FINISHER-C1/ SADDLE FINISHER-C2

SERVICE MANUAL

REVISION 0

Canon

DEC. 1998

FY8-13F6-000

COPYRIGHT © 1998 CANON INC. FINISHER-C1/SADDLE FINISHER-C2 REV. 0 DEC. 1998 PRINTED IN JAPAN (IMPRIME AU JAPON)

IMPORTANT

THE INFORMATION CONTAINED HEREIN PUBLISHED BY CANON, INC., JAPAN. SPECIFICATIONS AND OTHER INFORMATION CONTAINED WHEREIN MAY SLIGHTLY FROM ACTUAL MACHINE VALUES OR THOSE FOUND IN ADVERTISING AND OTHER PRINTED MATTER.

ANY QUESTIONS REGARDING INFORMATION CONTAINED HEREIN SHOULD BE DIRECTED TO THE COPIER SERVICE DEPARTMENT OF THE COMPANY.

COPYRIGHT © 1998 CANON INC.

Printed in Japan
Imprimé au Japon

Use of this manual should be strictly supervised to avoid disclosure of confidential information.

Prepared by

OFFICE IMAGING PRODUCTS TECHNICAL SUPPORT DEPARTMENT 1
OFFICE IMAGING PRODUCTS TECHNICAL SUPPORT DIVISION

CANON INC.

5-1, Hakusan 7-chome, Toride-shi Ibaraki, 302-8501 Japan

INTRODUCTION

This Service Manual contains basic data and figures for the Finisher-C1/Saddle Finisher-C2 needed to service the machine in the field.

Chapter 1 'General Description' introduces the finisher's features, specifications, and names of parts, and shows how to operate the sorter.
Chapter 2 'Finisher Unit Basic Operation' discusses the principles of operation used for the finisher mechanical and electrical systems. It also explains the timing at which these systems are operated.
Chapter 3 'Saddle Stitcher Unit Basic Operation' discusses the principles of operation used for the saddle stitcher unit's mechanical and electrical systems. It also explains the timing at which these systems are operated.
Chapter 4 'Mechanical System' discusses how the finisher is constructed mechanically, and shows how it may be disassembled/assembled and adjusted.
Chapter 5 'Maintenance and Inspection' provides tables of periodically replaced parts and consumables and durables, together with a scheduled servicing chart.
Chapter 6 'Troubleshooting' provides tables of maintenance/inspection, standards/adjustments, and problem identification (image fault/malfunction).

'Appendix' contains diagrams showing tables of signals, tables of solvents/oils, and a general timing chart.

The descriptions in this Service Manual are subject to change without notice for product improvement or other purposes, and major changes will be communicated in the form of Service Information bulletins.

All service persons are expected to have a good understanding of the contents of this Service Manual and all relevant Service Information bulletins and be able to identify and isolate faults in the machine.

COPYRIGHT © 1998 CANON INC.

COPYRIGHT © 1998 CANON INC. FINISHER-C1/SADDLE FINISHER-C2 REV. 0 DEC. 1998 PRINTED IN JAPAN (IMPRIME AU JAPON)

CONTENTS

CHAPTER 1 GENERAL DESCRIPTION

I. FEATURES 1-1
II. SPECIFICATIONS 1-2
A. Specifications 1-2
B. Cross Section 1-7
III. USING THE MACHINE 1-9
A. Removing Paper Jams from the Finisher Unit 1-9
B. Supplying the Finisher Unit with Staples 1-10
C. Removing Staple Jams from the Finisher Unit 1-11
D. Removing Paper Jams from the Saddle Sticher Unit 1-13
E. Supplying the Saddle Stitcher Unit with Staples 1-14
F. Removing Staple Jams from the Saddle Stitcher Unit 1-15
G. Removing Paper Jams from the Interrupt Tray 1-17
IV. MAINTENANCE BY THE USER 1-18
A. Maintenance by the User 1-18

CHAPTER 2 FINISHER UNIT BASIC OPERATION

I. BASIC OPERATION 2-1
A. Outline 2-1
B. Outline of Electrical Circuitry 2-2
C. Inputs to and Outputs from the Finisher Controller PCB 2-3
II. FEED/DRIVE SYSTEM 2-9
A. Outline 2-9
B. Types of Delivery Paths 2-13
C. Feeding and Delivering 2-16
D. Job Offset 2-19
E. Stapling Operation 2-22
F. Stapler Unit 2-28
G. Tray Operation 2-35
H. Detecting the Height of the Stack on the Tray 2-37
I. Shutter Operation 2-39
J. Buffer Path Operation 2-43
K. Interrupt Tray Delivery 2-47
L. Detecting Jams 2-49
III. POWER SUPPLY SYSTEM 2-55

COPYRIGHT © 1998 CANON INC.

CHAPTER 3 SADDLE STITCHER UNIT BASIC OPERATION

I. BASIC OPERATION 3-1
A. Outline 3-1
B. Electrical Circuitry.....3-2
C. Inputs to and Outputs from the Saddle Stitcher Controller PCB.....3-3
II. FEEDING/DRIVE SYSTEM 3-8
A. Outline 3-8
III. PAPER DEPOSITING MECHANISM 3-14
A. Outline 3-14
B. Controlling the Inlet Flappers..... 3-17
C. Controlling the Movement of Sheets..... 3-21
D. Aligning the Sheets 3-22
E. Controlling the Phase of the Crescent Roller..... 3-25
IV. STITCHING SYSTEM 3-27
V. FOLDING/DELIVERY SYSTEM 3-30
VI. CHECKING FOR A JAM 3-35
VII. POWER SUPPLY 3-39

CHAPTER 4 MECHANICAL CONSTRUCTION

(A) FINISHER UNIT 4-1
I. EXTERNALS AND CONTROLS 4-1
A. External Covers 4-1
II. FEEDING SYSTEM 4-8
III. PCBs 4-15
(B) SADDLE STITCHER UNIT 4-16

CHAPTER 5 MAINTENANCE AND INSPECTION

I. PERIODICALLY REPLACED PARTS 5-1
A. Finisher Unit 5-1
B. Saddle Stitcher Unit.....5-1
II. CONSUMABLES AND DURABLES.....5-1
A. Finisher Unit 5-1
B. Saddle Stitcher Unit.....5-1
III. PERIODICAL SERVICING 5-1

COPYRIGHT © 1998 CANON INC.
FINISHER-C1/SADDLE FINISHER-C2 REV. 0 DEC. 1998 PRINTED IN JAPAN (IMPRIME AU JAPON)

CHAPTER 6 TROUBLESHOOTING

I. ADJUSTMENTS 6-1
A. Electrical System (finisher unit) 6-1
B. Electrical System (saddle stitcher unit) 6-3
II. ALIGNMENT OF ELECTRICAL PARTS 6-8
A. Finisher Unit 6-8
B. Saddle Stitcher Unit 6-14
C. Variable Resistors (VR), Light-Emitting Diodes (LED), and Check Pins by PCB 6-20
III. TROUBLESHOOTING 6-22
A. Finisher Unit 6-22
B. Saddle Stitcher Unit 6-30
VI. SELF DIAGNOSIS 6-37
A. Finisher Unit 6-37
B. Saddle Stitcher Unit 6-39
C. Alarm 6-41
D. Copier I/O Notations 6-43

APPENDIX

A. Finisher Unit General Timing Chart A-1
B. Finisher Unit General Timing Chart A-2
C. Saddle Stitcher Unit General Timing Chart A-3
D. Signal and Abbreviations A-4
E. Finisher Unit General Circuit Diagram A-5
F. Saddle Stitcher Unit General Circuit Diagram A-6
G. Solvents and Oils A-7

COPYRIGHT © 1998 CANON INC.

CHAPTER 1

GENERAL DESCRIPTION

I. FEATURES 1-1
II. SPECIFICATIONS 1-2
A. Specifications 1-2
B. Cross Section 1-7
III. USING THE MACHINE 1-9
A. Removing Paper Jams from the Finisher Unit 1-9
B. Supplying the Finisher Unit with Staples 1-10
C. Removing Staple Jams from the Finisher Unit 1-11
D. Removing Paper Jams from the Saddle Sticher Unit 1-13
E. Supplying the Saddle Stitcher Unit with Staples 1-14
F. Removing Staple Jams from the Saddle Stitcher Unit 1-15
G. Removing Paper Jams from the Interrupt Tray 1-17
IV. MAINTENANCE BY THE USER 1-18
A. Maintenance by the User 1-18

COPYRIGHT © 1998 CANON INC. FINISHER-C1/SADDLE FINISHER-C2 REV. 0 DEC. 1998 PRINTED IN JAPAN (IMPRIME AU JAPON)

I. FEATURES

1. Accommodates large quantities of sheets

- Normally, the finisher holds a stack of sheets 220.6 mm in height in its three bins (small-sized paper of 80 g/m^2; no stapling).

2. Has high paper transportation performance.

- The finisher is capable of handling papers between 50 and 157 g/m^2.

3. Offers a job offset function.

- The finisher's job offset function delivers the first or the last sheet of each job by displacing it to the front, enabling sorting of copies on the tray.

4. Offers four types of auto stapling.

- The finisher offers a choice of four stapling modes (1-point stapling at rear, diagonal stapling at front, diagonal stapling at rear, 2-point stapling).

5. Uses a buffer roller.

- The use of a buffer roller enables the finisher to accept copies without interruption from the copier even during stapling or offset operation (small-size paper only).

6. Offers an interrupt delivery function.

- Installation of the interrupt delivery tray will enable an interruption of an ongoing operation (up to 50 copies of small-size paper or up to 30 copies of large-size paper; both of 80 g/m^2).

7. Has a saddle stitch function (Saddle Finisher-C2).

- The finisher can staple along the center of paper and fold it in two (up to 15 sheets).

8. Offers an incoming fax indicator (option).

- When installed, the incoming fax indicator lamp (LED) will turn on to indicate the arrival of a fax on tray 2/3.

COPYRIGHT © 1998 CANON INC.

II. SPECIFICATIONS

A. Specifications

1. Finisher Unit

Item	Description		
Stacking method	Trays 1 through 3: by lifting tray Interrupt tray: by fixed tray		
Stacking orientation	Face-down Face-up (1 to *n* copies only)		
Stacking size	AB: A3, A4, A4R, A5, A5R, B4, B5, B5R, postcard Inch: 279 × 432 mm (11 × 17), LGL, LTR, LTRR, STMT, STMTR		
Paper weight	50 to 128 g/m^2		
Bins	Interrupt tray, trays 1 through 3		
Modes	Non-sort: trays 1 through 3 and interrupt tray Sort: trays 1 through 3 Staple: trays 1 through 2		
Stacking capacity	Interrupt tray	Small size: 50 sheets	
		Large size: 30 sheets	
	Non staple sort	Small-size (Note 1)	Tray 1: 44 mm high (300 sheets) Tray 2: 146.6 mm high (1000 sheets)(Note 2) Tray 3: 30 mm high (200 sheets)
		Large-size (Note 1)	Tray 1: 22 mm high (100 sheets) Tray 2: 74 mm high (500 sheets) Tray 3: 15 mm high (100 sheets)
	Staple sort	Small-size (Note 1)	Tray 1: 47 mm high/50 sets (300 sheets) Tray 2: 146.6 mm high/50 sets (1000 sheets) Tray 3: Not possible
		Large-size (Note 1)	Tray 1: 22 mm high/30 sets (150 sheets) Tray 2: 74 mm high/30 sets (500 sheets) Tray 3: Not possible
Size mixing	Size mixing: 44 mm or less (300 sheets) Stapling: 22 mm or less (150 sheets)		
Stacking mixing	Face-up/face-down		

Notes:
1. Approximate when computed with reference to 80 g/m^2 paper.
2. Alignment may not be correct if 750 or more small-size sheets are stacked on tray 2.
3. The accuracy of the stack height is ±7 mm.

Table 1-201

COPYRIGHT © 1998 CANON INC.

Item	Description		
Stapling	By rotating cam		
Stapling position	See Figure 1-201.		
Stapling capacity	Small-size	50 sheets	Equivalent of 80 g/m^2 paper
	Large-size	25 sheets	
Staple supply	Special staple cartridge (5000 staples)		
Staples	Special (staple-E1)		
Staple detection	Provided		
Manual stapling	Not provided		
Stapling size	1-point (diagonal)	Front	A3, B4, A4m, A4R, B5, 279 × 432 mm (11 × 17), LGL, LTR, LTRR
		Rear	A3, B4, A4, A4R, B5, 279 × 432 mm (11 × 17), LTR
	1-point	Rear	A4R, LTRR, LGL
	2-point	A3, B4, A4, B5, 279 × 432 mm (11 × 17), LTR	
Paper detection	Trays 1 through 3: provided Interrupt tray: not provided		
Control panel	Not provided		
Display	Incoming fax indicator lamp (option)		
Dimensions	669 × 582 × 1047 mm (W × D × H; including saddle stitcher unit)		
Weight	45 kg (including saddle stitcher unit)		
Powr supply	From copier (24 VDC)		
Maximum power consumption	170 W or less		
Serial number	ZLJXXXXX (Finisher-C1)		

Table 2-202

Reference:

Small-size represents A4, A5, A5, B5, postcard, LTR, STMT, STMTR, while large-size represents A3, B4, A4R, B5R, LTRR, 279 × 432 mm (11 × 17), LGL.

COPYRIGHT © 1998 CANON INC.

Stapling Positions (finisher unit)

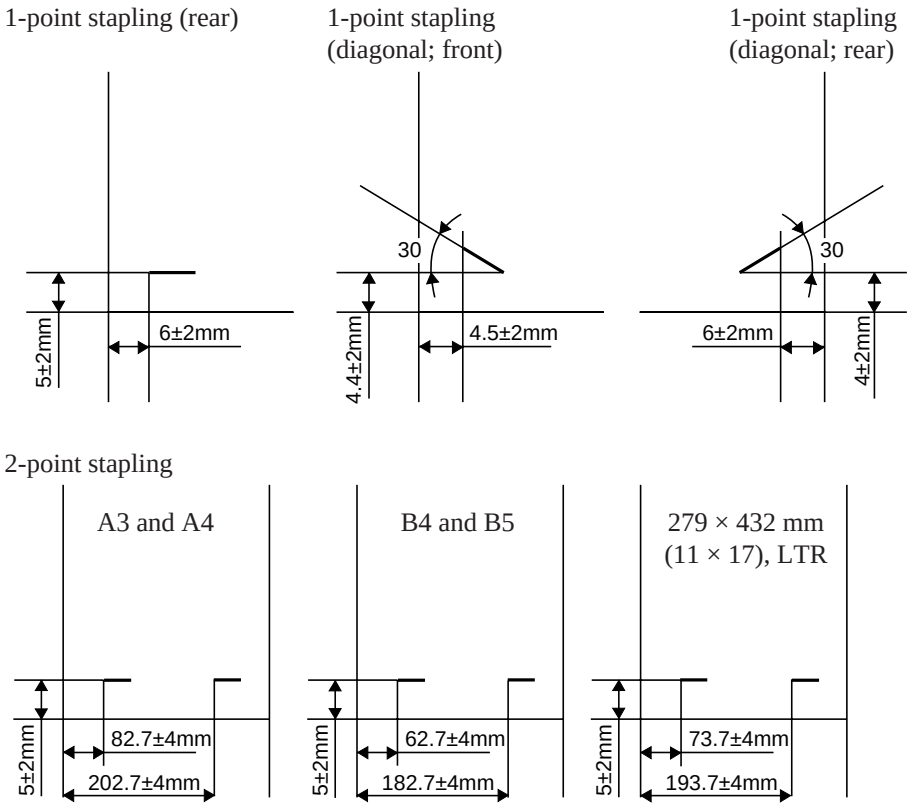

Figure 1-201

COPYRIGHT © 1998 CANON INC. FINISHER-C1/SADDLE FINISHER-C2 REV. 0 DEC. 1998 PRINTED IN JAPAN (IMPRIME AU JAPON)

2. Saddle Stitcher Unit

Item	Description	
Stapling method	Center binding (double folding)	
Folding position	See Figure 1-202.	
Paper size	A3, B4, AR4, 297mm × 432mm (11 × 17), LTRR	
Capacity	15 sheets (including single cover page)	
Paper weight	64 to 80 g (cover page up to 128 g)	
Stackihng capacity	10 sets (stack of 11 to 15 sheets), 20 sets (stack of 6 to 10 sheets), 25 sets (stack of 5 sheets or less)	
Stapling	Stapling position	2 points (center distribution; fixed interval)
	Staple accommodation	2000 staples
	Staple supply	Special cartridge
	Staples	Special staples (Staple-D1)
	Staple detection	Provided
	Manual stapling	Not provided
Folding	Folding method	Roller contact
	Folding mode	Double folding
	Folding position	Paper center
	Position adjustment	Provided
Power supply	From finisher unit (24 V channel × 2)	
Power consumption	160 W or less	
Serial number	ZLKxxxxx (Saddle Finisher-C2)	

Table 2-203

COPYRIGHT © 1998 CANON INC.

Staple and Folding Positions (saddle stitcher unit)

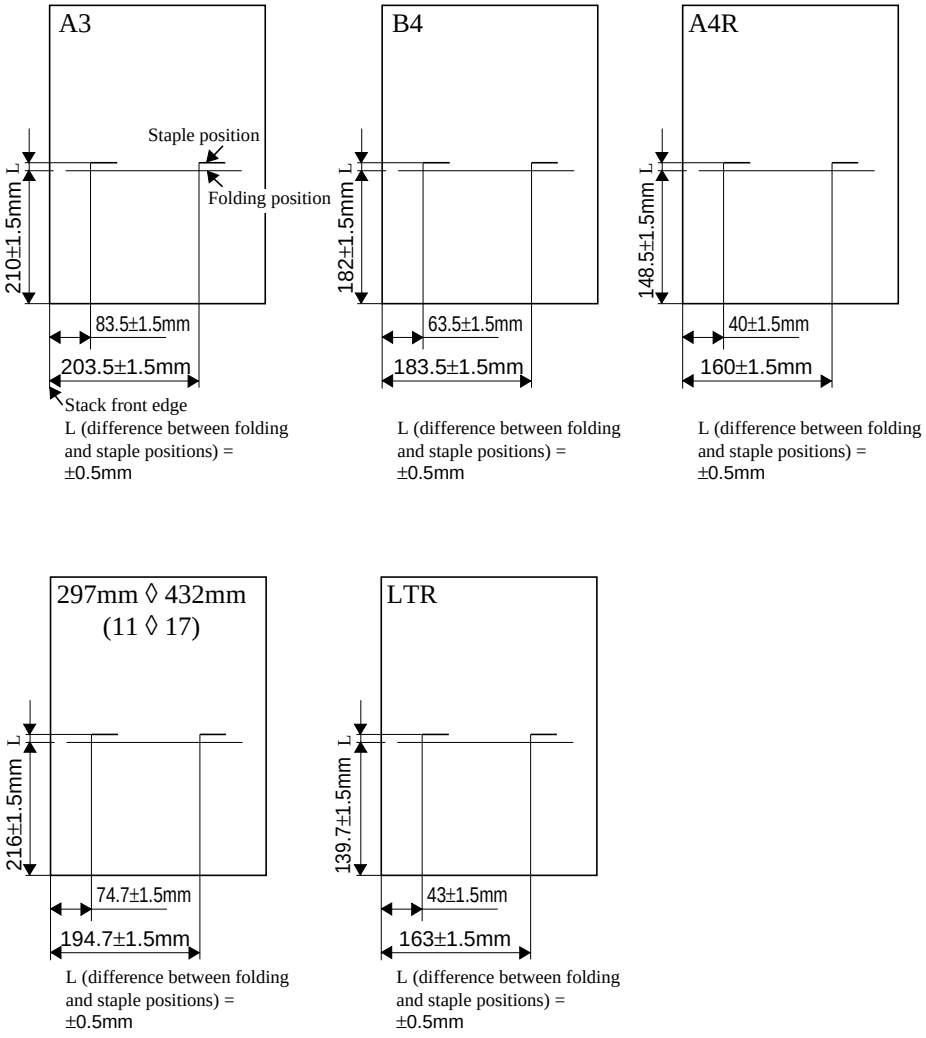

Figure 1-202

Specifications are subject to change without notice.

COPYRIGHT © 1998 CANON INC. FINISHER-C1/SADDLE FINISHER-C2 REV. 0 DEC. 1998 PRINTED IN JAPAN (IMPRIME AU JAPON)

B. Cross Section

1. Finisher Unit

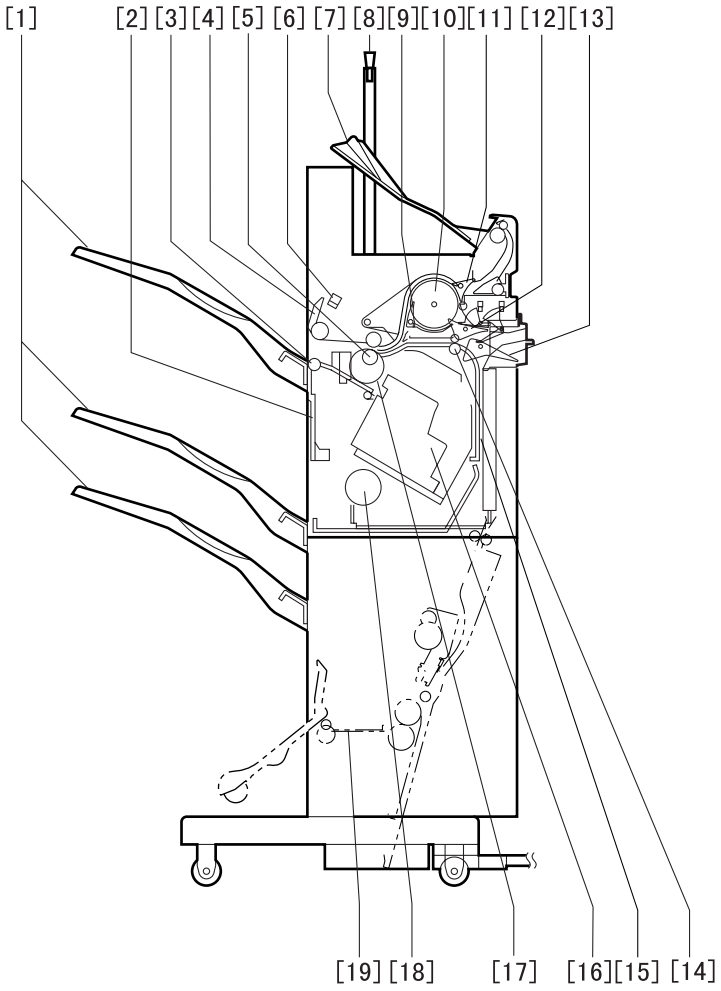

[1] Tray 1/2/3
[2] Shutter
[3] Delivery roller
[4] Jog guide
[5] Feed roller 2
[6] Height sensor
[7] Interrupt tray
[8] Incoming fax indicator lamp (option; 115V)
[9] Wrap flapper
[10] Buffer roller
[11] Interrupt flapper
[12] Buffer inlet flapper
[13] Saddle stitcher flapper
[14] Feed roller 1
[15] Vertical path
[16] Stapler
[17] Feed belt
[18] Tray lift motor
[19] Saddle stitcher unit (Saddle Finisher-C2)

Figure 1-203

COPYRIGHT © 1998 CANON INC.

2. Saddle Stitcher Unit

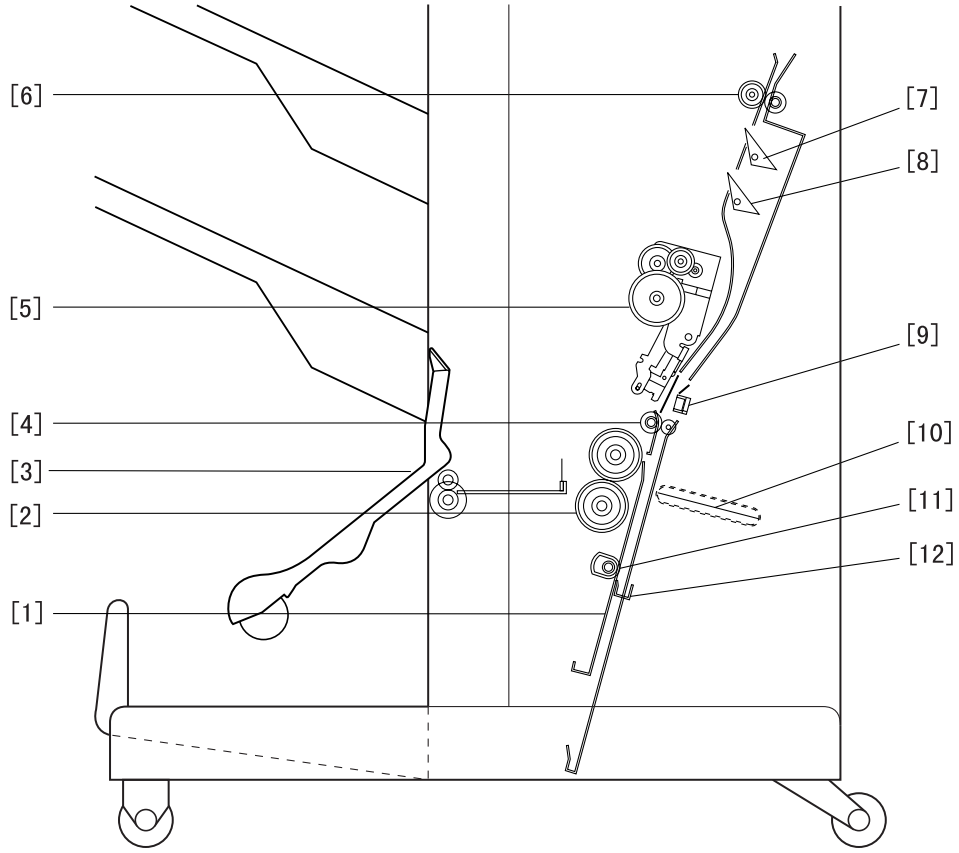

[1] Guide plate
[2] Folding roller
[3] Delivery guide plate
[4] Holding roller
[5] Stitcher (front, rear)
[6] Inlet roller
[7] No. 1 flapper
[8] No. 2 flapper
[9] Stitcher mount (front, rear)
[10] Butting plate
[11] Crescent roller
[12] Paper positioning plate

Figure 1-204

COPYRIGHT © 1998 CANON INC.

III. Using the Machine

A. Removing Paper Jams from the Finisher Unit

If the copier indicates the finisher paper jam message, perform the following to remove the jam.

1) Holding the finisher unit as shown, move it to detach it from the copier.

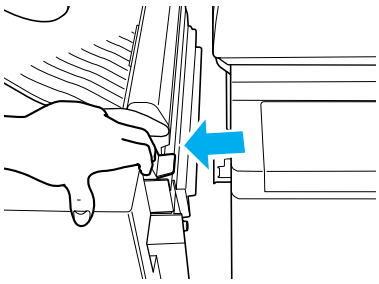

Figure 1-301

2) Remove any jam visible from the outside.

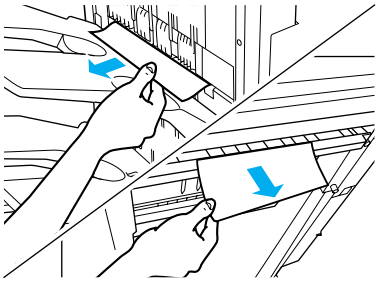

Figure 1-302

3) Shift up the interrupt tray, open the upper cover, and check the inside of the finisher.

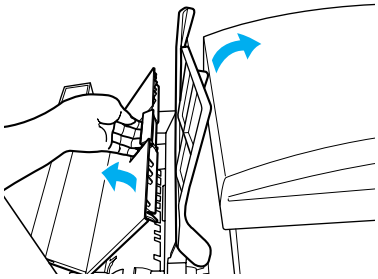

Figure 1-303

4) Lift the buffer roller cover, and remove the jam.

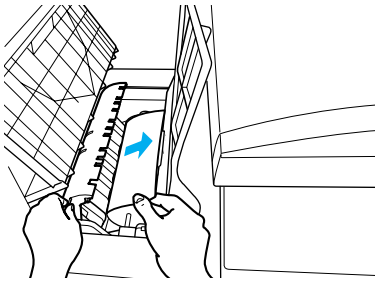

Figure 1-304

5) Lift the buffer roller, and remove the jam.

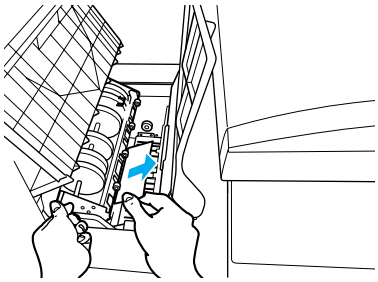

Figure 1-305

COPYRIGHT © 1998 CANON INC.

6) Return the buffer roller and the gray cover to their original position, and close the upper cover and the interrupt tray.

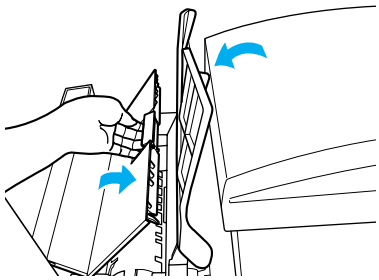

Figure 1-306

7) Connect the finisher to the copier.

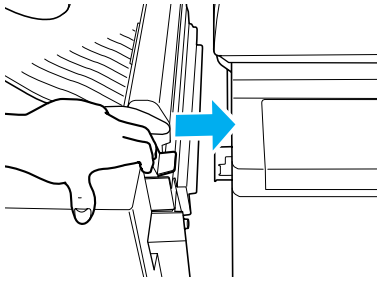

Figure 1-307

8) Operate as instructed on the display.

B. Supplying the Finisher Unit with Staples

If the copier indicates the finisher unit staple supply message, perform the following to supply it with staples.

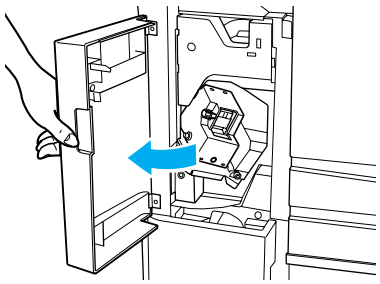

Figure 1-308

2) Shift down the green lever.

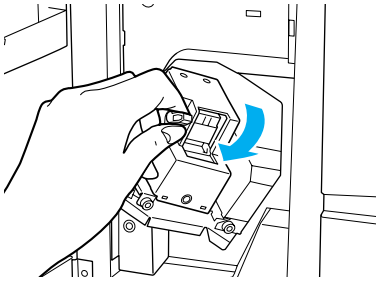

Figure 1-309

3) When the staple cartridge has slightly slid out, hold and pull it out.

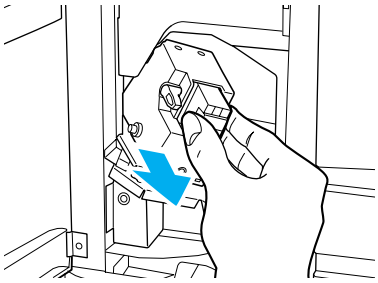

Figure 1-310

4) Hold the empty staple case on its sides, and slide it out.

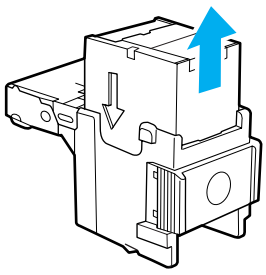

Figure 1-311

COPYRIGHT © 1998 CANON INC.

5) Set a new staple case.

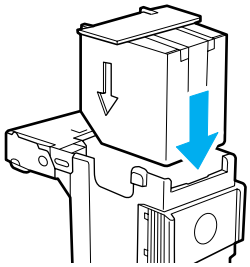

Figure 1-312

Reference:
You may set no more than one staple cartridge at a time.
Make sure that the new cartridge is one specifically designed for the finisher unit.

6) Pull the length of tape (used to hold the staples in place) straight out.

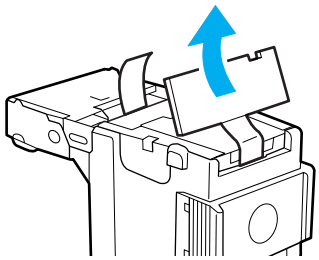

Figure 1-313

7) Push in the stapler unit until the green lever returns to its original position.

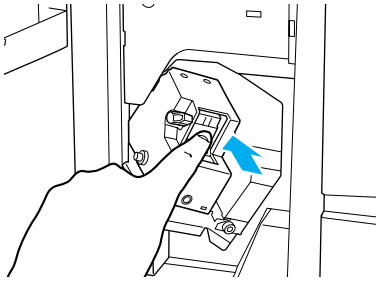

Figure 1-314

8) Check to make sure that the stapler has been locked in place, and close the front cover.

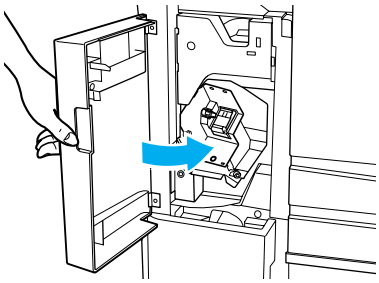

Figure 1-315

C. Removing Staple Jams from the Finisher Unit

If the copier indicates the finisher unit staple jam message, perform the following to remove the jam.

1) Remove the stack waiting to be stapled from the delivery tray.

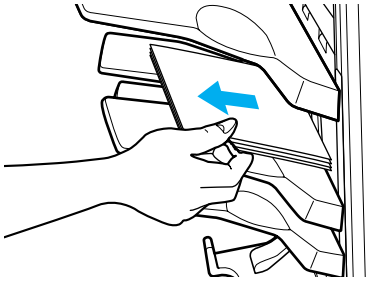

Figure 1-316

2) Open the front cover.

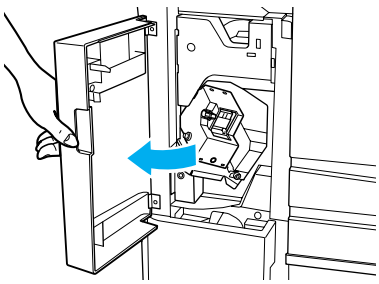

Figure 1-317

COPYRIGHT © 1998 CANON INC.

3) Shift down the green lever.

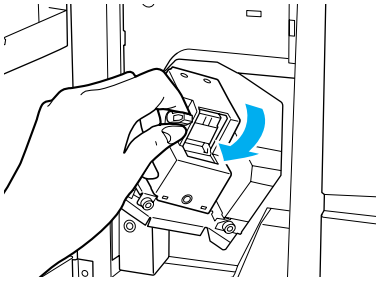

Figure 1-318

4) When the staple cartridge has slightly slid out, hold and pull it out.

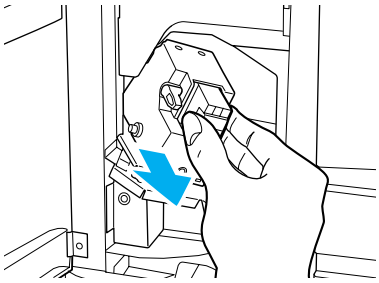

Figure 1-319

5) Shift down the tab on the staple cartridge.

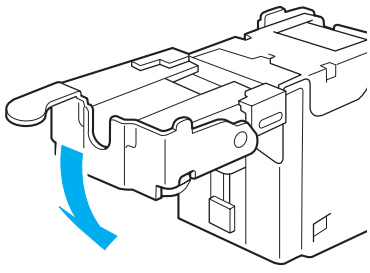

Figure 1-320

6) Remove all staples that have slid out of the staple case.

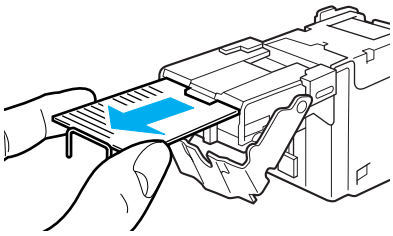

Figure 1-321

7) Return the tab on the staple cartridge to its original position.

8) Return the staple cartridge to its original position, and close the front cover.

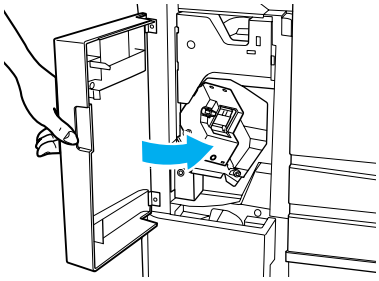

Figure 1-322

Reference

When the cover has been closed, the stapler unit will automatically execute idle punching several times to advance the staples.

COPYRIGHT © 1998 CANON INC.

D. Removing Paper Jams from the Saddle Sticher Unit (Saddle Finisher-C2)

If the copier indicates the saddle stitcher unit paper jam message, perform the following to remove the jam.

1) Holding the saddle stitcher unit as shown, move it to detach it from the copier.

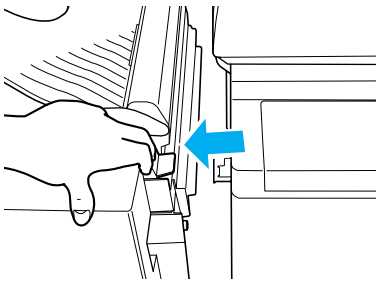

Figure 1-323

2) Open the front lower cover.

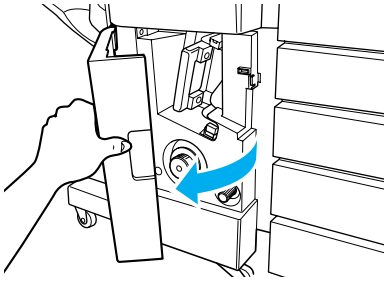

Figure 1-324

3) Turn the knob on the right side.

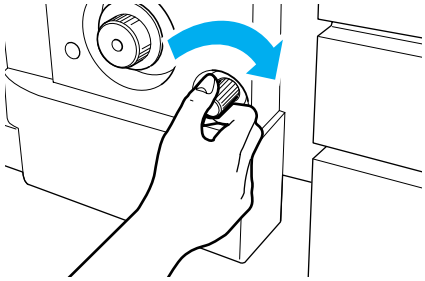

Figure 1-325

4) Turn the knob on the left side.

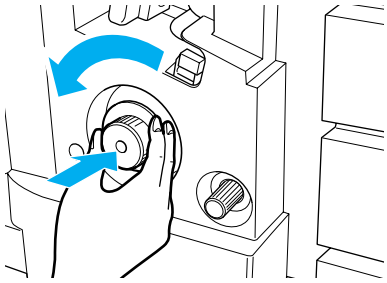

Figure 1-326

5) Remove the jam.

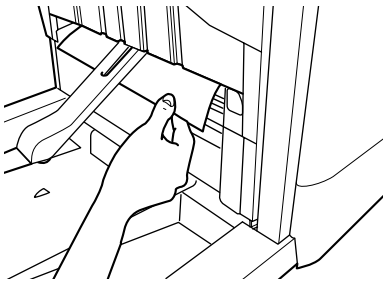

Figure 1-327

COPYRIGHT © 1998 CANON INC.

6) Open the inlet cover, and remove the jam.

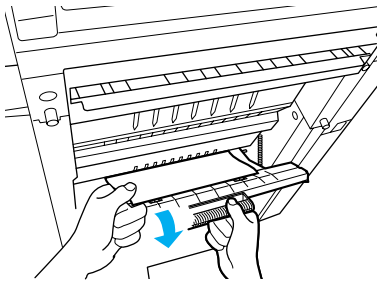

Figure 1-328

7) Close the front lower cover.

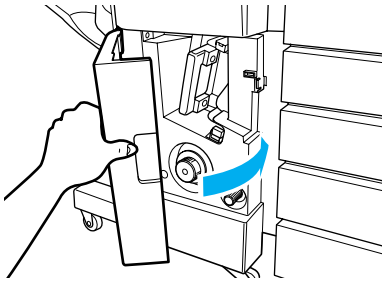

Figure 1-329

8) Connect the finisher unit.

9) Operate as instructed on the display.

E. Supplying the Saddle Stitcher Unit with Staples (Saddle Finisher-C2)

If the copier indicates the saddle stitcher unit staple supply message, perform the following to supply it with staples.

1) Open the front lower cover.

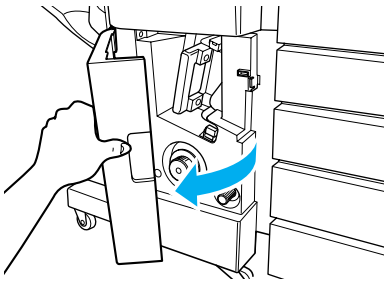

Figure 1-330

2) Slide out the stitcher unit.

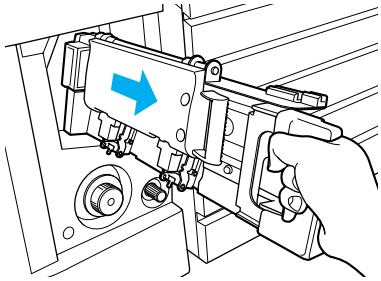

Figure 1-331

3) Pull the stitcher unit to the front once, and then shift it up.

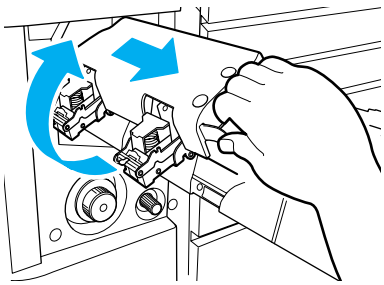

Figure 1-332

COPYRIGHT © 1998 CANON INC.

4) Hold the empty cartridge on its sides, and remove it.

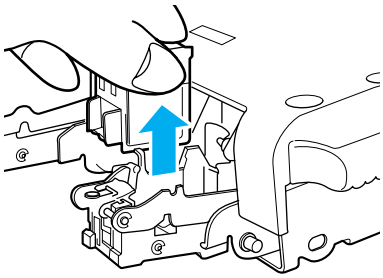

Figure 1-333

5) Fit the new cartridge.

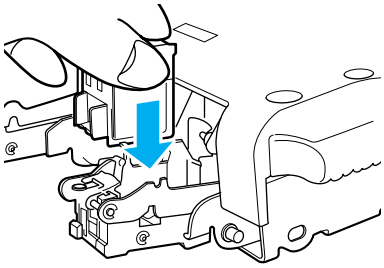

Figure 1-334

Caution:
You must always replace both cartridges at the same time.

6) Pull the stitcher to the front once, and then put it back to its original position.

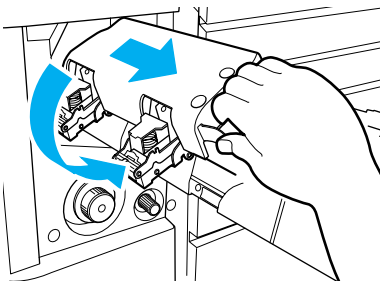

Figure 1-335

7) Push in the stitcher unit, and close the front cover.

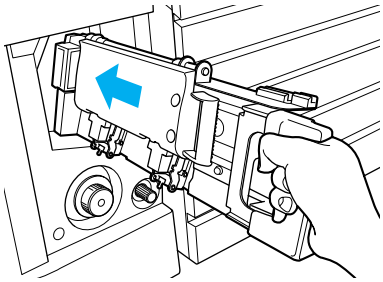

Figure 1-336

F. Removing Staple Jams from the Saddle Stitcher Unit (Saddle Finisher-C2)

If the copier indicates the saddle stitcher unit staple jam message, perform the following to remove the jam.

1) Open the front lower cover.

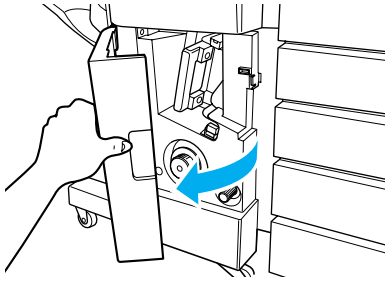

Figure 1-337

2) Slide out the stitcher unit.

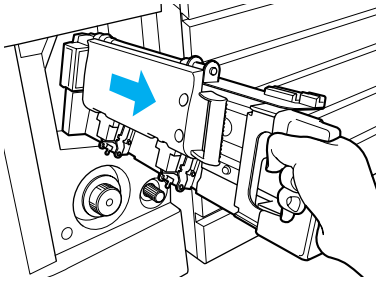

Figure 1-338

3) Pull the stapler of the stitcher unit to the front once, and then shift it up.

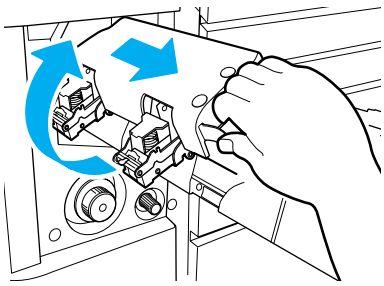

Figure 1-339

4) Hold the cartridge on its sides, and remove it.

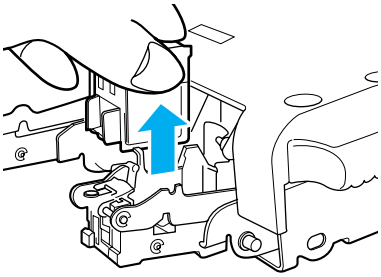

Figure 1-340

5) Push down on the area identified as A, and pull up the tab identified as B.

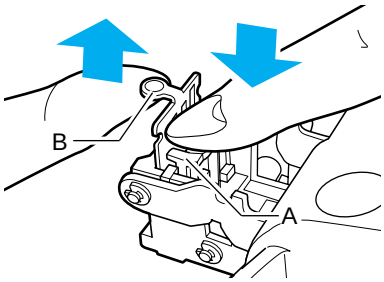

Figure 1-341

6) Remove the staple jam, and return the tab to its original position.

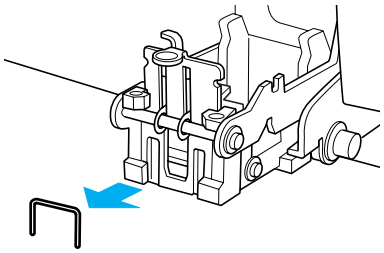

Figure 1-342

7) Return the cartridge to its original position.

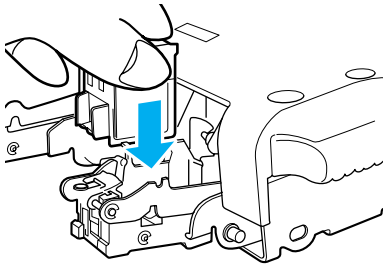

Figure 1-343

COPYRIGHT © 1998 CANON INC.

8) Pull the stitcher of the stitcher unit to the front once, and then return it to its original position.

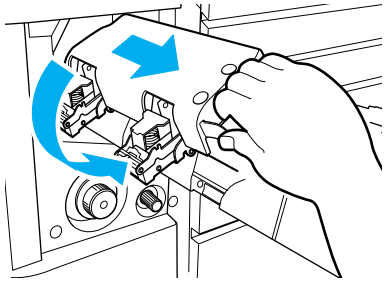

Figure 1-344

9) Push the stitcher unit back to its original position, and close the front lower cover.
• Whenever you have removed a staple jam, be sure to execute staple edging.

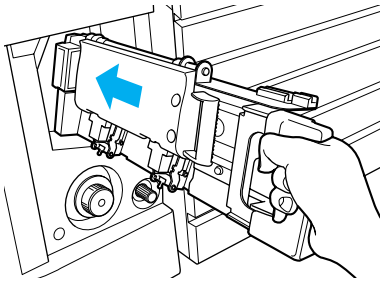

Figure 1-345

G. Removing Paper Jams from the Interrupt Tray

If the display indicates a paper jam on the interrupt tray, perform the following to remove the jam:

1) Hold the finisher as shown, and detach it from the copier.

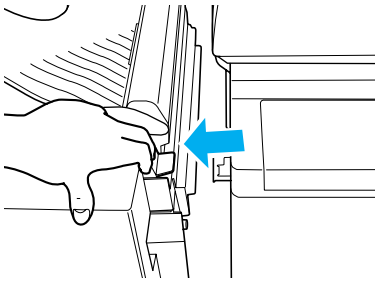

Figure 1-346

2) Remove the jam.

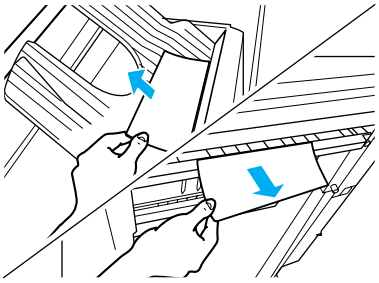

Figure 1-347

3) Connect the finisher to the copier.

4) Operate as instructed on the display.

IV. MAINTENANCE BY THE USER

A. Maintenance by the User

As of April 1998

No.	Item	Timing
1	Replacing the staple cartridge (finisher unit)	When the appropriate indication is made on the copier's display.
2	Replacing the staple cartridge (saddle stitcher)	

Caution:
The finisher unit and the saddle unit use different cartridge types. Be sure that the appropriate type is used for each.

Table 1-401

COPYRIGHT © 1998 CANON INC. FINISHER-C1/SADDLE FINISHER-C2 REV. 0 DEC. 1998 PRINTED IN JAPAN (IMPRIME AU JAPON)

CHAPTER 2

FINISHER UNIT BASIC OPERATION

I. BASIC OPERATION 2-1
A. Outline 2-1
B. Outline of Electrical Circuitry 2-2
C. Inputs to and Outputs from the Finisher Controller PCB 2-3
II. FEED/DRIVE SYSTEM 2-9
A. Outline 2-9
B. Types of Delivery Paths 2-13
C. Feeding and Delivering 2-16
D. Job Offset 2-19
E. Stapling Operation 2-22
F. Stapler Unit 2-28
G. Tray Operation 2-35
H. Detecting the Height of the Stack on the Tray 2-37
I. Shutter Operation 2-39
J. Buffer Path Operation 2-43
K. Interrupt Tray Delivery 2-47
L. Detecting Jams 2-49
III. POWER SUPPLY SYSTEM 2-55

COPYRIGHT © 1998 CANON INC. FINISHER-C1/SADDLE FINISHER-C2 REV. 0 DEC. 1998 PRINTED IN JAPAN (IMPRIME AU JAPON)

I. BASIC OPERATION

A. Outline

The finisher is designed to deliver copies arriving from its host copier, and its modes of delivery include simple stacking, job offset, staple, and interrupt.

All operations involved in these modes are controlled by the finisher controller PCB, according to the appropriate commands from the host copier.

In the case of the Saddle Finisher-C2, copies from the host copier may be routed to the saddle stitcher unit.

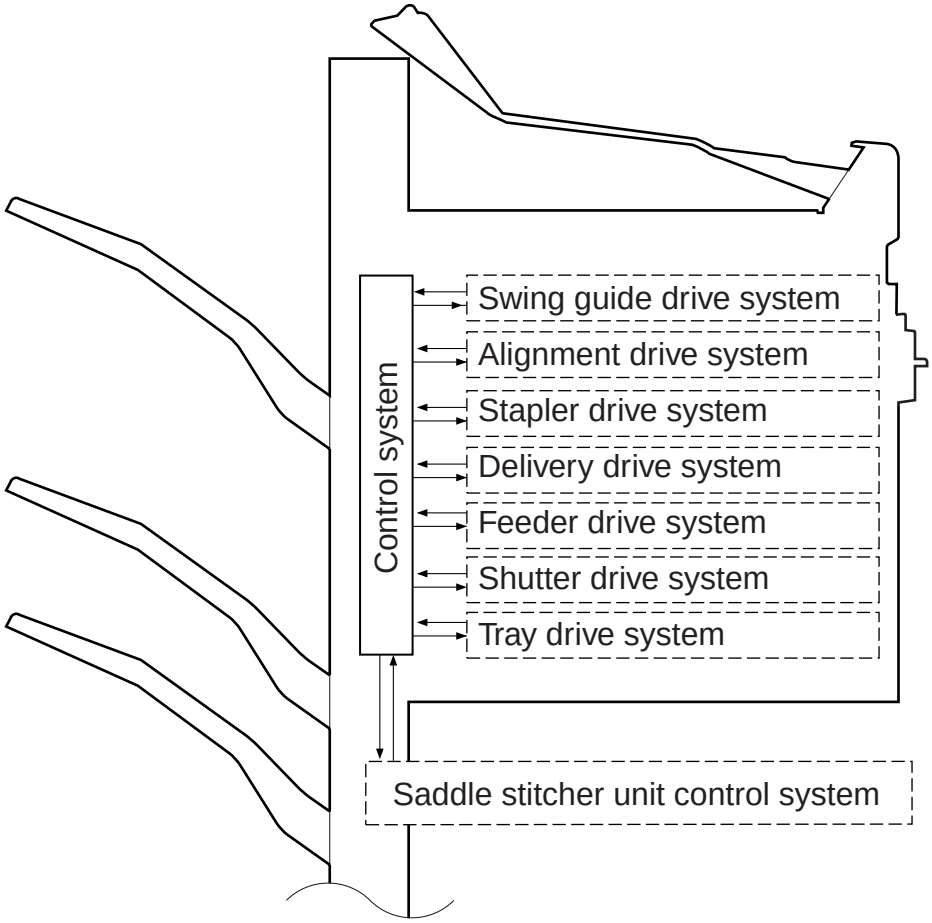

Figure 2-101

Note:

The term *job offset* refers to shifting of the first sheet of each sorting job, thereby separating a single stack into several stacks.

B. Outline of Electrical Circuitry

The finisher's sequence of operations is controlled by the finisher controller PCB. The finisher controller PCB is a 16-bit microprocessor (CPU), and is used for communication with the host copier (serial) in addition to controlling the finisher's sequence of operations.

The finisher controller PCB responds to the various commands coming from the host copier through a serial communications line to drive solenoids, motors, and other loads. In addition, it communicates the finisher's various states (information on sensors and switches) to the host copier through a serial communications circuit.

In the case of the Saddle Finisher-C2, the finisher controller PCB not only communicates with the saddle stitcher controller PCB but also communicates the saddle stitcher unit's various states (information on sensors and switches) to the host copier.

The ICs used on the finisher controller PCB are designed for the following:

- Q1 (CPU)
  Controls sequence of operations.
- Q2 (EP-ROM)
  Contains sequence programs.
- Q3 (RAM)
  Backs up initial settings data.
- Q4 (communications IC)
  Communicates with the host copier and the saddle stitcher unit.
- Q9 (regulator IC)
  Generates 5 V.

Figure 2-102 shows the flow of signals between the finisher and the options controller.

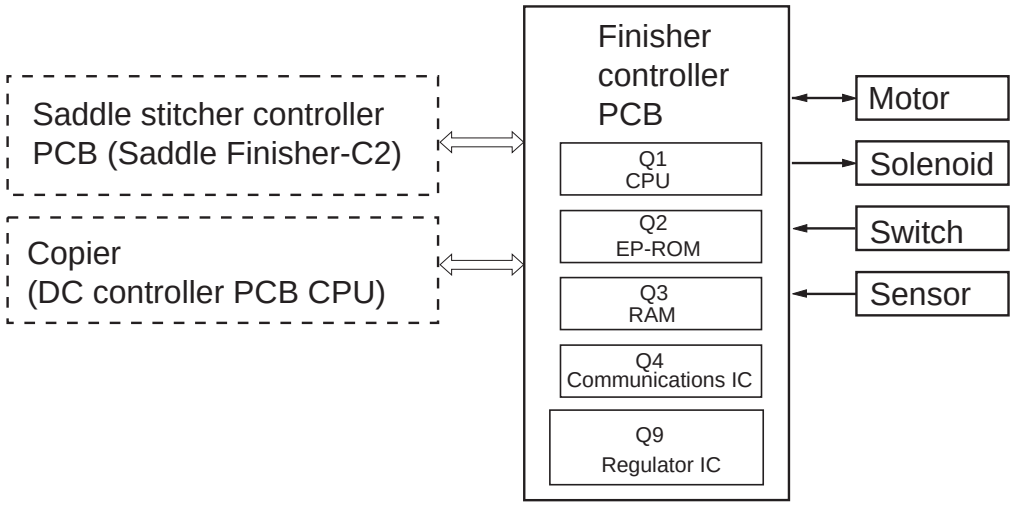

Figure 2-102

COPYRIGHT © 1998 CANON INC. FINISHER-C1/SADDLE FINISHER-C2 REV. 0 DEC. 1998 PRINTED IN JAPAN (IMPRIME AU JAPON)

C. Inputs to and Outputs from the Finisher Controller PCB

1. Inputs to the Finisher Controller PCB

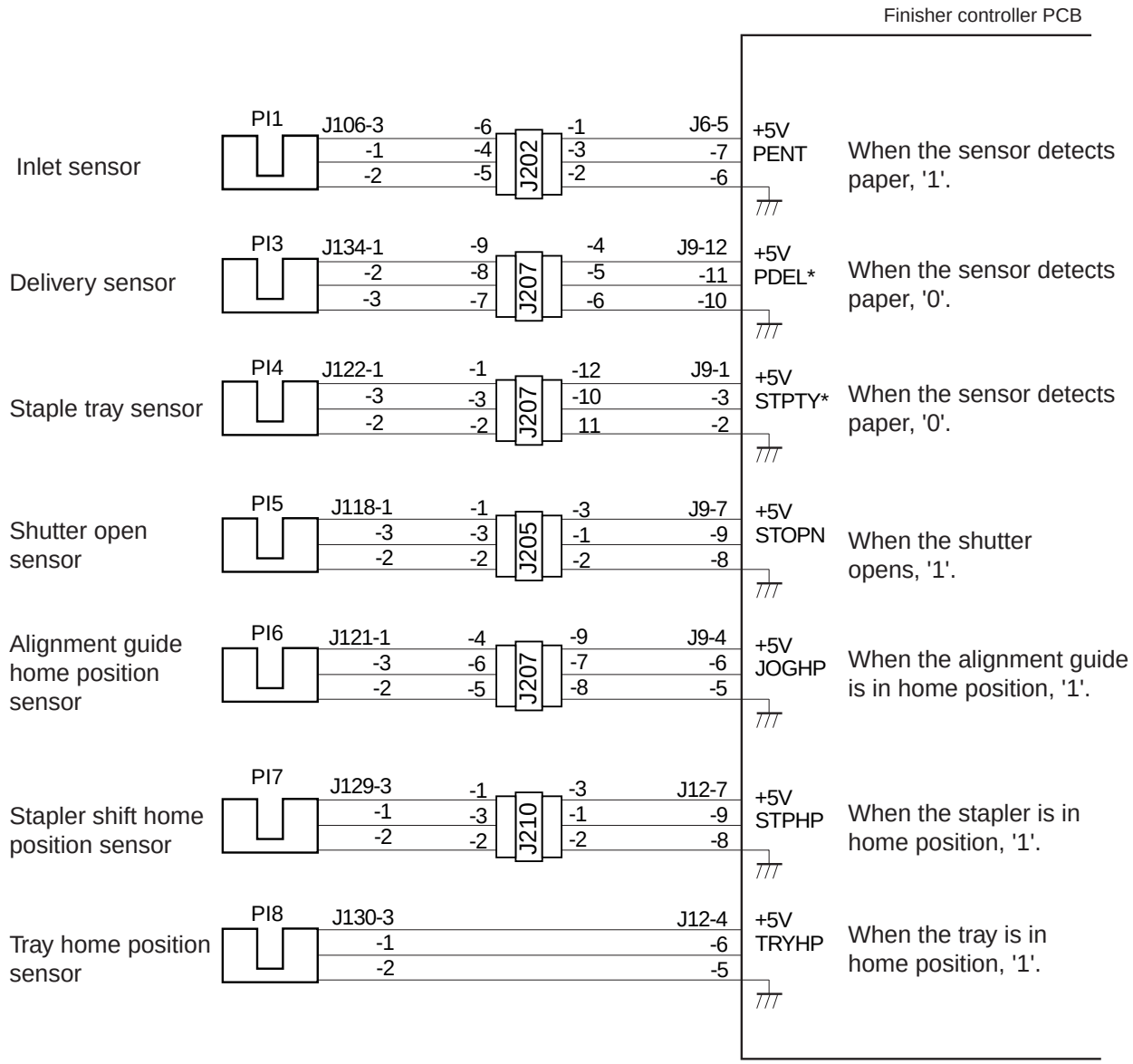

Figure 2-103

2. Inputs to the Finisher Controller PCB

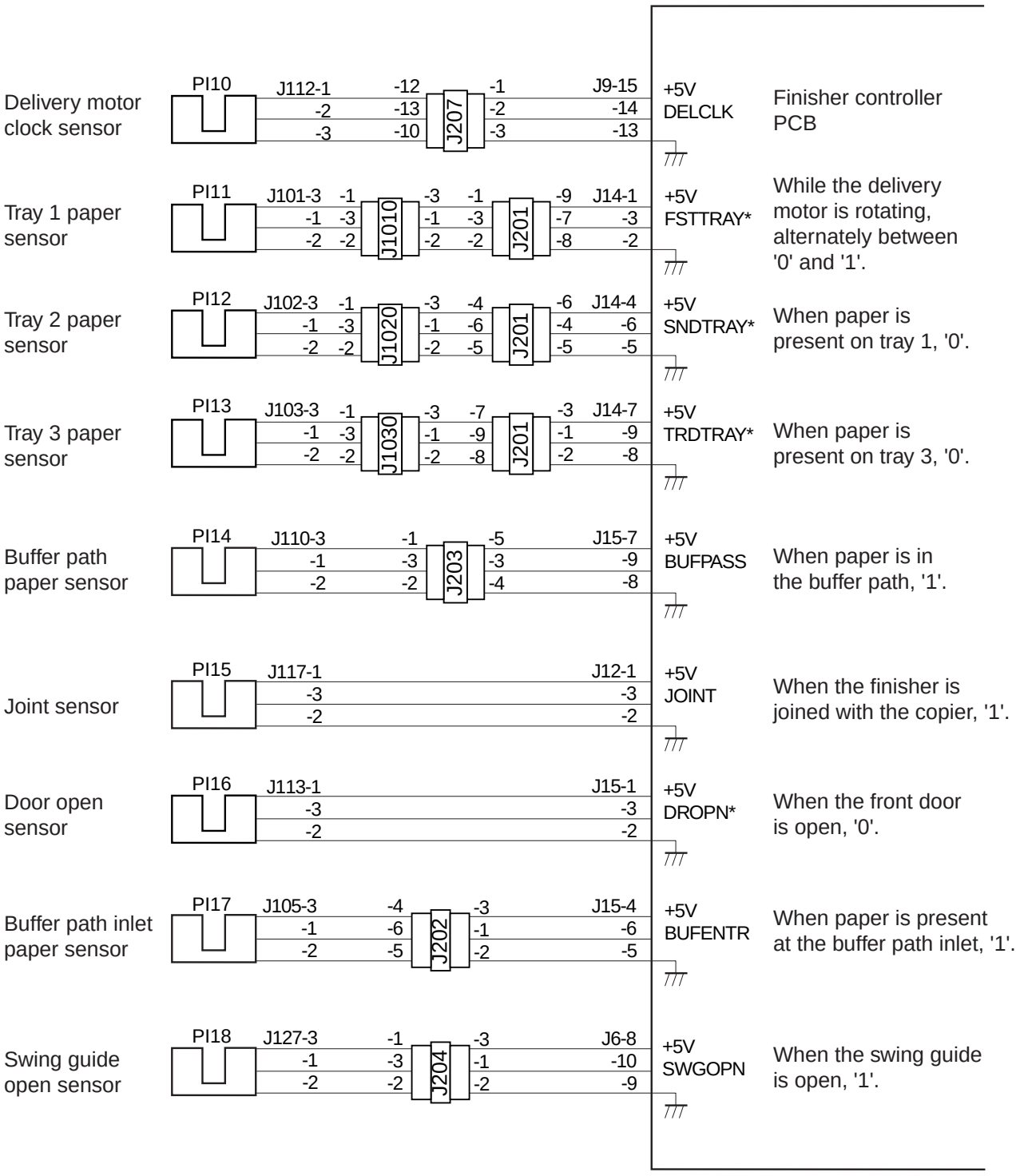

Figure 2-104

COPYRIGHT © 1998 CANON INC. FINISHER-C1/SADDLE FINISHER-C2 REV. 0 DEC. 1998 PRINTED IN JAPAN (IMPRIME AU JAPON)

3. Inputs to the Finisher Controller PCB

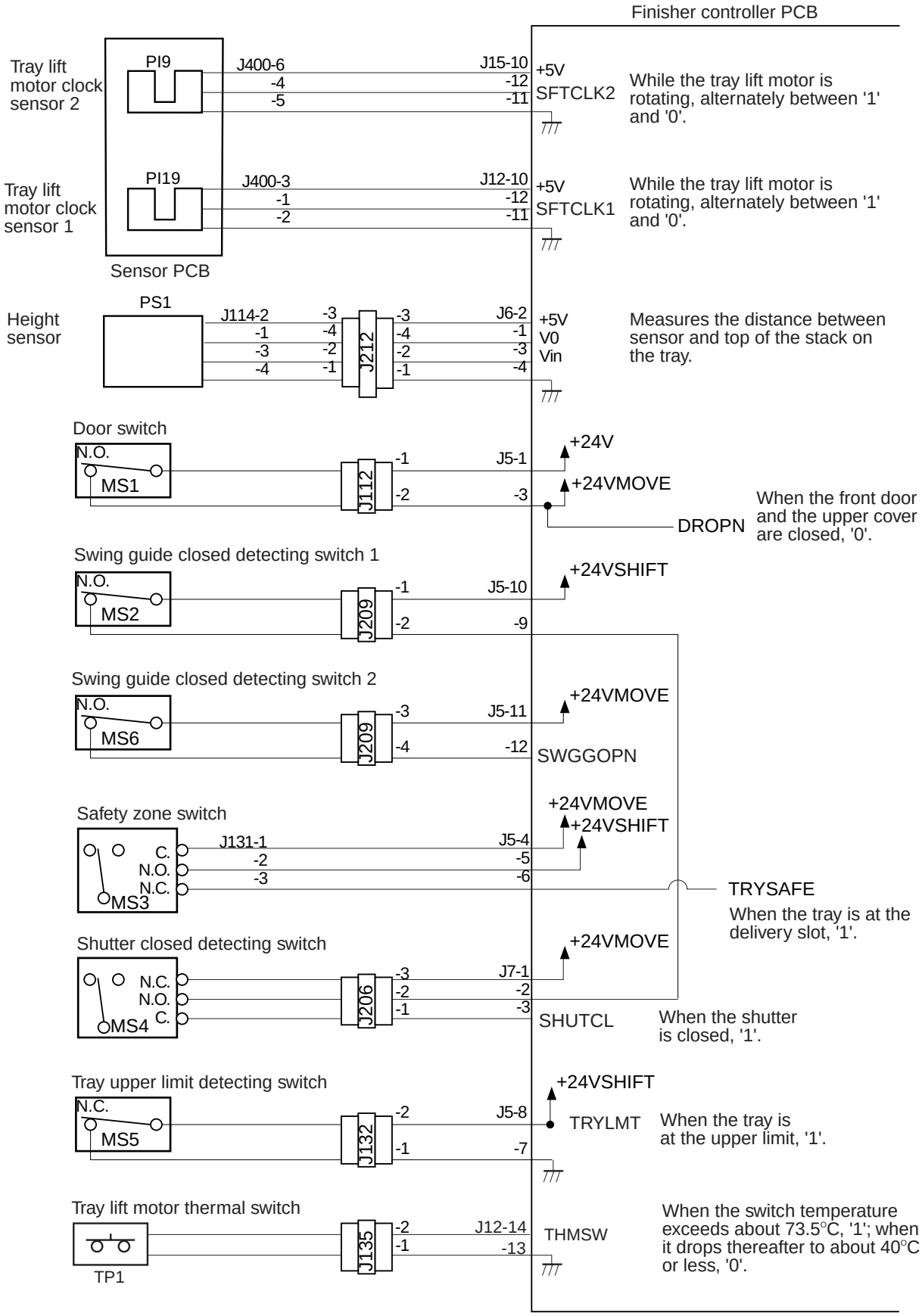

Figure 2-105

COPYRIGHT © 1998 CANON INC. FINISHER-C1/SADDLE FINISHER-C2 REV. 0 DEC. 1998 PRINTED IN JAPAN (IMPRIME AU JAPON)

4. Inputs to and Outputs from the Finisher Controller PCB

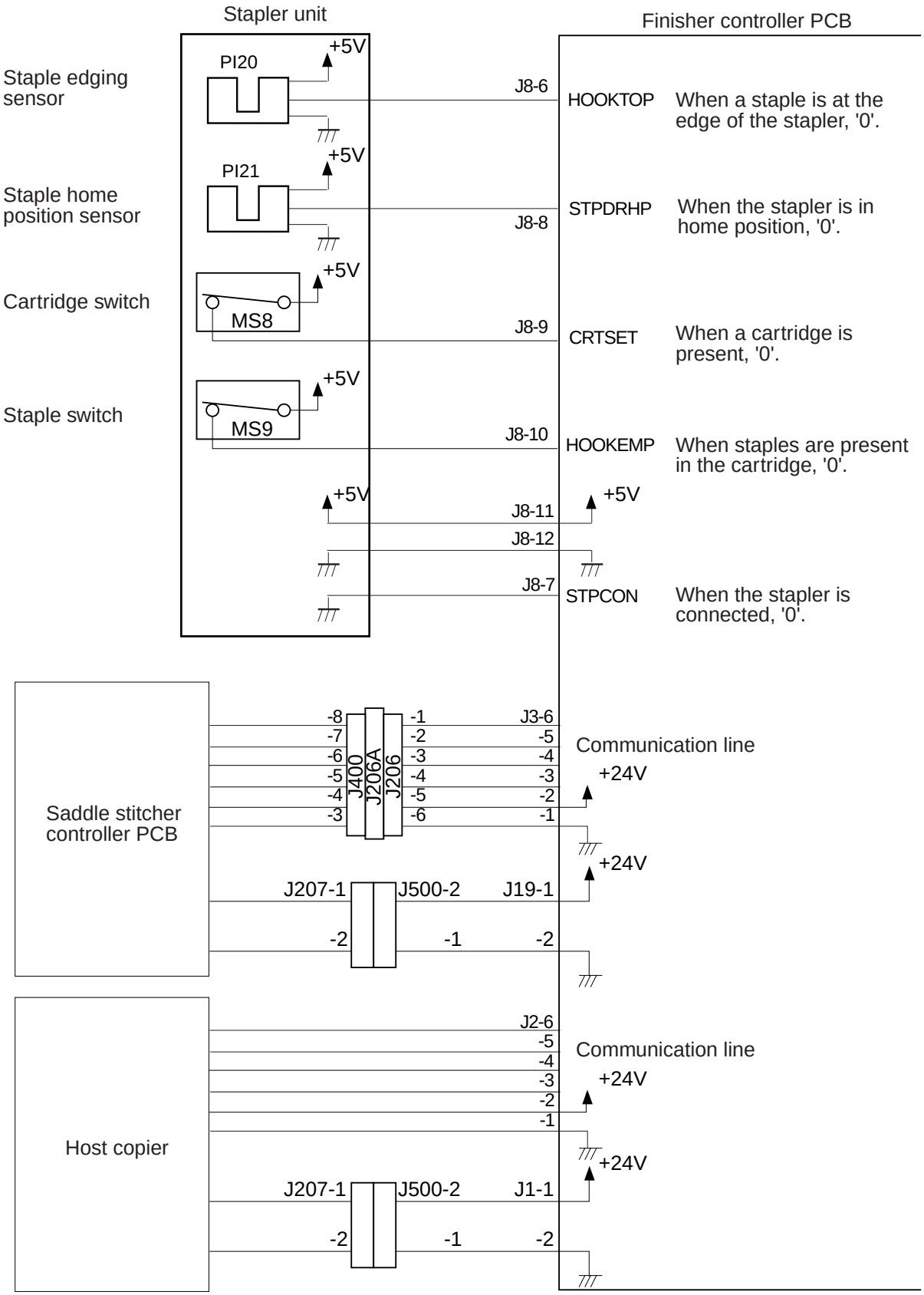

Figure 2-106

COPYRIGHT © 1998 CANON INC. FINISHER-C1/SADDLE FINISHER-C2 REV. 0 DEC. 1998 PRINTED IN JAPAN (IMPRIME AU JAPON)

5. Outputs from the Finisher Controller PCB

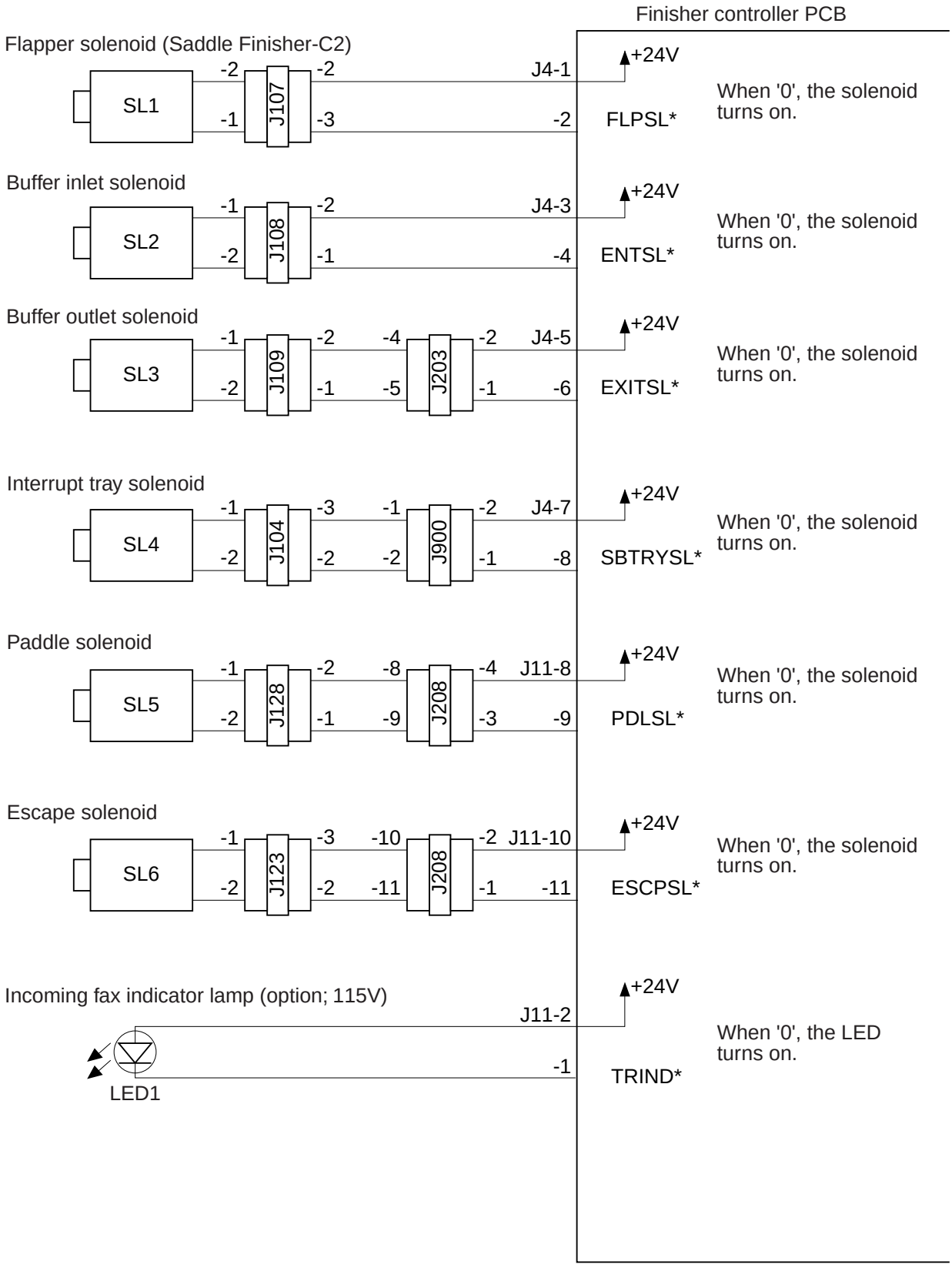

Figure 2-107

6. Outputs from the Finisher Controller PCB

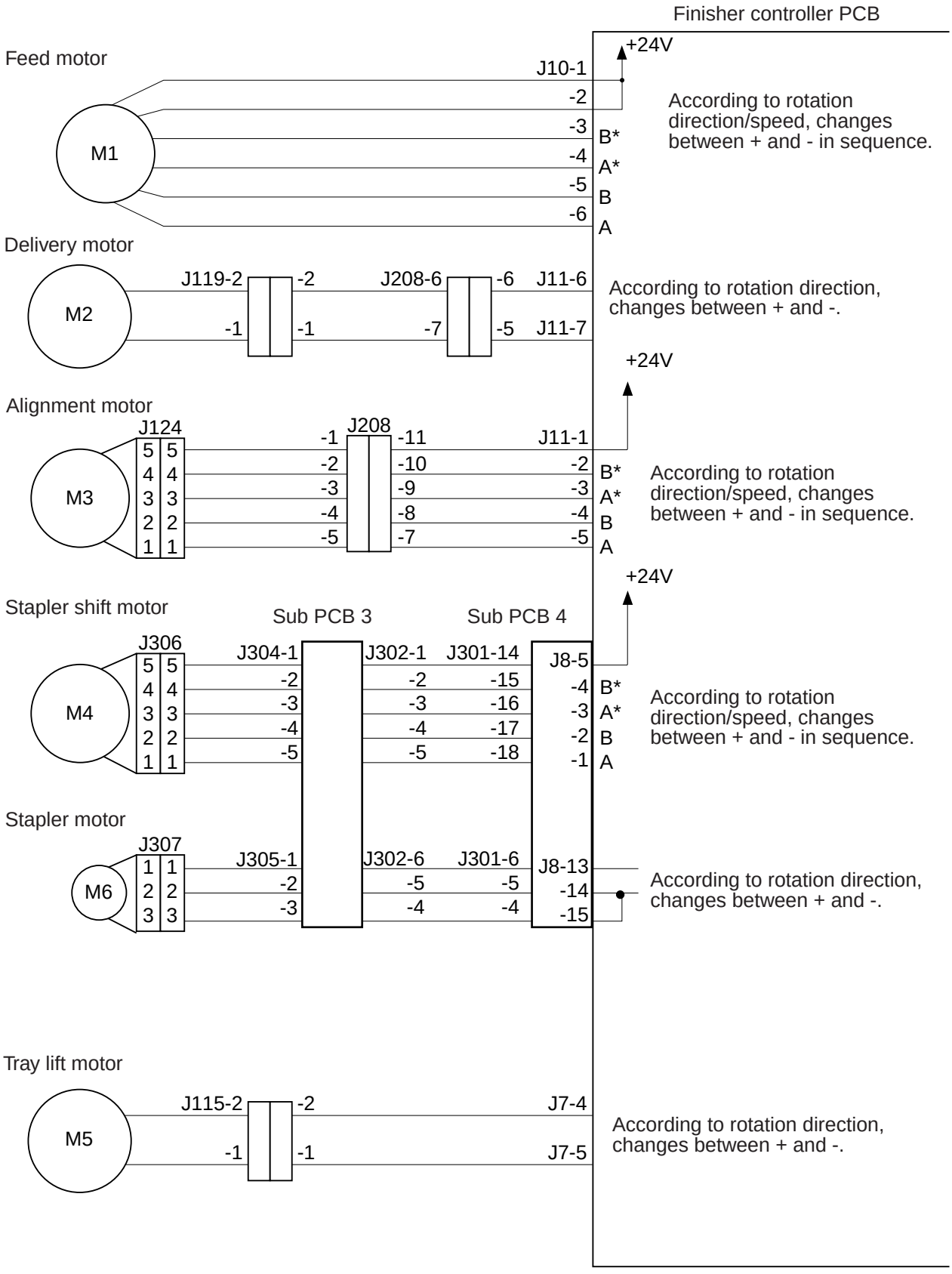

Figure 2-108

COPYRIGHT © 1998 CANON INC. FINISHER-C1/SADDLE FINISHER-C2 REV. 0 DEC. 1998 PRINTED IN JAPAN (IMPRIME AU JAPON)

II. FEED/DRIVE SYSTEM

A. Outline

The finisher is designed to operate according to the commands from its host copier to deliver arriving copies to trays in the appropriate mode: simple stacking, shifting, stapling. Or, the copier may request delivery to the interrupt delivery tray.

See Figure 2-201 for a diagram of the four modes of delivery (five for the Saddle Finisher-C2).

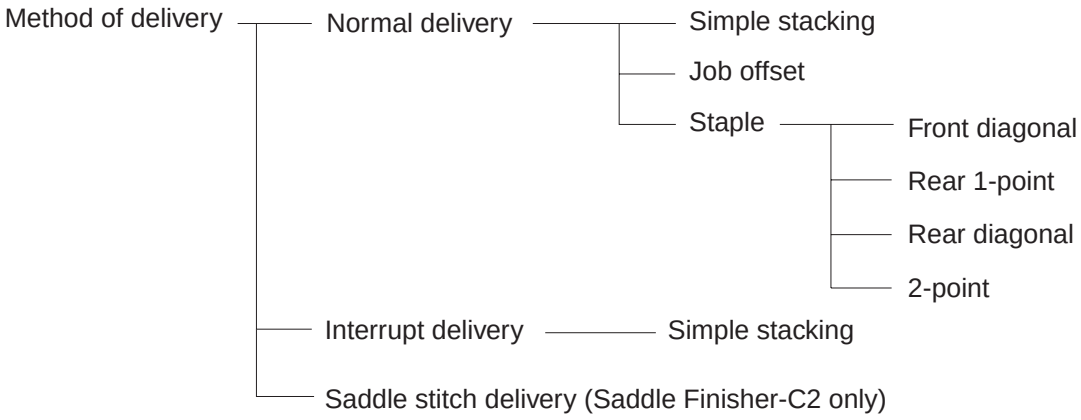

Figure 2-201

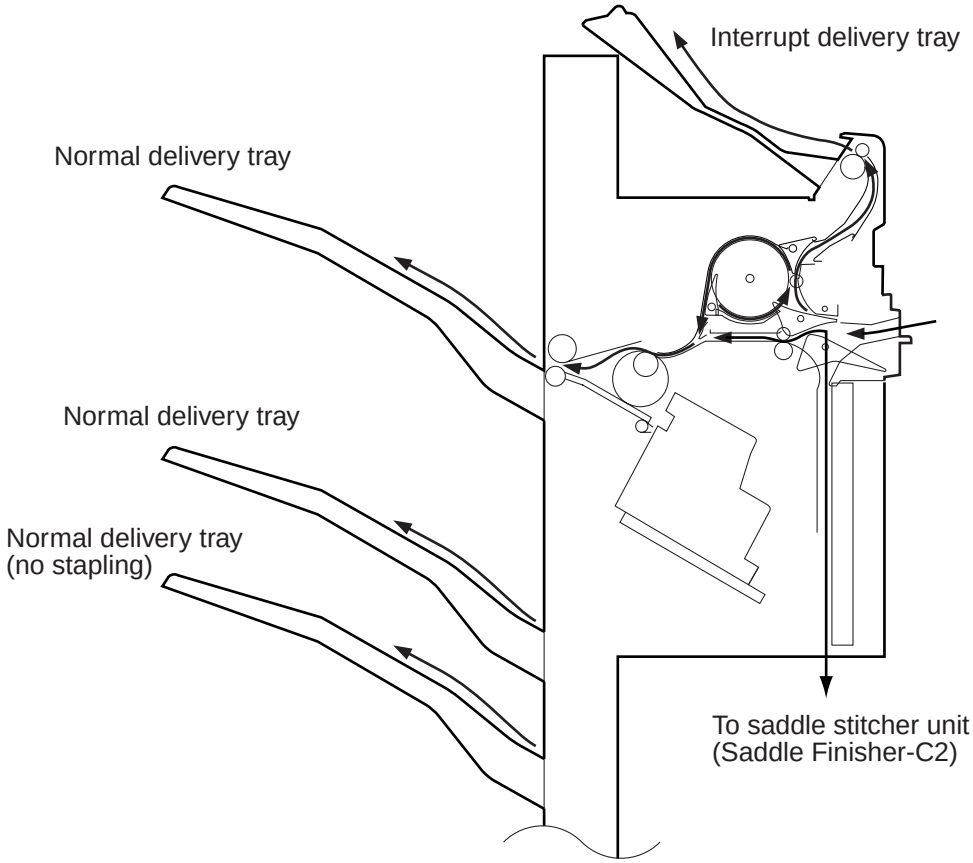

Figure 2-202

1. Normal Delivery

a. Simple Stacking

The finisher delivers copies directly to the tray.

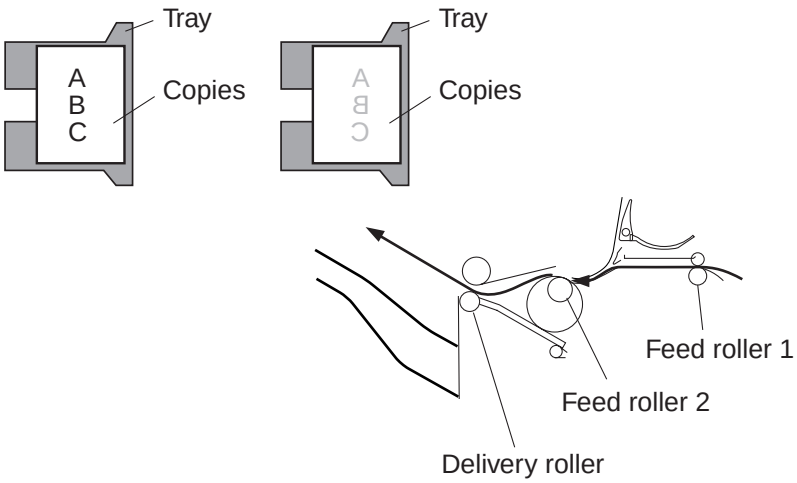

Figure 2-203

b. Job Offset

The finisher forwards the first or the last copy of a sort job to the stapling tray. The copy on the stapling tray is delivered with a shift to the front of about 30 mm. Whether the first copy or the last copy of a sort job should be shifted is determined by the host copier.

All other copies are delivered without being moved through the stapling tray.

- 1st Copy or Last Copy of Each Sort Job

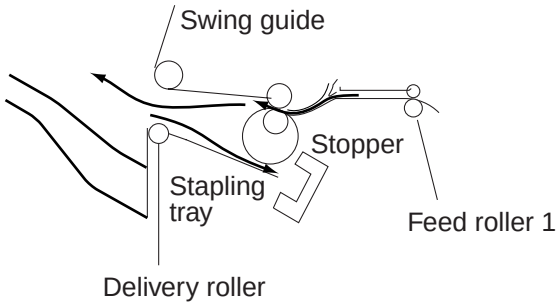

Figure 2-204

- 2nd and Subsequent Copies or Copies Other Than the Last Copy of Each Sort Job

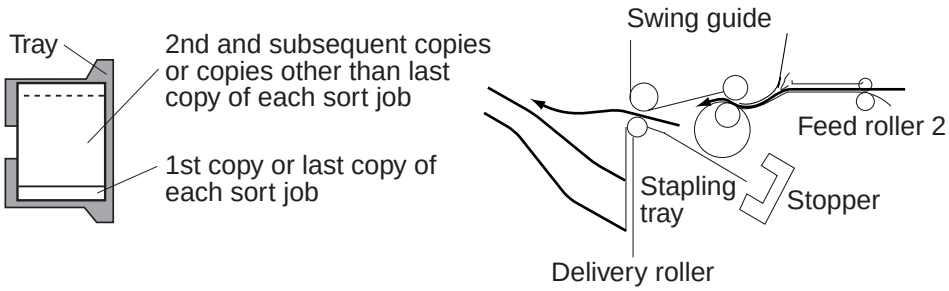

Figure 2-205

COPYRIGHT © 1998 CANON INC. FINISHER-C1/SADDLE FINISHER-C2 REV. 0 DEC. 1998 PRINTED IN JAPAN (IMPRIME AU JAPON)

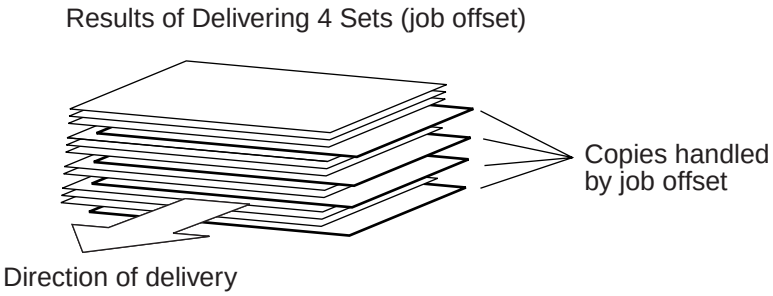

Figure 2-206

c. Stapling

The finisher stacks copies arriving from its host copier on the stapling tray. Then, it staples and delivers the copies to the appropriate tray (except to tray 3).

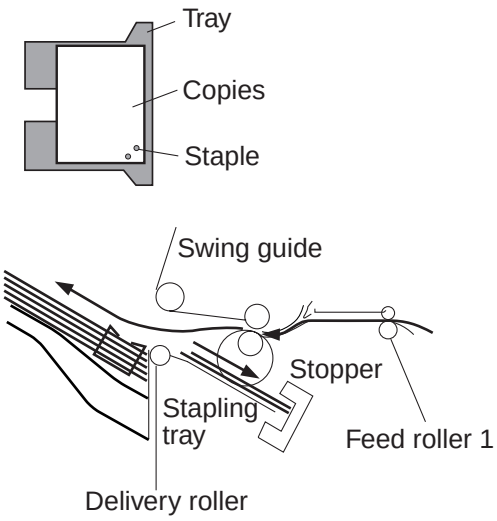

Figure 2-207

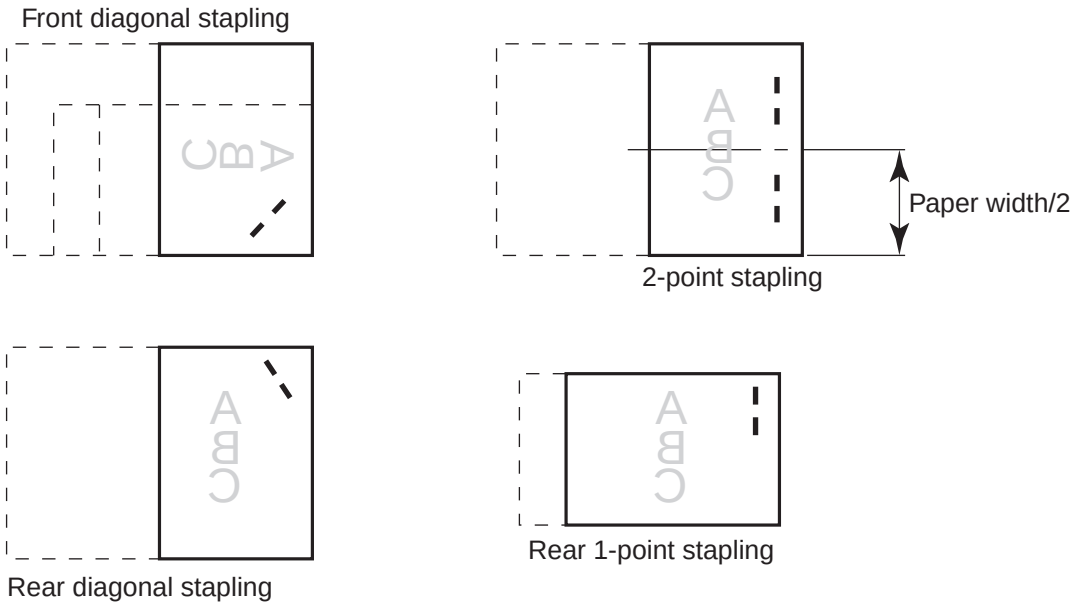

Figure 2-208

2. Interrupt Delivery

A copy arriving in the finisher from the copier is routed by the paper deflecting plate for delivery to the interrupt tray.

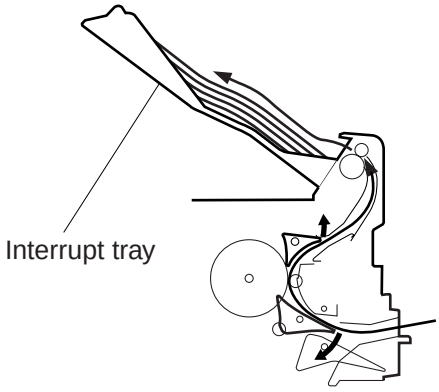

Figure 2-209

COPYRIGHT © 1998 CANON INC. FINISHER-C1/SADDLE FINISHER-C2 REV. 0 DEC. 1998 PRINTED IN JAPAN (IMPRIME AU JAPON)

3. Saddle Stitch Delivery (Saddle Finisher-C2)

A copy arriving in the finisher from the copier is routed to the saddle stitcher by the paper deflecting plate. The saddle stitcher executes stitching and saddling operations on the copy and then delivers it to the saddle stitcher tray.

For discussions of stacks in the saddle stitcher, see Chapter 3.

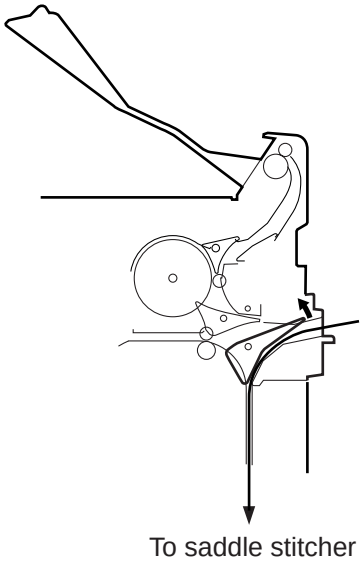

Figure 2-210

B. Types of Delivery Paths

The finisher has three different paper paths for delivery, each selected to suit paper size and delivery mode.

1. Small-Size Paper Route

Small-size copies are moved under the buffer roller.

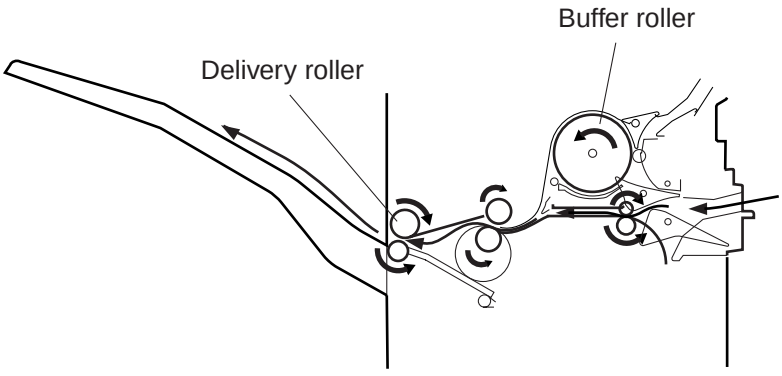

Figure 2-211

2. Large-Size Paper Route

Large-size copies or vertically fed copies are moved over the buffer roller, thereby increasing the distance between copies. For stapling, all copies are moved through this path regardless of size except the first copy.

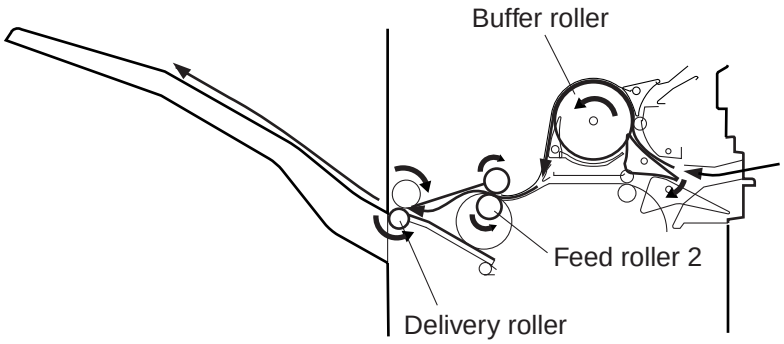

Figure 2-212

3. Buffer Paper Path

The buffer paper path is used for small-size copies when job offset or stapling is selected. The path is for copies to be offset or the first copy that follows the last stapled copy.

1) The first copy is moved in the direction of the buffer roller.

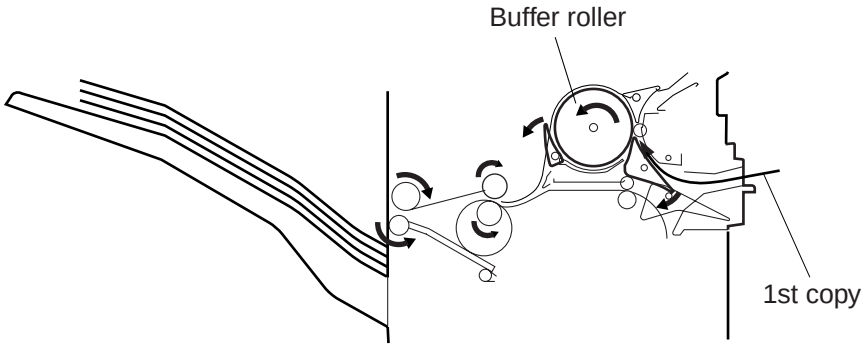

Figure 2-213

2) The first copy wraps around the buffer roller and, at the same time, the second copy arrives from the copier.

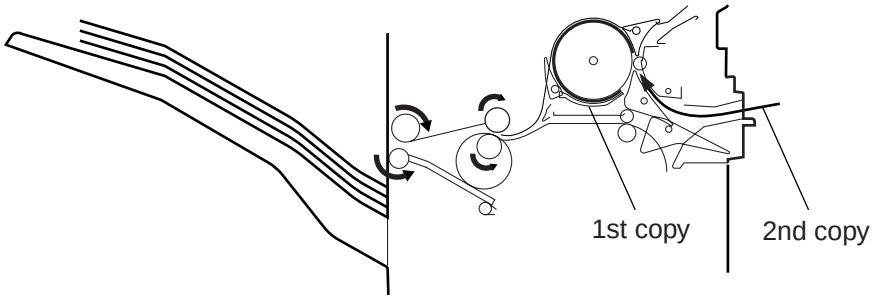

Figure 2-214

COPYRIGHT © 1998 CANON INC. FINISHER-C1/SADDLE FINISHER-C2 REV. 0 DEC. 1998 PRINTED IN JAPAN (IMPRIME AU JAPON)

3) The second copy is laid over the first copy.

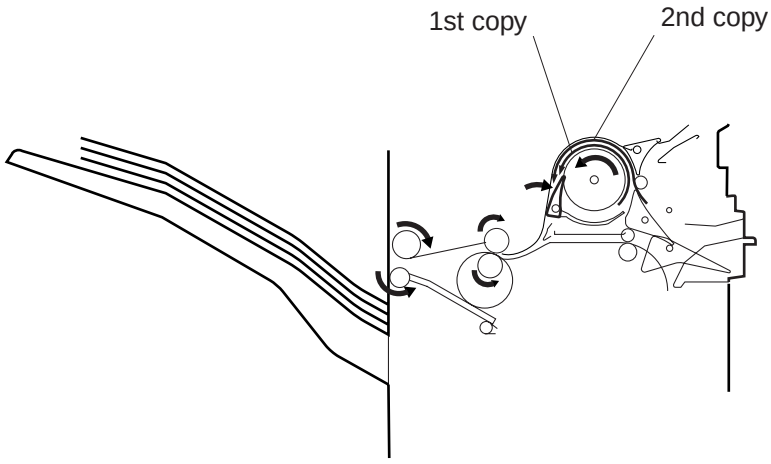

Figure 2-215

4) The first and second copies are simultaneously delivered to the tray. Or, they are pulled into the stapling tray.

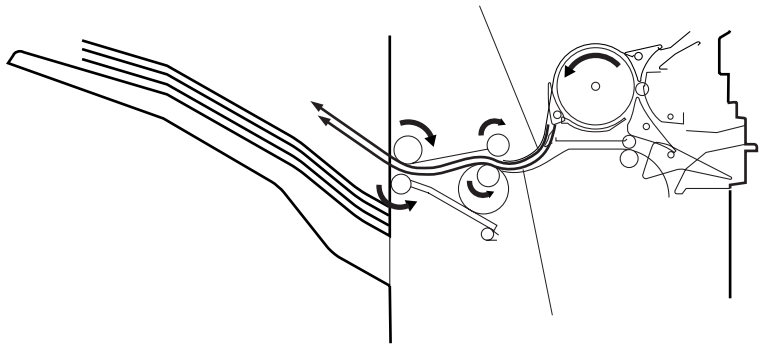

Figure 2-216

Cauiton:

The second copy as explained here is moved through the large-size paper path. The fact is omitted from the discussion to avoid interrupting the sequence of operations.

C. Feeding and Delivering

1. Outline

The finisher moves copies arriving from the copier to the normal tray, interrupt tray, or the saddle stitcher unit (Saddle Finisher-C2) according to the mode of delivery. On the trays, the copies are subjected to job offset or stapling as instructed by the copier.

The feed motor (M1) is a stepping motor, and the delivery motor (M2) is a DC motor. These motors are controlled by the microprocessor (CPU) on the finisher controller PCB, and rotate either clockwise or counterclockwise.

The paper paths are equipped with the following five sensors for detection of paper (arrival, passage):

- Inlet sensor (PI1)
- Delivery sensor (PI3)
- Stapling tray sensor (PI4)
- Buffer path paper sensor (PI14)
- Buffer path inlet paper sensor (PI17)

In addition, each delivery tray is equipped with a sensor designed to detect the presence/absence of paper on it.

- No 1 tray paper sensor (PI11)
- No. 2 tray paper sensor (PI12)
- No. 3 tray paper sensor (PI13)

If a copy fails to reach or move past each sensor within a specific period of time, the finisher controller PCB identifies the condition as a jam, and stops the ongoing operation and at the same time informs the copier of the condition.

COPYRIGHT © 1998 CANON INC. FINISHER-C1/SADDLE FINISHER-C2 REV. 0 DEC. 1998 PRINTED IN JAPAN (IMPRIME AU JAPON)

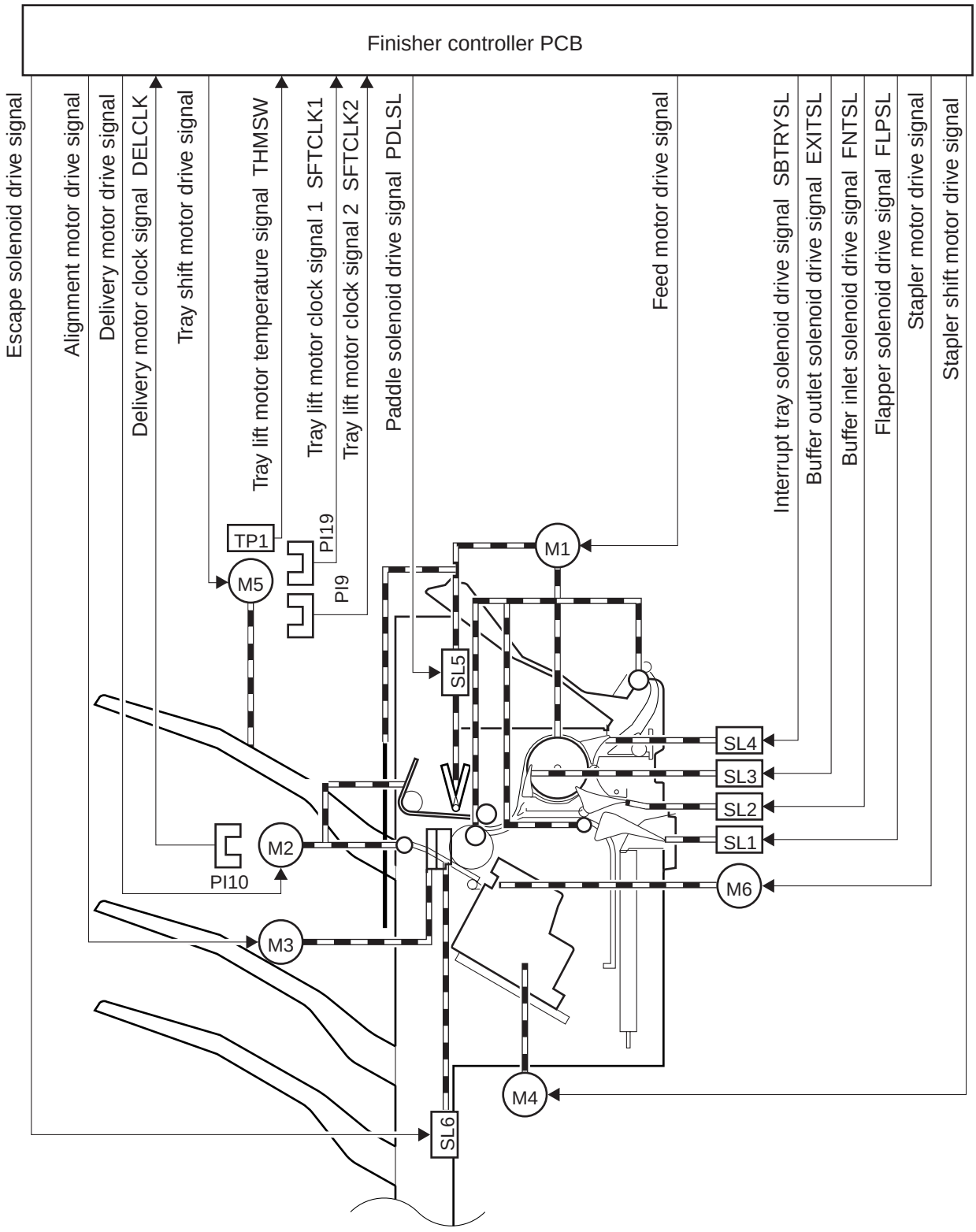

Figure 2-217

COPYRIGHT © 1998 CANON INC. FINISHER-C1/SADDLE FINISHER-C2 REV. 0 DEC. 1998 PRINTED IN JAPAN (IMPRIME AU JAPON)

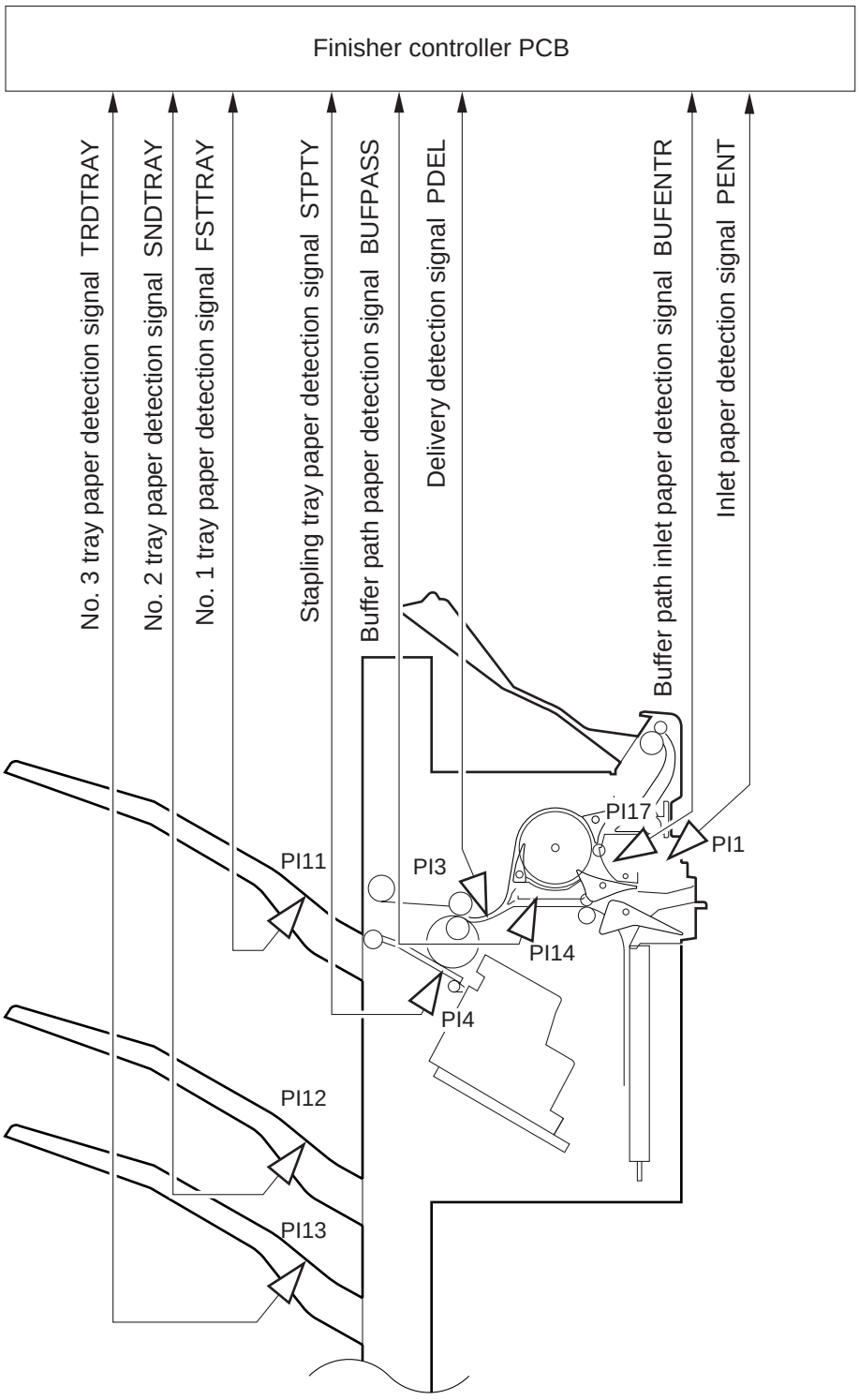

Figure 2-218

COPYRIGHT © 1998 CANON INC. FINISHER-C1/SADDLE FINISHER-C2 REV. 0 DEC. 1998 PRINTED IN JAPAN (IMPRIME AU JAPON)

D. Job Offset

1. Outline

In job offset mode, the first copy or the last copy is shifted to the front for delivery to the tray. Other copies are delivered to the tray without a shift.

The copies are shifted by the alignment plate. The alignment plate is checked by the alignment home position sensor (PI6) to find out whether it is in home position.

The finisher drive PCB drives the alignment plate motor (M3) at power-on to return the alignment plate to its home position.

The finisher controller PCB stops the delivery motor (M2) when the trailing edge of the copy has moved past the feed roller 2. Then, the finisher controller PCB rotates the delivery motor counterclockwise, thereby switching the gear assembly of the delivery motor to the swing guide mechanism. As a result, the drive of the delivery motor is transmitted to the swing guide to move up the guide. When the swing guide open sensor (PI18) detects the swing guide, the delivery motor stops, and the swing guide is held in up position.

When the swing guide has moved up, the feed belts attached to the feed roller 2 move the copy to the stapling tray. The presence of paper on the stapling tray is monitored by the stapling tray paper sensor (PI4).

The finisher controller PCB drives the alignment motor (M3) in advance, and keeps the alignment plate in wait at a point 7 mm behind the trailing edge of a sheet. When the sheet is moved to the stapling tray, the guide plate retaining solenoid (SL6) moves the guide plate away and under the stapling tray. Thereafter, the alignment motor shifts the sheet to the front by 30 mm.

When the copy has been shifted, the finisher controller PCB rotates the alignment motor counterclockwise to move the alignment plate to a point 7 mm behind the trailing edge of the sheet.

Thereafter, the delivery motor is rotated farther counterclockwise to move the swing guide down. When the swing guide has moved down and turned on the swing guide open/closed detecting switch 2 (MS6), the delivery motor rotates clockwise to deliver the sheet. The guide plate returns to up position upon delivery of the sheet.

COPYRIGHT © 1998 CANON INC. FINISHER-C1/SADDLE FINISHER-C2 REV. 0 DEC. 1998 PRINTED IN JAPAN (IMPRIME AU JAPON)

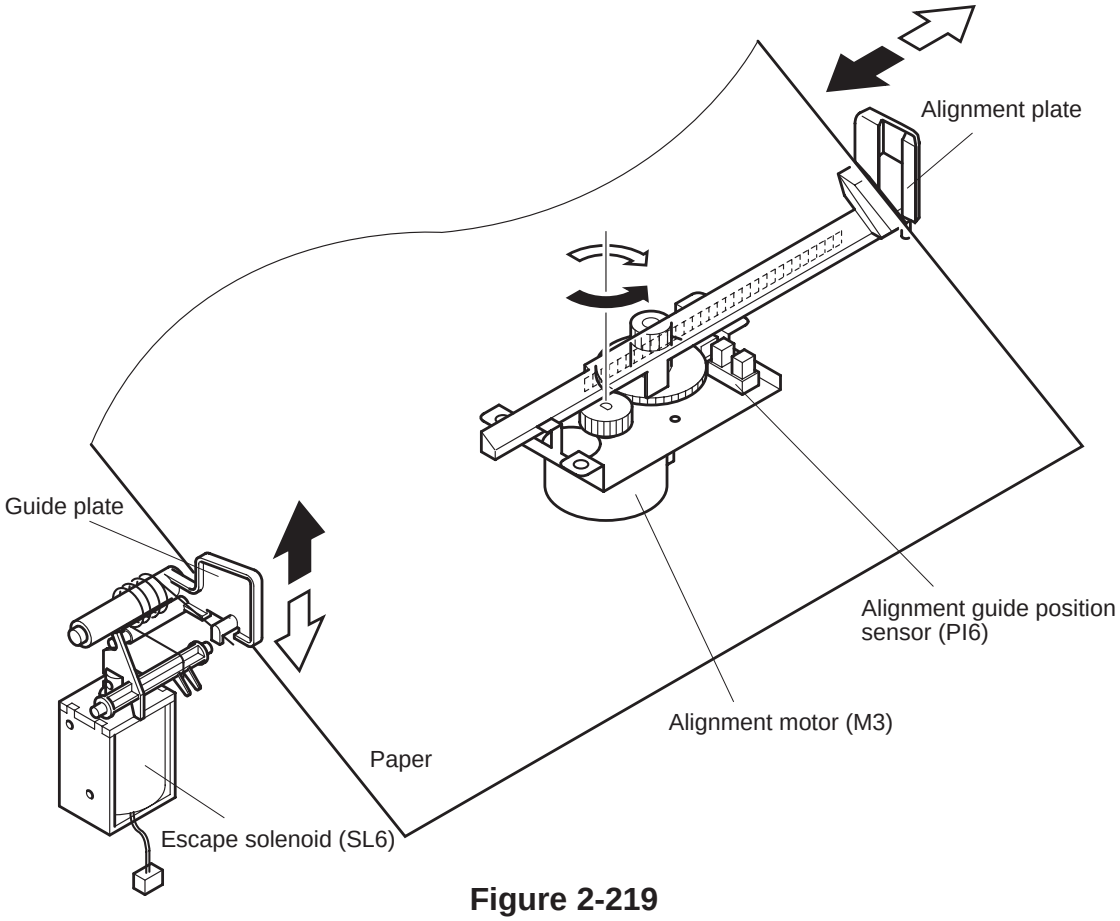

Figure 2-219

Sequence of Operations (job offset)

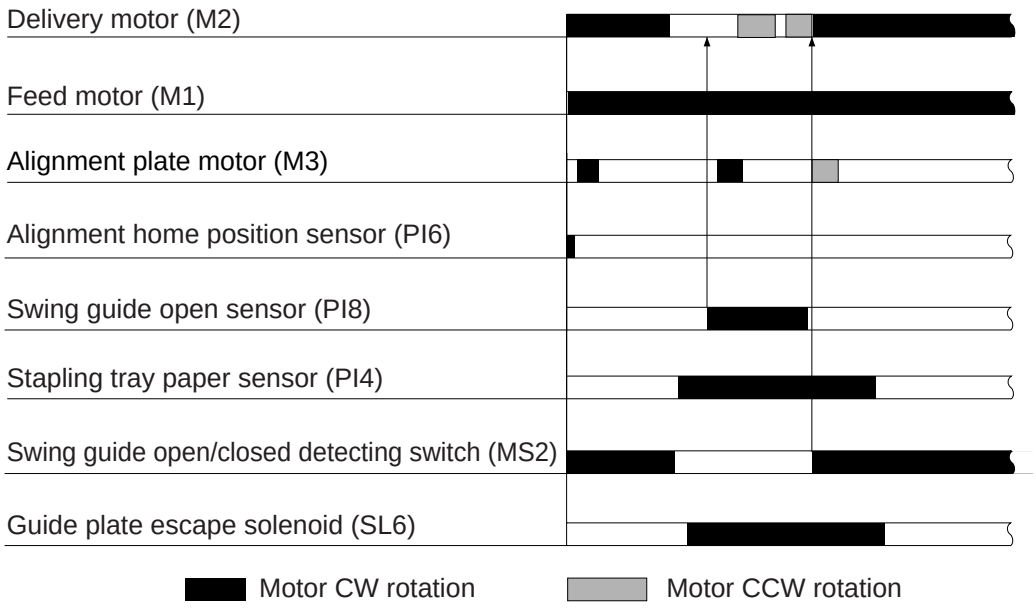

Figure 2-220

COPYRIGHT © 1998 CANON INC. FINISHER-C1/SADDLE FINISHER-C2 REV. 0 DEC. 1998 PRINTED IN JAPAN (IMPRIME AU JAPON)

2. Flow of Job Offset Operations

1) The swing guide moves up and, at the same time, the feed belts move the sheet to the stapling tray.

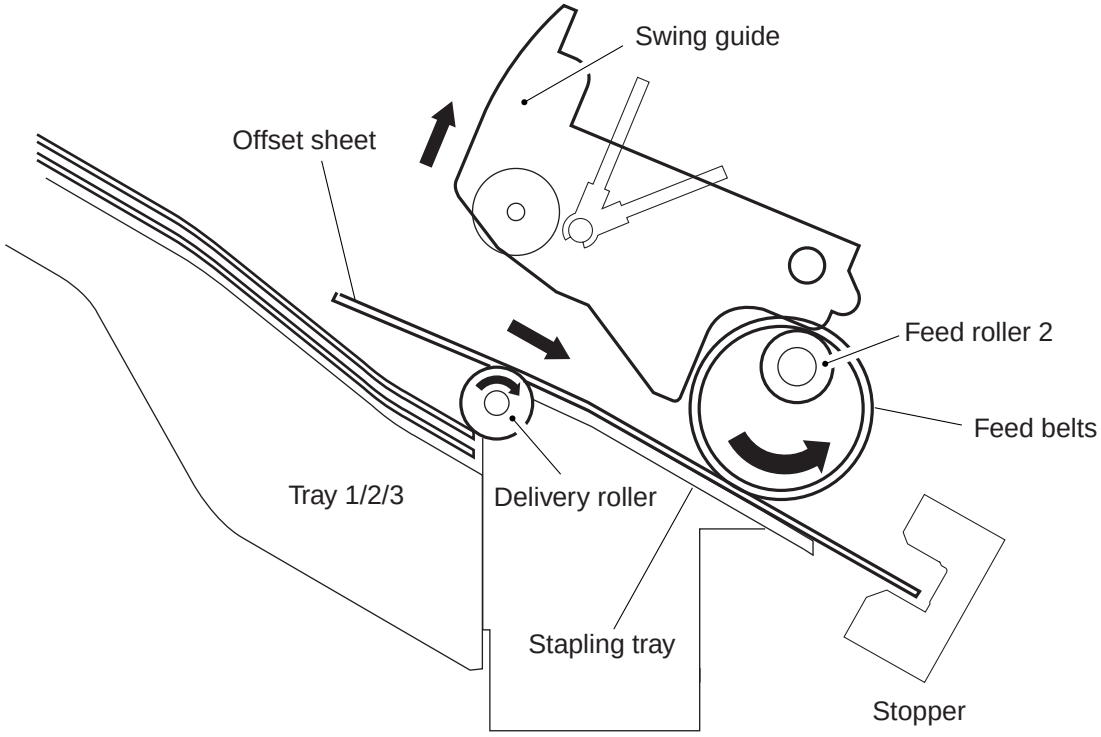

Figure 2-221

2) The alignment plate shifts the sheet to the front.

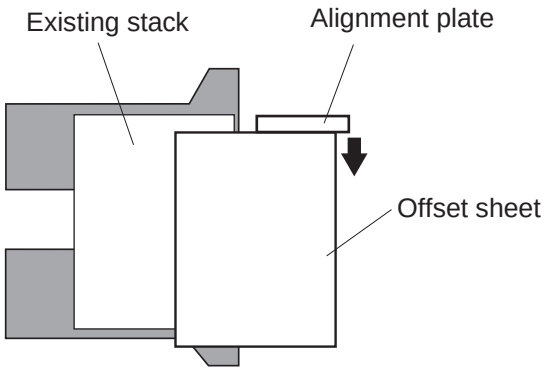

Figure 2-222

3) The swing guide moves down and, at the same time, the delivery roller delivers the sheet.

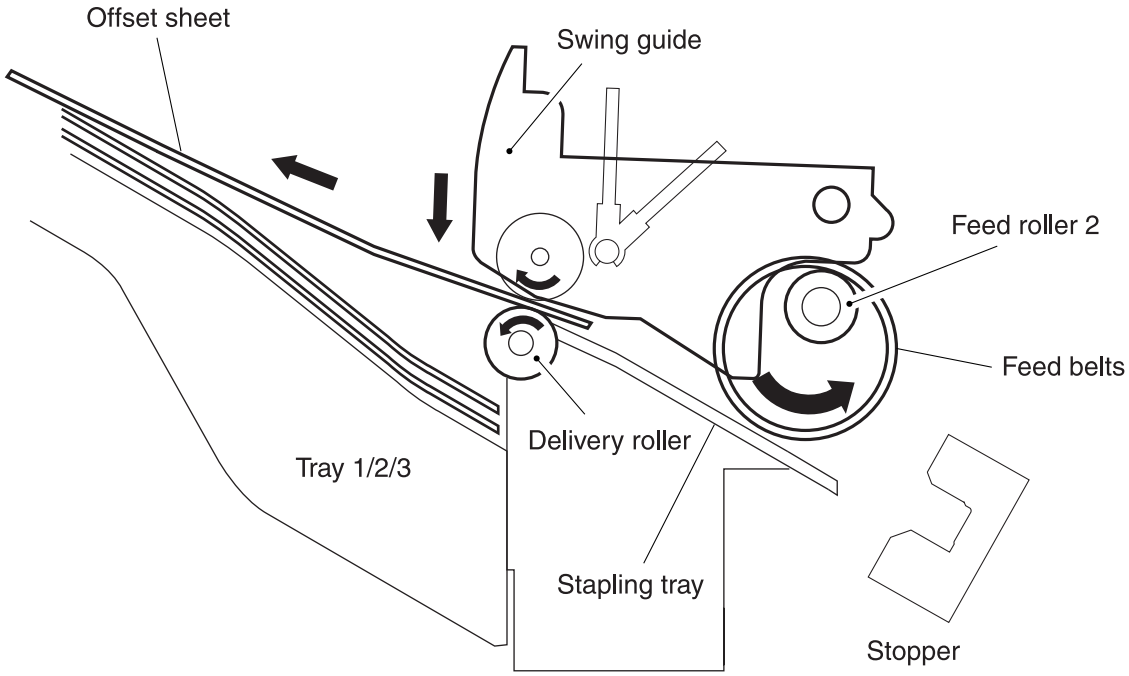

Figure 2-223

E. Stapling Operation

1. Outline

The stapler unit staples a stack of as many sheets as specified.

The stapling position differs according to the selected staple mode and paper size.

The stapler unit is checked by the stapler shift home position sensor (PI7) to find out whether it is in home position.

When starting operation after power-on, the finisher driver PCB drives the stapler shift motor (M4) to return the stapler unit to home position. If the stapler is already in home position, it is kept as it is in wait.

COPYRIGHT © 1998 CANON INC. FINISHER-C1/SADDLE FINISHER-C2 REV. 0 DEC. 1998 PRINTED IN JAPAN (IMPRIME AU JAPON)

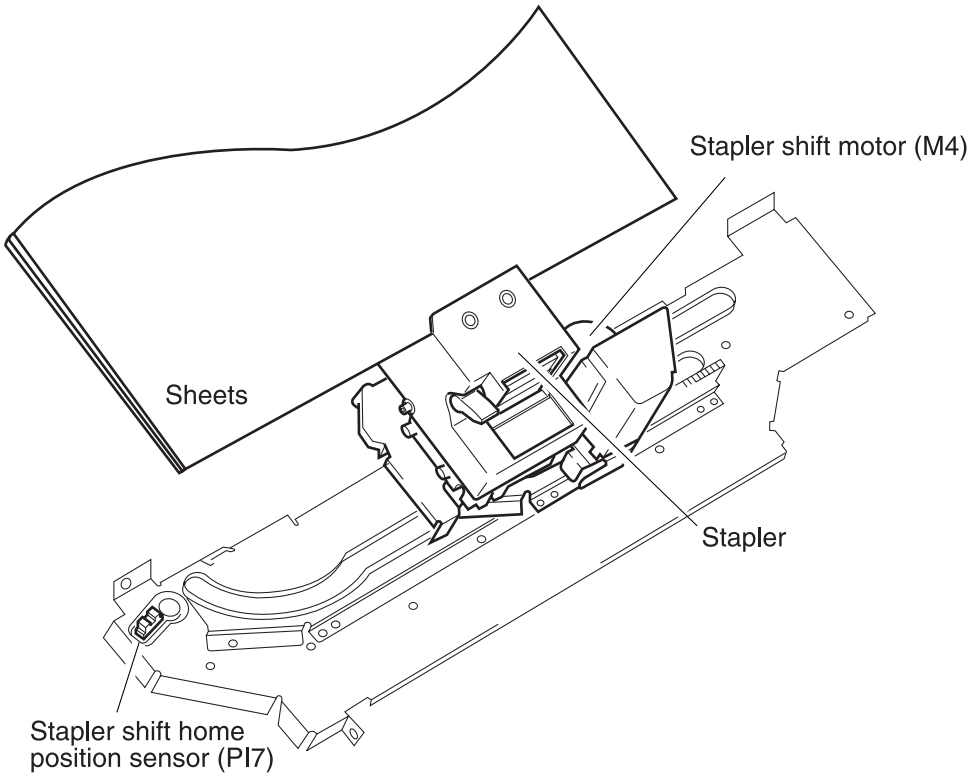

Figure 2-224

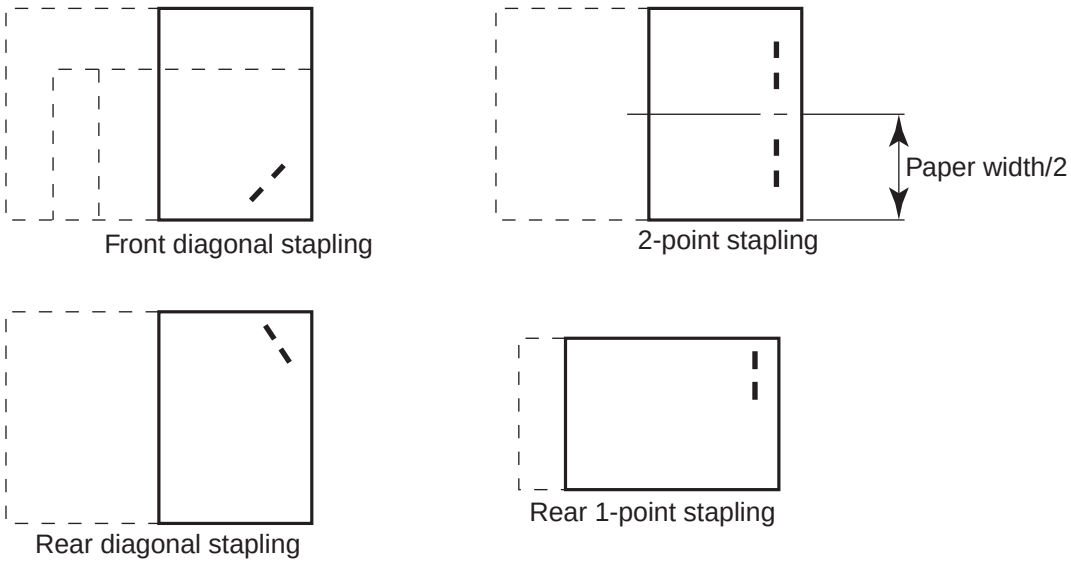

Figure 2-225

2. First Sheet

The finisher controller PCB stops the delivery motor (M2) as soon as the trailing edge of the first sheet has moved past the delivery roller. Then, it rotates the delivery motor clockwise to switch the gear drive to the swing guide mechanism, causing the swing guide to move up. When the swing guide open sensor (PI18) finds the swing guide in up position, the delivery motor stops, thereby maintaining the swing guide in up position.

When the swing guide has moved up, the feed belts of the feed roller 2 move the sheet to the stapling tray. The presence of paper on the stapling tray is detected by the stapling tray paper sensor (PI4).

The finisher controller PCB drives the alignment plate shift motor (M3) when the stapling tray paper sensor has detected paper to put sheets in order. The alignment plate is kept in wait in advance at a point 10 mm behind the trailing edge of the paper.

The swing guide is kept in wait in up position until the last sheet is deposited on the stapling tray.

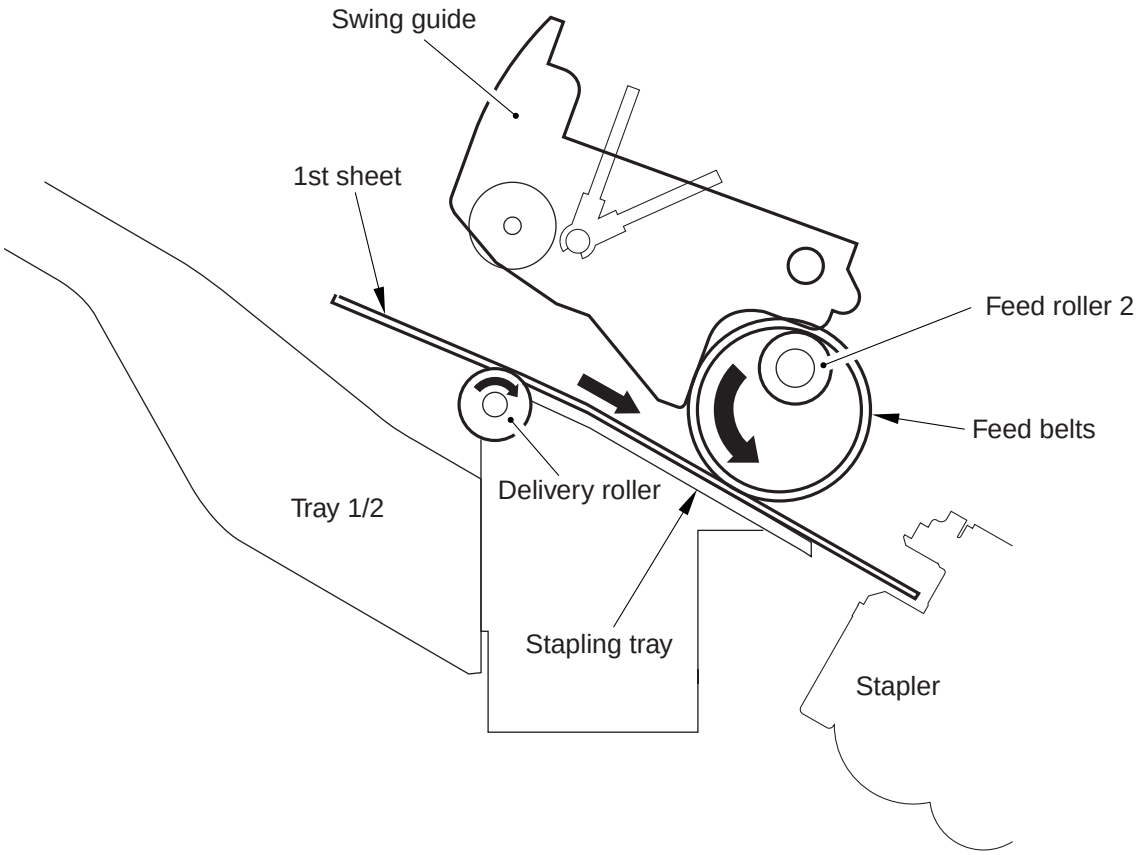

Figure 2-226

COPYRIGHT © 1998 CANON INC. FINISHER-C1/SADDLE FINISHER-C2 REV. 0 DEC. 1998 PRINTED IN JAPAN (IMPRIME AU JAPON)

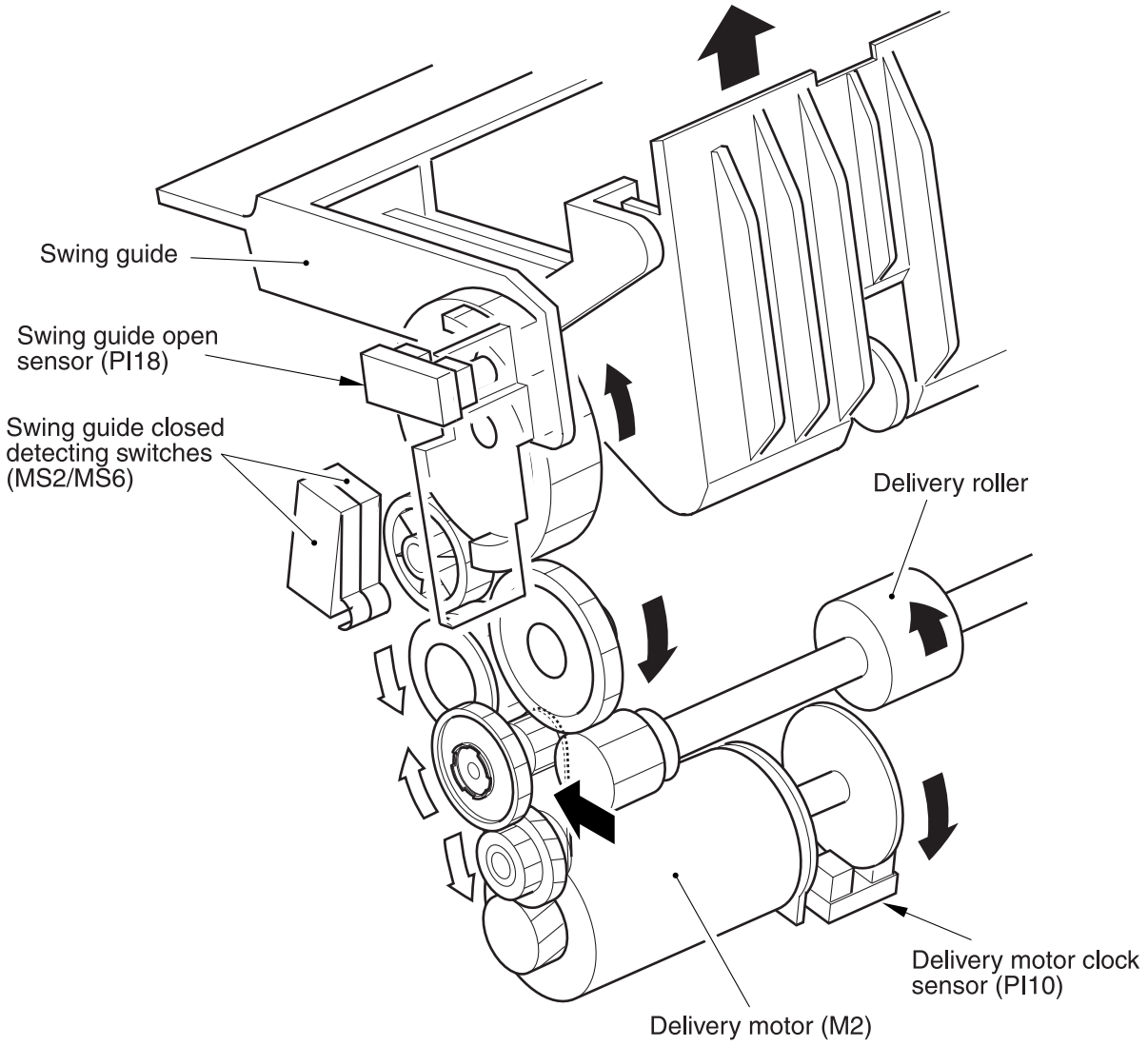
Swing guide
Swing guide open sensor (PI18)
Swing guide closed detecting switches (MS2/MS6)
Delivery roller
Delivery motor clock sensor (PI10)
Delivery motor (M2)

Figure 2-227

3. 2nd and Subsequent Sheets

The finisher controller PCB turns on the paddle solenoid (SL5) as soon as the trailing edge of the second and subsequent sheets have moved past the feed roller 2, thereby causing the drive of the feed motor to rotate the paddle.

The sheets are pushed by the paddle and moved to the stapling tray. The paddle operates twice for each sheet of B4, A3, 297 × 432mm (11 × 17), or LGL and once for other sizes. When the sheet has been deposited to the stapling tray, the finisher controller PCB rotates the alignment plate shift motor (M3) to put the sheets in order.

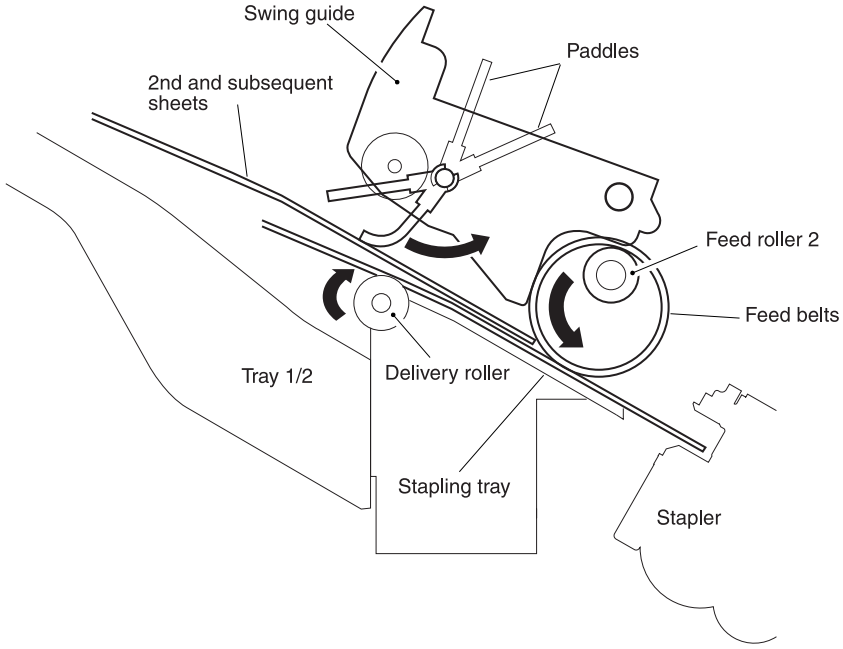

Figure 2-228

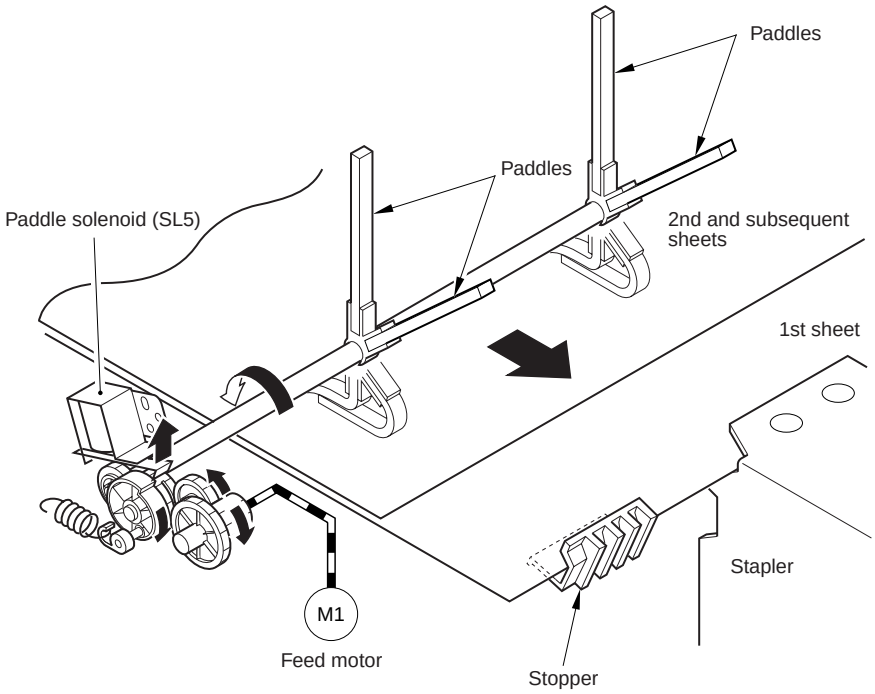

Figure 2-229

COPYRIGHT © 1998 CANON INC. FINISHER-C1/SADDLE FINISHER-C2 REV. 0 DEC. 1998 PRINTED IN JAPAN (IMPRIME AU JAPON)

4. Last Sheet

When the last sheet has been put into order, the finisher controller PCB turns on the alignment motor (M3) to move the alignment plate to the alignment position (to butt the plate against the stack). Then, the finisher controller PCB rotates the delivery motor (M2) counterclockwise to move down the swing guide.

The finisher controller PCB moves the stapler according to the staple mode selected on the copier for stapling.

When stapling operation ends, the finisher controller PCB drives the alignment motor, and moves the alignment plate to a point 10 mm behind the trailing edge of the paper. Thereafter, it rotates the delivery motor (M2) clockwise to delivery the stack to the tray.

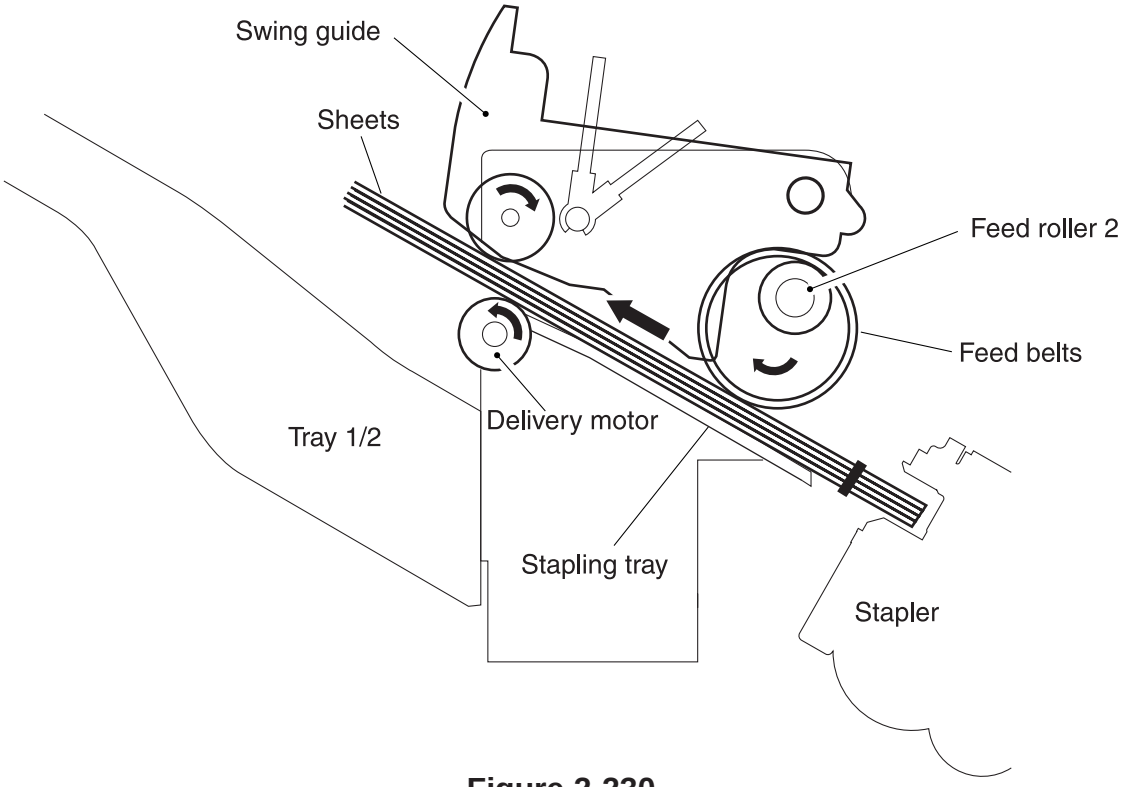

Figure 2-230

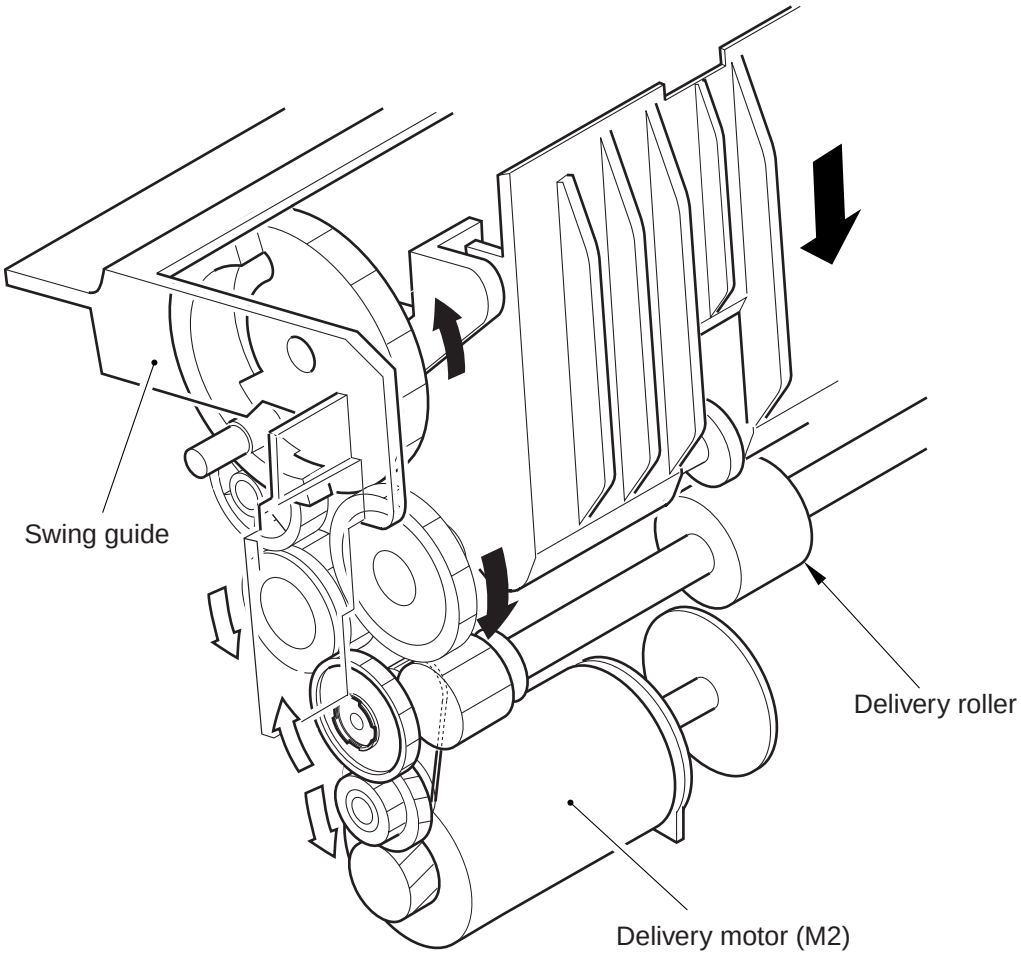

Figure 2-240

F. Stapler Unit

Stapling is executed by the stapler motor (M6). A single rotation of the cam by the motor results in one stapling operation.

The cam is checked by the stapling home position sensor (PI21) to find out whether it is in home position.

The stapler motor is controlled by the microprocessor (Q1) on the finisher controller so that it is rotated clockwise or counterclockwise.

When the stapling home position sensor is off, the finisher controller PCB rotates the stapler motor counterclockwise until the sensor turns on so as to return the stapling cam to its initial state.

The presence/absence of a staple cartridge is detected by the staple cartridge detecting switch (MS8).

The presence/absence of staples inside the staple cartridge is detected by the staple detecting switch (MS9). The staple edge sensor (PI20) is used to find out whether a staple has been edged out to the end of the cartridge.

The finisher controller PCB does not drive the stapler motor (M6) unless the swing guide closed detecting switch 2 (MS6) is on (i.e., the swing guide is closed). This is to protect against injuries that could occur as when a finger is stuck inside the stapler.

COPYRIGHT © 1998 CANON INC. FINISHER-C1/SADDLE FINISHER-C2 REV. 0 DEC. 1998 PRINTED IN JAPAN (IMPRIME AU JAPON)

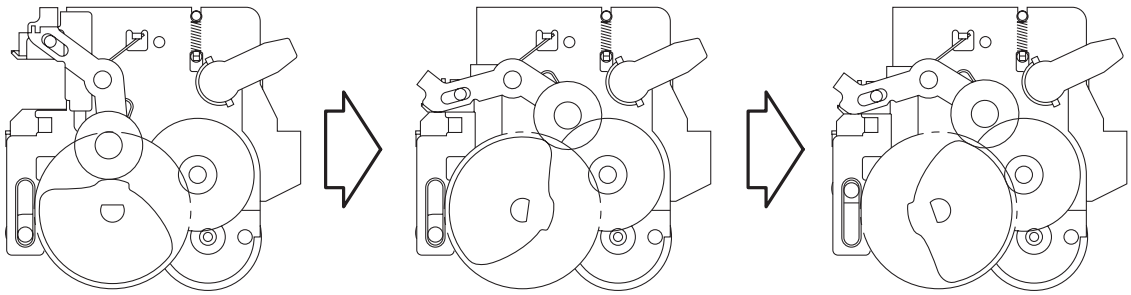

Figure 2-241

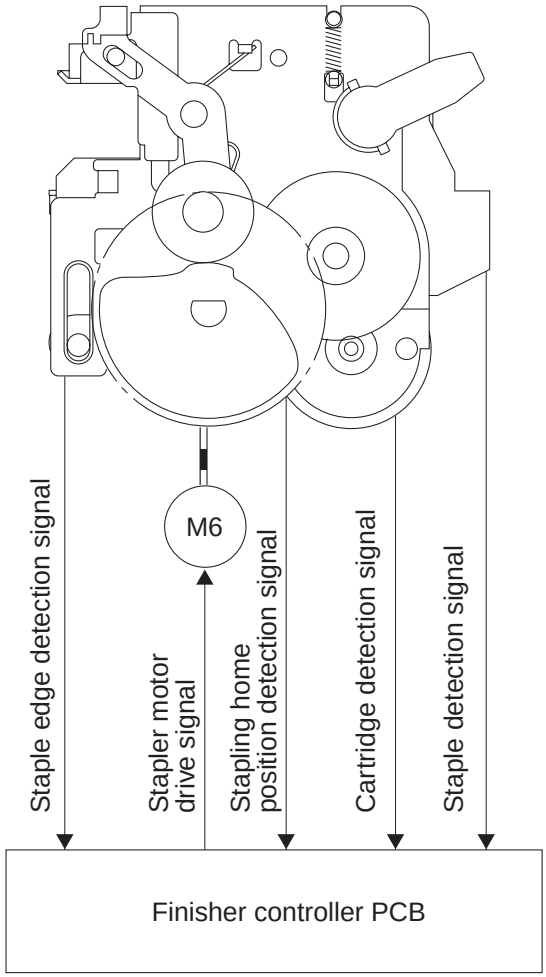

Figure 2-242

2 Sheets, Rear 1-Point Stapling

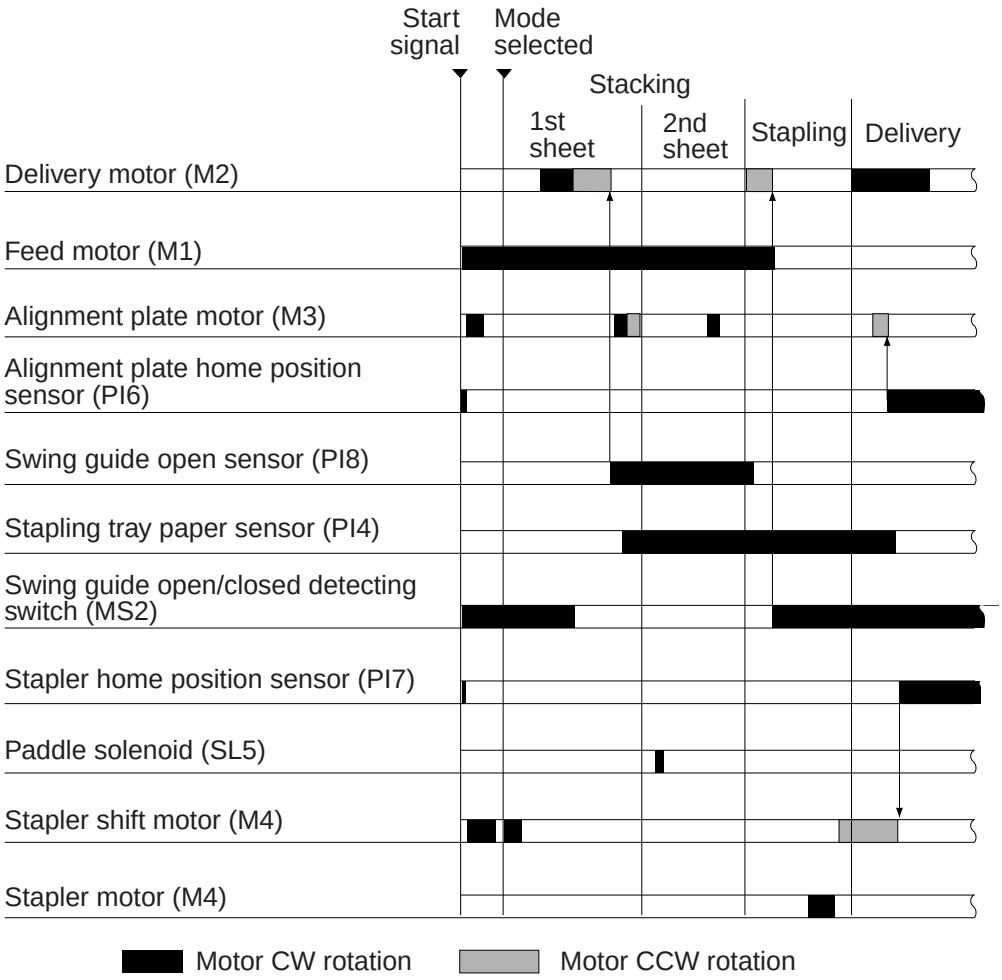

Figure 2-243

COPYRIGHT © 1998 CANON INC. FINISHER-C1/SADDLE FINISHER-C2 REV. 0 DEC. 1998 PRINTED IN JAPAN (IMPRIME AU JAPON)

5. Shifting the Stapler Unit

The stapler unit is moved by the stapler shift motor (M4). Its home position is detected by the stapler shift home position sensor (PI7). When the start signal arrives from the host copier, the stapler moves to the center of its movement range. This movement occurs regardless of the selected mode of delivery, as no specific mode is recognized at this point in time.

When the command for stapling arrives from the host copier after the first sheet has reached the copier pre-registration sensor, the stapler moves to the staple wait position to suit the appropriate stapling position and paper size.

See Figures 2-244 and later for an idea of wait position according to stapling mode.

a. Front Diagonal Stapling

The position is the same as stapling position.

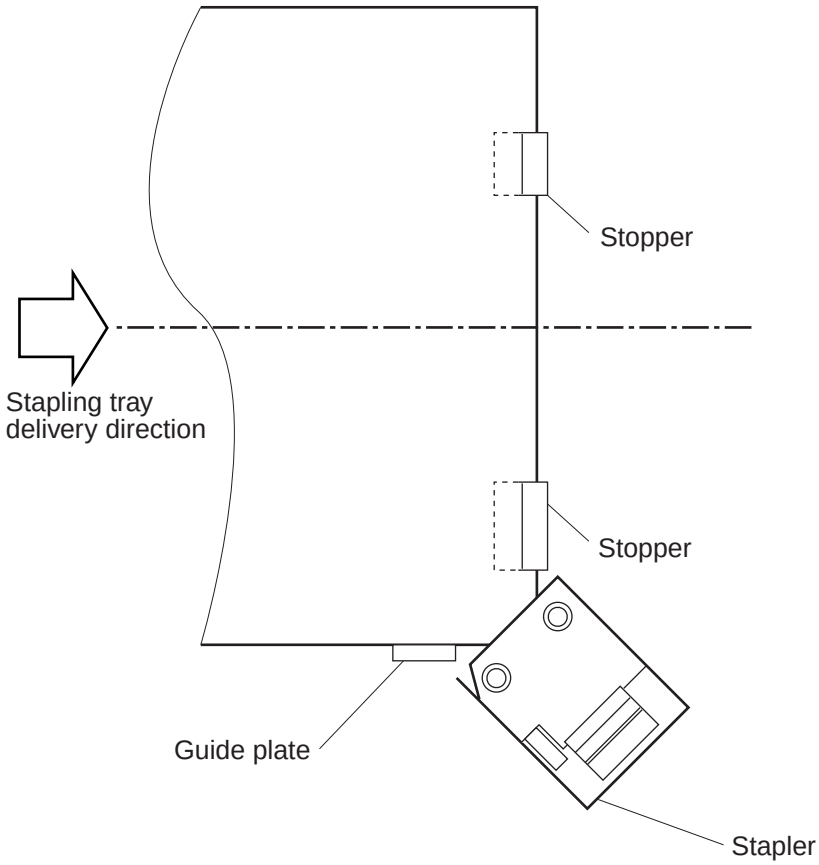

Figure 2-244

b. Rear 1-Point Stapling

The stapler is kept in wait at center position. The stapler is moved to and from stapling position for each stapling operation.

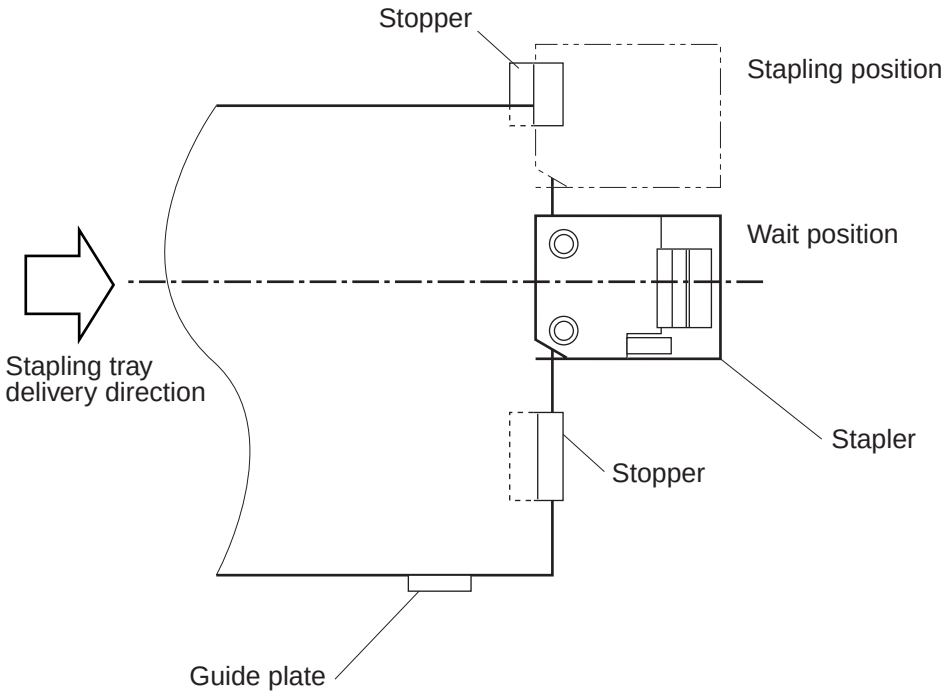

Figure 2-245

COPYRIGHT © 1998 CANON INC. FINISHER-C1/SADDLE FINISHER-C2 REV. 0 DEC. 1998 PRINTED IN JAPAN (IMPRIME AU JAPON)

c. Rear Diagonal Stapling

For LTR and B5 sizes, the stapler is kept in wait toward the rear away from stapling position. The stapler is moved to and from stapling position for each stapling operation.

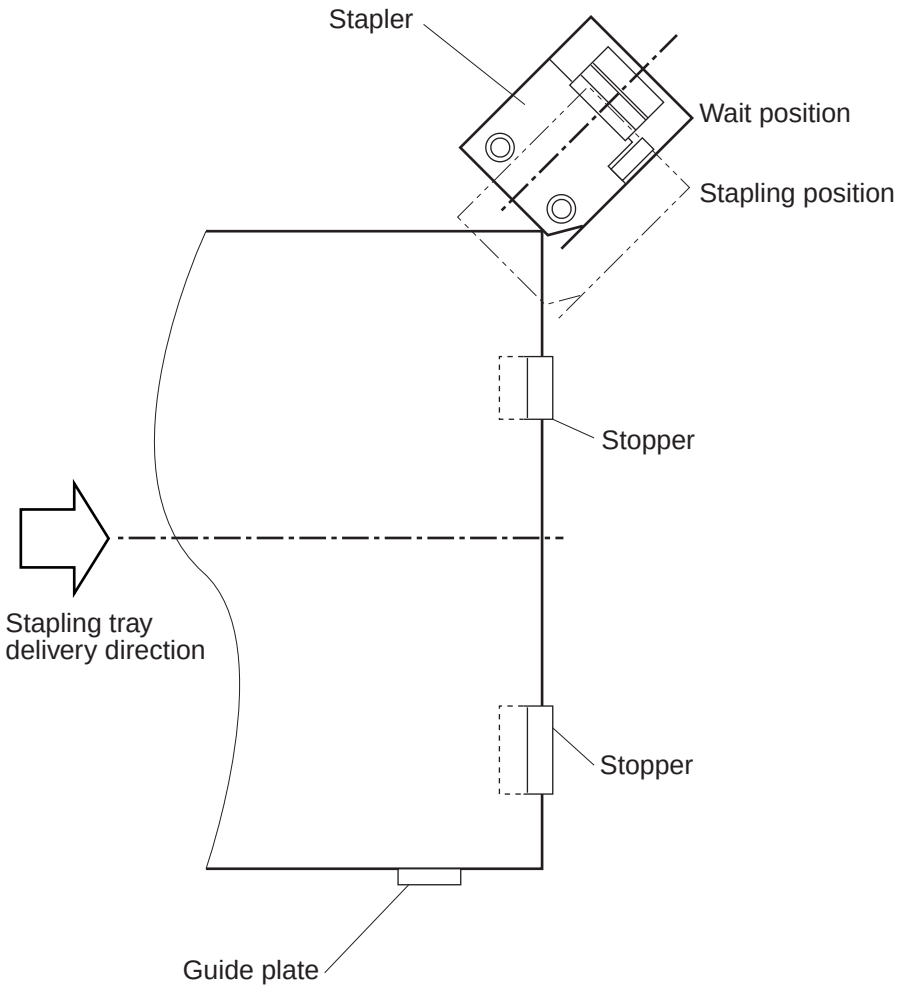

Figure 2-246

d. 2-Point Stapling

The stapler is kept in wait at center of paper. Stapling occurs at two points, first at the rear and then the front.

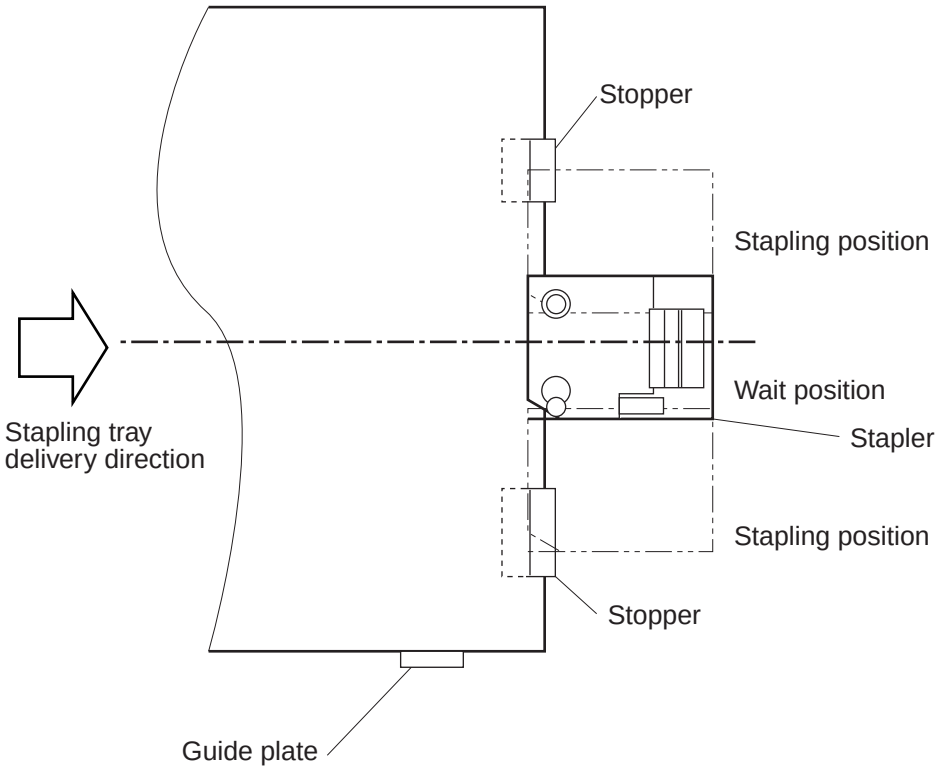

Figure 2-247

COPYRIGHT © 1998 CANON INC. FINISHER-C1/SADDLE FINISHER-C2 REV. 0 DEC. 1998 PRINTED IN JAPAN (IMPRIME AU JAPON)

G. Tray Operation

The finisher has three delivery trays for normal delivery, each accepting sheets.

Each tray is moved up and down by the tray lift motor (M5).

The position of the tray is identified with reference to the number of clock pulses of the tray lift motor clock sensor 1/2 (PI19/PI9) coming from the tray home position sensor (PI8). The finisher controller PCB finds out in which direction (up or down) the tray is moving based on combinations of pulses from the two clock sensors.

The tray lift motor is equipped with a thermal sensor (TP1). If the sensor reading reaches about 73.5°C when the motor has operated continuously, the finisher controller PCB stops motor loads. The sensor turns off when its reading drops to about 40°C, causing the finisher driver PCB to return motor loads.

The finisher controller PCB drives the tray lift motor (M5) to return the tray to home position at power-on. If the tray is already in home position, it is kept in wait as it is.

The finisher driver PCB moves up and down the tray selected by the copier so that it is positioned at the delivery slot.

The upper limit of the tray is detected by the tray upper limit detecting switch (MS5). The finisher controller PCB stops the drive (up) of the tray lift motor (M5) as soon as the tray upper limit detecting switch turns on.

The height of the stack on the tray is identified by the height sensor (PS1), which measures its distance from the top of the stack. The tray is moved down when the distance between the top of the stack and the delivery assembly drops to a specific measurement.

The finisher driver PCB cuts off the +24V power of the tray lift motor (M5) as soon as the safety zone detecting switch (MS3) turns on while the shutter and the swing guide are open, thereby stopping the operation of the finisher.

COPYRIGHT © 1998 CANON INC. FINISHER-C1/SADDLE FINISHER-C2 REV. 0 DEC. 1998 PRINTED IN JAPAN (IMPRIME AU JAPON)

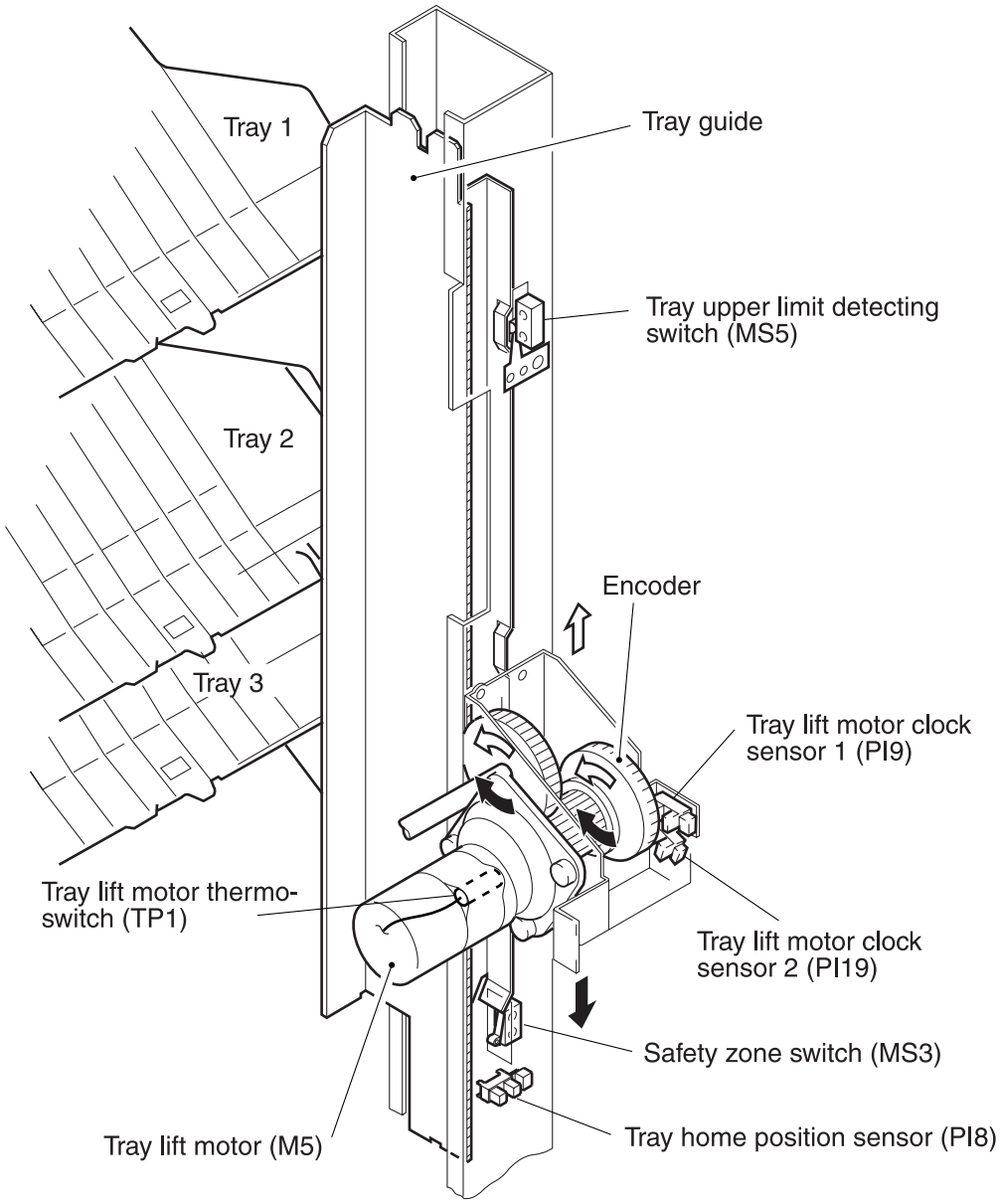

Figure 2-248

COPYRIGHT © 1998 CANON INC. FINISHER-C1/SADDLE FINISHER-C2 REV. 0 DEC. 1998 PRINTED IN JAPAN (IMPRIME AU JAPON)

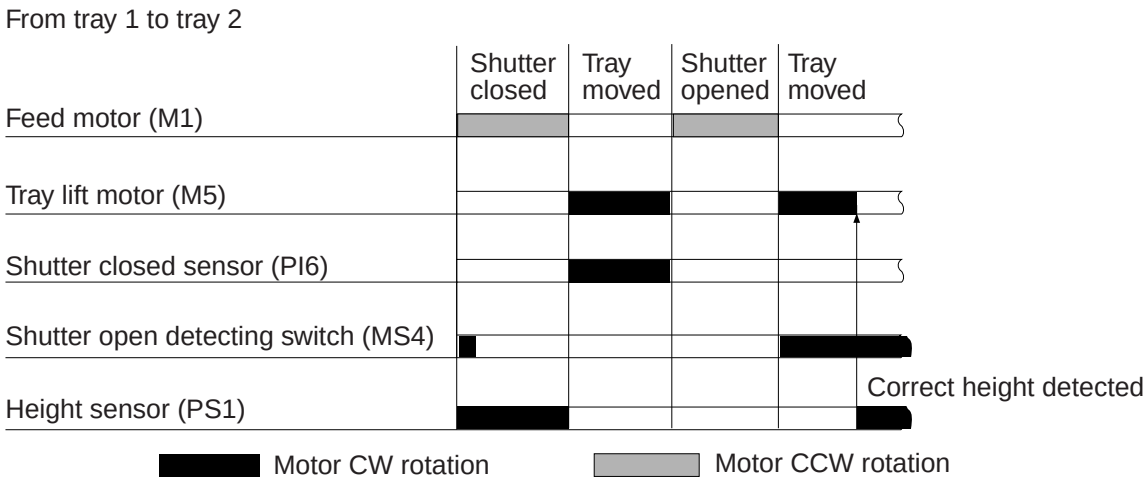

Figure 2-249

H. Detecting the Height of the Stack on the Tray

1. Outline

The number of sheets delivered to the tray and the number of sets (stapling or job offset operations) are stored in memory by the finisher controller PCB. The height of the stack is checked by the height sensor (PS1). See Table 2-202 for the maximum loading capacity of each tray.

The finisher controller PCB stops operation when the conditions in Table 2-202 occur, informing the host copier that the tray is full.

Table 2-202

Stacking mode / Tray	Non-staple sort		Staple sort	
	Small-size	Large-size	Small-size	Large-size
Tray 1	44 mm high (300 sheets)	22 mm high (150 sheets)	300 sheets/20 sets, fewer of two (or, 44 mm high)	150 sheets/30 sets, fewer of two (or, 22 mm high)
Tray 2	148 mm high (1000 sheets)	74 mm high (500 sheets)	750 sheets/30 sets, fewer of two (or, 110 mm high)	500 sheets/30 sets, fewer of two (or, 74 mm high)
Tray 3	30 mm high (200 sheets)	15 mm high (100 sheets)	Not possible	

Note: 1. The capacity for non-staple sort mode is approximate and computed based on 80 g/m^2 paper.
2. Alignment for stacks consisting of 750 sheets or more or 100 mm or higher is not guaranteed.

Caution:

1. The term “small-size” stands for A4, LTR, and B5.
2. The term “large-size” stands for A3, A4R, B4, LGL, 297 mm × 432 mm (11 × 17), and LTRR.

COPYRIGHT © 1998 CANON INC. FINISHER-C1/SADDLE FINISHER-C2 REV. 0 DEC. 1998 PRINTED IN JAPAN (IMPRIME AU JAPON)

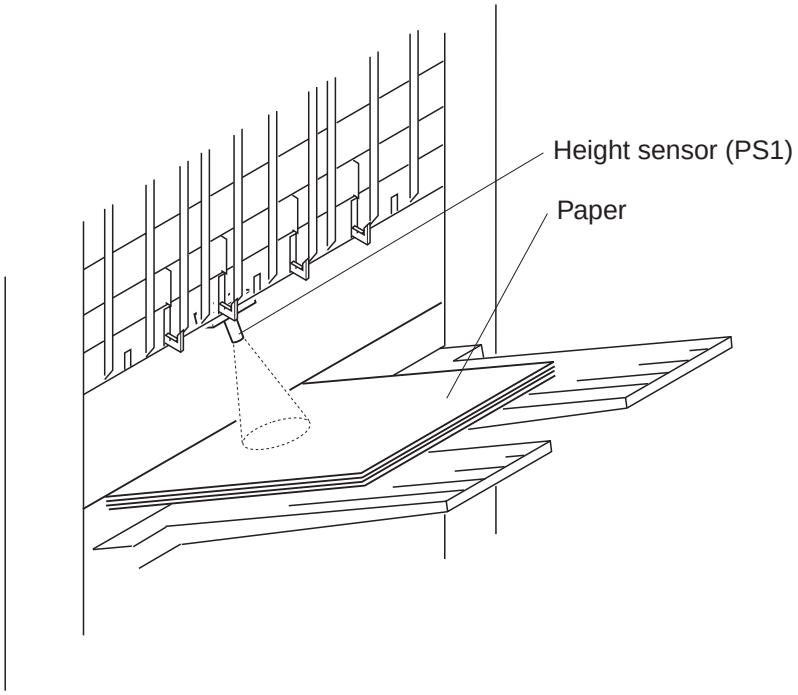

Figure 2-250

2. Manual Feed Tray Height Control Mode

The height sensor (PS1) is adjusted so that it takes measurements with reference to the light reflected (diffused) by plain paper. The light reflected by a transparency, however, behaves as if it is reflected by a mirror, causing the sensor to provide a reading about 30 mm lower than the height of a plain paper stack-this ultimately causes the machine to control the height of the tray higher than an optimum height.

To make up for the discrepancy, the height of the tray is controlled as follows during manual feed pick-up mode, which is believed to be used most often for transparencies.

a. When sheets for manual feed pick-up are stacked on the tray, the optimum height as detected by the height sensor is lowered by about 30 mm. This way, the tray will be controlled to an appropriate height when transparencies are stacked. (The height will be lower by about 30 mm from the optimum height if plain paper is stacked.)
b. The height of the stack will not be adjusted during continuous stacking operation in manual feed mode. (Because of the limited number of sheets in continuous stacking mode, stacking will not be hindered without height adjustment.) However, the height of the stack will still be adjusted at the start of copying operation. Moreover, the height will also be adjusted for stapling operation.
c. The mode ends when cassette pick-up operation starts after removal of all paper from the tray. The mode resumes when manual feed pick-up operation start once again.

Reference:

If the tray is controlled to a lower height when plain paper is stacked, sheets of certain special types or sizes can jam easily. To avoid such a problem, the machine is designed so that the manual feed tray height control mode may be disabled. For instructions, see Chapter 6.

COPYRIGHT © 1998 CANON INC. FINISHER-C1/SADDLE FINISHER-C2 REV. 0 DEC. 1998 PRINTED IN JAPAN (IMPRIME AU JAPON)

I. Shutter Operation

The finisher controller PCB closes the shutter mounted to the delivery slot before moving the tray, thereby preventing trapping the existing stack on the tray by the delivery slot and intrusion of the hands.

The shutter moves up (to close) when the feed motor (M1) rotates counterclockwise, and is held in position when the motor stops. When the feed motor rotates counterclockwise once again, it moves down (to open) to enable delivery.

When the shutter is held in up position, claws slide out of the swing guide to engage the back of the shutter. This way, the existing stack and the swing guide engage while the tray is moved, thereby preventing the guide from opening. The claws slide in when the shutter is moved down to release the engagement.

The upward movement of the shutter is monitored by the shutter closed detecting switch (MS4), and the downward movement is monitored by the shutter open sensor (PI5).

See the diagrams that follow for how these operations take place.

1) The feed motor rotates counterclockwise to move up the shutter.

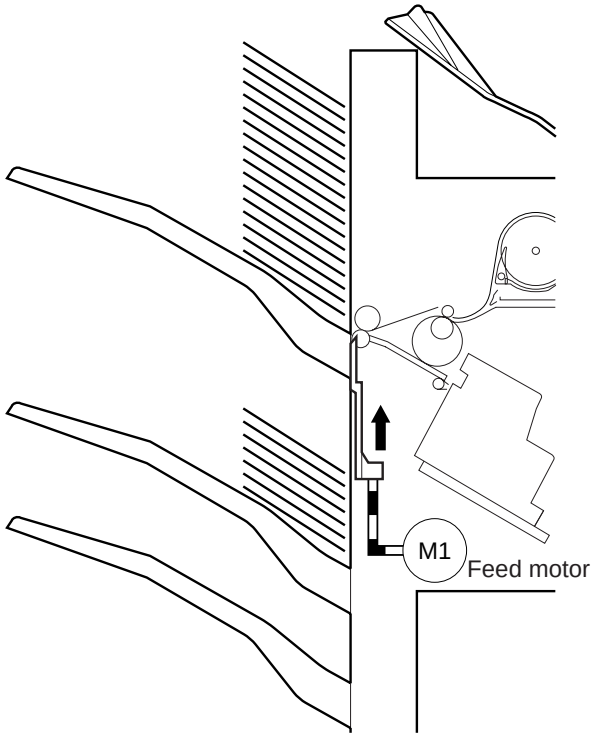

Figure 2-251

2) The tray lift motor rotates, and the new tray moves to the stacking lower limit. The distance of movement is detected by the tray shift motor clock sensor 1/2 (PI19/9).

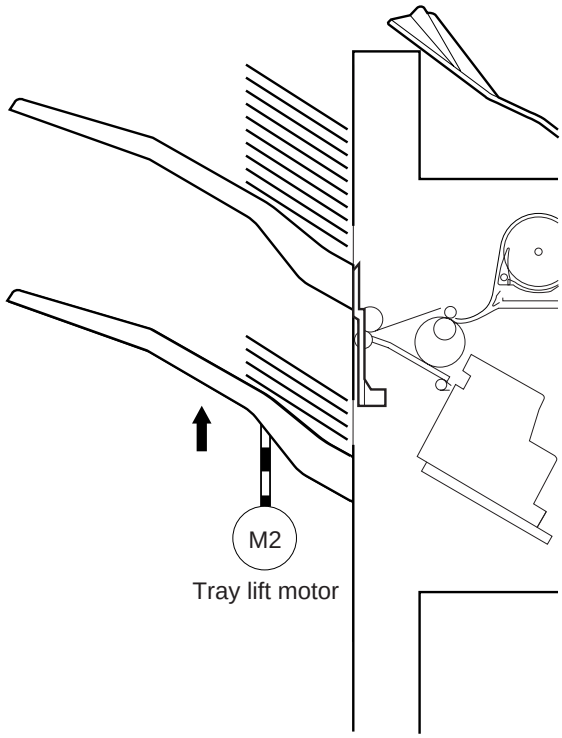

Figure 2-252

3) The feed motor rotates counterclockwise, and the shutter moves down.

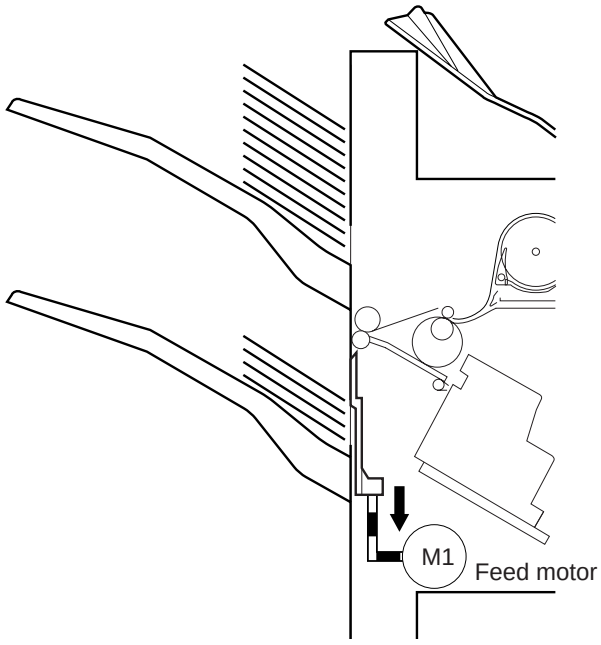

Figure 2-253

COPYRIGHT © 1998 CANON INC. FINISHER-C1/SADDLE FINISHER-C2 REV. 0 DEC. 1998 PRINTED IN JAPAN (IMPRIME AU JAPON)

4) The tray lift motor rotates, and the tray moves to suit the height of the stack. The appropriate height in relation to the existing stack is checked by the height sensor (PS1).

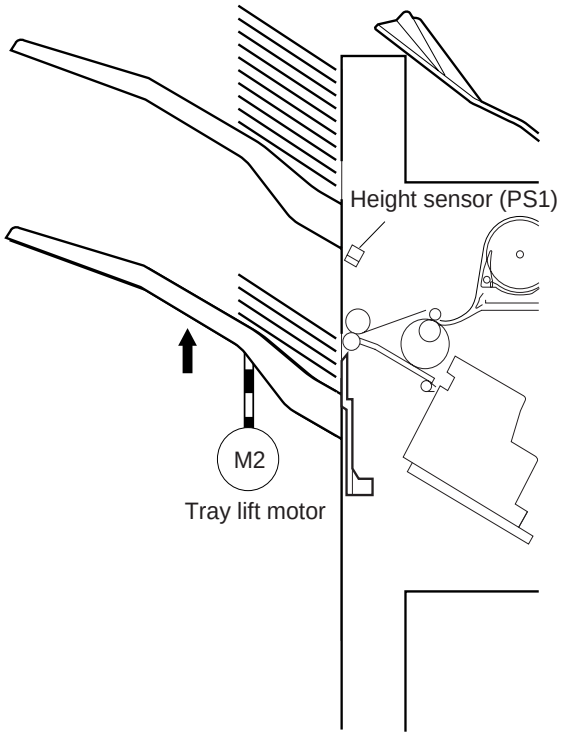

Figure 2-254

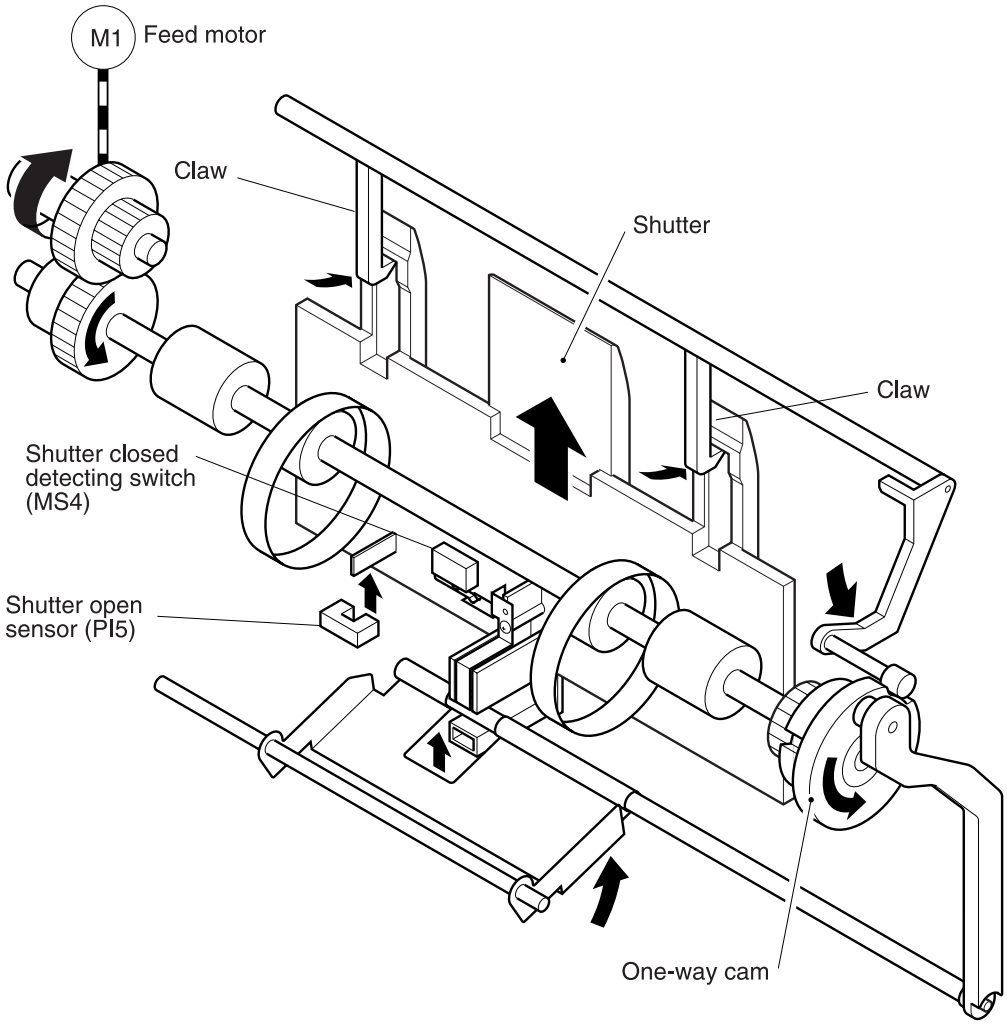

Figure 2-255

Sequence Operations (shutter drive)

From tray 1 to tray 2

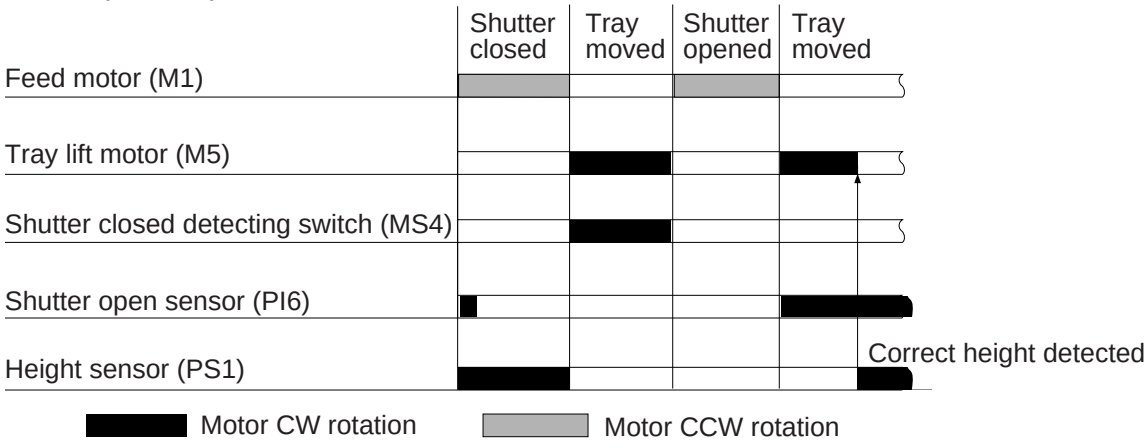

Figure 2-256

COPYRIGHT © 1998 CANON INC. FINISHER-C1/SADDLE FINISHER-C2 REV. 0 DEC. 1998 PRINTED IN JAPAN (IMPRIME AU JAPON)

J. Buffer Path Operation

1. Outline

When handling sheets A4, B5, or LTR in size, the finisher moves them through the buffer path without stopping the copier even when job offset operation is taking place as follows:

1) When the first sheet arrives, the buffer inlet flapper solenoid (SL2) turns on to switch to the buffer path. The switch-over occurs when the sheet of the previous job moves to the buffer inlet flapper or the sheet has reached the copier pre-registration sensor.

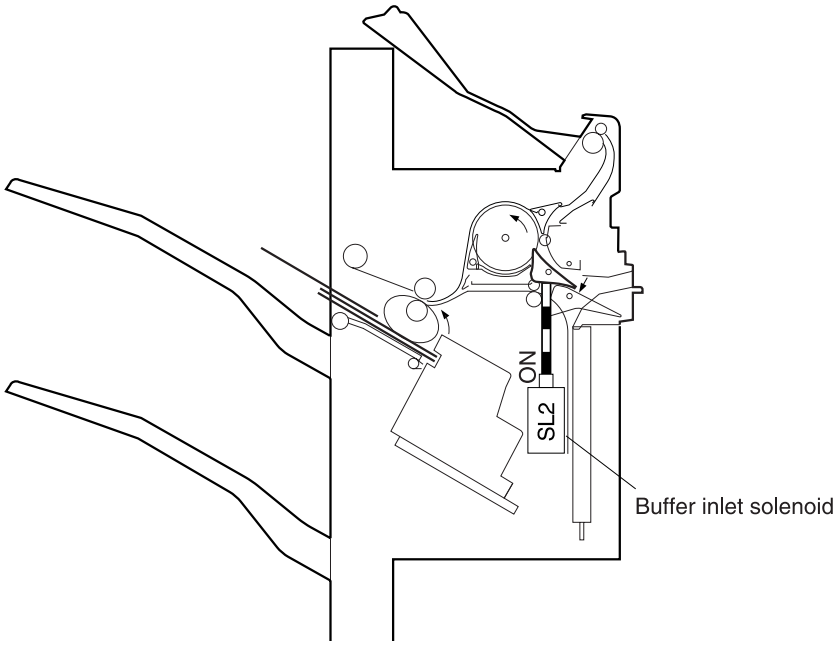

Figure 2-257

2) The first sheet enters the buffer path.

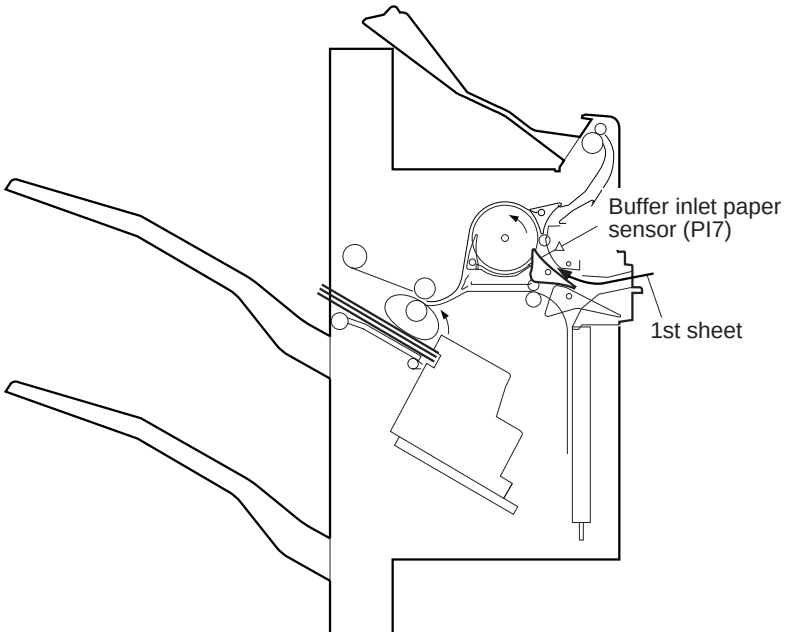

Figure 2-258

COPYRIGHT © 1998 CANON INC. FINISHER-C1/SADDLE FINISHER-C2 REV. 0 DEC. 1998 PRINTED IN JAPAN (IMPRIME AU JAPON)

3) When the leading edge of the sheet has moved past the buffer inlet paper sensor (PI7), the buffer outlet solenoid (SL3) turns on so as to cause the sheet to wrap around the buffer roller.

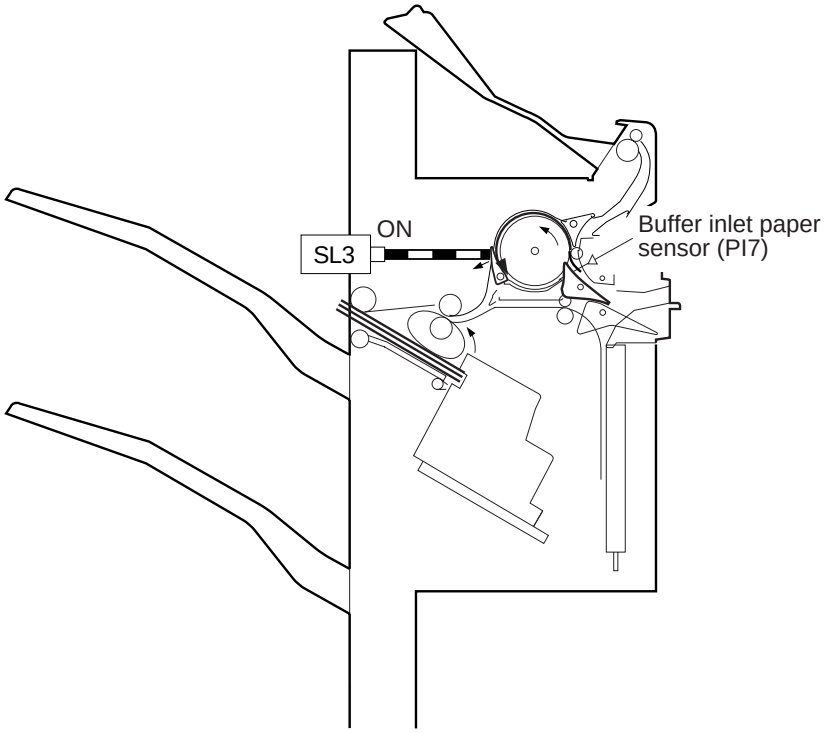

Figure 2-259

4) When the leading edge of the sheet has moved past the buffer path paper sensor (PI14) by about 50 mm, the buffer roller stops and waits for the second sheet.

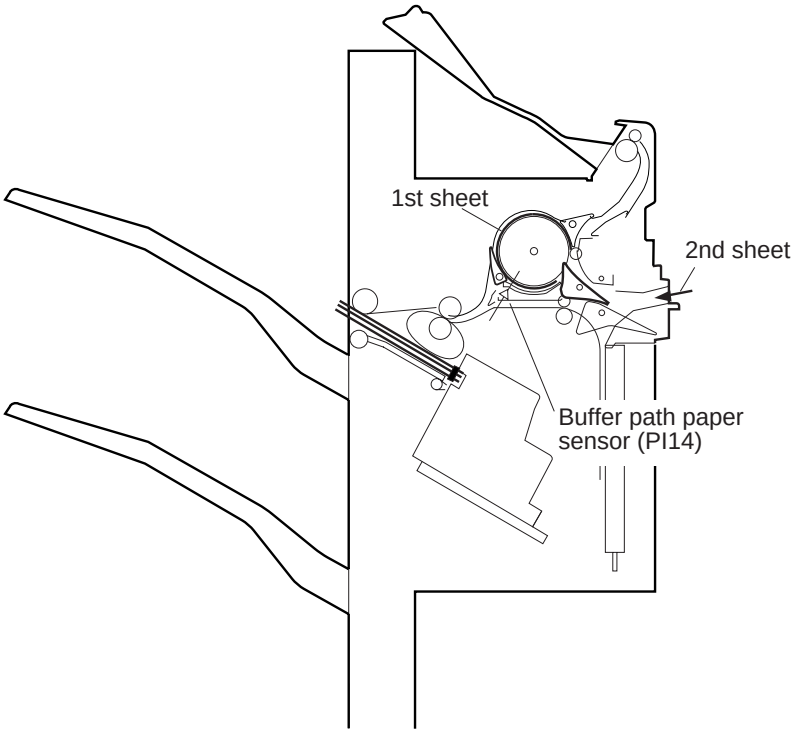

Figure 2-260

COPYRIGHT © 1998 CANON INC. FINISHER-C1/SADDLE FINISHER-C2 REV. 0 DEC. 1998 PRINTED IN JAPAN (IMPRIME AU JAPON)

5) When the second sheet arrives and its leading edge reaches the buffer inlet sensor (PI7), the buffer roller starts to operate once again. At the same time, the buffer outlet solenoid (SL3) turns off so that the path is directed in the direction of delivery. (The actual switch-over will occur after the trailing edge of the first sheet has moved past the flapper.)

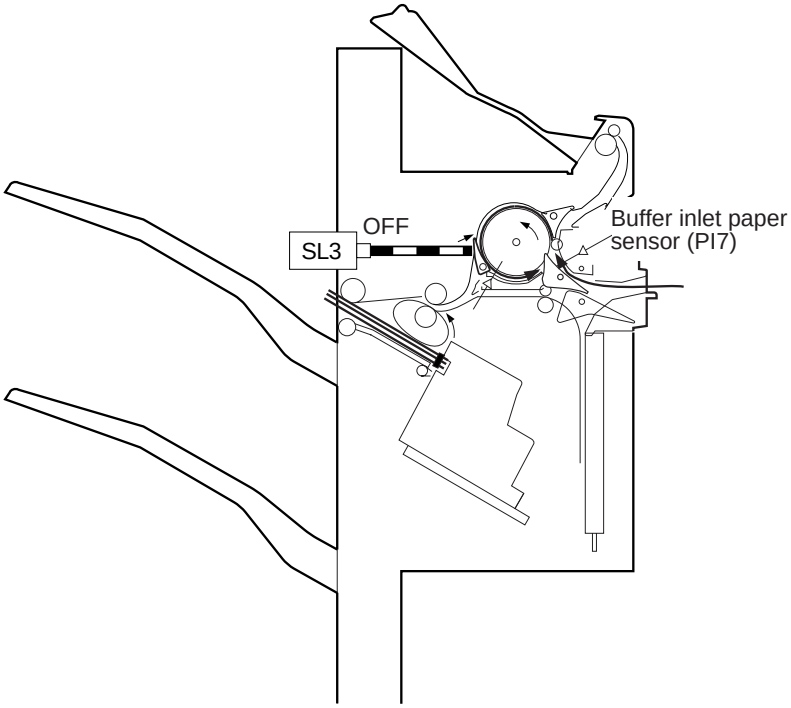

Figure 2-261

6) The first sheet and the second sheet simultaneously move past above the buffer roller at the same time.

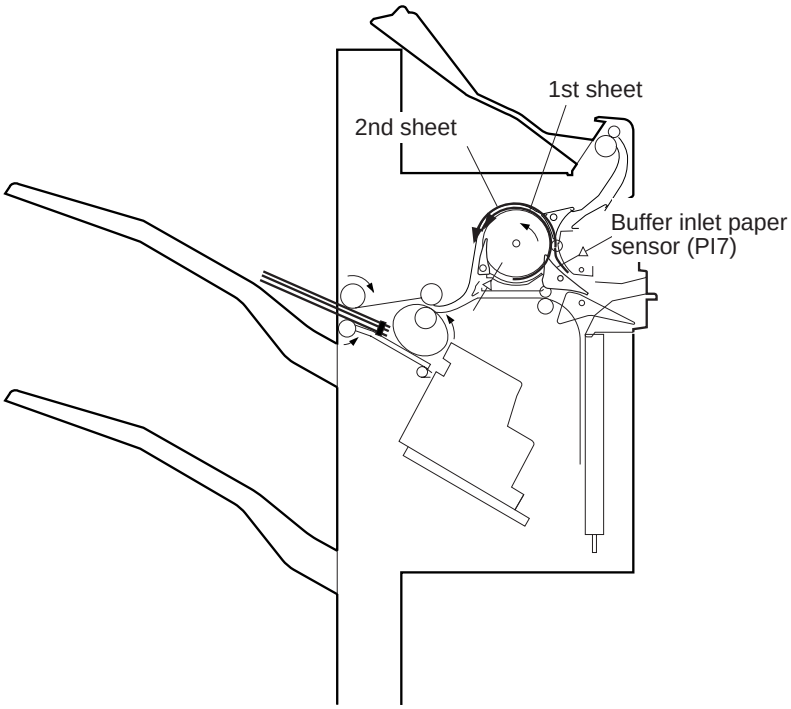

Figure 2-262

COPYRIGHT © 1998 CANON INC. FINISHER-C1/SADDLE FINISHER-C2 REV. 0 DEC. 1998 PRINTED IN JAPAN (IMPRIME AU JAPON)

7) When the trailing edge of the sheet has moved to the buffer inlet paper sensor (PI7), the buffer inlet flapper turns off. (However, it remains on if the next sheet is expected to move through the large-size paper path.)

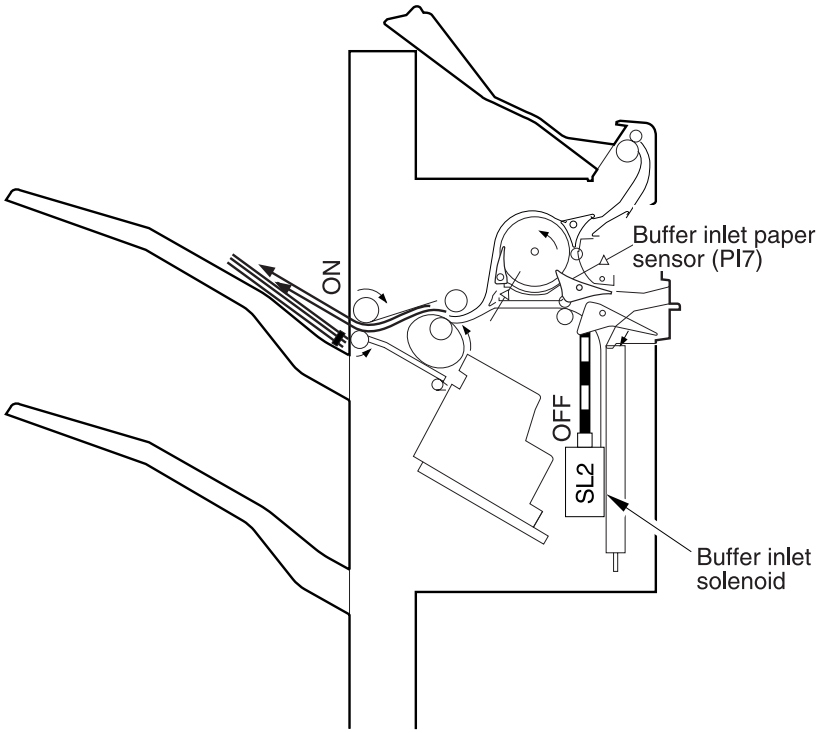

Figure 2-263

Sequence of Operations (buffer path)

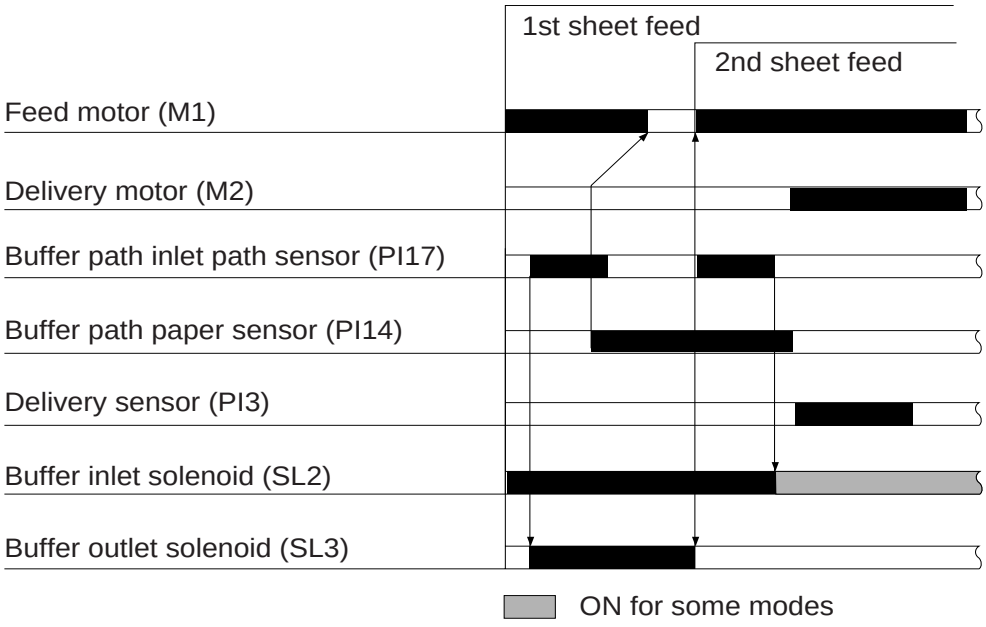

Figure 2-264

COPYRIGHT © 1998 CANON INC. FINISHER-C1/SADDLE FINISHER-C2 REV. 0 DEC. 1998 PRINTED IN JAPAN (IMPRIME AU JAPON)

K. Interrupt Tray Delivery

1. Outline

When delivery to the interrupt tray is selected on the copier, the finisher delivers sheets to the interrupt tray as follows:

1) When the first sheet arrives, the buffer inlet flapper solenoid (SL2) and the interrupt tray solenoid (SL4) turn on to switch to the feeding route for interrupt tray delivery. The switch-over occurs as soon as the sheet of the previous job has moved past the buffer inlet flapper or the sheet for interrupt delivery has reached the copier pre-registration sensor.

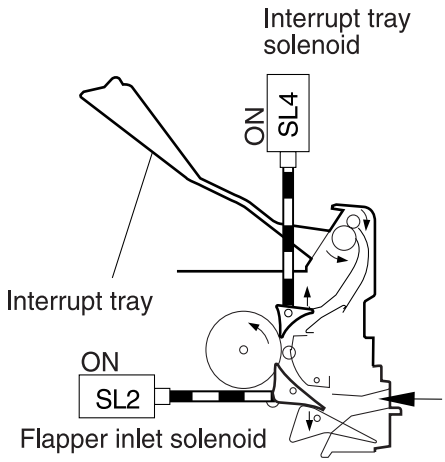

Figure 2-265

2) The first sheet enters the interrupt tray delivery route and then is delivered.

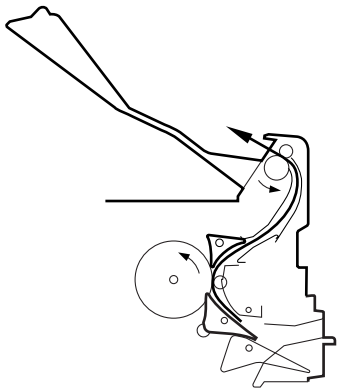

Figure 2-266

3) As many sheets as arrive from the copier are delivered through the same route.

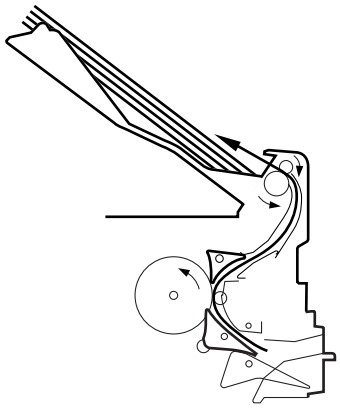

Figure 2-267

4) When the last sheet moves past the buffer path inlet sensor, the buffer path inlet solenoid and the interrupt solenoid turn off. (However, they remain on if the next sheet is expected to move through the large-size path.)

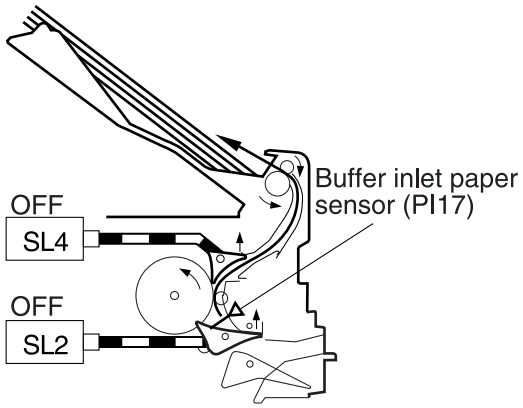

Figure 2-268

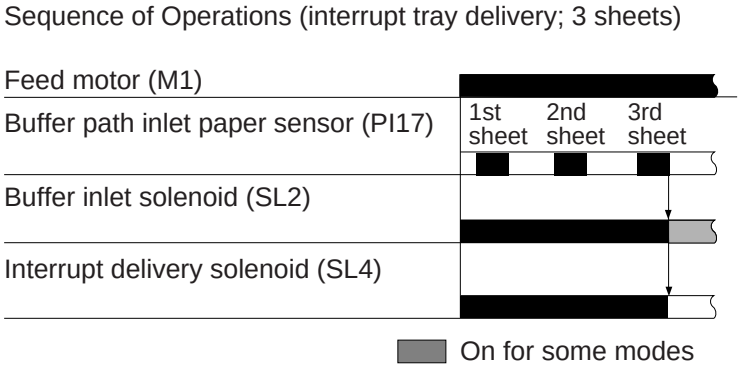

Figure 2-269

COPYRIGHT © 1998 CANON INC. FINISHER-C1/SADDLE FINISHER-C2 REV. 0 DEC. 1998 PRINTED IN JAPAN (IMPRIME AU JAPON)

L. Detecting Jams

The following sensors are used to detect the presence/absence of paper and to make sure that sheets are moved properly.

- Inlet sensor (PI1)
- Delivery sensor (PI3)
- Stapling tray sensor (PI4)
- Buffer path paper sensor (PI14)
- Buffer path inlet paper sensor (PI7)

A jam is identified with reference to the presence/absence of paper at each specific sensor at such times as programmed in the memory of the microprocessor (CPU) on the finisher driver PCB.

When the CPU identifies a jam, it suspends the finisher's delivery operation and informs the options controller of the presence of a jam.

The tray 1 paper sensor (PI11), tray 2 paper sensor (PI12), and tray 3 paper sensor (PI13) are not used to detect jams.

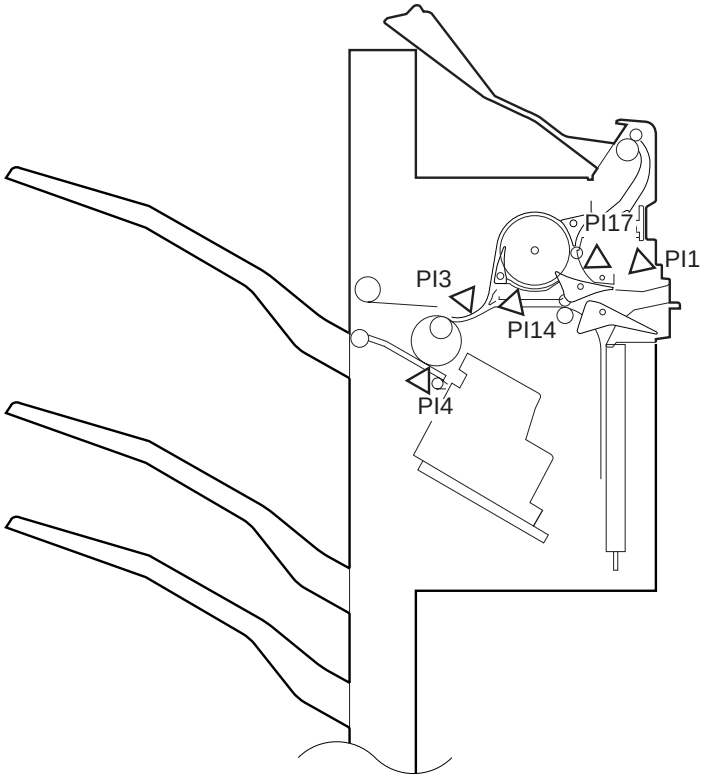

Figure 2-270

No.	Sensor names
PI1	Inlet sensor
PI3	Delivery sensor
PI4	Stapler tray sensor
PI14	Buffer path paper sensor
PI17	Buffer inlet paper sensor

Table 2-203

COPYRIGHT © 1998 CANON INC. FINISHER-C1/SADDLE FINISHER-C2 REV. 0 DEC. 1998 PRINTED IN JAPAN (IMPRIME AU JAPON)

1. Inlet Sensor Delay Jam (11H)

The inlet sensor does not detect paper when feeding an equivalent of 400 mm from when the copier's delivery signal has been issued.

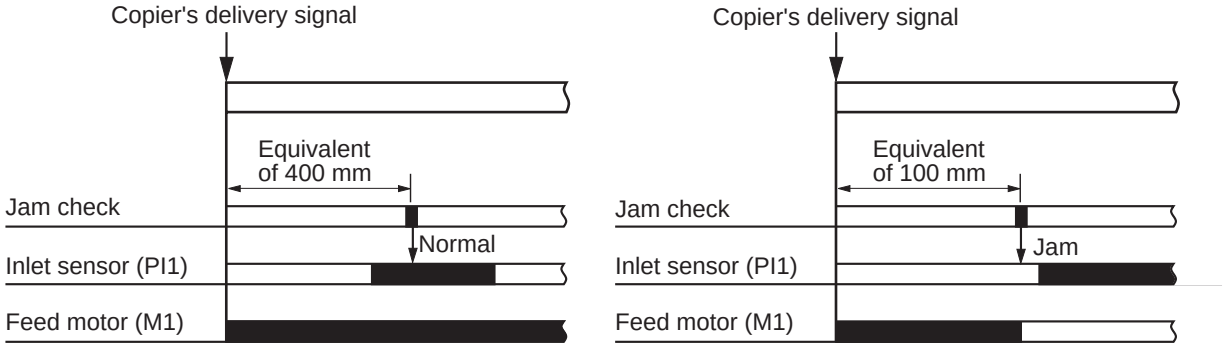

Figure 2-271

2. Inlet Sensor Stationary Jam (21H)

The sheet does not move past the inlet sensor when an equivalent of twice the feeding length of the sheet has been fed after the sensor turned on.

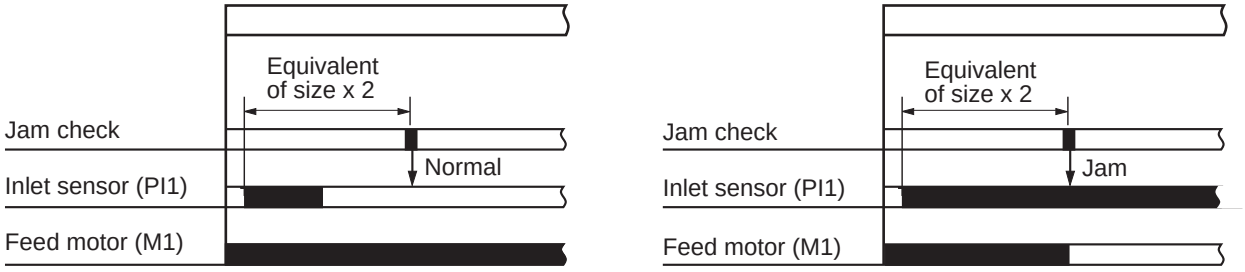

Figure 2-272

3. Buffer Inlet Sensor Delay Jam (12H)

The buffer inlet sensor does not detect paper when an equivalent of 100 mm has been fed after the inlet sensor turned on.

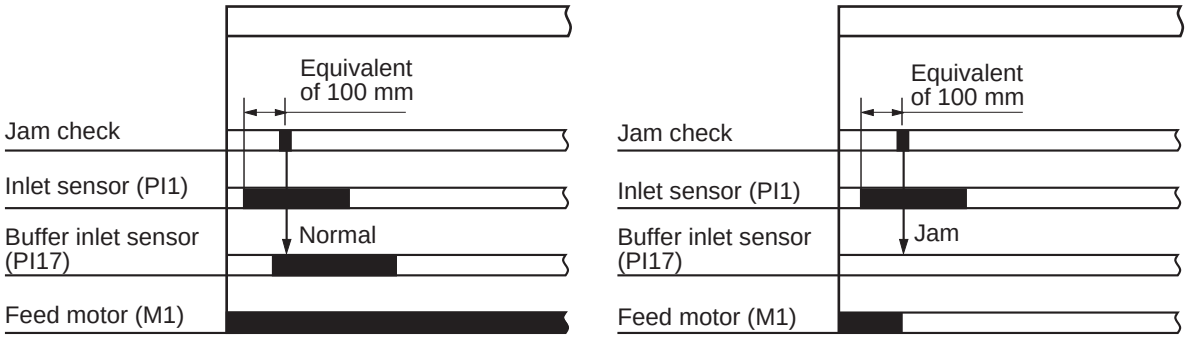

Figure 2-273

COPYRIGHT © 1998 CANON INC. FINISHER-C1/SADDLE FINISHER-C2 REV. 0 DEC. 1998 PRINTED IN JAPAN (IMPRIME AU JAPON)

4. Buffer Inlet Sensor Stationary Jam (22H)

The copier does not move past the buffer inlet sensor when an equivalent of twice the feeding length of the sheet has been fed after the sensor turned on.



Figure 2-274

5. Buffer Path Paper Sensor Delay Jam (13H)

The buffer path paper sensor does not detect paper when an equivalent of 400 mm has been fed after the buffer inlet sensor turned on.

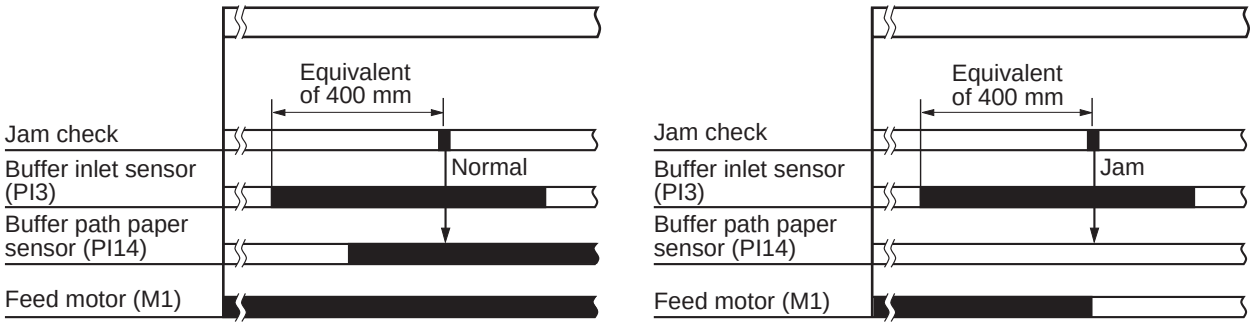

Figure 2-275

6. Buffer Path Paper Sensor Stationary Jam (23H)

The sheet does not move past the buffer path paper sensor when an equivalent of twice the feeding length of the sheet has been fed after the buffer path paper sensor turned on.

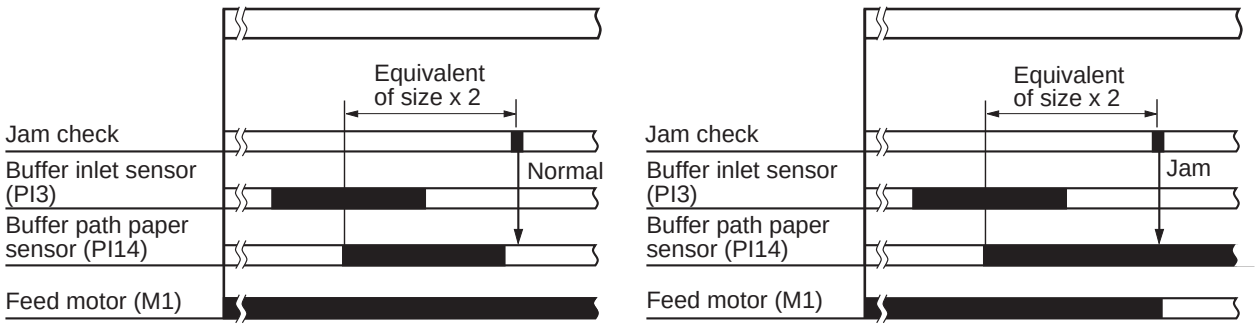

Figure 2-276

7. Delivery Sensor Delay Jam (14H)

a. Small-Size Paper Path

The delivery sensor does not detect paper when an equivalent of 260 mm has been fed after the inlet sensor turned on.

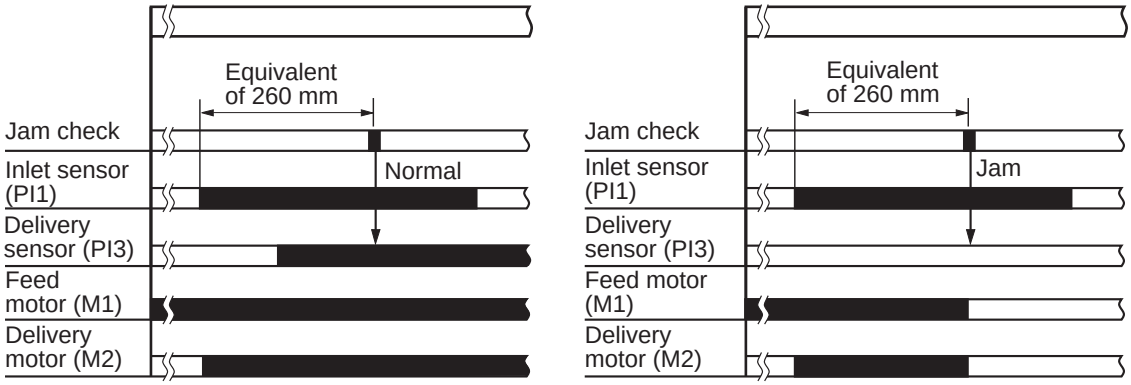

Figure 2-277

b. Large-Size Paper Path and Buffer Path

The delivery sensor does not detect paper when an equivalent of 460 mm has been fed after the buffer path inlet paper sensor turned on.

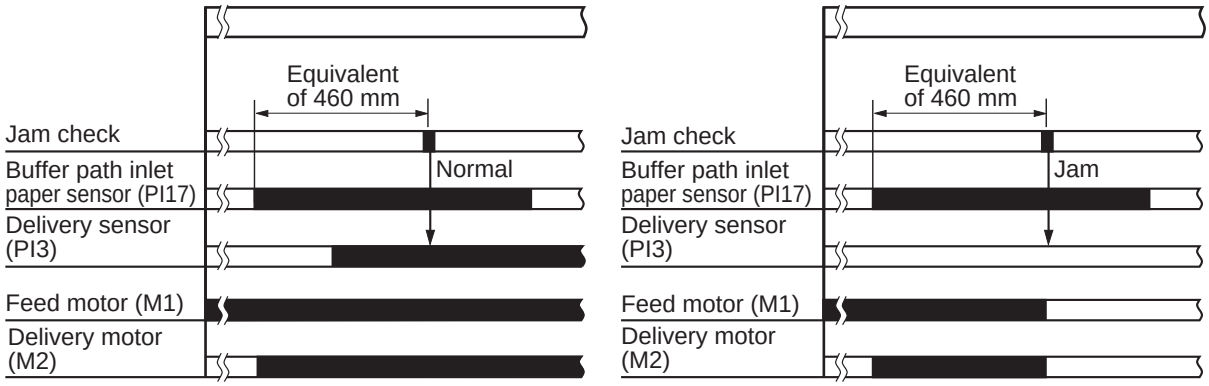

Figure 2-278

COPYRIGHT © 1998 CANON INC. FINISHER-C1/SADDLE FINISHER-C2 REV. 0 DEC. 1998 PRINTED IN JAPAN (IMPRIME AU JAPON)

8. Delivery Sensor Stationary Jam (24H)

The sheet does not move past the delivery sensor when an equivalent of twice the feeding length of the sheet has been fed after the delivery sensor turned on.

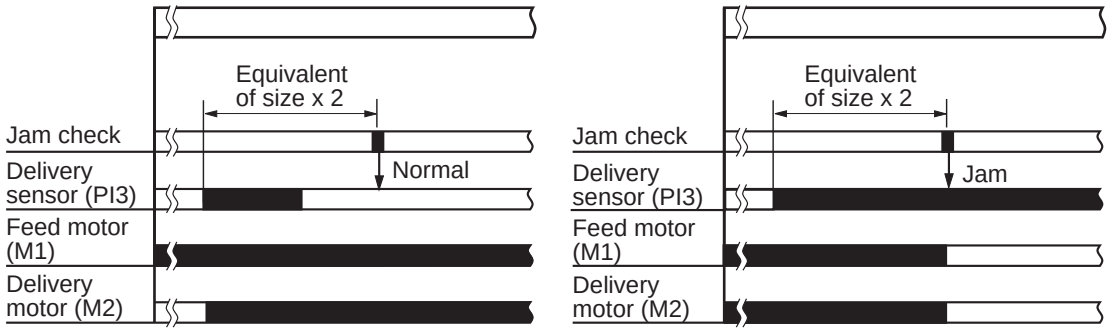

Figure 2-279

9. Stapling Tray Sensor Stationary Jam (25H)

a. With Stapling

The sheet does not move past the stapling tray sensor 1 sec after the delivery motor (M2) turned on.

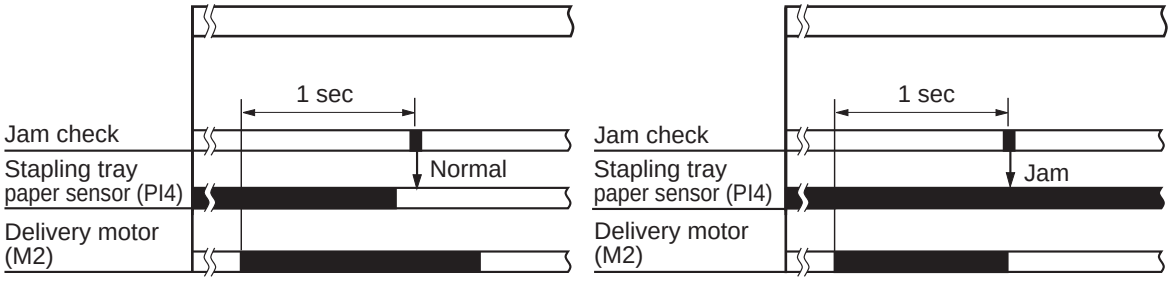

Figure 2-280

b. Without Stapling

The sheet does not move past the stapling tray sensor 2 sec after the delivery motor (M2) turned on.

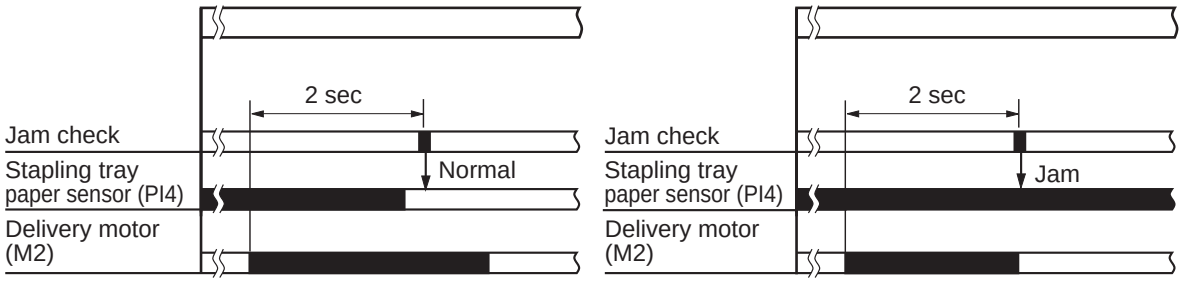

Figure 2-281

c. Job Offset

No check is made for stationary jams using the stapling tray sensor.

10.Timing Jam (05H)

The dilivery signal is sent from the copier while the finisher is not ready to receive a sheet.

10. Timing Jam (05H)

The dilivery signal is sent from the copier while the finisher is not ready to receive a sheet.

11. Staple Jam (06H)

When the staple motor (M6) is rotating clockwise, the staple home position sensor (PI21) does not turn on within 0.5 sec. after it has turned off but, in addition, the sensor turns on within 0.5 sec. after the motor has been rotated counterclockwise.

12. Power-On Jam (07H)

One of the paper sensors of the finisher detects paper at the time of power-on.

13. Door Open Jam (08H)

The joint sensor (PI15) turns off or the door open sensor (PI16) turns on during operation.

14. Stapling Tray Sensor Delay Jam

No check is made for jams using the stapling tray sensor for either staple or job offset mode.

COPYRIGHT © 1998 CANON INC. FINISHER-C1/SADDLE FINISHER-C2 REV. 0 DEC. 1998 PRINTED IN JAPAN (IMPRIME AU JAPON)

III. POWER SUPPLY SYSTEM

1. Outline

The finisher controller PCB is supplied with 24 VDC power (two channels) when the copier is turned on: of the two channels, one is used to drive the motor solenoids, while the other is used for sensors and ICs on PCBs after being turned into 5 VDC by the work of the regulator IC (Q9) on the finisher controller PCB. Both channels are also used to feed power from the finisher controller PCB to the saddle stitcher controller PCB.

Some of the 24 VDC power used to drive motors are cut off when the door switch (MS1) is open. The power to the saddle stitcher controller PCB, however, will not be cut off.

Figure 2-301 is a block diagram showing the power supply system. The finisher controller PCB is equipped with a battery (BAT101) for retention of memory.

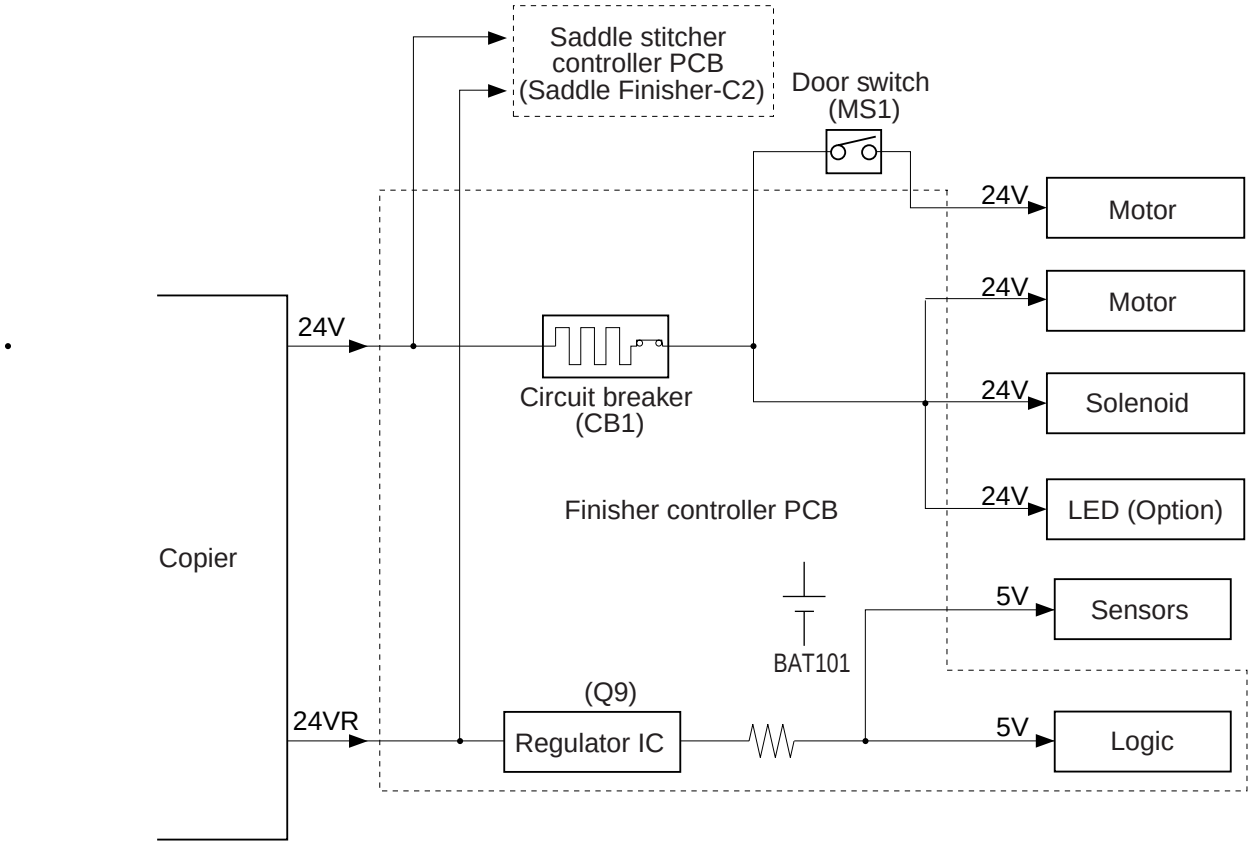

Figure 2-301

2. Protection Functions

The 24 VDC power channel used to drive motors and solenoids are equipped with a circuit breaker (CB1) for protection against overcurrent. The 24 V channel used to drive the feed motor (M1), alignment motor (M3), and stapler shift motor (M4) are equipped with a fuse, which is designed to melt in the presence of overcurrent.

Note:

Replace the lithium battery only with the one listed in the Parts Catalog. Use of different battery may present a risk of fire or explosion. The battery may present a fire or chemical burn hazard if mistreated. Do not recharge, disassemble, or dispose of it in fire.
Keep the battery out of reach of children and discard any used battery promptly.

COPYRIGHT © 1998 CANON INC. FINISHER-C1/SADDLE FINISHER-C2 REV. 0 DEC. 1998 PRINTED IN JAPAN (IMPRIME AU JAPON)

CHAPTER 3

SADDLE STITCHER UNIT BASIC OPERATION

I. BASIC OPERATION 3-1
A. Outline 3-1
B. Electrical Circuitry 3-2
C. Inputs to and Outputs from the Saddle Stitcher Controller PCB 3-3
II. FEEDING/DRIVE SYSTEM 3-8
A. Outline 3-8
III. PAPER DEPOSITING MECHANISM 3-14
A. Outline 3-14
B. Controlling the Inlet Flappers 3-17
C. Controlling the Movement of Sheets 3-21
D. Aligning the Sheets 3-22
E. Controlling the Phase of the Crescent Roller 3-25
IV. STITCHING SYSTEM 3-27
V. FOLDING/DELIVERY SYSTEM 3-30
VI. CHECKING FOR A JAM 3-35
VII. POWER SUPPLY 3-39

COPYRIGHT © 1998 CANON INC. FINISHER-C1/SADDLE FINISHER-C2 REV. 0 DEC. 1998 PRINTED IN JAPAN (IMPRIME AU JAPON)

I. BASIC OPERATION

A. Outline

The unit “stitches” (2 points) a stack of sheets delivered by the finisher unit and folds it in two for delivery. All these operations are controlled by the saddle stitcher controller PCB in response to commands from the copier through the finisher unit.

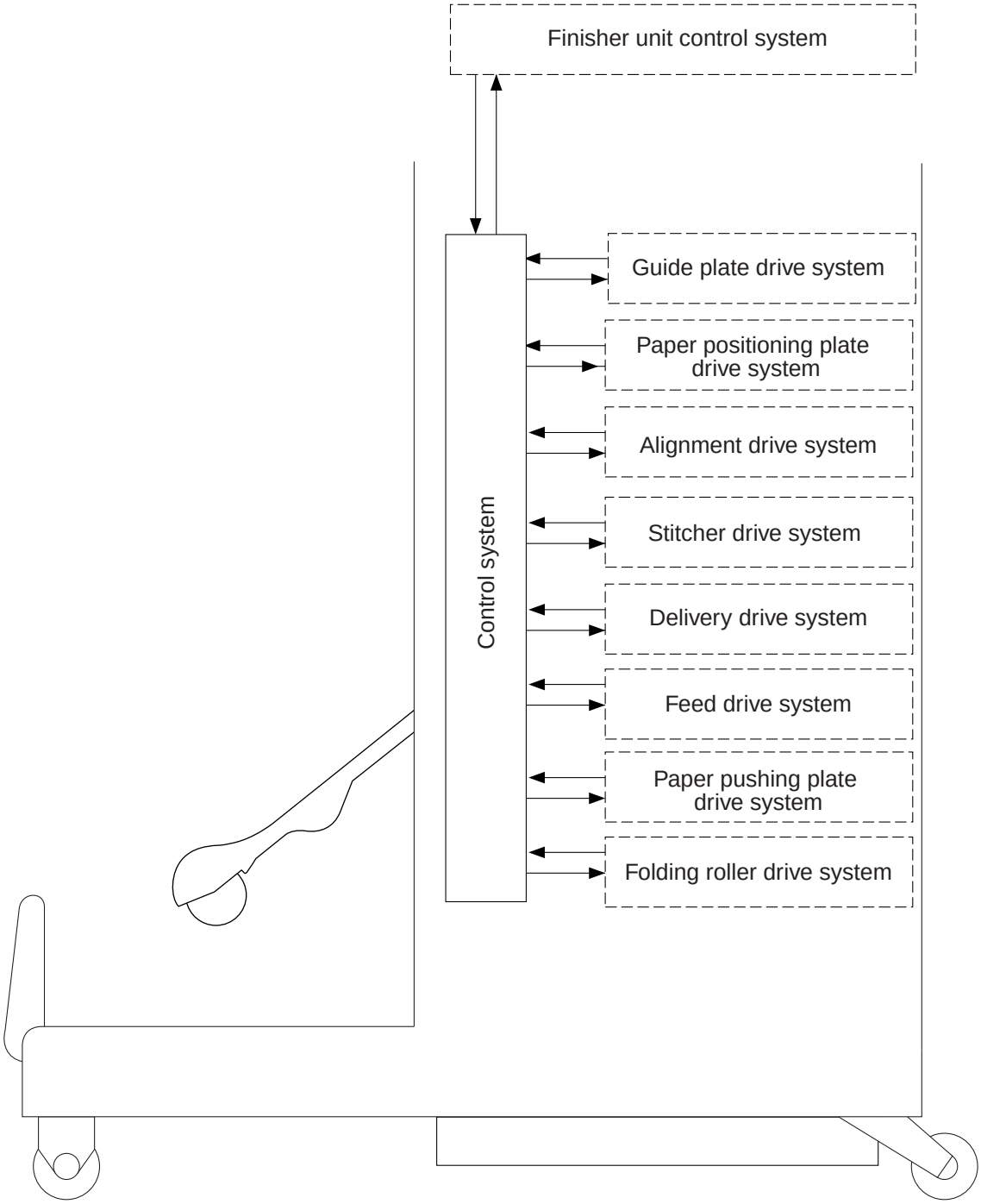

Figure 3-101

COPYRIGHT © 1998 CANON INC.

B. Electrical Circuitry

The sequence of operations used for the saddle stitcher is controlled by the saddle stitcher controller PCB. The saddle stitcher controller PCB has a microprocessor, and is used to control the sequence of operations and to handle serial communications with the finisher controller PCB, driving solenoids and motors in response to the various commands from the finisher controller PCB.

The saddle stitcher controller PCB is also used to communicate the state of various sensors and switches to the finisher controller PCB in serial.

The functions of the major ICs mounted on the saddle stitcher controller PCB are as follows:

- Q1
  Controls the sequence of operations.
- Q2
  Contains the sequence program.
- Q3
  Controls the sequence of operations.
- Q4
  Handles IPC communications.

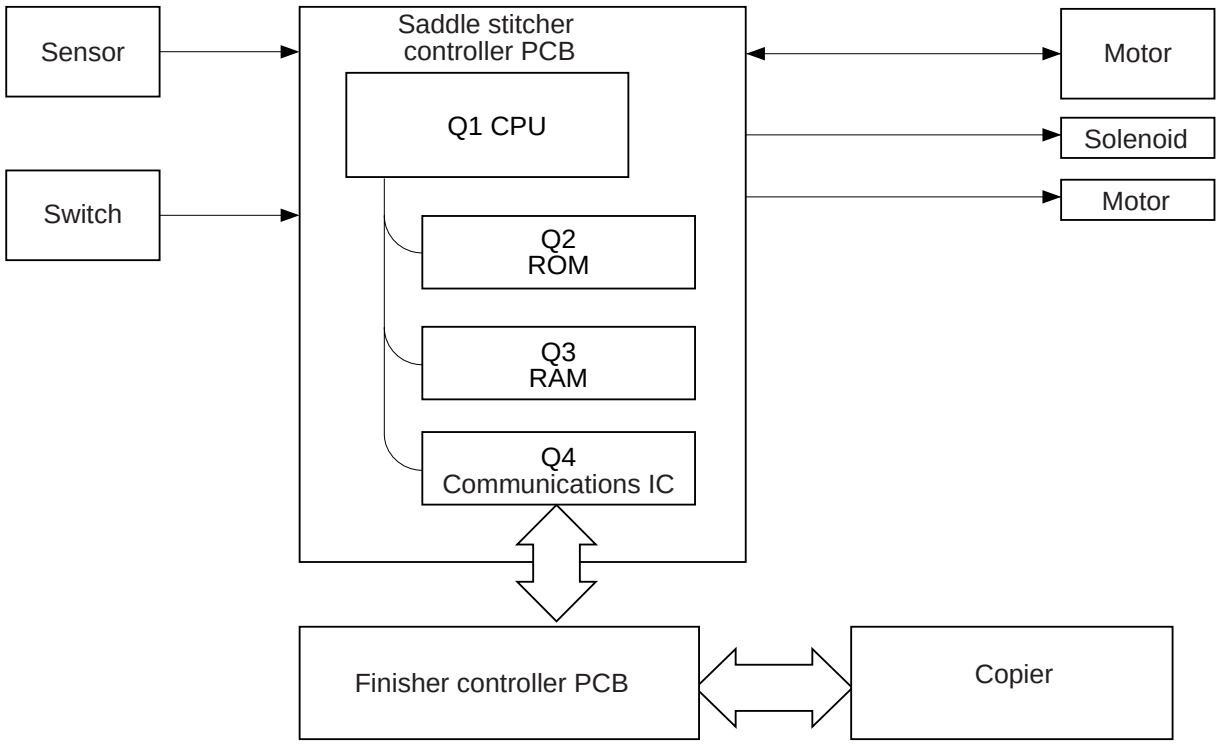

Figure 3-102

COPYRIGHT © 1998 CANON INC.

C. Inputs to and Outputs from the Saddle Stitcher Controller PCB

1. Inputs to the Saddle Stitcher Controller PCB

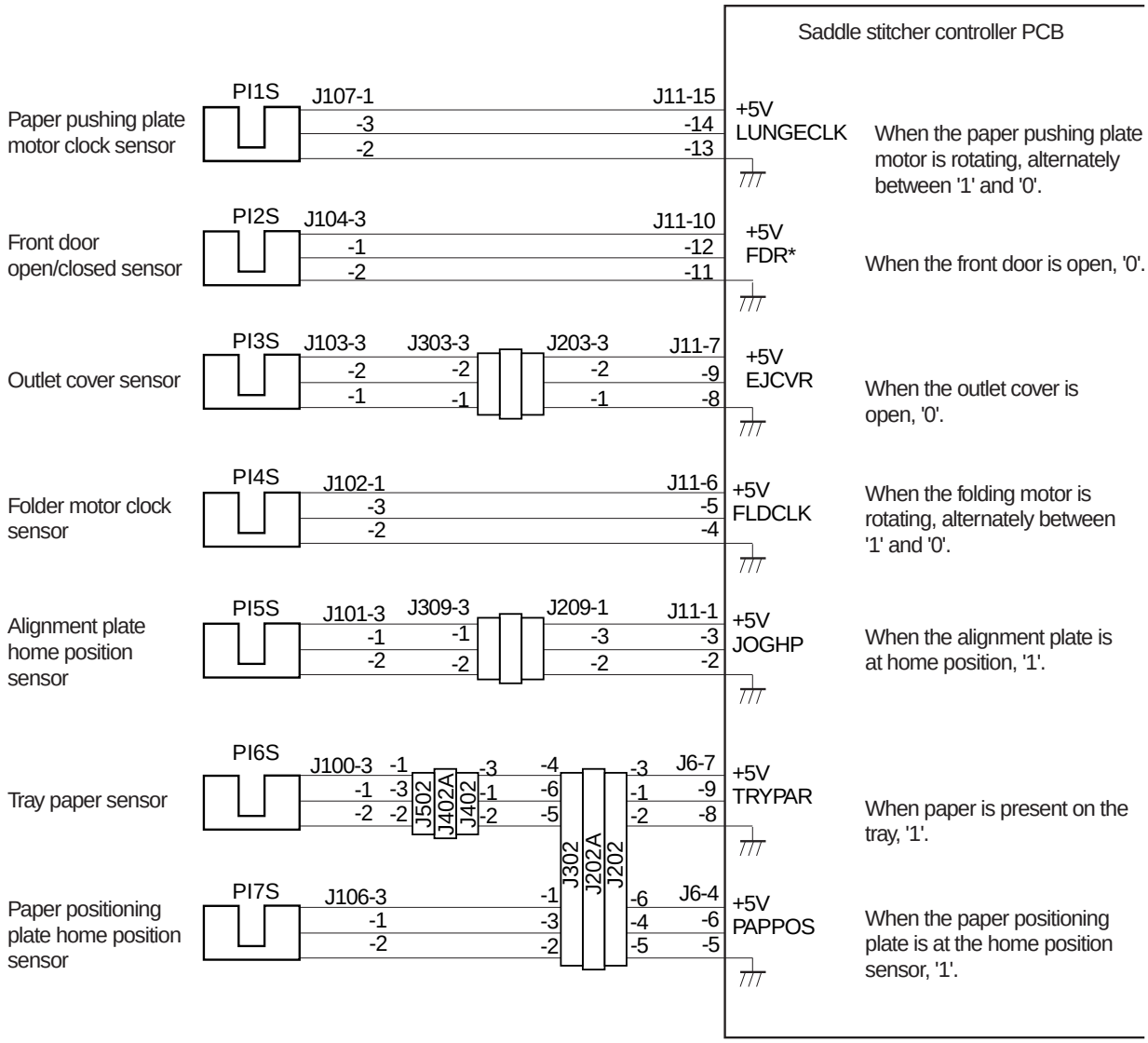

Figure 3-103

2. Inputs to the Saddle Stitcher Controller PCB

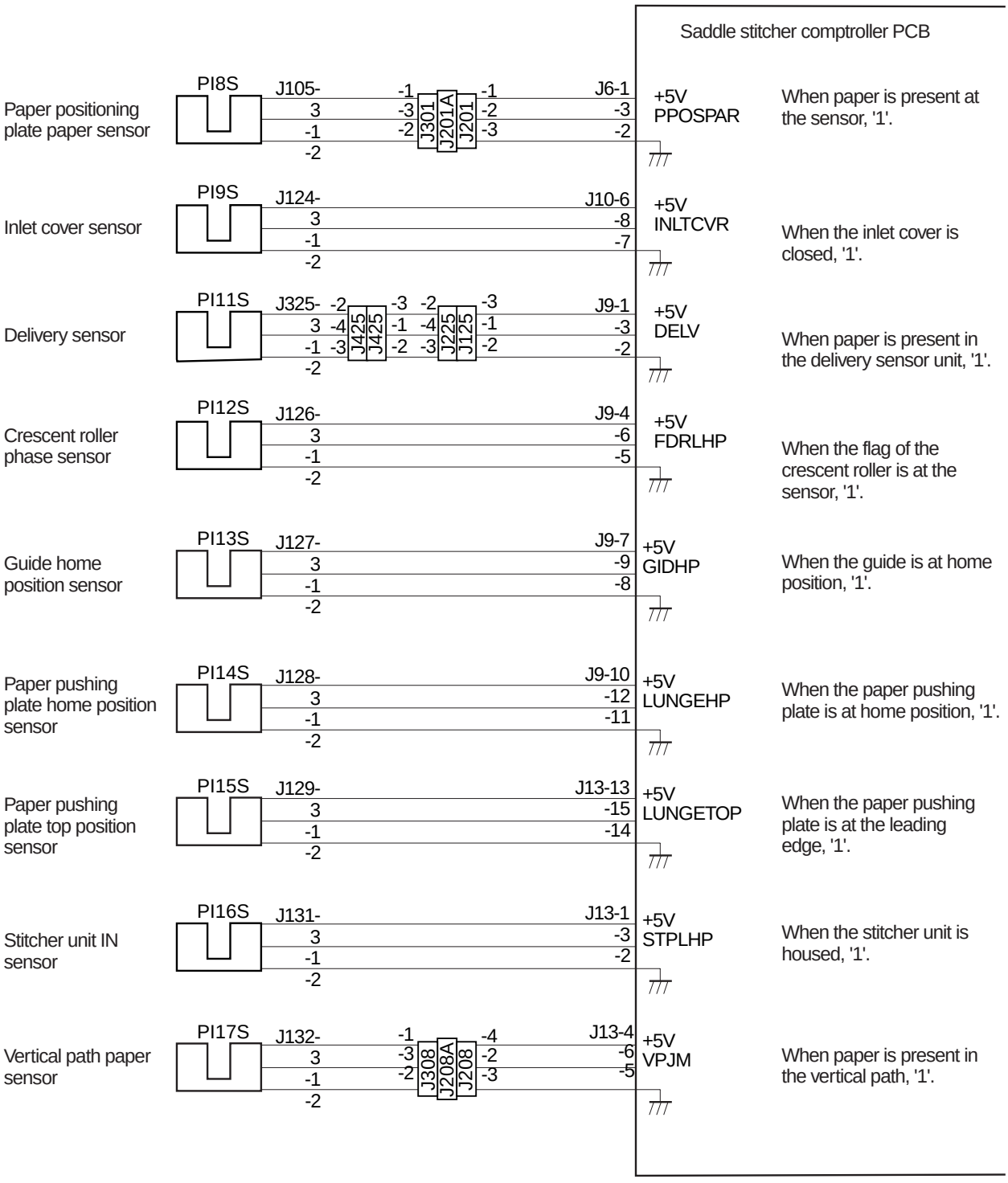

Figure 3-104

COPYRIGHT © 1998 CANON INC. FINISHER-C1/SADDLE FINISHER-C2 REV. 0 DEC. 1998 PRINTED IN JAPAN (IMPRIME AU JAPON)

3. Inputs to the Saddle Stitcher Controller PCB

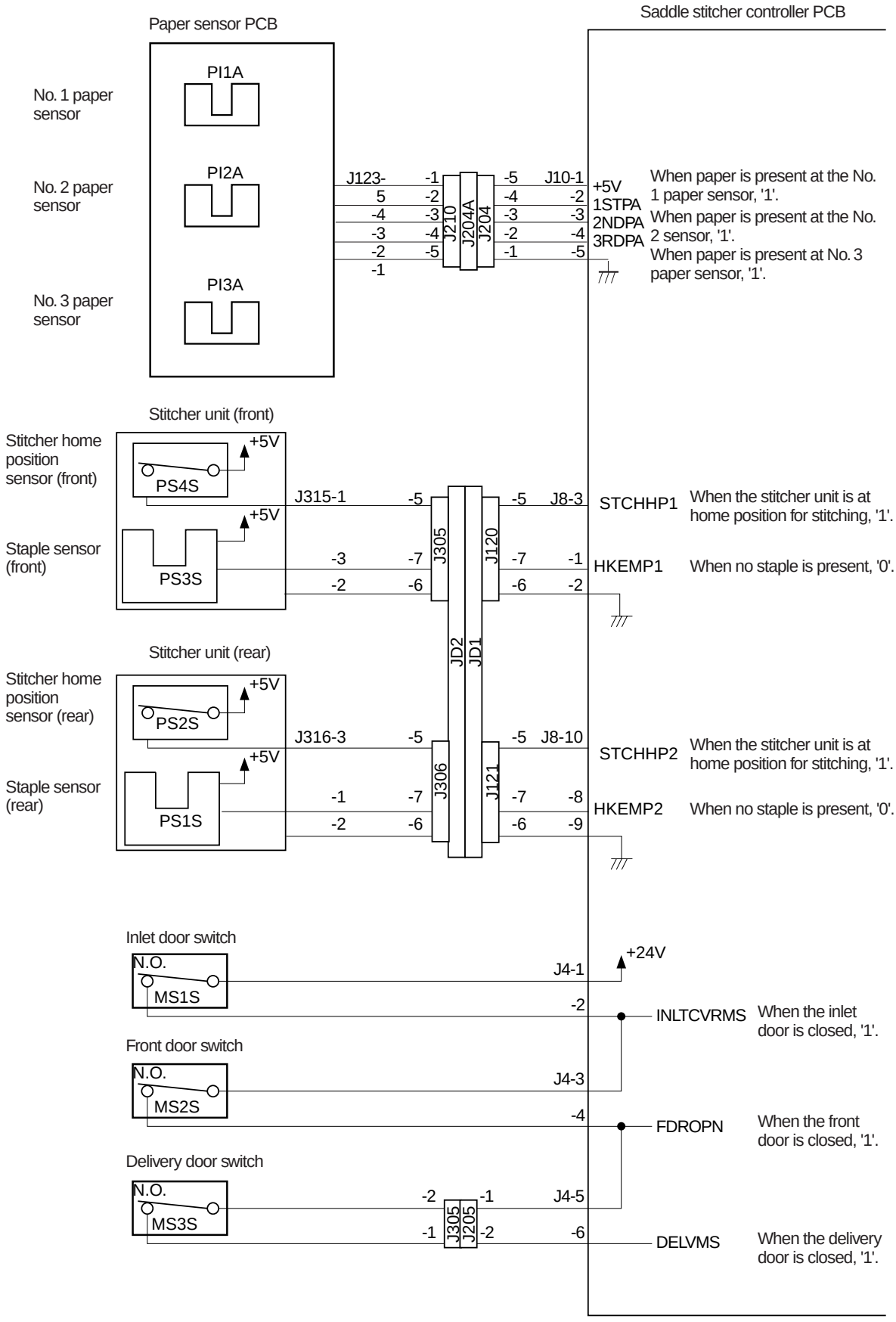

Figure 3-105

COPYRIGHT © 1998 CANON INC.

4. Outputs from the Saddle Stitcher Controller PCB

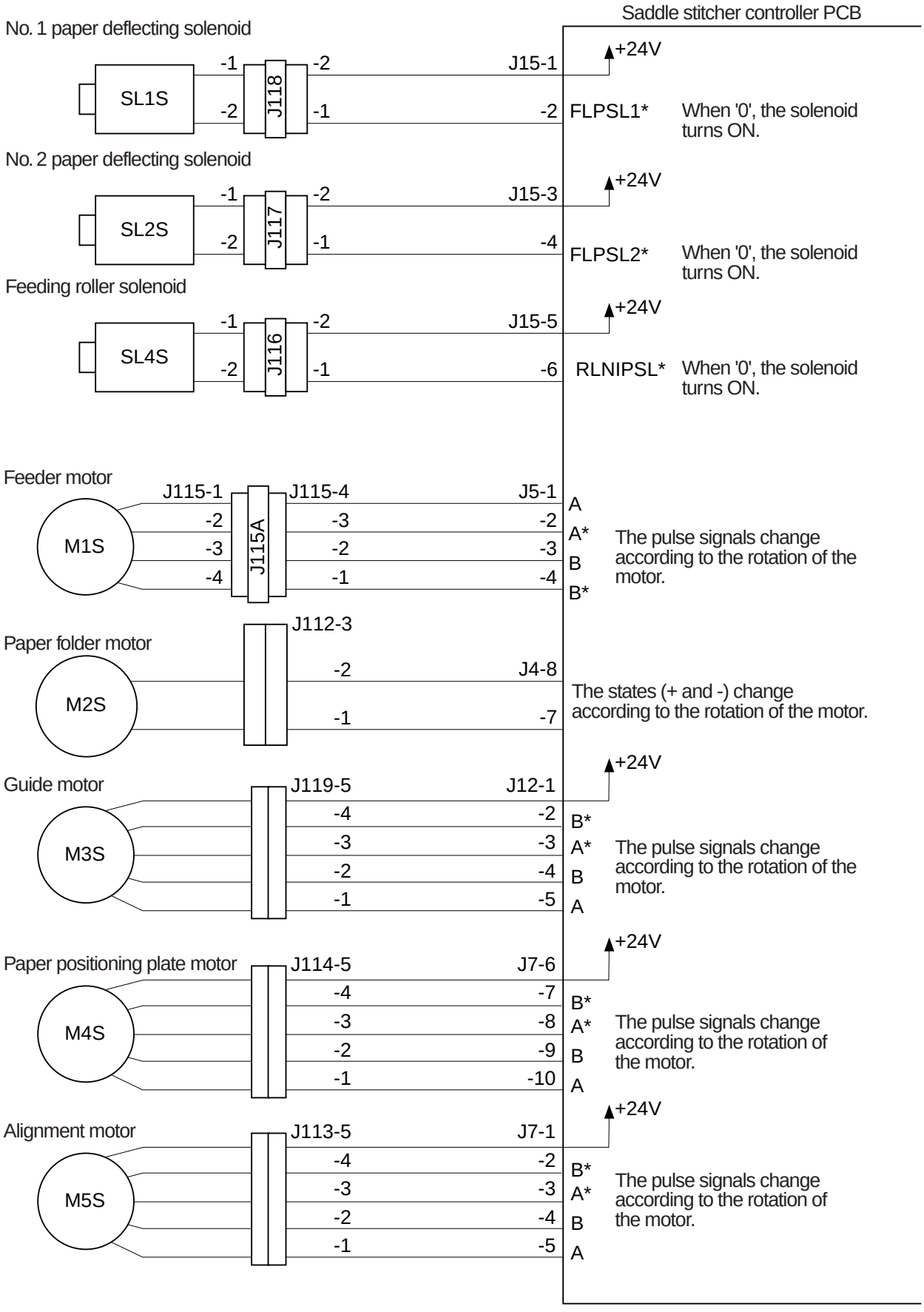

Figure 3-106

COPYRIGHT © 1998 CANON INC. FINISHER-C1/SADDLE FINISHER-C2 REV. 0 DEC. 1998 PRINTED IN JAPAN (IMPRIME AU JAPON)

5. Outputs from the Saddle Stitcher Controller PCB

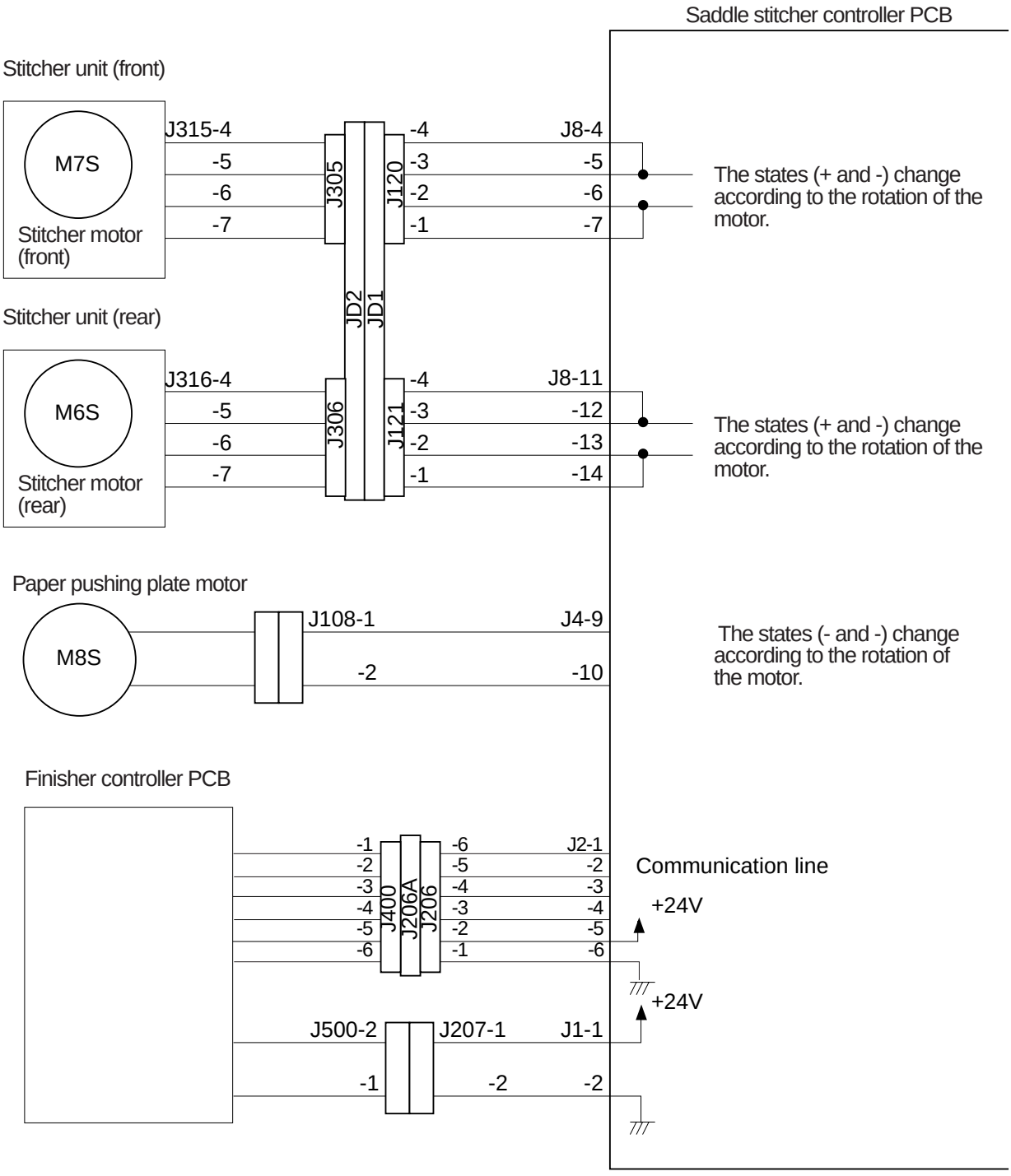

Figure 3-107

II. FEEDING/DRIVE SYSTEM

A. Outline

The stitcher unit aligns the sheets coming from the finisher unit and stitches the resulting stack for delivery to the delivery tray according to the commands coming through the finisher controller PCB.

The machine's operation consists of the following:

1. Receives sheets.
2. Aligns the sheets.
3. Stitches the stack.
4. Feeds the stack.
5. Folds and delivers the stack.

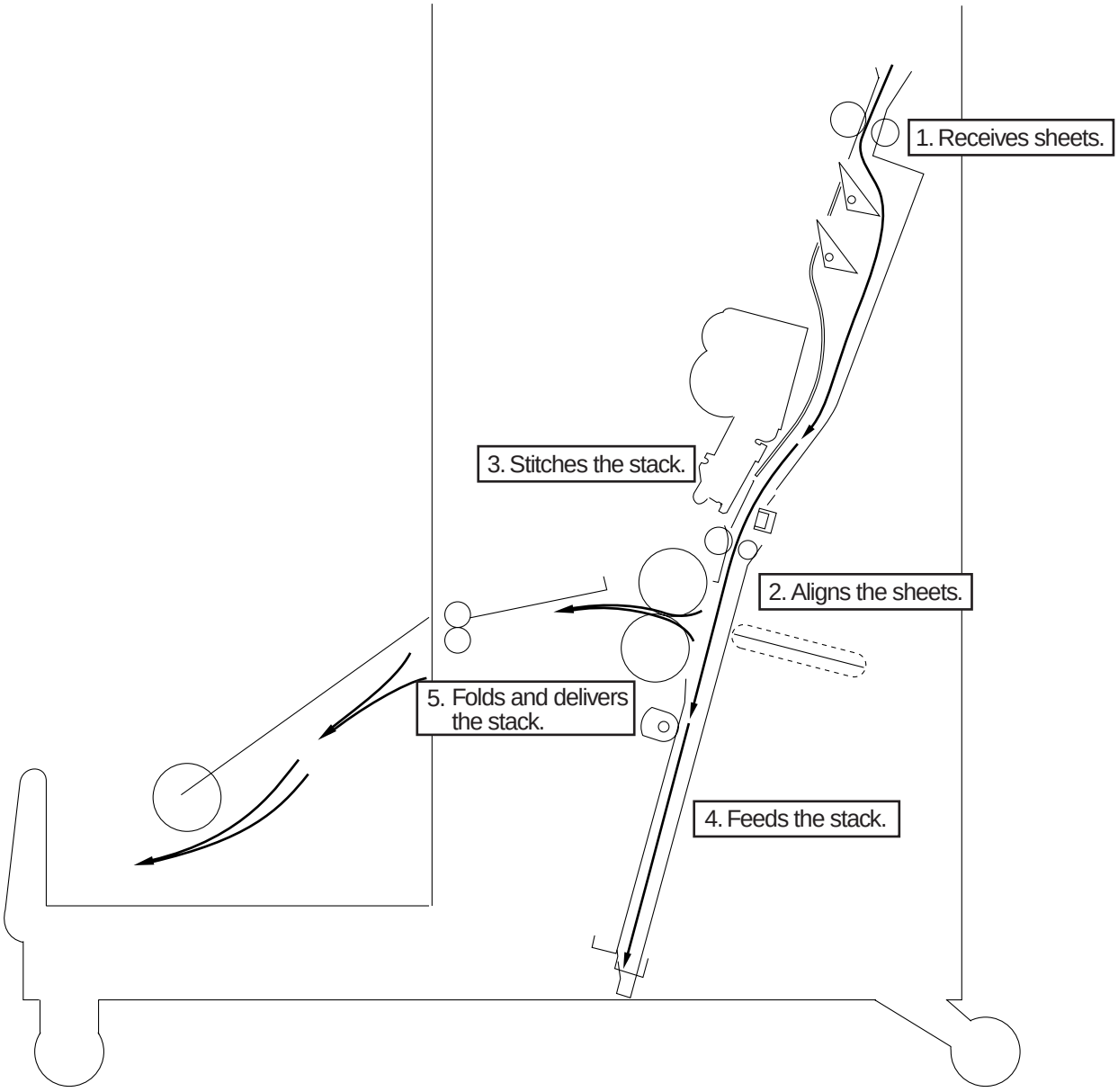

Figure 3-201

COPYRIGHT © 1998 CANON INC. FINISHER-C1/SADDLE FINISHER-C2 REV. 0 DEC. 1998 PRINTED IN JAPAN (IMPRIME AU JAPON)

1. Receiving Sheets

The stitcher unit receives sheets from the finisher unit and deposits them inside the vertical path in vertical orientation.

The vertical path while sheets are being deposited is configured by two paper deflecting plates.

The position of the sheets being deposited is set by the paper positioning plate so that the center of the stack matches the stapling/folding position.

Sheets coming later are deposited closer to the delivery slot, and the volume of paper that may be deposited is as follows:

- 15 sheets (maximum of 14 sheets of 80 g/m^2 + 1 sheet of 128 g/m^2)

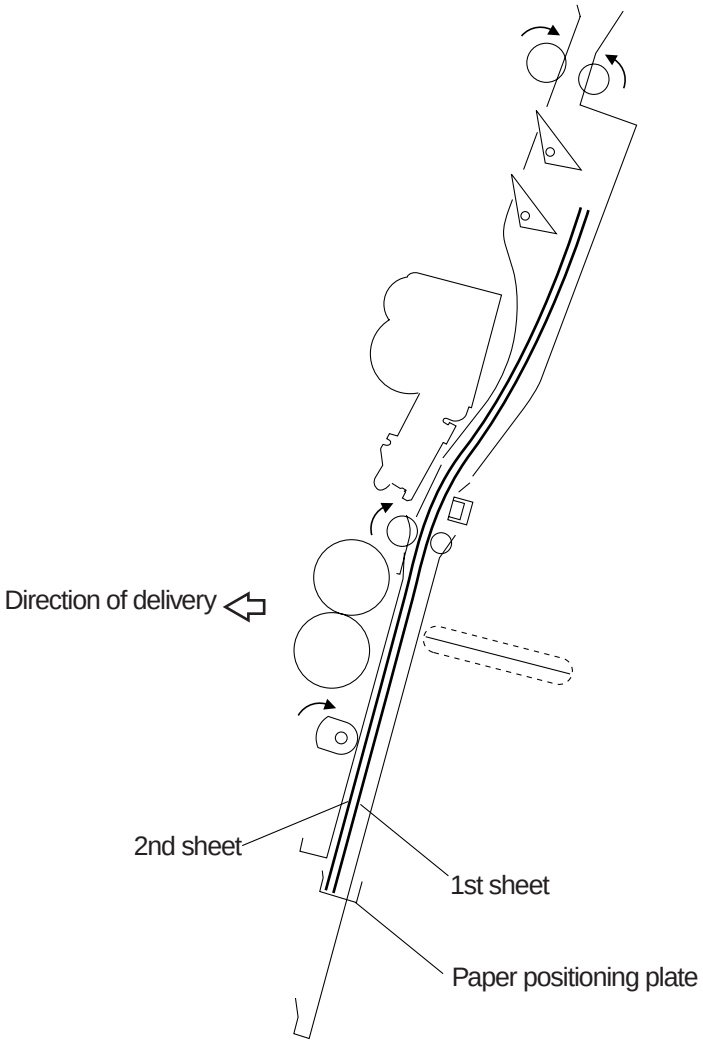

Figure 3-202

2. Aligning the Sheets

The alignment plates operate to put the sheets in order each time a sheet of paper is deposited in the vertical path assembly. The alignment plates are mounted at the edges of the vertical path assembly.

The alignment plates also operate after stapling to prepare the stack for delivery.

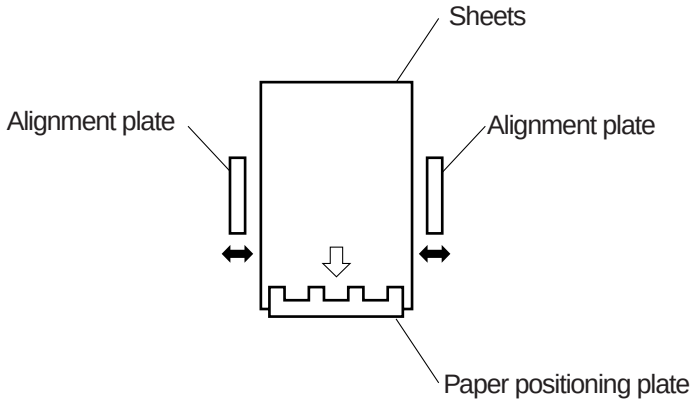

Figure 3-203

COPYRIGHT © 1998 CANON INC. FINISHER-C1/SADDLE FINISHER-C2 REV. 0 DEC. 1998 PRINTED IN JAPAN (IMPRIME AU JAPON)

3. Stitching

When all sheets have been deposited, the two stitchers stitch the stack. The stitchers are positioned so that they face the center of a stack.

The two stitchers are not operated simultaneously so as to avoid wrinkling the paper between two staples and to limit the load on the power supply.

If no more than one sheet of paper arrives from the copier, no stitching operation takes place and the sequence goes to the next operation (stack feeding).

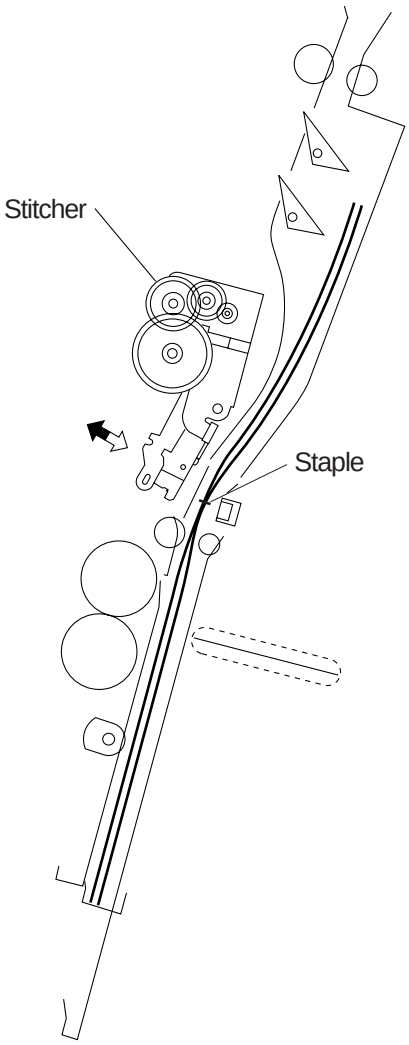

Figure 3-204

4. Feeding the Stack

The unit folds the stitched stack of sheets and then feeds it to the point of delivery, which is where the center of the stack, i.e., stapling position, matches the height of the paper pushing plate and the folding roller nip.

The stack is moved forward by operating the paper positioning plate. When the plate is operated, the guide plate which has been covering the folding rollers, also moves down so that the folding rollers directly face the stack.

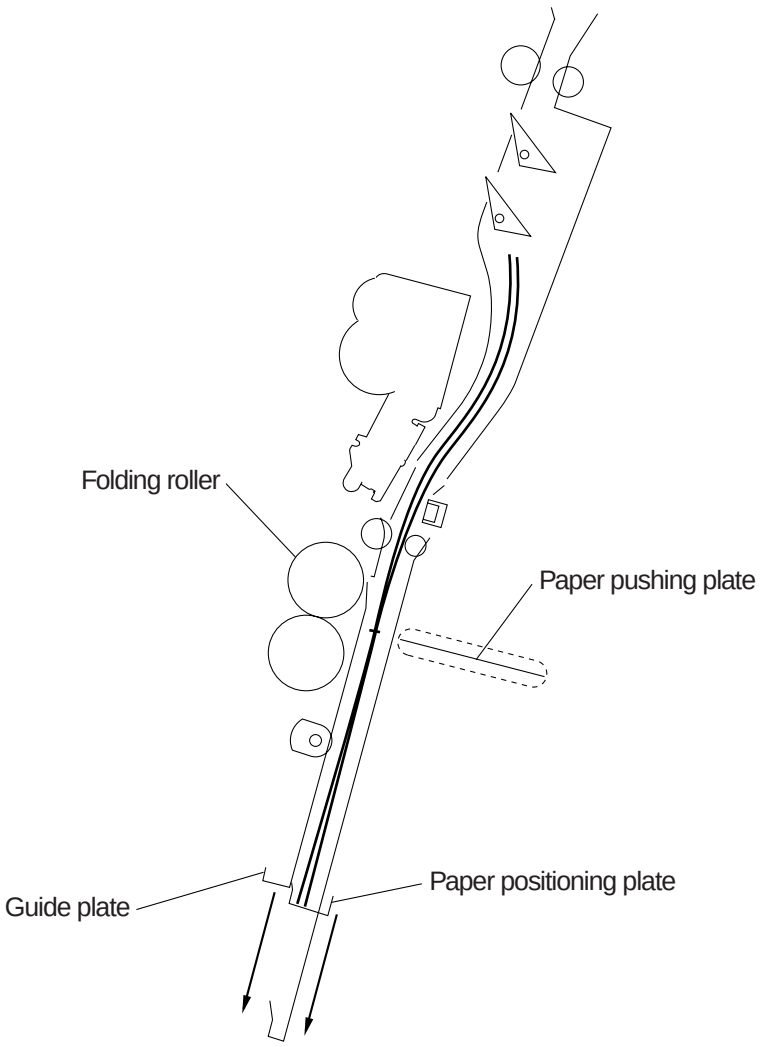

Figure 3-205

COPYRIGHT © 1998 CANON INC. FINISHER-C1/SADDLE FINISHER-C2 REV. 0 DEC. 1998 PRINTED IN JAPAN (IMPRIME AU JAPON)

5. Folding/Delivering the Stack

The paper pushing plate pushes against the center of the stack to move it in the direction of the folding rollers. In response, the folding rollers pick the stack along its center and fold it in two. The folding rollers together with the delivery roller then move the stack along to deposit it on the delivery tray.

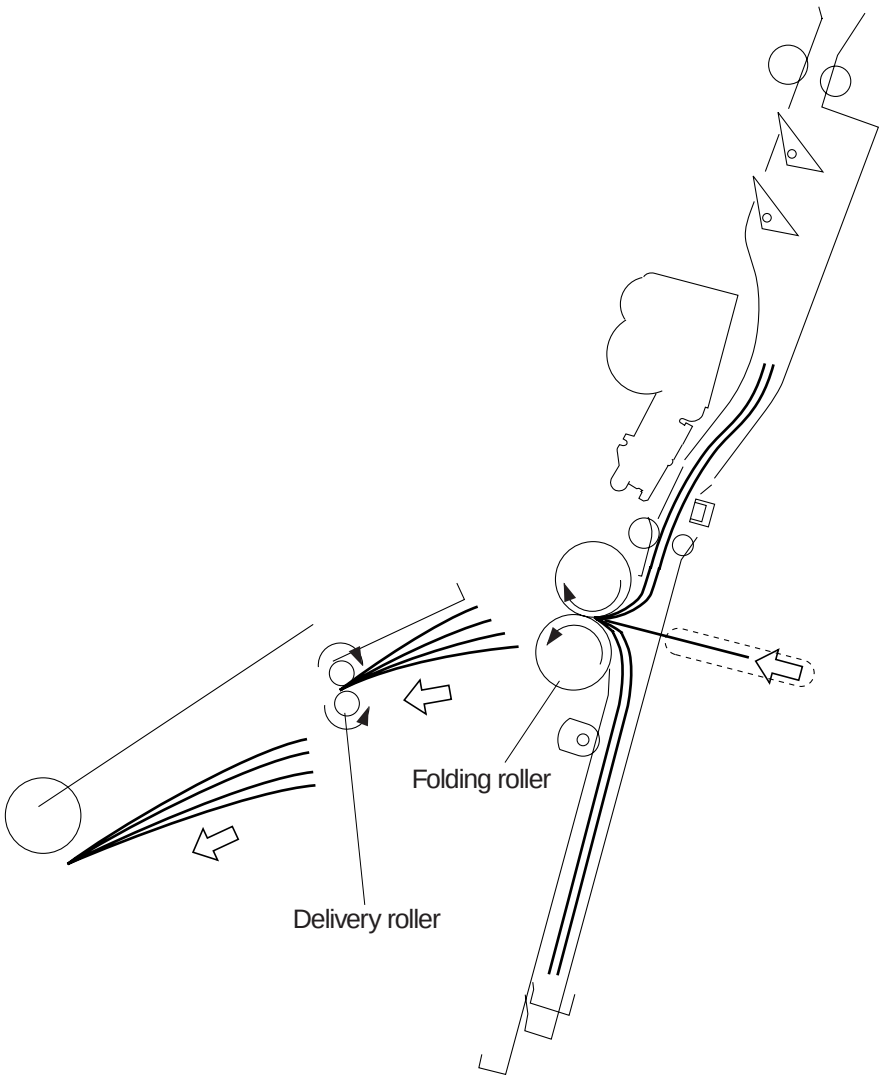

Figure 3-206

COPYRIGHT © 1998 CANON INC.

III. PAPER DEPOSITING MECHANISM

A. Outline

The paper depositing mechanism serves to keep a stack of sheets coming from the finisher in place for the next steps (stapling, folding).

The paper inlet is equipped with the No. 1 flapper and the No. 2 flapper, which operate to configure the paper path to suit the size of sheets. The paper positioning plate is kept in wait at a pre-determined location to suit the size of paper. The paper positioning plate is driven by the paper positioning plate motor (M4S), and the position of the plate is identified in reference to the number of motor pulses coming from the paper positioning plate home position sensor (PI7).

A sheet moved by the inlet roller is handled by the feed rollers and the crescent roller and held in specific position. The feed rollers serve to move sheets by coming into contact with or away from sheets as needed.

The alignment plates put the stack into order each time a sheet is deposited. The alignment plates are driven by the alignment motor (M4S), and its position is identified in reference to the number of motor pulses coming from the alignment plate home position sensor (PI5).

To prevent interference between paper and the folding rollers when the paper is being deposited, the folding rollers are designed to be covered by a guide plate. The guide plate moves down before paper is folded so as to expose the folding rollers.

The inlet is equipped with the No. 1, No. 2, and No. 3 sensors (PI1A, PI2Al, PI3A), each suited to a specific paper size, and the paper positioning plate is equipped with a paper positioning plate paper sensor (PI8).

COPYRIGHT © 1998 CANON INC. FINISHER-C1/SADDLE FINISHER-C2 REV. 0 DEC. 1998 PRINTED IN JAPAN (IMPRIME AU JAPON)

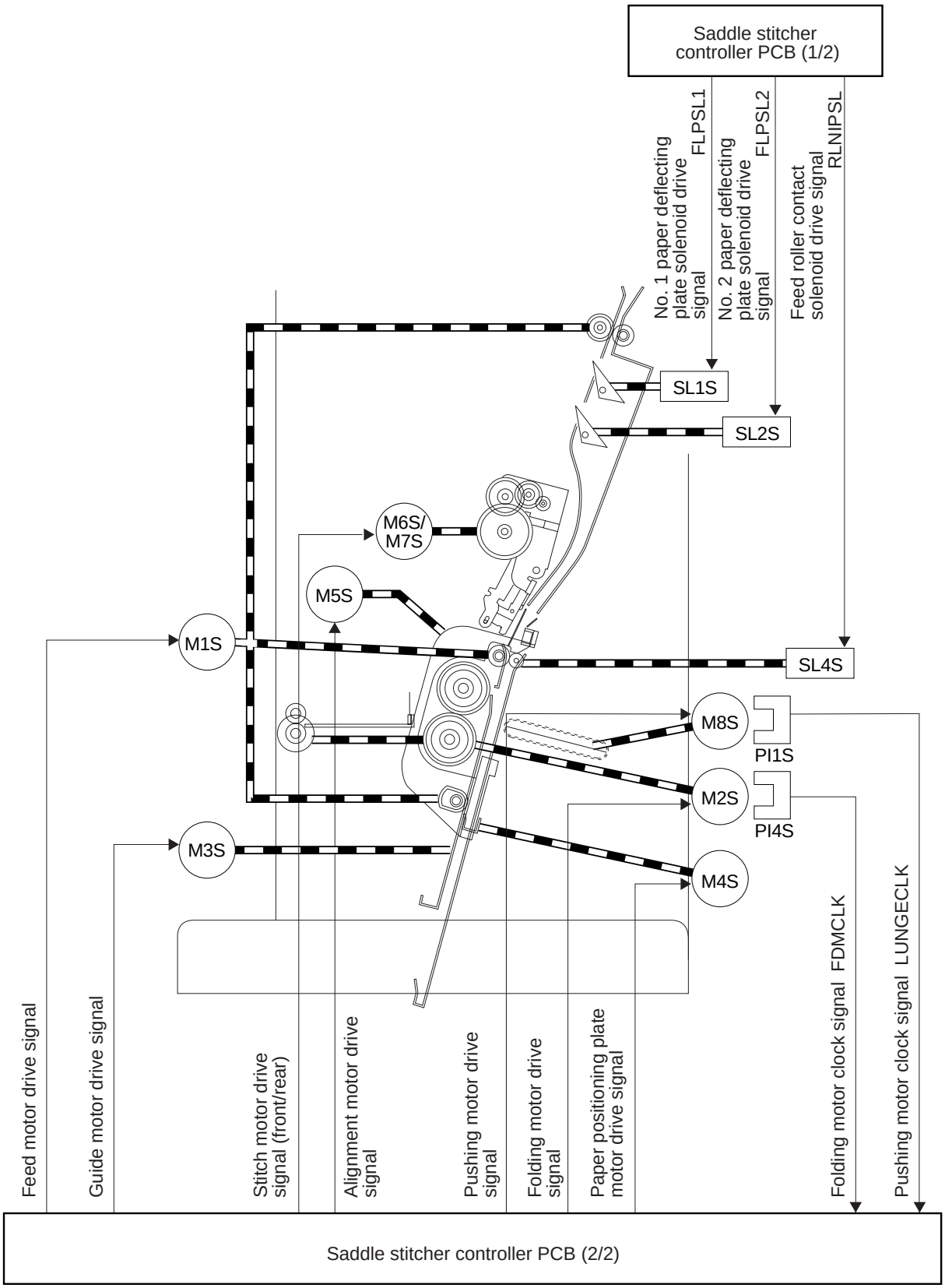

Figure 3-301

COPYRIGHT © 1998 CANON INC.

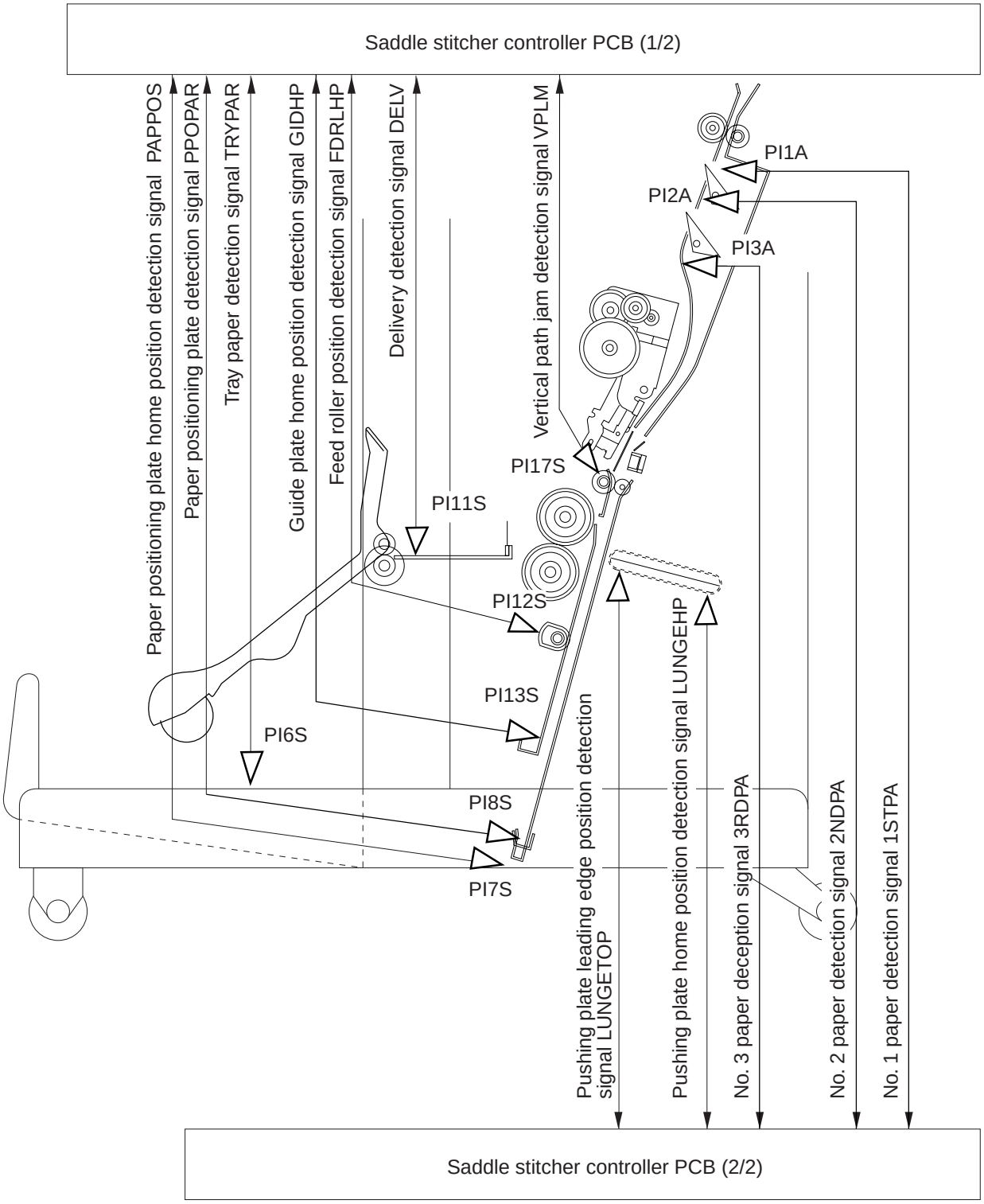

Figure 3-302

COPYRIGHT © 1998 CANON INC. FINISHER-C1/SADDLE FINISHER-C2 REV. 0 DEC. 1998 PRINTED IN JAPAN (IMPRIME AU JAPON)

B. Controlling the Inlet Flappers

1. Outline

The two flappers mounted at the paper inlet are operated to configure the feed path according to the size of paper. The flappers are used to enable the following:

1. To detect the passage of the trailing edge of the paper being moved by an appropriate sensor.
2. To prevent the following sheet from butting against the top of the existing stack.

The relationship between sensors and paper sizes is as shown in Table 3-301.

Table 3-301

Sensor	A3/LDR	B4	A4R/LTRR
No. 1 paper sensor (PI1A)	Used	Used	Used
No. 2 paper sensor (PI2A)	Not used	Used	Used
No. 3 paper sensor (PI3A)	No t used	Not used	Used

Each flapper is driven by its own solenoid.
The relationship between solenoids and paper sizes is as shown in Table 3-302.

Table 3-302

Solenoid	A3/LDR	B4	A4R/LTRR
No. 1 paper deflecting plate solenoid (SL1S)	OFF	ON	ON
No. 2 paper deflecting plate solenoid (SL2S)	OFF	OFF	ON

COPYRIGHT © 1998 CANON INC.

2. A3/LDR Paper Path (3 sheets)

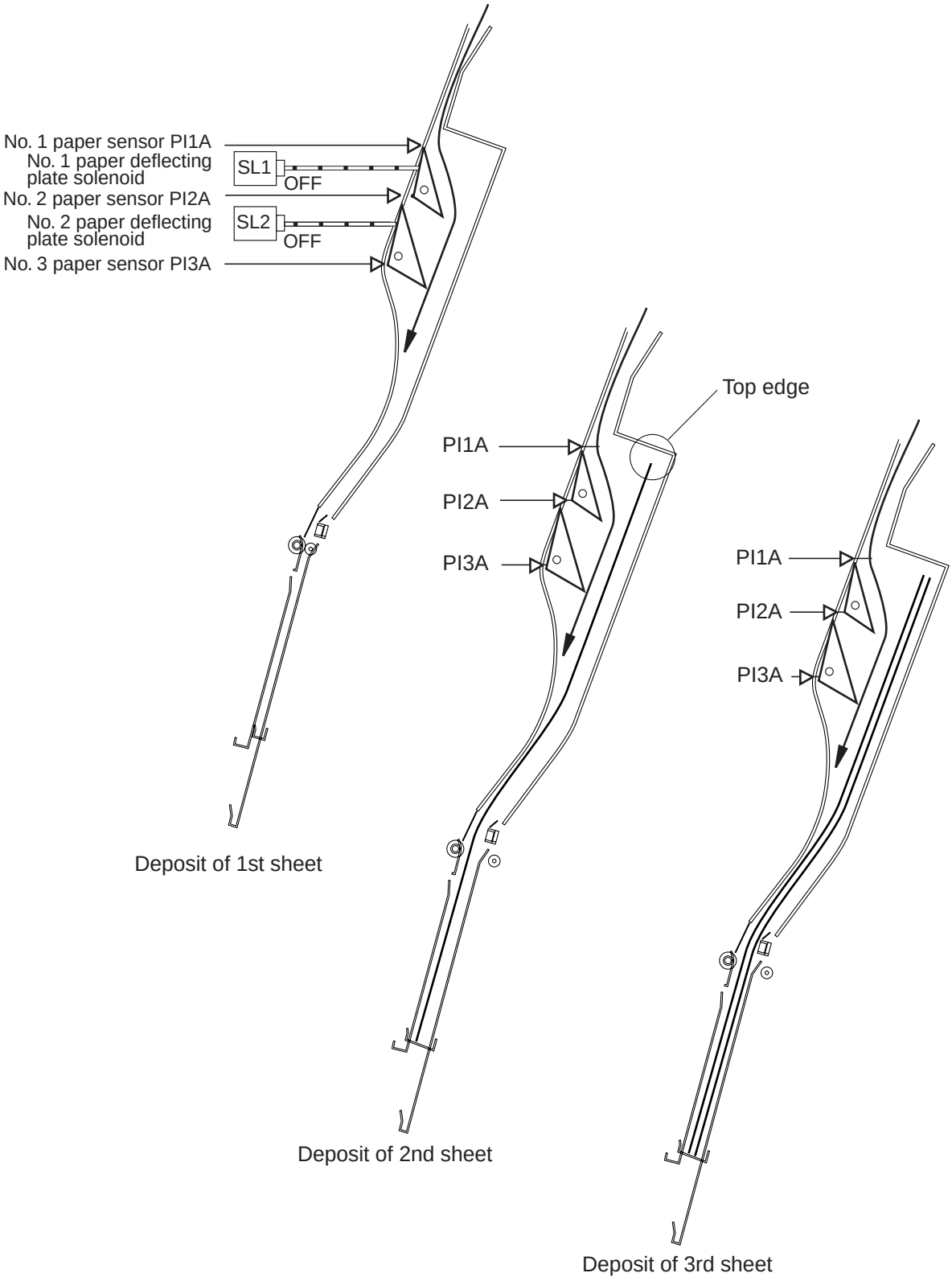

Figure 3-303

COPYRIGHT © 1998 CANON INC.

3. B4 Paper Path (3 sheets)

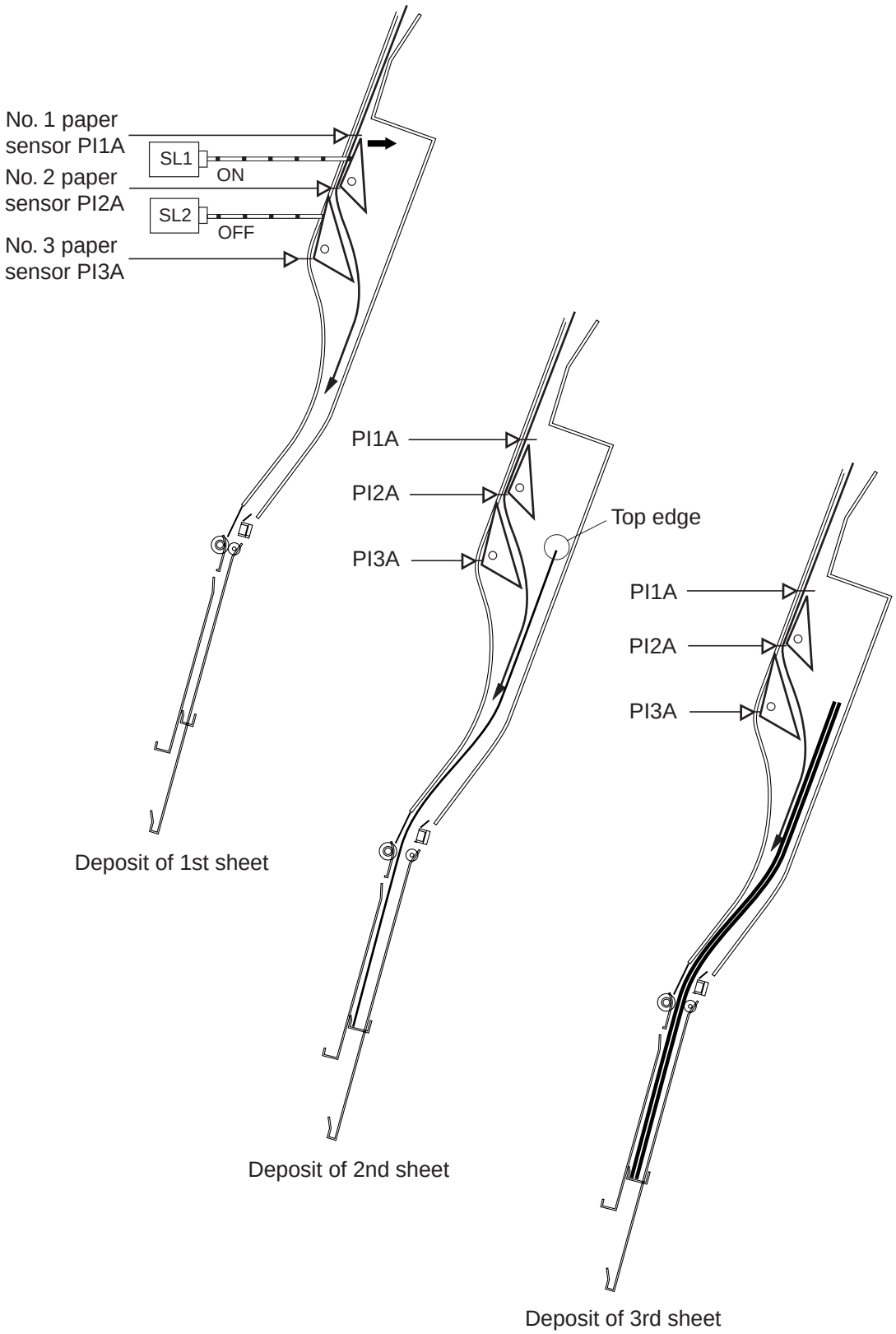

Figure 3-304

COPYRIGHT © 1998 CANON INC.

4. A4R/LTRR Paper Path (3 sheets)

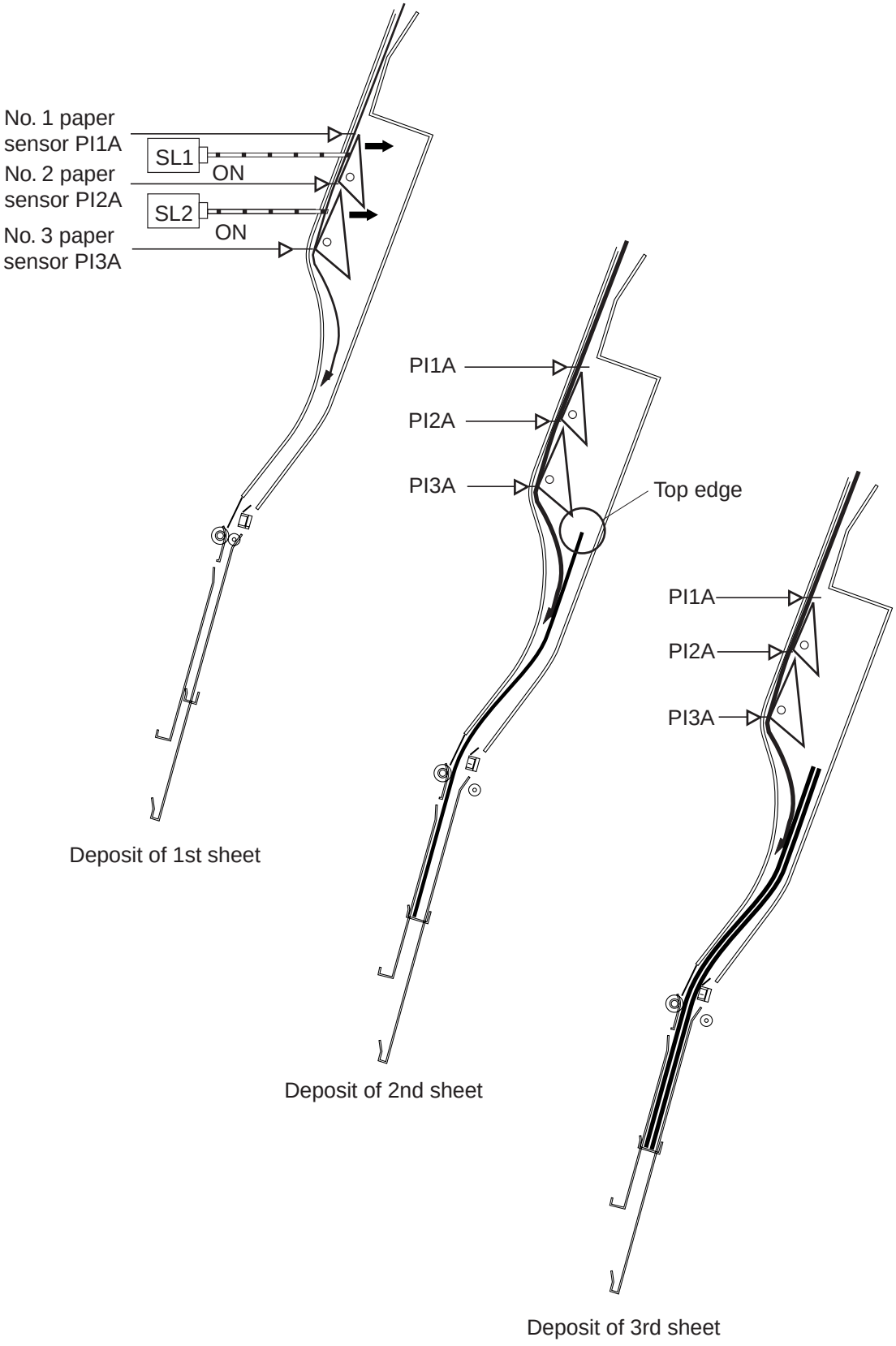

Figure 3-305

COPYRIGHT © 1998 CANON INC.

C. Controlling the Movement of Sheets

When the leading edge of a sheet has moved past the inlet flapper, the intermediate feed roller and the crescent roller start to move the sheet forward.

The intermediate feed roller is normally not in contact with the path bed. When the leading edge of a sheet reaches the intermediate feed roller contact section, the feed roller press solenoid (SL4S) causes the roller to come into contact with the path bed so as to move the sheet. The contact is broken as soon as the leading edge of the sheet reaches the paper positioning plate. This series of operations is executed each time a sheet arrives.

When the leading edge of the first sheet reaches the paper positioning plate, the paper positioning plate paper sensor (PI8) turns on. The arrival of the second and subsequent sheets will not be checked since the first sheet will still be over the sensor.

The crescent roller keeps rotating while sheets are being deposited, thereby butting the leading edge of each sheet against the paper positioning plate and, ultimately, keeping the leading edge of the stack in order.

The alignment plate motor (M5S) drives the alignment plates for each sheet so as to put both right and left edges of the sheet in order.

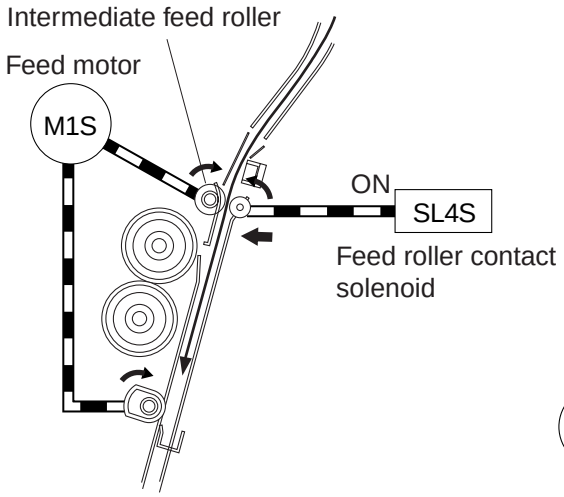

Figure 3-306

1] The solenoid turns ON while paper is being moved so that the roller comes into contact.

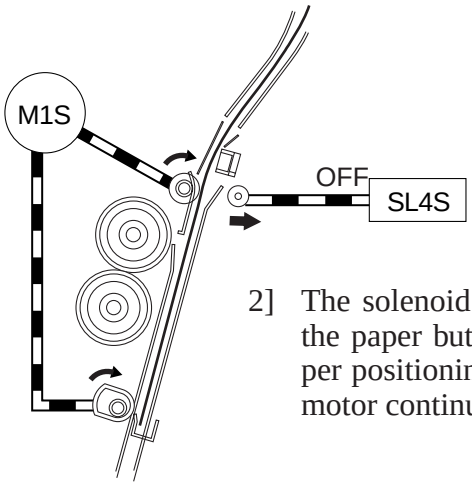

2] The solenoid turns OFF when the paper butts against the paper positioning plate. The feed motor continues to rotate.

Figure 3-307

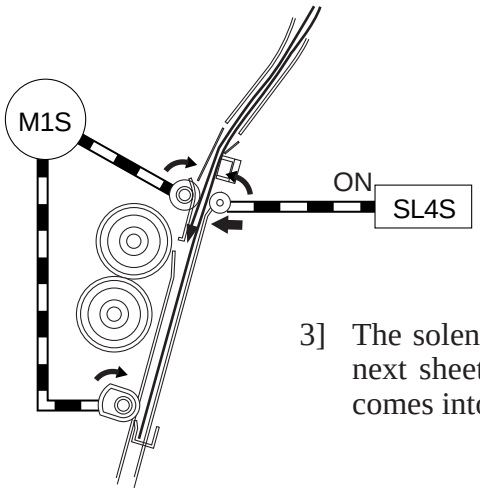

3] The solenoid turns ON when the next sheet arrives, and the roller comes into contact.

Figure 3-308

COPYRIGHT © 1998 CANON INC.

D. Aligning the Sheets

The alignment plate motor (M5S) drives the alignment plates each time a sheet is deposited, thereby putting both right and left edges of the sheet in order. The alignment plate motor is a 4-phase stepping motor. The position of the alignment plate is identified in reference to the number of motor pulses from the alignment plate home position sensor (PI7).

Go through the descriptions that follow for an idea of what takes place when the saddle stitching mechanism operates on two sheets.

1) When the first sheet has been deposited, the alignment plates butt against the right and left edges of the stack (first alignment).
   The alignment plates leave home position in advance and remain in wait at points 10 m from the edges of the stack.

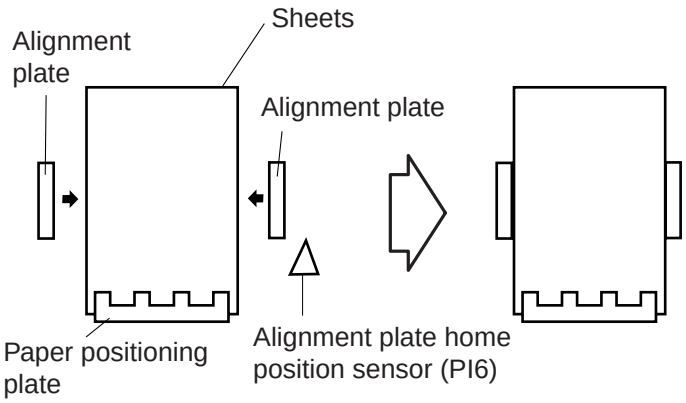

Figure 3-309

2) The alignment plates move away from the edges of the stack over a short distance and then butt against the edges once again (2nd alignment).

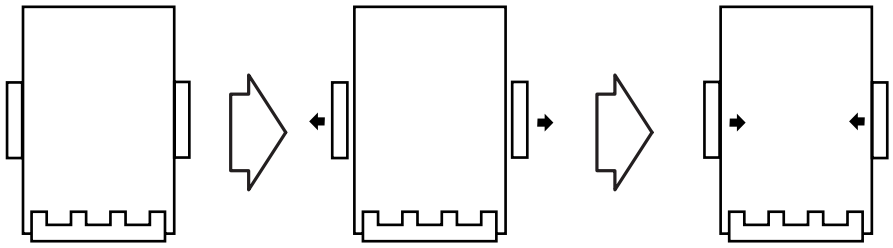

Figure 3-310

3) The alignment plates escape to points 10 mm from the edges of the stack.

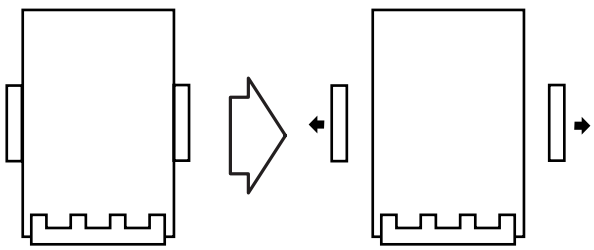

Figure 3-311

COPYRIGHT © 1998 CANON INC. FINISHER-C1/SADDLE FINISHER-C2 REV. 0 DEC. 1998 PRINTED IN JAPAN (IMPRIME AU JAPON)

4) When the following stack arrives, the foregoing steps 1 through 3 are repeated.
5) The alignment plates butt against the stack once again, during which stitching takes place.

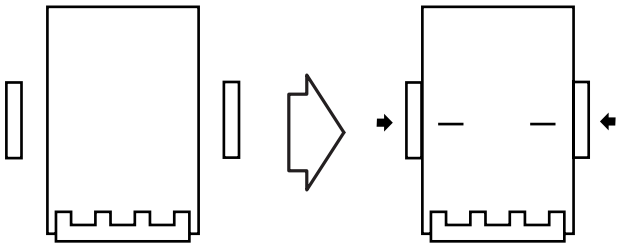

Figure 3-312

6) The alignment plates escape to points 10 mm from the edges of the stack, after which folding and delivery take place.

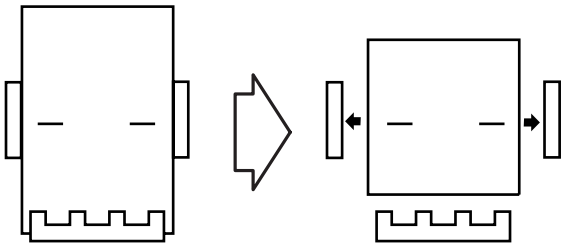

Figure 3-313

7) When the first sheet of the following stack reaches the No. 1 paper sensor, the guide moves to a point 10 mm from the edge of the stack to be ready for the next alignment operation.

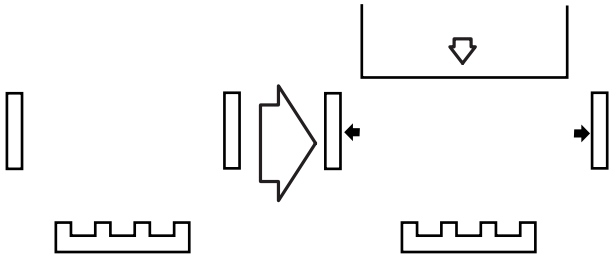

Figure 3-314

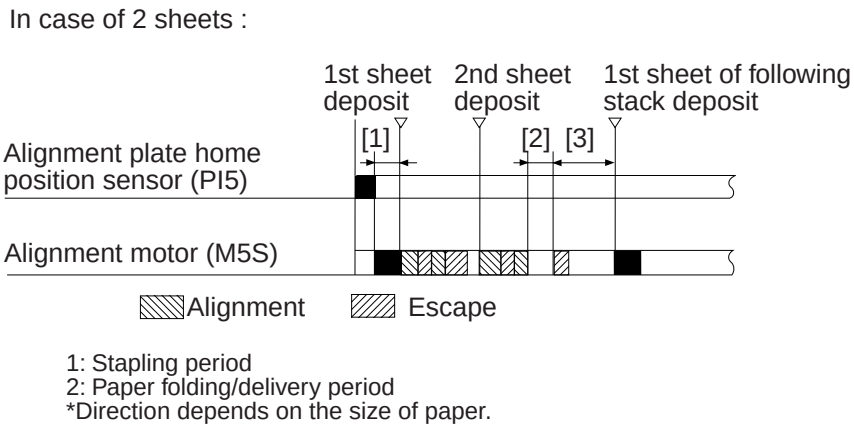

Figure 3-315

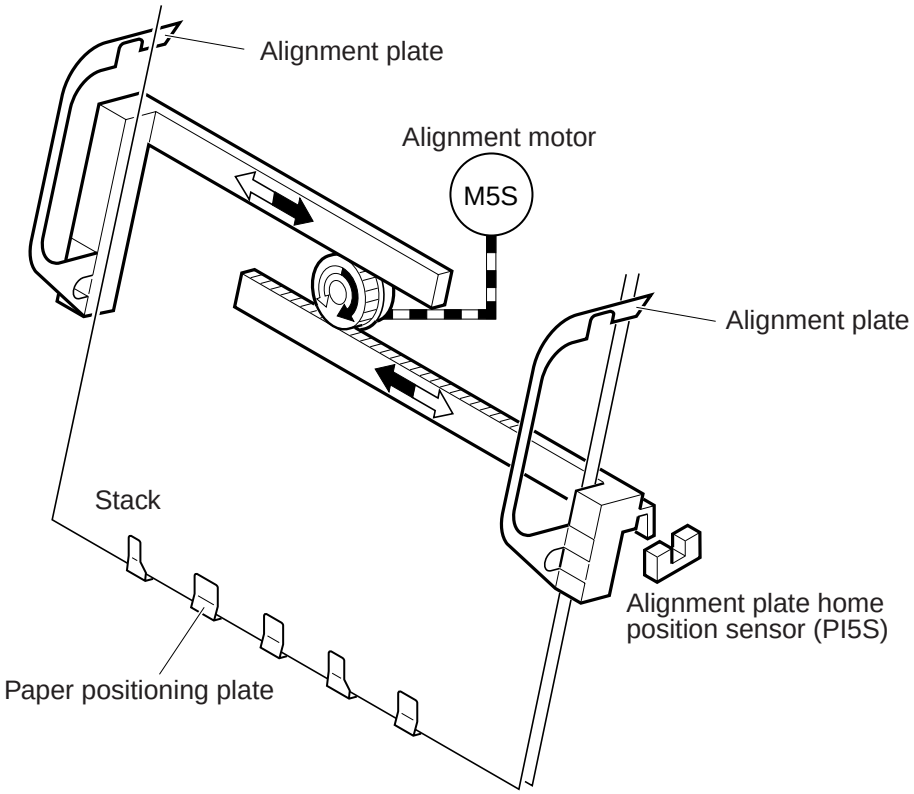

Figure 3-316

COPYRIGHT © 1998 CANON INC.

E. Controlling the Phase of the Crescent Roller

1. Outline

If alignment was executed while the crescent roller is in contact with the stack of sheets, the resulting friction against the roller causes the stack to move inappropriately (Figure 3-317). To prevent such a problem, the phase of the roller is identified and used to determine the timing of alignment operation.

The phase of the crescent roller is identified by the crescent roller phase sensor (PI12S). The flag for the crescent roller phase sensor is mounted to the crescent roller shaft. The flag will leave the sensor while the roller shaft rotates, turning on or off the sensor, enabling the assumption that the crescent roller is positioned at the opposite side of the stack (Figure 3-319). The alignment plates are operated to correspond with this change in the state of the sensor.

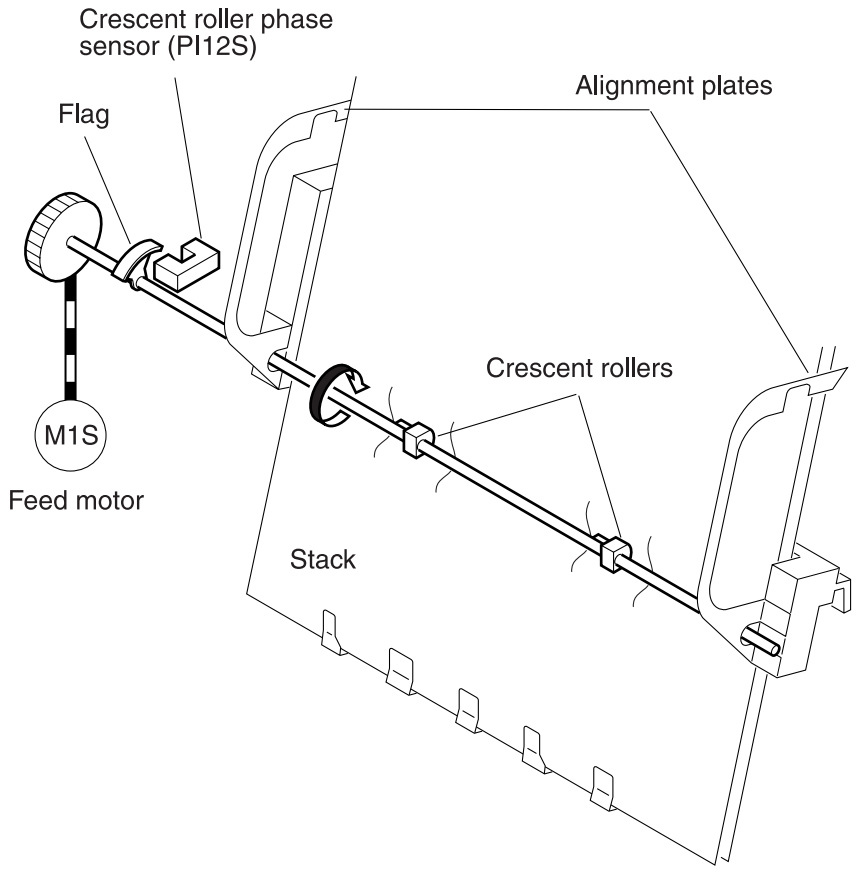

Figure 3-317

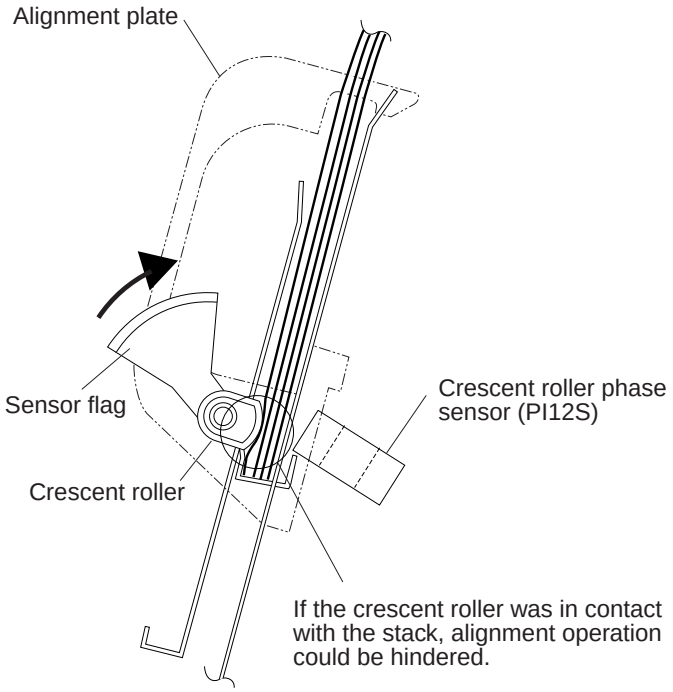

Figure 3-318

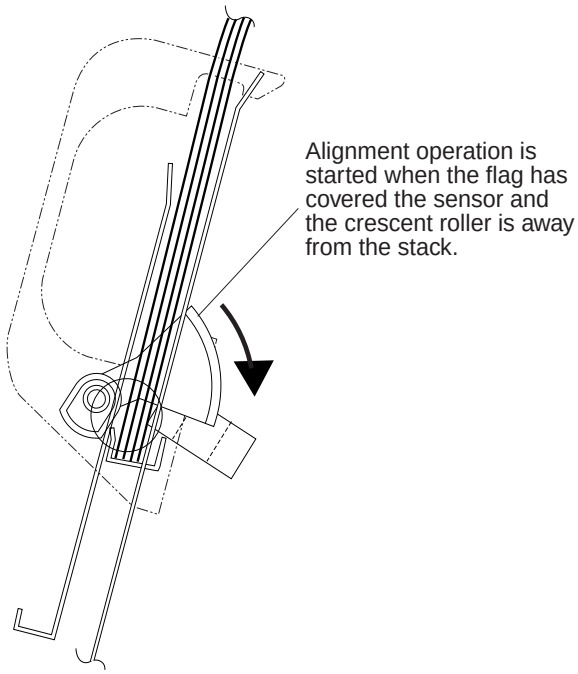

Figure 3-319

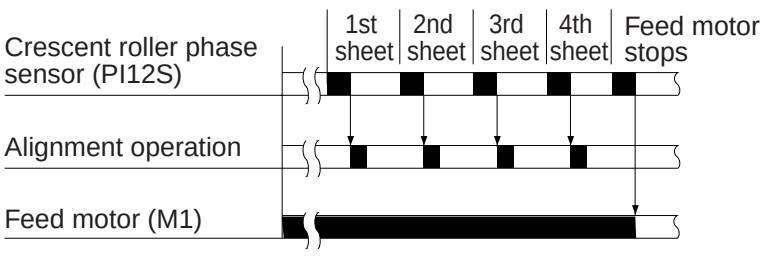

Figure 3-320

COPYRIGHT © 1998 CANON INC. FINISHER-C1/SADDLE FINISHER-C2 REV. 0 DEC. 1998 PRINTED IN JAPAN (IMPRIME AU JAPON)

IV. STITCHING SYSTEM

1. Outline

The stitching system “stitches” the center of a deposited stack with staples.

To enable stitching at two locations on a stack, two stitcher units (front, rear) are used, each stitcher being equipped with a stitcher home position sensor (PS4, PS2) for detection of position and a stapler sensor (PS3, PS1) for detection of the presence/absence of a staple.

The stitcher base is designed so that it may be drawn out to the front from the saddle stitcher for replacement of the staple cartridge or removal of a staple jam. The stitcher unit in sensor (PI16S) is used to make sure that the stitcher base is properly fitted to the saddle stitcher.

No safety switch is mounted for the stitcher unit (front, rear), as the location does not allow access by the user.

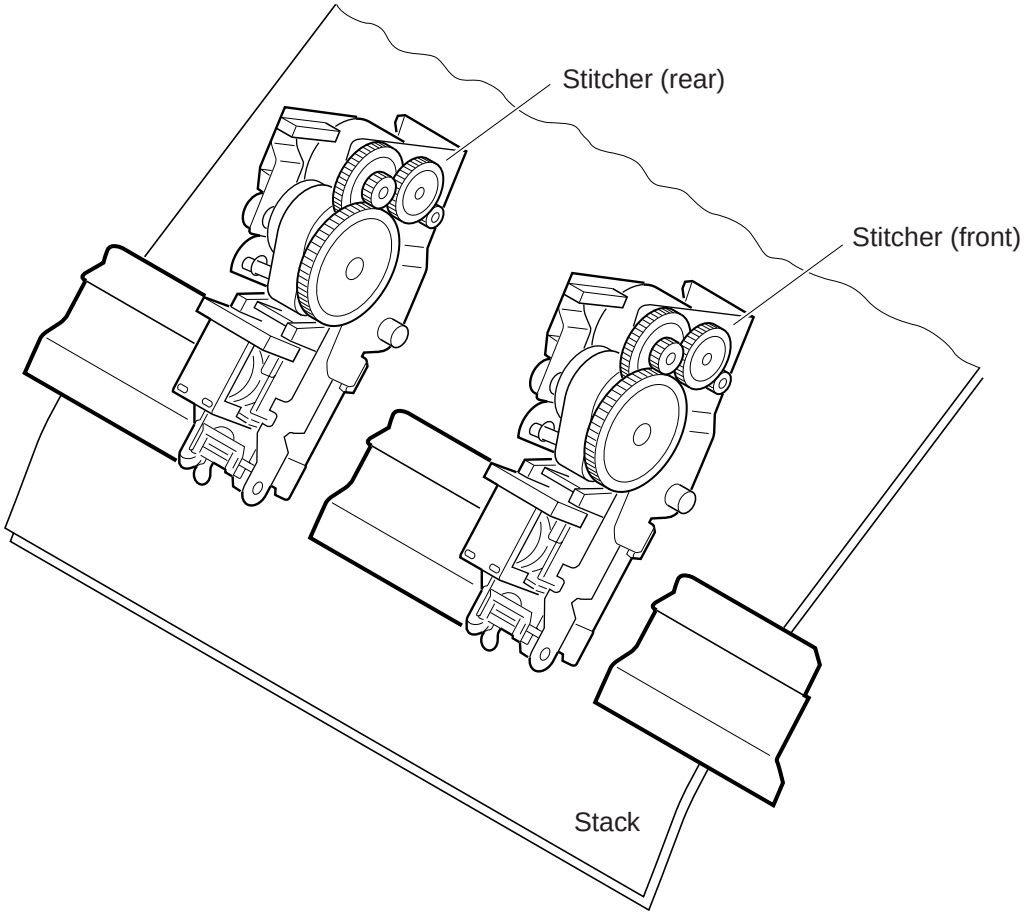

Figure 3-401

COPYRIGHT © 1998 CANON INC.

2. Stitcher Unit Operation

The stitcher base unit consists of two stitchers and stitcher bases. The stitchers are fixed in position, and are not designed to slide or swing.

Stitching operation is executed by driving the rotary cam by the stitch motor (M7S, M6S). The front and rear stitcher units are operated with a delay in time so as to prevent wrinkling of paper and to limit the load imposed on the power supply. (A delay in time for initiating the stitcher motor start-up current helps decrease the load on the power supply.)

The stitching home position sensor (PS4, PS2) is used to monitor the movement of the rotary cam, thereby enabling the identification of a single operation of the stitcher. The presence/absence of staples inside the staple cartridge fitted to the stitcher is detected by the staple sensor (PS3, PS1).

The alignment plates keep both edges of the stack in place while stitching takes place.

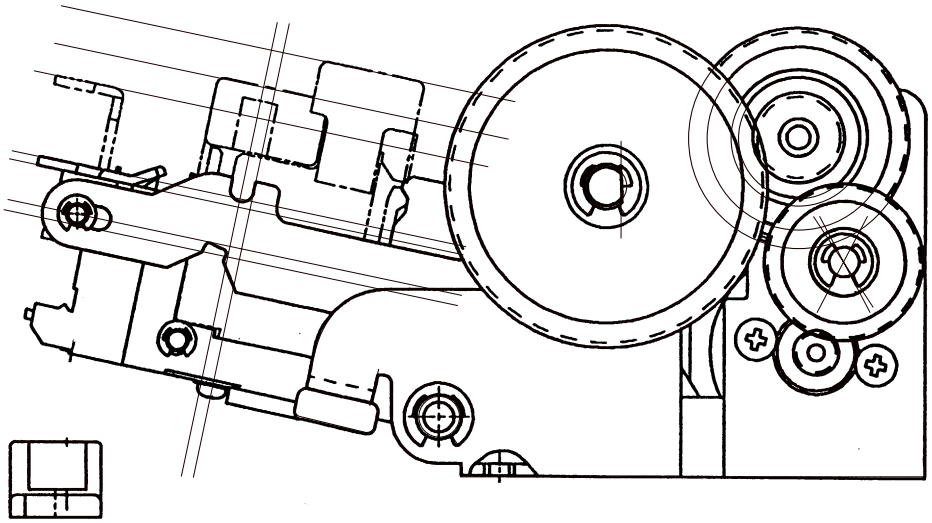

Figure 3-402

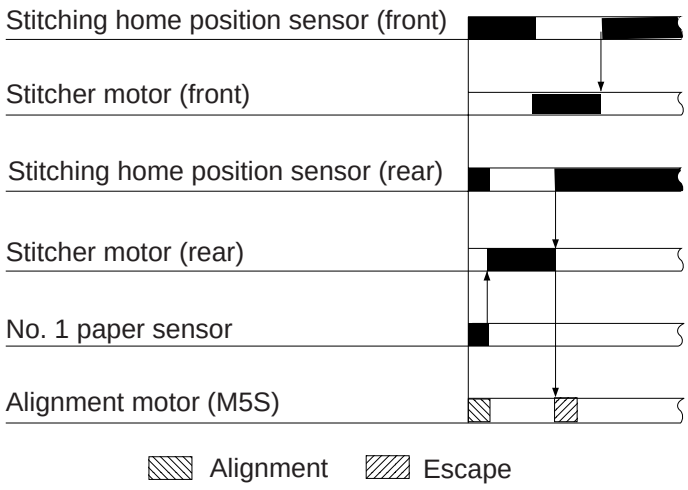

Figure 3-403

COPYRIGHT © 1998 CANON INC. FINISHER-C1/SADDLE FINISHER-C2 REV. 0 DEC. 1998 PRINTED IN JAPAN (IMPRIME AU JAPON)

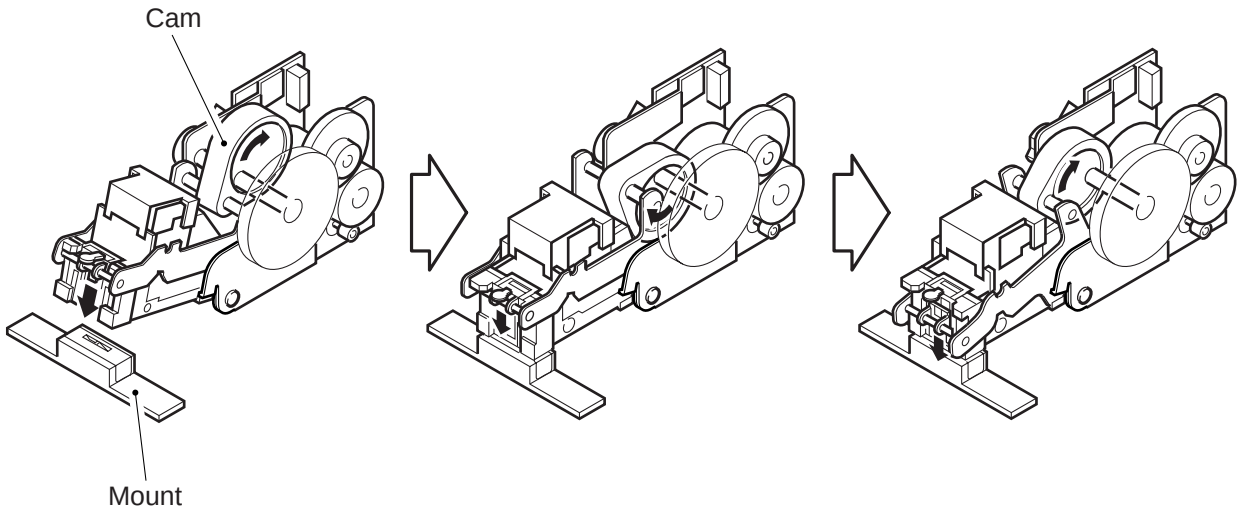

Figure 3-404

V. FOLDING/DELIVERY SYSTEM

1. Outline

The paper folding mechanism consists of a guide plate, folding rollers, paper pushing plate, and paper positioning plate.

The guide plate is used to cover the folding rollers while sheets are deposited so as to prevent sheets from coming into contact with the folding rollers during deposit.

Before the stack is folded, the guide plate moves down to enable the folding rollers to operate. The folding rollers are driven by the folding motor (M2S), and the drive of the motor is monitored by the folder motor clock sensor (PI4S).

The paper pushing plate is driven by the paper pushing plate motor (M8S), and the drive of the paper pushing plate motor is monitored by the paper pushing plate motor clock sensor (PI1S). The paper pushing plate home position sensor (PI14S) and the paper pushing plate top position sensor (PI15S) are used to detect the position of the paper pushing plate.

After being folded into two by the folding rollers, a stack is moved ahead by the delivery roller for delivery. The delivery roller is driven by the folding motor. The delivery sensor (PI11S) is mounted to the delivery assembly to detect delivery of paper. The tray paper sensor (PI6S) is used to detect the presence/absence of paper on the tray, but does not detect jams. The vertical path sensor (PI17S) serves to detect the presence of paper after jam removal.

2. Controlling the Movement of Stacks

When a stack has been stitched (2 points), the paper positioning plate lowers so that the stack will move to where the folding rollers come into contact with it and where the paper pushing plate is located. The position of the paper positioning plate is controlled in reference to the number of motor pulses coming from the paper positioning home position sensor (PI7).

At the same time as the paper positioning plate operates, the guide plate lowers so that folding may take place.

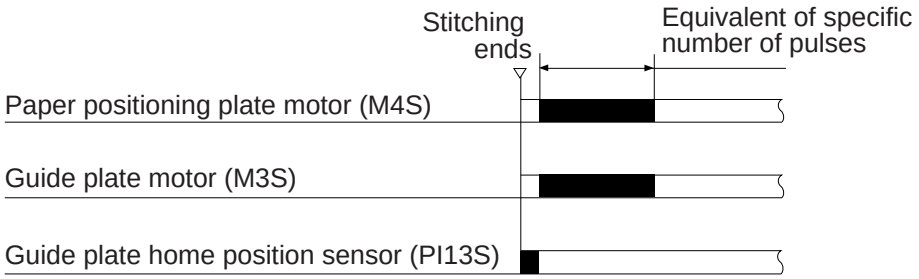

Figure 3-501

COPYRIGHT © 1998 CANON INC. FINISHER-C1/SADDLE FINISHER-C2 REV. 0 DEC. 1998 PRINTED IN JAPAN (IMPRIME AU JAPON)

3. Folding a Stack

A stack is folded by the work of the folding rollers and the paper pushing plate.

The paper pushing plate pushes against the center of a stack toward the roller contact section. The paper pushing plate starts at its home position and waits at the leading edge position until the stack has been drawn to the folding roller and is gripped for a length of 10 mm.

When the folding roller has gripped the stack for a length of about 10 mm, the paper pushing plate motor starts to rotate once again, and the paper pushing plate returns to home position. The stack so picked by the folding roller is drawn farther by the folding roller and then is moved by the delivery roller to the paper tray.

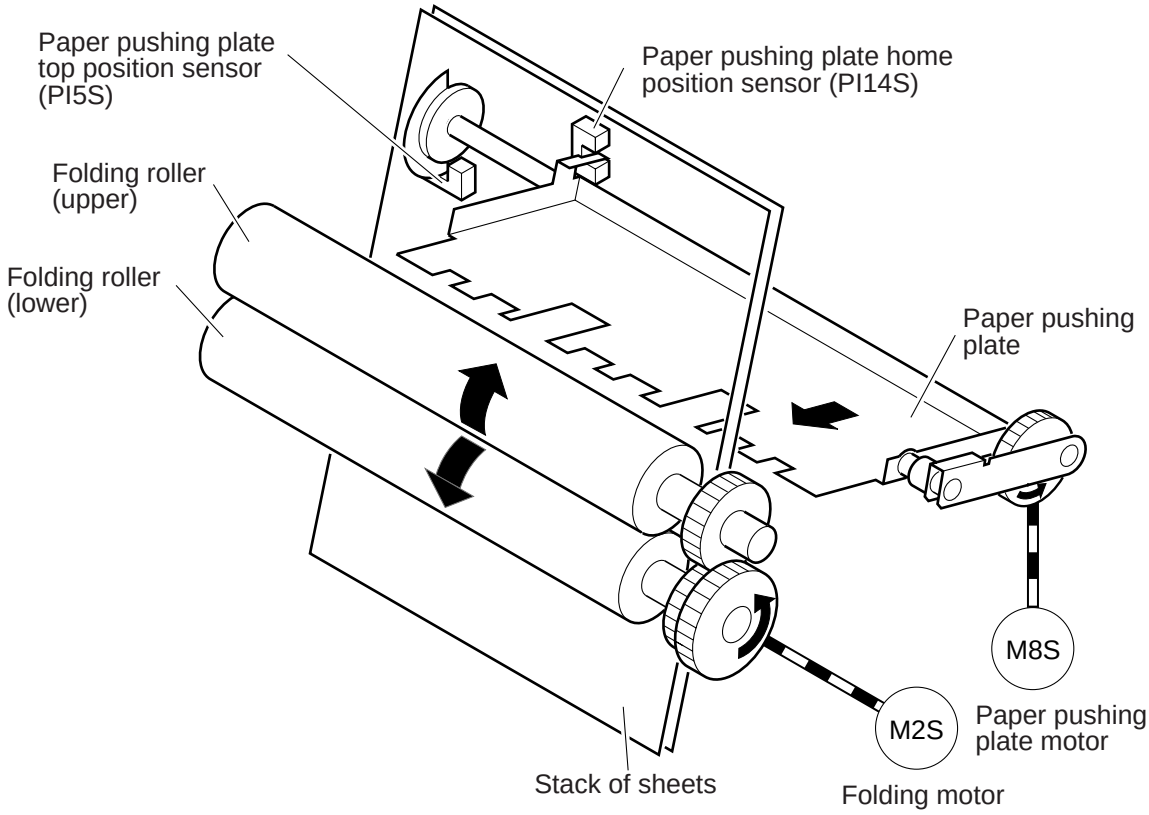

Figure 3-502

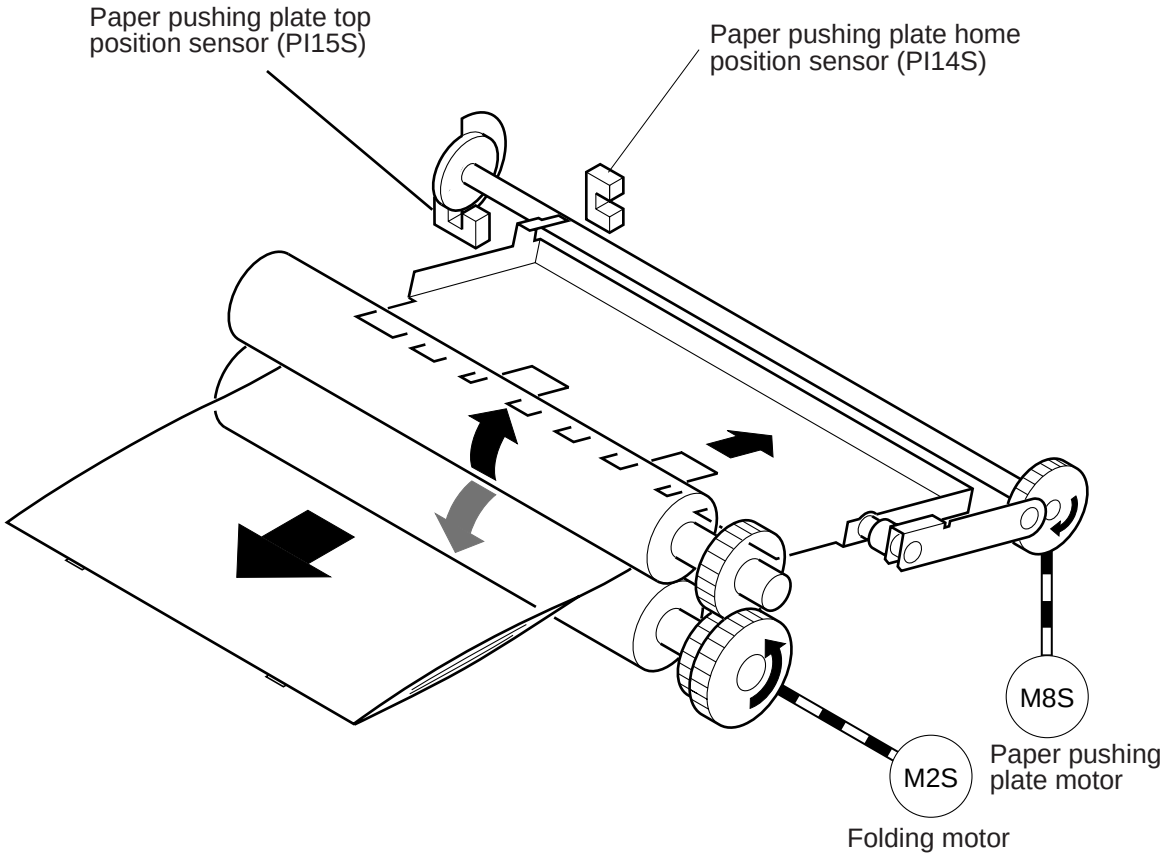

Figure 3-503

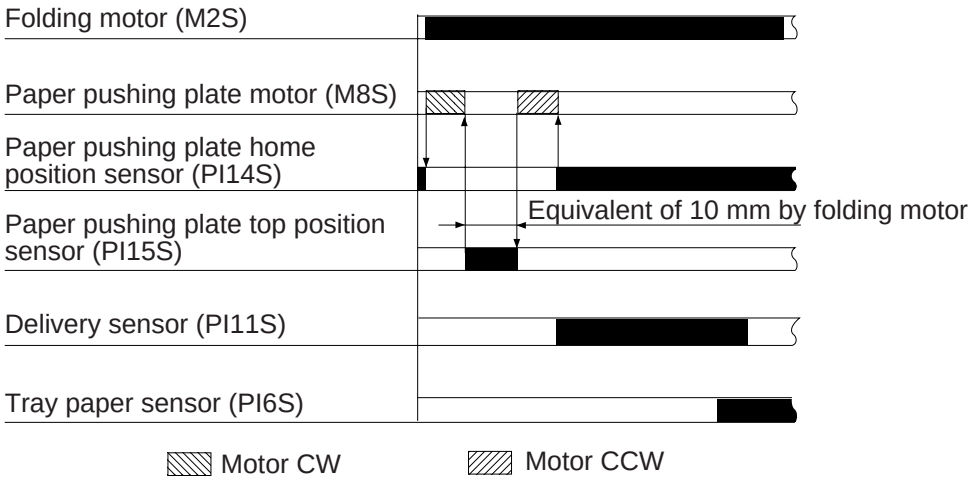

Figure 3-504

COPYRIGHT © 1998 CANON INC. FINISHER-C1/SADDLE FINISHER-C2 REV. 0 DEC. 1998 PRINTED IN JAPAN (IMPRIME AU JAPON)

4. Double Folding a Stack

To fold a stack consisting of 10 or more A4R or LTR-R sheets, folding is executed twice for the same stack.

The folding rollers rotate in reverse for an equivalent of 20 mm after gripping the stack for a length of 20 mm, enabling the folding rollers to apply an increased degree of pressure along the crease on the stack. Then, the folding rollers rotate normally, and the paper pushing plate returns to home position while the stack is being delivered.

This way, a stack requiring a large force may properly be folded with less pressure.

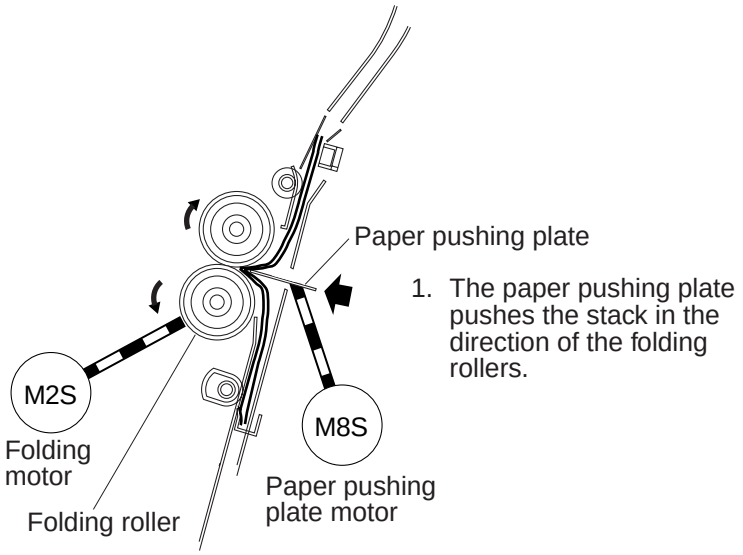

Figure 3-505

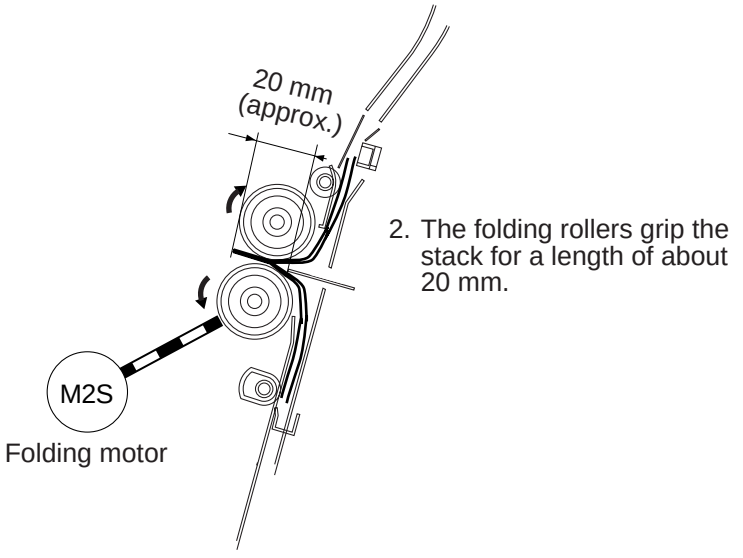

Figure 3-506

COPYRIGHT © 1998 CANON INC.

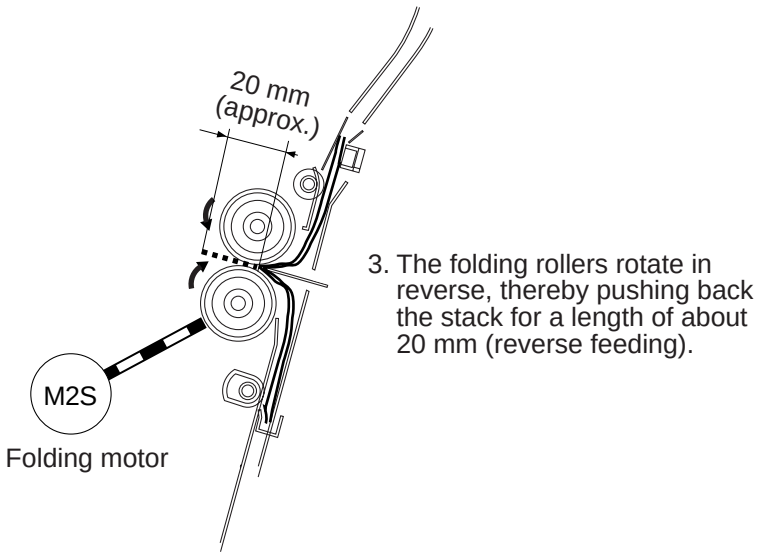

Figure 3-507

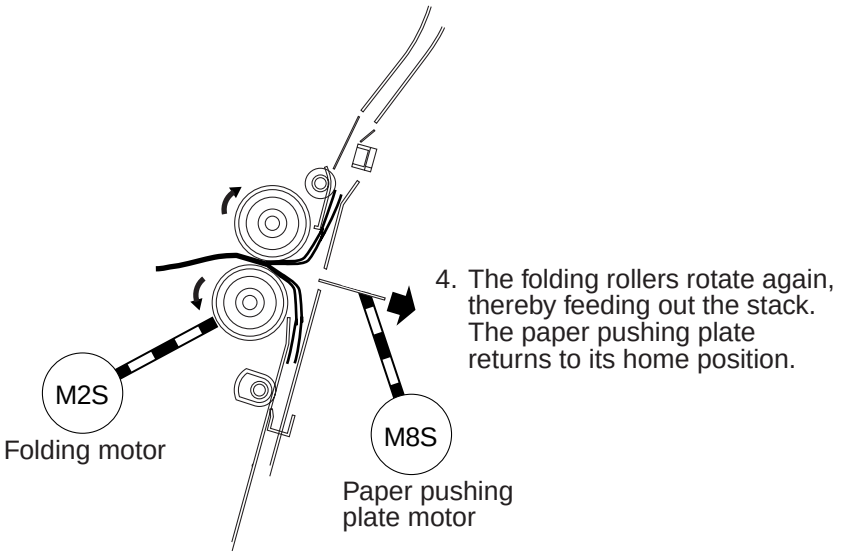

Figure 3-508

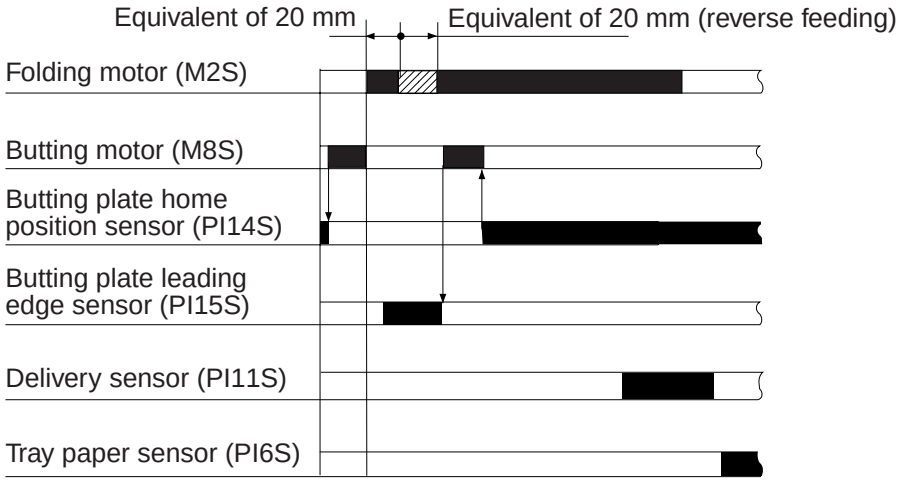

Figure 3-509

COPYRIGHT © 1998 CANON INC. FINISHER-C1/SADDLE FINISHER-C2 REV. 0 DEC. 1998 PRINTED IN JAPAN (IMPRIME AU JAPON)

VI. CHECKING FOR A JAM

1. Checking for a Jam

The saddle stitcher unit identifies any of the following conditions as a jam, and sends the jam signal to the copier. In response, the copier may stop copying operation and indicate the presence of a jam on its control panel.

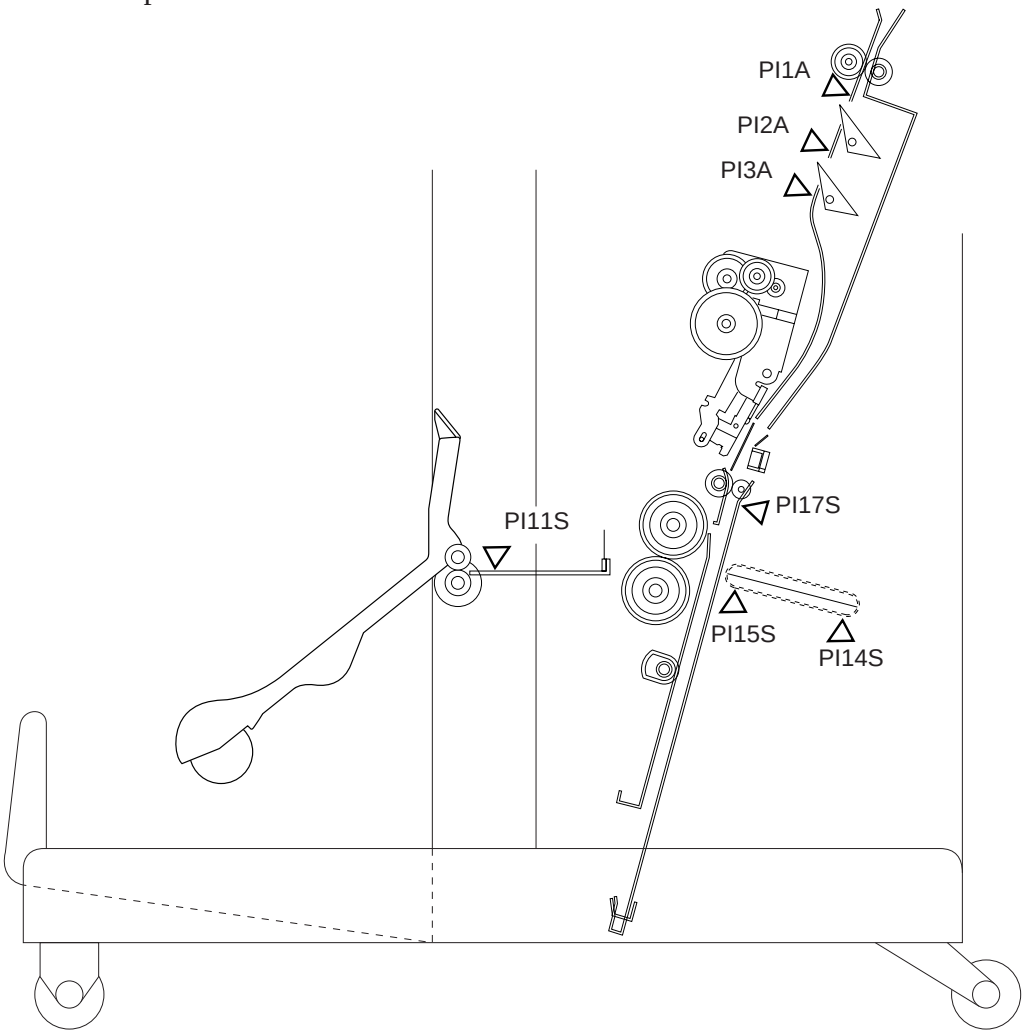

Figure 3-601

Table 3-601

No.	Sensor
PI1A	No. 1 paper sensor
PI2A	No. 2 paper sensor
PI3A	No. 3 paper sensor
PI8A	Paper positioning plate paper sensor
PI11S	Paper sensor
PI14S	Paper pushing plate home position sensor
PI15S	Paper pushing plate leading edge sensor
PI17S	Vertical path paper sensor

COPYRIGHT © 1998 CANON INC.

1. Inlet Delay Jam (11H)

The No. 1 paper sensor (PI1A) on the paper sensor PCB does not turn on a specific period of time after the delivery signal has been received from the copier.

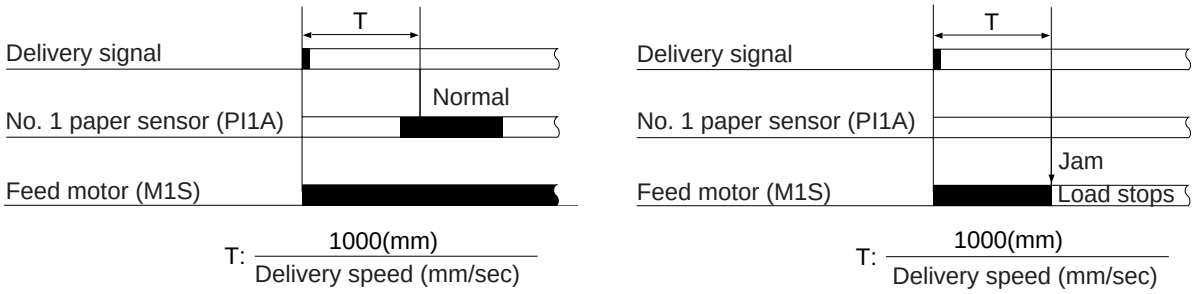

Figure 3-602

2. Inlet Stationary Jam (A1H)

The No. 1 paper sensor (PI1A), No. 2 paper sensor (PI2A), and No. 3 paper sensor (PI3A) on the paper sensor PCB do not turn off when the stack has been fed for a specific period after the sensors turned on.

a. A3/279 mm x 432 mm (11 x 17) Stack

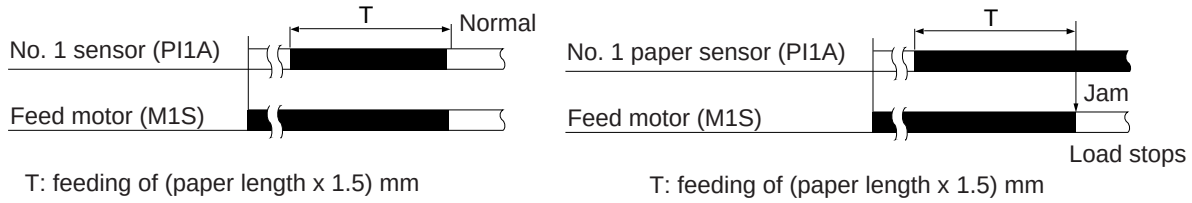

Figure 3-603

b. B4 Stack

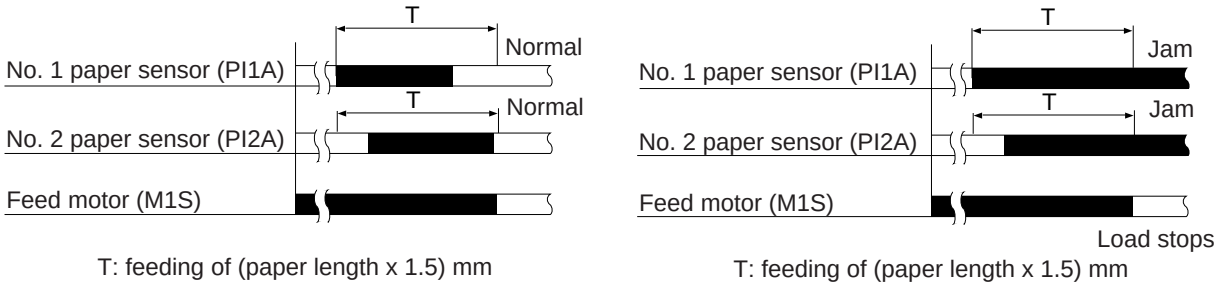

Note: The diagram shows two sensors checking for jams. Single detection, however, uses a single sensor.

Figure 3-604

COPYRIGHT © 1998 CANON INC. FINISHER-C1/SADDLE FINISHER-C2 REV. 0 DEC. 1998 PRINTED IN JAPAN (IMPRIME AU JAPON)

c. A4R/LTRR Stack

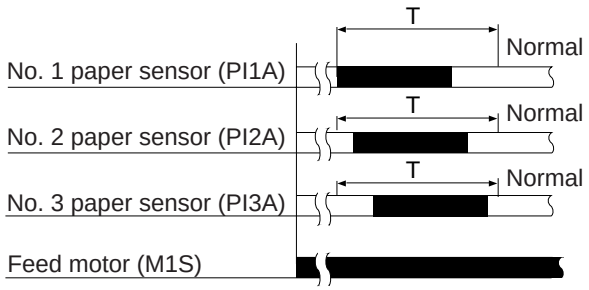

T: feeding of (paper length x 1.5) mm

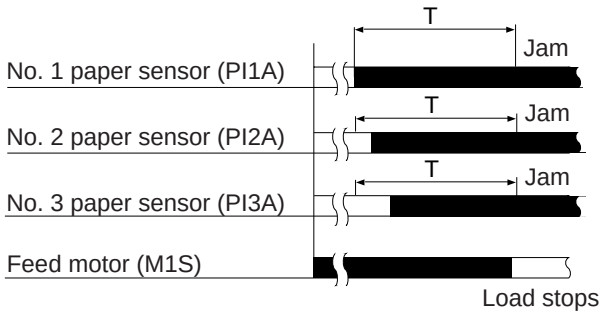

T: feeding of (paper length x 1.5) mm

Note: The figure shows three sensors checking for jams. Single detection, however, uses a single sensor.

Figure 3-605

3. Delivery Delay Jam (92H)

a. By delivery sensor

The delivery sensor (P11S) does not turn on within a specific period of time after the paper pushing plate top position sensor has turned on.

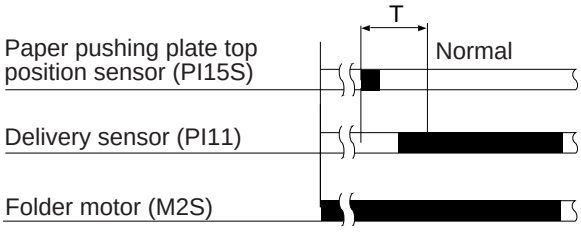

T: Equivalent of 270 mm

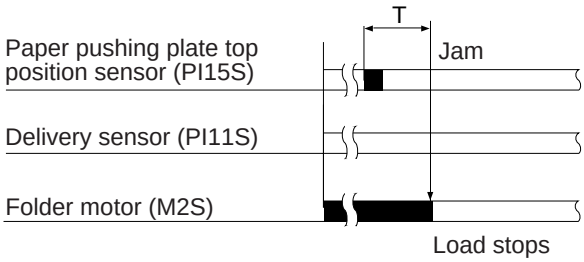

T: Equivalent of 270 mm

Figure 3-606

b. By vertical path paper sensor

The vertical path paper sensor (PI17S) does not turn off within a specific period of time (feeding) after the delivery sensor (PI11S) has turned on, i.e., the trailing edge of the stack does not leave the vertical path paper sensor.

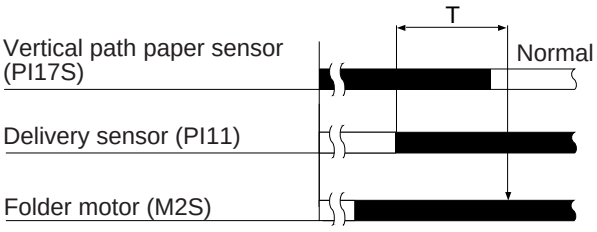

T: Feeding of $\left(\frac{\text{Paper length}}{2} - 130\right) + 50$ mm

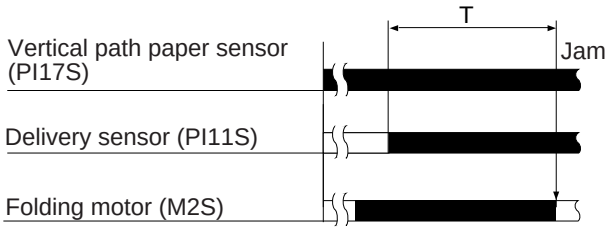

T: Feeding of $\left(\frac{\text{Paper length}}{2} - 130\right) + 50$ mm

Reference:
The length 130 mm is the length of the feeding path from the vertical path paper sensor to the delivery paper sensor, while the length 50 mm is a margin.

Figure 3-607

COPYRIGHT © 1998 CANON INC.

4. Delivery Stationary Jam (A2H)

The delivery sensor (PI11S) does not turn off a specific period of time (feeding) after it has turned on.

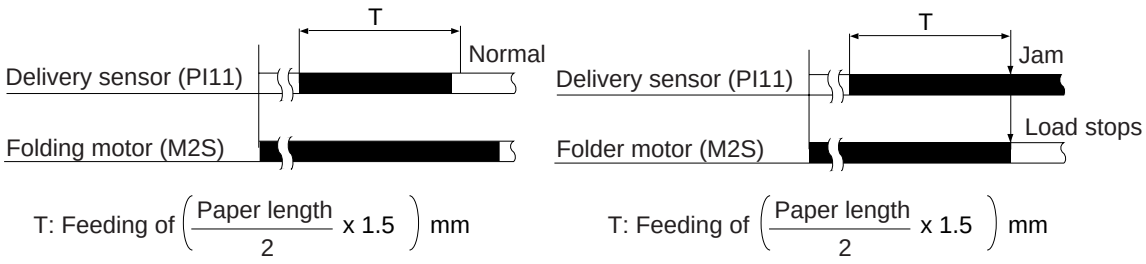

Figure 3-608

5. Power-On Jam (87H)

The No. 1 paper sensor (PI1A) or the delivery sensor (PI11) on the paper sensor PCB detects paper at time of power-on.

6. Door Open Jam (88H/89H)

The front door sensor (PI2), outlet cover sensor (PI3), or inlet cover sensor (PI9) finds that the respective cover is open during operation.

7. Stitcher Staple Jam

When the stitcher motor (M7S/M6S) is rotating clockwise, the stitcher home position sensor (PS4S/PS2S) does not turn on within 0.5 sec after it has turned off but, in addition, the sensor turns on within 0.5 sec after the motor has been rotated counterclockwise.

Reference:

When all doors are closed after the user has removed the jam, the saddle stitcher unit checks whether the vertical path paper sensor (PI17S) has detected paper or not. If the sensor has detected paper, the unit will identify the condition as being faulty jam removal and send the jam signal to the copier once again.

COPYRIGHT © 1998 CANON INC. FINISHER-C1/SADDLE FINISHER-C2 REV. 0 DEC. 1998 PRINTED IN JAPAN (IMPRIME AU JAPON)

VII. POWER SUPPLY

1. Outline

When the copier's power switch is turned on, two channels of 24V power are supplied by the finisher controller PCB.

Of the two 24V channels, one is used to drive solenoids: the 24V power from the finisher controller PCB to a solenoid does not go through any protective mechanisms (microswitches, or the like).

The 24V power to a motor, on the other hand, will not be supplied if any of the three door switches is open.

The 24V channel is used for the generation of 5V power intended for sensors.

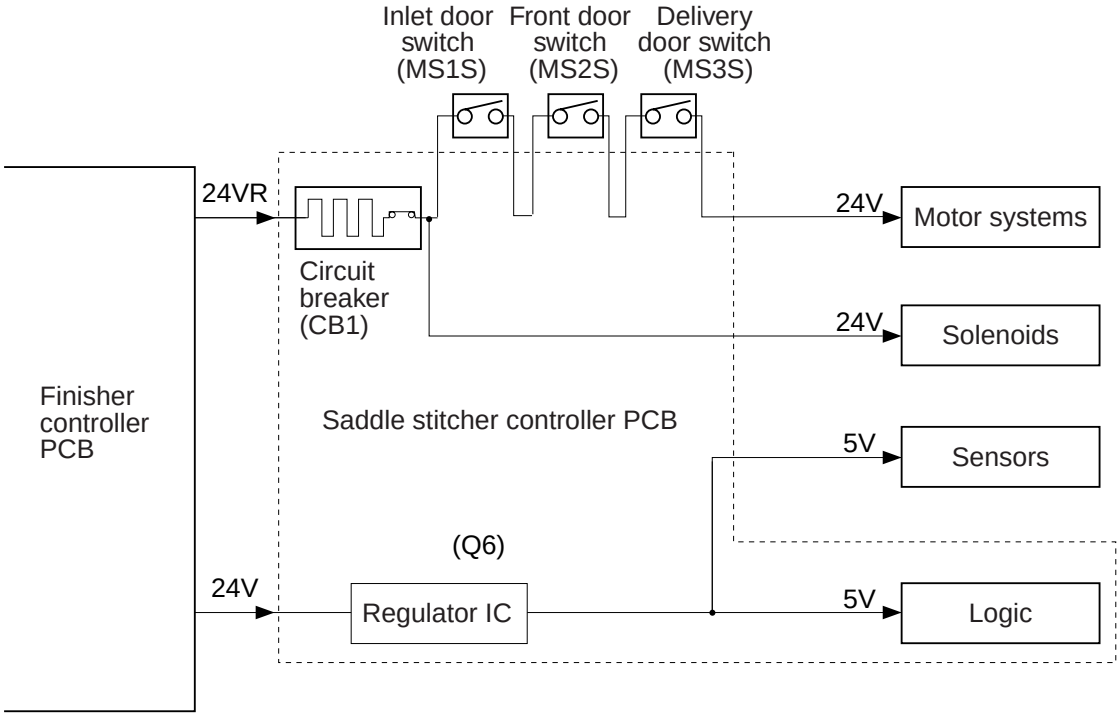

Figure 3-701

2. Protective Mechanisms

The 24VDC power supply used for motors and solenoids is equipped with a circuit breaker (CB1). The 24V power supply used to drive the feed motor (M1S), alignment motor (M3S), and the paper positioning plate motor (M4S) is equipped with a fuse designed to melt when an overcurrent flows.

COPYRIGHT © 1998 CANON INC.

CHAPTER 4

MECHANICAL CONSTRUCTION

(A) FINISHER UNIT 4-1
I. EXTERNALS AND CONTROLS 4-1
A. External Covers 4-1
II. FEEDING SYSTEM 4-8
III. PCBs 4-15
(B) SADDLE STITCHER UNIT 4-16

COPYRIGHT © 1998 CANON INC. FINISHER-C1/SADDLE FINISHER-C2 REV. 0 DEC. 1998 PRINTED IN JAPAN (IMPRIME AU JAPON)

(A) FINISHER UNIT

I. EXTERNALS AND CONTROLS

A. External Covers

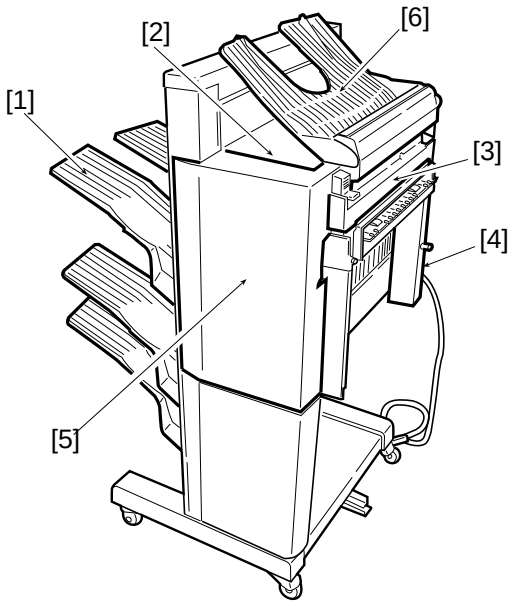

[1] Tray
[2] Interrupt tray
[3] Rear cover (3)
[4] Rear lower cover (4) (Saddle Finisher-C2)
[5] PCB cover (4)
[6] Front lower cover (Finisher-C1)
[7] Front door (Saddle Finisher-C2)
[8] Front door
[9] Upper door assembly

Figure 4-101A

1. Removing the Front Door Assembly

1) Remove the door assembly [1].
2) Remove the screw [2], and remove the bushing [3]; then, remove the front door assembly.

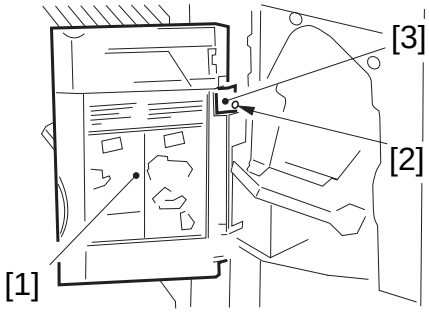

Figure 4-102A

COPYRIGHT © 1998 CANON INC. FINISHER-C1/SADDLE FINISHER-C2 REV. 0 DEC. 1998 PRINTED IN JAPAN (IMPRIME AU JAPON)

2. Removing the Rear Cover

1) Open the upper door assembly [1].
2) Remove the three screws [2], and lift the rear cover [3] to remove.

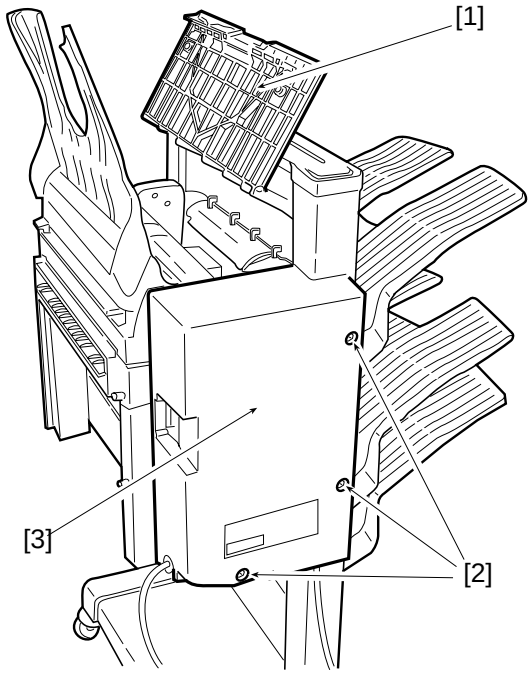

Figure 4-103A

3. Removing the Upper Door Assembly

1) Open the upper door assembly [1].
2) Remove the two claws [2], and remove the upper door assembly.

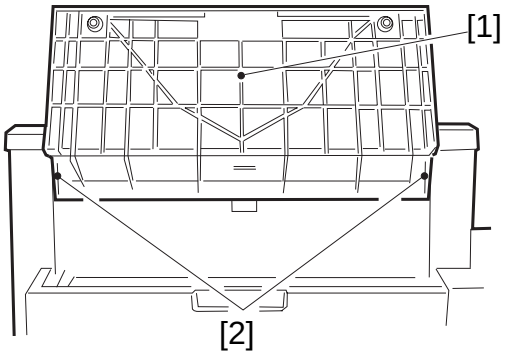

Figure 4-104A

COPYRIGHT © 1998 CANON INC. FINISHER-C1/SADDLE FINISHER-C2 REV. 0 DEC. 1998 PRINTED IN JAPAN (IMPRIME AU JAPON)

4. Removing the Front Cover

1) Remove the screw [1], and remove the front cover [2].

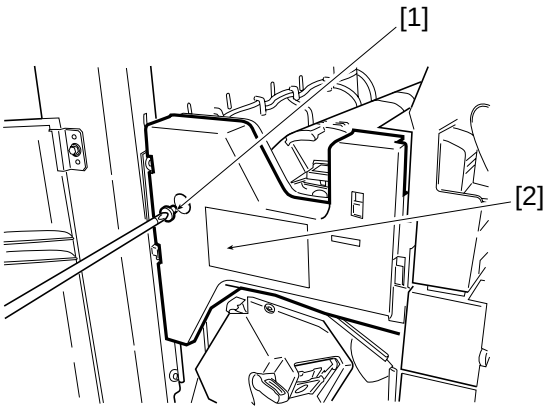

Figure 4-105A

5. Removing the Upper Support Cover (front, rear)

1) While holding the slide guide [1], push its both ends to lift and remove it.

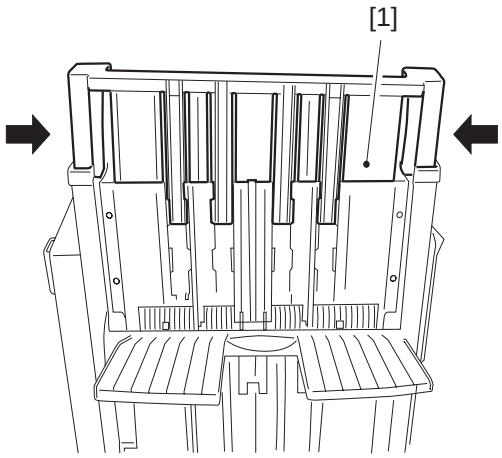

Figure 4-106A

COPYRIGHT © 1998 CANON INC.

2) While releasing the claws of the upper support cover [2] (front, rear) with a screwdriver, lift it to remove.

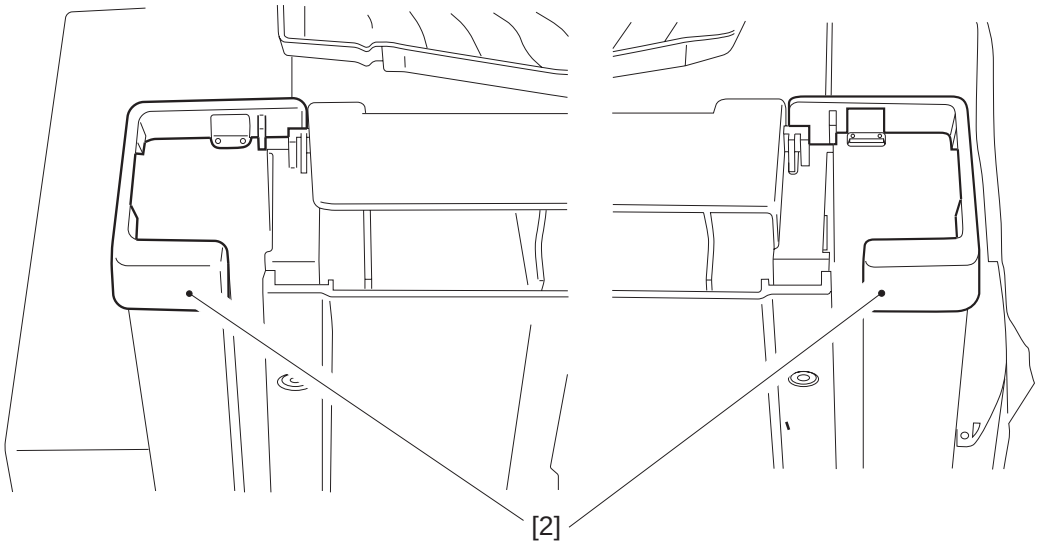

Figure 4-107A

6. Removing the Tray Assembly

1) Remove the rear cover. For the Saddle Finisher-C2, remove the rear lower cover also.
2) Disconnect the J201 [1] and grounding wire [2].

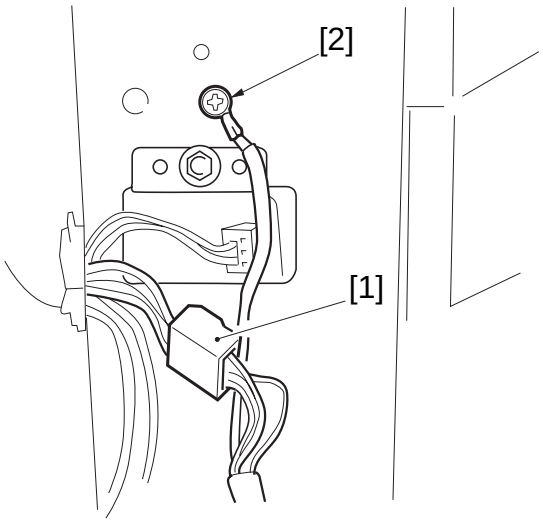

Figure 4-108A

COPYRIGHT © 1998 CANON INC. FINISHER-C1/SADDLE FINISHER-C2 REV. 0 DEC. 1998 PRINTED IN JAPAN (IMPRIME AU JAPON)

3) Remove the slide guide [4] and two upper support covers [3].
4) Lift the tray assembly [5] to remove.

Caution:

When installing the removed tray assembly back to the finisher assembly, be sure to release the tray lift motor gear clutch [1] with a screwdriver or the like when inserting it. Take extra care. (Figure 4-110A)

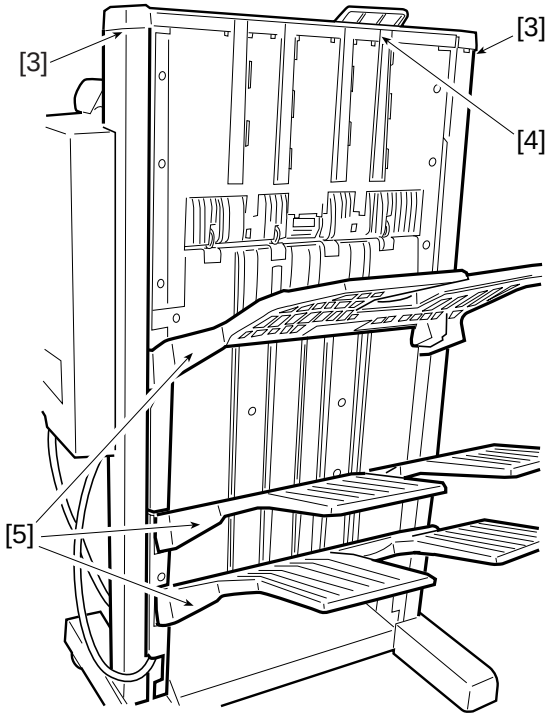

Figure 4-109A

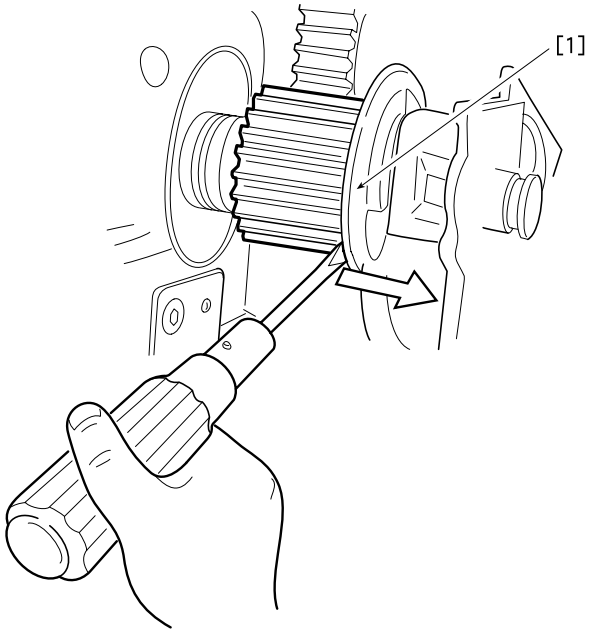

Figure 4-110A

7. Removing the Grate-shaped Upper Guide

1) Remove the slide guide [1].
2) Remove the five screws [2] (M4).
3) Remove the screw [3] (M3), and remove the grate-shaped upper guide [4].

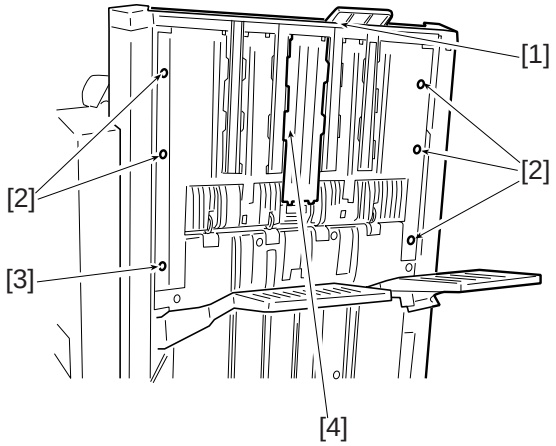

Figure 4-111A

8. Removing the Grate-Shaped Lower Guide

1) Remove the tray assembly.
2) Remove the three screws [1] (M4).
3) Remove the three screws [2] (M3), and open the grate-shaped lower guide to the front.

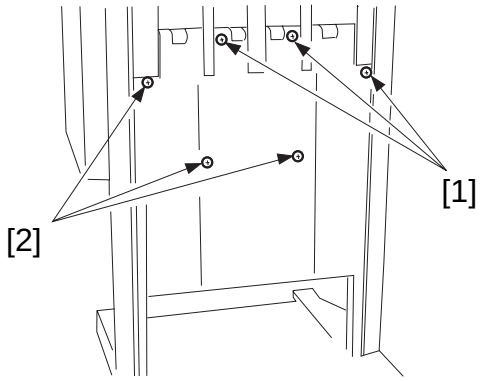

Figure 4-112A

4) Free the harness [5] from the harness stop[8].
5) Disconnect the two connectors [6], and remove the grate-shaped lower guide [7].

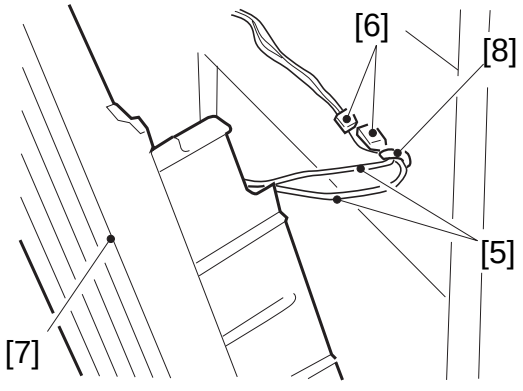

Figure 4-113A

COPYRIGHT © 1998 CANON INC. FINISHER-C1/SADDLE FINISHER-C2 REV. 0 DEC. 1998 PRINTED IN JAPAN (IMPRIME AU JAPON)

9. Points to Note When Mounting the Lattice Guide (lower)

Keep the following in mind when mounting the lattice guide (lower) to the finisher frame.

9.1 Shutter Link

Fit the lattice guide (lower) so that its shutter link [1] will engage with the shutter bar [2] of the wing guide. (Figure 3-2) The shutter will not operate unless engagement is correct.

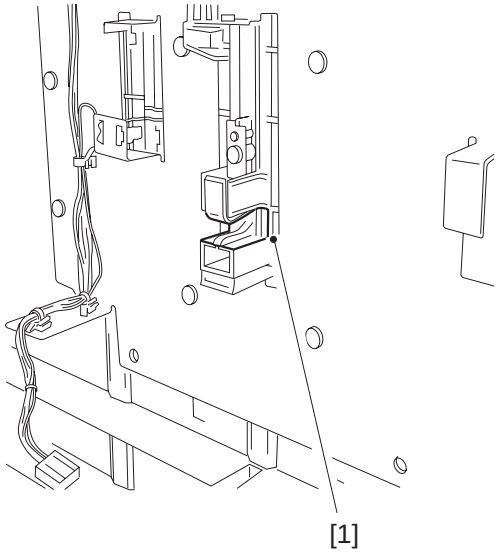

Figure 4-114A

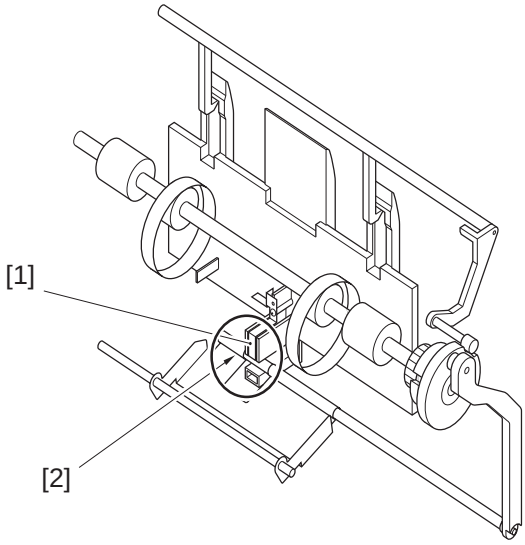

Figure 4-115A

9.2 Rear Edge Drop Member

Be sure that the claw-like section [2] at the front end of the lattice guide (lower) will not ride over the rear end member [1] of the swing guide; otherwise, jams can occur.

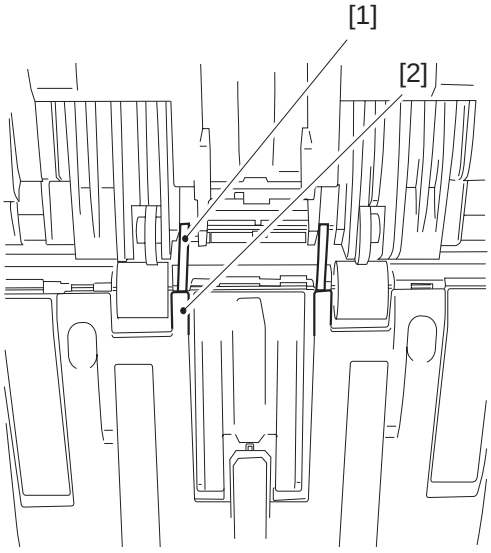

Figure 4-116A

COPYRIGHT © 1998 CANON INC. FINISHER-C1/SADDLE FINISHER-C2 REV. 0 DEC. 1998 PRINTED IN JAPAN (IMPRIME AU JAPON)

II. FEEDING SYSTEM

1. Removing the Swing Unit

1) Remove the tray assembly. (See I-6.)
2) Remove the grate-shaped upper guide.
3) Remove the grate-shaped lower guide.
4) Remove the rear cover.
5) Disconnect the cable [1] coming from the swing guide inside the harness guide assembly from the connector. (2 locations)

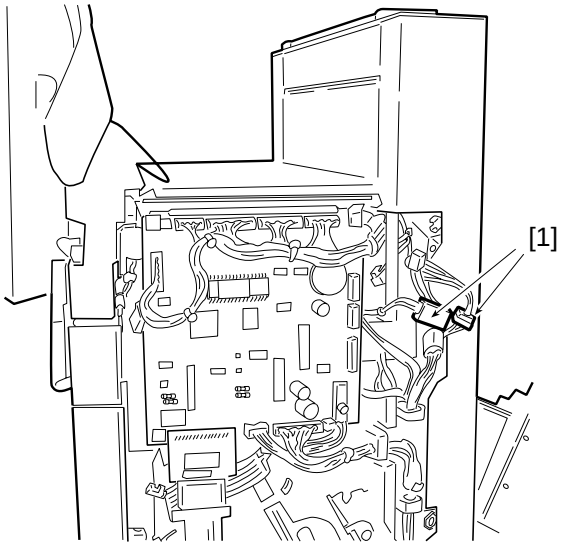

Figure 4-201A

6) Free the harness from the harness stop, and disconnect the two connectors [2].

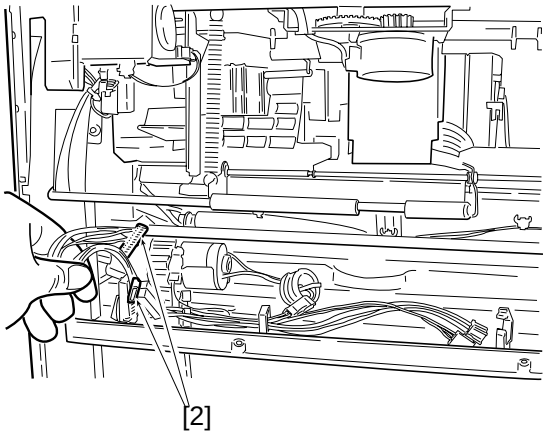

Figure 4-202A

COPYRIGHT © 1998 CANON INC. FINISHER-C1/SADDLE FINISHER-C2 REV. 0 DEC. 1998 PRINTED IN JAPAN (IMPRIME AU JAPON)

7) Remove the three screws [4] used to fix the swing guide unit [3] in place.

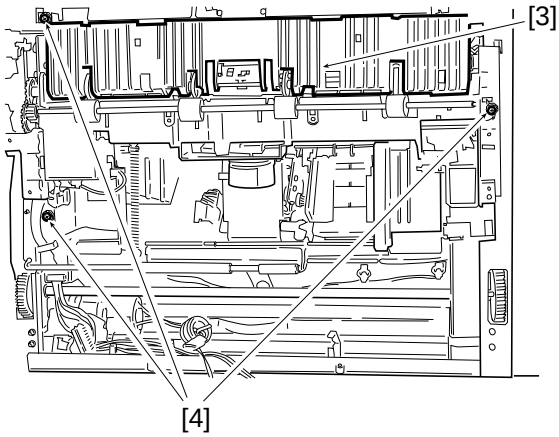

Figure 4-203A

8) Hold the swing guide unit [5] with both hands, and remove it as if to lift it to the front.

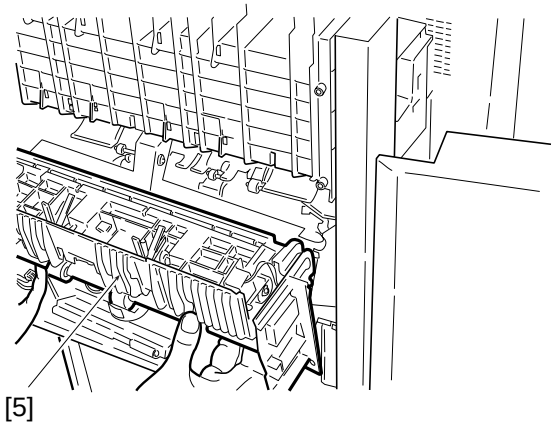

Figure 4-204A

COPYRIGHT © 1998 CANON INC.

2. Points To Note When Mounting the Swing Unit

Keep the following in mind when fitting the swinging unit into the finisher frame:

2.1 Swing Unit Inlet Guide and the Buffer Outlet Roll

Fit the swing guide to the frame, being careful so that the swing unit inlet guide edge 1 will not ride over the buffer outlet roll [2].

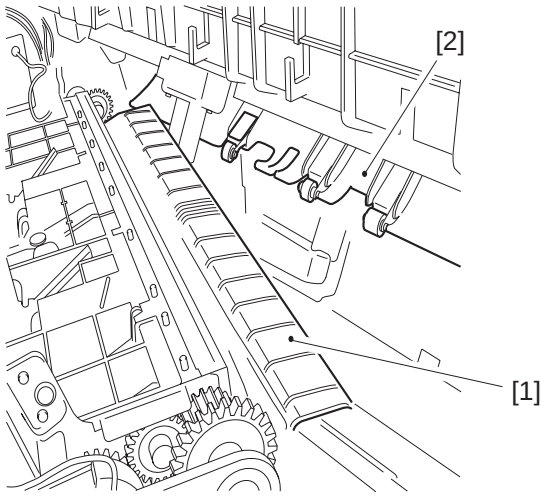

Figure 4-205A

To facilitate the work, insert a screwdriver [4] into the hole in the side plate of the buffer unit [3], and work after releasing the buffer unit.

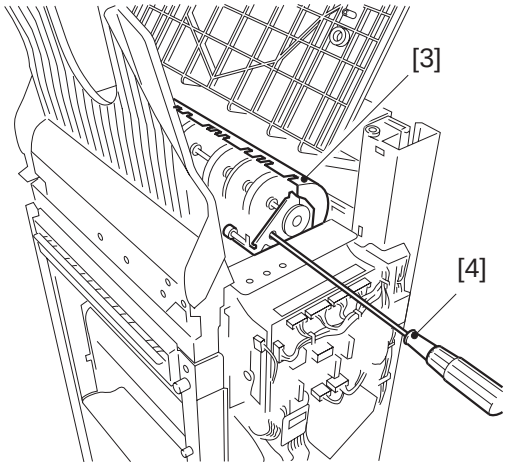

Figure 4-206A

COPYRIGHT © 1998 CANON INC. FINISHER-C1/SADDLE FINISHER-C2 REV. 0 DEC. 1998 PRINTED IN JAPAN (IMPRIME AU JAPON)

2.2 Swing Unit Inlet Guide and the Buffer Base Plate

After releasing the buffer unit, fit the swing guide to the frame, being careful so that the swing unit inlet guide edge 1 will not ride over the buffer base plate 2.

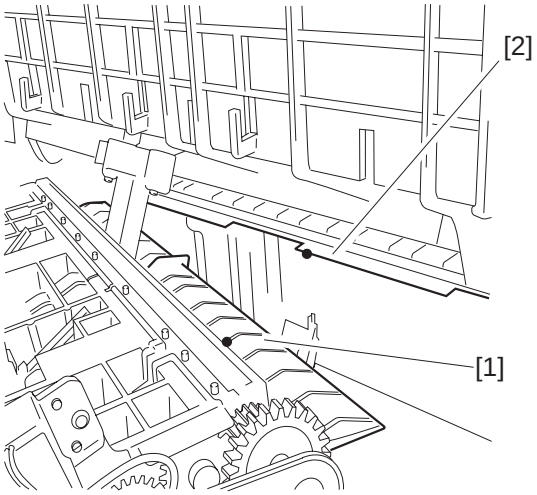

Figure 4-207A

2.3 Shutter Bar Position

The shutter bar 1 of the swing guide must be in bottom position (Figure 2-4). It must not be in top position (Figure 2-5); otherwise, the shutter link of the lattice guide (lower) and the shutter bar will not engage correctly later.

To ensure that the shutter bar will be in bottom position, correct the position before fitting the swing guide to the frame. To do so, turn the one-way cam 3 found at the end of the feeding roller 2 in the direction of the arrow until it stops.

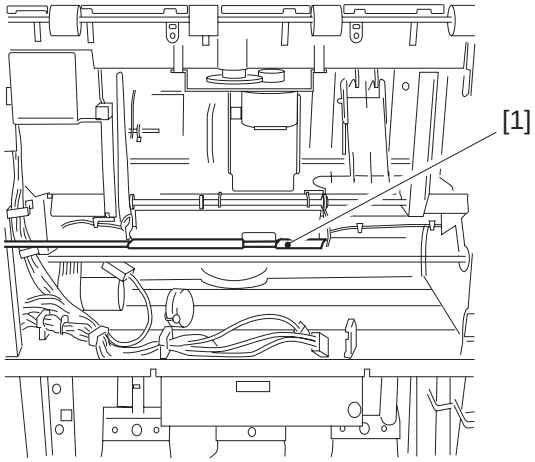

Figure 4-208A

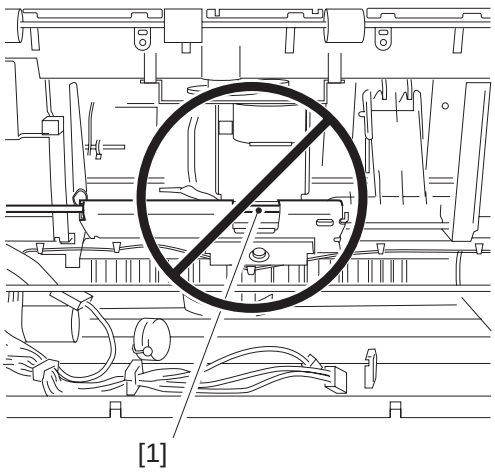

Figure 4-209A

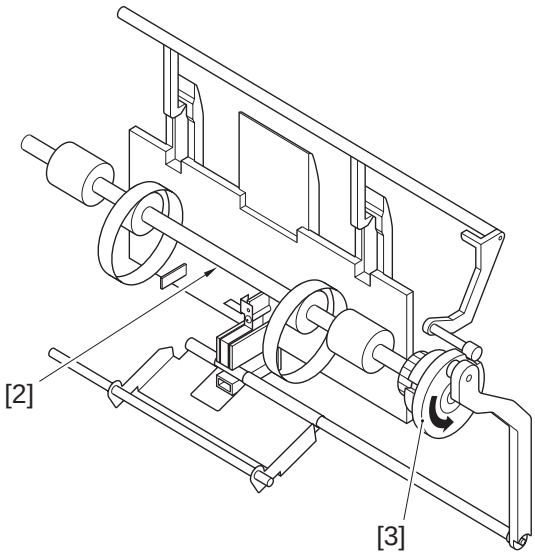

Figure 4-210A

COPYRIGHT © 1998 CANON INC. FINISHER-C1/SADDLE FINISHER-C2 REV. 0 DEC. 1998 PRINTED IN JAPAN (IMPRIME AU JAPON)

3. Removing the Buffer Roller Assembly

1) Remove the rear cover.
2) Disconnect the cable coming from the buffer roller assembly inside the harness guide assembly from the connector [1].

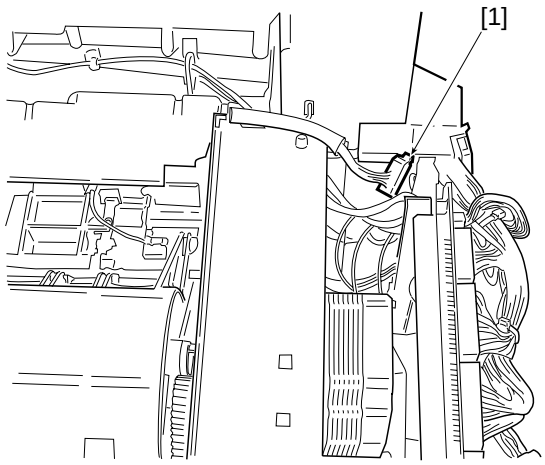

Figure 4-211A

3) While pushing the side plates on both edges of the buffer roller unit, free the notches [2] on both edges from holes to remove the buffer assembly [3].

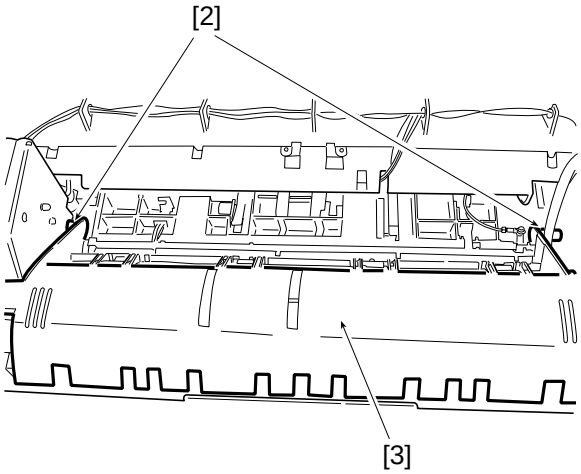

Figure 4-212A

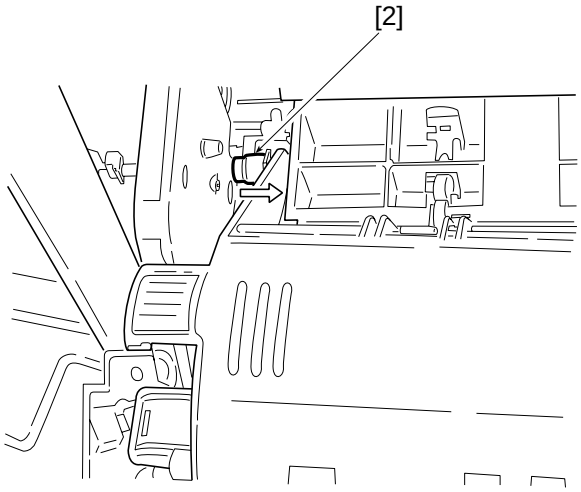

Figure 4-213A

COPYRIGHT © 1998 CANON INC. FINISHER-C1/SADDLE FINISHER-C2 REV. 0 DEC. 1998 PRINTED IN JAPAN (IMPRIME AU JAPON)

4. Removing the Stapler

1) Open the front cover, and move the stapler assembly to the front.
2) Remove the screw [1], and slide out the stapler assembly [2].

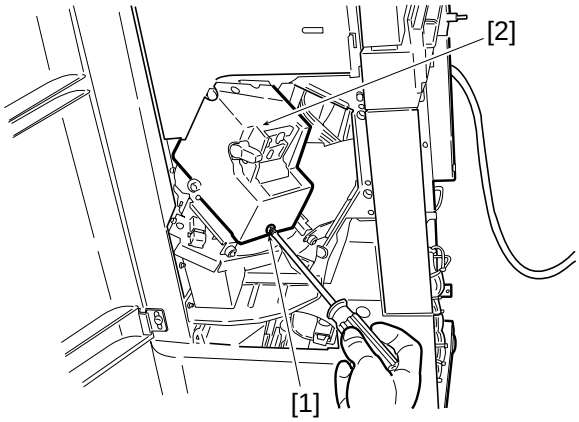

Figure 4-214A

3) Disconnect the connector [4] of the stapler assembly [3].

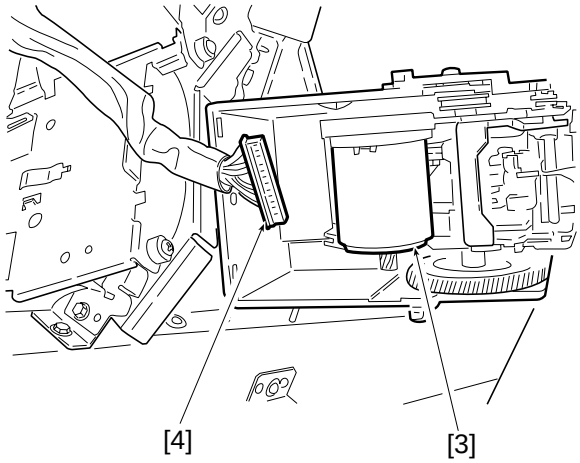

Figure 4-215A

4) Remove the two screws [5] from the stapler cover [6], and remove the stapler.

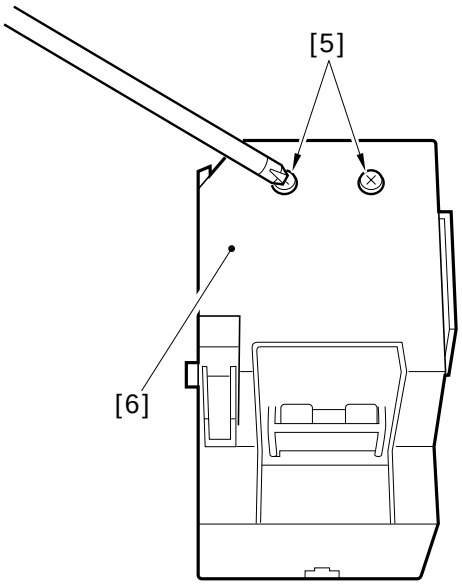

Figure 4-216A

COPYRIGHT © 1998 CANON INC. FINISHER-C1/SADDLE FINISHER-C2 REV. 0 DEC. 1998 PRINTED IN JAPAN (IMPRIME AU JAPON)

III. PCBs

1. Removing the Finisher Controller PCB

1) Remove the rear cover.
2) Disconnect the 13 connectors [1].
3) Remove the four screws [2], and remove the finisher controller PCB [3].

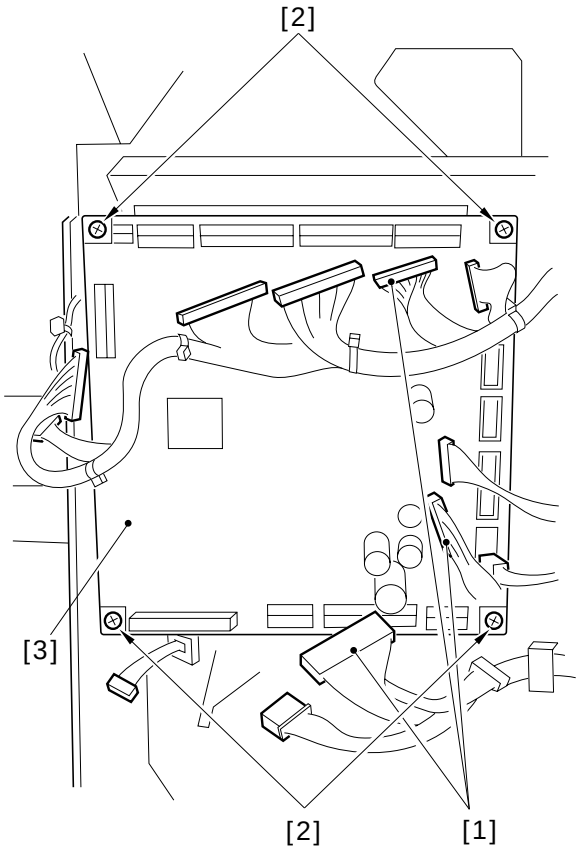

Figure 4-301A

(B) SADDLE STITCHER UNIT

1. Removing the Folding Roller

1) Remove the saddle stitcher unit. (See 2. "Removing and Installing the Saddle Unit.")
2) Disconnect the three connectors [1] (paper inlet side).

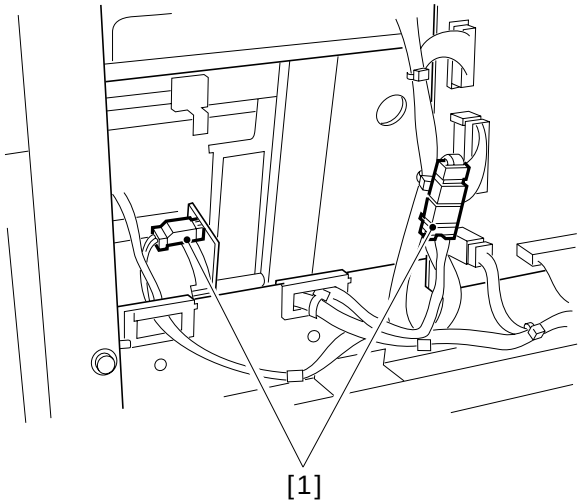

Figure 4-101B

3) Disconnect two connectors [2], remove the three screws [3], and remove the MOTOR mount [4].

Caution:
Take care not to drop the bushings.

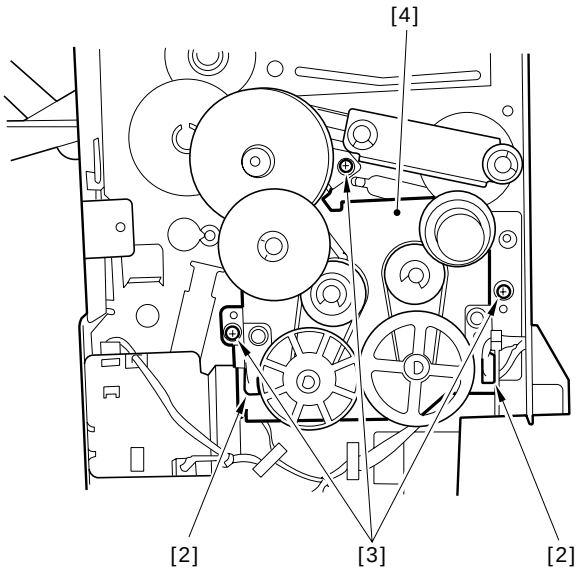

Figure 4-102B

COPYRIGHT © 1998 CANON INC. FINISHER-C1/SADDLE FINISHER-C2 REV. 0 DEC. 1998 PRINTED IN JAPAN (IMPRIME AU JAPON)

4) Remove the tension springs (front [5], rear [6]).

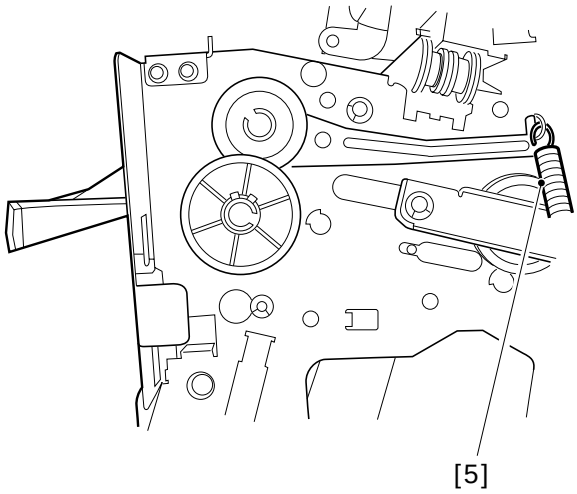

Figure 4-103B

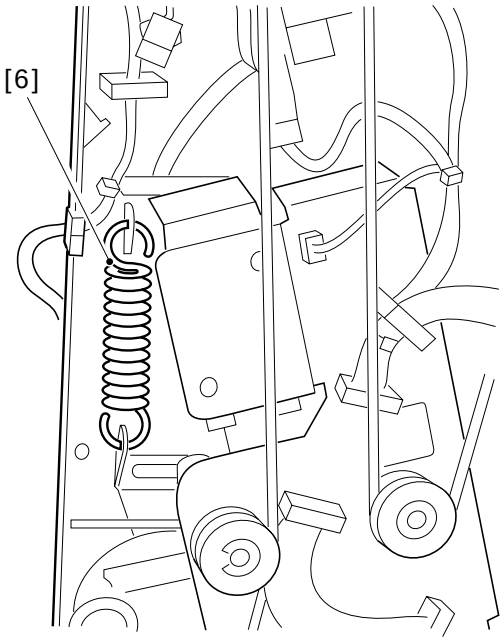

Figure 4-104B

COPYRIGHT © 1998 CANON INC.

5) Remove the two C-rings [7], and remove the two gears [8].

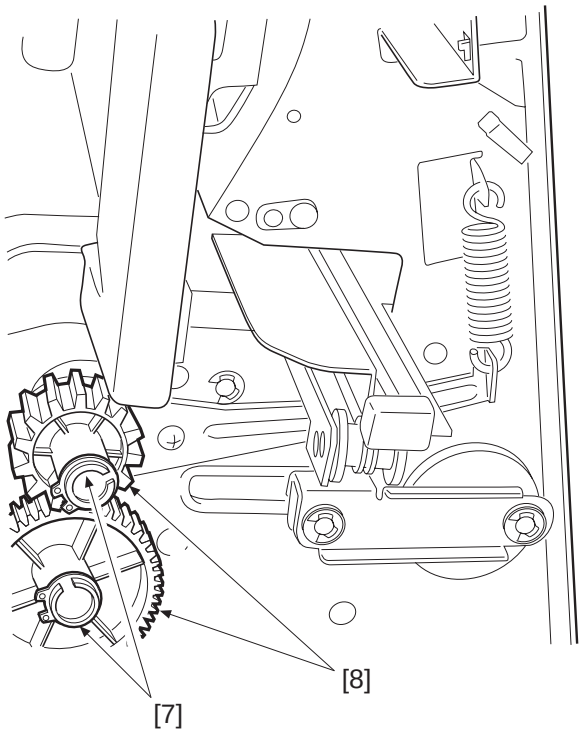

Figure 4-105B

6) Remove the two bearings [9].

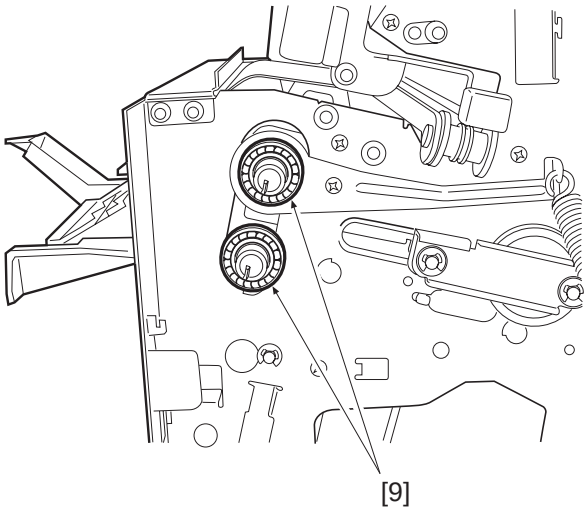

Figure 4-106B

COPYRIGHT © 1998 CANON INC. FINISHER-C1/SADDLE FINISHER-C2 REV. 0 DEC. 1998 PRINTED IN JAPAN (IMPRIME AU JAPON)

7) Likewise, remove the two C-rings [10] and the two bearings [11] at the rear.

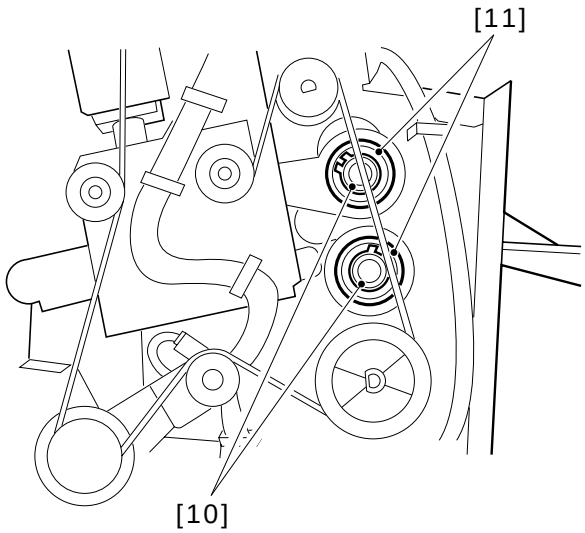

Figure 4-107B

8) Remove the three screws [12], and remove the delivery guide [13].

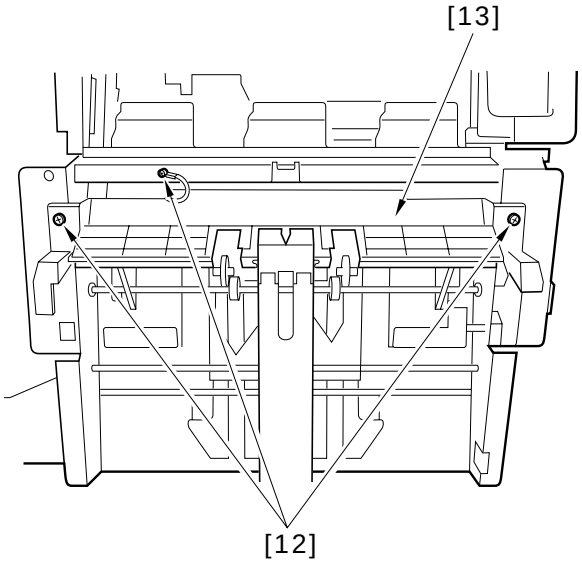

Figure 4-108B

9) Remove the stepped screws [15], and remove the tensioners [14] (both front and rear).

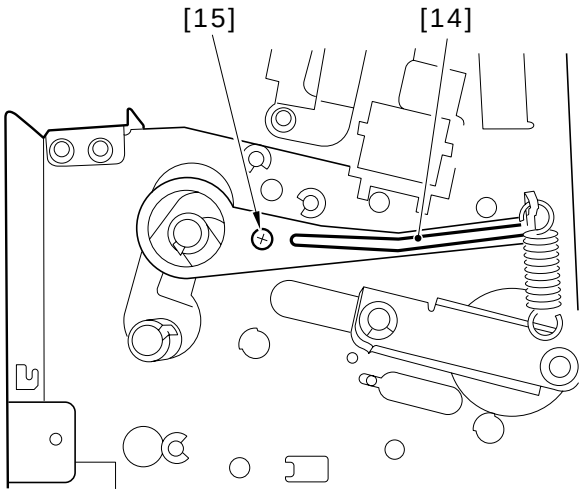

Figure 4-109B

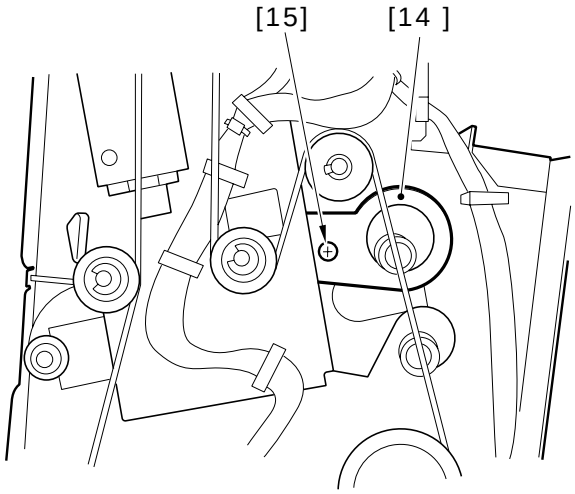

Figure 4-110B

COPYRIGHT © 1998 CANON INC. FINISHER-C1/SADDLE FINISHER-C2 REV. 0 DEC. 1998 PRINTED IN JAPAN (IMPRIME AU JAPON)

10) Remove the two screws each, and remove the two alignment plates [16].

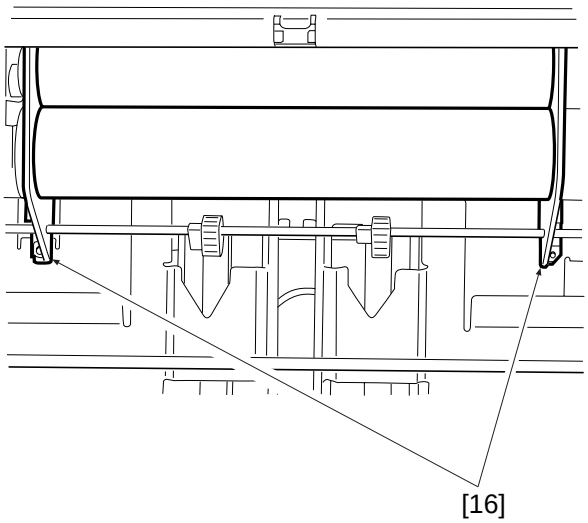

Figure 4-111B

11) Slide the roller [17] to the front, and pull it out in delivery direction.

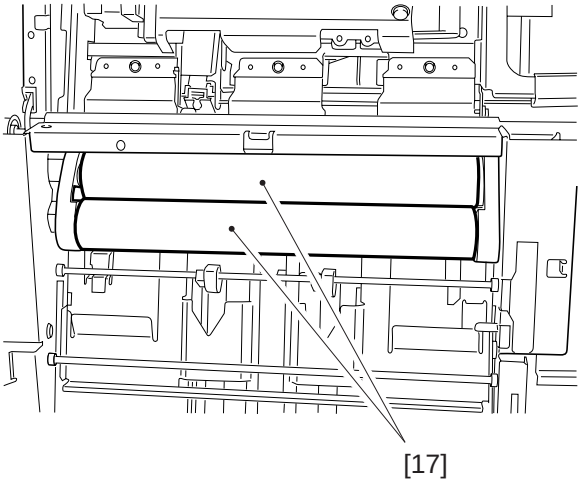

Figure 4-112B

COPYRIGHT © 1998 CANON INC.

2. Removing and Installing the Saddle Unit

1) Remove the grate-shaped shutter. (See I-5 “Tray Assembly.”)
2) Remove the four screws [1], and remove the PCB cover [2].

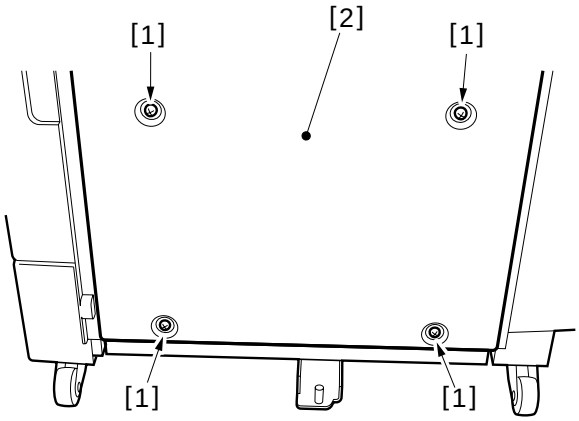

Figure 4-113B

3) Remove the screw, and remove the folding roller knob [3].

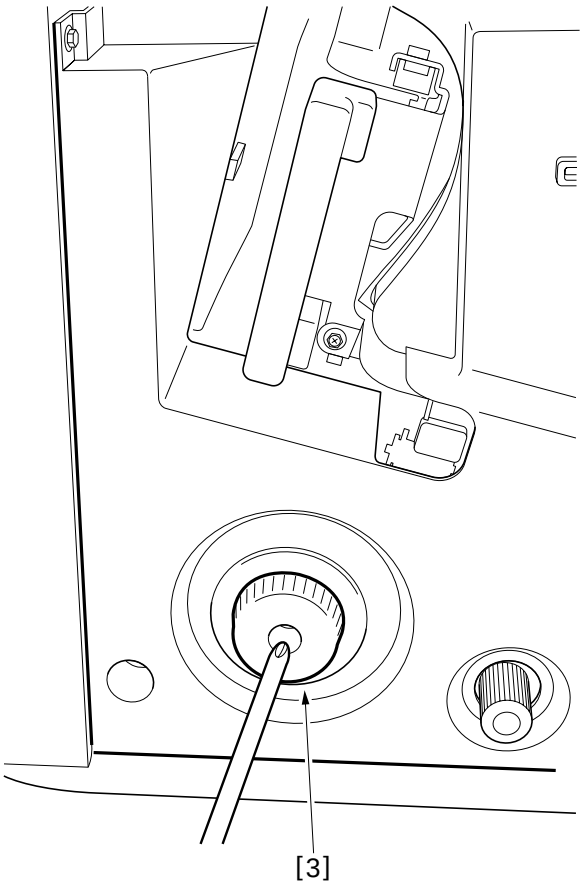

Figure 4-114B

COPYRIGHT © 1998 CANON INC. FINISHER-C1/SADDLE FINISHER-C2 REV. 0 DEC. 1998 PRINTED IN JAPAN (IMPRIME AU JAPON)

4) Remove the five screws [5], and remove the rear lower cover [4].
5) Remove the five screws [7], and remove the front inside cover [6].

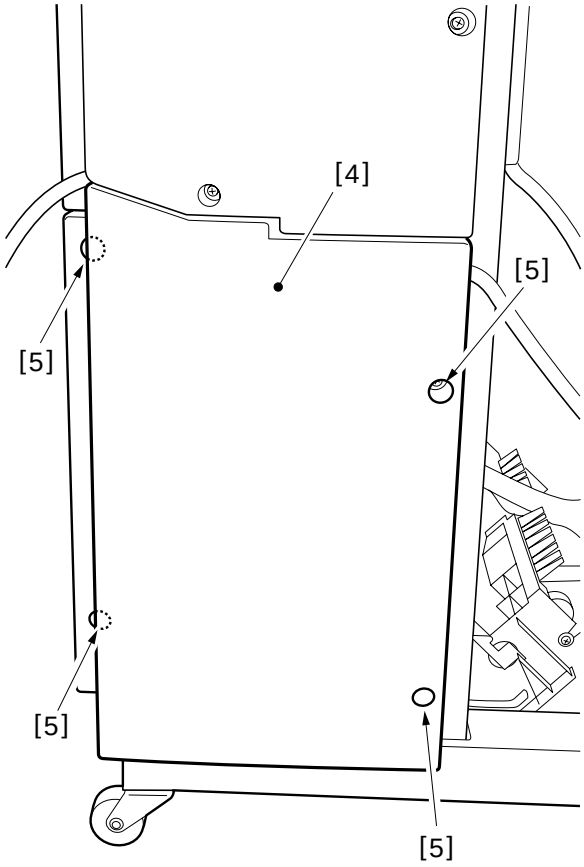

Figure 4-115B

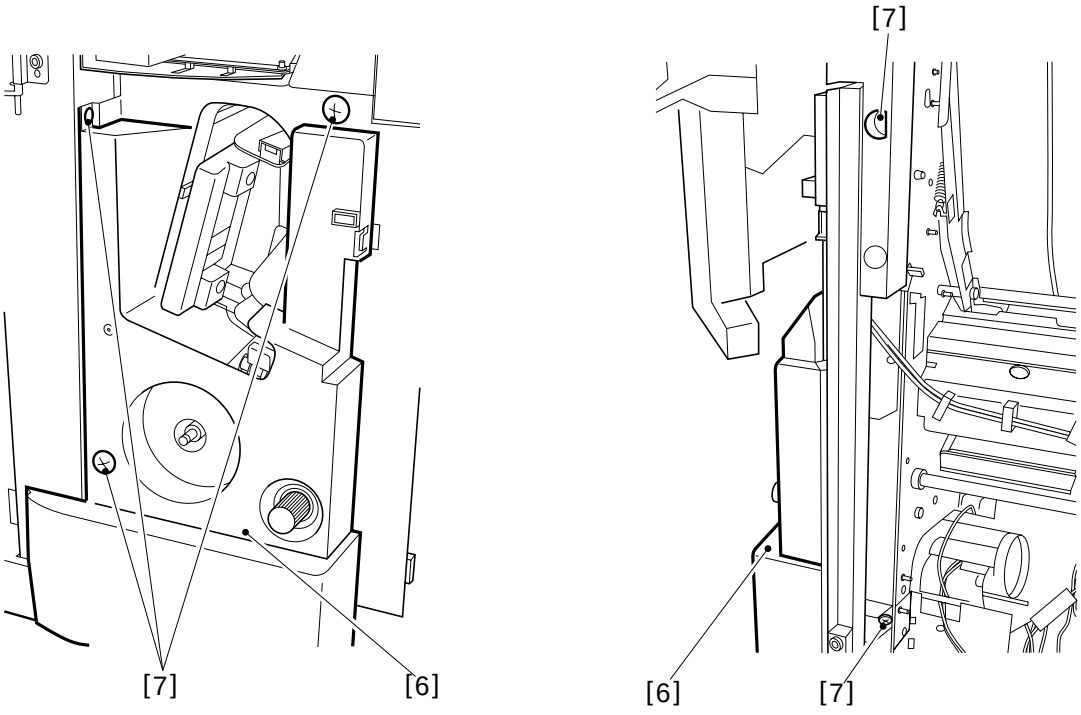

Figure 4-116B

6) Remove the delivery cover [8]. (1 screw [9]; 1 L-shaped pin [10]; 2 connectors [11])

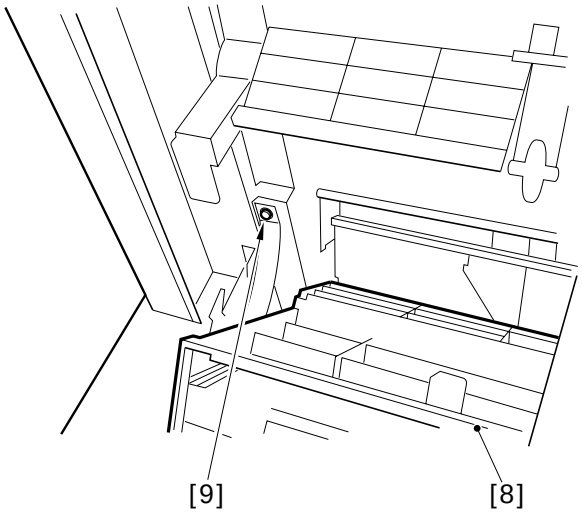

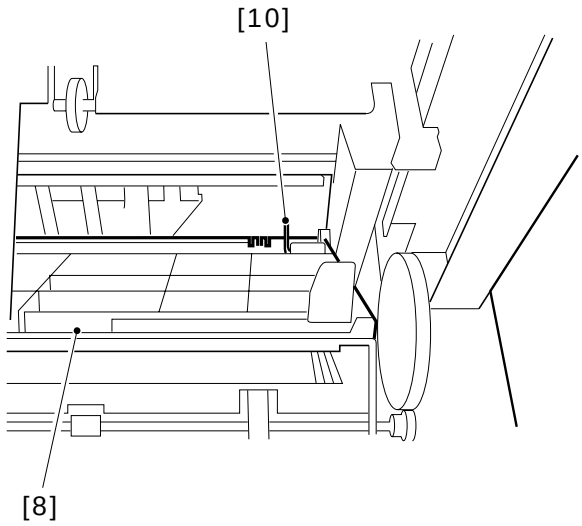

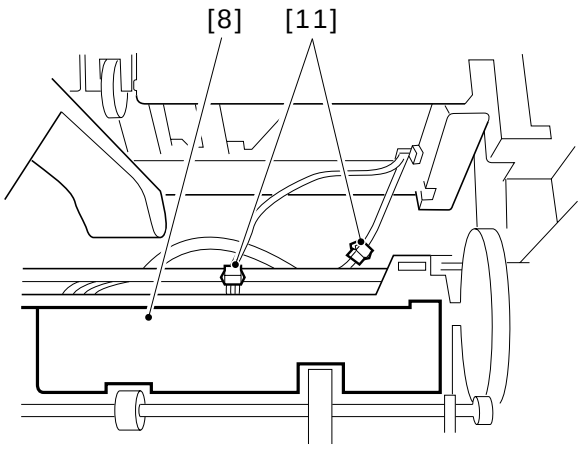

Figure 4-117B

COPYRIGHT © 1998 CANON INC. FINISHER-C1/SADDLE FINISHER-C2 REV. 0 DEC. 1998 PRINTED IN JAPAN (IMPRIME AU JAPON)

7) Remove the foot cover [12] of the frame. (This is to prevent interference between the foot cover and the clock disk [13] of the paper retaining plate motor when removing the saddle unit.)

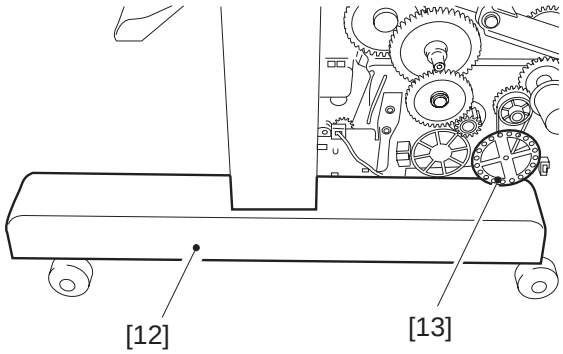

Figure 4-118B

8) Remove the front side cover [14] and the rear side cover [15]. (2 screws [16] each)

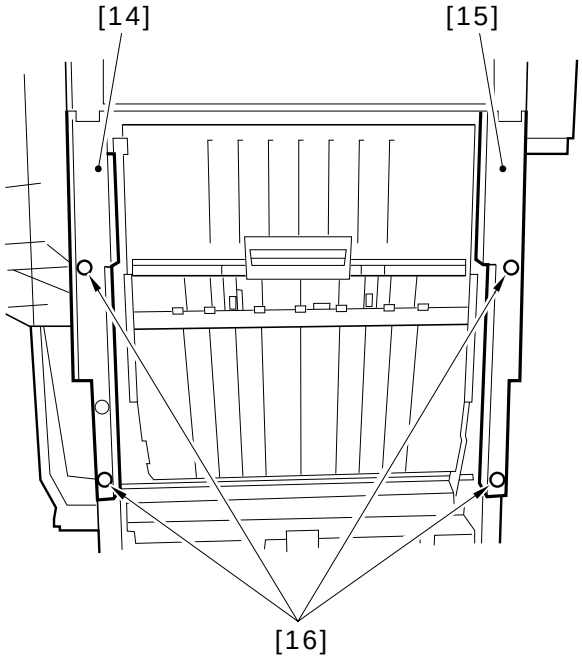

Figure 4-119B

9) Disconnect the two connectors [17].

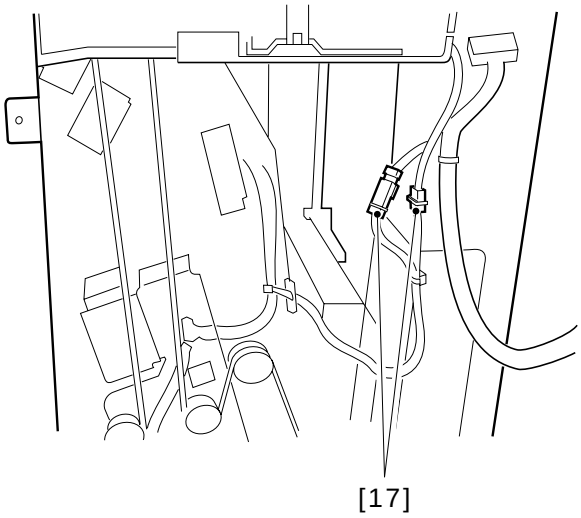

Figure 4-120B

COPYRIGHT © 1998 CANON INC.

10) Remove the five screws [18].
11) Remove the saddle stitcher unit [19] by moving it in pick-up direction.

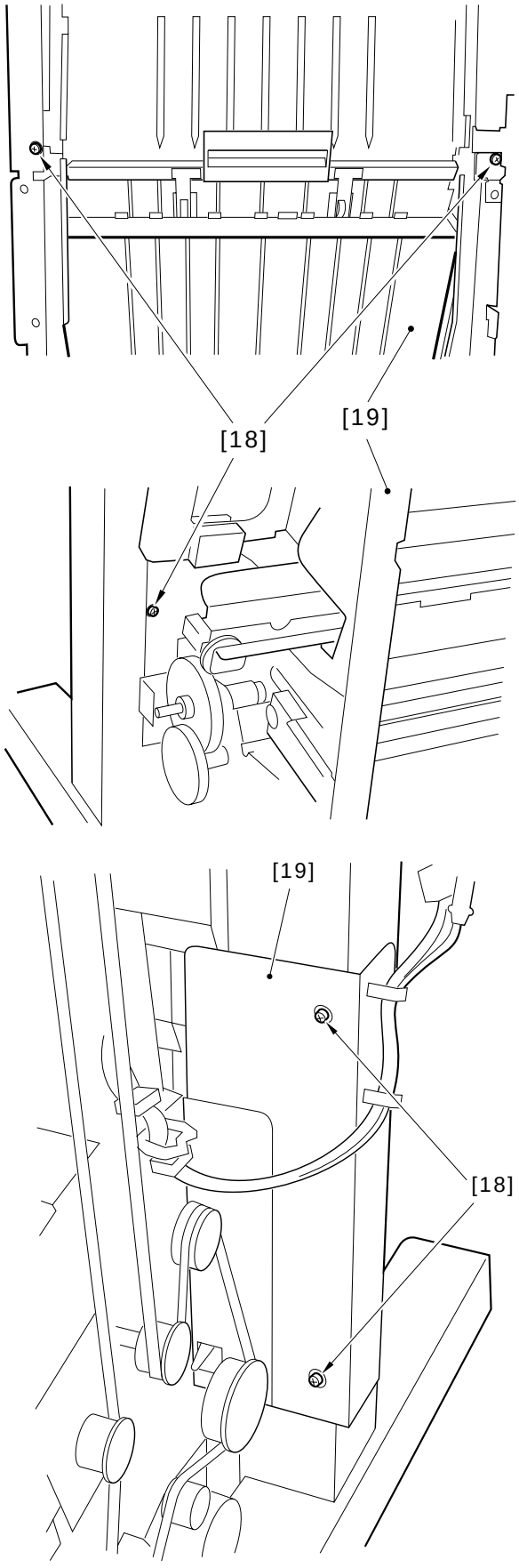

Figure 4-121B

COPYRIGHT © 1998 CANON INC. FINISHER-C1/SADDLE FINISHER-C2 REV. 0 DEC. 1998 PRINTED IN JAPAN (IMPRIME AU JAPON)

3. Removing the Paper Retaining Plate

1) Remove the four screws, and detach the PCB cover.
2) Remove the six screws, and detach the folding roller knob and the lower front cover.
3) Disconnect the 13 connectors [2], and four screws [3]; then, detach the saddle stitcher controller PCB [1].
4) Free the harness [5] from the cord clamp.

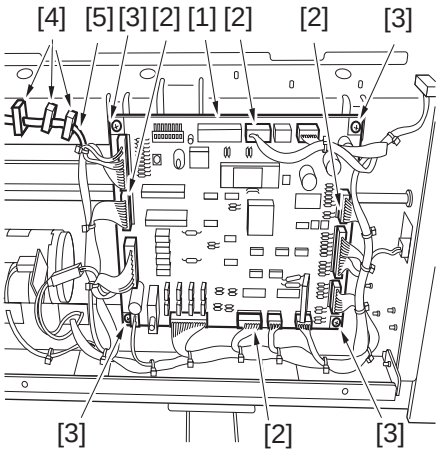

Figure 4-122B

5) Force the screws into the two screw holes in the paper retaining plate until they stop. These screws will laser serve as a reference when determining the distance L for mounting the paper retaining plate. (Use the screws used to hold the PCB covers.)

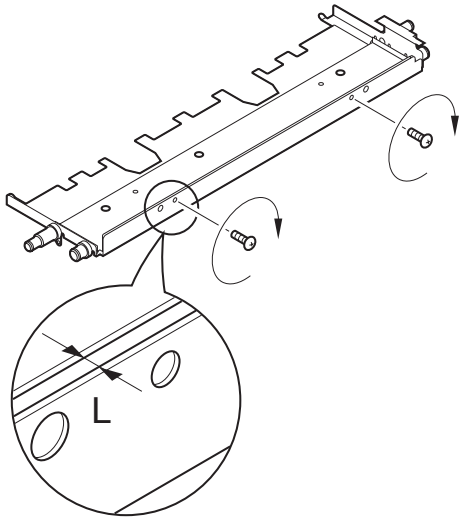

Figure 4-123B

6) Insert a screwdriver into the three holes [6] in the rail, and remove the three screws; then, detach the paper retaining plate [8] and its fixing plate [9].

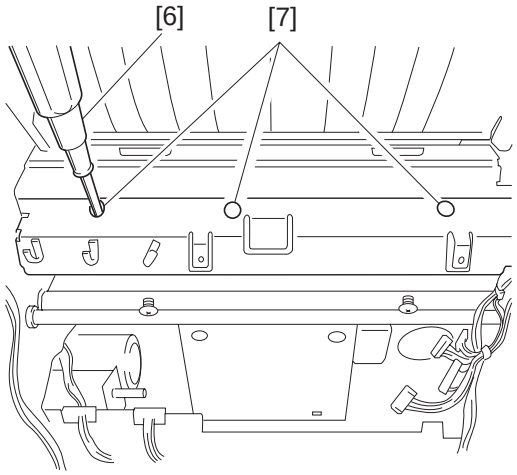

Figure 4-124B

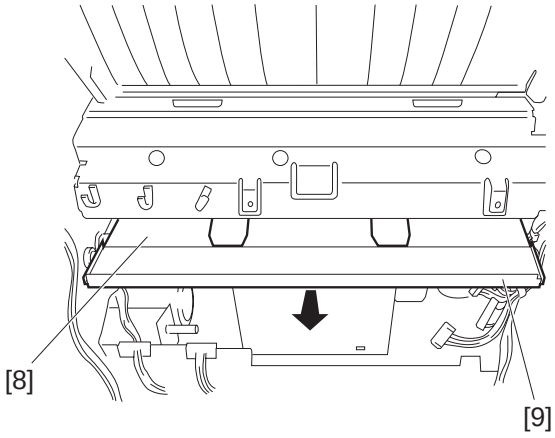

Figure 4-125B

COPYRIGHT © 1998 CANON INC. FINISHER-C1/SADDLE FINISHER-C2 REV. 0 DEC. 1998 PRINTED IN JAPAN (IMPRIME AU JAPON)

4. Adjusting the Position of the Paper Retaining Plate

1) Match the hole [1] in the paper retaining plate [1] with the boss [2] on the paper retaining plate fixing plate. (Pay attention. The paper retaining plate has a face and a back.)

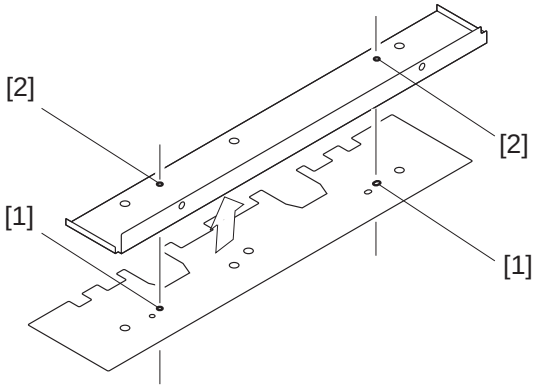

Figure 4-126B

2) Insert the paper retaining plate [3] and the paper retaining fixing plate [4] through a gap into the copier, and place them temporarily on the base. (Check to make sure that the boss on the paper retaining plate fixing plate and the hole in the paper retaining plate match.)

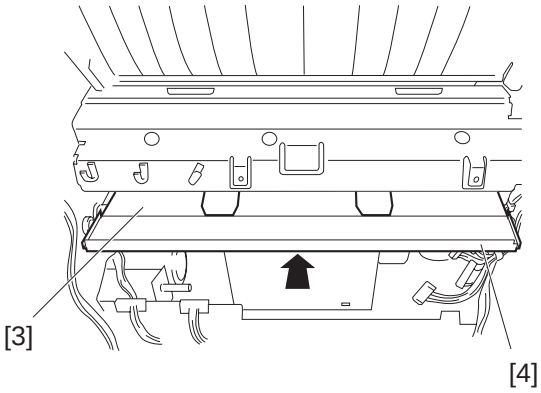

Figure 4-127B

3) Butt the paper retaining plate [5] against the two screws fitted previously.

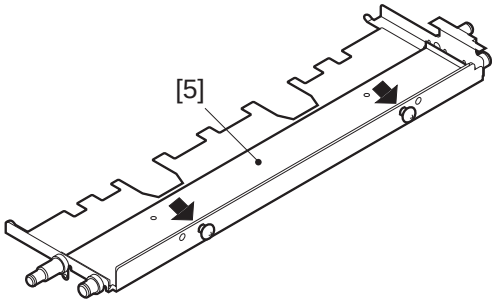

Figure 4-128B

COPYRIGHT © 1998 CANON INC.

4) Secure the paper retaining plate in place on the paper retaining plate fixing plate with three screws.
5) Remove the two screws used to serve as a reference.
6) Mount the parts removed for mounting the paper retaining plate.

4.1 Reference

At times, the paper retaining plate and its fixing plate can become separate when they are led through the gap. Study the following to facilitate the work.

4.1.1 Using Double-Sided Adhesive Tape

Keep the paper retaining plate and its fixing plate together by means of double-sided adhesive tape [1]. Then, perform the work starting with step [2]) under 4. "Adjusting the Position of the Paper Retaining Plate."

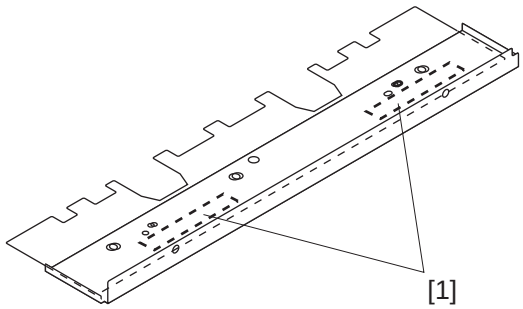

Figure 4-129B

COPYRIGHT © 1998 CANON INC. FINISHER-C1/SADDLE FINISHER-C2 REV. 0 DEC. 1998 PRINTED IN JAPAN (IMPRIME AU JAPON)

4.1.2 Using Adhesive

1) Attach adhesive tape to the border between the paper retaining plate and its fixing plate; then, fold it at a right angle. (Be sure the edge of the folded tape A sticks out the bend of the paper retaining plate as in Figure 4-130.)

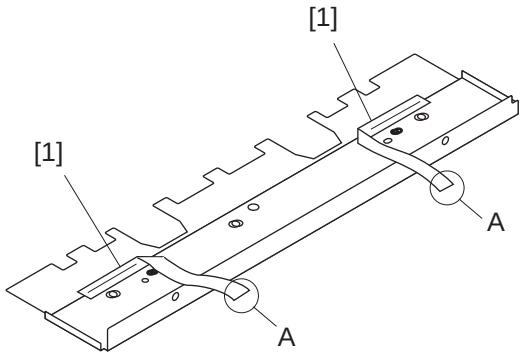

Figure 4-130B

2) Perform the work form step 2) to step 5) under 4. "Adjusting the Position of the Paper Retaining Plate." (At this time, keep the end of the tape A is outside the copier.)
3) Pull the end of the tape A out of the copier. Be sure not to leave the tape inside the copier.
4) Mount the eternal covers.

4.1.3 Using Adhesive

Glue the paper retaining plate and its fixing plate together. Then, perform the work staritng with step 2) under 4. "Adjusting the Position of the Paper Retaining Plate."

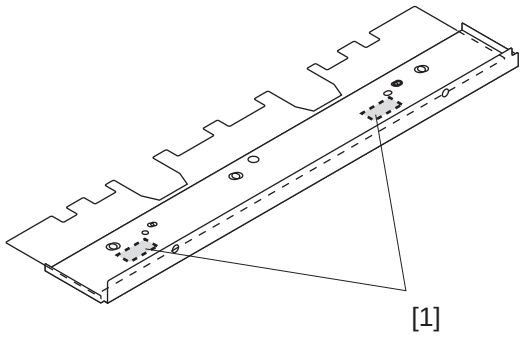

Figure 4-131B

5. Removing the Stitcher Mount Unit

1) Remove the front inside cover.
2) Remove the E-ring [1], and remove the roll [2] and the shaft [3].

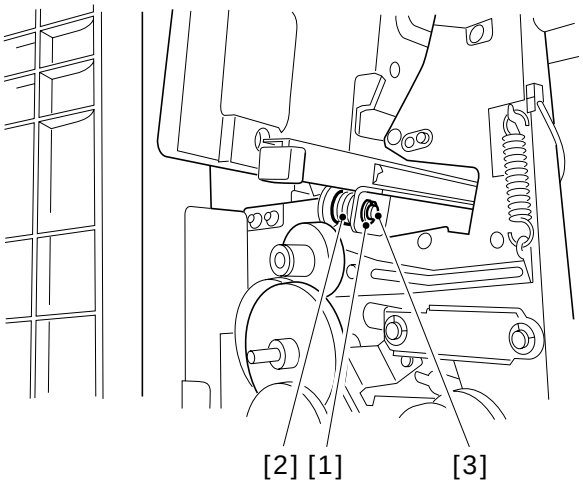

Figure 4-132B

3) Pull out the stitcher mount unit [4] to the front.

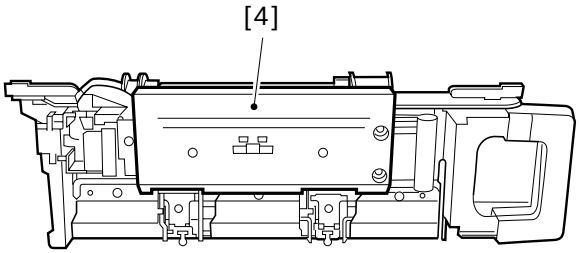

Figure 4-133B

COPYRIGHT © 1998 CANON INC. FINISHER-C1/SADDLE FINISHER-C2 REV. 0 DEC. 1998 PRINTED IN JAPAN (IMPRIME AU JAPON)

6. Adjusting the Stitcher Position

1) Remove the front inside cover.
2) Remove the front lower door.
3) Pull out the stitcher unit to the front.
4) Remove the three screws [2], and remove the stitcher mount unit cover [1].

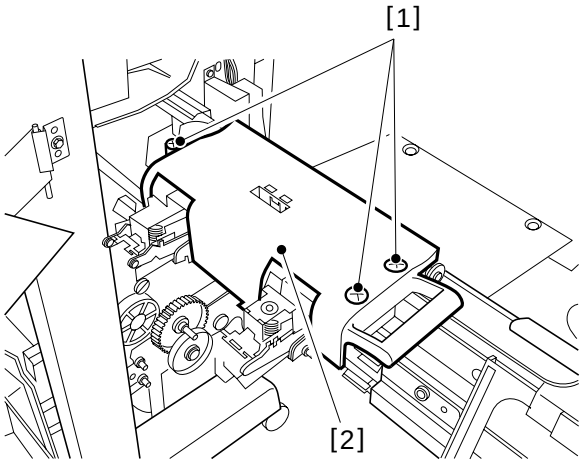

Figure 4-134B

5) Remove the stitcher positioning tool [3] from the back of the cover.

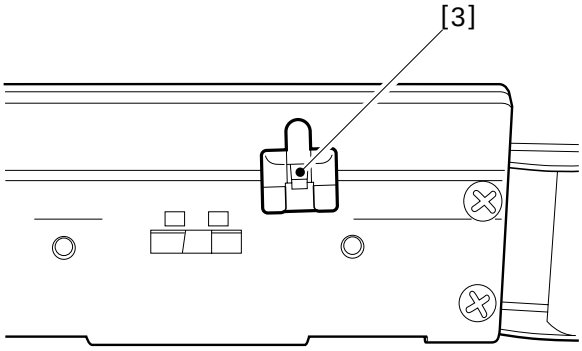

Figure 4-135B

6) If you must adjust the front stitcher, remove the center guide plate [5] and the front guide plate [4] (1 screw each). If you must adjust the rear stitcher, remove the center guide plate [5] and the rear guide plate [6] (1 screw each).

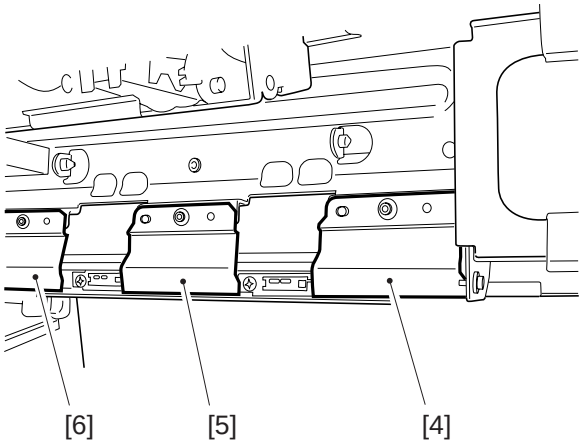

Figure 4-136B

COPYRIGHT © 1998 CANON INC.

7) Loosen the two screws [8] on the stitcher mount [7].

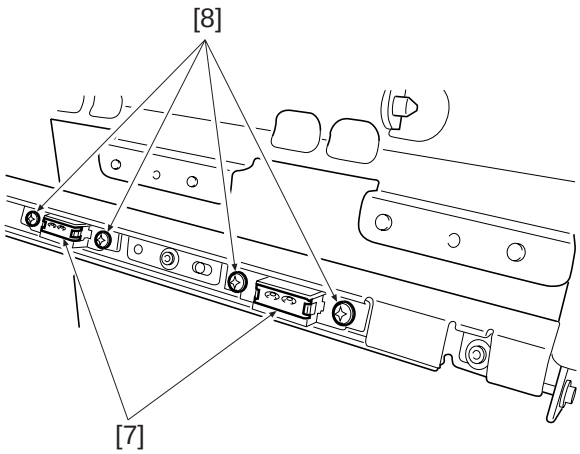

Figure 4-137B

8) Insert the tool [10] into the staple slot of the stitcher [9].

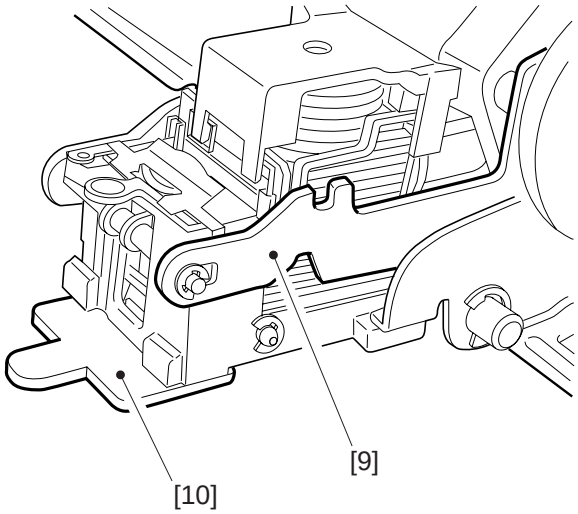

Figure 4-138B

9) Shift down the stitcher, and turn the stitcher gear so that the boss on the tool [11] and the recess of the mount [12] match; then, tighten the screws on the mount to fix the two in place.

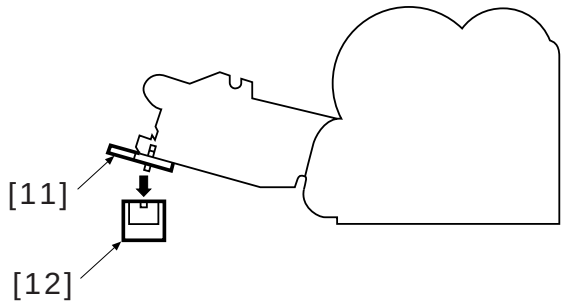

Figure 4-139B

COPYRIGHT © 1998 CANON INC. FINISHER-C1/SADDLE FINISHER-C2 REV. 0 DEC. 1998 PRINTED IN JAPAN (IMPRIME AU JAPON)

7. Removing the Positioning Plate Unit

1) Remove the PCB cover.
2) Remove the saddle stitcher controller (4 screws [1], 13 connectors [2])

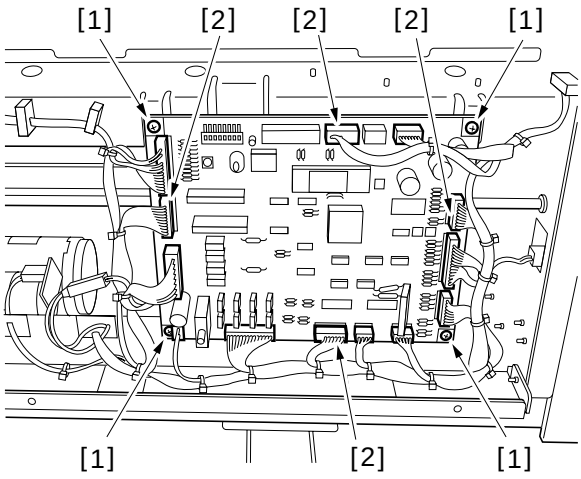

Figure 4-140B

3) Disconnect the two connectors [3] (motor, paper sensors) and two screws [4].
4) Slide the unit [5] right and left to remove it.

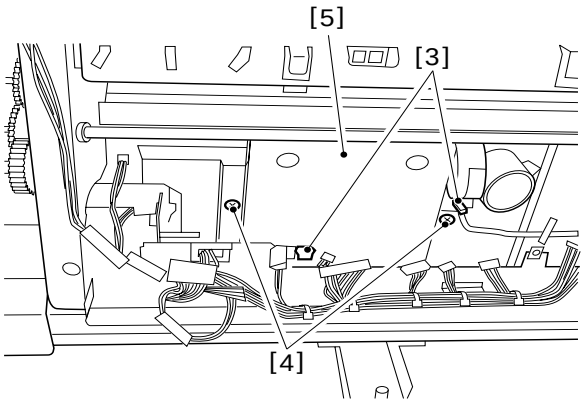

Figure 4-141B

COPYRIGHT © 1998 CANON INC.

8. Removing the No. 1 and No. 2 Paper Deflecting Plates

1) Remove the four screws, and remove the saddle stitcher unit rear cover.
2) Remove the two tension springs [1], and release the inlet guide plate [2].

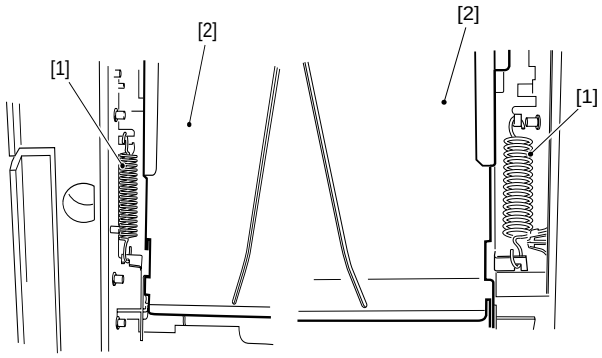

Figure 4-142B

3) Remove the claw [3] of the reflecting plate bushing, and pull out the deflecting plate shaft [4] toward the rear.

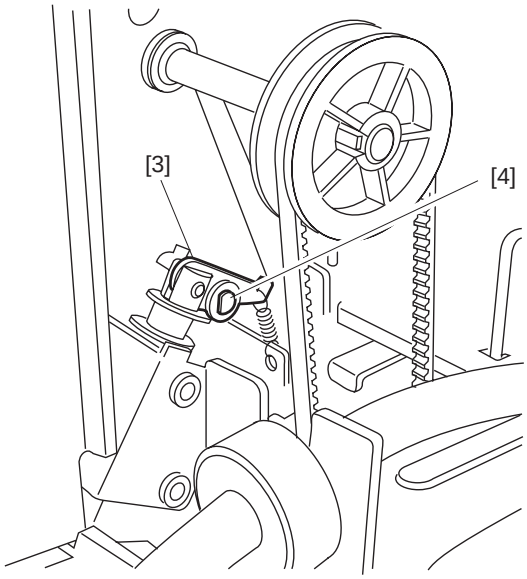

Figure 4-143B

4) After detaching the front shaft of the paper deflecting plate from the front side plate, remove the paper deflecting plate [5].

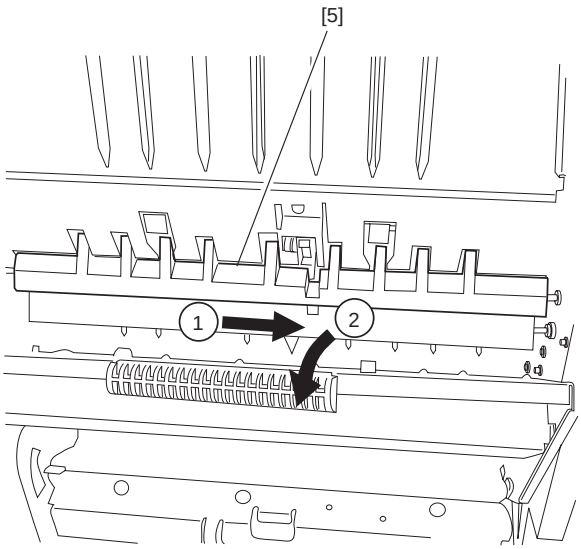

Figure 4-144B

COPYRIGHT © 1998 CANON INC. FINISHER-C1/SADDLE FINISHER-C2 REV. 0 DEC. 1998 PRINTED IN JAPAN (IMPRIME AU JAPON)

CHAPTER 5

MAINTENANCE AND INSPECTION

I. PERIODICALLY REPLACED PARTS 5-1
A. Finisher Unit 5-1
B. Saddle Stitcher Unit 5-1

II. CONSUMABLES AND DURABLES 5-1
A. Finisher Unit 5-1
B. Saddle Stitcher Unit 5-1

III. PERIODICAL SERVICING 5-1

COPYRIGHT © 1998 CANON INC. FINISHER-C1/SADDLE FINISHER-C2 REV. 0 DEC. 1998 PRINTED IN JAPAN (IMPRIME AU JAPON)

I. PERIODICALLY REPLACED PARTS

A. Finisher Unit

The finisher unit does not have a part that must be replaced on a periodical basis.

B. Saddle Stitcher Unit

The saddle stitcher unit does not have a part that must be replaced on a periodical basis.

II. CONSUMABLES AND DURABLES

Some of the parts of the machine may have to be replaced once or more because of wear or tear over the period of warranty of the machine. Replace them as necessary.

A. Finisher Unit

As of April 1998

No.	Name	Parts No.	Q'ty	Estimated life	Remarks
1	Stapler	FB4-5390-000	1	500,000 operations	5,000 operations/cartridge
2	Feed belt	FB4-6656-000	2	2,000,000 copies	
3	Paddle	FB4-5825-000	4	1,000,000 copies	

B. Saddle Stitcher Unit

As of April 1998

No.	Name	Parts No.	Q'ty	Estimated Life	Remarks
1	Stitcher	FB3-7860-000	2	200,000 operations	2,000 operations/cartridge

III. PERIODICAL SERVICING

As of April 1998

Item	Interval	Work	Remarks
Feed belt	Copier's minimum servicing interval	Cleaning	Use moist cloth
Paddle			

COPYRIGHT © 1998 CANON INC. FINISHER-C1/SADDLE FINISHER-C2 REV. 0 DEC. 1998 PRINTED IN JAPAN (IMPRIME AU JAPON)

CHAPTER 6

TROUBLESHOOTING

I. ADJUSTMENTS 6-1
  A. Electrical System (finisher unit) 6-1
  B. Electrical System (saddle stitcher unit) 6-3
II. ALIGNMENT OF ELECTRICAL PARTS 6-8
  A. Finisher Unit 6-8
  B. Saddle Stitcher Unit 6-14
  C. Variable Resistors (VR), Light-Emitting Diodes (LED), and Check Pins by PCB 6-20
III. TROUBLESHOOTING 6-22
  A. Finisher Unit 6-22
  B. Saddle Stitcher Unit 6-30
VI. SELF DIAGNOSIS 6-37
  A. Finisher Unit 6-37
  B. Saddle Stitcher Unit 6-39
  C. Alarm 6-41
  D. Copier I/O Notations 6-43

COPYRIGHT © 1998 CANON INC. FINISHER-C1/SADDLE FINISHER-C2 REV. 0 DEC. 1998 PRINTED IN JAPAN (IMPRIME AU JAPON)

I. ADJUSTMENTS

A. Electrical System (finisher unit)

1. Adjusting the Height Sensor (PS1)

Perform the following adjustments whenever you have replaced the finisher controller PCB or the height sensor (PS1).

1) Set SW1 on the finisher controller as indicated.



Figure 6-101

2) Put blank plain paper (A4 or LTR) on all trays.
3) Press SW2 on the finisher controller PCB. A press causes the finisher to execute automatic adjustment, in which the tray unit will shift tray 1, tray 2, and then tray 3 in sequence.
   - At the end of adjustment, trays will return to home position.
   - During adjustment, LED 1 flashes. At the end of adjustment, LED1 turns and remains on.
   - If automatic adjustment fails, the mechanism stops while the tray in question is being adjusted. (At the same time, LED1 turns off.)
4) Shift all bits on SW1 to OFF*, and turn off the copier once.
   *If you are disabling the manual feed tray height control mode, set bit 2 on SW1 to ON.

2. Adjusting the Alignment Position

If you have replaced the finisher controller PCB or if an alignment fault occurs, make the adjustments that follow. Performing the steps will affect all paper sizes.

1) Remove the rear cover of the finisher unit.
2) Set SW1 of the finisher controller PCB as indicated.

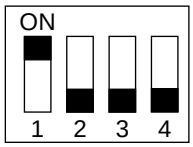

Figure 6-102

3) If you are using A4 paper, press SW2 on the finisher controller PCB. If you are using LTR paper, on the other hand, press SW3 on the finisher controller PCB.
   - A press on SW2/3 will open the swing guide and cause the alignment plate to move to A4/LTR position.
4) Place 10 sheets of A4/LTR paper between the alignment plate and the guide plate, butting them against the stoppers.
5) Press SW2 or SW3 on the finisher controller PCB, and butt the alignment plate against the sheets.
   - A press on SW2 will shift the alignment plate to the front in increments of 0.35 mm.
   - A press on SW3 will shift the alignment plate to the rear in increments of 0.35 mm.

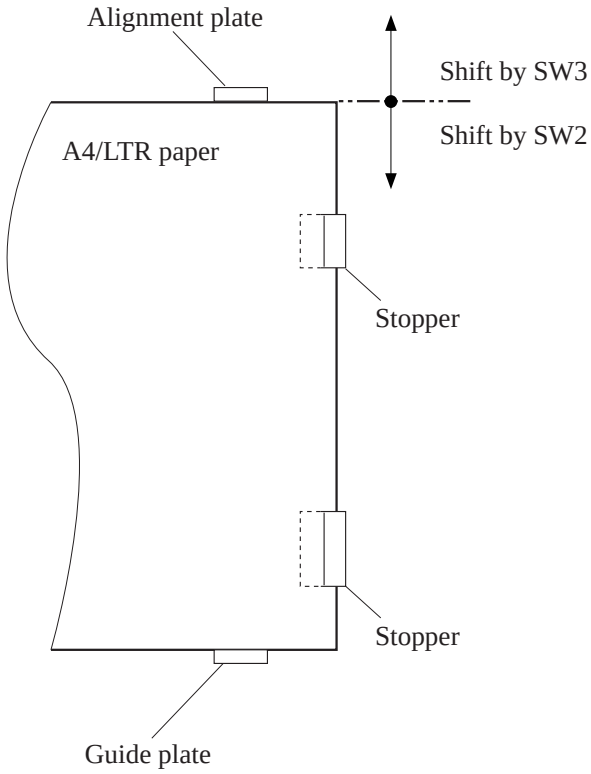

Figure 6-103

COPYRIGHT © 1998 CANON INC.

6) Press SW2 and SW3 simultaneously to store the adjustment value. (This will lower the swinging guide.)
7) Shift all bits of SW1 to OFF*, and install the rear cover of the finisher unit.
*If you are disabling the manual feed tray height control mode, set bit 2 on SW1 to ON.

3. Adjusting the Stapling Position (stapler movement range)

Make the adjustments that follow if you have replaced the finisher controller. Performing the steps will affect all paper sizes and all stapling positions.

1) Remove the rear cover from the finisher unit.
2) Set SW1 on the finisher controller PCB as indicated.

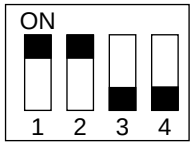

Figure 6-104

3) If you are using A4 paper, press SW2 on the finisher controller PCB. If you are using LTR paper, press SW3 on the finisher controller PCB.
   - A press on SW2/3 will open the swing guide and cause the feed belt to rotate.
4) Within 5 sec after pressing the switch, place one sheet of A4/LTR paper between the alignment plate and the guide plate, butting it against the stoppers.
   - When the finisher detects the paper, it will lower the swing guide and execute stapling (rear, 1-point). Take out the stapled paper manually, however; delivery operation will not be executed.

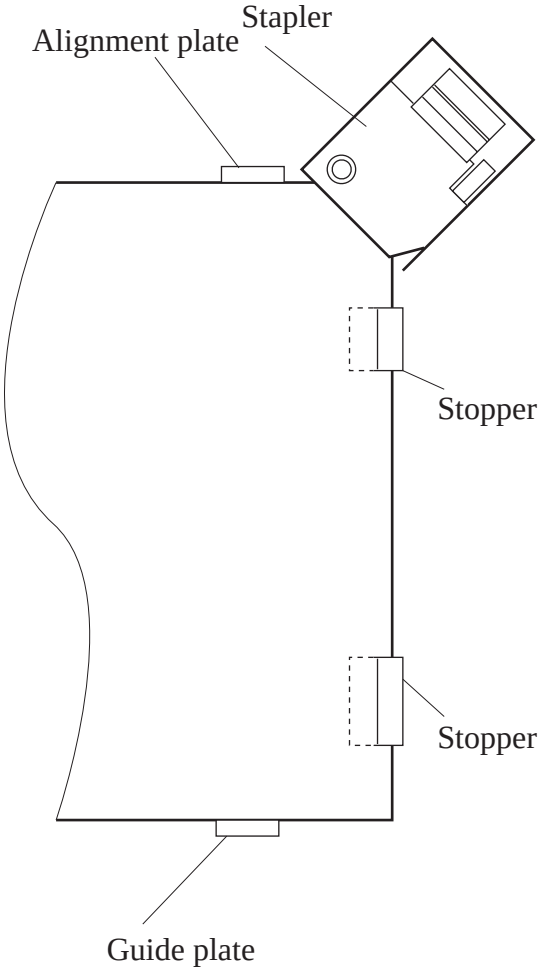

Figure 6-105

5) If the stapling position is correct, shift all bits on SW2 to OFF* to end the adjustments. If you need to change the stapling position, on the other hand, go to the next step.
*If you are disabling the manual feed tray height control mode, set bit 2 on SW1 to ON.
6) To suit the position of the staple on the paper, press SW2 or SW3 on the finisher controller PCB as many times as necessary.
   - A press on SW2 will shift the stapling position to the front in increments of 0.3 mm.
   - A press on SW3 will shift the stapling position to the rear in increments of 0.3 mm.

COPYRIGHT © 1998 CANON INC. FINISHER-C1/SADDLE FINISHER-C2 REV. 0 DEC. 1998 PRINTED IN JAPAN (IMPRIME AU JAPON)

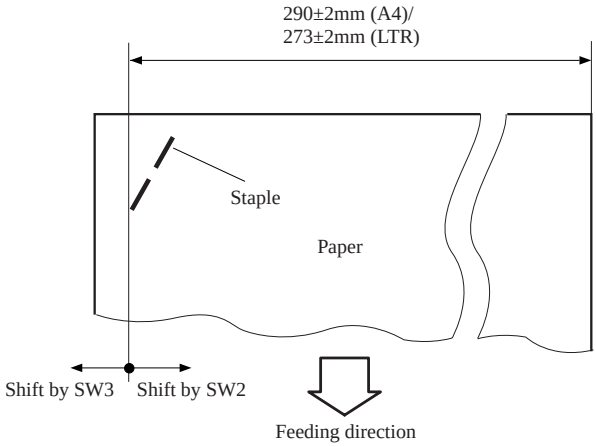

Figure 6-106

7) Press SW2 and SW3 simultaneously.
   - The press will open the swing guide, and cause the feed belt to rotate. Placement of one sheet of A4/LTR paper will cause the finisher to start stapling operation.
8) Check the stapling position. If good, shift all bits of SW1 to OFF*. If re-adjustments are necessary, go back to step 6).
   *If you are disabling the manual feed tray height control mode, set bit 2 on SW1 to ON.

Caution:
The settings held by the finisher controller are changed as soon as SW2 or SW3 is pressed. As such, to recover the previous settings after the press, you must press the other of the two switches as many times as you pressed previously.

4. Disabling Manual Feed Tray Height Control Mode

When such large-size sheets as SM-1 or GNT-80 are stacked continuously during manual feed pick-up operation, the trailing edge of a sheet can become stuck on the delivery roller assembly, causing the subsequent sheets to jam. This is because manual feed pick-up operation is executed in manual feed tray height control mode to control the height of the tray.

For users who tend to make use of large-size sheets often, the mode may be disabled as follows:

a. Disabling the Mode

Shift bit 2 of SW1 on the finisher controller PCB to ON.

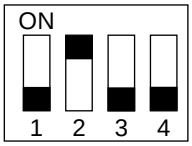

Figure 6-107

The new switch setting will use the same tray height control for both manual pick-up and cassette pick-up. The stacking volume, however, will be 200 sheets or less of 80 g/m^2 paper (stack partly consisting of transparencies).

- Relationship between Paper Types and Tray Height by New Switch Setting (result of control)

Manual feed paper type / bit 2 of SW1	Transparency	Plain paper (including SM-1/GNT-80)
OFF	Optimum	About 30 mm lower than optimum
ON	About 30 mm higher than optimum	Optimum

Table 6-101

Caution:
Note that a single setting will not fully accommodate both transparencies and SM-1/GNT-80 large-size sheets in manual feed mode simultaneously. Be sure to consult with the user about paper types of choice before deciding whether to change the switch settings.

B. Electrical System (saddle stitcher unit)

1. Adjusting the Folding Position

The folding position is adjusted by changing the settings of bits 6 through 8 of DIPSW1 on the saddle stitcher controller PCB so as to match with the stitching position (i.e., adjusting the distance over which the paper positioning plate is moved to the folding position from the stitching position).

COPYRIGHT © 1998 CANON INC.

If you have replaced the saddle stitcher controller PCB, be sure to set the new DIPSW1 so the settings will be the same as those on the old DIPSW1. If, for any reason, you must change the folding position, perform the following steps:

1) Remove the PCB cover, and set bits 1 through 4 of DIPSW1 on the saddle stitcher controller PCB as indicated.

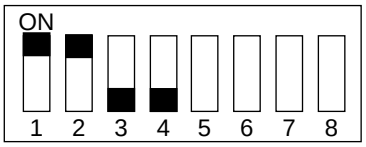

Do not change bits 5 through 8.

Figure 6-108

2) Remove the rear cover of the saddle stitcher unit, and tape the actuator of the inlet cover open sensor (PI9S) and the inlet cover open detecting switch (MS1S) of the saddle stitcher unit in place.
3) Press SW2 on the saddle stitcher controller PCB so that the feed motor (M1S) starts to rotate.
4) Before slot in the paper, put a marking at the top of the paper. (You will be using two sheets of A3 or LDR paper.)

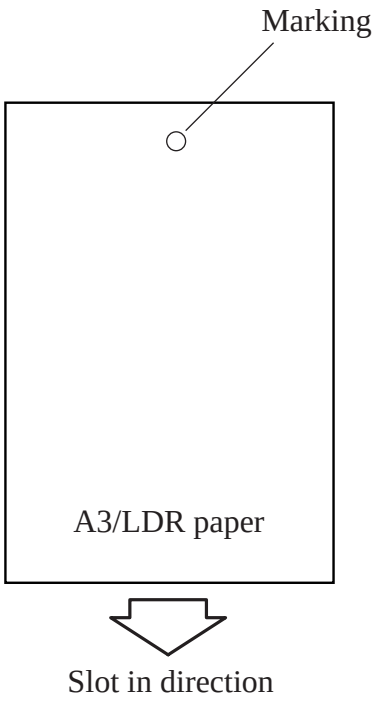

Figure 6-109

5) Open the inlet cover, and slot in two sheets of paper. (Push them in by hand until the leading edge of the sheets butts against the paper positioning plate.)

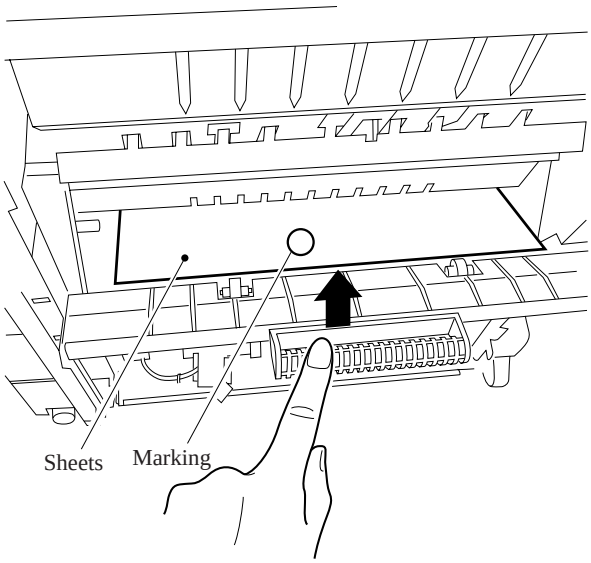

Figure 6-110

6) Close the inlet door.
7) Press SW2 on the saddle stitcher controller PCB.
   - The saddle stitcher unit will "stitch" the sheets, and fold and deliver the stack automatically.
8) Measure the distance (L) between the stitching position and the folding position. Then, perform "positive width adjustment" or "negative width adjustment" to suit the relationship between the stitching position and the folding position.
   - If the stitching position is below the folding position, perform "positive width adjustment."
   - If the stitching position is above the folding position, perform "negative width adjustment."

COPYRIGHT © 1998 CANON INC. FINISHER-C1/SADDLE FINISHER-C2 REV. 0 DEC. 1998 PRINTED IN JAPAN (IMPRIME AU JAPON)

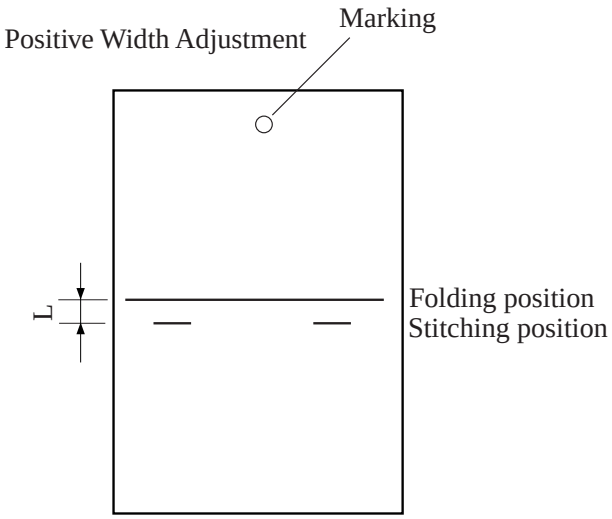

Figure 6-111

9) By referring to Table 5-101 below, change the settings of bits 6 through 8 on DIPSW1.
   - If the width adjustment is '0',
     The stitching position and the folding position match, requiring no change.
   - If for "positive width adjustment,"
     Set DIPSW1 so that the difference resulting from subtraction of the interval from the appropriate setting in Table 5-101 is provided.
     For instance, if the DIPSW1 is currently set to +2 and the interval is +1 mm, set DIPSW1 to reflect -2.
   - If for "negative width adjustment,"
     Set DIPSW1 so that the sum resulting from addition of the interval to the appropriate setting is provided.
     For instance, if DIPSW1 is currently set to -1 and the interval is +1 mm, set DIPSW1 to reflect +2.

DIPSW1 bit settings			Settings (in units of 0.25 mm)
bit 6	bit 7	bit 8	
OFF	ON	ON	+3
OFF	ON	OFF	+2
OFF	OFF	ON	+1
OFF	OFF	OFF	0
ON	OFF	ON	-1
ON	ON	OFF	-2
ON	ON	ON	-3

Do not touch the following.

bit 6	bit 7	bit 8
ON	OFF	OFF

Table 6-102

10) Shift bits 1 through 4 on DIPSW1 to OFF.

2. Stitching Position (adjusting center stitching)

Use the copier's user mode to perform the following:

1) Press the user mode key on the copier's control panel to start user mode.
2) Press the 'adjust/clean' key on the LCD.
3) Press the 'down' key to bring out the 2/2 screen.
4) Press 'adjust center folding position' key.
5) Press the appropriate key: 'A3, 11x17', 'B4', or 'A4R, LTRR'.
6) Enter the adjustment value in increments of 0.25 mm by pressing the 'down' key or the 'up' key
   To stop adjustment, press the 'stop' key.

COPYRIGHT © 1998 CANON INC.

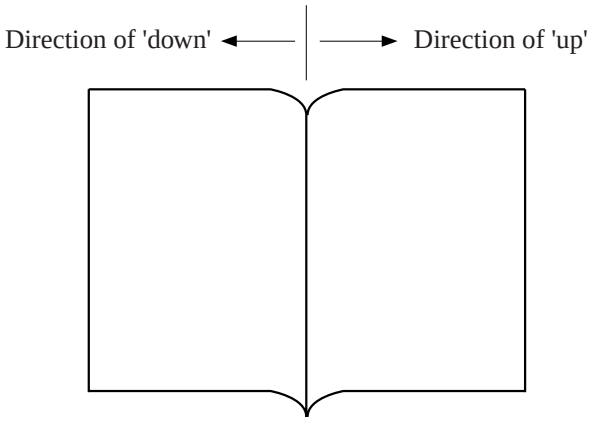

Figure 6-112

7) Press the 'OK' key to store the new adjustment value.

COPYRIGHT © 1998 CANON INC. FINISHER-C1/SADDLE FINISHER-C2 REV. 0 DEC. 1998 PRINTED IN JAPAN (IMPRIME AU JAPON)

COPYRIGHT © 1998 CANON INC.

II. ARRANGEMENT OF ELECTRICAL PARTS

A. Finisher Unit

1. Sensors

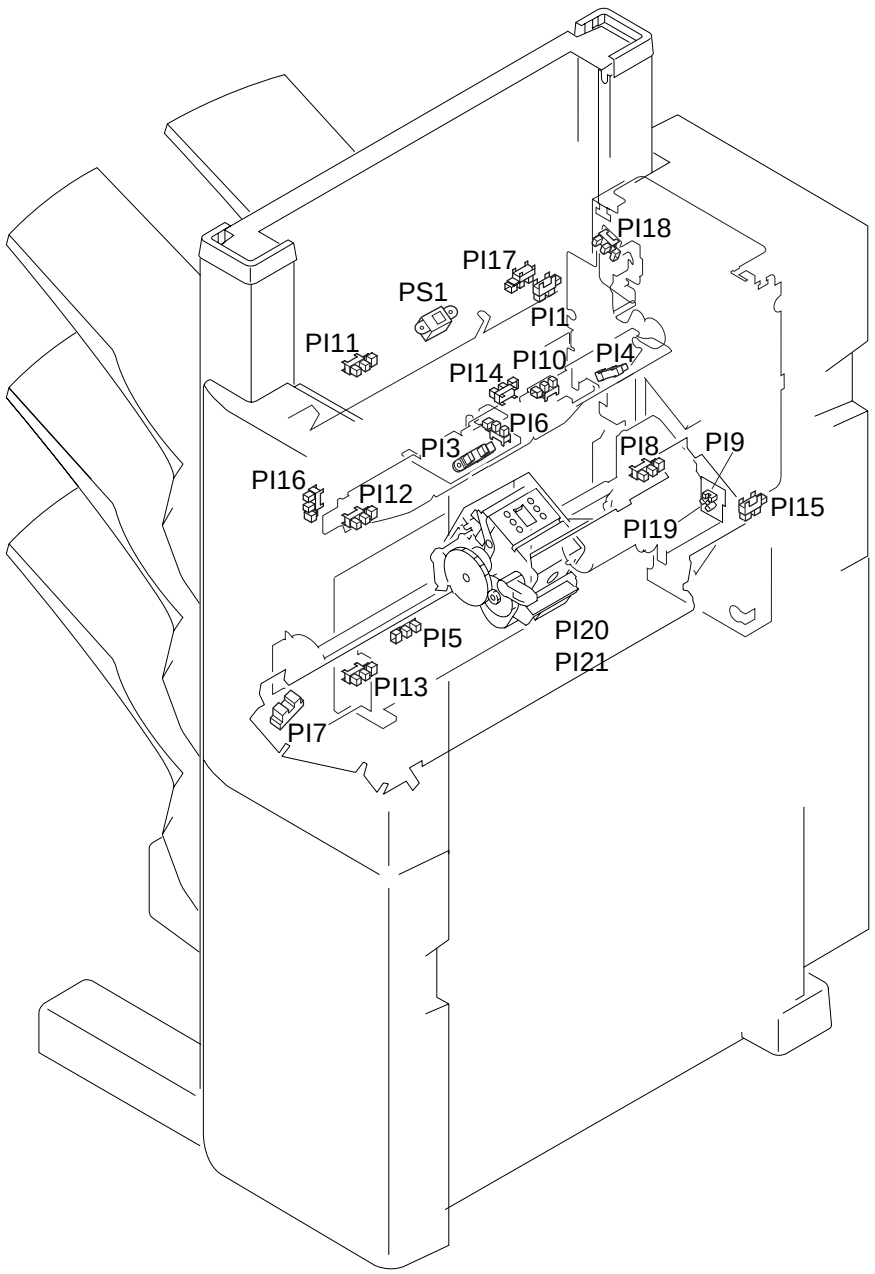

Figure 6-201

COPYRIGHT © 1998 CANON INC.

Name	Notation	Function
Photointerrupter	PI1	Detects paper in the inlet area
	PI3	Detects paper in the delivery area
	PI4	Detects paper on the stapling tray
	PI5	Detects the state (open) of the shutter
	PI6	Detects the alignment plate at home position
	PI7	Detects the stapler at home position
	PI8	Detects the tray at home position
	PI10	Detects delivery motor clock pulses
	PI11	Detects paper on tray 1
	PI12	Detects paper on tray 2
	PI13	Detects paper on tray 3
	PI14	Detects paper in the buffer path
	PI15	Detects the finisher joint
	PI16	Detects the state (open) of the door
	PI17	Detects paper at the inlet to the buffer path
	PI18	Detects the state (open) of the swing guide
	PI9	Detects tray lift motor clock pulses 2 (on sensor PCB)
	PI19	Detects tray lift motor clock pulses 1 (on sensor PCB)
	PI20	Detects edging of stamples (inside stapler)
	PI21	Detects stapling home position (inside stapler)
Height sensor	PS1	Detects the height of the stack on the tray

Table 6-201

COPYRIGHT © 1998 CANON INC.

2. Microswitches

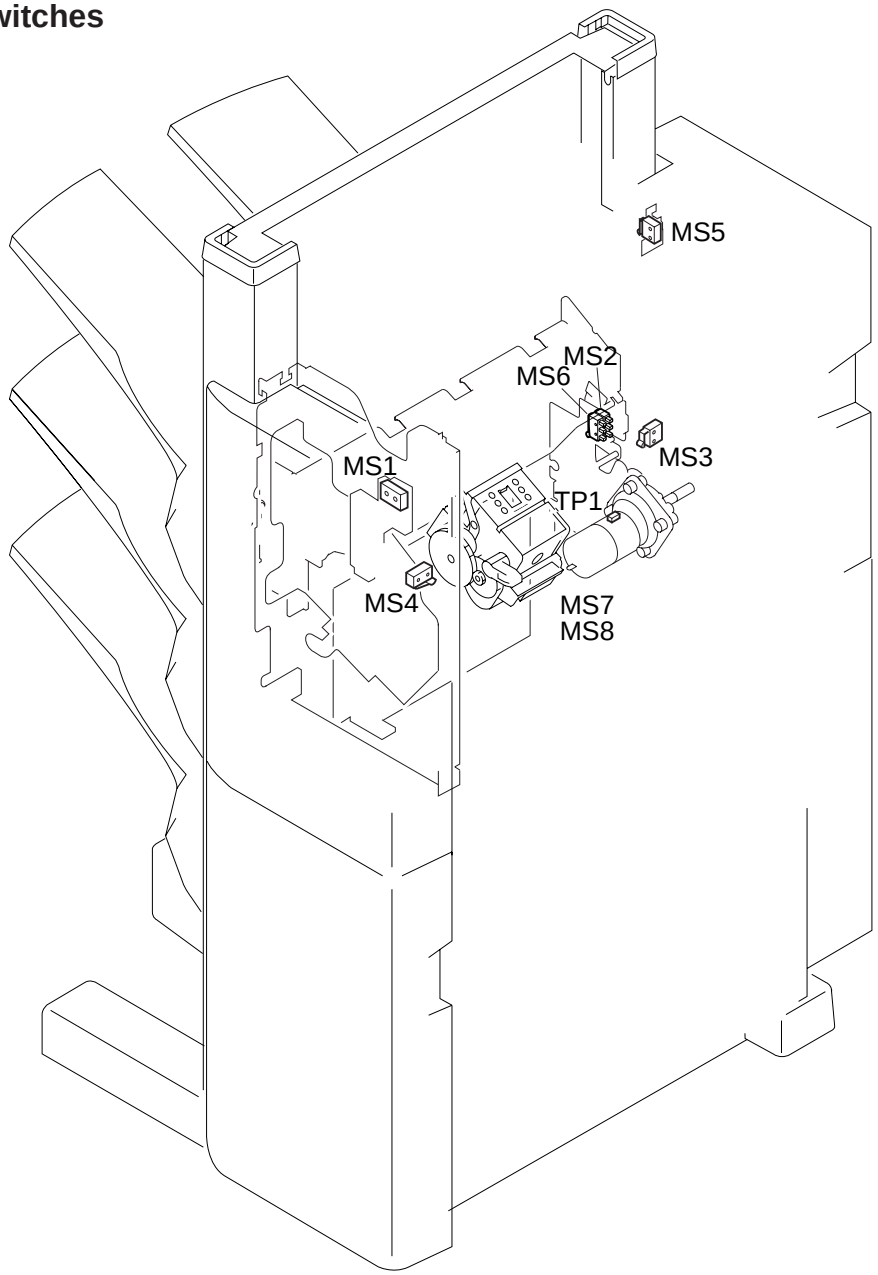

Figure 6-202

Name	Notation	Function
Microswitches	MS1	Detects the state (open) of the front door and the upper cover
	MS2	Detects the state (closed) of the swing guide
	MS3	Monitors the safety range
	MS4	Detects the state (closed) of the shutter
	MS5	Detects the tray at the upper limit
	MS6	Detects the state (closed) of the swing guide 2
	MS7	Detects the cartridge (inside stapler)
	MS8	Detects the presence/absence of staples (inside stapler)
Thermal switches	TP1	Detects increase in temperature of the tray lift motor

Table 6-202

COPYRIGHT © 1998 CANON INC. FINISHER-C1/SADDLE FINISHER-C2 REV. 0 DEC. 1998 PRINTED IN JAPAN (IMPRIME AU JAPON)

3. Motors

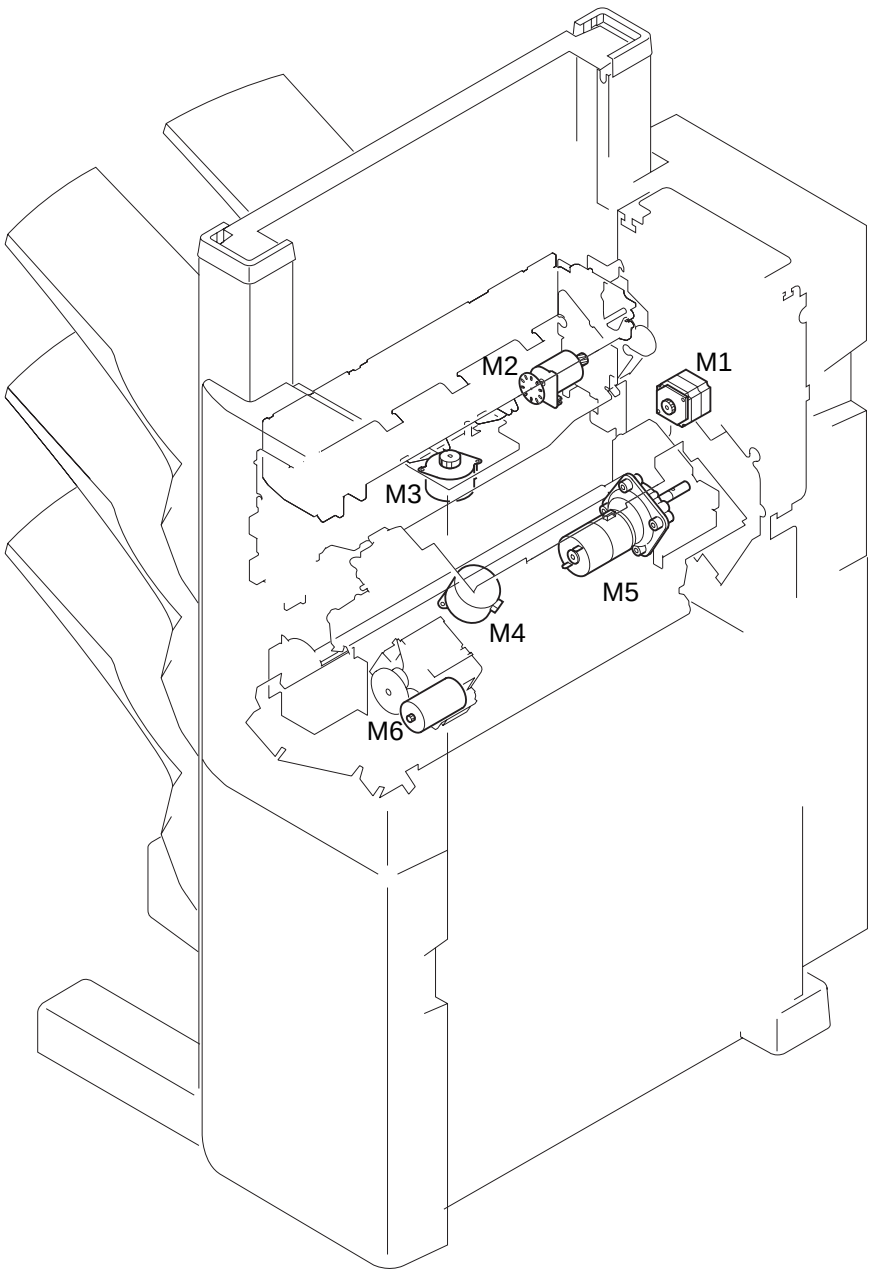

Figure 6-203

Name	Notation	Function
Motor	MS1	Feed motor
	MS2	Delivery motor
	MS3	Alignment motor
	MS4	Stapler shift motor
	MS5	Tray lift motor
	MS6	Stapler motor (inside stapler)

Table 6-203

COPYRIGHT © 1998 CANON INC.

4. Solenoids and Lamps

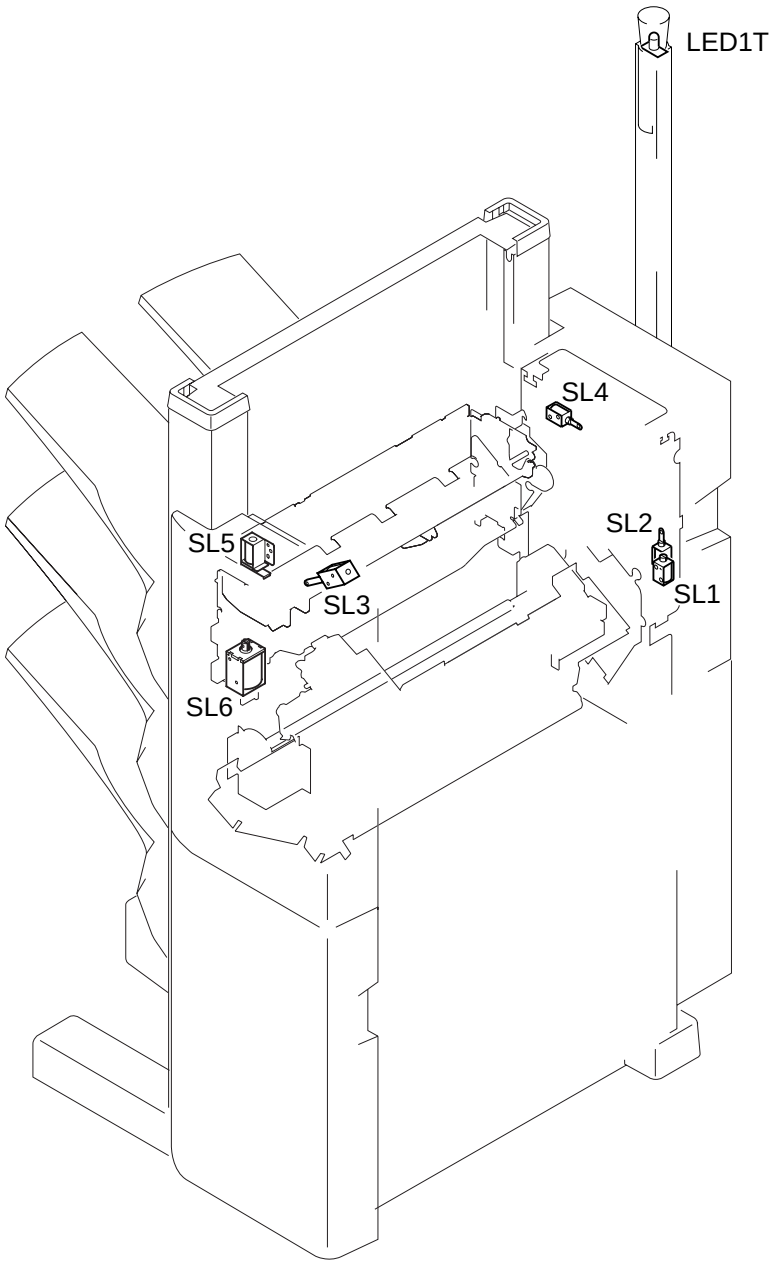

Figure 6-204

Name	Notation	Function
Solenoid	SL1	Flapper solenoid (Saddle Finisher-C2)
	SL2	Buffer inlet solenoid
	SL3	Buffer outlet solenoid
	SL4	Interrupt tray solenoid
	SL5	Paddle solenoid
	SL6	Escape solenoid
LED	LED1T	Incoming fax indicator lamp (option; 115V)

Table 6-204

COPYRIGHT © 1998 CANON INC. FINISHER-C1/SADDLE FINISHER-C2 REV. 0 DEC. 1998 PRINTED IN JAPAN (IMPRIME AU JAPON)

5. PCBs

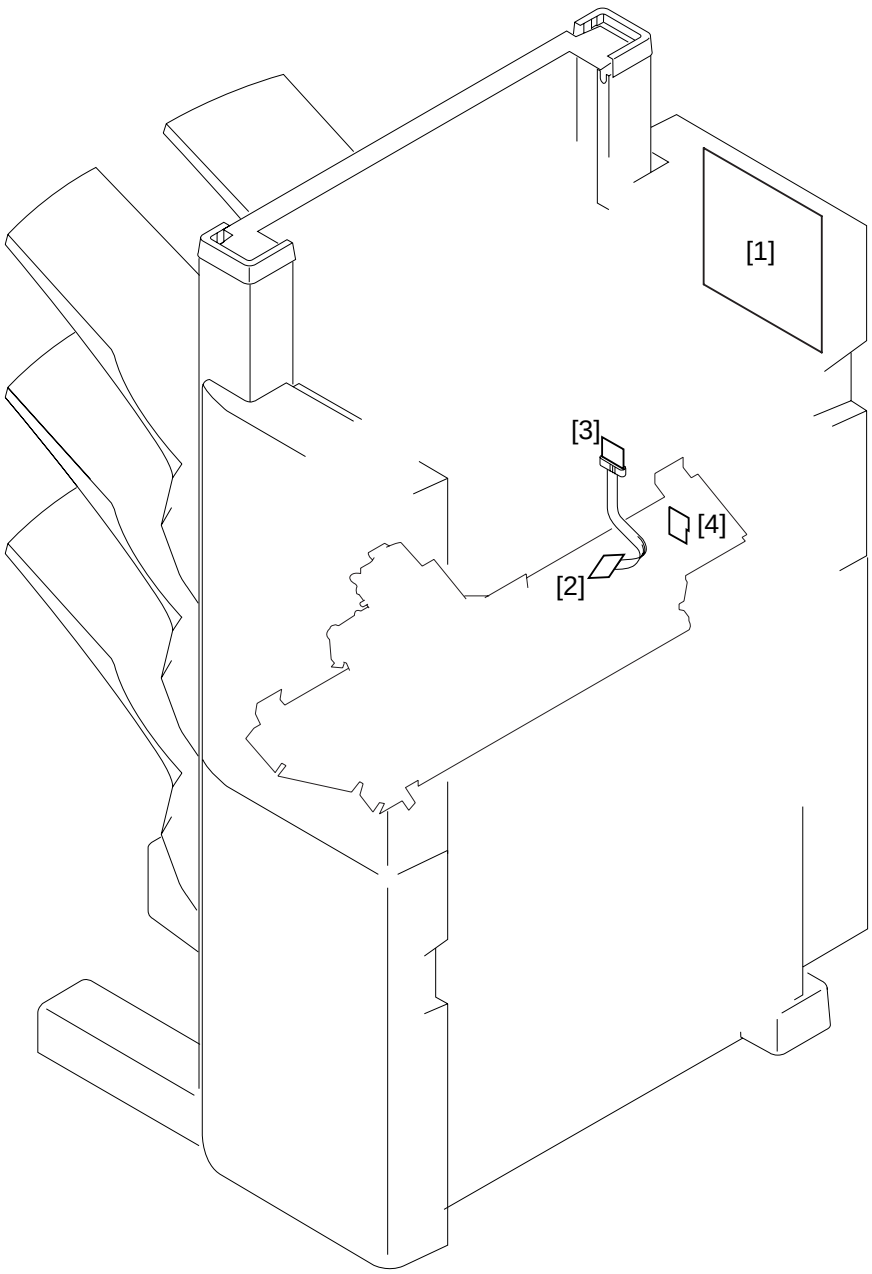

Figure 6-205

Reference	Name
[1]	Finisher controller PCB
[2]	Relay PCB 4
[3]	Relay PCB 3
[4]	Sensor PCB

Table 6-205

COPYRIGHT © 1998 CANON INC.

B. Saddle Stitcher Unit

1. Photointerrupters

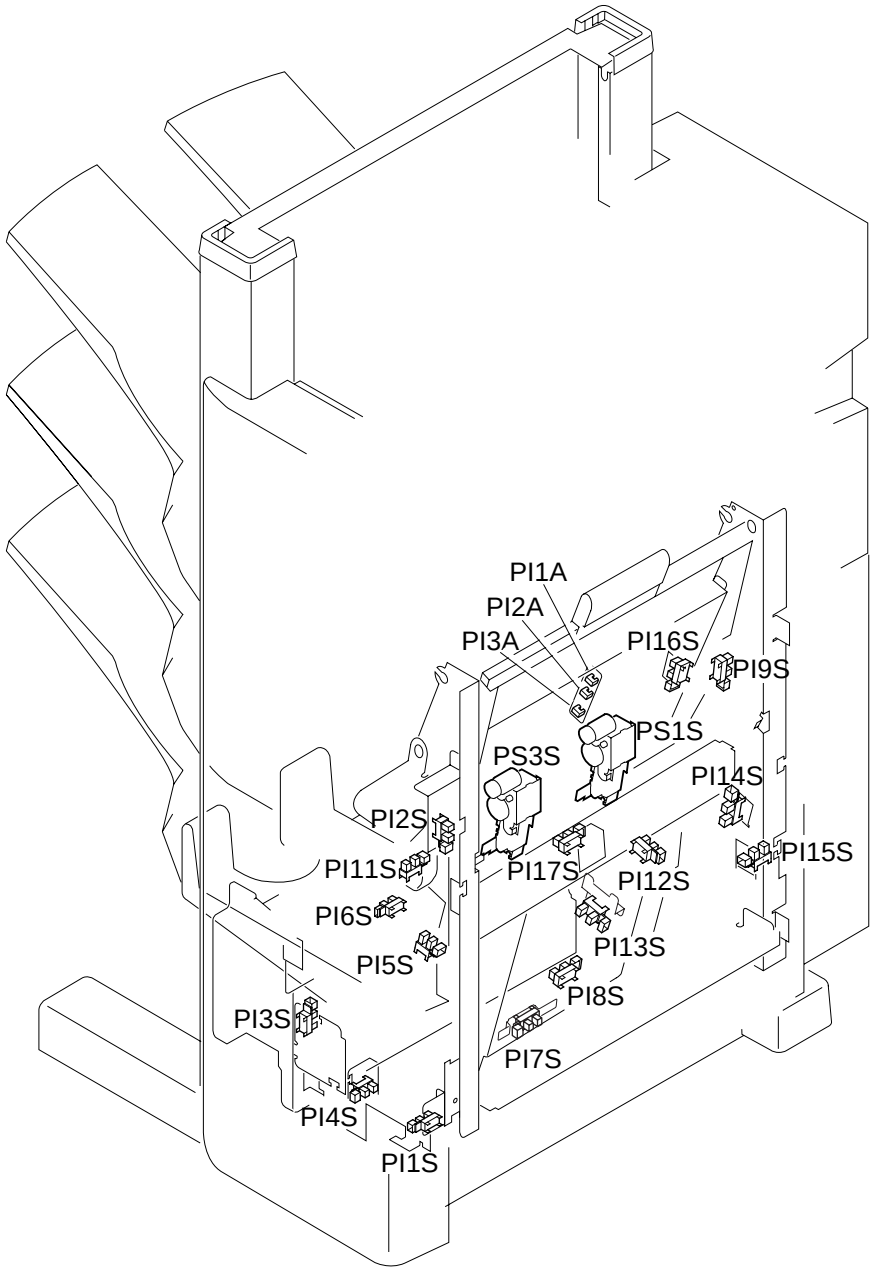

Figure 6-206

COPYRIGHT © 1998 CANON INC.

Name	Notation	Function
Photointerrupter	PI1S	Detects clock pulses from the paper pushing plate motor
	PI2S	Detects the state (open) of the front door
	PI3S	Detects the state (open) of the outlet cover
	PI4S	Detects clock pulses from the folder motor
	PI5S	Detects the alignment plates at home position
	PI6S	Detects paper on the tray
	PI7S	Detects the paper positioning plate at home position
	PI8S	Detects paper on the paper positioning plate
	PI9S	Detects the state (open) of the inlet cover
	PI11S	Detects paper in the delivery area
	PI12S	Detects the phase of the crescent roller
	PI13S	Detects the guide at home position
	PI14S	Detects the paper pushing plate at home position
	PI15S	Detects the paper pushing plate at the top position
	PI16S	Detects the state (in) of the stitcher unit
	PI17S	Detects paper in the vertical path
	PI1A	Detects paper (No. 1; on paper sensor PCB)
	PI2A	Detects paper (No. 2; on paper sensor PCB)
	PI3A	Detects paper (No. 3; on paper sensor PCB)
	PS1S	Detects the presence of staples (rear)
	PS3S	Detects the presence of staples (front)

Table 6-206

COPYRIGHT © 1998 CANON INC.

2. Microswitches

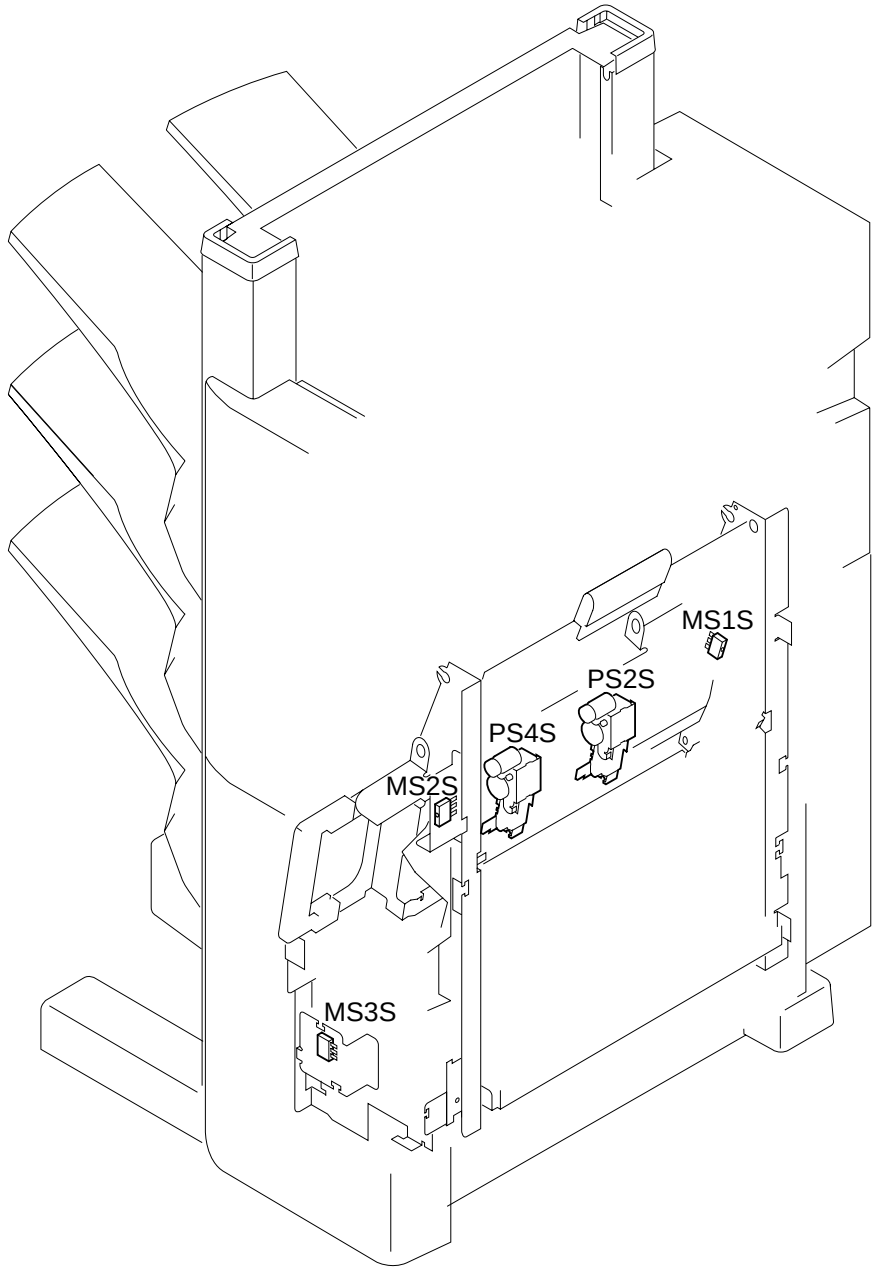

Figure 6-207

Name	Notation	Function
Microswitches	PS2S	Detects stitching home position (rear)
	PS4S	Detects stitching home position (front)
	MS1S	Detects the state (open) of the inlet door
	MS2S	Detects the state (open) of the front door
	MS3S	Detects the state (open) of the delivery door

Table 6-207

COPYRIGHT © 1998 CANON INC. FINISHER-C1/SADDLE FINISHER-C2 REV. 0 DEC. 1998 PRINTED IN JAPAN (IMPRIME AU JAPON)

3. Motors

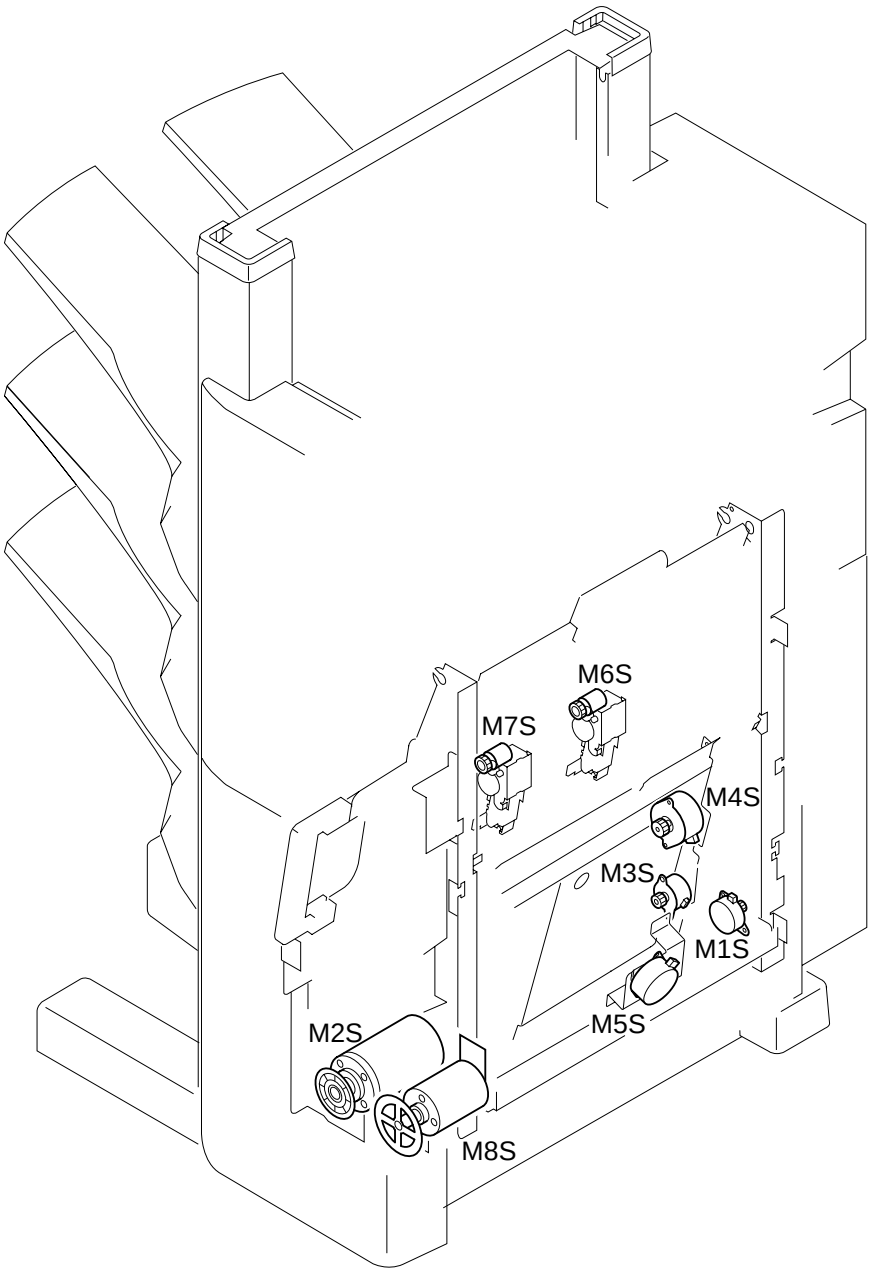

Figure 6-208

Name	Notation	Function
Motor	M1S	Feed motor
	M2S	Paper folder motor
	M3S	Guide motor
	M4S	Paper positioning plate motor
	M5S	Alignment motor
	M6S	Stitcher motor (rear)
	M7S	Stitcher motor (front)
	M8S	Paper pushing plate motor

Table 6-208

COPYRIGHT © 1998 CANON INC.

4. Solenoids

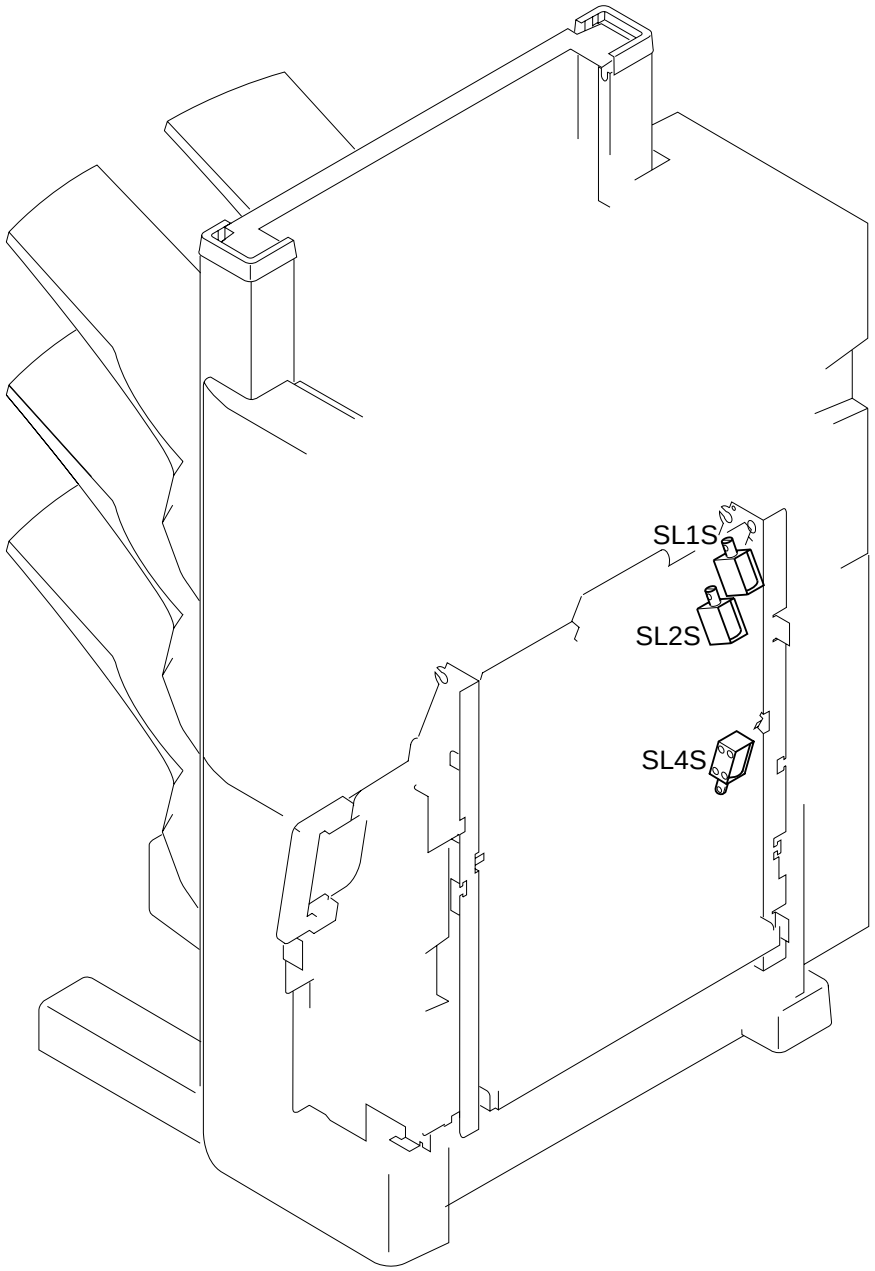

Figure 6-209

Name	Notation	Function
Solenoid	SL1S	No. 1 paper deflecting plate solenoid
	SL2S	No. 2 paper deflecting plate solenoid
	SL4S	Feed roller contact solenoid

Table 6-209

COPYRIGHT © 1998 CANON INC. FINISHER-C1/SADDLE FINISHER-C2 REV. 0 DEC. 1998 PRINTED IN JAPAN (IMPRIME AU JAPON)

5. PCBs

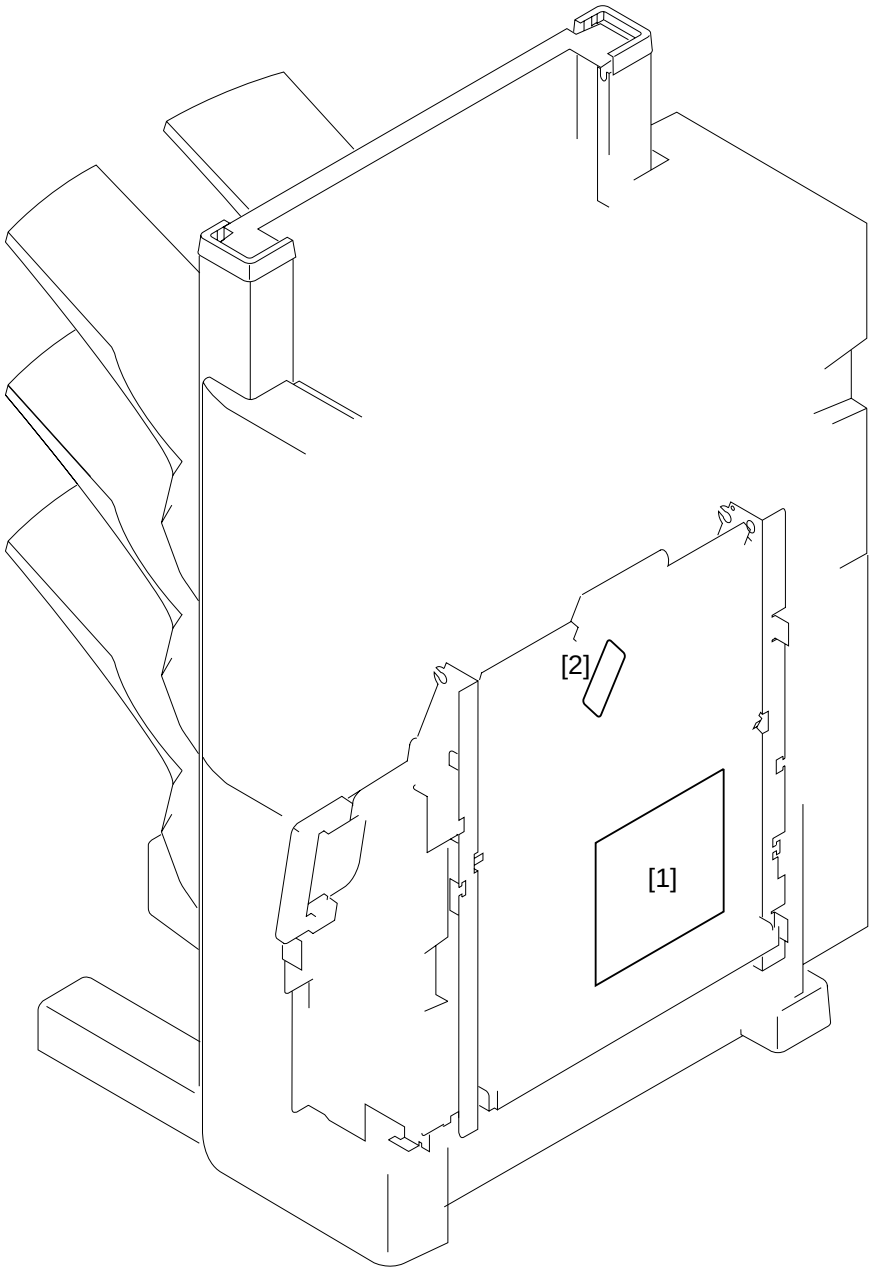

Figure 6-210

Reference	Name
[1]	Saddle stitcher controller PCB
[2]	Paper sensor PCB

Table 6-210

COPYRIGHT © 1998 CANON INC.

C. Variable Resistors (VR), Light-Emitting Diodes (LED), and Check Pins by PCB

Of the VRs, LEDs, and check pins used in the machine, those needed in the field are discussed herein.

Caution:
The VRs and check pins not discussed herein are for factory use only. Making adjustments and checks using these will require special tools and instruments and adjustments must be to high accuracy. Do not touch them in the field.

1. Finisher Controller PCB

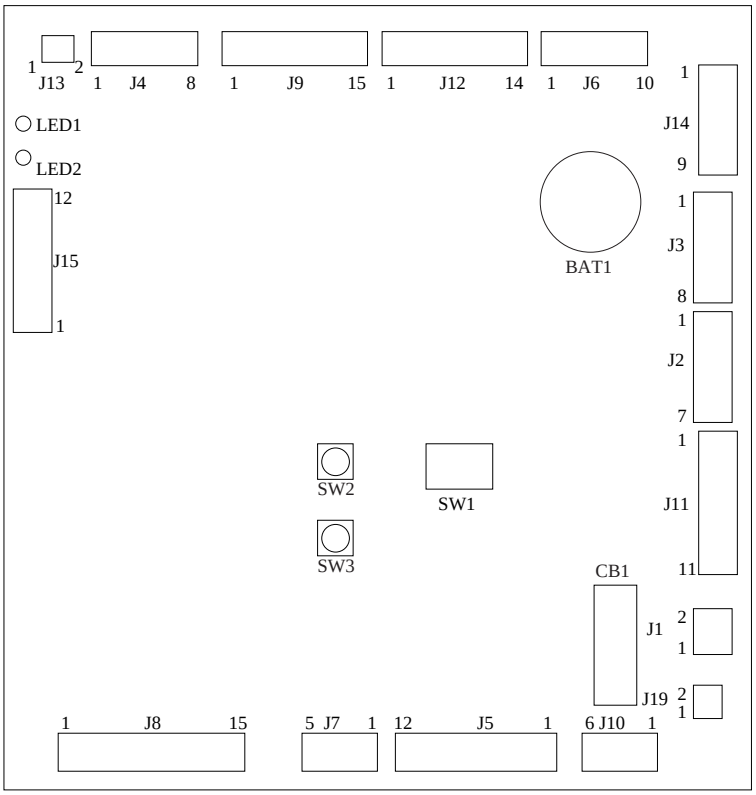

Figure 6-211

Switch	Function
SW1	Adjusts the height sensor/alignment plate position/stapling position.
SW2	Adjusts the height sensor/the alignment plate position/the staple position and moves the trays up.
SW3	Adjusts the alignment position/the stapling position and moves the trays down.

Table 6-211

COPYRIGHT © 1998 CANON INC. FINISHER-C1/SADDLE FINISHER-C2 REV. 0 DEC. 1998 PRINTED IN JAPAN (IMPRIME AU JAPON)

2. Saddle Stitcher Controller PCB

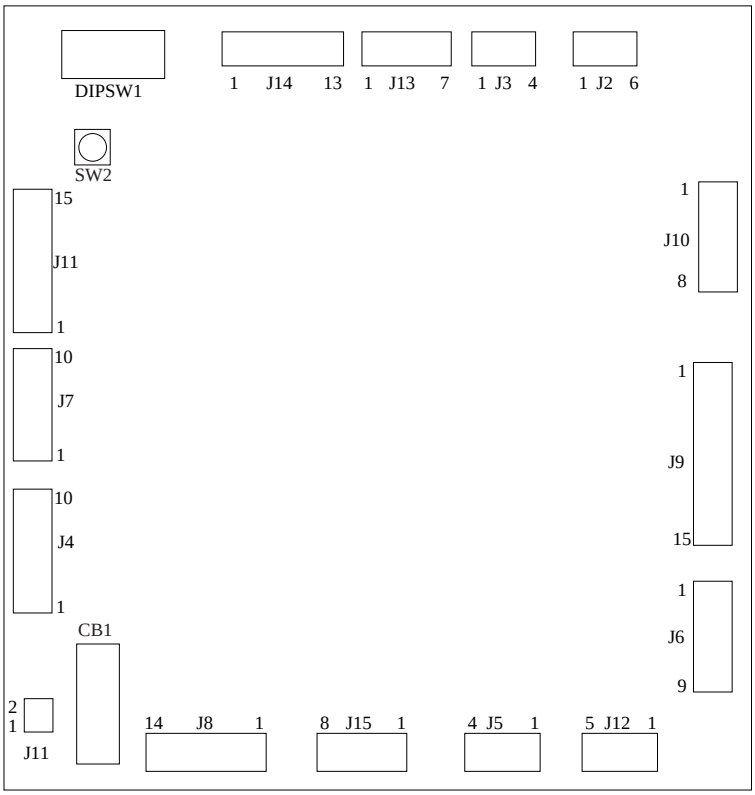

Figure 6-212

Switch	Function
DIPSW1 (bits 1-2)	Starts correction of discrepancy between stitching position and folding position.
DIPSW1 (bits 6-8)	Stores corrected settings for stapling position and folding position.
SW2	Starts correction of discrepancy between stitching position and folding position.

Table 6-212

III. TROUBLESHOOTING

A. Finisher Unit

1. E500 (fault in communication with copier)

Cause	Step	Checks	Yes/No	Action
Finisher controller PCB, Copier DC controller PCB	1	Turn off and then on the copier. Is the problem corrected?	Yes	End.
Wiring	2	Is the wiring between the finisher controller PCB and the copier controller PCB normal?	Yes	Correct it.
Finisher controller PCB, Copier DC controller PCB	3	Replace the finisher controller PCB and the copier DC controller PCB. Is the problem corrected?	Yes	End.

2. E503 (communication with saddle stitcher unit)

Cause	Step	Checks	Yes/No	Action
Finisher controller PCB, Saddle stitcher controller PCB	1	Turn off and then on the copier. Is the problem corrected?	Yes	End.
Wiring	2	Is the wiring between the finisher controller PCB and the saddle stitcher controller PCB normal?	Yes	Correct it.
Power supply	3	Measure the voltage between J3-2 (+) and J3-1 (-) on the finisher controller PCB. Is it 24 VDC?	No	Replace the finisher controller PCB.
Saddle stitcher controller PCB			Yes	Replace the saddle stitcher controller PCB.

3. E504 (faulty height sensor; detail code 01/02)

Cause	Step	Checks	Yes/No	Action
Finisher controller PCB	1	Turn off and then on the copier. Is the problem corrected?	Yes	End.
Wiring	2	Is the wiring between the finisher controller PCB and the sensors normal?	No	Correct the wiring.
Power supply	3	Measure the voltage between J6-2 (+) and J6-4 (-) on the finisher controller. Is it 5 VDC?	No	Replace the finisher controller PCB.
Height sensor (PS1)			Yes	Adjust the height sensor once again. If an error occurs again, replace the height sensor.

COPYRIGHT © 1998 CANON INC. FINISHER-C1/SADDLE FINISHER-C2 REV. 0 DEC. 1998 PRINTED IN JAPAN (IMPRIME AU JAPON)

4. E504 (faulty height sensor; detail code 03)

Cause	Step	Checks	Yes/No	Action
Connector	1	Is J6 on the finisher controller PCB, J114 on the height sensor, or J212 on the relay connector disconnected?	Yes	Connect the connector.
Power supply	2	Measure the voltage between J6-2 (+) and J6-4 (-) on the finisher controller PCB. Is it 5 VDC?	No	Replace the finisher controller PCB.
Height sensor (PS1)	3	Is the wiring between the finisher controller PCB and sensors normal?	Yes	Replace the height sensor.
Wiring			No	Correct the wiring.

5. E504 (faulty height sensor; detail code 04)

Cause	Step	Checks	Yes/No	Action
Adjustment	1	Try making adjustments using the DIP switch. Is the problem corrected?	Yes	End.
Wiring	2	Is the wiring between the finisher controller PCB and sensors normal?	No	Correct the wiring.
Power supply	3	Measure the voltage between J6-2 (+) and J6-4 (-) on the finisher controller PCB . Is it 5 VDC?	No	Replace the finisher controller PCB.
Height sensor (PS1)			Yes	Replace the height sensor.

6. E505 (faulty back-up RAM)

Cause	Step	Checks	Yes/No	Action
Finisher controller PCB	1	Turn off and then on the copier. Is the problem corrected?	Yes	End.
	2	Set bits l and 4 on the finisher controller PCB on. Then perform the height sensor adjust. Is the problem corrected? (after it, perform the stapling position adjustment and the alignment position adjustment.)	Yes	End.
			No	Replace the finisher controller PCB.

COPYRIGHT © 1998 CANON INC.

7. E512 (faulty delivery motor)

Cause	Step	Checks	Yes/No	Action
Delivery roller	1	Turn the delivery roller by hand. Does it turn smoothly?	Yes	Correct the mechanical workings.
Delivery motor clock sensor (PI10)	2	Check the delivery clock sensor. Is the sensor normal?	No	Replace the sensor.
Finisher controller PCB	3	Does the voltage between J11-6 and J11-7 on the finisher controller PCB change to 24 V as soon as the delivery motor starts to rotate?	No	Replace the finisher controller PCB.
			Yes	Check the wiring from the motor to the controller PCB; if normal, replace the motor.

8. E530 (faulty alignment motor)

Cause	Step	Checks	Yes/No	Action
Alignment plate home position sensor (PI6)	1	Check the alignment plate home position sensor. Is it normal?	No	Replace the sensor.
Wiring	2	Is the wiring between the finisher controller PCB and the alignment plate motor normal?	No	Correct the wiring.
Alignment plate	3	Is there any mechanical obstacle in the path o f the alignment plate?	Yes	Remove the mechanical obstacle.
Alignment motor (M3)	4	Replace the alignment motor. Is the problem corrected?	Yes	End.
Finisher controller PCB			No	Replace the finisher controller PCB.

9. E531 (faulty staple motor)

Cause	Step	Checks	Yes/No	Action
Wiring	1	Is the wiring between the stapler and the finisher controller PCB normal?	No	Correct the wiring.
Stapler	2	Replace the stapler. Is the problem corrected?	Yes	End.
Finisher controller PCB			No	Replace the finisher controller PCB.

COPYRIGHT © 1998 CANON INC. FINISHER-C1/SADDLE FINISHER-C2 REV. 0 DEC. 1998 PRINTED IN JAPAN (IMPRIME AU JAPON)

10. E532 (faulty stapler shift motor)

Cause	Step	Checks	Yes/No	Action
Stapler shift home position sensor (PI7)	1	Check the stapler shift home position sensor. Is the sensor normal?	No	Replace the sensor.
Wiring	2	Is the wiring between the finisher controller PCB and the stapler shift motor normal?	No	Correct the problem.
Stapler shift base	3	Is there any mechanical obstacle in the path of the stapler shift base?	Yes	Remove the mechanical obstacle.
Stapler shift motor (M4)	4	Replace the stapler motor. Is the problem corrected?	Yes	End.
Finisher controller PCB			No	Replace the finisher controller PCB.

11. E535 (faulty delivery motor; detail code 01)

Cause	Step	Checks	Yes/No	Action
Swinging mechanism	1	Turn the delivery motor in reverse by hand. Does the swing guide move up and down?	No	Correct the swing mechanism.
Swing guide closed detecting switch 2 (MS6)	2	Is the swing guide closed detecting switch 2 normal?	No	Replace the microswitch.
Delivery motor (M2)	3	Does the delivery motor rotate in reverse at a specific timing?	No	Replace the motor.
Finisher controller PCB			Yes	Replace the finisher controller PCB.

12. E535 (faulty delivery motor; detail code 02)

Cause	Step	Checks	Yes/No	Action
Swinging mechanism	1	Turn the delivery motor in reverse by hand. Does the swing guide move up and down?	No	Correct the swing mechanism.
Swing guide open sensor (PI8)	2	Is the swing guide open sensor normal?	No	Replace the sensor.
Delivery motor (M2)	3	Does the delivery motor rotate in reverse at a specific timing?	No	Replace the motor.
Finisher controller PCB			Yes	Replace the finisher controller PCB.

COPYRIGHT © 1998 CANON INC.

13. E535 (faulty delivery motor; detail code 03)

Cause	Step	Checks	Yes/No	Action
Safety range switch (MS3)	1	Check the safety range switch. Is the switch normal?	No	Replace the switch.
	2	Is the safety range detecting switch pressed correctly?	No	Correct the mechanical workings.
Swing guide closed detecting switch 2 (MS6)	3	Check the swing guide closed detecting switch 2. Is the switch normal?	No	Replace the switch.
	4	Is the swing guide closed detecting switch 2 pressed correctly?	No	Correct the mechanical workings.
Finisher controller PCB			Yes	Replace the finisher controller PCB.

14. E540 (faulty tray lift motor; detail code 01)

Cause	Step	Checks	Yes/No	Action
Tray home position sensor (PI8)	1	Check the tray home position sensor. Is it normal?	No	Replace the sensor.
Tray lift mechanism	2	Check the tray lift mechanism. Is the mechanism normal?	No	Correct the mechanism.
Finisher controller PCB	3	Is the tray lift motor supplied with 24 VDC by the finisher controller PCB as soon as the tray is driven?	No	Replace the finisher controller PCB.
Wiring	4	Check the wiring from the finisher controller PCB to the tray lift motor. Is the wiring normal?	No	Correct the wiring.
Tray lift motor (M5)			Yes	Replace the tray lift motor.

COPYRIGHT © 1998 CANON INC. FINISHER-C1/SADDLE FINISHER-C2 REV. 0 DEC. 1998 PRINTED IN JAPAN (IMPRIME AU JAPON)

15. E540 (faulty tray lift motor; detail code 02)

Cause	Step	Checks	Yes/No	Action
Tray position	1	Is the tray at the tray upper limit switch?	Yes	Lower the tray.
Tray upper limit switch (MS5)	2	Check the tray upper limit switch. Is the switch normal?	No	Replace the switch.
Wiring	3	Check the wiring from the finisher controller PCB to the tray upper limit detecting switch. Is the wiring normal?	No	Correct the wiring.
Finisher controller PCB			Yes	Replace the finisher controller PCB.

16. E540 (faulty tray lift motor; detail code 03)

Cause	Step	Checks	Yes/No	Action
—	1	Does the tray move up/down?	No	Go to step 2.
			Yes	Go to step 4.
	2	Is the motor supplied with power by the finisher controller PCB as soon as the tray moves up/down?	Yes	Go to step 3.
Finisher controller PCB			No	Replace the finisher controller PCB.
Tray lift mechanism	3	Is there a fault in the tray lift mechanism?	Yes	Correct the tray lift mechanism.
Tray lift motor (M5)			No	Replace the tray lift motor.
Tray lift motor clock sensor 1/2 (PI19/9)	4	Is the tray lift motor clock sensor 1/2 normal?	No	Replace the sensor.
Finisher controller PCB			Yes	Replace the finisher controller.

COPYRIGHT © 1998 CANON INC.

17. E584 (faulty feed motor; detail code 01)

Cause	Step	Checks	Yes/No	Action
Feed motor (M1)	1	Does the feed motor rotate in reverse at a specific timing?	No	Replace the feed motor or the finisher controller PCB.
Shutter mechanism	2	Are the shutter and the shutter upper/lower bar engaged correctly?	No	Engage them correctly.
	3	Turn the feed roller 2 in reverse by hand. Does the shutter upper/lower bar move up/down?	No	Correct the mechanism from the shutter upper/lower bar to the gear of the feed roller 2.
Shutter closed detecting switch (MS4)	4	Is the shutter closed detecting switch normal?	No	Replace the switch.
Finisher controller PCB			Yes	Replace the finisher controller PCB.

18. E584 (faulty feed motor; detail code 02)

Cause	Step	Checks	Yes/No	Action
Feed motor (M1)	1	Does the feed motor rotate in reverse at a specific timing?	No	Replace the feed motor or the finisher controller PCB.
Shutter mechanism	2	Are the shutter and the shutter upper/lower bar engaged correctly?	No	Engage them correctly.
	3	Turn the feed roller 2 in reverse by hand. Does the shutter upper/lower bar move up/down?	No	Correct the mechanism from the shutter upper/lower bar to the gear of the feed roller 2.
Shutter open sensor (PI5)	4	Is the shutter open sensor normal?	No	Replace the switch.
Finisher controller PCB			Yes	Replace the finisher controller PCB.

COPYRIGHT © 1998 CANON INC. FINISHER-C1/SADDLE FINISHER-C2 REV. 0 DEC. 1998 PRINTED IN JAPAN (IMPRIME AU JAPON)

19. E584 (faulty feed motor; detail code 03)

Cause	Step	Checks	Yes/No	Action
Safety range switch (MS3)	1	Check the safety range switch. Is the switch normal?	No	Replace the switch.
	2	Is the safety range detecting switch pressed correctly?	No	Correct the mechanical workings.
Shutter closed detecting switch (MS4)	3	Check the shutter closed detecting switch. Is the switch normal?	No	Replace the switch.
	4	Is the shutter closed detecting switch pressed normally?	No	Correct the mechanism.
Finisher controller PCB			Yes	Replace the finisher controller PCB.

COPYRIGHT © 1998 CANON INC.

B. Saddle Stitcher Unit

1. E5F0 (faulty paper positioning plate; detail code 01/02)

Cause	Step	Checks	Yes/No	Action
Paper positioning plate home position sensor (PI7S)	1	Check the paper positioning plate home position sensor. Is the sensor normal?	No	Replace the sensor.
Saddle stitcher controller PCB	2	Do the paper positioning plates operate at a specific timing?	Yes	Replace the saddle stitcher controller PCB.
Paper positioning plate motor (M4S)			No	Check the positioning plate drive mechanism. If a fault is found, correct it; otherwise, go to step 3.
	3	Replace the paper positioning plate motor. Is the problem corrected?	Yes	End.
Saddle stitcher controller PCB			No	Replace the saddle stitcher controller PCB.

2. E5F1 (folder motor)

Cause	Step	Checks	Yes/No	Action
Folder motor clock sensor (PI4S)	1	Check the folder motor clock sensor. Is the sensor normal?	No	Replace the sensor.
Saddle stitcher controller PCB	2	Does the folder motor operate at a specific timing?	Yes	Replace the saddle stitcher controller PCB.
Folder motor (M2S)			No	Check the folding roller drive mechanism. If a fault is found, correct it; otherwise, go to step 3.
	3	Replace the folder motor. Is the problem corrected?	Yes	End.
Saddle stitcher controller PCB			No	Replace the saddle stitcher controller PCB.

COPYRIGHT © 1998 CANON INC. FINISHER-C1/SADDLE FINISHER-C2 REV. 0 DEC. 1998 PRINTED IN JAPAN (IMPRIME AU JAPON)

3. E5F2 (faulty guide motor; detail code 01/02)

Cause	Step	Checks	Yes/No	Action
Guide home position sensor (PI13S)	1	Check the guide home position sensor. Is the sensor normal?	No	Replace the sensor.
Saddle stitcher controller PCB	2	Does the guide motor operate at a specific timing?	Yes	Replace the saddle stitcher controller PCB.
Guide motor (M3S)			No	Check the guide plate drive mechanism. If a fault is found, correct it; otherwise, go to step 3.
	3	Replace the guide motor. Is the problem corrected?	Yes	End.
Saddle stitcher controller PCB			No	Replace the saddle stitcher controller PCB.

4. E5F3 (faulty alignment motor; detail code 01/02)

Cause	Step	Checks	Yes/No	Action
Alignment plate home position sensor (PI5S)	1	Check the alignment plate home position sensor. Is the sensor normal?	No	Replace the sensor.
Saddle stitcher controller PCB	2	Does the alignment motor operate at a specific timing?	Yes	Replace the saddle stitcher controller PCB.
Alignment motor (M5S)			No	Check the alignment plate drive mechanism. If a fault is found, correct it; otherwise, go to step 3.
	3	Replace the alignment motor. Is the problem corrected?	Yes	End.
Saddle stitcher controller PCB			No	Replace the saddle stitcher controller PCB.

COPYRIGHT © 1998 CANON INC.

5. E5F4/E5F5 (faulty stitcher; detail code 01/02)

Cause	Step	Checks	Yes/No	Action
Stitcher (installation)	1	Are the front and rear stitchers and bases installed correctly?	No	Install them correctly.
Stitching home position switch (PS4S/PS2S)	2	Is the stitching home position switche of the front and the rear stitchers normal?	No	Replace the front or rear stitcher.
Saddle stitcher controller PCB	3	Do the front and the rear stitchers operate at a specific timing?	Yes	Check the wiring between the stitcher and the saddle stitcher controller PCB; if normal, replace the controller PCB.
Stitcher motor (M7S/M6S)			No	Replace the front or the rear stitcher.

6. E5F6 (faulty paper pushing plate motor; detail code 01/02)

Cause	Step	Checks	Yes/No	Action
Paper pushing plate home position sensor (PI4S)	1	Check the paper pushing plate home position sensor. Is the sensor normal?	No	Replace the sensor.
Saddle stitcher controller PCB	2	Does the paper pushing plate motor operate at a specific timing?	Yes	Replace the saddle stitcher controller PCB.
Paper pushing plate motor (M8S)			No	Check the paper pushing plate drive mechanisms. If a fault is found, correct it; otherwise, go to step 3.
	3	Replace the paper pushing plate motor. Is the problem corrected?	Yes	End.
Saddle stitcher controller PCB			No	Replace the saddle stitcher controller PCB.

COPYRIGHT © 1998 CANON INC. FINISHER-C1/SADDLE FINISHER-C2 REV. 0 DEC. 1998 PRINTED IN JAPAN (IMPRIME AU JAPON)

7. E5F6 (faulty paper pushing plate motor; detail code 03)

Cause	Step	Checks	Yes/No	Action
Paper pushing leading edge position sensor (PI5S)	1	Check the paper pushing plate leading edge position sensor. Is the sensor normal?	No	Replace the sensor.
Saddle stitcher controller PCB	2	Does the paper pushing plate motor operate at a specific timing?	Yes	Replace the saddle stitcher controller PCB.
Paper pushing plate motor (M8S)			No	Check the paper pushing plate drive mechanism. If a fault is found, correct it; otherwise, go to step 3.
	3	Replace the paper pushing plate motor. Is the problem corrected?	Yes	End.
Saddle stitcher controller PCB			No	Replace the saddle stitcher controller PCB.

8. E5F6 (faulty paper pushing plate motor; detail code 04)

Cause	Step	Checks	Yes/No	Action
Paper pushing plate motor clock sensor (PI1S)	1	Check the paper pushing plate motor clock sensor. Is the sensor normal?	No	Replace the sensor.
Saddle stitcher controller PCB	2	Does the paper pushing plate motor operate at a specific timing?	Yes	Replace the saddle stitcher controller PCB.
Paper pushing plate motor (M8S)			No	Check the butting plate drive mechanism. If a fault is found, correct it; otherwise, go to step 3.
	3	Replace the paper pushing plate motor. Is the problem corrected?	Yes	End.
Saddle stitcher controller PCB			No	Replace the saddle stitcher controller PCB.

COPYRIGHT © 1998 CANON INC.

9. E5F8 (disconnected sensor connector; detail code 01)

Cause	Step	Checks	Yes/No	Action
Guide home position sensor (PI13; disconnected)	1	Are the connectors of the guide home position sensor and the saddle stitcher controller PCB connected?	No	Connect the connectors.
Wiring	2	Is the wiring between the sensor and the saddle stitcher broken?	Yes	Correct the wiring.
Power supply	3	Is 5 VDC present at J9-7 on the saddle stitcher controller PCB?	No	Replace the saddle stitcher controller PCB.
Ground	4	Is J9-8 on the saddle stitcher controller PCB grounded correctly?	No	

10. E5F8 (disconnected sensor connector; detail code 02)

Cause	Step	Checks	Yes/No	Action
Paper pushing plate home position sensor (PI14S; disconnection)	1	Are the connectors of the paper pushing plate home position sensor and the saddle stitcher controller PCB connected correctly?	No	Connect the connectors.
Wiring	2	Is the wiring between the sensor and the saddle stitcher broken?	Yes	Correct the wiring.
Power supply	3	Is 5 VDC present at J9-10 on the saddle stitcher controller PCB?	No	Replace the saddle stitcher controller PCB.
Ground	4	Is J9-11 on the saddle stitcher controller PCB grounded correctly?	No	

11. E5F8 (disconnected sensor connector; detail code 03)

Cause	Step	Checks	Yes/No	Action
Paper pushing plate top position sensor (PI15S; disconnected)	1	Are the connectors of the paper pushing plate leading edge sensor and the saddle stitcher controller PCB connected correctly?	No	Connect the connectors.
Wiring	2	Is the wiring between the sensor and the saddle stitcher broken?	Yes	Correct the wiring.
Power supply	3	Is 5 VDC present at J9-13 on the saddle stitcher controller PCB?	No	Replace the saddle stitcher controller PCB.
Ground	4	Is J9-14 on the saddle stitcher controller PCB grounded correctly?	No	

COPYRIGHT © 1998 CANON INC. FINISHER-C1/SADDLE FINISHER-C2 REV. 0 DEC. 1998 PRINTED IN JAPAN (IMPRIME AU JAPON)

12. E5F9 (faulty microswitch; detail code 01)

Cause	Step	Checks	Yes/No	Action
Switch actuator	1	Check the switch actuator of the inlet door. Do the switch and the sensor operate correctly?	No	Correct the mechanism.
Inlet door switch (MS1S)	2	Check the inlet door switch. Is the switch normal?	No	Replace the switch.
Inlet door open sensor (PI9S)	3	Measure the voltage at the J10-8 on the saddle stitcher controller PCB with the door open. Is it 5 V?	Yes	The sensor is faulty. Replace it.
Power supply, Wiring	4	Measure the voltage between J19-1 (+) and J19-2 (-) on the finisher controller PCB. Is it 24 V?	No	Replace the finisher controller PCB.
			Yes	Check the wiring between J19 on the finisher controller PCB and J1 on the saddle stitcher controller PCB. If a fault is found, correct it; otherwise, replace the saddle stitcher controller PCB.

13. E5F9 (faulty microswitch; detail code 02)

Cause	Step	Checks	Yes/No	Action
Switch actuator	1	Check the switch actuator of the front door. Do the switch and the sensor operate correctly?	No	Replace the switch.
Front door switch (MS2S)	2	Check the front door switch. Is the switch normal?	No	Replace the sensor.
Front door open sensor (PI2S)	3	Measure the voltage at J11-12 on the saddle stitcher controller PCB with the front door open. Is it 5 V?	Yes	The sensor is faulty. Replace the sensor.
			No	Replace the saddle stitcher controller PCB.

COPYRIGHT © 1998 CANON INC.

14. E5F9 (faulty microswitch; detail code 03)

Cause	Step	Checks	Yes/No	Action
Switch actuator	1	Check the delivery door switch actuator. Do the switch and the sensor operate correctly?	No	Correct the mechanism.
Delivery switch (MS3S)	2	Check the delivery door switch. Is the switch normal?	No	Replace the switch.
Delivery door open sensor (PI3S)	3	Measure the voltage at J11-9 on the saddle stitcher controller PCB with the delivery door open. Is it 5 V?	Yes	The sensor is faulty. Replace the sensor.
			No	Replace the saddle stitcher controller PCB.

COPYRIGHT © 1998 CANON INC. FINISHER-C1/SADDLE FINISHER-C2 REV. 0 DEC. 1998 PRINTED IN JAPAN (IMPRIME AU JAPON)

IV. SELF DIAGNOSIS

The CPU (Q1) on the machine's finisher controller PCB or on the saddle stitcher controller PCB is equipped with a self diagnosis mechanism which runs a check at such times as programmed and sends an error code and an detail code to the copier upon detection of a fault. You may check the code on the copier's control panel and detail code using the copier's service mode.

A. Finisher Unit

Error code	Detail code	Error type	Description
E500	—	· Data communication error	· The communication between the copier and the finisher unit is disrupted. This error is detected by the copier.
E503	03	· Communication error	· The communication with the saddle stitcher unit is disrupted.
E504	01	· Height sensor (PS1)	· Communication is not possible between the height sensor and the finisher controller PCB. Or, there is a fault in communication data.
	02		· Communication between the sensor and the finisher controller is not possible for a specific period of time.
	03		· The sensor is identified as being disconnected at power-on.
	04		· Sensor adjustments using a DIP switch have a fault.
E505	01	· Back-up RAM	· There is a fault in the check sum value at power-on.
E512	01	· Delivery motor (M2) · Delivery motor clock sensor (PI10)	· A specific number of clock pulses have not been obtained from the delivery motor clock sensor at the beginning of operation.
	02		· Clock pulses in numbers equivalent to a feed length of 200 mm are not obtained while paper is being fed.
E530	01	· Alignment motor (M3) · Alignment plate home position sensor (PI6)	· The alignment plate does not leave the alignment plate home position sensor even after the alignment motor has operated for 2 sec.
	02		· The alignment plate does not return to the alignment plate home position sensor even after the alignment motor has operated for 2 sec.
E531	01	· Stapler motor (M6) · Stapling home position detecting switch (MS7)	· The stapler does not leave stapling home position even after the stapler motor has operated for 0.5 sec.
	02		· The stapler does not return to stapling home position even after the stapler motor has operated for 0.5 sec.
E532	01	· Stapler shift motor (M4) · Stapler shift home position sensor (PI7)	· The stapler shift home position sensor does not turn off even after the stapler shift motor has operated for 4 sec.
	02		· The stapler shift home position sensor does not turn off even after the stapler shift motor has operated for 4 sec.

COPYRIGHT © 1998 CANON INC.

Error code	Detail code	Error type	Description
E535	01	· Delivery motor (M2) · Swing guide closed detecting switch 2 (MS6)	· The swing guide closed detecting switch does not turn on even after the delivery motor has rotated in reverse for 1 sec.
	02	· Delivery motor (M2) · Swing guide open sensor (PI18)	· The swing guide open sensor does not turn on even after the delivery motor has rotated in reverse in 1 sec.
	03	· Safety range switch (MS3) · Swing guide closed detecting switch (MS6)	· The swing guide closed detecting switch is off when the tray 1/2 is at safety range switch off position.
E540	01	· Tray lift motor (M5) · Tray lift motor clock sensor 1/2 (PI12/PI9) · Tray home position sensor (PI8)	· The movement does not end within 15 sec after the tray lift motor is driven. · The tray home position cannot be detected after the tray lift motor has been driven for 15 sec.
	02	· Tray upper limit detecting switch (MS4)	· The tray upper limit detecting switch is on while the tray is moving up.
	03	· Tray lift motor (M5) · Tray lift motor clock sensor 1/2 (PI19/PI9)	· Clock pulses from the clock sensor 1/2 are not obtained for 200 ms after the tray lift motor has been driven.
E584	01	· Feeder motor (M1) · Shutter closed detecting switch (MS4)	· The shutter closed detecting switch does not turn on after the feed motor has rotated in reverse for 1 sec or more.
	02	· Feed motor (M1) · Shutter open sensor (PI5)	· The shutter open sensor does not turn on even after the feed motor has been rotated in reverse for 1 sec.
	03	· Safety range detecting switch (MS3) · Shutter open detecting switch (MS4)	· The shutter closed detecting switch is off when the tray 1/2 is at safety range switch off position.

COPYRIGHT © 1998 CANON INC. FINISHER-C1/SADDLE FINISHER-C2 REV. 0 DEC. 1998 PRINTED IN JAPAN (IMPRIME AU JAPON)

B. Saddle Stitcher Unit

Error code	Detail code	Error type	Description
E5F0	01	· Paper positioning plate motor (M4S) · Paper positioning plate home position sensor (PI7S)	· The paper positioning plate home position sensor does not turn on even after the paper positioning plate motor has been driven for 1.25 sec or more.
	02		· The paper positioning plate home position sensor does not turn off even after the paper position plate motor has been driven for 1 sec or more.
E5F1	01	· Folder motor (M2S) · Folder motor clock sensor (PI4S)	· The number of detecting pulses from the folder motor clock sensor drops blow a specific value.
E5F2	01	· Guide motor (M3S) · Guide home position sensor (PI13S)	· The guide home position sensor does not turn on even after the guide motor has been driven for 0.4 sec or more.
	02		· The guide home position sensor does not turn off even when the guide motor has been driven for 1 sec or more.
E5F3	01	· Alignment motor (M5S) · Alignment plate home position sensor (PI5S)	· The alignment plate home position sensor does not turn on even when the alignment motor has been driven for 0.5 sec or more.
	02		· The alignment plate home position sensor does not turn off even when the alignment motor has been driven for 1 sec or more.
E5F4	01	· Stitcher motor (rear, M6S) · Stitching home position switch (rear, PS2S)	· The stitching home position switch does not turn off even when the stitcher motor (rear) has been rotated clockwise for 0.5 sec or more.
	02		· The stitching home position switch does not turn on even when the stitcher motor (rear) has been rotated counterclockwise for 0.5 sec or more at time of jam recovery.
E5F5	01	· Stitcher motor (front, M7S) · Stitching home position switch (front, PS4S)	· The stitching home position switch does not turn off even when the stitcher motor (front) has been rotated clockwise for 0.5 sec or more.
	02		· The stitching home position switch does not turn on even when the stitcher motor (font) has been rotated counterclockwise for 0.5 at time of jam recovery.
E5F6	01	· Paper pushing plate motor (M8S) · Paper pushing plate home position sensor (PI14S)	· The paper pushing plate home position sensor does not turn on even when the paper pushing plate motor has been driven for 0.3 sec or more during the shift to paper pushing plate leading edge home position.
	02		· The paper pushing plate home position sensor does not turn off even when the paper pushing plate motor has been driven for 0.3 sec or more during the shift to paper pushing plate leading edge position.
	03	· Paper pushing plate (M8S) · Paper pushing plate top position sensor (PI15S)	· The paper pushing plate top position sensor does not turn off even after the paper pushing plate motor has been driven for 0.3 sec or more during the shift from the paper pushing plate leading edge position to home position.

COPYRIGHT © 1998 CANON INC.

Error code	Detail code	Error type	Description
E5F6	04	· Paper pushing plate motor (M8S) · Paper pushing plate motor clock sensor (PI1S)	· The number of clock pulses for the paper pushing plate motor clock sensor drops below a specific value.
	05	· Paper pushing plate motor (M8S) · Paper pushing pate top position sensor (PI15S)	· The paper pushing plate top position sensor does not turn on when the paper pushing plate motor has been driven for 0.3 sec or more after the paper pushing plate home position sensor turned off.
E5F8	01	· Guide home position sensor (PI13S) connector	· The connector of the guide home position sensor is identified as being disconnected.
	02	· Paper pushing plate home position sensor (PI14S) connector	· The connector of the paper pushing plate home position sensor is identified as being disconnected.
	03	· Paper pushing plate top position sensor (PI15S) connector	· The connector of the paper pushing plate top position sensor is identified as being disconnected.
E5F9	01	· Inlet door open detecting switch (MS1S) · Front door open detecting switch (MS2S) · Delivery door open detecting switch (MS3S)	· After any of the following three photointerrupters used for covers has found that its respective door is closed, the inlet door open detecting switch is identified as being open as soon as copying starts or 1 sec or more after the start of the copier's initial rotation. · Inlet door sensor (PI9S) · Front door open sensor (PI2S) · Delivery door open sensor (PI3S) (The front door open detecting switch (MS2S) or the delivery door open detecting switch (MS3S) may be open.)
	02	· Front door open detecting switch (MS2S) · Delivery door open detecting switch (MS3S)	· After any of the following three photointerrupters for covers has found that its respective door is closed, the front door open detecting switch identifies that the front door is open as soon as copying starts or 1 sec or more after the copier's initial rotation. · Inlet door sensor (PI9S) · Front door open sensor (PI2S) · Delivery door open sensor (PI3S) (The delivery door open detecting switch (MS3S) may be open.)
	03	· Delivery door open detecting switch (MS3S)	· After any of the following three photointerrupters for covers has identified that its respective door is closed, the delivery door open detecting switch finds that the delivery door is open as soon as copying starts or 1 sec after the copier's initial rotation. · Inlet door sensor (PI9S) · Front door open sensor (PI2S) · Delivery door open sensor (PI3S)

COPYRIGHT © 1998 CANON INC. FINISHER-C1/SADDLE FINISHER-C2 REV. 0 DEC. 1998 PRINTED IN JAPAN (IMPRIME AU JAPON)

C. Alarm

1. Finisher Unit Alarm

Code	Error	Condition	Detection	Machine operation	Resetting
08H	No stapler	· The stapler is not installed.	· At all times	· Prohibits stapler motor (M6y) and stapler shift motor (M4) operation.	· Install the stapler.
0AH	No stapler	· The cartridge has run out of staples.	· At all times	· Continues normal operation; however, the copier may prohibit operation.	· Replace the staple cartridge, or set it correctly.

2. Saddle Stitcher Unit alarm

a. Stacking Error Alarm

Code	Error	Condition	Detection	Machine operation	Resetting
02H	Stacking capacity error	· The stack of sheets on the delivery tray is in excess of the tray capacity.	· Upon delivery of the stack that causes the error.	· Continues normal operation.	· Remove the stack from the tray.
02H	Stitching capacity error	· The number of sheets in the holding area has exceeded 15.	· Upon delivery of the sheet that causes the error.	· Prohibits stitching.	· Remove the sheets from the holding area.

COPYRIGHT © 1998 CANON INC.

b. Stitcher Alarm

Code	Error	Condition	Detection	Machine operation	Resetting
01H	Stitching error	· Stitching operation did not end in 1 sec.	· The home position cannot be detected within 0.5 sec after stitching operation starts; the home position is detected within 0.15 sec after rotating the stitcher motor in reverse thereafter. (An error will be identified if the home position is still not detected within 0.5 sec after reverse rotation.)	· Stops stitching. Returns to home position.	· Remove the jam staple.
02H	Stitching capacity error	· The number of sheets in the holding area has exceeded 15.	· Upon deposit of the sheet that causes an excess.	· Prohibits stitching.	· Remove the sheets from the holding area.
03H	Mixed paper sizes	· Sheets of different sizes are deposited in the holding area.	· Upon deposit of the sheet that causes the fault.	· Prohibits stitching. · Prohibits alignment.	· Remove the sheets from the holding area.
04H	Staple shortage	· The staples have been pulled out of the stitcher unit. · The number of staples is inadequate.	· Upon detection of shortage of staples except during stitching operation.	· Prohibits stitching. · Communicates the shortage to the copier.	· Set a new staple cartridge.

COPYRIGHT © 1998 CANON INC. FINISHER-C1/SADDLE FINISHER-C2 REV. 0 DEC. 1998 PRINTED IN JAPAN (IMPRIME AU JAPON)

D. Copier I/O Notations

Note: When the I/O notation is displayed, the machine operation is not guaranteed.

1. Finisher Unit

Address	bit	Description	Signal	Connector	Remarks
P001 (input)	bit0	stapler connect detect signal	STPCNT	J8-7	L:connected
	bit1	staple absent detect signal	HOOKEMP	J8-10	L:staple present
	bit2	inlet paper detect signal	PENT	J6-7	L:paper present
	bit3	shutter open detect signal	STOPN	J7-3	H:closed
	bit4	swing guide open detecting switch signal	SWGGOPN	J5-12	L:closed
	bit5	tray upper limit detecting switch signal	TRKYLIM	J5-8	H:upper limit
	bit6	tray safety switch signal	TRAYSAFE	J5-6	H:safe
	bit7	front door open detect switch signal	FDROPN	J5-3	L:closed
P002 (output)	bit0	-			
	bit1	-			
	bit2	-			
	bit3	-			
	bit4	feed motor phase A output		J10-6	
	bit5	feed motor phase B output		J10-5	
	bit6	feed motor phase A* output		J10-4	
	bit7	feed motor phase B* output		J10-3	
P003 (output)	bit0	alignment motor phase A output		J11-5	
	bit1	alignment motor phase B output		J11-4	
	bit2	alignment motor current change			
	bit3	-			
	bit4	-			
	bit5	-			
	bit6	-			
	bit7	-			
P004 (input)	bit0	buffer path paper sensor connector off detect			L:connected
	bit1	buffer inlet paper sensor connector off detect			L:connected
	bit2	front door open/close sensor connector off detect			L:connected
	bit3	shift motor clock sensor connector off detect			L:connected
	bit4	-			
	bit5	-			
	bit6	-			
	bit7	-			

COPYRIGHT © 1998 CANON INC.

Address	bit	Description	Signal	Connector	Remarks
P005 (input)	bit0	LED1 ON signal (output) Note 2	TRIND	J13-1	H:on
	bit1	tray lift motor clock sensor 1			
	bit2	feed motor clock			
	bit3	tray lift motor clock sensor			
	bit4	shutter open sensor connector off detect			H:connected
	bit5	-			
	bit6	-			
	bit7	-			
P006	bit0	stapler shift motor current change (output)			L:driven
	bit1	feed motor current change (output)			L:driven
	bit2	stack detect start signal (output)			H:detect start
	bit3	height sensor (input)			
	bit4	staple cartridge detect (input)		J8-10	H:staple present
	bit5	height sensor clock (input)			
	bit6	-			
	bit7	-			
P007 (input)	bit0	shutter open detect signal	STOPN	J9-9	H:open
	bit1	tray home position detect signal	TRYHP	J12-6	H:HP
	bit2	LED2 ON signal (output)			L:on
	bit3	delivery motor clock signal		J9-14	
	bit4	front door open detect signal	FDR	J15-3	L:open
	bit5	delivery detect signal	PDEL	J9-11	L:paper present
	bit6	buffer path paper detect signal	BUFPASS	J15-9	H:paper present
	bit7	buffer path inlet paper detect signal	BUFENTR	J15-6	H:paper present
P008 (output)	bit0	delivery motor PWM			L:on
	bit1	delivery motor CCW drive output		J11-7	L:CCW
	bit2	tray lift motor PWM			L:on
	bit3	delivery motor CW drive output		J11-6	L:CW
	bit4	tray lift motor down drive output			H:down
	bit5	tray lift motor up drive output			H:up
	bit6	stapler shift motor phase A output			
	bit7	stapler shift motor phase B output			

COPYRIGHT © 1998 CANON INC. FINISHER-C1/SADDLE FINISHER-C2 REV. 0 DEC. 1998 PRINTED IN JAPAN (IMPRIME AU JAPON)

Address	bit	Description	Signal	Connector	Remarks
P009 (input)	bit0	stapler motor CW output (output)		J8-14	H:CW
	bit1	stapler motor CCW output (output)		J8-13	H:CCW
	bit2	staple tray paper detect signal	STPTY	J9-3	H:paper present
	bit3	joint detect signal	JOINT	J12-3	H:connected
	bit4	stapler drive HP detect signal	STPDRHP	J8-8	
	bit5	swing guide open detect signal	SWGOPN	J6-10	L:open
	bit6	stapler HP detect signal	STPHP	J12-9	L:HP
	bit7	alignment HP detect signal	JOGHP	J9-6	L:HP
P010 (input)	bit0	staple edge detect signal	HOOKTOP	J8-6	H:staple present
	bit1	thermal switch signal	THMSW	J12-14	H:temp error
	bit2	tray 1 paper sensor connector off detect			H:connected
	bit3	tray 2 paper sensor connector off detect			H:connected
	bit4	tray 3 paper sensor connector off detect			H:connected
	bit5	tray 1 paper detect signal	FSTTRAY	J14-3	H:paper present
	bit6	tray 2 paper detect signal	SNDTRAY	J14-6	H:paper present
	bit7	tray 3 paper detect signal	TRDTRAY	J14-9	H:paper present
P011 (output)	bit0	-			
	bit1	buffer outlet solenoid drive signal	EXITSL	J4-6	H:on
	bit2	interrupt tray solenoid drive signal	SBTRYSL	J4-8	H:on
	bit3	buffer inlet solenoid drive signal	ENTSL	J4-3	H:on
	bit4	flapper solenoid drive signal	FLPSL	J4-1	H:on
	bit5	paddle solenoid drive signal	PDLSL	J11-9	H:on
	bit6	solenoid timer (full suction) output			
	bit7	escape solenoid drive signal	ESCPSL	J11-11	H:on
P012 (input)	bit0	alignment guide HP sensor conenctor off detect		J9-4	H:connected
	bit1	staple tray paper sensor connector off detect		J9-3	H:connected
	bit2	tray lift motor clock sensor connector off detect		J12-10	H:connected
	bit3	joint sensor connector off detect		J12-1	H:connected
	bit4	stapler drive HP sensor connector off detect			H:connected
	bit5	tray HP sensor connector off detect		J12-4	H:connected
	bit6	inlet paper sensor connector off detect		J6-5	H:connected
	bit7	swing guide open sensor connector off detect		J6-8	H:connected

COPYRIGHT © 1998 CANON INC.

Address	bit	Description	Signal	Connector	Remarks
P026		24V power (output)			Note1
P027		SW1 bit 1/2 (input)			See Table 6-401.
P028		SW1 bit 3/4 (input)			See Table 6-401.
P029		SW 2/3 (input)			See Table 6-401.

Note 1: If 110 or higher, the 24V power supply is normal.
Note 2: LED 1 on the finisher controller PCB and the incoming fax indicator lamp LED serve the same purpose.

Reading	bit 1/3 of SW1, SW2	bit 2/4 of SW1, SW3
0 - 72	ON	ON
73 - 104	OFF	ON
105 - 190	ON	OFF
191 - 255	OFF	OFF

Table 6-401

COPYRIGHT © 1998 CANON INC. FINISHER-C1/SADDLE FINISHER-C2 REV. 0 DEC. 1998 PRINTED IN JAPAN (IMPRIME AU JAPON)

2. Saddle Stitcher Unit

Address	bit	Description	Signal	Connector	Remarks
P014 (output)	bit0	sticher motor (rear) CW signal		J8-13/14	L:CW
	bit1	stitcher motor (rear) CCW signal		J8-11/12	L:CCW
	bit2	stitcher motor (front) CW signal		J8-6/7	L:CW
	bit3	stitcher motor (front)CCW signal		J8-4/5	L:CCW
	bit4	folder motor CW drive signal		J4-7	L:CW
	bit5	folder motor CCW drive signal		J4-8	L:CCW
	bit6	flapper drive signal 1	FLPSL1	J15-2	L:on
	bit7	flapper drive signal 2	FLPSL2	J15-4	L:on
P015 (output)	bit0	-			
	bit1	-			
	bit2	-			
	bit3	-			
	bit4	-			
	bit5	crescent roller contact solenoid drive signal	RLNIPSL	J15-6	H:on
	bit6	solenoid timer (full suction) output			L:on
	bit7	paper positioning plate motor power			L:on
P016 (input)	bit0	24V power supply down detect		-	H:down
	bit1	paper pushing plate top position detect signal	LUNGETOP	J13-15	H:top position
	bit2	delivery detect signal	DELV	J9-3	L:paper present
	bit3	-			
	bit4	-			
	bit5	-			
	bit6	-			
	bit7	-			
P017 (input)	bit0	-			
	bit1	-			
	bit2	paper pushing plate HP detect signal	LUNGEHP	J9-12	H:HP
	bit3	alignment guide HP detect signal	JOGHP	J11-3	L:HP
	bit4	-			
	bit5	-			
	bit6	-			
	bit7	-			

COPYRIGHT © 1998 CANON INC.

Address	bit	Description	Signal	Connector	Remarks
P018 (input)	bit0	guide home position sensor detection signal	GIDHP	J9-9	L:HP
	bit1	stitcher in detect signal	STPLHP	J13-3	L:in
	bit2	inlet cover open sensor connector connect detect	INLTCVR	J10-6	L:connected
	bit3	vertical path paper detection signal	VPJM	J13-6	H:paper present
	bit4	crescent roller phase detect signal	FDRLHP	J9-6	H:flag present
	bit5	paper position plate HP detect signal	PAPPOS	J6-6	L:HP
	bit6	-			
	bit7	-			
P019 (output)	bit0	paper positioning plate motor phase A			
	bit1	paper positioning plate motor phase B			
	bit2	paper pushing plate motor PWM			
	bit3	feed motor power			L:on
	bit4	feed motor phase A			
	bit5	feed motor phase B			
	bit6	feed motor reference clock			
	bit7	paper pushing plate motor CCW (output)		J4-10	L:CCW
P020 (output)	bit0	alignment motor phase A			
	bit1	alignment motor phase B			
	bit2	folder motor PWM			
	bit3	paper pushing plate motor CW		J4-9	L:CW
	bit4	guide plate motor phase A			
	bit5	guide plate motor phase B			
	bit6	guide plate motor power			L:on
	bit7	alignment motor power			L:on
P021 (input)	bit0	No. 2 paper sensor paper detect signal	2NDPA	J10-3	L:paper present
	bit1	No. 3 paper sensor paper detect signal	3RDPA	J10-4	L:paper present
	bit2	stitching HP detect signal 2	STCHHP2	J8-10	H:HP
	bit3	stitching HP detect signal 1	STCHHP1	J8-3	H:HP
	bit4	paper positioning plate paper detect signal	PPOSPAR	J6-3	L:paper present
	bit5	tray paper detect signal	TRYPAR	J6-9	L:paper present
	bit6	No. 1 paper sensor paper detect signal	ISTPA	J10-2	L:paper present
	bit7	-			

COPYRIGHT © 1998 CANON INC. FINISHER-C1/SADDLE FINISHER-C2 REV. 0 DEC. 1998 PRINTED IN JAPAN (IMPRIME AU JAPON)

Address	bit	Description	Signal	Connector	Remarks
P022 (input)	bit0	alignment plate HP sensor connector connect detect		J11-1	H:connected
	bit1	paper pushing plate HP sensor connector connect detect		J9-10	H:connected
	bit2	delivery door open sensor connect detect		J11-7	H:connected
	bit3	front door open sensor connector connect detect		J11-10	H:connected
	bit4	paper pushing plate top position sensor connector connect		J9-13	H:connected
	bit5	-		-	-
	bit6	-			
	bit7	-			
P023 (output)	bit0	-			
	bit1	LED1 drive			L:on
	bit2	-			
	bit3	-			
	bit4	-			
	bit5	-			
	bit6	-			
	bit7	-			
P024 (input)	bit0	staple absent detect signal 2	HKEMP2	J8-8	L:staple absent
	bit1	staple absent detect signal 1	HKEMP1	J8-1	L:staple absent
	bit2	inlet cover open detect switch signal	INLTCVRMS	J4-2	H:open
	bit3	front door open detect switch signal	FDROPN	J4-4	H:open
	bit4	delivery door open detect signal	EJCVR	J11-9	L:open
	bit5	front door open detect signal	FDR	J11-12	L:open
	bit6	inlet cover open sensor connector connect detect	-	J10-8	L:connected
	bit7	delivery door open detect switch signal	DELVMS	J4-6	H:open
P025 (input)	bit0	DIPSW1 Bit 8			L:on
	bit1	DIPSW1 Bit 7			L:on
	bit2	DIPSW1 Bit 6			L:on
	bit3	DIPSW1 Bit 5			L:on
	bit4	DIPSW1 Bit 4			L:on
	bit5	DIPSW1 Bit 3			L:on
	bit6	DIPSW1 Bit 2			L:on
	bit7	DIPSW1 Bit 1			L:on

COPYRIGHT © 1998 CANON INC.

Address	bit	Description	Signal	Connector	Remarks
P011A (analog port)	bit0	stitcher (rear) staple present detect	HKEMP2	J8-8	Staple present if 92 or more
	bit1	stitcher (front) staple present detect	HKEMP1	J8-1	Staple present if 92 or more
	bit2	tray paper detect signal	TRYPAR	J6-9	Connected if 128 or more
	bit3	inlet cover open sensor connector connect detect	-	J10-6	Connected if 128 or more
	bit4	-			
	bit5	alignment guide HP sensor connect detect	-	J9-7	Connected if 128 or more
	bit6	-			
	bit7	paper pushing plate top position sensor connector connect	-	J13-13	Connected if 128 or more

COPYRIGHT © 1998 CANON INC. FINISHER-C1/SADDLE FINISHER-C2 REV. 0 DEC. 1998 PRINTED IN JAPAN (IMPRIME AU JAPON)

APPENDIX

A. Finisher Unit General Timing Chart A-1
B. Finisher Unit General Timing Chart A-2
C. Saddle Stitcher Unit General Timing Chart A-3
D. Signal and Abbreviations A-4
E. Finisher Unit General Circuit Diagram A-5
F. Saddle Stitcher Unit General Circuit Diagram A-6
G. Solvents and Oils A-7

COPYRIGHT © 1998 CANON INC. FINISHER-C1/SADDLE FINISHER-C2 REV. 0 DEC. 1998 PRINTED IN JAPAN (IMPRIME AU JAPON)

A. FINISHER UNIT GENERAL TIMING CHART

A4/LTR, 3 Sheets, 2-Point Stapling, 2 Sets, Delivery to Tray 2

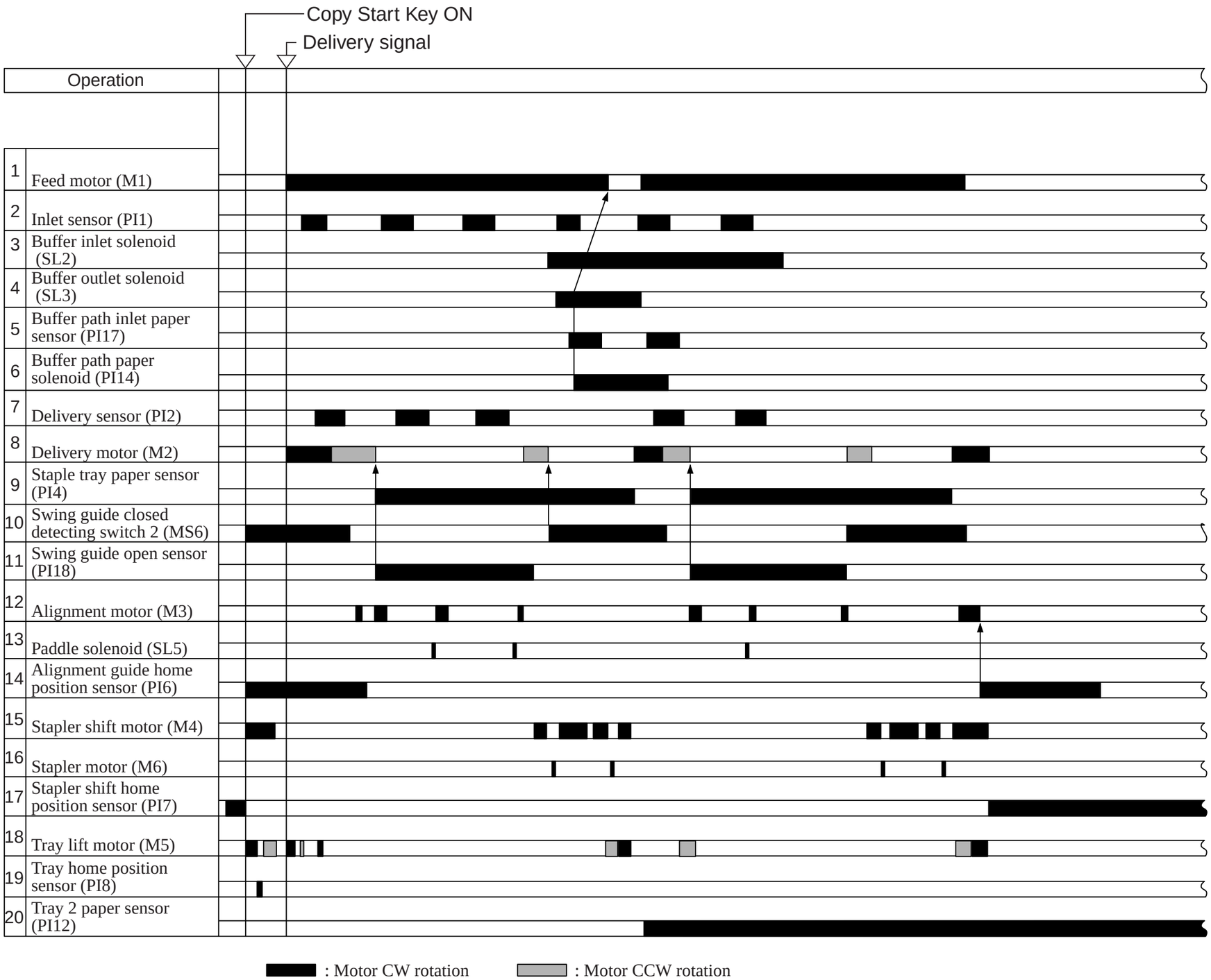

COPYRIGHT © 1998 CANON INC.

B. FINISHER UNIT GENERAL TIMING CHART

A4/LTR, 3 Sheets, Job Offset, 2 Sets, Delivery to Tray 1

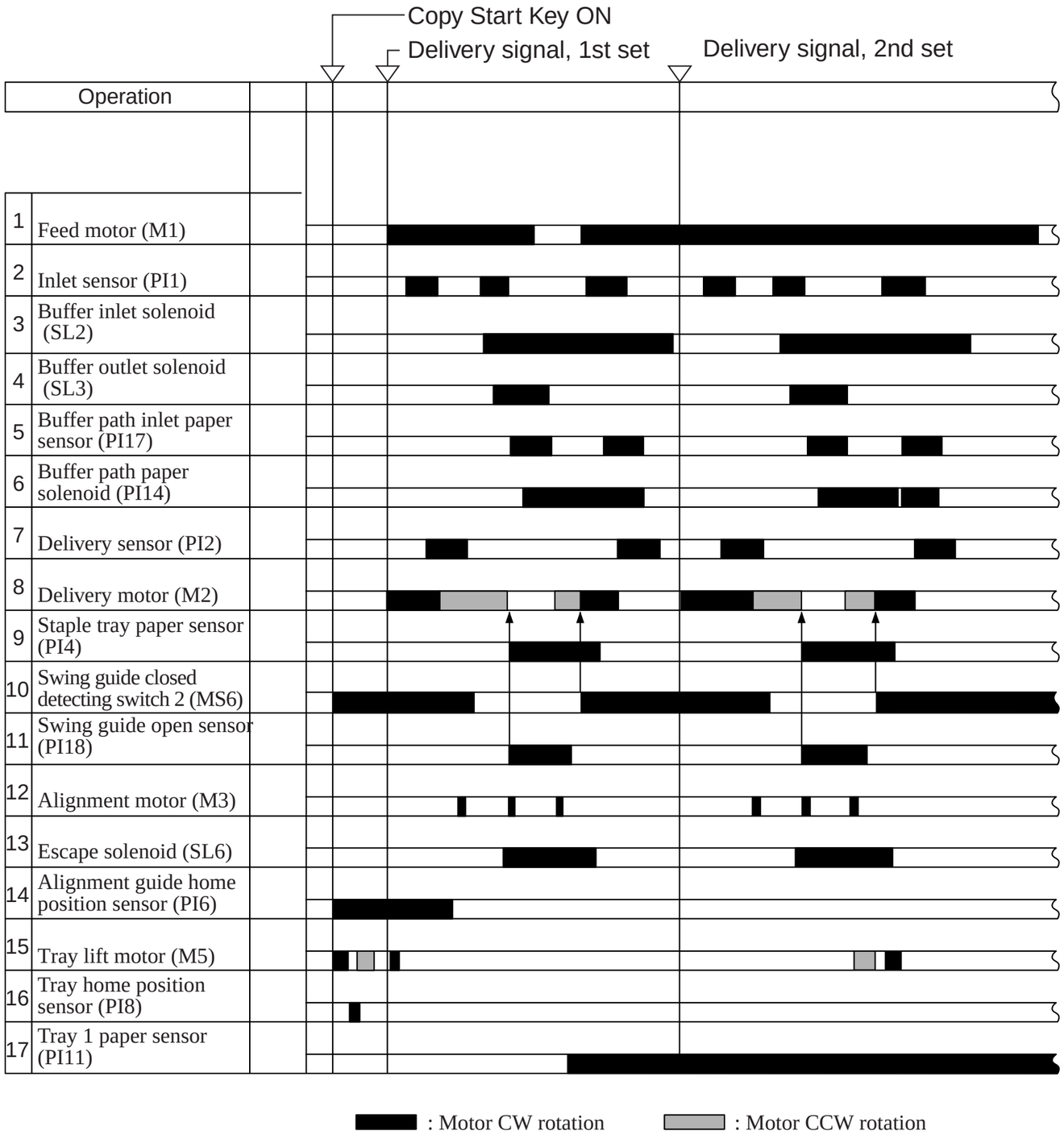

COPYRIGHT © 1998 CANON INC. FINISHER-C1/SADDLE FINISHER-C2 REV. 0 DEC. 1998 PRINTED IN JAPAN (IMPRIME AU JAPON)

C. SADDLE STITCHER UNIT GENERAL TIMING CHART

A4R/LTRR, 3 Sheets



COPYRIGHT © 1998 CANON INC.

D. SIGNAL AND ABBREVIATIONS

1STPA	No.1 PAPER SENSOR DETECT Signal
2NDPA	No.2 PAPER SENSOR DETECT Signal
3RDPA	No.3 PAPER SENSOR DETECT Signal
BUFENTR	BUFFER PATH INLET PAPER DETECT Signal
BUFPASS	BUFFER PATH PAPER DETECT Signal
DELV	DELIVERY DETECT Signal
DELVMS	DELIVERY DOOR OPEN DETECT SWITCH Signal
EDROPN	FRONT DOOR OPEN DETECT SWITCH Signal
EJCVR	DELIVERY DOOR OPEN DETECT Signal
ENTSL	BUFFER INLET SOLENOID DRIVE Signal
ESCPSL	ESCAPE SOLENOID DRIVE Signal
EXITSL	BUFFER OUTLET SOLENOID DRIVE Signal
FDR	FRONT DOOR OPEN DETECT Signal
FDR	FRONT DOOR OPEN DETECT Signal
FDRLHP	CRESCENT ROLLER PHASE DETECT Signal
FDROPN	FRONT DOOR OPEN DETECT SWITCH Signal
FLPSL	FLAPPER SOLENOID DRIVE Signal
FLPSL1	FLAPPER DRIVE Signal 1
FSPSL2	FLAPPER DRIVE Signal 2
FSTTRAY	TRAY 1 PAPER DETECT Signal
HKEMP1	STAPLE ABSENT DETECT Signal 1
HKEMP1	STICHER (FRONT) STAPLE PRESENT DETECT
HKEMP2	STAPLE ABSENT DETECT Signal 2
HKEMP2	STICHER (REAR) STAPLE PRESENT DETECT
HOOKEMP	STAPLE ABSENT DETECT Signal
HOOKTOF	SAMPLE EDGE DETECT Signal
INLTCVR	INLET COVER OPEN SENSOR CONNECTOR CONNECT DETECT
INLTCVR	INLET COVER OPEN DETECT SWITCH Signal
INLTCVR	INLET COVER OPEN DETECT Signal
JOGHP	ALIGNMENT HP DETECT Signal
JOGHP	ALIGNMENT GIDE HP DETECT Signal
JOGHP	ALIGNMENT GUIDE HP DETECT Signal
JOINT	JOINT DETECT Signal
LUNGEH	PAPER PUSHING PLATE HP DETECT Signal
LUNGET	PAPER PUSHING PLATE TOP POSITION DETECT Signal
PAPPOS	PAPER POSITION PLATE HP DETECT Signal
PDEL	DELIVERY DETECT Signal
PDLSL	PADDLE SOLENOID DRIVE Signal
PENT	INLET PAPER DETECT Signal
PPOSPA	PAPER POSITIONING PLATE PAPER DETECT Signal
RLNIPSL	CRESCENT ROLLER CONTACT SOLENOID DRIVE Signal
SBTRYSL	INTERRUPT TRAY SOLENOID DRIVE Signal
SNDTRAY	TRAY 2 PAPER DETECT Signal
SPCNT	STAPLER CONNECT DETECT Signal
STCHHP1	STITCHING HP DETECT Signal 1
STCHHP2	STITCHING HP DETECT Signal 2
STOPN	SHUTTER OPEN DETECT Signal
STOPN	SHUTTER OPEN DETECT Signal
STPDRHP	STAPLER DRIVE HP DETECT Signal
STPHP	STAPLER HP DETECT Signal
STPLHP	STITCHER IN DETECT Signal
STPTY	STAPLE TRAY PAPER DETECT Signal
SWGGOPM	SWING GUIDE OPEN DETECTING SWITCH Signal
SWGOPN	SWING GUIDE OPEN DETECT Signal
THMSW	THERMAL SWITCH Signal
TRAYSAF	TRAY SAFETY SWITCH Signal
TRDTRAY	TRAY 3 PAPER DETECT Signal
TRIND	LED 1 ON Signal (OUTOPUT)
TRKYLIM	TRAY UPPER LIMIT DETECTING SWITCH Signal
TRYHP	TRAY HOME POSITION DETECT Signal
TRYPAR	TRAY PAPER DETECT Signal
TRYPAR	TRAY PAPER DETECT Signal
VPJM	VERTICAL PATH PAPER DETECT Signal

COPYRIGHT © 1998 CANON INC. FINISHER-C1/SADDLE FINISHER-C2 REV. 0 DEC. 1998 PRINTED IN JAPAN (IMPRIME AU JAPON)

E. FINISHER UNIT GENERAL CIRCUIT DIAGRAM

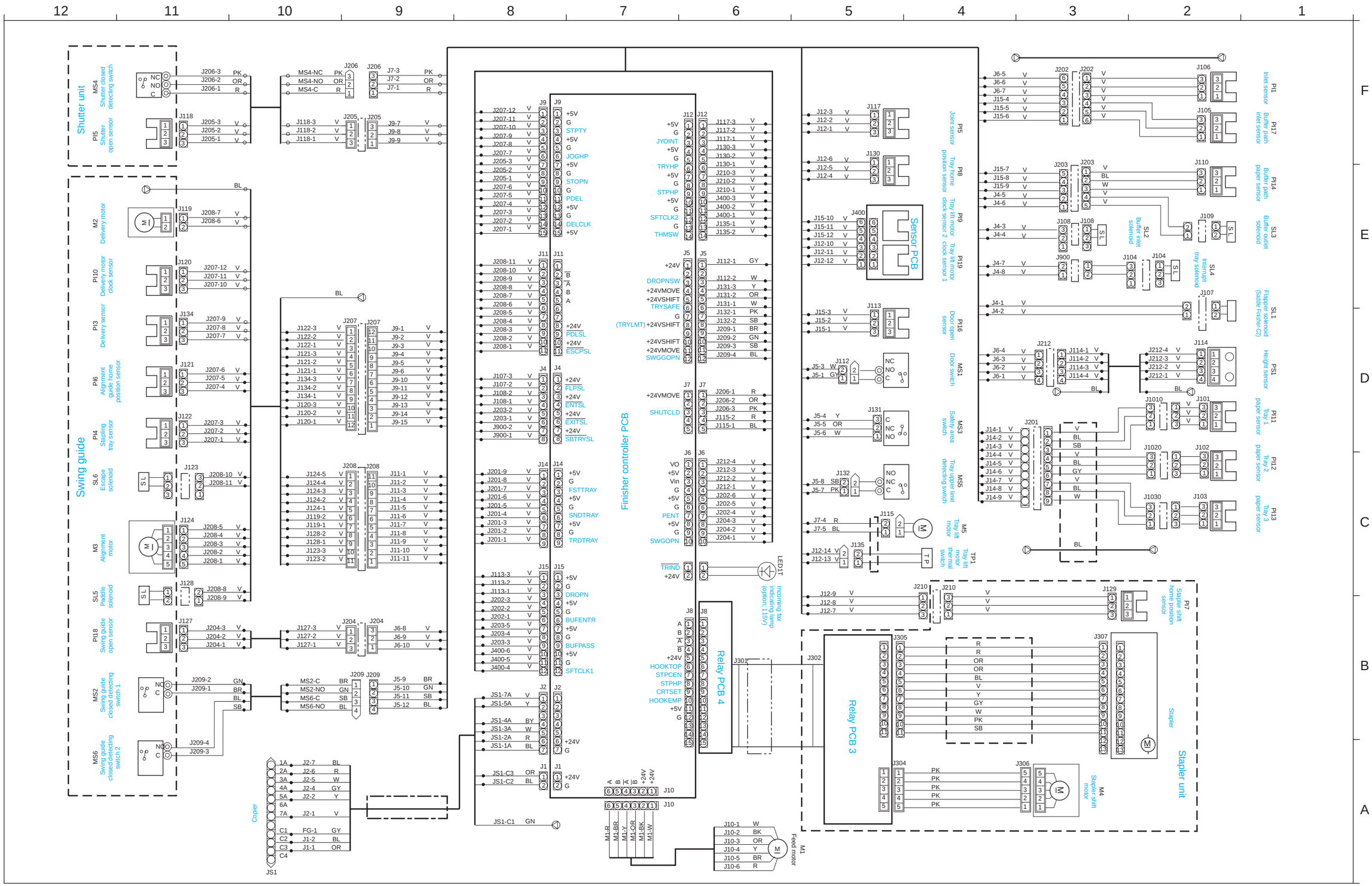

COPYRIGHT © 1998 CANON INC.

F. SADDLE STITCHER UNIT GENERAL CIRCUIT DIAGRAM

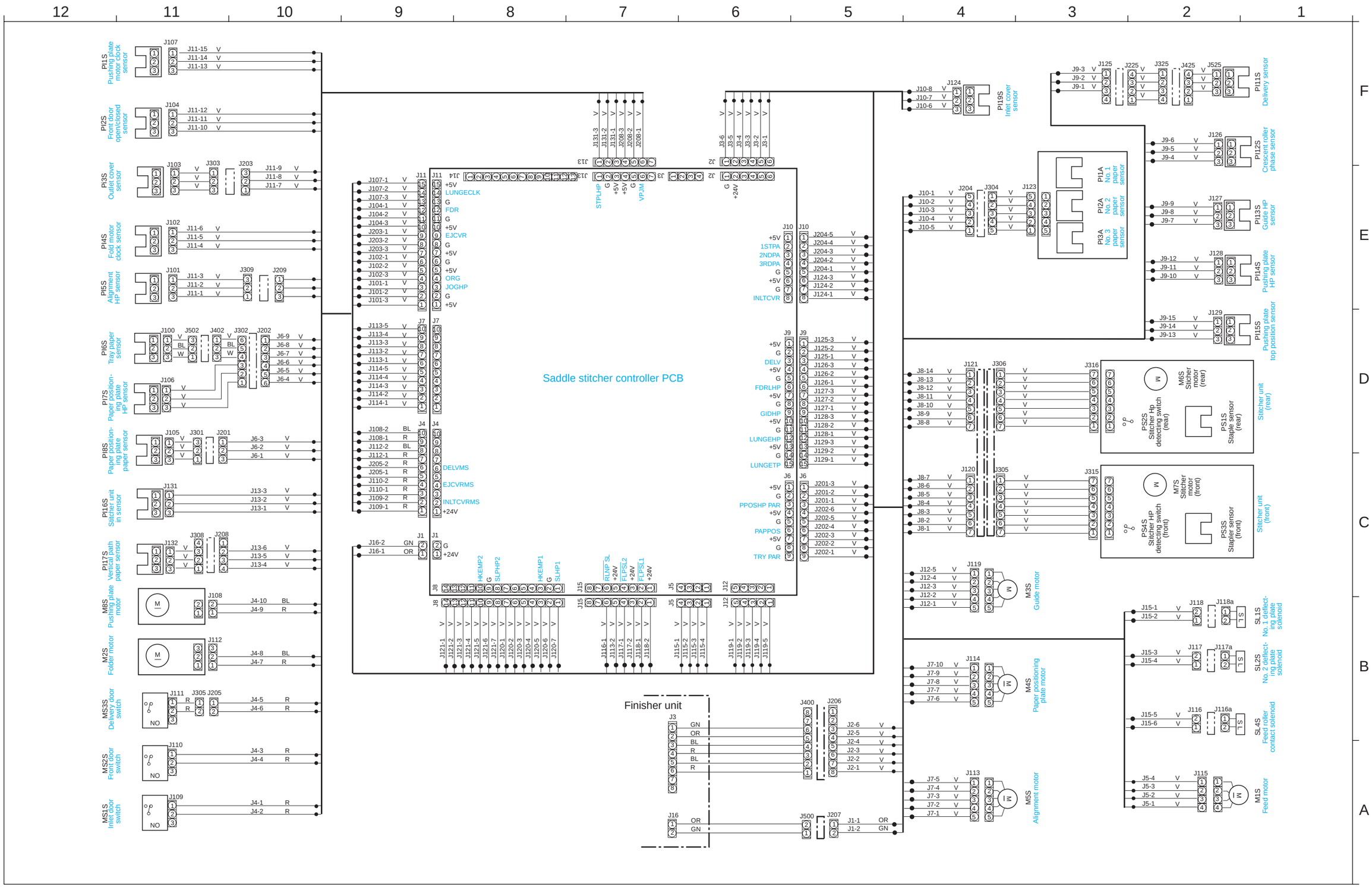

COPYRIGHT © 1998 CANON INC. FINISHER-C1/SADDLE FINISHER-C2 REV. 0 DEC. 1998 PRINTED IN JAPAN (IMPRIME AU JAPON)

G. Solvents and Oils

No.	Name	Description	Composition	Remarks
1	Alcohol	Cleaning: e.g., glass, plastic, rubber parts; external covers	Hydrocarbon (fluorine family) Alcohol Surface activating agent	·Do not bring near fire. ·Procure locally. ·Isopropyl alcohol may be substituted.
2	Lubricant	Drive, friction parts	Silicone oil	CK-0551 (20g)

COPYRIGHT © 1998 CANON INC.

Prepared by
Office Imaging Products Technical Support Dept. 1
Office Imaging Produce Quality Assurance Center.
CANON INC
Printed in Japan

REVISION 0 (DEC. 1998)(18756)

5-1, Hakusan 7-chome, Toride-shi Ibaraki, 302-8501 Japan

Canon

This publication is printed on
70% reprocessed paper.

PRINTED IN JAPAN (IMPRIME AU JAPON) 0299S0.3-2