GP405/335

SERVICE HANDBOOK

REVISION 0

Canon

JAN. 1999 FY8-23AZ-000

COPYRIGHT © 1999 CANON INC.

CANON 405/335 REV.0 JAN. 1999 PRINTED IN JAPAN (IMPRIME AU JAPON)

IMPORTANT

THE INFORMATION CONTAINED HEREIN IS PUBLISHED BY CANON, INC., JAPAN, AND IS FOR REFERENCE USE ONLY. SPECIFICATIONS AND OTHER INFORMATION CONTAINED HEREIN MAY VARY SLIGHTLY FROM ACTUAL MACHINE VALUES OR THOSE FOUND IN ADVERTISING AND OTHER PRINTED MATTER.

ANY QUESTIONS REGARDING INFORMATION CONTAINED HEREIN SHOULD BE DIRECTED TO THE COPIER SERVICE DEPARTMENT OF THE SALES COMPANY.

COPYRIGHT © 1999 CANON INC.

Printed in Japan

Imprimé au Japon

Use of this manual should be strictly supervised to avoid disclosure of confidential information.

Prepared by

OFFICE IMAGING PRODUCTS TECHNICAL SUPPORT DEPARTMENT 1
OFFICE IMAGING PRODUCTS TECHNICAL SUPPORT DIVISION

CANON INC.

5-1, Hakusan 7-chome, Toride-shi Ibaraki, 302-8501 Japan

CONTENTS

CHAPTER 1 MAINTENANCE AND INSPECTION

A. Scheduled Servicing Table 1-1
   1. Copier 1-1
   2. Paper Deck 1-2
B. Periodically Replaced Parts 1-3
C. Consumables and Durables 1-3
   1. Copier 1-3
   2. Side Paper Deck 1-4
D. Image Basic Adjustment Procedure 1-5
E. Points of Scheduled Servicing 1-6

CHAPTER 2 STANDARDS AND ADJUSTMENTS

A. Image Adjustment 2-1
B. Exposure System 2-6
C. Image Formation System 2-9
D. Pick-Up/Feeding System 2-11
E. Fixing System 2-16
F. Electrical System 2-18

CHAPTER 3 ARRANGEMENT AND FUNCTIONS OF ELECTRICAL PARTS

A. Clutches and Solenoids 3-2
B. Motors 3-4
C. Fan 3-6
D. Sensors 3-8
E. Switches and Counters 3-10
F. PCBs 3-12
G. Side Paper Deck 3-14
   1. Sensors and Switches 3-14
   2. Motors, Solenoids, and PCBs 3-16
H. Variable Resisters, Light-Emitting Diodes, and Check Pins by PCB 3-18
   1. Image Processor PCBs (main controller) 3-19
   2. DC Controller PCB (DC driver) 3-21
   3. Composite Power Supply CPB 3-23
   4. Deck Driver (side paper deck) 3-24
I. Upgrading 3-25
   1. Removing the DIMM 3-26
   2. Mounting the DIMM 3-27
   3. Downloading 3-28

CHAPTER 4 SERVICE MODE

A. Outline 4-1
   1. Starting Service Mode and Making Selections 4-1
   2. Ending Service Mode 4-2
   3. Backing Up the RAM 4-2
   4. Basic Operation 4-4
B. DISPLAY Control Display Mode 4-7
C. I/O Operation Check Mode 4-22
   1. DC-CON 4-23
   2. IP 4-30
   3. FEEDER 4-31
   4. SORTER (Finisher C1, Saddle Finisher C2, Finisher E1) 4-34
D. ADJUST Adjustment Mode 4-45
E. FUNCTION Operation Check Mode 4-53
F. OPTION Settings Mode 4-65
G. PG test Print 4-73
H. COUNTER Mode 4-78
I. FEEDER 4-81
J. SORTER (finisher, saddle stitcher) 4-85

CHAPTER 5 SELF DIAGNOSIS

A. Copier 5-3
B. DADF 5-10
C. Cassette Feeding Unit-R1/S1 5-11
D. Multi Output Tray-D1 5-11
E. Finisher-C1 5-12
F. Saddle Finisher-C2 5-14
G. Finisher-E1 5-18
H. Paper Deck-B1 5-20
I. SCSI Interface Board-D1 5-21

APPENDIX

A. General Timing Chart A-1
B. Signal name/abbreviation list A-3
C. General Circuit Diagram A-7
D. General Circuit Diagram Paper Deck A-13
E. Specifications A-15
   1. Copier A-15
   2. Paper Deck A-21

CHAPTER 1 MAINTENANCE AND INSPECTION

A. Scheduled Servicing Table

Caution:
Do not use solvents/oils not indicated here.

1. Copier

△ : Clean ● : Replace × : Lubricate □ : Adjust ◎ : Inspect

Unit	Part	Installation	every 60,000	every 120,000	every 240,000	Remarks
Scanner drive assembly	Scanner rail			△ ×		Use lubricant.
Optical assembly	No. 1 through No. 3 mirrors			△		Note
	Dust-proofing glass			△		
	Lens			△		
	Reflecting plate			△		
	Original size sensor			△		
Developing assembly	Developing assembly roll			△		
Feeding assembly	Transfer guide		△			During a visit. Clean as necessary.
	Feeding belt			△		
	Feeding assembly base			△		
Fixing assembly	Fixing assembly inlet guide			△		
	Upper separation claw		△		●	During a visit. Clean as necessary.
	Lower separation claw		△		●	During a visit. Clean as necessary.

Note: For cleaning intervals, use the hardware counter reading as a reference.

2. Paper Deck

△ : Clean ● : Replace × : Lubricate □ : Adjust ◎ : Inspect

Unit	Part	Maintenance intervals					Remarks
		Installation	every 250,000	every 500,000	every 750,000	every 1,000,000	
Pick-up assembly	Pick-up roller		●				
	Pick-up/feeding roller		●				
	Separation roller		●				
	Feeding roller, roll		△				

B. Periodically Replaced Parts

The machine does not have parts that need to be replaced on a periodical basis.

C. Consumables and Durables

1. Copier

Some parts of the machine may require replacement once or more over the period of warranty because of wear or damage. Replace them as necessary.

As of Dec. 1998

No.	Parts name	Parts No.	Q'ty	Life (copies)	Remarks
1	Pick-up roller	FF5-4552-020	2	120,000	Actual copies made.
2	Feeding roller	FF5-4552-020	2	120,000	Actual copies made.
3	Separation roller	FF5-4634-020	2	120,000	Actual copies made.
4	Pick-up roller (multifeeder)	FB1-8581-000	1	240,000	Actual copies made.
5	Separation pad (multifeeder)	FC1-9022-030	1	240,000	Actual copies made.
6	Transfer roller	FF5-6980-000	1	240,000	
7	Separation static eliminator	FF5-7246-000	1	240,000	
8	Scanning lamp	FH7-3314-000	1	240,000	
9	Pre-exposure lamp	FG5-6297-000	1	240,000	
10	Developing cylinder	FG6-0626-000	1	480,000	
11	Upper fixing roller	FB5-0289-000	1	240,000	
12	Lower fixing roller	FB4-2867-000	1	240,000	
13	Upper fixing separation claw	FB1-7075-000	5	240,000	
14	Lower fixing separation claw	FA2-9037-000	2	240,000	
15	Fixing cleaning belt	FA3-8908-000	1	160,000	
16	Heat insulating bush	FB1-6823-000	2	240,000	
17	Fixing heater (main)	FH7-4570-000	1	360,000	
18	Fixing heater (sub)	FH7-4573-000	1	360,000	
19	Thermistor	FG6-3881-000	1	240,000	
20	Internal delivery roller	FB4-2901-000	1	240,000	
21	Internal delivery sensor	FH7-7394-000	1	500,000	

2. Side Paper Deck

As of Dec. 1998

No.	Parts name	Parts No.	Q'ty	Life (copies)	Remarks
1	Side paper deck pick-up roller	FB4-2033-000	2	250,000	Actual copies made.
2	Side paper deck feeding roller	FB4-2034-000	2	250,000	Actual copies made.
3	Side paper deck separation roller	FB2-7777-000	1	250,000	Actual copies made.

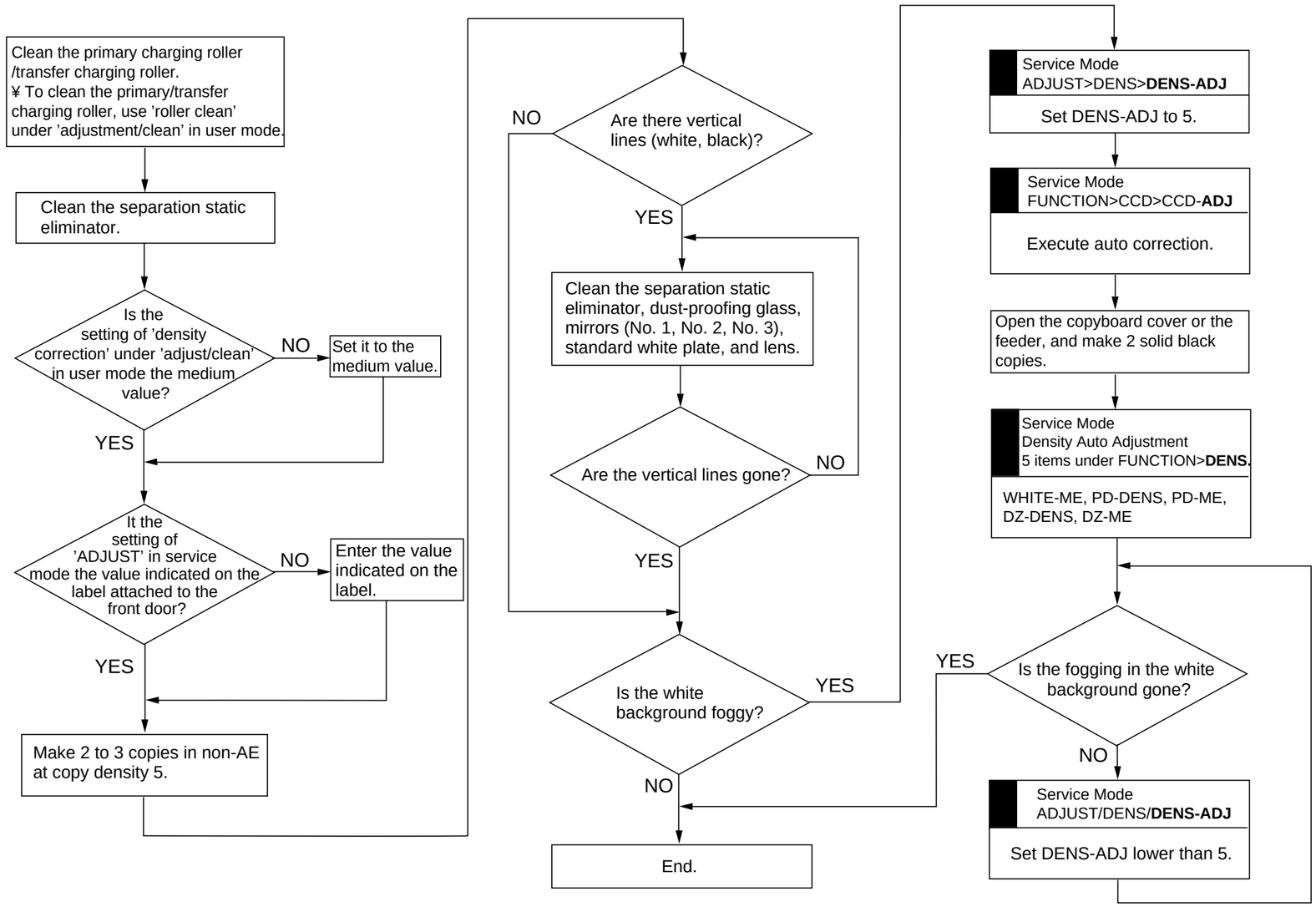
Clean the primary charging roller /transfer charging roller.
¥ To clean the primary/transfer charging roller, use 'roller clean' under 'adjustment/clean' in user mode.
Clean the separation static eliminator.
Is the setting of 'density correction' under 'adjust/clean' in user mode the medium value?
NO
Set it to the medium value.
YES
It the setting of 'ADJUST' in service mode the value indicated on the label attached to the front door?
NO
Enter the value indicated on the label.
YES
Make 2 to 3 copies in non-AE at copy density 5.
NO
Are there vertical lines (white, black)?
YES
Clean the separation static eliminator, dust-proofing glass, mirrors (No. 1, No. 2, No. 3), standard white plate, and lens.
Are the vertical lines gone?
NO
YES
Is the white background foggy?
YES
NO
End.
Service Mode
ADJUST>DENS>DENS-ADJ
Set DENS-ADJ to 5.
Service Mode
FUNCTION>CCD>CCD-ADJ
Execute auto correction.
Open the copyboard cover or the feeder, and make 2 solid black copies.
Service Mode
Density Auto Adjustment
5 items under FUNCTION>DENS.
WHITE-ME, PD-DENS, PD-ME, DZ-DENS, DZ-ME
Is the fogging in the white background gone?
YES
NO
Service Mode
ADJUST/DENS/DENS-ADJ
Set DENS-ADJ lower than 5.

E. Points of Scheduled Servicing

Copyboard/Scanner

Item	Tool/solvent	Work/remarks
Copyboard glass	Alcohol	Clean.
Original size sensor	Blower brush	Clean.
Scanning lamp	Lint-free paper	Dry-wipe.
Reflecting plate No.1 through No.3 mirrors	Blower brush	As necessary, dry-wipe with lint-free paper.
Standard white plate	Alcohol	Clean
Scanner rail	Alcohol, Lubricant	Clean, and lubricate.

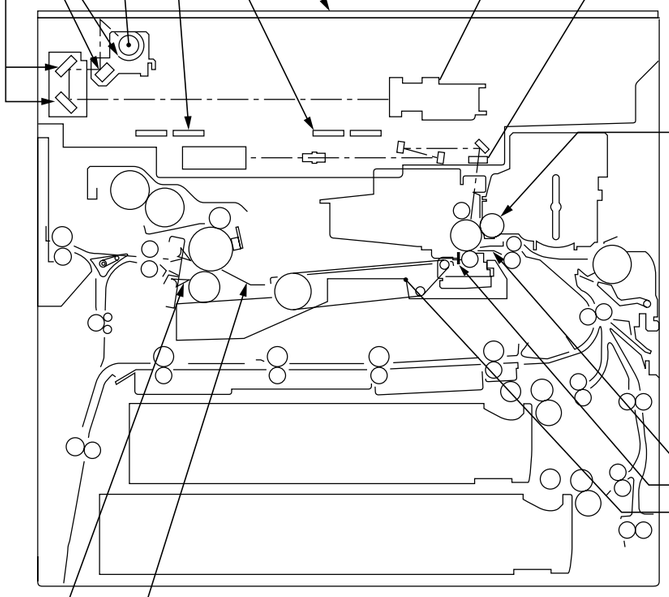

Optical Assembly

Item	Tool/solvent	Work/remarks
Lens	Blower brush	Clean.
Dust-proofing glass	Blower brush	Clean.

Developing Assembly

Item	Tool/solvent	Work/remarks
Developing roll	Alcohol	Clean.

Transfer/Feeding/Pick-Up Assembly

Item	Tool/solvent	Work/remarks
Transfer guide	Moist cloth*	Clean.
Static eliminator	Special brush	Clean.
Feeding assembly base/Feeding belt	Moist cloth*	Clean.
Pick-up/feeding/ separator roller	Alcohol	Clean.

*Take care not to leave droplets of water. Do not turn on the power before it is completely dry.

Fixing/Delivery Assembly

Item	Tool/solvent	Work/remarks
Separation	Solvent	Clean.
Inlet guide	Solvent	Clean.

CHAPTER 2 STANDARDS AND ADJUSTMENTS

A. Image Adjustment

Adjust the image margin, and then the non-image width.

Adjusting the Image Leading Edge Margin and the Non-Image Width

a. Change the following settings in service mode so that they are as indicated on the service label.
   - ADJUST>ADJ-XY>ADJ-X, ADJ-Y
   - ADJUST>FEED-ADJ>REGIST

b. Adjusting the Image Margin

1) Put A4 or A3 paper in the cassette, and select the cassette.
2) Select '6' in service mode (TEST>PG> TYPE), and generate a solid black copy.
3) Make adjustments so that the margin is 2.5 ±1.5 mm.
   <Main Scanning Direction>
   Use the horizontal registration mount. (See A-2.)
   <Sub Scanning Direction>
   Use service mode (ADJUST>FEED-ADJ>REGIST; see A-1).

c. Adjusting the Non-Image Width

1) Select the cassette used for adjusting the image margin, and make a copy of the NA-3 Chart.

Caution:

Be sure that the NA-3 is placed on the copyboard glass correctly.

2) Make adjustments so that the leading edge and left/right non-image widths are 2.5 mm.
   <Main Scanning Direction>
   ADJUST>ADJ-XY>ADJ-Y
   <Sub Scanning Direction>
   ADJUST>ADJ-XY>ADJ-X

1 Image Leading Edge Margin (REGIST; registration roller activation timing)

Standard: 2.5 ±1.5 mm
For steps see the previous page.

■ COPIER>ADJUST>FEED-ADJ>REGIST

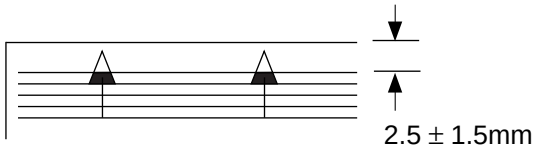

Figure 2-1

<Making Adjustments>

- To increase the leading edge margin, increase the setting of REGIST (thereby delaying the activation of the registration roller).
- To decrease the leading edge margin, decrease the setting of REGIST.

■ After adjusting the image leading edge margin, be sure to make adjustments under ADJUST>ADJ-XY>**ADJ-X**. (See the descriptions for service mode.)

2 Adjusting the Left/Right Registration (front)

a. Pick-Up from the Cassette

Check to see if the margin on the image front is 2.5 ±1.5 mm for each cassette.

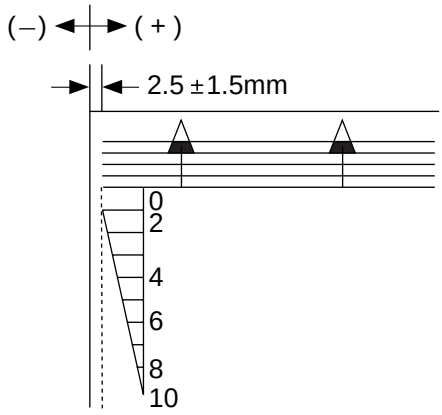

Figure 2-2

If it is not as indicated, perform the following:

1) Slide out the cassette in question.
2) Remove the two screws [1], and detach the horizontal registration mount.

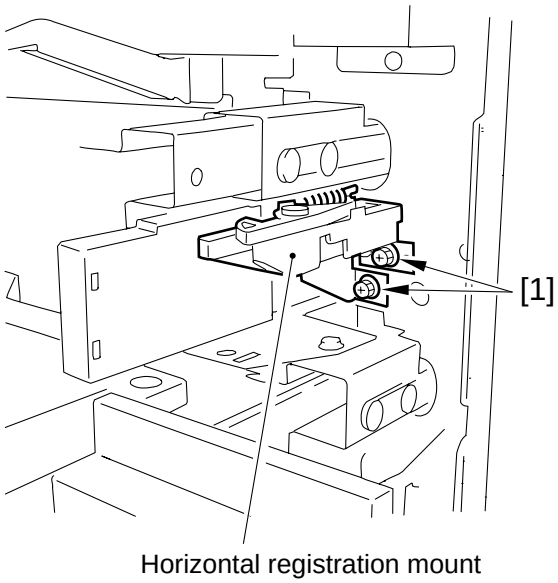

Figure 2-3

3) Loosen the hex screw, and move the horizontal registration plate to the front/ rear to make adjustments.

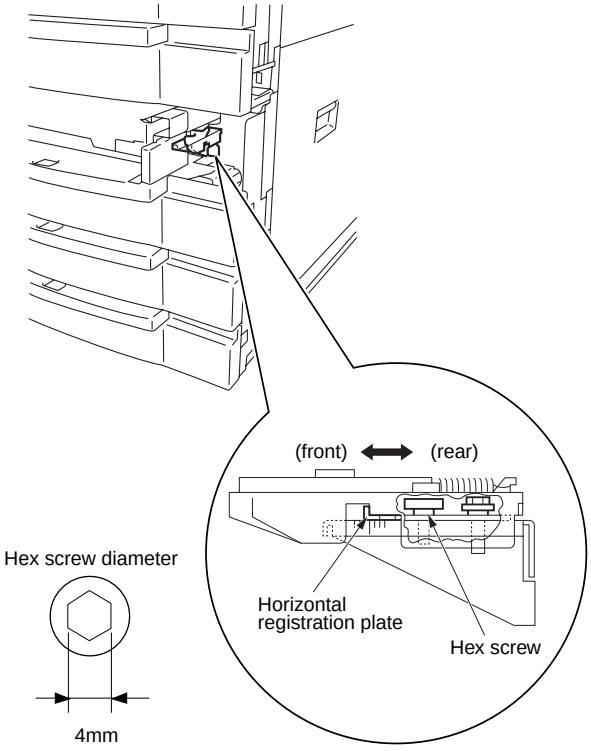

Figure 2-4

Caution:

When making adjustments, match the inside of the L angle of the horizontal registration plate with the appropriate graduation of the scale.

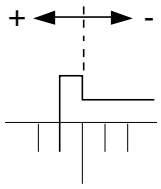

Figure 2-5

b. Pick-Up from the Multifeeder
Loosen the screw, and move the tray so that it is 2.5 ±1.5 mm in Direct mode.

3	**Left/Right Registration for the 2nd Side of a Double-Sided/Overlay Copy (rear/front direction)**

Check to see if the image on the 2nd side of a double-sided/overlay copy is as indicated.

- Standard: 2.5 mm ±2.0 mm

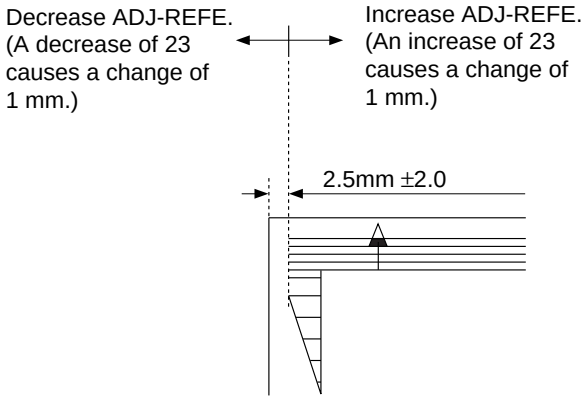

Figure 2-6

If it is not as indicated, make adjustments using the following in service mode:
COPIER>ADJUST>FEED-ADJ >**ADJ-REFE**

4 Left/Right Registration (side paper deck)

1) Make a copy of the Test Sheet, and check to see if the left/right registration is 0 ±1.5 mm.
2) If it is not as indicated, slide out the compartment, and turn the two screws to adjust the position of the latch plate of the deck open solenoid. (At this time, refer to the scale on the latch plate.)

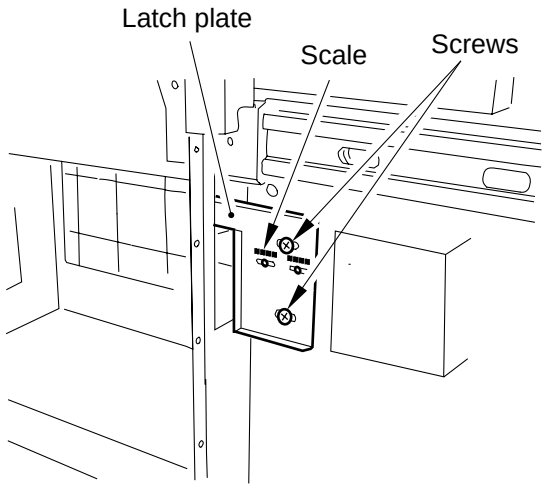

Figure 2-7 (rear left of the compartment)

5 AE Adjustment

The machine's AE (auto density adjustment) based on "priority on speed," and its method and concept are as follows:

1. Adjusting Priority on Speed AE Mode

ADJUST>AE>**AE-TBL** (1 through 9; 3 at time of shipment)

Adjust the density correction curve (text) for priority on speed AE mode.

- A higher setting makes text lighter.
- A lower setting makes text darker.

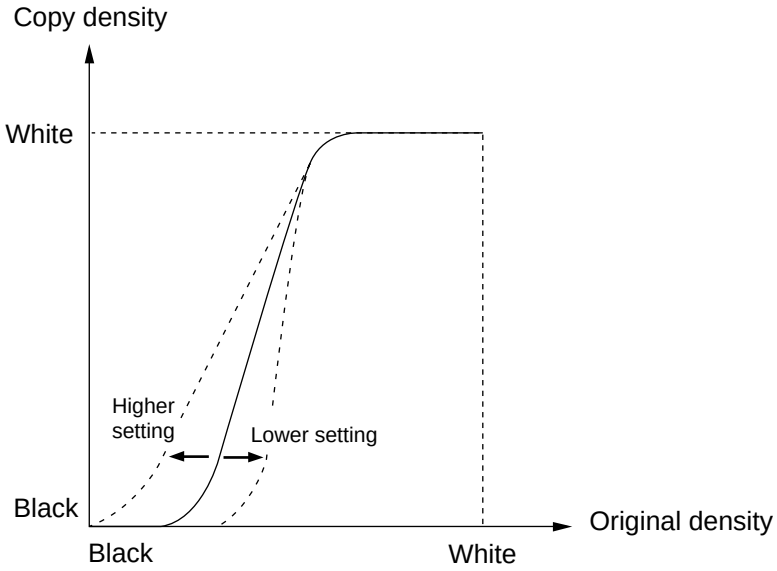

Figure 2-8

B. Exposure System

1	Routing the Scanner Drive Cable

Route the cable from [1] through [9]; then, go to the next item, "Adjusting the Mirror Position."

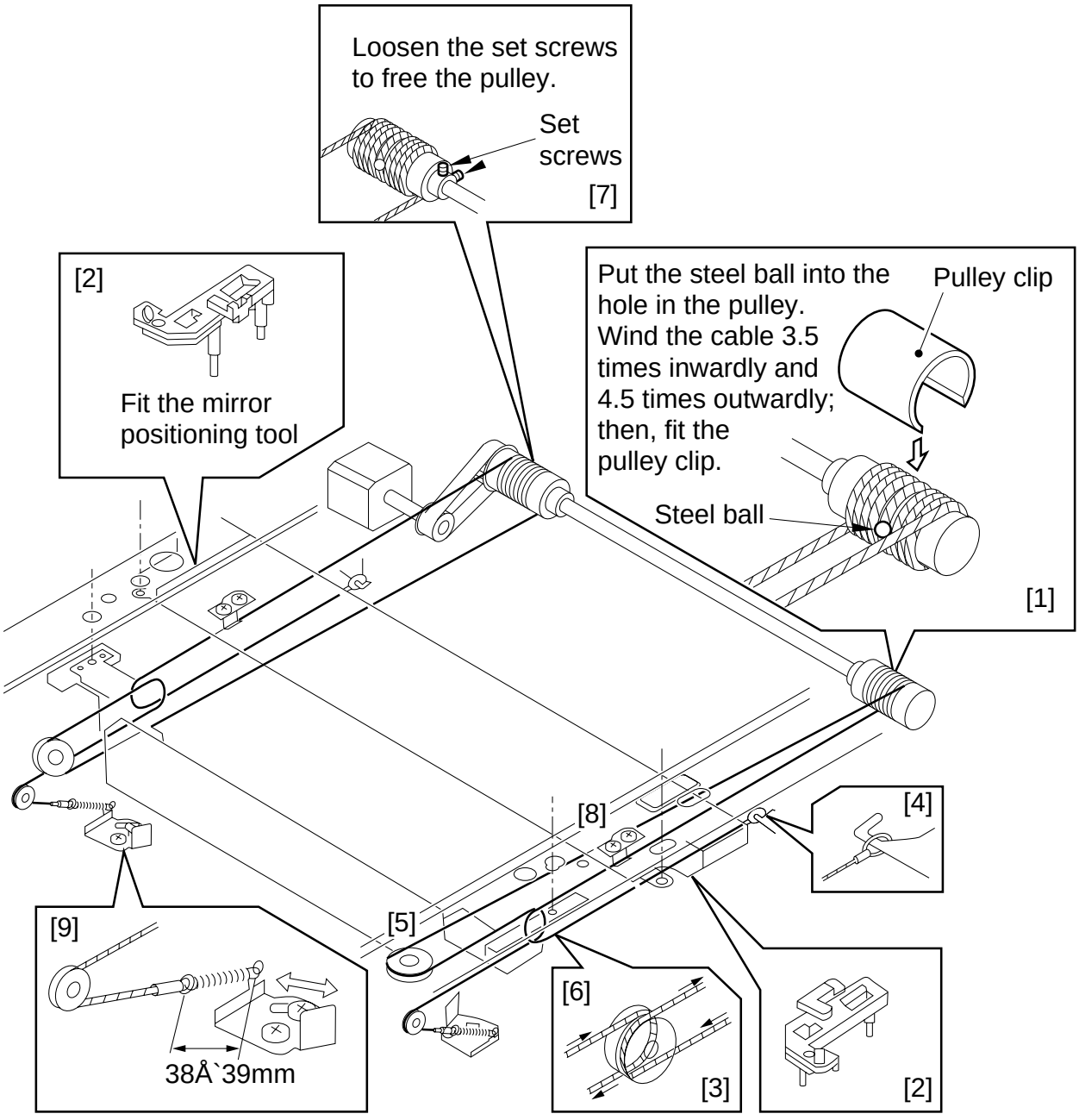

Figure 2-9

2	**Adjusting the Mirror Position (optical length between No. 1 mirror and No. 2/No. 3 mirror)**

Caution:

Use the mirror position tool FY9-3009-040. Be sure to relocate the pins before use.

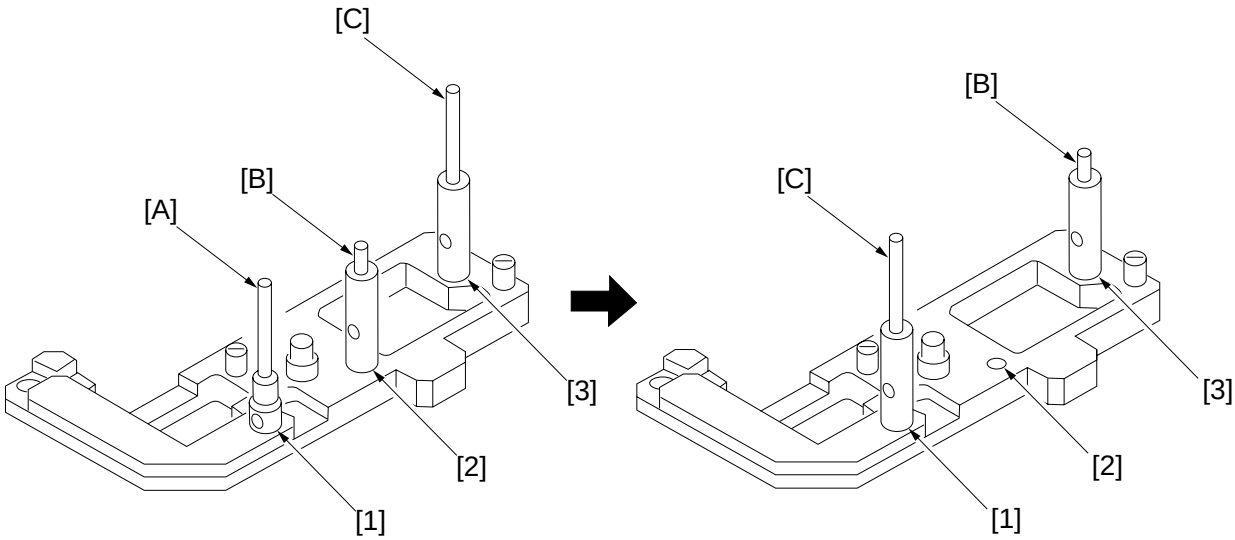

FY9-3009-040 Before Repositioning the Pins

After repositioning the Pins

Figure 2-10

1) Loosen the screws on the metal fixings used to secure the cable.
2) Fit the mirror positioning tools (after repositioning its pins) to the No. 1 mirror mount and the No. 2 mirror mount.

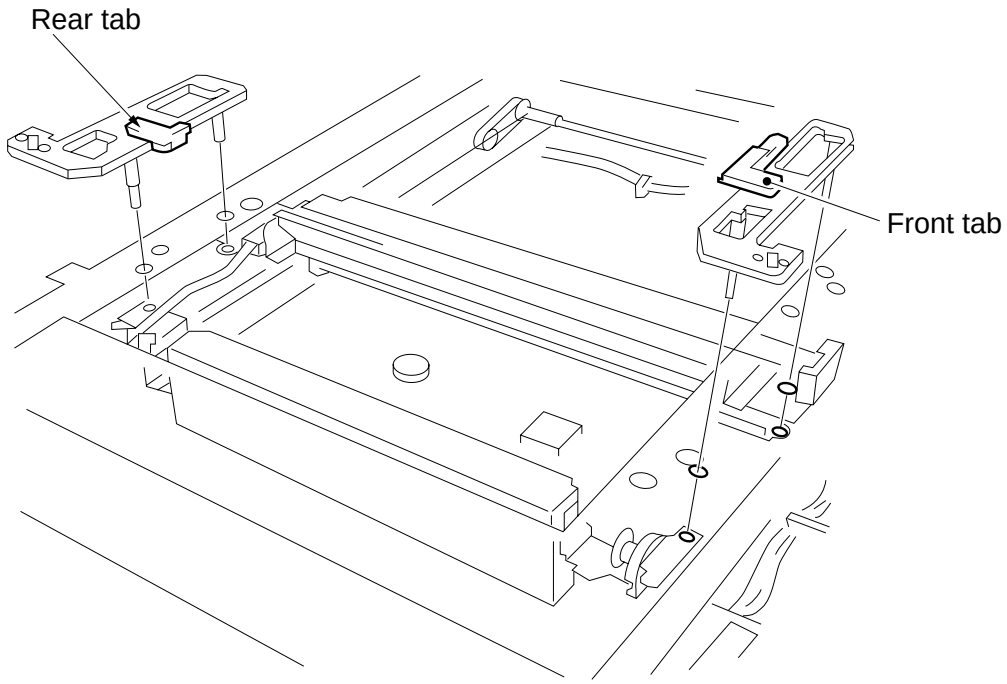

Figure 2-11

3) Tighten the screws on the metal fixings.
4) Detach the mirror positioning tools.

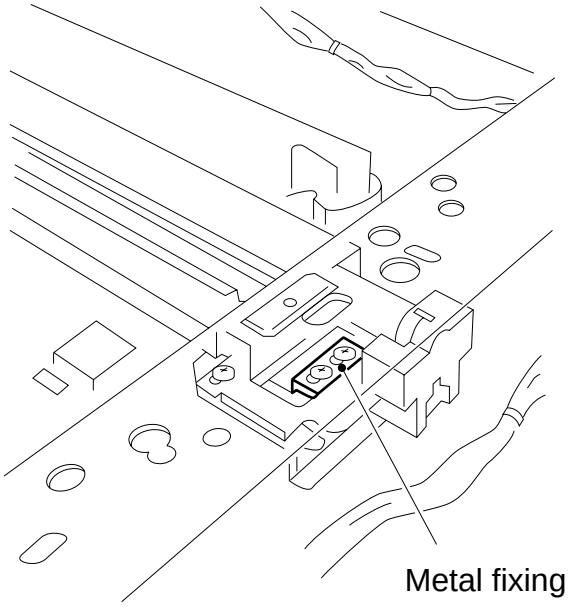

Figure 2-12

3 Mounting the Scanning Lamp

Keep the following in mind when mounting the scanning lamp:

1. Orient it so that the side (terminal) with the manufacturer's name is toward the rear.
2. Orient it so that its transparent side is toward the reflecting plate.
3. Do not touch the transparent side.

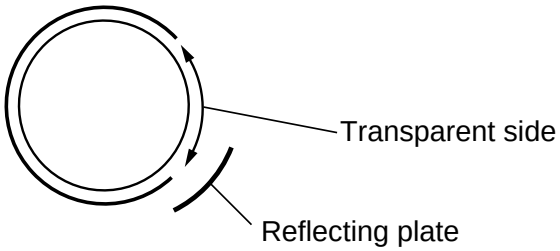

Figure 2-13

Make the following adjustments when replacing the scanning lamp:

1) Shading correction 2
   FUNCTION>CCD>**MAN-ADJ**
2) Auto density correction
   FUNCTION>DENS> **WHITE-ME**
   PD-DENS
   PD-ME
   DZ-DENS
   DZ-ME

For details, see the description for FUCNTION in service mode (VIII. of Chapter 14).

C. Image Formation System

1 When Replacing the Drum Unit

- Record the date and the counter reading on the label, and attach it to the front cover of the new drum unit.

date date Datum	counter compteur Zähler	notes note Notiz

- Clean the fixing separation claw (upper, lower).

2 Positioning the Developing Assembly Magnetic Seal

Mount the magnetic seal by butting it against the opening as shown.

Check to make sure that the magnetic seal is in firm contact with the housing.

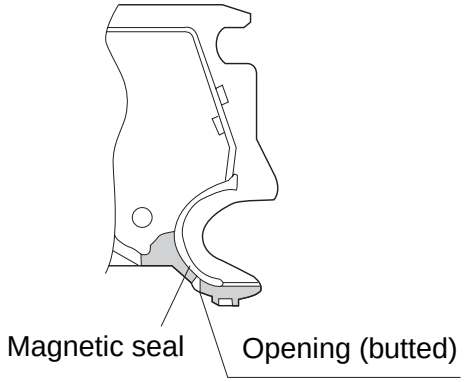

Figure 2-14

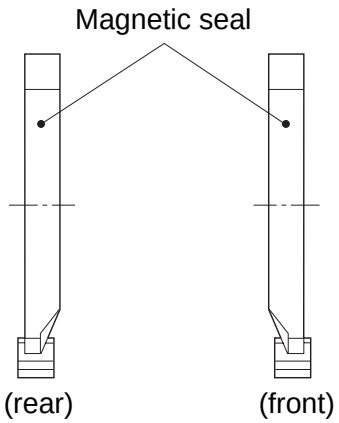

Figure 2-15

3 Mounting the Developing Assembly Blade

The blade is adjusted to a high accuracy when it is mounted to the blade mount. Avoid detaching it from its mount.

- If you must replace the blade on its own, be sure to adjust the position of the blade so that the gap between the blade and the developing cylinder is 0.21 ±0.03 mm when measured with a gap gauge (CK-0057-000).

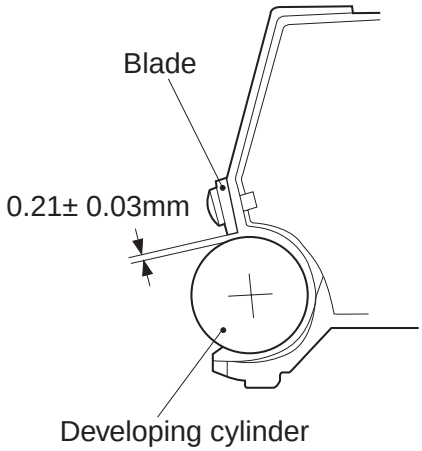

Figure 2-16

The surface of the developing cylinder can easily be damaged. Be sure to slide the gap gauge along its both ends.

4	Adjusting the Positioning the Primary Charging Roller Cleaning Solenoid

Make adjustments so that the length of the primary charging roller solenoid (SL1) indicated in the figure is 4.0 ±0.2 mm.

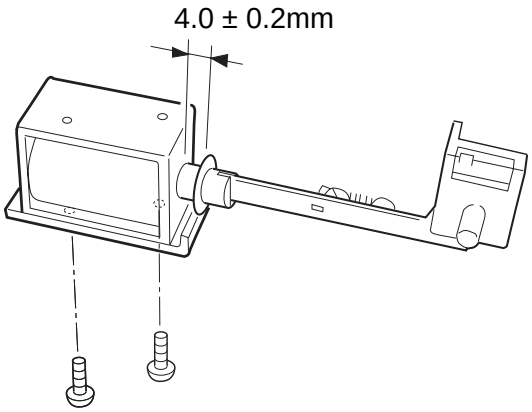

Figure 2-17

D. Pick-Up/Feeding System

1	Adjusting the Positioning the Multifeeder paper Guide Cam

Make adjustments so that the paper guide plate cam is as shown when the solenoid plate is in contact with the claw of the control ring.

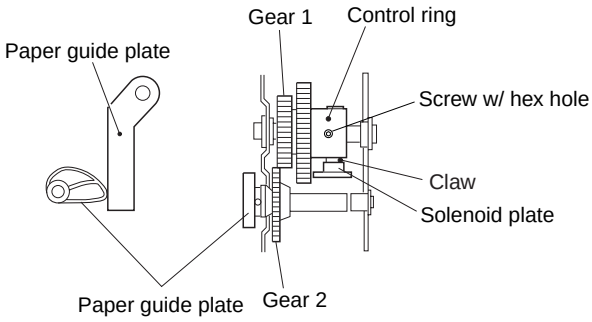

Figure 2-18

2 Attaching the Timing Belt in the Multifeeder

1) Butt the side guide plate of the multifeeder against the end (A; open condition).
2) Move the slide volume to the center (direction B), and fit the timing belt on the pulley.

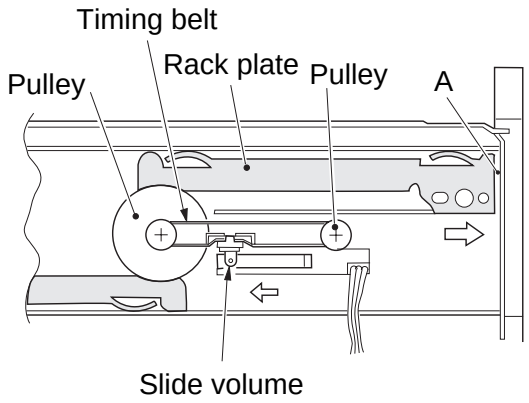

Figure 2-19

3 Mounting the Multifeeder Pick-Up Roller

Mount the multifeeder pick-up roller [1] so that the side with a cross [2] on its collar is toward the rear.

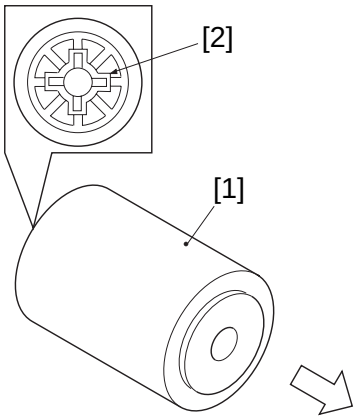

Figure 2-20

4	**Mounting the Delivery Assembly Paper Deflecting Plate Solenoid (SL2)**

1) Remove the delivery assembly.
2) Place the delivery assembly upright on a flat desk.
3) Push in the steel core of the paper deflecting plate 1 solenoid (SL2) until it stops.
4) Loosen the adjusting screw, and make adjustments so that the gap between the steel core E-ring of the solenoid and the solenoid frame is about 0.2 mm.
5) Mount the delivery assembly.

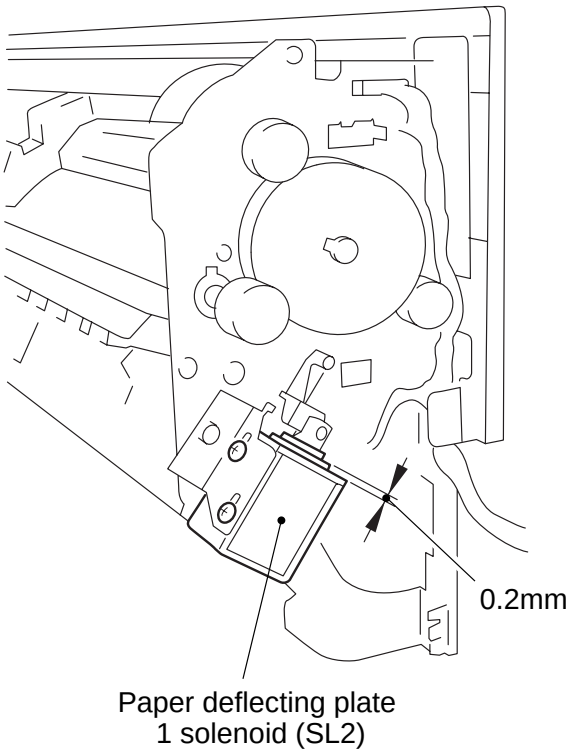

Figure 2-21

5	Orienting the Multifeeder Pick-Up Roller (side paper deck)

Mount the multifeeder pick-up roller by reversing the steps used to remove it with the following in mind:

- The pick-up roller used at the front and the one used at the rear are not interchangeable.
- The collar of the pick-up roller used at the front is silver in color.

When mounting the deck pick-up roller [1] for the front, orient it so that the marking [2] on the collar (silver) is toward the front, and the marking [3] on the side of the roller is toward the rear.

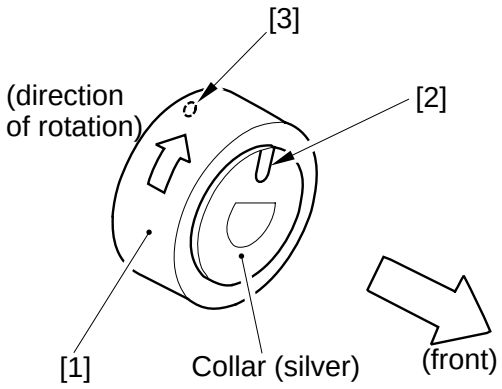

Figure 2-22 Pick-Up Roller for the Front

- The collar of the pick-up roller used at the rear is gold in color.

When mounting the deck-pick-up roller [4] for the rear, orient it so that the marking [5] on the side and the marking [6] on the collar (gold) are toward the rear.

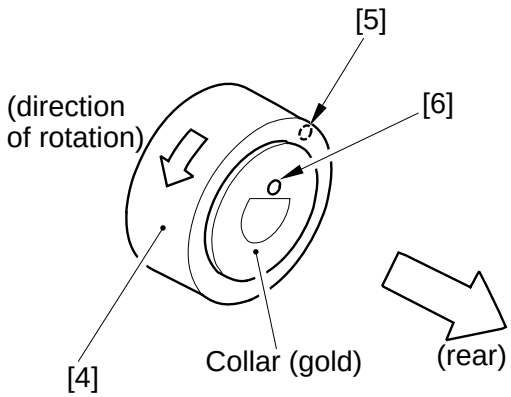

Figure 2-23 Pick-Up Roller for the Rear

6 Orienting the Side Paper Deck Feeding Roller

Mount the feeding roller [1] to the side paper deck pick-up assembly so that the belt pulley [2] is toward the front.

When attaching the pick-up/feeding roller rubber to the pick-up/feeding roller shaft, be sure that the marking [3] is toward the rear.

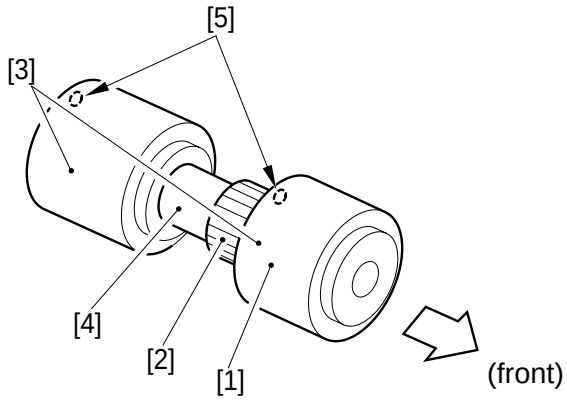

Figure 2-24

7 Positioning the Side Paper Deck Pick-Up Roller Releasing Solenoid

Take note of the position of the two fixing screws of the deck pick-up roller releasing solenoid with reference to the scale on the support plate before removing the solenoid. Or, mark the position of the solenoid on the support plate with a scriber.

When mounting the solenoid on its own, be sure to secure it back to its initial position.

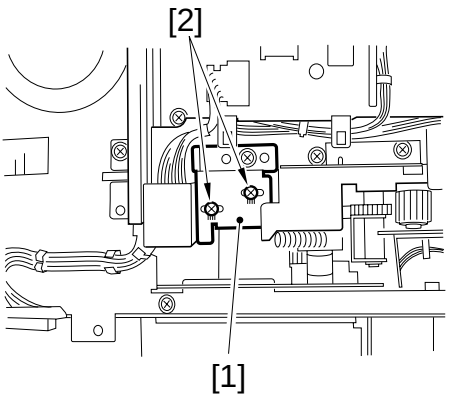

Figure 2-25

E. Fixing System

1 When Mounting the Fixing Heater

1) Do not touch the heater surface.
2) Orient it so that the side with the longer heater wire is toward the front.
3) Mount the main heater (700 W) to the right and the sub heater (600 W) to the left when viewing the fixing assembly from the front.
4) Connect the right faston of the heater to the main heater and the upper faston to the sub heater when viewing it from the rear. (The fastons are found at the rear.)

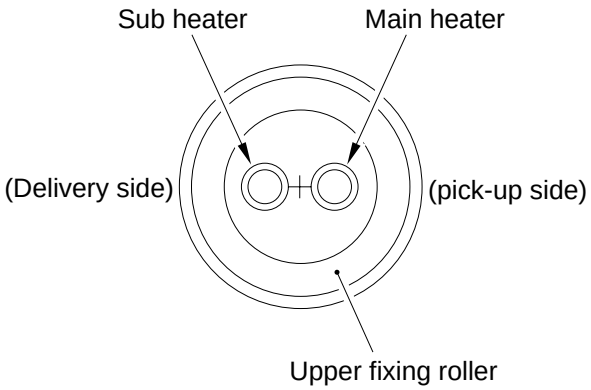

Figure 2-26

2 Positioning the Fixing Assembly Paper Guide

Caution:

If you removed the inlet guide plate, you would need to adjust the position of the inlet guide. To avoid the work, do not loosen the mounting screw (paint-locked) on the inlet guide mount; otherwise, be sure to set it to its initial position by referring to the scale on the fixing assembly.

3 Adjusting the Lower Fixing Roller Pressure (nip)

If you have replaced the upper fixing roller or the lower fixing roller, or if fixing faults occur, make the following adjustments:

If you are taking measurements while the fixing roller is cold, leave the machine alone for 15 min after it ends its wait period and make 20 copies before taking measurements:

<Taking Measurements>

1) Make an A4 solid black copy, and make a copy of it. Set the output in the multifeeder.
2) Select NIP-CHK in service mode (FUNCTION>**FIXING**), and press the OK key.
3) The paper will be picked up and is stopped between the fixing rollers temporarily; then, it will automatically be discharged in about 20 sec.
4) Measure the width of the area where toner is shiny (Figure 2-27).

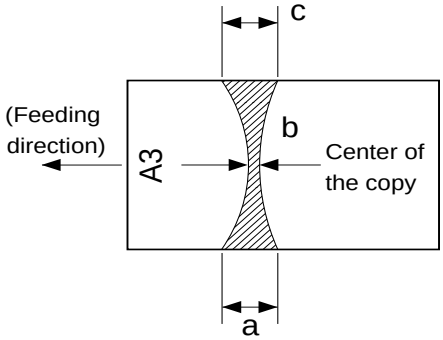

Figure 2-27

Caution:

a and c are points 10 mm from both edges of the copy paper.

Point	Measurements*
b	5.5 ±0.3 mm
a-c	0.5 mm or less

* Measured when the upper/lower roller is adequately heated.

Table 2-1

5) If not as indicated, turn the pressure adjusting screw 1 found at the rear and the front of the fixing assembly to make adjustments.

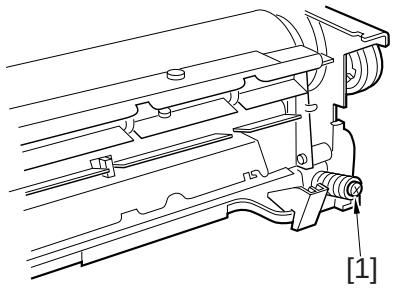

Figure 2-28

4	When Replacing the Lower Fixing Roller

When replacing the lower fixing roller or the bearing of the lower roller shaft, be sure to apply heat-resisting grease (MO-138S) to the shaft to prevent adhesion of the shaft and the bearing.

F. Electrical System

1 Replacing the Major Part

Parts	Description/Service mode	
Image processor PCB	■ Before Replacement Generate stored data of ADJUST, OPTION, and COUNTER.	FUNCTION>MISC-P>**P-PRINT**
	■ After Replacement 1) Execute RAM clear (image processor PCB).	FUNCTION>CLEAR>**IP**
	2) Enter data under AJDUST and OPTION.	YAKUNUKE
[A]	3) Execute shading auto correction 2.	FUNCTION>CCD>**MAN-ADJ**
	4) Execute density correction.	FUNCTION>DENS>**WHITE-ME**
	4-1) Execute standard white plate density read.	FUNCTION>DENS>**PD-DENS**
	4-2) Execute density auto correction.	FUNCTION>DENS>**DZ-DENS**
	4-3) Execute DZ density auto correction.	FUNCTION>DENS>**DZ-ME**
Composite power supply PCB	■ After Replacement 1) Enter the values indicated on the label attached to the composite power supply PCB in service mode.	
	2) Execute shading auto correction 1.	FUNCTION>CCD>**CCD-ADJ**
	3) Execute auto density correction.	Same as [A] above.
Laser scanner unit	1) Execute shading auto correction 1. 2) Execute auto density correction.	FUNCTION>CCD>**CCD>ADJ** Same as [A] above.
Laser unit		
CCD unit	1) Execute shading auto correction 2. 2) Execute auto density correction.	FUNCTION>CCD>**MAN-ADJ** Same as {A] above.
Scanning lamp		
DC controller PCB		
Standard white plate		
Control panel LCD	Adjust the coordinate position of the analog touch panel.	FUNCTION>PANEL>**TOUCHKEY**
Multifeeder size detecting volume	Store the paper width basic value for the multifeeder.	FUNCTION>CST>**MF-A4R, A6R, A4**
Fixing assembly	Nip (as indicated?)	FUNCTION>FIXING>**NIP-CHK**
Fixing cleaning belt	Execute cleaning belt clear.	COUNTER>MISC>**FIX-WEB**

2 Shading Auto Correction

- Shading auto correction may be either of two types (CCD-ADJ, MAN-AJD). Select the appropriate mode.
- In shading auto correction, various data measurements are taken and stored in the RAM on the image processor PCB for use as the target value for shading correction performed before scanning operation.
  The following are service mode item related to shading auto correction; see the appropriate service mode item for details:

ADJUST	ADJ-XY	**ADJ-S**	standard white plate read position
	CCD	**PPR**	standard white paper density data
		W-PLT	standard white plate density data
FUNCTION	CCD	**CCD-ADJ**	shading auto correction 1 (for normal image adjustment)
		MAN-ADJ	shading auto correction 2 (for PCB, lamp replacement)

■ Using CCD-ADJ

• Start service mode.

1) Press the asterisk key.
2) Press '2' and '8' on the keypad at the same time.
3) Press the asterisk key.
4) On the screen, select <COPIER>, <FUNCTION>, and <CCD> in sequence.
5) Select <CCD-ADJ>, and press the OK key. (You need not place standard white paper.)

■ Using MAN-ADJ

1) Remove the rear cover, and check the position of VR200 on the DC controller PCB.
2) Place the standard white paper on the copyboard glass.
3) Start service mode. (See steps 1) through 4) under "Using CCD-ADJ.")
4) Select <MAN-ADJ>, and press the OK key.
5) When VO is indicated and the beep is sounded, press the OK key. If the beep is not heard, turn VR200 on the DC controller PCB; when the beep is sounded, press the OK key. Adjustments are needed if LED201 turns on.
6) Check to see if END is indicated.

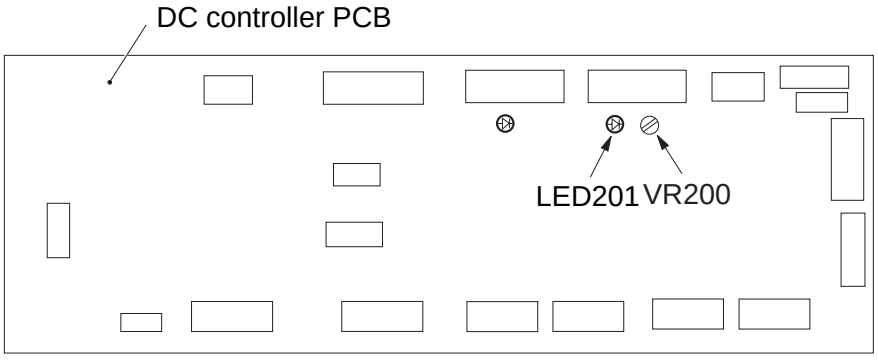

Figure 2-29

3 Copy Density Auto Correction

- Execute copy density auto correction for the following:
  The copy image is not proper (image fault).
  The laser unit has been replaced.
  The image processor has been replaced.
  The composite power supply PCB has been replaced.
- When executing copy density auto correction, be sure to execute the following three types (five items) as a set. Be sure to execute shading correction before executing density correction.
  - Standard white paper density read FUNCTION>DENS>**WHITE-ME**
  - PD density auto correction FUNCTION>DENS>**PD-DENS**
    (text, text/photo mode) FUNCTION>DENS>**PD-ME**
  - DZ density auto correction FUNCTION>DENS>**DZ-DENS**
    (photo mode) FUNCTION>DENS>**DZ-ME**
- The following blocks are subjected to correction processing:
  Laser characteristic correction
  Developing bias correction
- Executing the Mode

a. Executing Shading Correction

1) Start service mode.
2) Select COPIER>FUNCTION>CCD in sequence; then, select <**CCD-ADJ**>.
3) Press the OK key. (You need not place standard white paper.)
4) End service mode; then, make two solid black copies while holding the feeder or the copyboard glass open. Check to make sure that white lines did not occur.

b. Executing WHITE-ME

1) Place five sheets of standard white paper, and close the feeder or the copyboard cover.
   - Be sure that the paper is A4 or larger and placed vertically.
2) Start service mode, and select COPIER>FUNCTION-DNS>**WHITE-ME**.
3) Press the Copy Start key.
   - The scanner moves forward and reads the white paper.

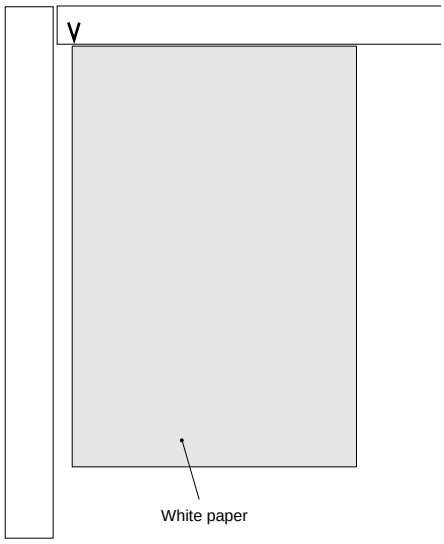

Figure 2-30

c. Executing PD-DENS

1) Select COPIER>FUNCTION>DENS>**PD-DENS**, and press the OK key.
   - A 15-graduation patter will be generated. (The patches are black.)

d. Executing PD-ME

1) Remove the white paper from the copyboard, and place the PD-DENS output on the copyboard.
   - Place the printed side down (for reading the pattern).
   - Place the white side as the leading edge and the black side toward the center.
   - Be sure to place originals against the marking V on the copyboard glass.

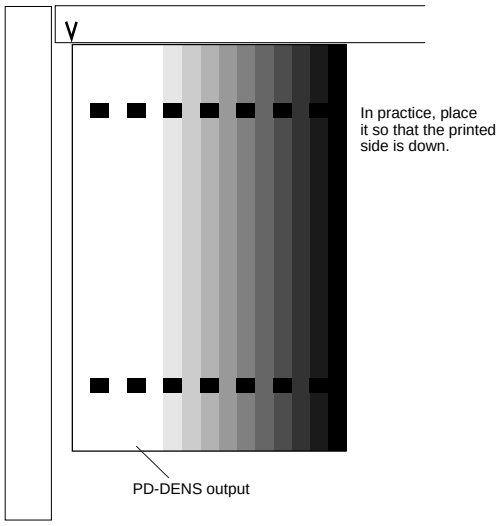

Figure 2-31

2) Select <**PD-ME**> under <PD-DENSE>; then, press the OK key.
   - The scanner makes 13 scans.
3) After reading operation, PD auto density correction ends when OK is indicated to the right of <**PD-ME**>. If NG, check the following:
   - Is the original placed correctly?
   - Is the original the PD-DENS output? (The patches are black.)

   After checking the above, execute PD-DENS once again. If still NG, go to the next page.

d. Executing DZ-DENS

1) Select COPIER>FUNCTION>DENS>**DZ-DENS**; then, press the OK key.
   - A 15-gradation pattern will be generated. (The patches are white.)

e. Executing DZ-ME

1) Remove the PD-DENS output (black patches), and place the DZ-DENS output (white patches) on the copyboard glass.

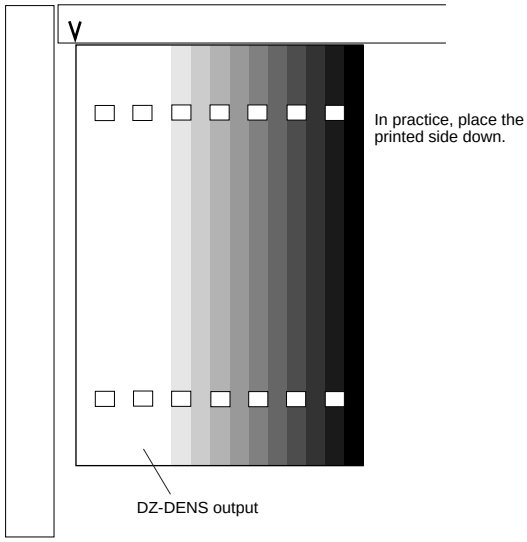

Figure 2-32

2) Select <**DZ-ME**> under DZ-DENS, and press the OK key.
   - The scanner makes 13 scans.
3) After read operation, PD auto density correction ends when OK is indicated to the right of <**DZ-ME**>. If NG, check the following:
   - Is the read original placed correctly?
   - Is the read original the DZ-DESN output? (The patches are white.)

   After checking the above, execute DZ-DENS once again. If still NG, go to the next page.

■ If PD-ME/DZ-ME Is NG

1. Clean the scanner.

2. Isolate the problem.
   Execute toner stirring COPIER>FUNCTION>INSTALL>**TONER-S**
   Execute drum resistance measurement COPIER>FUNCTION>DPC>**D-GAMMA**
   A this time, take notes of the measurement of D-GAMMA.

3. Execute copy density correction once again.
   If the result is still NG, perform the following according to the measurement of D-GAMMA.
   If 2.3 or higher, replace the drum cartridge.
   If 0.1 or lower, replace the developing assembly.

4 Storing the Multifeeder Paper Width Basic Value

Execute this mode if you have replaced the multifeeder paper width detecting volume.
Be sure to try A4R, A6R, and A4 in the order indicated.

■ Execution

1) Replace the paper width detecting VR.
2) Start service mode.
   asterisk key -> '2' and '8' at the same time -> asterisk key
3) Select COPIER>FUNCTION>CST, and highlight <**A4R**>.

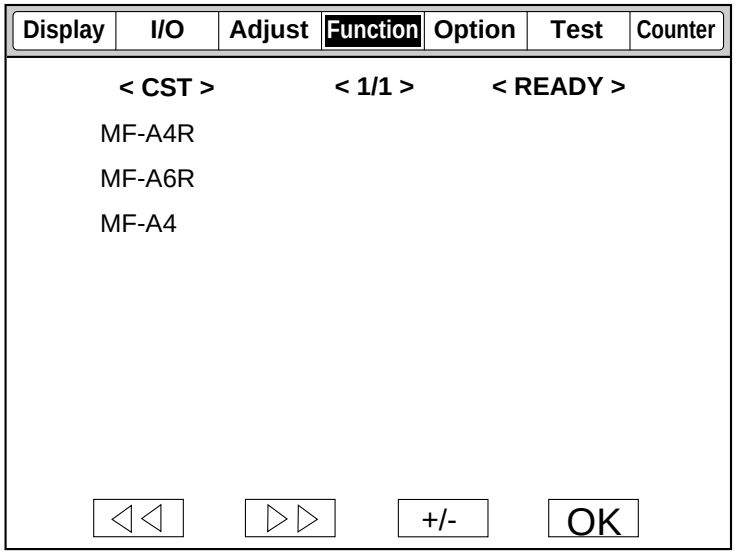

Figure 2-33

4) Place A4R paper in the multifeeder, and adjust the side guide to the paper width.
5) Press the OK key.
6) Repeat steps 3) through 5) for A6R and A4 as in A4R.
7) Press the Reset key to end service mode; then, turn off and then on the main power switch.

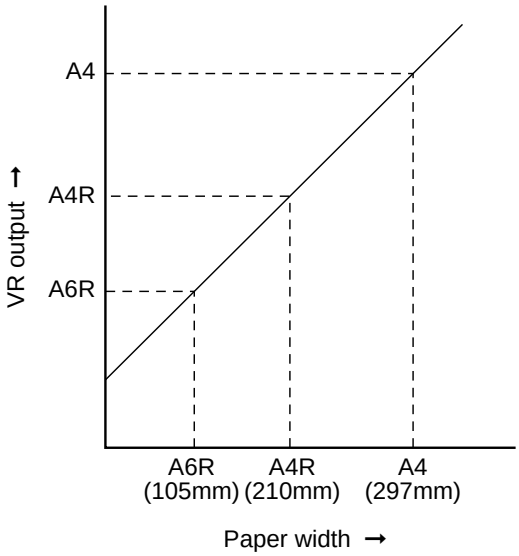

Figure 2-34

5 Checking the Photointerrupters

The photointerrupters may be checked in either of the following two methods:
a. Using a meter.
b. Using service mode (I/O mode).

a. Using a Meter

You cannot insert the meter probe directly into the connectors of the machine's PCBs, as they are designed specially to enable smooth connection. Obtain a probe extension tool (FY9-3038-000/ FY9-3039-000).

1) Set the digital multimeter range to 12 VDC.
2) Connect the meter probe to GND (0 VDC) of the DC controller PCB.
3) Make a check as indicated. (Use the probe extension and the clip as necessary.)

[Connection 1]

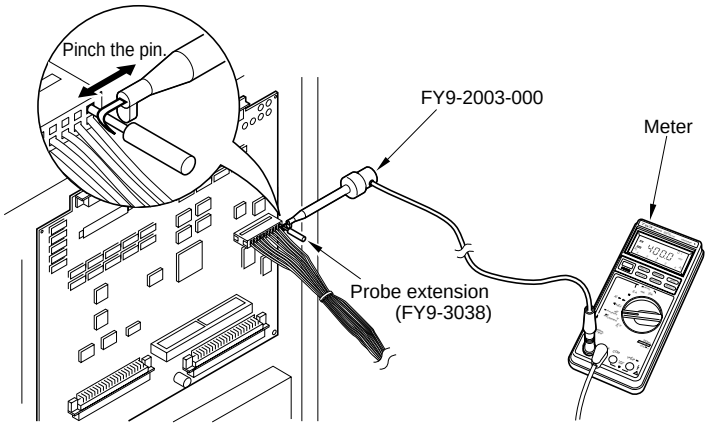

[Connection 2]

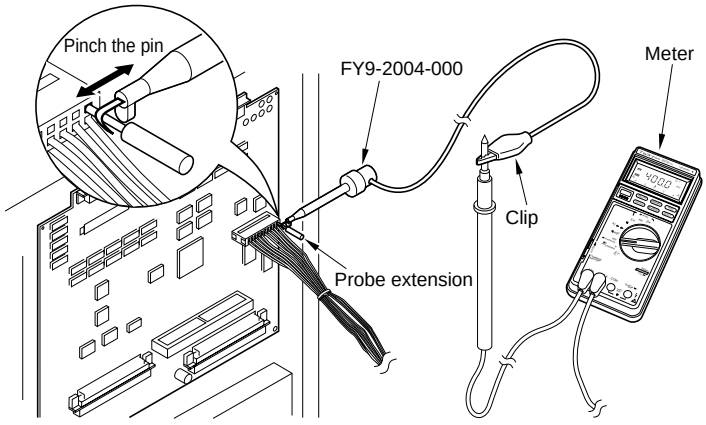

Figure 2-35

b. Using Service Mode

1) Start service mode.
2) Press COPIER>I/O, and select DC-CON.

The bit number notations in the tables that follow represent the following:

ex.P001 00000000
bit7 bit0

Notation	PS1		PS2		PS3	
name	Scanner home position sensor (PS1S)		Copyboard cover open/ closed sensor (PS2S)		Multifeeder paper sensor (PS3S)	
Meter probe	J112-B5		J108-B2		J108-B17	
Service mode			P003-bit13		P005-bit1	
Check (Normal if described.)	While in standby, move the scanner from the home position.		While in standby, open and close the copyboard cover.		While in standby, place paper on the multifeeder tray.	
	When the scanner is at the home position,	When the copyboard cover is closed,	When the scanner is not at the home position,	When the cupboard cover is opened,	When paper is placed,	When paper is not placed,
Display reading	-	1	-	0	1	0
Meter reading (approx.)	5 V	0 V	5 V	0 V	5 V	0 V

Notation	PS4		PS6		PS7	
name	Registration paper sensor (PS4S)		Internal delay sensor (PS6S)		External delivery sensor (PS7S)	
Meter probe	J108-B11		J106-2		J107-2	
Service mode	P004-bit3		P004-bit8		P004-bit5	
Check (Normal if described.)	While in standby, open the right door, and insert paper.		While in standby, open the delivery assembly, and move the flag of PS6.		While in standby, open the delivery assembly, and move the flag of PS7.	
	When paper is not inserted,	When paper is inserted,	When the flag is blocking the sensor (paper absent),	When the flag is not blocking the sensor (paper present),	When the flag is not blocking the sensor (paper present),	When the flag is blocking the sensor (paper absent),
Display reading	1	0	1	0	1	0
Meter reading (approx.)	5 V	0 V	5 V	0 V	5 V	0 V

Notation	PS8		PS9		PS10	
name	Duplexing assembly inlet paper sensor (PS8S)		Re-pick up sensor (PS9S)		Horizontal registration paper sensor (PS10S)	
Meter probe	J114-B2		J114-B5		J102-A8	
Service mode	P004-bit5		P004-bit10		P004-bit11	
Check (Normal if described.)	While in standby, open the delivery assembly, and move the flag of PS8.		While in standby, open the duplexing unit, and move the flag of PS9.		While in standby, open the right door; then, insert paper into the re-pick up assembly, and slide it to the rear.	
	When the flag is blocking the sensor (paper absent),	When the flag is not blocking the sensor (paper present),	When the flag is blocking the sensor (paper absent),	When the flag is not blocking the sensor (paper present),	When the paper is slid to the rear,	When the paper is not slid to the rear,
Display reading	1	0	1	0	1	0
Meter reading (approx.)	5 V	0 V	5 V	0 V	5 V	0 V

Notation	PS11		PS12		PS13	
name	Vertical path sensor (PS11)		Right cover open/ closed detecting sensor (PS12S)		Left cover open/closed sensor (PS13S)	
Meter probe	J108-B8		J108-B14		J114-5	
Service mode	P004-bit2		P003-bit13		P003-bit11	
Check (Normal if described.)	While in standby, move up the lever of PS11.		While in standby, open the right door.		While in standby, open the left door.	
	When the lever is moved up (paper present),	When the lever is moved back (paper absent),	When the right door is closed,	When the right door is open,	When the left door is closed,	When the left door is open,
Display reading	1	0	1	0	1	0
Meter reading (approx.)	5 V	0 V	5 V	0 V	5 V	0 V

Notation	PS14		PS18		PS19	
name	Front cover open/ closed sensor (PS14S)		Cassette 1 pick-up sensor (PS18S)		Cassette 1 pick-up sensor (PS19S)	
Meter probe	J102-A11		J108-A17		J108-A18	
Service mode	P003-bit4		P004-bit0		P004-bit1	
Check (Normal if described.)	While in standby, open the front cover.		While in standby, slide out the cassette, and insert paper between the pick-up rollers.		While in standby, slide out the cassette, and insert paper between pick-up rollers.	
	When the front cover is open,	When the front cover is closed,	When paper is inserted,	When paper is not inserted,	When paper is inserted,	When paper is not inserted,
Display reading	1	0	1	0	1	0
Meter reading (approx.)	5 V	0 V	5 V	0 V	5 V	0 V

Notation	PS40	
name	Fixing assembly outlet sensor (PS40S)	
Meter probe	J114-A2	
Service mode	P004-bit9	
Check (Normal if described.)	While in standby, push the lever on the fixing assembly outlet assembly.	
	When the lever is pushed,	When the lever is not pushed,
Display reading	1	0
Meter reading (approx.)	5 V	0 V

CHAPTER 3 ARRANGEMENT AND FUNCTIONS OF ELECTRICAL PARTS

A. Clutches and Solenoids

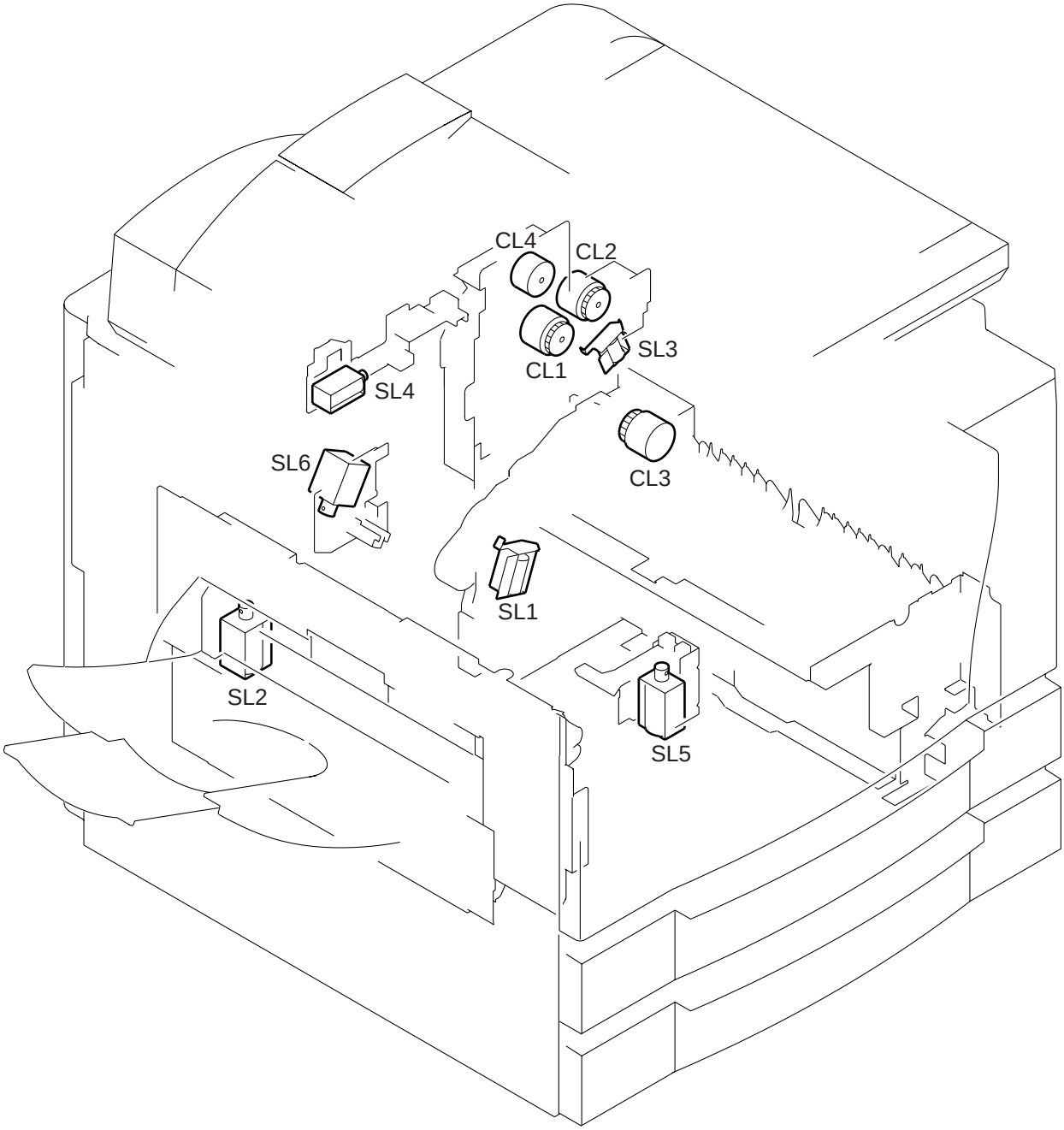

Figure 3-1

Clutches and Solenoids

Symbol	Part	Notation	Function
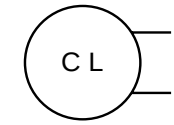	Clutch	CL1	Drives the registration roller.
		CL2	Drives the multifeeder pick-up mechanism.
		CL3	Drives the vertical path roller.
		CL4	Drives the developing cylinder.
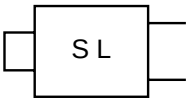	Solenoid	SL1	Moves down the pick-up roller.
		SL2	Drives the delivery flapper.
		SL3	Releases the multifeeder holding plate.
		SL4	Cleans the primary charging roller.
		SL5	Drives the fixing cleaning belt.
		SL6	Drives the fixing assembly inlet guide.

B. Motors

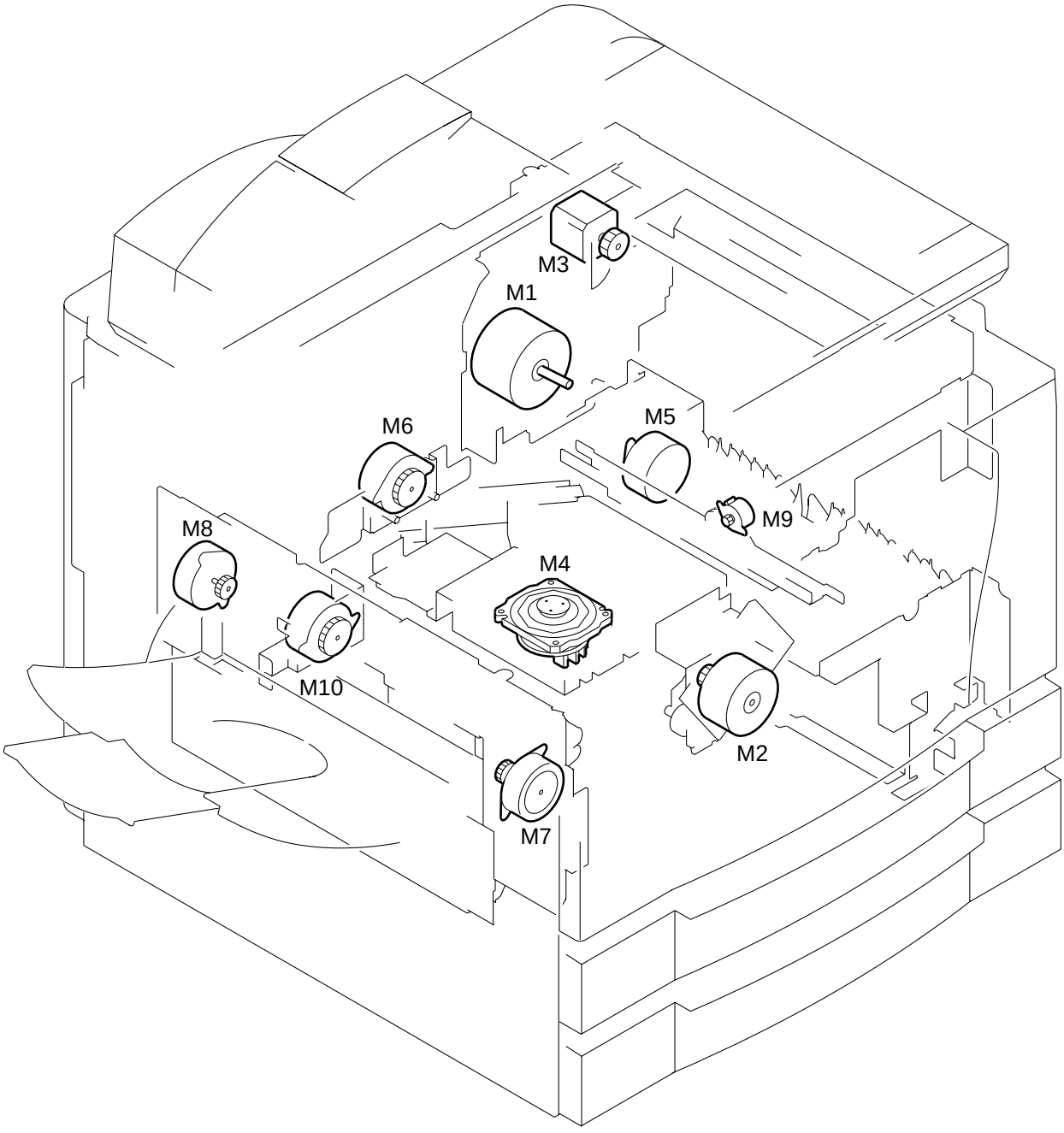

Figure 3-2

Motor

Symbol	Part	Notation	Function
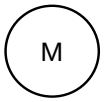	Motor	M1 M2 M3 M4 M5 M6 M7 M8 M9 M10	Main motor Fixing motor Scanner motor Laser scanner motor Pick-up motor Lower feeder motor Reversal delivery motor Delivery motor Horizontal registration sensor shift motor Duplexing reversal motor

C. Fan

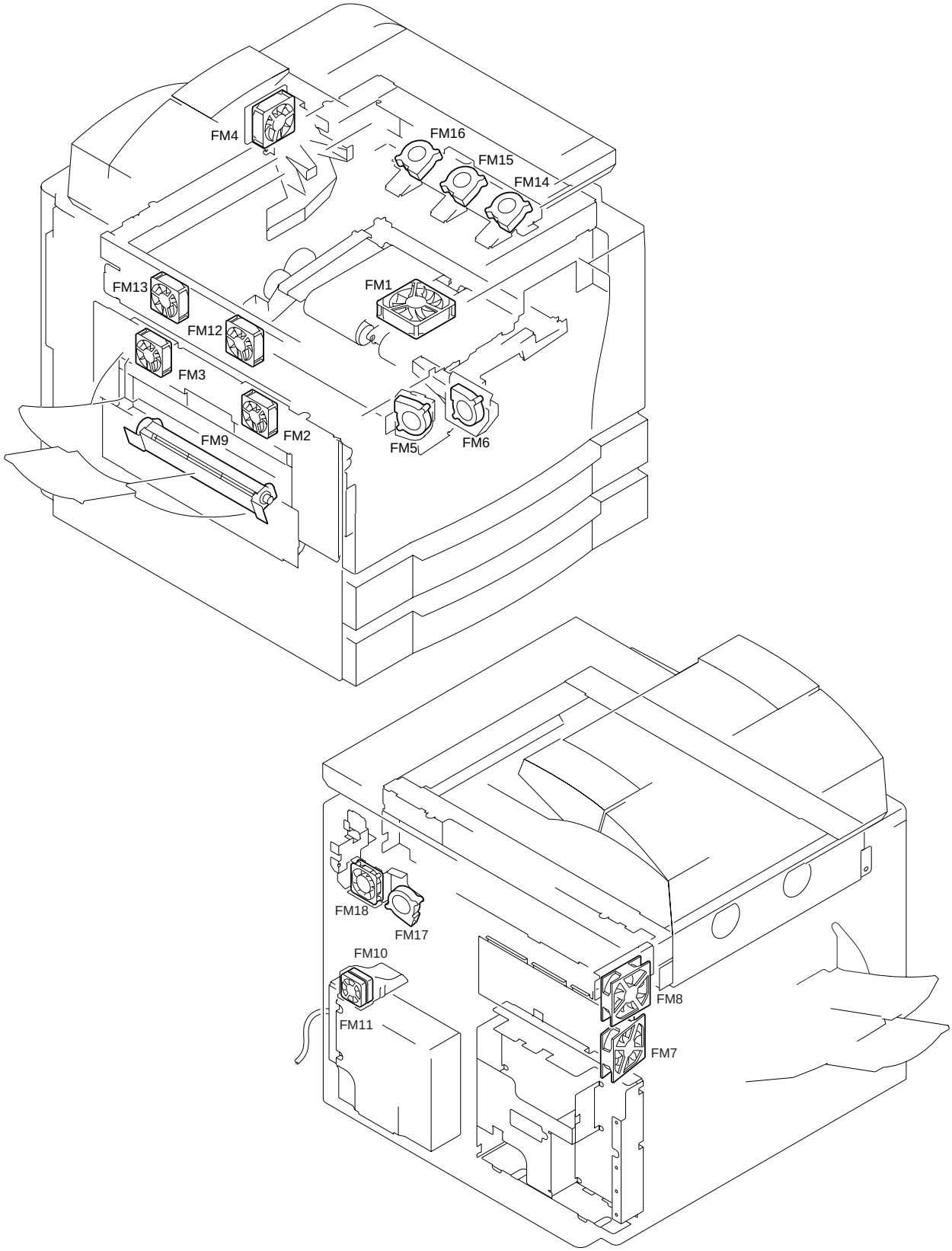

Figure 3-3

Fans

Symbol	Part	Notation	Function
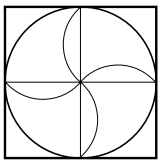	fan	FM1	Feeding fan
		FM2*	Fixing heat discharging fan 1
		FM3*	Fixing heat discharge fan 2
		FM4*	Laser drive cooling fan
		FM5*	Laser scanner motor cooling fan 1
		FM6*	Laser scanner motor cooling fan 2
		FM7*	Cleaner cooling fan
		FM8*	System cooling fan
		FM9	Reversal guide cooling fan
		FM10	Low-voltage power supply cooling fan 1
		FM11	Low-voltage power supply cooling fan 2
		FM12*	Reader cooling fan 1
		FM13*	Leader cooling fan 2
		FM14	Drum cartridge cooling fan 1
		FM15	Drum cartridge cooling fan 2
		FM16	Drum cartridge cooling fan 3
		FM17*	DC controller PCB cooling fan
		FM18*	Scanner motor cooling fan

* Rotates at half speed during standby.

D. Sensors

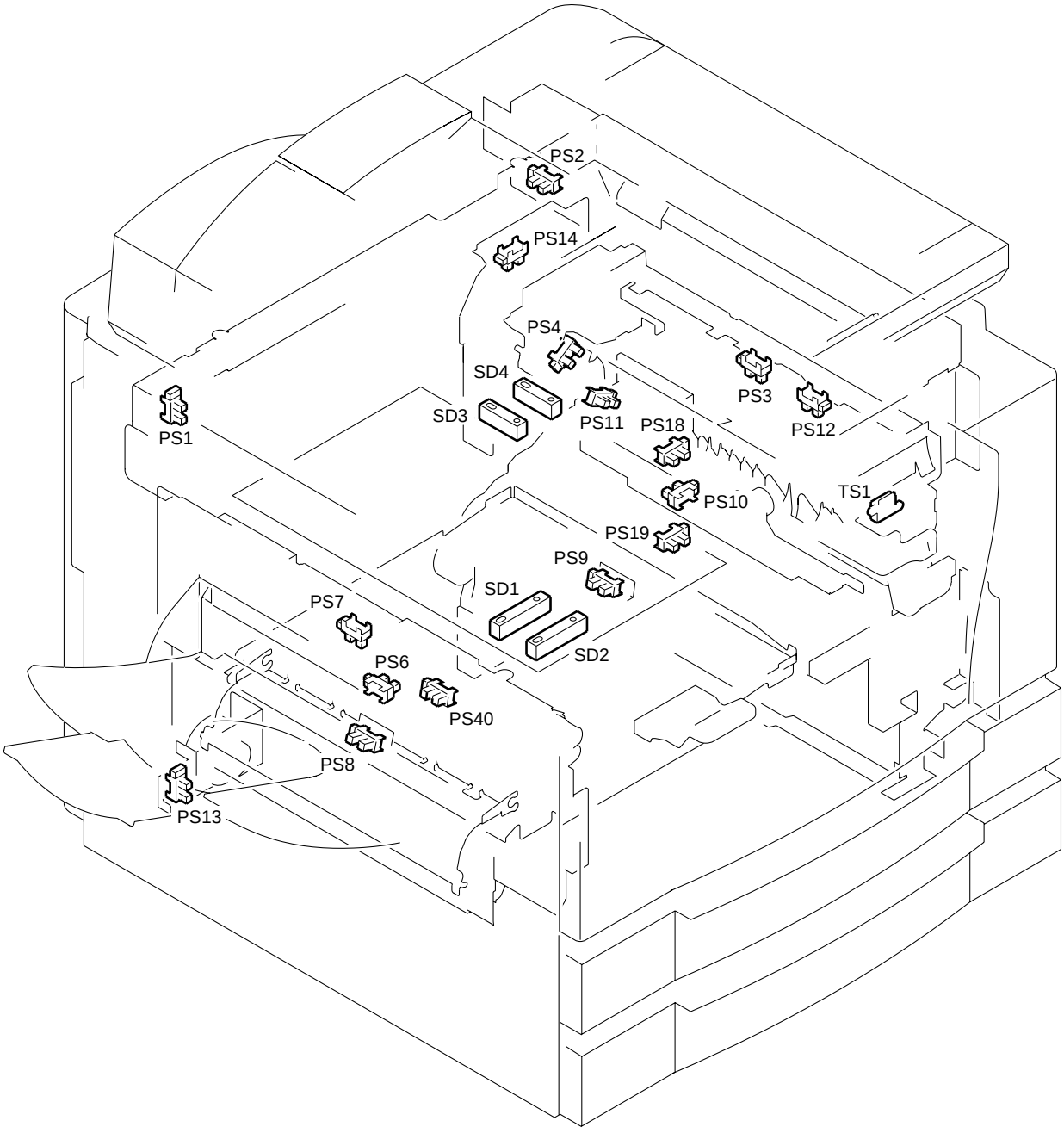

Figure 3-4

Sensors

Symbol	Name	Notation	Remarks
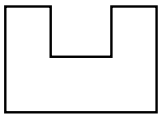	Photointerrupter	PS1	Scanner home position detection
		PS2	Copyboard cover open/closed detection
		PS3	Multifeeder paper detection
		PS4	Pre-registration paper detection
		PS6	Internal delivery assembly paper detection
		PS7	External delivery assembly paper detection
		PS8	Re-pick up assembly paper detection
		PS9	Re-pick up assembly paper detection
		PS10	Horizontal registration paper detection
		PS11	Vertical path paper detection
		PS12	Right door open/closed detection
		PS13	Left door open/closed detection
		PS14	Waste toner detection
		PS18	Cassette 1 retry paper detection
		PS19	Cassette 2 retry paper detection
		PS40	Fixing assembly outlet paper detection
	Piezoelectric oscillating element	TS1	Toner level detection
	Reflecting type sensor	SD1	Original size sensor 1
		SD2	Original size sensor 2
		SD3	Original size sensor 3
		SD4	Original size sensor 4

E. Switches and Counters

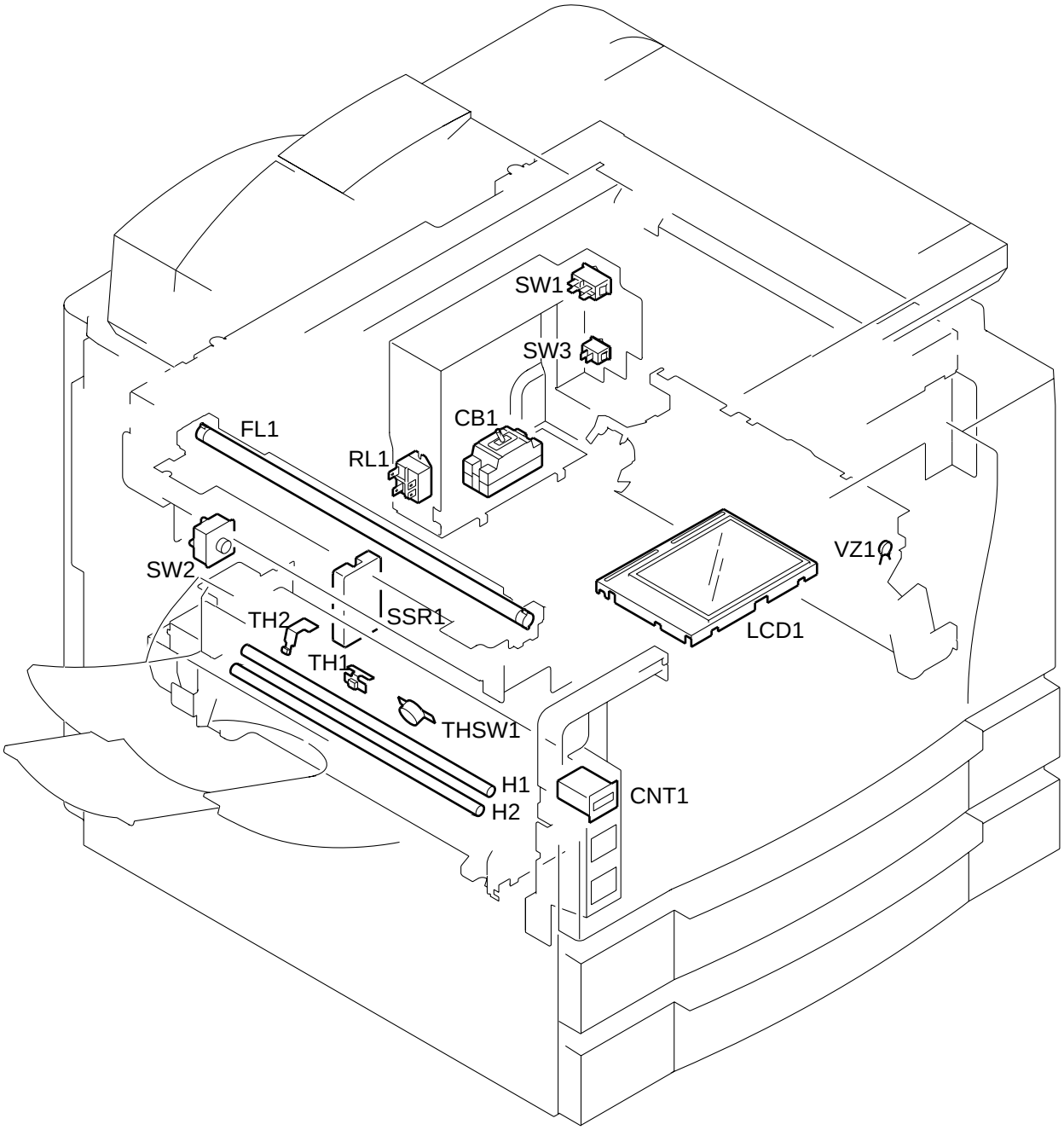

Figure 3-5

Switches, Counters, Heaters, Varistors, and Fuses

Part	Notation	Name
Switch	SW1 SW2 SW3	Main power supply switch Front door switch Cassette heater switch
Counter	CNT1	Total copy counter 1
Varistor	VZ1	Pre-registration guide varistor
SSR	SSR1	Solid state relay
Scanning lamp (fluorescent lamp)	FL1	Scanning lamp
Heater	H1 H2	Fixing main heater Fixing sub heater
Thermistor	TH1 TH2	Fixing heater main thermistor Fixing heater sub thermistor (end)
Thermal switch	THSW	Fixing heater thermal switch
Circuit breaker	CB1	Circuit breaker

F. PCBs

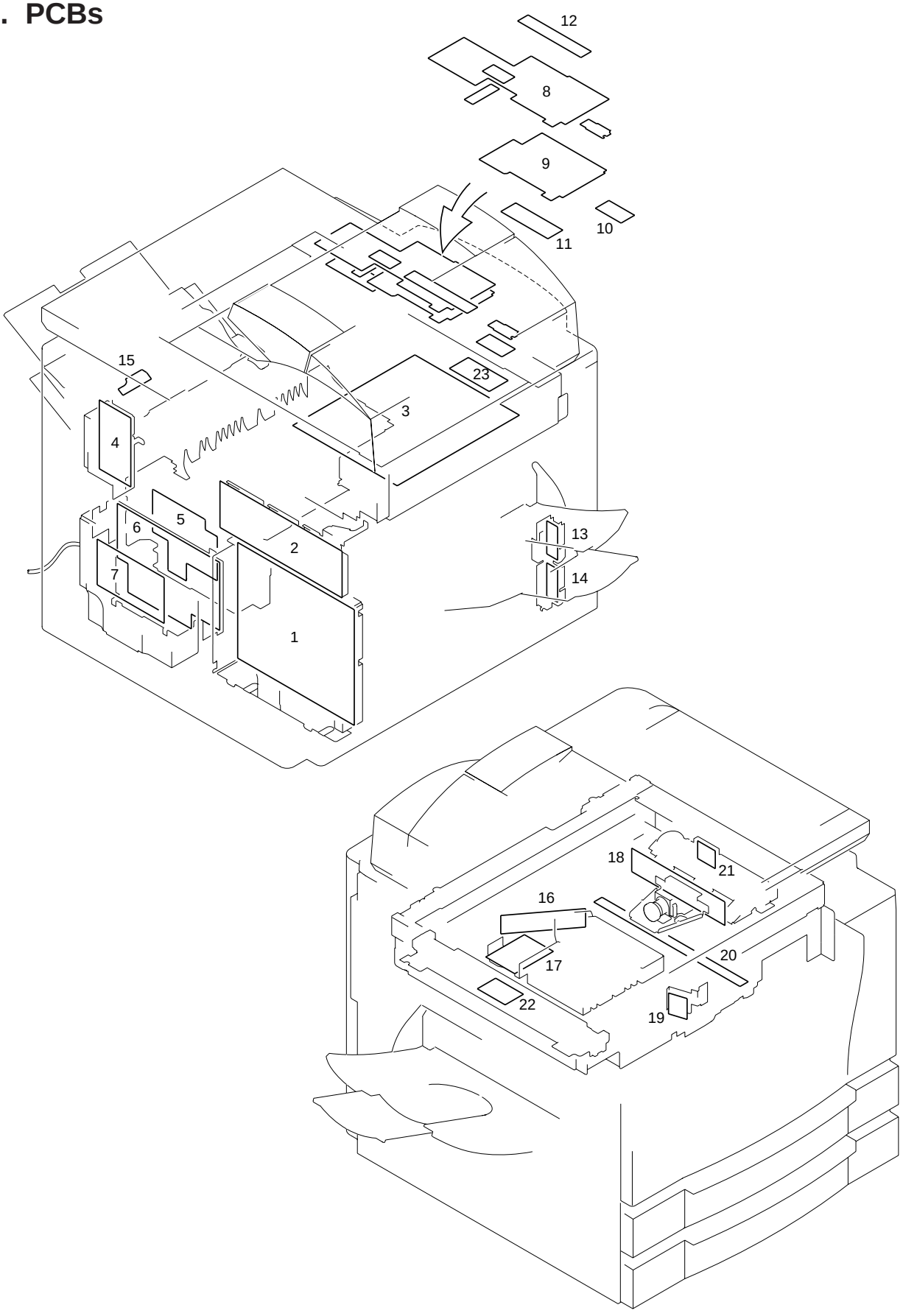

Figure 3-6

Switches, Counters, Heaters, Varistors, and Fuses

Part	Notation	Name
1	Composite power supply PCB	HVT, lamp regulator, DC power supply
2	DC controller PCB	DC load control (DC driver)
3	Image processor PCB	Image processing (main controller)
4	Accessories power supply	DADF, side paper deck
5	Pick-up unit PCB	Pick-up assembly sensor
6	Low-voltage power supply PCB	DC power supply
7	Noise filter	AC power supply noise removal
8	Control panel key PCB	
9	Control panel CPU PCB	
10	Inverter PCB	LCD (back light) power supply
11	Downloading PCB	
12	Function key PCB	
13	Upper cassette size detection PCB	Upper cassette size detection
14	Lower cassette size detection PCB	Lower cassette size detection
15	Multifeeder paper width detection PCB	Multifeeder paper width detection
16	Laser driver PCB	Laser dive
17	Laser scanner driver PCB	Laser scanner motor drive
18	Analog processor PCB	CCD drive, analog image processing
19	BD PCB	Laser beam detection
20	Pre-exposure lamp PCB	Photosensitive drum residual charge removal
21	Environment sensor PCB	Machine internal humidity detection
22	Intensity sensor PCB	Scanning lamp intensity detection
23	Battery PCB (accessory)	Fax image memory retention

G. Side Paper Deck

1. Sensors and Switches

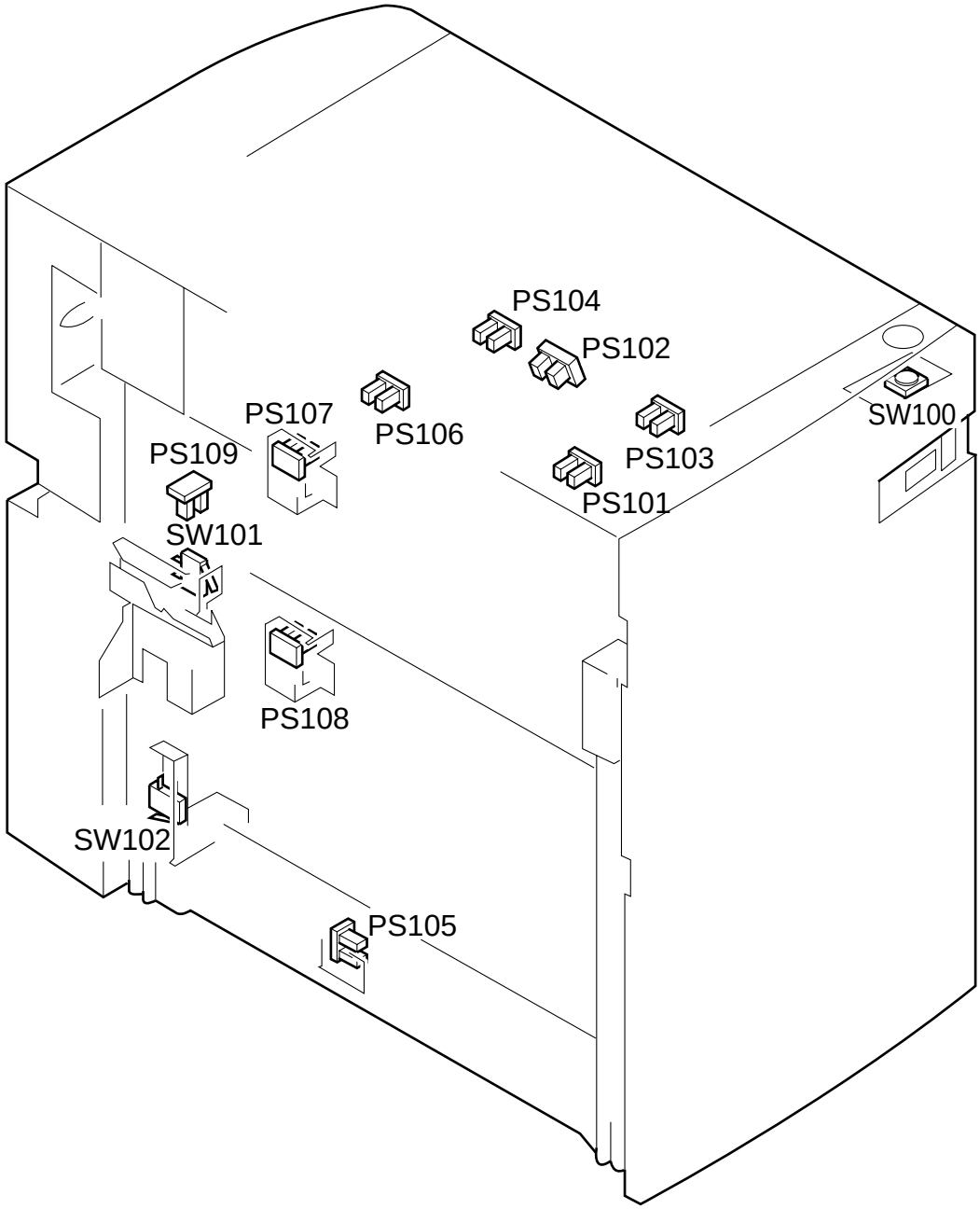

Figure 3-7a (side paper deck)

Symbol	Part	Notation	Function
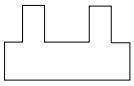	Photointerrupter	PS102 PS103 PS104 PS105 PS106 PS107 PS108 PS110	Deck lifter upper limit detection Deck paper supply position detection Deck set detection Deck pick-up guide open detection Deck vertical path paper detection Deck pick-up paper detection Deck paper detection Deck lifter position detection
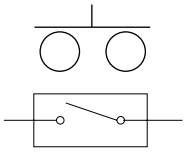	Switch Microswitch	SW100 SW102 SW103	Deck open switch Deck open detecting switch Deck lifter upper limit detecting switch

Table 3-1a (side paper deck)

2. Motors, Solenoids, and PCBs

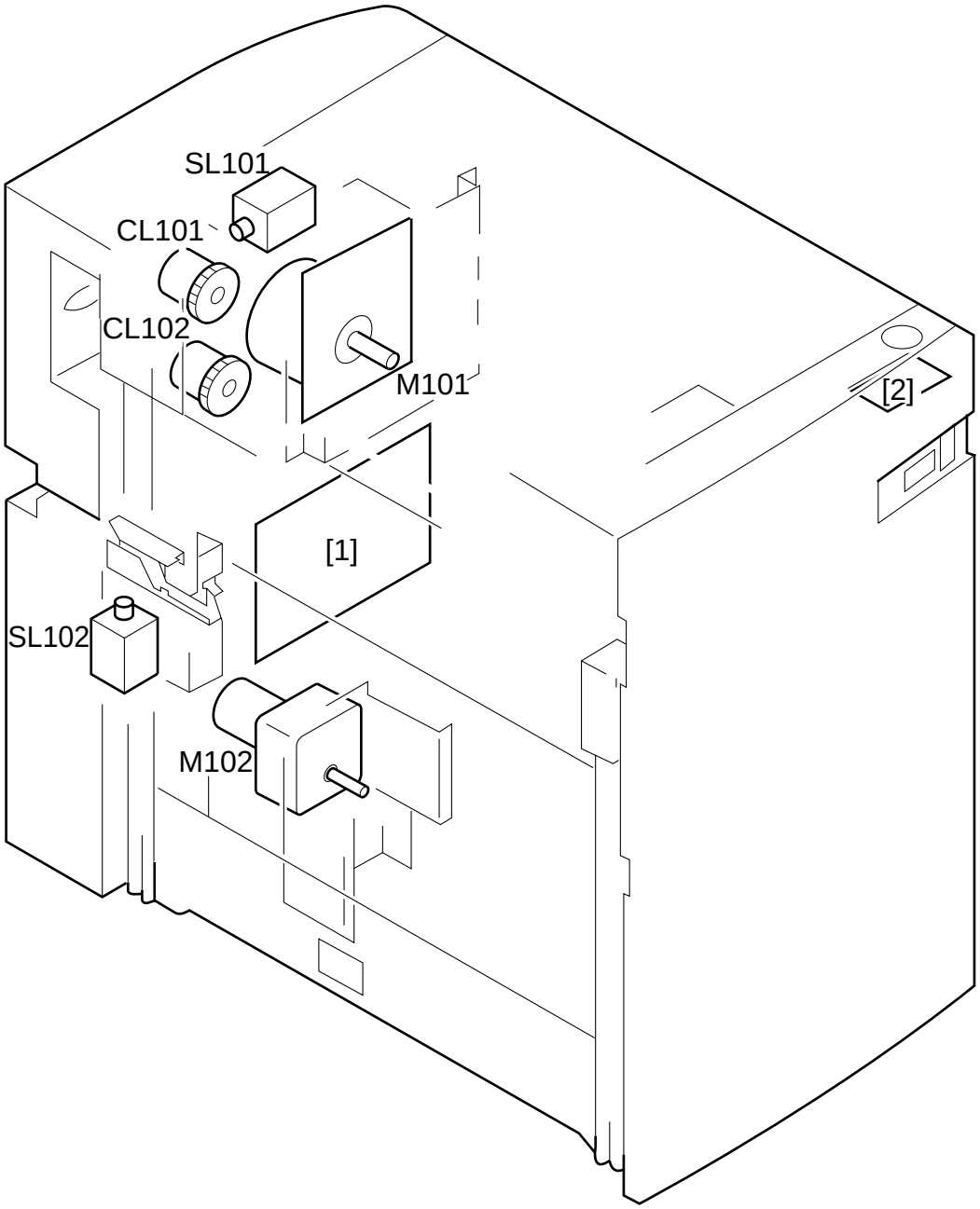

Figure 3-7b (paper deck)

Symbol	Part	Notation	Function
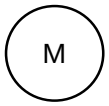	Motor	M101 M102	Deck main motor Deck lifter motor
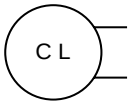	Clutch	CL101 CL102	Deck vertical path clutch Deck pick-up clutch
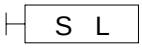	Solenoid	SL101 SL102	Deck pick-up roller releasing solenoid Deck open solenoid
	PCB	[1] [2]	Side deck driver PCB Open switch PCB

Table 3-1b (paper deck)

H. Variable Resisters, Light-Emitting Diodes, and Check Pins by PCB

Of the variable resistors (VR), light-emitting diodes (LED), and check pins used in the machine, those needed in the field are discussed.

Caution:

1. Some LEDs emit dim light when they are off because of leakage current. This is a normal condition, and must be kept in mind.
2. VRs that may be used in the field.
   : ⊘
   VRs that must not be used in the field.
   : ⊘

Caution:

Those VRs and check pins not listed in the tables are for factory use only, requiring special tools and high accuracy. Do not touch them in the field.

1. Image Processor PCBs (main controller)

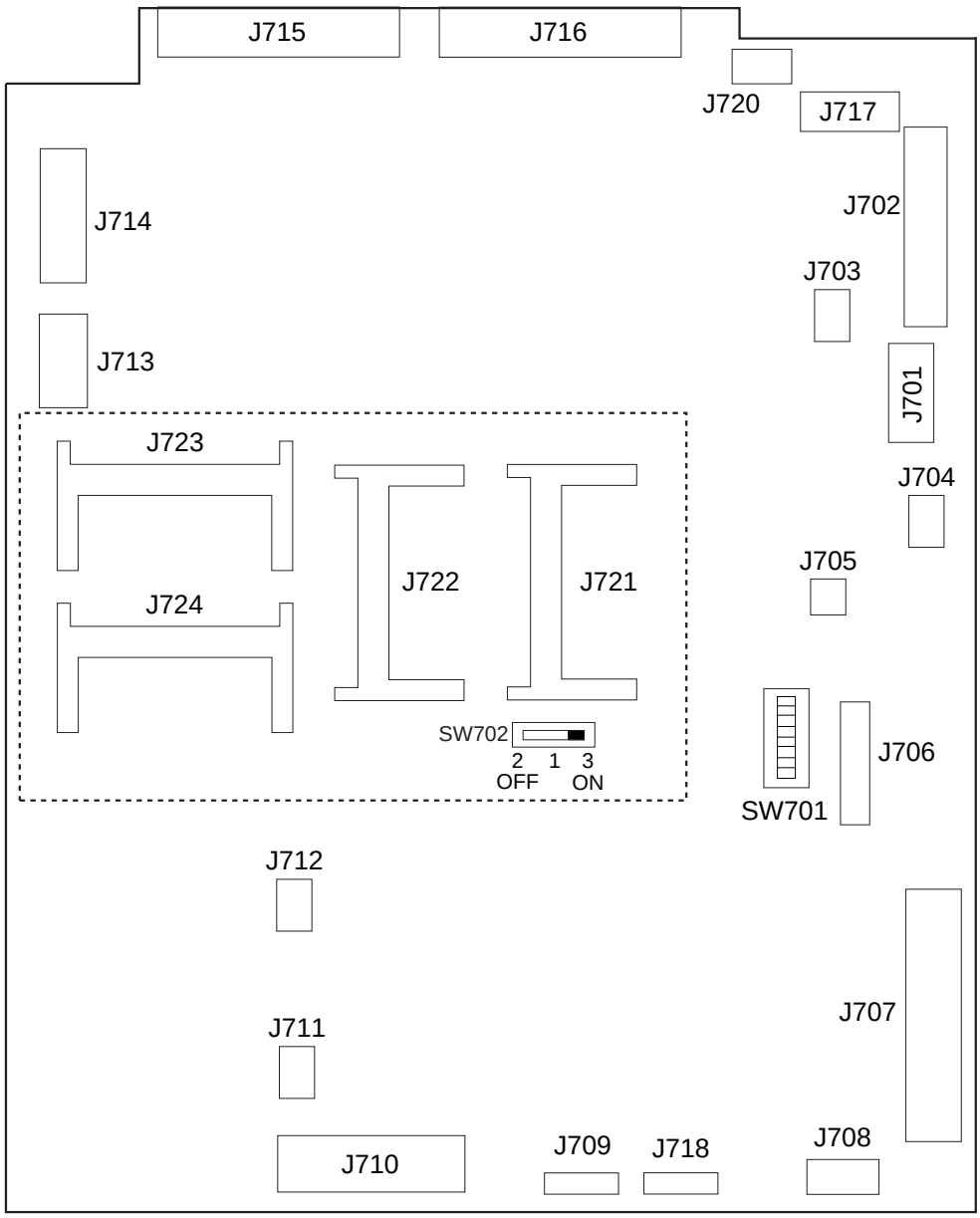

Figure 3-8

J721: Flash ROM slot for the IP-CPU (IP, DIMM); use the bottom slot for a 4-MB DIMM, and the top slot for a 1-MB DIMM.
J722: Flash ROM slot for the DC-CPU (DCC DIMM); 1-MB, DIMM
K723, J724: Slot for expansion memory (32 MB each); however, be sure to use J723 first (as when installing only one DIMM).
J720: Not used.

■ SW701 States

	AB	Inch	AB/Inch	A
SW1	OFF	ON	ON	OFF
SW2	OFF	OFF	ON	ON
SW3	OFF	ON	OFF	ON
SW4	OFF	OFF	ON	ON
SW5	OFF	ON	OFF	OFF
SW6	OFF	OFF	OFF	ON

■ Size Configuration
Use service mode to set the appropriate size (COPIER>OPTION>BODY>MODEL-SZ).

	MODEL-SZ setting
AB	0
Inch	1
A	2
AB/Inch	3

The setting will affect the following items:
• Pattern for default enlargement/reduction.
• Size detection by the feeder. (If the setting under FEEDER>OPTION>SIZE-SW in service mode is '1', AB/Inch detection will be made regardless of the country of installation.

■ Arrangement of the Original Sensor
The arrangement of original sensors may be changed. If the feeder is used, these switch settings need not be changed, since detection will be by the feeder. For sensor arrangement, see "Identifying the Size of Originals" in Chapter 3.
Use SW5 and SW6.

	AB	Inch
AB	OFF	OFF
Inch	ON	OFF
A	OFF	ON

2. DC Controller PCB (DC driver)

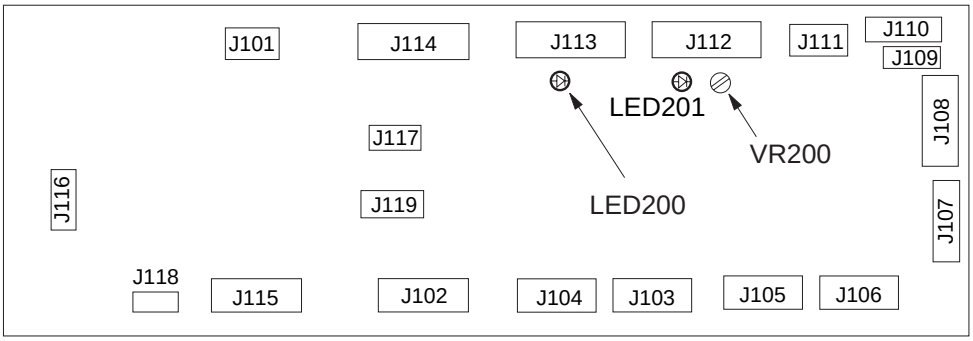

Figure 3-9

LED200: Check it to find out the state of the composite power supply PCB is indicated by flashing at different intervals. For details, see Table 13-601.

VR200: Turn it to adjust the lamp intensity used when shading auto correction (FUNCTION>CCD>MAN-ADJ) is executed in service mode. The result is good if LED201 turns on. Its adjustment range is equal to 3 rotations.
If LED201 does not turn on after a single rotation, try rotating it in the opposite direction.

LED201: Check it to find out whether VR200 is correctly adjusted (it should turn on).

States and LED Flashing Intervals

Flashing intervals	State	Description
◆ Flashes at 0.5-sec intervals 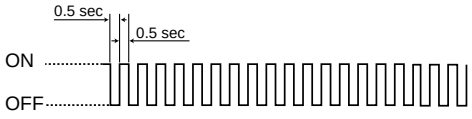	Normal	The composite power supply PCB is operating normally.
◆ OFF for 4 sec; then, flashes twice at 0.5-sec intervals 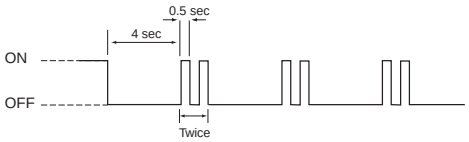	Over-current/over-voltage detected	An over-current/over-voltage condition has been detected in the +24-VU or +24-VR output. An over-current condition has been detected because of wire trapping or the like. ■ The control panel indicates 'E803'.
◆ OFF for 4 sec; then, flashes 5 times at 0.5-sec intervals. 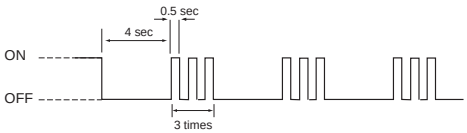	Error in communication with the DC controller PCB	An error has occurred in communication between the DC controller PCB and the composite power supply PCB, not updating the communication data for 8 sec or more. Note that this error may not flash/turn on LED100 on the DC controller PCB. • The output of the main transformer stops. • The control panel indicates 'E191'.
◆ OFF for 4 sec; then, flashes 3times at 0.5-sec intervals. 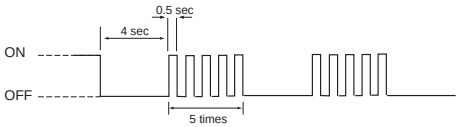	Low-voltage control error* in standby	In standby, the difference between the +24-VR setting and the actual control value is larger than indicated. • The output of the main transformer stops. • Error data is sent to the DC controller PCB. • The control panel indicates 'E803'.
◆ OFF for 4 sec; then, flashes 4 times at 0.5-sec intervals. 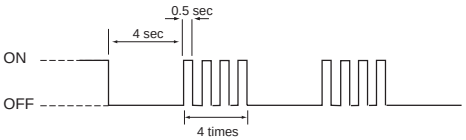	Low-voltage control error* during copying	During copying, the difference between the +24-VR setting and the actual control value is larger than indicated. • +24 VR is set to standby voltage (+18 VR). • Error data is sent to the DC controller PCB. • The control panel indicates 'E803'.
◆ OFF for 4 sec; then, flashes 6 times at 0.5-sec intervals. 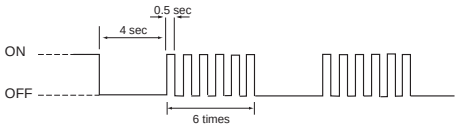	DC controller PCB check sum Error detection	The CPU on the DC controller PCB has detected a check sum of communication data twice or more continuously. • The output of the main transformer stops. • The control panel indicates 'E191'.

* The same error can occur owing to activation error in the fluorescent lamp (because of deterioration over time). If the LED flashes in threes or fours, check to see if the glass around the filament on both sides of the lamp is not black.

3. Composite Power Supply CPB

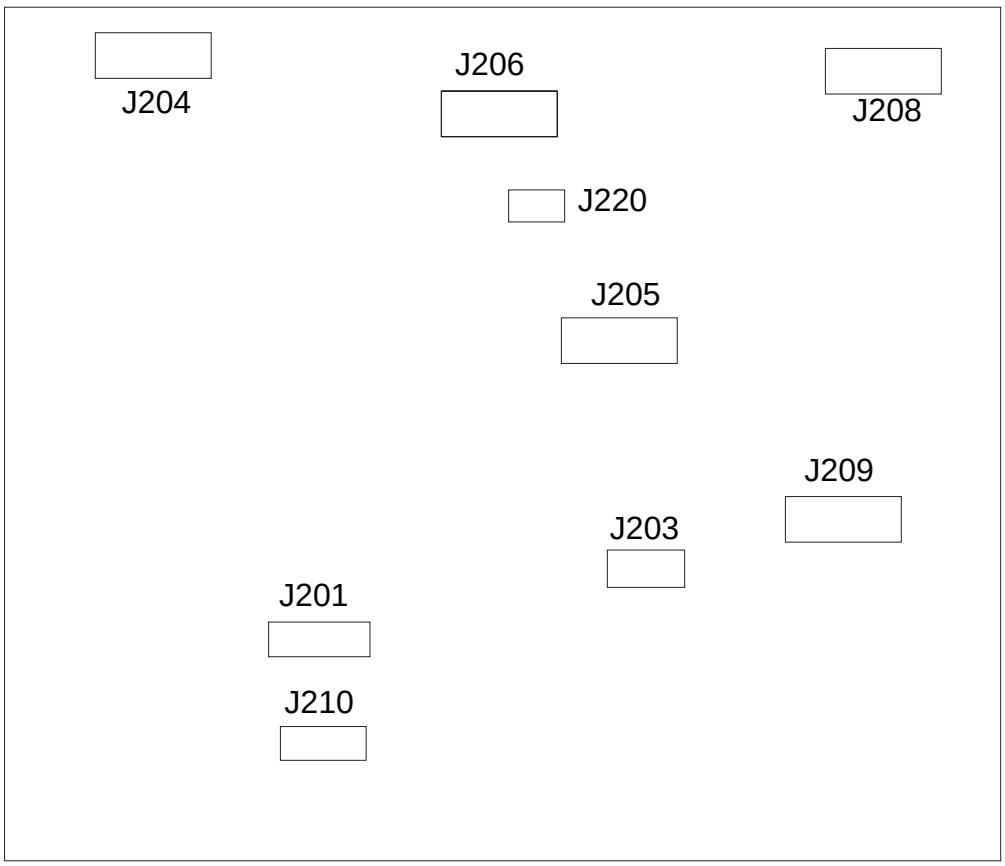

Figure 3-10

Label: Enter the values indicated on the label in service mode when replacing the composite power supply CPB.

OFST-DC	xx
AGS-GAIN	xxx
AGS-OFST	xxx
OFST1-AC	xxx
FL-OFST	xxx

Table 3-2 Label on the Composite Power Supply PCB

4. Deck Driver (side paper deck)

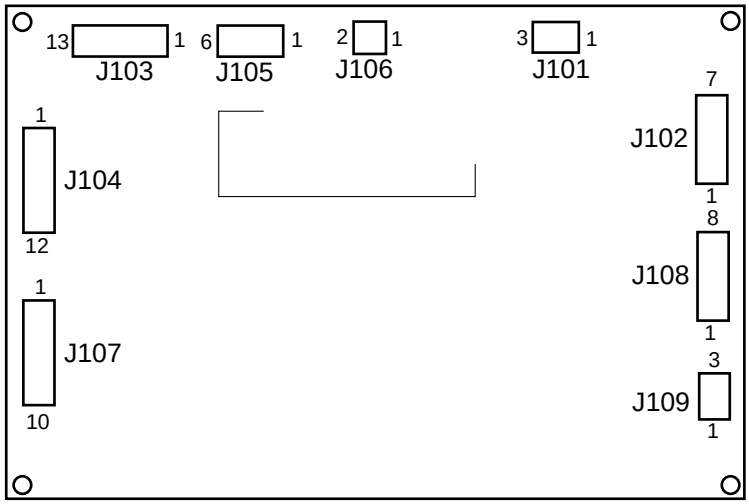

Figure 3-11

I. Upgrading

The machine may be upgraded in either of the following two ways:
- By replacing the DIMM on the image processor PCB.
- By updating the DIMM contents through downloading from a computer.

1. Replacing the DIMM

The DIMM (flash ROM) used in the machine comes in two types; both types are mounted on the image processor PCB. Figure 3-12 shows a view in which the IP small cover has been removed:
- DIMM for the IP-CPU
  4 MB: bottom of 2-layer slot
  1 MB: top of 2-layer slot
- DC-CPU DIMM (1 MB)

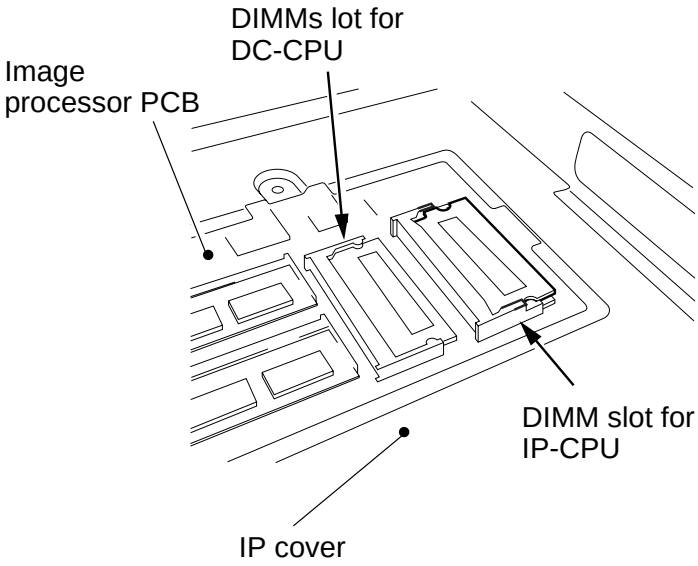

Figure 3-12

1. Removing the DIMM

1) Turn off the main power switch, and disconnect the power cord.
2) Remove the copyboard glass; then, remove the screw, and detach the small cover from the IP cover.

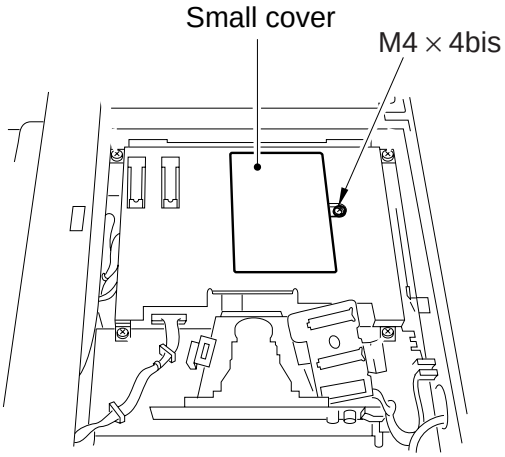

Figure 3-13

3) Open the slot claw, and pull off the DIMM as if to lift it.

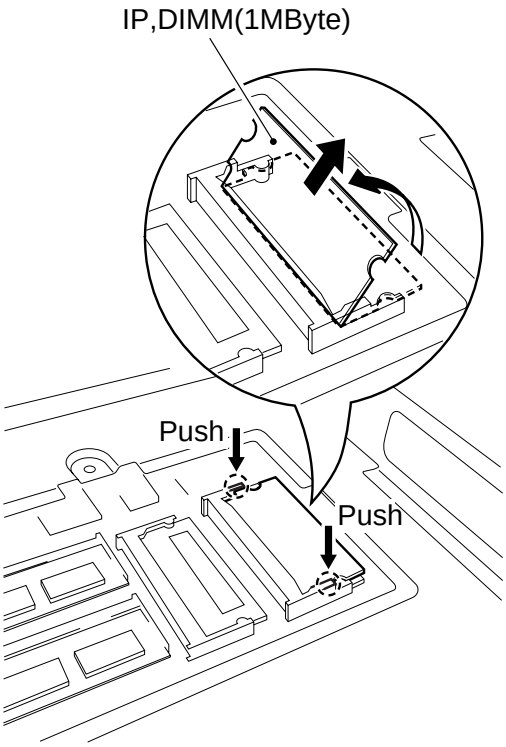

Figure 3-14

2. Mounting the DIMM

1) Check the DIMM slot on the IP PCB. The wrong slot can cause malfunction; pay attention. (Figure 3-12)
2) Insert the DIMM into the slot at an angle. At this time, check to be sure that the DIMM is fully inserted into the slot.
3) Shift down the DIMM until the claw of the slot clicks into position.
   At this time, do not force in the DIMM; such can damage the DIMM.
4) Mount the IP small cover (M4x4 screw, 1 pc.); then, mount the copyboard cover. Connect the power cord, and turn on the main power supply.

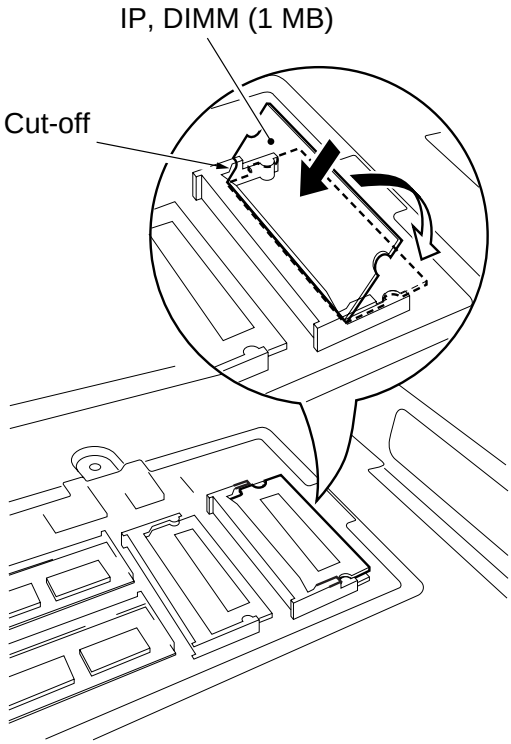

Figure 3-15

3. Downloading

1. Before Starting the Work

Obtain the following:

- PC to which the downloading tool (service tool) has been installed.
- Bi-Centronics cable (with an IEEE 1284 Standard-compliant marking)

2. Downloading

a. Connection

- Check to make sure that the communication memory lamp is off.

1) Turn off the machine's main power switch; then, disconnect the power plug, and disconnect the modular cable (telephone).
2) Open the front door, and open the connector cover for downloading.

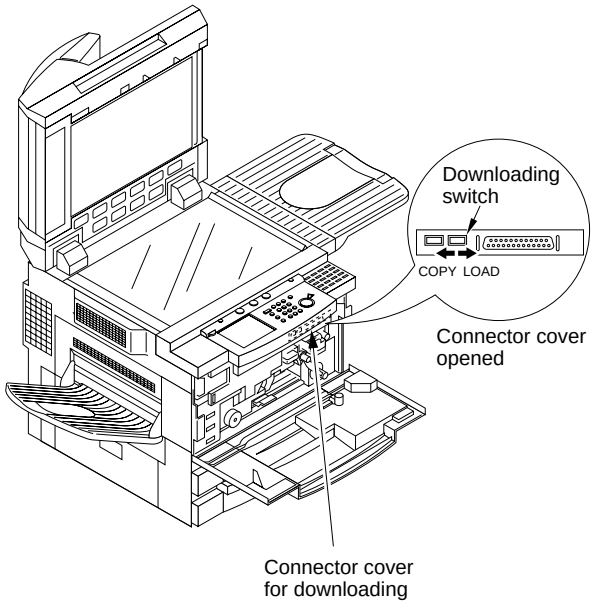

Figure 3-16

3) Connect the machine to the PC with a bi-Centronics cable.

- Make sure that the PC is off.
- Connect the 25-pin connector of the cable to the PC, and 36-pin connector to the machine.

4) Slide the switch to LOAD.

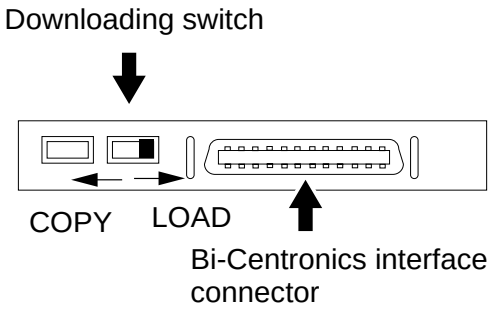

Figure 3-17

5) Turn on the PC, and start the downloading tool.

6) Connect the machine's power plug to the power outlet, and turn on the main power switch.

b. Downloading

1) Select 'To Main Menu' in response to the start-up message of the downloading tool.



2) Select 'Next' under the Download/Upload.

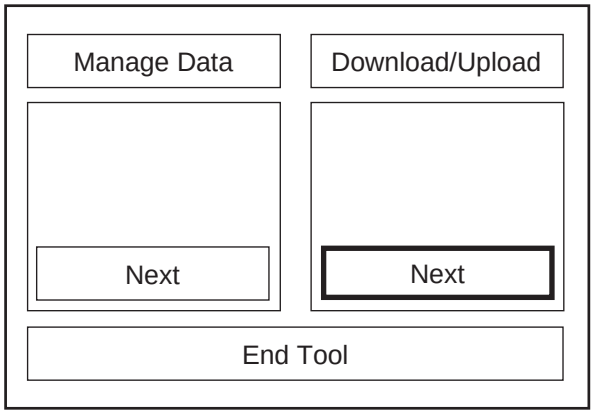

3) Click the model and PCB for downloading.
IP: DIMM for the IP-CPU
DC-CON: DIMM for the DC-CPU

4) Start upgrading the flash ROM following the instructions on the PC screen.

5) When downloading is done, operate as follows to turn off the PC:
OK → To Main Menu → End Tool → End



c. After Downloading

1) Turn off the machine's main power switch, and disconnect the power plug.
2) Disconnect the bi-Centronics cable from the PC and the machine.
3) Slide the download switch to COPY.

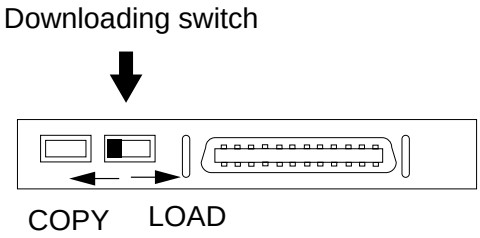

Figure 3-18

4) Close the connector cover, and close the front door.
5) If the machine is equipped with fax functions, connect the modular cable.
6) Turn on the main power switch.
7) Start service mode, and check the ROM version.
   COPIER> DISPLAY>**VERSION**

CHAPTER 4 SERVICE MODE

A. Outline

The machine's service mode is divided into the following seven:

Cause	Step	Check
1	DISPLAY	Display Mode
2	I/O DISPLAY	I/O Display Mode
3	ADJUST	Adjustment Mode
4	FUNCTION	Function Mode
5	OPTION	Setting Mode
6	TEST	PG Test Mode
7	COUNTER	Counter Mode

Table 4-1

1. Starting Service Mode and Making Selections

1) Press the asterisk key '' on the control panel.
2) Press '2' and '8' on the keypad at the same time.
3) Press the asterisk key '' on the control panel.
   - The display changes to the screen shown in Figure 13-801, indicating the connected accessories (FEEDER, SORTER, FAX).

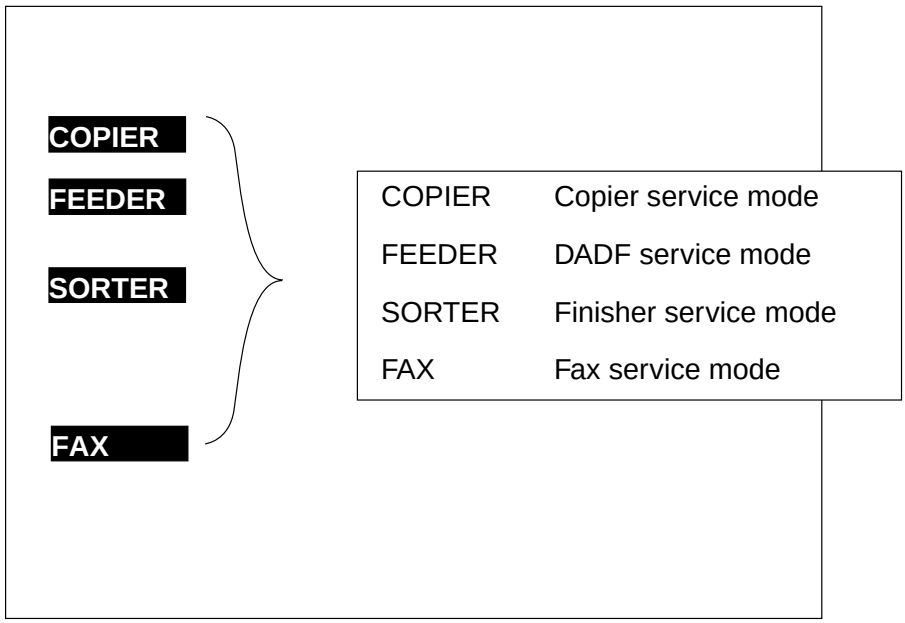

Figure 4-1

2. Ending Service Mode

Press the Reset key once to return to the Service Mode Initial screen (Figure 4-1).
Press the Reset key twice to end service mode and return to the User screen (standard).

3. Backing Up the RAM

The RAM data may be backed up in either of the following two ways:

Service Label: The label is found on the left side of the back of the front cover (Figure 4-2). Each machine is adjusted at the factory, and the adjustment values are recorded in the label.

List Print: The command generates a back-up output of ADJUST, OPTION, and COUNTER.
COPIER>FUNCTION>MISC-P>**P-PRINT**

- When Replacing the Image Processor PCB
  Enter the values indicated in the list print obtained before replacement.
- When Replacing the Composite Power Supply PCB
  Enter the values indicated on the label attached to the composite power supply.

COPIER/ADJUST		Factory	1	2	COPIER/ADJUST		Factory	1	2
Service Date					Service Date				
LAPM	FL-OFST				HV-PRI	AGS-GAIN			
	FL-DUTY					AGS-OFST			
	FL-PDUTY					OFST1-DC			
AE	AE-TBL					OFST1-AC			
ADJ-XY	ADJ-X					OFST2-AC			
	ADJ-Y					P-AC2			
	ADJ-S					P-AC3			
					HV-TR	TR-N1			
CCD	PPR					TR-N2			
	W-PLT					TR-OFST			
						TR-SPP			
LASER	PVE-OFST								
	LA-OFF				FEED-ADJ	REGIST			
						LOOP-CST			
						LOOP-MF			
DEVELOP	DE-DC					ADJ-REFE			
	DE-NO-DC					RVS-FD1			
	DE-OFST					RVS-FD2			
						RVS-DUP			
DENS	DENS-ADJ								
					CST-ADJ	MF-A4R			
HV-PRI	P-DC					MF-A6R			
	P-NO-DC					MF-A4			
	P-AC								
	P-NO-AC								
Boby No.			Date.				FB4-3277		

Figure 4-2 Service Label

OFST-DC	xx
AGS-GAIN	xxx
AGS-OFST	xxx
OFST1-AC	xxx
FL-OFST	xxx

Figure 4-3 Label on the Composite Power Supply PCB

4. Basic Operation

The screen design consists of three layers: Level 1, Level 2, and Level 3 screens.

a. Initial Screen

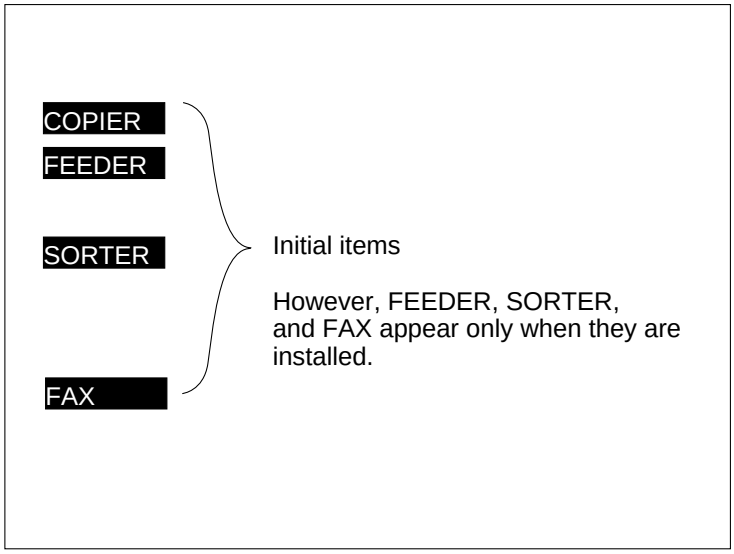

Figure 4-4

- An initial item is selected when the highlighted notation is pressed.

b. Level 1/Level 2 Screen

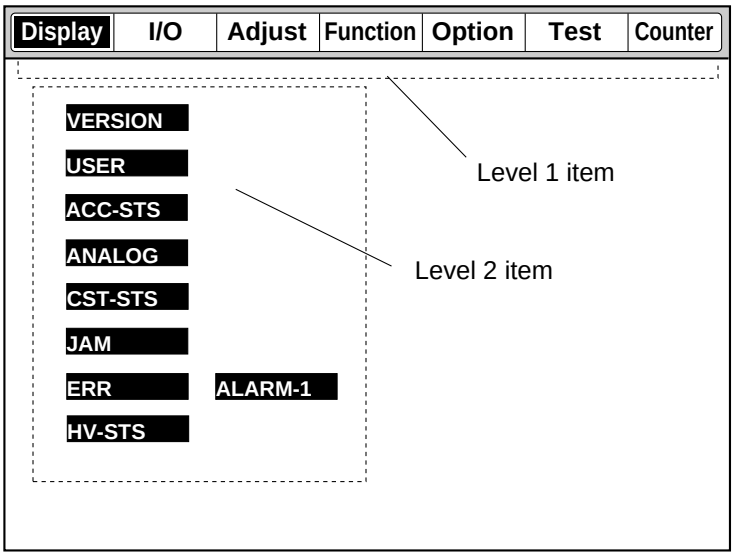

Figure 4-5

- To select a Level 1 item, press an item at the top of the screen.
- To select a Level 2 item, press a highlighted item.

c. Level 3 Screen

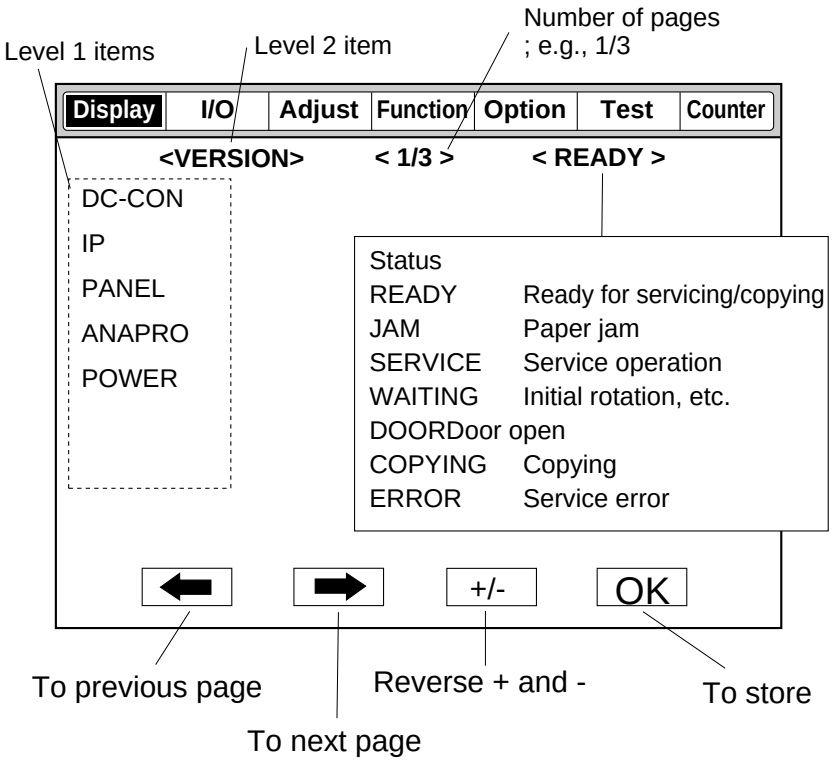

Figure 4-6

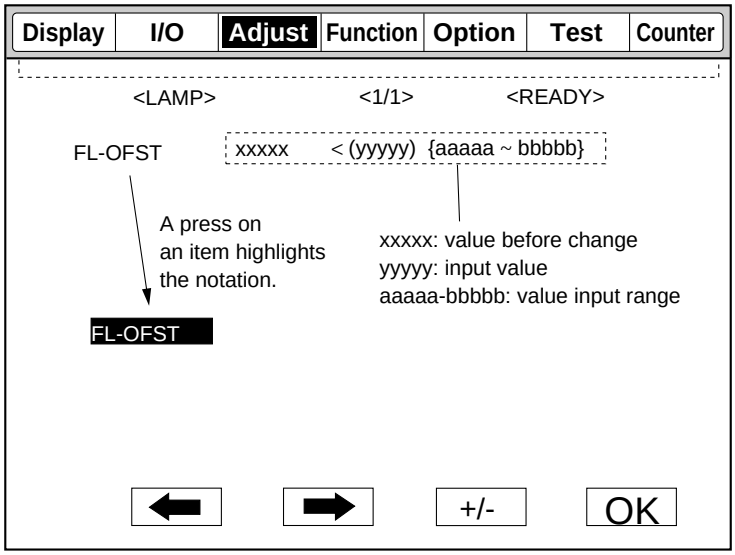

Figure 4-7

- A level 3 item may be selected by pressing it, and the selection is indicated by highlighting the item.

d. Selecting a Screen

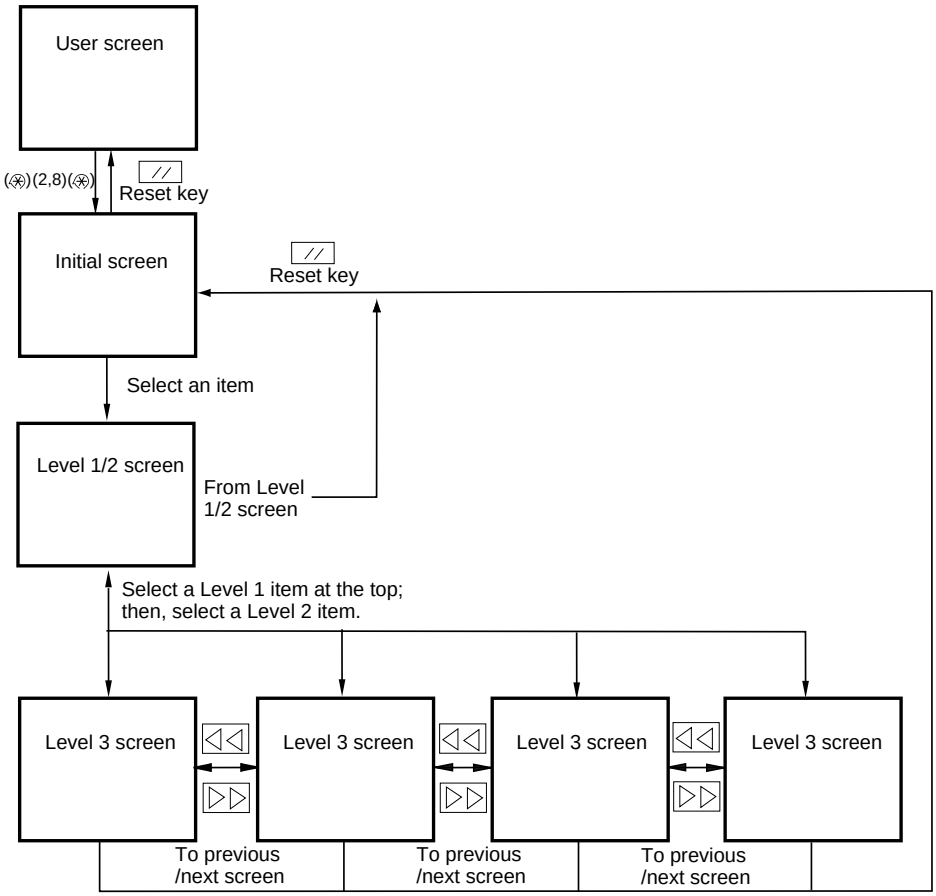

Figure 4-8

e. Guide to Keys
   1. Keypad
      Use it to enter a numeral (0 through 9).
   2. User Mode Key
      Use it to start user mode.
   3. Reset Key
      Use it to end service mode.
   4. Stop Key
      Use it to stop ongoing operation.
   5. Clear Key
      Use it to initialize settings in service mode or software counter readings.
   6. Copy Start Key
      Use it to make copies without ending service mode after making adjustments.
   7. Previous Page Key
      Use it to return to the previous page.
   8. Next Page Key
      Use it to move to the next page.
   9. +/- Key
      USe it to switch between + and -.
   10. OK Key
      Use it to store an input value.

B. DISPLAY Control Display Mode

Figure 4-9 shows the DISPLAY mode Level 2 screen and its items.

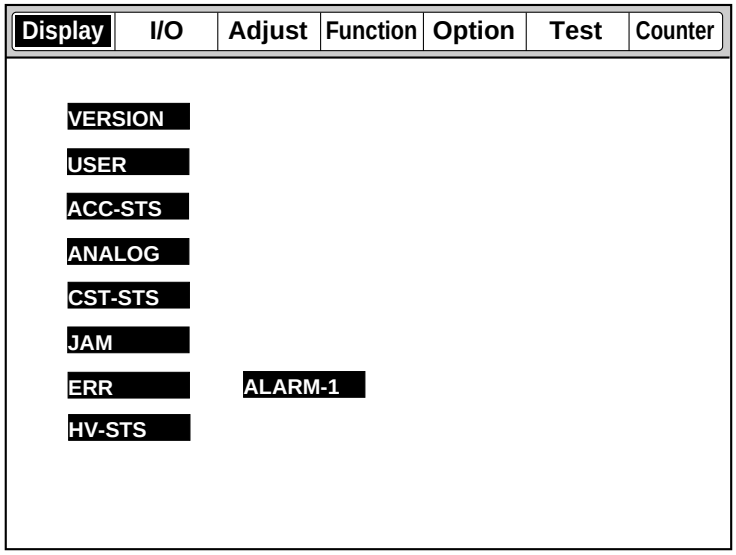

Figure 4-9 DISPLAY Level 2 Screen

DISPLAY Items

Level 1	Level 2	Level 3	Outline
DISPLAY	VERSION	DC-CON	Indicates the DIMM version of the DC controller PCB.
		IP	Indicates the DIMM version of the image processor PCB.
		PANEL	Indicates the ROM version of the control panel controller PCB.
		POWER	Indicates the ROM version of the composite power supply PCB.
		FEEDER	Indicates the ROM version of the feeder controller PCB.
		SORTER	Indicates the ROM version of the sorter controller PCB.
		PS-PCL	Indicates the version of the ROM of the PS-PCL board.
		LIPS	Indicates the ROM version of the LIPS board.
		SCSI	Indicates the version of the ROM on the SCSI Board.
		SDL-STCH	Indicates the version of the ROM of the saddle.
	USER	LANGUAGE	Indicates the ROM version of the LIPS board.
		COUNTER	Indicates the selected language.
	ACC-STS	FEEDER	Indicates the counter control type for the copy counter.
		SORTER	Indicates the connection of a feeder.
		DECK	Indicates the connection of the sorter.
		CARD	Indicates the connection of the paper deck.
		PCB	Indicates the connection of the control card.
		RAM	Indicates the connection of various boards (accessories*).
	ANALOG	TEMP	Indicates the total size of the RAM recognized by the machine.
		HUM	Indicates the machine internal temperature (environment sensor).
		ABS-HUM	Indicates the machine internal humidity (environment sensor).
		DR-TEMP	Indicates the absolute humidity.
		FIX-C	Indicates the drum ambient temperature (drum ambient temperature sensor).
	CST-STS	WIDTH-C1	Indicates the temperature of the upper fixing roller (main thermistor).
		WIDTH-C2	Indicates the width of the paper in the cassette 1 and the output of the paper size sensor.
		WIDTH-C3	Indicates the width of the paper in the cassette 2 and the output of the paper size sensor.
		WIDTH-C4	Indicates the width of the paper in the cassette 3 and the output of the paper size sensor.
		WIDTH-C5	Indicates the width of the paper in the cassette 4 and the output of the paper size sensor.
		WIDTH-C6	Indicates the width of the paper in the cassette 5 and the output of the paper size sensor.
		WIDTH-MF	Indicates the width of the paper in the cassette 6 and the output of the paper size sensor.
		WIDTH-DK	Indicates the width of paper in the multifeeder and the output of the paper size sensor.
	JAM		Indicates the width of paper in the deck and the output of the paper size sensor.
	ERR		Indicates the jam history.
	HV-STS	PRIMARY	Indicates the error history.
		BIAS	Indicates the current value (A) of the primary charging roller.
		TR-V	Indicates the developing bias DC value (V).
	ALARM1	DF	Indicates the ATVAC value.
		SORTER	Indicates the most recent alarm of the feeder.
			Indicates the most recent alarm of the sorter.

* Varies depending on the country.

<VERSION> DISPLAY
Indicates the ROM version of the machine and the accessories PCBs.

Level 3	Description	Remarks
DC-CON	DIMM version f the DC controller PCB	Notation: xx, yy xx: version number yy: R&D control number
IP	DIMM version of the image processor PCB	
PANEL	ROM version of the control panel controller PCB	
POWER	ROM version of the composite power supply PCB	
FEEDER	ROM version of the feeder controller PCB	
SORTER	ROM version of the sorter controller PCB	
SDL-STCH	ROM version of the saddle stitcher controller PCB	
LIPS	ROM version of the LIPS board	

<USR>
Indicates the items related to the User screen and the user.

Level 3	Description	Remarks
LANGUAGE	Notation: **<LANGUAGE AA.BB.CC.DD>** Indicates the selected language. AA: country code (not used in the machine) BB: language code CC: site code (See Table 14-803-1.) DD: Paper configuration code (Table 14-802)	
COUTER	Notation: **<COUNTER EE>** Indicates the type of copy counter count control. EE: Counter code detail (Table 13-803)	

Paper Configuration Code: DD

Code	Configuration
00	AB
01	Inch
02	A
03	AB/Inch

Table 4-2

Type Code: EE

Code	Counter 1	Counter 2	Counter 3
00	Total	Pint total	
01	Total		Fax print
10	Copy total		Fax print
11	All sizes		

Table 4-3

Site Code: CC

Code	Model
00	Common model
01	Canon model

Table 4-3-1

<ACC-STS> DISPLAY
Indicates accessory connection.

Level 3	Description	Remarks
FEEDER	Feeder connection	0: not connected. 1: connected.
SORTER	Sorter connection	
DECK	Paper deck connection (if the paper deck is required or not)	0: disable operation. The cable of the paper deck is connected to the copier, but the deck is not recognized by the copier. 1: enable operation. The paper deck is fully recognized by the copier; or, no paper deck is installed to the copier as an accessory.
CARD	Control card connection (if a control card is required)	0: disable operation. (The control card function is effective, but no card is set.) 1: enable operation. (A control card is set; or, the control card function is not effective.)
PCB	Accessory board connection Indicates the number of the board recognized by the copier.	1: Network board 2: not used. 3: Standard board 3: Standard memory (always 1) 4: Printer 5: SCSI board 6: G3FAX board 7: G3FAX (expansion) board
RAM	Indicates the size of the RAM recognized by the machine. If standard, 32 MB; with 1 addition, 64 MB; with 2 additions, 96 MB. Note: that any first addition must be installed to J723.	

<ANALOG>
Indicates the analog sensor readings.

Level 3	Description	Remarks
TEMP	Machine internal temperature (environment sensor)	°C
HUM	Machine relative humidity (environment sensor)	% RH
ABS-HUM	Machine absolute humidity (environment sensor) Indicates in terms of g of water in 100 m3 of air.	g
DR-TEMP	Photosensitive drum ambient temperature	°C
FIX-C	Upper fixing roller temperature (°C) Indicates the temperature detected by the main thermistor (TH1). Normally, controlled to 195°C.	°C

<CST-STS>
Indicates the use of cassettes and multifeeder.

Level 3	Description	Remarks
WIDTH-C1	Indicates the width (mm) of paper in the cassette 1 and paper size.	Indicates paper widths in whole numbers, omitting decimal places.
WIDTH-C2	Indicates the width (mm) of paper in the cassette 1 and paper size.	
WIDTH-C3	Indicates the width (mm) of paper in the cassette 1 and paper size.	
WIDTH-C4	Indicates the width (mm) of paper in the cassette 1 and paper size.	
WIDTH-C5	Indicates the width (mm) of paper in the cassette 1 and paper size.	
WIDTH-C6	Indicates the width (mm) of paper in the cassette 1 and paper size.	
WIDTH-MF	Indicates the width (mm) of paper in the multifeeder and paper size.	
WIDTH-DK	Indicates the width (mm) of paper in the deck and paper size.	

<JAM>
Indicates jam data.

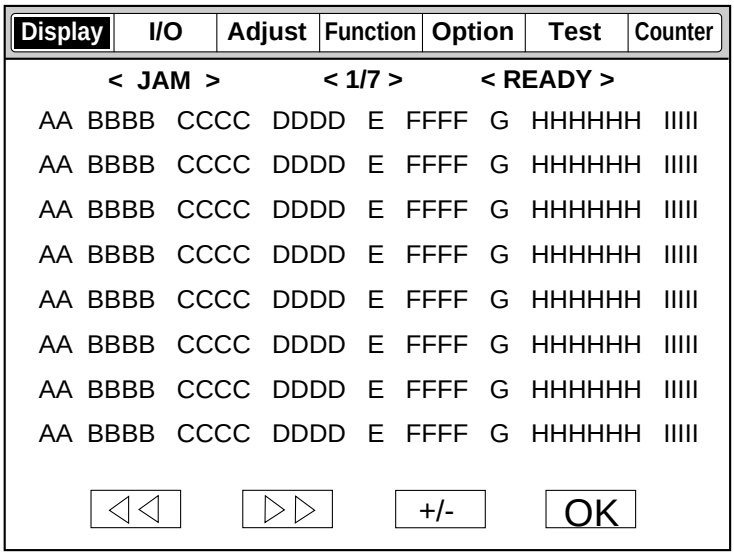

Figure 4-10

Level 3	Description	Remarks
AA	Order of jam (larger, the less recent)	1 to 50 (50 max.)
BBBB	Day of occurrence	Moth, day; 2 digits each
CCCC	Time of occurrence	24-hour notation
DDDD	Time of recovery	24-hour notation
E	Location: 0 for copier, 1 for feeder, 2 for sorter.	
FFff	Jam code First 2 digits (FF): type of jam (Table 4-4) Last 2 digits (ff): sensor detecting the jam (Table 4-5)	
G	Pick-up position (Table 4-5-1)	
HHHHHH	Pick-up holder software counter reading	
IIIII	Paper size	

Jam Type

Code	Type
01xx	Delay jam
02xx	Stationary jam
03xx	Timing jam
04xx	Protection jam
10xx	Residual jam at power-on
11xx	Do open during copying
12xx	Double feeding

See Table 4-5-2.

Table 4-4

G. Pick-Up Position

Code	Source
1	Cassette 1
2	Cassette 2
3	Cassette 3
4	Cassette 4
5	Cassette 5
6	Cassette 6
7	Paper deck
8	Multifeeder
9	Duplexing assembly

Table 4-5-1

Sensor

Code	Sensor
xx01	Pre-registration sensor
xx02	Vertical path 1 sensor
xx03	Vertical path 2 sensor
xx04	Cassette 1 pick-up sensor
xx05	Cassette 2 pick-up sensor
xx06	Cassette 3 pick-up sensor
xx07	Cassette 4 pick-up sensor
xx08	Cassette 5 pick-up sensor
xx09	Cassette 6 pick-up sensor
xx0A	Deck pick-up sensor
xx0B	Pre-registration paper sensor for multifeeder
xx31	Internal delivery sensor
xx32	Bin 1 delivery sensor
xx33	Bin 2 delivery sensor
xx34	Bin 3 delivery sensor
xx35	Bin 3 inlet sensor
xx36	Fixing assembly outlet sensor
xx37	Bin 1 delivery sensor via reversal delivery
xx38	Bin 2 delivery sensor via reversal delivery
xx39	Bin 3 delivery sensor via reversal delivery
xx3A	Bin 3 inlet sensor via reversal delivery
xx61	Duplexing assembly inlet sensor
xx62	Re-pick, up sensor

Table 4-5

Logic Jams

	Description	Correction
9004	The communication between the IP-CPU and the DC-CPU is faulty.	Remove the paper. Open and close the front cover.
9005	The communication between the finisher and the image processor PCB is faulty.	
9006	An excess volume of paper is placed in the Finisher-E1 at the start of copying or printing.	Remove the paper from the delivery tray.

Table 4-5-2

■ Jam Detection by the DADF DISPLAY

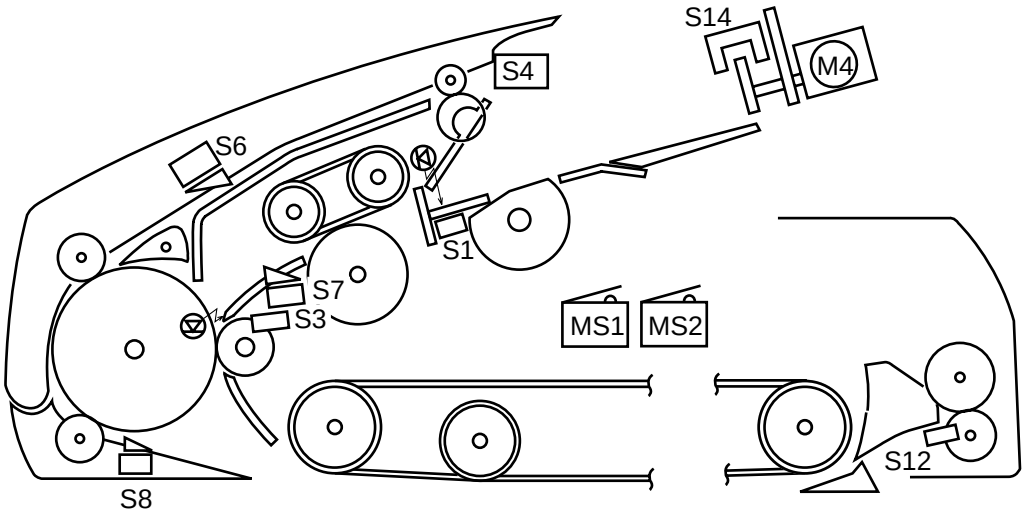

S1 ..... Original tray paper sensor
S3 ..... Registration paper sensor
S4 ..... Upper cover sensor
S6 ..... Delivery sensor 1
S7 ..... Pick-up sensor
S8 ..... Reverse sensor
S12 .... Delivery sensor 2
S14 .... Recirculating sensor
MS1 .. RF switch
MS2 .. Upper cover switch

Figure 4-10-1

	Jam type	Sensor	Description	Code
Pick-up	Original out	S1, S7	After the pick-up motor M1 has turned on, the sensor S7 does not detect the leading edge of an original and, in addition, the sensor S1 does not detect an original.	0001
	Pick-up delay	S7	After the pick-up motor M1 has turned on, the sensor S7 does not detect the leading edge of an original in 1500 msec.	0002
	Registration delay	S3, S7	After the sensor S7 has detected the leading edge of an original, the sensor S3 does not detect the leading edge of an original in 350 msec.	0003

Table 4-5-2

DISPLAY

	Jam type	Sensor	Description	Code
Pick-up	Double feeding	S3	When the 1st original is set on the copyboard glass, the sensor S3 detects an original.	0006
	Original leading edge retreat	S3	When starting original pick-up, the sensor S3 does not detect the leading edge of an original.	0008
Reversal	Reversal delay 1	S8	When reversing or delivering an original, the sensor S8 does not detect the leading edge of an original 140 mm or 225 msec after the belt motor M3 has started to rotate clockwise.	0011
	Reversal stationary	S8	When reversing or delivering an original, the sensor S8 does not detect the leading edge of an original after a reversal delay has been checked.	0012
	Reversal delay 2	S8	When delivering or picking up an original, the original (to be delivered) is moved back to the copyboard glass together with the original being picked up, causing the sensor S8 to fail to detect the preceding original 50 mm after the belt motor starts to rotate counterclockwise.	0013
	Reversal initial paper	S8	When reversing an original, the sensor S8 detects an original.	0020
	Reversal pick-up delay	S3	When reversing an original, the sensor S3 does not detect the leading edge of the reversed original in 100 mm or 300 msec after the sensor S8 has detected the original.	0032
	Reversal pick-up stationary	S3	After the sensor S8 has turned on and a feed length of 'original size + 180 mm', the sensor S3 does not detect the trailing edge of the reversed original.	0023
Delivery	Delivery delay	S6	When delivering an original, the sensor S6 does not detect an original in 100 mm or 250 msec after the sensor S8 has detected the leading edge of an original.	0041
	Delivery stationary	S6	After a check for reversal stationary, the sensor S6 does not detect the trailing edge of an original in 100 mm or 250 msec.	0042
	DADF open	MS1	The DADF is opened while it is in operation.	0081
	Upper cover open	MS2 S4	The upper cover is opened while the DADF is in operation.	0082
	Original re-circulating	S1	The sensor S1 does not detect the original delivered to the original tray.	0083
	Jam original	S6, S3 S8, S7	At the start of original pick-up, the sensor S6, S3, or S8 (or S7 if the paper stopper is up) detects an original.	0084
	Residual original	S8	When picking up the 1st original, an original is detected on the copyboard glass.	0088
	Re-circulating bar idle swing (2nd original and later)	S14	For the 2nd and subsequent originals, the re-circulating lever rotated without coming into contact with an original.	0089

Table 4-5-3

DISPLAY

Jam type	Sensor	Description	Code
Delivery failure	S3, S6	When delivering an original in lower separation pick-up mode, the original on the pick-up side is not stopped (e.g., the original being picked up is longer than the original being delivered).	008A
DADF open	MS1	The DADF is opened while the copier is at reset because of the absence of copy paper.	0091
Upper cover open	MS2, S4	The upper cover is opened while the copier is at rest because of the absence of copy paper.	0092
Re-circulating lever idle swing	S13	The re-circulating lever moved off existing originals during original pick-up.	0093

<ERR>
Indicates error codes/alarm codes.

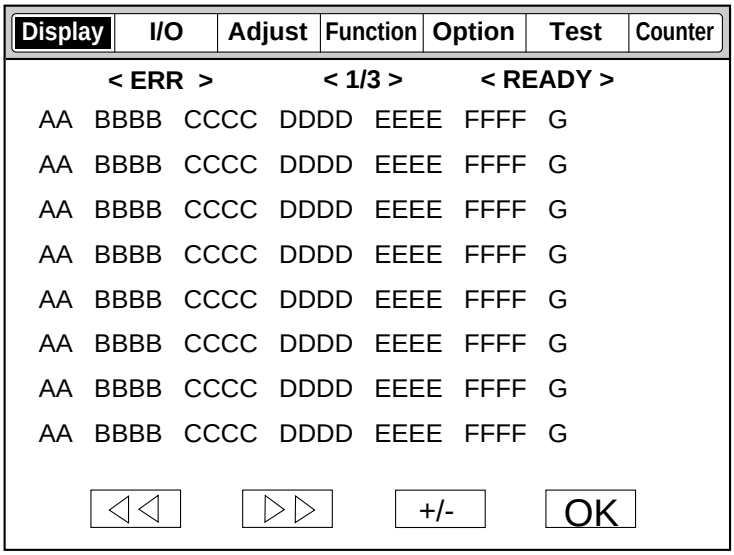

Figure 4-11

Level 3	Description	Remarks
AA	Error number (larger, less recent)	1 to 20 (20 max.)
BBBB	Date of occurrence	Month, day
CCCC	Time of occurrence	24-hour notation
DDDD	Time of recovery	24-hour notation
EEEE	Error code (Exxx)	
FFFF	Detail code E01, E004, E805 has detail code.	
G	Location: 0 for copier, 2 for feeder, 2 for sorter/finisher.	

For descriptions of each error code, see Chapter 5.

<ALARM1>
Indicates the most recent alarms for the sorter and the feeder.

Level 3	Description	Remarks
DF	Indicates the most recent alarm for the feeder. I no alarm, indicates '00'. For the DADF alarms, see the following pages.	
SORTER	Indicates the most recent alarm for the finisher/saddle finisher. SORTER: aa bb cc dd aa: stapler alarm for the finisher bb: stapler alarm of the saddle finisher cc: stack alarm dd: tray alarm	

■ DADF Alarms DISPLAY

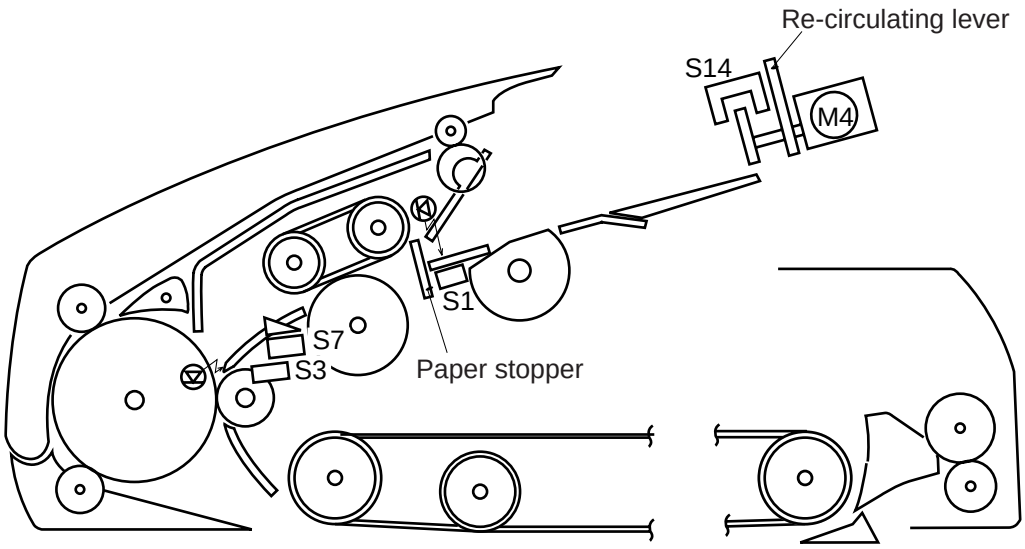

S1 ..... Original tray paper sensor
S3 ..... Registration paper sensor
S7 ..... Pick-up sensor
S14 .... Re-circulating sensor

Figure 4-11-1

Original placement	Sensor	Description	RDF operation	Code
Re-circulating lever idle swing	S1	Immediately after the re-circulating lever motor M4 has operated, the re-circulating lever swung idly without coming into contact with an original.	The on-going operation stops immediately upon detection.	01
Pick-up fault	S7	At time of pick-up, the sensor S7 does not detect the leading edge of an original in 1500 ms.	The separation belt, feeding roller, and pick-up roller stop immediately. The DADF stops after discharging the copy of the preceding original.	03
Paper stopper overriding	S7	When being placed, the original has overridden the paper stopper.	The ongoing operation stops immediately upon detection.	05
Number of originals	S3	After jam removal, the number of originals set on the original tray has changed; see Note: number of originals copied > number of originals on the tray	The ongoing operation stops immediately upon detection.	11
Number of originals	S3	The re-circulating lever does not fall on the original tray for some reason, not enabling detection of the last original. Reference: Normally, as many as 50 sheets of A5, STMT, A4, B5, or LTR may be placed; or, 25 sheets of A3, B4, 279x432-mm (11"x17"), or LGL.	As many as 100 sheets are counted, and the operation stops.	12
Original out	S14	The re-circulating lever has fallen to the original tray while an original is being processed.	Stops immediately upon detection.	13
Original size	S3	The size of the original which has been picked up is not of a default size.	Stops immediately upon detection.	14
Original size, Mixed sizes (in reduce image composition)	S3	[1] The original which has been picked up is of a size not supported by reduce image composition mode. [2] The original which has been picked up is of a size different from the first original.	Stops immediately upon detection.	15

Note: To reset, remove the originals form the original tray, and open the DADF.

Table 4-5-4

<HV-STS>
Indicates the measurements of voltage and current.

Level 3	Description	Remarks
PRIMARY	Current applied to the primary charging roller.	Unit: µA; about 200 µA
BIAS	Developing bias Dc value	Unit: V
TR-V	ATVC detection voltage If the level of 'TR-V' is 30 to 100, transfer is assumed to be normal.	Unit: V

C. I/O Operation Check Mode

Figure 4-12 shows the Level 2 screen and its items.

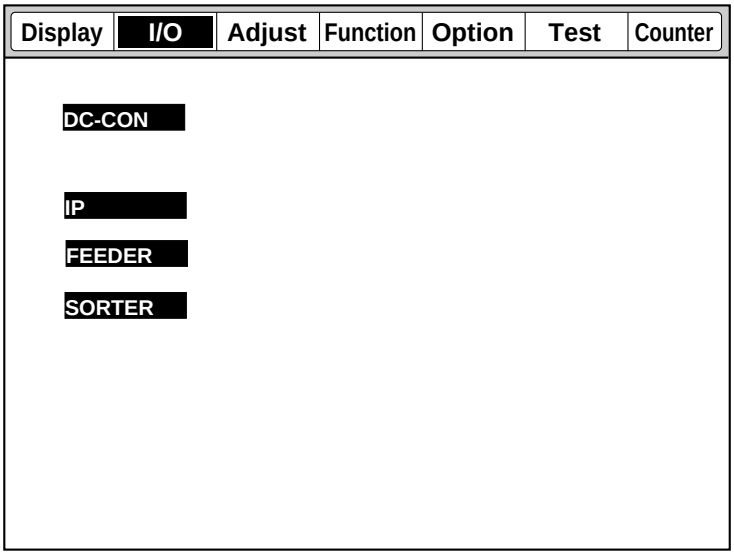

Figure 4-12 I/O Level 2 Screen

I/O
- DC-CON — P001 to P027
- IP — P001 to P011
- FEEDER — P001 to P010
- SORTER — P001 to P024

1. DC-CON

DC-CON

Address	bit	Display	Signal	Connector	Action
P001	bit0	duplexing reversal motor A	M10A	J114-A12	
	bit1	duplexing reversal motor A*	M10A*	J114-A11	
	bit2	duplexing reversal motor B	M10B	J114-A14	
	bit3	duplexing reversal motor B*	M10B*	J114-A13	
	bit4	lower feeder motor A	M6A	J114-B8	
	bit5	lower feeder motor A*	M6A*	J114-B7	
	bit6	lower feeder motor B	M6B	J114-B10	
	bit7	lower feeder motor B*	M6B	J114-B9	
	bit8	3-bin motor A	3BMA	J110-12	
	bit9	3-bin motor A*	3BMA*	J110-11	
	bit10	3-bin motor B	3BMB	J110-13	
	bit11	3-bin motor B*	3BMB*	J110-14	
	bit12				
	bit13				
	bit14				
	bit15				
P002	bit0	pick-up motor 12A	M5_A	J108-A6	
	bit1	pick-up motor 12A*	M5_B	J108-A7	
	bit2	pick-up motor 12B	M5_M0	J108-A8	
	bit3	pick-up motor 12B*	M5_M1	J108-A9	
	bit4	horizontal registration motor phase A	SIDE_A	J102-A3	
	bit5	horizontal registration motor phase A*	SIDE_A*	J102-A4	
	bit6	horizontal registration motor phase B	SIDE_B	J102-A5	
	bit7	horizontal registration motor phase B*	SIDE_B*	J102-A6	
	bit8	delivery motor phase A	M8_A	J106-8	
	bit9	delivery motor phase A*	M8_A*	J106-9	
	bit10	delivery motor phase B	M8_B	J106-12	
	bit11	delivery motor phase B*	M8_B*	J106-13	
	bit12	delivery reversal motor A	M7_A	J107-11	
	bit13	delivery reversal motor A*	M7_A*	J107-10	
	bit14	delivery reversal motor B	M7_B	J107-13	
	bit15	delivery reversal motor B*	M7_B*	J107-12	

DC-CON

Address	bit	Display	Signal	Connector	Action
P003	bit0	main motor clock detection	M1LCK	J114-A12	STBY 1, ON 0
	bit1	laser scanner motor clock detection	M4LK	J114-A1	STBY 1
	bit2	fixing motor lock detection	M2LK	J114-A14	STBY 1, ON 0
	bit3	toner sensor	TS1S	J114-A13	STBY 1
	bit4	waste toner sensor	PS14S	J114-B8	STBY 1
	bit5			J114-B7	
	bit6			J114-B10	
	bit7			J114-B9	
	bit8			J110-12	
	bit9			J110-11	
	bit10			J110-13	
	bit11	left door open/closed sensor	PS13S	J110-14	when open, 0; when closed, 1.
	bit12	copyboard cover open/closed sensor	PS2S		when open, 0; when closed, 1.
	bit13	right door open/closed sensor	PS12S		when open, 0; when closed, 1.
	bit14	front door open/closed sensor	FDOOR_PD*		when open, 1; when closed, 0.
	bit15	24 VR detection	(24V)		when open, 1; when closed, 0.
P004	bit0	cassette 1 pick-up sensor	PS18S	J108-A6	when paper is present, 1; absent, 0.
	bit1	cassette 2 pick-up sensor	PS19S	J108-A7	when paper is present, 1; absent, 0.
	bit2	No. 2 registration sensor	PS11S	J108-A8	when paper is present, 1; absent, 0.
	bit3	registration sensor	PS4S	J108-A9	when paper is present, 1; absent, 0.
	bit4			J102-A3	
	bit5	1-bin delivery sensor	PS7S	J102-A4	when paper is present, 1; absent, 0.
	bit6	2-bin delivery sensor	3BEX2	J102-A5	
	bit7	3-bin delivery sensor	3BEX3	J102-A6	
	bit8	reversal delivery sensor	PS6S	J106-8	When paper is present, 0; absent, 1.
	bit9	fixing assembly outlet sensor	PS40S	J114-A2	when paper is present, 1; absent, 0.
	bit10	re-pick up sensor	PS9S	J106-12	when paper is present, 0; absent, 1.
	bit11	horizontal registration sensor	PS10S	J102A-8	when edge is detected, 0.
	bit12	3-bin shift tray HP sensor	3BMHPS	J107-11	
	bit13			J107-10	
	bit14	3-bin inlet sensor	3BINLT	J107-13	
	bit15	duplexing assembly inlet sensor	PS8S	J107-12	when paper is present, 0; absent, 1.

DC-CON

Address	bit	Display	Signal	Connector	Action
P005	bit0	main motor drive	M1D*	J102-B11	when 0, ON.
	bit1	pre-exposure lamp drive	PED	J112-A1	
	bit2	laser scanner motor drive	M4D	J104-A2	
	bit3	registration roller clutch	CL1D	J102-B4	
	bit4	vertical path 12 clutch drive	CL3D*	J108-A4	
	bit5	developing clutch	CL4D*	J102-B8	
	bit6	multifeeder pick-up clutch	CL2D*	J102-B2	
	bit7	multifeeder solenoid	SL3D*	J102-B6	
	bit8	pick-up 12 solenoid drive	SL1D*	J108-A5	
	bit9	primary charging roller solenoid	SL6BK	J104-A7	
	bit10	delivery flapper solenoid	SL2D*	J106-7	
	bit11	3-bin delivery flapper solenoid	SBLSLD	J110-10	
	bit12	3-bin flapper solenoid	3BSLD*	J110-9	
	bit13	3-bin shift motor drive	3BMD_F	J110-8	
	bit14	fixing motor drive	M2D*	J115-A6	
	bit15	cleaning belt solenoid	SL5D	J115-A4	
P006	bit0	scanner motor step switch signal 0		-	
	bit1	scanner motor step switch signal 1		-	
	bit2	scanner motor step switch signal 2		-	
	bit3	scanner motor step switch signal 3		-	
	bit0	scanner motor current control signal 0		-	
	bit5	scanner motor current control signal 1		-	
	bit6	scanner motor hold control signal		-	
	bit7	intensity sensor level setting		-	
	bit8				
	bit9				
	bit10	fixing assembly inlet guide solenoid (pull: down)	SL6	J104-A4	
	bit11	fixing inlet guide solenoid (back: up)	SL6BK	J104-A5	
	bit12				
	bit13				
	bit14				
	bit15	reversing guide cooling fan	FM9D	J106-4	

DC-CON

Address	bit	Display	Signal	Connector	Action
P007	bit0	multifeeder sensor	PS3S	J108-B17	when paper is present, 0; absent, 1.
	bit1				
	bit2				
	bit3				
	bit4				
	bit5				
	bit6				
	bit7				
	bit8				
	bit9				
	bit10				
	bit11				
	bit12	3-bin ID		J110-15	
	bit13				
	bit14				
	bit15				
P008	bit0	cassette 1 size detection bit 0	CS1B0	J115-B4	
	bit1	cassette 1 size detection bit 1	CS1B1	J115-B5	
	bit2	cassette 1 size detection bit 2	CS1B2	J115-B6	
	bit3	cassette 1 size detection bit 3	CS1B3	J115-B7	
	bit4	cassette 1 size detection bit 4	CS1B4	J115-B8	
	bit5	cassette 2 size detection bit 0	CS2B0	J115-B10	
	bit6	cassette 2 size detection bit 1	CS2B1	J115-B11	
	bit7	cassette 2 size detection bit 2	CS2B2	J115-B12	
	bit8	cassette 2 size detection bit 3	CS2B3	J115-B13	
	bit9	cassette 2 size detection bit 4	CS2B4	J115-B14	
	bit10	cassette 1 paper sensor	UPPD	J108-A10	when paper is present, 0; absent, 1.
	bit11	cassette 2 paper sensor	LWPD	J108-A11	when paper is present, 0; absent, 1.
	bit12	cassette 1 paper level detection bit 0	1RPD0	J108-A13	
	bit13	cassette 1 paper level detection bit 1	1RPD1	J108-A14	
	bit14	cassette 2 level detection bit 0	2RPD0	J108-A15	
	bit15	cassette 2 level detection bit 1	2RPD1	J108-A16	

DC-CON

Address	bit	Display	Signal	Connector	Action
P009	bit0	primary	HVPDC*	J103-B4	
	bit1	developing DC	HDCON*	J103-B1	
	bit2	developing AC	HACON*	J103-B1	
	bit3				
	bit4	static eliminator	SEPON*	J103-B3	
	bit5				
	bit6	primary charging mode	HVPH*	J103-B11	
	bit7	developing DC mode	HDCH*	J103-B10	
	bit8	transfer mode 00	HVTM00*	J103-B5	
	bit9	transfer mode 01	HVTM01*	J103-B6	
	bit10	transfer mode 02	HVTM02*	J103-B7	
	bit11	transfer mode 03	HVTM03*	J103-B8	
	bit12	transfer mode 04	HVTM04*	J103-B9	
	bit13				
	bit14				
	bit15	relay shut-off drive	RELAY_D	J104-B11	when in error, '0'.
P010	bit0	feeding fan	FM1D	J115-A1	
	bit1				
	bit2	fixing heat discharge fan 1 (full speed) fixing heat discharge fan 2	FM2D FM3D	J107-A4 J107-A7	
	bit3	fixing heat discharge fan 1 (half speed) fixing heat discharge fan 2	FM2D FM3D	J107-A4 J107-A7	
	bit4				
	bit5				
	bit6	reader cooling fan 1 reader cooling fan 2 scanner motor cooling fan	FM12D FM13D FM18D	J104-B5 J104-B8 J104-A11	
	bit7				
	bit8	laser driver cooling fan laser scanner motor cooling fan (full speed) cleaner heat discharge fan	FM4D FM5D - FM7D	J112-B7 J112-A7 - J112-B13	
	bit9	laser scanner fan laser scanner motor cooling fan (half speed) cleaner heat discharge fan	FM4D FM5D - FM7D	J112-B7 J112-A7 - J112-B13	
	bit10	cartridge cooling fan system cooling fan (full speed) DC controller cooling fan	FM6D FM8D FM7D	J112-A10 J112-B16 J112-A13	

Address	bit	Display	Signal	Connector	Action
P010	bit11	cartridge coiling fan system cooling fan (half speed) DC controller cooling fan	FM6D FM8D FM17D	J112-A10 J112-B16 J112-A13	
	bit12	low-voltage power supply cooling fan 1 low-voltage power supply cooling fan 2	FM10D FM11D	J118-1 J118-4	
	bit13				
	bit14	drum cartridge cooling fan 1 drum cartridge cooling fan 2 (full speed) drum cartridge cooling fan 3	FM14D FM15D - FM16D	J119-9 J119-5 - J119-3	
	bit15	drum cartridge cooling fan 1 drum cartridge cooling fan 2 (half speed) drum cartridge cooling fan 3	FM14D FM15D - FM16D	J119-9 J119-5 - J119-3	
P011	bit0	fan rotation detection (fixing heat discharge fan 1)	FM2LK	J107-5	
	bit1	fan rotation detection 2 (fixing heat discharge fan 2)	FM3LK	J107-8	
	bit2	fan rotation detection 3 (laser scanner motor cooling fan)	FM4LK	J112-B8	
	bit3	fan rotation detection 4 (laser diver cooling fan)	FM5LK	J112-A8	
	bit4	fan rotation detection 5 (cleaner heat discharge fan)	FM7LK	J112-B14	
	bit5	fan rotation detection 6 (system cooling fan)	FM8LK	J112-B17	
	bit6	fan rotation detection 7 (DC controller cooling fan)	FM17LK	J112-B11	
	bit7	fan rotation detection 8 (cartridge cooling fan)	FM6LK	J112-A11	
	bit8	fan rotation detection 9 (drum cartridge cooling fan 1)	FM14LK	J119-2	
	bit9	fan rotation detection 10 (drum cartridge cooling fan 2)	FM15LK	J119-5	
	bit10	fan rotation detection 11 (drum cartridge cooling fan 3)	FM16LK	J119-8	

Address	bit	Display	Signal	Connector	Action
P011	bit11	fan rotation detection 12 (low-voltage power supply cooling fan 1)	FM10LK	J118-2	
	bit12	fan rotation detection 13 (low-voltage power supply cooling fan 2)	FM11LK	J118-3	
	bit13	fan rotation detection 14 (reader cooling fan 1)	FM12LK	J104-B6	
	bit14	fan rotation detection 15 (reader cooling fan 2)	FM13LK	J104-B9	
	bit15	fan rotation detection 16 (scanner motor cooling fan)	FM18LK	J104-A9	
P012	bit0	main heater SSR short circuit detection	H1_ERR	J114-B11	upon detection, '1'.
	bit1	sub heater SSR short circuit detection	H2_ERR	J114-B14	upon detection, '1'.
	bit2	sub thermistor error detection		-	
	bit3	sub thermistor phase detection		-	
	bit4	counter 1 open circuit detection		-	
	bit5	counter 2 open circuit detection		-	
	bit6	counter 3 open circuit detection		-	
	bit7				
	bit8	fixing relay shut-off 0 (main thermistor)		-	when in error, '1'.
	bit9	fixing relay shut-off 1 (sub thermistor)		-	
	bit10	fixing relay shut-off 2 (SSR short circuit)		-	
	bit11				
	bit12				
	bit13				
	bit14				
	bit15				

2. IP

P001	bit 0	not used	
	bit 1	hardware version	
	bit 2	not used	
	bit 3	hardware version	
	bit 4	hardware version	
	bits 5 to 7	not used	
P002		not used	
P003	bit 0, bit 1	not used	
	bit 2	Indicates the connection of the SCSI board to the fax motherboard.	0: SCSI board not connected 1: SCSI boar connected
	bit 3	Indicates the connection of the AX board to the fax motherboard.	0: FAX board not connected 1: FAX board connected
	bit 4	Indicates the connection of the PDL I/F board to the FAX motherboard.	0: PDL I/F not connected 1: PDL I/F board connected
	bits 5 to 7	not used	
P004 to P007		not used	
P008	bit0	not used	
	bit1	control panel reset	0: reset disabled 1: reset enabled
	bit2	control panel back light	0: OFF 1: ON
	bit3	not used	
	bit4	DC controller PCB LED201	0: OFF 1: ON
	bit5	laser bias output	0: ON 1: OFF
	bit6	control card count	0: OFF 1: ON
	bit7	not used	
P009 to P011		not used	

Indicates the hardware version of the image processor PCB in respect of combinations of the states of bits 1, 3, and 4 (P001):

<bit1, bit3, bit4>=<0, 0, 1> System supported

3. FEEDER

Address	bit	Display	Remarks
P001	bit0	stopper plate solenoid (SL1) drive	when 1, ON.
	bit1	paper deflecting plate solenoid (SL3) drive	when 1, ON.
	bit2	stamp solenoid (SL4) drive	when 1, ON.
	bit3	belt motor (M3) rotation direction signal	when right delivery, '1'.
	bit4	PCB signal	
	bit5	PCB signal	
	bit6	PCB signal	
	bit7	PCB signal	
P002	bit0	reversal sensor (S8)	when paper is present, '1'.
	bit1	delivery sensor (S8)	when paper is present, '1'.
	bit2	pick-up sensor (S7)	when paper is present, '1'.
	bit3	not used	
	bit4	PCB signal	
	bit5	PCB signal	
	bit6	not used	
	bit7	not used	
P003	bit0	PCB signal	
	bit1	PCB signal	
	bit2	PCB signal	
	bit3	PCB signal	
	bit4	PCB signal	
	bit5	recirculatio sensor (S14)	when paper is present , '1'.
	bit6	PCB signal	
	bit7	PCB signal	
P004	bit0	feeder motor clock sensor (S9)	in rotation, repeats '0' an '1'.
	bit1	belt motor clock sensor (S10)	in rotation, repeats '0' an '1'.
	bit2	registration roller clock sensor (S11)	in rotation, repeats '0' an '1'.
	bit3	delivery motor clock sensor (S3)	in rotation, repeats '0' an '1'.
	bit4	pick-up roller sensor (S5)	when at home position, '1'.
	bit5	not used	
	bit6	not used	
	bit7	not used	

Address	bit	Display	Remarks
P005	bit0	PCB signal	
	bit1	PCB signal	
	bit2	PCB signal	
	bit3	PCB signal	
	bit4	PCB signal	
	bit5	PCB signal	
	bit6	not used	
	bit7	not used	
P006	bit0	PCB signal	
	bit1	PCB signal	
	bit2	belt motor (M3) rotation speed signal	changes between '0' and '1' according to speed.
	bit3	belt motor (M3) dive signal	when '1', ON.
	bit4	feeder motor (M2) rotation speed signal	changes between '0' and '1' according to speed.
	bit5	PCB signal	
	bit6	pick-up motor (M1) rotation speed signal	changes between '0' and '1' according to speed.
	bit7	pick-up motor (M1) drive signal	when '1', ON.
P007	bit0	delivery motor (m5) rotation speed signal	changes between '0' and '1' according to speed.
	bit1	pick-up motor (M1) rotation direction signal	in top separation, '1'.
	bit2	recirculatio motor (m5) drive signal	when '1', ON.
	bit3	original indicator LD (LD101, LED102)	when '0', ON.
	bit4	PCB signal	
	bit5	brake (BK) drive	when '1', ON.
	bit6	clutch (CL) drive	when '1', ON.
	bit7	paper holding plate solenoid (SL2)	when '1', ON.
P008	bit0	PCB signal	
	bit1	not used	
	bit2	DADF switch (MS1)	when DADF is open, '0'.
	bit3	upper cover switch (MS2), upper cover sensor (S4)	when upper cover is open, '0'.
	bit4	delivery sensor (S12)	when paper is present, '1'.
	bit5	SW3 on DADF controller PCB	when pressed, '1'.
	bit6	SW2 on DADF controller PCB	when pressed, '1'.
	bit7	SW1 on DADF controller	when pressed, '1'.

Address	bit	Display	Remarks
P009	bit0	not used	
	bit1	not used	
	bit2	not used	
	bit3	not used	
	bit4	not used	
	bit5	not used	
	bit6	LED1 on DADF controller PCB	when '0', ON.
	bit7	LED2 on DADF controller PCB	when '0', ON.
P010	bit0	DSW1-8 on DADF controller PCB	when '1', ON.
	bit1	DSW1-7 on DADF controller PCB	when '1', ON.
	bit2	DSW1-6 on DADF controller PCB	when '1', ON.
	bit3	DSW1-5 on DADF controller PCB	when '1', ON.
	bit4	DSW1-4 on DADF controller PCB	when '1', ON.
	bit5	DSW1-3 on DADF controller PCB	when '1', ON.
	bit6	DSW1-2 on DADF controller PCB	when '1', ON.
	bit7	DSW1-1 on DADF controller PCB	when '1', ON.

4. SORTER (Finisher C1, Saddle Finisher C2, Finisher E1)

For details, see the individual Service Manuals.

a. Finisher

Address	bit	Display	Signal	Connector	Action
P000 (input)	bit0	stapler connection detection signal	STPCNT	J8-7	L: connected.
	bit1	stapler absent detection signal	HOOKEMP	J8-10	L: staple present.
	bit2	inlet paper detection signal	PENT	J6-7	L: paper present.
	bit3	shutter open detection signal	STOPN	J7-3	H: closed.
	bit4	swing guide open detecting switch signal	SWGGOPN	J5-12	L: closed.
	bit5	tray upper limit detecting switch signal	TRKYLIM	J5-8	H: upper limit.
	bit6	tray safety switch signal	TRAYSAFE	J5-6	H: safe.
	bit7	front door open detecting switch signal	FDROPN	J5-3	L: closed.
P001 (input)	bit0	-			
	bit1	-			
	bit2	-			
	bit3	-			
	bit4	feeder motor phase A output		J10-6	
	bit5	feeder motor phase B output		J10-5	
	bit6	feeder motor phase A* output		J10-4	
	bit7	feeder motor phase B output		J10-3	
P002 (input)	bit0	alignment motor phase A output		J11-5	
	bit1	alignment motor phase B output		J11-4	
	bit2	alignment motor current switch			
	bit3	-			
	bit4	-			
	bit5	-			
	bit6	-			
	bit7	-			
P003 (input)	bit0	buffer path paper sensor connector detection			H: connected.
	bit1	buffer inlet paper sensor connector detection			H: connected.
	bit2	front cover open/closed sensor connector detection			H: connected.
	bit3	shift motor clock sensor connector detection			H: connected.
	bit4	-			
	bit5	-			
	bit6	-			
	bit7	-			

Address	bit	Display	Signal	Connector	Action
P004 (input)	bit0	LED1 ON signal (output) Note 2	TRIND	J13-1	H: ON.
	bit1	tray lift motor clock sensor 1			
	bit2	feeder motor clock			
	bit3	tray lifter motor clock sensor			
	bit4	shutter open sensor connector detection			H: connected.
	bit5	-			
	bit6	-			
	bit7	-			
P005	bit0	stapler shift motor current switch (output)			L: ON.
	bit1	feeder motor current switch (output)			L: ON.
	bit2	stack detection start signal (output)			H: detection start.
	bit3	height sensor (input)			
	bit4	staple cartridge detection (input)		J8-10	H: staple present.
	bit5	height sensor clock (input)			
	bit6	-			
	bit7	-			
P006 (input)	bit0	shutter closed detection signal	STOPN	J9-9	H: open.
	bit1	tray home position detection signal	TRYHP	J12-6	H: HP.
	bit2	LED2 ON signal (output)			L: ON.
	bit3	delivery motor clock signal		J9-14	
	bit4	front door open detection signal	FDR	J15-3	L: open.
	bit5	delivery detection signal	PDEL	J9-11	H: HP.
	bit6	buffer path paper detection signal	BUFPASS	J15-9	L: paper present.
	bit7	buffer path inlet paper detection signal	BUFENTR	J15-6	H: paper present.
P007 (output)	bit0	delivery motor PWM			L: ON.
	bit1	delivery motor reverse rotation drive output		J11-7	L: CCW.
	bit2	tray lifter motor PWM			L: ON.
	bit3	delivery motor CW rotation output		J11-6	L: CW.
	bit4	tray lifter motor descent drive output			H: down.
	bit5	tray lift motor ascent drive output			H: up.
	bit6	stapler shift motor phase A output			
	bit7	stapler shift motor phase B output			

Address	bit	Display	Signal	Connector	Action
P008 (input)	bit0	stapler motor CW rotation output		J8-14	H: CW.
	bit1	stapler motor CCW rotation output		J8-13	H: CCW.
	bit2	stapler tray paper detection signal		J9-3	H: paper present.
	bit3	joint detection signal	STPTY	J12-3	H: connected.
	bit4	stapler drive home position detecting signal	JOINT	J8-8	
	bit5	swing guide open detection signal	STPDRHP	J6-10	L: open.
	bit6	stapler home position detecting signal	SWGOPN	J12-9	L: HP.
	bit7	alignment plate home position signal	STPHP	J9-6	L: HP.
P009 (output)	bit0	stapler edge position detection signal	JOGHP	J8-6	L: staple present.
	bit1	thermal switch signal	HOOKTOP	J12-14	H: overheating.
	bit2	tray 1 paper sensor connector detection	THMSW		H: connected.
	bit3	tray 2 paper sensors connector detection			H: connected.
	bit4	tray 3 paper sensor connector detection			H: connected.
	bit5	tray 1 paper detection signal		J14-3	L: paper peasant.
	bit6	tray 2 paper detection signal	FSTTRAY	J14-6	L: paper peasant.
	bit7	tray 3 paper detection signal	SNDTRAY	J14-9	L: paper peasant.
P010 (output)	bit0	-	TRDTRAY		
	bit1	buffer outlet solenoid drive signal		J4-6	H: ON
	bit2	interrupt trays solenoid drive signal	EXITSL	J4-8	H: ON
	bit3	buffer inlet solenoid drive signal	SBTRYSL	J4-3	H: ON
	bit4	flapper solenoid drive signal	ENTSL	J4-1	H: ON
	bit5	paddle sound drive signal	FLPSL	J11-9	H: ON
	bit6	solenoid timer (full suction) output	PDLSL		
	bit7	escape solenoid drive signal		J11-11	H: ON
P012	bit0	alignment guide home position sensor connector detection	ESCPSL	J9-4	H: connected.
	bit1	stapler tray paper sensor connector detection		J9-3	H: connected.
	bit2	tray lifter motor clock sensor connector detection		J12-10	H: connected.
	bit3	joint sensor connector detection		J12-1	H: connected.
	bit4	stapler drive home position sensor connector detection		J12-4	H: connected.
	bit5	tray home position connector detection		J6-5	H: connected.
	bit6	inlet paper sensor connector detection		J6-8	H: connected.
	bit7	swing guide open sensor connector detection			H: connected.

Address	bit	Display	Signal	Connector	Action
P000A		24-V power (output)			Note
P001A		WW1 bit 1, 2 (input)			See Table 14-806.
P002A		SW1 bit 3, 4 (input)			Table 14-806.
P003A		SW2, 3 (input)			Table 14-806.

Note: When 110 (analog) or higher, the 24 V power supply is normal.

Reading	SW1 bit 1/3; SW2	SW1 bit 2/4; SW3
0 to 72	ON	ON
73 to 104	OFF	ON
105 to 190	ON	OFF
190 to 255	OFF	OFF

Figure 4-6

b. Saddle Finisher

Address	bit	Display	Signal	Connector	Action
P013 (output)	bit0	stitcher motor (rear) CW rotation signal		J8-13/14	L: CW.
	bit1	stitcher motor (rear) CCW signal		J8-11/12	L: CCW.
	bit2	stitcher motor (front) CW rotation		J8-6/7	L: CW.
	bit3	stitcher motor (front) CCW signal		J8-4/5	L: CCW.
	bit4	folder motor CW rotation signal		J4-7	L: CW.
	bit5	folder motor reversal drive signal		J4-8	CW.
	bit6	flapper drive signal 1	FLPSL1	J15-2	L: ON
	bit7	flapper drive signal 2	FLPSL2	J15-4	L: ON
P014 (output)	bit0	-			
	bit1	-			
	bit2	-			
	bit3	-			
	bit4	-			
	bit5	crescent roller contact solenoid drive signal	RLNIPSL	J15-6	H: ON
	bit6	solenoid timer (full suction) output			L: ON
	bit7	paper positioning plate motor power			L: ON
P015 (input)	bit0	24-V power supply down detection		-	H: down.
	bit1	paper pushing plate leading edge detection signal	LUNGETOP	J13-15	H: leading edge.
	bit2	delivery detection signal	DELV	J9-3	L: paper present.
	bit3	-			
	bit4	-			
	bit5	-			
	bit6	-			
	bit7	-			

Address	bit	Display	Signal	Connector	Action
P016 (input)	bit0	-			
	bit1	-			
	bit2	paper pushing plate home position detection signal	LUNGEHP	J9-12	H: HP
	bit3	alignment guide home position detection signal	JOGHP	J11-3	L: HP
	bit4	-			
	bit5	-			
	bit6	-			
	bit7	-			
P017 (input)	bit0	paper positioning plate home position detection signal	PAPPOS	J6-6	L: HP
	bit1	stitcher retraction detection signal	STPLHP	J13-3	L: in.
	bit2	inlet cover open sensor connector detection	INLTCVR	J10-6	L: connected.
	bit3	-			
	bit4	crescent roller phase detection signal	FDRLHP	J9-6	H: flag present.
	bit5	alignment guide home position detection signal	JOGHP	J9-9	L: HP
	bit6	-			
	bit7	-			
P018 (output)	bit0	paper positioning plate motor phase A			
	bit1	paper positioning plate phase B			
	bit2	paper pushing plate motor PWM			
	bit3	feeder motor power			L: ON
	bit4	feeder motor phase A			
	bit5	feeder motor phase B			
	bit6	feeder motor reference clock			
	bit7	paper pushing plate motor CCW rotation (output)		J4-10	L: CCW.
P019 (output)	bit0	alignment motor phase A			
	bit1	alignment motor phase B			
	bit2	folder motor PSWM			
	bit3	paper pushing plate motor CW rotation		J4-9	L: CW.
	bit4	guide plate motor phase A			
	bit5	guide plate motor phase B			
	bit6	guide plate motor power			L: ON
	bit7	alignment motor power			L: ON

Address	bit	Display	Signal	Connector	Action
P020 (input)	bit0	No. 2 paper sensor detection signal	2NDPA	J10-3	L: paper present.
	bit1	No. 3 paper sensor detection signal	3RDPA	J10-4	L: paper present.
	bit2	stitching home position detection signal 2	STCHHP2	J8-10	H: HP
	bit3	stitching home position signal 1	STCHHP1	J8-3	H: HP
	bit4	paper positioning plate detection signal	PPOSPAR	J6-3	L: paper present.
	bit5	tray power detection signal	TRYPAR	J6-9	L: paper present.
	bit6	vertical path paper detection signal	VPJM	J13-6	L: paper present.
	bit7	-			
P021 (input)	bit0	alignment plate home position connector detection		J11-1	H: connected.
	bit1	paper pushing plate home position connector detection		J9-10	H: connected.
	bit2	delivery door open sensor small neck detection signal		J11-7	H: connected.
	bit3	front door open sensor connector detection		J11-10	H: connected.
	bit4	paper pushing plate leading edge sensor connector		J13-13	H: connected.
	bit5	paper holding plate home position sensor connector detection		J9-10	H: connected.
	bit6	-			
	bit7	-			
P022 (output)	bit0	-			
	bit1	LED1 drive			L: ON.
	bit2	-			
	bit3	-			
	bit4	-			
	bit5	-			
	bit6	-			
	bit7	-			
P023 (input)	bit0	staple absent detection signal 2	HKEMP2	J8-8	L: staple absent.
	bit1	staple absent detection single 1	HKEMP1	J8-1	L: staple absent.
	bit2	inlet cover open detecting switch signal	INLTCVRMS	J4-2	H: open.
	bit3	front door open detecting switch signal	FDROPN	J4-4	H: open.
	bit4	delivery door open detection signal	EJCVR	J11-9	L: open.
	bit5	front door open detection signal	FDR	J11-12	L: open.
	bit6	inlet cover open detection signal	INLTCVR	J10-8	L: open.
	bit7	delivery door open detecting switch signal	DELVMS	J4-6	H: open

Address	bit	Display	Signal	Connector	Action
P024 (input)	bit0	DIPSW1 Bit 8			L: ON
	bit1	DIPSW1 Bit 7			L: ON
	bit2	DIPSW1 Bit 6			L: ON
	bit3	DIPSW1 Bit 5			L: ON
	bit4	DIPSW1 Bit 4			L: ON
	bit5	DIPSW1 Bit 3			L: ON
	bit6	DIPSW1 Bit 2			L: ON
	bit7	DIPSW1 Bit 1			L: ON
P025 analog port	bit0	stitcher (rear) staple detected	HKEMP2	J8-8	92 or higher, connected.
	bit1	stitcher (front) staple detection	HKEMP1	J8-1	92 or higher, connected.
	bit2	tray paper detection signal	TRYPAR	J6-9	128 or higher, connected.
	bit3	inlet cover open sensor connector detection	-	J10-6	128 or higher, connected.
	bit4	-			128 or higher, connected.
	bit5	alignment guide home position sensor detection	-	J9-7	128 or higher, connected.
	bit6	-			128 or higher, connected.
	bit7	paper pushing plate leading edge sensor connector detection	-	J13-13	128 or higher, connected.

c. Finisher E1

Address	bit	Display	Signal	Connector	Action
P001	bit0	stack tray home position detection	S10D	J11-15	if '1', home position.
	bit1	inlet paper detection	S2D	J11-18	if '1', paper present
	bit2	stack tray lower limit detection	S12D	J11-3	if '1', lower limit
	bit3	stack tray upper limit detection	S13D	J11-6	if '1', paper present
	bit4	stack tray paper detection	S11D	J12-3	if '1', paper present
	bit5	copier, finisher connection detection	S4D	J11-12	if '1', connection released
	bit6	stack processing tray paper detection	S5D	J9-9	if '1', paper present
	bit7	returning roller home position detection	S3D	J10-6	if '1', home position
P002	bit0				
	bit1				
	bit2				
	bit3				
P003	bit0	front aligning plate home position detection	S6D	J9-3	if '1', home position
	bit1	rear aligning plate home position detection	S7D	J9-6	if '1', home position
	bit2	stack delivery lever home position detection	S8D	J9-12	if '0', home position
	bit3				
	bit4	staple cartridge detection	S18D	J8-13	if '1', cartridge absent
	bit5	staple detection	S15D	J8-7	if '0', staple absent
	bit6	stapling home position detection	S17D	J8-9	if '0', home position
	bit7	staple edge detection	S16D	J8-8	if '1', staple not at edge
P004	bit0	delivery motor clock detection	S1D	J10-3	if '1', rising edge
	bit1				
P005	bit0	stack tray lift motor rotation 1	M5D1	J3-1	if '1', up
	bit1				
	bit2	stack tray lift motor CCW rotation 1	M5D2	J3-2	if '1', down
	bit3				
	bit4	stack tray lift motor clock pulse detection	S9D	J11-9	if '1', rising edge
	bit5	stapler safety detection	S14D	J7-2	if '1', obstacle present

Address	bit	Display	Signal	Connector	Action
P006	bit0				
	bit1				
	bit2	front alignment motor enable signal	-	-	if '1', enabled
	bit3	rear alignment motor enable signal	-	-	if '1', enabled
	bit4				
	bit5				
	bit6	stapler motor rotation 2	M6DA	J8-2	if '0', CW rotation
	bit7	stapler motor CCW rotation 2	M6DB	J8-5	if '0', CCW rotation
P007	bit0	stapler motor rotation 1	M6DA	J8-1	if '0', CW rotation
	bit1	stapler motor CCW rotation 1	M6DB	J8-4	if '0', CCW rotation
	bit2	stack tray lift motor rotation 2	M5D1	J3-1	if '1', up.
	bit3	stack tray lift motor CCW rotation 2	M5D2	J3-2	if '1', down
	bit4				
	bit5				
	bit7	delivery motor OFF signal	-	-	if '0', current ON
P008	bit0	push switch	-	-	if '0', ON
	bit1				
	bit2				
	bit3				
	bit4				
	bit5				
	bit6				
	bit7	24 VP detection	-	-	
P009	bit0				
	bit1				
	bit2				
	bit3				
	bit4				
	bit5				
	bit6				
	bit7				

Address	bit	Display	Signal	Connector	Action
P010	bit0	delivery motor current switching	-	-	1: current low 0: current high
	bit1	stack processing motor current switching 1	-	-	1: current low 0: current high
	bit2	stack processing motor current switching 2	-	-	1: current low 0: current medium
	bit3	front alignment motor current stitching	-	-	1: current low 0: current high
	bit4	rear alignment motor current switching	-	-	1: current low 0: current high
	bit5	LED1	-	-	if '0', ON
	bit6	LED2	-	-	if '0', ON
	bit7	LED3	-	-	if '0', ON
P011	bit0	mode setting switch 0	-	-	if '0', ON
	bit1	mode setting switch 1	-	-	if '0', ON
	bit2	mode setting switch 2	-	-	if '0', ON
	bit3	mode setting switch 3	-	-	if '0', ON
	bit4	mode setting switch 4	-	-	if '0', ON
	bit5	mode setting switch 5	-	-	if '0', ON
	bit6	mode setting switch 6	-	-	if '0', ON
	bit7	mode setting switch 7	-	-	if '0', ON

P012 through P036 are not used.

D. ADJUST Adjustment Mode

Figure 4-13 shows the Level 2 screen and its items.

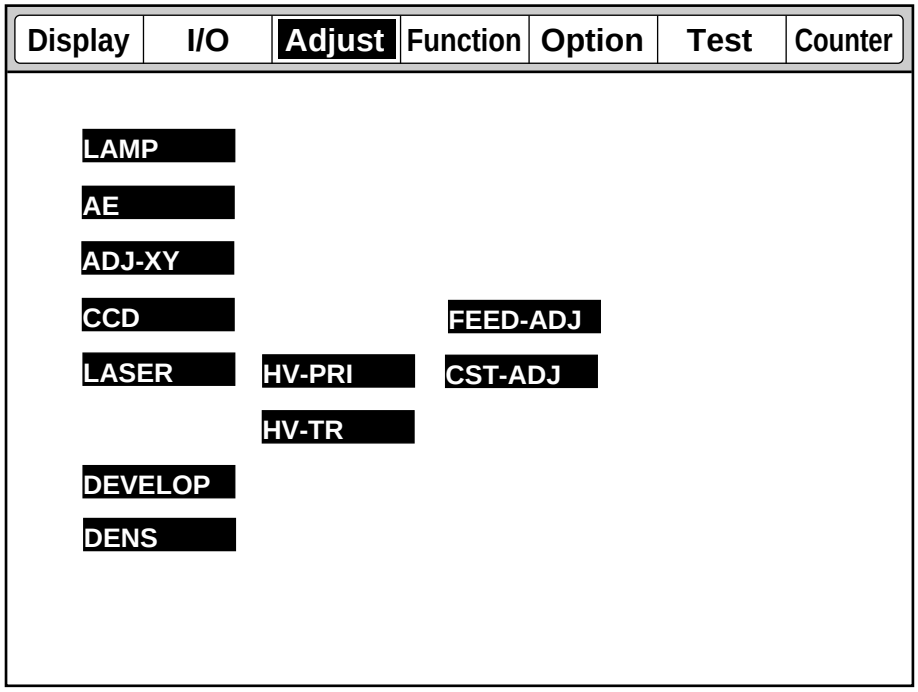

Figure 4-13 ADJUST Level 2 Screen

ADJUST Items

Level 1	Level 2	Level 3	Range	Outline
ADJUST	LAMP	FL-OFST	0 to 255	scanning lamp offset
		FL-DUST	0 to 100	lamp post-activation duty ratio adjustment
		FL-PDUTY	0 to 100	lamp pre-activation duty ratio adjustment
	AE	AE-TBL	0 to 9	AE mode text density adjustment
	ADJ-XY	ADJ-X	0 to 1000	image read start position (X direction) adjustment
		ADJ-Y	0 to 400	image read state position (Y direction) adjustment
		ADJ-S	50 to 80	standard white plate read start position fine adjustment
	CCD	PPR	0 to 255	standard white plate density data
		W-PLT	0 to 255	standard white plate data
	LASER	PVE-OFST	-200 to +200	offset from laser center
		LA-OFF	0 to 255	laser trailing edge deactivation adjustment
	DEVELOP	DE-DC	0 to 127	developing DC output during image exposure
		DE-NO-DC	0 to 127	developing DC output during image exposure
		DE-OFST	98 to 158	image bias DC component offset
	DENS	DENS-ADJ	0 to 9	post copy density auto correction fogging adjustment
	HV-PRI	P-DC	0 to 127	image area primary charging DC output
		P-NO-DC	0 to 127	sheet-to-sheet primary charging DC output
		P-AC	0 to 127	primary charging AC output 1 during image exposure
		P-NO-AC	0 to 127	sheet-to-sheet primary charging DC output
		AGS-GAIN	78 to 178	APVC gain
		AGS-OFST	78 to 178	APVC offset
		OFST1-DC	98 to 158	primary charging DC offset
		OFST1-AC	98 to 158	primary charging AC offset 1
		OFST2-AC	98 to 158	primary charging AC offset 2
		P-AC2	0 to 255	primary charging AC output 2 during image exposure
		P-AC3	0 to 255	primary charging AC output 3 during image exposure
	HV-TR	TR-N1	0 to 10	transfer roller bias adjustment (1st side)
		TR-N2	0 to 10	transfer roller bias adjustment (2nd side)
		TR-OFST	98 to 158	transfer charging offset
		TR-SPP	0 to 10	thick paper ATVC table offset adjustment
	FEED-ADJ	REGIST	-320 to +320	registration clutch ON timing
		LOOP-CST	0 to 200	cassette pick-up arching adjustment
		LOOP-MF	0 to 200	multifeeder arching adjustment
		ADJ-REFE	7500 to 8500	re-pick up horizontal registration adjustment
		RVS-FD1	factory setting±100	1-bin reversal point adjustment
		RVS-FD2	factory setting±100	2-/3-bin reversal point adjustment
		RVS-DUP	factory setting±100	duplexing reversal pin adjustment
	CST-ADJ	MF-A4R	0 to 1000	multifeeder paper width sensor adjustment (A4R)
		MF-A6R	0 to 1000	multifeeder paper width sensor adjustment (A6R)
		MF-A4	0 to 1000	multifeeder paper width sensor adjustment (A4)

<LAMP> ADJUST
Adjusting the Scanning Lamp Reference Activation Voltage

Level 3	Description	Remarks
FL-OFST	Adjusts the scanning lamp offset.	Enter the settings recorded on the service label when replacing the composite power supply PCB.
FL-DUTY	Adjusts the duty ratio used after activation of the scanning lamp.	
FL-PDUTY	Adjusts the duty ratio used before activation of the scanning lamp.	

<AE>
Adjusting for AE Mode

Level 3	Description	Remarks
AE-TBL	Adjusts the text density when AE mode with priority on speed is executed. It adjusts the AE density correction curve for priority on speed AE: A higher setting makes text lighter. A lower setting makes text darker. 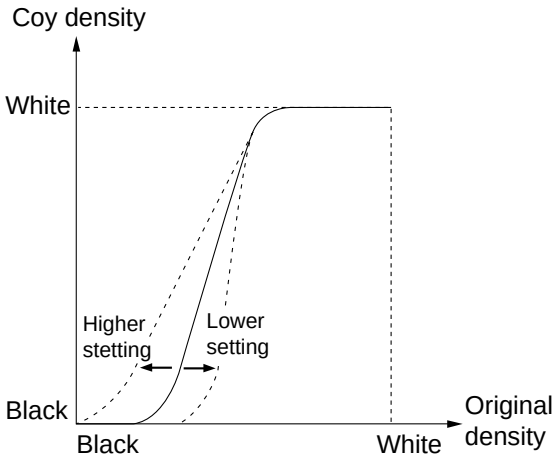 	The machine's AE is 'priority on speed' only. Settings: 1 to 9 Default: 3

<ADJ-XY> ADJUST
Adjusting the Image Read Start Position

Level 3	Description	Remarks
ADJ-X	Adjusts the image read start position (X direction). A higher setting shifts the read start position in the direction of scannerforward movement. 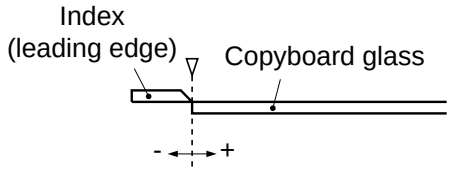	Sub Scanning Direction Unit: about 1 mm for each 12 Range: 0 to 1000
ADJ-Y	Adjusts the CCD read start position (Y direction). A higher setting shifts the read start position toward the front. 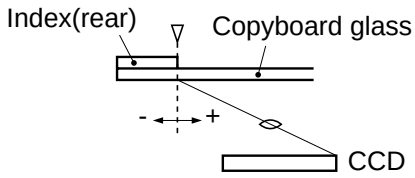	Main Scanning Direction Unit: about 1 mm for each 12 Range: 0 to 400
ADJ-S	Adjusts the position of collecting data for shading correction from the standard white plate. 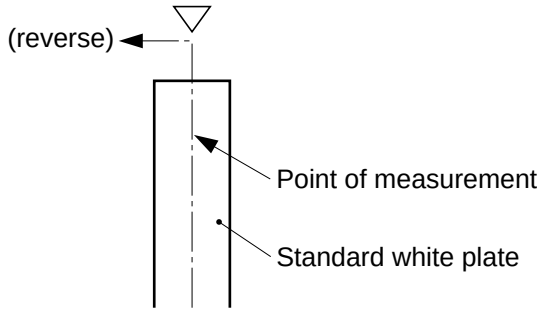	Unit: 1 mm for each 12 (1 about 0.083 mm) Range: 50 to 80

<CCD> ADJUST
Adjusting CCD Shading-Related Settings

Level 3	Description	Remarks
PPR	Adjusts the density of the standard white paper. If copies have fogging after executing the following, decrease the setting: 1. Scanner cleaning 2. Shading correction (FUNCTION>CCD>CCD-ADJ) 3. Standard white plate point of measurement (ADJSUT>ADJ-XY>ADJ-S)	Enter the setting recorded on the service label when initializing the RAM or replacing the image processor PCB. Range: 0 to 255
W-PLT	Adjusts the density data of the standard white plate. Do not change the setting in the field.	

<LASER>
Adjusting the Laser System

Level 3	Description	Remarks
PVE-OFST	Adjusts the offset from the laser center. Adjusts the position of the laser beam. A higher setting shifts the image toward the rear in main scanning direction. A lower setting shifts the image toward the front in main scanning direction.	Range: -200 to +200 1 mm for each 23 Enter the setting recorded on the service label when replacing the composite power supply. To enter a negative value, press the +/- key after entering the value.
LA-OFF	Adjusts the timing at which the laser turns off at the trailing edge of paper (non-default size; free-size paper in the multifeeder; wrong cassette size setting). Adjusts the time from when the trailing edge of paper moves past the pre-registration sensor to when the laser is turned off. This mode is disabled when a default-size paper is picked up. A higher setting increases the time to de-activation. A lower setting decreases the time to de-activation.	Range: 0 to 255

<DEVELOP> ADJUST
Adjusting the Developing System

Level 3	Description	Remarks
DE-DC	Adjusts the developing bias DC component (0 to 127) for the large area.	Enter the setting indicated on the service label when replacing the composite power supply PCB.
DE-NO-DC	Adjusts the developing bias DC component (0 to 127) applied to the distance between sheets during feeding.	
DE-OSFT	Adjusts the developing bias DC component offset (98 to 158). If the image is too light, decrease the setting. If the image is too dark, increase the setting.	Keep it to factory setting +30, -30

<DENS>
Fine-Adjusting Copy Density Auto Correction

Level 3	Description	Remarks
DENS-ADJ	Adjusts copy density correction if the copy image still has fogging after executing copy density auto correction*. 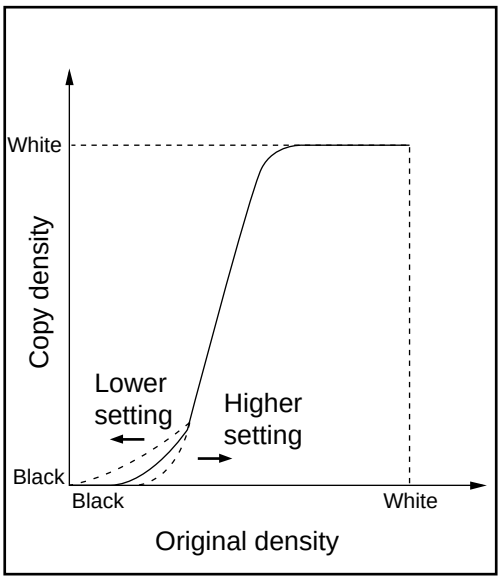 	Range: 1 to 9 (3*) * Copy density auto correction crefers to the five items under FUNCTION>DENS executed in sequence. See FUNCTION in VIII.

<HV-PRI> ADJUST

Adjustments by Condition for the Primary Charging Roller High-Voltage Output

Level 3	Description	Remar
P-DC	Image area primary charging DC component (0 to 127)	Enter the setting recorded on the service label after replacing the composite power supply PCB.
P-NO-DC	Sheet-to-sheet primary charging DC component during feeding (0 to 127)	
P-AC	Image area primary charging AC component (0 to 255)	
P-NO-AC	Sheet-to-sheet primary charging AC component (0 to 127) during feeding	
AGS-GAIN	APVC gain (78 to 178)	
AGS-OFST	APVC offset (78 to 178)	
OFST1-DC	Primary charging DC offset (98 to 158) If the image is too light, increase the setting. If the image is too dark, decrease the setting.	
OFST1-AC	Primary charging AC offset (98 to 158)	
OFST2-AC	Primary charging AC offset 2 (98 to 158)	
P-AC2	Image area primary charging AC component 2 (0 to 255)	Enter the settings recorded on the service label after replacing the composite power supply PCB.
P-AC3	Image area primary charging AC component 3 (0 to 255)	

<HV-TR>

Adjusting the Transfer Charging Roller High-Voltage Output

Level 3	Description	Remarks
TR-N1	Adjusts the transfer roller bias (0 to 10) for the 1st side of a double-sided print or of a single-sided print on plain paper.	Unit: µA Effective for small-size plain paper; to make it effective for large-size paper, set '1' to OPTION>BODY>TRNS-SW. (if 200 mm or less in main scanning direction, small-size; if over 200 mm, large-size)
TR-N2	Adjusts the transfer roller bias (0 to 10) on the 2nd side of a double-sided print on plain paper.	
TR-OFST	Adjusts the transfer charging offset (98 to 158).	
TR-SPP	Adjusts the offset for thick-paper ATVC* table (0 to 10). Effective for thick paper mode with pick-up from the multifeeder. A higher setting increases the effects.	

<FEED-ADJ> ADJUST
Adjusting the Feeding System

Level 3	Description	Remarks
REGIST	Adjusting the timing at which the registration clutch turns on (-320 to +320). Adjusts the leading edge margin. A higher setting delays the timing of activation, reducing the leading edge margin.	Unit:mm Standard: Direct 2.5 ±1.0
LOOP-CST	Adjusts the arching (0 to 200) when pick-up is from the cassette.	Enter the settings recorded on the label.
LOOP-MF	Adjusts the arching (0 to 200) when pick-up is from the multifeeder.	
ADJ-FREE	Adjusts the horizontal registration (7500 to 8500). Use it if the image on the paper picked up from the lower feeding assembly is displaced in the main scanning direction. If displaced to the rear, decrease the setting. If displaced to the front, increase the setting.	Unit: 1 mm for each 23 For details, see p. 0-00.
RVS-FD1	Adjusts the point of reversal for bin 1.	Range: factory setting -100, +100
RVS-FD2	Adjusts the point of reversal for bin 2/3.	
RVS-DUP	Adjusts the point of reversal for double-sided sheets.	

<CST-ADJ>
Adjusting the Multifeeder Size

Level 3	Description	Remarks
MF-A4R	Adjusts the paper width basic value for A4R for the multifeeder.	Enter the settings recorded on the service label after replacing the image processor PCB. Execute FUNCTION>CST if the paper width sensor has been replaced or to enter the settings newly.
MF-A6R	Adjusts the paper width basic value for A6R for the multifeeder.	
MF-A4	Adjusts the paper width basic value for A4 for the multifeeder.	

E. FUNCTION Operation Check Mode

Figure 4-14 shows the FUNCTION mode Level 2 screen and its items.

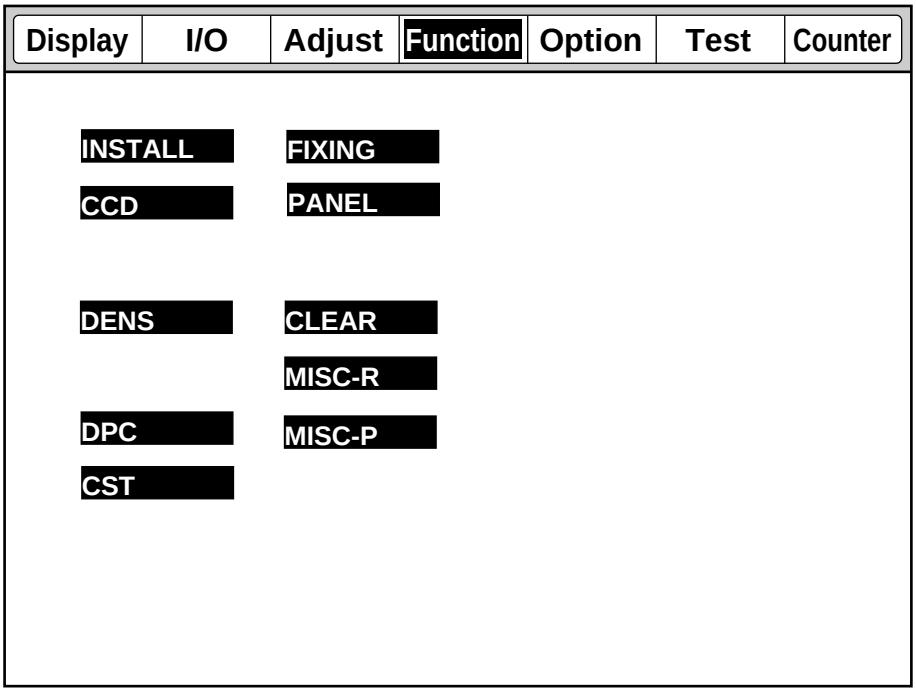

Figure 4-14 FUNCTION Level 2 Screen

ADJUST Items

Level 1	Level 2	Level 3	Outline
FUNCTION	INSTALL	TONER-S	toner stirring. (automatically stops in about 4 mm)
	CCD	CCD-ADJ	shading auto correction. (reads the density of the standard white plate)
		MAN-ADJ	shading auto correction (reads the difference between the standard white paper and the white plate)
	DENS	WHITE-ME	standard white paper density read
		PD-DENS	text, text/photo mode image adjustment pattern output
		PD-ME	PD-DENS output read
		DZ-DENS	photo mode image adjustment pattern output (white patches)
		DZ-ME	DZ-DENS output read mode
	DPC	D-GAMMA	photosensitive drum resistance measurement (forced APVC mode)
	CST	MF-A4R	multifeeder paper width basic value storage (A4R)
		MF-A6R	multifeeder paper width basic value storage (A6R)
		MF-A4	multifeeder paper width basic value storage (A4)
	FIXING	NIP-CHK	nip width creation mode
	PANEL	LCD-CHK	LCD dot check
		LED-CHK	control panel LED activation check
		LED-OFF	control panel LED deactivation check
		KEY-CHK	control panel key press check
		TOUCHCHK	analog panel coordinate position adjustment
	CLEAR	ERR	E000 series error initialization
		DC-CON	DC controller PCB RAM initialization
		IP	image processor PCB RAM initialization
		MMI-COPY	copier control panel back-up RAM initialization
		MMI-FAX	fax control panel back-up RAM initialization
		MMI-COM	common setting back-up RAM initialization
		SERVICE	service mode back-up RAM initialization
		FAX	FAX board RAM initialization
		JAM-HIST	jam history initialization
		ERR-HIST	error code history initialization
	MISC-R	SCANLAMP	scanning lamp activation check
	MISC-P	IP-CHK	image processor PCB self diagnosis
		P-PRINT	ADJUST, OPTION, COUNTER storage data generation
		KEY-HIST	copier operation analysis key input report

The upper right corner of the screen indicates the state of the machine. Be sure to pay attention to the indication when executing service mode: the following messages are often indicated:

<READY> The machine is ready to accept a servicing/copying job.

<SERVICE> The copier is executing service mode. This message remains while operations are being checked in service mode.

<INSTALL> FUNCTION
Adjusting the Feeding System

Level 3	Description	Remarks
TONER-S	Stirs the toner inside the developing assembly at time of installation. **Caution:** • Do not execute this mode without removing the drum cartridge. 1. At Time of Installation Execute this mode without removing the dummy cartridge. However, you may lock only the developing assembly in place and use the door switch actuator; nevertheless, the drum cartridge must not be mounted for this method. 2. After Installation Unlock the feeding assembly and the developing assembly, and remove the drum cartridge; lock the developing assembly, and then execute this mode. ■ Starting the Operation Select TONER-S to highlight; then, press the OK key. ■ During Operation The count (down) will be indicated to the right of <TONER-S>; from 240 to 0 (about 4 min). All keys other than the Stop key remain disabled.	

<CCD>
CCD/Shading-Related Auto Adjustment

Level 3	Description	Remarks
CCD-ADJ	Executes shading auto correction. Execute this mode after replacing the composite power supply PCB or the laser scanner unit. ■ Operation 1) Select <CCD-ADJ> to highlight. 2) Press the OK key to start (automatic; about 30 sec). During adjustment, the message <SERVICE> will be indicated in the upper right of the screen. 3) During adjustment, the scanning lamp turns on twice; upon completion, END is indicated on the screen.	

<CCD> FUNCTION

Level 3	Description	Remarks
MAN-ADJ	Executes shading auto correction. Execute this mode after replacing the CCD PCB, scanning lamp, DC controller PB, image processor PCB, or standard white plate. The VR on the DC controller PCB must be turned during execution; be sure to remove the rear cover and locate the VR on the DC controller PCB in advance. During adjustment, SERVICE will be indicated in the upper right corner of the screen. ■ Operation 1) Place five or more sheets of standard white paper on the cupboard glass. 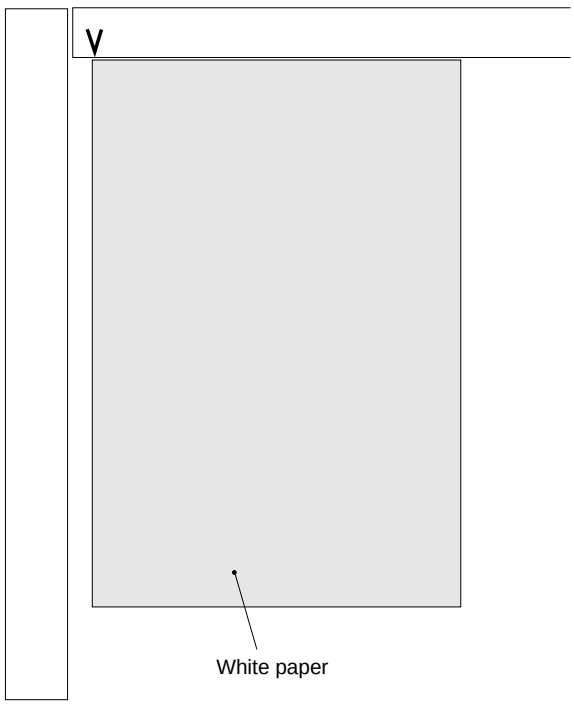 2) Select <MAN-ADJ> to highlight; then, press the OK key. 3) Check that the machine starts auto adjustment mode, and the screen indicates the following: AD -> CLANP -> VOL 4) When a beep is heard while VOL is indicated, press the OK key on the screen. If no beep is heard in several seconds, turn VR200 on the DC controller PCB so that a beep is heard; then, press the OK key. 5) Check that the screen indicates the following after VOL-OK; at the end, it indicates END. GAIN → CLANP2 → DARK → SHADING	

* The whitest of all used by the user (except paper for a color copier).

<DENS> FUNCTION

Density Auto Adjustment

Be sure to execute shading correction before executing density auto adjustment; be sure also to execute WHITE-ME, PD-DENS, PD-ME, DZ-DENS, and DZ-ME in the order indicated.

Level 3	Description	Remarks
WHITE-ME	Executes white level density auto correction. ■ Operation 1) Place about five sheets of white paper (whitest used by the user) on the copyboard, and select WHITE-ME to highlight; then, press the OK key. 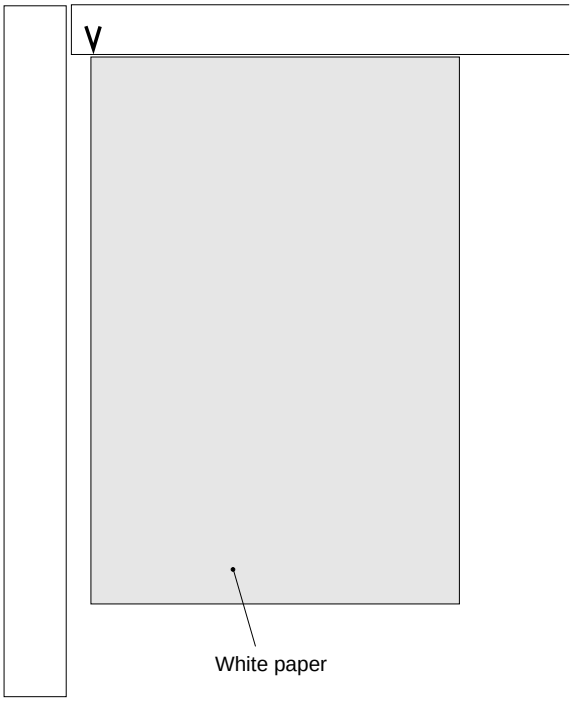 2) The scanning lamp makes a single scan, and the operation ends.	
PD-DENS	Generates a print pattern for density auto adjustment in text or text/photo mode. Text and text/photo mode uses binary processing in a PD method, requiring the execution of this mode for density correction. ■ Operation 1) Select <PD-DENS> to highlight, and press the Start key. 2) Check that a 15-gradation print pattern (with black patches) is generated. Keep the pattern for <PD-ME.>	

PD-ME	Executes density auto correction for text or text/photo mode (reads the PD-DENS output). ■ Operation 1) Place the PD-DENS output on the cupboard glass as follows: • Place it so that its printed side faces down. • Place it so that the whiter (lighter) side of the 15 gradations is toward the vertical size plate. • Place it with reference to the V marking in the rear left of the copyboard glass. 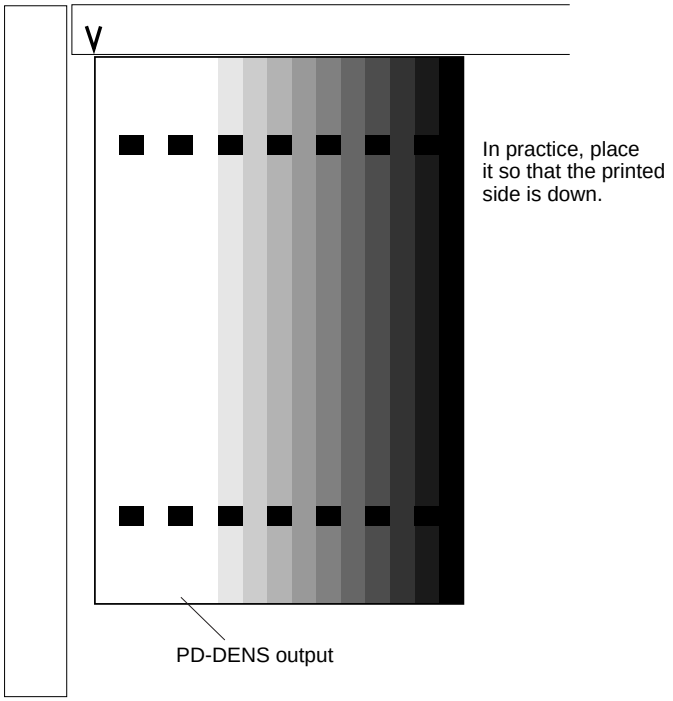 2) Select <PD-ME> to highlight; then, press the OK key. The scanning lamp turns on and off 13 times to make scans. • OK is shown to indicate that the execution ended successfully; if NG, perform "If PD-ME/DZ-ME is NG" on p. 2-23.	

<DENS> FUNCTION

Level 3	Description	Remarks
DZ-DENS	Generates a print pattern for photo mode density auto adjustment. Photo mode uses binary method under a dither method, requiring the execution of density adjustment. ■ Operation 1) Select <DZ-DENS> to highlight, and press the Start key. 2) Check that a 15-gradation print pattern (with white patches) is generated. Keep the pattern for the execution of <DZ-ME>.	
DZ-ME	Executes density auto adjustment for photo mode by reading the DZ-DENS output. 1) Place the DZ-DENS output on the copyboard as follows: • Place it so that its printed side faces down. • Place it so that the whiter lighter side of the 15 gradations is toward the vertical size plate. • Place it with reference to the V marking in the rear left of the copyboard glass. 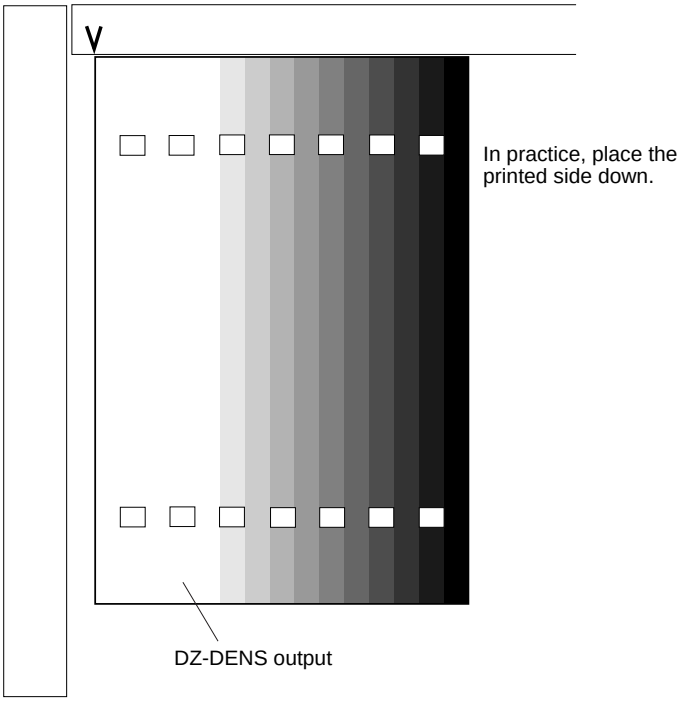 2) Select <DZ-ME> to highlight; then, press the OK key. The scanning lamp turns on and off 13 times. • OK is indicated to show that the execution ended successfully. • If NG, perform "If PD-ME/DZ-ME is NG" on p. 14-27	

<DPC> FUNCTION
Photosensitive Drum Potential Measurement

Level 3	Description	Ref.
D-GAMMA	Measures the photosensitive drum resistance, and indicates the result in 0 through 3. This mode is effective when '1' is set to OPTION>BODY>AGS-NON. It is a mode in which APVC is forced. ■ Operation 1) Check to make sure that '1' is set to OPTION>BODY>**AGS-NON**. 2) Select <**D-GAMMA>** to highlight, and press the Copy Start key. A solid black copy is generated, and the screen will indicate a number. ■ Uses Use the mode only under the following conditions; do not rely on this mode unnecessarily: • To isolate the cause if copy density auto adjustment ends in NG. • To obtain an idea of the wear of the drum. • To make adjustments if images show faults after replacement of the drum cartridge. 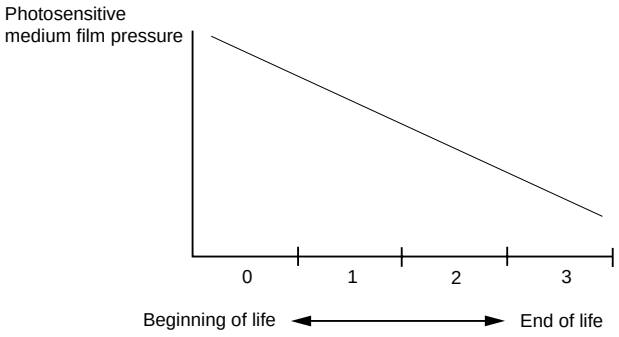 0: The drum is as good as new. 1: The drum will not present a problem. 2: The drum may be replaced. (replace it if possible). 3. The drum must be replaced.	

<CST> FUNCTION
Multifeeder Paper Width Registration

Level 3	Description	Remarks
MF-A4R MF-A6R MF-A4	Restores the multifeeder paper width basic value. For fine adjustment after registration, execute the following: ADJUST>CST-ADJ>**MF-A4R**, **MF-A6R**, **MF-A4**. ■ Operation 1) Place A4R paper in the multifeeder, and adjust the side guide to A4R. 2) Select MF-A4R to highlight, and press the OK key. (The new value will be stored for MF-A4R.) 3) Likewise, repeat steps 1) and 2) for A6R and A4.	A4R width: 210 mm A6R width: 105 mm A4 width: 297 mm

<FIXING>
Fixing Assembly-Related

Level 3	Description	Remarks
NIP-CHK	Fixing Nip Auto Measurement ■ Operation 1) Make an A4 solid black copy; by feeding the output, make a solid black copy. Set the output in the multifeeder. (In other words, feed the same solid black copy through the fixing assembly twice.) 2) Select FIXING>**NIP-CHK**, and press the OK key. 3) Check that the paper is picked up from the multifeeder and is stopped between the fixing rollers; it is then discharged automatically in about 20 sec. 4) Measure the width of the area where the toner is shiny. 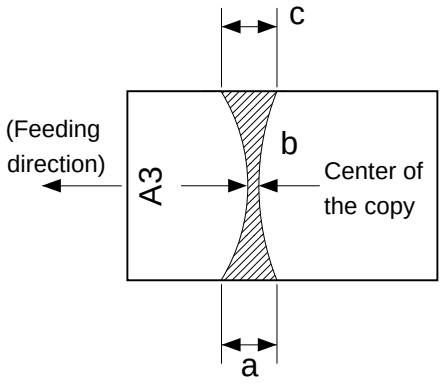 **Note:** a and c are points 10 mm from both ends.	Standard: b: 5.5 ±0.3 mm | a - c |: 0.5 mm or less See II-E in Chapter 14.

<PANEL> FUNCTION
Control Panel Check

Level 3	Description	Remarks
LCD-CHK	Checks the LCD for missing dots. ■ Operation 1) Select the item, and press the OK key. The entire face of the LCD turns on in white and blue alternately for several seconds. To stop the operation, press the Stop key.	
LED-CHK	Control Panel LED Check Start ■ Operation 1) Select the item to highlight, and press the OK key. The LEDs are turned on in sequence. To stop the operation, press <**LED-OFF**>.	
LED-OFF	Control Panel LED Check End ■ Operation 1) Select the item to highlight so that <**LED-CHK**> operation will stop.	
KEY-CHK	Key Input Check Start (indicates key number and name) Selecting KEY -CHK once again will end the input check mode.	Table 4-7
TOUCHKEY	Analog Touch Panel Coordinate Position Adjustment Use it to match the point of a press on the analog touch panel and the LCD coordinates. Execute this mode after replacing the LCD. 1) Select the item to highlight, and press the OK key. 2) Press the nine +'s indicated in the upper left of the LCD in sequence. 3) Press the highlighted item once again.	

Input Keys and Numbers/Names

Key	YAKUNUKE	YAKUNUKE	YAKUNUKE	Key	YAKUNUKE
0 to 9, #, *, Reset, Stop	0 to 9, #, *, RESET, STP	Combine User Mode	L M	Start Power Save Interrupt Clear ID Guide FAX Speed (1 to 60)	START STAND BY INTERRUPT CLEAR ID ? F1 to F60

Table 4-7

<CLEAR> FUNCTION
RAM/Jam History/Error Code Clear

Level 3	Description	Remarks
ERR	Initializes an error. E000, E001, E002, E003, E004, E032, E717 ■ Operation 1) Select the item to highlight, and press the OK key. 2) Turn off and then on the main power supply.	
DC-CON	Initializes the back-up data of the DC controller PCB.	■ Select the item to highlight, and press the OK key.
IP	Initializes the RAM on the image processor PCB.	
MMI-COPY	Initializes the back-up data of the control panel. (preference mode, mode storage)	
MMI-FAX	Initializes the back-up data of the FAX control panel. (telephone directory, program memory) However, data for one-touch dialing, speed dialing, and caller name is not initialized.	
MMI-COM	Initializes back-up data for common settings. (auto cassette change, manual feed size input)	
SERVICE	Initializes back-up data for service mode.	
FAX	ID mode Initializes data for ID and ID password by group.	
JAM-HIST	Initializes the jam history.	
EER-HIST	Initializes the error code history.	

<MISC-R> FUNCTION
Reader Check

Level 3	Description	Remarks
SCANLAMP	Starts a check on the operation of the scanning lamp. ■ Operation 1) Select the item to highlight, and press the OK key. The scanning lamp will remain on for 1 sec and will then turn off.	

<MISC-P> FUNCTION
Printer Check

Level 3	Description	Remarks
IP-CHK	Executes self diagnosis within the image processor PCB. ■ Operation 1) Select the item to highlight, and press the OK key. A check starts on the PCB, and OK will be indicated if the result is good. If NG is indicated, replace the image processor PCB.	
P-PRINT	Prints the contents of <ADJUST, OPTION and COUNTER> of service mode. Be sure to execute this mode before replacing the image processor PCB. ■ Operation 1) Select the item to highlight, and press the OK key. A total of three pages will be delivered. ■ Source of Paper • If a source is selected on the Basic screen, that source will be used. • If auto paper selection is enabled, the topmost cassette will be used.	The list may be generated in the absence of a FAX board.
KEY-HIST	Generates a key input report for copier operation analysis. Select the item, and press the OK key. AA time at which a key is pressed BB if numeral, the number of soft key HARD: hard key SOFT: soft key ONET: one-touch key CC key type RESET: reset key START: start key GUIDE: guide key USE MDOE: user mode key FNC_COPY: Copy key (extended functions key) FNC_FAX: FAX key (extended functions key) POWER_MMI: control panel power key xxxxxxx function value	

F. OPTION Settings Mode

Figure 4-15 shows the Level 2 screen and its items for OPTION mode.

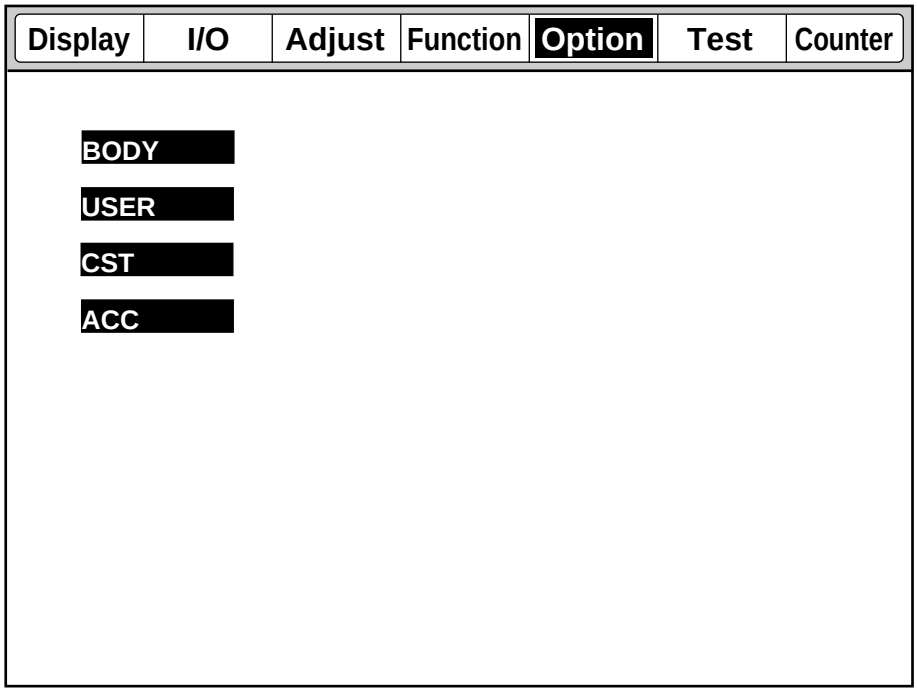

Figure 4-15 OPTION Level 2 Screen

OPTION Items

Level 1	Level 2	Level 3	Outline
OPTION	BODY	AGS-NON	density correction curve selection from photosensitive drum resistance (0*: auto adjust; 1: no change)
		MODEL-SZ	AB/Inch switch (0I: AB; 1: Inch; 2: A; 3: AB/Inch)
		HUM-SW	humidity sensor setting (0*: control by humidity sensor; 1: humidity sensor OFF, for high humidity; 2: humidity sensor OFF, normal humidity; 3: humidity sensor OFF; low humidity)
		TRNS-SW	large-size constant current control switch (0*: constant current control; 1: constant voltage control)
		THINP-SP	thin paper separation mode (0*: OFF; 1: ON)
		GUIDE-SW	fixing assembly inlet guide control mode (0*: no control; 1: 2nd side of double-sided; 2: all)
		PRIAC-SW	image enhancement mode for fault drum charging (0*: OFF; 1: ON)
		ELC-PWR	anti-flicker mode (0*: OFF; 1: ON)
		FAN-SPD	fan drive noise reduction mode (0*: OFF; 1: FM2, FM3 off in STBY; 2: FM2, FM3 off in STBY and FM2, FM3 half-speed in operation)
		IMG-CLR	enable/disable clearing of print images in memory at time of power-on (main power) (0*: do not clear; 1: clear)
		FIX-TYPE	set target control temperature to suit each fixing assembly (0*: 120/230-V model or 100-V system support model; 1: 100-V model)
		TEMPCON2	enhanced fixing mode (0*: normal mode in 100-V area, 1*: normal mode in 120/230-V area, 2: enhanced fixing mode)
	USER	COPY-LIM	copy upper limit change (1 to 999; 999*)
		SLEEP	sleep function ON/OFF (0*: OFF; 1: ON)
		WEB-DISP	fixing cleaning belt warning switch
		FACEDOWN	copy output face-down/face-up switch (0*: top pick-up, face-down; 1: bottom pick-up, face-up)
		FAX-PRT	fax output face (normal, reverse order) (0*: face-down; 1: face-up)
		DATE-DSP	date/time notation switch (0: 'YY/MM/DD; 1: DD/MM/'YY; 2: MM/DD/YY)
		MB-CCV	mail box control card user limit
	CST	U1-NAME	U1 size cassette paper notation ON/OFF
		U2-NAME	U2 size cassette paper notation ON/OFF
		U3-NAME	U3 size cassette paper notation ON/OFF
		U4-NAME	U4 size cassette paper notation ON/OFF
		U5-NAME	U5 size cassette paper notation ON/OFF
		U6-NAME	U6 size cassette paper notation ON/OFF
		U7-NAME	U7 size cassette paper notation ON/OFF
		U8-NAME	U8 size cassette paper notation ON/OFF
		CST-U1	U1 size cassette paper notation set
		CST-U2	U2 size cassette paper notation set
		CST-U3	U3 size cassette paper notation set
		CST-U4	U4 size cassette paper notation set
		CST-U5	U5 size cassette paper notation set
		CST-U6	U6 size cassette paper notation set
		CST-U7	U7 size cassette paper notation set
		CST-U8	U8 size cassette paper notation set
		CST-LTR	LTR size cassette paper notation set
		CST-LTRR	LTRR size cassette paper notation set
	ACC	COIN	coin vendor switch
		DK-P	paper size set for external paper deck.

* Factory setting.

<BODY> OPTION
Copier-Related Machine Settings

Level 3	Operation	Remarks
AGS-NON	Enable or disable automatic selection of a density correction curve based on the result of photosensitive drum resistance measurement. The resistance represents the reading of FUNCTION>DPC>**D-GAMMA** when this item is set to '0'. ■ Uses If adjustment is not possible using the Basic Image Adjustment Procedure (i.e., the result is far from the reference value), select '1'. Such a condition, however, indicates that the image processor PCB, DC controller PCB, composite power supply PCB, or scanner unit is faulty.	0*:The density correction curve will automatically be corrected based on the result of measurement. 1: The density correction curve will be maintained as it is (no change).
MODEL-SZ	Switches between B and Inch configuration, and the result will affect the following: • Enlargement/reduction pattern • Feeder size detection However, if '1' is set (FEEDER>OPTION>SIZE-SW), AB/Inch detection will be made. To change original detection for copyboard cover mode, the size sensors must be rearranged and the DIP SW701 on the image processor PCB must be set accordingly. (VI-H in Chapter 14)	0*:AB 1: Inch 2: A 3: Ab/Inch
HUM-SW	Enables/disables the environment sensor. ■ Uses The machine automatically controls the transfer separation current according to the reading of the environmental sensor. However, this item may be set as needed to suit the site: • To prevent control faults caused by a fault environment sensor. • To enable use in a special environment. • Measurement are taken every 2 hr, and control is based on the average of the most recent five measurements.	0*:control by the environment sensor. 1: fixed mode (for high humidity) 2: fixed mode (for normal humidity) 3: fixed mode (for low humidity) (1, 2, and 3 will not use control by the environment sensor.)
TRNS-SW	Sets the transfer bias output control method for large-size copy paper. Use it to correct image faults on large-size paper owing to transfer. If '1' is set in this mode, the transfer bias control method will be a constant voltage control method for both small- and large-size papers, and TR-N1 and TR-N2 settings will affect transfer output for both small-size and large-size papers.	0*:auto mode 1: manual mode If you have selected manual mode, make sub settings under ADJUST>HV-TR>TR-N1, N2.
THINP-SP	Enables or disables separation enhancement mode. Select '1' to ensure separation of paper with low separation characteristics (thin paper) by increasing the bias used for separation discharge.	0*:OFF (-2.3 KV) 1: ON (- 3.0 KV)

<BODY> OPTION

Level 3	Description	Remarks
GUIDE-SW	Sets control mode for driving the fixing assembly inlet guide. Use it if images are soiled along the trailing edge of paper owing to the fixing assembly. (In such a case, select descent control.)	0*:no control 1: control on 2nd side of double-sided copy 2: control on all
PRIAC-SW	Use it to enable or disable image improvement made by changing the charging current level (as when correcting image faults caused by charging faults of the drum cartridge). It will be effective if the image tends to show white spots in solid areas often occurring between when a new drum cartridge is mounted and about 2000 copies are made. Use it ('1' -> '0') in the following cases: • If a new drum cartridge has been installed and the copier has been turned on. • If COPIER>FUNCTION>D-GAMMA has been executed in service mode. • If the setting has been changed for this item.	0*:do not increase charging current 1: increase charging current
ELC-PWR	Enables or disables a mechanism to prevent flickering of the fluorescent lamp caused by a site environmental factor. Select this item if the fluorescent lamp flickers because of the condition of the site. (effective in 100/120-V areas only)	0*:disable anti-flickering mechanism 1: enable anti-flicker mechanism
FAN-SPD	Selects fan drive sound reduction mode. Use it to reduce the sound of fan drive by decreasing fan rotation speed. This mode is effective only when the site is 27.5°C or less. Do not use it if the site temperature is 27.5°C or more. (applicable to FM2, FM3)	0*:disables fan rotation speed rotation control. 1: in standby, stops 2 delivery heat discharge fans. 2: in addition to '1', rotates 2 delivery heat discharge fans at half speed.
IMG-CLR	Use this mode to enable/disable clearing print images in the memory on the image processor PCB when the main power is turned on. ■ Conditions • The machine must be equipped with an image memory back-up battery. • The printer control software netCraft is used. ■ If the machine is equipped with an image memory back-up battery, the images are backed up even when the main power is turned off. However, some commercially available printer control software is designed to clear the printer log when the main power is turned off, requiring the mode to be set to '1'.	0*:factory setting 1: clear print images at power-on (main power)
FIX-TIPE	Not used. In a 120/230-V model, fixed to '0'. Do not change the setting.	0*:for 120/230-V model. 1: for 100-V model.

Level 3	Description	Remarks
TEMPCOM2	Use this mode to improve fixing if fixing faults occur. Setting this mode to '2' increases the control temperature for fixing regardless of cassette selection to improve fixing. ■ If set to '2', the following will take place: • Increased Control Temperature at standby, 190°C → 195°C during operation, 195°C → 200°C • Increased Initial Multiple Rotation Period 2.5 sec → 20 sec • Increased initial Rotation Start Temperature 100-V model: 170°C → 195°C 120/230-V model: 190°C → 195°C ■ Thick Paper Mode Pick-up starts when the fixing control temperature reaches 195°C. • To select thick paper mode, perform the following: user mode>common settings>special cassette registration>icon selection	0: OFF (factory setting for 100-V model) 1: OFF (factory setting for 120/230-V model) 2: ON (enhanced fixing mode for 100/2120/230-V model)

<USER> OPTION
User Mode-Related Machine Settings

Level 3	Description	Remarks
COPY-LIM	Changes the upper limit for the number of copies. Any number may be set.	1 to 999 (999*)
SLEEP	Enables or disables the sleep function. Use it to enable or disable the shift to sleep state.	0: OFF 1*:ON
WEB-DISP	Enables or disables a warning on the Basic screen when the fixing cleaning belt starts to run out. timing: 145,000th copy (in terms of a4) A warning will be indicated before starting service mode.	0*:disables warning 1: enables warning
FACE-DWN	Switches copy delivery between face-down and face-up. However, delivery will always be face-up if it is independent of sequence; i.e., • single copy • multiple copies without sorting and in copyboard cover mode	0*:face-down (top pick-up for feeder) 1: face-up (bottom pick-up for feeder)
FAX-PRT	Selects a fax output screen.	0*:face-down delivery 1: face-up delivery
DATE-DSP	Switches date/time indication.	0*:'YY MM/DD 1: DD/MM 'YY 2: MM/DD/YY
MB-CCV	Restricts control card users for the mail box.	0*:disables 1: enables

<CST> OPTION

Cassette-Related Settings

To store the new setting, turn off and then on the main power after making the change.

Level 3	Operation	Remarks
U1-NAME	Turns on off the indication of the paper name for the U-size cassette. 0: If the cassette paper size dial is set to U1, the LCD will indicate 'U1'. 1: If the cassette paper size dial is set to U1, the LCD will indicate the abbreviation of the paper selected under <CST-U1>.	
U2-NAME U3-NAME U4-NAME U5-NAME U6-NAME U7-NAME U8-NAME	Turns on and off the indication of the paper name for the U-size cassette. 0: If the cassette paper size dial is set to U2 through U8, the LCD will indicate 'U2' through 'U8'. 1: If the cassette paper size dial is set to U2 through U8, the LCD will indicate the following: U2: FOLIO FOLIO U3: A-FLS FLS U4: G-LTR LTR U5: D-LTRR LTRR U6: G-LGL LGL U7: K-LGL LGL U8: K-LGLR LGLR	
CST-U1	Selects the notation for the U1 size cassette. See Table 14-808. This mode requires an input of a numerical value, not indicating "FLSC" or "OFI" in service mode.	U1: 24, 26, 27, 28, 33, 36
CST-U2 CST-U3 CST-U4 CST-U5 CST-U6 CST-U7 CST-U8	Selects the notation for the U2 through &8, LTR, and LTRR size cassette. However, paper of a default size must be put in the U2 through U8 size cassettes.	U2: 35 U3: 25 U4: 31 U5: 32 U6: 34 U7: 22 U8: 23
CST-LTR	Use it to select notation for the paper in the LTR cassette. Select the nation of the paper to be indicated on the LCD when the paper size registration dial is set to LTR. 18: LTR (factory setting) 29: A-LTRR	Select either 18 or 29. See Table 14-808.
CST-LTRR	Use it to select notation for the paper in the LTRR cassette. Select the nation of the paper to be indicated on the LCD when the paper size registration dial is set to LTRR. 18: LTRR (factory setting) 29: A-LTR	Select either 17 or 30. See Table 14-808.

OPTION

No.	Notation	Paper	No.	Notation	Paper
01	A1	A1	21	LGL	LEGAL
02	A2	A2	22	K-LGL	KOREAN
03	A3R	A3R	23	K-LGLR	GOVERNMENT
04	A3	A3	24	FLSC	KOREAN GOVERNMENT R
05	A4R	A4R	25	A-FLS	FOOLSCAP
06	A4	A4	26	OFI	AUSTRALIAN FOOLSCAP
07	A5	A5	27	E-OFI	OFICIO
08	A5R	A5R	28	B-OFI	ECUADORIAN OFFICIO
09	B1	B1	29	A-LTR	BOLIVIAN OFFICIO
10	B2	B2	30	A-LTRR	ARGENTINE LETTER
11	B3	B3	31	G-LTR	ARGENTINE LETTER R
12	B4R	B4R	32	G-LTR	GOVERNMENT LETTER
13	B4	B4	33	A-LGL	GOVERNMENT LETTER R
14	B5R	B5R	34	G-LGL	ARGENTINE LEGAL
15	B5	B5	35	FOLI	GOVERNMENT LEGAL
16	11×17	11'×17'	36	A-OFI	FOLIO
17	LTRR	LETTER-R	37		ARGENTINE OFFICIO
18	LTR	LETTER	38		
19	STMT	STATEMENT	39		
20	STMTR	STATEMENT-R	40	ALL	

Table 4-8

<ACC>
Accessory-Related

Level 3	Description	Remarks
COIN	Enables or disables coin vendor.	0: OFF 1*:ON
DK-P	Sets the paper size for the side paper deck.	0*:A4 1: B5 2: LTR

G. PG test Print

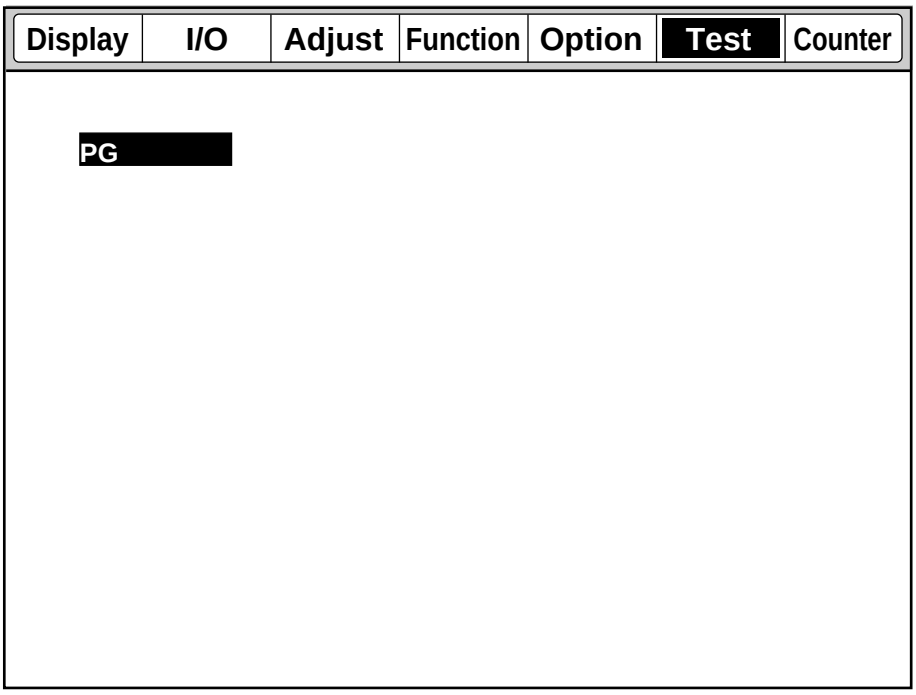

Figure 4-16

Level 2	Level 3	Outline
PG	TYPE	test print output
	TXPH	test print mode switch

Level 3	Description	Remarks
TYPE	Selects and generates a test print (1 through 8). When the PG screen is closed by resetting, '0' will automatically be set to return to normal copying mode. • Selecting the Source of Paper When a paper type is selected on the Initial screen, paper will be picked up from the selected holder. If auto selection (no source is selected) is enabled, the topmost holder will be used. 0 represents normal copying mode (image from the CCD).	Operation 1) Select 'PG', and enter the number of the item on the keypad. 2) Press the OK key and then the Copy Start key to generate a test print.
TXPH	Selects the output mode for the test print selected by TYPE. Switches between text mode and photo mode. This mode is effective only when making test prints, and the setting will be disabled when the PG screen is closed. 0: text mode 1: photo mode	

1. Grid Test Print

Use it to check the angles (right angles) and lines (straight lines).

- If the lines are not straight,
- suspect a displaced laser beam or a BD fault.

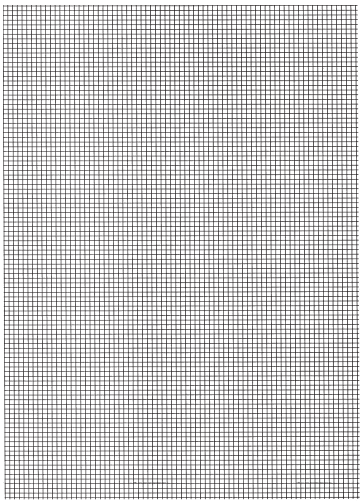

No.1

2. 17-Gradation Test Print (with density correction)
3. 17-Gradation Test print (without density correction)

Use it to check gradation, fogging, white lines, and uneven density between left and right.

- If the gradation is poor, suspect a fault in the laser system.
- If fogging is noted, suspect a fault in the photosensitive drum, developing system, or laser.
- If white lines (bands) are noted, suspect a fault in the developing system or dirt on the transfer charging roller.
- If white lines are noted, suspect shading faults caused by dirt on the standard white plate.
- If uneven density between left and right is noted, suspect dirt on the primary charging roller or the developing assembly.

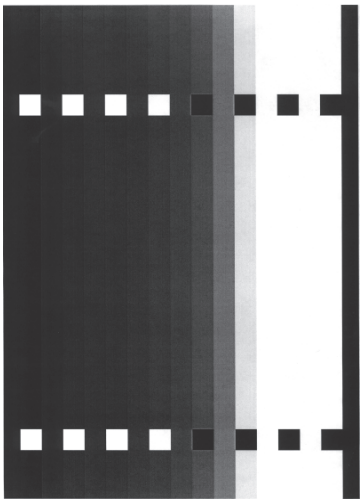

No.2

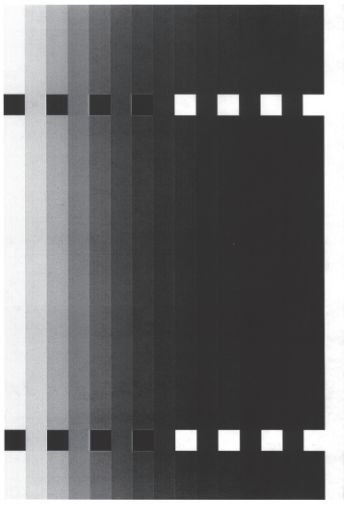

No.3

4. Blank Test Print
Use it to check for fogging.
- If fogging is noted, suspect a fault in the photosensitive drum, developing system, or laser.

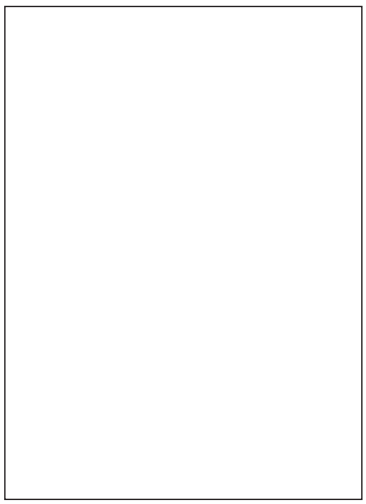

No.4

5. Halftone Test Print
Use it to check for transfer faults, black lines, white lines, and uneven intervals.
- If transfer faults (vertical white spots) are noted, suspect dirt on the transfer charging roller or dirt on the separation static eliminator.
- If black lines re noted, suspect scratches on the drum or dirt on the primary charging roller.

No.5

6. Solid Black Test Print
Use it to check for white spots and white lines.
- If white spots are noted, suspect dirt on the transfer charging roller or dirt on the separation static eliminator.
- If white lines are noted, suspect shading faults caused by dirt on the standard white plate.



No.6

7. Vertical Straight Line Test Print
8. Horizontal Straight Line Test Print
   Use it to check straight lines.
   - If the lines are not straight, suspect a fault in beam detection.

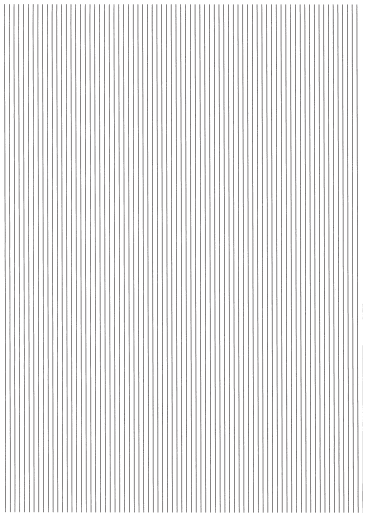

No.7

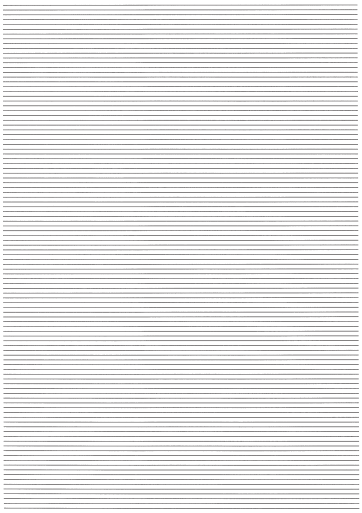

No.8

H. COUNTER Mode

Figure 4-17 shows the Level 2 screen and its items for COUNTER mode.

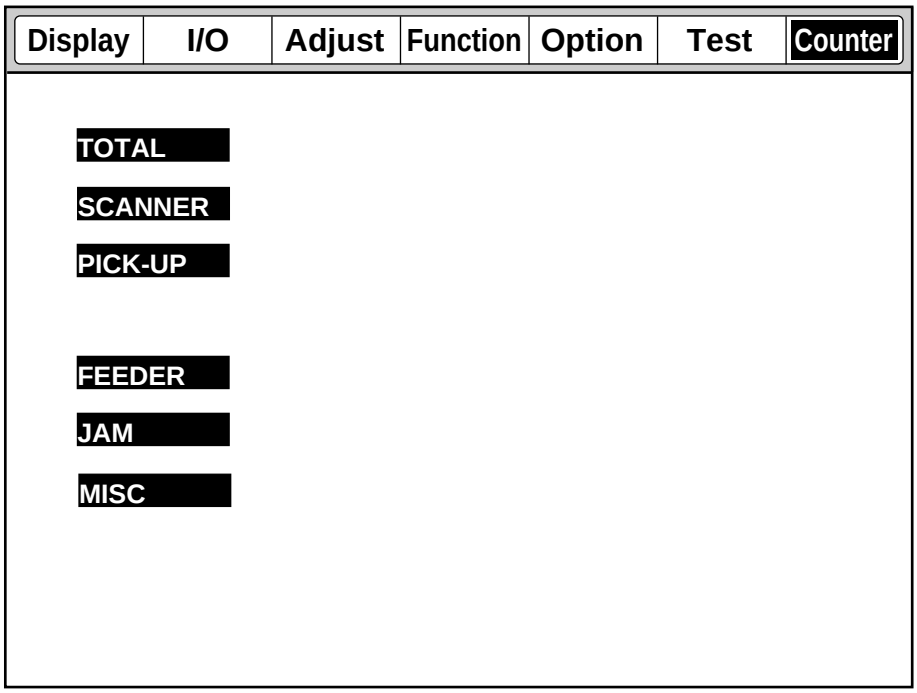

Figure 4-17

- The reading indicates the number of times the machine has operated.
- To clear the counter reading,
  1) Press the item to highlight.
  2) Press the Clear key on the control panel.

  The counter will be cleared to return to '00000000'.
- In text, the large and small sizes are defined as follows:
  large size: 300 mm long or more or non-default size; e.g., B4 or larger.
  small size: less than 300 mm long; e.g., smaller than A4.

COUNTER Items

Level 1	Level 2	Level 3	Outline
COUNTER	TOTAL	SERVECE1	total copy counter 1 for servicing
		SERVECE2	total copy counter 2 for servicing
		TTL	total copy counter (copier, fax, and all)
		L-TTL	large size copy total counter
		S-TTL	small size total copy counter
		COPY	total copy counter
		L-COPY	large size copy counter
		S-COPY	small-size copy counter
		PRNT	total print counter
		L-PRNT	large-size total print counter
		S-PRNT	small-size total print counter
		FAX	total fax counter
		L-FAX	large-size fax counter
		S-FAX	small-size fax counter
	SCANNER	SC-TTL	scanner total scan counter
		SC-COPY	scan counter for copier mode
		SC-FAX	scanner counter for fax mode
		SC-SCSI	scan counter for SCSI scan
	PICKUP	C1	cassette 1 pick-up total copy counter
		L-C1	large-size cassette 1 pick-up counter
		S-C1	small-size cassette 1 pick-up counter
		C2	cassette 2 pick-up total counter
		L-C2	large-size cassette 2 pick-up counter
		S-C2	small-size cassette 2 pick-up counter
		C3	cassette 3 pick-up total counter
		L-C3	large-size cassette 3 pick-up counter
		S-C3	small-size cassette 3 pick-up counter
		C4	cassette 4 pick-up total counter
		L-C4	large-size cassette 4 pick-up counter
		S-C4	small-size cassette 4 pick-up counter
		C5	cassette 5 pick-up total counter
		L-C5	large size cassette 5 pick-up counter
		S-C5	small-size cassette 5 pick-8p counter
		C6	cassette 6 pick-up total counter
		L-C6	large-size cassette 6 pick-up counter
		S-C6	small-size cassette 6 pick-up counter
		MF	multifeeder pick-up total counter
		L-MF	large-size multifeeder pick-up total counter
		S-MF	small-size multifeeder pick-up total counter
		DK	side paper deck pick-up total counter
		L-DK	large-size side paper deck pick-up total counter
		S-MK	small-size side paper deck pick-up total counter
		2-SIDE	2nd side double-sided pick-up total counter
		L-2-SIDE	large-size 2nd size of double-sided pick-up total counter
		S-2-SIDE	small-size 2nd side of double-sided pick-up total counter

Level 1	Level 2	Level 3	Outline
COUNTER	FEEDER	FEED	feeder pick-up total counter
		L-FEED	large size original feeder pick-up total counter
		S-FEED	small size original feeder pick-up total counter
	JAM	TOTAL	total jam count
		PRINT	print jam count
		FEEDER	feeder original jam count
		SORTER	sorter original jam count
	MISC	FIX-WEB	fixing cleaning belt counter
		FIN-STPL	finisher stapling count 1-point stapling: 1 count; 2-point stapling: 2 counts
		SDL-STPL	saddle finisher stapling count 1-point stapling: 1 count; 2-point stapling count: 2 counts

I. FEEDER

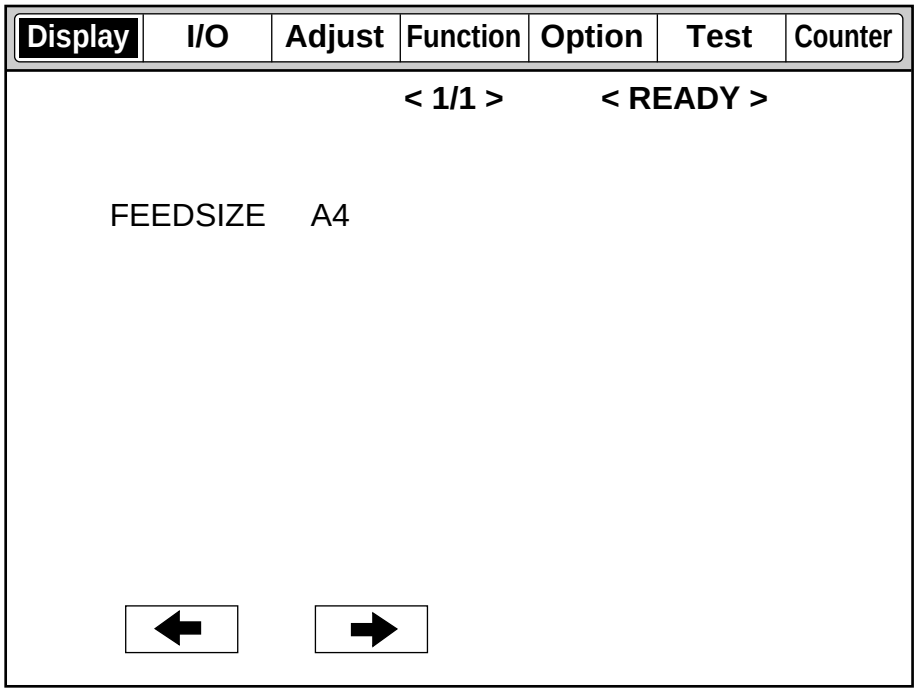

Figure 4-18

FEEDER Items

Level 1	Level 2	Outline
DISPLAY	FEEDSIZE	feeder original size display
ADJUST	DOC-ST	top pick-up original stop position adjustment
	DOC-ST-R	bottom pick-up original stop position adjustment
	P-INTL-U	sheet-to-sheet distance for top pick-up adjustment
	P-INTL-L	sheet-to-sheet distance for bottom adjustment
FUNCTION	SENS-INT	DADF sensor auto sensitivity adjustment (initialization)
	UBLT-CLN	DADF top pick-up separation belt cleaning mode
	DBLT-CLN	DADF bottom pick-up separation belt cleaning mode
OPTION	SIZE-SW	AB/Inch size original mix detection ON/OFF
	SCAN-SEL	non-default size original size detection ON/OFF

Note:
In FEEDER, the following are not used: I/O, Test, Counter.

<DISPLAY> FEEDER

Level 1	Description	REf.
FEEDSIZE	Displays the size of original detected by the feeder. e.g., A4, LTR.	

<ADJUST>

Level 3	Description	REf.
DOC-ST	Adjusts the original stop position for top separation. Same as DOC-ST-R.	Unit: 0.5 mm
DOC-ST-R	After selecting the item, place a single original on the RDF original tray, and press the OK key. When the original has been fed, open the feeder, and take note of the original on the copyboard glass. If the original is to the left of the V marking, increase the setting. If the original is to the right of the V marking, decrease the setting.	
P-INTL-U	Selects sheet-to-sheet distance for top pick-up. 1) Check to make sure that '0' is set to COPIER>OPTION>FACE-DOWN. 2) Select the item, and place two originals on the original tray. 3) Press the OK key. The original will be fed and will be stopped on the copyboard glass. 4) Adjust the distance between sheets. If the distance is small, increase the setting. If the distance is large, increase the setting.	
P-INTL-L	Adjusts the sheet-to-sheet distance for bottom pick-up. 1) Check to make sure that '1' is set to COPIER>OPTION>FACE-DOWN. 2) Select the item, and place two originals on the original tray. 3) Press the OK key. The original will be fed and stopped on the copyboard glass. 4) Measure the distance between sheets. If the distance is small, increase the setting. If the distance is large, decrease the setting.	

<FUNCTION> FEEDER

Level 3	Description	REf.
SENS-INT	Executes auto sensitivity adjustment for the RDF sensor (initialization). Execute this mode if you replaced the DADF controller PCB, original tray paper sensor (S1), or registration sensor (S3); further, if you have replaced the DADF controller PCB, you will have to perform additional steps. The specifics of this adjustment are the same as those made using the DIP switch on the DADF controller PCB. 1) Remove the DADF controller cover, and find out the location of LED 1/2. 2) Select the item, and press the OK key. 3) Check that the machine executes the mode and stops automatically.	See Standards and Adjustments in the DADF Service Manual.
UBLT-CLN	Executes separation belt cleaning mode for DADF top pick-up. ■ Operation 1) Select UBLT-CLN to highlight. 2) Moisten the center of paper with solvent, and place the paper on the original tray of the feeder. 3) Press the OK key. The original will be fed to the middle, and the top pick-up separation belt will rotate idly. 4) Press the OK key to stop the operation. 5) Open the feeder upper cover, and remove the paper; then, close the upper cover.	
DBLT-CLN	Executes separation belt cleaning mode for DADF bottom pick-up. ■ Operation Same as <UBLT-CLN>.	

<OPTION> FEEDER

Level 3	Description	REf.
SIZE-SW	Enables or disables AB/Inch mix document size detection. 0*:disables detection 1: enable detection	Factory setting: 0
SCAN-SEL	Enables or disables the original size detection for non-default size. 0*:disables detection (normal copying mode) 1: enables detection (priority on paper mode)	Factory setting: 0

J. SORTER (finisher, saddle stitcher)

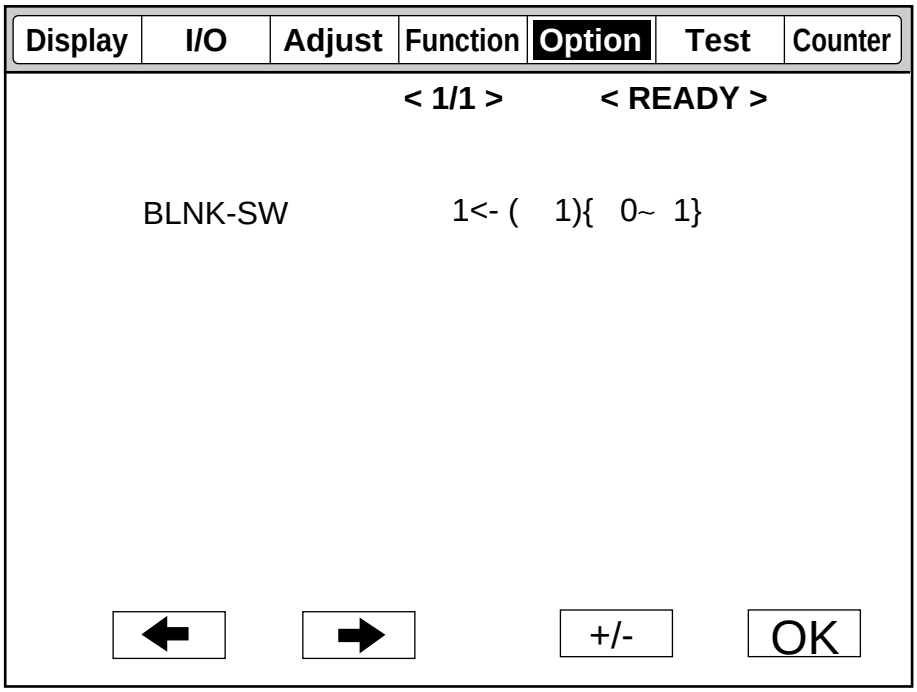

Figure 4-19

SORTER Items

Level 1	Level 3	Outline
OPTION	BLNK-SW	folding position side margin set for saddle stitcher

Note:
Under SORTR, only the following mode is used: OPTION.

<OPTION>

Level 3	Description	REf.
BLNK-SW	Sets the margin (W) on both sides of the line of folding when the saddle stitcher is used. 0: normal width (5 mm) 1: large width (10 mm) 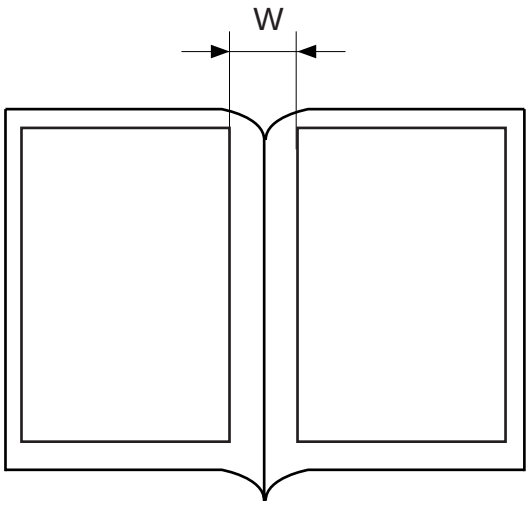	

CHAPTER 5 SELF DIAGNOSIS

The machine is equipped with a self diagnostic mechanism to check on machine condition (especially sensor condition). It runs a check as needed and, upon detection, indicates the nature of an error on the control panel.

	Error code
Copier	E000,E001,E002,E003,E004,E005,E010,E014,E030, E032,E051,E064,E100,E110,E191,E202,E220,E240, E241,E243,E261,E300,E301,E315, E604,E605,E674 E710,E711,E712,E713,E717,E803,E805
DADF-A1	E400,E401,E402,E403,E404,E411
Cassette Feeding Unit-R1/S1	E716,E901
Multi Output Tray D1	E540
Finisher-C1	E500,E503,E504,E505,E512,E530,E531,E532,E535, E540,E584,
Saddle Finisher-C2	E5F0,E5F1,E5F2,E5F3,E5F4,E5F5,E5F6,E5F8,E5F9
Finisher-E1	E500,E512,E514,E530,E531,E537,E577,E580
Paper Deck-B1	E015,E041,E043
SCSI Interface Board-D1	E601,E603
Printer Board	E677

■ Resetting Errors

1. The following error codes cannot be reset by merely turning off and then on the main power. They require resetting in service mode:
   E000, E001, E002, E003, E004, E032, E717
   1) Start service mode, and select COPIER>FUNCTION>CLEAR>ERR.
   2) Press the OK key.
   3) Turn off and then on the main power.
2. Error codes other than the above may be reset by turning off and then on the main power.

■ Detail Code

Some error codes offer detail codes, which may be checked in service mode:
COPIER>DISPLAY>**ERR** (3rd block from the right)

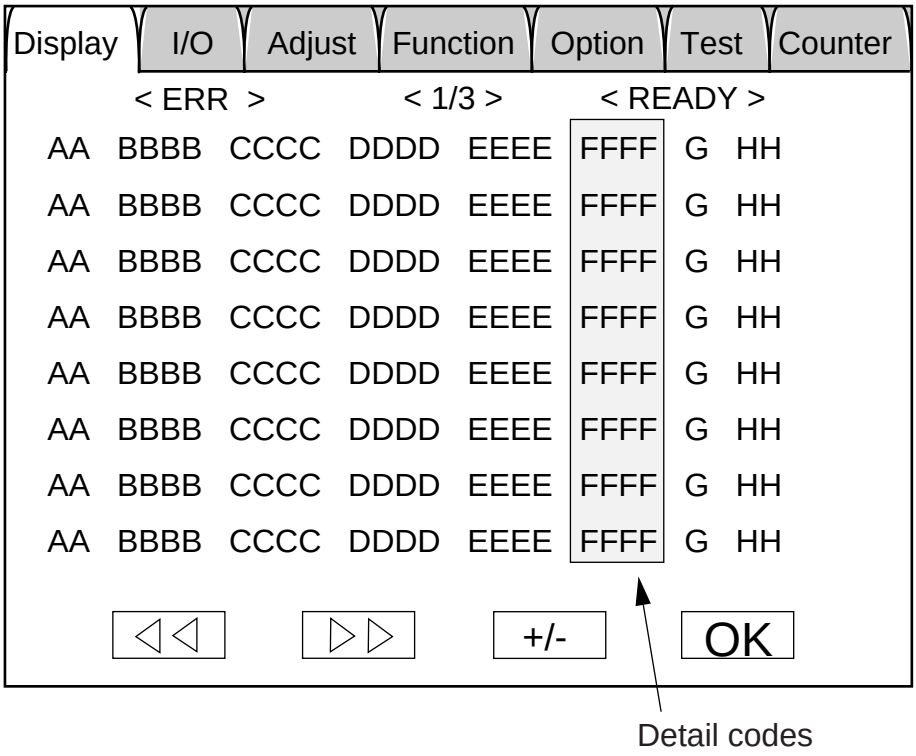

Figure 5-1

A. Copier

Code	Detail	Cause	Description
E000		The fixing temperature does not increase. • The main thermistor (TH1) has poor contact or an open circuit. • The fixing heater has an open circuit. • The thermal switch has an open circuit. • The DC controller PCB has a fault. • The image processor PCB has fault.	The main thermistor reading does not reach 55°C 45 sec after the main power switch has been turned on.
E001	0001	The fixing temperature has increased abnormally. • The main thermistor (TH1) has a short circuit. • The fixing heater drive circuit has a fault. • The DC controller PCB has a fault. • The image processor PCB has a fault.	The output of the main thermistor has exceeded 220°C.
	0002	The sub thermistor has detected overheating. • The main thermistor (TH) has a short circuit. • The fixing heater drive circuit has a fault. • The DC controller PCB has a fault. • The image processor PCB has a fault.	The output of the sub thermistor has exceeded 235°C.
	0003	The sub thermistor has an open circuit. • The sub thermistor has an open circuit. • The SSR has a fault. • The DC controller PCB has a fault. • The image processor PCB has a fault.	
E002		The fixing temperature does not reach a specific value. • The thermistor (TH1, TH2) is not mounted properly, has poor contact, or has an open circuit. • The fixing heater has an open circuit or has a crack. • The fixing heater drive circuit has a fault. • The DC controller PCB has a fault. • The image processor PCB has a fault.	The output of the main thermistor satisfies the following: • 31 sec or more between 40°C and 75°C. • 23 sec or more between 75°C and 100°C • 19 sec or more between 100°C and 120°C • 19 sec or more between 120°C and 140°C • 19 sec or more between 140°C and 160°C. • 15 sec or more between 160°C and 170°C.
E003		The fixing temperature has dropped abnormally. • The thermistor (TH1, TH2) is not mounted properly, has poor contact, or has an open circuit. • The fixing heater has an open circuit or has a crack. • The fixing heater drive circuit has a fault. • The DC controller PCB has a fault. • The image processor PCB has a fault.	• The thermistor (TH1, TH2) has detected 100°C or less after wait-up.

Code	Detail	Cause	Description
E004	0001	The SSR has a short circuit. • The SSR has an error. • The DC controller PCB has a fault.	• The fixing heater remains on. • The fixing temperature has increased abnormally.
	0002	The heater relay has an error. • The heater relay has an error. • The DC controller PCB has a fault.	The heater relay remains on.
E005		The fixing cleaning belt has been taken up. • The fixing cleaning belt has been taken up. • The DC controller PCB has a fault. • The image processor PCB has a fault.	The fixing cleaning belt drive solenoid has been driven more than a specific number of times.
E010		The main motor has faulty rotation. • The main motor (M1) has a fault. • The DC controller PCB has a fault. • The image processor PCB has a fault.	• The rotation of the main motor does not stabilize 9 sec after it has started. • While the main motor is rotating at a constant speed, its revolution has deviated from a specific value by 9 sec or more.
E014		The fixing motor has faulty rotation. • The main motor (M2) has a fault. • The DC controller PCB has a fault. • The image processor PCB has a fault.	• The rotation of the main motor does not stabilize 1 sec after it has started. • While the fixing motor is rotating at a constant speed, its revolution has deviated from a specific value by 1 sec or more.
E030		The total copy counter does not operate. • The total copy counter (CNT1) has an open circuit. • The DC controller PCB has a fault. • The image processor PCB has a fault.	• A check is made immediately before the counter turns on and off. (When the counter turns on, normal if the counter drive signal is '0'.)
E032		The copy controller counter has an error. • The counter data communication between the copier and the copy data controller has an error. • The DC controller PCB has a fault. • The image processor PCB has a fault.	The copy data controller does not detect count data within a specific time after the copier has sent the copy start signal.
E051		The horizontal registration home position detection mechanism has a fault. • The horizontal registration sensor (PS10) has a fault. • The horizontal registration motor (M9) has a fault. • The DC controller PCB has a fault.	The home position cannot be detected after the horizontal registration signal has been sent.

Code	Detail	Cause	Description
E064		The high-voltage (primary charging, transfer charging, development) output has a fault. • The composite power supply PCB has a fault. • The DC controller PCB has a fault. • The wiring has a fault (short circuit, open circuit).	• The difference between the output prescribed by the high-voltage control signal and the high-voltage output actually generated is more than a specific value. • Either the primary charging roller, transfer charging roller, or developing bias has an output error.
E100	0001	BD error has occurred. • The laser unit has a fault. • The BD PCB has a fault. • The BD PCB has a fault. • The laser driver PCB has a fault.	• The BD signal is not generated during image formation (2nd sheet pick-up and later). • The BD signal cycle has deviated.
	0002		• The BD signal is not generated within 2 sec after the laser has turned on (at time of 1st sheet pick-up).
E110		The laser scanner motor does not generate clock pulses. • The laser scanner motor (M3) has a fault. • The laser scanner driver PCB has a fault. • The DC controller PCB has a fault.	• The laser scanner motor does not reach a specific speed after the laser scanner motor drive signal has been generated. • The laser scanner motor deviates from a specific speed after it has reached it.
E191		The serial communication between the DC controller PCB and the composite power supply PCB has a fault.	• The communication data is not updated for 8 sec or more. • The check sum of the communication data varies three times continuously.
E202 • No code indication. • Control panel keys locked.		The scanner home position cannot be detected. • The scanner home position sensor (PS1) has a fault. • The scanner motor (M3) has a fault. • The DC controller PCB has a fault.	• The scanner does not reach the home position after it has started to operate.
E220		The scanning lamp turns on abnormally. • The scanning lamp has a fault. • The intensity sensor has a fault. • The CCD PCB has a fault. • The composite power supply PCB has a fault. • The DC controller PCB has a fault.	• The lamp intensity does not exceed a specific value within a specific time after scanning operation starts (following lamp activation). • The lamp remains off for 10 sec when it should remain on.
E240		The communication on the image processor PCB has a fault. • The communication between the DC-CPU and the IP-CPU has an error.	A communication error is detected between the DC-CPU and the IP-CPU on the image processor CPB.

Code	Detail	Cause	Description
E243		The communication with the control panel has an error. • The control panel CPU has an error. • The image processor PCB has an error.	A communication error is detected between the CPU on the control panel and the image processor PCB.
E261		The zero-cross signal has an error. • The power supply frequency fluctuates. • The composite power supply PCB has a fault.	The intervals of the zero-cross signal deviates from a specific range.
E300	0000	The download data contains a mismatch model type (speed, spec). The versions of the two flash ROMs on the image processor PCB do not match.	The download data is found to be for a different model when the main switch is turned on after downloading.
	0001		
E301		The scanning lamp intensity has a fault. • The scanning lamp has a fault. • The CCD PCB has a fault. • The DC controller PCB has a fault.	The output of the intensity sensor drops below a specific value while the lamp is on.
E315		The image data coding mechanism has an error. • The coding chip has an error. • The image memory has an error.	A fault is discovered when image data is coded/decoded.
	0001	An error has occurred in self diagnosis on the chip for image compression/ decompression.	When the main power is turned on.
	0002	An error has occurred in decoding.	When image data is being decoded for printing.
	0003	An error has occurred in coding.	When image data is being coded during copying or fax reading.
	0004	An error has occurred in coding.	When image data is being coded during storing print data.

Code	Detail	Cause	Description
E601		The communication between the machine and the SCSI board has a fault.	An error exists in the communication between the SCSI-CPU and the IP-CPU.
	0000		If the response from the SCSI board has an error when the machine sends a command to the SCSI board.
	0001		When an initial check is made for communication.
	0002		When an initial check is made for communication.
	0003		When a check is made for communication initialization.
	0004		When a check is made for communication initialization.
	0005		When a check is made for communication initialization.
	0006		If no response comes from the SCSI board within a specific time when the machine sends a command to the SCSI board.
	0007		If no response comes from the machine to the SCSI board within a specific time.
	0008		If the machine has sent NAK three times or more in response to a command from ACSI board.
	0010		If the SCSI board has sent NAK three times or more when it sends a command to the machine.
E603		The SCSI fuse has blown.	The SCSI fuse has blown.
E604		The image memory has a fault. • The RAM has a fault. • The expansion memory is not mounted properly.	A write fault is detected when image data is written to the image memory.
E605		The image memory battery has a fault. • The battery has a fault. (The image memory battery is an accessory to the FAX board.)	The voltage of the image memory battery is lower than a specific value (if after an adequate charging time and the power was turned on within a charge life).
E674		The fax unit has a fault. • The chip has a fault. • The fax unit has poor connection.	An error is detected when writing to the chip while receiving a fax message.

Code	Detail	Cause	Description
E677		The communication between the printer board and the copier is faulty.	An error has occurred in the communication between the printer board and the IP-CPU.
	0001	An error is noted while the printer board is being started up.	The power-on signal from the printer board does not reach the image processor PCB.
	0002	The communication between the printer board and the copier is faulty.	An error has occurred in the communication between the printer board and the IP-CPU.
	0003	The initialization of the printer board is faulty.	
	0004	The communication between printer board and the copier is faulty.	
	0005	A check-sum error is noted at the end of initializing the printer board.	
	0006*	Time-out error during processing of PDL data	
E710		The IPC chip self diagnosis has an error. An error exists in the IPC chip self diagnosis mechanism on the image processor PCB.	The IPC chip self diagnosis mechanism on the image processor PCB does not end normally when power is turned on.
E711		The IPC communication has a fault. • The cable has poor contact. • The cable has a fault. • The options print PCB unit has a fault. • The accessory IPC chip has a fault.	The communication between the IPC chip on the image processor PCB and the IPC chip (accessory) has a fault.
E712		The communication with the feeder has a fault.	The communication is interrupted.
E713		The sorter IC has an error.	The communication is interrupted.
E716		The communication with the pedestal has a fault.	The communication is interrupted.
E717		The communication with the copy data controller has a fault.	The communication is interrupted.

* Displas the error history only.
For 0006 of E677, the printer board will be reset, thereby canceling the job.

Code	Detail	Cause	Description
E803		Both ends of the fluorescent lamp became black because of an error output voltage of the composite power supply or deterioration of the lamp.	The output voltage of the composite power supply PCB (+24 VU, +24 VR) has an error. For details, refer to LED200 (to see how it turns on; p.14-133).
E805		The fan rotation has a fault. • The fan has a fault. • The DC controller PCB has a fault. • The fan connector has poor contact.	• The fan motor does not rotate at a specific speed 5 sec after it has started to rotate. • The fan motor rotation deviates from a specific value for 5 sec or more while it is rotating at a specific speed. For the locations of the fans, see II. of Chapter 10.
	0002	Fixing heat discharge fan 1 (FM2)	
	0003	Fixing heat discharge fan 2 (FM3)	
	0004	Laser driver cooling fan (FM4)	
	0005	Laser scanner motor cooling fan (FM5)	
	0006	Laser scanner motor cooling fan 2 (FM6)	
	0007	Cleaner heat exhaust fan (FM7)	
	0008	System cooling fan (FM8)	
	0010	Low-voltage power supply cooling fan 1 (FM10)	
	0011	Low-voltage power supply cooling fan 2 (FM11)	
	0012	Reader cooling fan 1 (FM12)	
	0013	Reader cooling fan 2 (FM13)	
	0014	Drum cartridge cooling fan 1	
	0015	Drum cartridge cooling fan 2	
	0016	Drum cartridge cooling fan 3	
	0017	DC controller PCB cooling fan	
	0018	Scanner motor cooling fan	

B. DADF

Code	Cause	Description
E400	• The data communication with the copier has a fault.	• The communication is monitored at all times, and this error is identified when the communication is interrupted for 5 sec or more.
E401	• The pick-up motor (M1) does not rotate. • The pick-up roller sensor (S5) has a fault.	• A flag is attached to the shaft of the pick-up motor (M1), and the rotation of the motor is detected when the flag blocks the pick-up roller sensor (S5). This error is identified when the sensor does not turn on and off twice or more within 1 sec.
E402	• The belt motor (M3) does not rotate. • The belt motor clock sensor (S10)has a fault.	• The number of belt motor clock pulses within 200 msec is below a specific value.
E403	• The feeder motor (M2) does not rotate. • The feeder motor clock sensor (S9) has a fault.	• The number of feeder motor clock pulses within 200 msec is below a specific value.
E404	• The feeder motor (M5) does not rotate. • The feeder motor clock sensor (S13) has a fault.	The number of feeder motor clock pulses within 200 msec is below a specific value.
E411	• The original tray paper sensor (S1) has a fault. • The registration sensor (S3) has a fault.	The output for the sensor is 2.3 V or more in the absence of paper.

Caution:

1. If the self diagnosis mechanism has turned on, turn on and off the copier's power switch.
2. If the DADF is out of order, open it and place an original on the copyboard glass to make copies.

C. Cassette Feeding Unit-R1/S1

Code	Cause	Description
E716	The pedestal has an error. • The pedestal controller PBC has an error. • The connector has poor connection. • The 24-V power supply has a fault.	The communication IC (Q101) on the pedestal controller PCB is out of order.
E901	• The pedestal motor (M20) has a fault. • The pedestal controller PCB has a fault.	• The pedestal motor does not rotate at a specific speed within 10 sec after it has turned on. • The pedestal motor speed deviates

D. Multi Output Tray-D1

Code	Cause	Description
E540	The shift tray home position sensor fails.	The home position detection signal does not turn on within 5 sec when making a shift tray home position search.

E. Finisher-C1

Code	Detail code	Error	Description
E500	-	• Data communication error	• The communication between the copier and the finisher is interrupted. This error is detected by the copier.;
E503	0003	• Communication error	• The communication with the saddle stitcher is interrupted.
E504	0001	• Height sensor (PS1)	• The communication between the height sensor and the finisher controller is not possible. Or, the communication data has an error.
	0002		• The communication between the sensor and the finisher controller PCB is not possible for a specific period or more.
	0003		• The disconnection of the sensor connector is detected at time of power-on.
	0004		• The sensor adjustment made by a DIP switch has an error.
E505	0001	• Back-Up RAM	• The check sum has an error at power-on.
E512	0001	• Delivery motor (M2) • Delivery motor clock sensor (PI10)	• The number of clock pulses was not obtained from the delivery motor clock sensor at the start of operation.
	0002		• The clock pulses stop for an equivalent of 200 mm during feeding operation.
E530	0001	• Alignment motor (M3) • Alignment plate home position sensor (PI6) • The fixing heater drive circuit has a fault.	• The alignment plate does not leave the alignment home position sensor after the alignment motor has been driven for 2 sec.
	0002		• The alignment plate does not return to the alignment plate home position sensor after the alignment motor has been driven for 2 sec.

Code	Detail code	Error	Description
E531	0001	• Stapler motor (M6) • Stapler motor home position sensor (PI7)	• The stapler does not leave the stapling home position even when the stapler motor has been driven for 0.5 sec.
	0002		• The stapler does not leave the home position even when the stapler motor has been driven for 0.5 sec.
E532	0001	• Stapler shift motor (M4) • Stapler shift home position sensor (PI7)	• The stapler does not leave the stapler shift home position even when the stapler shift motor has been driven for 4 sec.
	0002		• The stapler shift home position cannot be detected even when the stapler motor has been driven for 4 sec.
E535	0001	• Delivery motor (M2) • Swing guide closed detecting switch 2 (MS6)	• The swing guide closed detecting switch does not turn on even when the delivery motor has been driven in reverse direction for 1 sec.
	0002	• Delivery motor (M2)	• The swing guide open sensor does not turn on when the delivery motor has been turned counterclockwise for 1 sec.
	0003	• Safety area switch (MS3) • Swing guide closed detecting switch (MS6)	• The swing guide closed detecting switch turned off when the tray 1/2 is in the safety switch OFF position.

Code	Detail code	Error	Description
E540	0001	• Tray lifter motor (M5) • Tray lifter motor clock sensor 1/2 (PI19, PI9) • Tray home position sensor (PI8)	• The upward movement does not end within 15 sec when the tray lifter motor has been driven. • The tray home position is not detected even when the tray lifter motor has been driven for 15 sec.
	0002	• Tray upper limit detecting switch (MS4)	• The tray upper limit detecting switch turned on while the tray is moving upward.
	0003	• Tray lifter motor (M5) • Tray lifter motor clock sensor 1/2 (PI19/PI20)	• The clock sensor 1/2 does not generate clock pulses for 200 msec or more even when the tray lifter motor has been driven.
E584	0001	• Feeder motor (M1) • Shutter closed sensor (PI5)	• The shutter closed detecting switch does not turn on even when the feeder motor has been driven in reverse for 1 sec or more.
	0002	• Feeder motor (M1) • Shutter closed sensor (PI5)	• The shutter open sensor does not turn on even when the feeder motor has been driven in reverse for 1 sec or more.
	0003	• Safety area detecting switch (MS3) • Shutter closed detecting switch (MS4)	• The shutter detecting switch turned off when the tray 1/2 is in the safety area switch OFF position.

F. Saddle Finisher-C2

Code	Detail code	Error	Description
E5F0	0001	• Paper positioning plate motor (M4S) • Paper positioning plate home position sensor (PI7S)	• The paper positioning plate home position sensor does not turn on even when the paper positioning plate motor has been driven for 1.25 sec or more.
	0002		• The paper positioning sensor does not turn off even when the paper positioning plate motor has been driven for 1 sec or more.

Code	Detail code	Error	Description
E5F1	0001	• Folding motor (M2S) • Folding motor clock sensor (PI4S)	• The number of detecting pulses of the folding motor clock sensor has dropped below a specific value.
E5F2	0001	• Guide motor (M3S) • Guide home positioning sensor (PI13S)	• The guide home positioning sensor does not turn on even when the guide motor has been driven for 0.4 sec or more.
	0002		• The guide home position sensor does not turn off even when the guide motor has been driven for 1 sec or more.
E5F3	0001	• Alignment motor (MSS) • Alignment plate home position sensor (PI5S)	• The alignment plate home position sensor does not turn on even when the alignment motor has been driven for 0.5 sec or more.
	0002		• The alignment plate home position sensor does not turn off even when the alignment motor has been driven for 1 sec or more.
E5F4	0001	• Stitcher motor (rear, M6S) • Stitching home position switch (rear, PS2S)	• The stitching home position switch does not turn off even when the stitcher motor (rear) has been rotated clockwise for 0.5 sec or more.
	0002		• The stitching home position switch does not turn on even when the stitcher motor (rear) has been driven in reverse for 0.5 sec or more during jam recovery.
E5F5	0001	• Stitcher motor (front, M7S) • Stitching home position switch (front, PS4S)	• The stitching home position switch does not turn off even when the stitcher motor (front) has been driven clockwise for 0.5 sec or more.
	0002		• The stitching home position switch does not turn on even when the stitcher motor (front) has been driven in reverse for 0.5 sec or more.

Code	Detail code	Error	Description
E5F6	0001	• Paper pushing plate motor (M8S) • Paper pushing plate home position sensor (PI14S)	• During a shift to the paper pushing plate home position, the paper pushing plate home position sensor does not turn on even when the paper pushing plate motor has been driven for 1.0 sec or more.
	0002		• During a shift to the paper pushing plate leading edge position, the paper pushing plate home position sensor does not turn on when the paper pushing plate motor has been driven for 1.0 sec or more.
	0003	• paper pushing plate motor (M8S) • Paper pushing plate leading edge sensor (PI15S)	• During a shift from the paper position plate leading edge position to home position, the paper pushing plate leading edge position sensor does not turn off even when the paper pushing plate motor has been driven for 1.0 sec or more.
	0004	• Paper pushing plate motor (M8S) • Paper pushing plate motor clock sensor (PI1S)	• The number of detecting pulses of the paper pushing plate motor clock sensor drops below a specific value.
E5F8	0001	• Connector of the guide home position sensor (PI13S)	• The connector of the guide home position sensor is identified as being disconnected.
	0002	• Connector of the pushing plate home position sensor (PI14S)	• The connector of the paper pushing plate home position sensor is identified as being disconnected.
	0003	• Connector of the pushing pate leading edge position sensor (PI15S)	• The connector of the paper pushing plate leading edge sensor is detected to be disconnected.

Code	Detail code	Error	Description
E5F9	0001	• Inlet door open detecting switch (MS1S) • Inlet door sensor (PI9S)	• The inlet door open detecting switch is detected to be open for 1 sec or more from the start of copying or from the start of the copier's initial multiple rotation while the following three cover photointerrupers detect that the doors are open: • Inlet door sensor (PI9S) • Front door open sensor (PI2S) • Delivery door open sensor (PI3S)
	0002	• Front door open detecting switch (MS2S) • Front door open sensor (PS2S)	• The front door open detecting switch detects that the front door is open for 1 sec or more from the start of copying or from the start of the copier's initial multiple rotation while the following three cover photointerrupers detect that the doors are closed: • Inlet door sensor (PI9S) • Front door open sensor (PI2S) • Delivery door open sensor (PI3S)
	0003	• Delivery door open detecting switch (MS3S) • Delivery door open sensor (PI3S)	• The delivery door open detecting switch detects that the delivery door is open for 1 sec or more form the start of copying or from the start of the copier's initial multiple rotation while the following three cover photointerrupers detect that the doors are open: • Inlet door sensor (PI9S) • Front door open sensor (PI2S) • Delivery door open sensor (PI3S)

G. Finisher-E1

Code	Cause	Description
E500	• The copier connection harness is faulty (disconnection, open circuit). • The finisher controller PCB or the copier's DC controller PCB is faulty.	The communication between the copier and the finisher has been interrupted for 5 sec or more.
E512	• The delivery motor (M1) is faulty. • The delivery clock sensor (S1) is faulty; or, the connector is disconnected, or there is an open circuit. • The finisher controller PCB is faulty.	The delivery clock sensor (S1) signals are not detected when the delivery motor (M1) has been driven for a specific period of time or more (equivalent of 70 mm, 80 pulses).
E514	• The stack processing motor (M2) is faulty. • The stack delivery lever home position sensor (S8) is faulty; or, the connector is disconnected, or there is an open circuit. • The stack processing motor (M2) relay harness is faulty. • The stack delivery belt is faulty. • The returning roller is faulty.	The stack delivery lever does not reach the stack lever home position sensor (S8) when the stack processing motor (M2) has been driven for a specific period of time at the start of operation. **Reference:** The same condition detected during delivery of a stack will be treated as a jam.
E530	• The rear alignment motor (M4) is faulty. • The rear aligning plate home position sensor (S7) is faulty. • The rear alignment motor relay harness is faulty. • The rear aligning plate has a faulty load.	• The aligning plate does not reach the home position sensor (S7) when the rear alignment motor (M4) has been driven for a specific period of time. • The rear aligning plate does not leave the home position when the rear alignment motor (M4) has been driven for a specific period of time.
E531	• The staple motor (M6) is faulty. • The stapling home position sensor (S17) is faulty. • The stapler harness is faulty. • The finisher controller PCB is faulty.	• The stapler does not leave the stapling home position sensor (S17) within 0.5 sec after the stapler motor has been rotated clockwise. • The stapler does not return to the stapling home position sensor (S17) within 0.5 sec after the stapler motor has been driven clockwise; then, it does not return to the sensor within 0.5 sec when the motor has been rotated clockwise thereafter.

Code	Cause	Description
E537	• The front alignment motor (M3) is faulty. • The front aligning plate home positions sensor (S6) is faulty. • The front alignment motor relay harness is faulty. • The front aligning plate has an excess load.	• The aligning plate does not reach the aligning plate home position sensor when the front alignment motor (M3) has been driven for a specific period of time. • The aligning plate doe not leave the aligning plate home position sensor (S6) after the front alignment motor (M3) has been driven for a specific period of time.
E577	• The stack processing motor (M2) or the finisher controller PCB is faulty. • The returning roller home positions sensor (S3) is faulty; or, the harness connector is disconnected, or there is an open circuit. • The stack processing motor relay harness is faulty. • The stack delivery lever is faulty. • The returning roller is faulty.	The returning roller does not reach the home position even when the stack processing motor (M2) has been driven long enough to return it to the returning roller home positions sensor (S3). **Reference:** The same condition will be treated as a jam if it occurs while the stack is being aligned in feeding direction.
E580	• The stack tray lift motor (M5) is faulty. • The stack tray power height sensor (S10) is faulty; or, the harness connector is disconnected, or there is an open circuit. • The stack tray lift motor has a faulty load. • The finisher controller PCB is faulty.	• The stack tray upper limit sensor (S13) has turned on while the tack tray lift motor (M5) is being driven. • The clock signal from the stack tray lift motor clock sensor (S9) is not detected 15 times or more within 0.8 sec while the stack tray lift motor (M5) is being driven. • The stack tray does not reach the stack tray paper height sensor (S10) 4 sec after the stack tray lift motor (M5) has been turned on for upward movement. • The stack tray does not leave the stack tray paper height sensor (S10) 4 sec after the stack tray lift motor (M5) has been turned on for downward movement.

H. Paper Deck-B1

Code	Cause	Description
E041	• The deck lifter motor (M102) has a fault. • The side deck driver PCB has a fault. • The DC controller has a fault. • The deck lifter position sensor (PS104) has a fault. • The deck paper supply position sensor (PS107) has a fault.	• The deck lifter position sensor (PS104) does not detect the lifter within 60 sec after the deck lifter up signal has been generated. • The deck paper supply position sensor (PS107) is '0' when the deck lifter position sensor (PS104) and the deck level sensor position (PS108) are '1'.
E043	• The deck main motor (M101) has a fault. • The side deck driver PCB has a fault. • The DC controller has a fault.	• The deck main motor PLL lock signal (DMPLK) is '1' for 900 msec or more after the deck main motor drive signal has been generated.

I. SCSI Interface Board-D1

Code	Detail	Cause	Description
E601		The communication between the SCSI board and the copier has an error.	The communication between the SCSI-CPU and the IP-CPU has been interrupted.
	0000		If the response from the SCSI board has an error when the machine sends a command to the SCSI board.
	0001		When an initial check is made for communication.
	0002		When an initial check is made for communication.
	0003		When a check is made for communication initialization.
	0004		When a check is made for communication initialization.
	0005		When a check is made for communication initialization.
	0006		If no response comes from the SCSI board within a specific time when the machine sends a command to the SCSI board.
	0007		If no response comes from the machine to the SCSI board within a specific time.
	0008		If the machine has sent NAK three times or more in response to a command from ACSI board.
	0010		If the SCSI board has sent NAK three times or more when it sends a command to the machine.
E603		The fuse of the SCSI has blown.	The fuse of the SCSI has blown because of overcurrent.

APPENDIX

A. General Timing Chart

Basic Sequence of Operations (direct Copying)

- A4, plain paper, Direct, copyboard cover, 1 copy, topmost cassette, face-up delivery

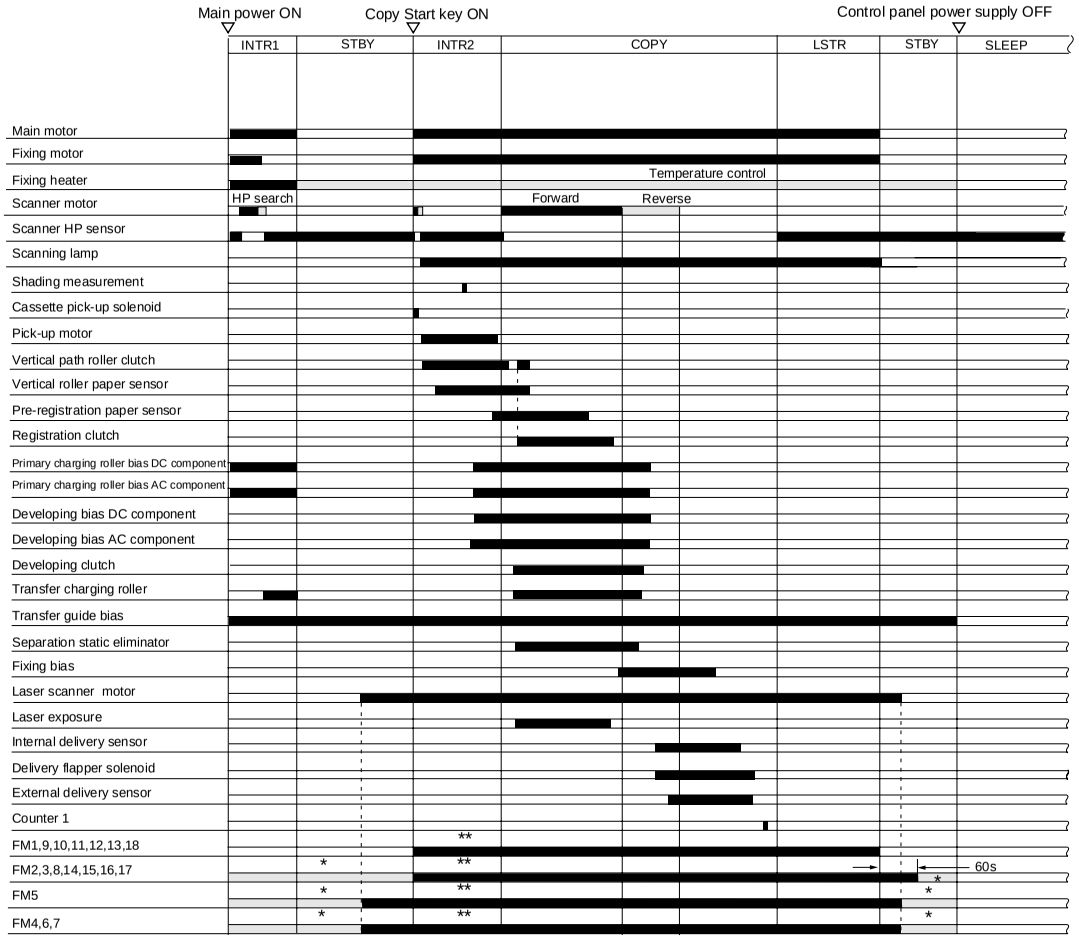

*Half speed rotation. **Full-speed rotation.

- pick-up from feeder, 1 original, plain paper, A4, 3 copies, Direct, cassette 1, memory copying

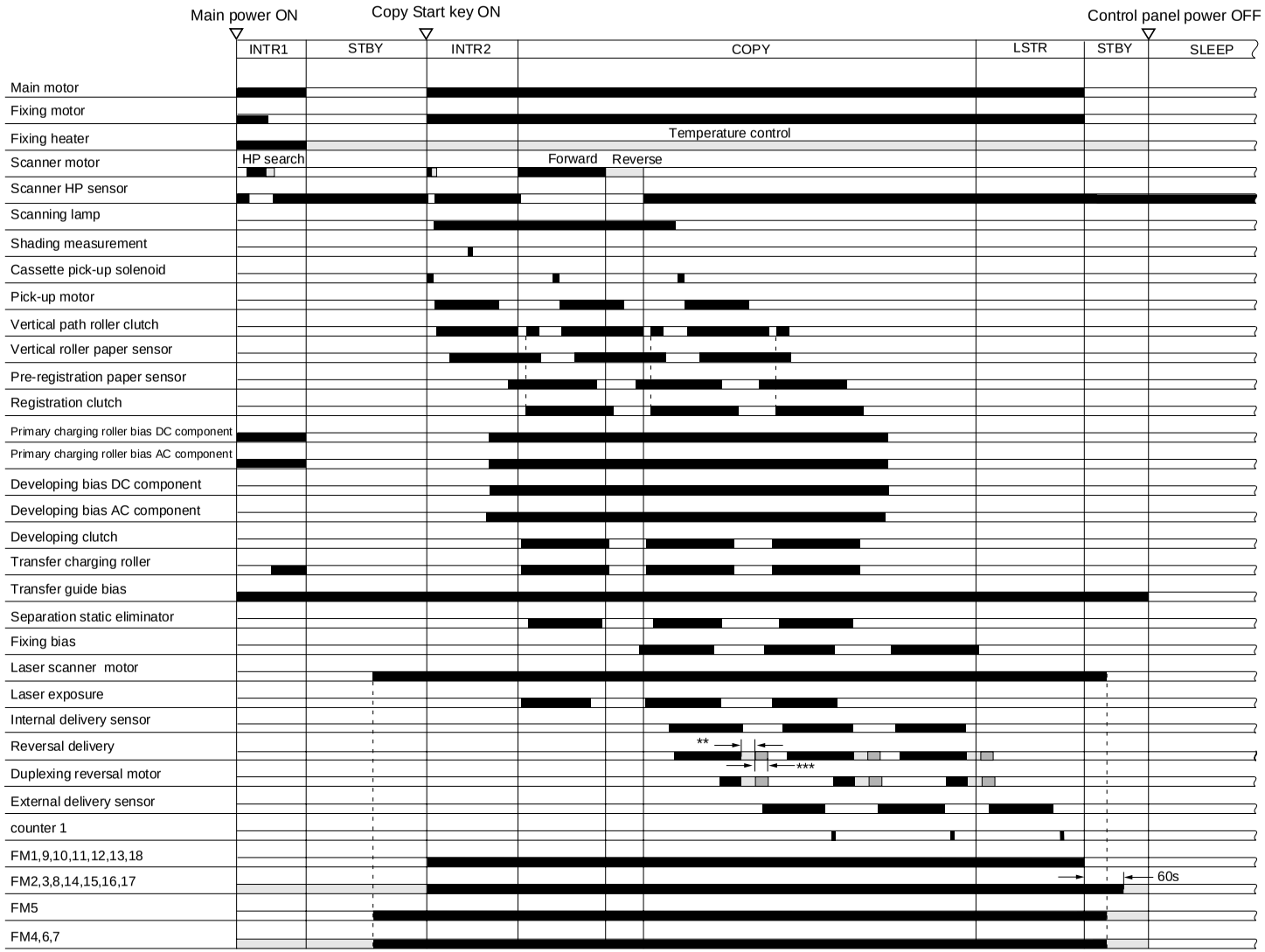

**Double speed rotation. ***Reversal double speed rotation.

B. Signal name/abbreviation list

1RPD0	CASSETTE 1 PAPER DETECTION 0 signal
1RPD1	CASSETTE 1 PAPER DETECTION 1 signal
2RPD0	CASSETTE 2 PAPER DETECTION 0 signal
2RPD1	CASSETTE 2 PAPER DETECTION 1 signal
ASSCNTP	COPY DATA CONTROLLER COUNTER PULSE signal
ASSRXD	COPY DATA CONTROLLER RECEPTION DATA signal
ASSTXD	COPY DATA CONTROLLER TRANSMISSION DATA signal
CL1D	REGIST CLUTCH DRIVE signal
CL2D	MULTIFEEDER CLUTCH DRIVE command
CL3D	VERTICAL PATH ROLLER CLUTCH DRIVE command
CL4D	DEVELOPING CLUTCH DRIVE command
CN1D	COUNTER DRIVE 1 command
CN2D	COUNTER DRIVE 2 command
CN3D	COUNTER DRIVE 3 command
CS1B0	CASSETTE 1 SIZE DETECTION signal 0
CS1B1	CASSETTE 1 SIZE DETECTION signal 1
CS1B2	CASSETTE 1 SIZE DETECTION signal 2
CS1B3	CASSETTE 1 SIZE DETECTION signal 3
CS1B4	CASSETTE 1 SIZE DETECTION signal 4
CS2B0	CASSETTE 2 SIZE DETECTION signal 0
CS2B1	CASSETTE 2 SIZE DETECTION signal 1
CS2B2	CASSETTE 2 SIZE DETECTION signal 2
CS2B3	CASSETTE 2 SIZE DETECTION signal 3
CS2B4	CASSETTE 2 SIZE DETECTION signal 4
DRUMTEMP	DRUM TEMPERATURE DETECTION signal
FDOOR_PD	FRONT DOOR OPEN DETECTION signal
FLS_S	FLUORESCENT LAMP INTENSITY signal
FM1D	FAN1 (FM1) DRIVE command
FM2D	FAN2 (FM2) DRIVE command
FM2LK	FAN2 (FM2) LOCK signal
FM3D	FAN3 (FM3) DRIVE command
FM3LK	FAN3 (FM3) LOCK signal
FM4D	FAN4 (FM4) DRIVE command
FM4LK	FAN4 (FM4) LOCK signal
FM5D	FAN5 (FM5) DRIVE command
FM5LK	FAN5 (FM5) LOCK signal
FM6D	FAN6 (FM6) DRIVE command
FM6LK	FAN6 (FM6) LOCK signal
FM7D	FAN7 (FM7) DRIVE comand
FM7LK	FAN7 (FM7) LOCK signal
FM8D	FAN8 (FM8) DRIVE comand
FM8LK	FAN8 (FM8) LOCK signal
FM9D	FAN9 (FM9) DRIVE comand
FM10D	FAN10 (FM10) DRIVE command
FM10LK	FAN10 (FM10) LOCK signal

FM11D	FAN11 (FM11) DRIVE command
FM11LK	FAN11 (FM11) LOCK signal
FM12D	FAN12 (FM12) DRIVE command
FM12LK	FAN12 (FM12) LOCK signal
FM13D	FAN13 (FM13) DRIVE command
FM13LK	FAN13 (FM13) LOCK signal
FM14D	FAN14 (FM14) DRIVE command
FM14LK	FAN14 (FM14) LOCK signal
FM15D	FAN15 (FM15) DRIVE command
FM15LK	FAN15 (FM15) LOCK signal
FM16D	FAN16 (FM16) DRIVE command
FM16LK	FAN16 (FM16) LOCK signal
FM17D	FAN17 (FM17) DRIVE command
FM17LK	FAN17 (FM17) LOCK signal
FM18D	FAN18 (FM12) DRIVE command
FM18LK	FAN18 (FM12) LOCK signal
HUMT	ENVIRONMENT SENSOR TEMPERATURE signal
HUMID	ENVIRONMENT SENSOR HUMIDITY signal
HVPON	SEPARATION STATIC ELININATOR ON command
LWPD	LOWER CASSETTE PAPER DETECTION signal
M1D	MAIN MOTOR DRIVE command
M1LCK	MAIN MOTOR LOCK signal
M4D	LASER SCANNER MOTOR DRIVE command
M4LK	LASER SCANNER MOTOR LOCK signal
MTVR	MULTIFEEDER PAPER WIDTH signal
PED	PRE-CONDITIONING EXPOSURE LAMP LIT signal
PFLPH	FLUORESCENT LAMP PRE THEMISTOR signal
PFLPWM	FLUORESCENT LAMP PWM DRIVE signal
PS1S	SCANNER HOME POSITION signal
PS2S	COPYBOARD COVER CLOSE signal
PS3S	MULTIFEEDER PAPER DETECTION signal
PS4S	REGISTRATION PAPER DETECTION signal
PS6S	INSIDE DELIVERY PAPER DETECTION signal
PS7S	EXTERNAL DELIVERY PAPER DETECTION signal
PS8S	PAPER DETECTION 8 signal
PS9S	PAPER DETECTION 9 signal
PS10S	SIDE REGISTRATION PAPER DETECTION signal
PS11S	VERTICAL PATH PAPER DETECTION signal
PS12S	RIGHT DOOR OPEN DETECTION signal
PS13S	LEFT DOOR OPEN DETECTION signal
PS14S	WASTE TONER DETECTION signal
PS18S	PAPER DETECTION 18 signal
PS19S	PAPER DETECTION 19 signal
	FEED PAPER ROLLER DOWN
SL1D	SOLENOID DRIVE signal

SL2D	DELIVERY DEFLCTION SOLENOID DRIVE signal
SL3D	MULTI FEED ROLLER SOLENID DRIVE signal
SL4D	PRIMALY CHARGING ROLLER CLEANING SOLENOID DRIVE signal
SL5D	FIXING CLEANING BELT DRIVE SOLENOID DRIVE signal
SL6PLL	FIXING ASSEMBLY GUIDE DOWN SOLENOID DRIVE signal
SL6BACK	FIXING ASSEMBLY GUIDE UP SOLENOID DRIVE signal
TH1_S	MAIN THEMISTOR DRIVE command
TH2_X	SUB THEMISTOR
TH2_Y	SUB THEMISTOR
TS1S	TONER ENPTY signal
UPPD	UPPER CASSETTE PAPER DETECTION signal
VPPD	CASSETTE VERTICAL PATH PAPER DETECTION signal

C. General Circuit Diagram

General Circuit Diagram (1/6)

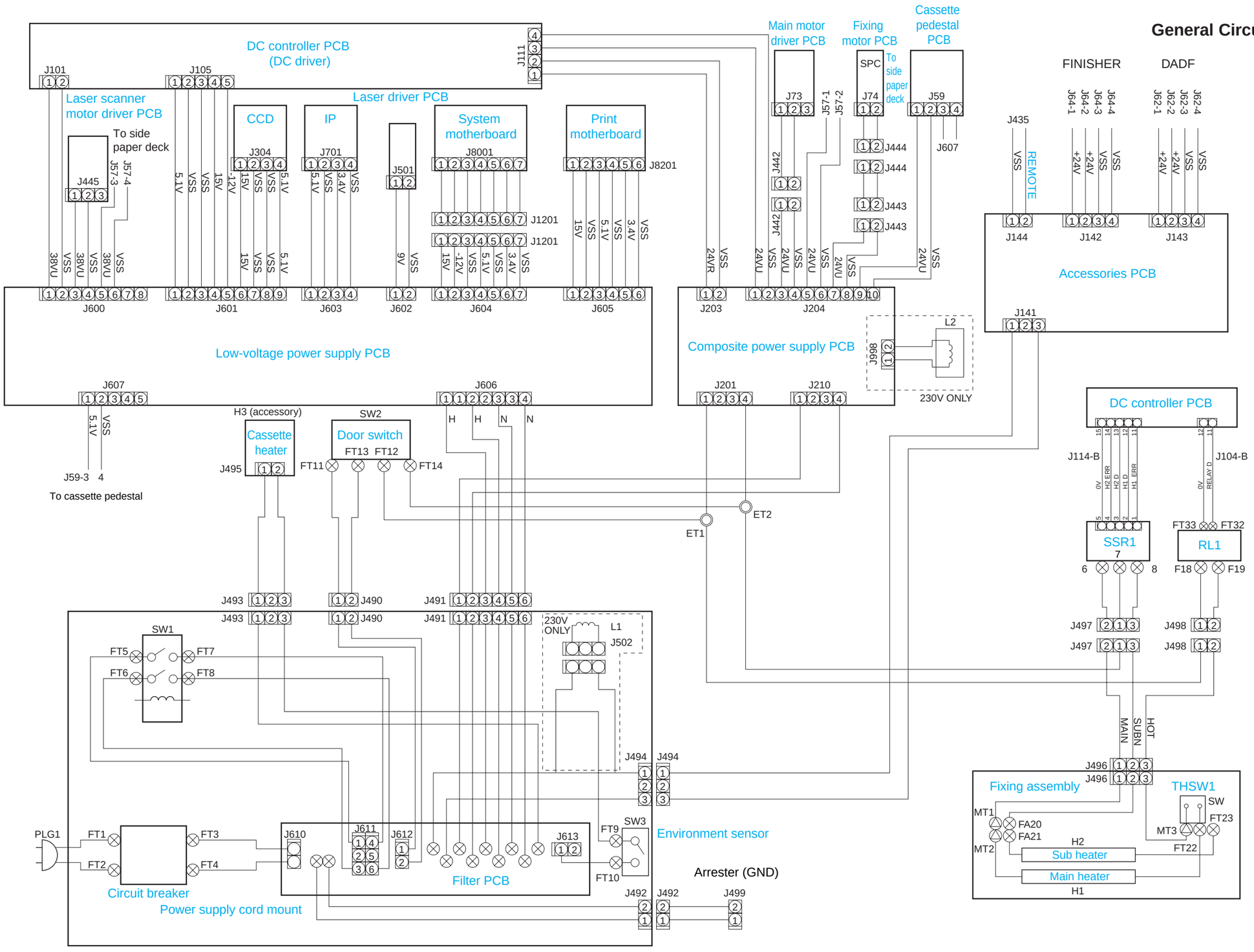

General Circuit Diagram (2/6)

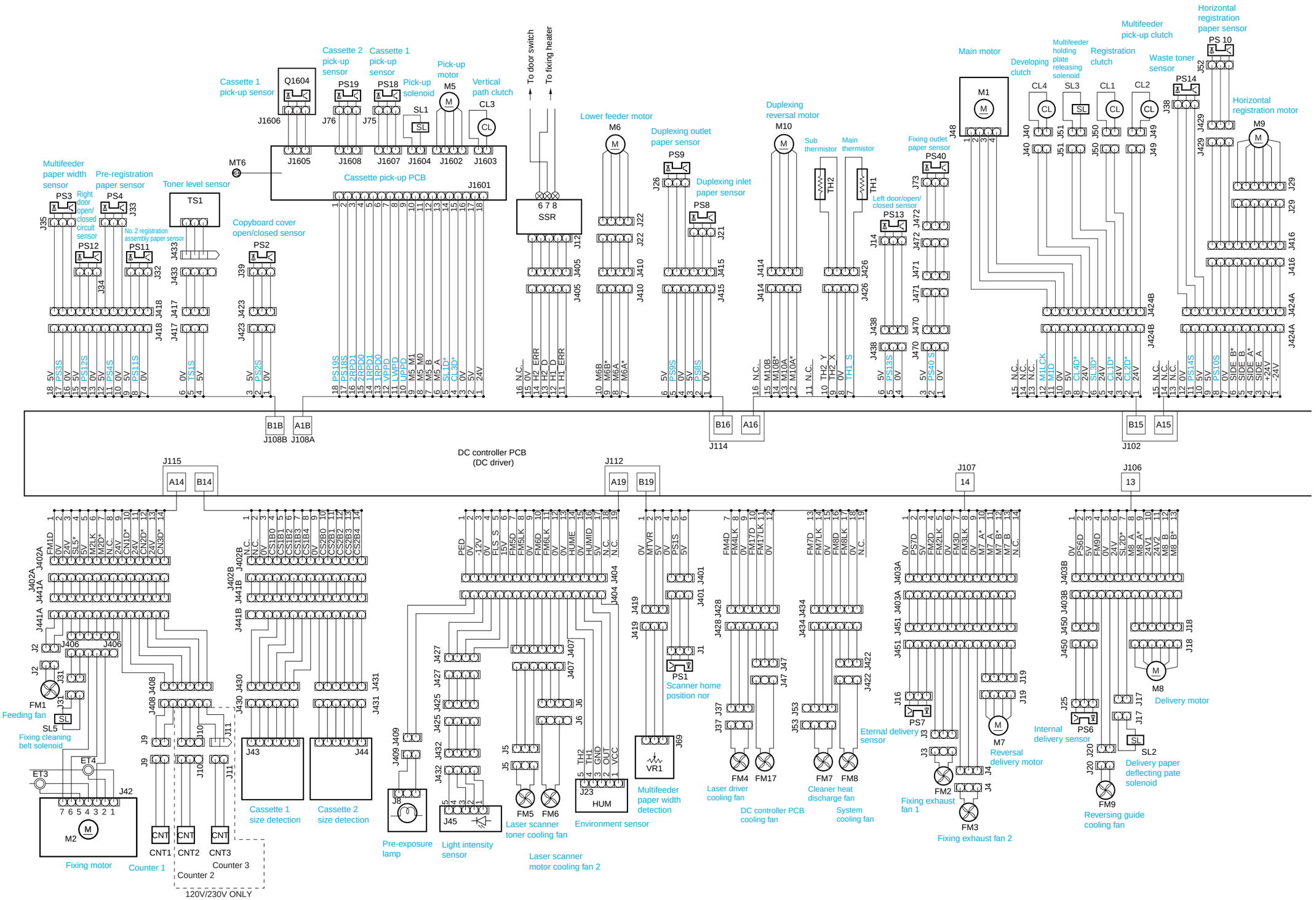

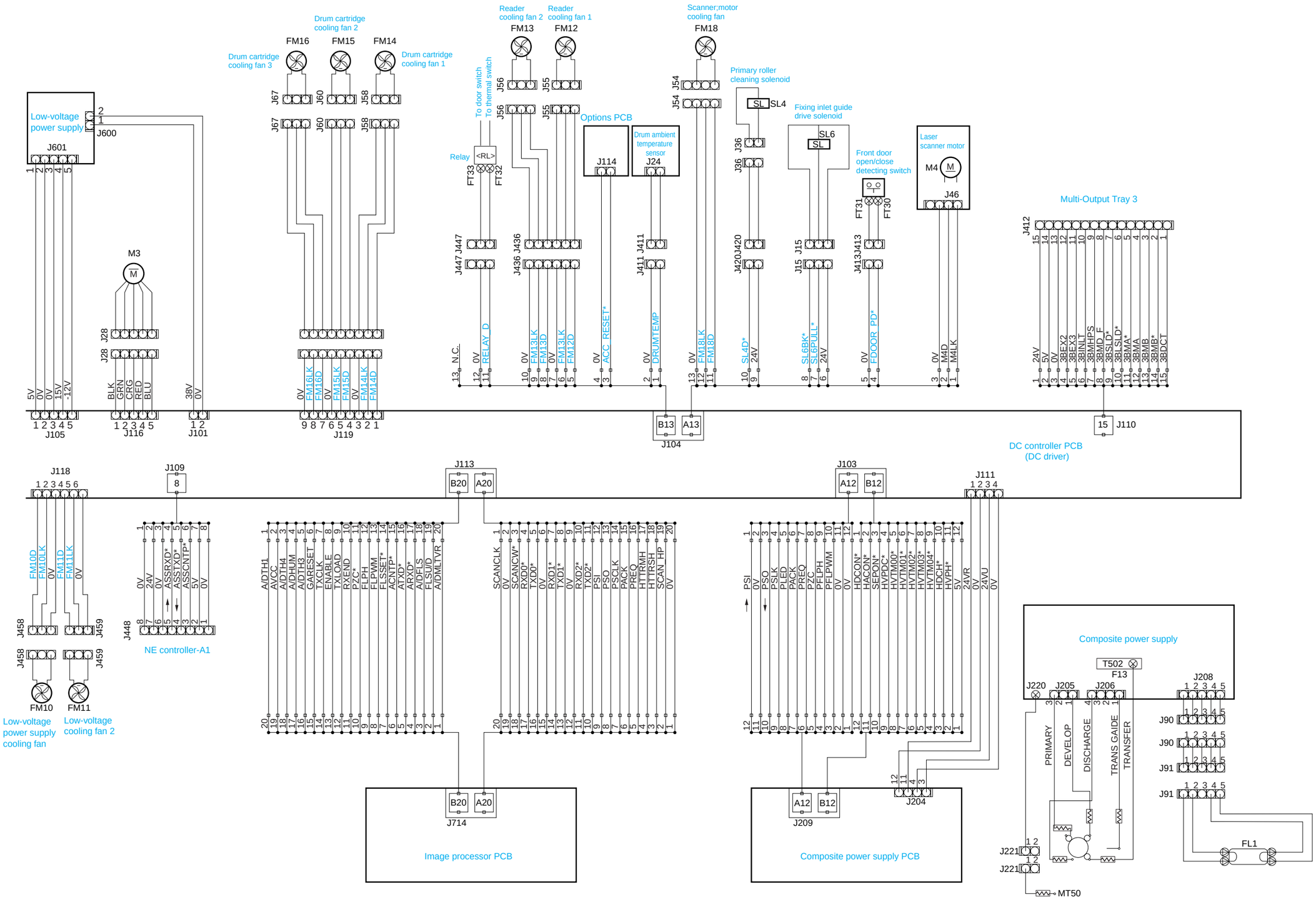
Low-voltage power supply
J601
J600
J105
M3
J116
J101
Drum cartridge cooling fan 2
Drum cartridge cooling fan 3
Drum cartridge cooling fan 1
FM16
FM15
FM14
J67
J60
J58
J119
Reader cooling fan 2
Reader cooling fan 1
FM13
FM12
J56
J55
To door switch
To thermal switch
Relay
FT33
FT32
Options PCB
J114
Drum ambient temperature sensor
J24
J447
J436
J411
J104
Scanner;motor cooling fan
FM18
J54
Primary roller cleaning solenoid
SL4
J36
J420
Fixing inlet guide drive solenoid
SL6
J15
Front door open/close detecting switch
FT31
FT30
J4133413
Laser scanner motor
M4
J46
Multi-Output Tray 3
J412
J110
DC controller PCB
(DC driver)
J118
J109
J113
J103
J111
NE controller-A1
J458
J459
FM10
FM11
Low-voltage power supply cooling fan
Low-voltage cooling fan 2
J714
Image processor PCB
J209
Composite power supply PCB
J204
Composite power supply
T502
F13
J220
J205
J206
J208
J90
J91
PRIMARY
DEVELOP
DISCHARGE
TRANS GAIDE
TRANSFER
FL1
J221
MT50

General Circuit Diagram (4/6)

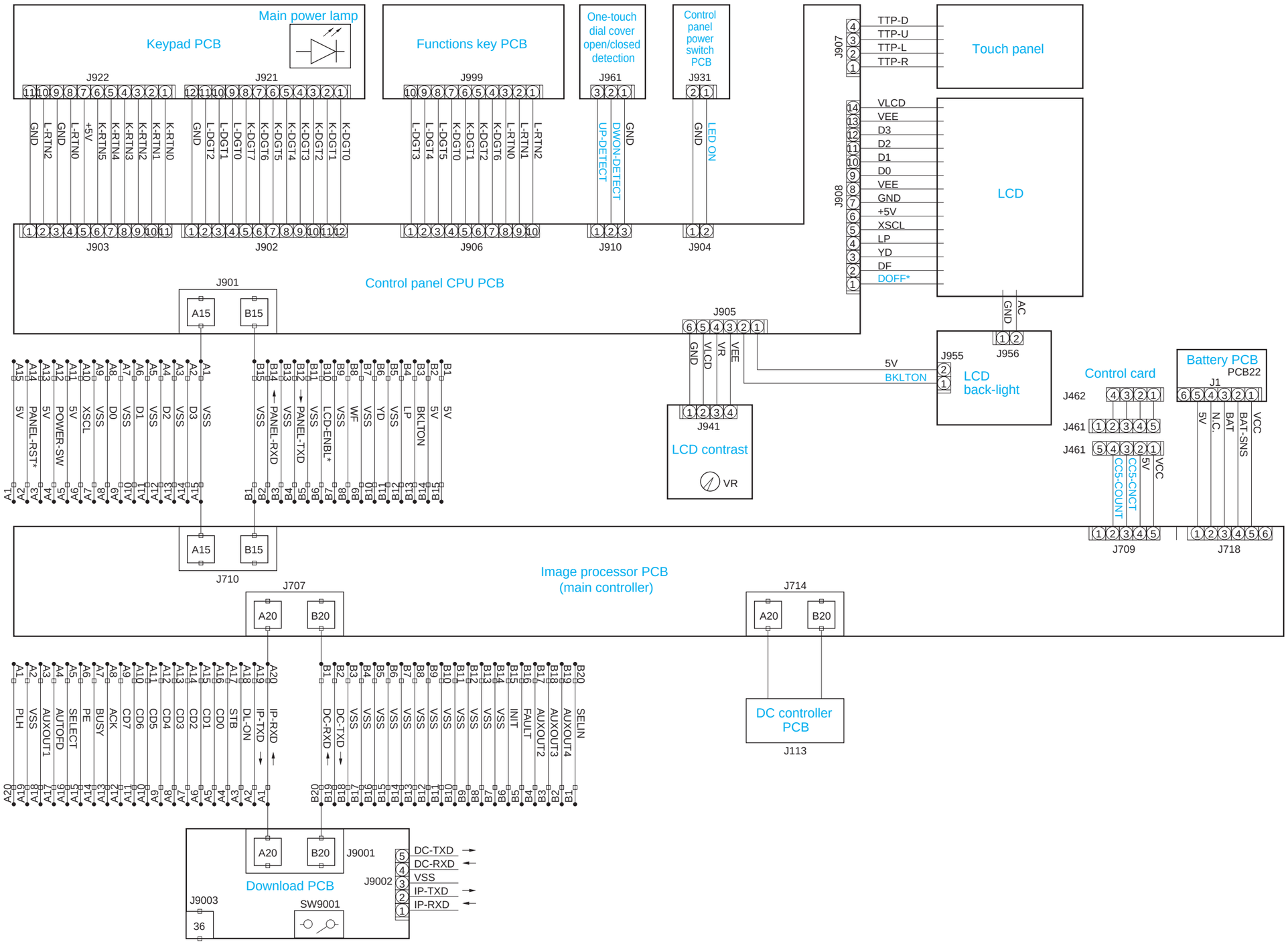

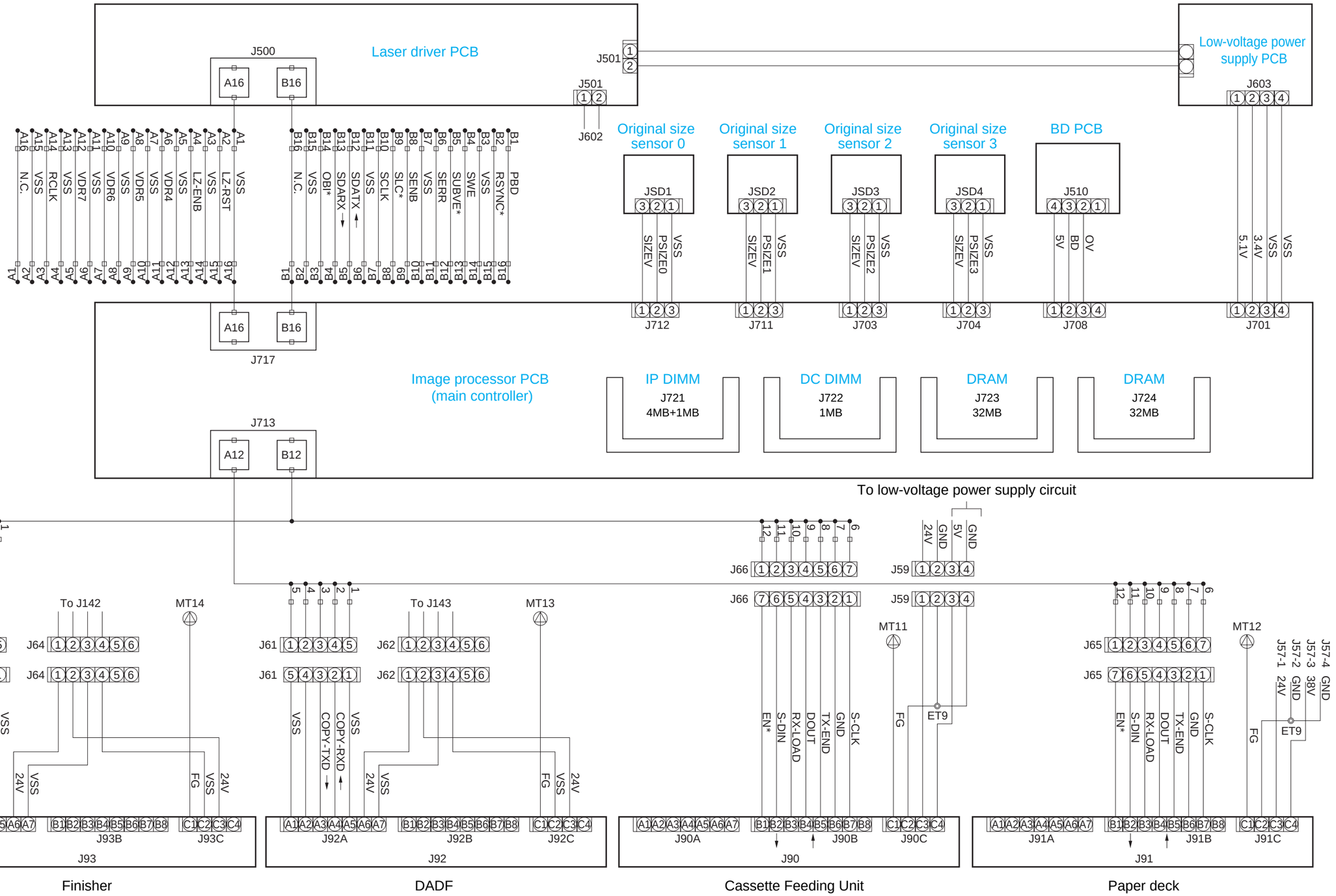
Laser driver PCB
J500
A16
B16
J501
J602
Low-voltage power supply PCB
J603
Original size sensor 0
Original size sensor 1
Original size sensor 2
Original size sensor 3
BD PCB
JSD1
JSD2
JSD3
JSD4
J510
SIZEV
PSIZE0
PSIZE1
PSIZE2
PSIZE3
VSS
5V
BD
0V
5.1V
3.4V
J712
J711
J703
J704
J708
J701
J717
Image processor PCB
(main controller)
IP DIMM
J721
4MB+1MB
DC DIMM
J722
1MB
DRAM
J723
32MB
DRAM
J724
32MB
J713
A12
B12
To low-voltage power supply circuit
J63
J64
J61
J62
J66
J59
To J142
To J143
MT14
MT13
MT11
MT12
VSS
COPY-TXD
COPY-RXD
24V
FG
EN*
S-DIN
RX-LOAD
DOUT
TX-END
GND
S-CLK
J65
J57-1
J57-2
J57-3
J57-4
ET9
J93A
J93B
J93C
J93
J92A
J92B
J92C
J92
J90A
J90B
J90C
J90
J91A
J91B
J91C
J91
Finisher
DADF
Cassette Feeding Unit
Paper deck

General Circuit Diagram (6/6)

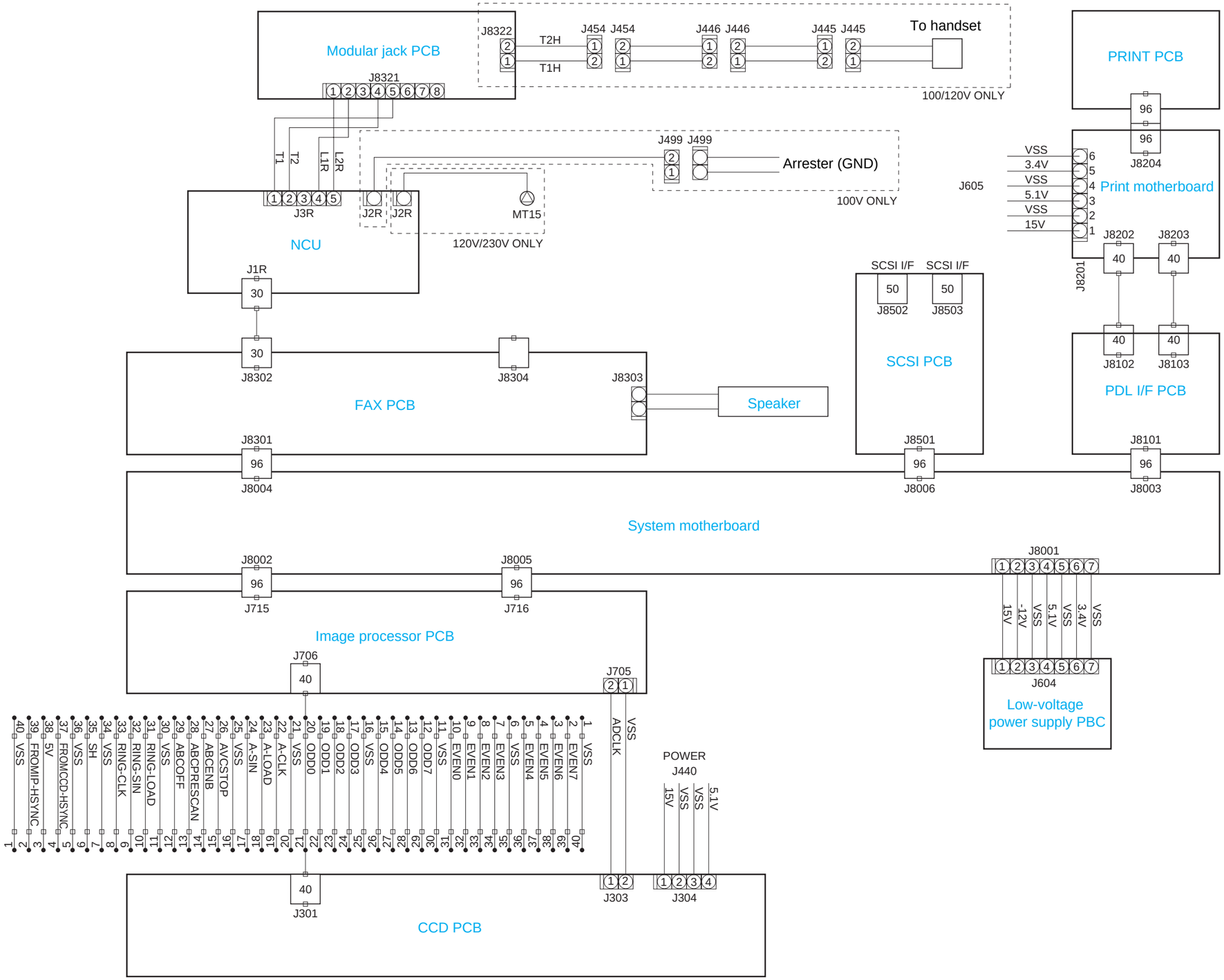

D. General Circuit Diagram Paper Deck

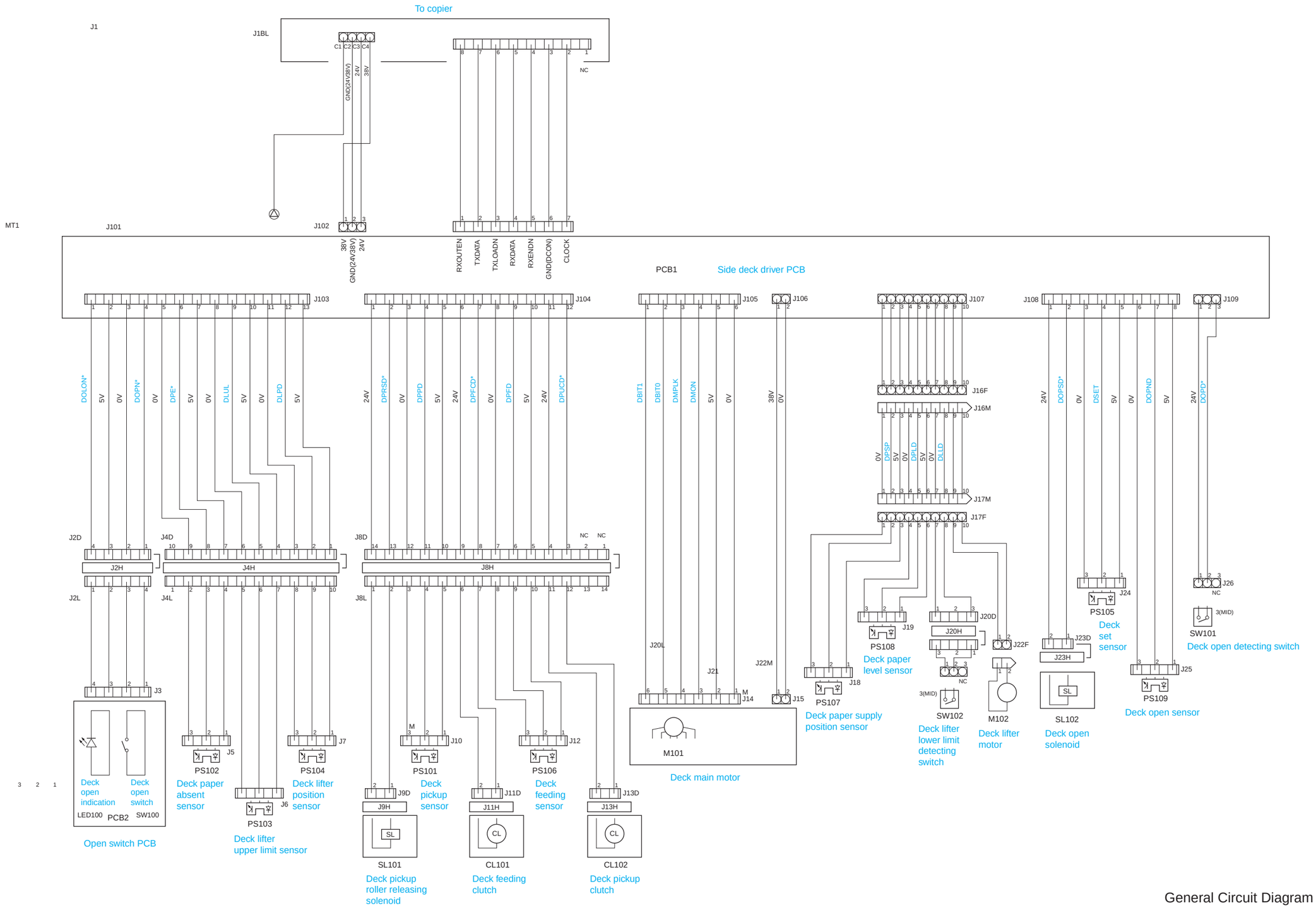

General Circuit Diagram

E. Specifications

1. Copier

a. Type

Item	Specifications
Copier	Desktop
Copyboard	Fixed
Light source	Fluorescent lamp
Lens	Lens array
Photosensitive medium	OPC drum

b. Method

Item	Specifications
Copying	Indirect electrostatic copying
Charging	Roller charging (AC + DC)
Exposure	Laser exposure
Copy density adjustment	Automatic or manual
Development	Dry, single-component, toner projection
Pick-up	Cassette: Retard method (center reference)
	Multifeeder: Dupro-method (center reference)
Transfer	Roller charging (DC)
Separation	Static (static eliminator) + curvature
Cleaning	Cleaning blade
Fixing	Heating roller

c. Performance

Resolution		600 x 600 dpi (reading) 600 x 600 dpi (during output; by smoothing, 200-equivalent x 600 dpi)
Gradation		256 gradations
Original type		Sheet, book, 3-D object (2 kg max.)
Maximum original size		A3 (297 x 420 mm)/297 x 432 mm (11"x17") max.
Copy size	AB	6R6E
	Inch	5R5E
	A	3R4E
	AB/Inch	6R6E
Zoom		25% to 800% (in 1% increments)
	Auto	Provided
	XY independent zoom	Provided
Wait time (20°C)		From main power supply 77 sec or less From sleep state 77 sec or less From power save mode Without recovery time 0 sec -10% mode 9 sec or less -25% mode 20 sec or less -40% mode 33 sec or less
First copy time		6.0 sec or less (topmost cassette, Direct, A4/LTR, auto density adjustment, no pre-scanning)
Continuous copying		1 to 999 copies
Copying speed		See Table 1-201.
Copy size	Cassette	A3 (297 x 420 mm)/297 x 432 mm (11"x17") to A5 (STMT)
	Multifeeder	A3 (297 x 420 mm)/297 x 432 mm (11"x17") to postcard
	Double-sided	A3 (297 x 420 mm)/297 x 432 mm (11"x17") to A5 (STMT)
Copy paper type	Cassette	Plain paper, recycled paper, eco paper (64 to 80 g/m^2)
	Multifeeder	Plain paper, recycled paper, eco paper, transparency, colored paper, postcard, label, thick paper, tracing paper (64 to 128 g/m^2)
	Double-sided	Plain paper, recycled paper eco paper
Cassette specifications	Claw	Not used
	General/ universal	500 sheets (average; of 80 g/m^2)

		Item	Specifications
Multifeeder tray		50 sheets	80 g/m^2
Copy tray		100 sheets	80 g/m^2
Non-image width	Leading/ trailing edge	2.5 mm	
	Left/right	2.5 mm	
Auto clear		Provided	2 min standard; may be varied between 0 and 9 min.
Auto sleep time		Provided	10 min to 8 hr

d. Others

Item			Specifications			
Operating environment	Temperature		7.5 to 32.5°C			
	Humidity		5 to 85%			
	Atmospheric pressure		810 to 1013hPa (0.8 to 1.0)			
Power supply			405/400		335/300	
	120V (USA)		400E NNUxxxxx 400S NNVxxxxx		300E NNXxxxxx 300S NNYxxxxx	
	230V (Italia)		405	PNYxxxxx	335	PNZxxxxx
	230V (Others)		405	PNWxxxxx	335	PNXxxxxx
	230V (UK)		405	QNYxxxxx	335	QNZxxxxx
	230V (CA)		405	RNXxxxxx	335	RNYxxxxx
	230V (FRN)		405	SNYxxxxx	335	SNZxxxxx
	230V (GER)		405	TNYxxxxx	335	TNZxxxxx
	230V (AMS)		405	UNYxxxxx	335	UNZxxxxx
Power consumption* (reference only; at time of 23°C and at rated input; for the copier, actual measurement)			w/o FAX expansion			
	Copying		910W			
	Standby		193W			
	Sleep 1		190W			
	Sleep 2	No recovery time	190W			
		-10%	170W			
		-25%	143W			
		-40%	116W			
	Sleep 3		69W			
			Sound Power Level (Impulse mode)			
Noise	Copying		71 dB or less (by sound power level, Impulse mode)			
	Standby		50 dB or less (by sound power level, Impulse mode)			
Ozone			0.01 ppm or less in average; 0.02 ppm or less at max.			
Dimensions	Width		585mm			
	Depth		720mm			
	Height		538mm			
Weight			80 kg or less			
Consumables	Copy paper		Keep wrapped to avoid humidity.			
	Toner		Avoid direct sunshine; store at 40°C, 85%.			

* With expanded fax functions maximum + 12W
With expanded printer functions maximum + 15W

e. Default Ratios

Country	Reduction		Enlargement	
Japan, Australia, others (6R6E)		0.250	B4→A3 B5R→A4R B5→A4	1.153
		0.500	A4R→B4 A5→B5	1.223
	A3→B5	0.611	A4RA3 B5RB4	1.414
	A3→A4R B4→B5R	0.707	A5A3	2.000
	B4→A4R	0.815		4.000
	A3→B4 A4R→B5R	0.865		8.000
North America (5R5E)		0.250	LGL→11x17	1.214
		0.500	LTRR→11x17	1.294
	11x17→LTRR	0.647	STMT→LTRR	2.000
	11x17→LGL	0.733	STMTR→11x17	4.000
	LGL→LTRR	0.786		8.000
Europe (3R4E)		0.250	A4R→A3	1.414
		0.500	A5→A3	2.000
	A3→A4R	0.707		4.000
				8.000

f. Copying Speed

Mode		Size	Copy size	405/400 (copies/min)	335/330 (copies/min)
Direct		A3	A3	19	19
		A4	A4	40	33
		A4R	A4R	28	28
		A5	A5	40	33
		A5R	A5R	40	33
		B4	B4	22	22
		B5	B5	40	33
Reduce	II	A3→A5	A5R	40	33
	III	A3→B5	B5R	33	33
	IV	A3→A4	A4R	28	28
		B4→B5	B5R	33	33
	V	B4→A4	A4R	28	28
		B5→A5	A5	40	33
	VI	A3→B4	B4	22	22
		A4→B5	B5	40	33
Enlarge	II	A5→A3	A3	19	19
	III	A4→A3	A3	19	19
		B5→B4	B4	22	22
	IV	A4→B4	B4	22	22
		A5→B5	B5	40	33
	V	B4→A3	A3	19	19
		B5→B4	B4	22	22

Feeder used, delivery to copy tray, auto paper select used, density auto adjust used, non-sort mode, topmost cassette used, no data in memory.

Ratio	Size	405/400 Copies/min	335/330 Copies/min
DIRECT	LTR	40	33
	11x17	19	19
	LGL	23	23
	LTRR	30	30
	STMT	40	33
	STMTR	40	33
REDUCE	LGL→LTRR	30	30
	11x17→LGL	23	23
	11x17→LTRR	30	30
	11x17→STMTR	40	33
	11x15→LTRR	30	30
ENLARGE	LGL→11x17	19	19
	LTRR→11x17	19	19
	STMTR→11x17	19	19

The above specifications are subject to change for product improvement.

2. Paper Deck

Item	Specifications
Pick-up	No claw (retard) method
Paper holder	Side tray method
Copy paper type	• Plain paper (65 to 80 g/m^2) A4, B5, LTR • Colored paper (Canon-recommended) A4
Paper holding capacity	385 mm high (3500 sheets of 80 g/m^2)
Serial number	A4 ZSKxxxxx LTR ZSLxxxxx
Paper size switching	Shifting the size guide plate and setting in service mode (OPTION>ACC>**DK-P**)
Dimensions	(not including protrusions/grip cover, rail)
Weight	31 kg (approx.; body)/10 kg (approx.; rails)
Power supply	By copier (DC power)
Operating environment Temperature Humidity	Same as copier

The above specifications are subject to change for product improvement.

Prepared by
OFFICE IMAGING PRODUCTS TECHNICAL SUPPORT DEPARTMENT 1
OFFICE IMAGING PRODUCTS TECHNICAL SUPPORT DIVISION
CANON INC.
Printed in Japan

REVISION 0 (JAN. 1999) (30809)

5-1, Hakusan 7-chome, Toride-shi Ibaraki, 302-8501 Japan

Canon

This publication is printed on
70% reprocessed paper.

PRINTED IN JAPAN (IMPRIME AU JAPON) 0199S1.8-1