Service Bulletin

COPIER

Issued by Canon Europa N.V.

Model : GP605

No.: GP605-004 Rev. 2
(FF-T01-K1-000011-03)

DATE: 10.08.99

Location : ADF REVERSING FLAPPER

Subject : PREVENTING ADF REVERSING FLAPPER FROM STAYING OPEN

Reason : To communicate countermeasures to take by way of servicing the machine for the possibility of putting one's hand on the reversing flapper and allowing it to stay open while clearing a jam that has occurred in the ADF.

Details : <Symptom>
The user in the course of clearing a jam in the ADF tries to manually open the flapper at the lower part of the ADF, and finds oneself that the flapper stays open.

<Cause>
In the course of clearing a jam at the lower part of the ADF, the lower guide cover indicates that it should be opened with the hands, but depending on how the user opens it, the flapper stays open.

<Factory measure>
The reversing flapper has been extended with a change in the shape to prevent overriding the guide plate. (Fig. 1)

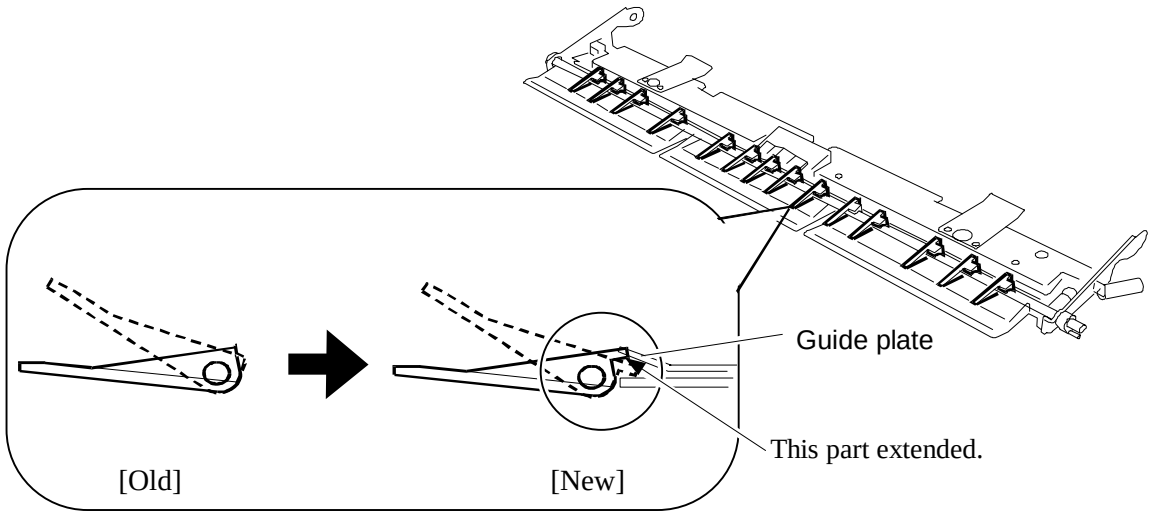

Fig. 1

Servicing **:** < Procedure for implementing countermeasures >

1) Remove the 2 binding screws at the bottom of the ADF. (Fig. 2)

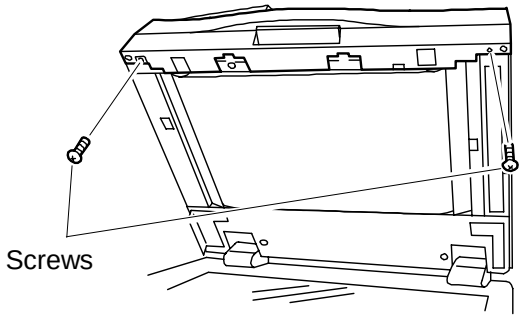

Fig. 2

2) Remove the 1 screw from the right face of the ADF. (Fig. 3)

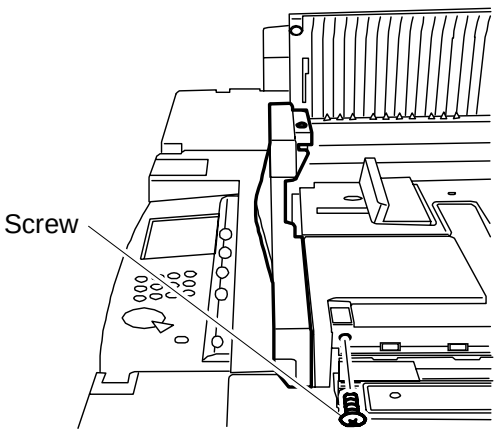

Fig. 3

3) Remove the 1 screw from the upper cover assembly, and remove the front cover (upper/lower). (Fig. 4)

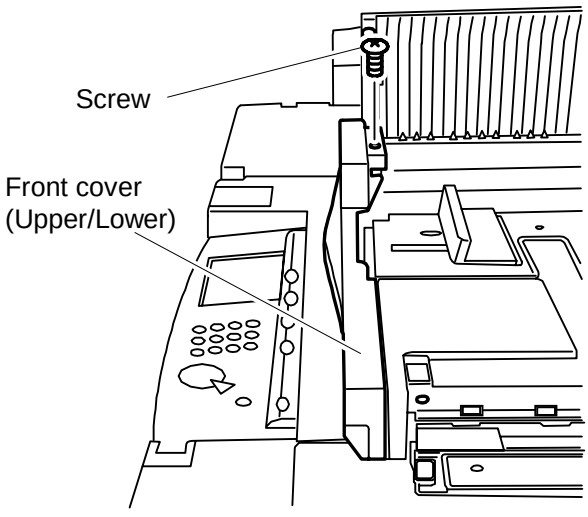

Fig. 4

4) Open the registration guide, and remove the 2 screws and then the paper guide. (Fig. 5)

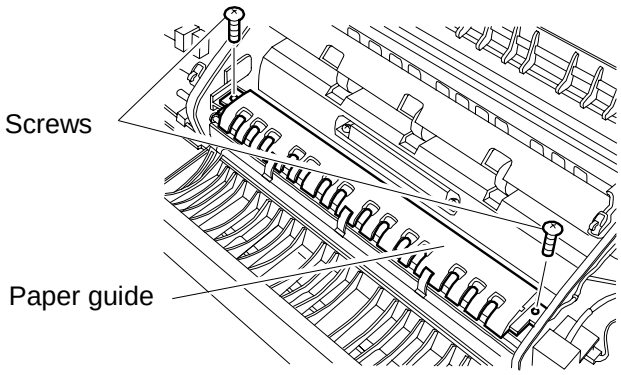

Fig. 5

5) Remove the 2 tension springs from their spring hooks, and tighten the cover. (Fig. 6)

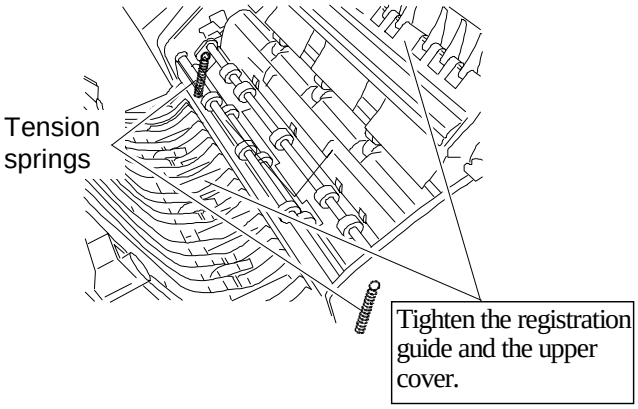

Fig. 6

6) Open the ADF, remove the 2 screws from the front face, and take out the stopper shaft. (Fig. 7)

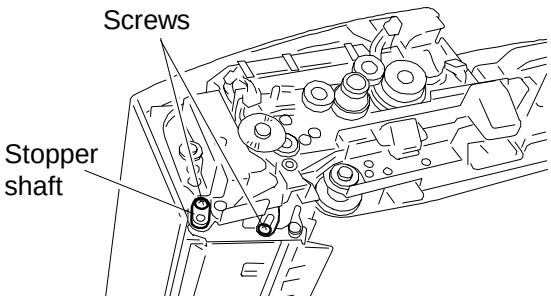

Fig. 7

7) While holding up the flapper assembly, remove the upper cover assembly and the flapper assembly from the inner pin in removing the flapper. (Fig. 8)

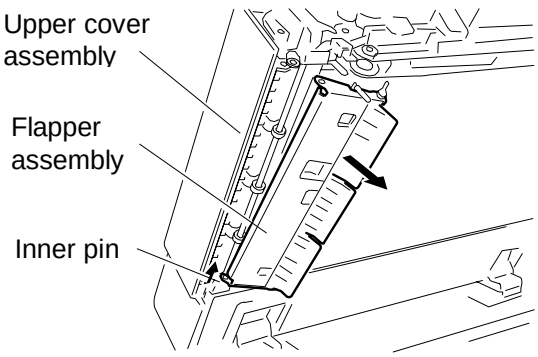

Fig. 8

8) Remove the 3 screws and the lower guide cover. (Fig. 9)

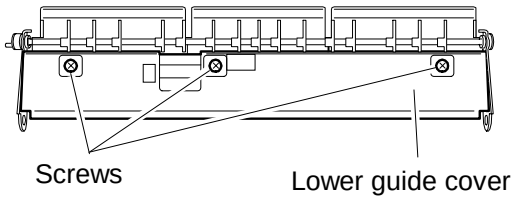

Fig. 9

9) Remove the 1 tension spring from the flapper assembly. (Fig. 10)

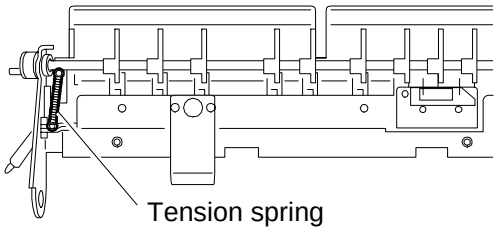

Fig. 10

10) Remove the 3 standard washers from their locations and remove the shaft.
11) Replace the reversing flapper with its countermeasure replacement, and re-attach the bushing and the standard washers. (Fig. 11)

Caution

If it is noted that the flapper stays open, replace also the lower guide at the same time.

* When replacing the lower guide, be sure to use the leaf spring while repalcing the guide with a new one.

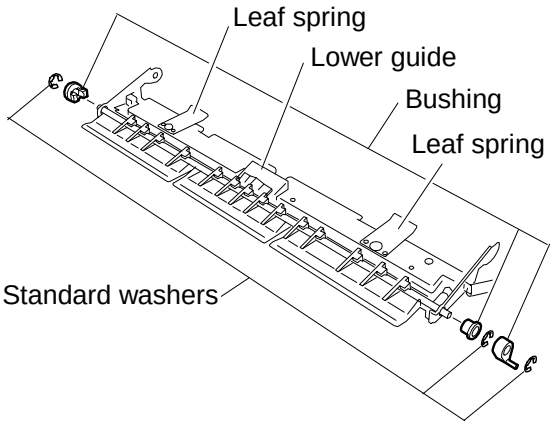

Fig. 11

12) Attach the 1 tension spring. (Fig. 12)

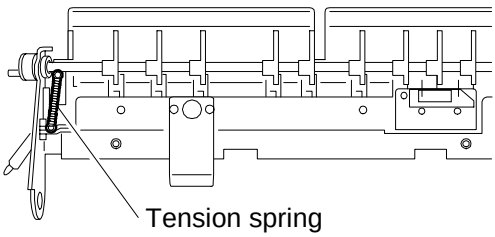

Fig. 12

13) Attach the lower guide cover. (3 screws)
Caution: 2 of these are stepped screws. (Fig. 13)

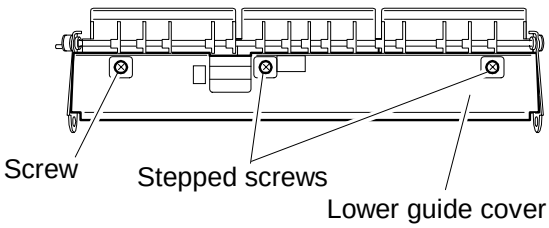

Fig. 13

14) Fit the flapper assembly and the upper cover in that order onto the inner pin, and then fit the stopper shaft. (Fig. 14)

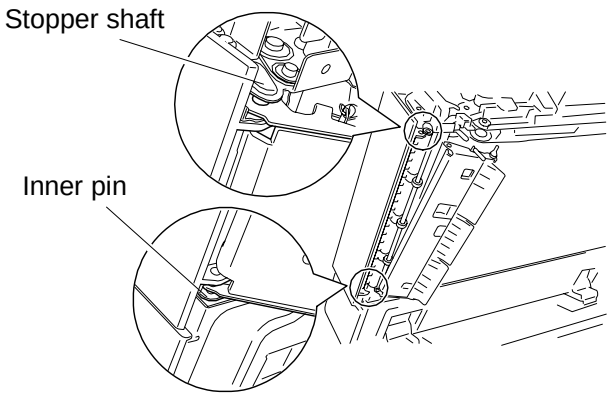

Fig. 14

15) Tighten the 2 screws on the front face. (Fig. 15)

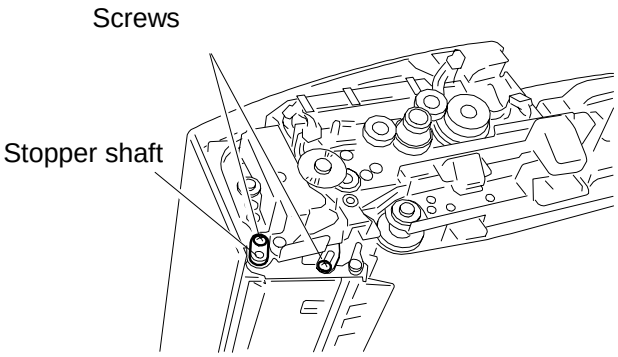

Fig. 15

16) Fit the 2 tension springs back into the gap in the guide. (Fig. 16)

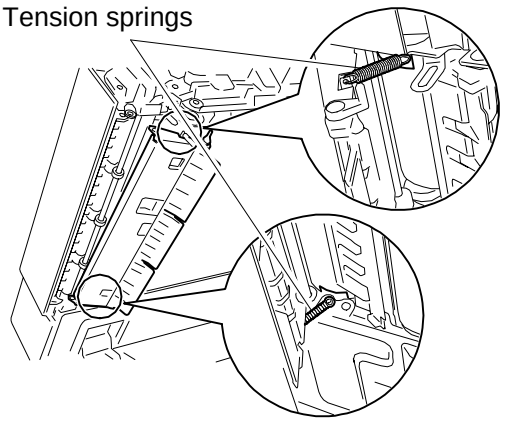

Fig. 16

17) Hook the 2 tension springs back onto the spring hooks. (Fig. 17)

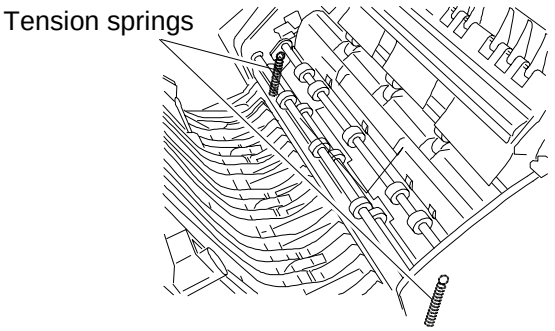

Fig. 17

18) Attach the paper guide (2 screws). (Fig. 18)

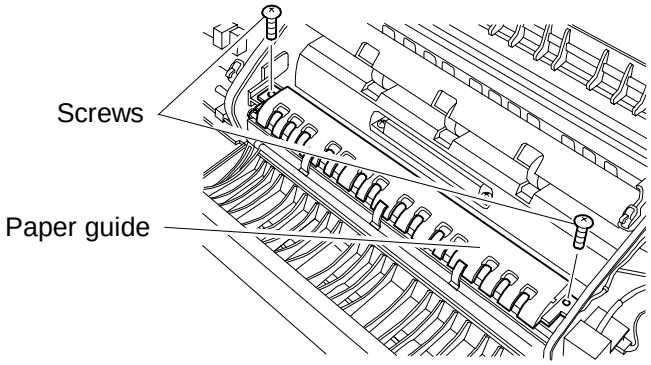

Fig. 18

19) Close the registration guide, set the front cover, and tighten the 2 screws. (Fig. 19)

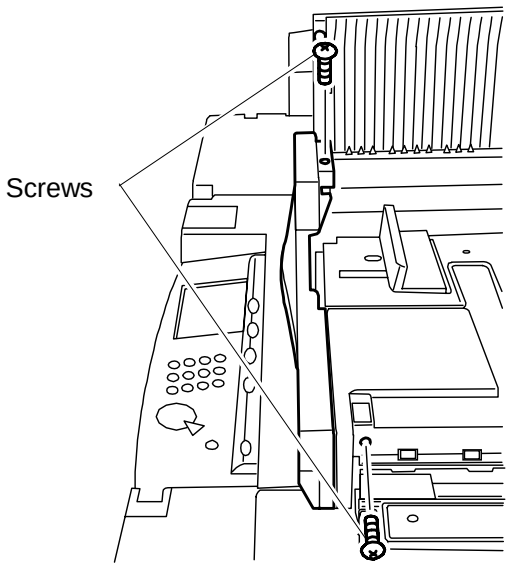

Fig. 19

20) Remove the 2 binding head screws at the bottom of the ADF. (Fig. 20)

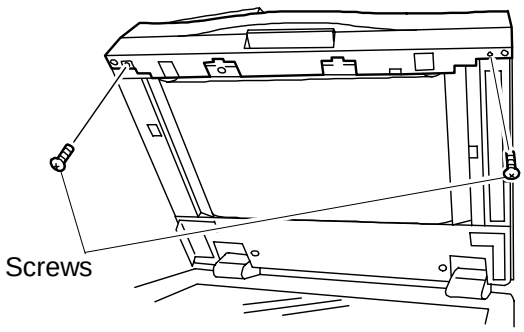

Fig. 20

Affected machines: ←

PLE00149 and later	RLE00051 and later	NLE03359 and later	SLE00431 and later
PLP00053 and later	TLE00199 and later	QLE00353 and later	ULE00657 and later