Canon

Service Bulletin

COPIER

Issued by Canon Europa N.V.

Model : GP605

No.: GP605-005 Rev. 1
(FF-T01-K1-000009-02)

DATE: 04.06.99

Location : SLIDE GUIDE (ON ADF PICKUP TRAY)

Subject : PREVENTING JAMS WHILE READING AN ORIGINAL

Reason : The adhesive used on the leaf spring of the slide guide of the ADF can fail, possibly causing a jam because of the resulting incorrect detection of the size of an original during reading operation. This bulletin communicates measures to take as part of servicing work to prevent the problem.

Details : <Symptom>
When copies are made using the ADF, wrong detection of paper size can at times occur during reading operation, causing jams.

<Cause>
A portion of the leaf spring of the slide guide (rear) found on the ADF pickup tray can fail against the upward force of the ribs found under the spring, resulting in detachment.

<Factory measure>

- Tentative Measures
  The ribs of the slide guide (used to prevent noise; see the figures below) are shaved off to limit the stress against the glued portion (switch-over on and after March 30, 1999).

- Permanent Measures
  In addition to the tentative measures above, the shape of the leaf spring will be modified to prevent stress on the leaf spring (see the figures below; switch-over on and after April 13, 1999).

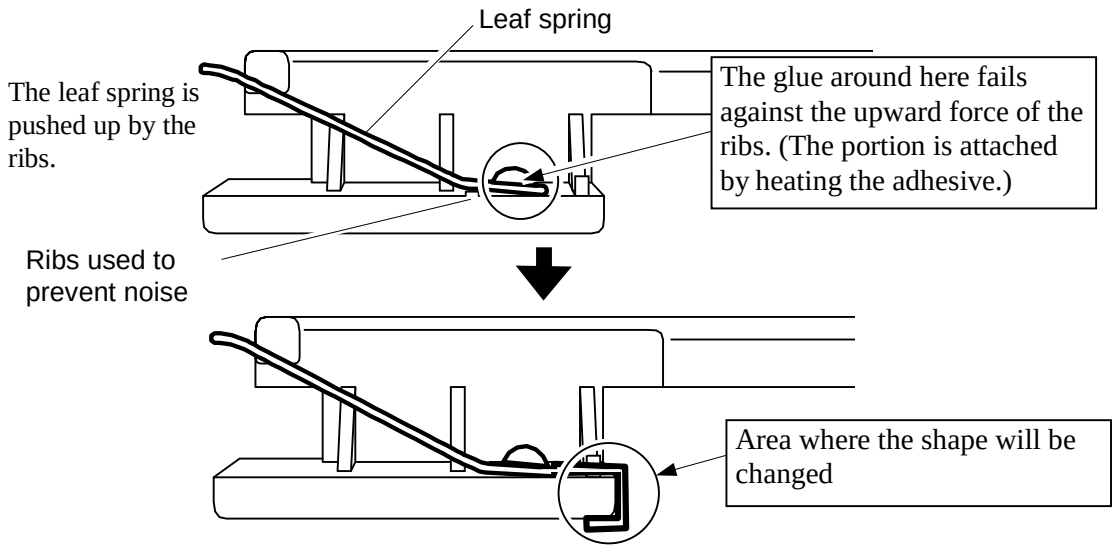

Fig. 1

Servicing **:** < Implementing the Measures >

1) Remove the screw, and detach the cover at the back of the ADF.

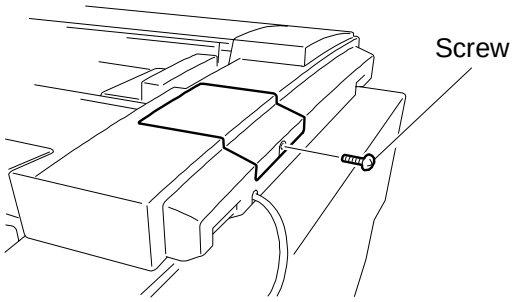

Fig. 2

2) Free the harness of the pickup tray.
i) Remove the wire saddle.
ii) Remove the tie-wrap.
iii) Disconnect the connector.
iv) Remove the screw, and detach the grounding wire.

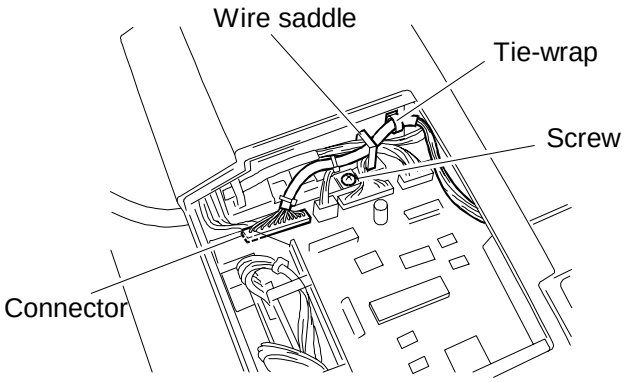

Fig. 3

3) Remove the two screws from the pickup tray, and detach the pickup tray.

> ***Note:***
> When detaching the pickup tray, pay attention to its harness.

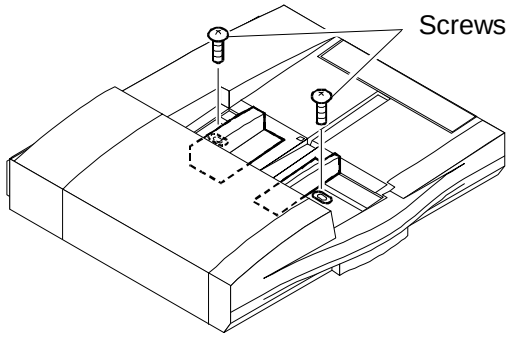

Fig. 4

4) Turn over the pickup tray, and disconnect the three connectors.
5) Remove the screw, and detach the grounding wire.

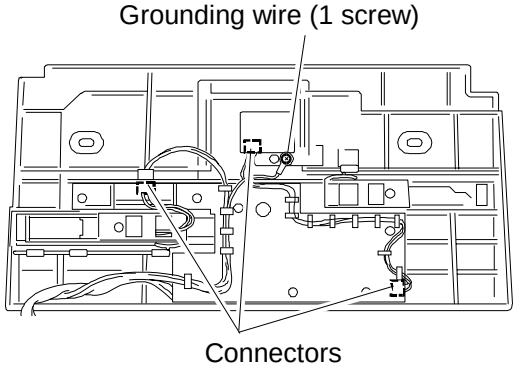

Fig. 5

6) Remove the four screws, and open the slide switch cover.

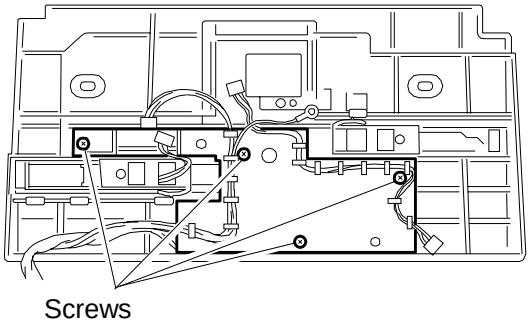

Fig. 6

7) Remove the grip ring, and detach the gear.

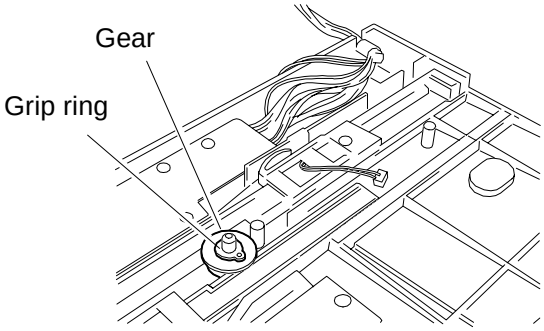

Fig. 7

8) Remove the screw, and detach the guide retainer.

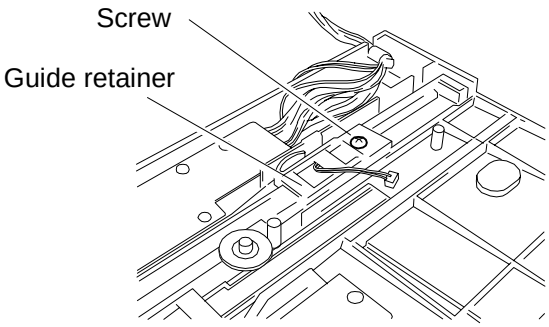

Fig. 8

9) Remove the two screws, and detach the indicator LED PCB holder; then, mount it to the slide guide which has been provided with the measures.

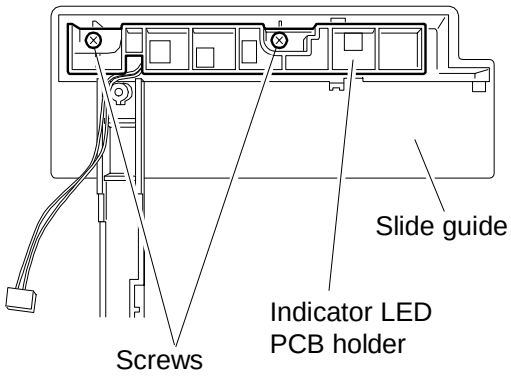

Fig. 9

10) Shift both slide guides inward, and match the teeth as shown (indicated by arrows).

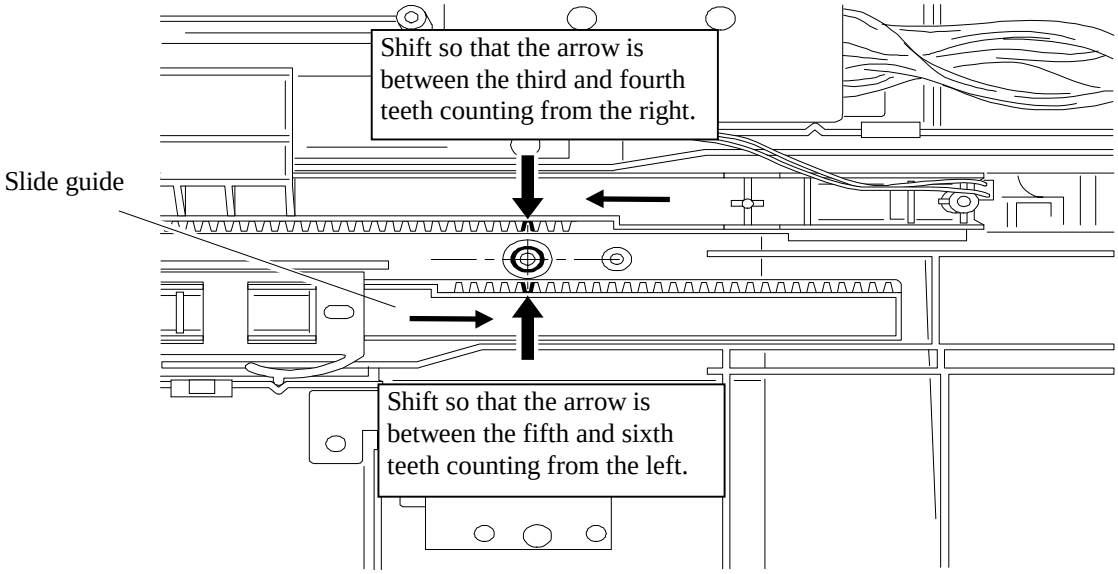

Fig. 10

11) While keeping the teeth matched, set the gear and mount the grip ring.
Note: Put one transparency between the gear and the grip ring to allow a gap (of about 0.3 mm).

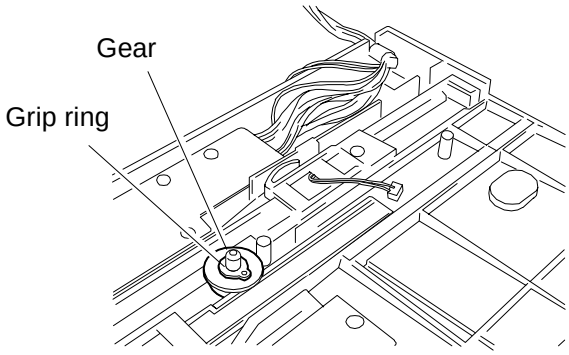

Fig. 11

12) While paying attention to the routing of the harness and the positioning block (used to match the phase), mount the guide retainer with a screw.
Note: Take care to avoid trapping the wire.

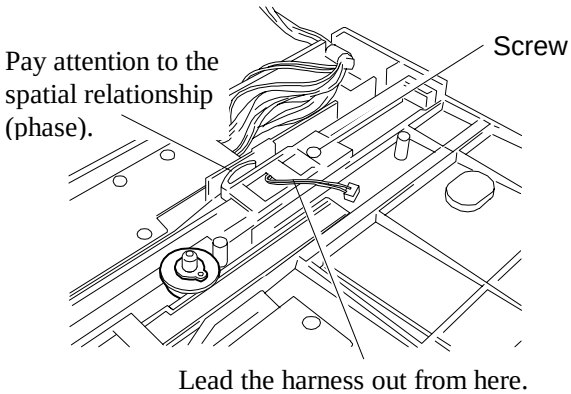

Fig. 12

13) Close the slide switch cover, and tighten the four screws.
Note: At this time, connect one connector in advance to facilitate the work.

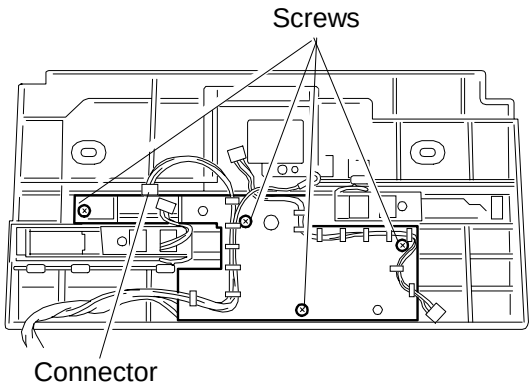

Fig. 13

14) Connect all connectors.

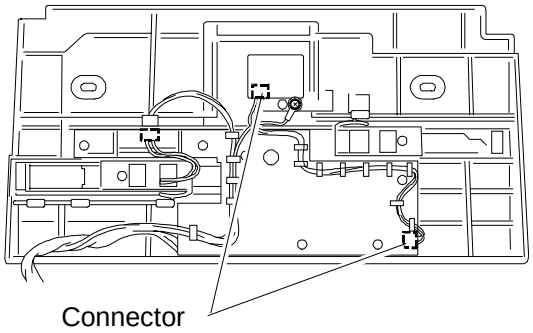

Fig. 14

15) While arranging the harness as needed, set the pickup tray and tighten the two screws.

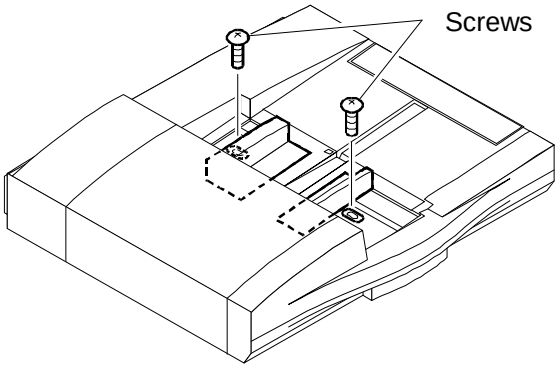

Fig. 15

16) Free the harness of the pickup tray.
i) Mount the grounding wire with a screw.
ii) Connect the connector.
iii) Fit the tie-wrap.
iv) Fit the harness to the wire saddle, and lock it in position.

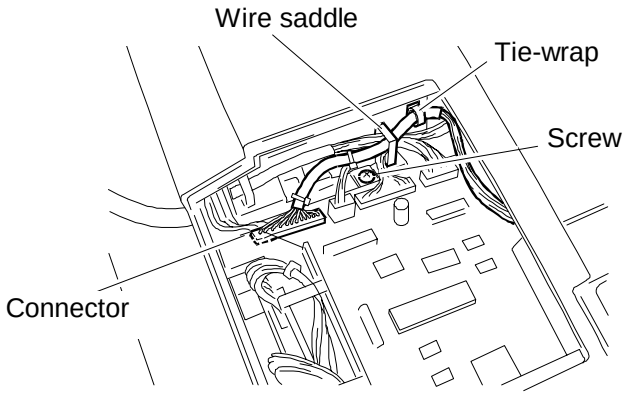

Fig. 16

17) Secure the cover at the rear of the ADF in place with a screw.

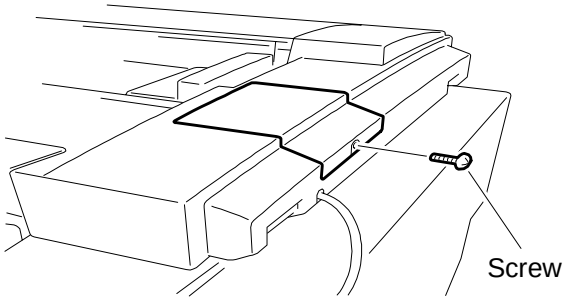

Fig. 17

Affected machines:

➔ Main body:

PLE00102 and later	NLE01743 and later	PLP00049 and later
QLE00246 and later	RLE00040 and later	SLE00374 and later
TLE00140 and later	ULE00537 and later	

Classification by level of the ADF

Classification label attached to the ratings plate

Tentative measures: 9-mm dia. Brown label

Permanent measures: 9-mm dia. Pink label

ADF Units Affected

YC01647 and later

YD01384 and later

YE00068 and later