Canon

Service Bulletin

COPIER

Issued by Canon Europa N.V.

Model : GP605

No.: GP605-006
(FF-T01-K1-000014-01)

DATE: 07.05.99

Location : DEVELOPER

Subject : DEVELOPER CAUSING LIGHT OR COMPLETELY BLANK IMAGE

Reason : To communicate procedures for countermeasures regarding the possibility of light or completely blank image occurring due to scraping of the developer washer which causes electrical leaks.

Details : <Symptom>
Light or completely blank image sometimes occur depending on the workload in terms of the copy volume achieved to date.

<Cause>
A washer which has been added (to the space between the electrode positioning plate and the developer sleeve) as a countermeasure for preventing noise may scrape off over a period of time, and then the broken fragments falling into the die-cast section of the main unit could result in electrical leaks.

<Factory measure>
Temporary countermeasure: Remove the washer which has been used to prevent noise.
* If there is a space of 0.2mm between the electrode positioning plate and the developer sleeve, noise will not occur even upon removing the washer.

Servicing : < Procedure >

1) Remove the screw.
2) Remove the electrode positioning plate.
3) Remove the washer.
4) Clean the pressure roller.

Caution: There can be recurrence of the problem for developers which have had light or completely blank image occurring, and for this reason replace the pressure roller.

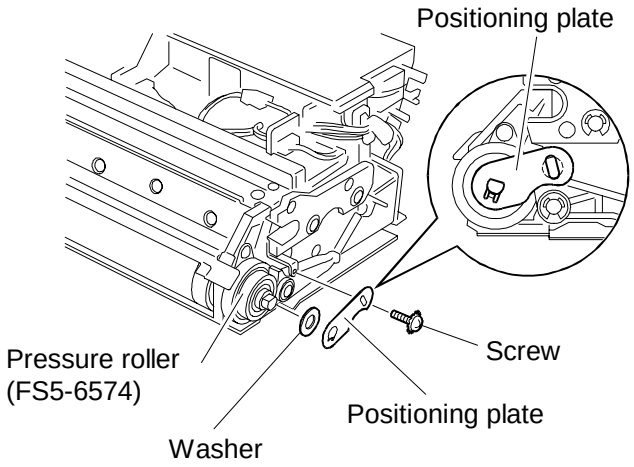

Fig. 1

5) Insert the 0.2mm spacer (for example, OHP sheets of about 0.2mm thickness) and place the electrode positioning plate.
6) Tighten the screw.
   * Since there is a magnet in the developer sleeve roller, tighten the screw at the natural position without going against the effect of the magnet.

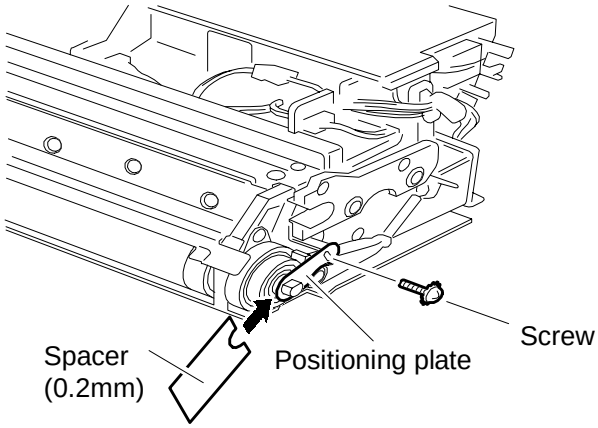

Fig. 2

Caution: In attaching the electrode positioning plate, exercise caution not to raise it up or bend it.

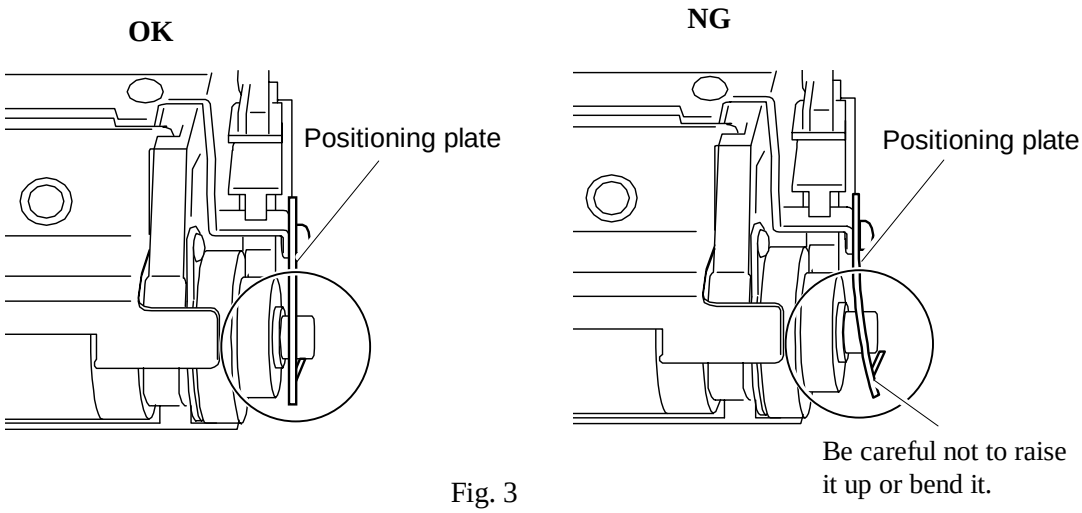

Fig. 3

Affected machines:

Affected machines

PLE00027 ~ PLE00102
NLE00848 ~ NLE01858
PLP00007 ~ PLP00048
QLE0052 ~ QLE00245
RLE00017 ~ RLE00039
SLE00235 ~ SLE00371
TLE00082 ~ TLE00139
ULE00362 ~ ULE00536

A round yellow label has been attached to the outside of boxes for modified machines.