Canon

Service Bulletin

COPIER

Issued by Canon Europa N.V.

Model : GP605

No.: GP605-007
(FF-T01-K1-000016-01)

DATE: 07.05.99

Location : FIXING ASSEMBLY

Subject : DISPLACEMENT OF SCREW SECURING RECIPROCATING SHAFT BUSHING

Reason : This bulletin communicates measures to take in the filed to prevent quality problems caused by displacement of the screw used to secure the reciprocating shaft bushing.

Details : It was found, different models, that the screw used to fix the reciprocating shaft bushing in place becomes loose because of heat or vibration, ultimately falling off the bushing.
In the worst case, the screw falling between the thermal switch and the reciprocating shaft can short-circuit the power line of the fixing heater.
This bulletin contains measures for preventing such a problem as a precaution for the GP605, which is deigned based on the same concept.

< Factory measure >

Tentative Measures: The screw used to secure the reciprocating shaft bushing is replaced with a W-sems screw, which tends to remain firmly tightened.
XB1-2400-609 (binding screw) ->XB2-8400-809 (W-sems screw)

Permanent Measures: The screw (6mm-long) used to secure the reciprocating shaft bushing is replaced with an 8mm-long screw. Further, tightening of the nut is added to the work.

Servicing : As part of a servicing visit, replace the 6mm-long screw used to secure the reciprocating shaft bushing with an 8mm-long screw. In addition, tighten the nut.

< Points to Note during Work >

- Check to make sure that the fixing assembly is not hot before starting the work.
- Take care not to damage the fixing roller and the cleaning belt.
- Check the existing reciprocating shaft bushing, and replace it if a crack is found.

< Work Procedure >

1) Remove the fixing cleaning belt. (Figure 1)

- For instructions between sliding out the fixing/feeding assembly and detaching the fixing cleaning belt, see the Service Manual (FY8-13FD-000; pp. 8-26, -27, -29, -30). However, you need not detach the fixing assembly from the fixing/feeding assembly.

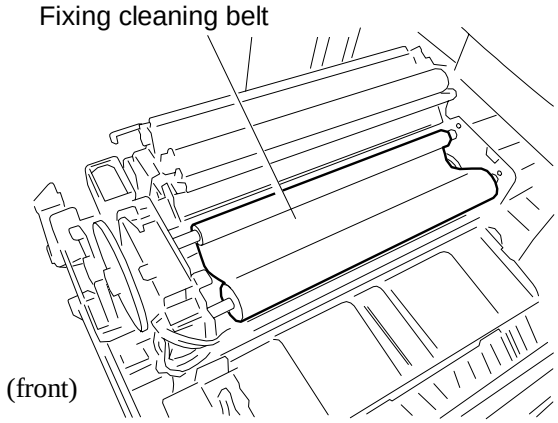

Fig. 1

2) Release the lock of the wire saddle, and remove the fastons; then, disconnect the connectors. (Figure 2)

- Release the lock of the wire saddle.
- Remove the fastons, and disconnect the connectors.

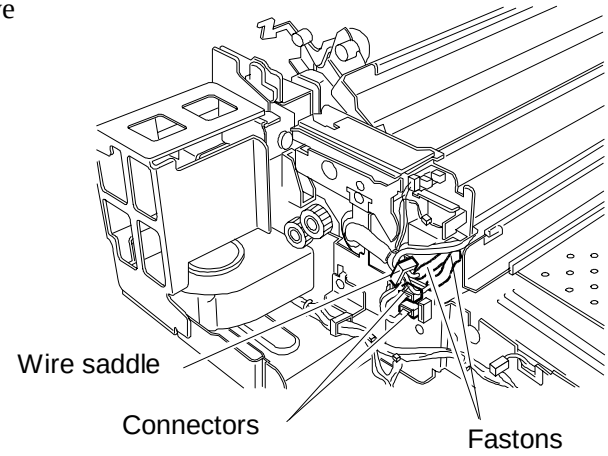

Fig. 2

3) Remove the spring. (Figure 3)

- Remove the glue from the spring.
- Detach the spring.

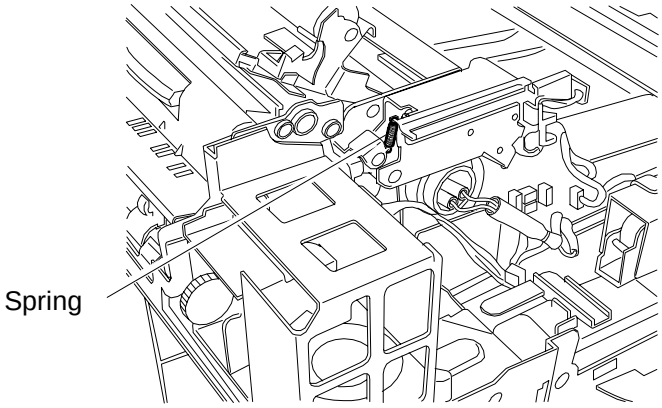

Fig. 3

4) Remove the heater positioning plate. (Figure 4)

- Remove the screw, and detach the heater positioning plate.

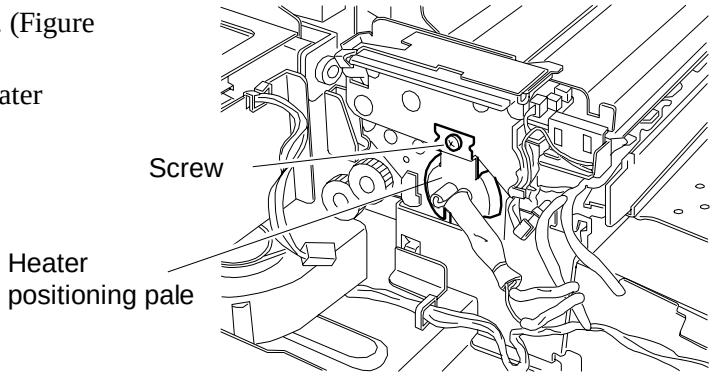

Fig. 4

5) Remove the fixing cleaning belt drive assembly. (Figure 5)

- Remove the screws, and detach the fixing cleaning belt drive assembly.

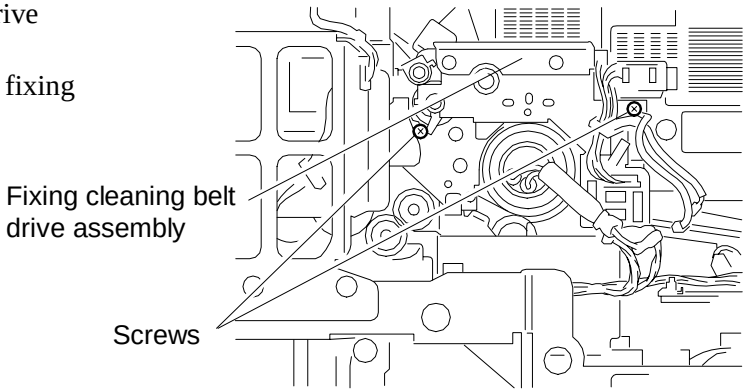

Fig. 5

6) Replace the screw used to secure the reciprocating shaft bushing, and tighten the nut. (Figure 6)

- **Replace the screw used to secure the reciprocating shaft bushing with an 8mm-long screw (XB1-2400-807), and tighten it lightly so that there is no play in the bushing.**
- **With a screwdriver fitted to the screw, attach the nut (XB7-2100-409) to the screw; then, tighten it. At this time, keep the screw still using the screwdriver.**

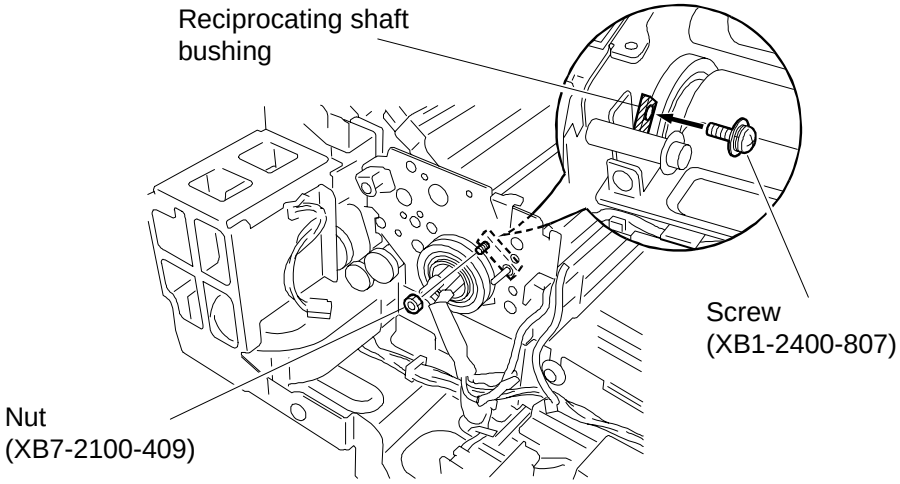

Fig. 6

7) Assemble the parts.

- Assemble the parts by reversing the steps used to remove them.

Service Parts :

No.	Description		Part number	Q'ty		Inter-change-ability	P.C.
1	Old	SCREW, MACHINE M4x6	XB1-2400-609	1→0		No Yes	810-505
	New	SCREW, M4x8	XB1-2400-807	0→1			
2	Old						810-
	New	NUT, HEX M4	XB7-2100-409	0→1			

Affected machines:

Machines Selected for Tentative Measures:

PLE00082	and later	NLE01593	and later
PLP00019	and later	QLE00191	and later
RLE00027	and later	SLE00372	and later
TLE00136	and later	ULE00482	and later

Note: The serial numbers of the machines selected for permanent measures will be communicated as soon as they are identified.