Service Bulletin

COPIER

Issued by Canon Europa N.V.

Model : GP605

No.: GP605-008
(FF-T01-K1-000018-01)

DATE: 04.06.99

Location : FRONT DECK (RIGHT) PICK-UP ASSEMBLY

Subject : COUNTERMEASURES FOR GEAR BREAKAGE DUE TO FALLING TIE-WRAP

Reason : To communicate countermeasures to take with regard to the possibility of gear breakage due to tie-wrap which holds the front deck (right) pick-up assembly cables getting cut and falling into the machine main unit.

Details : <Symptom>
Noise from the pick-up assembly or stoppage of paper pick-up with occurrence of noise.

<Cause>
When the fixing/feeder frame assembly is drawn in and out, tight space inside the machine causes the cable tie which holds the front deck (right) pick up assembly cables to make contact and gets cut. The cut cable tie falls into the front deck (right) gear and the gear drive locks, causing the weakest 20T/32T gear (Parts Catalog FY8-31DU-010 P260-2) in the paper pick-up drive assembly to break.

<Factory measure>
The cable guide was cut, and the cables are held in place by freeing the cable tie from its former position.

Identification method:
* Implementation from body No. 5674.
* Identification accomplished by sticking a 15mm diameter pink seal on the product code label.

Servicing **:** < Procedure >

1) Remove the front deck (right) pick-up assembly.
   (See Service Manual FY8-13FE-000 P7-53.)
2) Cut the cable tie (Fig.1).
3) Accomplish reattachment by following the procedure in reverse.

Caution: Even with users who are using the optional side paper deck, there is no need to remove the side paper deck.

Procedure for removing the right (upper) door which is done instead of removing the side paper deck.

i) Move the side paper deck to the position as far as it can slide away from the machine.
ii) Open the multi feed tray assembly widely.
iii) Release the right (upper) door from the supporting pin by lifting the door up while opening it to a certain degree.

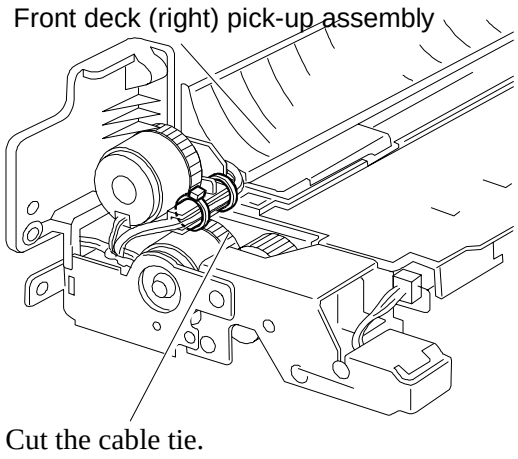

Fig. 1

Affected machines:

PEL00102	and later	NLE02549	and later	PLE00049	and later
QLE00272	and later	RLE00040	and later	SLE00411	and later
TLE00160	and later	ULE00537	and later		