Canon

Service Bulletin

COPIER

Issued by Canon Europa N.V.

Model : GP605

No.: GP605-009 Rev. 1
(FF-T01-K1-000020-02)

DATE: 09.07.99

Location : ADF PICK-UP ASSEMBLY

Subject : FOLDING OF DOCUMENT'S LEADING EDGE IN ADF

Reason : To communicate countermeasures for the possibility of the document's leading edge becoming folded when the accuracy as to the position the ADF reversing flapper stops is deficient or when the reversing guide is not completely pushed in and properly seated after attending to the problem of this flapper remaining folded up through mishandling.

Details : <Symptom>
When using the ADF to copy, there are cases where the document's leading edge becomes folded.

<Cause>

- In case the accumulated tolerances of the parts get too close to the limits, the document may strike the copyboard glass and the document's leading edge may become folded.
- The reversing flapper is replaced as the measure to deal with the situation of breakage consequent to the user getting his fingers caught to the reversing flapper in clearing a jam. But failing to notice during the replacement that the reversing guide has not been completely pushed in and properly seated could result in the document's leading edge to become folded.

<Factory measure>
By eliminating the rib of link B (Parts Catalog TY8-31DV-000 page 30-97) and changing to the type with a different angle, the folding up of the reversing flapper was restrained, and the striking of the document against the copyboard glass prevented.

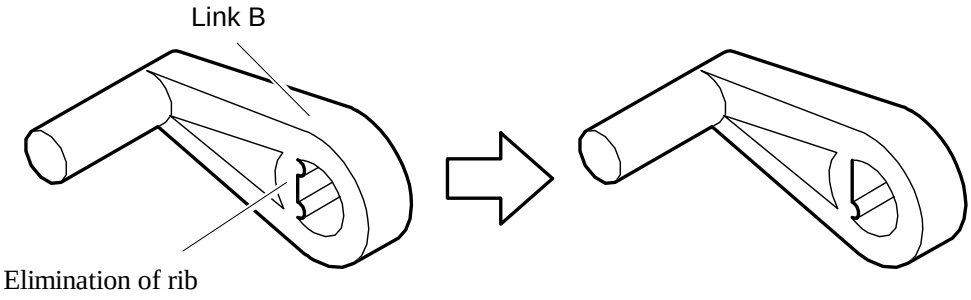

[Old] [New]

Fig. 1

Servicing **:** < Work procedure >

1) Remove the 2 binding screws underneath the ADF. (Fig. 2)

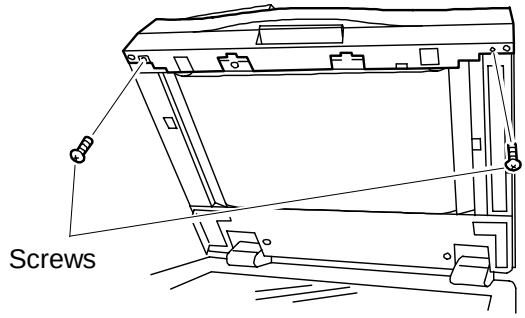

Fig. 2

2) Remove the 1 screw from the right side of the ADF. (Fig. 3)

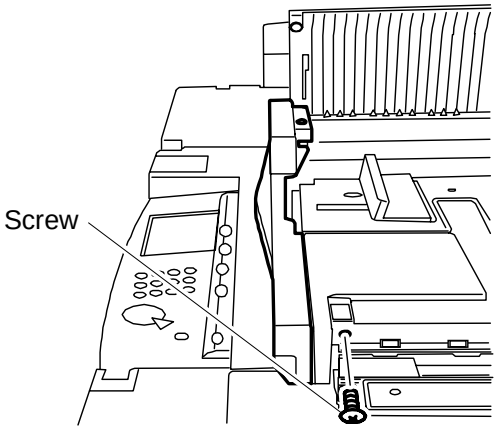

Fig. 3

3) Open the upper cover assembly and remove 1 screw, then remove the front cover (upper/lower) (Fig. 4).

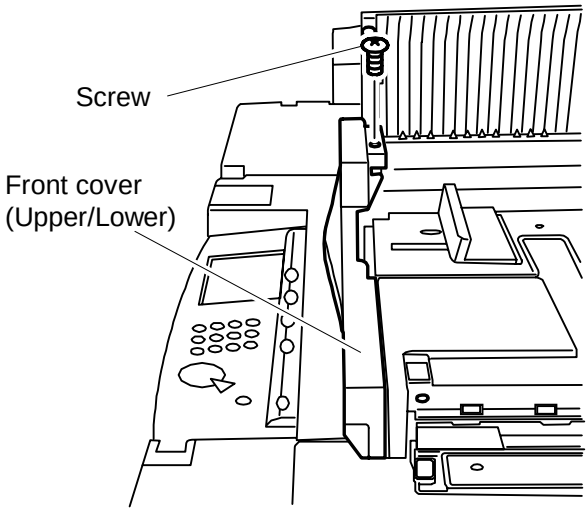

Fig. 4

4) Remove the E ring, and replace link B (Fig. 5).

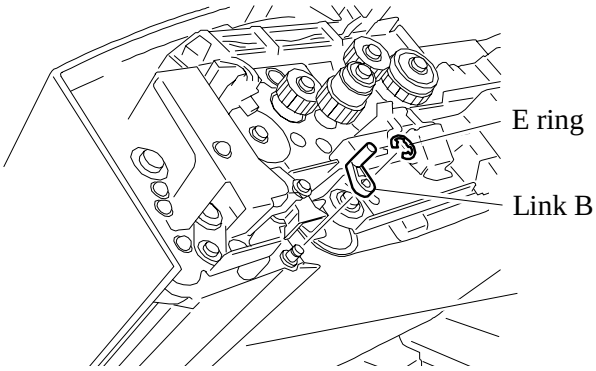

Fig. 5

5) Open the registration guide, loosen the 2 screws and push in the reversing guide B in the direction of the arrow until properly seated, and then re-tighten the screws (Fig. 6).

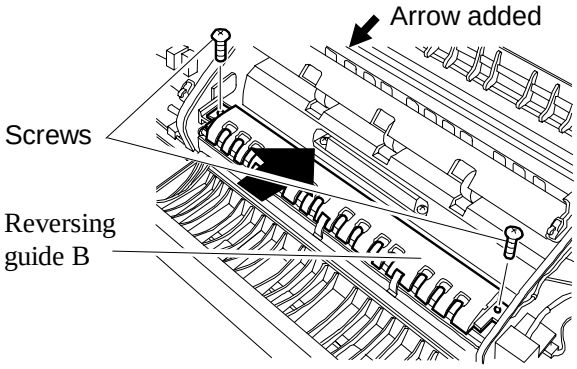

Fig. 6

6) Place the front cover by following the procedure in reverse, then tighten the 4 screws.