Issued by Canon Europa N.V.

Model : GP605

No.: GP605-012
(FF-T01-K1-000026-01)

DATE: 10.08.99

Location : ADF PICKUP ASSEMBLY

Subject : ADF PICK-UP JAM THAT OCCURS WITH 200G/M2 PAPER

Reason : When an original using a thick and stiff paper is fed from the ADF, the original may strike the edge of the copyboard glass with the consequence of folding at the leading edge of the original or an occurrence of a pick-up jam. To overcome this problem, a spring with higher tension has been made available to the field. And in this connection, a formal engineering drawing change has been made.

Details : <Symptom>
When an original using a thick paper is fed from the ADF, the original may strike the edge of the copyboard glass with the consequence of folding at the leading edge of the original or an occurrence of a pick-up jam for the original.

<Cause>
When a thick and stiff original is fed, it can push down the lower guide (for guiding the paper to the path the paper is to follow) to a position below the edge of the copyboard glass. When that occurs the original may strike the glass with the consequence of folding at the leading edge of the original or an occurrence of a pick-up jam for the original. (See Figure 1.)

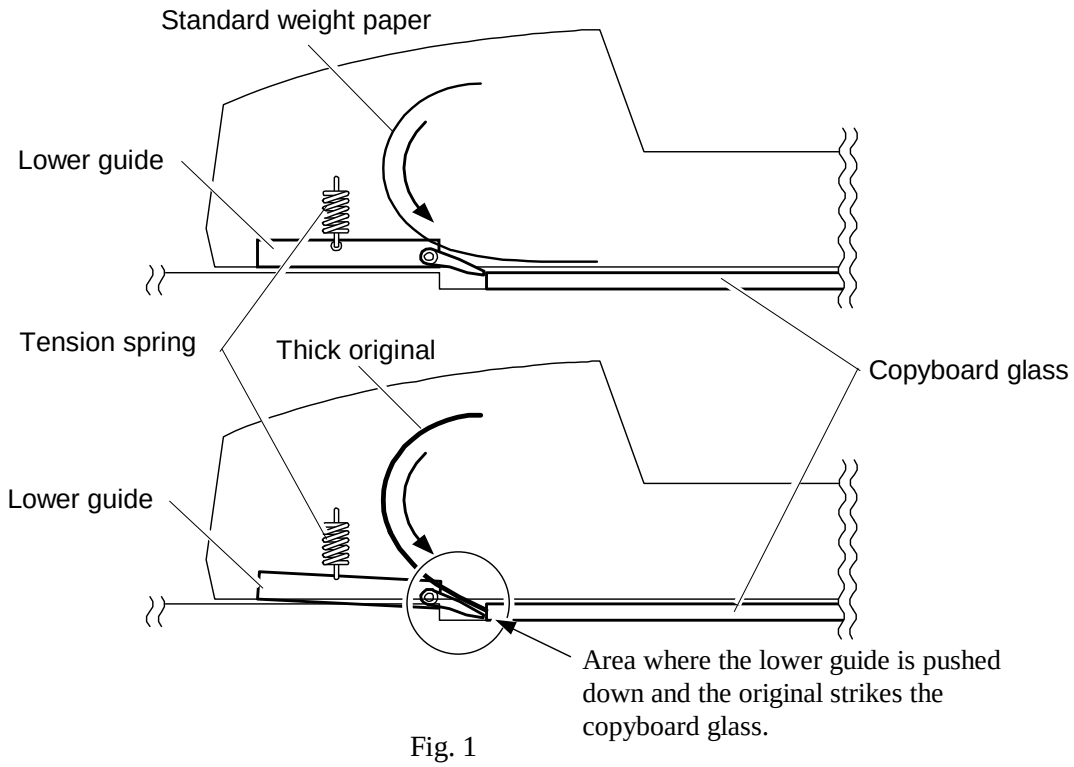

Fig. 1

<Factory measure>

Tentative Measures: Supply a countermeasure spring for specific cases of users in the field feeding thick papers.

Permanent measure: An engineering drawing change has been made to increase the pressure of the spring in retaining the lower guide in place (prevent it from getting pushed down) against the downward force of the stiff paper.

Servicing : The diameter of the spring increases due to the engineering drawing change, necessitating a change to the shape of the following parts (4 locations; Parts Catalog FY8-31DV-000, p. 32) as shown in the Figure below. It is not possible to install the new spring to the ADF without the modification and for that reason old parts and old part numbers will continue to be in use.

Note: *Since the parts other than the springs used in the modified locations are not assigned as service parts, change in the revision level segment of the parts numbers is not the matter to become concerned with.*

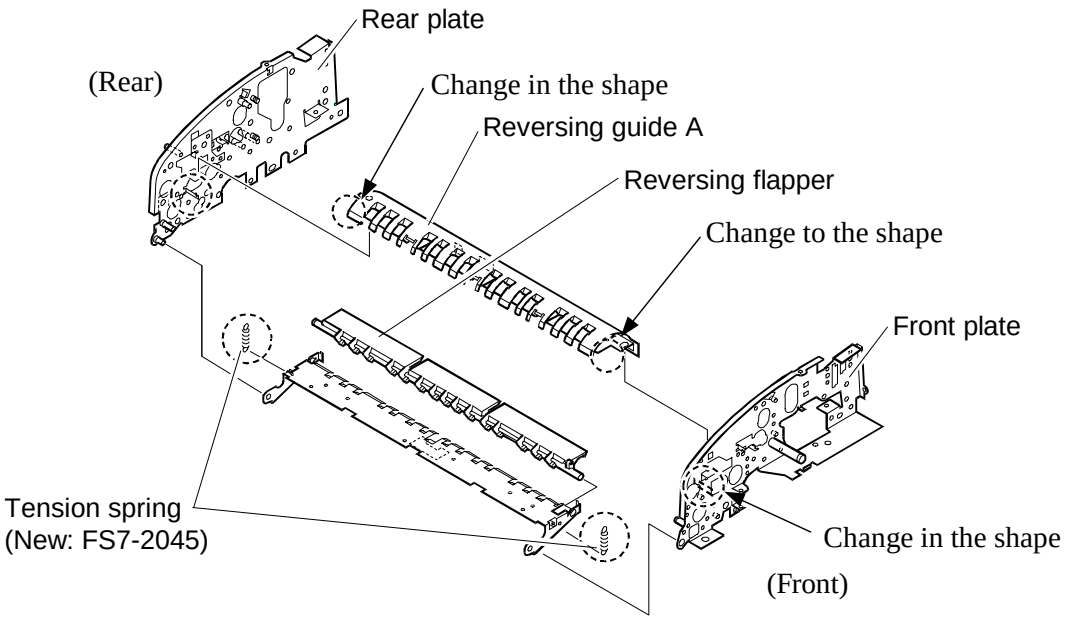

Fig. 2

Service Parts :

No.	Description		Part number	Q'ty		Inter-change-ability	P.C.
1	Old	SPRING, TENSION	FS7-2031-000	1→0		No ↓ ↑ No	30-82
	New	SPRING, TENSION	FS7-2045-000	0→1			