Service Bulletin

COPIER

Issued by Canon Europa N.V.

Model : GP605P

No.: GP605-014
(FF-T01-K1-000029-01)

DATE: 10.08.99

Subject : DIFFERENCES BETWEEN GP605P AND GP605

Reason : This bulletin is prepared to communicate the differences between GP605P and GP605 in view of the introduction of the former.

Details : 1. Major Differences
- The scanner function and ADF have been removed (no copying function).
- The control panel has been modified.
- The front cover has been modified.

The following shows the external view and the control panel.

< External View >

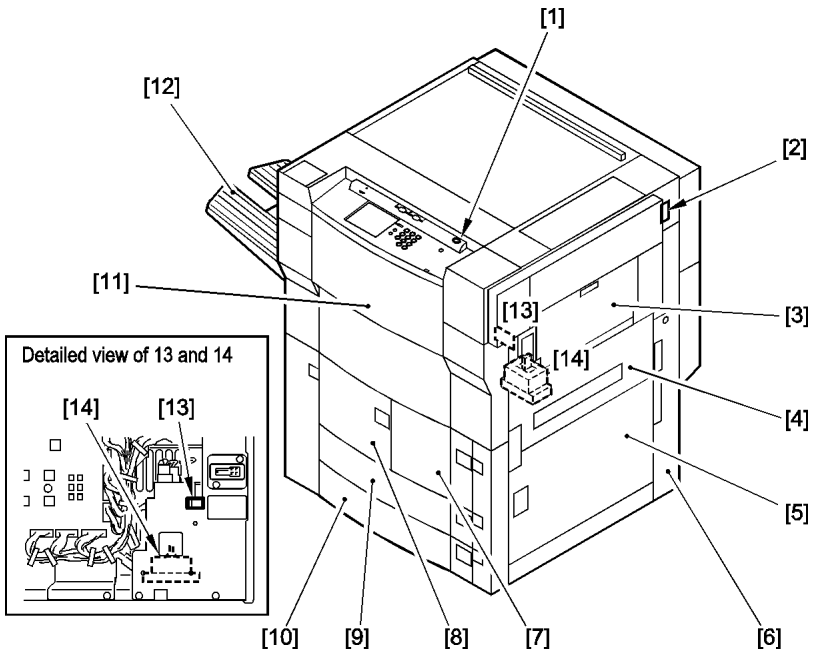

[1] Control panel power switch
[2] Main power switch
[3] Manual feed tray
[4] Upper right cover
[5] Lower right cover
[6] Waste toner case / drum protective sheet holder
[7] Right deck
[8] Left deck
[9] Cassette 3
[10] Cassette 4
[11] Front cover
[12] Delivery tray (accessory)
[13] Heater switch (cassette)
[14] Leakage breaker

< Control Panel >

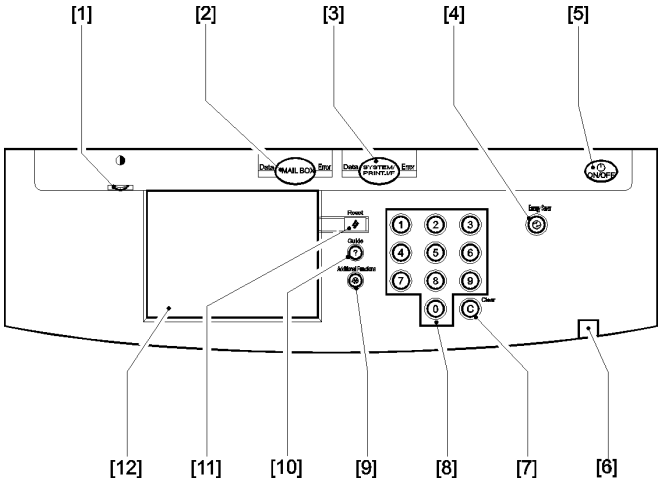

[1] Screen contrast dial
[2] Mail box key
[3] SYSTEM key (may be called by a different name)
[4] Save power key
[5] Control panel power key
[6] Main power lamp
[7] Clear key
[8] Numeric keypad
[9] User Mode key
[10] Guide key
[11] Reset key
[12] Touch panel

2. Product Notations and Names

Voltage/country	Product notation	Name	Type
230V/AMS	F135695	GP605P	COD
230V/FRN	F135675	GP605P	BOD
230V/UK	F135655	GP605P	DOD
230V/GER	F135685	GP605P	AOD
230V/ITA	F135625	GP605P	FOD

3. Power Consumption (reference only)

Operating mode		230V model	
Continuous printing (Wh, approx.)		1148	
Standby (Wh, approx.)		302	
Low power mode (Wh, approx.)		112	
Sleep mode (Wh, approx.)		32	
Power save mode (Wh, approx.)	10%	270	
	25%	222	
	50%	159	

4. Points to Note for Installation

- The printer board is packaged separately. Install the machine, and then install the board according to the Installation Procedure that comes with it.
  The names of the keys on the control panel to be used under 3. "Making Checks after Installation" in the Installation Procedures are as follows on the machine:

GP600	GP600P
OPTIONEN	SYSTEM
OPTIONS	

5. Installation

A. Unpacking

No.	Work	Remarks
1	Unpack the printer. Remove the two grip covers (front, rear) on the left side, and shift up the grips.	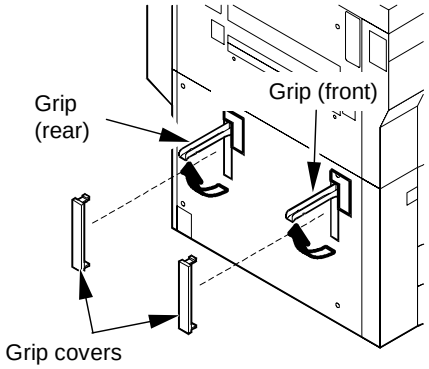
2	Take out the grip from inside the shipping box.	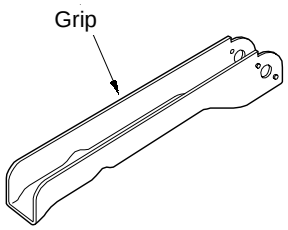
3	Remove the grip cover (rear) from the right side of the printer, and shift up the grip at the rear.	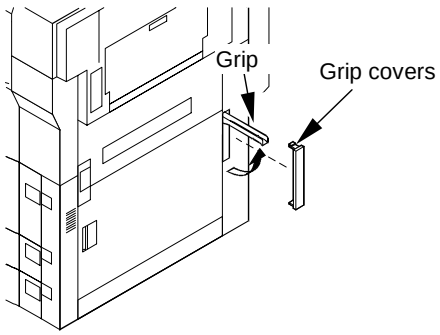
4	Open the upper right door, and slide the face cover (small) to the rear to remove; then, detach the face cover (large). Push in the grip removed in step 2) into the slot at the front.	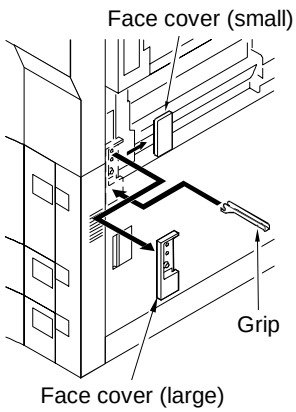

No.	Work	Remarks
5	Holding the grips on the pick-up side (front, rear), lift the printer slightly, and remove the pad. Likewise, holding the grips on the delivery side, lift the printer slightly, and remove the pad. At this time, be sure to remove the plastic bag.	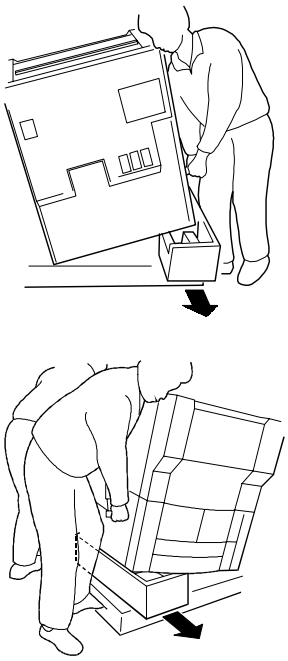
6	Shift up the two adjusters (front) on the bottom of the printer, and check to make sure that they are unlocked.	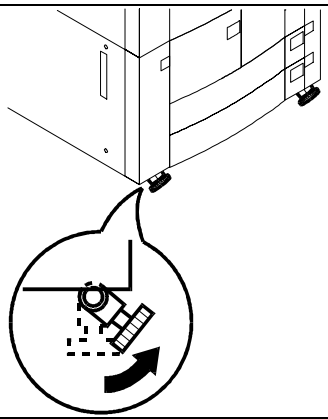
7	Take out the two slope plates stored in the middle of the skid.	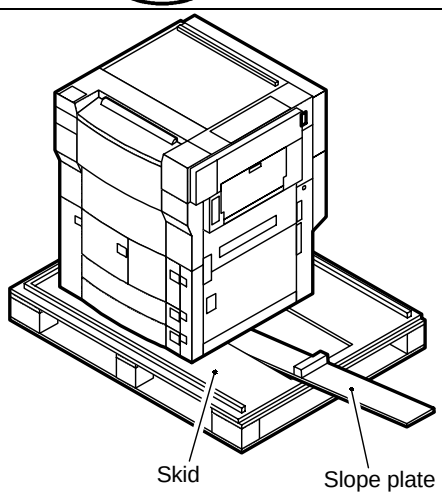

No.	Work	Remarks
8	Turn over the slope plates, and match the pin holes of the skid and the pin holes of the slope plates; then, fit the pins (one each). Holding the grips (front, rear) of the printer, slide the printer down the slope plates off the skid. **Caution :** The pins are taped in place to the slopes.	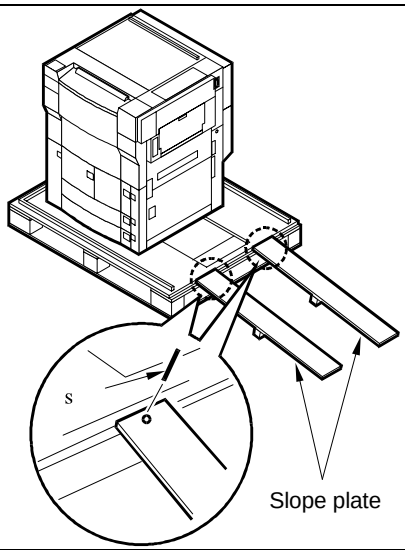
9	Open the cardboard box that comes with the printer, and take out the parts and sub members. Check that none of the attachments is missing.	
10	Put away the grip used in step 4) in the compartment behind the front cover.	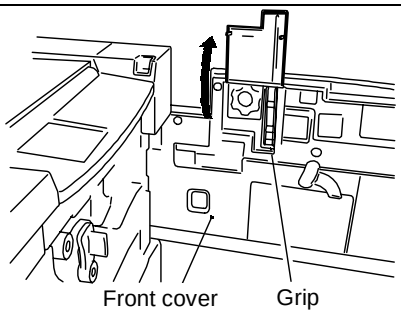
11	Mount the face covers (right and left) that have been removed.	

Caution :

Before moving on to the next steps, check to see if there is condensation on the outside or the inside of the printer right after taking it out of its shipping box. If condensation is found, stop the work and wait until the printer has become used to the room temperature.
Start the steps that follow after making sure that the printer is free of condensation.

B. Mounting the Fixing Assembly

No.	Work	Remarks
1	Open the front door.	
2	Shift down the fixing/feeding assembly releasing lever in the direction of the arrow (left), and unlock the transfer/separation charging assembly. Slide out the fixing/feeding unit to the front.	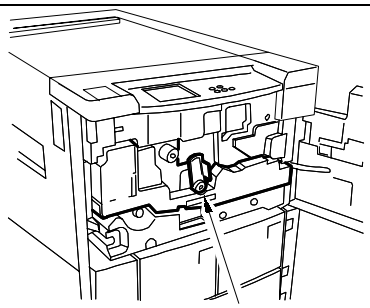 Fixing/feeding assembly releasing lever 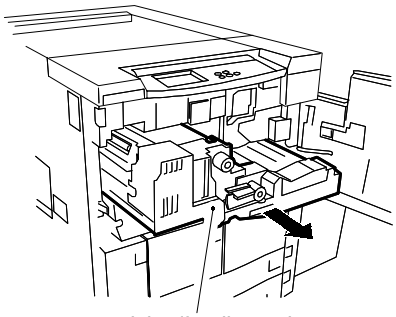 Fixing/feeding unit
3	Remove the tag and the separation assembly releasing member from above the fixing/feeding assembly. **Caution :** Be sure to remove all traces of glue (from tape) and foreign matter from the feeding belt.	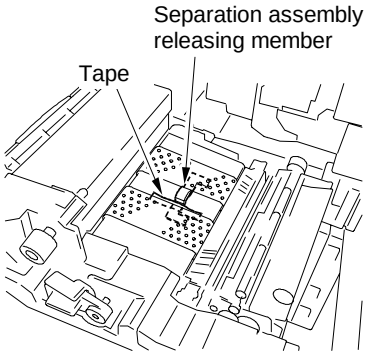 Separation assembly releasing member Tape
4	Remove the tag retaining tape, and remove the two fixing nip releasing screws at the front and the rear.	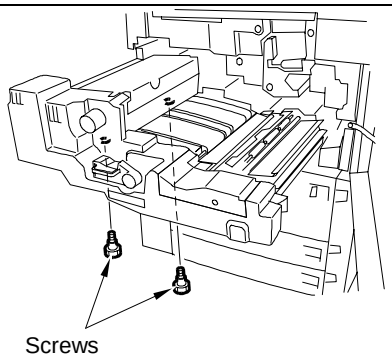 Screws

C. Mounting the Corona Assemblies

No.	Work	Remarks
1	Remove the screw, and detach the front cover of the transfer separation charging assembly.	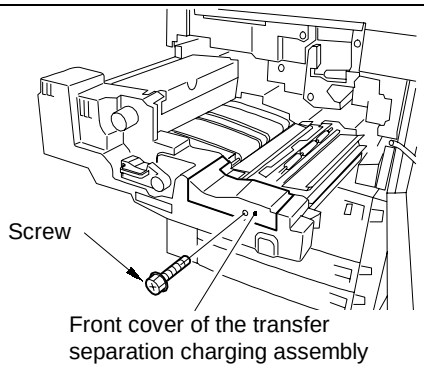
2	Remove the metal fixing (1 screw), and disconnect the connector. While pressing down on the front and the rear of the transfer separation charging assembly, pull it to the front then to the upper left to remove. Use alcohol solution, and clean the transfer separation charging wire.	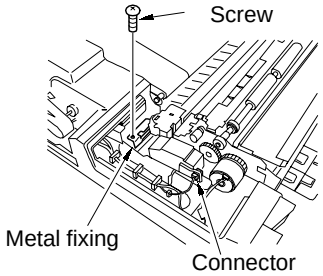
3	Mount the transfer separation charging assembly with the following in mind: • The charging assembly must be completely dry. • The charging wire cleaning member is at the center. • The gut wire is not forced against the transfer guide. • The grounding plate is positioned on the outside of the frame. (See the diagram on the right.)	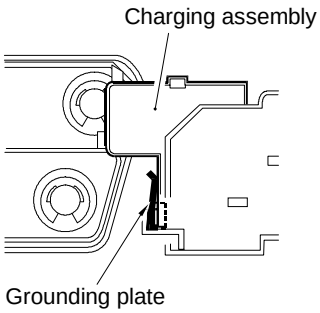
4	Connect the connector of the transfer separation charging assembly, and mount the metal fixing.	
5	Mount the front cover of the transfer separation charging assembly with a screw. Push in the fixing/feeding assembly until it locks in place.	
6	Remove the screw, and detach the front cover of the primary charging assembly.	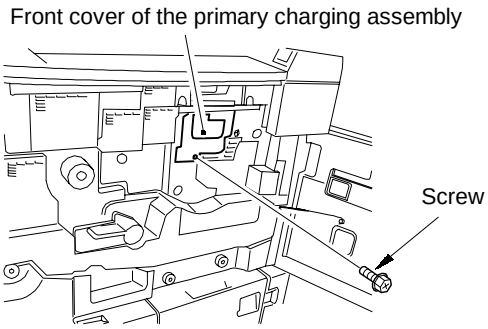

No.	Work	Remarks
7	Disconnect the connector and unlock the primary charging assembly; then take out the charging assembly. Clean the primary charging wire and the grid wire using alcohol.	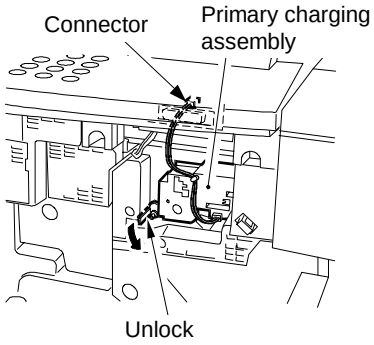
8	Remove the screw, and detach the front cover of the pre-transfer charging assembly.	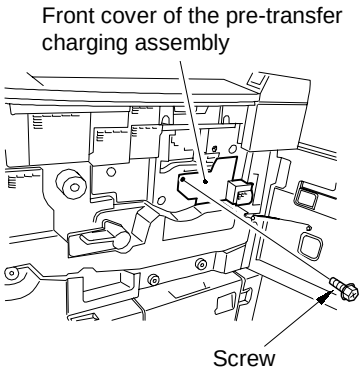
9	Disconnect the connector; then, unlock the pre-transfer charging assembly, and take out the charging assembly. Clean the pre-transfer charging wire with alcohol.	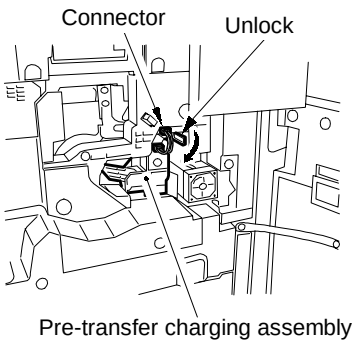
10	While keeping the lock released, push in the primary charging assembly, and connect the connector.	
11	With the lock released, insert the pre-transfer charging assembly fully and slowly with care, and connect the connector. **Caution :** Check to make sure that the one-way arm of the transfer charging assembly is on top of the eccentric cam.	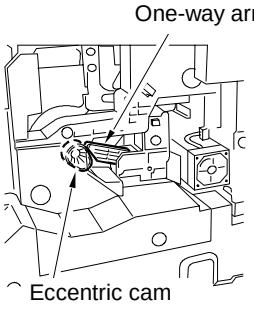
12	Mount the primary charging assembly cover and the pre-transfer charging assembly cover with one screw each.	
13	Close the front door.	

D. Checking the Developing Assembly

No.	Work	Remarks
1	Open the multifeeder tray, and remove the screw from the door tape.	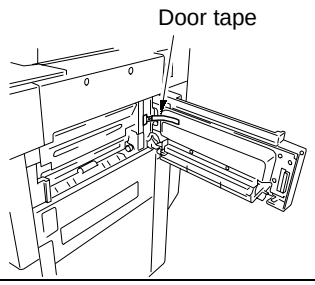
2	Take out the developing assembly from the shipping box that comes with the printer. Turn the developing assembly cylinder gear by hand, and check the cylinder surface for damage.	
3	Holding the center of the developing assembly (pocket of the grip), mount it in the printer. Then, connect two connectors. **Caution :** When mounting the developing assembly, try inserting it from high above, taking care not to bring the developing cylinder into contact with the metal plate of the developing assembly base.	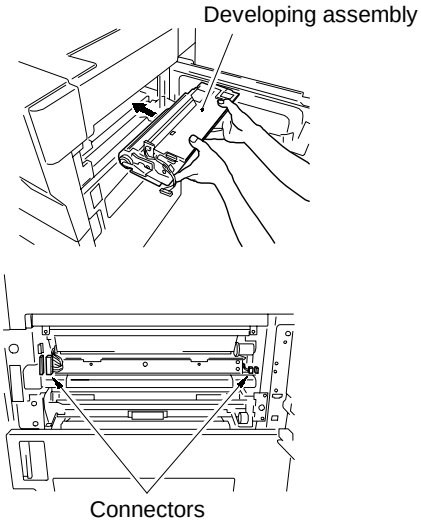
4	Secure the developing assembly locking unit in place with six screws (M4 6; black; attachment).	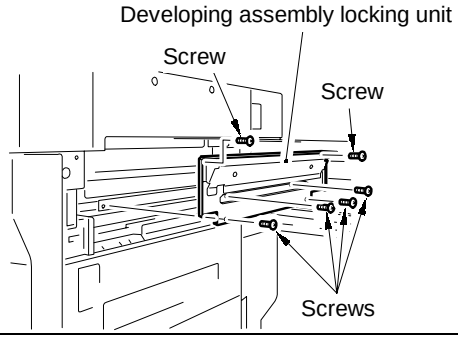
5	Mount the door tape of the multifeeder with a screw.	

E. Mounting the Pick-Up Assembly

No.	Work	Remarks
1	Open the multifeeder door, and shift the lever in the direction of the arrow. Then, take out the pick-up roller releasing spacer.	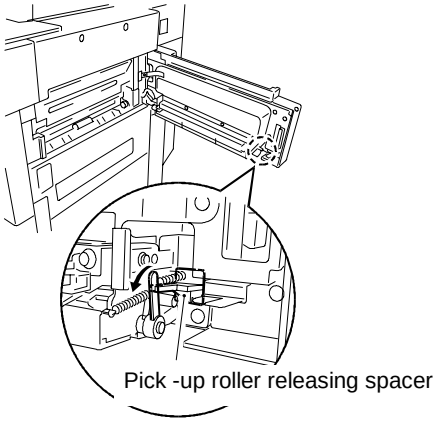
2	Open the upper right door and the lower right door. Then, push the releasing button of the front deck (R), cassettes 3 and 4, and slide them out half way.	
3	Remove the three pick-up roller releasing spacers.	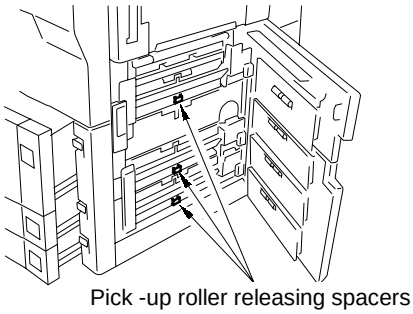
4	Secure the deck pressure plate to the front deck (left) with an RS tightening screw (M4 6; white).	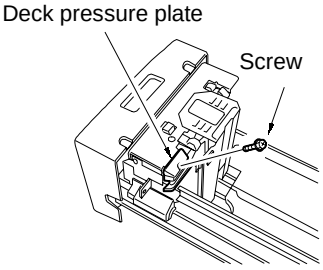

F. Supplying Toner

No.	Work	Remarks
1	Take out the toner cartridge from the packaging box.	Toner cartridge 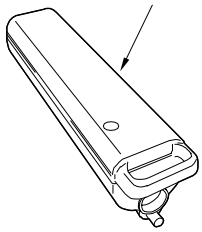
2	Remove the packing tape	Packing tape 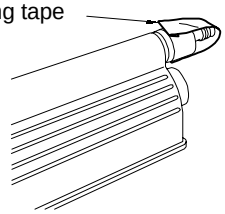
3	Open the hopper cover, and insert the toner cartridge from the front of the printer. **Caution :** Insert the toner cartridge until the marking ▲ of the toner cartridge and the marking ▼ of the printer come into contact. Marking Toner cartridge 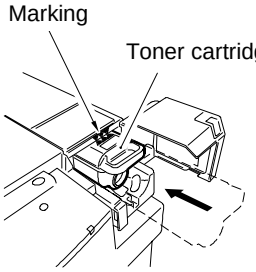	Hopper cover 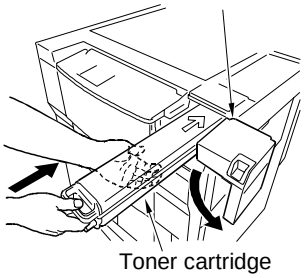 Toner cartridge
4	Close the hopper cover.	

G. Checking Images/Operations (user mode)

<table>
<tr><th>No.</th><th>Work</th><th>Remarks</th></tr>
<tr><td>1</td><td>Push the releasing buttons of the cassettes 3 and 4; then, slide out the cassettes to the front, and remove the packing material.</td><td></td></tr>
<tr><td>2</td><td>Set the side plates of the cassettes 3 and 4 against the holes (A4/A3) of the marking M.
Fit the stops into the holes identified as follows so that the bottom of the cassette will not lift.
A: STMT-R
H: LTR-R

Caution :
This step applies only if the user does not use Inch-configured paper.</td><td>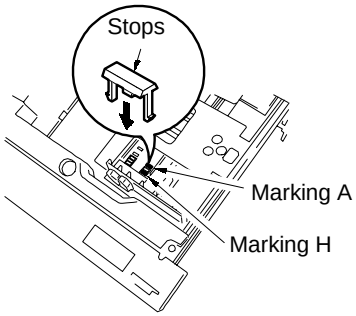
</td></tr>
<tr><td>3</td><td>Connect the power plug to the outlet; then, turn on the main power switch and the control panel power switch in sequence.

Caution :
In the case of a 230V model, connect the power plug that comes with the unit to the printer before making checks.
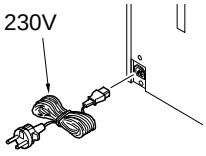
</td><td>• Adjust the contrast of the control panel using the control dial on the screen. Inform the user of how the dial may be used.
• Check that the Supply Paper indicator has turned on.
• Press the keys on the keypad and the Clear key to make sure that the indicated is correct.</td></tr>
<tr><td>4</td><td>Place paper into the cassettes according to paper size.</td><td>Caution :
If you need to change the size of the deck (R) or (L), see H. "Changing the Size of the Front Deck (right and left)."</td></tr>
<tr><td>5</td><td>Attach the size stickers to the paper size plate of the cassettes.</td><td></td></tr>
<tr><td>6</td><td>Set each cassette to the printer.</td><td></td></tr>
</table>

No.	Work	Remarks
7	Attach cassette size stickers to the cassettes to suit the user's needs.	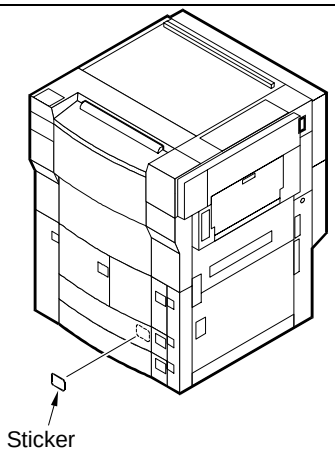
8	If you are not installing the finisher, mount the copy tray.	
9	Start service mode. Control Panel Key Operations Select 'COPIER'. ↓ Select 'FUNCTION'. ↓ Select 'INSTALL'. ↓ Make sure that the notation on the screen for service mode has changed from 'WAITING' to 'READY'; then, ↓ Select 'TONER-S'. ↓ Check that the message 'CHECK THE DEVELOPER' is indicated. ↓ After making sure that the developing assembly and its locking unit are properly mounted, press the 'OK' key. ↓ The printer will start toner supply operation (about 10 min). ↓ When the operation ends, press the Reset key twice to end service mode.	Starting Service Mode 1. Press the User Mode key. 2. Press '2' and '8' of the keypad at the same time. 3. Press the User Mode key. 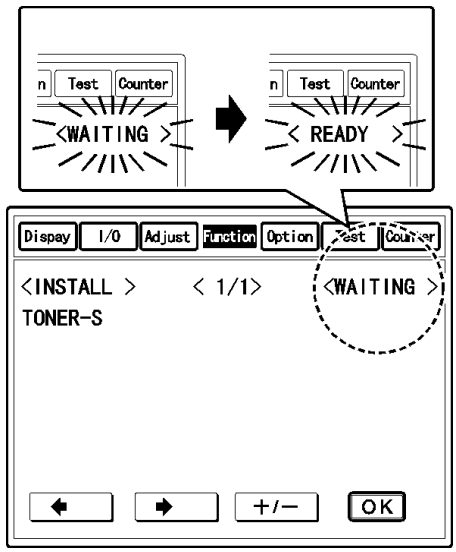 **Caution :** Do not turn off the power while the machine is operating.
10	Make settings for standard mode in user mode and service mode to suit the user's needs.	For details of service mode, see the VIII. in chapter 13.
11	Press the Reset key twice to end service mode.	
12	Clean up the area around the printer.	
13	Move the printer to the site of installation, and fix the printer in place using the adjusters.	

No.	Work	Remarks
14	If you need to install accessories, install them now according to the instructions given in the respective Installation Procedures.	
15	Fill out the Service Sheet.	

H. Changing the Size of the Front Deck (right and left)

No.	Work	Remarks
1	Press the releasing button, and slide out the deck.	
2	Remove the screw from the rear guide plate, and fix the guide plate in position to suit the new size.	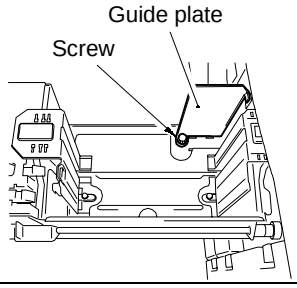
3	Remove the screw (one each) from the left and right guide plates. Then, fix the guide plates in position to suit the new size.	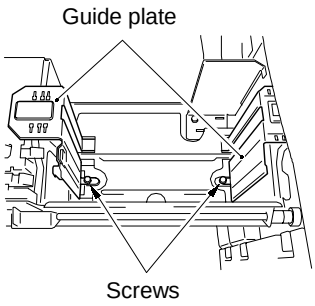
4	Put paper in the deck.	
5	Attach the new size sticker to the paper size plate of the deck.	
6	Slide the deck into printer.	
7	Start service mode, and register the new paper size.	For deck (R): COPIER>OPTION>CST>P-SZ-C1 For deck (L): COPIER>OPTION>CST>P-SZ-C2 A4: 6, B5: 15, LTR: 18

I. Mounting the Printer Board

No.	Work	Remarks
1	Take out the Printer Board from a box packaged separately. For mounting instructions, see the Installation Procedure that comes with the Printer Board.	

6. Points to Note for Servicing

- For servicing, see the Service Manual (for GP605, FY8-13FD-000). The periodically replaced parts and durables are the same as those of GP605.
- For service parts, see the newly released Parts Catalog (for GP605, FY8-31DU-00).