GP605/605V

SERVICE HANDBOOK

REVISION 0

Canon

JAN. 1999 FY8-23AW-000

COPYRIGHT © 1999 CANON INC. CANON GP605/GP605V REV.0 JAN. 1999 PRINTED IN JAPAN (IMPRIME AU JAPON)

IMPORTANT

THE INFORMATION CONTAINED HEREIN IS PUBLISHED BY CANON, INC., JAPAN. SPECIFICATIONS AND OTHER INFORMATION CONTAINED HEREIN MAY DIFFER SLIGHTLY FROM ACTUAL MACHINE VALUES OR THOSE FOUND IN ADVERTISING AND OTHER PRINTED MATTER.

ANY QUESTIONS REGARDING INFORMATION CONTAINED HEREIN SHOULD BE DIRECTED TO THE COPIER SERVICE DEPARTMENT OF THE COMPANY.

COPYRIGHT © 1999 CANON INC.

Printed in Japan
Imprimé au Japon

Use of this manual should be strictly supervised to avoid disclosure of confidential information.

Prepared by

OFFICE IMAGING PRODUCTS TECHNICAL SUPPORT DIVISION

CANON INC.

5-1, Hakusan 7-chome, Toride, Ibaraki, 302-8501 Japan

CONTENTS

CHAPTER 1 MAINTENANCE / INSPECTION

I. SCHEDULED SERVICING ITEMS 1-1
A. Copier 1-1
B. Work Steps 1-4
1. Work 1 1-4
2. Work 2 1-5
II. PERIODICALLY REPLACED PARTS 1-9
III. DURABLES TABLE 1-10
A. Copier 1-10
B. Side Paper Deck 1-13
IV. POINTS TO NOTE FOR SCHEDULED SERVICING 1-15
V. IMAGE ADJUSTMENT BASIC PROCEDURE 1-16
1. Checking the Printer Side 1-16
2. Checking the Scanner Side 1-18

CHAPTER 2 STANDARDS AND ADJUSTMENTS

A. Adjusting Images 2-1
1. Adjusting the Image Position 2-1
2. Adjusting the Left/Right Image Margin 2-2
3. Adjusting the Image Leading Edge Margin 2-6
4. Adjusting the Left/Right Non-Image Width 2-6
5. Adjusting the Image Leading 2-7
B. Scanner System 2-8
1. Replacing the Scanner Drive Cable 2-8
2. Adjusting the Scanner Mirror Mount 2-10
3. After Replacing the Scanning Lamp 2-11
C. Image Formation System 2-12
1. Routing the Primary Charging Assembly Grid Wire 2-12
2. Routing the Charging Assembly Charging Wires 2-13
3. Mounting the Drum Cleaning Blade 2-16
4. Replacing the Developing Blade 2-17
5. Replacing the Potential Sensor/Potential Control PCB 2-19
D. Pickup/Feeding System 2-21
1. Orienting the Deck/Cassette Pickup Roller 2-21
2. Orienting the Deck/Cassette Separation Roller 2-22
3. Orienting the Deck/Cassette Pickup Assembly Feeding Roller 2-22
4. Orienting the Manual Feed Tray/Side Paper Deck Pickup Roller 2-23
5. Orienting the Manual Feed Pickup Roller 2-24
6. Orienting the Side Paper Deck Feeding Roller 2-24
7. Adjusting the Pressure of the Deck/Cassette Separation Roller 2-25
8. Adjusting the Pressure of the Manual Tray Pickup/Feeding Roller 2-26
9. Mounting the Solenoids 2-27
9-1. Position of the Fixing Inlet Guide Solenoid (SL1) 2-28

9-2. Position of the Fixing Cleaning Belt Solenoid (SL2) 2-29
9-3. Position of the Delivery Flapper Solenoid (SL3) 2-30
9-4. Position of the Fixing/Feeding Unit Locking Solenoid (SL4) 2-30
9-5. Position of the Multifeeder Pickup Latching Solenoid (SL6) 2-31
9-6. Position of the Deck (right) Pickup Solenoid (SL7) 2-32
9-7. Position of the Deck (left) Pickup Solenoid (SL8) 2-33
9-8. Position of the Cassette 3/4 Pickup Solenoid (SL9/10) 2-34
9-9. Position of the Side Paper Deck Pickup Roller Releasing Solenoid 2-35
10. Routing the Manual Feed Tray Assembly Side Guide Timing Belt 2-35
11. Routing the Drive Belt 2-36
E. Fixing System 2-37
1. Point to Note When Mounting the Fixing Heater 2-37
2. Position of the Fixing Assembly Inlet Guide 2-37
3. Adjusting the Lower Roller Pressure (nip) 2-39
F. Laser Exposure System 2-40
1 After Replacing the Laser Unit 2-40
2 Checking the Laser Power 2-41
G. Electrical Parts 2-45
1 After Replacing the CCD Unit 2-45
2 After Replacing the Image Processor PCB 2-46
3 After Replacing the MFC PCB 2-47
4. After Replacing the Hard Disk 2-48
5. After Replacing the DC Controller PCB 2-49
6. Checking the Surface Potential Control System 2-49
7. Checking the Potential System 2-55
8. Potential Control System Conversion Table 2-57
9. Checking the Environment Sensor 2-61
10. Checking the Photointerrupters 2-62

CHAPTER 3 ARRANGEMENT AND FUNCTION OF ELECTRICAL PARTS

A. Clutches 3-2
B. Solenoids 3-4
C. Motors 3-6
D. Fans 3-8
E. Sensors 1 3-10
F. Sensors 2 3-12
G. Switches 3-14
H. Counters, Heaters, Fuses, and Others 3-16
I. PCBs 3-18
J. Side Paper Deck 3-20
1. Sensors and Switches 3-20
2. Motors, Clatches, Solenoids, and PCBs 3-22
K. Variable Registers (VR), Light-Emitting Diodes, and Check Pins by PCB 3-24
1. MFC PCB 3-25
2. Image Processor PCB 3-26
3. DC Controller PCB 3-27
4. DC Power Supply PCB 3-28
5. Relay PCB 3-28
6. Control Panel CPU PCB 3-29
7. HV-DC PCB 3-30
8. Side Deck Driver (side paper deck) 3-31

CHAPTER 4 SERVICE MODE

A. Outline 4-1
1. Starting Service Mode and Selecting an Item 4-2
2. Ending Service Mode 4-3
3. Backing Up the RAM 4-3
4. Basic Operation 4-4
B. DISPALY Control Display Mode 4-6
C. I/O Input/Output Display Mode 4-16
D. ADJUST Adjustment Mode 4-43
E. FUNCTION Operation/Inspection Mode 4-56
F. OPTION Settings Mode 4-67
G. PG Test Print 4-78
H. COUNTER Mode 4-82

CHAPTER 5 SELF DEAGNOSIS

A. Copier Self Diagnosis 5-1
B. ADF Self Diagnosis 5-9
C. Finisher Self Diagnosis 5-10

APPENDIX

A. GENERAL TIMING CHART A-1
B. LIST OF SIGNALS/ ABBREVIATIONS A-3
C. GENERAL CIRCUIT DIAGRAM A-9
D. SPECIFICATIONS A-17
1. Copier A-17
2. Side Paper Deck-C1 ..... A-25
E. SPECIAL TOOLS TABLE A-26
F. SOLVENTS/OILS A-28

CHAPTER 1 MAINTENANCE / INSPECTION

I . SCHEDULED SERVICING ITEMS

Caution:
Do not use solvents/oils other than those shown herein.

A. Copier

△: Clean ●: Replace ×: Oil □: Adjust ◎: Inspect

Unit	Part	Intervals					Remarks
		Instal-lation	every 250,000	every 500,000	every 750,000	every 1,000,000	
Externals/ controls	Copyboard glass		△				
	Ozone filter (FM2, FM8)		△				Remove the dust from the surface of the filter. See Figure 1-101.
	Dust-proofing filter (FM1, FM3, FM4; FM10, FM14)		△				Remove the dust from the surface of the filter. See Figure 1-101.
Scanner	Scanner cable		◎ □				Check/adjust for the first 250,000 copies.
	Scanner rail		△ ×				Apply silicone oil (FY9-6011).
Optical path	No. 1 through No. 3 mirrors		△				
	Dust-proofing glass		△				
	Reflecting plate		△				
	Standard white plate		△				
Charging assembly	Charging wire (primary, pre-transfer, transfer/separation)	△	●				
	Grid wire (primary)	△	△	●			
	Charging assembly shield plate (each assembly)	△	△				
	Roller electrode	△	△				

Table 1-101-1

△: Clean ●: Replace ×: Oil □: Adjust ◎: Inspect

Unit	Part	Intervals					Remarks
		Instal-lation	every 250,000	every 500,000	every 750,000	every 1,000,000	
Photosensitive drum	Photosensitive drum			△			Use alcohol and drum cleaning powder (CK-0429); for steps, see B.2. "Work Steps."
	Slip ring electrode (for drum heater)					△×	Clean the following with alcohol; then, apply grease (FY9-6008): • electrode of the slip ring • protrusion of electrode • static brush
Developing assembly	Developing cylinder	◎					
	Developing assembly roll		△				
Cleaner	Toner replace the (rear/front)		△				For details of work, see item 1 of B.1."Work."
	Magnet roller			△			For details of work, see item 2 of B.2."Work."
Fixing assembly	Inlet guid		△				
	Cleaning belt	◎					Remove the slack at installation.
	Oil receptacle			△			
	Thermistor		△	●			
	No. 2 thermistor		△	●			
	Thermal switch					●	
Delivery assembly	Separation claw (upper/lower)		△				
Waste toner collecting mechanism	Waste toner case		◎				Check/remove.
Pickup/feeding assembly	Transfer guide		△				
	Registration roller (upper, lower)		△				
	Feeding belt		△				
	Various feeding rollers		△				
Duplexing assembly	Duplexing horizontal registration sensor		△				

Table 1-101-2

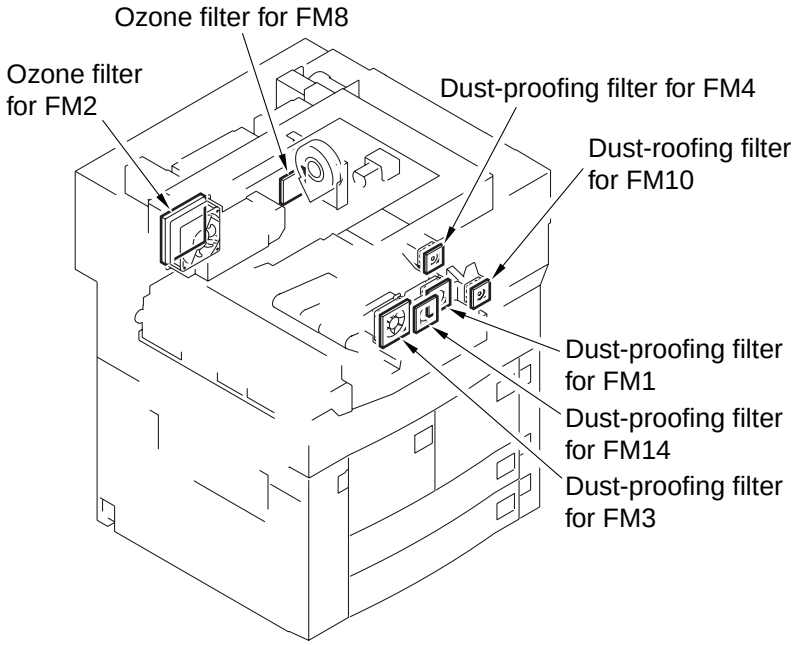
Ozone filter for FM8
Ozone filter
for FM2
Dust-proofing filter for FM4
Dust-roofing filter
for FM10
Dust-proofing filter
for FM1
Dust-proofing filter
for FM14
Dust-proofing filter
for FM3

Figure 1-101

B. Work Steps

Perform the following for the parts associated with the drum:

1. Work 1

a. Cleaning the toner pan

1) Slide out the fixing feeding unit from the copier.
2) Unlock the slide rails, and slide the fixing/feeding unit farther out.

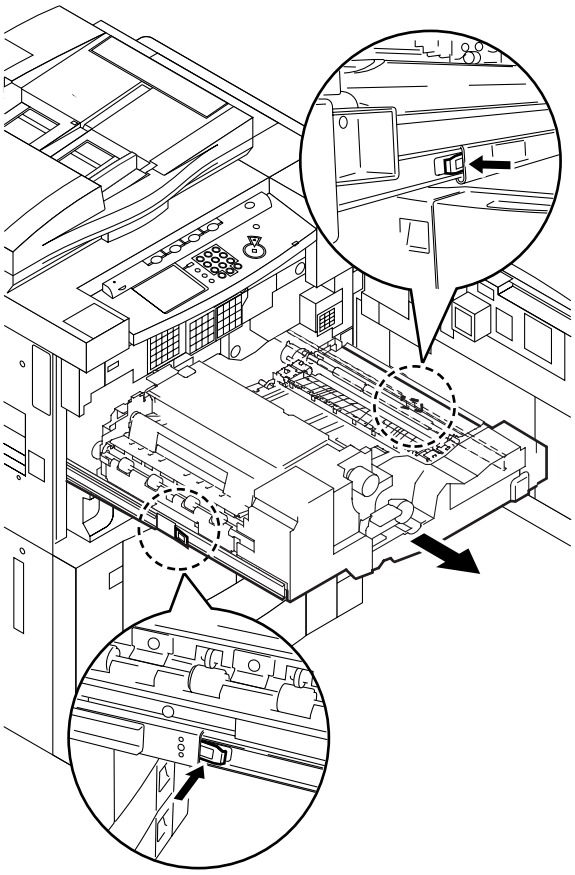

Figure 1-102

3) Remove the screw [3], and remove the toner pan (rear, front); then, remove the toner from the toner pan.

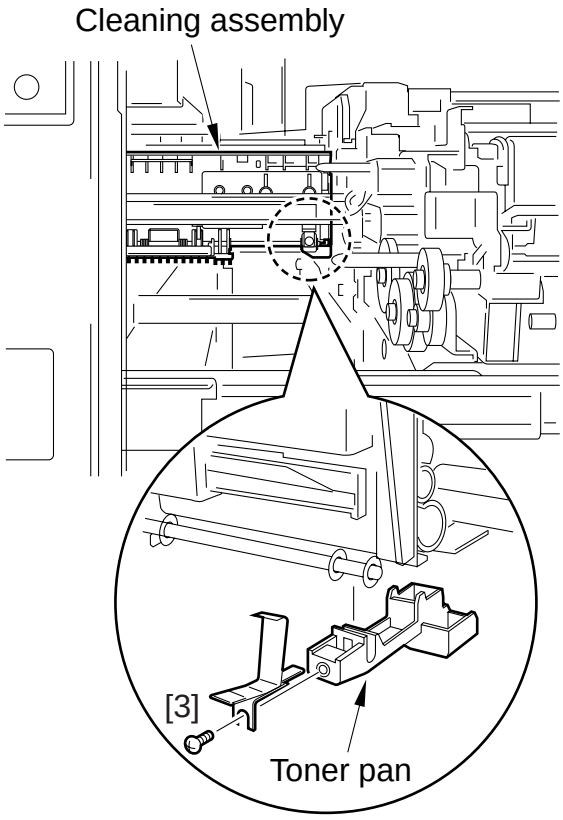

Figure 1-103

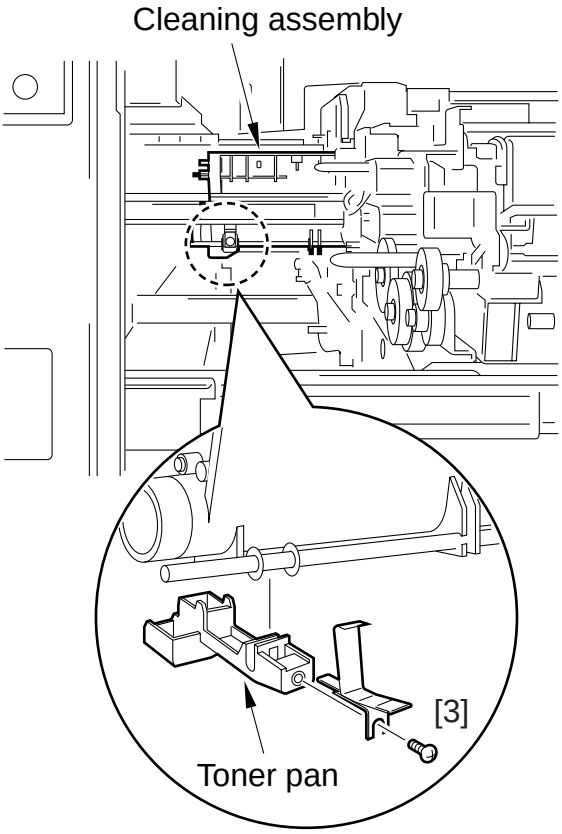

Figure 1-104

2. Work 2

a. Cleaning the photosensitive drum.

b. Removing the toner from the magnet roller assembly.

c. Reversing/replacing the cleaning blade.

Caution:
Do not rotate the magnet roll drive assembly during work. Otherwise, waste toner may fall through the cleaner assembly.

1) Slide out the process unit. (Be sure to place the drum protective sheet over the fixing/feeding unit.)
2) Take out the photosensitive drum.
3) Moisten lint-free paper [1] with 5 to 10 cc of alcohol [2]; then, pour 0.2 to 0.3 g of drum cleaning powder (CK-0429) [3] on the lint-free paper.

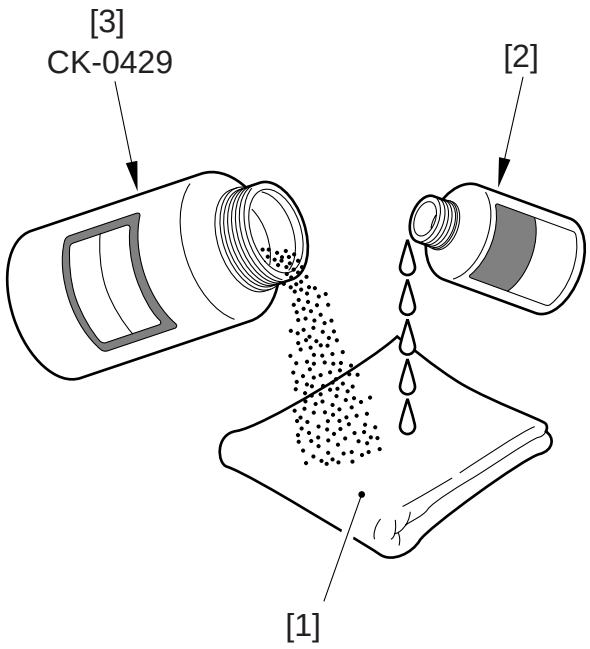

Figure 1-105

4) While butting the lint-free paper relatively strongly against the photosensitive drum, wipe the surface of the drum from the front to the rear and from the rear to the front.

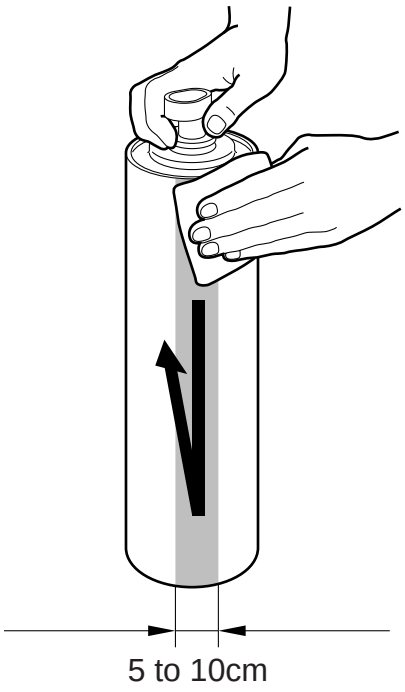

Figure 1-106

Caution:
- Keep the widths of cleaning to 5 to 10 cm in the peripheral direction of the drum.
- Move the lint-free paper back and forth 15 to 20 times over a single area. Forcing the lint-free paper will not affect the life of the drum.

5) When the alcohol has evaporated, dry wipe the surface with lint-free paper. If the area is uneven, go back to step 4), and increase the back-and-forth movements.
6) Rotate the drum for the width (5 to 10 cm), and repeat steps 3) through 5) until the entire area of the surface has been cleaned.
7) Remove the cleaning blade assembly.

8) Insert a ruler [6] between the magnet roll [4] and the scraper [5], and move it from the front to the rear and then from the rear to the front to break any cake of toner.

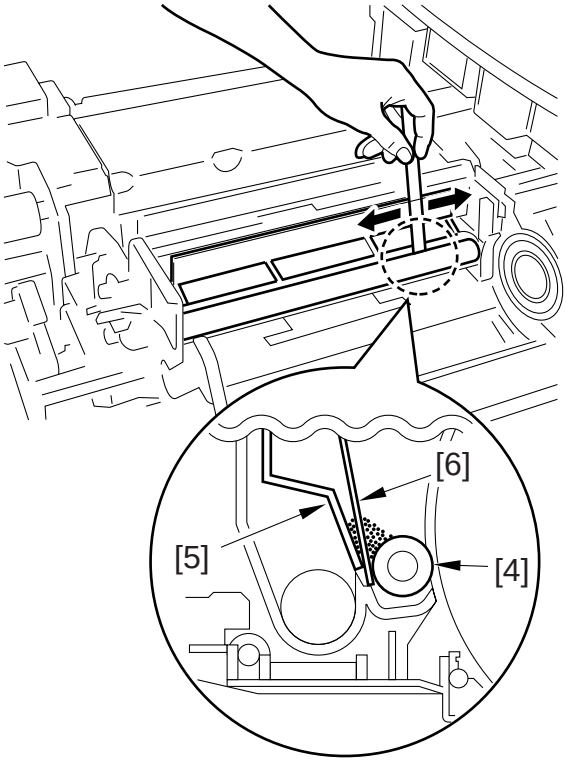

Figure 1-107

9) Remove the cleaning blade from the cleaning blade assembly.
10) Put the reversed or new cleaning blade [7] against the edge of the rear of the blade retaining plate [8].

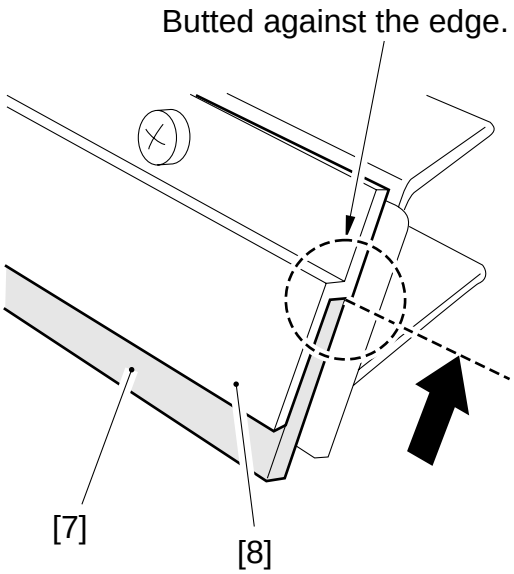

Figure 1-108

Caution:
When butting the cleaning blade, be sure to apply force to eliminate any gap.

11) Tighten the screws on the blade retaining plate in the order indicated.

- Tighten temporarily for screws 1 through 5.

Caution 1:
While the blade is held in place with the plate, tighten the screws temporarily.

- Tighten fully for screws 6 trough 10.

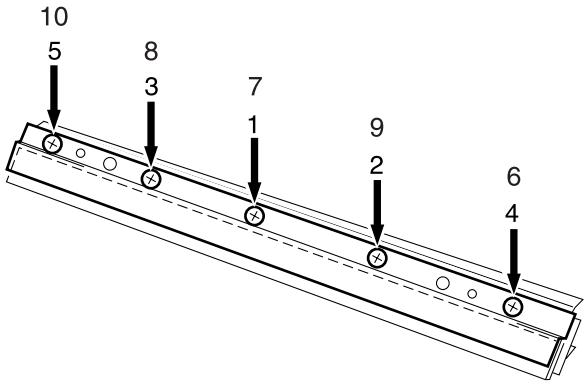

Figure 1-109

Caution 2:
When mounting the cleaning blade, be sure to put the blade auxiliary plate between the blade support plate and the blade back plate.

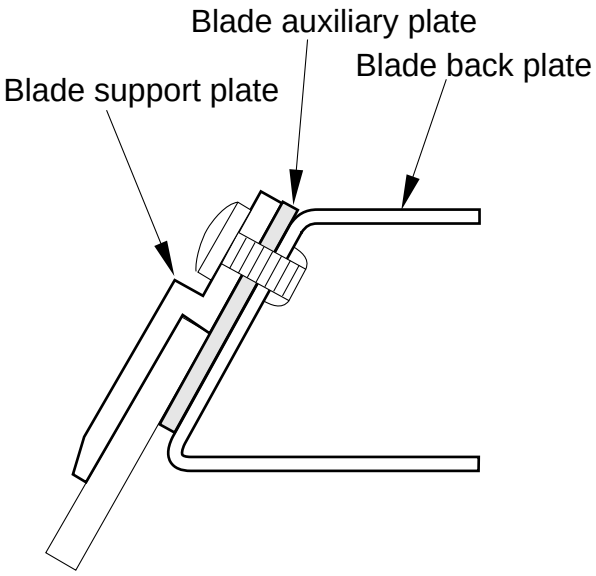

Figure 1-110

Caution 3:
After mounting the cleaning blade, rotate the drum; if toner slips through the blade, repeat the foregoing steps. If the fault is not corrected, replace the blade.

II . PERIODICALLY REPLACED PARTS

To maintain the performance of the machine at a specific level, you must replace the parts in Table 1-201 on a periodical basis. (Once they fail, they will appreciably affect the machine regardless of external change or damage.)

Schedule the replacement so that it will coincide with a periodical visit.

As of December 1998

No.	Parts name	Parts No.	Q'ty	Life (copies)	Remarks
1	Primary, pre-transfer, separation charging wire	FY3-0030-000	AR	250,000	
2	Primary grid wire	FY1-0883-000	AR	500,000	
3	Thermistor	FY7-7463-000	1	500,000	
4	No. 2 thermistor	FH7-7464-000	1	500,000	
5	Thermal switch	FH7-6281-000	1	1,000,000	

Note: The above values are estimates only, and are subject to change based on future data.

Table 1-201

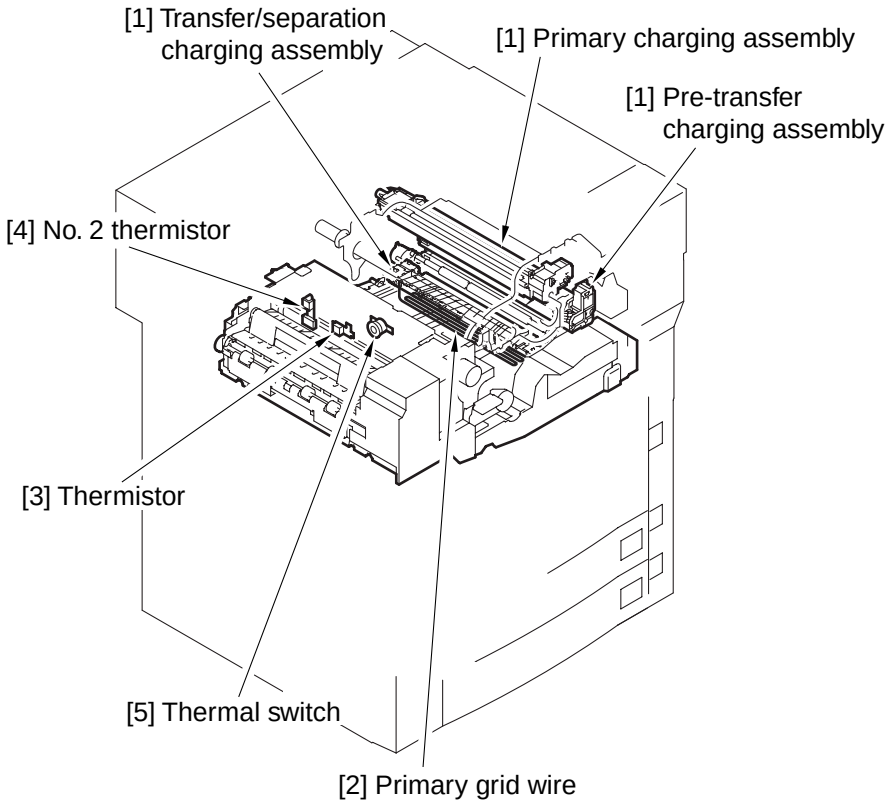

Figure 1-201

III . DURABLES TABLE

Table 1-301 shows the parts that may require replacement because of deterioration or damage at least once over the period of machine warranty. Replace them when they have failed.

A. Copier

As of December 1998

No.	Parts name	Parts No.	Q'ty	Life (copies)	Remarks
1	Scanning lamp	FH7-3347	1	200hr	
2	Developing cylinder	FB4-1819	1	1,000,000	
3	Developing assembly roll	FS5-6579	2	1,000,000	
4	Cleaner separation claw	FB4-8018	3	250,000	
5	Cleaning blade	FB4-1596	1	1,000,000	Use both edges; one for 500,000 copies. Apply toner after replacement.
6	Primary charging assembly	FG6-2015	1	1,000,000	
7	Transfer/separation charging assembly	FG6-2045	1	1,000,000	
8	Pre-transfer charging assembly	FG6-2016	1	1,000,000	
9	Primary charging wire cleaner 1	FF2-3552	2	250,000	
10	Primary charging wire cleaner 2	FF2-3551	2	250,000	
11	Transfer charging wire cleaner 1	FF5-6883	1	500,000	
12	Transfer charging wire cleaner 2	FF5-6884	1	500,000	
13	Separation charging wire cleaner	FF5-7891	1	250,000	
14	Pre-transfer charging wire cleaner	FF5-3090	1	500,000	
15	Pre-transfer charging assembly scraper	FF5-7934	1	500,000	
16	Upper fixing roller	FB2-7200	1	500,000	
17	Lower fixing roller	FB4-2220	1	500,000	
18	Fixing cleaning belt	FB4-7491	1	500,000	
19	Insulating bush (front, rear)	FB2-7239	2	500,000	Simultaneously with upper fixing roller.
20	Delivery upper separation claw	FC1-0391	6	500,000	

Table 1-301-1

No.	Parts name	Parts No.	Q'ty	Life (copies)	Remarks
21	Delivery lower separation claw	FA2-9037	2	1,000,000	
22	Pickup roller (deck, cassette)	FB4-2033	8	250,000	Actual copies made; may be checked in service mode. (Use 2 for each holder.)
23	Pickup/feeding roller (deck, cassette)	FB4-2034	8	250,000	Actual copies made; may be checked in service mode. (Use 2 for each holder.)
24	Separation roller (deck, cassette)	FB2-7777	4	250,000	Actual copies made; may be checked in service mode. (Use 2 for each holder.)
25	Pickup roller (manual feed tray)	FB4-2033	2	120,000	Actual copies made; may be checked in service mode.
26	Pickup/feeding roller (manual feed tray)	FB4-2035	2	120,000	Actual copies made; may be checked in service mode.
27	Separation roller (manual feed tray)	FB2-7545	1	120,000	Actual copies made; may be checked in service mode.
28	Decurling guide (Rear)	FF5-9544	1	500,000	
29	Decurling guide (Center)	FF5-9413	1	500,000	
30	Decurling guide (Front)	FF5-9543	1	500,000	

Table 1-301-2

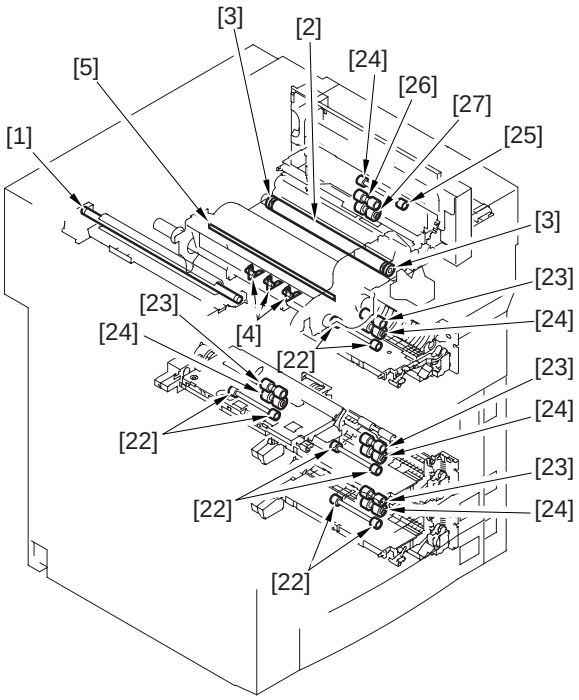

Figure 1-301a

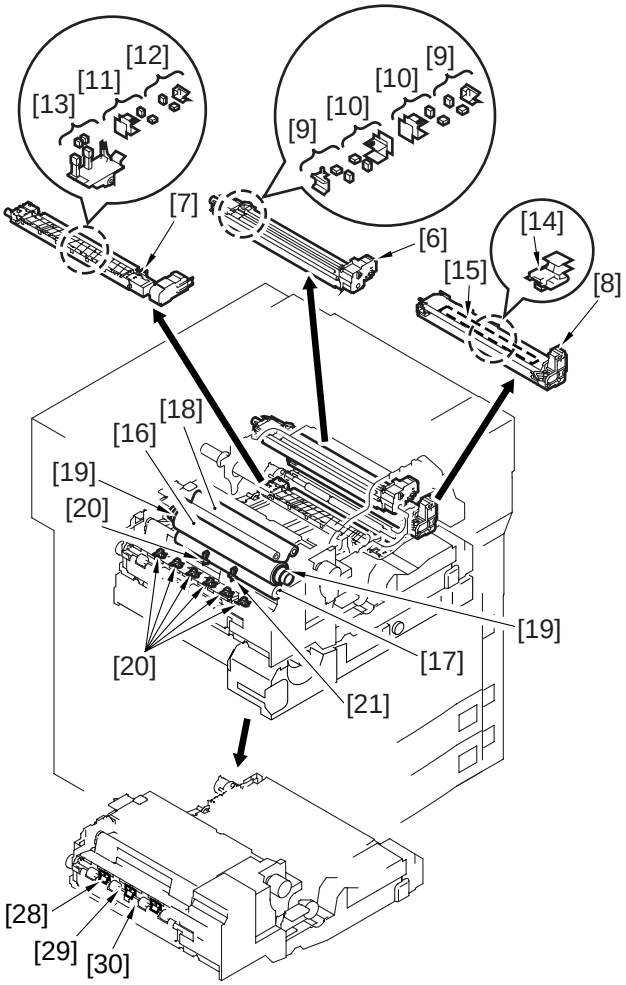

Figure 1-301b

B. Side Paper Deck

As of November 1998

No.	Parts name	Parts No.	Q'ty	Life (copies)	Remarks
1	Side paper deck pickup roller	FB4-2033-000	2	250,000	
2	Side paper deck feeding roller	FB4-2034-000	2	250,000	
3	Side paper deck separation roller	FB2-7777-020	1	250,000	

Table 1-302

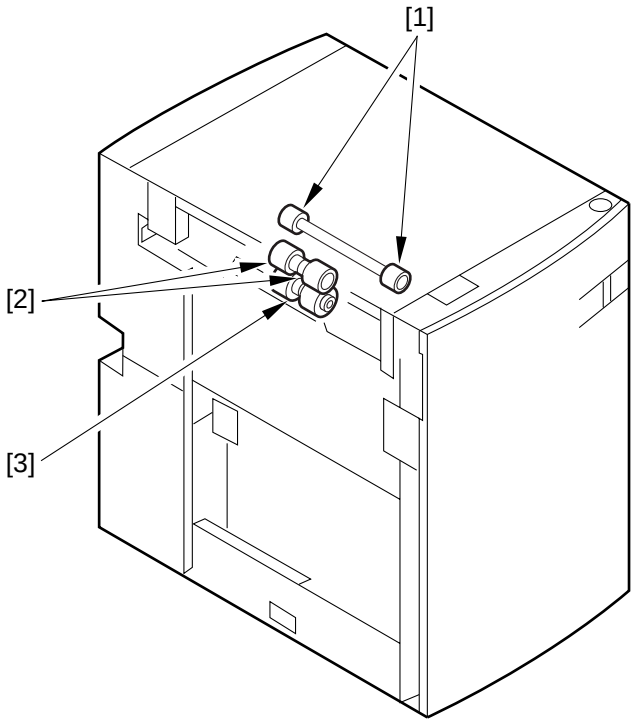

Figure 1-302

IV . POINTS TO NOTE FOR SCHEDULED SERVICING

Caution:

- Check to make sure that the block (front, rear) is free of melting, thermal deformation, cracking, or yellowing because of leakage. If noted, replace it with a new part.
- Check and clean as far as the inside of the block (front, rear).
- Do not use a cloth soiled with metal powder for cleaning.
- Do not use a moist cloth. Instead, dry wipe with lint-free paper, and then use alcohol; thereafter, make sure that alcohol has completely evaporated before mounting to the copier.
- Try to finish scheduled servicing and scheduled replacement within a specific period of time.

Part	Tool/solvent	Work
Pre-exposure lamp	Alcohol	Cleaning.
Copyboard glass	Alcohol	Cleaning.
Scanning lamp	Lint-free paper	Dry wiping.
Standard white plate	Lint-free paper	Dry wiping.
Reflecting plate	Blower brush	Cleaning.
No. 1 mirror through No. 3 mirror	Blower brush or lint-free paper	Cleaning by a blower brush; if dirt is excessive, cleaning with lint-free paper.

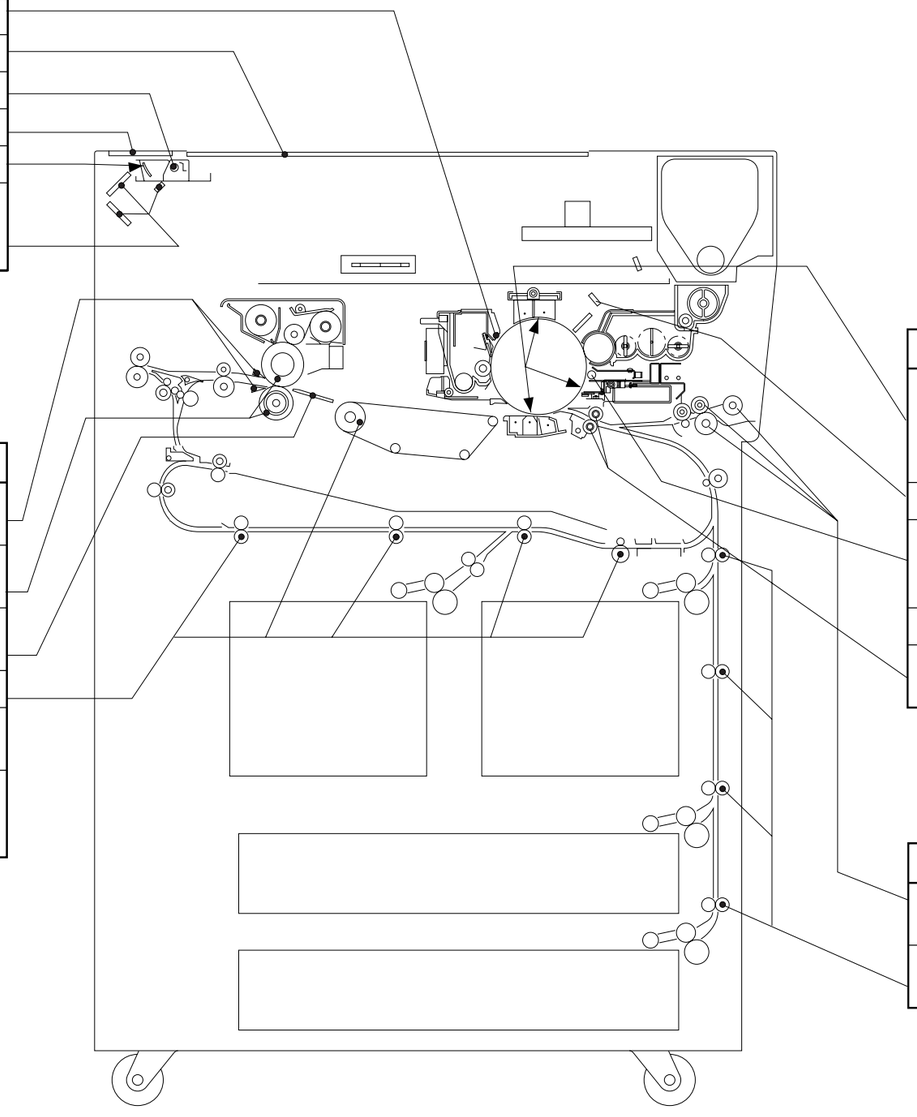

Part	Tool/solvent	Work
Primary charging assembly, transfer/separation assembly, pre-transfer assembly	Alcohol and lint-free paper	Dry wiping; then, cleaning with lint-free paper moistened with alcohol.
Dust-proofing glass	Lint-free paper	Cleaning
Dust-collecting roller		Disposing of toner collecting around the dust-collecting roller.
Developing assembly mount	Moist cloth*	Cleaning.
Registration roller	Alcohol and lint-free paper	Cleaning.

*Make sure no droplet of water remains.

Part	Tool/solvent	Work
Separation claw	Solvent and lint-free paper	Cleaning.
Upper roller, lower roller	Cleaning oil, lint-free paper	Cleaning.
Paper guide	Solvent and lint-free paper	Cleaning.
Feeding assembly	Moist cloth*	Cleaning.
Re-pickup assembly, reversing roller	Alcohol, lint-free paper	Cleaning.
Re-pickup assembly, pickup roller, registration roller	Alcohol and lint-free paper	Cleaning.

*Make sure no droplet of water remains.

Part	Tool/solvent	Work
Manual feed tray, pickup roller, feeding roller	Alcohol and lint-free paper	Cleaning.
Vertical path roller	Alcohol and lint-free paper	Cleaning.

V . IMAGE ADJUSTMENT BASIC PROCEDURE

1 Checking the Printer Side (1/2)

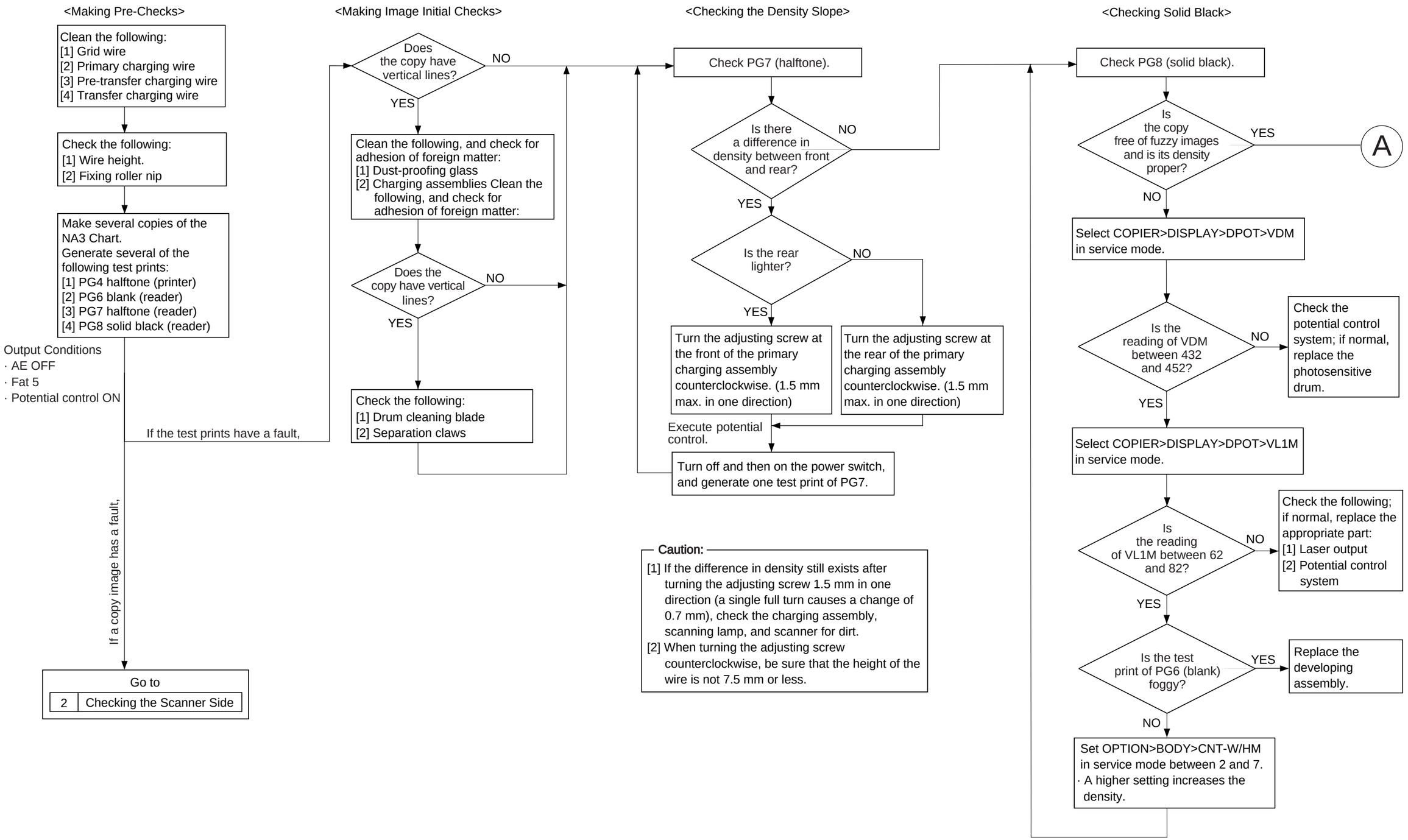

1	Checking the Printer Side (2/2)

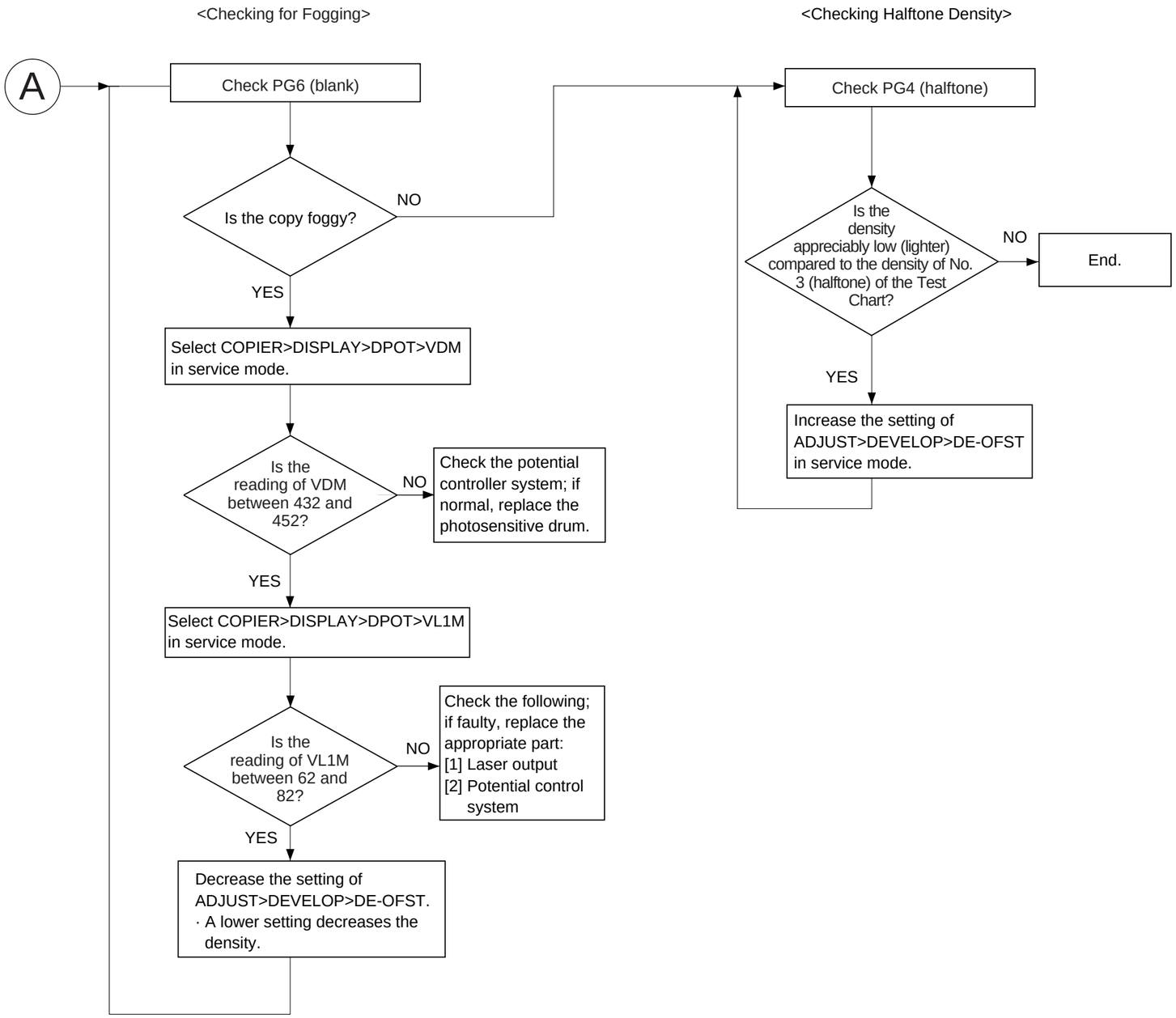

2 Checking the Scanner Side

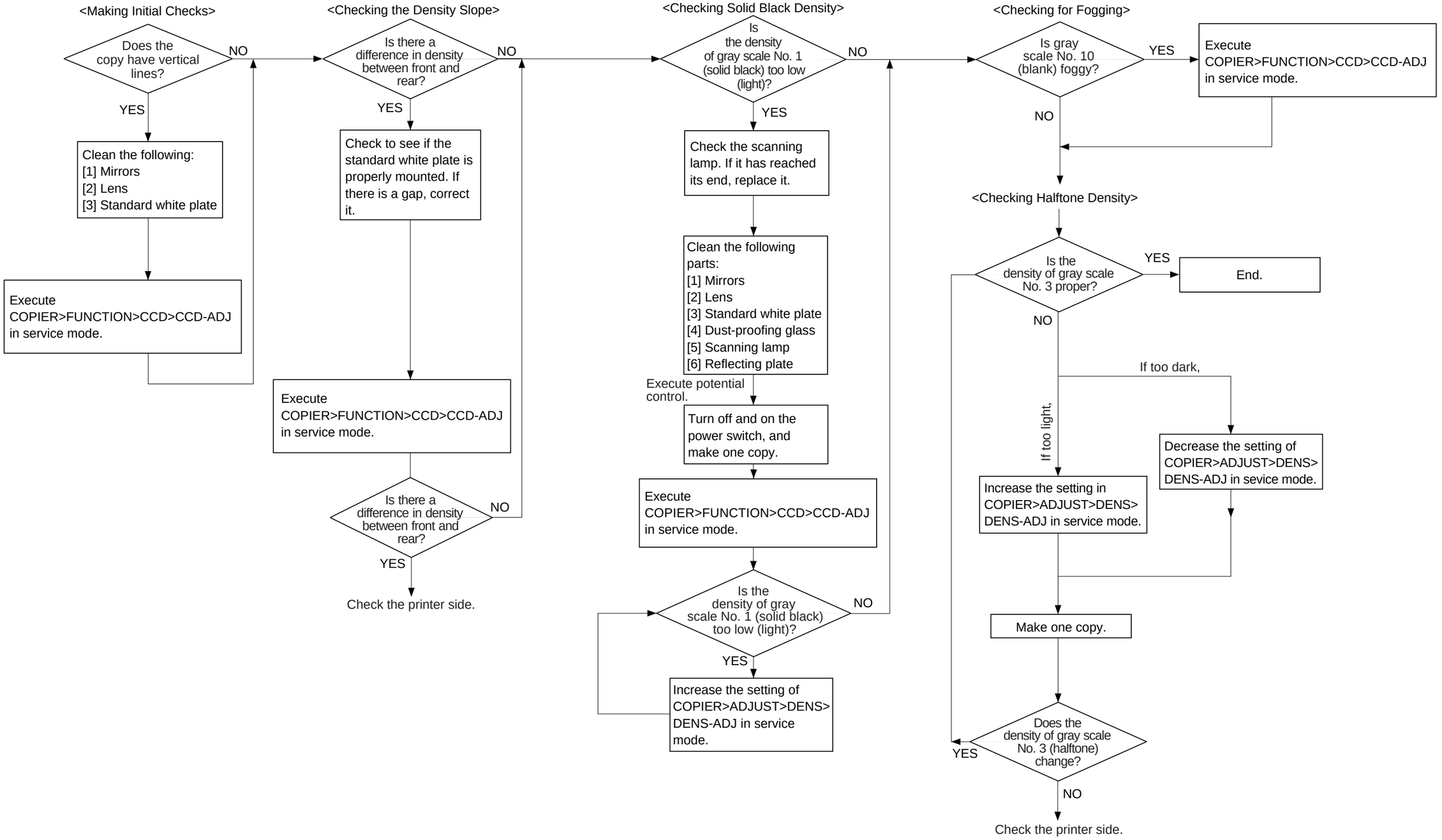

CHAPTER 2 STANDARDS AND ADJUSTMENTS

A. Adjusting Images

1 Adjusting the Image Position

Make 10 prints from each of the following sources of paper to see if the image margin and the non-image width are as indicated:

- Cassette (each)
- Front deck (left, right)
- Manual feed tray
- Duplexing feeding unit
- Side paper deck

The image margin and the non-image width must be as follows on prints made in Direct:

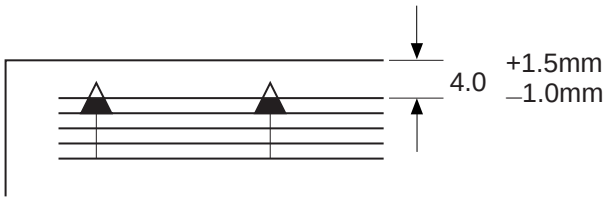

Figure 2-A101 Image Leading Edge Margin

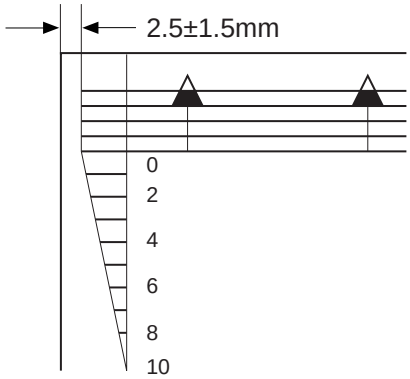

Figure 2-A102 Left/Right Image Margin

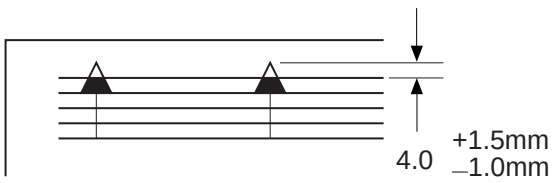

Figure 2-A103 Image Leading Edge Non-Image Width

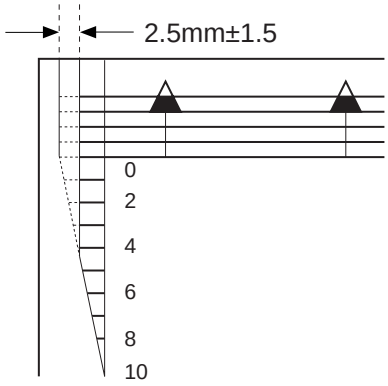

Figure 2-A104 Left/Right Non-Image Width

If not as indicated, adjust the image position in the following order:
[1] Left/right image margin (registration adjustment)
[2] Image leading edge margin (registration adjustment)
[3] Left/right non-image width (CCD read start position)
[4] Image leading edge non-image width (scanner image leading edge position)

2 Adjusting the Left/Right Image Margin

a. Cassette 3/4

1) Remove the two screws [2], and detach the cassette front cover [1].

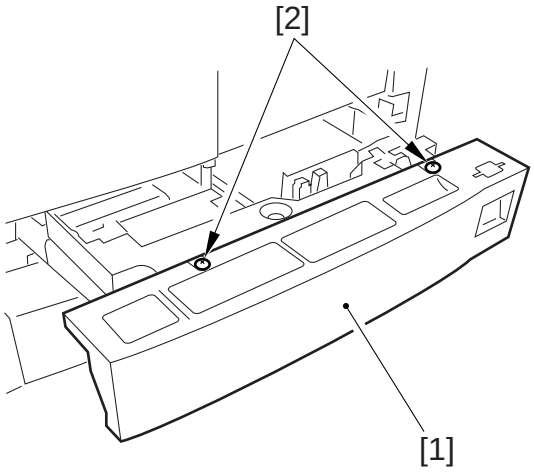

Figure 2-A105

2) Loosen the two fixing screws [3] on the left and right of the cassette; then, make adjustments using the adjusting screw [4].
3) After adjustment, be sure to execute COPIER>FUNCTION>CST>C3-STMTR/A4R or C4-STMTR/A4R in service mode.

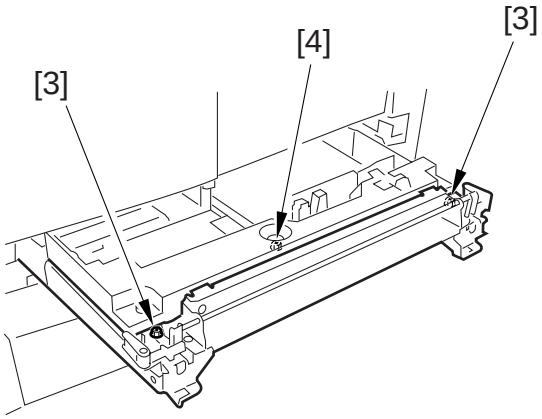

Figure 2-A106

b. Front Deck (left/right)

1) Loosen the four screws [2] and the two fixing screws [3] on the cassette front cover [1].

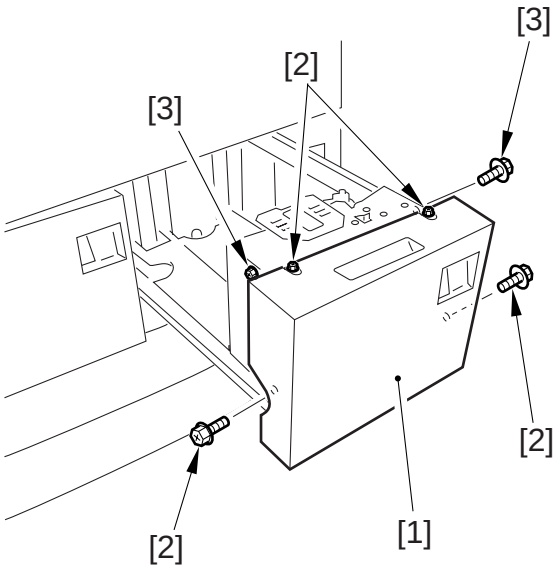

Figure 2-A107

2) Move the cassette guide assembly (front) [4] to the front or the rear to make adjustments.

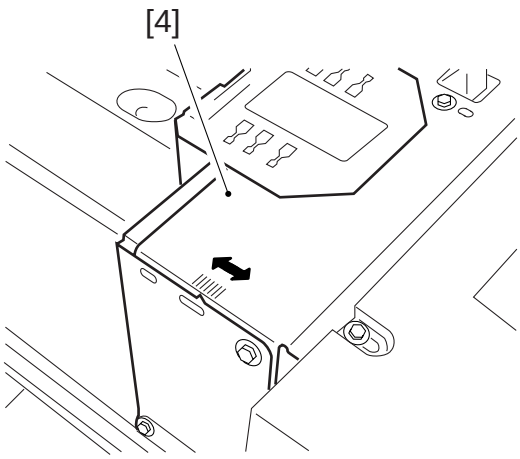

Figure 2-A108

c. Manual Feed Tray

1) Loosen the two mounting screws on the manual tray, and adjust the position of the manual tray.

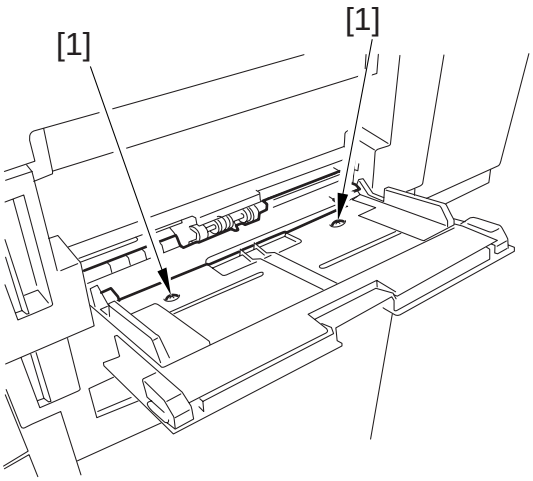

Figure 2-A109

d. Duplexing Feeding Unit (2nd side of double-sided print)

1) Correct the image margin as specified using service mode (COPIER>ADJUST>FEED-ADJ>ADJ-REFE).

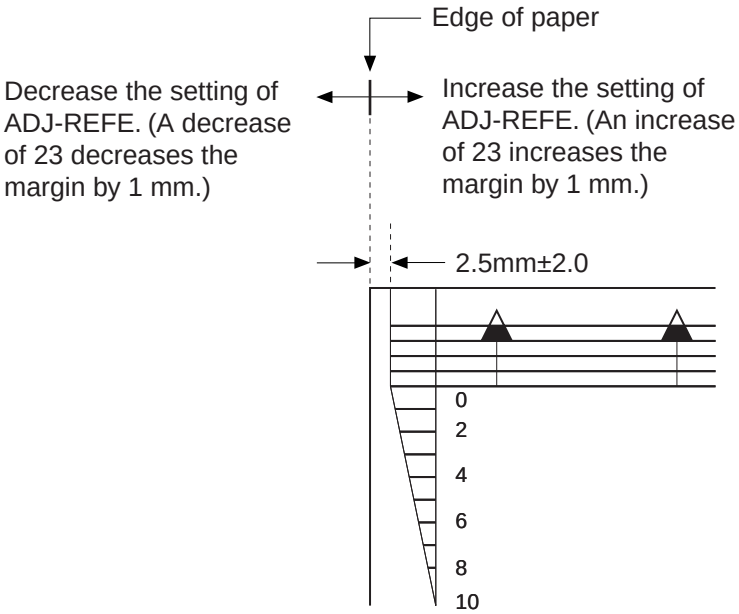

Figure 2-A110

e. Side Paper Deck

1) Slide out the compartment, and adjust the position of the latch plate of the deck open solenoid using the two screws. (At this time, use the scale graduations on the latch plate as a guide.)

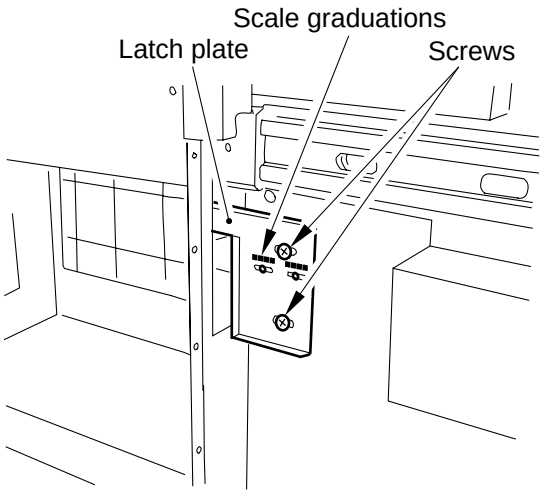

Figure 2-A111 Left Rear of the Compartment

3 Adjusting the Image Leading Edge Margin

1) Set the image margin as specified in service mode (COPIER>ADJUST>FEED-ADJ>REGIST).

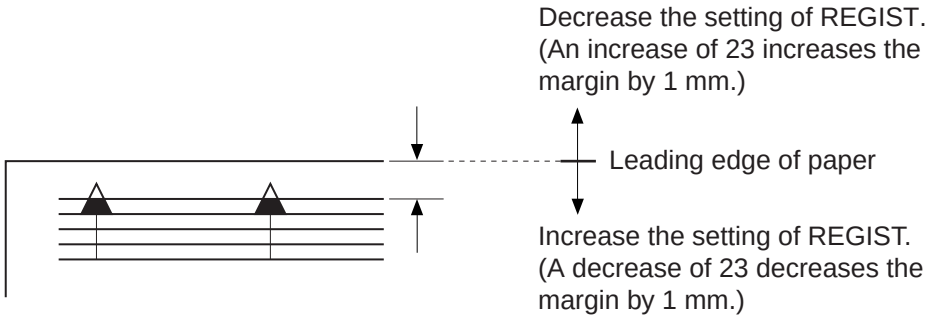

Figure 2-A112

4 Adjusting the Left/Right Non-Image Width

1) Correct the non-image width as specified in service mode (COPIER>ADJUST>ADJ-XY>ADJ-Y).

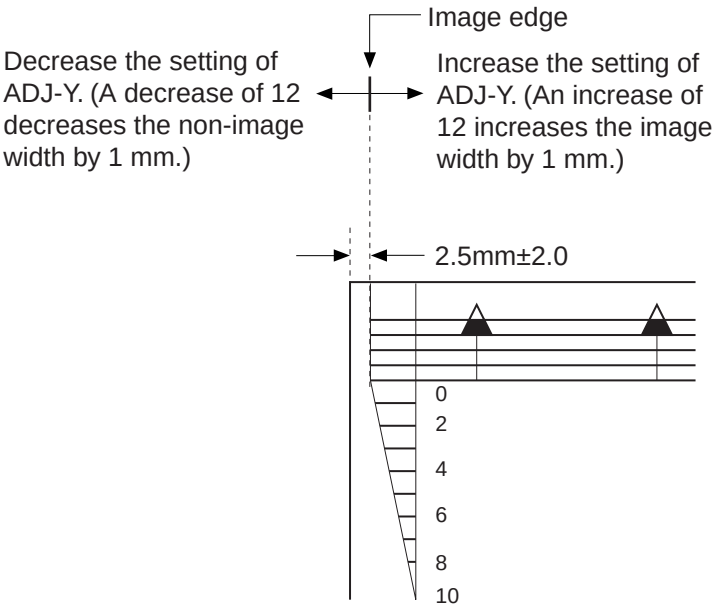

Figure 2-A113

5 Adjusting the Image Leading

1) Correct the non-image width as specified in service mode (COPIER>ADJUST>ADJ-XY>ADJ-X).

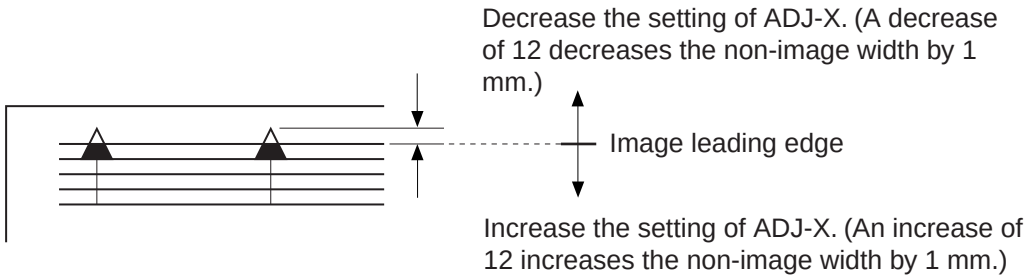

Figure 2-A114

B. Scanner System

1 Replacing the Scanner Drive Cable

Before starting the work, obtain the mirror positioning tool (FY9-3040-000).

1) Remove the ADF.
2) Remove the right glass retainer.
3) Remove the copyboard glass.
4) Open the front cover, and remove the upper inside cover and the inside cover (AP kit).
5) Remove the control panel.
6) Remove the rear cover.
7) Remove the four screws [1], and detach the right reinforcing stay [2].
8) Remove the inverter PCB unit.
9) Move the No. 1 mirror mount until its cable metal fixing [3] is visible through the hole in the copier's side plate.

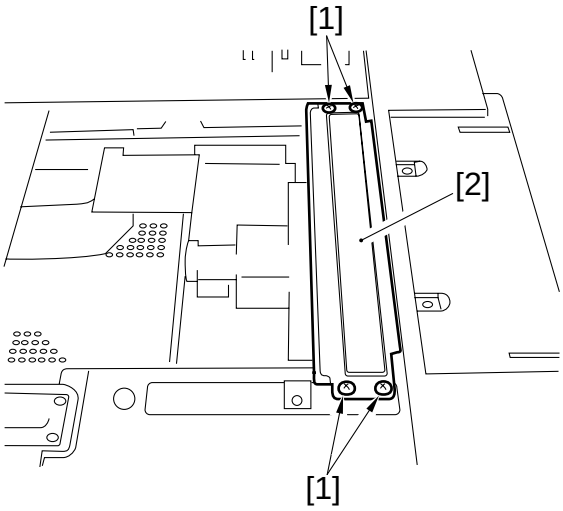

Figure 2-B101

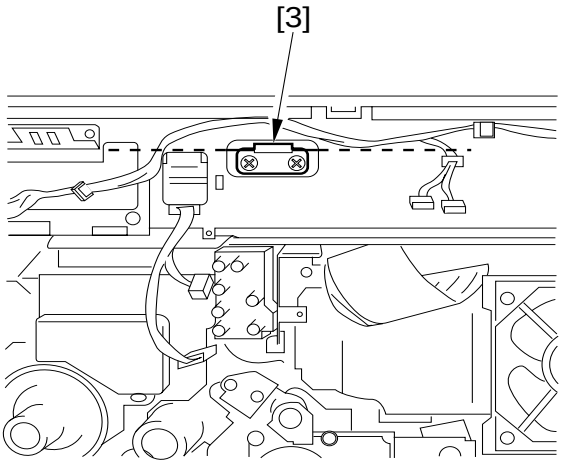

Figure 2-B102

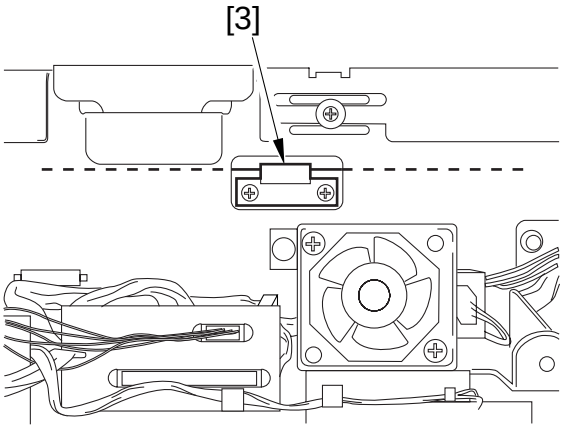

Figure 2-B103

10) Remove the old scanner cable.

11) Rout the new scanner cable through the pulley and hooks as shown in Figure 2-B104.

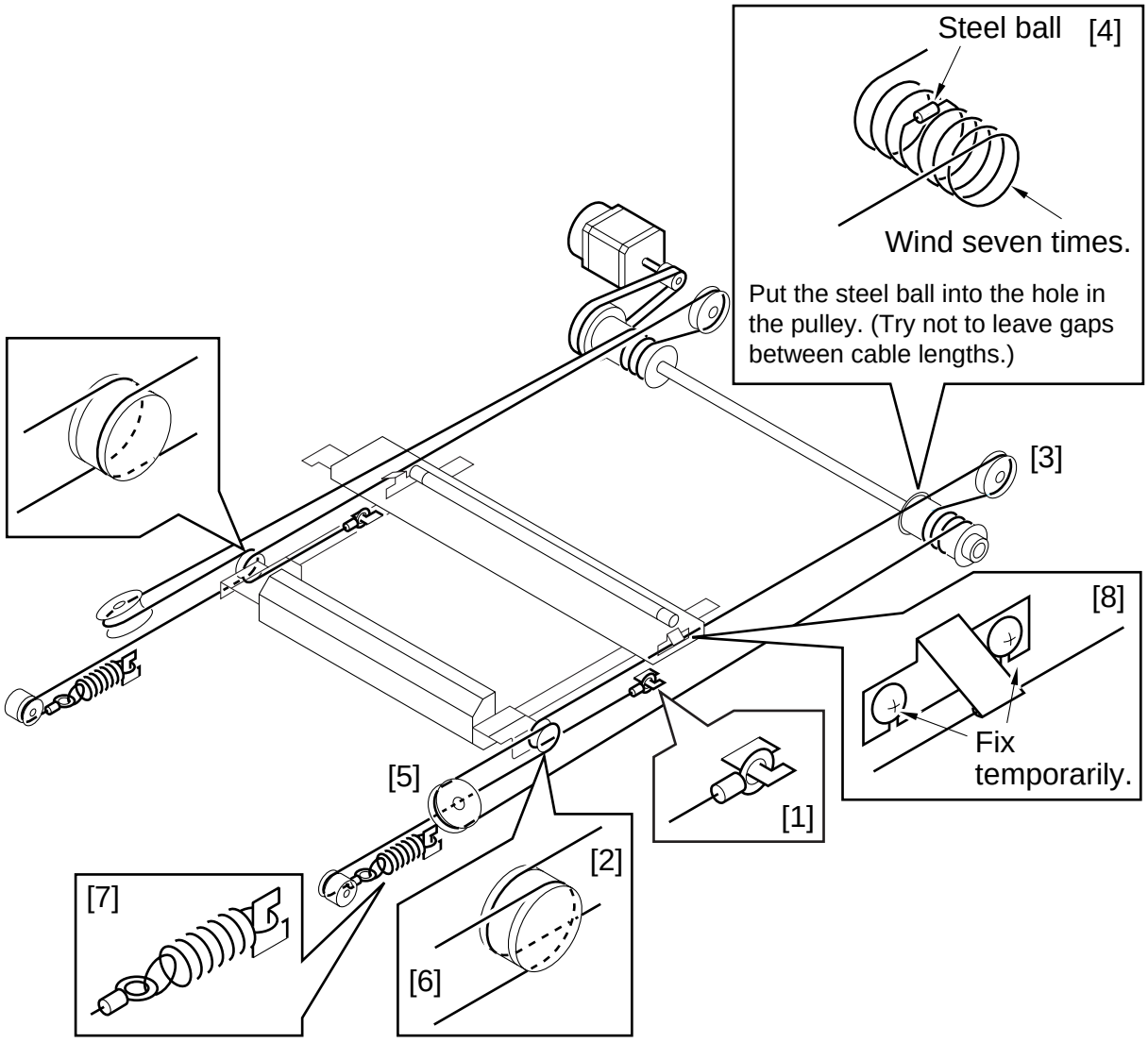

Figure 2-B104

12) Adjust the scanner Mirror Mount.

2 Adjusting the Scanner Mirror Mount

1) Fit the mirror positioning tool [4] between the No. 1 mirror mount and the No. 2 mirror mount; then, insert the pin [5] that comes with the mirror positioning tool.

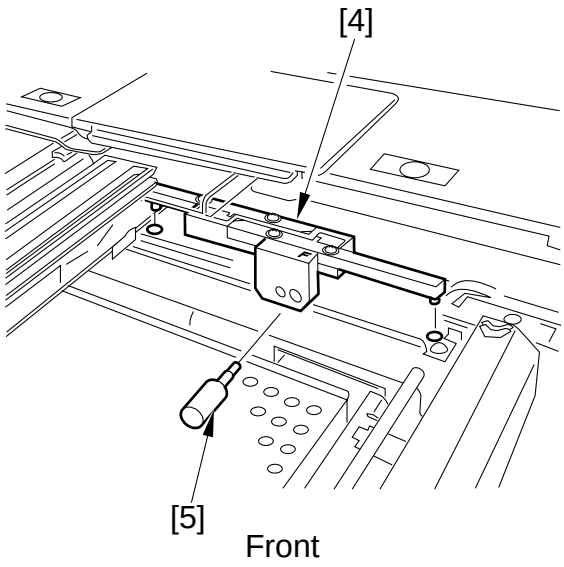

Figure 2-B105

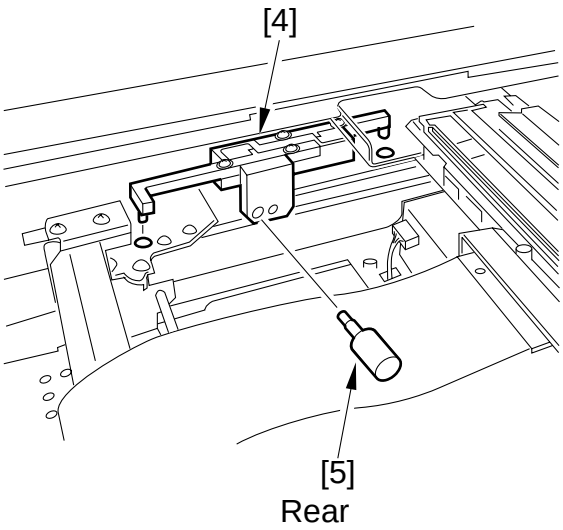

Figure 2-B106

2) Secure the cable metal fixing [3] temporarily fixed in place in [8] of step 11) using two screws [6] through the hole in the side plate.

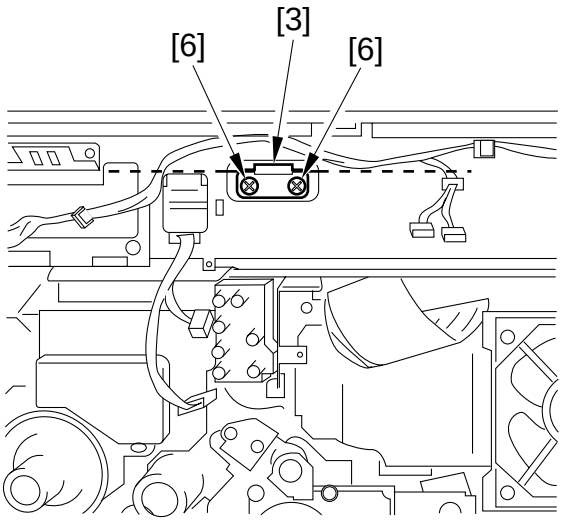

Figure 2-B107

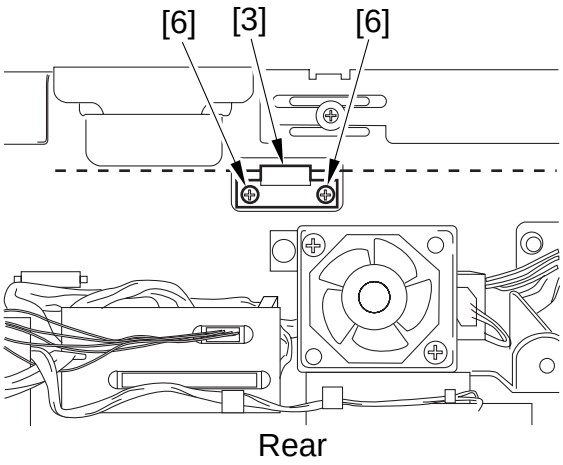

Figure 2-B108

3) Detach the mirror positioning tool.

3	After Replacing the Scanning Lamp

1) Execute COPIER>FUNCTION>CCD>CCD-ADJ in service mode.
2) When all items of COPIER>ADJUST>CCD and data of COPIER>ADJUST>LAMP>L-DATA have been updated, record them on the service label.

C. Image Formation System

1	Routing the Primary Charging Assembly Grid Wire

1) Check to make sure that the four screws used to keep the blocks and the shielding plate (front, rear) in place; then, hook the end of the charging wire on stud A; after routing the charging wire for 41 runs, hook it on studs, B, C, and D; then, lead it through the two washers [1], and turn it 1/2 over the screw [2] to keep it in place.

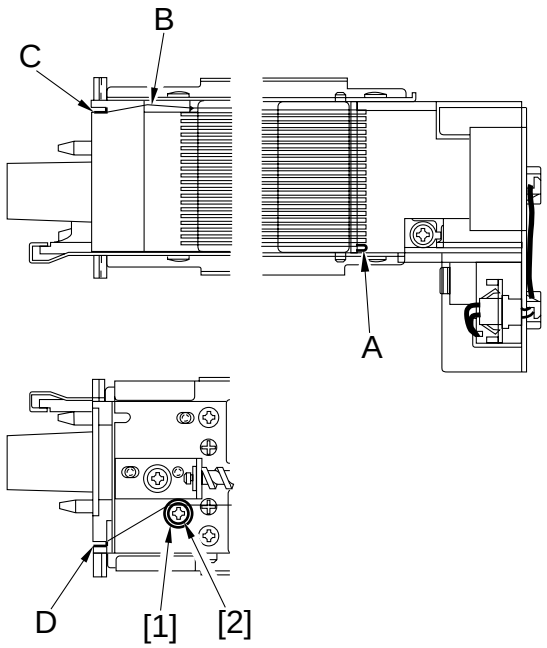

Figure 2-C101

2) Loosen the screws [3], [4], [5], and [6]; then, tighten the screw [7] at a torque of 1.5 ±0.2 kg · cm; then, tighten the screws [3], [4], [5], and [6] in order at a torque of 10 kg · cm or more.

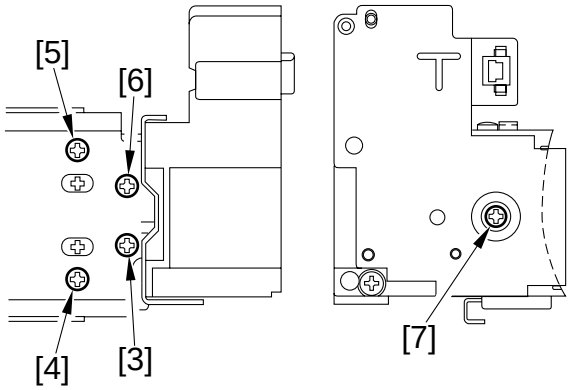

Figure 2-C102

2 Routing the Charging Assembly Charging Wires

As a rule, the charging wire (except the grid wire) is routed in the same way for all charging assemblies; the following uses the charging assembly:

1) Remove the screw one each [1], and detach the shielding plates (left/right) [2].
   To prevent deformation (slack) of the primary charging assembly, be sure to work on the left and right shielding plates separately. (Do not loosen the screws on both left and right shielding plates.)

2) Remove the wire cleaner.

Caution:
For other charging assemblies, remove the lids (2 pcs.).

3) Free a length of about 5cm from the charging wire reel (wire diameter 0.06 mm), and form a loop on the end (2mm in diameter).

Reference:
When forming a loop, wind the wire around the hex key once, and twist the hex key three to four times; then, twist the charging wire to form a loop easily.

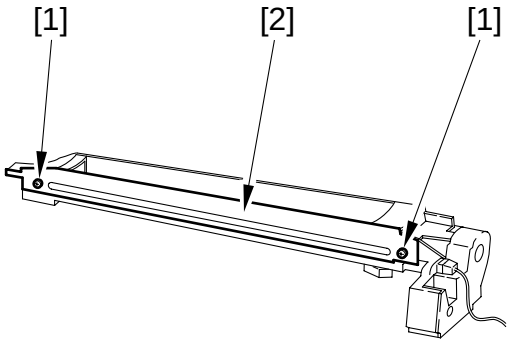

Figure 2-C103

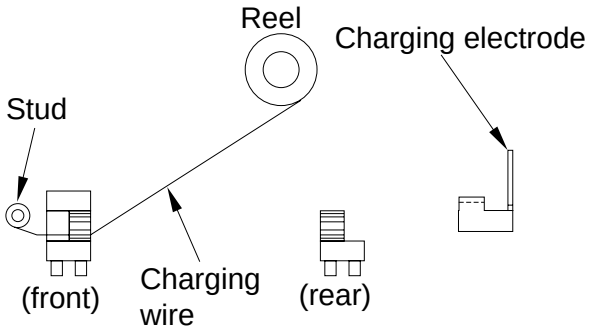

Figure 2-C104

4) Cut off the twisted end of the wire (excess) with a nipper.
5) Hook the loop on the stud.
6) At the rear side, hook the charging wire on the charging wire positioner; then, hook and twist the charging wire tensioning spring on the charging wire.

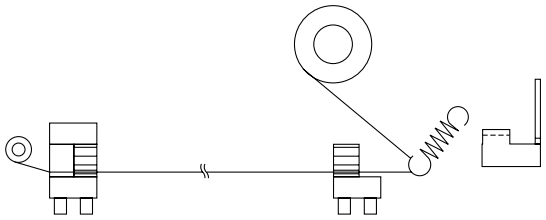

Figure 2-C105

7) Cut the excess charging wire with a nipper.
8) Pick the end of the charging wire tensioning spring with tweezers, and hook it on the charging wire electrode. (In the case of the pre-transfer charging assembly, hook the spring on the pin at the front.)

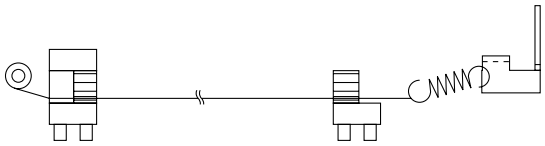

Figure 2-C106

Caution:
Check the following:
- The charging wire must not be bent or twisted.
- The charging wire must be in the V-groove of the charging wire positioned.

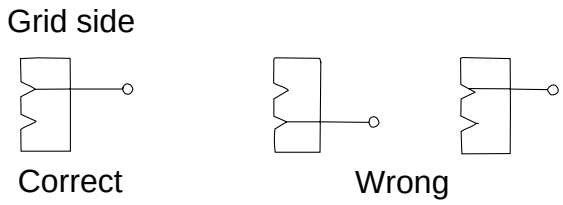

Figure 2-C107

9) Mount the cushion at the front of the charging wire (except the primary charging assembly).
10) Mount the shielding plate (left, right).

Caution:
For other charging assemblies, mount the lids (2 pcs.).

Charging assembly	Height of the charging wire
Primary	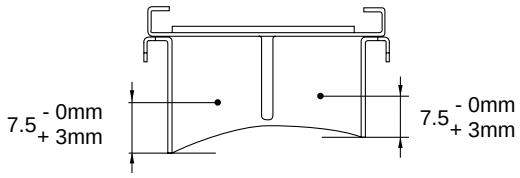
Pre-transfer	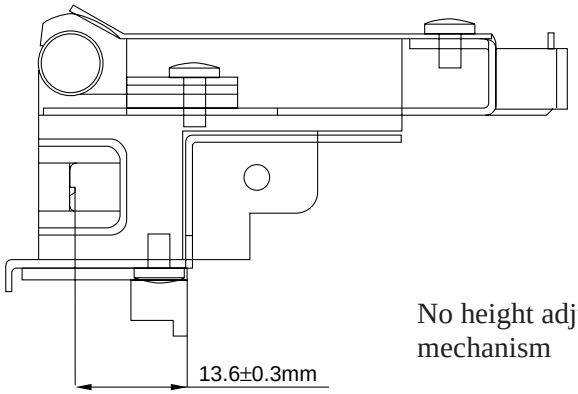 No height adjusting mechanism
Transfer	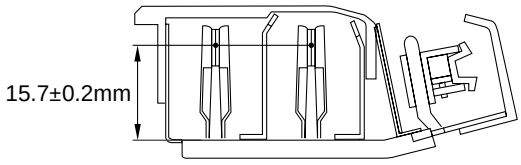
Separation	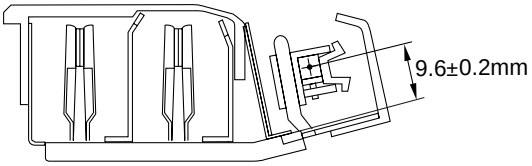

Figure 2-C108

Reference:

The height of the charging wire for the primary assembly and the transfer charging assembly may be adjusted by turing the screw found on the back of the assemblies. A single turn of the screw changes the height by about 0.7mm.

3 Mounting the Drum Cleaning Blade

1) Butt the cleaning blade [1] against the rear end of the blade retaining plate [2].

Caution:
When butting the cleaning blade, be sure there is not gap.

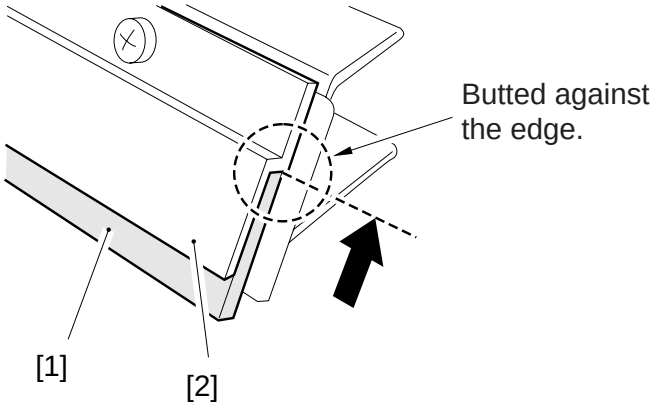

Figure 2-C109

2) Tighten the screws on the blade retaining plate temporarily in the order indicated.

Caution:
When tightening the screws temporarily, be sure to hold the blade down against the end. (See Figure 2-C109.)

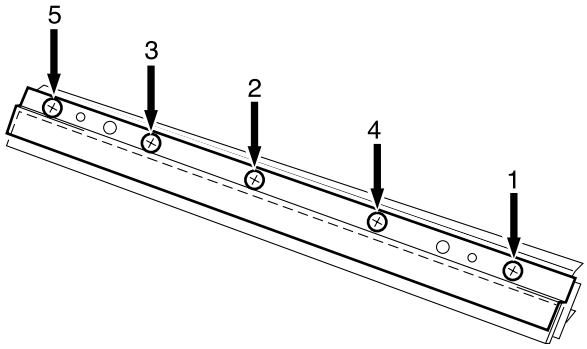

Figure 2-C110

3) Tighten the screws on the blade retaining plate fully in the order indicated.

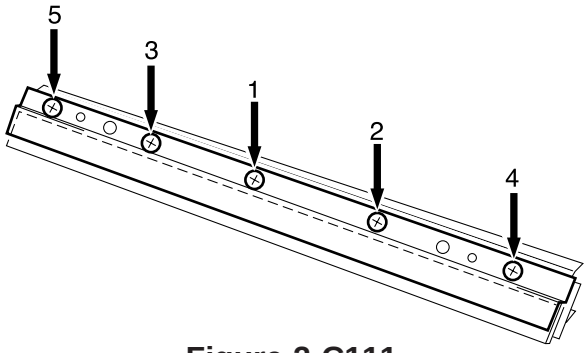

Figure 2-C111

Caution:
When mounting the cleaning blade, be sure to put the blade auxiliary plate between the blade support plate and the blade back plate.

Caution:
After mounting the cleaning blade, turn the drum; if toner slips off the cleaning blade at this time, repeat the foregoing steps.
If the problem is not corrected after tightening the screws, replace the cleaning blade.

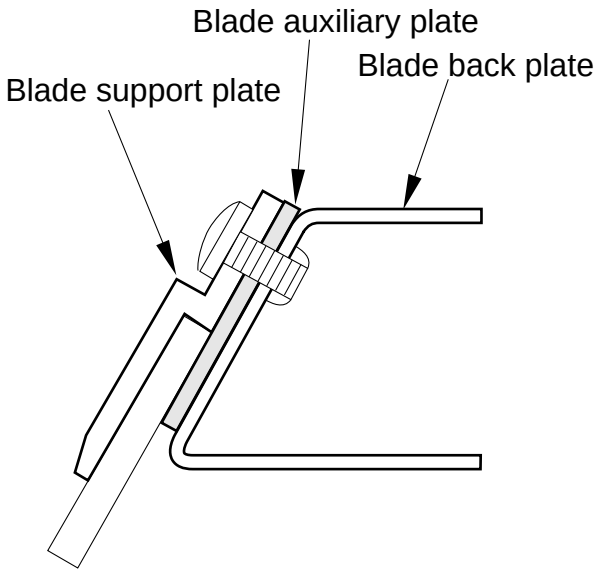

Figure 2-C112

4. Replacing the Developing Blade

1) Remove the four mounting screws [1], and detach the sleeve cover [2].

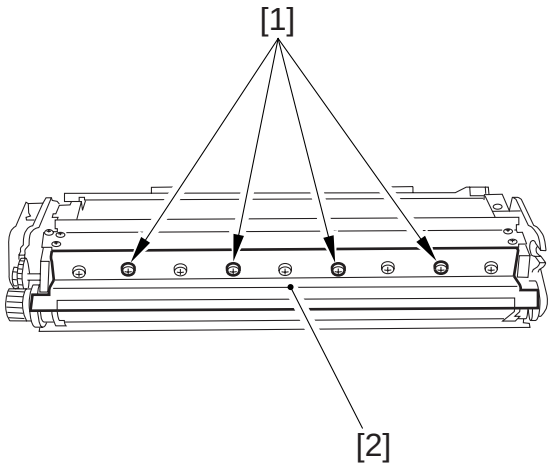

Figure 2-C113

2) Remove the screw [3], and detach the polarity plate [4]; then, remove the five screws [5], and detach the blade [6] together with the mounting plate [7].

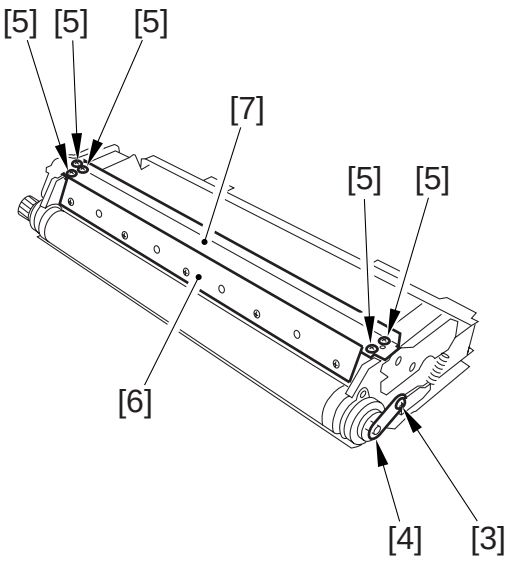

Figure 2-C114

Caution:
The blade must be adjusted to an extremely high accuracy. Do not remove it on its own in the field. (Detach it together with its mounting plate.)

Mount the blade by reversing the steps used to remove it.

3) Butt the blade mounting plate against the developing assembly, and secure it in place with five screws.
   Be sure to put copy paper over the developing cylinder for protection before starting to mount the blade.
4) Mount the polarity plate with a screw.

5 Replacing the Potential Sensor/Potential Control PCB

1) Check to make sure that the data lamp on the control panel is off, and turn off the main power switch.
2) Disconnect the power plug.

Caution:
The copier remains powered as long as the power plug is connected to the power outlet even after the main power switch is turned off. Be sure to disconnect the power plug.

3) Replace the potential sensor/potential control PCB.

Caution:
The potential sensor and the potential control PCB are adjusted as a pair. Be sure to replace both of them if either of them must be replaced.

4) Fit the potential sensor tester electrode (FY9-3041) to the potential sensor.

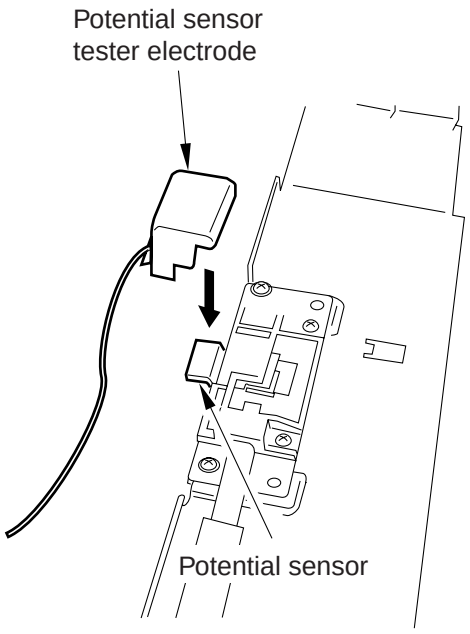

Figure 2-C115

Caution:
When fitting the tester electrode to the potential sensor, take care so that the magnet of the electrode will not come into contact with the potential sensor cover.

5) Connect the cable of the potential sensor tester electrode to the support metal plate (GND) of the potential measurement PCB.

Caution:
Be sure not to bring the clip into contact with the sensor cover by keeping it sufficiently away from the window of the sensor.

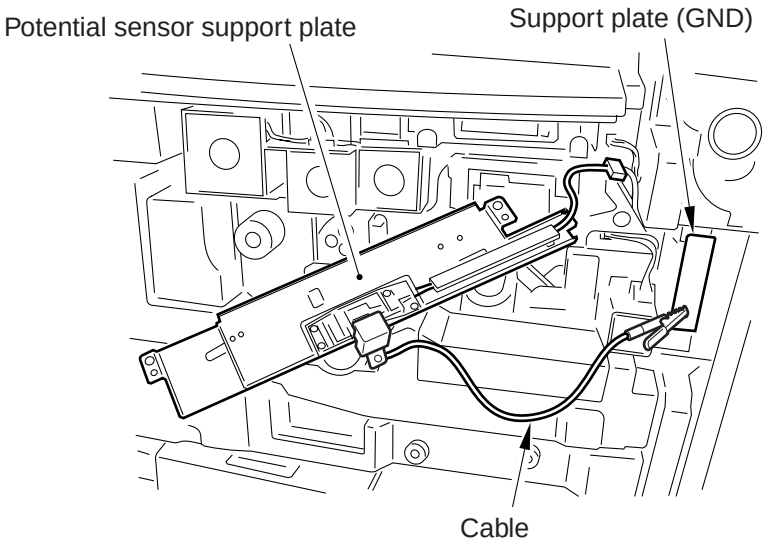

Figure 2-C116

6) Insert the door switch actuator into the door switch assembly.
7) Connect the power plug to the power outlet, and turn on the main power switch and the control panel power switch.
8) Execute COPIER>FUNCTION>DPC>OFST in service mode.
9) Record the setting of OFST on the service label.
10) Check to make sure that the data lamp on the control panel is off, and turn off the main power switch.
11) Disconnect the power plug from the power outlet.
12) Detach the potential sensor tester electrode.
13) Connect the power plug to the power outlet, and turn on the main power switch and the control panel power switch.

D. Pickup/Feeding System

1	Orienting the Deck/Cassette Pickup Roller

Mount the deck/cassette pickup roller by reversing the steps used to remove it with the following in mind:

- The front and rear pickup rollers are not interchangeable.
- The front pickup roller is identified by its gold collar. When mounting the pickup roller [1] to the pickup assembly, be sure that the round marking [2] and the round marking [3] on the collar (gold) are toward the copier's front.

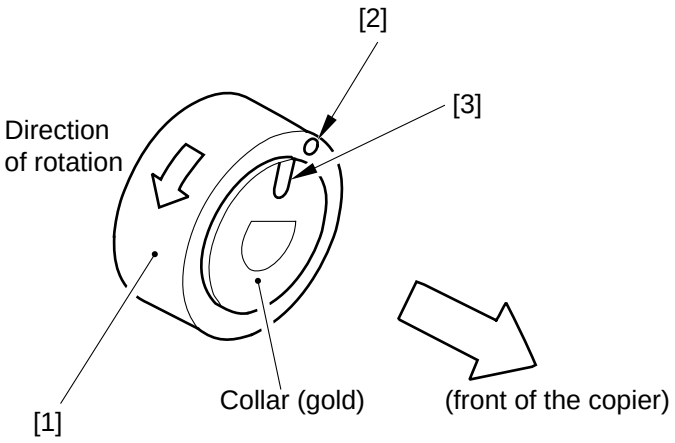

Figure 2-D101a

- The rear pickup roller is identified by its silver collar. When mounting the rear pickup roller [4] to the pickup assembly, be sure that the round marking [5] on the side of the roller is toward the copier's front while the round marking [6] on the collar (silver) is toward the copier's rear.

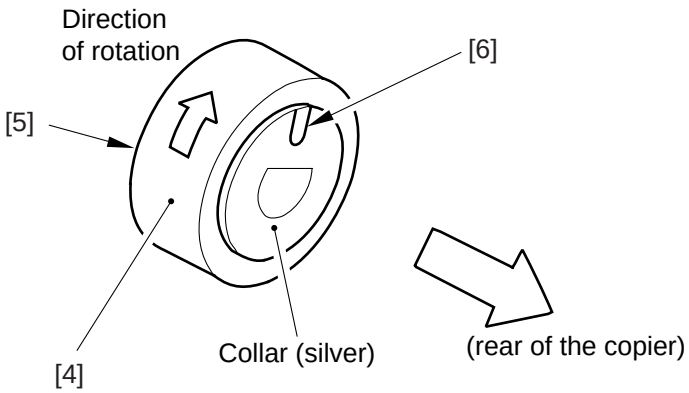

Figure 2-D101b

2 Orienting the Deck/Cassette Separation Roller

When replacing the separation roller, be sure to orient it as follows:

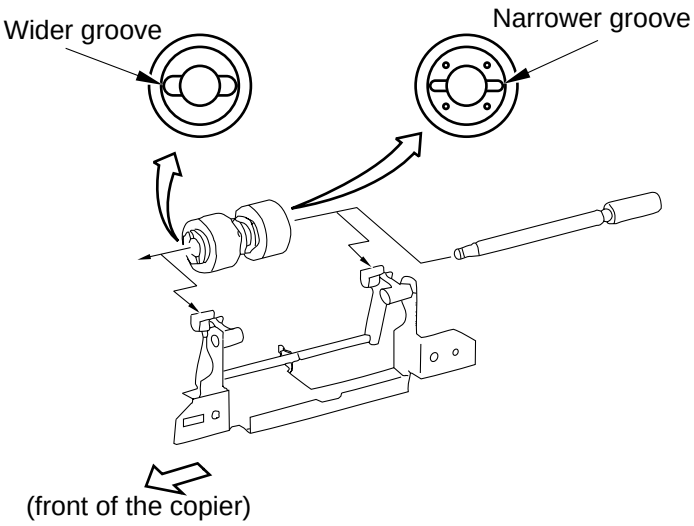

Figure 2-D102

3 Orienting the Deck/Cassette Pickup Assembly Feeding Roller

When mounting the deck/cassette pickup assembly feeding roller, be sure that the belt pulley [2] is toward the copier's front. When mounting the feeding roller [3] to the feeding roller shaft [4], be sure that the round marking [5] is toward the copier's front.

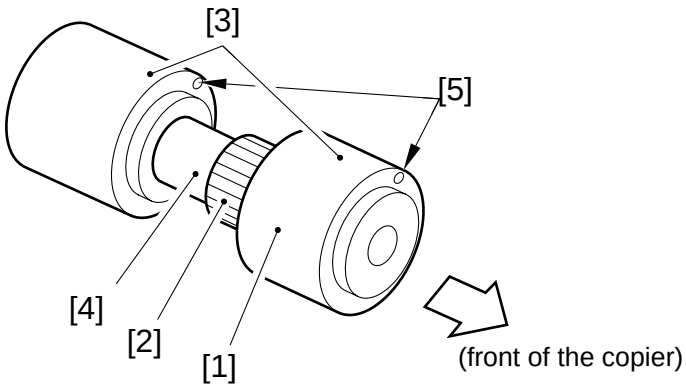

Figure 2-D103

4 Orienting the Manual Feed Tray/Side Paper Deck Pickup Roller

Mount the manual feed tray/side paper deck pickup roller by reversing the steps used to remove it with the following in mind:

- The front and rear pickup rollers are not interchangeable.
- The front pickup roller is identified by its silver collar. When mounting the pickup roller [1] to the pickup assembly, be sure that the round marking [2] on the collar (silver) is toward the copier's front.

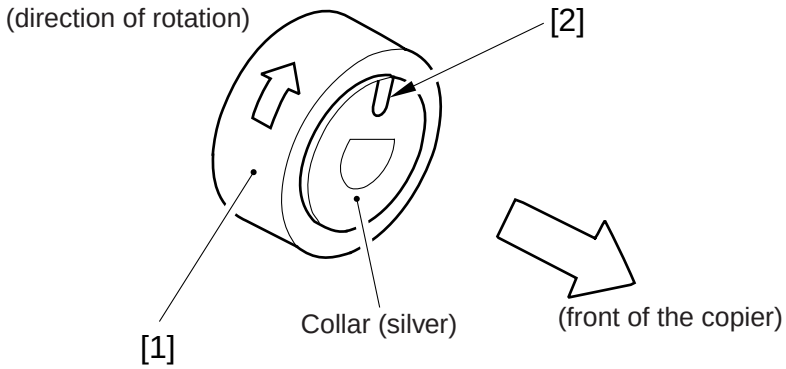

[1] Pickup roller
[2] Marking (collar)

Figure 2-D104a

- The rear pickup roller is identified by its gold collar. When mounting the pickup roller [4] to the pickup assembly, be sure that the round marking [5] on the side of the roller and the round marking [6] on the collar (gold) are toward the rear of the copier.

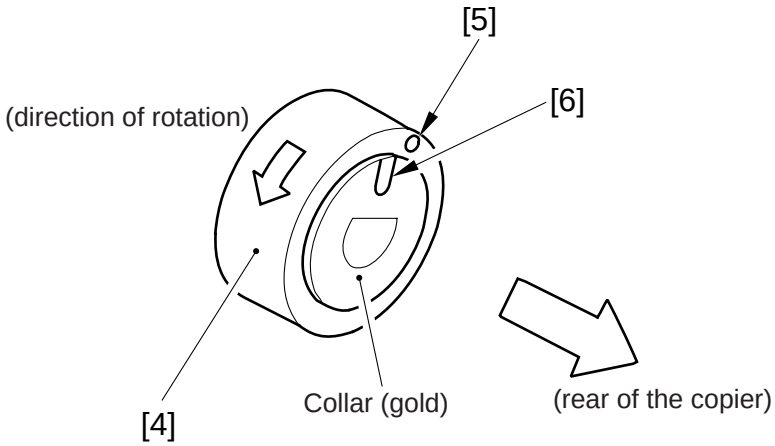

[4] Pickup roller
[5] Marking (roller)
[6] Marking (collar)

Figure 2-D104b

5 Orienting the Manual Feed Pickup Roller

When routing the feeding roller assembly [1] to the manual feed tray pickup assembly, be sure that the belt pulley [2] is toward the copier's front. When mounting the feeding roller [3] to the feeding roll shaft [4], be sure that the round marking [5] is toward the copier's front.

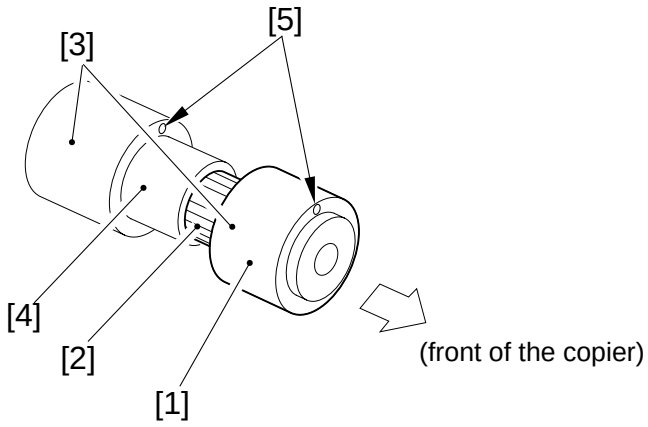

Figure 2-D105

6 Orienting the Side Paper Deck Feeding Roller

When mounting the feeding roller [1] to the side paper deck pickup assembly, be sure that the belt pulley [2] is toward the copier's front. When mounting the feeding roller [3] to the feeding roler shaft [4], be sure that the round marking [5] is toward the copier's rear.

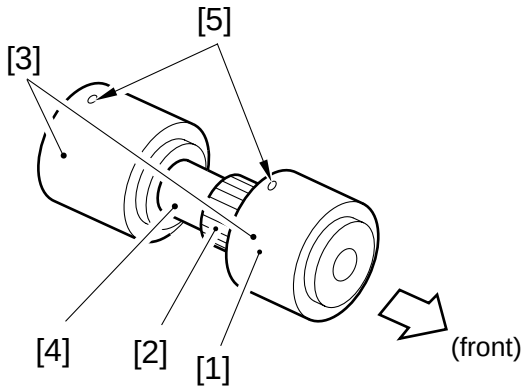

Figure 2-D106

7 Adjusting the Pressure of the Deck/Cassette Separation Roller

If double feeding or pickup failure occurs during pickup operation, reposition the pressure spring of the separation roller.

- If double feeding occurs, move the spring into the direction of arrow B.
- If pickup failure occurs, move the spring in the direction of arrow A.

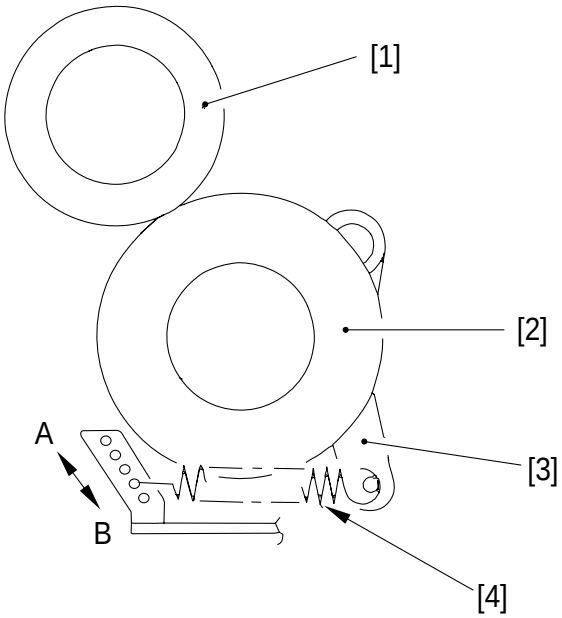

[1] Feeding roller [2] Separation roller
[3] Pressure lever [4] Pressure spring

Figure 2-D107

8 Adjusting the Pressure of the Manual Tray Pickup/Feeding Roller

If double feeding or pickup failure occurs during pickup operation, reposition the pressure spring of the separation roller.

- If double feeding occurs, move the spring in the direction of arrow A.
- If pickup failure occurs, move the spring in the direction of arrow B.

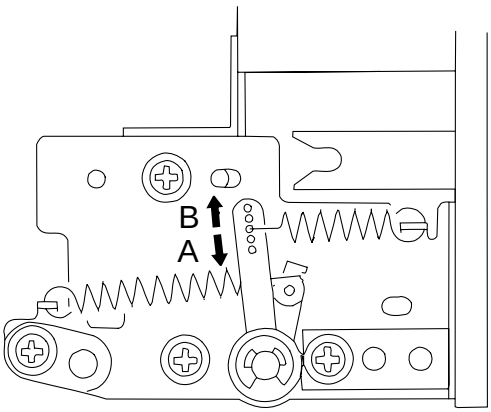

Figure 2-D108

9 Mounting the Solenoids

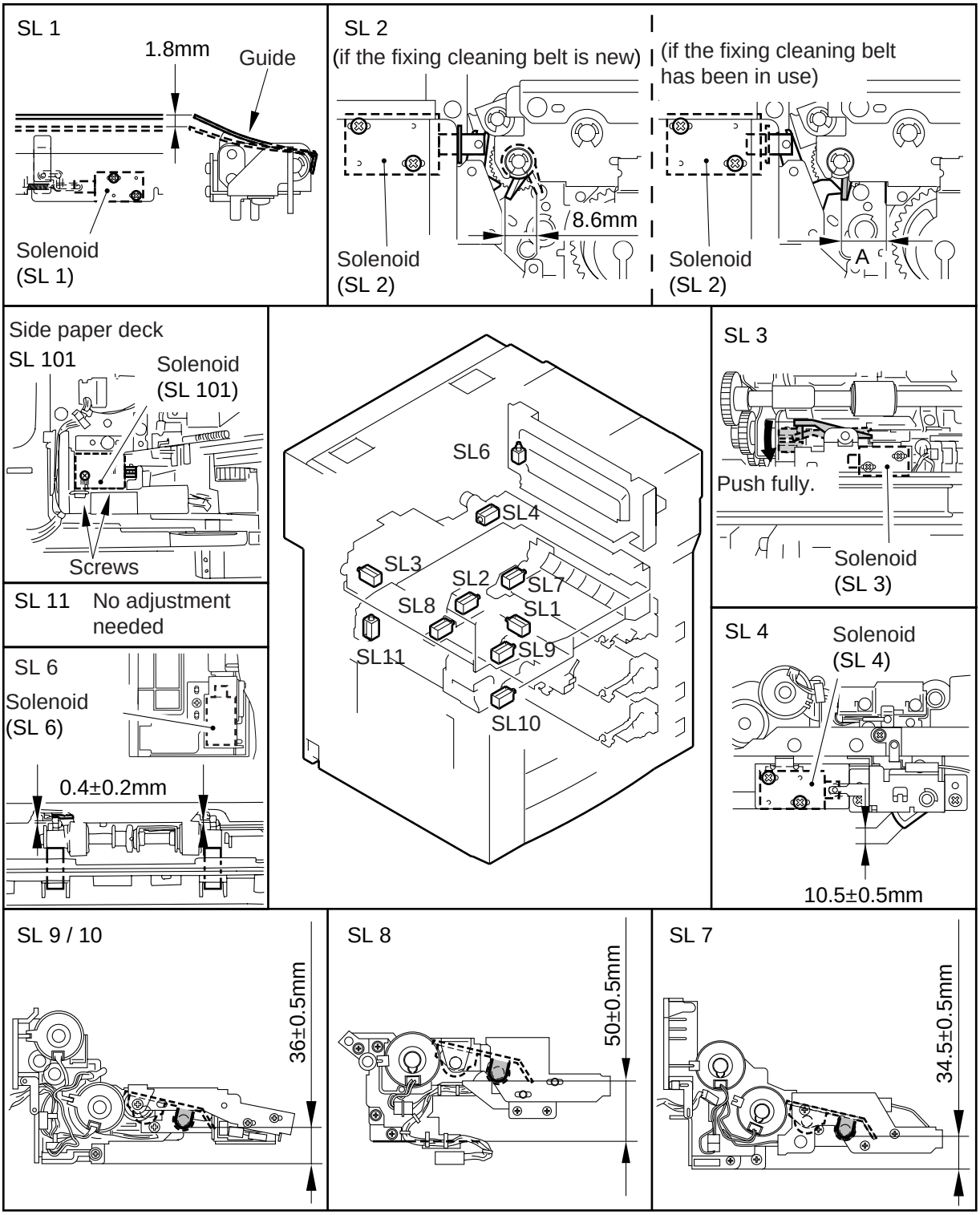

Figure 2-D109

9.1 Position of the Fixing Inlet Guide Solenoid (SL1)

Adjust the position of the solenoid using the screw [1] so that the guide will lower 1.8 mm when the solenoid turns on.

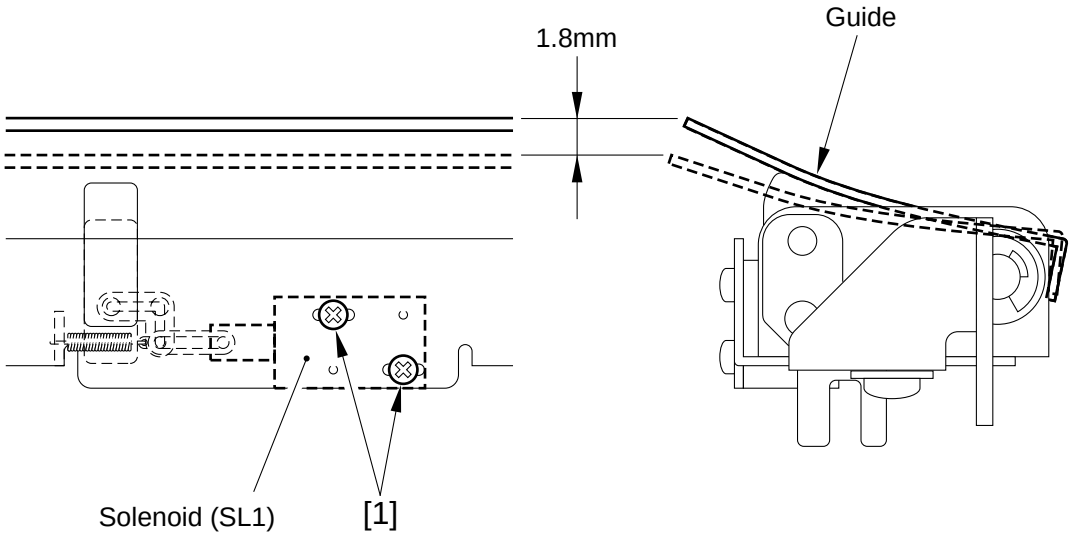

Figure 2-D110

9.2 Position of the Fixing Cleaning Belt Solenoid (SL2)

a. If the Fixing Cleaning Belt is New

Adjust the position of the solenoid using the screw [1] so that the movement of the drive lever will be over a distance of 8.6 mm.

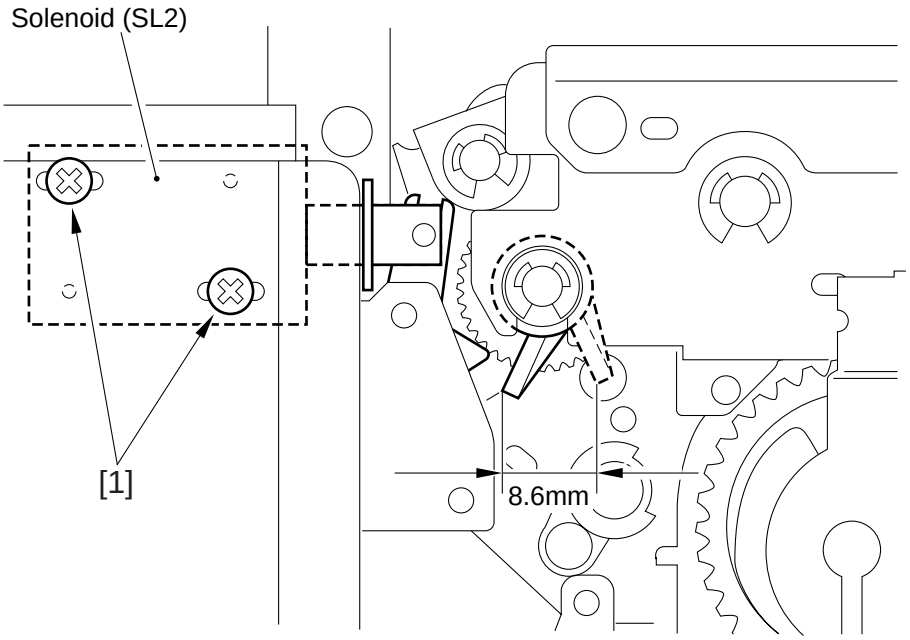

Figure 2-D111a

b. If the Fixing Cleaning Belt Has Been in Use

Before removing the solenoid, take note of the position A of the drive lever when the solenoid is on. After replacing the solenoid, adjust the position using the screw [1] so that it will be the same as it was before removal when the solenoid turns on.

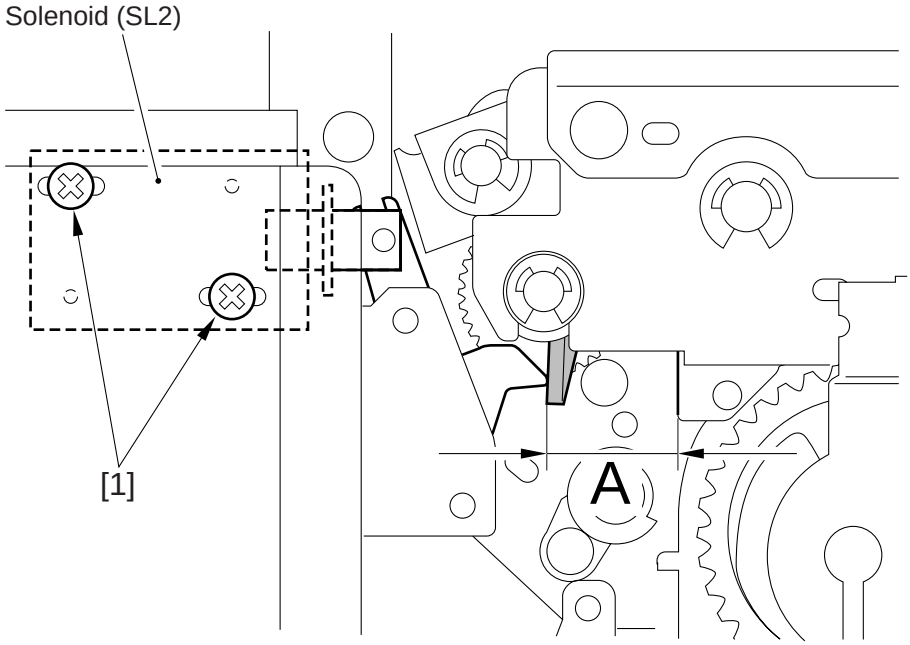

Figure 2-D111b

9.3 Position of the Delivery Flapper Solenoid (SL3)

Adjust the position of the solenoid using the screw [1] so that the drive lever is fully moved when the solenoid turns on (i.e., the steel core is pulled).

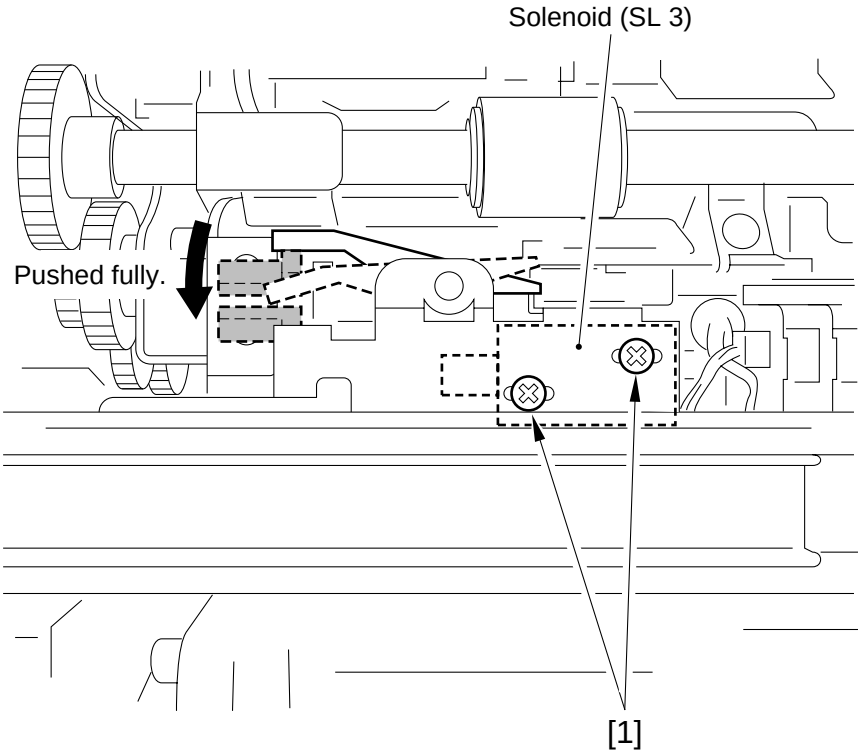

Figure 2-D112

9.4 Position of the Fixing/Feeding Unit Locking Solenoid (SL4)

Adjust the position of the solenoid using the screw [1] so that the locking lever sticks out of the frame by 10.5 ±0.5 mm when the solenoid turns on (steel core is pulled).

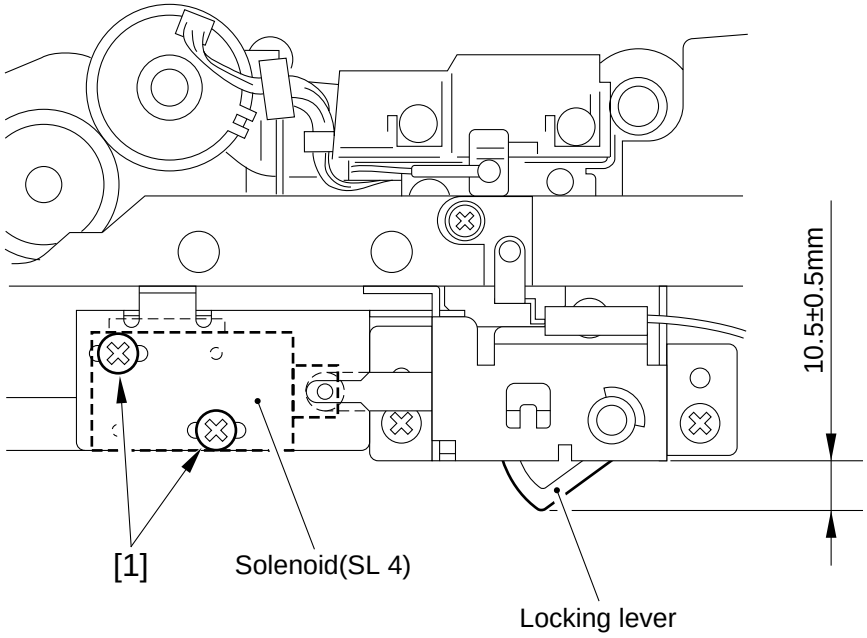

Figure 2-D113

9.5 Position of the Multifeeder Pickup Latching Solenoid (SL6)

Slide the solenoid into the direction of A to adjust so that the gap between the shutter [1] and the shutter plate [2] is 0.4 ±0.2 mm when the solenoid is pulled.

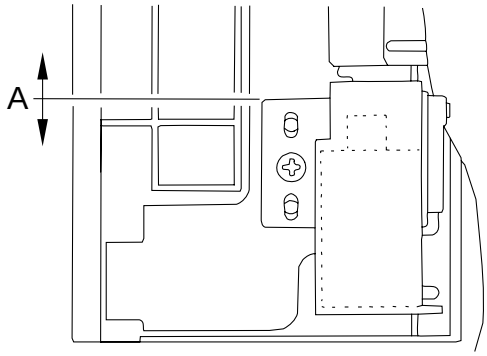

Figure 2-D114a

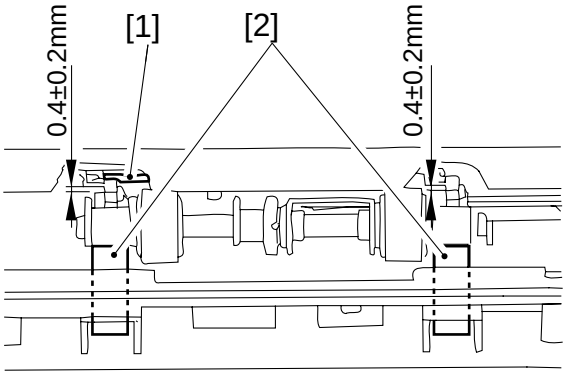

Figure 2-D114b

9.6 Position of the Deck (right) Pickup Solenoid (SL7)

Adjust pickup solenoid using the screw [1] so that the distance between the bottom face of the pickup unit of each holder and the bottom edge of the bushing of the support plate is 34.5 ±0.5 mm when the plunger of the pickup roller releasing solenoid is pulled as shown (operated as in [1] and [2]).

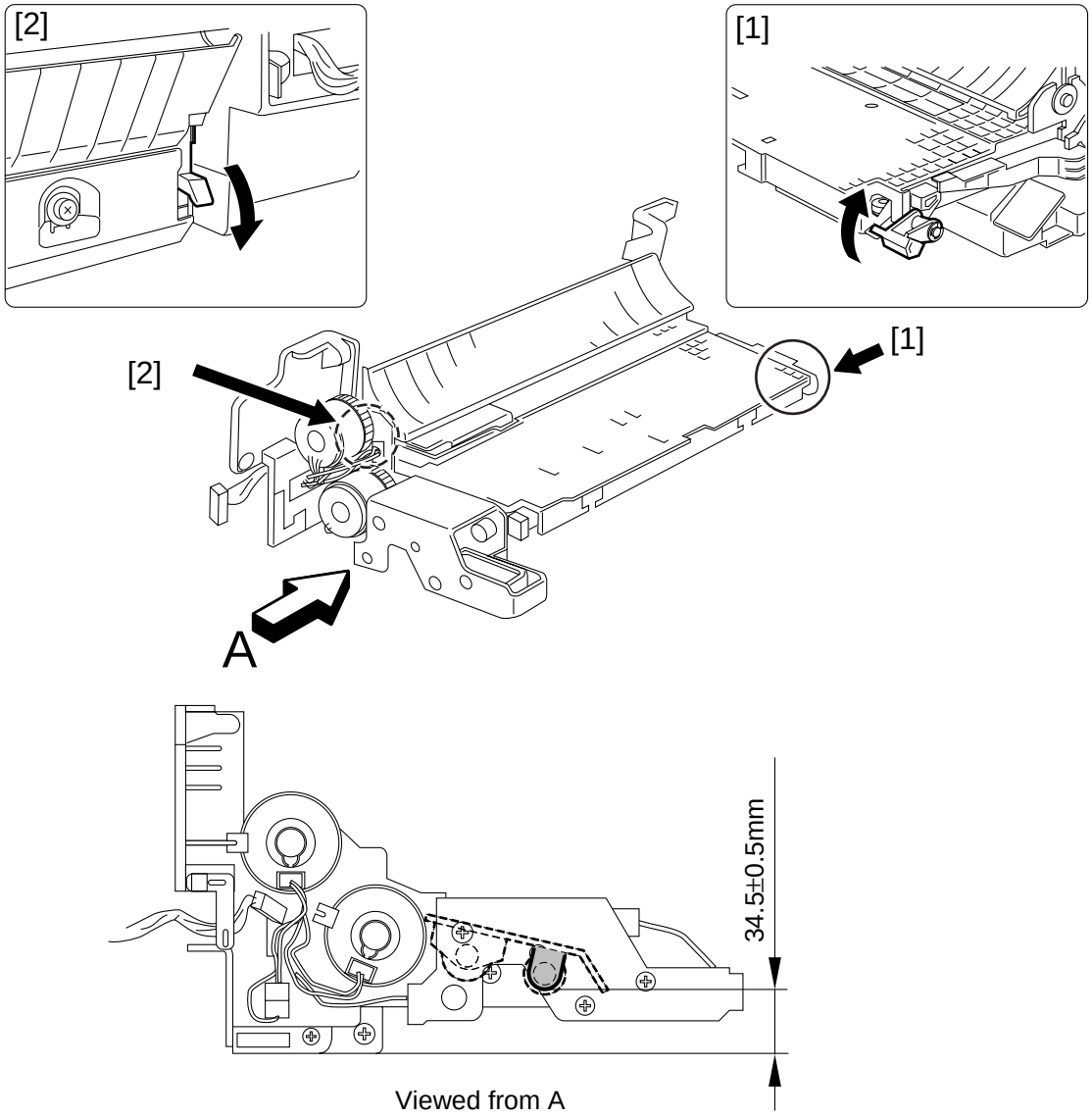

Figure 2-D115

9.7 Position of the Deck (left) Pickup Solenoid (SL8)

Adjust the pickup solenoid using the screw [1] so that the distance between the bottom face of the pickup unit of each holder and the bottom edge of the bushing of the roller support plate is 50 ±0.5 mm when the plunger of the pickup roller releasing solenoid is pulled as shown (operated as in [1] and [2]).

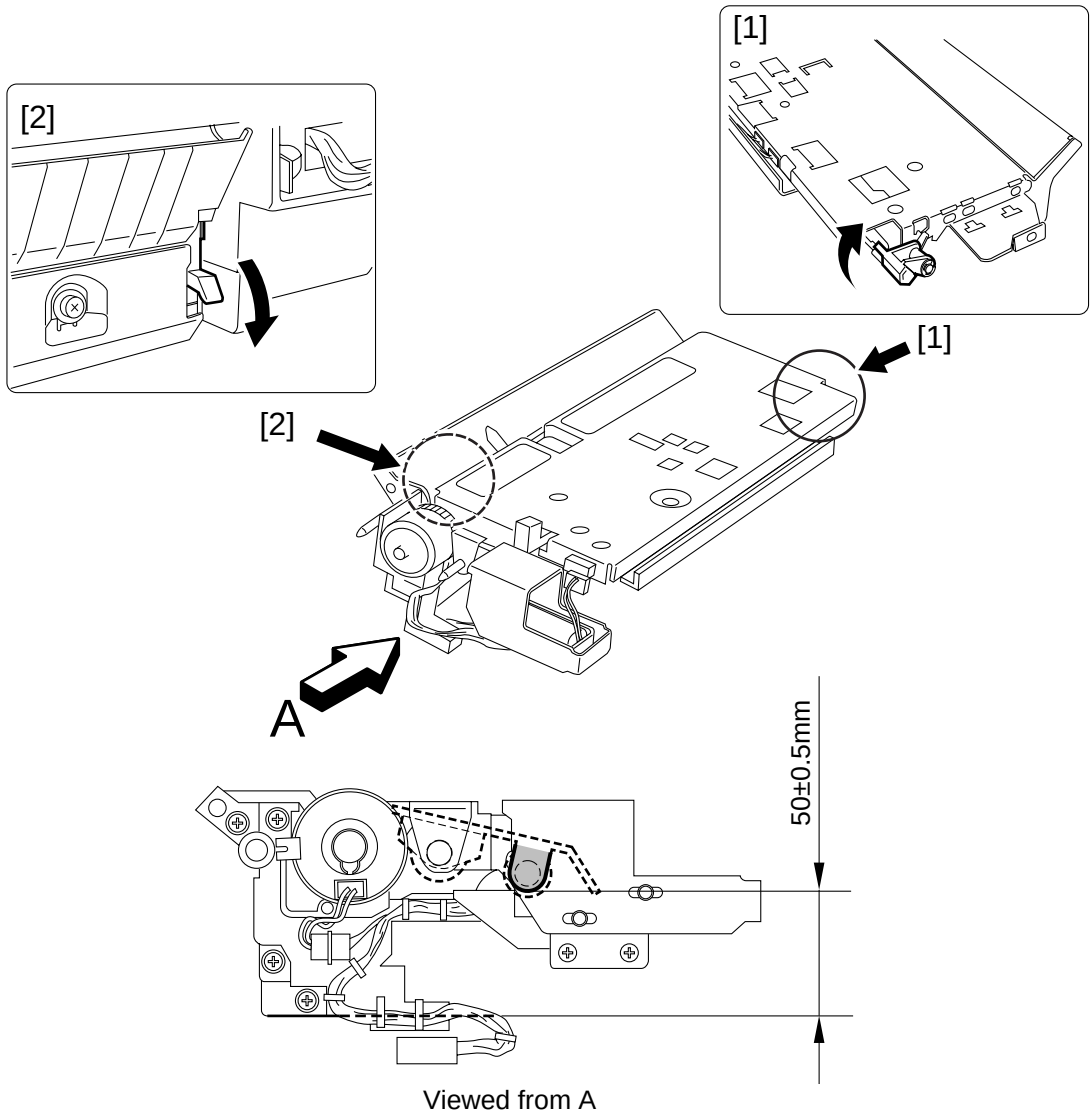

Figure 2-D116

9.8 Position of the Cassette 3/4 Pickup Solenoid (SL9/10)

Adjust the pickup solenoid using the screw [1] so that the distance between the bottom face of the pickup unit of each holder and the bottom edge of the bushing of the roller support plate is 36 ±0.5 mm when the plunger of the pickup roller releasing solenoid is pulled as shown (operated as in [1] and [2]).

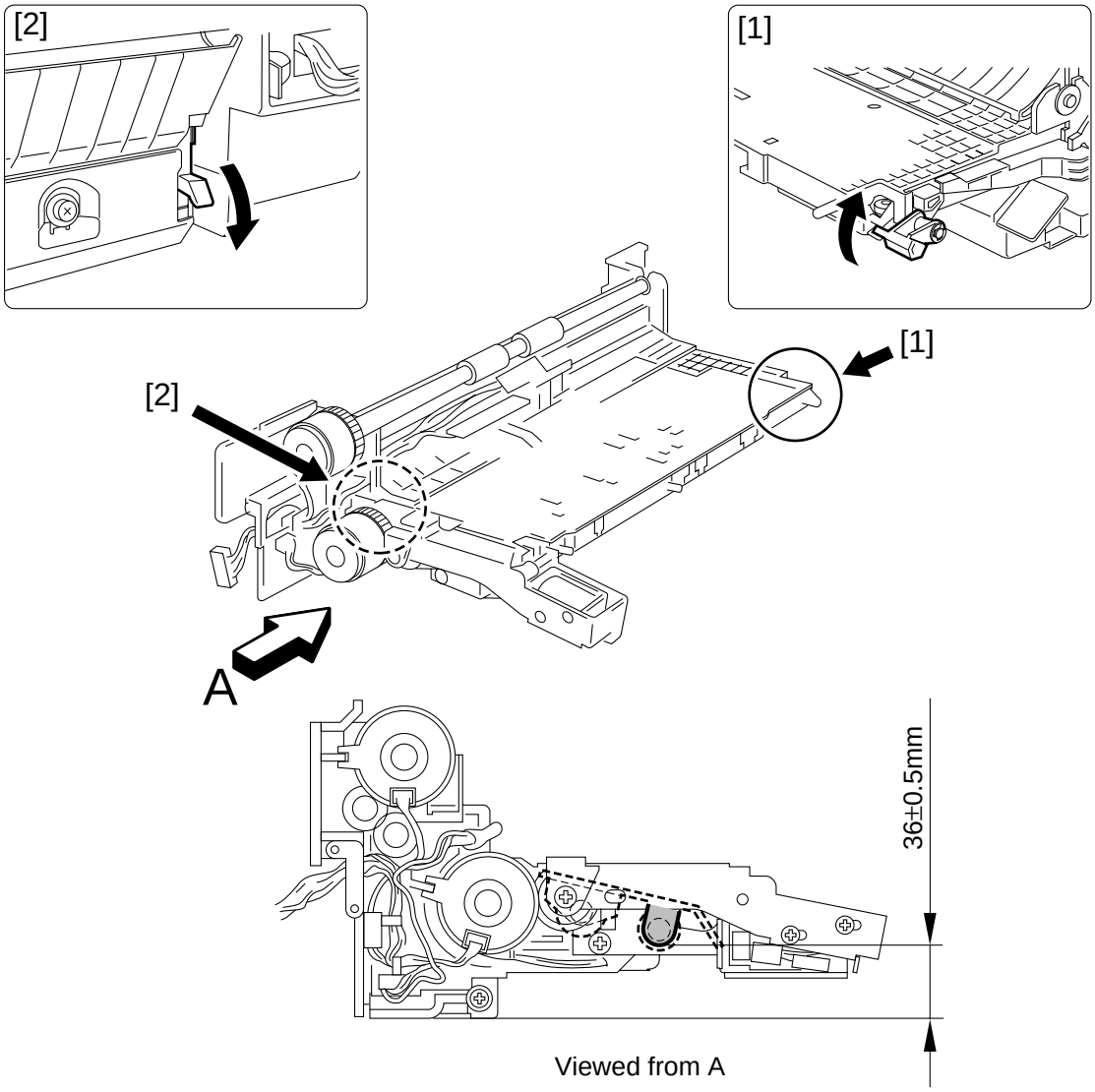

Figure 2-D117

9.9 Position of the Side Paper Deck Pickup Roller Releasing Solenoid

Before removing the deck pickup roller releasing solenoid [1] from the support plate, keep note of the positions of the two fixing screws [2] of the solenoid with reference to the scale graduations on the support plate; or, mark the position of the solenoid (of itself) on the support plate with a scriber.

If you are mounting the solenoid on its own, be sure to secure it in place in its initial position.

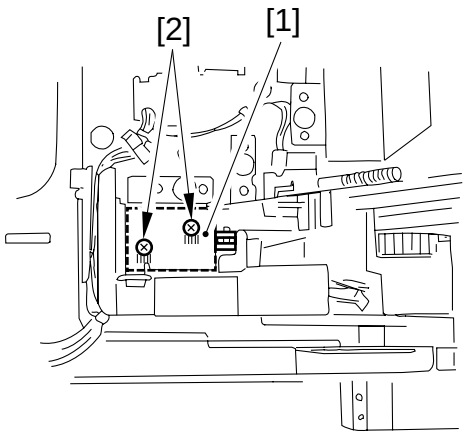

Figure 2-D118

10 Routing the Manual Feed Tray Assembly Side Guide Timing Belt

Butt the rack plate of the manual feed tray against section A (open condition).

Move the slide volume into the direction of B, and attach the timing belt to the pulley.

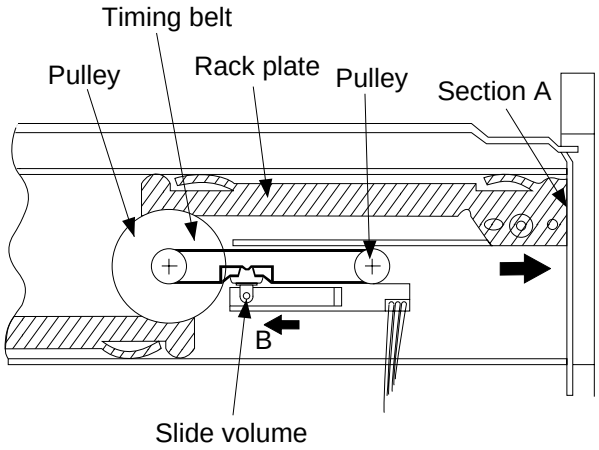

Figure 2-D119

11 Routing the Drive Belt

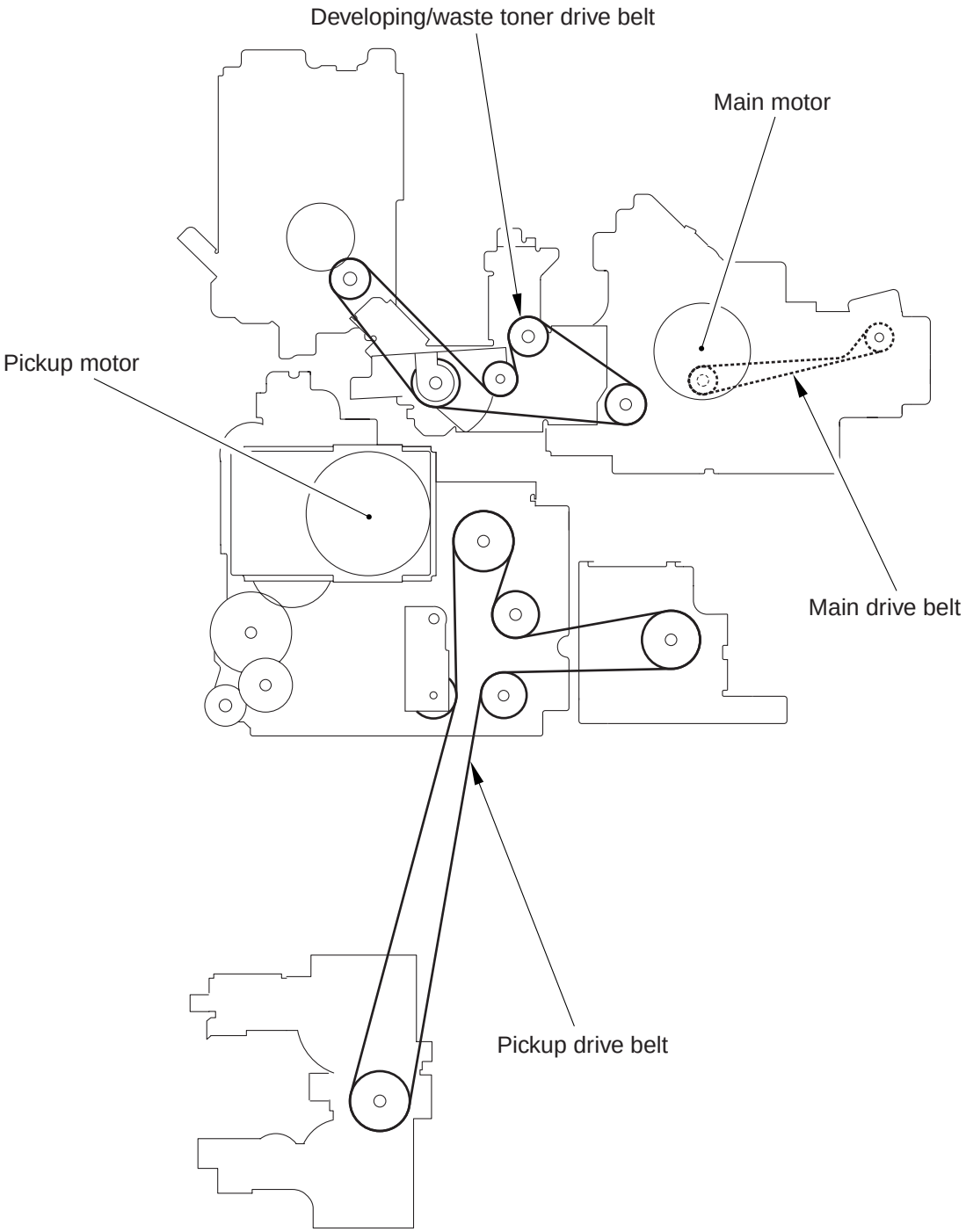

Figure 2-D120

E. Fixing System

1 Points to Note When Mounting the Fixing Heater

1. Do not touch the surface of the heater.
2. Mount the fixing heater so that its terminal with the longer wire is toward the front. (This applies to both heaters.)
3. Mount the main heater (760 W for the 15A model; 850 W for the 20 A model) on the right side of the fixing assembly (viewing from the front) and the sub heater (400 W for the 15A model; 360 W for the 20A model) to the left side.
4. Connect the fastons of the heater harness at the rear. (Connect the right side to the main heater, and the top side to the sub heater when viewing from the rear.)

2 Position of the Fixing Assembly Inlet Guide

Points to Note When Adjusting in the Field

- The inlet guide must be mounted as shown in the diagram.
- The inlet guide must lower when the solenoid (SL1) turns on.
- The inlet guide must be level so that the difference in height between its front and rear must be within 0.5 mm.
- The inlet guide must be adjusted for height by loosening the fixing screw on the "height adjusting support plate."

Height of the Fixing Assembly Inlet Guide

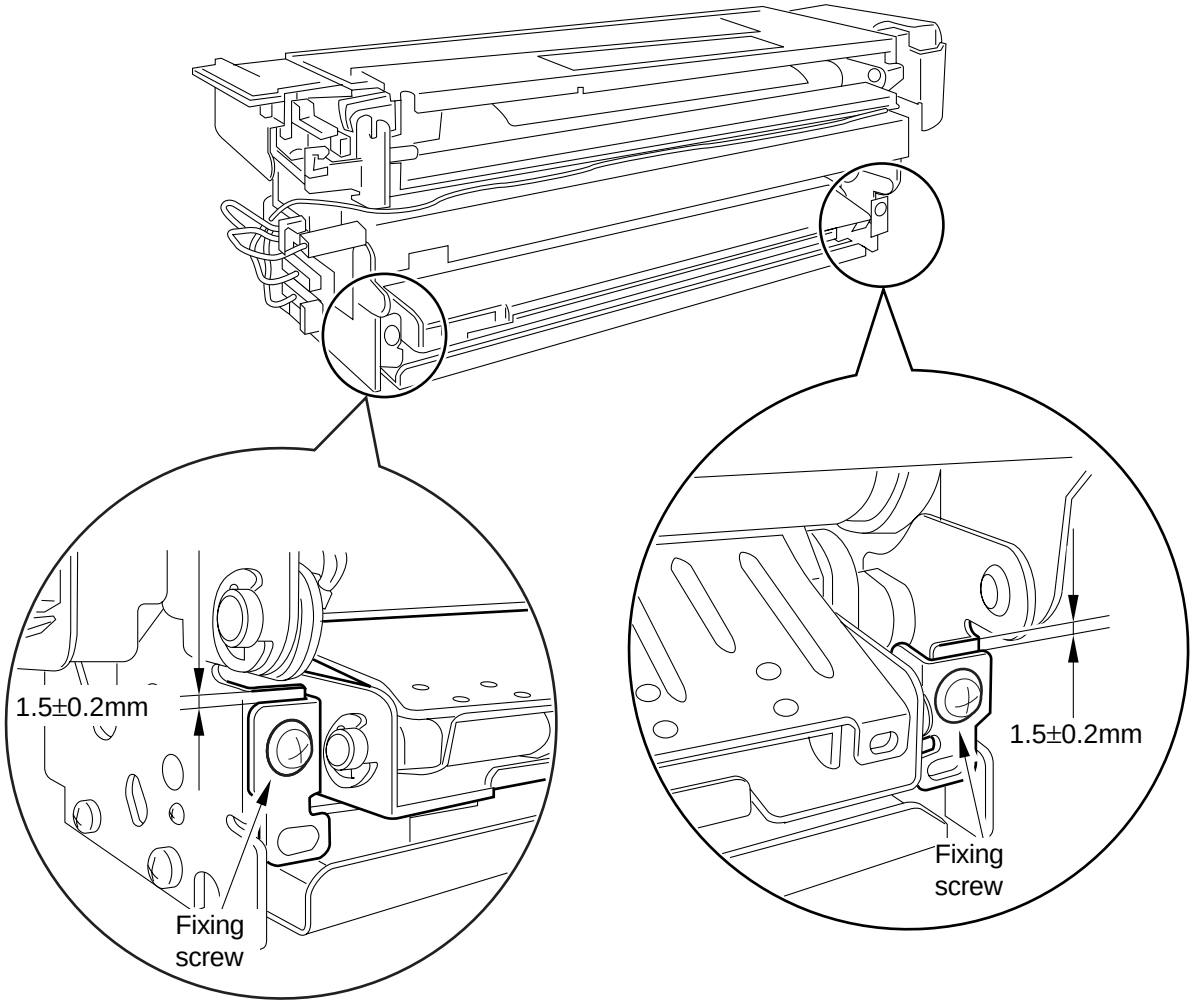

Figure 2-E101

Caution:

You would have to adjust the position of the inlet guide if you removed the inlet guide mount. Do not loosen the fixing screw on the inlet guide to avoid adjustment. If the fixing screw has been loosened for some reason, be sure to tighten it back in reference to the scale graduations on the fixing assembly mount.

3 Adjusting the Lower Roller Pressure (nip)

The nip width is correct if it is as indicated in Table 13-E201. Otherwise, adjust it using the pressure adjusting nut.

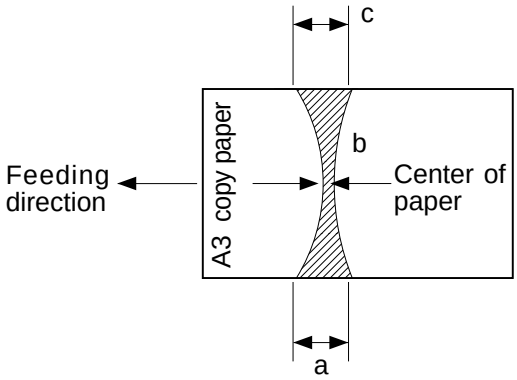

Figure 2-E102

Caution:
a and c are points 10 mm from both edges of the paper.

Dimensions	Measurements*
b	7.3±0.5mm
l a-c l	0.5 mm or less

*Taken when the upper and lower rollers have sufficiently been heated.

Table 2-E101

a. Measuring the Nip Width

1) Place A3 copy paper on the manual feed tray.
2) Select COPIER>FUNCTON>FIXING>NIP-CHK in service mode, and discharge the paper. A3 copy paper will be picked up and discharged as a copy (Figure 2-E102).

F. Laser Exposure System

1 After Replacing the Laser Unit

1) Check to make sure that the data lamp on the control panel is off, and turn off the main power switch.
2) Disconnect the power plug.

Caution:
The machine remains powered as long as the power plug is connected to the power outlet even after the main power switch has been turned off. Be sure to disconnect the power plug.

3) Replace the laser unit.
4) Take notes of the values recorded on the label (LA-PWR-A/B, LA-DELAY) of the new laser unit.
5) After mounting, connect the power plug, and turn on the main power switch and the control panel power switch.
6) Enter the values from step 4) in service mode (COPIER>ADJUST>LASER>LA-PWR-A/B, COPIER>ADJUST>LASER>LA-DELAY).

2 Checking the Laser Power

1) Check to make sure that the data lamp on the control panel is off, and turn off the main power switch.
2) Disconnect the power plug from the power outlet.
3) Remove the copyboard glass.
4) Move the No. 1 mirror mount to the left edge.
5) Remove the two screws [1], and disconnect the connector [2]; then, detach the original sensor unit (rear) [3].

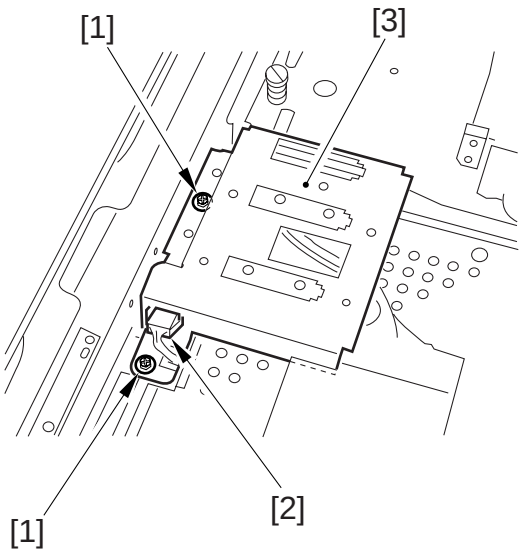

Figure 2-F103

6) Remove the two screws [4], and detach the flat cable [5].

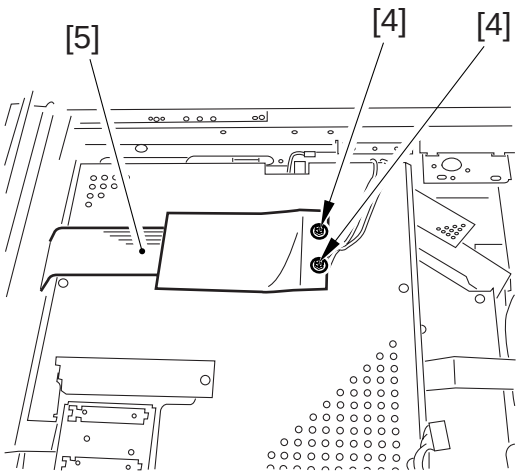

Figure 2-F104

7) Remove the four screws [6], and detach the image processor cover [7].

Caution:
At this time, take care not to damage the flat cable removed in step 6).

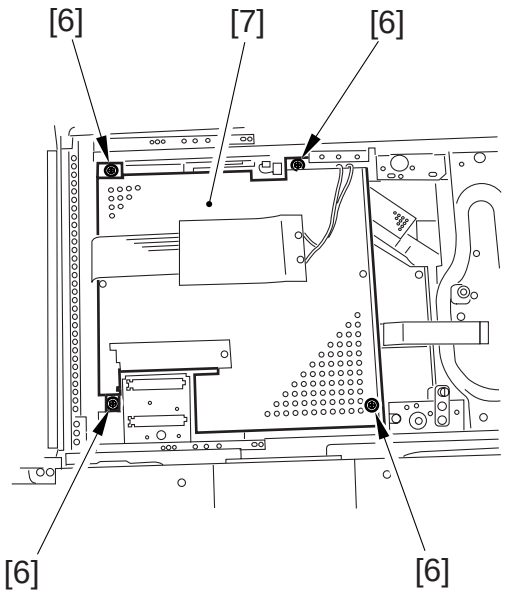

Figure 2-F105

8) Open the laser power checker inlet cover.

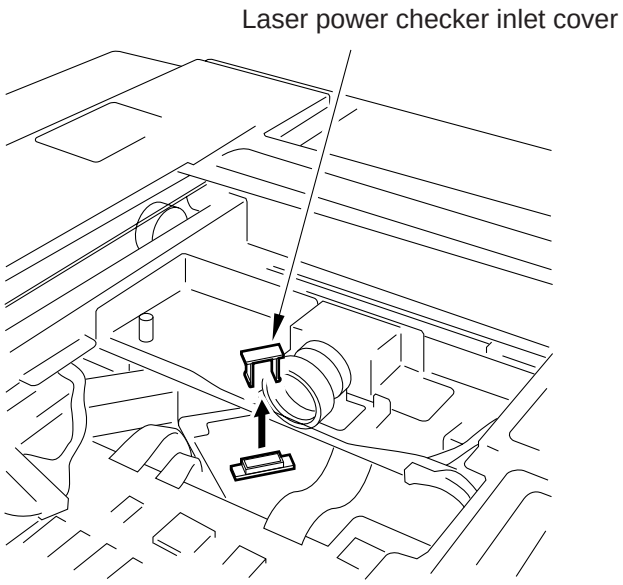

Figure 2-F106

9) Shift the switch on the laser power checker (FY9-4013) to '2'.

10) Orient the light-receiving face of the laser power checker as shown, and insert it.

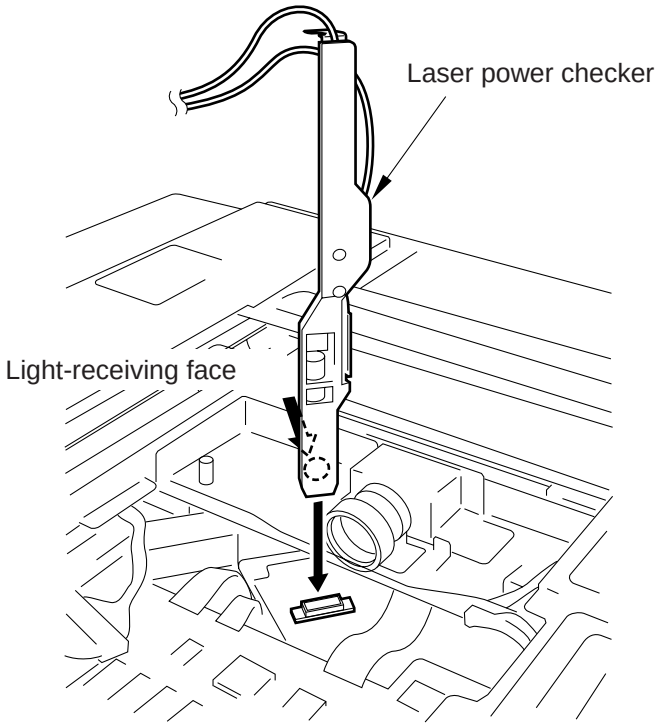

Figure 2-F107

11) Insert the lead wire of the laser power checker into the digital multimeter.

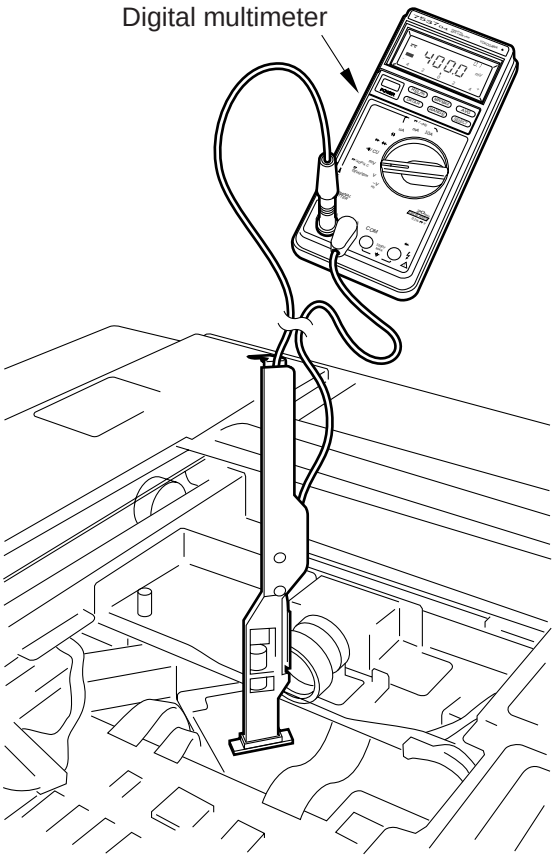

Figure 2-F108

12) Connect the power plug to the power outlet, and turn on the main power switch and the control panel power soft switch.
13) Select COPIER>FUNCTION>LASER in service mode.
14) Select POWER-A, and press the OK key.
15) Check to see if the reading of the digital multimeter is between 6 and 8 mV so that the power of the laser A is at a correct level.
16) Select POWER-B, and press the OK key.
17) Check to see if the reading of the digital multimeter is between 6 and 8 mV so that the power of the laser B is at a correct level.

G. Electrical Parts

1	After Replacing the CCD Unit

1) Check to make sure that the data lamp on the control panel is off, and turn off the main power switch.
2) Disconnect the power plug.

Caution:
The copier remains powered as long as it is connected to the power outlet even after the main power switch has been turned off. Be sure to disconnect the power plug.

3) Replace the CCD unit.
4) After mounting, connect the power plug to the power outlet, and turn on the main power switch and the control panel power switch.
5) Execute COPIER>FUNCTION>CCD>CCD-ADJ in service mode.
6) Record the new values when all items of COPIER>ADJUST>CCD and the data of COPIER>ADJUST>LAMP>L-DATA have been updated.

2 After Replacing the Image Processor PCB

1) Make settings in user mode except the following:
   - adjust/clean>change middle staple position
   - adjust/clean>change double staple width
2) Record the setting of the following in service mode:
   - item A
3) Check to make sure that the data lamp on the control panel is off, and turn off the main power switch.
4) Disconnect the power plug from the power outlet.

Caution:
The machine remains powered as long as the power plug is connected to the power outlet even after the main power switch has been turned off. Be sure to disconnect the power plug.

5) Replace the image processor PCB.
6) Take notes of the values (IP-DELAY) recorded on the new image processor PCB.

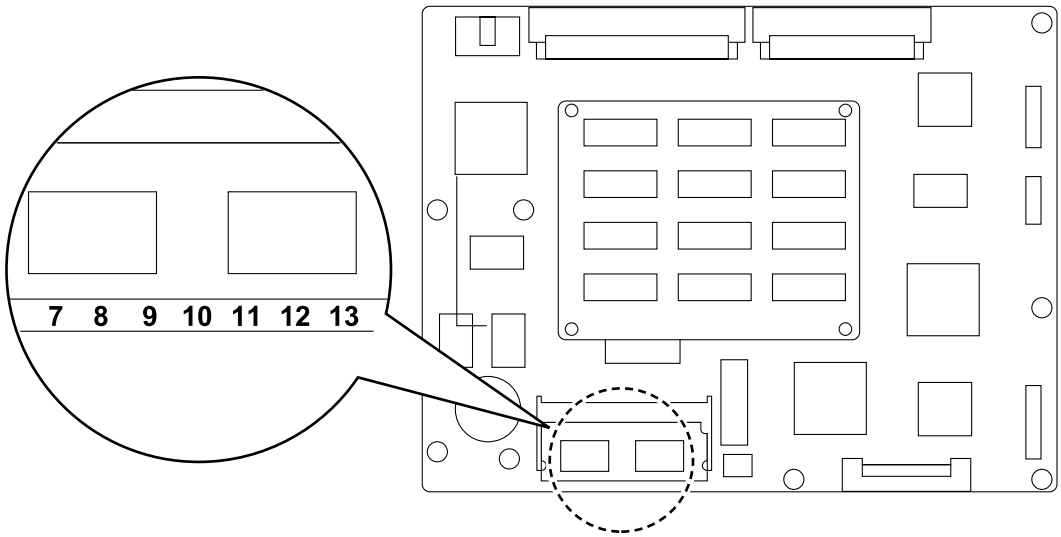

Figure 2-G101

7) After mounting, connect the power plug, and turn on the main power switch and the control panel power switch.
8) Execute COPIER>FUNCTION>CLEANER>IP in service mode.
9) Turn off and then on the main power switch, and turn on the control panel power switch.
10) Enter the settings of the user mode/service mode that have been recorded.
11) Execute COPIER>FUNCTION>CCD>CCD-ADJ in service mode.
12) Record the new values when all items of COPIER>ADJUST>CCD and the data of COPIER>ADJUST>LAMP>L-DATA have been updated.
13) Enter the values from step 6) in service mode (COPIER>ADJUST>LASER>IP-DELAY).

3 After Replacing the MFC PCB

1) Take notes in user mode except the following:
   - adjust/clean>change middle staple position
   - adjust/clean>change double staple width
2) Record the setting of the following in service mode:
   - item B
3) Check to make sure that the data lamp on the control panel is off, and turn off the main power switch.
4) Disconnect the power plug from the power outlet.

Caution:
The machine remains powered as long as the power plug is connected to the power outlet even after the main power switch has been turned off. Be sure to disconnect the power plug.

5) Replace the MFC PCB.
6) Check to make sure that the setting of the DIP switch on the new MFC PCB is the same as the DIP switch on the removed MFC PCB.
7) After mounting, connect the power plug to the power outlet, and turn on the main power switch and the control panel power switch.
8) Execute COPIER>FUNCTION>CLEAR>MF-CON in service mode.
9) Turn off and then on the main power switch, and turn on the control panel power switch.
10) Record the settings from the previous step in user mode/service mode.

4 After Replacing the Hard Disk

1) Take notes in user mode for the following:
   - set image server spec>register/set mail box
   - set image server spec>set image server size
2) Inform the user that the following will be lost and obtain his/her approval:
   - form images in memory
   - images in mail box
3) As necessary take notes of the following in service mode (the data will be lost):
   - COPIER>DISPLAY>JAM
   - COPIER>DISPALY>ERR
   - COPIER>COUNTER>JOB>all items
4) Check to make sure that the data lamp on the control panel is off, and turn off the main power switch.
5) Disconnect the power plug from the power outlet.

Caution:
The machine remains powered as long as the power plug is connected to the power outlet even after the main switch has been turned off. Be sure to disconnect the power plug from the power outlet.

6) Replace the hard disk.
7) After mounting, connect the power plug, and turn on the main power switch and the control power switch.
8) Execute COPIER>FUNCTION>HARD-DISK>FORMAT in service mode.
   If the result of execution is OK, end the work.
   If the result of execution is NG, execute COPIER>FUNCTION>HRD-DISK>SCANDISK.
   If the result is NG once again, replace the hard disk (it is likely to be faulty).

5 After Replacing the DC Controller PCB

No particular work is needed in conjunction with the replacement of the DC controller PCB.

6 Checking the Surface Potential Control System

a. Outline

If an image fault occurs, it is important first to find out whether the cause is in the latent static formation block (including the photosensitive drum and the potential control system) or the development/transfer block, requiring a check on the surface potential, which may be checked in service mode.

b. Disabling Auto Control

The auto control mechanism may be disabled as one way of finding out whether the corona current control, lamp intensity control, or developing bias control mechanism is faulty ("non-auto control mode" hereafter).

Non-auto control mode, further, may be used as an emergency measure in response to a fault in any of the auto control mechanisms.

Keep in mind that each output in non-auto control will be fixed to its standard setting.

1. Steps
   1) Select COPIER>OPTION>BODY>PO-CNT in service mode; then, enter '0', and press the OK key.
   2) Press the Reset key twice.

Caution:

In non-auto control mode, all settings for corona current control, light intensity control, and developing bias control will automatically be set to the standard settings stored in the ROM.

2. Making Use of Non-Auto Control Mode

If an image fault occurs, use it to find out whether the cause is on the input side or the output side of the microprocessor on the DC controller PCB.

If the images made in non-auto control mode are relatively better, the potential measurement unit or the DC controller PCB may be faulty.

c. Zero-Level Check

A "zero level check" may be used as a means to find out the condition of the surface potential control circuit.

Reference:

A zero-level check is to find out whether a microprocessor is reading 0 V when the surface potential of the drum is 0 V.

A zero-level check enables a check on the microprocessor on the DC controller PCB and the measuring unit, and it may be either of the following two ways; method 1 enables a check on the level shift circuit on the DC controller PCB, while method 2 enables a check on the potential measurement circuit:

1. Method 1

1) Turn off the power switch.
2) Short J522-1 and -2 on the DC controller PCB with a jumper wire, and disconnect the connector J3 of the potential control PCB.

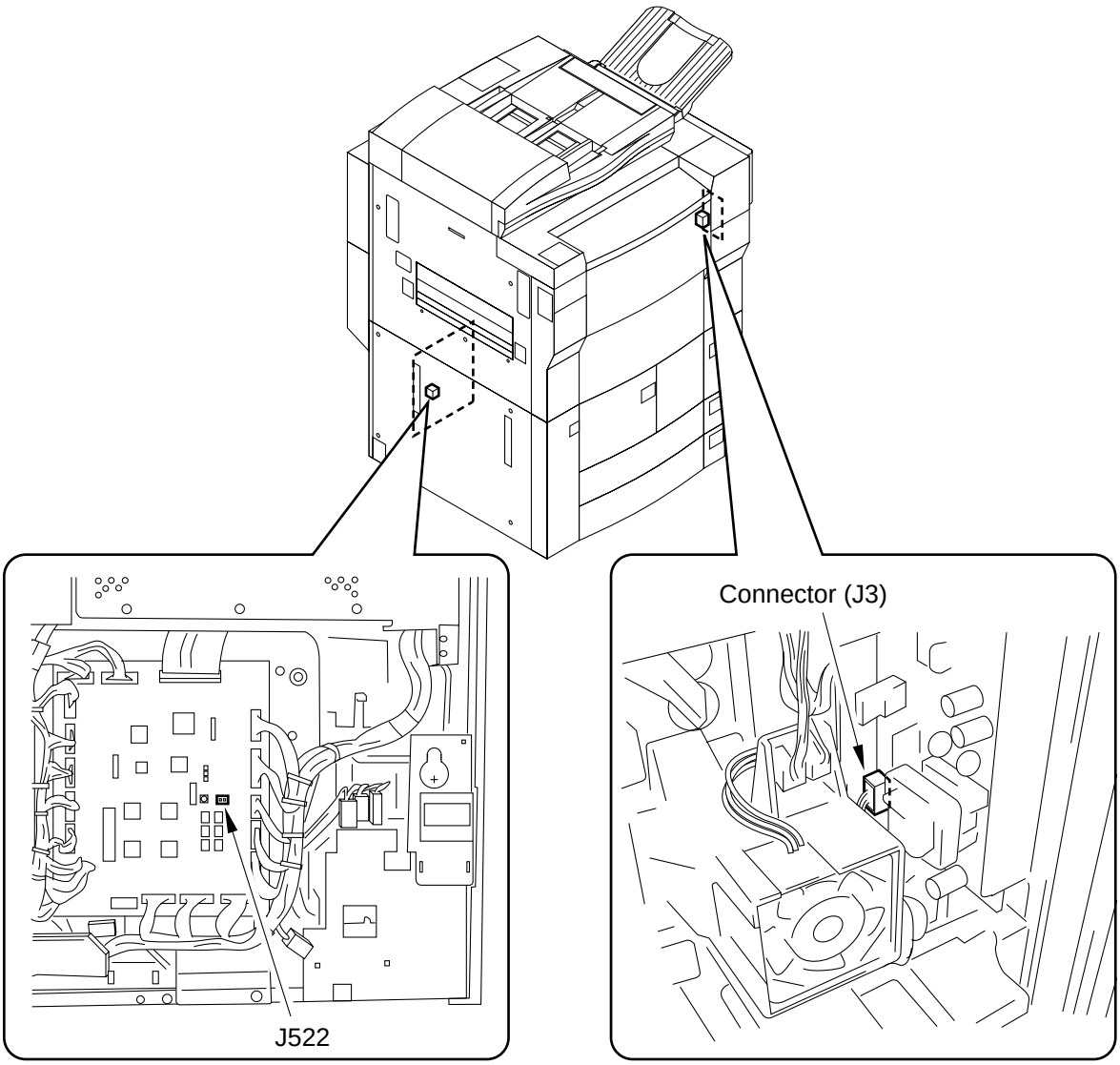

Figure 2-G102

3) Fit the door switch actuator into the door switch assembly, and turn on the power switch.
4) Select COPIER>DISPLAY>DPOT>DPOT-K in service mode, and check to make sure that the reading during initial rotation is between 0 and 30.

If the reading is not between 0 and 30, the DC controller PCB may be faulty.

5) Turn off the power switch, and detach the door switch actuator.
6) Remove the door switch actuator.
6) Detach the jumper wire from the DC controller PCB.
7) Connect the connector to J3 on the potential control circuit.
8) Turn on the power switch.

2. Method 2
1) Turn off the power switch.
2) Remove the developing assembly, and slide out the process unit.
3) Disconnect the connector of the potential sensor.

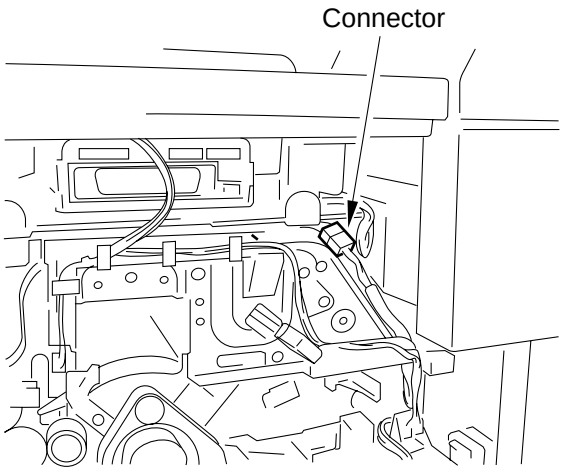

Figure 2-G103

4) Remove the two screws, and replace the potential sensor support plate.

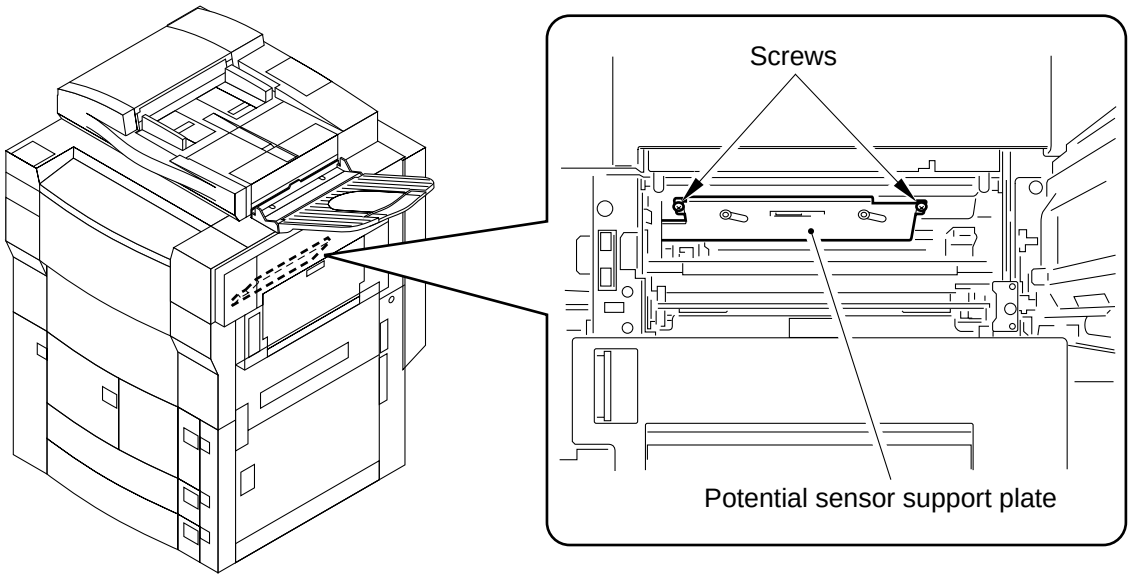

Figure 2-G104

5) Put back the developing assembly and the process unit.
6) Connect the connector of the potential sensor.

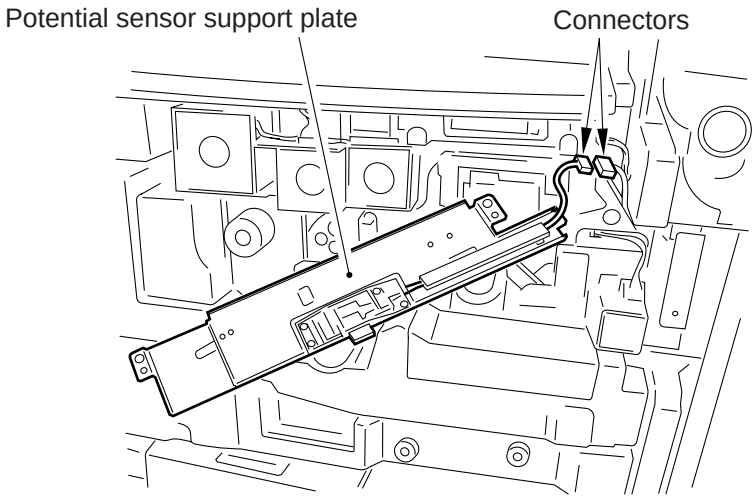

Figure 2-G105

7) Attach the potential sensor tester electrode (FY9-3041) to the potential sensor.

Caution:
When attaching the tester electrode to the potential sensor, take care so that the magnet on the meter electrode will not come into contact with the potential sensor cover.

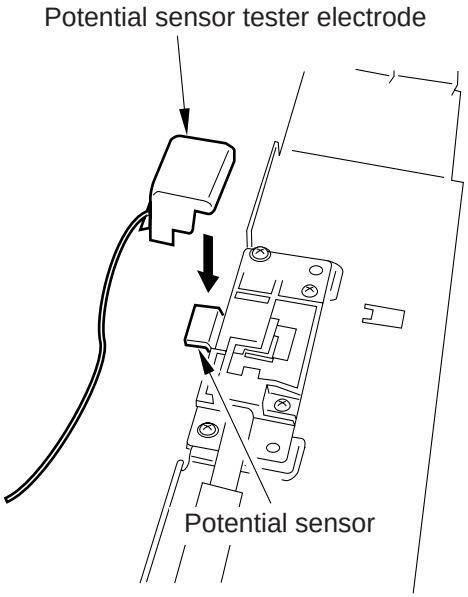

Figure 2-G106

8) Connect the cable of the potential sensor tester electrode to the support metal plate (GND) of the potential measurement PCB.

Caution:
Be sure never to bring the clip into contact with the cover of the sensor. Keep it sufficiently away from the window of the sensor.

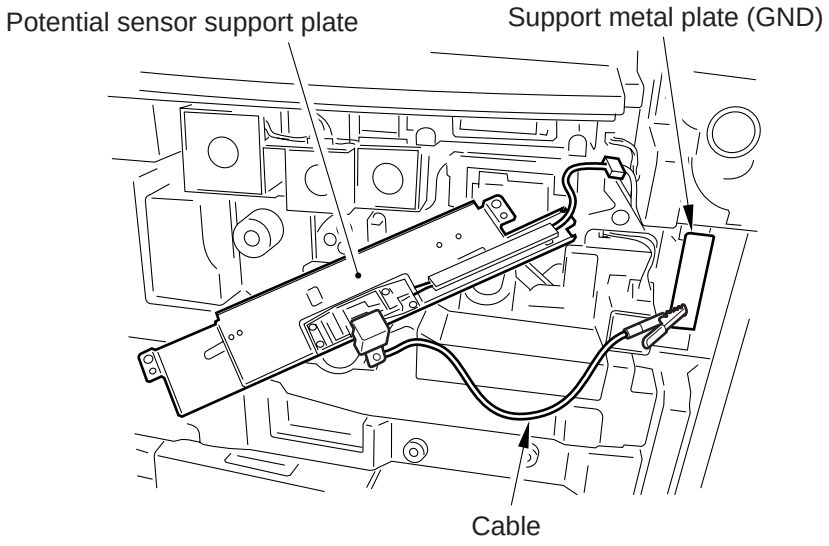

Figure 2-G107

9) Fit the door switch auto control into the door switch assembly.
10) Turn on the power switch.

Caution:
Do not touch the potential sensor after turning on the power switch.

11) Select COPIER>DISPLAY>DPOT>DPOT-K in service mode, and check that the reading during initial rotation is between 0 and 30.

Reference:
1. If the result in method 1 is as indicated, and the result in method 2 is not as indicated, suspect dirt on the sensor or a fault in the potential measurement unit.
2. If the results in method 1 and method 2 are as indicated, assume that the signal path from the potential sensor unit to the microprocessor on the DC controller PCB is normal and the operation in general is also normal.

12) Turn off the power switch.
13) Detach the potential sensor meter electrode.
14) Mount the potential sensor support plate.
15) Turn on the power switch.

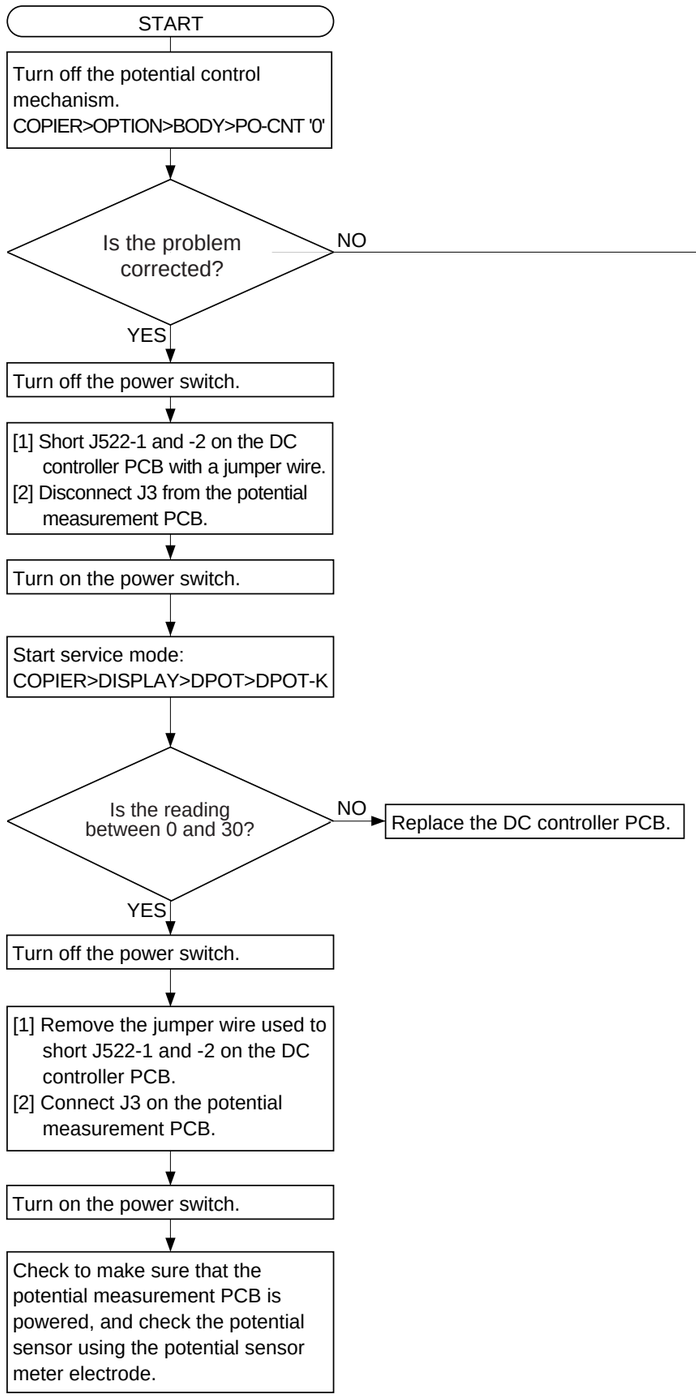
START
Turn off the potential control mechanism.
COPIER>OPTION>BODY>PO-CNT '0'
Is the problem corrected?
NO
YES
Turn off the power switch.
[1] Short J522-1 and -2 on the DC controller PCB with a jumper wire.
[2] Disconnect J3 from the potential measurement PCB.
Turn on the power switch.
Start service mode:
COPIER>DISPLAY>DPOT>DPOT-K
Is the reading between 0 and 30?
NO
Replace the DC controller PCB.
YES
Turn off the power switch.
[1] Remove the jumper wire used to short J522-1 and -2 on the DC controller PCB.
[2] Connect J3 on the potential measurement PCB.
Turn on the power switch.
Check to make sure that the potential measurement PCB is powered, and check the potential sensor using the potential sensor meter electrode.

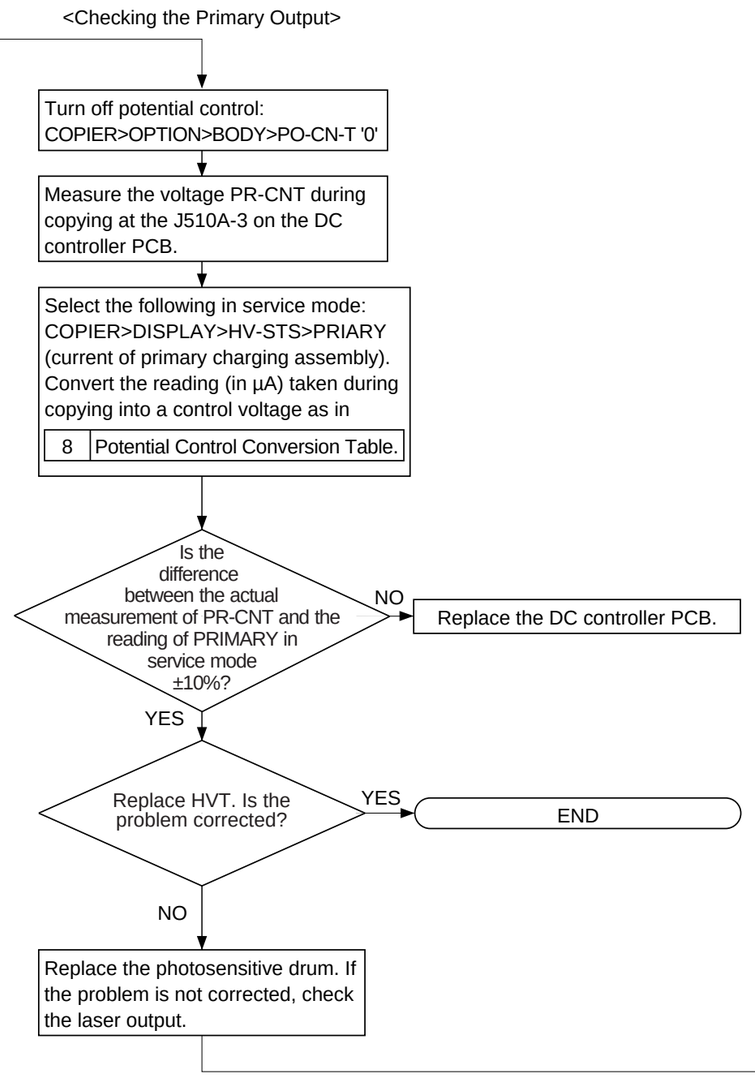
<Checking the Primary Output>
Turn off potential control:
COPIER>OPTION>BODY>PO-CN-T '0'
Measure the voltage PR-CNT during copying at the J510A-3 on the DC controller PCB.
Select the following in service mode:
COPIER>DISPLAY>HV-STS>PRIARY
(current of primary charging assembly).
Convert the reading (in µA) taken during copying into a control voltage as in
8 Potential Control Conversion Table.
Is the difference between the actual measurement of PR-CNT and the reading of PRIMARY in service mode ±10%?
NO
Replace the DC controller PCB.
YES
Replace HVT. Is the problem corrected?
YES
END
NO
Replace the photosensitive drum. If the problem is not corrected, check the laser output.

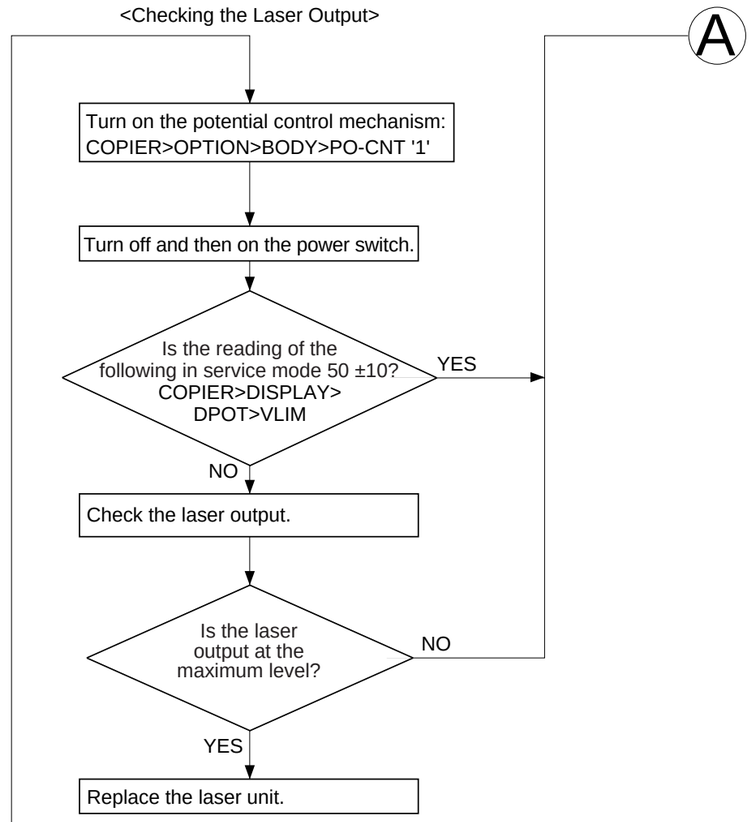
<Checking the Laser Output>
A
Turn on the potential control mechanism:
COPIER>OPTION>BODY>PO-CNT '1'
Turn off and then on the power switch.
Is the reading of the following in service mode 50 ±10?
COPIER>DISPLAY>
DPOT>VLIM
YES
NO
Check the laser output.
Is the laser output at the maximum level?
NO
YES
Replace the laser unit.

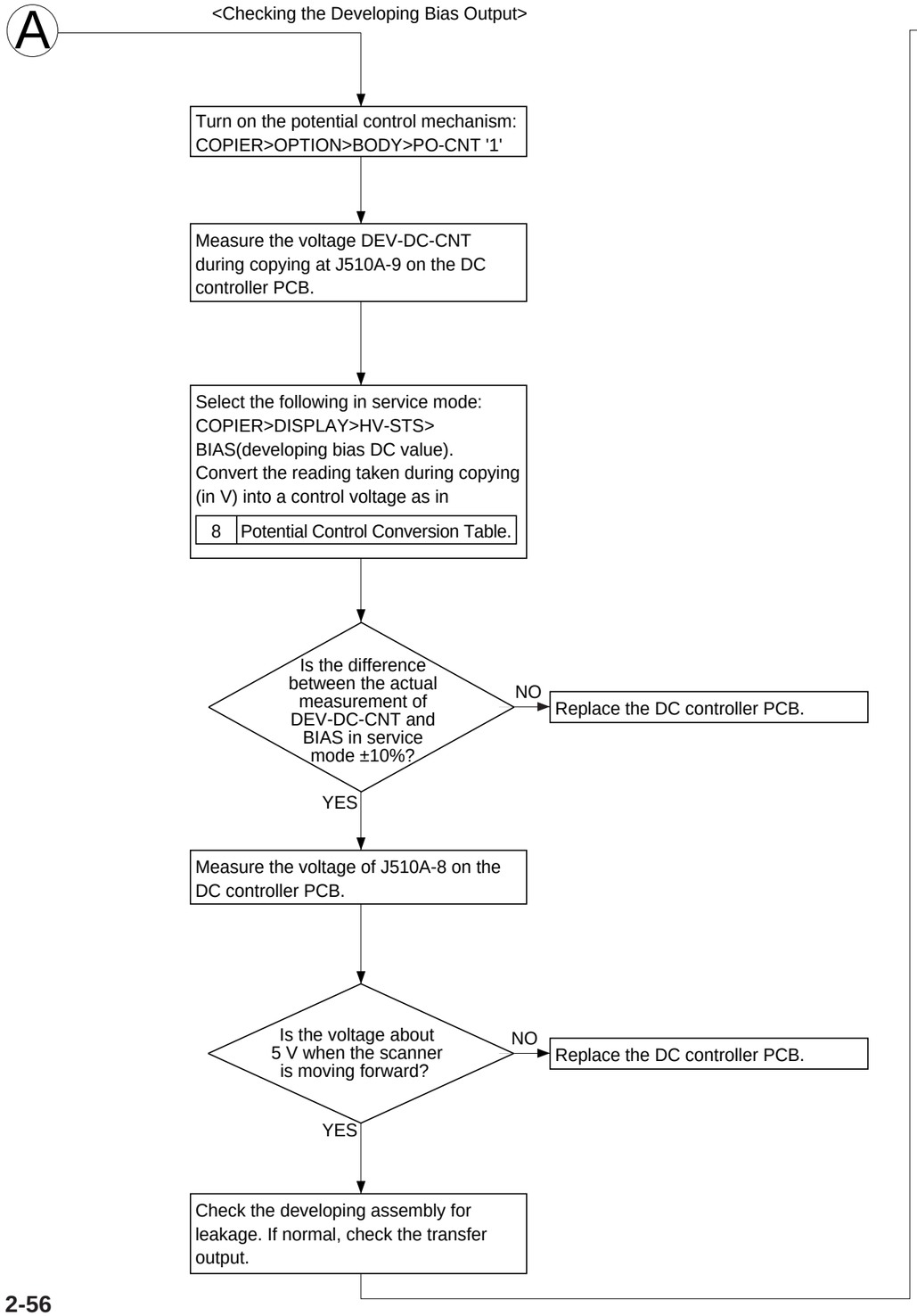
A
<Checking the Developing Bias Output>
Turn on the potential control mechanism: COPIER>OPTION>BODY>PO-CNT '1'
Measure the voltage DEV-DC-CNT during copying at J510A-9 on the DC controller PCB.
Select the following in service mode: COPIER>DISPLAY>HV-STS> BIAS(developing bias DC value). Convert the reading taken during copying (in V) into a control voltage as in
8 Potential Control Conversion Table.
Is the difference between the actual measurement of DEV-DC-CNT and BIAS in service mode ±10%?
NO
Replace the DC controller PCB.
YES
Measure the voltage of J510A-8 on the DC controller PCB.
Is the voltage about 5 V when the scanner is moving forward?
NO
Replace the DC controller PCB.
YES
Check the developing assembly for leakage. If normal, check the transfer output.

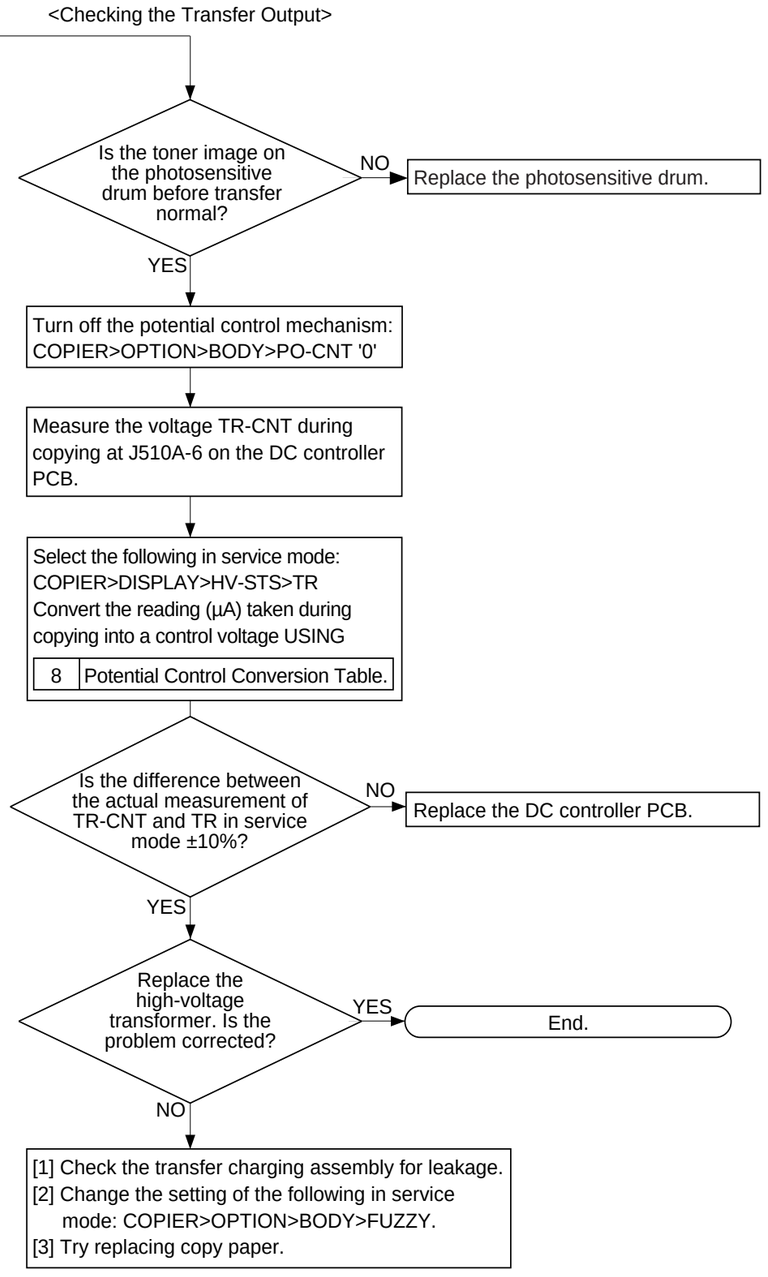
<Checking the Transfer Output>
Is the toner image on the photosensitive drum before transfer normal?
NO
Replace the photosensitive drum.
YES
Turn off the potential control mechanism: COPIER>OPTION>BODY>PO-CNT '0'
Measure the voltage TR-CNT during copying at J510A-6 on the DC controller PCB.
Select the following in service mode: COPIER>DISPLAY>HV-STS>TR Convert the reading (µA) taken during copying into a control voltage USING
8 Potential Control Conversion Table.
Is the difference between the actual measurement of TR-CNT and TR in service mode ±10%?
NO
Replace the DC controller PCB.
YES
Replace the high-voltage transformer. Is the problem corrected?
YES
End.
NO
[1] Check the transfer charging assembly for leakage.
[2] Change the setting of the following in service mode: COPIER>OPTION>BODY>FUZZY.
[3] Try replacing copy paper.

8 Potential Control System Conversion Table

Control (V)	Primary (µA)	Developing bias (V)	Pre-transfer (µA)	Transfer (µA)	Separation (µA)
3.00	1,400	0	0	440	100
3.05	1,391	3	-2	437	96
3.10	1,382	7	-4	434	92
3.15	1,373	11	-6	431	88
3.20	1,365	15	-8	429	85
3.25	1,356	18	-10	426	81
3.30	1,347	22	-12	426	77
3.35	1,338	26	-14	420	73
3.40	1,330	30	-16	418	70
3.45	1,321	33	-18	415	66
3.50	1,312	37	-20	412	62
3.55	1,303	41	-22	409	58
3.60	1,295	45	-24	407	55
3.65	1,286	48	-26	404	51
3.70	1,277	52	-28	401	47
3.75	1,268	56	-30	398	43
3.80	1,260	60	-33	396	40
3.85	1,251	63	-35	393	36
3.90	1,242	67	-37	390	32
3.95	1,233	71	-39	387	28
4.00	1,225	75	-41	385	25
4.05	1,216	78	-43	382	21
4.10	1,207	82	-45	379	17
4.15	1,198	86	-47	376	13
4.20	1,190	90	-49	374	10
4.25	1,181	93	-51	371	6
4.30	1,172	97	-53	368	2
4.35	1,163	101	-55	365	-1
4.40	1,155	105	-57	363	-5
4.45	1,146	108	-59	360	-8
4.50	1,137	112	-61	357	-12
4.55	1,128	116	-63	354	-16
4.60	1,120	120	-66	352	-20
4.65	1,111	123	-68	349	-23
4.70	1,102	127	-70	346	-27
4.75	1,093	131	-72	343	-31
4.80	1,085	135	-74	341	-35
4.85	1,076	138	-76	338	-38
4.90	1,067	142	-78	335	-42
4.95	1,058	146	-80	332	-46

Control (V)	Primary (µA)	Developing bias (V)	Pre-transfer (µA)	Transfer (µA)	Separation (µA)
5.00	1,050	150	-82	330	-50
5.05	1,041	153	-84	327	-53
5.10	1,032	157	-86	324	-57
5.15	1,023	161	-88	321	-61
5.20	1,015	165	-90	319	-65
5.25	1,006	168	-92	316	-68
5.30	997	172	-94	313	-72
5.35	938	176	-96	310	-76
5.40	980	180	-99	308	-80
5.45	971	183	-101	305	-83
5.50	962	187	-103	302	-87
5.55	953	191	-105	299	-91
5.60	945	195	-107	297	-95
5.65	936	198	-109	294	-98
5.70	927	202	-111	291	-102
5.75	918	206	-113	288	-106
5.80	910	210	-115	286	-110
5.85	901	213	-117	283	-113
5.90	892	217	-119	280	-117
5.95	883	221	-121	277	-121
6.00	875	225	-123	275	-125
6.05	866	228	-125	272	-128
6.10	857	232	-127	269	-132
6.15	848	236	-129	266	-136
6.20	840	240	-132	264	-140
6.25	831	243	-134	261	-143
6.30	822	247	-136	258	-147
6.35	813	251	-138	255	-151
6.40	805	255	-140	253	-155
6.45	796	258	-142	250	-158
6.50	787	262	-144	247	-162
6.55	778	266	-146	244	-166
6.60	770	270	-148	242	-170
6.65	761	273	-150	239	-173
6.70	752	277	-152	236	-177
6.75	743	281	-154	233	-181
6.80	735	285	-156	231	-185
6.85	726	288	-158	228	-188
6.90	717	292	-160	225	-192
6.95	708	296	-162	222	-196

Control (V)	Primary (µA)	Developing bias (V)	Pre-transfer (µA)	Transfer (µA)	Separation (µA)
7.00	700	300	-165	220	-200
7.05	691	303	-167	217	-203
7.10	682	307	-169	214	-207
7.15	673	311	-171	211	-211
7.20	665	315	-173	209	-215
7.25	656	318	-175	204	-218
7.30	647	322	-177	203	-222
7.35	638	326	-179	200	-226
7.40	630	330	-181	198	-230
7.45	621	333	-183	195	-233
7.50	612	337	-185	192	-237
7.55	603	341	-187	189	-241
7.60	595	345	-189	187	-245
7.65	586	348	-191	184	-248
7.70	577	352	-193	181	-252
7.75	568	356	-195	178	-256
7.80	560	360	-198	176	-260
7.85	551	363	-200	173	-263
7.90	542	367	-202	170	-267
7.95	533	371	-204	167	-271
8.00	525	375	-206	165	-275
8.05	516	378	-208	162	-278
8.10	507	382	-210	159	-282
8.15	498	386	-212	156	-286
8.20	490	390	-214	154	-290
8.25	481	393	-216	151	-293
8.30	472	397	-218	148	-297
8.35	463	401	-220	145	-301
8.40	455	405	-222	143	-305
8.45	446	408	-224	140	-308
8.50	437	412	-226	137	-312
8.55	428	416	-228	134	-316
8.60	420	420	-231	132	-320
8.65	411	423	-233	129	-323
8.70	402	427	-235	126	-327
8.75	393	431	-237	123	-331
8.80	385	435	-239	121	-335
8.85	376	438	-241	118	-338
8.90	367	442	-243	115	-342
8.95	358	446	-245	112	-346

Control (V)	Primary (µA)	Developing bias (V)	Pre-transfer (µA)	Transfer (µA)	Separation (µA)
9.00	350	450	-247	110	-350
9.05	341	453	-249	107	-353
9.10	332	457	-251	104	-357
9.15	323	461	-253	101	-361
9.20	315	465	-255	99	-365
9.25	306	468	-257	96	-368
9.30	297	472	-259	93	-372
9.35	288	476	-261	90	-376
9.40	280	480	-264	88	-380
9.45	271	483	-266	85	-383
9.50	262	487	-268	82	-387
9.55	253	491	-270	79	-391
9.60	245	495	-272	77	-395
9.65	236	498	-274	74	-398
9.70	227	502	-276	71	-402
9.75	218	506	-278	68	-406
9.80	210	510	-280	66	-410
9.85	201	513	-282	63	-413
9.90	192	517	-284	60	-417
9.95	183	521	-286	57	-421
10.00	175	525	-288	55	-425
10.05	166	528	-290	52	-428
10.10	157	532	-292	49	-432
10.15	148	536	-294	46	-436
10.20	140	540	-297	44	-440
10.25	131	543	-299	41	-443
10.30	122	547	-301	38	-447
10.35	113	551	-303	35	-451
10.40	105	555	-305	33	-455
10.45	96	558	-307	30	-458
10.50	87	562	-309	27	-462
10.55	78	566	-311	24	-466
10.60	70	570	-313	22	-470
10.65	61	573	-315	19	-473
10.70	52	577	-317	16	-477
10.75	43	581	-319	13	-481
10.80	35	585	-321	11	-485
10.85	26	588	-323	8	-488
10.90	17	592	-325	5	-492
10.95	8	596	-327	2	-496
11.00	0	600	-330	0	-500

9 Checking the Environment Sensor

1) Perform the following:
   Select COPIER>DISPLAY>ANALOG in service mode; then, check and record the temperature and the humidity indicated on the control panel.
   data A
   RTMP °C ....data A1
   RHUM % ....data A2
2) Press the Reset key twice, and turn off the power switch.
3) Remove the environment sensor, and insert the environment sensor tool (FY9-3014) in its place.
4) Turn on the power switch, and leave the copier alone for 5 min.
5) Select COPIER>DISPLAY>ANALOG in service mode; then, check and record the temperature and the humidity on the control panel:
   data B
   RTMP °C ....data B1
   RHUM % ....data B2
6) Compare data A and data B.
   • The difference between data A1 and data B1 is 0 ±5.
   • The difference between data A2 and data B2 is 0 ±20.
   If the difference between data A and data B is not as indicated, replace the environment sensor.
7) Press the Reset key twice, and turn off the power switch.
8) Detach the environment sensor tool, and inert the environment sensor.
9) Mount all covers.

Caution:
The environment sensor tool (FY9-3014) is adjusted at the factory to high accuracy. To maintain its performance, be sure to store it in an airtight case with a drying agent.

10 Checking the Photointerrupters

The copier's photointerrupters may be checked using either its service mode or a conventional meter or the machine's service mode.

a. Using a Meter

1) Set the meter range to 30 VDC.
2) Connect the - probe of the meter to GND of the DC controller PCB.
3) Connect the + probe of the meter to the terminals indicated (DC controller PCB).
4) Make checks as indicated.

b. Using Service Mode

1) Select COPIER>I/O in service mode, and check the appropriate addresses:

Caution:
Take care. Turning on/off a sensor can start a motor or the like.

Sensor	Connector No. / I/O address	Checks		1/0	Voltage
PS1 Scanner home position sensor	J507-A1	While in standby, move the scanner by hand.	The light-blocking plate is at PS1.	1	5V
	PC		The light-blocking plate is not at PS1.	0	0V
PS3 Image leading edge sensor	J507-A4	While in standby, move the scanner by hand.	When the light-blocking plate is at PS3.	1	5V
	PC		When the light-blocking plate is not at PS3.	0	0V
PS4 Copyboard cover open/closed sensor	J507-B9	While in standby, move the copyboard cover by hand.	The cover is closed.	1	5V
	PC		The cover is opened.	0	0V
PS5 Registration paper sensor	J509-A2	While in standby, put paper over PS5.	Paper is not over PS5.	1	5V
	PC		Paper is over PS5.	0	0V
PS6 Fixing claw jam sensor	J508-B15	While in standby, put paper over PS6.	Paper is not over PS6.	0	0V
	PC		Paper is over PS6.	1	5V
PS7 Fixing cleaning belt sensor	J508-B2	While in standby, put paper over PS7.	Paper is not over PS7.	0	0V
	PC		Paper is over PS7.	1	5V
PS8 Fixing cleaning belt warning sensor	J508-B5	While in standby, put paper over the detecting lever of PS8.	Paper is inserted.	1	5V
	PC		Paper is removed.	0	0V
PS9 Internal delivery sensor	J508-A2	While in standby, put paper over the detecting lever of PS9.	Paper is inserted.	1	5V
	PC		Paper is removed.	0	0V
PS10 External delivery sensor	J508-A8	While in standby, put paper over the detecting lever of PS10.	Paper is inserted.	1	5V
	PC		Paper is removed.	0	0V
PS11 Fixing/feeding unit outlet sensor	J508-A11	While in standby, put paper over the detecting lever of PS11.	Paper is inserted.	1	5V
	PC		Paper is removed.	0	0V
PS12 Duplexing reversal sensor	J519-B6	While in standby, put paper over the detecting lever of PS12.	Paper is inserted.	0	0V
	PC		Paper is removed.	1	5V
PS13 U-turn sensor	J519-B7	While in standby, put paper over the detecting lever of PS13.	Paper is inserted.	1	5V
	PC		Paper is removed.	0	0V

Sensor	Connector No. / I/O address	Checks		1/0	Voltage
PS14 Pre-confluence sensor	J519-B8	While in standby, put paper over the detecting lever of PS14.	Paper is inserted.	1	5V
	PC		Paper is removed.	0	0V
PS15 Post-confluence sensor	J519-B9	While in standby, put paper over the detecting lever of PS15.	Paper is inserted.	1	5V
	PC		Paper is removed.	0	0V
PS16 Reversal sensor	J508-A5	While in standby, put paper over the detecting lever of PS16.	Paper is inserted.	1	5V
	PC		Paper is removed.	0	0V
PS17 Manual feed tray paper sensor	J510-B8	While in standby, move the rear partition plate by hand.	Paper is inserted.	1	5V
	PC		Paper is removed.	0	0V
PS18 Horizontal registration sensor	J519-B1	While in standby, move the side guide by hand.	The light-blocking plate is not at PS18.	1	5V
	PC		The light-blocking plate is at PS18.	0	0V
PS19 Waste toner full sensor	J514-A2	While in standby, put paper over the detecting lever of PS19.	Paper is inserted.	1	5V
	PC		Paper is removed.	0	0V
PS20 Front deck (right) pickup sensor	J511-B2	While in standby, move the detecting lever by hand.	The light-detecting plate is at PS20.	1	5V
	PC		The light-detecting plate is not at PS20.	0	0V
PS21 Front deck (right) lifter sensor	J511-A6	While in standby, move the detecting lever by hand.	The light-detecting plate is at PS21.	1	5V
	PC		The light-detecting plate is not at PS21.	0	0V
PS22 Front deck (right) paper sensor	J511-A9	While in standby, move the detecting lever by hand.	The light-detecting plate is at PS22.	1	5V
	PC		The light-detecting plate is not at PS22.	0	0V
PS23 Front deck (right) open/closed sensor	J511-B5	While in standby, move the detecting lever by hand.	The light-detecting plate is at PS23.	1	5V
	PC		The light-detecting plate is not at PS23.	0	0V
PS24 Front deck (right) limit sensor	J511-B8	While in standby, move the detecting lever by hand.	The light-detecting plate is at PS24.	1	0V
	PC		The light-detecting plate is not at PS24.	0	5V
PS25 Front deck (left) pickup sensor	J518-A8	While in standby, move the detecting lever by hand.	The light-detecting plate is at PS25.	1	0V
	PC		The light-detecting plate is not at PS25.	0	5V
PS26 Front deck (right) feeding sensor	J519-B10	While in standby, move the detecting lever by hand.	The light-detecting plate is at PS26.	1	0V
	PC		The light-detecting plate is not at PS26.	0	5V
PS27 Front deck (right) feeding sensor	J511-B11	While in standby, move the detecting lever by hand.	The light-detecting plate is at PS27.	1	0V
	PC		The light-detecting plate is not at PS27.	0	5V

Sensor	Connector No. / I/O address	Checks		1/0	Voltage
PS28 Fixing/feeding unit releasing lever sensor	J509-B9	While in standby, move the detecting lever by hand.	The light-detecting plate is at PS28.	1	5V
	PC		The light-detecting plate is not at PS28.	0	0V
PS31 Front deck (left) lifter sensor	J518-A2	While in standby, move the detecting lever by hand.	The light-detecting plate is at PS31.	1	5V
	PC		The light-detecting plate is not at PS31.	0	0V
PS32 Front deck (left) paper sensor	J518-A5	While in standby, move the detecting lever by hand.	The light-detecting plate is at PS32.	1	5V
	PC		The light-detecting plate is not at PS32.	0	0V
PS33 Front deck (left) open/closed sensor	J518-B2	While in standby, move the detecting lever by hand.	The light-detecting plate is at PS33.	1	5V
	PC		The light-detecting plate is not at PS33.	0	0V
PS34 Front deck (left) limit sensor	J518-A5	While in standby, move the detecting lever by hand.	The light-detecting plate is at PS34.	1	5V
	PC		The light-detecting plate is not at PS34.	0	0V
PS35 Multifeeder detecting inlet sensor	J510-B2	While in standby, move the detecting lever by hand.	The light-detecting plate is at PS35.	1	5V
	PC		The light-detecting plate is not at PS35.	0	0V
PS37 Cassette 3 pickup sensor	J515-B2	While in standby, move the detecting lever by hand.	The light-detecting plate is at PS37.	—	5V
	——		The light-detecting plate is not at PS37.	—	0V
PS38 Cassette 3 lifter sensor	J515-A6	While in standby, move the detecting lever by hand.	The light-detecting plate is at PS38.	1	5V
	PC		The light-detecting plate is not at PS38.	0	0V
PS39 Cassette 3 paper sensor	J515-A9	While in standby, move the detecting lever by hand.	The light-detecting plate is at PS39.	—	5V
	——		The light-detecting plate is not at PS39.	—	0V
PS40 Cassette 3 open/closed sensor	J515-B5	While in standby, move the detecting lever by hand.	The light-detecting plate is at PS40.	1	5V
	PC		The light-detecting plate is not at PS40.	0	0V
PS41 Vertical path 3 sensor	J515-B8	While in standby, move the detecting lever by hand.	The light-detecting plate is at PS41.	1	5V
	PC		The light-detecting plate is not at PS41.	0	0V
PS42 Cassette 4 pickup sensor	J517-B2	While in standby, move the detecting lever by hand.	The light-detecting plate is at PS42.	1	5V
	PC		The light-detecting plate is not at PS42.	0	0V
PS43 Cassette 4 lifter sensor	J518-A6	While in standby, move the detecting lever by hand.	The light-detecting plate is at PS43.	1	5V
	PC		The light-detecting plate is not at PS43.	0	0V
PS44 Cassette 4 paper sensor	J517-A9	While in standby, move the detecting lever by hand.	The light-detecting plate is at PS44.	1	5V
	PC		The light-detecting plate is not at PS44.	0	0V

Sensor	Connector No. / I/O address	Checks		1/0	Voltage
PS45 Cassette 4 open/closed sensor	J517-A9	While in standby, move the detecting lever by hand.	The light-detecting plate is at PS45.	1	5V
	PC		The light-detecting plate is not at PS45.	0	0V
PS46 Vertical path 4 sensor	J517-B8	While in standby, move the detecting lever by hand.	The light-detecting plate is at PS46.	1	5V
	PC		The light-detecting plate is not at PS46.	0	0V
PS47 Pre-registration paper sensor	J502-B5	While in standby, move the detecting lever by hand.	The light-detecting plate is at PS47.	1	5V
	PC		The light-detecting plate is not at PS47.	0	0V
PS48 Lower right cover open/closed sensor	J516-A2	While in standby, move the detecting lever by hand.	The light-detecting plate is at PS48.	1	5V
	PC		The light-detecting plate is not at PS48.	0	0V
PS49 Vertical path 2 sensor	J516-B9	While in standby, move the detecting lever by hand.	The light-detecting plate is at PS49.	1	5V
	PC		The light-detecting plate is not at 49.	0	0V
PS51 Deck (right) paper level middle sensor	J513-B9	While in standby, move the detecting lever by hand.	The light-detecting plate is at PS51.	1	5V
	PC		The light-detecting plate is not at PS51.	0	0V
PS52 Deck (right) paper level upper sensor	J513-B12	While in standby, move the detecting lever by hand.	The light-detecting plate is at PS52.	—	5V
	——		The light-detecting plate is not at PS52.	—	0V
PS54 Deck (left) paper level middle sensor	J514-B9	While in standby, move the detecting lever by hand.	The light-detecting plate is at PS54.	1	5V
	PC		The light-detecting plate is not at PS54.	0	0V
PS55 Deck (left) paper level upper sensor	J514-B12	While in standby, move the detecting lever by hand.	The light-detecting plate is at PS55.	—	5V
	——		The light-detecting plate is not at PS55.	—	0V
PS56 Multifeeder cover open/closed sensor	J502-A2	While in standby, move the detecting lever by hand.	The light-detecting plate is at PS56.	1	5V
	PC		The light-detecting plate is not at PS56.	0	0V
PS58 Left center cover open/closed sensor	J502-B2	While in standby, move the detecting lever by hand.	The light-detecting plate is at PS58.	1	5V
	PC		The light-detecting plate is not at PS58.	0	0V
PS59 Toner cartridge cover open/closed sensor	J512-B2	While in standby, move the detecting lever by hand.	The light-detecting plate is at PS59.	1	5V
	PC		The light-detecting plate is not at PS59.	0	0V

CHAPTER 3 ARRANGEMENT AND FUNCTION OF ELECTRICAL PARTS

A. Clutches

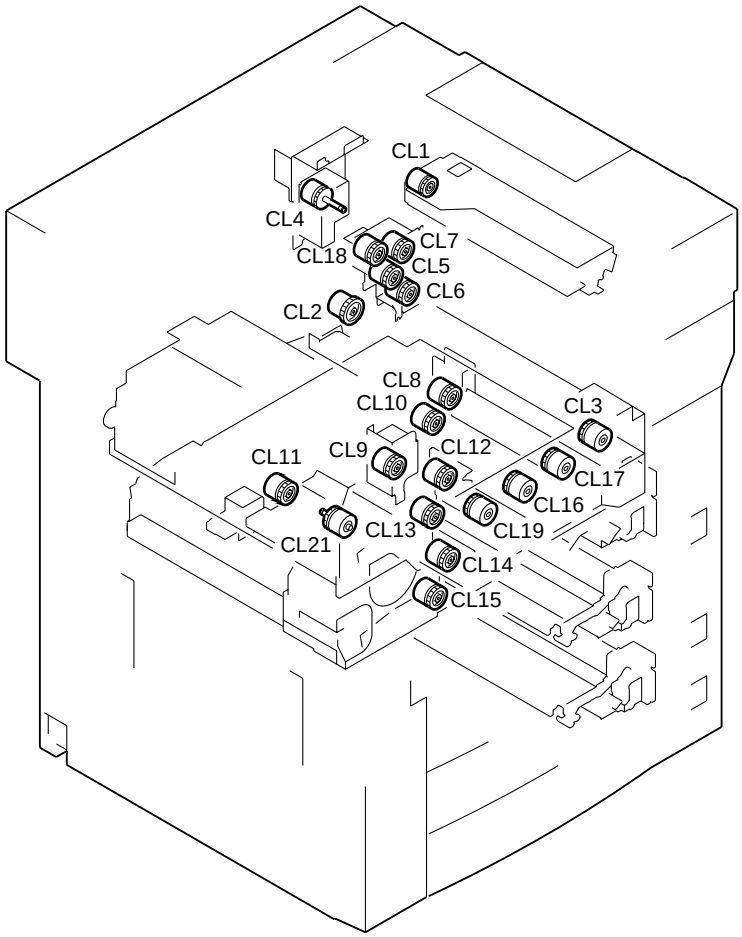

Figure 3-101

Clutches

Symbol	Name	Notation	Description
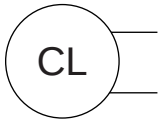	Clutch	CL1	Drives the hopper.
		CL2	Drives the registration roller.
		CL3	Drives the registration roller brake.
		CL4	Drives the developing cylinder.
		CL5	Drives the pre-registration roller.
		CL6	Drives the pre-registration roller brake.
		CL7	Drives the manual feed tray pickup roller.
		CL8	Drives the vertical path 1 roller.
		CL9	Drives the vertical path 2 roller.
		CL10	Drives the front deck (right) pickup roller.
		CL11	Drives the front deck (left) pickup roller.
		CL12	Drives the cassette 3 pickup roller.
		CL13	Drives the vertical path 3 roller.
		CL14	Drives the cassette 4 pickup roller.
		CL15	Drives the vertical path 4 roller.
		CL16	Drives the lower feeding middle roller.
		CL17	Drives the lower feeding right roller.
		CL18	Drives the manual feed tray feeding roller.
		CL19	Drives the front deck (left) feeding roller.
		CL21	Switches delivery speed.

B. Solenoids

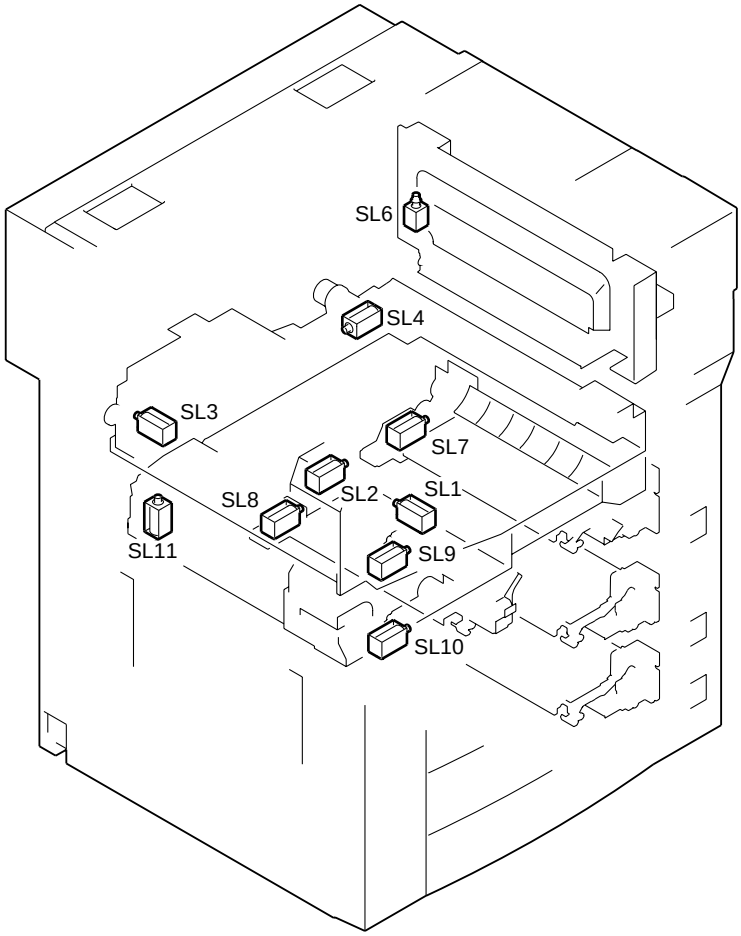

Figure 3-102

Solenoids

Symbol	Name	Notation	Description
	Solenoid	SL1 SL2 SL3 SL4 SL6 SL7 SL8 SL9 SL10 SL11	Drives the fixing inlet guide. Drives the fixing cleaning belt. Drives the delivery flapper. Locks the fixing/feeding unit. Drives the manual feed tray pickup latch. Drives the front deck (right) pickup mechanism. Drives the front deck (left) pickup mechanism. Drives the cassette 3 pickup mechanism. Drives the cassette 4 pickup mechanism. Drives the reversing flapper.

C. Motors

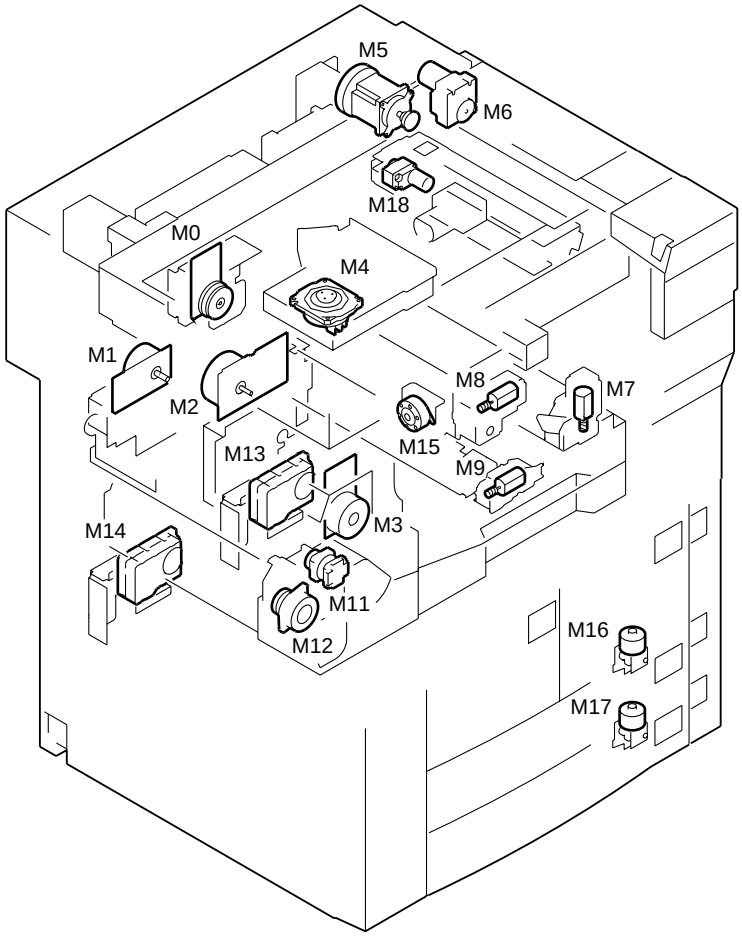

Figure 3-103

Motors

Symbol	Name	Notation	Description
M	Motor	M0	Drum motor
		M1	Main motor
		M2	Pickup motor
		M3	Fixing motor
		M4	Laser scanner motor
		M5	Scanner motor
		M6	Cartridge motor
		M7	Pre-transfer charging wire cleaner motor
		M8	Primary charging wire cleaner motor
		M9	Transfer separation charging wire cleaner motor
		M11	Reversal motor
		M12	Duplexing feeding motor
		M13	Front deck (right) lifter motor
		M14	Front deck (left) lifter motor
		M15	Horizontal registration motor
		M16	Cassette 3 lifter motor
		M17	Cassette 4 lifter motor
		M18	Hopper inside toner feeder motor

D. Fans

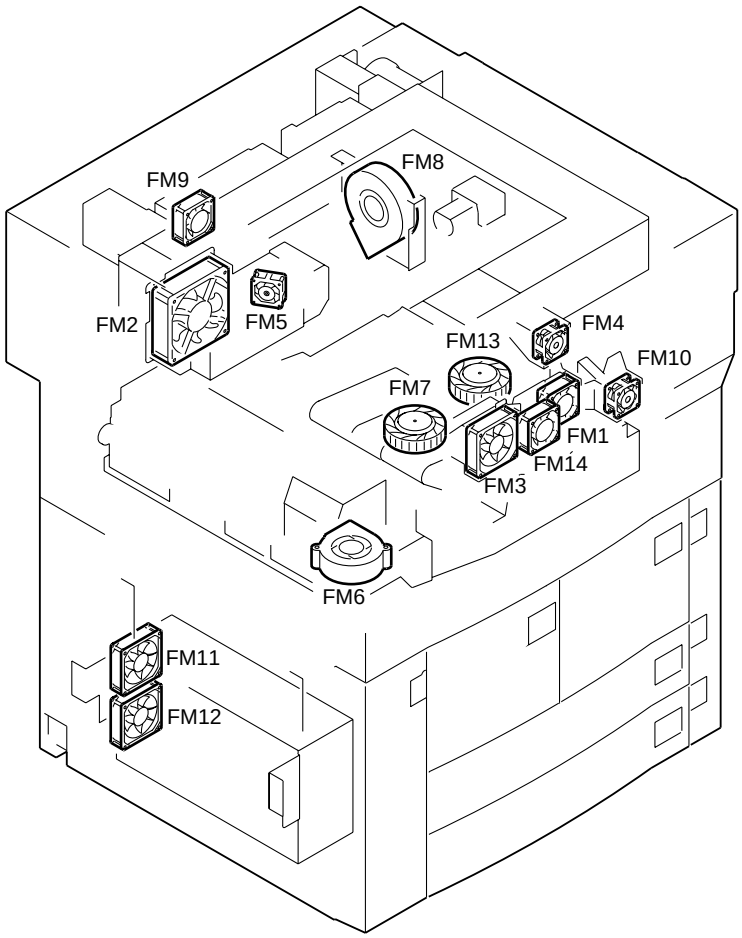

Figure 3-104

Fans

Symbol	Name	Notation	Description
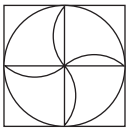	Fans	FM1	Primary charging assembly fan
		FM2	Fixing assembly heat discharge fan
		FM3	Scanner cooling fan
		FM4	Stream reading fan
		FM5	Laser driver cooling fan
		FM6	De-curling fan
		FM7	Feeding fan
		FM8	Drum fan
		FM9	Inverter cooling fan
		FM10	Pre-transfer charging assembly fan
		FM11	Power supply cooling fan 1
		FM12	Power supply cooling fan 2
		FM13	Separation fan
		FM14	Laser scanner fan

E. Sensors 1

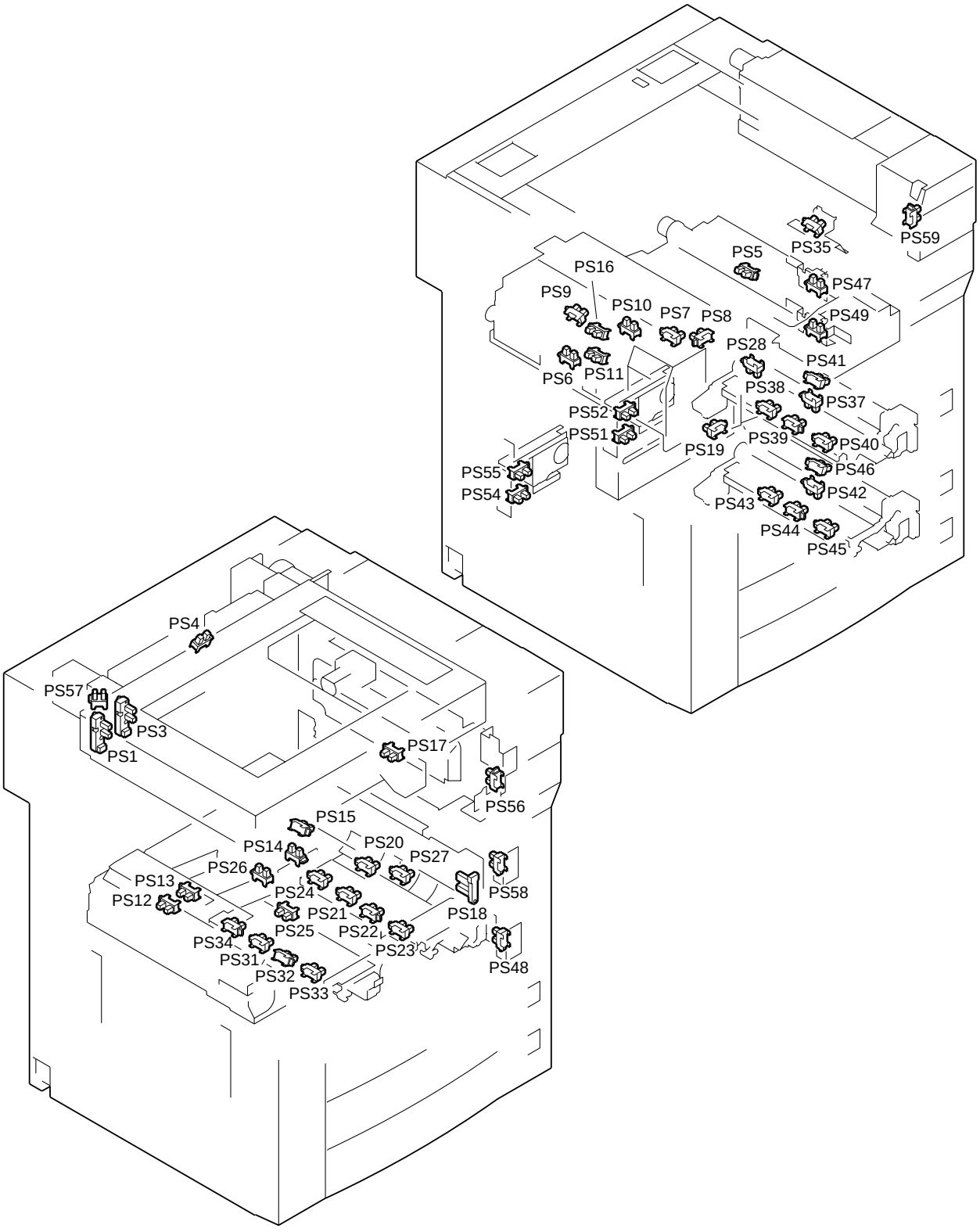

Figure 3-105

Sensors 1

Symbol	Name	Notation	Description
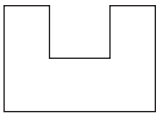	Photointerrupter	PS1	Scanner home position detection
		PS3	Image leading edge detection
		PS4	ADF open/closed detection
		PS5	Registration paper detection
		PS6	Fixing claw jam detection
		PS7	Fixing cleaning belt detection
		PS8	Fixing cleaning belt warning detection
		PS9	Internal delivery paper detection
		PS10	External delivery paper detection
		PS11	Fixing feeding unit outlet paper detection
		PS12	Duplexing reversal paper detection
		PS13	U-turn paper detection
		PS14	Pre-confluence paper detection
		PS15	Post-confluence paper detection
		PS16	Reversal paper detection
		PS17	Manual feed tray paper detection
		PS18	Horizontal registration paper detection
		PS19	Waste toner case full detection
		PS20	Front deck (right) pickup paper detection
		PS21	Front deck (right) lifter position detection
		PS22	Front deck (right) paper detection
		PS23	Front deck (right) open/closed detection
		PS24	Front deck (right) lifter upper limit detection
		PS25	Front deck (left) pickup paper detection
		PS26	Front deck (left) feeding paper detection
		PS27	Front deck (right) feeding paper detection
		PS28	Fixing/feeding unit releasing lever detection
		PS31	Front deck (left) lifter position detection
		PS32	Front deck (left) paper detection
		PS33	Front deck (left) open/closed detection
		PS34	Front deck (left) lifter upper limit detection
		PS35	Manual feed tray de-curling inlet paper detection
		PS37	Cassette 3 pickup paper detection
		PS38	Cassette 3 lifter position detection
		PS39	Cassette 3 paper detection
		PS40	Cassette 3 open/closed detection
		PS41	Vertical path 3 roller paper detection
		PS42	Cassette 4 pickup paper detection
		PS43	Cassette 4 lifter position detection
		PS44	Cassette 4 paper detection
		PS45	Cassette 4 open/closed detection
		PS46	Vertical path 4 roll paper detection
		PS47	Vertical path roller 1 paper detection
		PS48	Lower right cover open/closed detection
		PS49	Vertical path 2 roller paper detection
		PS51	Front deck (right) medium level paper detection
		PS52	Front deck (right) upper level paper detection
		PS54	Front deck (left) medium level paper detection
		PS55	Front deck (left) upper level paper detection
		PS56	Manual feed tray cover open/closed detection
		PS57	Copyboard glass detection
		PS58	Middle right cover open/closed detection
		PS59	Toner cartridge cover open/closed detection

F. Sensors 2

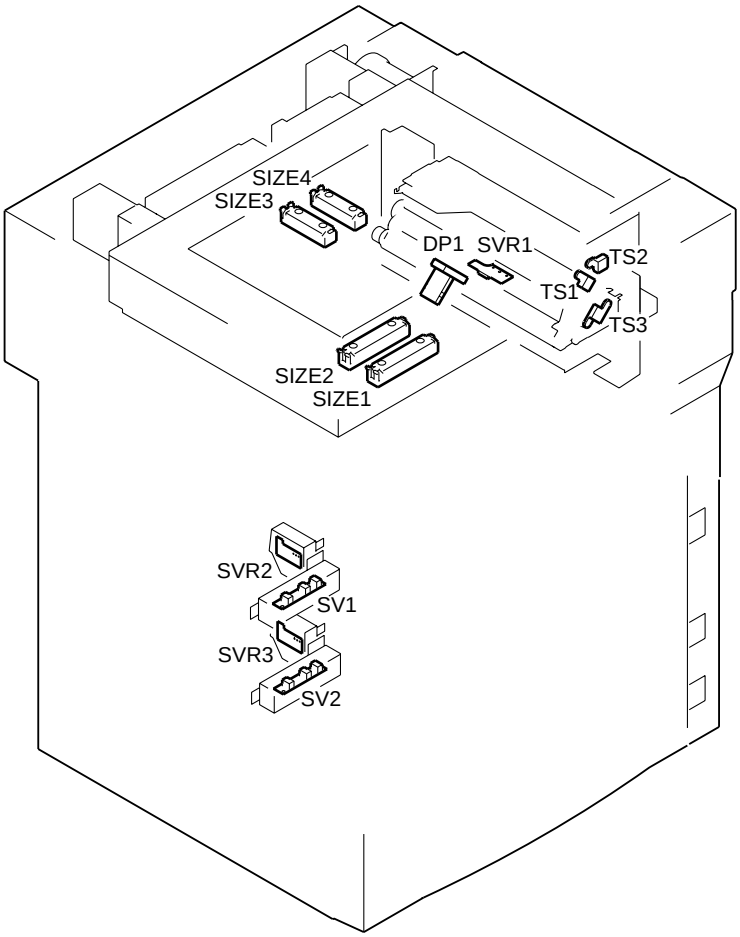

Figure 3-106

Sensors 2

Symbol	Name	Notation	Description
TS	Piezoelectric oscillator	TS1 TS2 TS3	Hopper inside toner level detection 1 Hopper inside toner lower limit detection 2 Developing assembly inside toner level detection
DP	Potential sensor	DP1	Drum surface potential measurement
SV	Photointerrupter	SV1 SV2	Cassette 3 paper length detection Cassette 4 paper length detection
SIZE	Reflecting type sensor	SIZE1 SIZE2 SIZE3 SIZE4	Original size detection 1 Original size detection 2 Original size detection 3 Original size detection 4
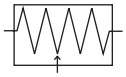	Slide registration	SVR1 SVR2 SVR3	Manual feed tray paper width detection Cassette 3 paper width detection Cassette 4 paper width detection

G. Switches

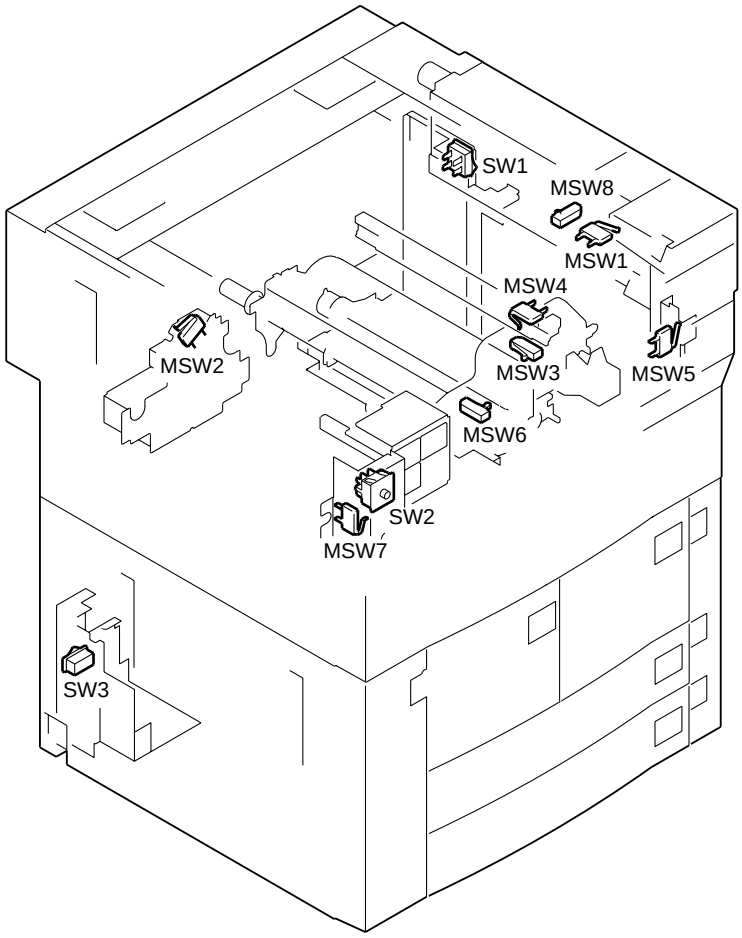

Figure 3-107

Switches

Name	Notation	Description
Switch	SW1	Main switch
	SW2	Front cover switch
	SW3	Drum heater switch
	MSW1	Cartridge detection
	MSW2	Waste toner clogging detection
	MSW3	Pre-transfer charging wire cleaner home position detection
	MSW4	Primary charging wire cleaner home position detection
	MSW5	Manual feed tray cover open/closed detection
	MSW6	Transfer/separation charging wire cleaner home position detection
	MSW7	Front cover open/closed detection
	MSW8	Cartridge motor drive

H. Counters, Heaters, Fuses, and Others

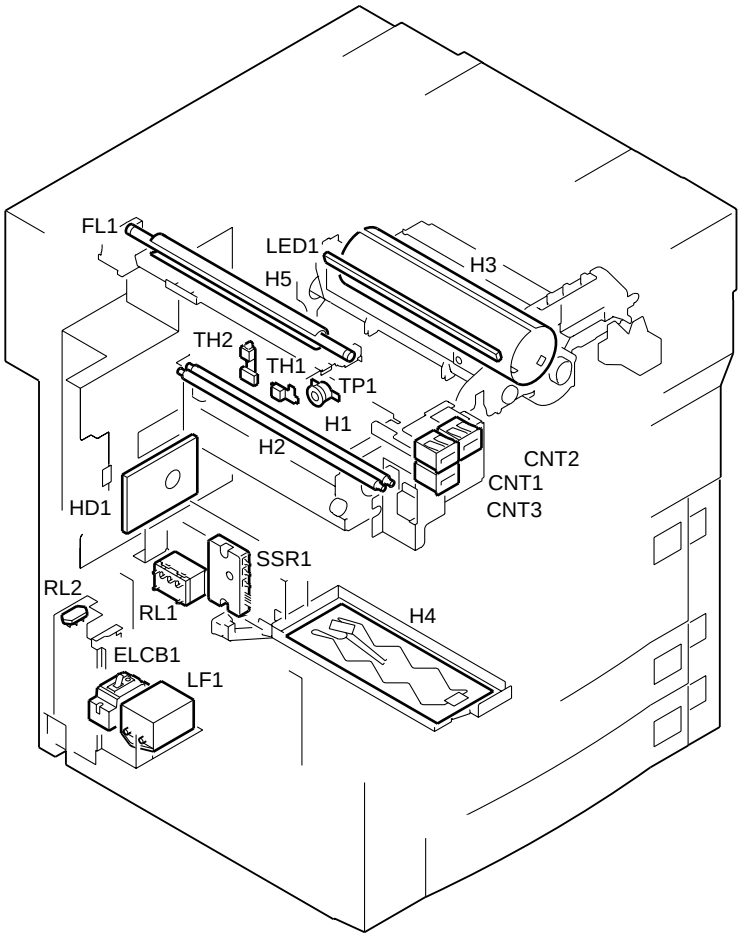

Figure 3-108

Counters, Heaters, Fuses, and Others

Name	Notation	Description
Counter	CNT1 CNT2 CNT3	Total counter Options counter (some 230-V models only) Printer counter
SSR	SSR1	Solid state relay
Scanning lamp (fluorescent lamp)	FL1	Scanning lamp
Heater	H1 H2 H3 H4 H5	Fixing main heater Fixing sub heater Drum heater Cassette heater (standard with 100-V) Scanning lamp heater
Thermistor	TH1 TH2	Fixing heater main thermistor Fixing heater sub thermistor (end part)
Thermal switch	TP1	Fixing heater thermal switch
Leakage breaker	ELCB1	Leakage breaker
Line filter	LF1	AC power supply noise removal
Relay	RL1 RL2	Fixing heater power supply Drum heater/cassette heater power supply
Pre-exposure lamp	LED1	Drum pre-exposure
Image server (hard disk)	HD1	Hard disk memory

I. PCBs

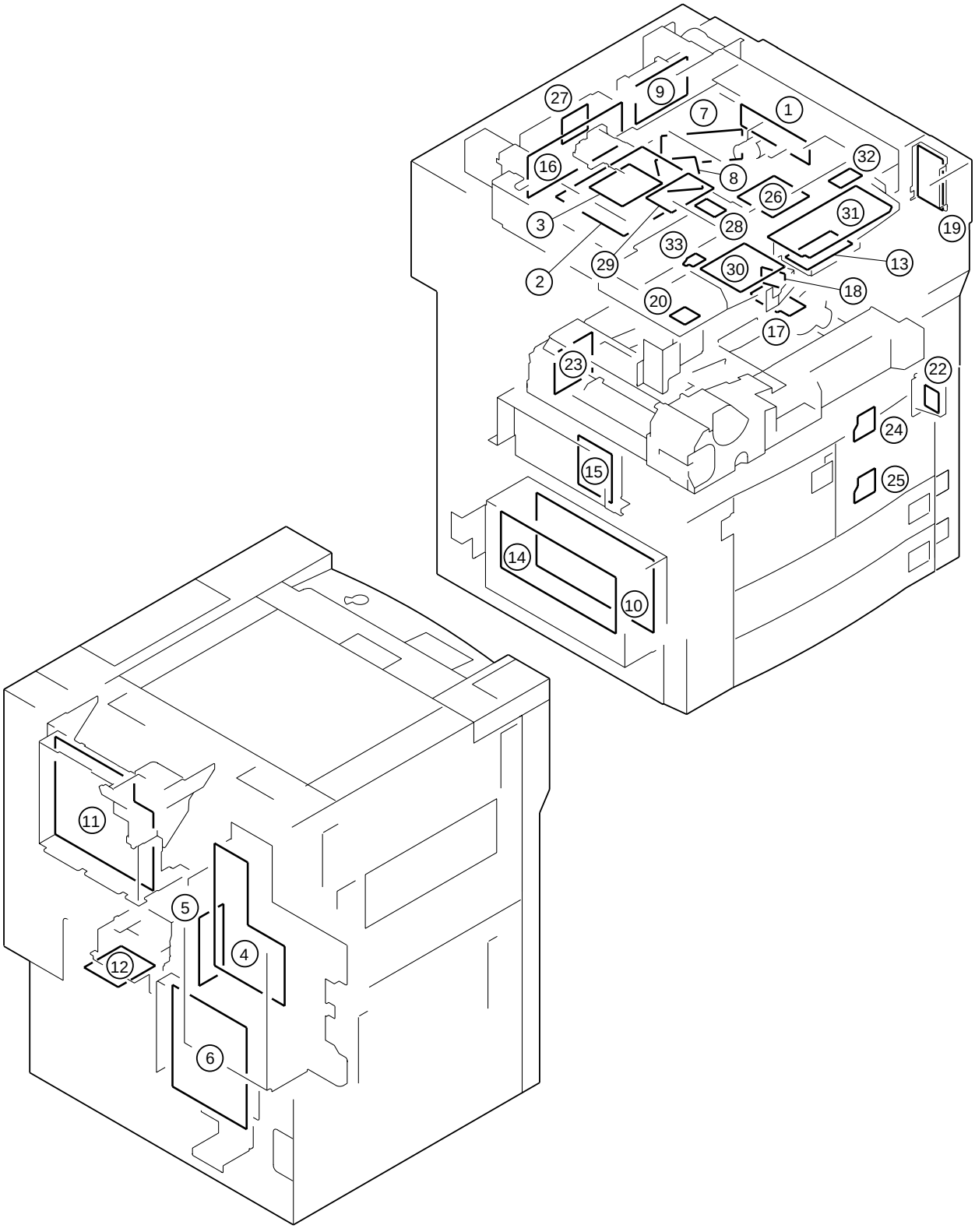

Figure 3-109

PCBs

Notation	Name	Description
1	CCD PCB	CCD drive/analog image processing
2	Image processor PCB	Digital image processing
3	Page memory PCB	Image data storage
4	MFC PCB	System control
5	System motherboard	Signal relay
6	DC controller PCB	DC load control
7	Laser driver PCB 1	Laser diode drive
8	Laser driver PCB 2	Laser intensity control
9	Scanner motor drier PCB	Scanner motor driver
10	DC power supply PCB	DC power supply
11	HVT-DC1 PCB	High-voltage DC component generation
12	HVT-AC PCB	High-voltage AC component generation
13	Bi-Centronics PCB	Downloading I/F
14	Relay PCB	DC power supply distribution/supply
15	Heater driver PCB	Cassette heater drive
16	Fluorescent inverter PCB	Fluorescent lamp activation control
17	Drum heater control PCB	Drum heater drive
18	BD PCB	Laser beam detection
19	Potential control PCB	Drum surface potential control
20	Options counter PCB	Options counter drive
22	Environment sensor PCB	Machine internal temperature/humidity detection
23	No-stacking PCB	Duplexing feeding unit drive
24	Cassette 3 paper level detection PCB	Cassette 3 paper level detection
25	Cassette 4 paper level detection PCB	Cassette 4 paper level detection
26	Laser scanner motor drier PCB	Laser scanner motor drive
27	Intensity control PCB	Fluorescent lamp intensity control
28	Intensity sensor PCB	Fluorescent lamp intensity detection
29	Original orientation detection PCB	Original orientation detection
30	Control panel CPU PCB	Control panel control
31	Control panel key and LED PCB	Control panel key input, LED indication
32	Control panel main switching PCB	Control panel power switch
33	Control panel volume PCB	Control panel contrast adjustment

J. Side Paper Deck

1. Sensors and Switches

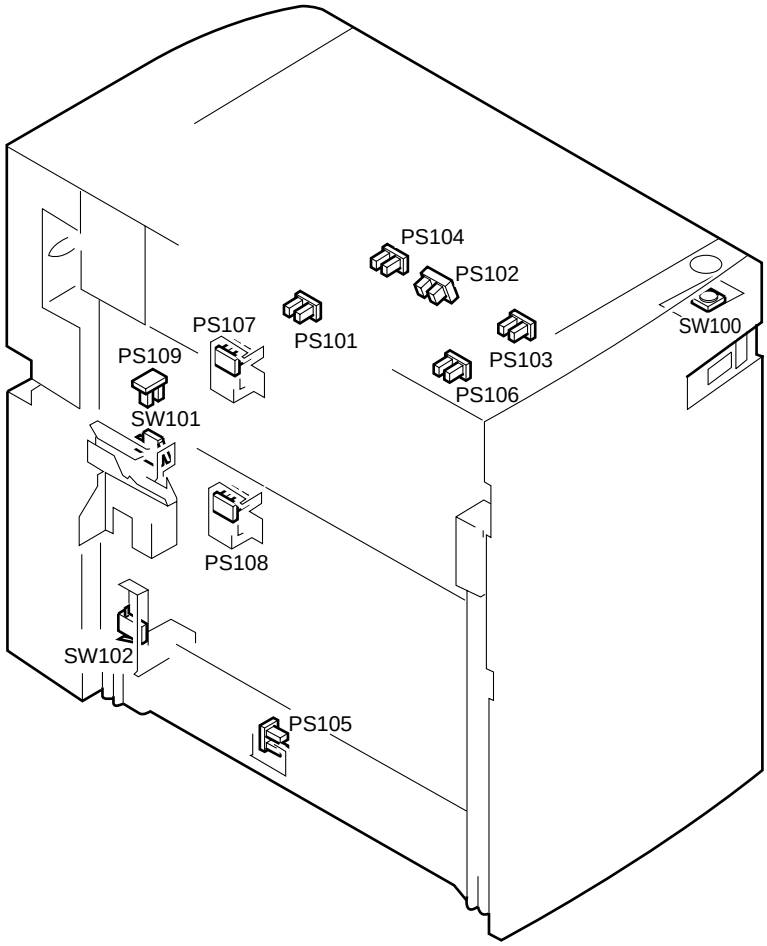

Figure 3-110 Side Paper Deck

Symbol	Name	Notation	Description
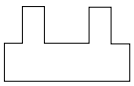	Photointerrupter	PS101 PS102 PS103 PS104 PS105 PS106 PS107 PS108 PS109	Detects paper picked up from the deck. Detects the absence of paper in the deck. Detects the upper limit of the deck lifter. Detects the position of the deck lifter. Detects installation (connection) of the deck. Detects paper in the vertical path for the deck. Detects the deck paper supply position. Detects the level of paper in the deck. Detects the state (open) of the deck.
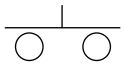	Switch	SW100	Deck open switch
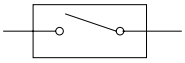	Microswitch	SW101 SW102	Deck open detecting switch Deck lifter upper limit detecting switch

2. Motors, Clutches, Solenoids, and PCBs

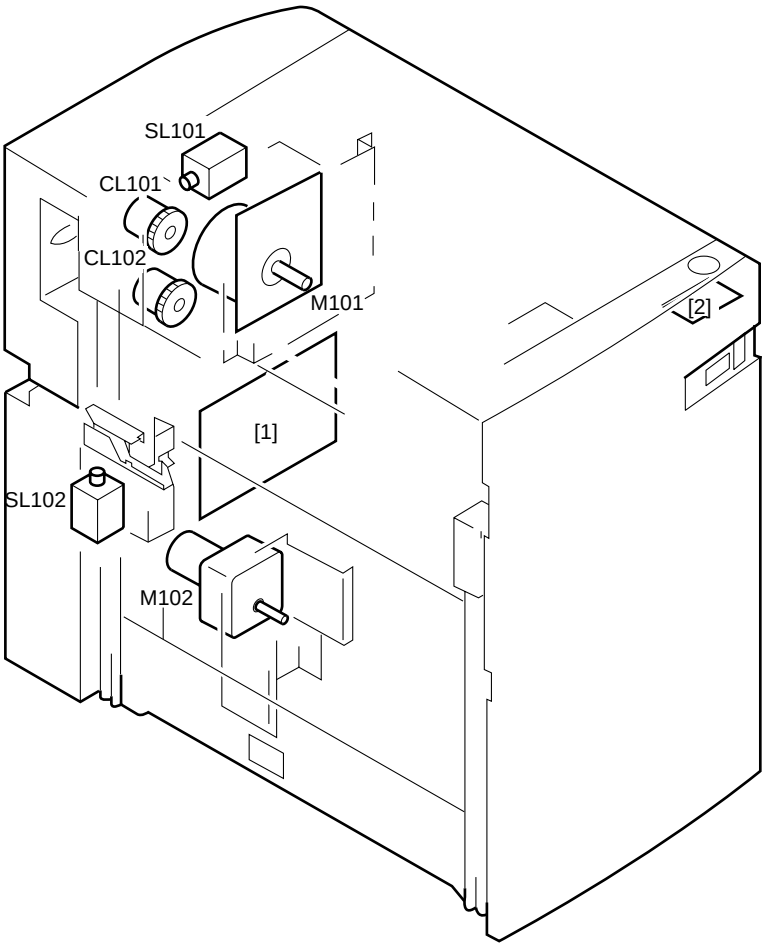

Figure 3-111 Side Paper Deck

Symbol	Name	Notation	Description
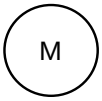	Motor	M101 M102	Deck main motor Deck lifter motor
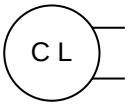	Clutch	CL101 CL102	Deck vertical path clutch Deck pickup clutch
	Solenoid	SL101 SL102	Deck pickup roller releasing solenoid Deck open solenoid
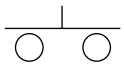	PCB	[1] [2]	Side deck driver PCB Open switch PCB

K. Variable Registers (VR), Light-Emitting Diodes, and Check Pins by PCB

Of the variable resistors (VR), light-emitting diodes, and switches found inside the machine, those needed in the field are discussed.

Caution:

1. Some LEDs emit dim light even when they are off. This is a normal condition, and must be kept in mind.
2. VRs that may be used in the field.

: 

VRs that must not be used in the field

: 

Caution:

The VRs and check pins not found in the tables are for factory use only. They require special tools and high accuracy and, therefore, must not be touched in the fieled when making adjustments and checks.

1. MFC PCB

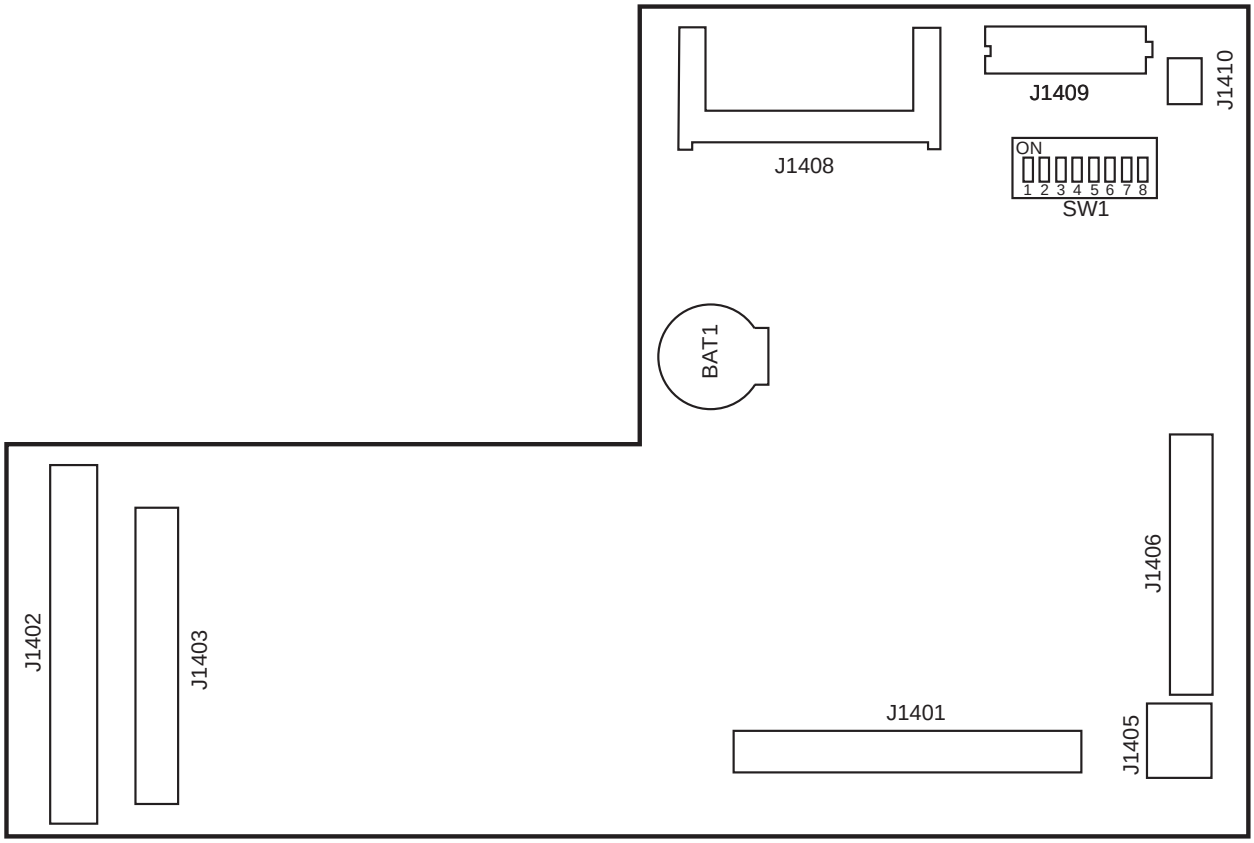

Figure 3-112

The functions of the DIP switch (SW1) are as follows; use it to change the country (site) of installation:

Setting	Configuration
	AB
	A
	INCH
	AB/INCH

2. Image Processor PCB

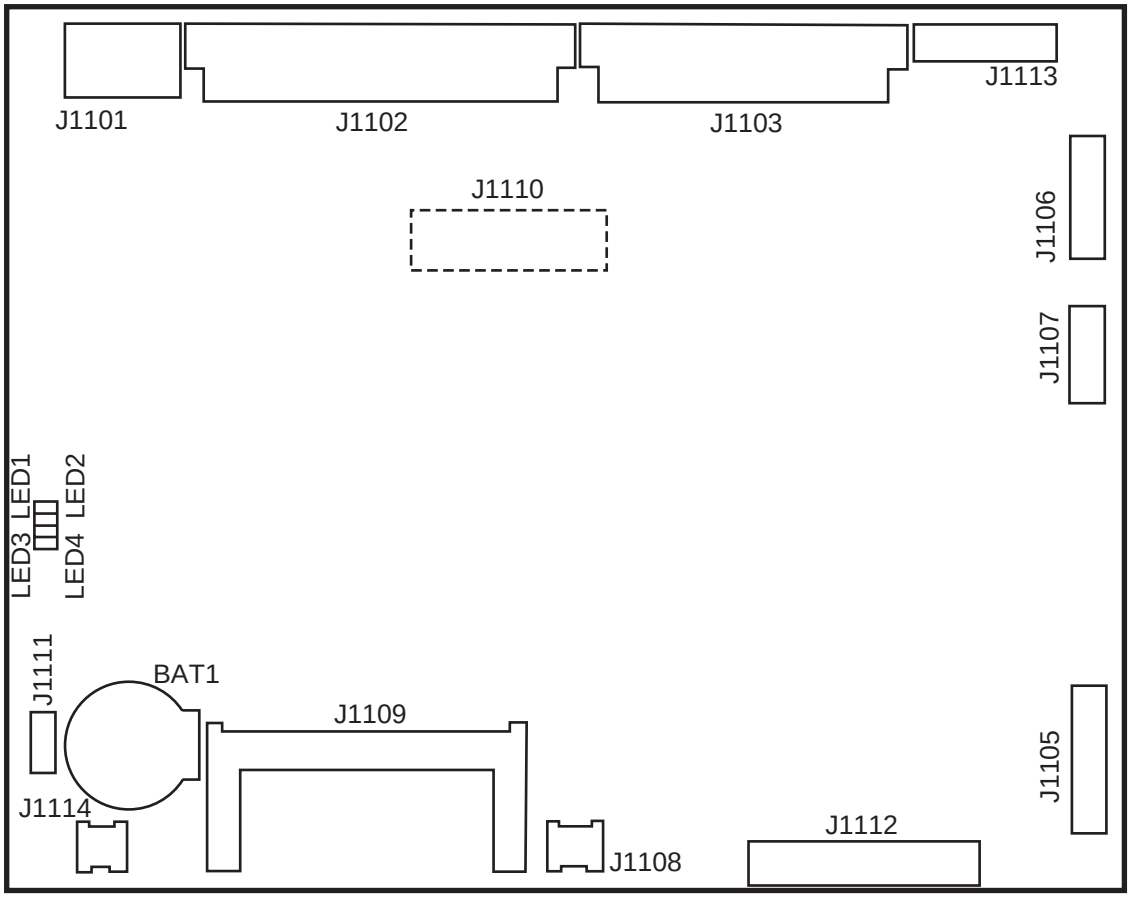

Figure 3-113

3. DC Controller PCB

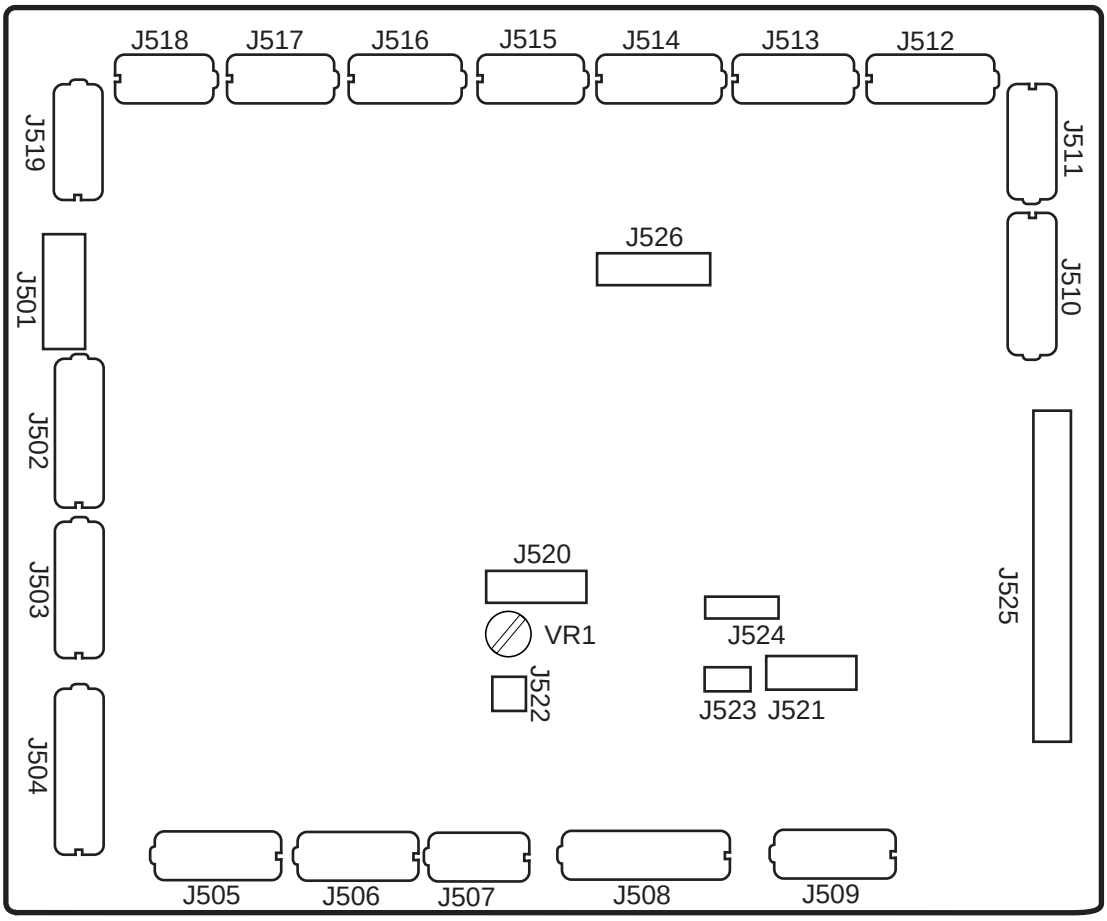

Figure 3-114

4. DC Power Supply PCB

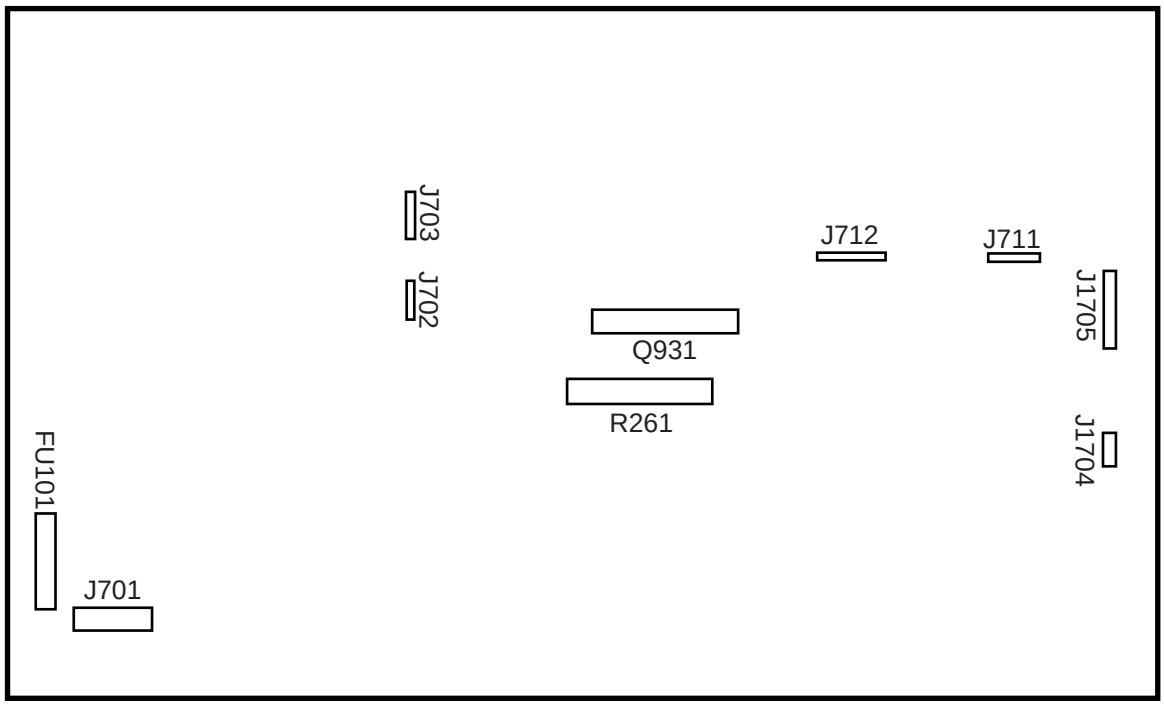

Figure 3-115

5. Relay PCB

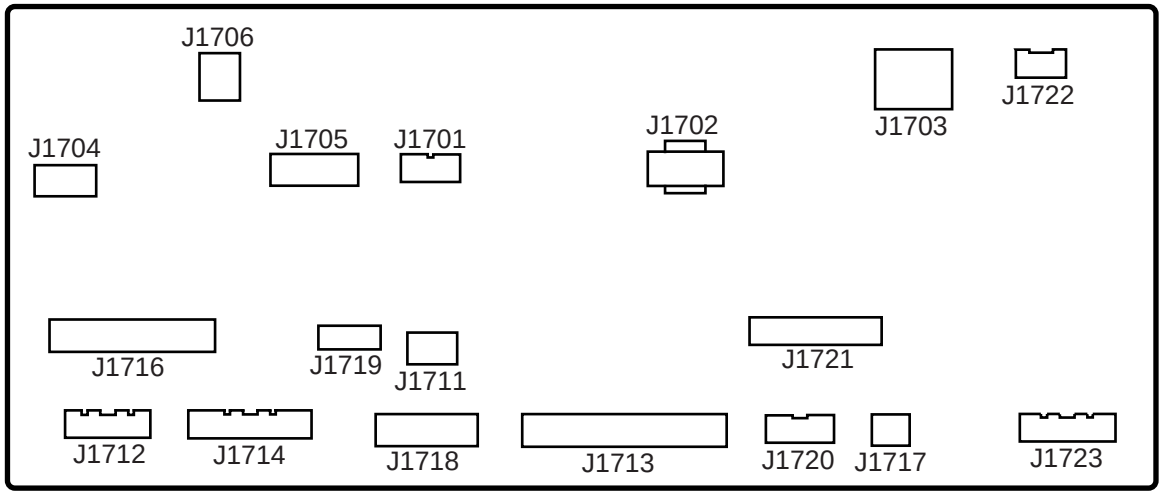

Figure 3-116

6. Control Panel CPU PCB

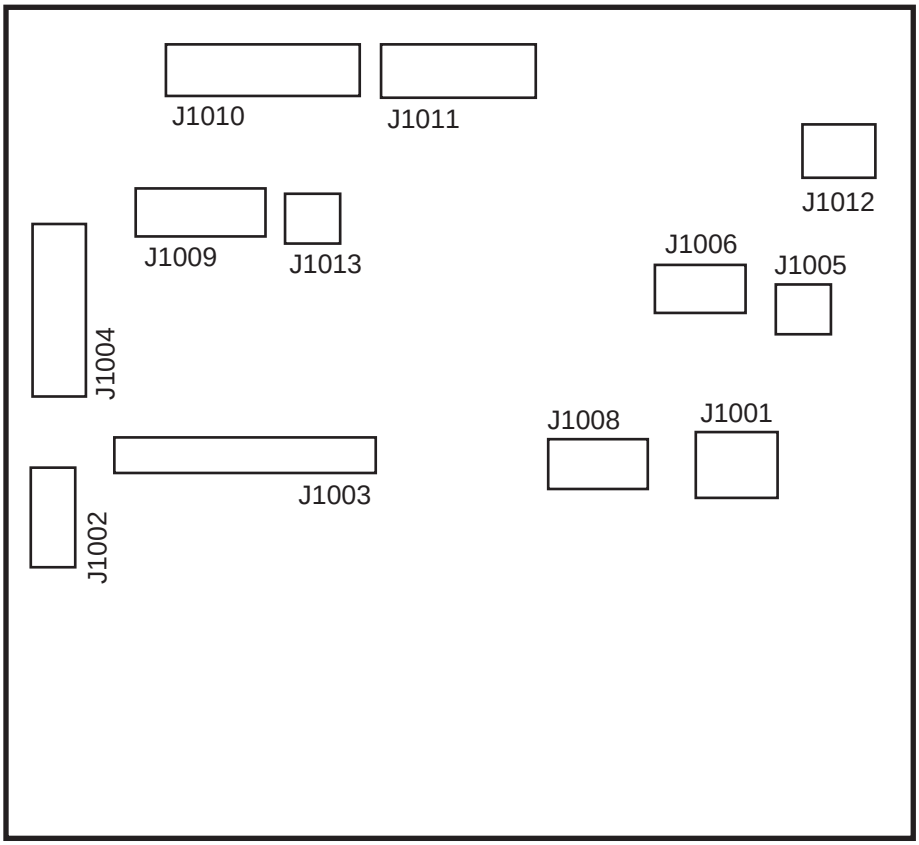

Figure 3-117

7. HV-DC PCB

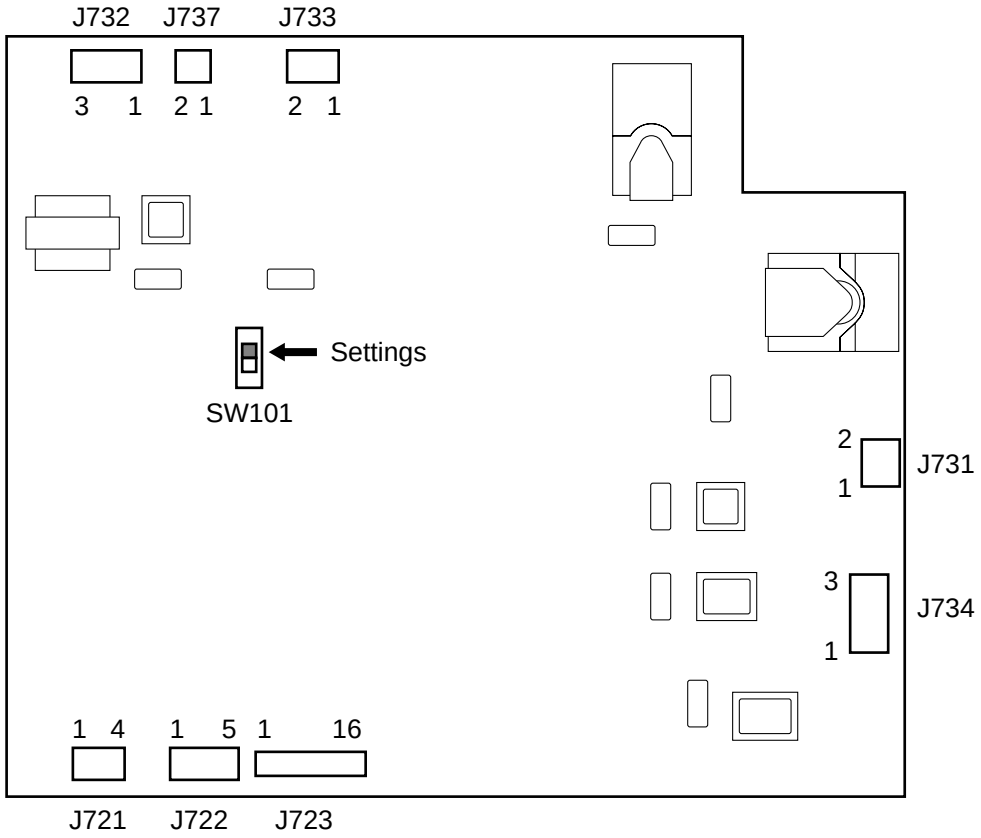

Figure 3-118

The slide switch (SW101) is for factory use only, and is not used for servicing work in the field. (Keep it as it is set at the factory.)

8. Side Deck Driver (side paper deck)

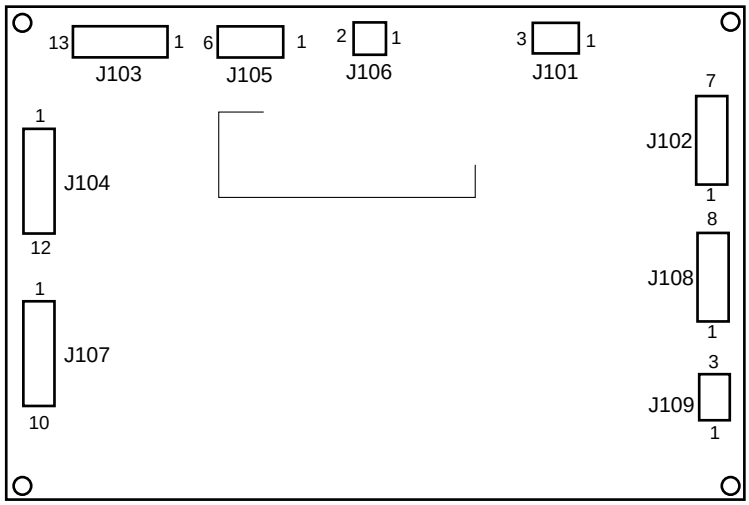

Figure 3-119

CHAPTER 4 SERVICE MODE

A. Outline

The service mode screen configuration has a 3-layer construction: Initial screen, Level 1/Level 2 screen, and Level 3 screen.

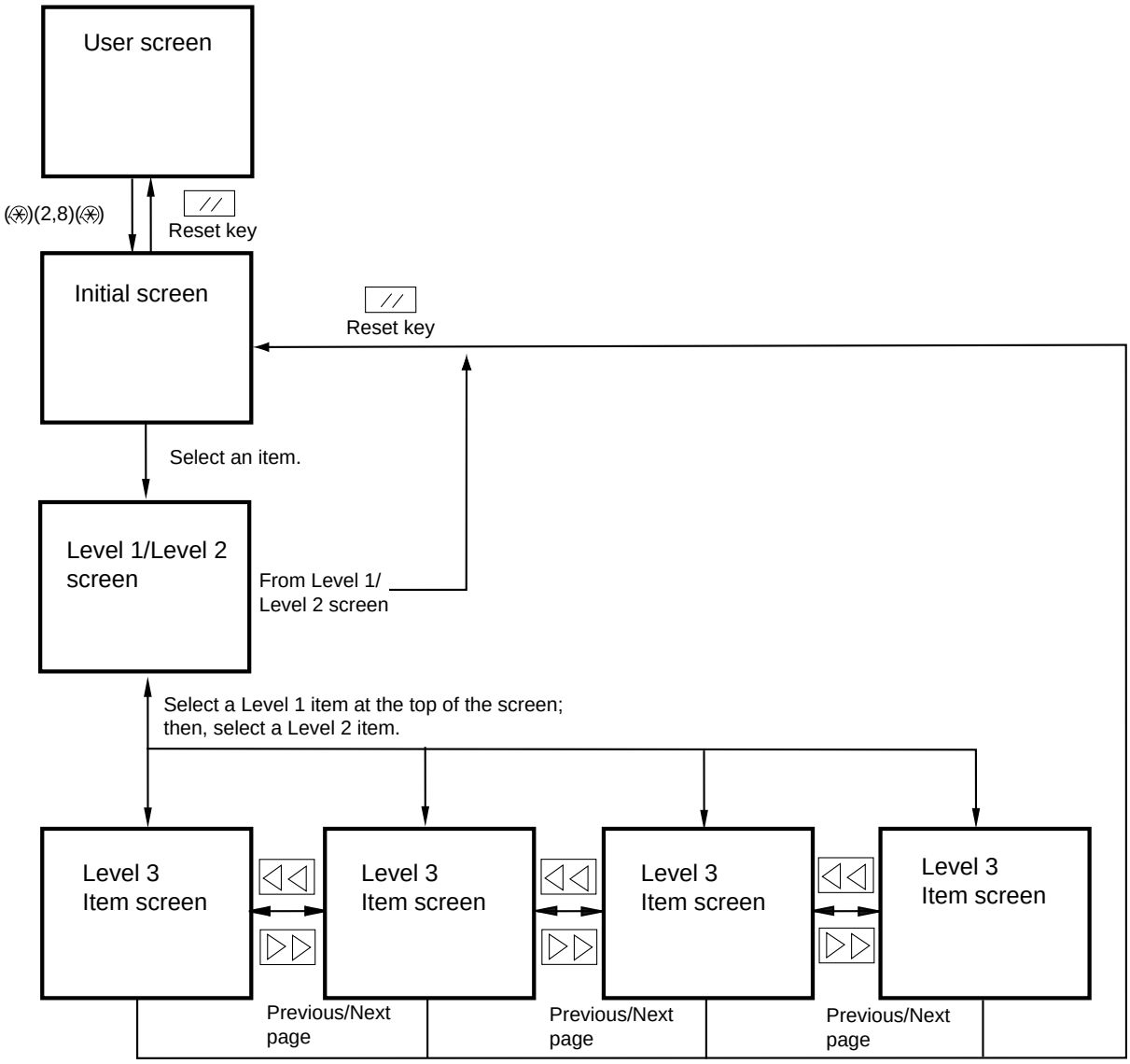

Figure 4-A101 Configuration of the Screens

The copier's service mode is divided into the following seven:

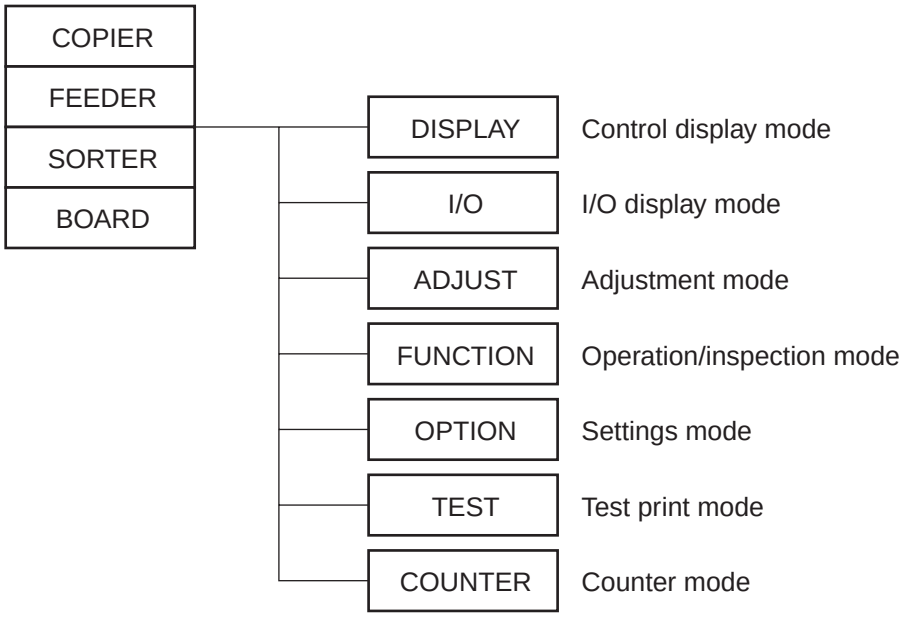

Figure 4-A102 Service Mode Classification

1. Starting Service Mode and Selecting an Item

1) Press the asterisk key "✳" on the control panel.
2) Press "2" and "8" on the keypad at the same time.
3) Press the asterisk key "✳" on the control panel.

■The above operations bring up the Initial screen (Figure 4-A103).

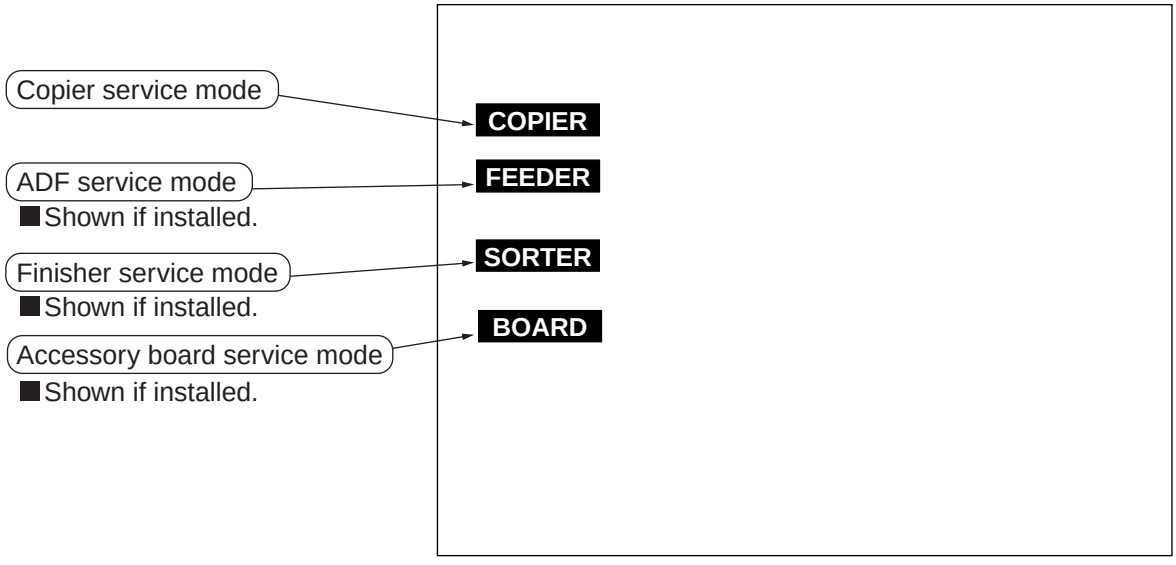

Figure 4-A103 Initial Screen

2. Ending Service Mode

Press the Reset key once to return to the Service Mode Initial screen (Figure 4-A103).
Press the Reset key twice to end service mode and return to the User screen (standard screen).

3. Backing Up the RAM

Each machine is adjusted at the factory, and its adjustment values are recorded on the service label (attached to the cover of the service document case).

Item A: Value retained by the RAM on the image processor PCB.
Item B: Value retained by the RAM on the MFC PCB.

Table 4-A101

If you have replaced the above PCBs or initialized the RAMs, the corresponding values will be affected. If you have made adjustments or changed service mode values in the field, be sure to record the new values on the service label.

Item A		Factry	Field1	Field2	Field3	Item A		Factry	Field1	Field2	Field3
COPIER>ADJUST						COPIER>ADJUST					
LAMP	L-DATA	0				HV-PRI	GRID	0			
AE	AE-TBL	0				HV-TR	TR-N1	0			
ADJ-XY	ADJ-X	0					TR-N2	0			
	ADJ-Y	0					PRE-TR	0			
	ADJ-S	0				HV-SP	SP-N1	0			
CCD	GAIN-E	0					SP-N2	0			
	GAIN-O	0				FEED-ADJ	REGST	0			
	OFST-E	0					ADJ-REFE	0			
	OFST-O	0				CST-ADJ	C3-STMTR	0			
	SH-TRGT	0					C3-A4R	0			
LASER	PVE-OFST	0					C4-STMTR	0			
	LA-DELAY	0					C4-A4R	0			
	LA-PWR-A	0					MF-A4R	0			
	LA-PWR-B	0					MF-A6R	0			
	IP-DELAY	0					MF-A4	0			
DEVELOP	DE-DC	0					C3-LVOL	0			
	DE-NO-DC	0					C3-HVOL	0			
	DE-OFST	0					C4-LVOL	0			
DENS	DENS-ADJ	0					C4-HVOL	0			
BLANK	BLANK-T	0				MISC	ATM	0			
	BLANK-B	0									
V-CONT	EPOTOFST	0				FEEDER>ADJUST					
	VL-OFST	0					STRD-S	0			
	VD-OFST	0					STRD-L	0			
Body No.				Date.	1998-11-07						

Item A			Factory	Field1	Field2	Field3
COPIER>OPTION	BODY	PO-CNT				
		TRNSG-SW				
		FIX-TEMP				
		CPMKP-SW				
		IDL-MODE				
		FUZZY				
		SCANSLCT				
		OHP-TEMP				
		PM-RD-MD				
		OHP-CNT				
		CNT-W/HM				
		PR-SEL				
		CNT-W/PR				
		FIX-TMP1				
		TRSW-P-B				
		SP-MODE				
		FTMP-DWN				
		DRUM-CLN				
		DRM-IDLE				
		F-GD-CNT				
	USER	SIZE-DET				
		PR-D-SEL				
	CST	P-SZ-C1				
		P-SZ-C2				
		C1-DWSW				
		C2-DWSW				
		DK-DWSW				
		C3-DWSW				
		C4-DWSW				
	ACC	DK-P				

Item A			Factory	Field1	Field2	Field3
FEEDER	OPTION	DOC-F-SW				
		SIZE-SW				
SORTER	OPTION	BLNK-SW				

Item B			Factory	Field1	Field2	Field3
COPIER>OPTION	BODY	MODEL-SZ				
	USER	COPY-LIM				
		SLEEP				
		WEB-DSP				
		DATE-DISP				
		MB-CCV				
		PM-DENS				
	CST	U1-NAME				
		U2-NAME				
		U3-NAME				
		U4-NAME				
		CST-U1				
		CST-U2				
		CST-U3				
		CST-U4				

Figure 4-A104 Service Label

4. Basic Operation

a. Initial Screen

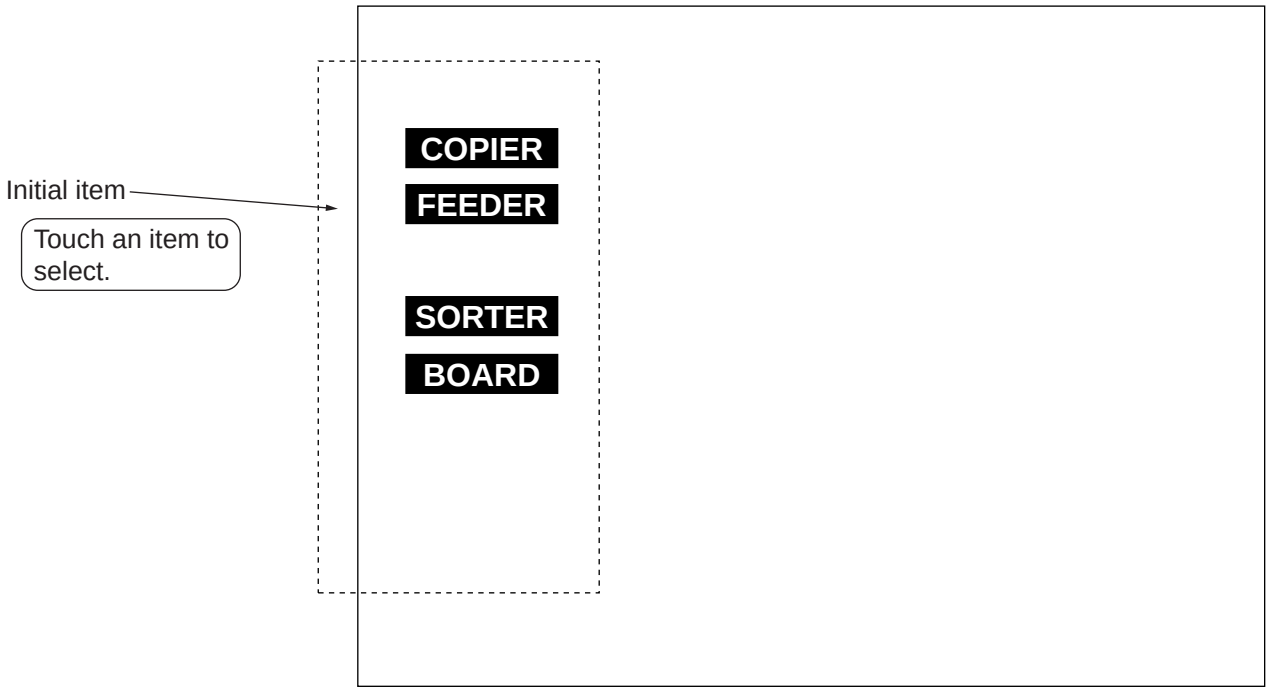

Figure 4-A105

b. Level 1/Level 2 Screen

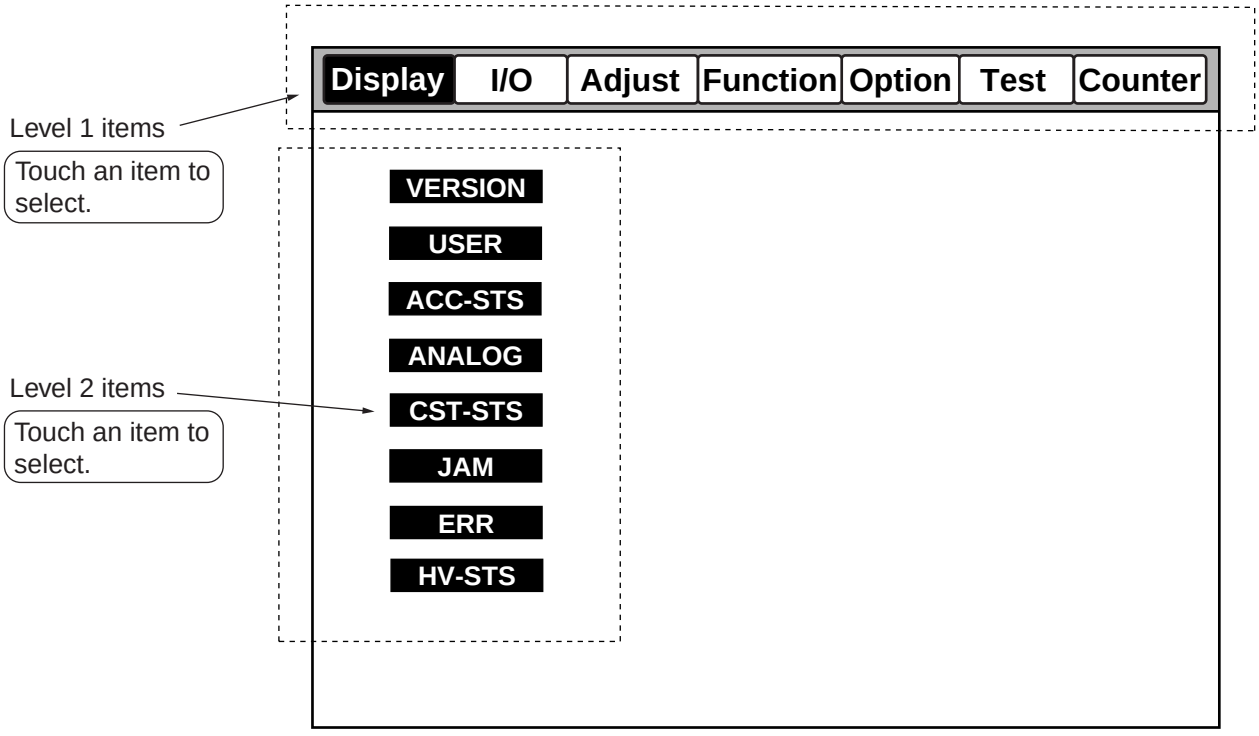

Figure 4-A106

c. Level 3 Item Screen

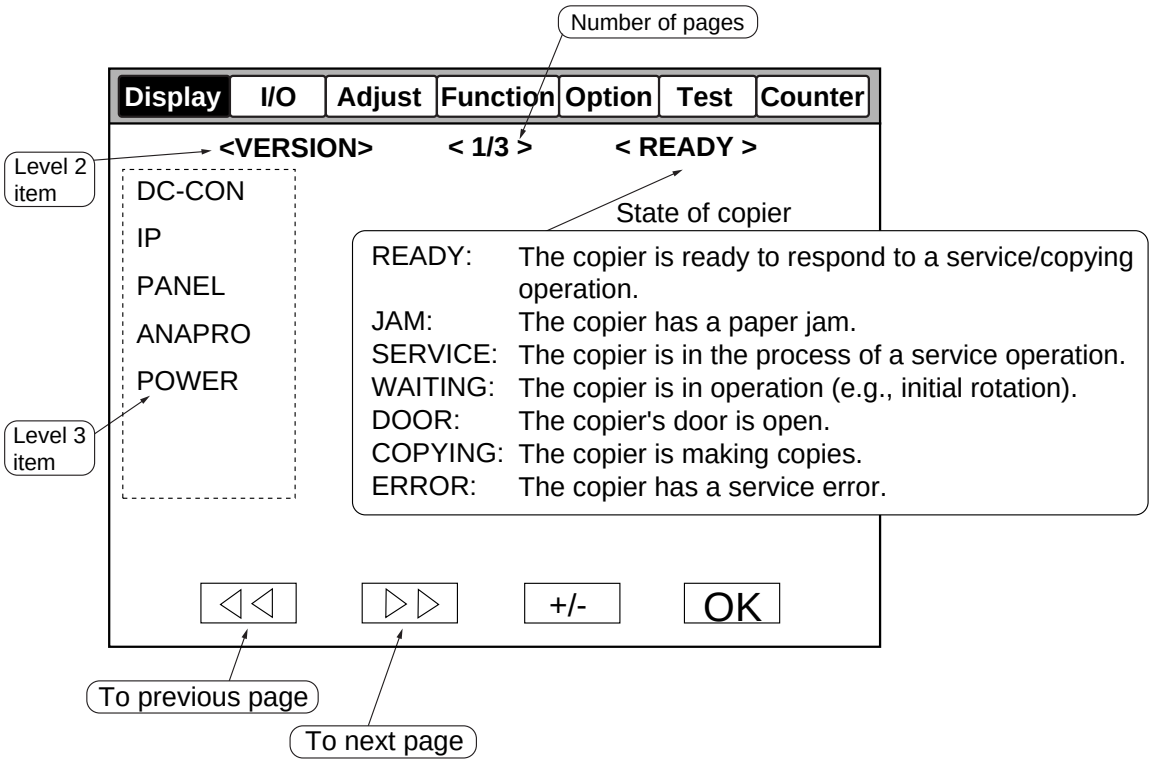

Figure 4-A107

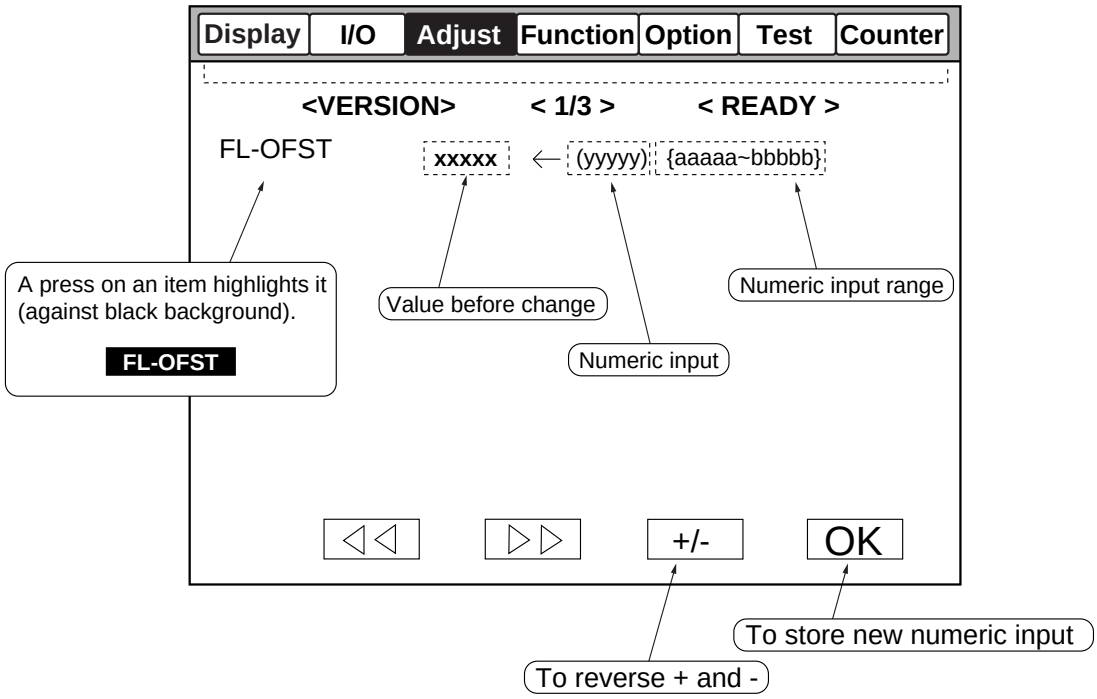

Stop key: Use it to stop an ongoing operation.

Clear key: Use it to clear a numeric value.

Start key: Use it to make a copy without ending service mode.

Figure 4-A108

B. DISPLAY Control Display Mode

When you select COPIER>DISPLAY, you are given the choices shown in the table that follows.

Items under COPIER>DISPLAY

Level 1	Level 2	Level 3	Description
DISPLAY	VERSION	DC-CON	Indicates the version of the ROM on the DC controller PCB.
		IP	Indicates the version of the ROM on the image processor PCB.
		FEEDER	Indicates the version of the ROM on the feeder controller PCB.
		SOR	Indicates the version of the ROM on the sorter controller PCB.
		PC/PCL	Indicates the version of the ROM on the PC/PCL controller PCB.
		LIPS	Indicates the version of the ROM on the LIPS controller PCB.
		MFC	Indicates the version of the ROM on the MFC PCB.
		PCL	Indicates the version of the ROM on the PCL controller PCB.
		PS/KANJI	Indicates the version of the ROM on the PS/KANJI controller PCB.
		SDL-STCH	Indicates the version of the ROM on the saddle stitcher controller PCB.
	USER	LANGUAGE	Indicates the language used.
		COUNTER	Indicates the count control type for the copy counters.
	ANALOG	TEMP	Indicates the machine temperaure humidity (detected by the environment sensor).
		HUM	Indicates the machine internal humidity (detected by the environment sensor).
		OPTICS	Indicates the temperature of the scanning lamp (detected by the fluorescent lamp temperature sensor H5).
		FIX-C	Indicates the temperature at the middle of the upper fixing roller (detected by the main thermistor TH1).
		FIX-E	Indicates the temperature of the ends of the upper fixing roller (detected y the sub thermistor TH2).
	CST-STS	WIDTH-C3	Indicates the paper size for the cassette 3.
		WIDTH-C4	Indicates the paper size for the cassette 4.
		WIDTH-MF	Indicates the paper width (new value) or the paper size for the manual feed tray.
	JAM		Indicates the jam history.
	ERR		Indicates the error history.
	HV-STS	PRIMARY	Indicates the current level (μA) of the primary charging assembly.
		PRI-GRID	Indicates the grid voltage (V) of the primary charging assembly.
		PRI-TR	Indicates the current level (μA) of the pre-transfer charging assembly.
		TR	Indicates the current level (μA) of the transfer charging assembly.
		SP	Indicates the current level of the separation charging assembly (μA).
		BIAS	Indicates the voltage of the developing DC bias (V).
	DPOT	DPOT-K	Indicates the surface potential (V) of the photosensitive drum.
		VL1M	Indicates the drum light area potential measurement (V).
		VDM	Indicates the drum dark area potential measurement (V).
	SENSOR	DOC-SZ	Indicates the size of an original detected by the original size sensor.
		DOC-SZ1	Indicates the output of the original size sensor 1.
		DOC-SZ2	Indicates the output of the original size sensor 2.
		DOC-SZ3	Indicates the output of the original size sensor 3.
		DOC-SZ4	Indicates the output of the original size sensor 4.
	MISC	FL-LIFE	Indicates the activation duty ratio (%) of the scanning lamp.
	ALARM1		Indicates alarm codes.

Items under FEEDER>ADJUST

Level 1	Level 3	Description
DISPLAY	FEEDSIZE	Indicates the size of an original detected by the feeder.

<VERSION>

COPIER>DISPLAY

Indicates the versions of the ROMs on the copier and accessory PCBs.

Level 3	Description	Remarks
DC-CON	Indicates the version of the ROM on the DC controller PCB.	Indication <**xx, yy**> Version number R&D control number
IP	Indicates the version of the ROM on the image processor PCB.	
FEEDER	Indicates the version of the ROM on the feeder controller PCB.	
	Indicates the version of the ROM on the sorter controller PCB.	
SORTER	Indicates the version of the ROM on the PS/PCL controller PCB.	
PS/PCL		
	Indicates the version of the ROM on the LIPS controller PCB.	
LIPS	Indicates the version of the ROM on the MFC PCB.	
MFC	Indicates the version of the ROM on the PCL controller PCB.	
PCL	Indicates the version of the ROM on the PS/Kanji controller PCB.	
PS/KANJI		
	Indicates the version of the ROM on the saddle stitcher controller PCB.	
SDL-STCH		

<USER>

Indicates the items related to the User screen and the user.

Level 3	Description	Remarks
LAN-GUAGE	Indicates the language used and the paper size configuration used.	Indication <**LANGUGE JP. oo. aa**> Language used Destination 00:CANON 01:OEM Paper configuration code aa: 00 AB; 01 Inch; 02 A; 03 All sizes
COUNTER	Indicates the type of count control for copy counters.	Indication <**COUNTER bb**> Details of each counter code bb: 00 Total; 01 Total Double-sided; 02 Total Small-size; 03 Total Large-size; 04 Large-size Small-size; 10 Total Print total; 14 Total Print total Large-size; 15 Total Print total Double-sided

<ANALOG>
Indicates the readings of analog sensors.

COPIER>DISPLAY

Level 3	Description	Remarks
TEMP	Indicates the machine internal temperature (detected by the environment sensor).	Unit: °C
HUM	Indicates the machine internal relative humidity (detected by the environment sensor).	Unit: %RH
OPTICS	Indicates the temperature of the scanning lamp (indicated by the fluorescent lamp sensor).	Unit: °C
FIX-C	Indicates the temperature at the middle of the upper fixing roller (detected by the main thermistor TH1).	
FIX-E	Indicates the temperature of the ends of the upper fixing roller (detected by the sub thermistor TH2).	

<CST-STS>
Indicates the use of the cassette and the manual feed tray.

Level 3	Description	Remarks
WIDTH-C3	Indicates the paper size for the cassette 3.	The paper width is shown as a whole number, omitting decimal places.
WIDTH-C4	Indicates the paper size for the cassette 4 .	
WIDTH-MF	Indicates the paper size and the paper width (mm) for the manual feed tray.	

<JAM>
Indicates jam data.

COPIER>DISPLAY

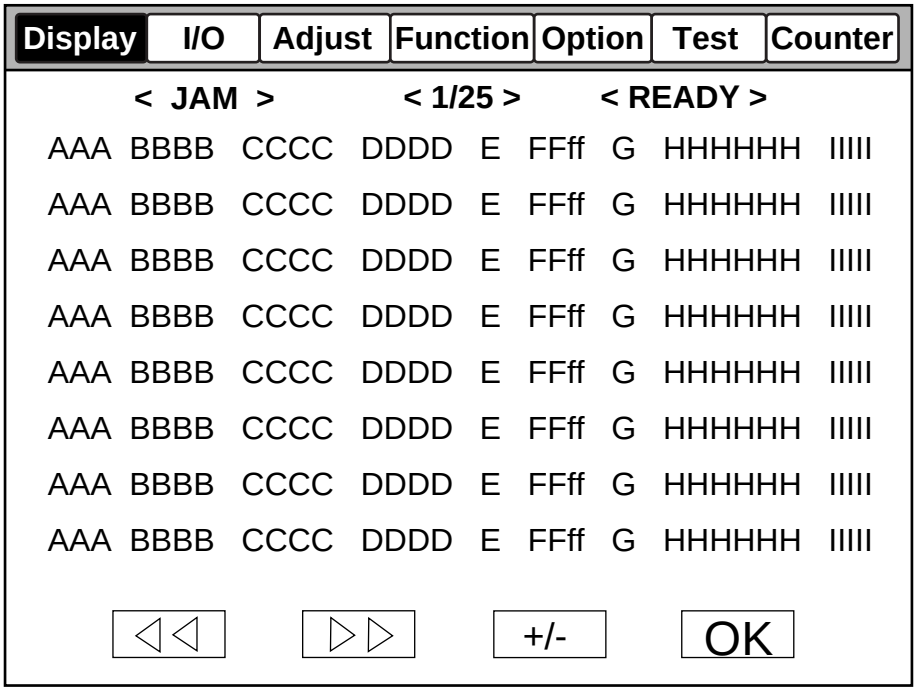

Figure 4-B101 Jam Screen

	Description	Remarks
AAA	Indicates the order of jams (the higher the number, the older the jam).	1 to 200 (200 as highest)
BBBB	Indicates the date of a jam.	Month and day (in 2 digits each)
CCCC	Indicates the time of a jam.	In 24-hr notation
DDDD	Indicates jam recovery time.	In 24-hr notation
E	Indicates the location of a jam.	0: copier 1: feeder 2: finisher
FFff	Indicates jam codes.	FF: jam type (Table 4-B101) ff: sensor that detected the jam. • For the copier, see Table 4-B103. • For the feeder or the finisher, see its respective Service
G	Indicates the source of paper.	See Table 4-B102.
HHHHHH	Indicates the soft counter for the source of paper.	
IIIII	Indicates the paper size in question.	

FF: Type of Jam

Code	Type
01xx	Delay jam
02xx	Stationary jam
03xx	Residual jam at power-on
04xx	Door open jam during copying
05xx	ADF jam during stream reading

Table 4-B101

G: Source of Paper

Code	Description
1	Front deck (right)
2	Front deck (left)
3	Cassette 3
4	Cassette 4
5	Not used
6	Not used
7	Side paper deck
8	Manual feed tray
9	Duplexing assembly

Table 4-B102

ff: Copier Jam Sensors

Code	Jam sensor
xx01	Front deck (right) pickup sensor (PS20)
xx02	Front deck (left) pickup sensor (PS25)
xx03	Cassette 3 pickup sensor (PS37)
xx04	Cassette 4 pickup sensor (PS42)
xx05	Vertical path 1 sensor (PS47)
xx06	Vertical path 2 sensor (PS49)
xx07	Vertical path 3 sensor (PS41)
xx08	Vertical path 4 sensor (PS46)
xx09	Registration sensor (PS5)
xx10	U-turn sensor (PS13)
xx11	Pre-confluence sensor (PS14)
xx12	Post-confluence sensor (PS15)
xx13	Front deck (left) feed sensor (PS26)
xx14	Front deck (right) feed sensor (PS27)
xx15	Side paper deck feed sensor (PS106)
xx16	Manual feed tray feed sensor (PS35)
xx17	Side paper deck pickup sensor (PS101)
xx0A	Fixing separation claw sensor (PS6)
xx0B	Internal delivery sensor (PS9)
xx0C	External delivery sensor (PS10)
xx0D	Fixing/feeding outlet sensor (PS11)
xx0E	Reversal sensor (PS16)
xx0F	Duplexing reversal sensor (PS12)

Table 4-B103

<ERR>
Indicates error codes.

COPIER>DISPLAY

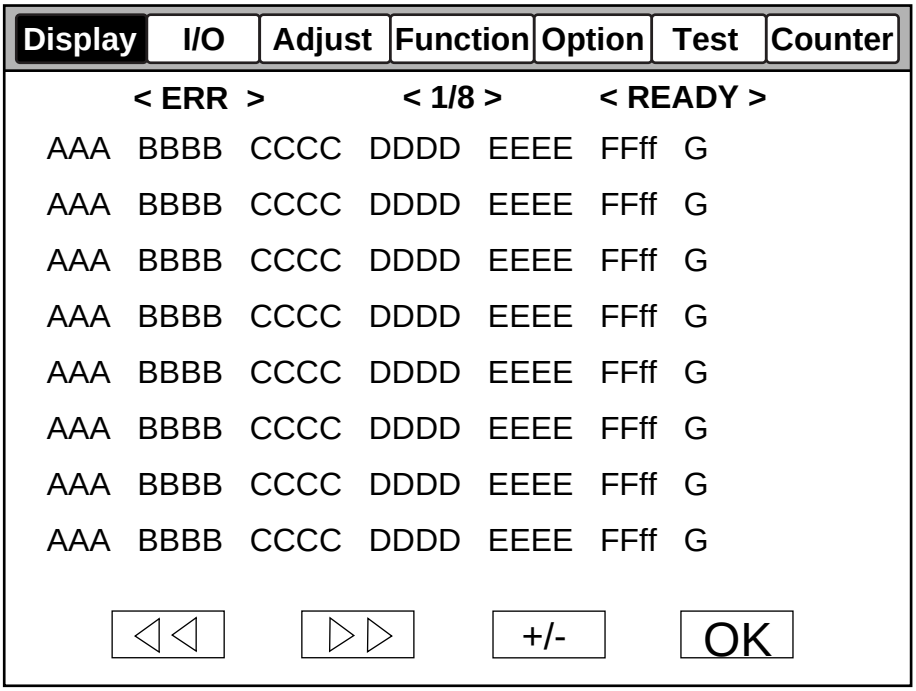

Figure 4-B102 Jam Screen

	Description	Remarks
AAA	Indicates the order of errors (the higher the number, the older the error).	1 to 64 (64 as highest)
BBBB	Indicates the date of an error.	Month, day (2 digits each)
CCCC	Indicates the time of an error.	In 24-hr notation
DDDD	Indicates the time of error recovery.	In 24-hr notation
EEEE	Indicates error codes.	See chapter 5 the descriptions under "Self Diagnosis."
FFff	Indicates detail codes.	If none, '0000'.
G	Indicates the location of a jam.	0: copier. 1: feeder. 2: finisher.

<ALRAM1>
Indicates alarm codes.

COPIER>DISPLAY

<table>
<tr><th>Level 3</th><th>Description</th><th>Remarks</th></tr>
<tr><td>BODY</td><td>Indicates alarms for the copier.</td><td>
<table>
<tr><th>Code</th><th>Type</th></tr>
<tr><td>01</td><td>Separation charging assembly leakage</td></tr>
<tr><td>02</td><td>Feeding fan (FM7) locking</td></tr>
<tr><td>03</td><td>De-curling fan (FM6) locking</td></tr>
<tr><td>04</td><td>Front deck (right) lifter fault</td></tr>
<tr><td>05</td><td>Front deck (left) lifter fault</td></tr>
<tr><td>06</td><td>Cassette 3 lifter fault</td></tr>
<tr><td>07</td><td>Cassette 4 lifter fault</td></tr>
<tr><td>08</td><td>Side paper deck lifter fault</td></tr>
</table>
</td></tr>
<tr><td>DF</td><td>Feeder Alarms
• For details of each code, see the Feeder Service Manual.</td><td></td></tr>
<tr><td>SORTER</td><td>Finisher Alarms
• For details of each code, see the Finisher Service Manual.</td><td>00 00 00 00
Tray alarm
Stack alarm
Stapler alarm (saddle stitcher)
Stapler alarm (finisher)</td></tr>
</table>

<HV-STS>
COPIER>DISPLAY
Indicates the voltage/current levels of the high-voltage system.

Level 3	Description	Remarks
PRIMARY	Indicates the level of current (µA) applied to the primary charging wire.	Standard: 1000 (approx.)
PRI-GRID	Indicates the grid level of voltage (V) applied to the primary grid wire.	Reference: 550 to 850
PRI-TR	Indicates the level of current (µA) applied to the pre-transfer charging wire.	
TR	Indicates the level of current (µA) applied to the transfer charging wire.	Reference: 300 to 500
SP	Indicates the level of current (µA) applied to the separation charging wire.	Reference: 350 to 450
BIAS	Indicates the level of voltage of the DC bias (V) applied to the developing cylinder.	Reference: 280 (approx.)

<DPOT>
Indicates the measurement of the surface potential of the photosensitive drum.

Level 3	Description	Remarks
DPOT-K	Indicates the surface potential (V) of the photosensitive drum.	
VL1M	Indicates the light area surface potential (V) of the photosensitive drum.	Reference: 62 to 82
VDM	Indicates the dark area surface potential (V) of the photosensitive drum.	Reference: 432 to 452

<SENSOR>
Indicates the output of the original size sensor.

Level 3	Description	Remarks
DOC-SZ	Indicates the size of an original detected by the original size sensor.	Default sizes
DOC-SZ1	Indicates the output of the original size sensor 1.	1: original present. 0: original absent.
DOC-SZ2	Indicates the output of the original size sensor 2.	
DOC-SZ3	Indicates the output of the original size sensor 3.	
DOC-SZ4	Indicates the output of the original size sensor 4.	

<MISC>
Indicates other data.

COPIER>DISPLAY

Level 3	Description	Remarks
FL-LIFE	Indicates the activation duty ratio (%) of the scanning lamp.	Indicates the duration of activation in % needed to obtain an optimum light intensity; if new, about 50%. (Around 80%, suspect that the end of life is near.)

<FEEDER>
Indicates data related to the feeder.

FEEDER>DISPLAY

Level 3	Description	Remarks
FEEDSIZE	Indicates the size of an original detected by the feeder.	

C. I/O Input/Output Display Mode

1. DC-CON

I/O>DC-CON

Address	bit	Description	Signal	Connector	Remarks
P001	bit0	Not used			
	bit1	Not used			
	bit2	Not used			
	bit3	Not used			
	bit4	Cassette 3 paper length sensor	C3-LNG0	J513-B4	
	bit5	Cassette 3 paper length sensor	C3-LNG1	J513-B5	
	bit6	Cassette 4 paper length sensor	C4-LNG0	J514-A11	
	bit7	Cassette 4 paper length sensor	C4-LNG1	J514-A12	
P002	bit0	Primary wire cleaner home position	PRWC-HP	J502-A10	0: HP
	bit1	Not used			
	bit2	Not used			
	bit3	Not used			
	bit4	Pre-transfer wire cleaner home position	PSTWC-HP	J504-A4	0: HP
	bit5	Not used			
	bit6	Transfer/separation wire cleaner home position	TSWC-HP	J509-A7	0: HP
	bit7	Not used			
P003	bit0	Right deck lifter ON/OFF	RDK-LFT-ON	J514-A4	1: lifter ON
	bit1	Left deck lifter ON/OFF	LDK-LFT-ON	J514-B1	1: lifter ON
	bit2	Cassette 3 lifter ON/OFF	C3-LFT-ON	J516-A4	1: lifter ON
	bit3	Cassette 4 lifter ON/OFF	C4-LFT-ON	J516-B1	1: lifter ON
	bit4	Not used			
	bit5	Not used			
	bit6	SLAVE-PRDV	—	CPU	0: RDY
	bit7	Not used			
P004	bit0	Primary wire cleaner drive	PRWC-RV	J502-A7	1: to rear
	bit1	Primary wire cleaner drive	PRWC-FW	J502-A8	1: to front
	bit2	Not used			
	bit3	Not used			
	bit4	Pre-transfer wire cleaner drive	PSTWC-FW	J504-A8	1: to front
	bit5	Pre-transfer wire cleaner drive	PSTWC-RV	J504-A9	1: to rear
	bit6	Transfer/separation wire cleaner drive	TSWC-RV	J509-B4	1: to rear
	bit7	Transfer/separation wire cleaner drive	TSWC-FW	J509-B5	1: to front

I/O>DC-CON

Address	bit	Description	Signal	Connector	Remarks
P005	bit0	Scanner motor drive data	OPT-D0	J506-A3	—
	bit1	Scanner motor drive data	OPT-D1	J506-A4	—
	bit2	Scanner motor drive data	OPT-D2	J506-A5	—
	bit3	Scanner motor drive data	OPT-D3	J506-A6	—
	bit4	Scanner motor current level data	OPT-CD0	J506-A9	—
	bit5	Scanner motor current level data	OPT-CD1	J506-A10	—
	bit6	Scanner motor current level data	OPT-CD2	J506-A11	—
	bit7	Not used			
P006	bit0	Not used			
	bit1	Not used			
	bit2	Not used			
	bit3	Scanner motor rotation direction	OPT-CCW	J506-A8	1: scanner forward
	bit4	Scanner motor ON	OPT-CLK	J506-A12	1: ON
	bit5	Not used			
	bit6	Not used			
	bit7	Not used			
P007	bit0	Right deck lifter sensor	RDK-LFT-DT	J511-A6	1: upper limit
	bit1	Left deck lifter sensor	LDK-LFT-DT	J518-A2	1: upper limit
	bit2	Cassette 3 lifter sensor	C3-LFT-DT	J515-A6	1: upper limit
	bit3	Cassette 4 lifter sensor	C4-LFT-DT	J517-A6	1: upper limit
	bit4	Right deck open	RDK-OPN	J511-B5	0: open
	bit5	Left deck open	LDK-OPN	J518-B2	0: open
	bit6	Cassette 3 open	C3-OPN	J515-B5	0: open
	bit7	Cassette 4 open	C4-OPN	J517-B5	0: open
P008	bit0	Not used			
	bit1	Not used			
	bit2	Not used			
	bit3	Not used			
	bit4	Right deck paper	RDK-PDT	J511-A9	1: paper present
	bit5	Left deck paper	LDK-PDT	J518-A5	1: paper present
	bit6	Cassette 3 paper	C3-PDT	J515-A9	1: paper present
	bit7	Cassette 4 paper	C4-PDT	J517-A9	1: paper present

I/O>DC-CON
I/O>IP

Address	bit	Description	Signal	Connector	Remarks
P009	bit0	Not used			
	bit1	Right deck paper level data 1	RDK-PRM1	J513-B9	1: paper present
	bit2	Right deck paper level data 2	RDK-PRM2	J513-B12	1: paper present
	bit3	Right deck lifter limit	RDK-LFT-LMT	J511-B8	1: upper limit
	bit4	Not used			
	bit5	Left deck paper level data 1	LDK-PRM1	J514-B9	1: paper present
	bit6	Left deck paper level data 2	LDK-PRM2	J514-B12	1: paper present
	bit7	Left deck lifter limit	RDK-LFT-LMT	J518-B5	1: upper limit

2. IP

Address	bit	Description	Signal	Connector	Remarks
P001	bit0	Manual feed tray paper sensor	MLT-PAPE-PS	J510-B8	1: paper present
	bit1	Registration paper sensor	PS5S	J509-A2	1: paper present
	bit2	Right deck pickup sensor	PS20S	J511-B2	1: paper present
	bit3	Cassette 3 paper sensor	PS39S	J515-A9	1: paper present
	bit4	Vertical path 3 paper sensor	PS41S	J515-B8	1: paper present
	bit5	Cassette 4 paper sensor	PS44S	J517-A9	1: paper present
	bit6	Vertical path 4 paper sensor	PS46S	J517-B8	1: paper present
	bit7	Right deck paper sensor	PS22S	J511-A9	1: paper present
	bit8	Pre-registration paper sensor	PS47S	J502-B5	1: paper present
	bit9	Left deck paper sensor	PS32S	J518-A5	1: paper present
	bit10	Vertical path 2 paper sensor	PS49S	J516-B9	1: paper present
	bit11	External delivery sensor	PS10S	J508-A8	1: paper present
	bit12	Internal delivery sensor	PS9S	J508-A2	1: paper present
	bit13	Fixing/feeding outlet sensor	PS11S	J508-A11	1: paper present
	bit14	Fixing claw jam sensor	PS6S	J508-B15	1: paper present
	bit15	Left deck feed sensor	PS26S	J519-B10	1: paper present

I/O>IP

Address	bit	Description	Signal	Connector	Remarks
P002	bit0	Cassette 3 pickup sensor	PS37S	J515-B2	1: paper present
	bit1	Cassette 4 pickup sensor	PS42S	J517-B2	1: paper present
	bit2	Left deck pickup sensor	PS25S	J518-A8	1: paper present
	bit3	Duplexing reversal sensor	PS12S	J519-B6	1: paper present
	bit4	U-turn sensor	PS13S	J519-B7	1: paper present
	bit5	Pre-confluence sensor	PS14S	J519-B8	1: paper present
	bit6	Post-confluence sensor	PS15S	J519-B9	1: paper present
	bit7	Reversal sensor	PS16S	J508-A5	1: paper present
	bit8	Waste toner case full sensor	PS19S	J514-A2	1: full
	bit9	Hopper toner sensor 1	TS1S	J504-B8	0: toner absent
	bit10	Hopper toner sensor 2	TS2S	J504-B11	0: toner absent
	bit11	Developing assembly toner sensor	TS3S	J504-B16	0: toner absent
	bit12	Fixing cleaning belt sensor	PS7S	J508-B2	1: belt absent
	bit13	Fixing cleaning belt warning sensor	PS8S	J508-B5	1: warning
	bit14	Cartridge detecting switch	MSW1S	J512-B7	0: cartridge present
	bit15	Waste toner clog detecting switch	MSW2S	J512-B14	0: clogged
P003	bit0	Original size sensor 1	SIZE1	J503-B2	0: original present
	bit1	Original size sensor 2	SIZE2	J503-B5	0: original present
	bit2	Original size sensor 3	SIZE3	J504-B2	0: original present
	bit3	Original size sensor 4	SIZE4	J504-B5	0: original present
	bit4	Copyboard cover open/closed sensor	PS4S	J507-B9	1: closed
	bit5	Pre-transfer charging wire cleaner detecting switch	MSW3S	J504-A4	0: home position
	bit6	Primary charging wire detecting switch	MSW4S	J502-A10	0: home position
	bit7	Transfer separation charging wire cleaner detecting switch	MSW6S	J509-A7	0: home position
	bit8	Cartridge door open/closed sensor	PS59S	J512-B2	1: closed
	bit9	Right cover (upper) open/ closed sensor	PS58S	J502-B2	1: closed
	bit10	Not used			
	bit11	Right door closed/open sensor	PS23S	J511-B5	1: closed
	bit12	Left door closed/open sensor	PS33S	J518-B2	1: closed

I/O>IP

Address	bit	Description	Signal	Connector	Remarks
P003	bit13	Right cover (lower) open/ closed sensor	PS48S	J516-A2	1: closed
	bit14	Manual feed cover open/closed sensor	PS56S	J502-A2	1: closed
	bit15	Front cover open/closed detecting switch	MSW7S	J502-B17	0: closed
P004	bit0	Through path tray detection	TPCNCT	J519-B12	0: present
	bit1	Fixing/feeding releasing lever sensor	PS28S	J509-B9	1: released
	bit2	Not used			
	bit3	Cassette 3 open/closed sensor	PS40S	J515-B5	1: closed
	bit4	Cassette 4 open/closed sensor	PS45S	J517-B5	1: closed
	bit5	Not used			
	bit6	Multifeeder de-curling sensor	PS35S	J510-B2	1: paper present
	bit7	Not used			
	bit8	Fixing sub thermistor error detection	—	CPU	1: error (E001-2)
	bit9	Not used			
	bit10	Fixing main thermistor error detection	—	CPU	1: error (E001-1)
	bit11	Fluorescent lamp absent detection	—	CPU	1: error (E220)
	bit12	Not used			
	bit13	Main SSR error detection	—	CPU	1: short circuit (E004-1)
	bit14	Sub SSR error detection	—	CPU	1: short circuit (E004-2)
	bit15	Main switch shut-off open circuit detection	—	CPU	0: normal
P005	bit0	Primary charging assembly cleaning fan stop detection	FM1LCK	J504-A13	1: stopped
	bit1	Fixing delivery fan stop detection	FM2LCK	J503-A4	1: stopped
	bit2	Scanner cooling fan stop detection	FM3LCK	J504-A10	1: stopped
	bit3	Fan stop detection	FM4LCK	J502-A4	1: stopped
	bit4	Laser driver cooling fan stop detection	FM5LCK	J503-A1	1: stopped
	bit5	De-curling fan stop detection	FM6LCK	J509-B11	1: stopped
	bit6	Feeding fan stop detection	FM7LCK	J509-A8	1: stopped

I/O>IP

Address	bit	Description	Signal	Connector	Remarks
P005	bit7	Drum fan stop detection	FM8LCK	J512-A8	1: stopped
	bit8	Inverter cooling fan stop detection	FM9LCK	J507-A7	1: stopped
	bit9	Pre-transfer charging assembly fan stop detection	FM10LCK	J504-A5	1: stopped
	bit10	Power supply cooling fan 1 stop detection	FM11LCK	J505-B1	1: stopped
	bit11	Power supply cooling fan 2 stop detection	FM12LCK	J505-B4	1: stopped
	bit12	Separation fan stop detection	FM13LCK	J509-A11	1: stopped
	bit13	Laser scanner fan stop detection	FM14LCK	J504-A16	1: stopped
	bit14	Not used			
	bit15	Not used			
P006	bit0	Drum motor lock detection	M0LCK	J512-B9	0: low-speed
	bit1	Laser scanner motor lock detection	M4LCK	J503-A8	0: low-speed
	bit2	Fixing drive motor lock detection	M3LCK	J508-A17	
	bit3	Not used			
	bit4	Not used			
	bit5	Not used			
	bit6	Not used			
	bit7	Fluorescent lamp detection	—	CPU	1: ON
	bit8	Not used			
	bit9	Scanner home position detection	PS1S	J507-A1	1: home position
	bit10	Not used			
	bit11	Slave power ready detection	—	CPU	0: ready
	bit12	Not used			
	bit13	CC-V connect signal	CC5-CONNECT	J503-A14	0: CC-V present
	bit14	Power supply control detection	—	CPU	0: power ON
	bit15	Not used			

I/O>IP

Address	bit	Description	Signal	Connector	Remarks
P007	bit0	Overcurrent detection (24 V)	24ERR	J505-B10	1: overcurrent
	bit1	Overcurrent detection (38 V)	38ERR	J505-B11	1: overcurrent
	bit2	Primary charging error detection	PR-ERR	J510-A4	1: error
	bit3	Transfer charging error detection	TR-ERR	J510-A7	1: error
	bit4	Separation/pre-transfer charging error detection	POST-ERR	J510-A13	1: error
	bit5	Hopper motor error detection	—	CPU	1: error (E020)
	bit6	Cartridge motor error detection	—	CPU	1: error (E025)
	bit7	Not used			
	bit8	Options counter switch bit 0	OP-bit1	J503-B8	DIOSW0
	bit9	Options counter switch bit 1	OP-bit2	J503-B9	DIOSW1
	bit10	Counter open circuit detection 1 (total)	—	CPU	1: open circuit (E030)
	bit11	Counter open circuit 2 (option)	—	CPU	1: open circuit (E031)
	bit12	Counter open circuit detection 3	—	CPU	1: open circuit
	bit13	Not used			
	bit14	Not used			
	bit15	Right deck feed sensor	PS27S	J511-B11	1: paper
P008	bit0	Manual feed tray pickup clutch	CL7D	J513-A9	1: ON
	bit1	Cassette 3 pickup clutch	CL12D	J515-A2	1: ON
	bit2	Vertical path 3 clutch	CL13D	J515-A4	1: ON
	bit3	Cassette 4 pickup clutch	CL14D	J517-A2	1: ON
	bit4	Vertical path 4 clutch	CL15D	J517-A4	1: ON
	bit5	Right deck pickup clutch	CL10D	J511-A2	1: ON
	bit6	Vertical path 1 clutch	CL8D	J511-A4	1: ON
	bit7	Left deck pickup clutch	CL11D	J518-B8	1: ON
	bit8	Vertical path 2 clutch	CL9D	J514-A7	1: ON
	bit9	Pre-registration clutch	CL5D	J513-A12	1: ON
	bit10	Lower feeding middle clutch	CL16D	J519-B4	1: ON
	bit11	Lower feeding right clutch	CL17D	J519-B3	1: ON
	bit12	Left deck feed clutch	CL19D	J519-B2	1: ON
	bit13	Delivery speed switching clutch	CL21D	J508-A14	1: high-speed 0: normal speed
	bit14	Registration brake clutch	CL3D	J509-B7	1: ON
	bit15	Multifeeder feed clutch	CL18D	J513-A7	1: ON

I/O>IP

Address	bit	Description	Signal	Connector	Remarks
P009	bit0	Hopper clutch	CL1D	J504-B14	1: ON
	bit1	Developing clutch	CL4D	J512-A12	1: ON
	bit2	Not used			
	bit3	Right deck pickup solenoid	SL7D	J511-A12	1: ON
	bit4	Left deck pickup solenoid	SL8D	J518-B10	1: ON
	bit5	Cassette 3 pickup solenoid	SL9D	J515-B11	1: ON
	bit6	Cassette 4 pickup solenoid	SL10D	J517-B11	1: ON
	bit7	Multifeeder pickup latch solenoid (return)	SL6R	J510-B12	1: ON
	bit8	Multifeeder latch solenoid (pull)	SL6P	J510-B11	1: ON
	bit9	Delivery flapper solenoid	SL3D	J508-B18	1: ON
	bit10	Reversing flapper solenoid	SL11D	J519-B5	1: ON
	bit11	Fixing inlet guide solenoid (return)	SL1R	J508-B13	1: ON
	bit12	Fixing inlet guide solenoid (pull)	SL1P	J508-B12	1: ON
	bit13	Fixing cleaning belt solenoid	SL2D	J508-B20	1: ON
	bit14	Fixing/feeding unit locking solenoid (return)	SL4R	J509-B3	1: ON
	bit15	Fixing/feeding unit locking solenoid (pull)	SL4P	J509-B2	1: ON
P010	bit0	Inverter cooling fan (full speed)	FM9D	J507-A9	1: ON
	bit1	Inverter cooling fan (full speed)	FM9D	J507-A9	1: ON
	bit2	Not used			
	bit3	Not used			
	bit4	Not used			
	bit5	Not used			
	bit6	Transfer guide bias ON/OFF	FGD-ON	J510-A15	0: ON
	bit7	Transfer guide bias switch	FGD-CNT	J510-A16	0: 200V, 1: 600V
P011	bit0	Drum motor drive	MOD	J512-B10	0: ON
	bit1	Main motor drive	MM-ON	J514-B5	0: ON
	bit2	Pickup motor drive	M2-ON	J513-A3	0: ON
	bit3	Fixing motor drive	FXM-ON	J508-A18	0: ON
	bit4	Laser scanner motor drive	LM-ON	J503-A9	0: ON
	bit5	Cartridge motor drive	CRGM-ON	J512-B4	1: ON
	bit6	Hopper motor drive	HM-ON	J504-B18	1: ON
	bit7	Laser scanner motor switch	SP-SEL	J503-A7	0: high-speed

I/O>IP

Address	bit	Description	Signal	Connector	Remarks
P012	bit0	Waste toner case full detection reset	—	CPU	0: reset
	bit1	Cassette/drum heater ON/OFF	CST-HTR-ON	J505-A8	0: ON
	bit2	Fluorescent lamp pre-heater ON/OFF	PRH-ON	J506-B9	0: ON
	bit3	Fluorescent lamp heater ON/OFF	HEAT-ON	J506-B2	0: ON
	bit4	Fixing main heater ON/OFF	MH-ON	J505-A10	1: ON
	bit5	Fixing sub heater ON/OFF	SH-ON	J505-A11	1: ON
	bit6	Drum heater full-wave/half-wave	D-HTR-ON	J505-A6	1: full-wave, 0: half-wave
	bit7	Not used			
P013	bit0	Power supply fan 1/2 full-speed	FM11D/12D	J505-B3/B6	1: ON(24V)
	bit1	Power supply fan 1/2 half-speed	FM11D/12D	J505-B3/B6	1: ON(12V)
	bit2	Separation fan full-speed	FM13D	J509-A13	1: ON(24V)
	bit3	Separation fan half-speed	FM13D	J509-A13	1: ON(12V)
	bit4	Laser scanner fan full-speed	FM14D	J504-A18	1: ON(24V)
	bit5	Not used			
	bit6	Not used			
	bit7	Not used			
P014	bit0	Feeding fan full-speed	FM7D	J509-A10	1: ON(24V)
	bit1	Feeding fan half-speed	FM7D	J509-A10	1: ON(12V)
	bit2	Drum fan full-speed	FM8D	J512-A10	1: ON(24V)
	bit3	Drum fan half-speed	FM8D	J512-A10	1: ON(12V)
	bit4	De-curling fan full-speed	FM6D	J509-B13	1: ON
	bit5	Not used			
	bit6	Pre-transfer charging assembly fan full-speed	FM10D	J504-A7	1: ON(24V)
	bit7	Pre-transfer charging assembly fan half-speed	FM10D	J504-A7	1: ON(12V)

I/O>IP

Address	bit	Description	Signal	Connector	Remarks
P015	bit0	Primary charging assembly fan full-speed	FM1D	J504-A15	1: ON(24V)
	bit1	Primary charging assembly fan half-speed	FM1D	J504-A15	1: ON(12V)
	bit2	Fixing assembly heat discharge fan full-speed	FM2D	J503-A6	1: ON(24V)
	bit3	Fixing assembly heat discharge fan half-speed	FM2D	J503-A6	1: ON(18V)
	bit4	Scanner stream reading fan full-speed	FM3D/4D	J504-A12 J502-A6	1: ON(24V)
	bit5	Scanner stream reading fan half-speed	FM3D/4D	J504-A12 J502-A6	1: ON(12V)
	bit6	Laser driver cooling fan full-speed	FM5D	J503-A3	1: ON
	bit7	Not used			
P016	bit0	Copier/ADF image leading edge select	—	CPU	1: copier, 0: ADF-Y
	bit1	Not used			
	bit2	Shut-off	SW-OFF	J512-A14	1: main switch
	bit3	Power off	—	CPU	1: ON
	bit4	Original size detection ON/OFF	—	CPU	1: ON
	bit5	CCV count	CC5-CNT	J503-A15	1: count
	bit6	CCX count	CCX-CNT	J521-6	1: count
	bit7	Scan start	—	CPU	1: start
P017	bit0	Fluorescent lamp ON/OFF	FLON	J506-B11	0: ON
	bit1	Counter 1 (total)	CNT1D	J503-B13	1: count
	bit2	Counter 2 (options)	CNT2D	J503-B11	1: count
	bit3	Counter 3 (print)	CNT3D	J503-B15	1: count
	bit4	Not used			
	bit5	Not used			
	bit6	Pre-exposure lamp ON/OFF	PEX-ON	J504-A1	1: ON
	bit7	Not used			

I/O>IP

Address	bit	Description	Signal	Connector	Remarks
P018	bit0	Potential sensor ON/OFF	POT-ON	J502-A12	1: ON
	bit1	Not used			
	bit2	Not used			
	bit3	HVT DC component ON/OFF	HVDC-EN	J510-A2	0: high-voltage output ON
	bit4	HVT developing AC component ON/OFF	DEV-AC-ON	J510-A8	0: ON
	bit5	Not used			
	bit6	HVT pre-transfer AC/ separation AC component ON/ OFF	HVAC-EN	J510-A10	0: ON
	bit7	Not used			
P019	bit0	Not used			
	bit1	Not used			
	bit2	Not used			
	bit3	Not used			
	bit4	Not used			
	bit5	Not used			
	bit6	Not used			
	bit7	Not used			
P020	bit0	Not used			
	bit1	Not used			
	bit2	Not used			
	bit3	Not used			
	bit4	Not used			
	bit5	Not used			
	bit6	Not used			
	bit7	Not used			
P021	bit0	Not used			
	bit1	Not used			
	bit2	Not used			
	bit3	Not used			
	bit4	Not used			
	bit5	Not used			
	bit6	Not used			
	bit7	Not used			

I/O>IP

Address	bit	Description	Signal	Connector	Remarks
P022	bit0	Not used			
	bit1	Not used			
	bit2	Not used			
	bit3	Not used			
	bit4	Not used			
	bit5	Not used			
	bit6	Not used			
	bit7	Not used			
P023	bit0	Not used			
	bit1	Not used			
	bit2	Not used			
	bit3	Not used			
	bit4	Not used			
	bit5	Not used			
	bit6	Not used			
	bit7	Not used			
P024	bit0	Not used			
	bit1	Not used			
	bit2	Not used			
	bit3	Not used			
	bit4	Not used			
	bit5	Not used			
	bit6	Not used			
	bit7	Not used			
P025	bit0	Not used			
	bit1	Not used			
	bit2	Not used			
	bit3	Not used			
	bit4	Not used			
	bit5	Not used			
	bit6	Not used			
	bit7	Not used			

3. FEEDER

I/O>FEEDER

Address	bit	Description	Signal	Connector	Remarks
P001	bit0	Pre-reversing solenoid	SL3D*	J10-2	0: ON
	bit1	Not used			
	bit2	Reversing solenoid	SL1D*	J9-2	1: ON
	bit3	Delivery solenoid (position 1)	SL4D1*	J2-2	1: ON
	bit4	Delivery solenoid (position 2)	SL4D2*	J2-3	1: ON
	bit5	Stopper plate solenoid (position 1)	SL2D1*	J9-4	1: ON
	bit6	Stopper plate solenoid (position 2)	SL2D2*	J9-5	1: ON
	bit7	Solenoid timer	SLTMR	CPU	1: ON
P002	bit0	Not used			
	bit1	Not used			
	bit2	Not used			
	bit3	Not used			
	bit4	Pickup roller home position sensor	PKHP	J14-A5	1: home position
	bit5	Pickup roller height sensor 2	PKH2	J14-A8	1: original present
	bit6	Pickup roller height sensor 1	PKH1	J14-A11	1: original present
	bit7	Pre-reversal sensor	PRTR	J12-12	1: original present
P003	bit0	Not used			
	bit1	Original sensor LED	DTLED	J5-15	0: ON
	bit2	Not used			
	bit3	Not used			
	bit4	Not used			
	bit5	Not used			
	bit6	Not used			
	bit7	Not used			

*Checks not possible because of data processing speed.

I/O>FEEDER

Address	bit	Description	Signal	Connector	Remarks
P004	bit0	Separation sensor	SPS	J13-10	0: original present
	bit1	Separation sheet-to-sheet distance clock	TRNA_X	CPU	alternately '0' and '1' *
	bit2	Belt motor encoder	BTCLK	J12-3	alternately '0' and '1' *
	bit3	Post-registration roller paper sensor	RGAS	J13-6	0: original present
	bit4	Manual feed registration roller paper sensor	MFRGS	J2-6	0: original present
	bit5	Not used			
	bit6	Not used			
	bit7	Not used			
P005	bit0	Tx (transmission)	SERIAL_DO	CPU	1: transmit
	bit1	Da load	DAC_LD	CPU	1: transmit
	bit2	Rx (reception)	SERIAL_DI	CPU	1: reception
	bit3	EEPROM chip select	EEP_CS	CPU	0: EEPROM select
	bit4	Serial reference clock	SERIAL_CLK	CPU	alternately '0' and '1' *
	bit5	Separation motor encoder	SPCLK	J12-5	alternately '0' and '1' *
	bit6	Not used			
	bit7	Not used			
P006	bit0	Belt motor mode 1	BLTMO1	CPU	'0' at all times
	bit1	Belt motor mode 2	BLTMO2	CPU	'0' at all times
	bit2	Belt motor reference clock	REF-CLK	J7-1	alternately '0' and '1' *
	bit3	Belt motor CW/CCW	CW/CCW	J7-4	0: delivery direction
	bit4	Separation motor PWM	SPPWM	CPU	alternately '0' and '1' *
	bit5	Reversal motor layer B	TANB	CPU	alternately '0' and '1' *
	bit6	Delivery motor PWM	EJPWM	CPU	alternately '0' and '1' *
	bit7	Reversal motor layer A	TANA	CPU	alternately '0' and '1' *

*Checks not possible because of data processing speed.

I/O>FEEDER

Address	bit	Description	Signal	Connector	Remarks
P007	bit0	Image leading edge signal	ITOP-F	CPU	1: at edge
	bit1	Pre-registration roller paper sensor	RGBS	J13-4	1: original present
	bit2	Separation motor reference clock	SEPCLKPEF	CPU	alternately '0' and '1' *
	bit3	Delivery motor encoder	EJCLK	J13-2	alternately '0' and '1' *
	bit4	Pickup motor layer A	PICKA	CPU	alternately '0' and '1' *
	bit5	Pickup motor layer B	PICKB	CPU	alternately '0' and '1' *
	bit6	Pickup motor hold	PICKHOLB	CPU	1: output present
	bit7	AD trigger	ADTRG	CPU	1: output present
P008	bit0	Not used			
	bit1	Separation clutch	CLD	J10-4	
	bit2	Skew sensor	SKS	J13-12	1: original present
	bit3	Original delivery sensor	EJJAM	J2-15	1: original present
	bit4	Manual feed cassette sensor	MFST	J2-10	1: original present
	bit5	Not used			
	bit6	Reversal sensor	TNS	J14-B3	1: output present
	bit7	Registration roller clock	TRCLK	J10-B10	alternately '0' and '1' *
P009	bit0	DIP switch 1	DIPSW1	CPU	0: ON
	bit1	DIP switch 2	DIPSW2	CPU	0: ON
	bit2	DIP switch 3	DIPSW3	CPU	0: ON
	bit3	DIP switch 4	DIPSW4	CPU	0: ON
	bit4	DIP switch 5	DIPSW5	CPU	0: ON
	bit5	DIP switch 6	DIPSW6	CPU	0: ON
	bit6	Left cover sensor (front)	LCVF	J14-B7	1: closed
	bit7	Left cover sensor (rear)	LCVR	J12-9	1: closed

*Checks not possible because of data processing speed.

I/O>FEEDER

Address	bit	Description	Signal	Connector	Remarks
P010	bit0	7-segment LED0	7SEG_D	CPU	0: ON
	bit1	7-segment LED1	7SEG_E	CPU	0: ON
	bit2	7-segment LED2	7SEG_C	CPU	0: ON
	bit3	7-segment LED3	7SEG_G	CPU	0: ON
	bit4	7-segment LED4	7SEG_B	CPU	0: ON
	bit5	7-segment LED5	7SEG_F	CPU	0: ON
	bit6	7-segment LED6	7SEG_A	CPU	0: ON
	bit7	ADF open/closed sensor	RFOP	J12-15	1: closed
P011	bit0	Slide switch 0	SSW-0	J51-5	1: ON
	bit1	Slide switch 1	SSW-1	J51-4	1: ON
	bit2	Slide switch 2	SSW-2	J51-3	1: ON
	bit3	Slide switch 3	SSW-3	J51-2	1: ON
	bit4	Slide switch 4	SSW-4	J51-6	1: ON
	bit5	Push switch 1	PSHSW-1	CPU	0: ON
	bit6	Push switch 2	PSHSW-2	CPU	0: ON
	bit7	Push switch 3	PSHSW-3	CPU	0: ON
P012	bit0	Not used			
	bit1	Not used			
	bit2	Not used			
	bit3	Not used			
	bit4	Not used			
	bit5	Not used			
	bit6	Not used			
	bit7	Not used			

4. SORTER

I/O>SORTER

Address	bit	Description	Signal	Connector	Remarks
P001	bit0	Not used			
	bit1	Not used			
	bit2	Not used			
	bit3	Not used			
	bit4	Upper path switching solenoid (SL2) ON	UPSCHG	J119-2	0: ON
	bit5	Inlet path paper sensor PCB (S1)	ENTPCB	J121-B3	1: paper present
	bit6	Delivery motor current switch	—	CPU	1: constant speed, 0: acceleration
	bit7	Puncher feeding path detection	—	CP106	
P002	bit0	Master CPU (IC101) busy signal	—	CPU	0: busy
	bit1	Slave CPU (IC121) reset	—	CPU	0: reset
	bit2	Not used			
	bit3	Not used			
	bit4	Not used			
	bit5	Not used			
	bit6	Not used			
	bit7	Not used			
P003	bit0	Not used			
	bit1	Lower path paper sensor (S3) detection	LWRPPCB	J120-B8	1: paper absent, 0: paper present
	bit2	Not used			
	bit3	Not used			
	bit4	Shutter home position detection		J107-3	0: HP
	bit5	Rear jogging plate home position (PI7) detection	RJOGHP	J104-B9	1: HP
	bit6	Front jogging plate home position (PI9) detection	FJOGHP	J104-B3	1: HP
	bit7	Tray auxiliary plate retraction detection	SPTTRYIN	J105-B6	1: HP

I/O>SORTER

Address	bit	Description	Signal	Connector	Remarks
P004	bit0	Swing motor FG	—	CP104	
	bit1	Buffer path rear sensor (PI3)	—	CP120A-7	0: paper present
	bit2	Inserter drive motor FG	—	IC145-2	
	bit3	Not used			
	bit4	Sort delivery sensor (PI4)	STDLV	J120-B3	1: paper present
	bit5	Not used			
	bit6	Not used			
	bit7	Not used			
P005	bit0	EEROM serial output	—	IC102-3	—
	bit1	EEROM load signal	—	IC102-1	0: CS
	bit2	EEROM serial input	—	IC102-4	—
	bit3	24 VR down detection	—	J101-1	1: down
	bit4	Not used			
	bit5	Delivery motor FG		IC128-9	
	bit6	Not used			
	bit7	Not used			
P006	bit0	Buffer motor (M2) A	BUFMA	J122-A5	alternately '0' and '1'
	bit1	Buffer motor (M2) B	BUFMB	J122-A4	alternately '0' and '1'
	bit2	Buffer motor (M2) A*	BUFMA*	J122-A3	alternately '0' and '1'
	bit3	Buffer motor B*	BUFMB*	J122-A2	alternately '0' and '1'
	bit4	Delivery motor (M3) A/A*	EJCMA	J122-B5	alternately '0' and '1'
	bit5	Delivery motor (M3) B/B*	EJCMB	J122-B4	alternately '0' and '1'
	bit6	Inlet motor (M1) clock	INPASSMCLK	J124-4	alternately '0' and '1'
	bit7	Delivery motor (M3) ON*	EJCMHLD	J122-B6	1: OFF, 0: ON

*Checks not possible because of data processing speed.

I/O>SORTER

Address	bit	Description	Signal	Connector	Remarks
P007	bit0	Not used			
	bit1	Not used			
	bit2	Stack delivery motor (M7) PMW*	—	—	1: OFF, 0: ON
	bit3	Stack delivery motor (M7) CCW*	—	—	1: CW, 0: CCW
	bit4	Stack delivery motor (M7) CW*	—	—	1: CCW, 0: CW
	bit5	Inlet motor (M1) ON	INPASSMON*	J124-7	0: ON
	bit6	Inlet motor (M1) CW*/CCW	INPASSMCW*	J124-6	1: CCW, 0: CW
	bit7	Inlet motor (M1) brake	INPASSMBRK	J124-5	1: braked
P008	bit0	Buffer path switching solenoid (SL1) ON	BFPSSCHG*	J120-A2	1: wrapped, 0: released
	bit1	Not used			
	bit2	Inlet motor (M1) lock signal	INPASSMLOCK	J124-3	0: lock
	bit3	Non-sort delivery sensor (PI6) detection	NSTDLV	J119-5	1: paper present
	bit4	Stack delivery motor (M7) lock detection	—	—	0: lock
	bit5	Lower path paper sensor	BFPSSXIT	J120-A9	1: paper present
	bit6	Not used			
	bit7	Not used			
P009	bit0	Staple detecting switch (MSW3) detection	HOOKEMP	J111-9	1: staple absent
	bit1	Cartridge switch (MSW4) detection	CRTSET	J111-10	1: absent, 0: present
	bit2	Staple edging (PI18) detection	SLFPRIM	J111-13	0: edging
	bit3	Stacking tray proximity detection		J116-3	0: ON
	bit4	Folding feeding path 1 detection		J125-A3	1: paper present
	bit5	Folding feeding path 2 detection		J125-A2	1: paper present
	bit6	Folding feeding path 3 detection		J125-B9	1: paper present
	bit7	Folding feeding path 4 detection		J125-B8	1: paper present

*Checks not possible because of data processing speed.

I/O>SORTER

Address	bit	Description	Signal	Connector	Remarks
P010	bit0	Inserter cover open/closed detection		J117-A1	1: open
	bit1	Tray safety switch (front, MSW6)/tray safety switch (rear, MSW7) detection	—	J114-1	1: OFF
	bit2	Inserter unit detection	—	J117-A8	0: present
	bit3	Punching unit detection	—	J118-B3	0: present
	bit4	Z-folding unit detection	—	J125-A1	0: present
	bit5	Saddle unit detection	—	J102-B7	0: Present
	bit6	Stapler safety switch (front, MSW8)/stapler safety switch (rear, MSW9)/swing guide safety switch (MSW2)	—	J113-1	0: OFF
	bit7	Fan (FM1) rotation error detection	FANSTP	J103-7	1: error, 0: normal
P011	bit0	Not used			
	bit1	Not used			
	bit2	Not used			
	bit3	Swing (M8) motor ON	—	CPU	1: OFF, 0: ON
	bit4	Power supply fan (FM1) ON signal	FANON	J103-8	1: ON, 0: OFF
	bit5	Buffer motor (M2) ON signal	BUFMHLD	J122-A6	1: OFF, 0: ON
	bit6	Buffer motor (M2) current switching	—	CPU	1: constant speed, 0: acceleration
	bit7	Not used			
P012	bit0	Front jogging plate motor (M4) A	FJOGMA/ FJOGMA*	J104-A5/-A3	alternately '0' and '1'
	bit1	Front jogging plate motor (M4) B	FJOGMB/ FJOGMB*	J104-A4/-A2	alternately '0' and '1'
	bit2	Front jogging plate motor (M4) hold	—	CPU	1: stop
	bit3	Knurled belt solenoid (SL3)	FDBLT*	J120-B5	0: wait
	bit4	Rear jogging plate motor (M5) A	RJOGMA/ RJOGMA*	J104-A10/-A8	alternately '0' and '1'
	bit5	Rear jogging plate motor (M5) B	RJOGMB/ RJOGMB*	J104-A9/-A7	alternately '0' and '1'
	bit6	Rear jogging plate motor (M5) hold	—	CPU	1: stop
	bit7	Not used			

*Checks not possible because of data processing speed.

I/O>SORTER

Address	bit	Description	Signal	Connector	Remarks
P013	bit0	Tray auxiliary plate motor (M6) A	SPTTRYMA/ SPTTRYMA*	J105-A9/-A7	alternately '0' and '1'
	bit1	Tray auxiliary plate motor (M6) B	SPTTRYMB/ SPTTRYMB*	J105-A8/-A6	alternately '0' and '1'
	bit2	Tray auxiliary plate motor (M6) hold	—	CPU	1: stop
	bit3	Not used			
	bit4	Paddle motor (M9) A	STPMVMA/ STPMVMA*	J108-A5/-A3	alternately '0' and '1'
	bit5	Paddle motor (M9) B	STPMVMB/ STPMVMB*	J108-A4/-A2	alternately '0' and '1'
	bit6	Paddle motor (M9) ON signal*	—	CPU	1: stop
	bit7	Paddle motor (M9) current switching	—	CPU	1: low-speed, 0: acceleration
P014	bit0	Paddle home position (PI14) detection	PDLHP	J108-A8	0: HP
	bit1	Z-folding unit upper cover detection	—	J125-B3	1: closed
	bit2	Inserter open detection	—	J117-A9	1: closed
	bit3	Front cover open sensor (PI1) detection	FDROPN	J121-B6	1: closed
	bit4	Upper cover open sensor (PI5) detection	UPCVROPN	J119-8	1: closed
	bit5	Z-folding path set detection	—	J125-B6	1: present
	bit6	Z-folding path 1 paper level detection	—	J125-B7	1: paper present
	bit7	Saddle inlet front path sensor	—	J123-5	1: paper present
P015	bit0	Puncher waste paper feeder motor ON	—	J118-B10	1: ON
	bit1	Stacker sub tray solenoid ON		J110-B12 J110-B13	
	bit2	Not used			
	bit3	Inlet motor (M10) gain adjustment	M1ADJ	J124-1	1: high-speed, 0: low-speed
	bit4	Not used			
	bit5	Saddle path flapper solenoid ON		J123-2	0: ON
	bit6	Inserter drive motor ON		J117-B9	1: ON
	bit7	Not used			

I/O>SORTER

Address	bit	Description	Signal	Connector	Remarks
P016	bit0	Inserter feeding path 1 detection		J117-A6	1: paper present
	bit1	Inserter feeding path 2 detection		J117-A7	1: paper present
	bit2	Inserter feeding path 3 detection		J117-A8	1: paper present
	bit3	Tray B paper detection (PI22)	STTRYPA	J110-B7	1: paper present
	bit4	Sample tray paper detection		J115-B10	1: paper present
	bit5	Swing guide closed detection (PI15)	SWDGDCL	J108-B3	0: close
	bit6	Swing guide open detection (PI16)	SWORN	J108-B6	1: open
	bit7	Stack delivery sensor (PI8) detection	BNDLDELV	J104-B6	1: paper present
P017	bit0	DUST-BOX-SET			1: set
	bit1	Not used			
	bit2	Not used			
	bit3	Not used			
	bit4	Not used			
	bit5	Not used			
	bit6	Not used			
	bit7	Sample tray detection			1: present, 0: absent
P018	bit0	SW103-1	—	SW103-1	0: ON
	bit1	SW103-2	—	SW103-2	0: ON
	bit2	SW103-3	—	SW103-3	0: ON
	bit3	SW103-4	—	SW103-4	0: ON
	bit4	SW103-5	—	SW103-5	0: ON
	bit5	SW103-6	—	SW103-6	0: ON
	bit6	SW103-7	—	SW103-7	0: ON
	bit7	SW103-8	—	SW103-8	0: ON

I/O>SORTER

Address	bit	Description	Signal	Connector	Remarks
P019	bit0	SW104 input		PSW-104	0: ON
	bit1	SW106 input		PSW-106	0: ON
	bit2	SW105 input		PSW-105	0: ON
	bit3	Punch hole number set		SW107-1	1: 2 holes, 0: 3 holes
	bit4	For adjustment 0		SW107-2	0: ON
	bit5	For adjustment 1		SW107-3	0: ON
	bit6	For adjustment 2		SW107-4	0: ON
	bit7	For adjustment 3		SW107-5	0: ON
P020	bit0	Segment a		LED101	1: ON
	bit1	Segment b		LED101	1: ON
	bit2	Segment c		LED101	1: ON
	bit3	Segment d		LED101	1: ON
	bit4	Segment e		LED101	1: ON
	bit5	Segment f		LED101	1: ON
	bit6	Segment g		LED101	1: ON
	bit7	Segment dot		LED101	1: ON
P021	bit0	Not used			
	bit1	Not used			
	bit2	Not used			
	bit3	Not used			
	bit4	Not used			
	bit5	Not used			
	bit6	Not used			
	bit7	Not used			
P022	bit0	Not used			
	bit1	Not used			
	bit2	Not used			
	bit3	Not used			
	bit4	Not used			
	bit5	Not used			
	bit6	Not used			
	bit7	Not used			

I/O>SORTER

Address	bit	Description	Signal	Connector	Remarks
P023	bit0	Not used			
	bit1	Not used			
	bit2	Not used			
	bit3	Not used			
	bit4	Not used			
	bit5	Not used			
	bit6	Not used			
	bit7	Not used			
P024	bit0	Not used			
	bit1	Not used			
	bit2	Not used			
	bit3	Not used			
	bit4	Not used			
	bit5	Not used			
	bit6	Not used			
	bit7	Not used			
P025	bit0	Not used			
	bit1	Not used			
	bit2	Not used			
	bit3	Not used			
	bit4	Not used			
	bit5	Not used			
	bit6	Not used			
	bit7	Not used			
P026	bit0	Not used			
	bit1	Not used			
	bit2	Not used			
	bit3	Not used			
	bit4	Not used			
	bit5	Not used			
	bit6	Not used			
	bit7	Not used			

I/O>SORTER

Address	bit	Description	Signal	Connector	Remarks
P027	bit0	Not used			
	bit1	Not used			
	bit2	Not used			
	bit3	Not used			
	bit4	Not used			
	bit5	Not used			
	bit6	Not used			
	bit7	Not used			
P028	bit0	Tray B upper position sensor (PI20) detection	STTRYUPPO	J110-B4	1: blocked
	bit1	Tray B lower position sensor (PI21) detection	STTRLWPPO	J110-B3	1: blocked
	bit2	Stapler shift home position detection (PI17)	STPLHP	J112-8	1: HP
	bit3	Stapling home position detection (PI19)	STPDRHP	J111-11	1: HP
	bit4	Not used			
	bit5	Not used			
	bit6	Not used			
	bit7	Not used			
P029	bit0	Not used			
	bit1	Not used			
	bit2	Not used			
	bit3	Not used			
	bit4	Not used			
	bit5	Not used			
	bit6	Not used			
	bit7	Not used			
P030	bit0	Not used			
	bit1	Not used			
	bit2	Not used			
	bit3	Not used			
	bit4	Not used			
	bit5	Not used			
	bit6	Not used			
	bit7	Not used			

I/O>SORTER

Address	bit	Description	Signal	Connector	Remarks
P031	bit0	Not used			
	bit1	Not used			
	bit2	Tray B lock detection (PI23)	STTRYDL	J110-B10	
	bit3	Not used			
	bit4	Not used			
	bit5	Not used			
	bit6	Not used			
	bit7	Not used			
P032	bit0	Not used			
	bit1	Not used			
	bit2	Not used			
	bit3	Not used			
	bit4	Not used			
	bit5	Not used			
	bit6	Not used			
	bit7	Not used			
P033	bit0	Not used			
	bit1	Not used			
	bit2	Not used			
	bit3	Not used			
	bit4	Not used			
	bit5	Not used			
	bit6	Not used			
	bit7	Not used			
P034	bit0	Not used			
	bit1	Not used			
	bit2	Not used			
	bit3	Not used			
	bit4	Not used			
	bit5	Not used			
	bit6	Not used			
	bit7	Not used			

I/O>SORTER

Address	bit	Description	Signal	Connector	Remarks
P035	bit0	Not used			
	bit1	Not used			
	bit2	Not used			
	bit3	Not used			
	bit4	Not used			
	bit5	Not used			
	bit6	Not used			
	bit7	Not used			

D. ADJUST Adjustment Mode

When you select COPIER>AJDUST, you are given the choices shown in the table that follows.

Items under COPIER>ADJUST

Level 1	Level 2	Level 3	Range	Description
ADJUST	LAMP	L-DATA	0 to 255	Use it to adjust the scanning lamp intensity data.
	AE	AE-TBL	1 to 9	Use it to adjust the text density for AE mode with priority on speed.
	ADJ-XY	ADJ-X	0 to 2970	Use it to adjust the image leading edge position.
		ADJ-Y	360 to 1360	Use it to adjust the CCD image read start position (main scanning direction).
		ADJ-S	0 to 4	Use it to adjust the scanner home position.
	CCD	GAIN-E	80 to 160	Use it to adjust the CCD even-number photocell gain.
		GAIN-O	80 to 160	Use it to adjust the CCD odd-number photocell gain.
		OFST-E	1 to 254	Use it to adjust the CCD even-number photocell offset.
		OFST-O	1 to 254	Use it to adjust the CCD odd-number photocell offset.
		SH-TRGT	1 to 511	Use it to set the white level target value for shading correction.
	LASER	PVE-OFST	-300 to 300	Use it to adjust the offset from the center of the laser.
		LA-DELAY	450 to 550	Use it to enter the laser delay value for the laser unit.
		LA-PWR-A	48 to 432	Use it to set the laser A power adjustment value.
		LA-PWR-B	48 to 432	Use it to set the laser B power adjustment value.
		IP-DELAY	5 to 25	Use it to set the laser delay value for the IP PCB.
	DEVELOP	DE-DC	0 to 500	Use it to set the developing DC output adjustment value for image exposure.
		DE-NO-DC	0 to 500	Use it to set the developing DC output adjustment value for image exposure.
		DE-OFST	-50 to 50	Use it to adjust the offset for the image bias DC component.
	DENS	DENS-ADJ	1 to 9	Use it to adjust copy density.
	BLANK	BLANK-T	0 to 2362	Use it to set the leading edge non-image width.
		BLANK-B	0 to 2362	Use it to set the trailing edge non-image width.
	V-CONT	EPTOTOFST	0 to 255	Use it to set the potential sensor offset.
		VL-OFST	-5 to 5	Use it to set the light area potential target value offset.
		VD-OFST	-5 to 5	Use it to set the dark area potential target value offset.
	HV-PRI	GRID	400 to 900	Use it to set the primary charging assembly grid bias output adjustment value.
	HV-TR	TR-N1	-650 to -150	Use it to set the transfer charging output adjustment value (1st side).
		TR-N2	-650 to -150	Use it to set the transfer charging output adjustment value (2nd side).
		PRE-TR	0 to 300	Use it to set the output adjustment value for the pre-transfer charging assembly.
	HV-SP	SP-N1	0 to 500	Use it to set the separation charging output adjustment value (1st side).
		SP-N2	0 to 500	Use it to set the separation charging output adjustment value (2nd side).

Items under COPIER>ADJUST

Level 1	Level 2	Level 3	Range	Description
ADJUST	FEED-ADJ	REGIST	-50 to 50	Use it to adjust the activation timing for the registration clutch.
		ADJ-REFE	-101 to 100	Use it to adjust the re-pickup horizontal registration.
	CST-ADJ	C3-STMTR		Use it to adjust the paper width sensor for the cassette 3 (STMTR).
		C3-A4R		Use it to adjust the paper width sensor for the cassette 3 (A4R).
		C4-STMTR		Use it to adjust the paper width sensor for the cassette 4 (STMTR).
		C4-A4R		Use it to adjust the paper width sensor for the cassette 4 (A4R).
		MF-A4R		Use it to adjust the paper width sensor for the manual feed cassette (A4R).
		MF-A6R		Use it to adjust the paper width sensor for the manual feed tray (A6R).
		MF-A4		Use it to adjust the paper width sensor for the manual feed tray (A4).
		C3-LVOL		Use it to set the stacking limit for the cassette 3 (50 sheets).
		C3-HVOL		Use it to set the stacking limit for the cassette 3 (275 sheets).
		C4-LVOL		Use it to se the stacking limit for the cassette 4 (50 sheets).
		C4-HVOL		Use it to set the stacking limit for the cassette 4 (275 sheets).

Items under FEEDER>ADJUST

Level 1	Level 3	Range	Description
ADJUST	DOCST	-50 to 50	Use it to adjust the original stop position.
	DOCST-M	-50 to 50	Use it to adjust the original stop position (for manual feed).
	LA-SPEED	-54 to 54	Use it to adjust the original feeding speed for stream reading mode.
	STRD-S	-25 to 25	Use it to adjust the original stop position for stream reading mode (for small-size).
	STRD-L	-25 to 25	Use it to adjust the original stop position for stream reading mode (for large-size).
	RVM-SPD	-30 to 30	Use it to adjust the reversal motor speed.

Items under SORTER>ADJUST

Level 1	Level 3	Range	Description
ADJUST	PNCH-HLE		Use it to adjust the offset of punch holes.

<LAMP> COPIER>ADJUST

Adjusting the Activation Voltage of the Scanning Lamp

Level 3	Description	Remarks
L-DATA	Entering Scanning Lamp Intensity Data • If faulty images are generated after execution of COPIER>FUNCTION>CCD>CCD-ADJ, enter the value recorded on the service label. • This will determine FL-PWM. 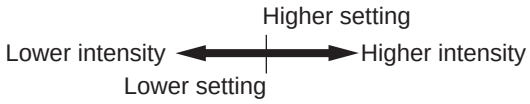	Range : 0 to 255

<AE>

AE Adjustment

Level 3	Description	Remarks
AE-TBL	Adjusting Text Density for Real-Time AE Mode • Enter a value to adjust the density correction curve for real-time AE mode (10 settings). 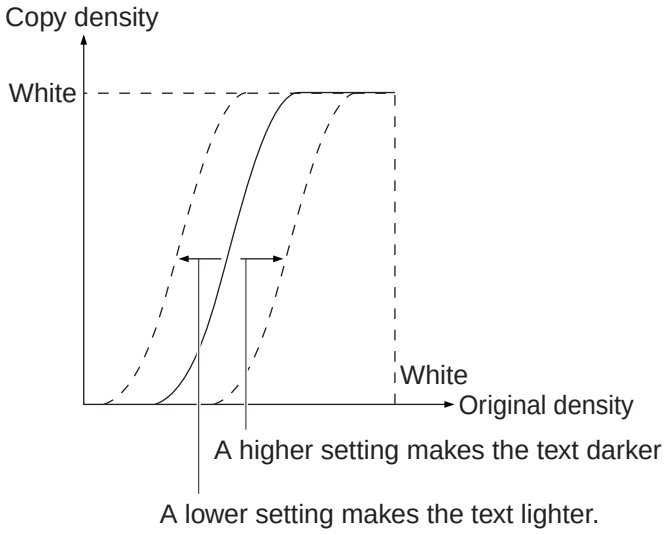	Range : 0 to 9 (default at 3)

<ADJ-XY>
Adjusting the Image Read Start Position

COPIER>ADJUST

Level 3	Description	Remarks
ADJ-X	Adjusting the Scanner Image Leading Position • Enter a value to adjust the image leading edge position. 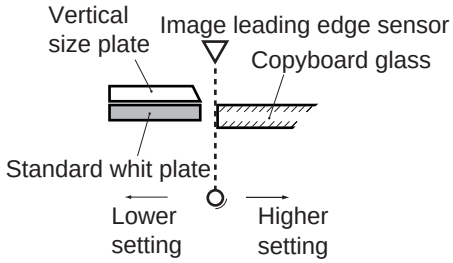	Range : 0 to 2970 ('12' causes a shift of 1 mm) • Be sure to execute this mode before adjusting the margin. • Do not create a margin using this mode.
ADJ-Y	Adjusting the CCD Read Start Position • Enter a value to adjust the read start position. 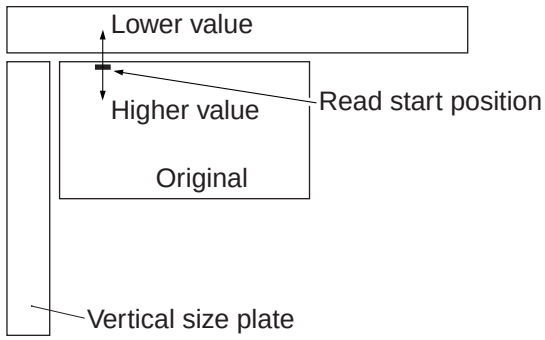	Range : 360 to 1360 (each '12' causes a shift of 1 mm)
ADJ-S	Adjusting the Scanner Home Position • Enter a value to adjust the home position (standard white plate read position). 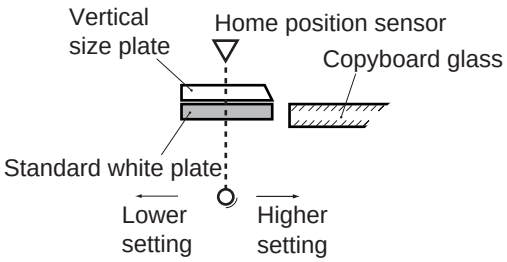	Range : 0 to 4 • If dirt exists on the standard white plate, use this mode to avoid reading the area.

<CCD>
Adjusting CCD/Shading-Related items

COPIER>ADJUST

Level 3	Description	Remarks
GAIN-E	Use it to enter a gain adjustment value for the CCD output for even-number pixels.	Execute COPIER>FUNCTION>CCD>CCD-ADJ; then, if a faulty image is generated, enter the value recorded on the service label.
GAIN-O	Use it to enter a gain adjustment value for the CCD output for odd-number pixels.	
OFST-E	Use it to enter an offset adjustment value for the CCD output for even-number pixels.	
OFST-O	Use it to enter an offset adjustment value for the CCD output for odd-number pixels.	
SH-TRGT	Use it to enter a white level target value for shading correction.	

<LASER>
Adjusting the Laser Output

COPIER>ADJUST

Level 3	Description	Remarks
PVE-OFST	Use it to adjust the position of laser exposure. 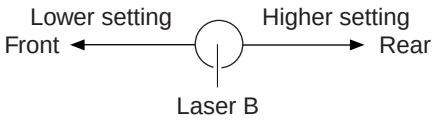	Range : -300 to 300 • If you have replaced the IP PCB or initialized the RAM on the IP PCB, enter the value recorded on the label on the PCB. • Note that laser A shifts in sync with laser B.
IP-DELAY	Use it to enter a delay value for the image processor PCB.	If you have replaced the IP PCB or initialized the RAM on the IP PCB, enter the value recorded on the PCB.
LA-PWR-A	Use it to enter a laser power adjustment value for laser A.	If you have replaced the laser unit or initialized the RAM on the IP PCB, enter the value recorded on the label attached to the laser unit.
LA-PWR-B	Use it to enter a laser power adjustment value for laser B.	
LA-DELAY	Use it to enter a delay value for the laser unit.	If you have replaced the laser unit or initialized the RAM on the IP PCB, enter the value recorded on the label attached to the laser unit.

<DEVELOP>
Adjusting the Developing Bias Output

COPIER>ADJUST

Level 3	Description	Remarks
DE-DC	Use it to enter a DC bias output value for the image area.	Range: 0 to 500 • If you have replaced the IP PCB or initialized the RAM on the IP PCB, enter the value recorded on the service label.
DE-NO-DC	Use it to enter a developing bias output value for sheet-to-sheet distance.	
DE-OFST	Use it to adjust the offset value of the developing DC bias. 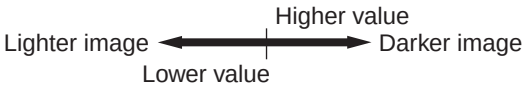	Range : -50 to 50 • If you have replaced the IP PCB or initialized the RAM on the IP PCB, enter the value recorded on the service label.

<DENS>
Fine-Adjusting Copy Density Auto Correction

Level 3	Description	Remarks
DENS-ADJ	Correcting Copy Density • Use it to correct the f-value table if the copy image is foggy or the high-density area is blurred. 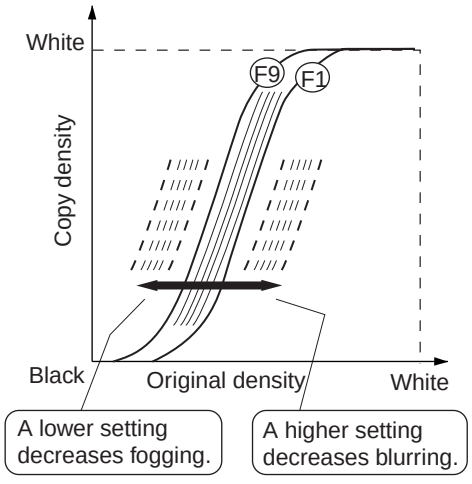	Range : 0 to 9 (default at 3)

<BLANK>
Adjusting the Non-Image Width

COPIER>ADJUST

Level 3	Description	Remarks
BLANK-T	Use it to enter a non-image width adjustment value for the image leading edge.	• If you have replaced the IP PCB or initialized the RAM on the IP PCB, enter the value recorded on the service label.
BLANK-B	Use it to enter a non-image width adjustment value for the image trailing edge.	

<V-CONT>
Adjusting the Potential Control System

Level 3	Description	Remarks
EPOTOFST	Use it to enter an offset value for the potential sensor.	• If you have replaced the IP PCB or initialized the RAM on the IP PCB, enter the value recorded on the service label.
VL-OFST	Use it to enter an offset value for the VL target potential.	
VD-OFST	Use it to enter an offset value for the VD target potential.	

<HV-PRI>
Adjusting the Output of the Primary Charging Assembly

COPIER>ADJUST

Level 3	Description	Remarks
GRID	Use it to enter an output adjustment value for the grid bias.	• If you have replaced the IP PCB or initialized the RAM on the IP PCB, enter the value recorded on the service label.

<HV-TR>
Adjusting the Output of the Transfer Charging Assembly/Pre-Transfer Charging Assembly

Level 3	Description	Remarks
TR-N1	Use it to enter an output adjustment value for the transfer charging current (for plain paper; single-sheet or 1st side of double-sided sheet).	• If you have replaced the IP PCB or initialized the RAM on the IP PCB, enter the value recorded on the service label.
TR-N2	Use it to enter an output adjustment value for the transfer charging current (for plain paper; 2nd side of double-sided sheet).	
PRE-TR	Use it to enter an output adjustment value for the pre-transfer charging current.	

<HV-SP>
Adjusting the Output of the Separation Charging Assembly

Level 3	Description	Remarks
SP-N1	Use it to enter an output adjustment value for separation charging current (for plain paper; single-sided sheet or 1st side of double-sided sheet).	• If you have replaced the IP PCB or initialized the RAM on the IP PCB, enter the value on the service label.
SP-N2	Use it to enter an output value for the separation charging current (for plain paper; 2nd side of double-sided sheet).	

<FEED-ADJ>
Adjusting the Feeding System

COPIER>ADJUST

Level 3	Description	Remarks
REGIST	Adjusting the Activation Timing for the Registration Clutch • A higher setting delays the timing, decreasing the leading edge margin.	Range : -50 to 5 (each '23' causes a shift of 1 mm)
ADJ-REFE	Adjusting the Horizontal Registration for Re-Pickup • If the image is displaced to the rear, enter a lower setting. • If the image is displaced to the front, enter a higher setting.	Range : -101 to 100 (each '23' causes a shift of 1 mm)

<CST-ADJ>
Adjusting the Cassette/Manual Feed Tray-Related Items

Level 3	Description	Remarks
C3-STMTR	Use it to enter a paper width basic value for the cassette 3 (STMTR).	• If you have replaced the IP PCB or initialized the RAM on the IP PCB, enter the value recorded on the service label. • Be sure to execute FUNCTION>CST if you have replaced the paper width sensor.
C3-A4R	Use it to enter a paper width basic value for the cassette 3 (A4R).	
C4-STMTR	Use it to enter a paper width basic value for the cassette 4 (STMTR).	
C4-A4R	Use it to enter a paper width basic value for the cassette 4 (A4R).	
MF-A4R	Use it to enter a paper width basic value for the manual feed tray (A4R).	
MF-A6R	Use it to enter a paper width basic value for the manual feed tray (A6R).	
MF-A4	Use it to enter a paper width basic value for the manual feed tray (A4).	
C3-LVOL	Use it to set the stacking limit for the cassette 3 (50 sheets).	• If you have replaced the IP PCB or initialized the RAM on the IP PCB, enter the value recorded on the service label.
C3-HVOL	Use it to set the stacking limit for the cassette 3 (250 sheets).	
C4-LVOL	Use it to set the stacking limit for the cassette 4 (50 sheets).	
C4-HVOL	Use it to set the stacking limit for the cassette 4 (250 sheets).	

<FEEDER>

FEEDER>ADJUST

Level 3	Description	Remarks
DOCST	Adjusting the Original Stop Position for Pickup from the Feeder (original tray pickup) Operation 1) Select DOCST. 2) Place paper on the tray (A3/11"x17"). 3) Enter a setting using the keypad. 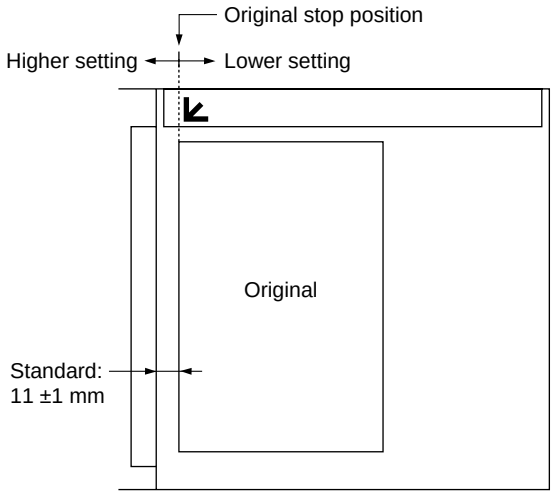 4) Press the OK key. • The paper on the original tray will be picked up and stopped on the copyboard glass. 5) Open the feeder slowly, and check the position of the paper. 6) Close the feeder slowly without removing the paper. 7) Press the OK key. • The paper on the copyboard glass will be delivered to the original tray. 8) If the stop position is not as indicated, go back to step 3), and make adjustments once again.	Range : -50 to 50 (Each '1' causes a shift of 0.5 mm) • The data is retained by the ADF controller PCB on the feeder side.

<FEEDER>

FEEDER>ADJUST

Level 3	Description	Remarks
DOCST-M	Adjusting the Original Stop Position for Pickup for the Feeder (manual tray pickup) Operation 1) Select DOCST-M. 2) Place paper on the manual feed tray (A3/11"×17"). 3) Enter a setting using the keypad. 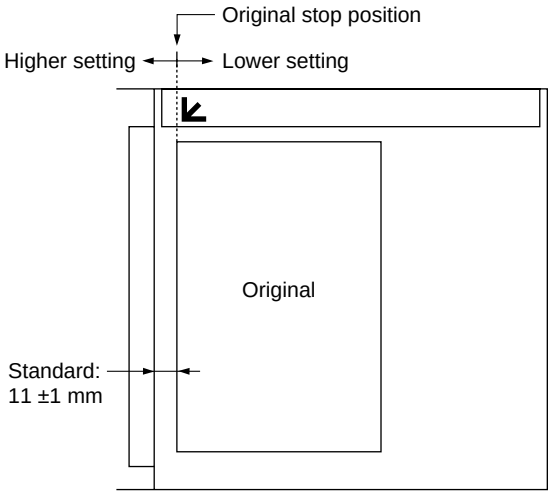 4) Press the OK key. • The paper on the manual feed tray will be picked up and stopped on the copyboard glass. 5) Open the feeder slowly, and check the position of the paper. 6) Close the feeder slowly without removing the paper. 7) Press the OK key. • The paper on the copyboard board glass will be delivered to the manual feed tray. 8) If the stop position is not as indicated, go back to step 3), and make adjustments once gain.	Range : -50 to 50 (Each '1' causes a shift of 0.5 mm) • The data is retained by the ADF controller PCB on the feeder side.

<FEEDER-Related Items>

FEEDER>ADJUST
SORTER>ADJUST

Level 3	Description	Remarks
LA-SPEED	Adjusting the Original Feeding Speed for Stream Reading Mode	Range : -54 to 54 (a higher setting will increase the speed) • The data is retained by the controller PBC of the ADF on the feeder side.
STRD-S	Adjusting the Scanner Stop Position for Stream Reading Mode (small-size) 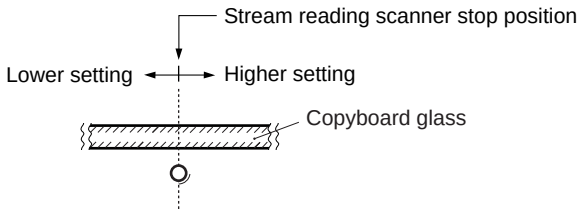 	Range : -25 to 25 (each '1' causes a shift of 0.1 mm) • The data is retained by the IP PCB on the copier. • If you have replaced the IP PCB or initialized the RAM on the IP PCB, enter the value recorded on the service label.
STRD-L	Adjusting the Scanner Stop Position for Stream Reading (large-size) 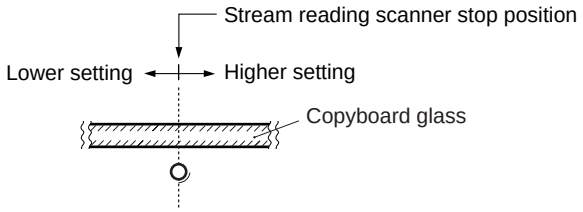 	
RVM-SPD	Adjusting the speed of Reversal Motor • For details, see the Feeder Service Manual.	Range : -30 to 30 (each '1' increases the speed by 0.1%) • The data is retained by the controller PBC of the ADF on the feeder side.

<SORTER-Related Items>

Level 3	Description	Remarks
PNCH-HLE	Adjusting the offset for Punch Hole Position (feeding direction) • For details, see the Finisher Service Manual.	Range : 6 to 24mm (12mm at default) • The data is retained by the finisher controller PCB on the finisher side.

E. FUNCTION Operation/Inspection Mode

When you select COPIER>FUNCTION, you are given the choices shown in the table that follows.

Items under COPIER>FUNCTION

Level 1	Level 2	Level 3	Description
FUNCTION	INSTALL	TONER-S	Use it to supply or stir toner.
	CCD	CCD-ADJ	Use it to execute auto adjustment of shading.
	LASER	POWER-A	Use it to turn on laser A.
		POWER-B	Use it to turn on laser B.
	DPC	OFST	Use it to adjust the offset for the potential sensor.
	CST	C3STMTR	Use it to execute auto registration of a paper width basic value for the cassette 3 (STMTR).
		C3-A4R	Use it to execute auto registration of a paper width basic value for the cassette 3 (A4R).
		C4-STMTR	Use it to execute auto registration of a paper width basic value for the cassette 4 (STMTR).
		C4-A4R	Use it to execute auto registration of a paper width basic value for the cassette 4 (A4R).
		MF-A4R	Use it to execute auto registration of a paper width basic value for the manual feed tray (A4R).
		MF-A6R	Use it to execute auto registration of a paper width basic value for the manual feed tray (A6R).
		MF-A4	Use it to execute auto registration of a paper width basic value for the manual feed tray (A4).
	FIXING	NIP-CHK	Use it to generate a nip width check image output for the fixing roller.
	PANEL	LCD-CHK	Use it to check missing dots on the touch panel.
		LED-CHK	Use it to check the activation of the LEDs on the control panel.
		LED-OFF	Use it to check the de-activation of the LEDs on the control panel.
		KEY-CHK	Use it to check the inputs of the keys on the control panel.
		TOUCHCHK	Use it to adjust the coordinates for the touch panel.
	PART-CHK	CL	Use it to select a clutch that turns on at CL-ON.
		CL-ON	Use it to check the operation of a clutch.
		MTR	Use it to check the operation of a motor.
		MTR-ON	Use it to check the operation of a motor.
		SL	Use it to select a solenoid that turns on at SL-ON.
		SL-ON	Use it to check the operation of a solenoid.
	CLEAR	ERR	Use it to clear error codes.
		IP	Use it to initialize the RAM on the image processor PCB.
		JAM-HIST	Use it to clear the jam history.
		ERR-HIST	Use it to initialize the error code history.
		MF-CON	Use it to initialize the RAM on the MFC PCB.
	MISC-R	SCANLAMP	Use it to check the activation of the scanning lamp.
		PRE-EXP	Use it to check the activation of the pre-exposure LEDs.
	HRD-DISK	SCANDISK	Use it to scan the hard disk.
		FORMAT	Use it to format the hard disk.

The state of the machine is indicated in the upper right corner of the screen. Pay attention to the indications while executing service mode; they include the following:

READY: The machine is ready for servicing/copying operation.

SERVICE: The machine is performing servicing operations. (This indication is used while in inspection/operation mode of service mode.)

Items under FEEDER>FUNCTION

Level 1	Level 3	Description
FUNCTION	SENS-INT	Use it to adjust the sensitivity of each sensor of the feeder.
	BLT-CLN	Use it to clean the separation belt of the feeder.
	REG-CLN	Use it to clean the registration roller of the feeder.

<INSTALL>
Operations for Installation

COPIER>FUNCTION

Level 3	Description	Remarks
TONER-S	Supplying Toner from the Toner Cartridge to the Hopper/Developing Assembly and Stirring the Toner Inside the Developing Assembly Operation Select TONER-S to highlight, and press the OK key. (The operation ends in about 10 min.) **Caution:** 1. Before pressing the OK key, check to be sure that the developing assembly is fitted securely. 2. Do not turn off the power while the machine is in operation.	• A count-down number is indicated to the right of TONER-S during operation. • No key except the Stop key is enabled during operation.

<CCD>
Executing Auto Adjustment for CCD/Shading-Related Items

Level 3	Description	Remarks
CCD-ADJ	Executing Auto Adjustment for Shading Operation 1) Place standard white paper* (10 sheets or more) on the copyboard glass. 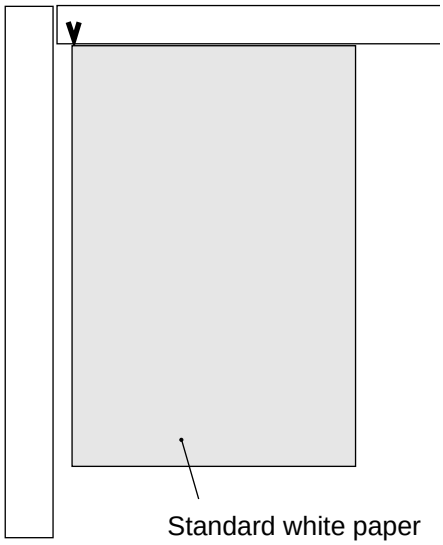 2) Select CCD-ADJ to highlight, and press the Ok key. 3) See that the machine has entered auto adjustment mode. (The adjustment ends in about 1 min.) 4) Record all items under COPIER>ADJUST>CCD and the data under COPIER>ADJUST>LAMP>L-DATA on the service label when they have been updated. * Whitest of all papar used by the user (except paper for a color copier).	If you have replaced the CCD unit, scanning lamp, image processor PCB, or standard white plate, execute this mode.

<LASER>
Laser-Related Operations

COPIER>FUNCTION

Level 3	Description	Remarks
POWER-A POWER-B	Turning On the Laser Operation 1) Select POWER-A or POWER-B to highlight, and press the OK key. 2) See that the selected laser turns on and SERVICE is indicated in the upper right of the screen. 3) See that the laser turns off automatically in about 30 sec. To turn off the laser before that, press the Stop key.	

<DPC>
Executing Automatic Adjustment of Photosensitive Drum Potential-Related Items

Level 3	Description	Remarks
OFST	Adjusting the Potential Sensor Offset Operation 1) Select OFST to highlight, and press the OK key.	• This item is one of series of procedures executed after replacing the potential sensor. Do not use it on its own. For details, See II.C. "Image Formation."

<CST>
Storing the Cassette/Manual Feed Tray Paper Width

Level 3	Description	Remarks
C3-STMTR C3-A4R C4-STMTR C4-A4R	Registering the Paper Width Basic Value for the Cassette 3/4 Operation 1) Set paper of the STMTR size in the cassette, and adjust the side guide plate to its width. 2) Select C3-STMTR (C4-STMTR) to highlight, and press the OK key. • The new setting will be stored under C3-STMTR (C4-STMTR). 3) Repeat steps 1) and 2) for A4R size.	STMTR width : 139.5 mm A4R width : 210 mm • For fine-adjustment, use the following: ADJUST >CST-ADJ>C3-STM-TR (C4-STMTR), C3-A4R (C4-A4R).
MF-A4R MF-A6R MF-A4	Registering the Paper Width Basic Value for the Manual Feed Tray Operation 1) Place A4R paper on the manual feed tray, and adjust the side guide to its width. 2) Select MF-A4R to highlight, and press the OK key. The new setting will be stored under MF-A4R. 3) Repeat steps 1) and 2) for A6R and A4 sizes.	A4R width:210 mm A6R width:105 mm A4 width: 297 mm • For fine-adjustment, use the following: ADJUST>CST-ADJ>MF-A4R, MF-A6R, MF-A4.

<FIXING>
Executing Auto Adjustment for Fixing Assembly-Related Items

COPIER>FUNCTION

Level 3	Description	Remarks
NIP-CHK	Generating a Fixing Nip Width Measurement Print Operation 1) Make about 20 copies of the Test Sheet in A4. 2) Set A3 paper on the manual feed tray. 3) Select NPP-CHK to highlight, and press the OK key. • The paper will be picked up and stopped between the fixing rollers; then, it will be discharged in about 20 sec. 4) Measure the width as indicated. 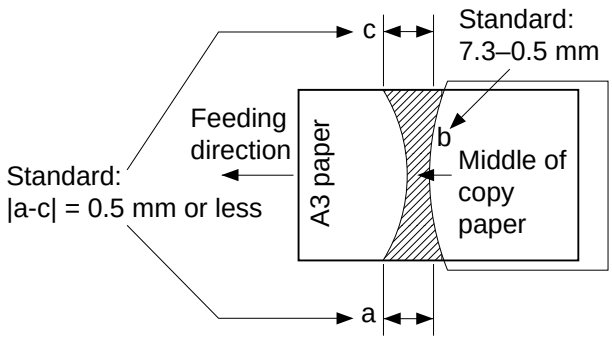 **Caution:** a and c are points 10 mm from both ends of paper.	

<PANEL>
Activating the LEDs on the Control Panel

COPIER>FUNCTION

Level 3	Description	Remarks
LCD-CHK	Checking the Touch Panel for Missing Dots Operation 1) Select the item to highlight, and press the OK key. • The entire face of the touch panel will turn on white and then blue repeatedly. 2) Press the Stop key to end the operation.	
LED-CHK	Checking LEDs on the Control Panel Operation 1) Select item to highlight, and press the OK key. • The LEDs will turn on in sequence. To stop, select LED-OFF.	
LED-OFF	Ending a Check on the LEDs of the Control Panel Operation 1) Select the item to highlight, ending the operation.	
KEY-CHK	Checking the Key Inputs Operation 1) Select the item to highlight. 2) Press any key to check. If normal, the corresponding characters will be indicated on the touch panel. 3) Select KEY-CHK to end the operation.	See Table 4-E101.
TOUCHKEY	Adjusting the Coordinates for the Touch Panel Operation 1) Select the item to highlight, and press the OK key. 2) Press "+" indicated on the touch panel in sequence (9 points). 3) When the adjustment is over, select TOUCHKEY to end the operation.	• The point of a press on the touch panel and the coordinates of the LCD are matched. • Execute this mode if you have replaced the LCD assembly.

	Screen indication
Copy A	COPY A
Copy B	COPY B
Mail Box	PB
Extension	OTHER
0 ~ 9	0 ~ 9

	Screen display
ID	ID
C	CLEAR
//	RESET
?	?
*	M

	Screen display
	INTERRUPT
	STOP
	START
	STAND BY

Table 4-E101 KEY-CHK Screen

<PART-CHK>
Checking the Operation of Loads

COPIER>FUNCTION

Level 3	Description	Remarks
CL	Selecting the Clutch to Check Operation 1) Select CL. 2) Using the keypad, enter the code of the clutch. (See the code table that follows.) 3) Press the OK key.	
CL-ON	Checking the Operation of the Clutch. Operation 1) Select CL-ON, and press the OK key.	ON → 10 sec OFF → ON → 10 sec OFF → ON → OFF
MTR	Selecting the Motor to Check Operation 1) Select MTR. 2) Using the keypad, enter the code of the motor to check. (See the code table that follows.) 3) Press the OK key.	
MTR-ON	Checking the Motor Operation 1) Select MTR-ON, and press the OK key.	10 sec ON → OFF
SL	Selecting the Solenoid to Check Operation 1) Select SL. 2) Using the keypad, enter the code of the solenoid. (See the code table that follows.) 3) Press the OK key.	
SL-ON	Checking the Solenoid Operation 1) Select SL-ON, and press the OK key.	ON → 10 sec OFF → ON → 10 sec OFF → ON →OFF

Code	
1	Manual tray pickup clutch (CL7)
2	Cassette 3 pickup clutch (CL12)
3	Vertical path 3 roller drive clutch (CL13)
4	Cassette 4 pickup clutch (CL14)
5	Vertical path 4 roll drive clutch (CL15)
6	Front deck (right) pickup clutch (CL10)
7	Vertical path 1 roller drive clutch (CL8)
8	Front deck (left) pickup clutch (CL11)
9	Vertical path 2 roller drive clutch (CL9)
10	Pre-registration roller drive clutch (CL5)
11	Lower feeding middle roller drive clutch (CL16)
12	Lower feeding right roller drive clutch (CL17)
13	Front deck (left) feeding clutch (CL19)
14	Delivery speed switching clutch (CL21)
15	Registration roller brake drive clutch (CL3)
16	Manual feed tray feeding clutch (CL18)
17	Hopper drive clutch (CL1)
18	Developing cylinder drive clutch (CL4)
19	Registration roller drive clutch (CL2)
20	Side paper deck feeding clutch (CL101)
21	Side paper deck pickup clutch (CL102)

Code	
1	Drum motor (M0)
2	Main motor (M1)
3	Pickup motor (M2)
4	Fixing motor (M3)
5	Laser scanner motor (M4)
6	Cartridge motor (M6)
7	Hopper motor (M18)
8	Horizontal registration motor (M15)
9	Duplexing reversal motor (M11)
10	Duplexing feeding motor (M12)
11	Side paper deck main motor (M101)

Code	
1	Front deck (right) pickup solenoid (SL7)
2	Front deck (left) pickup solenoid (SL8)
3	Cassette 3 pickup solenoid (SL9)
4	Cassette 4 pickup solenoid (SL10)
5	Manual feed tray pickup clutch solenoid (SL6; push)
6	Manual feed tray pickup clutch solenoid (SL6; pull)
7	Delivery flapper drive solenoid (SL3)
8	Reversing flapper drive solenoid (SL11)
9	Fixing inlet guide drive solenoid (SL1; push)
10	Fixing inlet guide drive solenoid (SL1; pull)
11	Fixing cleaning belt drive solenoid (SL2)
12	Fixing feeding unit locking solenoid (SL4; push)
13	Fixing feeding unit locking solenoid (SL4; pull)

<CLEAR>
Clearing RAM/Error Code Histories

COPIER>FUNCTION

Level 3	Description	Remarks
ERR	Clearing Error Codes Operation 1) Select the item to highlight, and press the OK key. 2) Turn off and then on the main power.	• The code is cleared only when the main power switch is turned off and then on. Be sure to turn it off and then on.
IP	Initializing the RAM on the Image Processor Operation 1) Select the item to highlight, and press the OK key. 2) Turn off and then on the main power.	• The RAM is initialized only when the main power switch is turned off and then on. Be sure to turn it off and then on.
JAM-HIST	Clearing the Jam History Operation 1) Select the item to highlight, and press the OK key. 2) Turn off and then on the main power.	• The history is cleared only when the main power switch is turned off and then on. Be sure to turn it off and then on.
ERR-HIST	Clearing the Error Code History Operation 1) Select the item to highlight, and press the OK key. 2) Turn off and then on the main power.	• The history is cleared only when the main power switch is turned off and then on. Be sure to turn it off and then on.
MF-CON	Initializing the RAM on the MFC PCB Operation 1) Select the item to highlight, and press the OK key. 2) Turn off and then on the main power.	• The RAM is initialized only when the main power switch is turned off and then on. Be sure to turn it off and then on.

<MISC-R>
Checking the Scanning System

COPIER>FUNCTION

Level 3	Description	Remarks
SCAN-LAMP	Checking the Activation of the Scanning Lamp Operation 1) Select the item to highlight, and press the OK key. • The scanning lamp will turn on for about 3 sec and then will turn off.	
PRE-EXP	Checking the Activation of the Pre-exposure Lamp Operation 1) Select the item to highlight, and press the OK key. • The scanning lamp will turn on for about 3 sec and then will turn off.	

<HRD-DISK>
Checking the Operation of the Hard Disk

Level 3	Description	Remarks
SCAN-DISK	Detecting an Error on/Initializing the Hard Disk • The operation starts, and the count is made starting at 0%; the operation ends at 100% (in about 25 min).	• Execute this mode if the hard disk has some kind of problem.
FORMAT	Initializing the Hard Disk (ends in about 1 sec).	• Execute this mode for a normal hard disk. • Execute this mode at time of shipment from the factory or after replacing the hard disk.

<FEEDER-Related Items>

FEEDER>FUNCTION

Level 3	Description	Remarks
SENS-INT	Adjusting the Sensitivity of Sensors of the Feeder • For details, see the Feeder Service Manual (B. "Making Adjustment after Replacing the Major Parts"). • The operation is identical to when the push switch (SW2) is turned on.	
BLT-CLN	Cleaning the Feeder Separation Belt (See chapter 5 E. "Cleaning.") • For Details, see the Feeder Service Manual. • The operation is identical to when the push switch (SW2) is turned on.	
REG-CLN	Cleaning the Feeder Registration Roller (See E. "Cleaning.") • For details, see the feeder Service Manual. • The operation is identical to when the push switch (SW2) is turned on.	

F. OPTION Settings Mode

When you select COPIER>OPTION, you are given the choices shown in the table that follows.

Items under COPIER>OPTION

Level 1	Level 2	Level 3	Description
OPTION	BODY	PO-CONT	Use it to turn on/off potential control.
		MODEL-SZ	Use it to select the site (country) of installation.
		TRNSG-SW	Use it to select transfer guide bias control mode.
		FIX-TMP	Use it to select operation temperature for thick paper copy down sequence.
		CPMKP-SW	Use it to turn on/off thick paper copy down sequence.
		IDL-MODE	Use it to select developing assembly idle rotation mode.
		FUZZY	Use it to turn on/off fuzzy control.
		SCANSLCT	Use it to turn on/off original size detection by the ADF.
		OHP-TEMP	Use it to select fixing roller control temperature for copying on transparencies.
		PM-RD-MD	Use it to turn on/off potential control for transparencies.
		OHP-CNT	Use it to turn on/off potential control for transparency mode.
		CNT-W/HM	Use it to select potential control for high humidity environment mode.
		PR-SEL	Use it to select uneven potential reduction mode.
		CNT-W/PR	Use it to turn on/off density variation mode for printing operation.
		FIX-TMP1	Use it to select operating temperature for down sequence.
		TRSW-P-B	Use it to turn on/off transfer current output correction control along edges of paper.
		SP-MODE	Use it to turn on/off separation current output correction.
		FTMP-DWN	Use it to select stacking enhancement mode.
		DRUM-CLN	Use it to select drum cleaning enhancement mode.
		F-GD-CNT	Use it to select fixing inlet guide color mode.
		DRM-IDL	Use it to select drum idle rotation mode.
	USER	COPY-LIM	Use it to change the upper copy limit.
		SLEEP	Use it to turn on/off the sleep function.
		WEB-DISP	Use it to turn on/off the fixing cleaning belt level warning indication.
		SIZE-DET	Use it to turn on/off the original size detection function.
		DATE-DSP	Use it to switch data/time notation.
		MB-CCV	Use it to restrict users of the mail box by control cards.
		PM-DENS	Use it to turn off/on density variation mode for during printing (scanner input).
		PR-D-SEL	Use it to set density for printing (PDL input).
	CST	U1-NAME	Use it to turn on/off paper notation in terms of paper size group U1
		U2-NAME	Use it to turn on/off paper notation in terms of paper size group U2
		U3-NAME	Use it to turn on/off paper notation in terms of paper size group U3
		U4-NAME	Use it to turn on/off paper notation in terms of paper size group U4
		CST-U1	Use it to select paper notation for paper size group U1.
		CST-U2	Use it to select paper notation for paper size group U2.
		CST-U3	Use it to select paper notation for paper size group U3.
		CST-U4	Use it to select paper notation for paper size group U4.
		P-SZ-C1	Use it to select a paper size for the front deck (right).
		P-SZ-C2	Use it to select a paper size for the for deck (left).
		C1-DWSW	Use it to turn on/off the thick paper control sequence for the front deck (right).
		C2-DWSW	Use it to turn on/off the thick paper control sequence for the front deck (left).
		DK-DWSW	Use it to turn on/off the thick paper control sequence for the option deck.
		C3-DWSW	Use it to turn on/off the thick paper control sequence for the cassette 3.
		C4-DWSW	Use it to turn on/off the thick paper control sequence for the cassette 4.
	ACC	DK-P	Use it to select the paper size for the side paper deck.
		COIN	Use it to turn on/off the coin vender notation.

Items under FEEDER>OPTION

Level 1	Level 3	Description
OPTION	DOC-F-SW	Use it to turn on/off stream reading mode
	SIZE-SW	

Items under SORTER>OPTOIN

Level 1	Level 3	Description
OPTION	BLNK-SW	Use it to set a margin for the saddle stitcher.

Items under BOARD>OPTION

Level 1	Level 3	Description
OPTION	LIPS-HL	Use it to select menu display mode for the LIPS board.

<BODY>
Selecting Copier-Related Machine Settings

COPIER>OPTION

Level 3	Description	Remarks
PO-CNT	Use it to turn on/off potential control.	0: off 1: on (default)
MODEL-SZ	Use it to select the site (country) of installation for the feeder. • This changes the way the default ratios are displayed and how the feeder identifies the size of originals.	0: AB (6R5E) 1: Inch (5R4E) 2: A (3R3E) 3: AB/Inch (6R5E)
TRNSG-SW	Use it to select transfer guide bias control mode. • If transfer faults occur in images, increase the settings.	0: for extremely high humidity, +200 V 1: fixed at +600 V 2: fixed at +200 V 3: for extremely high humidity, +200 V (default) 4: if not low humidity, +200 V
FIX-TMP	Use it to select a down sequence operating temperature for thick paper. • This is effective if CPMKP-SW is set to ON.	0: 170°C 1: 175°C 2: 180°C 3: 185°C 4: 190°C 5: 195°C
CPMKP-SW	Use it to turn on/off the down sequence for thick paper.	0: off (default) 1: on
IDL-MODE	Use it to select idle rotation mode for the developing assembly. • If the images are distorted or the density is too low (light), select '1' or '2'.	0: auto control by the environment sensor (default) Low humidity: idle rotation. normal/high humidity: start idle rotation when the control panel soft switch is turned on 1: start idle rogation when temperature of fixing roller reaches 100°C 2: start idle rotation when control panel soft switch is turned on

COPIER>OPTION

Level 3	Description	Remarks
FUZZY	Use it to turn on/off fuzzy control. • This affects the pre-transfer, transfer, and separation charging current levels. • Selecting '1' through '3' will free the mode from the environment sensor.	0: turn on fuzzy control (default) 1: low humidity mode (current level is lower than standard) 2: normal humidity mode 3: high humidity mode (current level higher than standard)
SCANSLCT	Use it to turn on/off the original size detection mechanism for the ADF.	0: off (default) 1: on
OHP-TEMP	Use it to switch control temperature settings for transparency mode.	0: no temperature control for transparency mode (normal temperature control only) 1: use temperature control for transparency mode at "normal control temperature -5°C" 2: use temperature control for transparency mode at "normal control temperature -10°C" 3: use temperature control for transparency mode at "normal control temperature -15°C"
PM-RD-MD	Use it to turn on/off page memory read control.	1: read while writing to page memory (default) 0: read after writing to page memory equivalent of 1 page, thereby preventing jams in memory in response to jams in feeder
OHP-CNT	Use it to turn on/off potential control for transparency mode.	0: use target value obtained by potential control for transparency mode while transparency mode is under way (default) 1: no potential control during transparency mode

COPIER>OPTION

Level 3	Description	Remarks
CNT-W/ HM	Use it to select potential control mode for a high humidity environment. • Use it to prevent decreases in density caused by a reduced transfer efficiency because of moist paper or a low development efficiency because of moist toner. • Between '2' and '6', the higher the setting, the darker the images.	1: correct laser power/ developing bias to suit environment 0: no correction of target value (default) 2: extremely low humidity 3: low humidity 4: normal humidity 5: high humidity 6: extremely high humidity
PR-SEL	Use it to select uneven potential reduction mode. • Use it to reduce uneven density occurring as a result of primary charging.	0: standard mode (default) 1: reduction 1 2: reduction 2
CNT-W/ PR	Use it to turn on/off density variation mode during printing (PDL input).	0: correct target value to enable variation of density during printing (default) 1: no variation of density during printing
FIX-TMP1	Use it to select a down sequence start temperature for plain paper. • Select a higher temperature for users preferring image quality, while selecting a lower temperature for users preferring copying speed.	0: 170°C 1: 175°C 2: 180°C 3: 185°C 4: 190°C 5: 195°C
TRSW-P-B	Use it to turn on/off the transfer current output correction control mechanism for the trailing edge of paper.	1: no variation of transfer current level (if transfer faults occur along trailing edge) 0: correct transfer current level for trailing edge (default)
SP-MODE	Use it to turn on/of separation current output correction control.	0: standard mode (AC output is 10.5 kvpp; default) 1: low voltage mode (AC output is 9.8 kvpp; if error occurs frequently because of leakage)

COPIER>OPTION

Level 3	Description	Remarks
FTMP-DWM	Use it to select stacking enhancement mode. • Select a timing at which the fixing temperature is reduced to ensure proper stacking in the finisher.	0: no reduction in fixing temperature 1: reduce after passing 1000 sheets or more 2: reduce after passing 1000 sheets or more in high humidity environment 3: reduce after passing 1000 sheets of AB paper (default)
DRUM-CLN	Use it to select drum cleaning enhancement mode. • Change the setting if faults occur in drum cleaning. A higher setting increases performance. • During copying, the drum is stopped for about 1 sec after a specific number of sheets have been processed, thereby allowing the cleaning blade to recover its cleaning performance.	0: after passing 1000 single-sided copies or 500 double-sided copies (default) 1: after passing 1000 single-sided copies or 250 double-sided copies 2: after passing 250 single-sided copies or 250 double-sided copies 3: auto control to suit environment; under high humidity, same as '0'; under low humidity, after passing 250 single-sided copies or 500 double-sided copies
F-GD-CNT	Use it to select fixing inlet guide control mode. • If the images are uneven because of fixing or the images are too light, select '1'.	0: normal control (default) 1: for paper 350 mm or larger, fixing inlet guide is lowered when 1st side is passing; for others, same as normal control.

COPIER>OPTION

Level 3	Description	Remarks
DRM-IDL	Use it to select idle rotation mode for the photosensitive drum. • If the images are distorted or the density is too low (light), select '1' through '4'.	0: no idle rotation (default) 1: for high humidity, initiate idle rotation for 30 sec when control panel soft switch is turned on 2: for high humidity, initiate idle rotation for 2 min when control panel soft switch is turned on 3: independently of environment, initiate idle rotation for 30 sec when control panel soft switch is turned on 4: independently of environment, initiate idle rotation for 2 min when control panel soft switch is turned on

<USER>
Selecting User-Mode Related Machine Settings

COPIER>OPTION

Level 3	Description	Remarks
COPY-LIM	Use it to change the upper limit for copy counts.	Range : 1 through 999 (default at 999)
SLEEP	Use it to turn on/off the sleep mechanism.	0: off 1: on (default)
WEB-DISP	Use it to turn on/off the fixing cleaning belt length warning message. • Use it to enable or disable indication of a warning on the touch panel when the fixing cleaning belt starts to run out.	0: disable warning 1: enable warning • A warning is indicated when starting service mode after passing 145,000 sheets (A4).
SIZE-DET	Use it to turn on/off the original size detecting mechanism.	0: off 1: on (default)
DATE-DSP	Use it to switch date/time notation.	0: 'YY (MM/DD (default) 1: DD/MM 'YY 2: MM/DD/YY
MB-CCV	Use it to restrict the user of the mail box (by control card).	0: disable restriction (default) 1: enable restriction
PM-DENS	Use it to turn on/off density variation mode during printing (scanner input).	0: off 1: on (default)
PR-D-SEL	Use it to set a density for printing (PDL input).	Range : 0 through 8 (default at 4)

<CST>
Selecting Cassette-Related Settings

COPIER>OPTION

Level 3	Description	Remarks
U1-NAME U2-NAME U3-NAME U4-NAME	Use it to turn on/off paper notation upon detection of paper size in terms of paper size group (U1 through U4).	0: off ('U1' to 'U4' on the touch panel) 1: on (paper names selected under CST-U1 through -U4)
CST-U1	Use it to select paper notation for paper size group U1.	31: G-LTR (default) 22: K-LGL
CST-U2	Use it to select paper notation used by paper size group U2.	24: FOOLSCAP (default) 26: OFFICIO 27: E-OFFI 33: A-LGL 36: A-OFFL
CST-U3	Use it to select paper notation used by paper size group U3.	34: G-LGL (default) 35: FOLIO 25: A-FLS
CST-U4	Use it to select paper notation used by paper size group U4.	18: LTR (default) 29: A-LTR
P-SZ-C1 P-SZ-C2	Use it t select paper size for the front deck.	6: A4 15: B5 18: LTR
C1-DWSW C2-DWSW DK-DWSW C3-DWSW C4-DWSW	Use it to turn on/off control sequence for thick paper. C1 : front deck (right) C2 : front deck (left) DK: side paper deck C3 : cassette 3 C4 : cassette 4	0: off (default) 1: on

COPIER>OPTION

Code	Abbreviation	Paper name	Code	Abbreviation	Paper notation
01	A1	A1	21	LGL	LEGAL
02	A2	A2	22	K-LGL	Korean Government
03	A3R	A3R	23	K-LGLR	Korean Government R
04	A3	A3	24	FLSC	Foolscap
05	A4R	A4R	25	A-FLS	Australian Foolscap
06	A4	A4	26	OFI	OFFICIO
07	A5	A5	27	E-OFI	Ecuadorian Officio
08	A5R	A5R	28	B-OFI	Bolivian Officio
09	B1	B1	29	A-LTR	Argentine Letter
10	B2	B2	30	A-LTRR	Argentine Letter-R
11	B3	B3	31	G-LTR	Government Letter
12	B4R	B4R	32	G-LTRR	Government Letter-R
13	B4	B4	33	A-LGL	Argentine Legal
14	B5R	B5R	34	G-LGL	Government Legal
15	B5	B5	35	FOLI	FOLIO
16	11×17	11×17	36	A-OFI	Argentine Officio
17	LTRR	LETTER-R	37		
18	LTR	LETTER	38		
19	STMT	STATEMENT	39		
20	STMTR	STATEMENT-R	40	ALL	

Table 4-F101 Cassette Paper Size Codes

<ACC>
Selecting Accessory-Related Settings

Level 3	Description	Remarks
COIN	Use it to turn on/off coin vender notation. • Use it to change the Control Card Set to notation for a coin vender.	0: for control card (default) 1: for coin vender
DK-P	Use it to select a paper size for the side paper deck.	0: A4 1: B5 2: LTR

<FEEDER-Related items>

FEEDER>OPTION
SORTER>OPTION
BOARD>OPTION

Level 3	Description	Remarks
DOC-F-SW	Use it to turn on/off stream reading mode.	0: enable stream reading (default) 1: enable stream reading for large-size only 2: disable stream reading
SIZE-SW	Use it to turn on/off the size mix mechanism (AB and Inch papers).	0: disable detection of mix (default) 1: enable detection of mix

<SORTER-Related items>

Level 3	Description	Remarks
BLNK-SW	Use it to set the margin (W) on both sides of the fold (for the saddle stitcher). 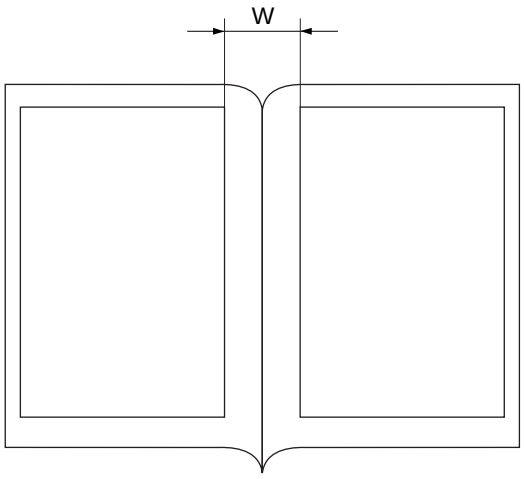	0: normal width (5 mm) 1: larger width (10 mm)

<BOARD-Relate Items>

Level 3	Description	Remarks
LIPS-HL	Use it to select menu display mode for the LIPS board. • For details, see the Service Manual for each respective board.	0: disable display (default) 1: display mode 1 2: display mode 2

G. PG Test Print

Level 1	Level 2	Level 3	Description
TEST	PG	TYPE	Use it to generate test prints.

Level 3	Description	Remarks
TYPE	Use it to select and generate a test print (1 thorough 8). Operation 1) Place A3/11×17 or A4/LTR paper in the cassette 3. 2) Select PG, and enter the number of the item using the keypad. 3) Press the OK key. • A test print will be generated.	• The machine will automatically be in copying mode when it is reset to leave the PG screen. • For test printing, the source of paper is the cassette 3.

1. Grid (PG-TYPE 1)

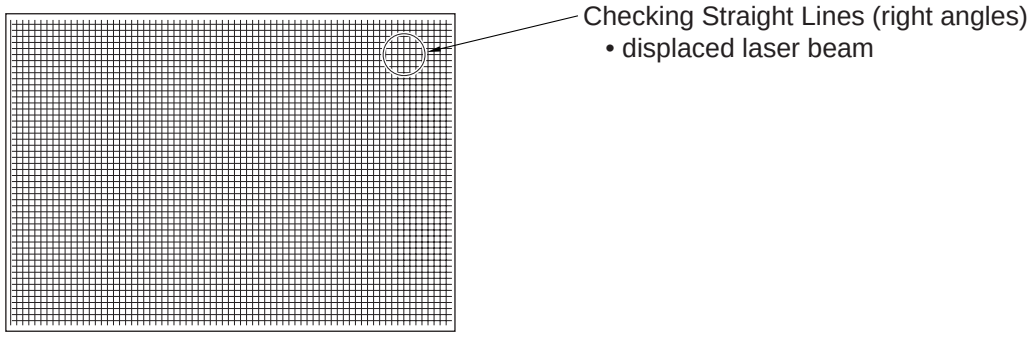

2. Vertical Lines (PG-TYPE 2)

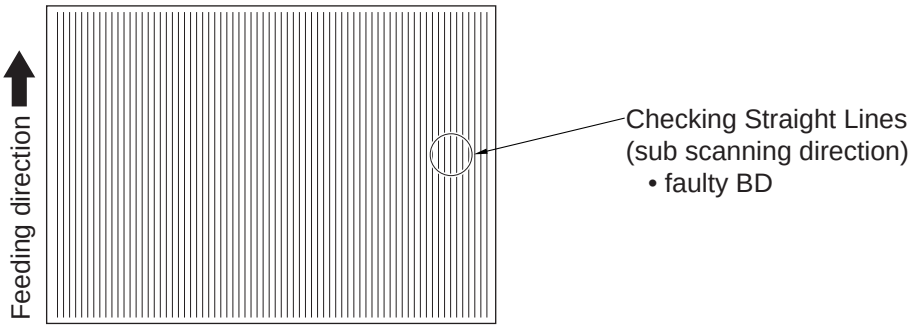

3. Horizontal Lines (PG-TYPE 3)

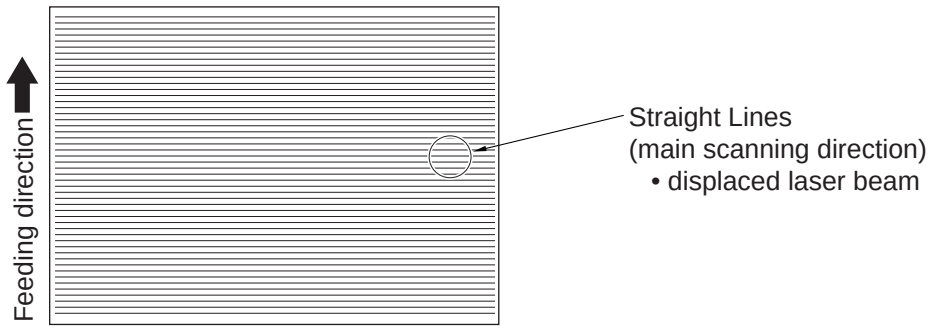

4. Halftone (PG-TYPE 4)

■This print consists of halftone created without passing the paper through the density correction block (image processing). The result depends entirely on the performance of the image formation system.

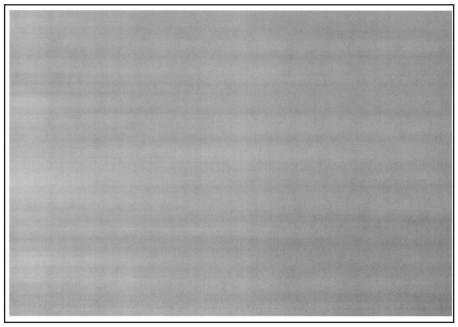

5. 17-Gradation (PG-TYPE 5)

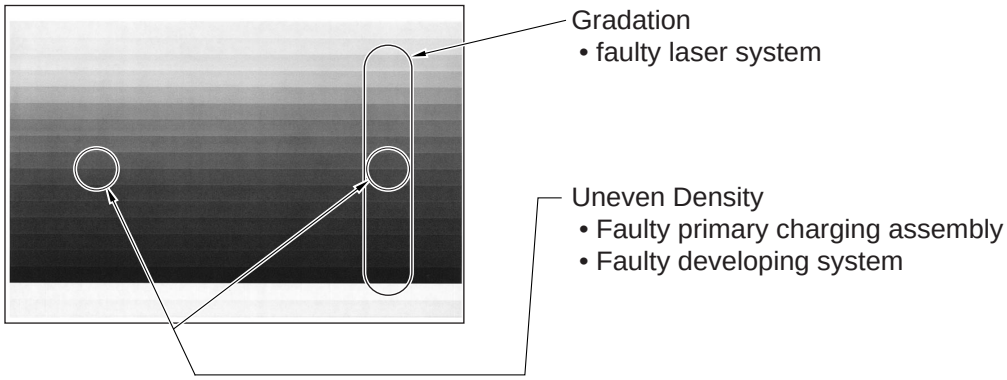

6. Blank (PG-TYPE 6)

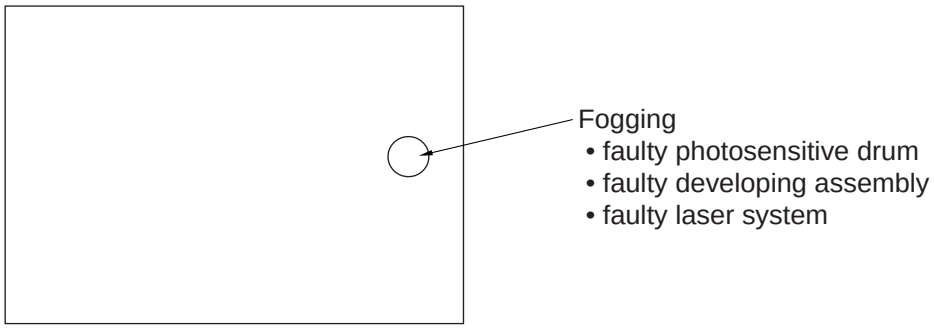

7. Halftone (PG-TYPE 7)

■The print consists of halftone created by passing the paper through the density correction block. The result is dependent on AE and other density correction mechanisms in addition to the performance of the image formation system.

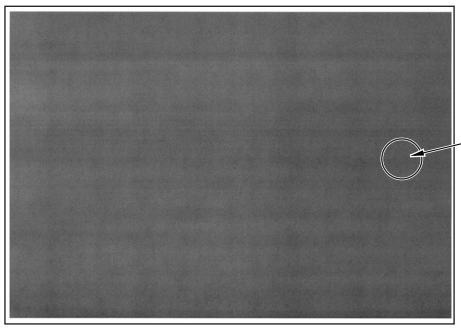

[1] Black Lines
- scratches on drum
- dirt on primary charging wire

[2] Verti cal White Spots
- transfer faulty

[3] Uneven Left/Right Density
- primary charging assembly faults
- developing system faults

8. Solid Black (PG-TYPE 8)

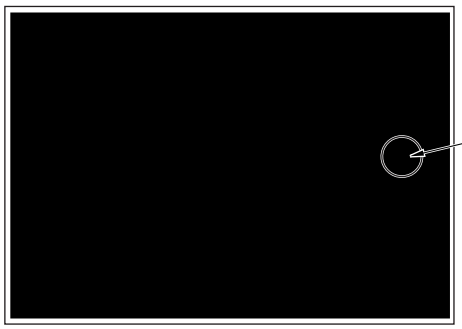

[1] White Spots
- transfer faults

[2] White Lines
- shading faults
  (i.e., dirt on standard white plate)

H. Counter Mode

When you select COUNTER mode, you are given the choices shown in the table that follows.

- In this mode, each number represents the number of times the machine has operated.
- To Clear the Counter Readings,

1) Select an item to highlight.
2) Press the Clear key on the control panel.
   The counter will be cleared to return to '00000000'.

- The terms "large" and "small" as used in reference to sizes mean the following:
  Large-size paper is paper whose length is 300 mm or more or paper of a non-default size. (e.g., B4 or larger)
  Small-size paper is paper whose length is less than 300 mm. (e.g., A4 or smaller)

Items under COUNTER

Level 1	Level 2	Level 3	Description
COUNTER	TOTAL	SERVECE1	total counter 1 for servicing
		SERVECE2	total counter 2 for servicing
		TTL	total counter
		L-TTL	large-size total counter
		S-TTL	small-size total counter
		COPY	total counter (scanner input)
		L-COPY	large-size counter (scanner input)
		S-COYP	small-size counter (scanner input)
		PRNT	total counter (PDL input)
		L-PRNT	large-size total counter (PDL input)
		S-PRNT	small-size total print counter (PDL input)
	SCANNER	SC-TTL	total scan counter for scanner
		SC-STRM	stream reading scan counter for scanner
		SC-NRM	fixed reading scan counter for scanner
	PICKUP	L-C1	front deck (right) pickup counter (large-size)
		S-C1	front deck (right) pickup counter (small-size)
		L-C2	front deck (left) pickup counter (large-size)
		S-C2	front deck (left) pickup counter (small-size)
		L-C3	cassette 3 pickup counter (large-size)
		S-C3	cassette 3 pickup counter (small -size)
		L-C4	cassette 4 pickup counter (large-size)
		S-C4	cassette 4 pickup counter (small-size)
		L-MF	manual feed tray pickup total counter (large-size)
		S-DK	manual feed tray pickup total counter (small-size)
		L-DK	side paper deck pickup total counter (large-size)
		S-DK	side paper deck pickup total counter (small-size)
		L-2-SIDE	double-sided 2nd side pickup total counter (large-size)
		S-2-SIDE	double-sided 2nd side pickup total counter (small-size)
	FEEDER	L-FEED	feeder pickup total counter (large-size original)
		S-FEED	feeder pickup total counter (small-size original)
		TTL-MF	feeder pickup (manual feed) total counter
	MISC	FIX-WEB	fixing cleaning belt counter
		WST-TNR	waste toner counter
	JOB	COPY	copy job operations
		MAIL-BOX	mail box output job operations
		SGNL-CPY	single copy operations
		INTRPT	interrupt copy operations
		OVR10CPY	copy operations for 10 copies or more
		PRINT	print job operations
	PER10DEC	FIX-TH1	main thermistor (TH1) operation time (in sec)
		FIX-TH2	main thermistor (TH2) operation time (in sec)
		FX-TSW	thermal switch (TP1) operation time (in sec)
		PRM-WIRE	primary charging wire high-voltage activation time (in sec)
		PRM-GRID	primary grid wire high-voltage activation time (sin sec)
		TR-WIRE	transfer charging wire high-voltage activation time (in sec)
		PO-WIRE	pre-transfer charging wire high-voltage activation time (sec)

Items under COUNTER

Level 1	Level 2	Level 3	Description
COUNTER	DURABLE	PT-DRM	photosensitive drum rotation time (in sec)
		SCN-LMP	scanning lamp activation time (in sec)
		DVG-CYL	developing cylinder rotation time (in sec)
		DVG-ROLL	developing assembly roll rotation time (in sec)
		SP-CLAW	cleaner separation claw use time (in sec)
		CLN-BLD	cleaning blade use time (in sec)
		PRM-UNIT	primary charging assembly high-voltage activation time (in sec)
		TR-UNIT	transfer charging assembly high-voltage activation time (in sec)
		PO-UNIT	pre-transfer charging assembly high-voltage activation time (in sec)
		PRI-CLN	primary charging cleaning operations (in number of times)
		TR-CLN	transfer charging cleaning operations (in number of times)
		PO-CLN	pre-transfer charging cleaning operations (in number of times)
		PO-SCRPR	pre-transfer charging scraper use time (in sec)
		FX-UP-RL	upper fixing roller paper passage (in number of sheets)
		FX-LW-RL	lower fixing roller paper passage (in number of sheets)
		DLV-UCLW	delivery upper separation claw paper passage (in number of sheets)
		DLV-LCLW	delivery lower separating claw paper passage (in number of sheets)
		RD-PU-RL	front deck (right) pickup roller paper passage (in number of sheets)
		RD-SP-RL	front deck (right) feeding roller paper passage (in number of sheets)
		LD-PU-RL	front deck (left) pickup roll paper passage (in number of sheet)
		LD-SP-RL	front deck (left) feeding roller paper passage (in number of sheets)
		C3-PU-RL	cassette 3 pickup roller paper passage (in number of sheets)
		C3-SP-RL	cassette 3 feeding roller paper passage (in number of sheets)
		C4-PU-RL	cassette 4 pickup roller paper passage (in number of sheets)
		C4-SP-RL	cassette 4 pickup roller paper passage (in number of sheets)
		M-PU-RL	manual feed tray pickup roller paper passage (in number of sheets)
		M-SP-RL	manual feed tray feeding roller paper passage (in number of sheets)
		PD-PU-RL	side paper deck pick up roller paper passage (in number of sheets)
		PD-SP-RL	side paper deck feeding roller paper passage (in number of sheets)
		RD-PU-CL	front deck (right) pickup clutch operations (in number of times)
		RD-SP-CL	front deck (right) feeding clutch operations (in number of times)
		LD-PU-CL	front deck (left) pickup clutch operations (in number of times)
		LD-PL-CL	front deck (left) feeding clutch operations (in number of times)
		C3-PU-CL	cassette 3 pickup clutch (CL12) operations (in number of times)
		C3-PL-CL	cassette 3 feeding clutch (CL13) operations (in number o times)
		C4-PU-CL	cassette 4 pickup clutch (CL14) operations (in number of times)
		C4-PL-CL	cassette 4 feeding clutch (CL15) operations (in number of times)
		M-PU-CL	manual feed tray pickup clutch (CL7) operations (in number o times)
		M-PL-CL	side paper deck pickup clutch (CL102) operations (in number of times)
		PD-PU-CL	side paper deck feeding clutch (CL 102) operations (in number of times)
		PD-PL-CL	side paper deck feeding clutch (CL 101) operations (in number of times)
		VP1-CL	vertical path 1 clutch (CL8) operations (in number of times)
		VP2-CL	vertical path 2 clutch (CL9) operations (in number of ties)
		REG-CL	registration clutch (CL2) operations (in number of times)
		DUP-C-CL	lower feeding middle clutch (CL16) operations (in number of times)
		DUP-R-CL	lower feeding right clutch (CL17) operation (in number of times)
		INV-FAN	inverter cooling fan (FM9) drive time (in sec)
		PWS-FAN	power supply fan (FM11) operation time (in sec)
		SP-FAN	separation fan (FM13) operation time (in sec)
		LSR-FAN	laser scanner fan (FM14) operation time (in sec)
		FEED-FAN	feeding fan (FM7) operation time (in sec)
		DRM-FAN	drum fan (FM8) operation time (in sec)
		CURL-FAN	de-curling fan (FM6) operation time (in sec)
		POST-FAN	pre-transfer charging assembly fan (FM10) operation time (in sec)

Items under COUNTR

Level 1	Level 2	Level 3	Description
COUNTER	DURABLE	PRM-FAN	primary charging assembly fan (FM1) operation item (in sec)
		FX-FAN	fixing heat discharge fan (FM2) operation time (in sec)
		SCN-FAN	scanner cooling fan (FM3) operation time (sin sec)
		LSR-FAN	laser driver cooling fan (FM5) operation time (in sec)
		DRM-MTR	drum motor (M0) operation time (in sec)
		FX-MTR	fixing motor (M3) operation time (in sec)
		PICK-MTR	pickup motor (M2) operation time (in sec)
		FEED-MTR	main motor (M1) operation time (in sec)
		LSR-MTR	laser scanner motor (M4) operation time (in sec)
		HD-DRV	hard disk operation time (in sec)
		LSR-DRV	laser operation time (in sec)
		FHTR-M	fixing main heater (H1) operation time (in sec)
		FHTR-S	fixing sub heater (H2) operation time (in sec)
		B-LIGHT	control panel back light activation time (in sec)
		NON-SORT	non-sort path paper passage (in number of sheets)
		SORT	sort path paper passage (in number of sheets)
		INSERTER	inserter paper passage (in number of sheets)
		FOLD	folding unit path paper passage (in number of sheets)
		SADDLE	saddle paper passage (in number of sheets)
		SDL-STPL	saddle stapling operations (in number of times)
		PUNCH	punching operations (in number of operations)
		FIN-STPR	finisher stapler operations (in number of times)

CHAPTER 5 SELF DIAGNOSIS

The microprocessor on the copier's DC controller PCB is equipped with a mechanism that checks the state of the copier (especially its sensors). It runs a check as needed and, upon detection of a fault, indicates a code on the control panel.

A. Copier Self Diagnosis

Code	Cause	Description
E000 (NOTE 1)	• The main thermistor (TH1) has poor contact or an open circuit. • The fixing heater (H1, H2) has an open circuit. • The thermal switch (TS1) has an open circuit. • The SSR is faulty. • The DC control PCB is faulty. • The sub thermistor (TH2) has poor contact or an open circuit. After indicating E000, the power switch turns off in about 5 sec.	• The temperature of the upper fixing roller does not reach 70°C within 3 min 30 sec after power-on.
E001 (NOTE 1)	• The main thermistor (TH1) has a short circuit. • The SSR is faulty. • The DC controller PCB is faulty. • The sub thermistor (TH2) has detected overheating.	• The temperature of the upper fixing roller exceeds 230°C for 2 sec or more. • The difference in detection temperature between the main thermistor (TH1) and the sub thermistor (TH2) is 50°C for 1 sec or more.
E002 (NOTE 1)	• The main thermistor (TH1) has poor contact or an open circuit. • The fixing heater (H1, H2) has an open circuit. • The thermal switch (TS1) has an open circuit. • The SSR is faulty. • The DC controller PCB is faulty.	• The temperature of the upper fixing roller does not reach 100°C within 2.5 min after it has exceeded 70°C. • The temperature of the upper fixing roller does not reach 150°C within 2.5 min after it has exceeded 100°C.
E003 (NOTE 1)	• The main thermistor (TH1) has poor contact or an open circuit. • The fixing heater (H1, H2) has an open circuit. • The thermal switch (TS1) has an open circuit. • The SSR is faulty. • The DC controller PCB is faulty.	• The temperature of the upper fixing roller drops to 70°C or less for 2 sec after it has reached 100°C.
E004 (NOTE 1)	• The SSR is faulty. • The DC controller PCB is faulty.	• The SSR used to drive the fixing heater has a short circuit.
E005	• The cleaning belt inside the fixing assembly has been taken up. • The fixing cleaning belt length sensor (PS7) is faulty. • The DC controller PCB is faulty.	• The cleaning belt inside the fixing assembly has been taken up more than a specific length.

Code	Cause	Description
E010	• The main motor (M1) is faulty. • The DC controller PCB is faulty.	• No clock pulse arrives for 2 sec or more after the output of the main motor drive signal.
E012	• The drum motor (M0) is faulty. • The DC controller PCB is faulty.	• No PLL lock signal (MOLCK) arrives for 2 sec or more after the output of the drum motor drive signal.
E013	• The waste toner feed screw has a fault. • The DC controller PCB is faulty.	• The waste toner feed screw cannot rotate, and the detecting switch (MSW2) has been pressed multiple times within a specific period of time.
E014	• The fixing motor (M3) is faulty. • The DC controller PCB is faulty.	• No PLL lock signal (M1-FG) arrive for 2 sec or more after the output of the fixing motor drive signal.
E015	• The pickup motor (M2) is faulty. • The DC controller PCB is faulty.	• No clock pulse arrives for 2 sec or more after the output of the pickup motor drive signal.
E019	• The waste toner case is full.	• As many as about 50,000 pages worth of images have been formed (in terms of A4) without disposing of the waste toner after a waste toner case full condition (message indicated) has been identified.
E020	• The hopper inside toner feeder motor (M18) is faulty. • The magnet roller drive clutch (CL1) is faulty. • The developing assembly inside toner sensor (TS3) is faulty. • The DC control PCB is faulty. • The hopper connector is disconnected.	• The absence of toner inside the developing assembly has been detected for 2 min or more after supplying the developing assembly with toner.
E025	• The cartridge inside toner feeder motor (M6) is faulty. • DC controller PCB is faulty.	• An overcurrent to the cartridge inside toner feeder motor (M6) has been detected twice for 10 sec each by the DC controller PCB. (In response to the first detection, the copier will indicate "Shake the Toner Case.")
E030	• The toner copy counter has an open circuit. • The DC controller PCB is faulty.	• The total copy counter is identified as having an open circuit when it is driven.
E031	• The option counter has an open circuit. • The DC controller PCB is faulty.	• The options counter is identified as having an open circuit when it is driven.
E032	• The Copy Data Controller-A1 or the Remoto Diagnostic Device II is faulty. • The DC controller PCB is faulty.	• The Copy Data Counter-A1 or the Remoto Diagnostic Device II counter function fails to operate. • The Copy Data Controller-A1 or the Remoto Diagnostic Device II is disconnected.

Code	Cause	Description
E043	• The deck main motor (M101) is faulty. • The side deck driver PCB is faulty. • The DC controller PCB is faulty.	• No PLL lock signal (DMPLK) arrives for 2 sec or more after the input of the PLL lock signal (DMPLK).
E051	• The horizontal registration sensor (PS18) is faulty. • The horizontal registration motor (M15) is faulty. • The DC controller PCB is faulty.	• The home position signal is not detected in 5 sec while the horizontal registration motor (M15) drive signal is being generated.
E060	• The primary charging wire cleaner motor (M8) is faulty. • The primary charging wire cleaner home position detecting switch (MSW4) is faulty. • The DC controller PCB is faulty.	• The home position is not detected within 60 sec after wire cleaning has been started.
E063	• The transfer/separation charging wire cleaner motor (M9) is faulty. • The transfer/separation charging wire cleaner home position detecting switch (MSW6) is faulty. • The DC controller PCB is faulty.	• The home position is not detected within 60 sec after wire cleaning has been started.
E065	• The primary charging assembly is faulty. • The HV-DC PCB is faulty. • The wiring is faulty (short circuit, open circuit).	• The high-voltage to the primary charging assembly is faulty (leakage).
E066	• The pre-transfer charging wire cleaner motor (M7) is faulty. • The pre-transfer charging wire cleaner home position detecting switch (MSW3) is faulty. • The DC controller PCB is faulty.	• The home position cannot be detected within 60 sec after wire cleaning has been started.
E067	• The HV-DC PCB is faulty. • The HV-AC PCB is faulty. • The wiring is faulty (short circuit, open circuit).	• Of the primary high-voltage, pre-transfer high-voltage, transfer high-voltage, and separation high-voltage, a fault is found in two or more at the same time.
E068	• The HV-DC PCB is faulty. • The HV-AC PCB is faulty. • The separation charging assembly is faulty. • The wiring is faulty (short circuit, open circuit).	• The high-voltage output to the separation charging assembly has a fault (leakage).
E069	• The HV-DC PCB is faulty. • The transfer charging assembly is faulty. • The wiring is faulty (short circuit, open circuit).	• The high-voltage to the transfer charging assembly has a fault (leakage).

Code	Cause	Description
E100	• The BD PCB is faulty. • The image processor PCB is faulty. • The DC controller PCB is faulty. • The laser unit is faulty. • The laser driver PCB 1 is faulty. • The laser driver PCB 2 is faulty. • The wiring is faulty (short circuit, open circuit).	• The BD signal does not arrive within 1 sec after the output of the laser drive signal. • The BD signal does not arrive for 1 sec or more while the laser is on.
E102	• The image processor PCB is faulty. • The laser driver PCB 1 is faulty. • The wiring is faulty (short circuit, open circuit).	• The laser power data cannot be written to the laser driver PCB 1 when starting copying or printing operation.
E110	• The laser scanner motor (M4) is faulty. • The laser scanner driver is faulty. • The DC controller PCB is faulty. • The wiring is faulty (short circuit, open circuit).	• The constant speed rotation signal (LM-RDY) does not arrive for 15 sec or more after the output of the laser scanner motor (M4) drive signal.
E111	• The laser scanner motor (M4) is faulty. • The DC controller PCB is faulty • The wiring is faulty (short circuit, open circuit).	• The lock signal (FM14LCK) is detected for 5 sec or more while the laser scanner fan (FM14) is being driven.
E121	• The laser driver cooling fan (FM5) is faulty. • The DC controller PCB is faulty. • The wiring is faulty (short circuit, open circuit).	• The lock signal (FM5LCK) is detected for 5 sec or more while the laser driver cooling fan (FM5) is being driven.
(E202) No code. Keys disabled. (Note 2)	• The scanner motor (M5) is faulty. • The scanner home position sensor (PS1) is faulty. • The DC controller PCB is faulty.	• The scanner home position is not detected within a specific period of time when the power switch or the Copy Start key is pressed.
(E204) No code. Keys disabled. (Note 2)	• The scanner motor (M5) is faulty. • The image leading edge sensor (PS3) is faulty. • The DC controller PCB is faulty.	• No image signal is detected while the scanner is moving forward in fixed reading mode or when the home position is being detected. • No image signal arrives from the ADF while in stream reading mode.
E211	• The fluorescent lamp heater inside thermistor is faulty. • The light intensity control PCB is faulty. • The DC controller PCB is faulty. • The wiring is faulty (short circuit, open circuit).	• The temperature around the fluorescent lamp does not exceed 10°C 2 sec after the fluorescent lamp heater has turned on at power-on. • The temperature around the fluorescent lamp is 0°C or less at power-on.
E215	• The fluorescent lamp heater inside thermistor is faulty. • The light intensity control PCB is faulty. • The DC controller PCB is faulty. • The wiring is faulty (short circuit, open circuit).	• The temperature around the fluorescent amp is 170°C or more when the fluorescent lamp is off.

Code	Cause	Description
E218	• The fluorescent lamp is mounted wrongly.	• The absence of the fluorescent lamp is detected at power-on.
E219	• The fluorescent lamp is faulty. • The fluorescent lamp heater inside thermistor is faulty.	• The temperature around the fluorescent lamp is 170°C or more while the fluorescent lamp is on.
E220	• The fluorescent lamp is faulty. • The light intensity sensor is faulty. • The intensity control PCB is faulty. • The inverter PCB is faulty. • The DC controller PCB is faulty.	• The light intensity does not reach a specific level within 10 sec after the fluorescent lamp has been turned on. • The activation detection signal (FL-DTCT) arrives within 5 sec after the fluorescent lamp has been turned off. • The activation detection signal (FL-DTCT) does not arrive within 60 sec after the fluorescent lamp has been turned on during shading adjustment.
E222	• The fluorescent lamp is faulty. • The light intensity control PCB is faulty. • The DC controller PCB is faulty. • The wiring is faulty (short circuit, open circuit).	• The light intensity does not reach a specific level within 10 sec after the fluorescent lamp has been turned on. (However, within 60 sec if the room temperature is 10°C or less.) • The activation signal is not turned off 5 sec after the fluorescent lamp has been turned off. • The activation signal does not arrive with 60 sec after the fluorescent lamp has been turned on during shading adjustment.
E226	• The scanner cooling fan (FM3) is faulty. • The DC controller PCB is faulty. • The wiring is faulty (short circuit, open circuit).	• The lock signal (FM3LCK) is detected for 5 sec or more while the scanner cooling fan (FM3) is being driven.
E240	• The DC controller PCB is faulty.	• An error in communication occurs in the microprocessor on the DC controller PCB.
E241	• The image processor PCB is faulty. • The original orientation detection PCB is faulty.	• The orientation of the original is not identified when the second or subsequent original must be read. • The orientation of the last original is not detected 5 sec or more after the last original has been read.
E243	• The DC controller PCB is faulty. • The control panel PCB is faulty.	• A communication error has occurred between the microprocessor on the DC controller PCB and the microprocessor on the control panel PCB.
E251	• The inverter cooling fan (FM9) is faulty. • The DC controller PCB is faulty. • The wiring is faulty (short circuit, open circuit).	• The lock detection signal (FM9LCK) is generated 5 sec or more while the inverter cooling fan (FM9) is being driven.

Code	Cause	Description
E302	• The CCD PCB is faulty. • The image processor PCB is faulty. • The wiring is faulty (short circuit, open circuit).	• The shading end signal from the CCD PCB does not reach the image processor PCB during shading operation.
E320	• The CCD PCB is faulty. • The image processor PCB is faulty. • The wiring is faulty (short circuit, open circuit).	• The image read end signal from the CCD PCB does not reach the image processor PCB within 60 sec during image reading operation.
E601	• The image processor PCB is faulty. • The MFC PCB is faulty. • The wiring is faulty (short circuit, open circuit). • The image server (hard disk) is faulty.	• The MFC PCB has detected an error in control data during image transfer between the MFC PCB and the image server. • The image processor PCB has detected an error in image transfer between the MFC PCB and the image processor PCB.
E602	• The image processor PCB is faulty. • The MFC PCB is faulty. • The wiring is faulty (short circuit, open circuit). • The image server (hard disk) is faulty.	• An error has been detected in the image data when the image processor PCB writes to or reads from the image server.
E677	• A printer board (accessory) is faulty. • The MFC PCB is faulty. • The system motherboard is faulty.	• An error has occurred in the communication between a printer board (accessory) and the MFC PCB.
E710	• The DC controller PCB is faulty. • The ADF controller PCB is faulty. • The finisher controller PCB is faulty.	• The IPC (IC12) on the DC controller PCB cannot be initialized at power-on.
E711	• The DC controller PCB is faulty. • The ADF controller PCB is faulty. • The finisher controller PCB is faulty.	• The IPC (IC12) on the DC controller PCB is out of order at power-on.
E712	• The ADF controller PCB is faulty. • The connector has poor contact. • The 24-V power supply is faulty. • The DC controller PCB is faulty.	• The communication control IC on the ADF controller PCB is out of order.
E713	• The finisher controller PCB is faulty. • The connector has poor contact. • The 24-V power supply is faulty. • The DC controller PCB is faulty.	• The communication control IC on the finisher controller PCB is out of order.
E717	• The Copy Data Controller-A1 or the Remoto Diagnostic Device II is faulty. • The wiring is faulty (short circuit, open circuit).	• The PCB of the Copy Data Controller-A1 or the Remoto Diagnostic Device II is out of order.

Code	Cause	Description
E800	• The auto power-off circuit has an open circuit. • The DC controller PCB is faulty.	• The auto power-off circuit has an open circuit. • The auto power-off signal has been detected twice or more within 2 sec.
E804	• The power supply cooling fan (1/2) is faulty. • The DC controller PCB is faulty. • The wiring is faulty (short circuit, open circuit).	• The lock signal (FM1LCK, FM2LCK) is detected for 5 sec or more while the power supply cooling fan (1/2) is being driven.
E805	• The fixing assembly heat discharge fan (FM2) is faulty. • The DC controller PCB is faulty. • The wiring is faulty (shorting, open circuit).	• The lock signal (FM2LCK) has been detected 5 sec or more while the fixing assembly heat discharge fan (FM2) is being driven.
E820	• The drum fan (FM8) is faulty. • The DC controller PCB is faulty. • The wiring is faulty (short circuit, open circuit).	• The lock signal (FM8LCK) has been detected for 5 sec or more while the drum fan (FM8) is being driven.
E823	• The pre-transfer charging assembly fan (FM10) is faulty. • The DC controller PCB is faulty. • The wiring is faulty (short circuit, open circuit).	• The lock signal (FM10LCK) is detected for 5 sec or more while the pre-transfer charging assembly fan (FM10) is being driven.
E824	• The primary charging fan (FM1) is faulty. • The DC controller PCB is faulty. • The wiring is faulty (short circuit, open circuit).	• The lock signal (FM1LCK) is detected for 5 sec or more while the primary charging assembly fan (FM1) is being driven.
E830	• The separation fan (FM13) is faulty. • The DC controller PCB is faulty. • The wiring is faulty (short circuit, open circuit).	• The lock signal (FM13LCK) is detected for 5 sec or more while the separation fan (FM13) is being driven.

Notes:

1. When the self diagnostic mechanism has turned on, you can reset the copier by turning on its power switch once. This, however, is not true of E000, E001, E002, E003, E004, E005, E013, or E020. (Otherwise, the user could reset the copier while a thermistor may have an open circuit, causing the fixing roller to suffer thermal damage or toner inside the hopper to overflow.)
   If the error is E000 through E003, the power switch will turn off automatically in about 20 sec if you turn it on without resetting. In the case of E004, on the other hand, the power switch will turn off in about 5 sec after E000 is indicated if you turn on the power switch without resetting.
   You will have to initialize the RAM on the DC controller PCB if E000, E001, E002, E003, E004, E005, E013, or E020 is indicated.
   Resetting the Copier
   1) Execute COPIER>FUNCTION>CLEAR>ERR in service mode.
   2) Press the Reset key twice to return to the Copy Mode screen.
   3) Turn off and then on the main power switch.
2. For E202, and E204, you can check codes in service mode (COPIER>DISPLAY> ERR).
   In the case of E202 or E204, the control panel will show the following:

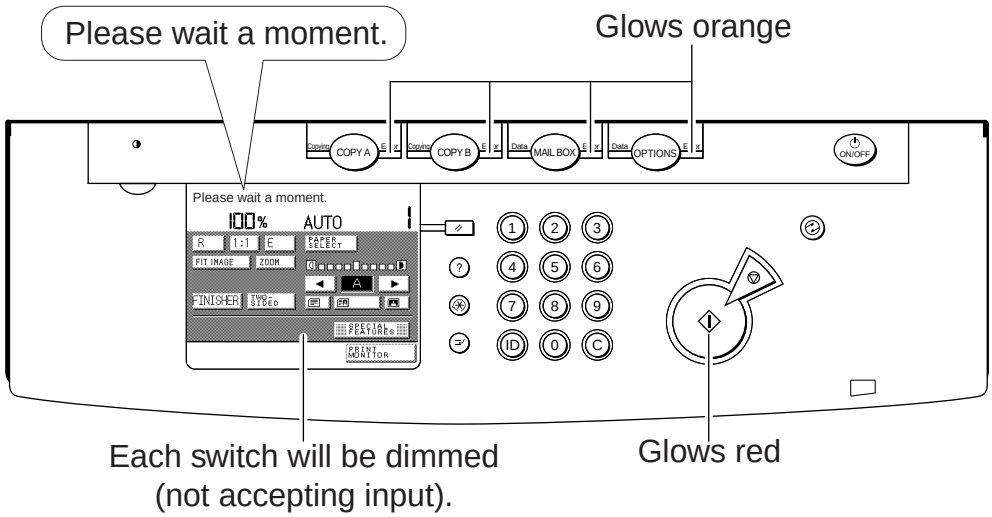

Figure 5-101

B. ADF Self Diagnosis

Code	Cause	Description
E400	• The communication cable between the machine and the copier is faulty. • The ADF controller PCB is faulty.	• The communication between the machine and the copier is disrupted for 5 sec or more while the machine is in standby. • The communication between the machine and the copier is disrupted for 0.5 sec or more while the ADF is in operation.
E402	• The belt motor (M2) is faulty. • The belt motor clock sensor (PI1) is faulty. • The ADF controller PCB is faulty.	• No clock signal is generated for 100 msec while the belt motor drive signal is being generated.
E404	• The delivery motor (M5) is faulty. • The delivery motor clock sensor (PI11) is faulty. • The ADF controller PCB is faulty.	• No clock signal is generated for 200 msec while the delivery motor drive signal is being generated.
E405	• The separation motor (M4) is faulty. • The separation motor clock sensor (PI2) is faulty. • The ADF controller PCB is faulty.	• No lock signal is generated for 200 msec while the separation motor drive signal is being generated.
E410	• The pickup motor (M3) is faulty. • The pickup roller height sensor 1 (PI8) is faulty. • The pickup roller height sensor 2 (PI9) is faulty. • The pickup roller home position sensor (PI7) is faulty. • The ADF controller PCB is faulty.	• The pickup roller height sensor 1 (PI8) or 2 (PI9) does not generate a signal within 2 sec after the pickup motor has been driven. • The pickup roller home position sensor (PI7) does not generate a signal within 2 sec after the pickup motor has been driven.
E420	• The back-up data cannot be read, or the data which has been read has an error.	• The back-up data cannot be read (twice) when the copier is turned on, or the data which has been read contains an error.

Caution:

If the self-diagnosis mechanism has turned on, you can reset the copier by turning off the power switch once.

You may continue to make copies when the ADF is out of order: disconnect the lattice connector on the ADF side, open the ADF, and place an original on the copyboard glass.

C. Finisher Self Diagnosis

Code	Cause	Description
E500	• The data communication has an error.	• The communication between the copier and the machine has been interrupted and, in addition, is not corrected after 5 sec during which re-transmission was tried. • After the above condition, a recovery attempt has been tried three times in 5 sec.
E501		• The communication between the master CPU (IC101) and the slave CPU (IC121) has been disrupted.
E505	• The backup RAM (EEPROM) is faulty.	• The check sum has an error at power-on.
E510	• The inlet motor (M1) is faulty.	• The clock pulses from the inlet motor are 50 mm/sec or less for 1 sec or more while the motor is in operation.
E514	• The stack delivery motor (M7) is faulty. • The stack delivery motor clock sensor (PI12) is faulty.	• The clock pulses from the stack delivery motor clock sensor are 50 mm/sec or less for 1 sec or more while the motor is in operation.
E537	• The front jogging plate motor (M4) is faulty. • The front jogging plate home position sensor (PI7) is faulty.	• The front jogging plate does not leave the front jogging plate home position sensor when the front jogging plate motor has been driven for 4 sec. • The front jogging plate does not return to the front jogging plate home position sensor after the front jogging plate motor has been driven for 4 sec.
E530	• The rear jogging plate motor (M5) is faulty. • The rear jogging plate home position sensor (PI9) is faulty.	• The rear jogging plate does not leave the rear jogging plate home position sensor when the rear jogging plate motor has been driven for 4 sec. • The rear jogging plate does not return to the rear jogging plate home position sensor after the rear jogging plate motor has been driven for 4 sec.
E531	• The stapler motor (M11) is faulty. • The stapler home position detecting sensor (PI9) is faulty. • The swing guide safety switch (MSW2) is faulty • The stapler safety switch (front; MSW8) is faulty. • The stapler safety switch (rear; MSW9) is faulty.	• The stapler does not leave the stapler home position after the stapler motor has been driven for 0.5 sec. • The stapler does not return to the stapler home position when the stapler motor has been driven for 0.5 sec.

Code	Cause	Description
E532	• The stapler shift motor (M10) is faulty. • The stapler shift home position sensor (PI7) is faulty. • The swing guide safety switch (MSW2) is faulty • The stapler safety switch (front; MSW8) is faulty. • The stapler safety switch (rear; MSW9) is faulty.	• The stapler shift home position sensor does not turn off when the stapler shift motor has been driven for 4 sec. • The stapler shift home position is not detected when the stapler shift motor has been driven for 4 sec.
E535	• The swing motor (M8) is faulty. • The swing guide open sensor (PI16) is faulty.	• The swing guide closed sensor does not detect the swing guide when the swing motor has been driven for 2 sec. (detail code FF)
	• The swing motor (M8) is faulty. • The swing guide closed sensor (P15) is faulty.	• The swing guide closed sensor does not detect the swing guide when the swing motor has been driven for 2 sec. (detail code 01)
E542	• The tray B lift motor (M12) is faulty. • The tray B lock sensor (PI23) is faulty. • The tray B lower limit sensor (PI24) is faulty. • The tray B upper position sensor (PI20) is faulty. • The tray lower position sensor (PI21) is faulty.	• The lifter operation does not end within 25 sec after the tray lift motor has been driven. • The clock pulses from the tray idle rotation sensor are absent for 250 msec or more while the motor is rotating. • The input from the tray B upper position sensor (PI20) is '0' at power-on (i.e., the tray B is above the tray paper sensor PCB).
E551	• The power supply fan (FM1) is faulty.	• The power supply fan is at rest for 2 sec.
E577	• The paddle motor (M9) is faulty. • The paddle home position sensor (PI14) is faulty.	• The paddle home position sensor does not detect the paddle for 5 sec after the motor has been started.
E583	• The tray auxiliary plate motor (M6) is faulty. • The tray auxiliary plate retraction sensor (PI11) is faulty.	• The tray auxiliary plate retraction sensor does not turn on within 2 sec after the motor has been started when the tray auxiliary plate is being retracted.

■ Resetting the Machine

• If the copier is making copies,
  [1] The copier indicates an error code and the message "Turn On the Power Once Again."
  [2] After the jam reset mechanism has been activated, the copier runs a self check: if the result is good, the machine is reset; if not good, the machine enters down state* (indicated on the copier's control panel as "E5XX").

• If the copier is not making copies,
  [1] The copier indicates an error code and the message "Turn On the Power Once Again."
  [2] When the power has been turned off and then on, the copier runs a self check: if the result is good, the machine is reset; if not good, the machine enters down state* (indicated on the copier's control panel as "E5XX").

*State in which "E" is indicated.

A4, 2 Originals, Single-Sided Copy



A4, 4 Originals, Double-Sided Copy

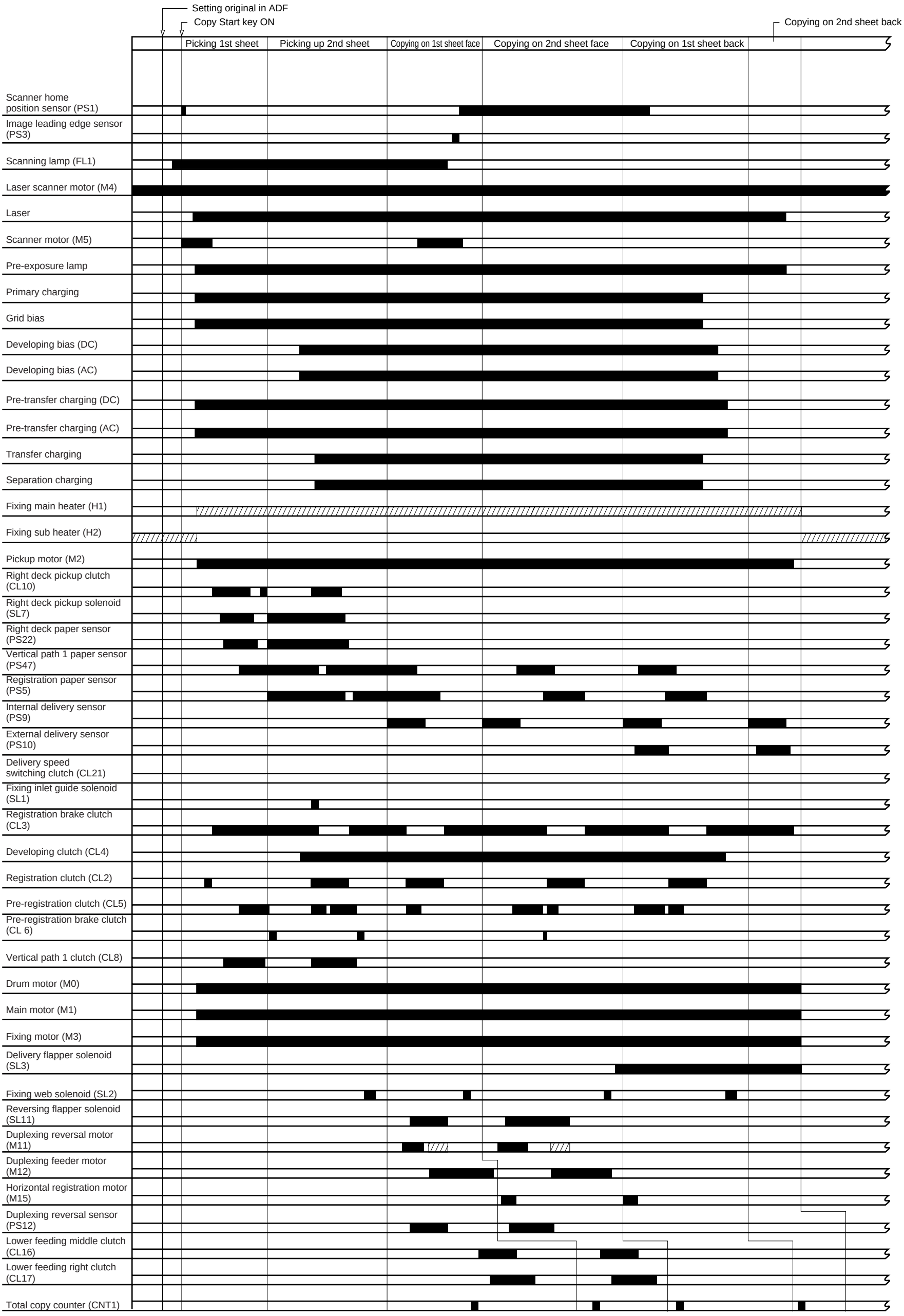

B. LIST OF SIGNALS/ABBREVIATIONS

The following is a list of the signals and abbreviations used in this chapter and the circuit diagrams.

Reference:

The abbreviations in parentheses are electrical signals, but are analog signals, which cannot be expressed in terms of '1' or '0'. Others are digital signals, which may be expressed in terms of '1' or '0'.

CL1-ON	hopper inside magnet roll clutch drive command
CL2-ON	registration roller clutch drive command
CL3-ON	registration roller brake clutch drive command
CL4-ON	developing clutch drive command
CL5-ON	pre-registration roller clutch drive command
CL6-ON	pre-registration roller brake clutch command
CL7-ON	multifeeder pickup clutch drive command
CL8-ON	vertical path 1 roller clutch drive command
CL9-ON	vertical path 2 roller clutch drive command
CL10-ON	deck (right) pickup clutch drive command
CL11-ON	deck (left) pickup clutch drive command
CL12-ON	cassette 3 pickup clutch drive command
CL13-ON	vertical path 3 roller clutch drive command
CL14-ON	cassette 4 pickup clutch drive command
CL15-ON	vertical path 4 roller clutch drive command
CL16-ON	lower feeding middle roller clutch drive command
CL17-ON	lower feeding right roller clutch drive command
CL18-ON	multifeeder feeding roller clutch drive command
CL19-ON	deck (left) feeding roller drive command
CL21-ON	delivery speed switching clutch drive command
CNT1D	total copy counter drive command
CNT2D	options counter drive command
CNT2-B0	count selection signal 0
CNT2-B1	count selection signal 1
CNT3D	print counter drive command
DUPF-A	duplexing feeder motor phase-A excitation signal
DUPF-B	duplexing feeder motor phase-B excitation signal
DUPF-OFF	duplexing feeder motor drive command

DUPI-A	duplexing reversal motor phase-A excitation signal
DUPI-B	duplexing reversal motor phase-B excitation signal
DUPI-OFF	duplexing reversal motor drive command
FL-GAIN	scanning lamp light intensity correction signal
FL-REF	scanning lamp light intensity reference signal
FL-TH	fluorescent lamp heater temperature detection signal
FM1LCK	primary charging assembly fan constant speed rotation detection signal
FM1-ON	primary charging assembly fan drive command
FM2LCK	fixing assembly heat discharge fan constant speed rotation detection signal
FM2-ON	fixing assembly heat discharge fan drive command
FM3LCK	scanner cooling fan constant speed rotation detection signal
FM3-ON	scanner cooling fan drive command
FM4LCK	stream reading fan constant speed rotation detection signal
FM4-ON	stream reading fan drive command
FM5LCK	laser driver cooling fan constant speed rotation detection signal
FM5-ON	laser driver cooling fan drive command
FM6LCK	de-curling fan constant speed rotation detection signal
FM6-ON	de-curling fan drive command
FM7LCK	feeding fan constant speed rotation detection signal
FM7-ON	feeding fan drive command
FM8LCK	drum fan constant speed rotation detection signal
FM8-ON	drum fan drive command
FM9LCK	inverter cooling fan constant speed rotation detection signal
FM9-ON	inverter cooling fan drive command
FM10LCK	pre-transfer charging assembly fan constant speed rotation detection signal
FM10-ON	pre-transfer charging assembly fan drive command
FM11LCK	power supply cooling fan 1 constant speed rotation detection signal
FM11-ON	power supply cooling fan 1 drive command
FM12LCK	power supply cooling fan 2 constant speed rotation detection signal
FM12-ON	power supply cooling fan 2 drive command
FM13LCK	separation fan contestant rotation detection signal
FM13-ON	separation fan drive command
FM14LCK	laser scanner fan constant speed rotation detection signal
FM14-ON	laser scanner fan drive command
HEAT-ON	fluorescent lamp heater drive command
MO-LCK	drum motor constant speed rotation detection signal

MO-ON	drum motor drive command
M1-FG	main motor rotation detection signal
M1-ON	main motor drive command
M2-FG	pickup motor rotation detection signal
M2-ON	pickup motor drive command
M3LCK	fixing motor constant speed rotation detection signal
M3-ON	fixing motor drive command
M4F/H	laser scanner motor high-speed rotation control signal
M4LCK	laser scanner motor constant speed rotation detection signal
M4-ON	laser scanner motor drive command
M6+	cartridge inside toner feeder motor power signal
M6-	cartridge inside toner feeder motor power signal
M7FW	pre-transfer charging wire cleaning motor CW rotation control signal
M7RV	pre-transfer charging wire cleaning motor CCW rotation control signal
M8FW	primary charging wire cleaning motor CW rotation control signal
M8RV	primary charging wire cleaning motor CCW rotation control signal
M9FW	transfer/separation charging wire cleaning motor CW rotation control signal
M9RV	transfer/separation charging wire cleaning motor CCW rotation control signal
M13-ON	deck (right) lifter motor drive command
M14-ON	deck (left) lifter motor drive command
M16-ON	cassette 3 lifter motor drive command
M17-ON	cassette 4 lifter motor drive command
M18+	hopper inside toner feeder motor power signal
M18-	hopper inside toner feeder motor power signal
MHDTC	fixing main heater power detection signal
MH-ON	fixing main heater drive command
MSW1S	toner cartridge detection signal
MSW2S	waste toner clogging detection signal
MSW3S	pre-transfer charging wire cleaning home position detection signal
MSW4S	primary charging wire cleaner home position detection signal
MSW5S	multifeeder cover open/closed detection signal
MSW6S	transfer/separation charging wire cleaner home position detection signal
MSW7S	front cover open/closed detection signal
M-TEMP	fixing main thermistor temperature detection signal
PEXP	pre-expose lamp drive command
POT-ON	drum potential control drive command

POT-SG	drum potential signal
PS1S	scanner home position detection signal
PS3S	image leading edge detection signal
PS4S	copyboard cover open/closed detection signal
PS5S	registration roller paper detection signal
PS6S	fixing claw jam detection signal
PS7S	fixing cleaning belt length detection signal
PS8S	fixing cleaning belt length warning detection signal
PS9S	internal delivery assembly paper detection signal
PS10S	external delivery assembly paper detection signal
PS11S	fixing/feeding unit outlet paper detection signal
PS12S	duplexing reversal paper detecting signal
PS13S	U-turn paper detection signal
PS14S	pre-confluence paper detection signal
PS15S	post-confluence paper detection signal
PS16S	reversal paper detection signal
PS17S	multifeeder paper detection signal
PS18S	horizontal registration paper detection signal
PS19S	waste toner case full detection signal
PS20S	deck (right) pickup detection signal
PS21S	deck (right) lifter detection signal
PS22S	deck (right) paper detection signal
PS23S	deck (right) open/closed detection signal
PS24S	deck (right) limit detection signal
PS25S	deck (left) pickup detection signal
PS26S	deck (left) feeding paper detection signal
PS27S	deck (right) feeding paper detection signal
PS28S	fixing/feeding unit releasing lever detection signal
PS31S	deck (left) lifter detection signal
PS32S	deck (left) paper detection signal
PS33S	deck (left) open/closed detection signal
PS34S	deck (left) limit detection signal
PS35S	manual feed paper detection signal
PS37S	cassette 3 pickup detection signal
PS38S	cassette 3 lifter detection signal
PS39S	cassette 3 paper detection signal

PS40S	cassette 3 open/closed detection signal
PS41S	vertical path 3 roller paper detection signal
PS42S	cassette 4 pickup detection signal
PS43S	cassette 4 lifter detection signal
PS44S	cassette 4 paper detection signal
PS45S	cassette 4 open/closed detection signal
PS46S	vertical path 4 roller paper detection signal
PS47S	vertical path 1 roller paper detection signal
PS48S	lower right cover open/closed detection signal
PS49S	vertical path 2 roller paper detection signal
PS51S	deck (right) paper level medium detection signal
PS52S	deck (right) paper level upper detection signal
PS54S	deck (left) paper level medium detection signal
PS55S	deck (left) paper level upper detection signal
PS56S	multifeeder cover open/closed detection signal
PS57S	copyboard glass detection signal
PS58S	upper right cover open/closed detection signal
PS59S	toner cartridge cover open/closed detection signal
SHDTC	fixing sub heater power detection signal
SH-ON	fixing sub heater drive signal
SHUT_OFF	main power switch OFF signal
SIZE1	original size detection signal 1
SIZE2	original size detection signal 2
SIZE3	original size detection signal 3
SIZE4	original size detection signal 4
SL1-ON	fixing inlet guide solenoid drive command
SL2-ON	fixing cleaning belt solenoid drive command
SL3-ON	delivery flapper solenoid drive command
SL4-ON	fixing/feeding unit locking solenoid drive command
SL6-ON	multifeeder pickup latch solenoid drive command
SL7-ON	deck (right) pickup solenoid drive command
SL8-ON	deck (left) pickup solenoid drive command
SL9-ON	cassette 3 pickup solenoid drive command
SL10-ON	cassette 4 pickup solenoid drive command
SL11-ON	reversing flapper solenoid drive command
SREGI-A	horizontal registration motor phase-A excitation signal

SREGI-B	horizontal registration motor phase-B excitation signal
SREGI-HOLD	horizontal registration motor position retention signal
S-TEMP	fixing sub thermistor temperature detection signal
SV1-0	cassette 3 paper length detection signal 0
SV1-1	cassette 3 paper length detection signal 1
SV2-0	cassette 4 paper length detection signal 0
SV2-1	cassette 4 paper length detection signal 1
SVR1	multifeeder paper width detection signal
SVR2	cassette 3 paper width detection signal
SVR3	cassette 4 paper width detection signal
TS1S	hopper inside toner detection signal
TS2S	hopper inside toner lower limit detection signal
TS3S	developing assembly inside toner detection signal

C. GENERAL CIRCUIT DIAGRAM

General Circuit Diagram (1/7)

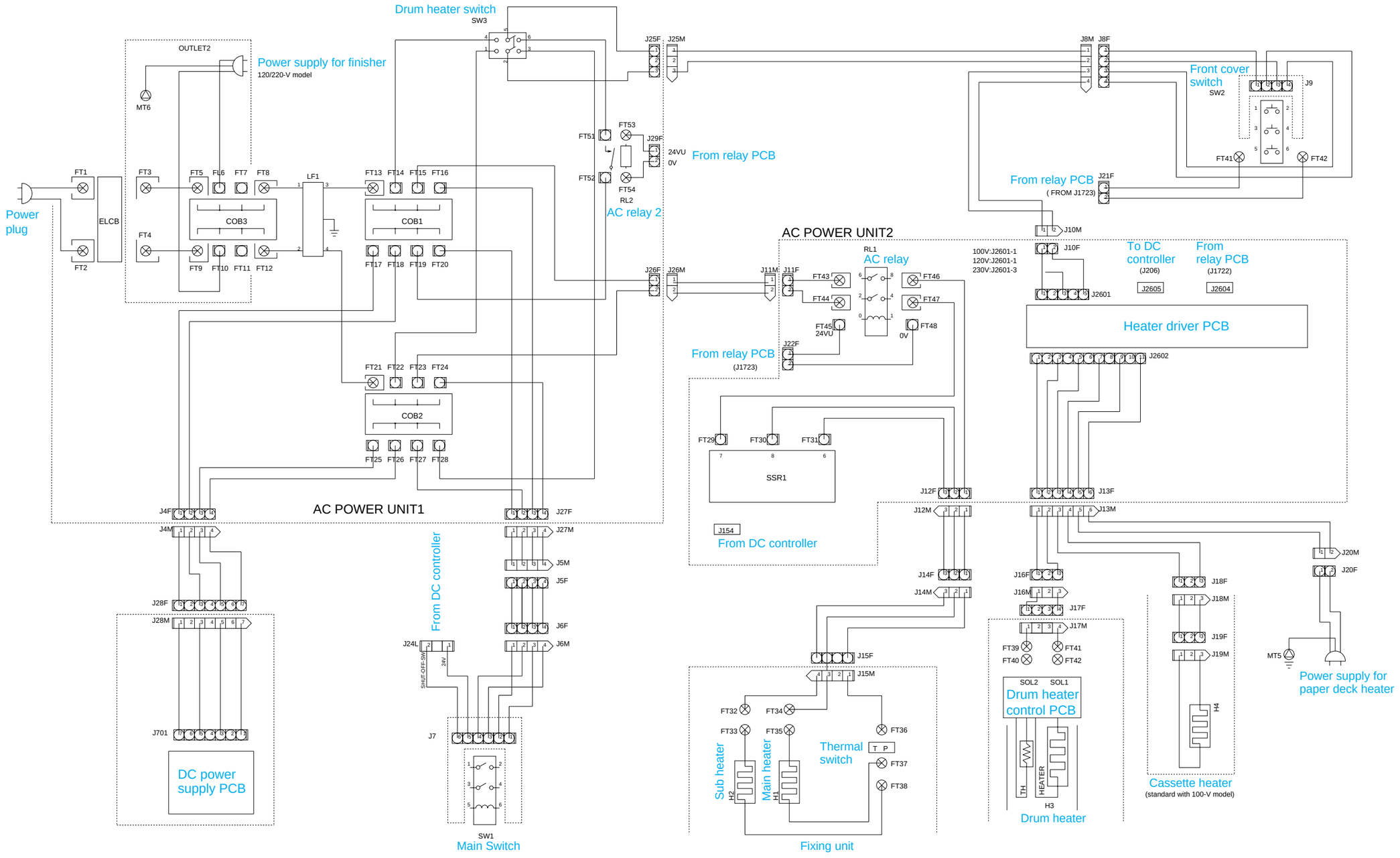

General Circuit Diagram (2/7)

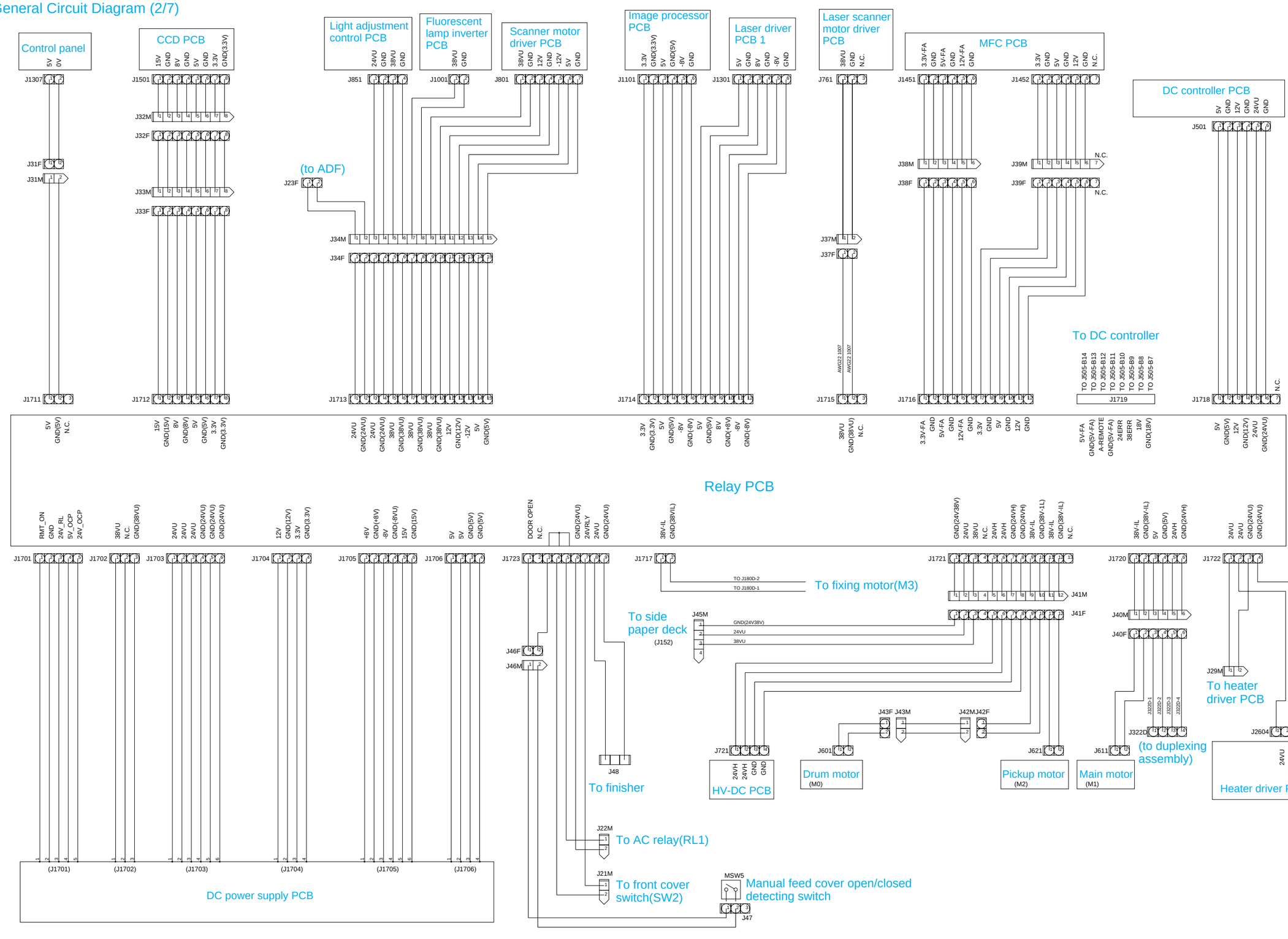

General Circuit Diagram (3/7)

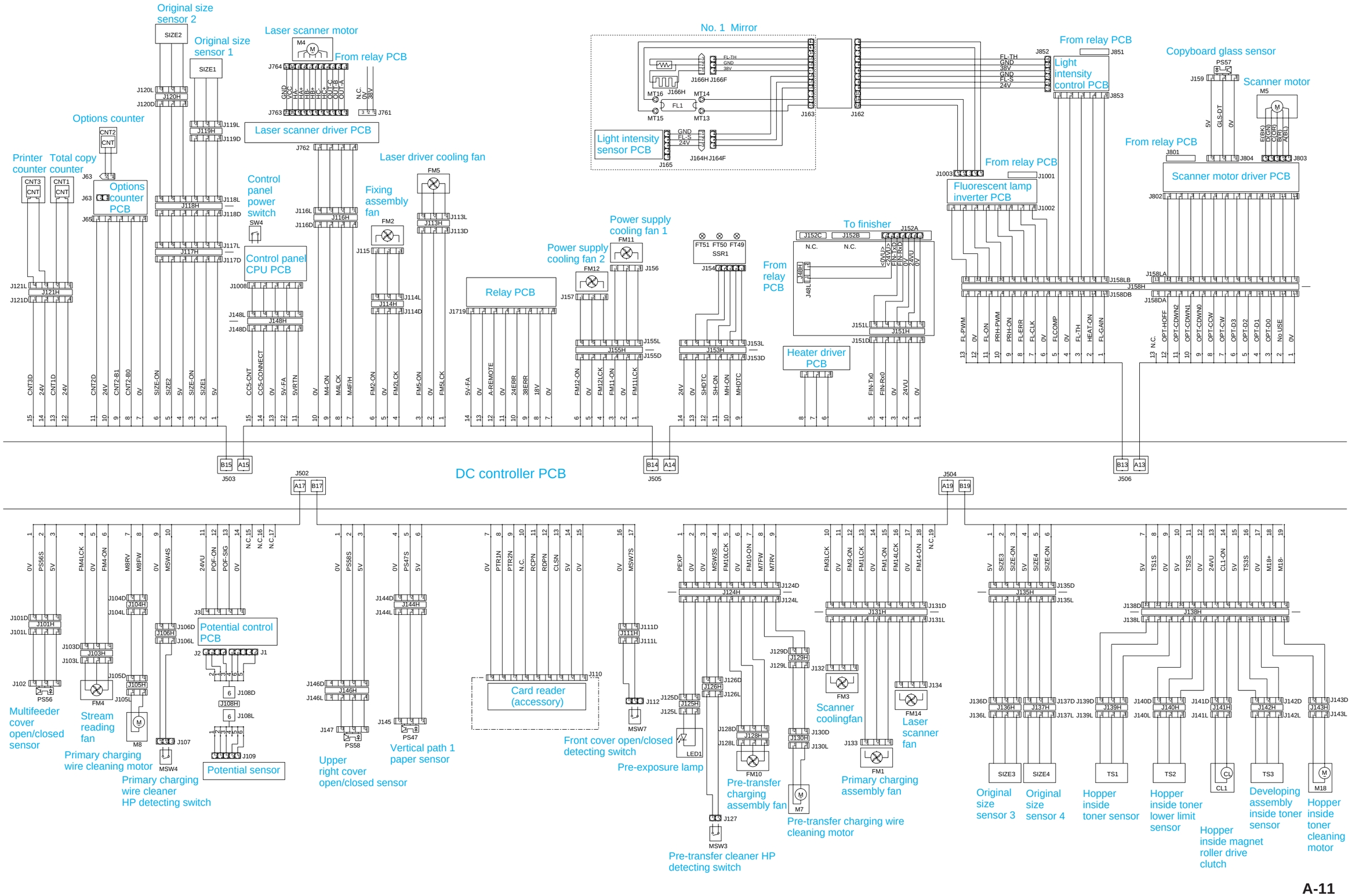

General Circuit Diagram (4/7)

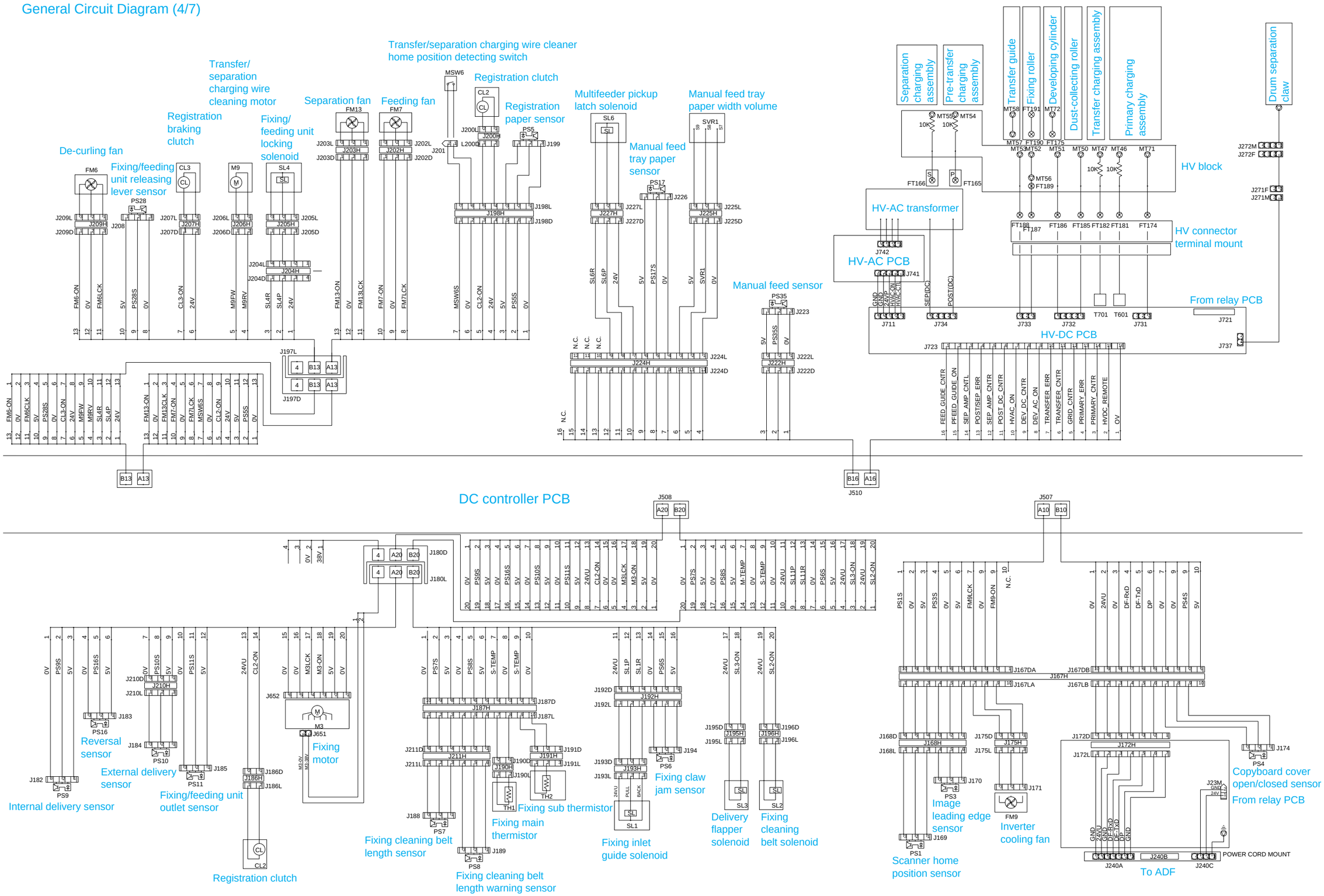

General Circuit Diagram (5/7)

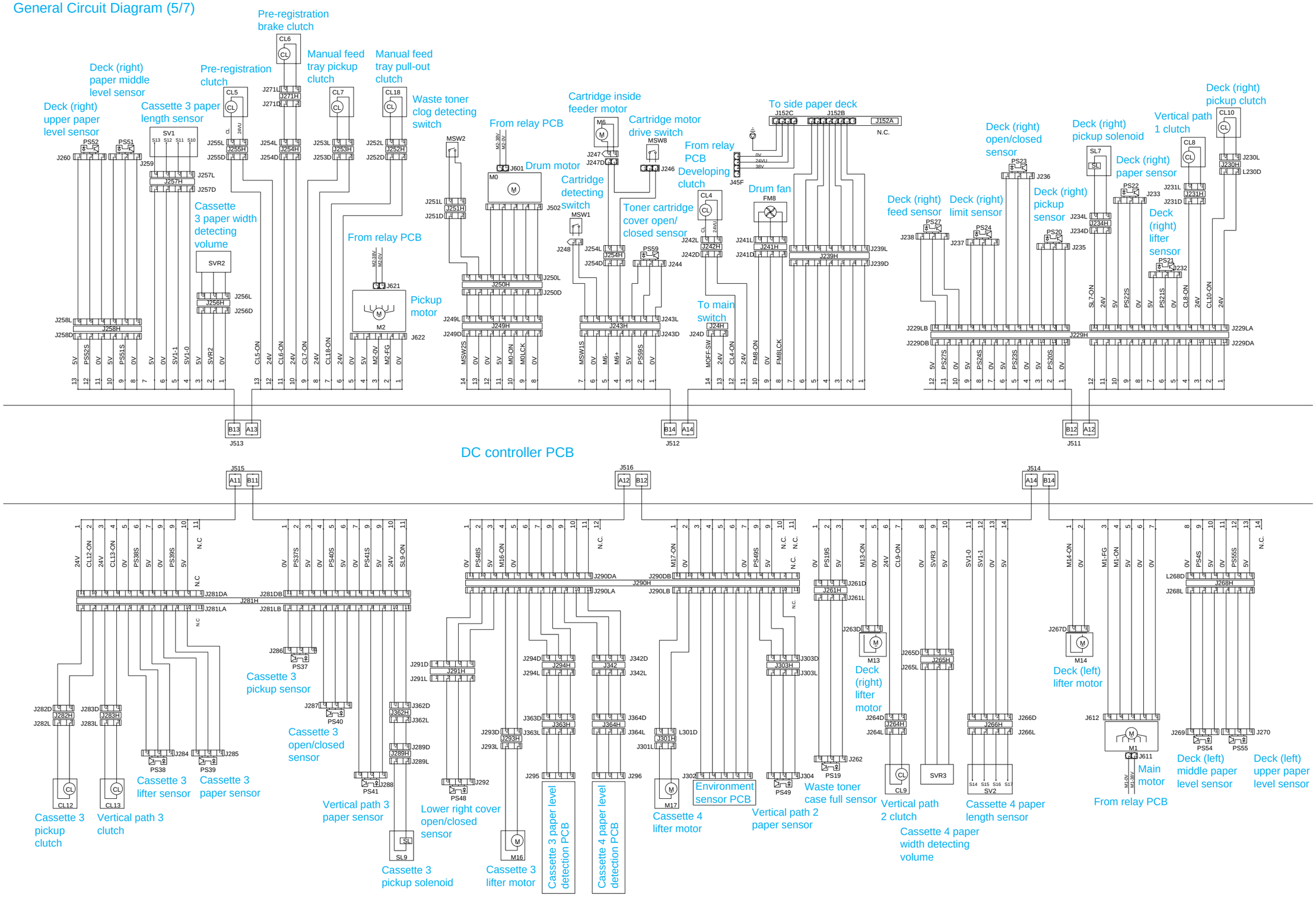

General Circuit Diagram (6/7)

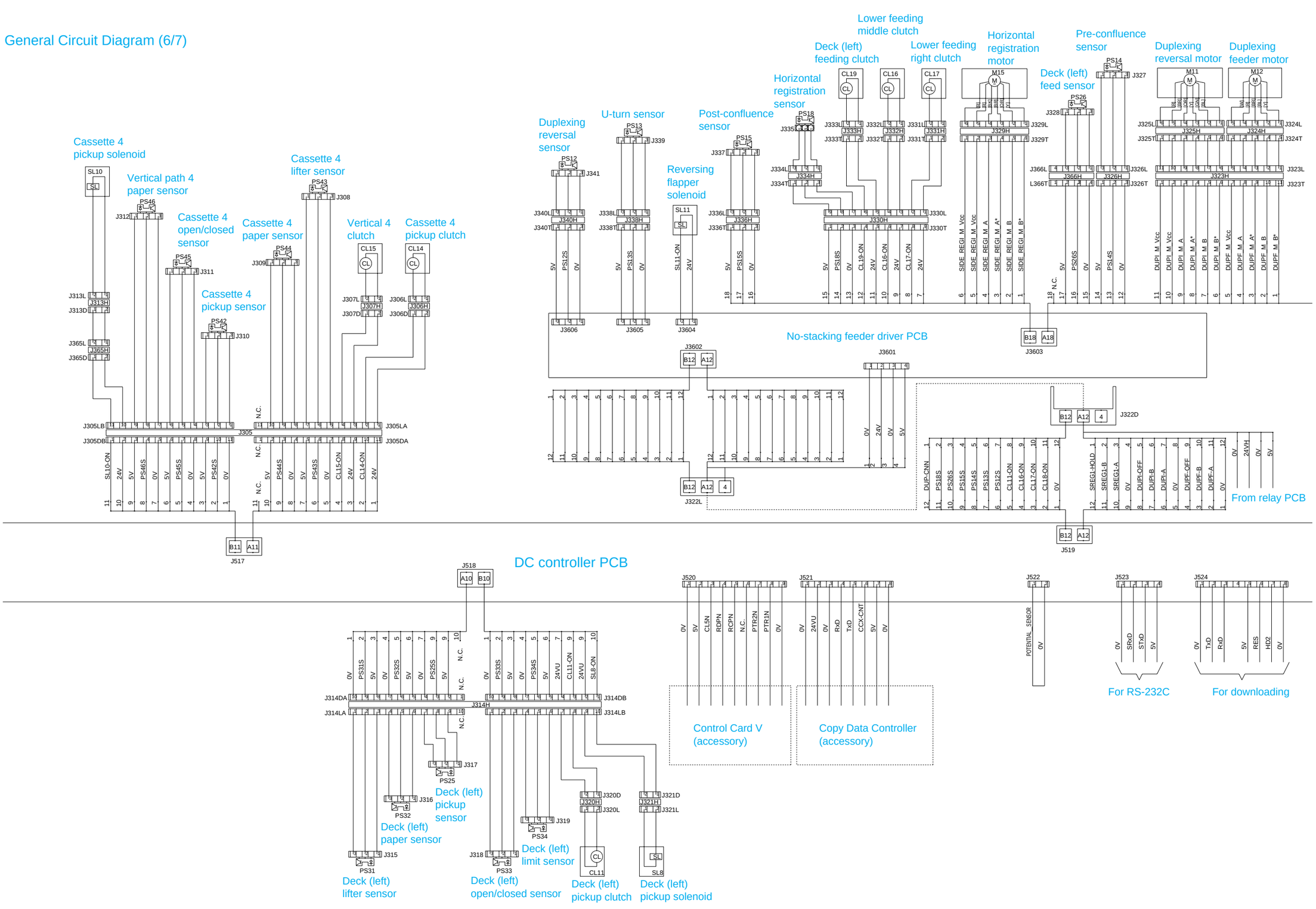

General Circuit Diagram (7/7)

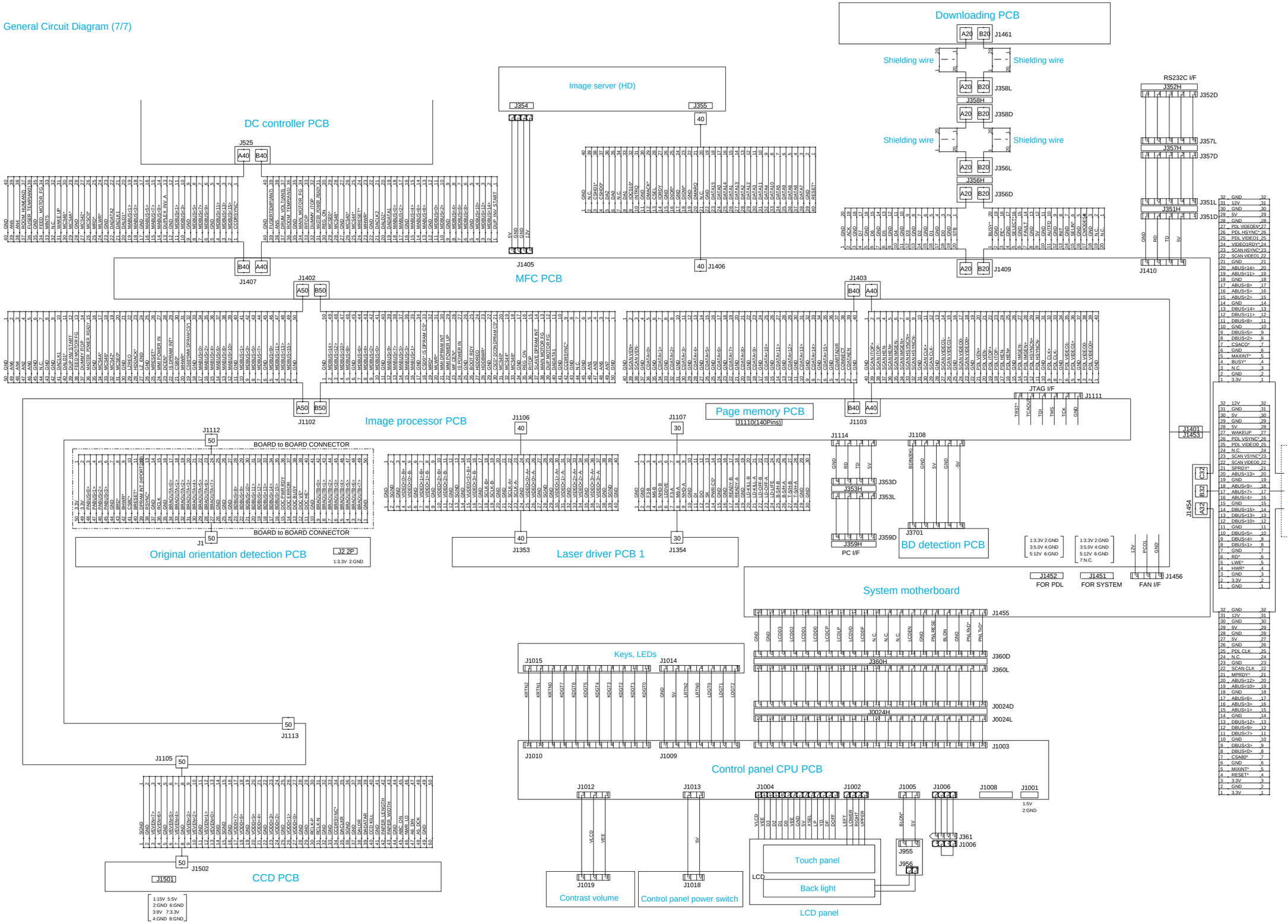

D . SPECIFICATIONS

1. Copier

a. Type

Body	Console
Copyboard	Fixed
Light source	Fluorescent lamp
Lens	Lens array (F3.7)
Photosensitive medium	Amorphous silicon (108 mm dia.)

Table A-101

b. System

		GP605/GP605V
Copying		Indirect photostatic
Charging		Corona
Exposure		Twin laser
Copy density adjustment		Auto or manual
Development		Dry (toner projection)
Pickup	Auto	Front deck (2 holders), front cassette (2 holders)
	Manual	Manual feed tray (about 5.5 mm deep; about 50 sheets of 80 g/m^2 paper)
Transfer		Corona
Separation		Corona (static separation)
Cleaning		Blade
Fixing		Heating rollers GP605 (100-V model): 760 W (main) + 400 W (sub) GP605V (100-V model): 850 W (main) + 360 W (sub) GP605 (120/230-V model): 910 W (main) + 390 W (sub)

Table A-102

c. Performance

		GP605 / GP605V		
Original type		Sheet, book, 3-D object (2 kg max.)		
Maximum original size		A3		
Reproduction ratio	DIRECT	1 : 1		
	REDUCE I	1 : 0.250		
	REDUCE II	1 : 0.500		
	REDUCE III	1 : 0.611		
	REDUCE IV	1 : 0.707		
	REDUCE V	1 : 0.816		
	REDUCE VI	1 : 0.865		
	ENLARGE I	1 : 1.154		
	ENLARGE II	1 : 1.224		
	ENLARGE III	1 : 1.414		
	ENALRGE IV	1 : 2.000		
	ENALRGE V	1 : 4.000		
	ZOOM	1 : 0.250 to 4.00 (in 1% increments)		
Wait time		5 min or less (at 20°C room temperature)		
First copy		6.5 sec (stream reading, right deck, Direct, A4/LTR, non-AE, face-down delivery) 5.2 sec (book mode, cassette 1, Direct, A4/LTR, non-AE, straight delivery, not including pre-heating of fluorescent lamp)		
Continuous copying		999 copies max.		
Copy size		Single-sided	AB	A3 max.; postcard min. (vertical feeding)
			Inch	279.4 × 431.8 mm (11"×17") max., STMT min. (vertical feeding)
		Double-sided	AB	A3 max., A5 min. (vertical feeding)
			Inch	279.4 × 431.8 mm (11"×17") max., STMT min. (vertical feeding)

Table A-103-1

	Copy paper type
Right deck Left deck	• Plain Paper (64 to 80 g/m^2) A4, B5, LTR • Tracing Paper (SM-1) A4, B5 • Colored Paper (recommended by Canon) A4 • Thick Paper (90 to 200 g/m^2) A4, B5, LTR
Cassette 3 Cassette 4	• Plain Paper (64 to 80 g/m^2) A3, B4, A4, B5, A5R, A4R, B5R, 279.4 × 431.8 mm (11"×17"), LGL, LTR, LTRR, STMT (vertical feeding) • Tracing Paper (SM-1) A3, B4, A4, B5, A4R, B5R • Colored Paper (recommended by Canon) B4, A4, A4R • Thick Paper (90 to 200 g/m^2) A3, B4, A4, B5, AR, B5R, LTR, LTRR
Manual feed tray	• Plain Paper (64 to 80 g/m^2) A3, B4, A4, B5, A5R, A4R, B5R, 279.4 × 431.8 mm (11"×17"), LGL, LTR, LTRR, STMT (vertical feeding) • Tracing Paper (SM-1, GNT-80, GSN-75) A3, B4, A4, B5, A4R, B5R • Colored Paper (recommended by Canon) B4, A4, A4R • Postcard (vertical feeding only) Japanese government postcards • Label Sheet (recommended by Canon) B4, A4, A4R, LTR, LTRR • Thick Paper (90 to 200 g/m^2) A3, B4, A4, B5, A4R, B5R, LTR, LTRR

Table A-103-2

		Copy paper type
Single-sided mode		• Plain Paper (64 to 80 g/m^2) A3, B4, A4, B5, A5R, A4R, B5R, 279.4 × 431.8 mm (11"×17"), LGL, LTR, LTRR, STMT (vertical feeding) • Tracing Paper (SM-1, GNT-80, GSN-75) A3, B4, A4, B5, A4R, B5R • Transparency (recommended by Canon) A4, A4R, LTR, LTRR • Colored Paper (recommended by Canon) B4, A4, A4R • Postcard (vertical feeding only) Japanese government postcards • Label Sheet (recommended by Canon) B4, A4, A4R, LTR, LTRR • Thick Paper (90 to 200 g/m^2) A3, B4, A4, B5, A4R, B5R, LTR, LTRR
Face-down delivery mode		• Plain Paper (64 to 80 g/m^2) A3, B4, A4, B5, A5R, A4R, B5R, 279.4 × 431.8 mm (11"×17"), LGL, LTR, LTRR, STMT (vertical feeding) • Tracing Paper (SM-1, GNT-80, GSN-75) A3, B4, A4, B5, A4R, B5R • Colored Paper (recommended by Canon) B4, A4, A4R • Postcard (vertical feeding only) Japanese government postcards • Label Sheet (recommended by Canon) B4, A4, A4R, LTR, LTRR • Thick Paper (90 to 200 g/m^2) A3, B4, A4, B5, A4R, B5R, LTR, LTRR
Double-sided mode	Auto	• Plain Paper (64 to 80 g/m^2) A3, B4, A4, B5, A5R, A4R, B5R, 279.4 × 431.8 mm (11"×17"), LGL, LTR, LTRR, STMT (vertical feeding) • Colored Paper (recommended by Canon) B4, A4, A4R • Thick Paper (90 to 200 g/m^2) A3, B4, A4, B5, A4R, B5R, LTR, LTRR
	Manual feed tray	• Plain Paper (64 to 80 g/m^2) A3, B4, A4, B5, A5R, A4R, B5R, 279.4 × 431.8 mm (11"×17"), LGL, LTR, LTRR, STMT (vertical feeding) • Colored Paper (recommended by Canon) B4, A4, A4R • Postcard (vertical feeding only) Japanese government postcards • Thick Paper (90 to 200 g/m^2) A3, B4, A4, B5, A4R, B5R, LTR, LTRR

Table A-103-3

Tray	Claw	No
	Paper deck (right, left)	162 mm deep (approx.; about 1,500 sheets of 80 g/m^2)
	Cassette 3/4	55 mm deep (approx.; about 550 sheets of 80 g/m^2)
Delivery tray		250 sheets (approx.; equivalent of 80 g/m^2 paper)
Image server (hard disk size)		2GB
Non-image width	Leading edge	Direct, Enlarge/Reduce: 4.0 +1.5, -1.0 mm (4.0 + 1.8, -1.4 mm)*
	Trailing edge	Direct, Enlarge/Reduce: 2.5 ±1.5 mm (2.5 ±1.8 mm)*
	Left/right (1st side)	Direct, Enlarge/Reduce: 2.5 ±1.5 mm (2.5 ±1.8 mm)*
Auto clear		Yes (2 min standard; may be changed between 0 and 9 min in 1-min increments)
Auto power-off		No
Power save mode	Low power mode	Yes (15 min standard; may be changed in user mode to 10, 15, 20, 30, 40, 50, 90 min or 2, 3, or 4 hr.)
	Auto sleep	Yes (60 min standard; may be changed in user mode to 10, 15, 20, 30, 40, 50, 90 min or 2, 3, or 4 hr)
	Power save mode	Yes
Accessory		• Finisher-D1 • Saddle Finisher-D2 • Side Paper Deck-C1 • Cassette Heater Kit-16 (for Side Paper Deck-C1) • Remote Diagnostic Device II • Copy Data Controller-A1 • Control Card V • Copy Tray Unit-D1 • Original Base D1

*When the ADF is used.

Table A-103-4

d. Others

<table>
<tr><th colspan="2"></th><th>GP605 / GP605V</th></tr>
<tr><td rowspan="3">Operating conditions</td><td>Temperature</td><td>15° to 30°C</td></tr>
<tr><td>Humidity</td><td>5% to 80%</td></tr>
<tr><td>Atmospheric Pressure</td><td>810.6 to 1013.3 hpa (0.8 to 1.0 atm)</td></tr>
<tr><td>Power supply</td><td>Serial No.</td><td>100V : LLPxxxxx
100V (GP605V) : LEExxxxx
120V (UL) : NLExxxxx
120V : NLZxxxxx
230V (AMS) : ULExxxxx
230V (FRN) : SLExxxxx
230V (UK) : QLExxxxx
230V (DL) : TLExxxxx
230V (ITA) : PLExxxxx
230V (CA) : RLExxxxx
230V : PLPxxxxx</td></tr>
<tr><td colspan="2">Power consumption</td><td>
<table>
<tr><th></th><th></th><th>100V/20A</th><th>100V/15A</th><th>120V</th><th>230V</th></tr>
<tr><td colspan="2">Maximum (kW)</td><td>2.0</td><td>1.5</td><td>2.0</td><td>2.0</td></tr>
<tr><td colspan="2">Continuous* (Wh) : (Reference)</td><td>498</td><td>497</td><td>474</td><td>467</td></tr>
<tr><td colspan="2">Standby (Wh) : (Reference)</td><td>357</td><td>355</td><td>335</td><td>330</td></tr>
<tr><td colspan="2">SLEEP (Wh) : (Reference)</td><td>12</td><td>12</td><td>12</td><td>16</td></tr>
<tr><td colspan="2">LOW-POWER MODE (Wh) : (Reference)</td><td>158</td><td>155</td><td>141</td><td>135</td></tr>
<tr><td rowspan="3">ENERGY SAVER MODE (Wh) : (Reference)</td><td>-10%</td><td>346</td><td>315</td><td>313</td><td>298</td></tr>
<tr><td>-25%</td><td>311</td><td>269</td><td>270</td><td>255</td></tr>
<tr><td>-50%</td><td>269</td><td>224</td><td>216</td><td>200</td></tr>
</table>
*The operationg conditions are as follows:
As many as 10 originals are placed, the copy count is set to '20', and this sequence is repeated three times with the intervals of jobs being 20 min.
</td></tr>
<tr><td>Noise (Sound power level :impulse mode)</td><td>Copying
Stanby</td><td>78 dB or less
55 dB or less</td></tr>
<tr><td colspan="2">Ozone (8 hr average)</td><td>0.05 ppm or less</td></tr>
<tr><td>Dimensions</td><td>Width
Depth
Height</td><td>764 mm
795 mm
1137 mm</td></tr>
<tr><td colspan="2">Weight</td><td>251Kg</td></tr>
<tr><td>Consumables</td><td>Copy paper
Toner</td><td>Keep copy paper wrapped to protect against humidity. Avoid direct sunshine, and keep at 40°C/85% or less.</td></tr>
</table>

Table A-104-1

Reproduction mode		Size	Copy paper size	copies/min*
Direct		A3(297×420mm)	A3	26(30)
		A4(210×297mm)	A4	55(60)
		B4(257×364mm)	B4	32(35)
		B5(182×257mm)	B5	58(60)
		A4R(297×210mm)	A4R	33(43)
		B5R(257×182mm)	B5R	33(50)
Reduce	III (61.1%)	A3→A5R	B5R	34
	IV (70.7%)	B4→A5R	B5R	38
		A3→A4R	A4R	32
	V (81.6%)	B4→A4R	A4R	36
	VI (86.5%)	A4→B5	B5	57
		A3→B4	B4	28
Enlarge	II (200.0%)	A5R→A3	A3	–*
	III (141.4%)	A4R→A3	A3	23
		B5R→B4	B4	23
	IV (122.4%)	A4R→B4	B4	27
	V (115.4%)	B4→A3	A3	28
		B5→A4	A4	50

Note: A5R originals cannot be set in the ADF.
*1-to-n values are in parentheses.

Table A-104-2 Copying Speed (copier alone)

Reproduction mode		Size	Copy Size	copies/min*
Direct		279.4×431.8mm (11"×17")	279.4×431.8mm (11"×17")	23(30)
		LTR	LTR	55(60)
		LGL	LGL	36(36)
		LTRR	LTRR	33(46)
		STMTR	STMT	–*(60)
Reduce	III (64.7%)	279.4×431.8mm (11"×17")→LTRR	LTRR	30
	IV (73.3%)	279.4×431.8mm (11"×17")→LGL	LGL	28
	V (78.6%)	LGL→LTRR	LTRR	38
Enlarge	II (200.0%)	STMTR→ 279.4×431.8mm (11"×17")	279.4×431.8mm (11"×17")	–*
	III (129.4%)	LTRR→ 279.4×431.8mm (11"×17")	279.4×431.8mm (11"×17")	25
	IV (121.4%)	LGL→ 279.4×431.8mm (11"×17")	279.4×431.8mm (11"×17")	27

Note: A5R originals cannot be set in the ADF.
*1-to-n values are in parentheses.

Table A-104-3 Copying Speed (copier alone)

The specifications are subject to change for product improvement.

2. Side Paper Deck-C1

Item	Descriptions
Pickup	No claw (retard) type
Paper storage	Side tray
Copy paper type	• Plain Paper (64 to 80 g/m^2) A4, B5, LTR • Tracing Paper (SM-1) A4, B5 • Colored Paper (recommended by Canon) A4 • Thick Paper (90 to 200 g/m^2) A4, B5, LTR
Paper storage capacity	385 mm high (stack; approx.; about 3,500 sheets of 80 g/m^2)
Serial No.	A4 type: ZQYxxxxx/LTR type: ZQZxxxxx
Paper size alternation	By relocating the size guide plate (in steps), by setting in service mode (OPTION)
Dimensions	329 (W) × 583 (D) × 680 (H) mm
Weight	33.5 kg (approx.)
Power supply	DC power from the copier.
Operating Conditions Temperature Humidity Atmospheric pressure	Same as the copier.

Table A-105

The specifications are subject to change for product improvement.

E. SPECIAL TOOLS TABLE

You will need the following tools in addition to the standard tools set to service the copier.

No.	Tool name	Tool No.	Shape	Rank*	Remarks
1	Digital multimeter	FY9-2002	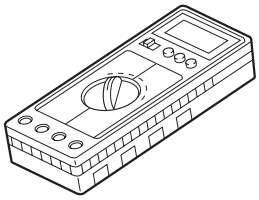	A	For adjusting the laser intensity together with the laser power checker (for electrical checks).
2	Laser power checker	FY9-4013	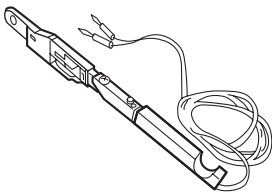	A	For adjusting the light intensity together with the digital multimeter.
3	Door switch	TKN-0093	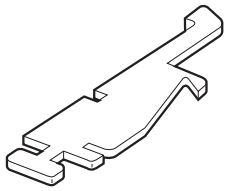	A	
4	Mirror positioning tool (front, rear)	FY9-3040	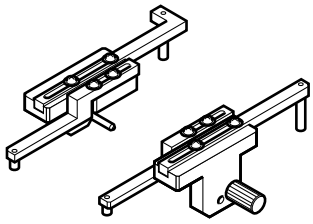	B	For adjusting the distance between No. 1 and No. 2 mirrors.
5	NA-3 test sheet	FY9-9196	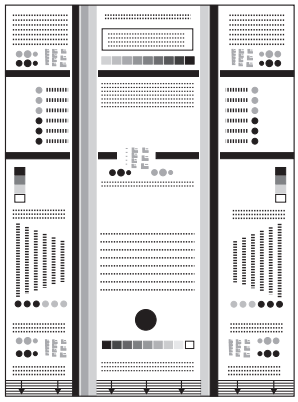	A	For adjusting images and making checks.
6	Potential sensor tester electrode	FY9-3041	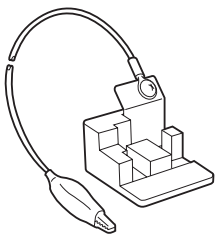	B	For checking the zero level of the surface potential sensor.

No.	Tool name	Tool No.	Shape	Rank*	Remarks
7	Environment sensor meter sensor	FY9-3014	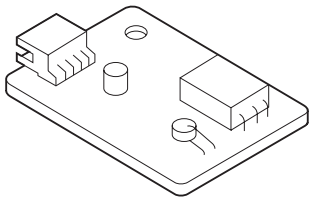	B	For checking the environment sensor.
8	Tester extension pin	FY9-3038	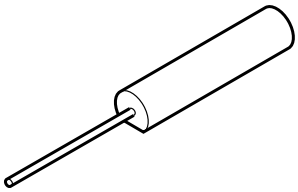	A	For making electrical checks (attachment to the meter).
9	Tester extension Pin (L-tipped)	FY9-3039	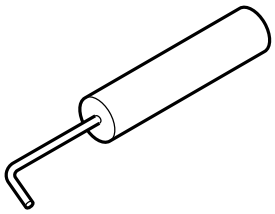	A	For making electrical checks (attachment to the meter).

*Rank:
- A: Each service person is expected to carry one.
- B: Each five or so service persons is expected to carry one.
- C: Each workshop is expected to carry one.

F. SOLVENTS/OILS

No.	Name	Uses	Composition	Remarks
1	Alcohol	Cleaning; e.g., glass, plastic, rubber (external covers)	Hydrocarbon of the fluorine family, alcohol, surface activating agent, water	• Do not bring near fire. • Procure locally. • IPA (isopropyl alcohol)
2	Solvent	Cleaning; e.g., metal areas; removing oil or toner.	Hydrocarbon of fluorine family, hydrocarbon of chlorine family, alcohol	• Do not bring near fire. • Procure locally.
3	Heat-resisting grease	Lubricating; e.g., fixing drive parts.	Lithium soap of mineral family, molybdenum disulfide	• CK-0427 (500 g/can)
4	Lubricant		Mineral oil (paraffin family)	• CK-0524 (100 cc)
5	Lubricant	Lubricating; e.g., friction parts.	Silicone oil	• CK-0551 (20 g)
6	Drum cleaning powder	Cleaning; e/g., photosensitive drum.	Selenium oxide	• CK-0429
7	Lubricant	Lubricating; e.g., scanner rail.	Silicone oil	• FY9-6011 (50 cc)
8	Conducting grease	Drum heater contact	Fluorine poly ethyl, Poly tetra fluorine ethylene	• FY9-6008 (10 g)

Prepared by
Office Imaging Products Technical Support Division
CANON INC
Printed in Japan

REVISION 0 (JAN. 1999) (20801, 23715, 30359)

5-1, Hakusan 7-chome, Toride, Ibaraki, 302-8501 Japan

Canon

The Publication is printed on
70%reprocessed paper.

PRINTED IN JAPAN (IMPRIME AU JAPON) 0199M1.77-1