FINISHER-B1

PAPER FOLDING UNIT-A1

SERVICE MANUAL

REVISION 0

Canon

MAY 1997 FY8-13EW-000

COPYRIGHT © 1997 CANON INC. CANON FINISHER-B1 REV.0 MAY 1997 PRINTED IN JAPAN (IMPRIME AU JAPON)

IMPORTANT

THE INFORMATION CONTAINED HEREIN IS PUBLISHED BY CANON INC., JAPAN. SPECIFICATIONS AND OTHER INFORMATION CONTAINED HEREIN MAY VARY SLIGHTLY FROM ACTUAL MACHINE VALUES OR THOSE FOUND IN ADVERTISING AND OTHER PRINTED MATTER.

ANY QUESTIONS REGARDING INFORMATION CONTAINED HEREIN SHOULD BE DIRECTED TO THE COPIER SERVICE DEPARTMENT OF THE COMPANY.

COPYRIGHT © 1997 CANON INC.

Printed in Japan
Imprimé au Japon

Use of this manual should be strictly supervised to avoid disclosure of confidential information.

Prepared by

OFFICE IMAGING PRODUCTS TECHNICAL SUPPORT DEPARTMENT 1
OFFICE IMAGING PRODUCTS TECHNICAL SUPPORT DIVISION

CANON INC.

7-5-1, Hakusan, Toride-shi, Ibaraki 302 Japan

INTRODUCTION

This manual is compiled to provide the service technician with basic facts and figures about the Finisher-B1/Paper Folding Unit-A1, thereby ensuring the machine's quality and performance through servicing in the field.

This Service Manual consists of the following chapters:

Chapter 1, "General Description," gives the Finisher-B1/Paper Folding Unit-A1's features, specifications, names of parts, and an outline of how to operate it.

Chapter 2, "Operations and Timing," explains the Finisher-B1/Paper Folding Unit-A1's mechanical and electrical mechanisms by function.

Chapter 3, "Mechanical System," discusses the Finisher-B1/Paper Folding Unit-A1's mechanical construction, and shows how to disassemble, assemble, and adjust it.

Chapter 4, "Maintenance and Servicing," contains tables of periodically replaced parts and tables of durables and consumables; the chapter also contains a scheduled servicing chart.

Chapter 5, "Troubleshooting," sets forth steps used to troubleshoot possible faults in the Finisher-B1/Paper Folding Unit-A1 organized in a tabular format, and provides standards/adjustments tables, self diagnosis codes tables, electrical parts charts, and service mode charts.

Appendix provides signals lists, general circuit diagram, printed circuit diagrams, special tools table, and solvents/oils table.

For installation, see the Installation Procedure, which comes with the Finisher-B1/Paper Folding Unit-A1.

The contents of this manual may be updated from time to time to reflect improvements rendered to the machine; a Service Information bulletin will be issued as necessary to cover major changes.

All service technicians are expected to be thoroughly familiar with the information contained in this manual and Service Information bulletins for quick response to the user's needs.

COPYRIGHT © 1997 CANON INC. CANON FINISHER-B1 REV.0 MAY 1997 PRINTED IN JAPAN (IMPRIME AU JAPON)

CONTENTS

CHAPTER 1 GENERAL DESCRIPTION

I. FEATURES 1-1
II. SPECIFICATIONS 1-2
A. Finisher-B1.....1-2
B. Paper Folding Unit-A1 1-5
III. NAMES OF PARTS.....1-6
A. Exterior View.....1-6
B. Cross Section.....1-8
IV. OPERATING THE MACHINE 1-10
A. Control Panel 1-10
B. Adjusting the Brightness of the Touch Panel Display 1-11
C. Making User Mode Settings.....1-13
D. Supplying the Stapler with Staples..1-15
E. Removing Jammed Staples.....1-18
F. Removing Paper Jams 1-22

CHAPTER 2 OPERATIONS AND TIMING

I. BASIC CONSTRUCTION 2-1
A. Functional Construction 2-1
B. Outline of the Electrical Circuitry 2-2
C. Inputs to the Finisher Controller PCB.....2-3
D. Outputs from the Finisher Controller PCB 2-13
E. Communication between Copier and Finisher 2-20
II. BASIC OPERATION 2-21
A. Outline.....2-21
B. Basic Operation 2-26
C. Emergency Operation Mode.....2-33
III. FEEDING DRIVE SYSTEM 2-38
A. Outline.....2-38
B. Feeding Path.....2-40
C. Controlling the Feeding Speed 2-42
D. Controlling the Feeding Motor 2-44
E. Paddle.....2-47
F. Limitless Sorting.....2-49
G. Overstacking 2-53
H. Jams 2-57
IV. BIN UNIT DRIVE SYSTEM.....2-67
A. Outline.....2-67
B. Bin Unit 2-69
C. Controlling the Guide Bar 2-85
D. Controlling the Bin Cover.....2-89
V. STACK PROCESSING UNIT.....2-91
A. Outline.....2-91
B. Up/Down Drive System.....2-92
C. Side Gripper Drive System 2-99
D. Stapler Unit Drive System 2-113
E. Front Gripper Drive System 2-128
F. Jams 2-150
G. Sequence of Operations 2-157
VI. STACKER UNIT 2-159
A. Outline.....2-159
B. Stacker Unit Up/Down Drive System 2-160
C. Stacker Tray Drive System 2-170
D. Leading Edge Stopper Drive System 2-183
E. Lift Wall Drive System.....2-186
F. Emergency Stop Button.....2-190
G. Internal Lamp 2-192
H. Sequence of Operations 2-193
VII. CONTROL PANEL 2-195
A. Outline.....2-195
B. Operation 2-195
VIII. POWER SUPPLY.....2-198
A. Outline of the Power Supply 2-198
B. Power Supply Circuit 2-199
C. Protection Mechanisms for the Power Supply Circuit.....2-202
D. DC Power Supply Rated Outputs..2-202
IX. PAPER FOLDING UNIT-A1 2-203
A. Outline.....2-203
B. Outline of the Electrical Circuit 2-204
C. Inputs to and Outputs from the Paper Folding Unit.....2-205
D. Basic Operations.....2-207
E. Feeding Drive System 2-209
F. Detecting Jams 2-219
G. Power Supply.....2-222

COPYRIGHT © 1997 CANON INC. CANON FINISHER-B1 REV.0 MAY 1997 PRINTED IN JAPAN (IMPRIME AU JAPON)

CHAPTER 3 MECHANICAL SYSTEM

I. USING THE DOOR SWITCH ACTUATORS 3-1
A. Outline.....3-1
B. Using the Door Switch Actuators.....3-2
C. Using the Stapler 3-4
II. RELOCATING THE MACHINE 3-5
A. Fixing the Stack Processing Unit and the Stacker Unit in Place 3-5
B. Separating from the Copier.....3-9
C. Taping the Covers in Place.....3-12
III. EXTERNALS AND CONTROLS.....3-13
A. External Covers 3-13
B. Separating the Finisher and the Copier 3-20
C. Display 3-21
D. Bin Cover Switch Assembly.....3-24
E. Access Door Switch Assembly 3-26
F. Installing the Service Screen 3-28
IV. BIN MODULE.....3-30
A. Bin.....3-30
B. Bin Shift Motor 3-38
C. Lead Cam 3-46
D. Guide Bar Unit 3-64
E. Guide Bar Motor 3-70
V. FEEDING UNIT.....3-71
A. Upper Feeding Mobile Assembly.....3-71
B. Vertical Path Unit 3-78
C. Lower Feeding Assembly 3-81
D. Inlet Unit.....3-85
E. Removing the Common Path Feeding Motor (M1) 3-87
F. Removing the Upper Path Feeding Motor (M2) 3-88
G. Removing the Lower Path Feeding Motor (M3) 3-91
VI. STACK PROCESSING UNIT.....3-93
A. Stack Processing Unit.....3-93
B. Removing the Side Gripper Left/Right Shift Drive Assembly 3-100
C. Side Gripper.....3-102
D. Bin Rear End Wall Open/Close Unit.....3-109
E. Stapler Front/Rear Shift Drive System.....3-111
F. Removing the Stapler Unit.....3-120
G. Front Gripper.....3-124
H. Front Gripper Left/Right Shift Motor (M10).....3-128
I. Front Gripper Front/Rear Shift Drive System 3-134
J. Stack Processing Unit Screen 3-138
VII. STACKER UNIT 3-142
A. Stacker Unit 3-142
B. Removing the Stacker Tray Drive System 3-150
C. Removing the Leading Edge Stopper Drive System.....3-159
D. Removing the Lifter Wall Drive System 3-165
E. Adjusting the Tension of the Stacker Unit Shift Brake 2 Belt 3-169
F. Adjusting the Orientation of the Stack Tray 3-170
VIII. ELECTRICAL SYSTEM 3-171
A. Removing the Finisher Controller PCB.....3-171
B. Removing the Stack Processing Unit Drive PCB 3-172
C. Removing the Power Supply PCB.....3-174
D. Noise Filter Unit 3-175
IX. PAPER FOLDING UNIT-A1 3-176
A. External Covers 3-176
B. Paper Folding Unit 3-177
C. Feeding System 3-183
D. Drive System.....3-192
E. Removing the Folder Drive PCB ...3-198

CHAPTER 4 MAINTENANCE AND SERVICING

I. PERIODICALLY REPLACED PARTS 4-1
II. CONSUMABLES AND DURABLES 4-1
A. Finisher-B1.....4-1
B. Paper Folding Unit-A1 4-7
III. SCHEDULED SERVICING 4-8
A. Finisher-B1.....4-8
B. Paper Folding Unit-A1 4-20

COPYRIGHT © 1995 CANON INC.

CHAPTER 5 TROUBLESHOOTING

I. STANDARDS AND ADJUSTMENTS 5-1
  A. Mechanical System 5-1
  B. Electrical System 5-25
II. TROUBLESHOOTING 5-53
  A. Troubleshooting Malfunctions 5-53
III. ARRANGEMENT OF ELECTRICAL PARTS 5-90
  A. Sensors 5-90
  B. Motors, Clutches, Solenoids, and Brakes 5-98
  C. Switches and Lamps 5-100
  D. Paper Folding Unit-A1 5-102
  E. Variable Resistors (VR), Light-Emitting Diodes (LED), and Check Pins by PCB 5-104
IV. SERVICE MODE 5-118
  A. Outline 5-118
  B. Using Service Mode 5-118
  C. Checking the Operation 5-121
  D. Adjustment 5-129
  E. Job Mix Switch/Staple Position Adjustment 5-147
V. SELF DIAGNOSIS 5-154
  A. Jam Alarm 5-155
  D. Errors 5-162

APPENDIX

A. GENERAL TIMING CHART A-1
B. SIGNAL AND ABBREVIATIONS A-5
C. GENERAL CIRCUIT DIAGRAM A-7
D. PAPER FOLDING UNIT GENERAL CIRCUIT DIAGRAM A-11
E. SPECIAL TOOLS A-13
F. SOLVENTS AND OILS A-13

COPYRIGHT © 1995 CANON INC. CANON FINISHER-B1 REV.0 MAY 1997 PRINTED IN JAPAN (IMPRIME AU JAPON)

CHAPTER 1

GENERAL DESCRIPTION

I. FEATURES 1-1
II. SPECIFICATIONS 1-2
A. Finisher-B1.....1-2
B. Paper Folding Unit-A1 1-5
III. NAMES OF PARTS.....1-6
A. Exterior View.....1-6
B. Cross Section.....1-8
IV. OPERATING THE MACHINE 1-10
A. Control Panel 1-10
B. Adjusting the Brightness of the Touch Panel Display 1-11
C. Making User Mode Settings.....1-13
D. Supplying the Stapler with Staples..1-15
E. Removing Jammed Staples.....1-18
F. Removing Paper Jams 1-22

COPYRIGHT © 1997 CANON INC. CANON FINISHER-B1 REV.0 MAY 1997 PRINTED IN JAPAN (IMPRIME AU JAPON)

I. FEATURES

1. Uninterrupted copying work.
- The two bin modules are operated independently of each other, enabling uninterrupted copying work.

2. Shorter stapling time.
- The bins are divided into two groups (upper/lower), shortening the processing time through simultaneous sorting and stapling.

3. Three modes of auto stapling.
- In staple sort mode, the copies delivered to the bins may automatically be stapled either at the front (single), rear (single), or both front and rear (double)–as many as 100 sheets may be stapled (98 sheets of 80 g/m^2 + 2 sheets of 200 g/m^2).

4. Easier jam removal.
- A jam may be removed from the front without having to separate the machine from the copier.
- The bins may be moved up or down by a press on a switch, making removal of a jam between a bin and the feeding assembly very easy.
- The finisher's display shows instructions on how to remove jams.

5. Better paper feeding.
- Paper as thick as 200 g/m^2 may be fed.

6. Easier access to copies.
- The stacker may be drawn to the front, providing easy access to the delivered copies.

7. Folding function (accessory).
- Installation of the Paper Folding Unit-A1 (accessory) will enable folding copies of A3, A4, or 279.4 $\times$ 431.8 mm (11" $\times$ 17") in Zs. (Paper must be of 64 to 80 g/m^2).

COPYRIGHT © 1997 CANON INC.

II. SPECIFICATIONS

A. Finisher-B1

Item		Specifications
Stacking	Sorter	Face up, moving bins, two-way sorting
	Stacker	Face up, tray drop, gripper feeding
Paper type		Plain paper (64 to 200 g/m^2)
Mode		Non-sort, sort, staple sort
Delivery (number of bins)		Non-sort delivery assembly, bins (6 × 2 modules), stacker tray
Paper size		Non-sort delivery assembly : STMTR to A3/279.4 × 431.8 mm (11" × 17") Bins : B5R to A3/279.4 × 431.8 mm (11" × 17") Stacker tray : B5R to B4/LGL
Stack	Stack without folded sheets	Non-sort delivery assembly : 250 sheets (thick paper at 80 g/m^2) Bins : 100 sheets (B5R to A4) 50 sheets (A3, 279.4 × 413.8 mm (11" × 17"), B4, LGL) Stacker tray : 2000 sheets equivalent (about 260 mm high; or, 100 sheets for stapling)*
	Stack with folded sheets**	Non-sort delivery assembly : 50 sheets (of which 10 or fewer folded sheets) Bin† : 100 sheets (of which 10 or fewer folded sheets) Stacker tray : 10 sheets
Control panel		Access key, display (bin up/down movement for jam removal)
Display		Copy End indicator, stacker tray stack level indicator, LCD (jam removal, guide, service mode)
Paper detection		Provided (non-sort tray, bin, stacker)
Stacker tray stacking condition		Front/rear offset position (by 20 mm, approx.)

* Stacking will be to the upper bin module in excess of 1200 sheets.
** Each folded sheet is counted as 10 spread sheets.
† Folding sheets may be stacked only in the first bin of each bin module.

COPYRIGHT © 1997 CANON INC.
CANON FINISHER-B1 REV.0 MAY 1997 PRINTED IN JAPAN (IMPRIME AU JAPON)

<table>
<tr><th>Item</th><th>Specifications</th></tr>
<tr><td>Stapling</td><td>Punching by rotating cam</td></tr>
<tr><td>Stapling position</td><td>
<table>
<tr><th>Stapling</th><th>Position</th></tr>
<tr><td>Corner

Sheet size
A3, A4, A4R, B4, B5, B5R, 279.4 × 431.8mm (11" × 17"), LGL, LTR, LTRR</td><td>A3, B4, A4, B5, A4R, B5R, 279.4 × 431.8mm (11"× 17") LGL, LTR, LTRR
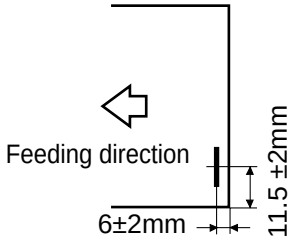
</td></tr>
<tr><td>Double

Sheet size
A3, A4, B4, B5, 279.4 × 431.8mm (11" × 17"), LTR</td><td>A3, A4
B4, B5
279.4 × 431.8mm (11" × 17"), LTR
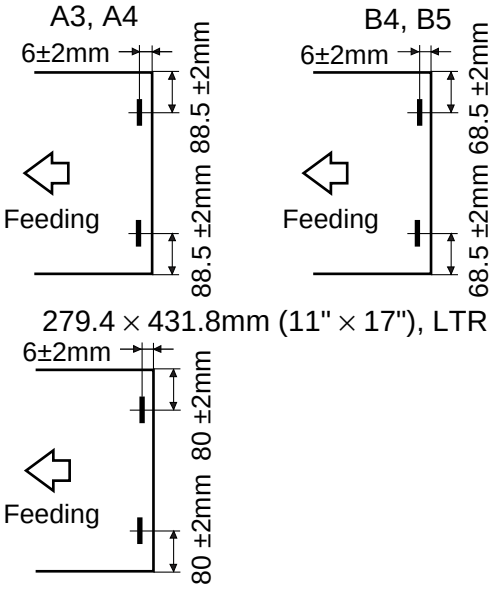
</td></tr>
<tr><td>Single

Sheet size
A4R, B5R, LTRR</td><td>A4R, B5R, LTRR
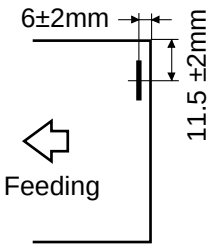
</td></tr>
</table>
</td></tr>
</table>

Item		Specifications
Manual stapling		Not provided
Number of sheets		100 sheets, 98 sheets (80 g/m^2)/2 sheets (200 g/m^2)
Staples		Special (in cartridge of 5000 staples) 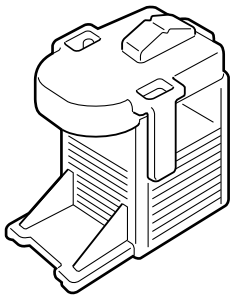
Staple absent detection		Provided (indicator on if about 55 or fewer staples remain at the end of stapling)
Sheet size		B5R to A3/279.4 × 431.8mm (11" × 17")
Operating environment	Temperature	Same as copier
	Humidity	Same as copier
Power supply		100V
Serial number		LGF xxxxx
Maximum power consumption		300 W or less
Weight		230 kg (approx.)
Dimensions (W × D × H)		1127 × 787 × 1411 [mm]

Specifications subject to change without notice.

COPYRIGHT © 1997 CANON INC.
CANON FINISHER-B1 REV.0 MAY 1997 PRINTED IN JAPAN (IMPRIME AU JAPON)

B. Paper Folding Unit-A1

Item		Specifications
Folding		Roller pressure folding
Paper type		Plain paper (64 to 80 g/m^2), A3, B4, 279.4 × 431.8 mm (11" × 17")
Folding		Z-folding
Operating environment	Temperature	Same as copier
	Humidity	Same as copier
Power supply		24 V (from Finisher-B1)
Serial number		ZFX xxxxx
Weight		40 kg (approx.)
Dimensions (W × D × H)		244 × 727 × 938 [mm]

Specifications subject to change without notice.

COPYRIGHT © 1997 CANON INC.

III. NAMES OF PARTS

A. Exterior View

1. Finisher-B1

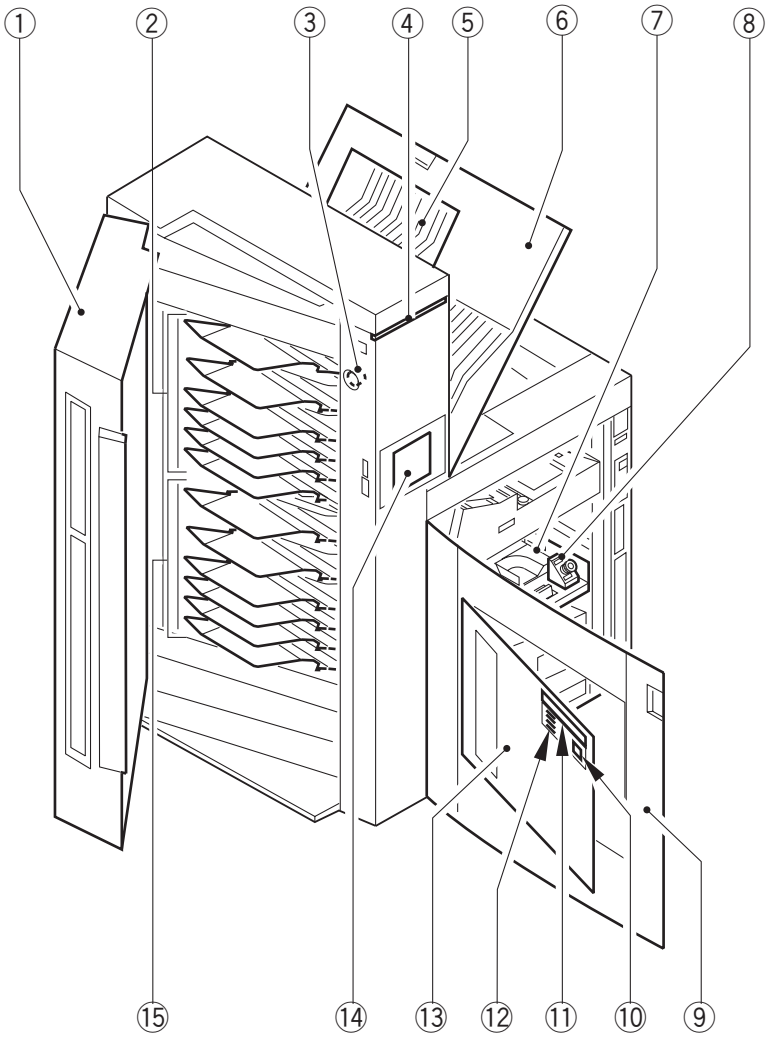

① Bin cover
② Upper bin module
③ Contrast adjusting dial
④ Copy End indicator
⑤ Non-sort tray
⑥ Upper cover
⑦ Stack tray
⑧ Emergency Stop button
⑨ Front door
⑩ Access key
⑪ Stack Tray Removal indicator
⑫ Stack Tray Stack Level indicator
⑬ Access door
⑭ Display
⑮ Lower bin module

Figure 1-301

COPYRIGHT © 1997 CANON INC.

2. Paper Folding Unit-A1

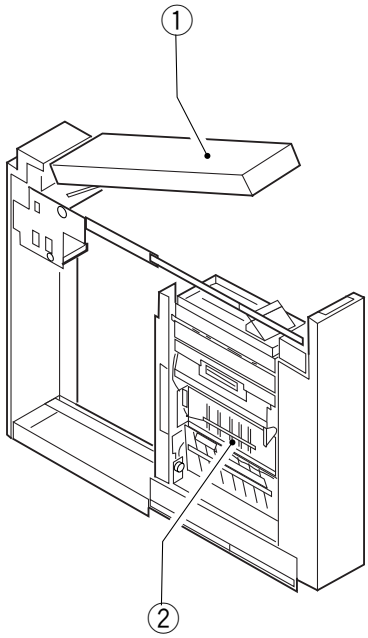

① Folding unit upper cover
② Folding unit

Figure 1-302

B. Cross Section

1. Finisher-B1

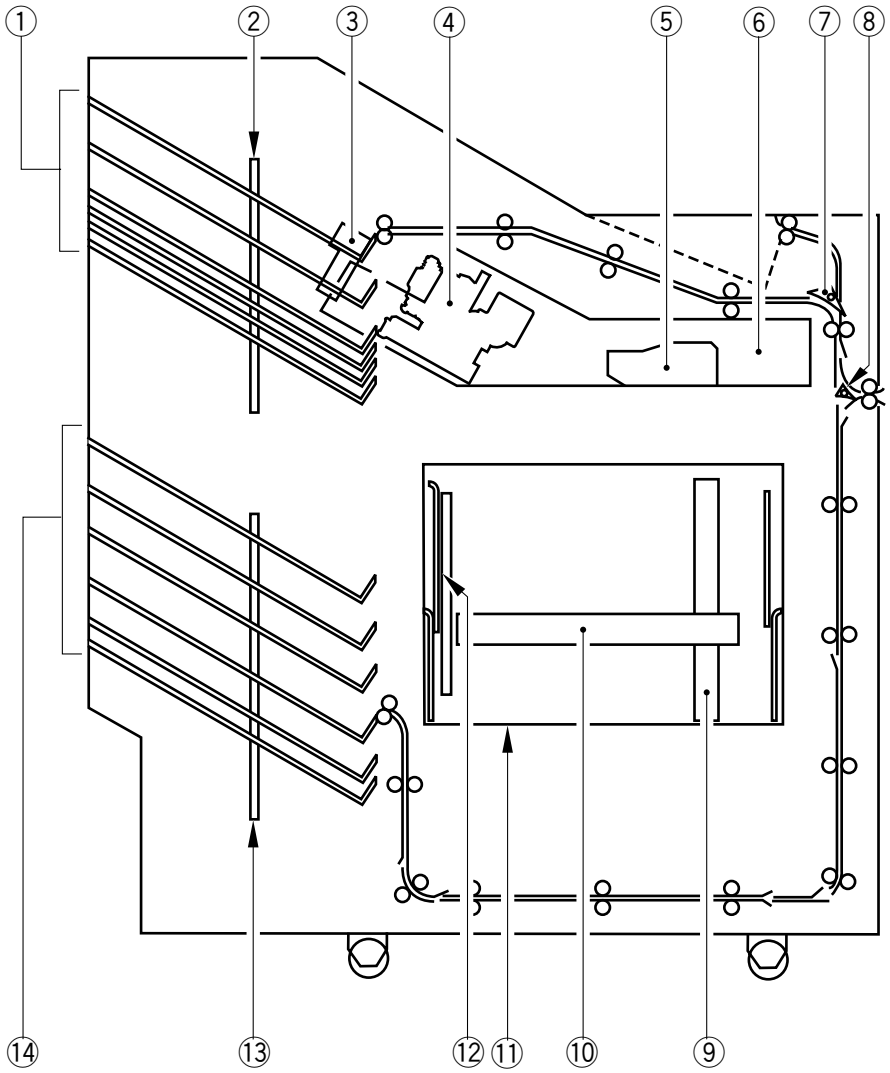

① Upper bin module
② Upper bin module guide bar
③ Side gripper
④ Stapler
⑤ Front gripper
⑥ Stack processing unit
⑦ Non-sort path switching flapper
⑧ Path switching flapper
⑨ Leading edge stopper
⑩ Stacker tray
⑪ Stacker unit
⑫ Lift wall
⑬ Lower bin module guide bar
⑭ Lower bin module

Figure 1-303

COPYRIGHT © 1997 CANON INC.

2. Paper Folding Unit-A1

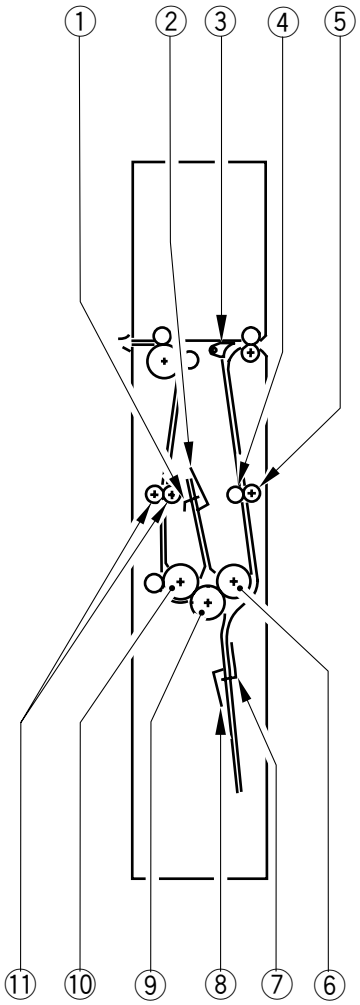

① No. 2 stopper (A3/279.4 × 431.8 mm or 11" × 17")
② No. 2 stopper (B4)
③ Inlet flapper
④ Pressure roller
⑤ Skew correcting roller
⑥ Folding roller B
⑦ No. 1 stopper (A3/279.4 × 431.8 mm or 11" × 17")
⑧ No. 1 stopper (B4)
⑨ Folding roller A
⑩ Folding roller C
⑪ No. 2 folding roller

Figure 1-304

COPYRIGHT © 1997 CANON INC.

IV. Operating the Machine

A. Control Panel

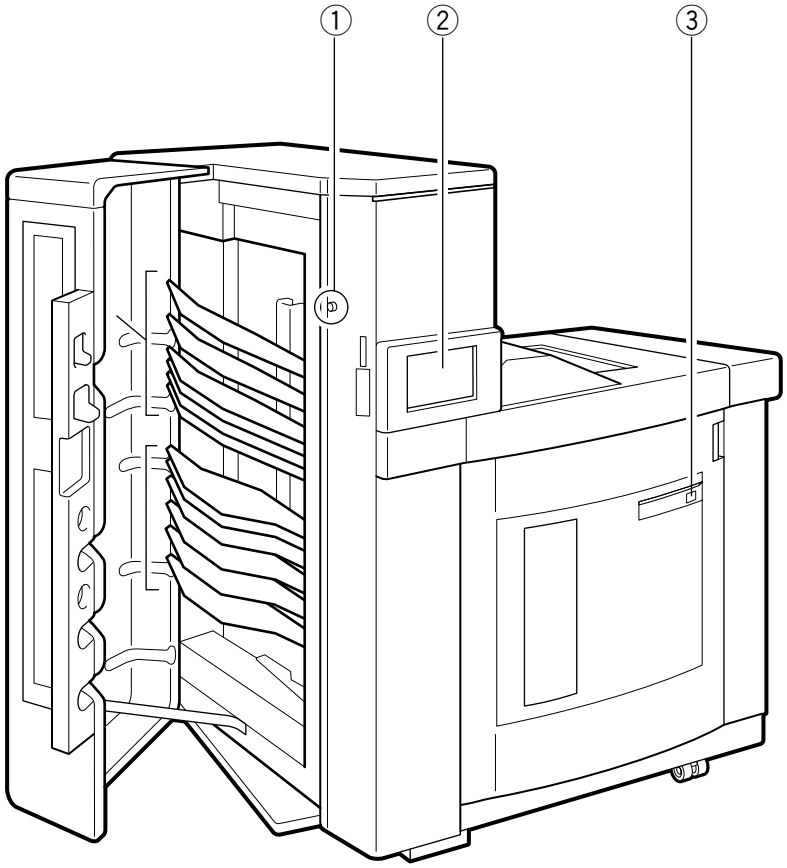

Figure 1-401

Ref.	Name	Description
1	Contrast adjusting dial	• Use it to adjust the brightness of the display.
2	Display	• Normally, remains off. Touch the screen to bring up the guide screen for instructions on how to supply staples. • Shows how to remove jams in response to a jam in the finisher.
3	Access key	• Use it to open the access door.

Table 1-401

COPYRIGHT © 1997 CANON INC.

B. Adjusting the Brightness of the Touch Panel Display

1) Open the bin cover.

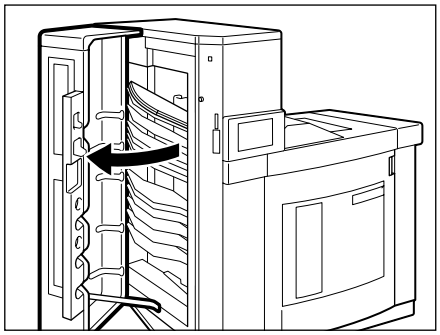

2) If the display is off, touch it so that the ? key appears.

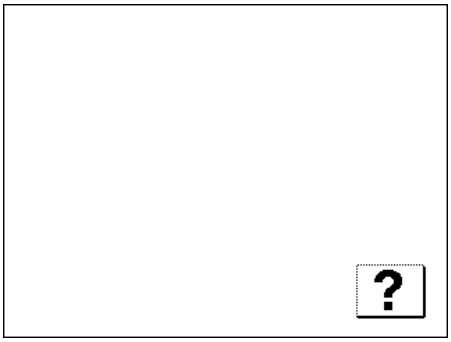

3) Turn the Contrast adjusting dial to adjust the brightness of the display.
   - To make it brighter,
     Turn the dial counterclockwise.

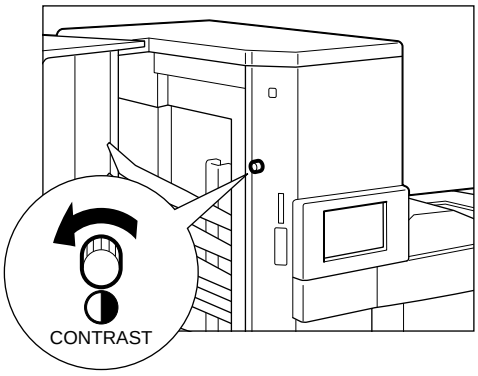

   - To make it darker,
     Turn the dial clockwise.

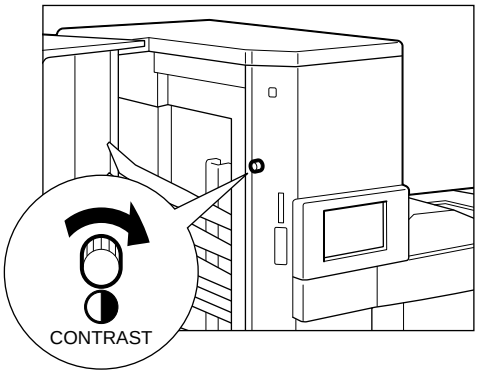

4) Close the bin cover.

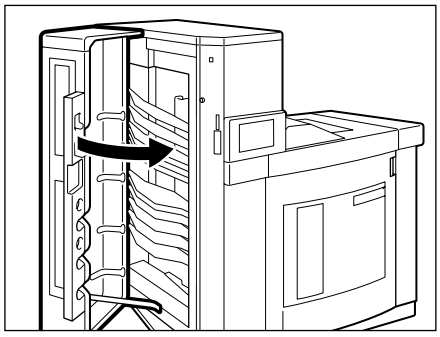

COPYRIGHT © 1997 CANON INC.

C. Making User Mode Settings

Reference:

Connecting the finisher will add 'feed staple' and 'set staple width' functions to settings items of the copier's user mode.

1. Staple Feed Function

Whenever you have removed a staple jam, you must execute the staple punch function.

For instructions, see E. "Removing Staple Jams in the Stapler."

2. Set Staple Width Function

In the set staple width function, you can specify the intervals (A) of double stapling in units of 1 mm (1/8 in).

Rang: 40 to 160 mm (1-5/8 to 6-1/6 in)

Default: 120 mm (4-5/8 in)

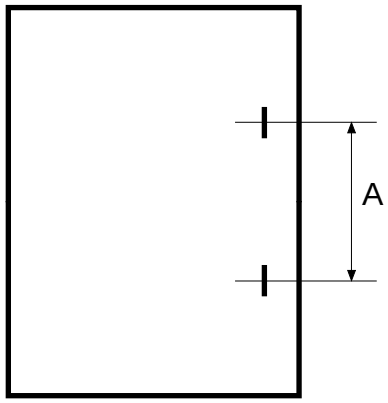

Figure 1-402

1) Press the Additional Function key on the control panel.

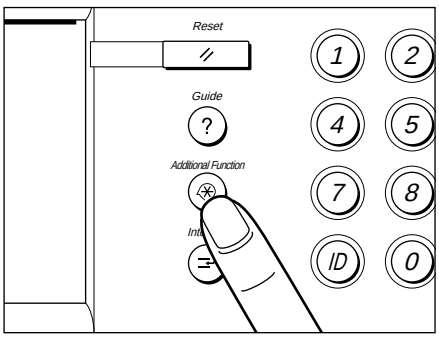

2) Press the [CUSTOM SETTING] key.

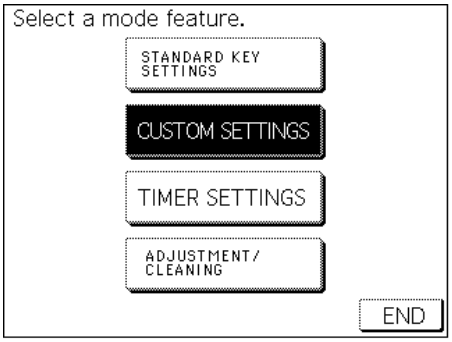

3) Press [▲]/[▼] until 'change width of double stapling' appears.

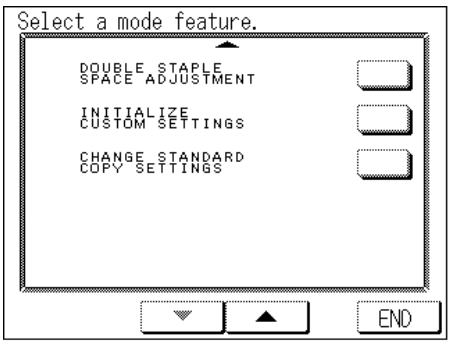

4) Press [+] or [−], and enter the appropriate stapling width; then, press [OK].
   - You may press 'inch' to enter the width in inches.

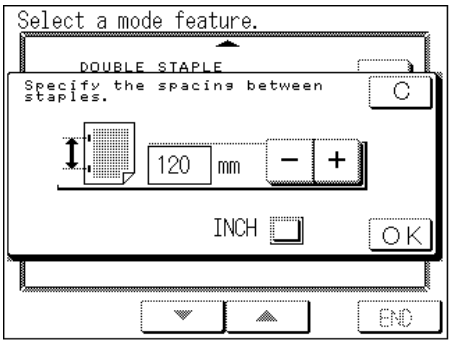

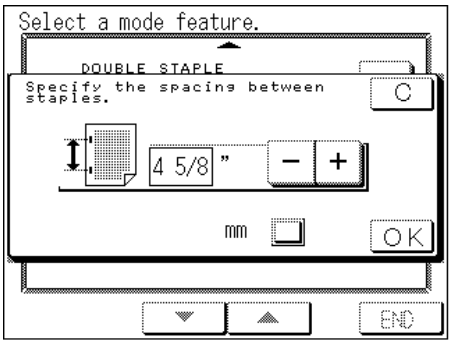

5) When done, press the [END] key.

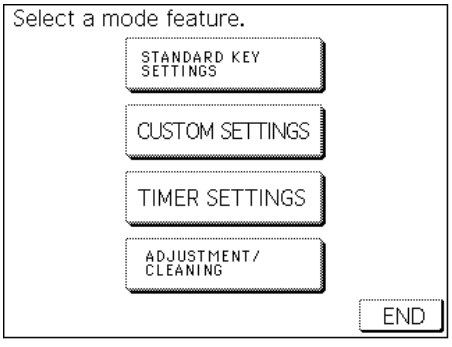

COPYRIGHT © 1997 CANON INC.

D. Supplying the Stapler with Staples

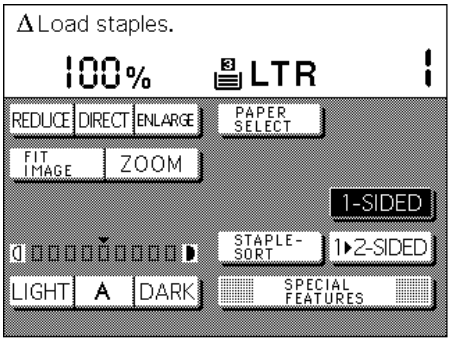

The display of the copier's control panel shows a message when the stapler runs out of staples. Perform the following steps to supply it with staples.

Caution:

You must be sure that the message has appeared before performing the following steps. Otherwise, do not remove the staple cartridge, as such is likely to cause damage.

Reference:

You may use the finisher's display to find out how to go about supply staples. Press the display; when the ? key has appeared, press 'how to supply staples'.

1) Open the upper cover.

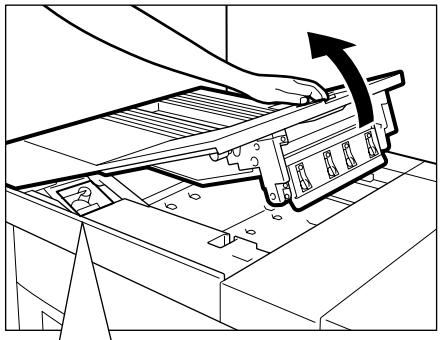

2) Release the stapler locking lever.

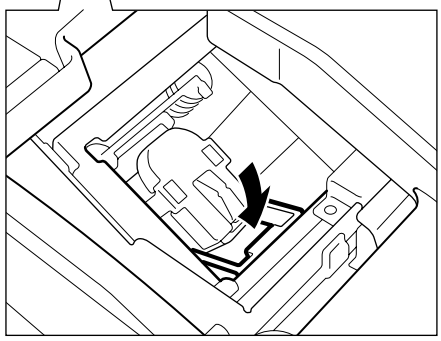

COPYRIGHT © 1997 CANON INC.

3) Remove the empty staple cartridge.

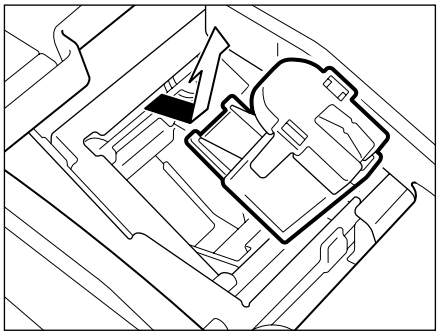

Caution:
Do not remove any staples remaining inside the stapler unit.

4) Obtain a new staple cartridge.
Remove the transparent cover from the new staple cartridge.

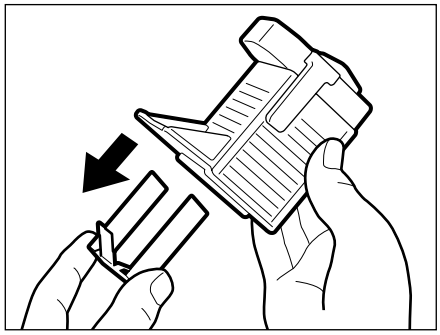

5) Set the new staple cartridge.

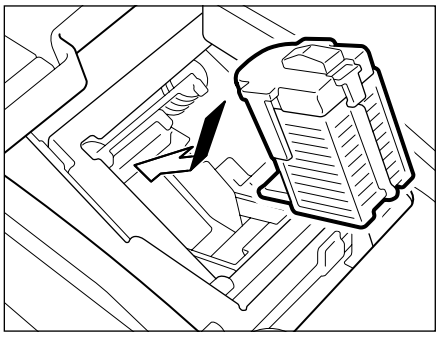

6) Lock the stapler locking lever in position.

Reference:
Shift up the lever until you hear a click, indicating that the lever has been secured in position.

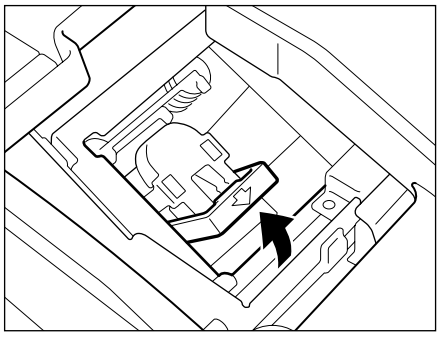

7) Open the front door.

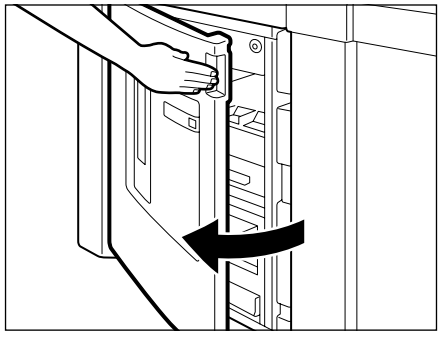

COPYRIGHT © 1997 CANON INC.

8) Remove the staple chip case.
Dispose of the staple chips collected inside the case.

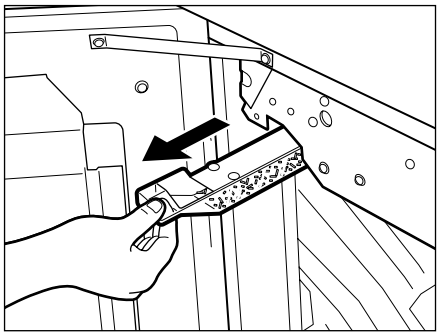

Reference:

- Be sure to dispose of the staple chips whenever you have supplied staples. (Otherwise, they can overflow.)
- You can remove the staple chip case when the stack processing unit is at home position.
  If the stack processing unit is not at home position, close all doors of the finisher, and turn off and then on the copier.

9) Set the staple chip case.
Be sure to push it in until a click is heard.

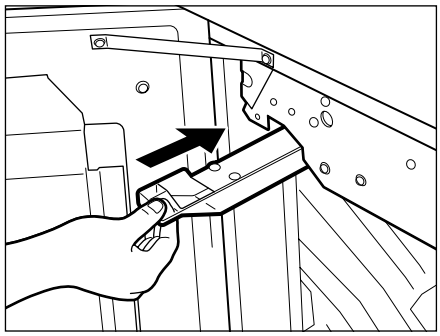

10) Close the front door.

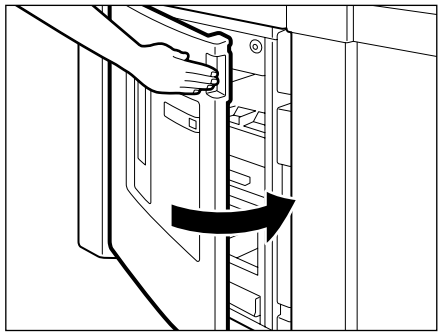

11) Close the upper cover.

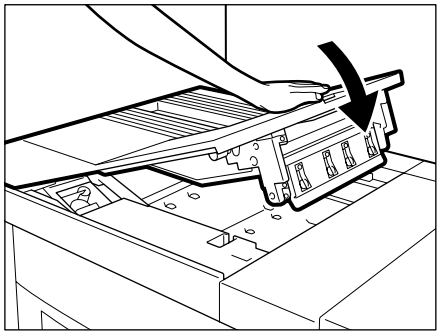

COPYRIGHT © 1997 CANON INC.

E. Removing Jammed Staples

The control display of the copier's control panel shows a message in response to a staple.

You can suspect a staple jam if stapling operation fails.

Perform the following steps, making sure to remove all staple jams.

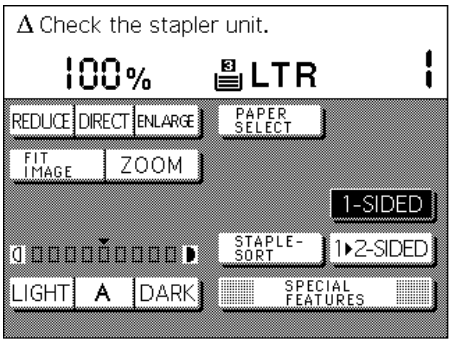

1) Touch the touch panel, and press the ? key when it has appeared.

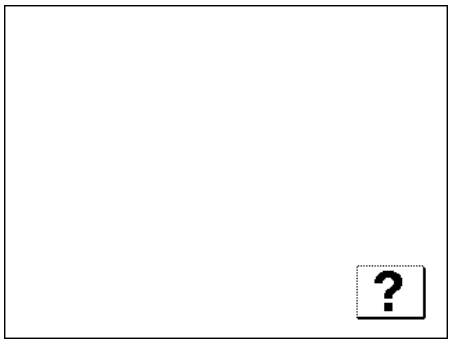

2) Press 'if stapling fails'.

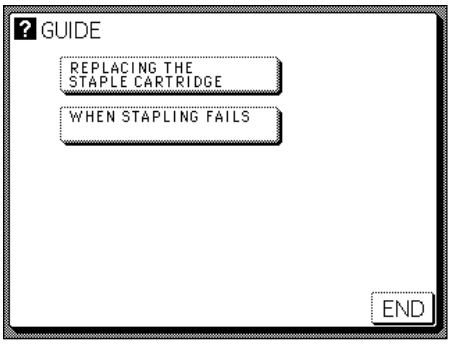

3) Press 'move bin'.

Reference:

Be sure to close the bin cover. The bins will not shift if it is open.

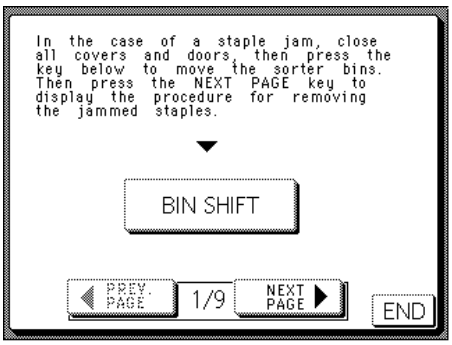

4) Open the bin cover.

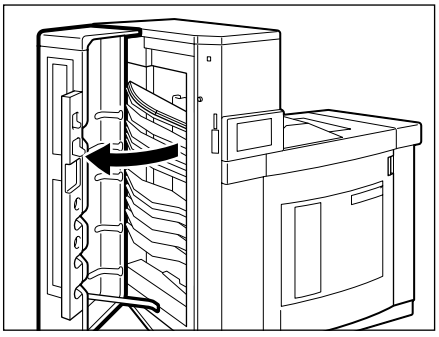

COPYRIGHT © 1997 CANON INC.

5) Holding the grip, move the staple unit. Move it until ▼and ▲match.

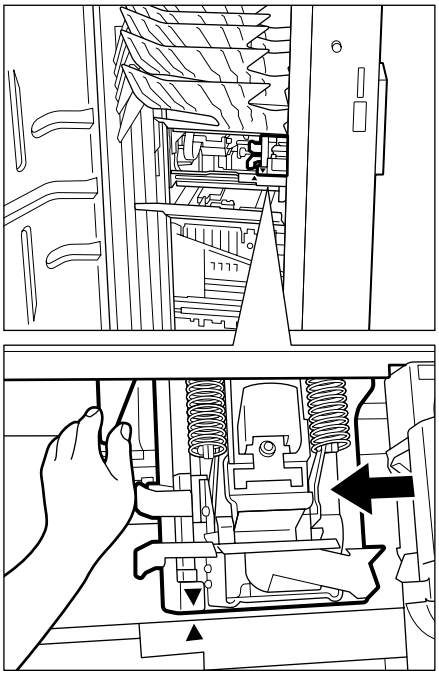

6) Release the stapler locking lever.

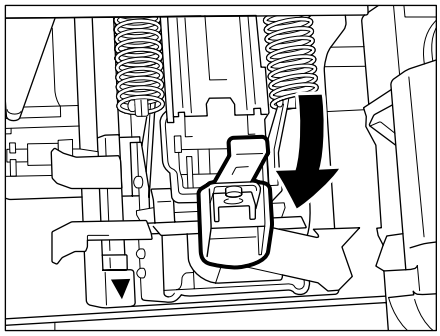

7) Remove all staple jams.

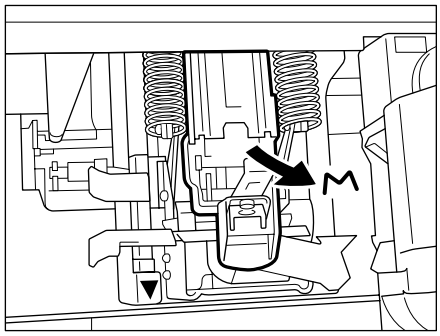

8) Lock the stapler locking lever.
   - Shift up the lever until a click is heard, indicating that the lever has been secured in place.

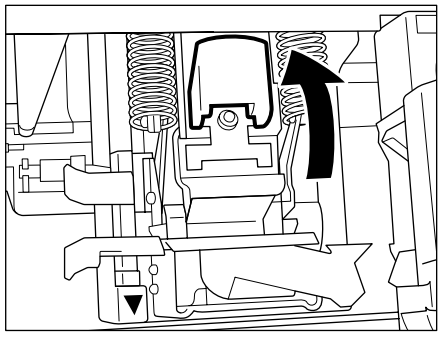

COPYRIGHT © 1997 CANON INC.

9) Close the bin cover.

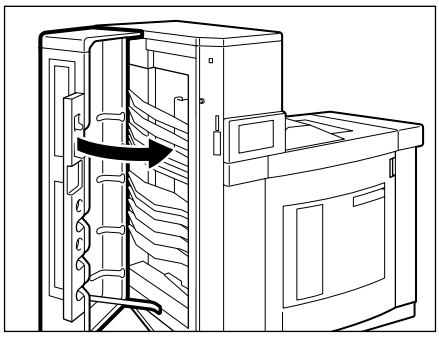

Caution:

You must always execute 'feed staple' as follows whenever you have removed staple jams.

10) Press the Additional Function key on the copier's control panel.

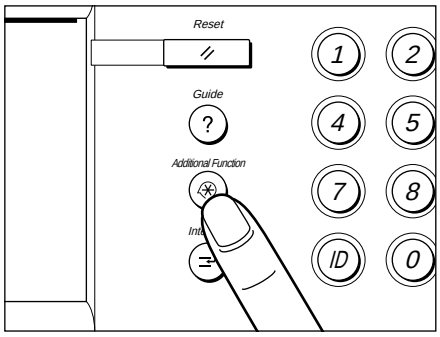

11) Press 'adjust/clean'.

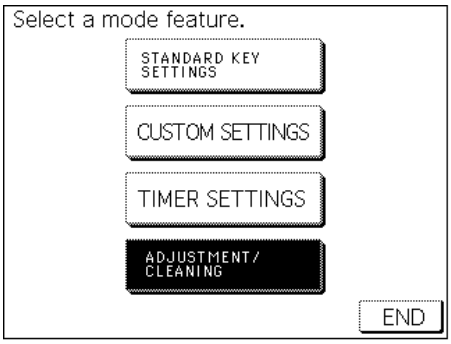

12) Select [REPOSITIONING STAPLES].

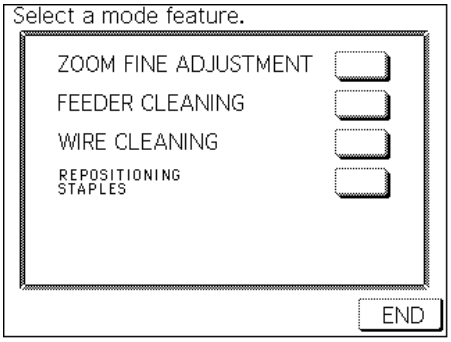

COPYRIGHT © 1997 CANON INC.

13) Press ‘start’.
Copy paper will automatically be drawn in from the tray, and stapled five times.
The display returns to the Basic screen when the ‘feed staple’ function has ended.

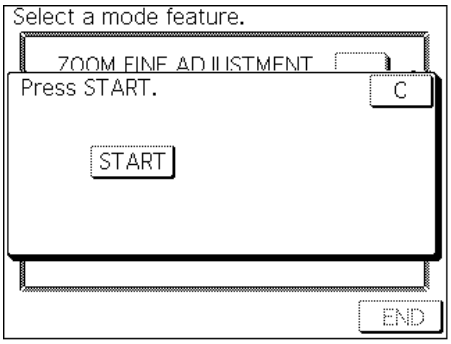

Reference:
- Paper in the side tray top will be given priority.
- The sheets used in the feed staple function will not be counted.

14) Press the Access key, and open the access key. Then, remove the stapled sheet.

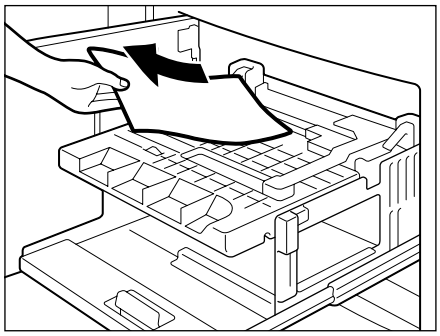

Reference:
If the paper on the copier’s tray is A3 only, A3 paper will be used for stapling. If such is the case, open the bin cover when removing the stapled paper.

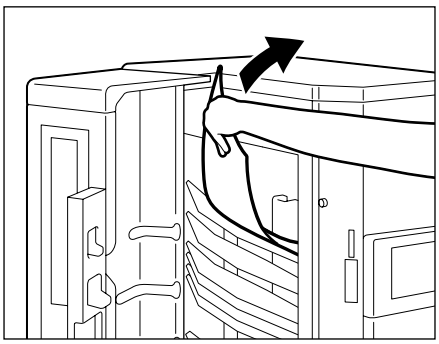

F. Removing Paper Jams

A message will appear in response to a paper jam in the finisher, indicating the location of the jam and how to remove it.

When the message has appeared, check both copier and finisher for a paper jam.

① Paper Jam at F2, F3, or F4

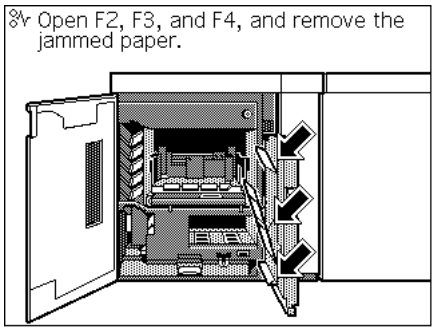

② Paper Jam at F10 or F11

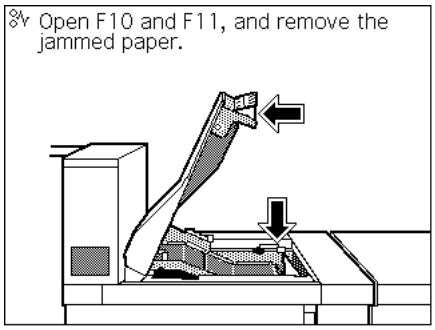

③ Paper Jam at F13

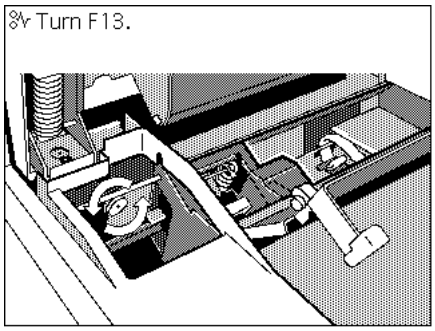

④ Paper Jam on the Stack Tray

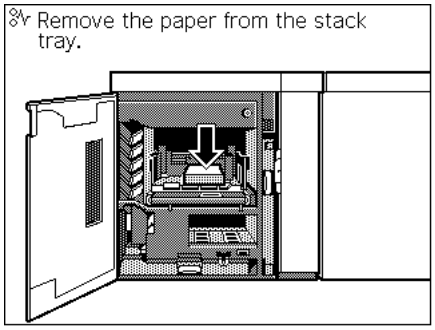

⑤ Paper Jam at F6, F7, F8, o F9

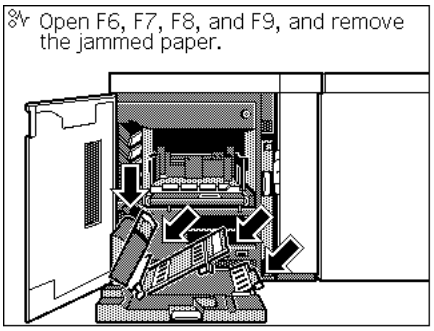

⑥ Paper Jam at F13 or F15

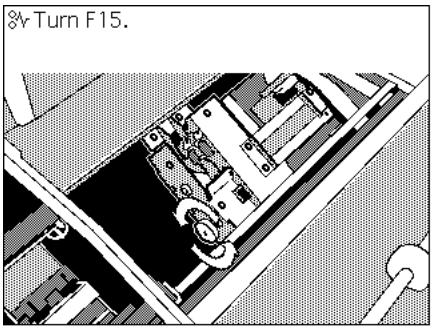

⑦ Paper Jam at F15

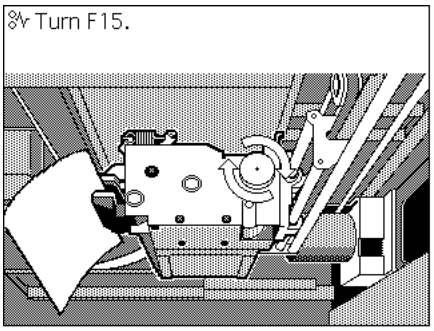

⑧ Paper Jam behind the Bin Cover

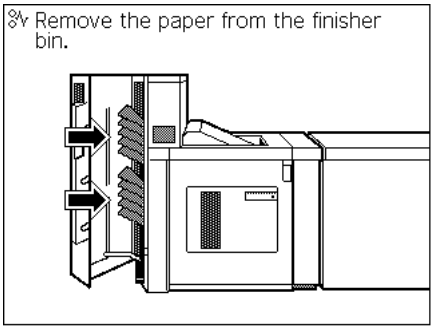

COPYRIGHT © 1997 CANON INC.

1. Paper Jam at F2, F3, or F4

Suspect a paper jam at either of the locations indicated on the display. Perform the following steps to remove the jam.

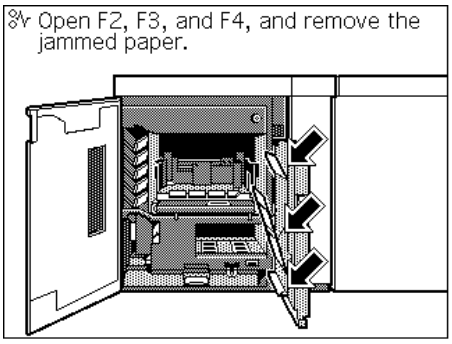

1) Open the front door.

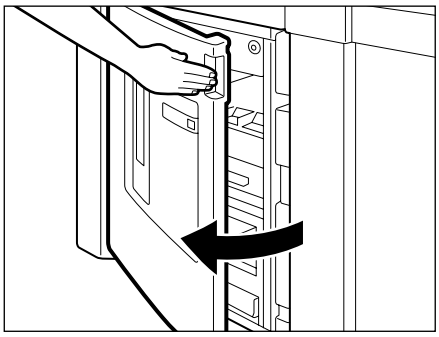

2) Slide out F1.

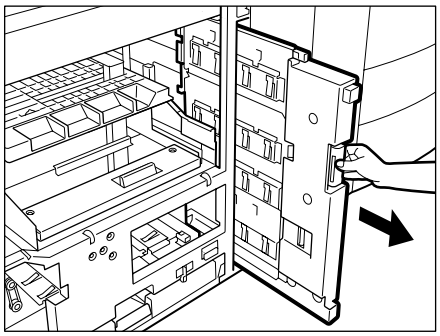

3) Open F2/F3/F4, and remove the paper jam.
   • A jam at F2.

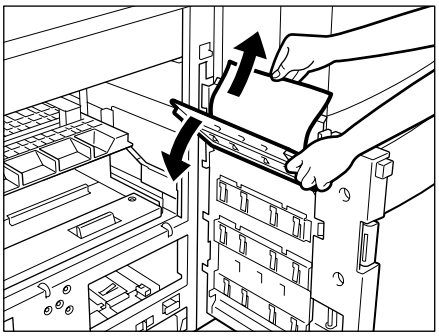

• A jam at F3.

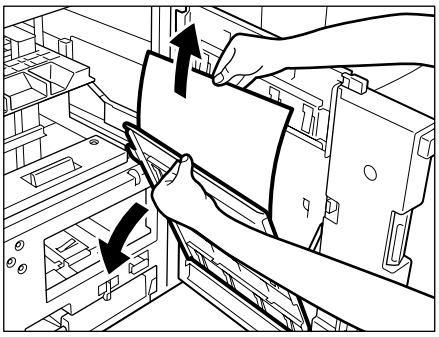

• A jam at F4.

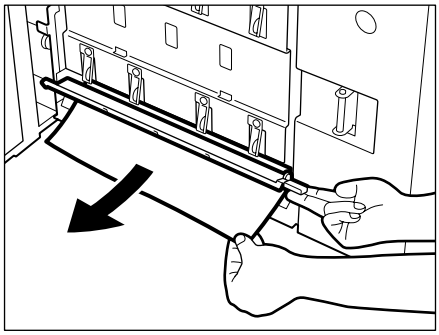

4) Slide in F1 with care until stops.

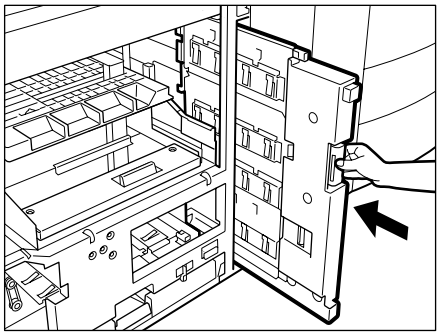

5) Close the front door.

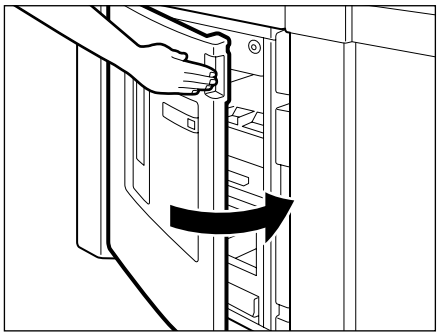

COPYRIGHT © 1997 CANON INC.

2. Paper Jam at F6, F7, F8, or F9

Suspect a paper jam at either of the locations indicated on the display. Perform the following steps to remove the jam.

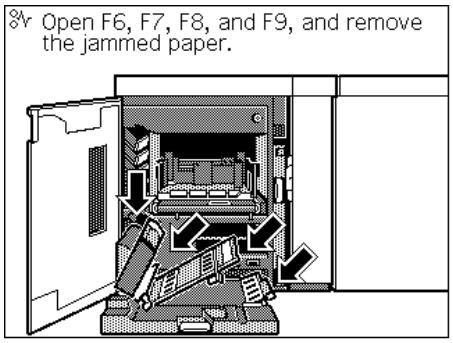

1) Open the front door.

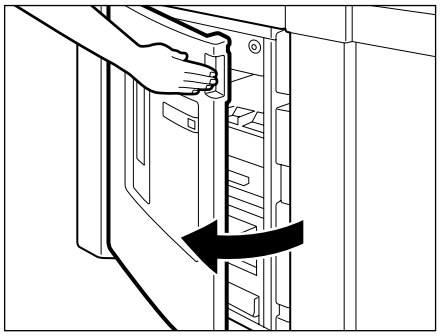

2) Slide out F5.

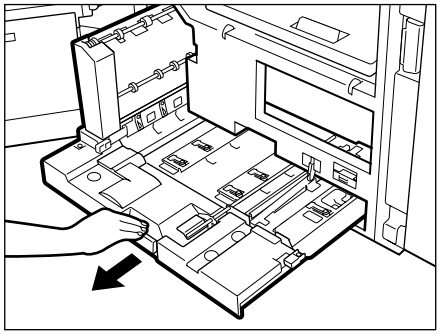

3) Open F6/F7/F8/F9, and remove the paper jam.
   • A jam at F6.

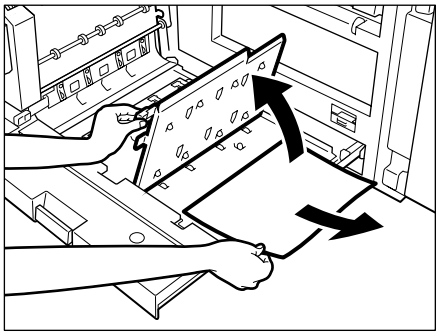

• A jam at F7.

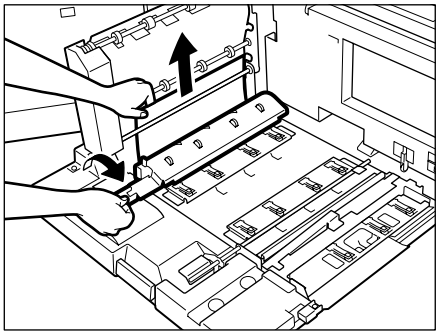

• A jam at F8.

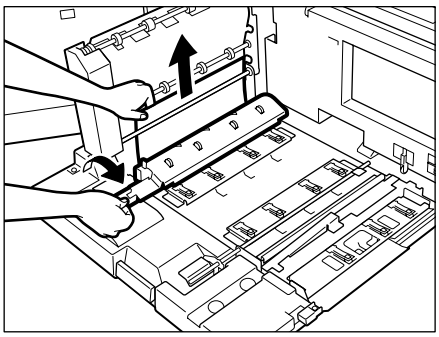

• A jam at F9.

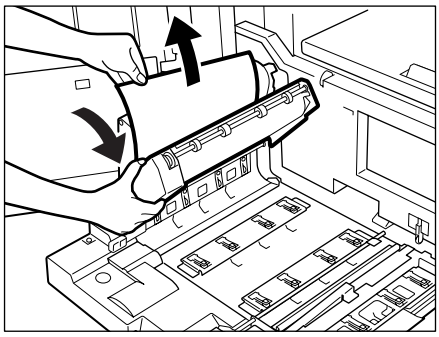

4) Slide in F5 until it stops.

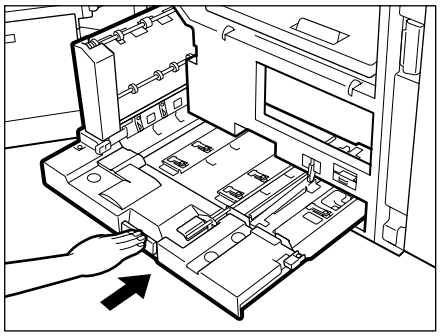

5) Close the front door.

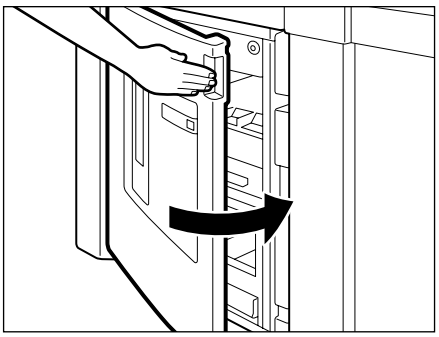

COPYRIGHT © 1997 CANON INC.

3. Paper Jam at F10/F11

Suspect a paper jam at either of the locations indicated on the display. Perform the following steps to remove the jam.

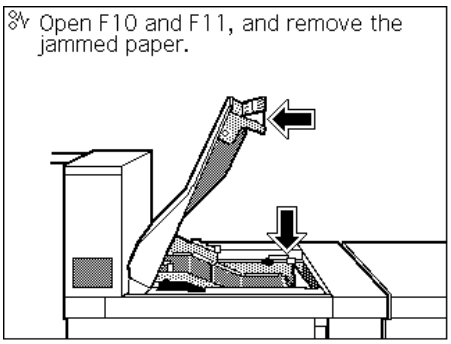

1) Open the upper cover.

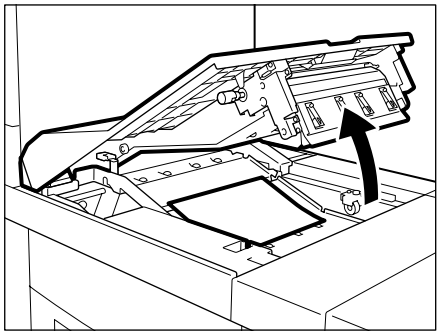

2) Remove the paper jam.

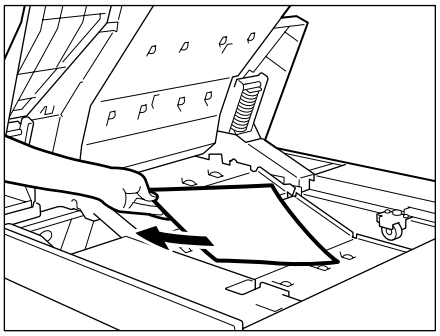

3) Remove the paper jam trapped in the delivery slot of the non-sort tray.
   - If more than half of the paper has been delivered, turn the knob in the direction of the arrow when removing it.

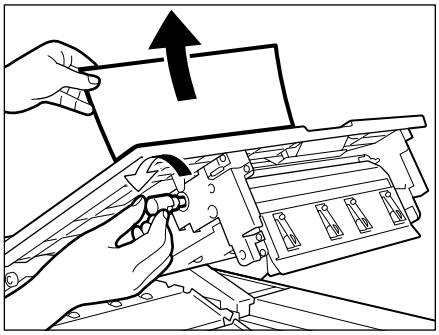

- If more than half of the paper remains inside the machine, open F10 to remove it.

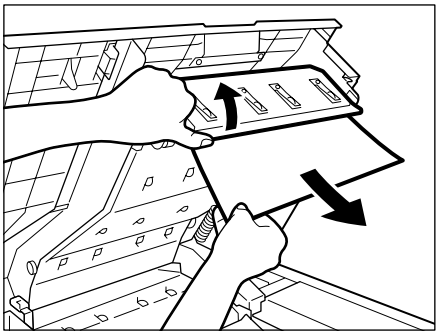

4) Lift F11, and remove the paper jam.

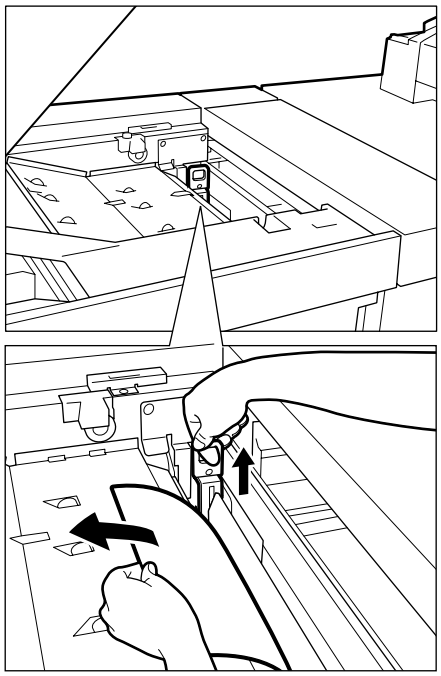

5) Close the upper cover.

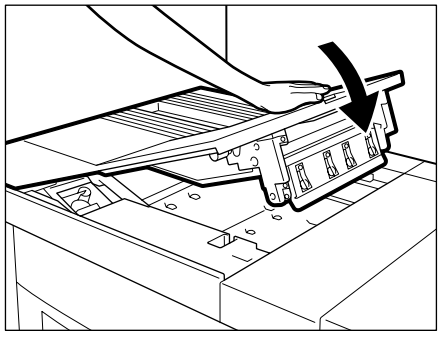

COPYRIGHT © 1997 CANON INC.

4. Paper Jam at F13 or F15

Suspect a paper jam at either of the locations indicated on the display. Perform the following steps to remove the jam.

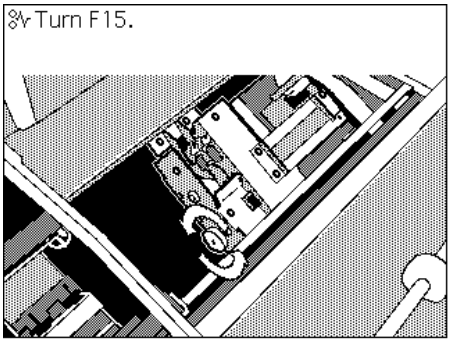

Reference:

The side to work on varies depending on whether the stack tray is at top or bottom position.

1) Open the upper cover or the front door.
   - If the stack tray is at top position,
     ① Open the upper cover.

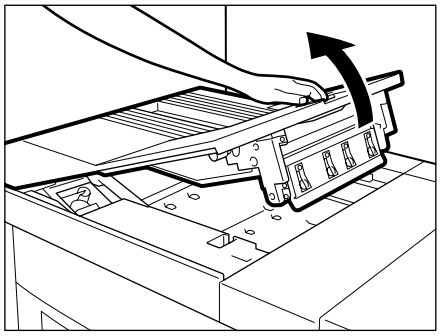

② Open F12.

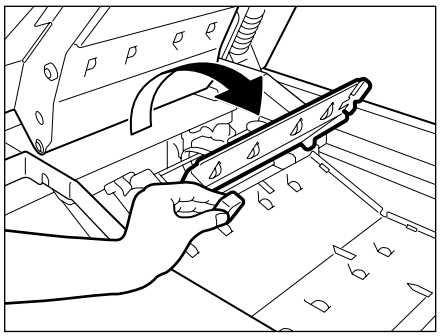

- If the stack tray is at bottom position, Open the front door.

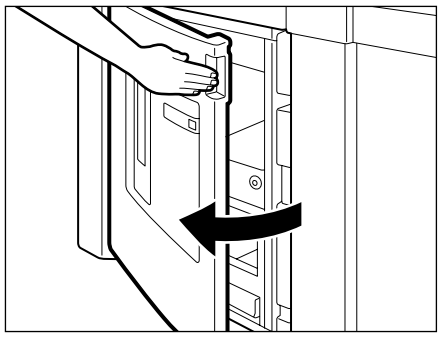

2) Turn F15 in the direction of the arrow.

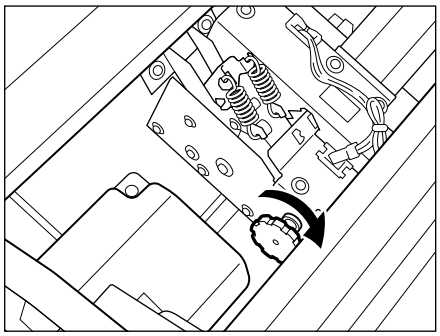

3) Push in F14 until ▲ and ▼ match.

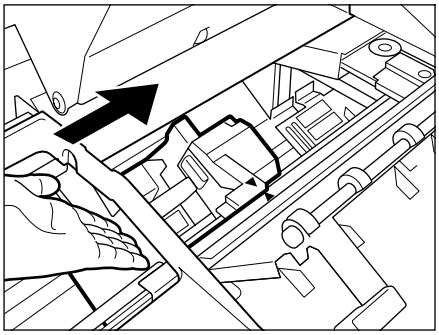

4) Turn F13 in the direction of the arrow.

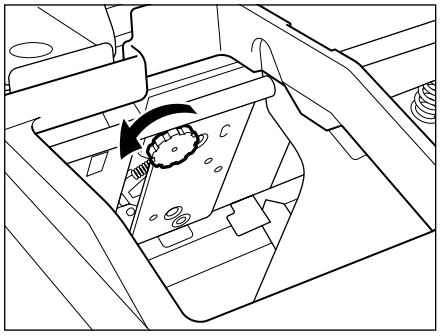

5) Close the upper cover or the front door.
   • If the stack tray is at top position,
   ① Close F12.

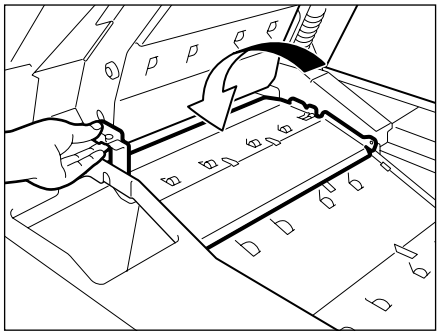

② Close the upper cover.

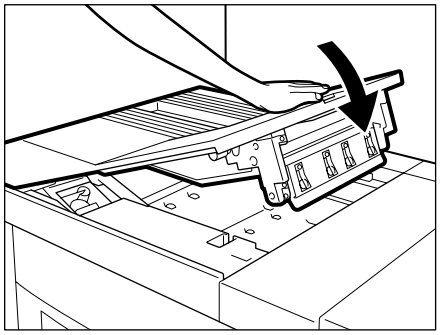

COPYRIGHT © 1997 CANON INC.

• If the stack tray is at bottom position, Close the front door.

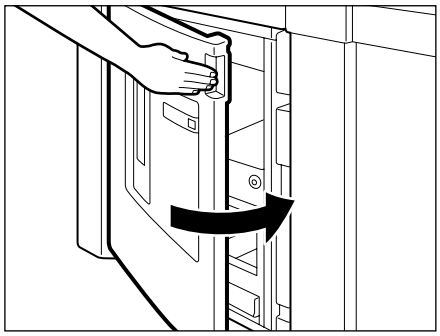

6) Open the bin cover.

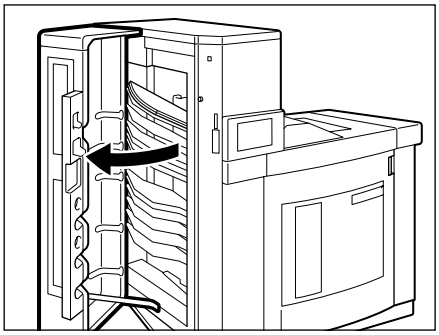

7) Remove the paper jam.

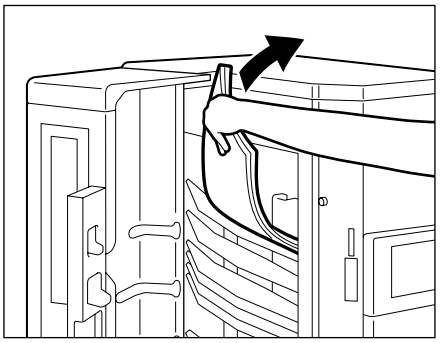

8) Close the bin cover.

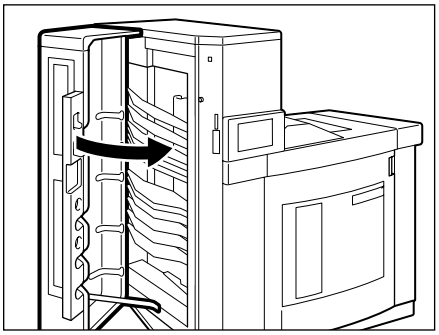

COPYRIGHT © 1997 CANON INC.

5. Paper Jam at F13

Suspect a paper jam at either of the locations indicated on the display. Perform the following to remove the jam.

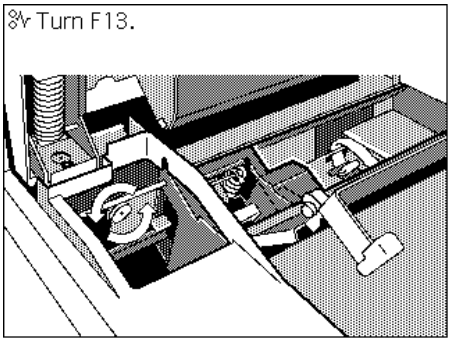

Reference:

The side to work on varies depending on whether the stack tray is at top or bottom position.

1) Open the upper cover or the front door.
   - If the stack tray is at top position,
     ① Open the upper cover.

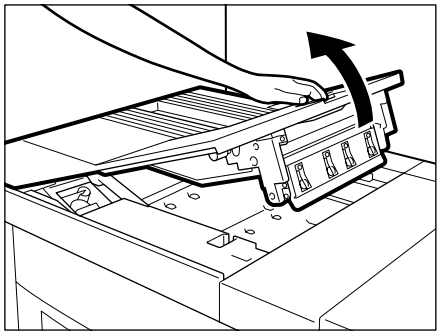

② Open F12.

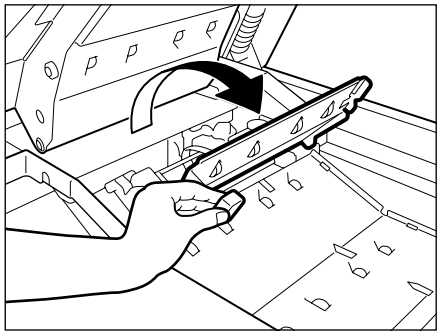

- If the stack tray is at bottom position, Open the front door.

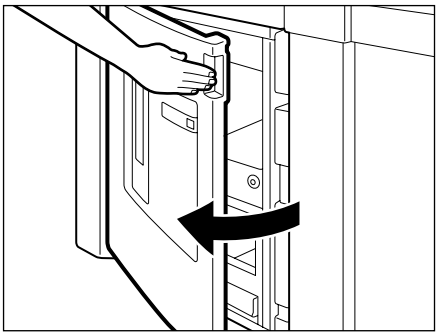

COPYRIGHT © 1997 CANON INC.

2) Push in F14 unti ▲ and ▼ match.

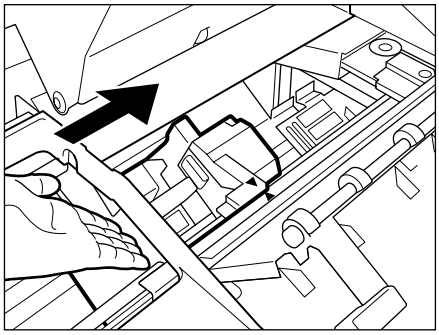

3) Turn F13 in the direction of the arrow.

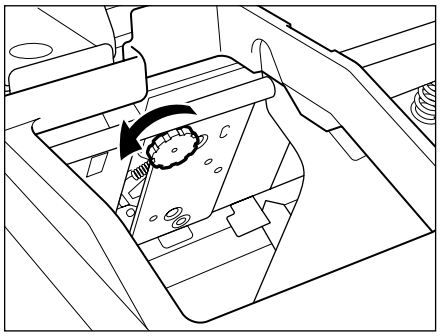

4) Close the upper cover or the front door.
   - If the stack tray is at top position,
     ① Close F12.

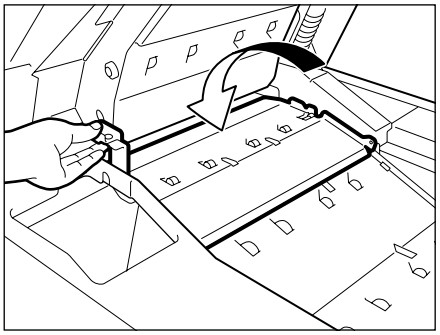

② Close the upper cover.

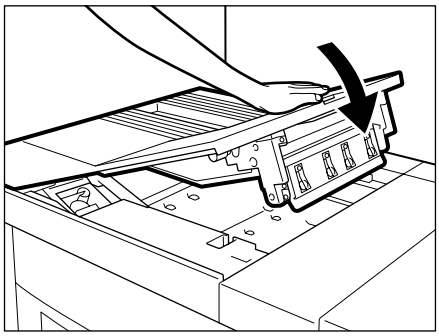

- If the stack tray is at bottom position, Close the front position.

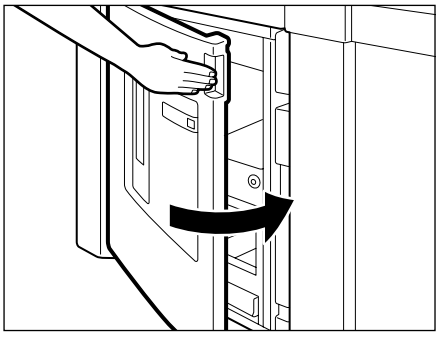

COPYRIGHT © 1997 CANON INC.

5) Open the bin cover.

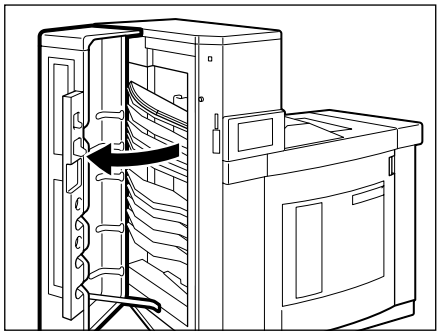

6) Remove the paper jam.

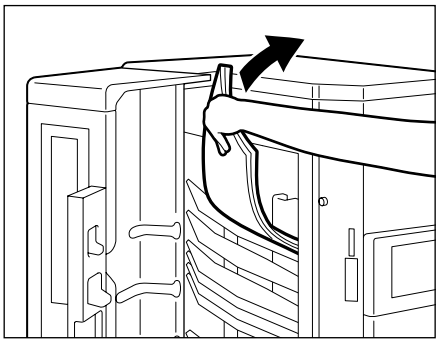

7) Close the bin cover.

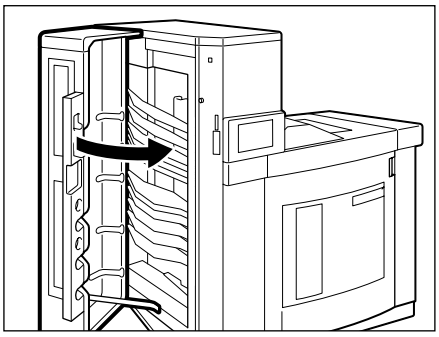

COPYRIGHT © 1997 CANON INC.

6. Paper Jam at F15

Suspect a paper jam at either of the locations indicated on the display. Perform the following steps to remove the jam.

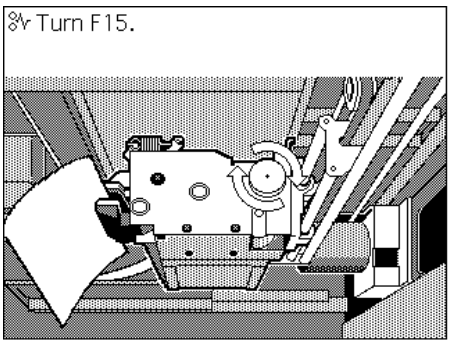

Reference:

The side to work on varies depending on whether the stack tray is at top or bottom position.

1) Open the front door.

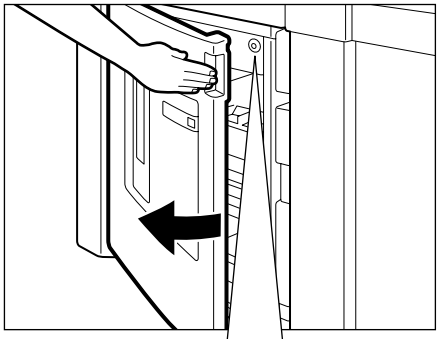

2) Turn F16 in the direction of the arrow.

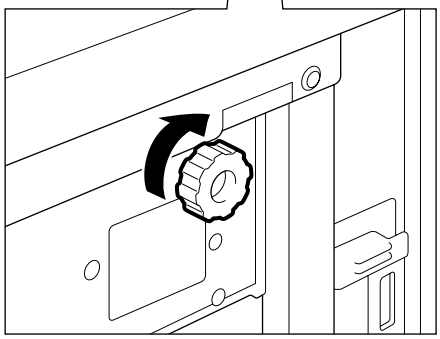

3) Turn F15 in the direction of the arrow.
   • If the stack tray is at top position,

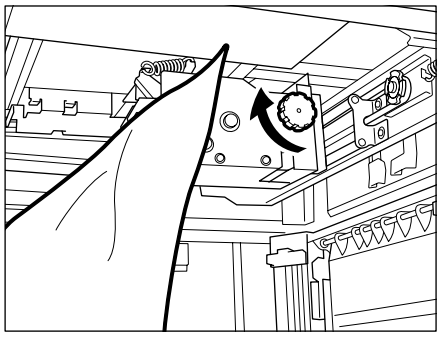

COPYRIGHT © 1997 CANON INC.

•If the stack tray is at bottom position,

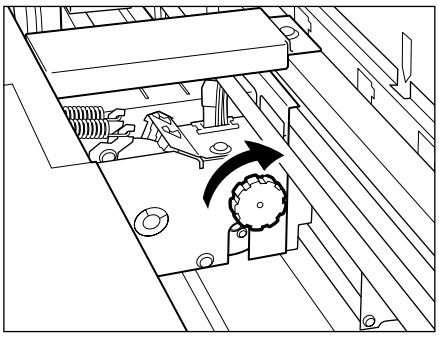

4) Remove the paper jam.

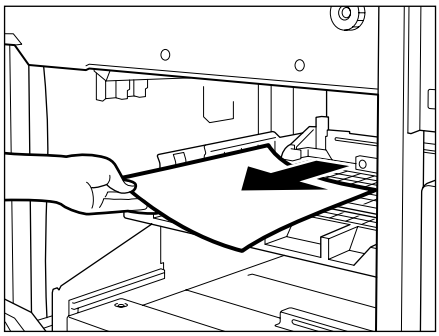

5) Close the front door.

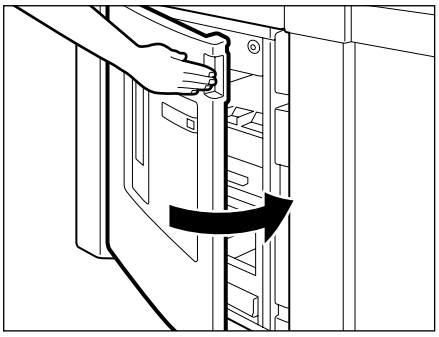

COPYRIGHT © 1997 CANON INC.

7. Paper Jam on the Stack Tray

Suspect a paper jam at the location indicated on the display. Perform the following steps to remove the jam.

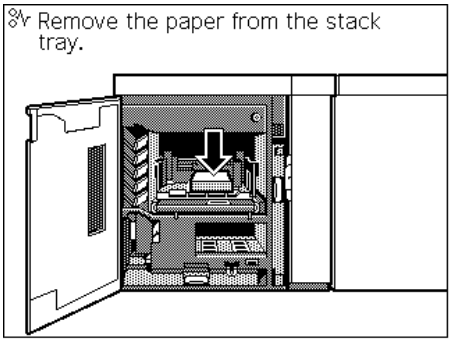

1) Open the front door.

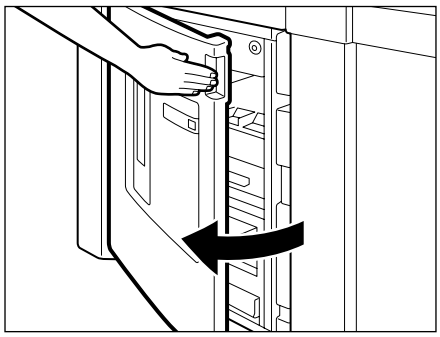

2) Remove the paper jam.

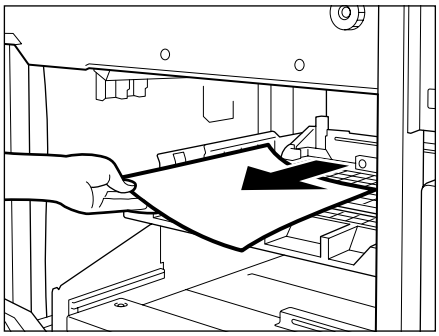

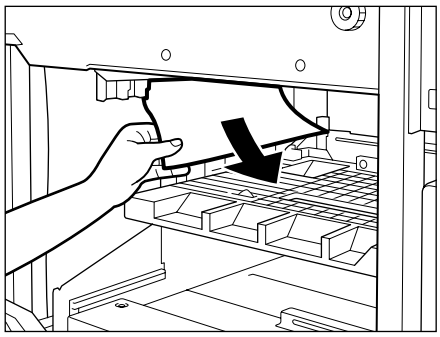

3) Close the front door.

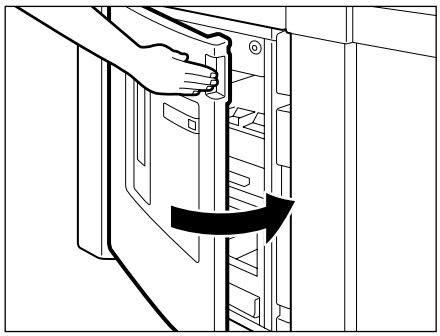

8. Paper Jam Behind the Bin Cover

Suspect a paper jam at the location indicated on the display. Perform the following steps to remove the jam.

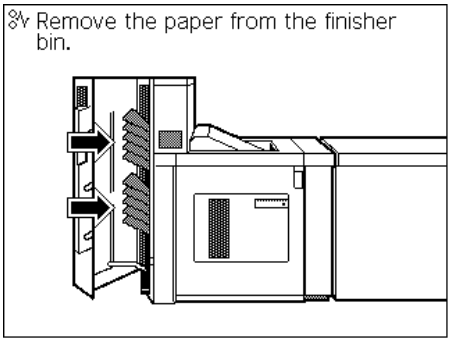

1) Open the bin cover.

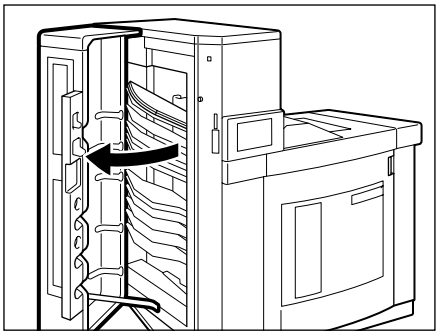

2) Remove the paper jam.

Reference:

If the paper is trapped at the rear and cannot be removed easily, see 9. “Paper jam at the Rear of the Sort Bin.”

- A jam in an upper bin.

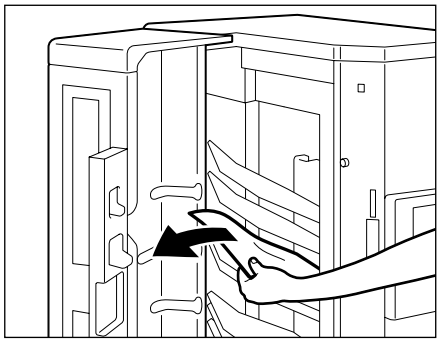

- A jam in a lower bin.

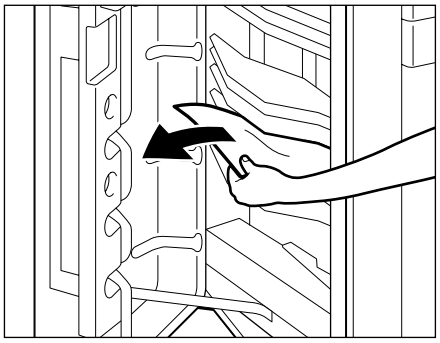

COPYRIGHT © 1997 CANON INC.

3) Close the bin cover.

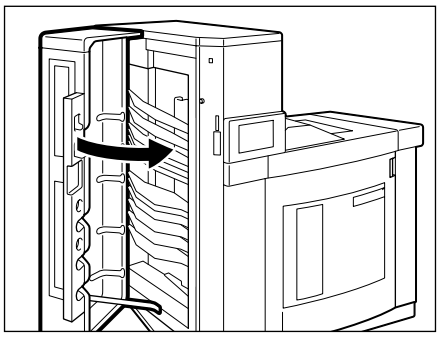

COPYRIGHT © 1997 CANON INC.

9. Paper Jam at the Rear of the Sort Bin

At times, paper gets trapped at the rear of the bin (finisher) and cannot be easily removed. If such is the case, perform the following steps to remove the paper jam.

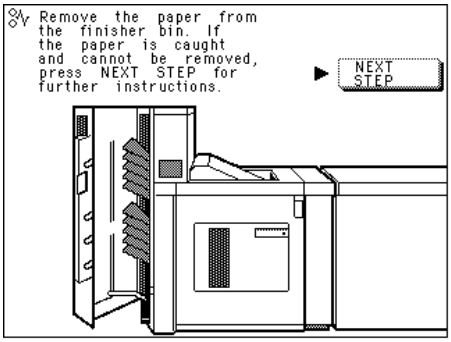

1) Press [NEXT STEP] key on the display.
2) Close the bin cover.

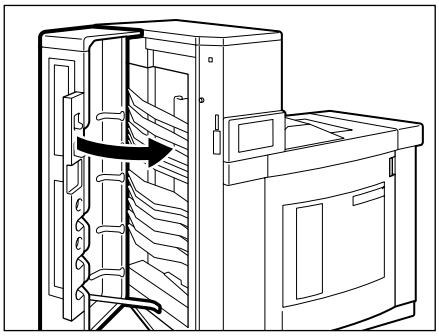

3) Find out the interval of the bins and the position of the bin in question.
   - If the jam is farther up than the close interval bins,

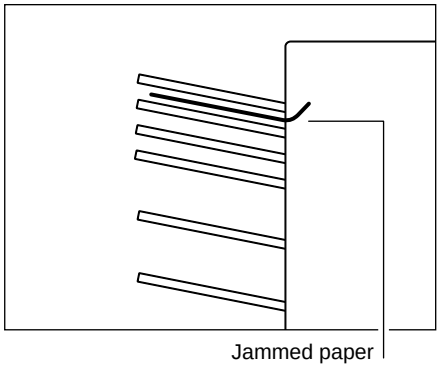

   Press the ▲ key so that the bin in question will lower to the wide interval bins.

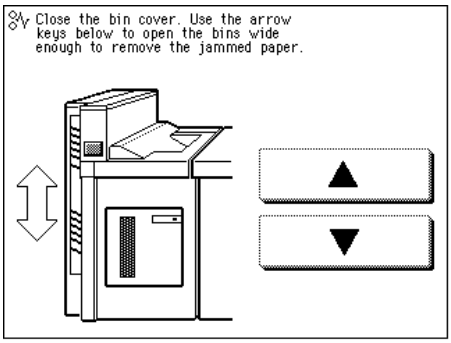

Caution:
Be sure to close the bin cover. Otherwise, you cannot move the bins.

COPYRIGHT © 1997 CANON INC.

• If the jam is farther down than the wide interval bins.

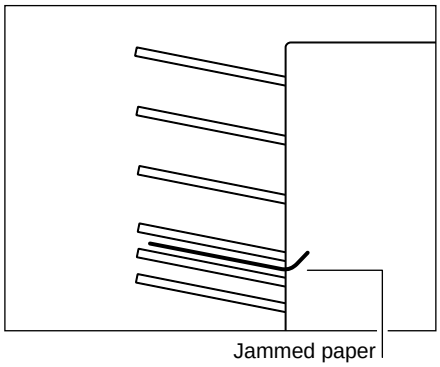

Press the ▲ key so that the bin in question will rise to the wide interval bins.

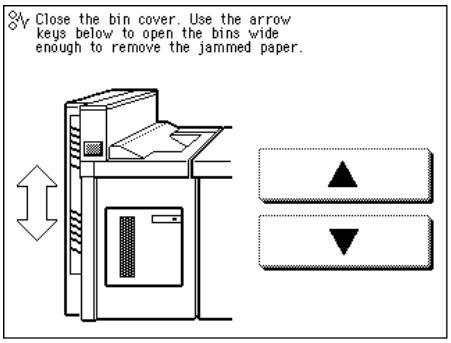

Caution:
Be sure to close the bin cover. Otherwise, you cannot move the bins.

4) Open the bin cover.

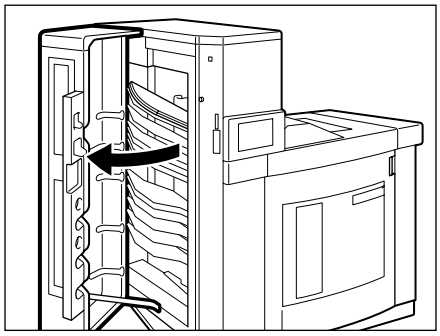

5) Remove the paper jam.

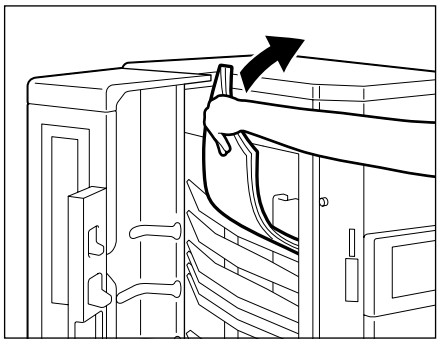

6) Close the bin cover.

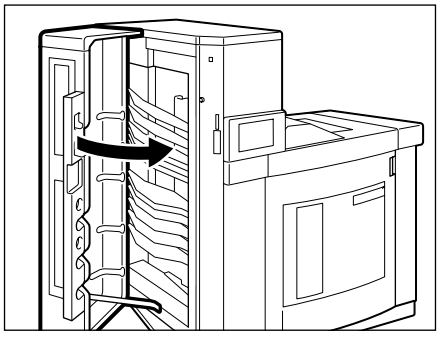

10. Paper jam in the Folder

Steps to perform to remove a paper jam varies depending on whether Z-folding was selected or not.

1. In Non Z-Fold Mode

Suspect a paper jam in the location indicated on the display on the control panel. Perform the following steps to remove the jam.

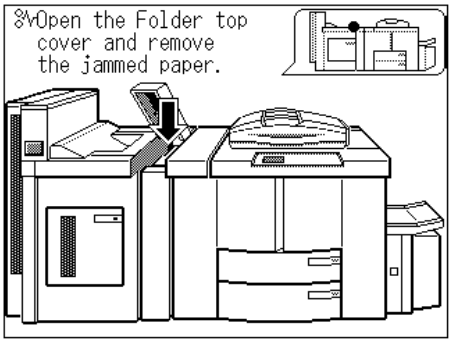

1) Open the upper cover of the folder.

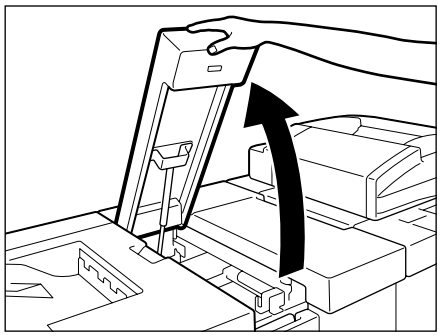

2) Open F12, and remove the paper jam.

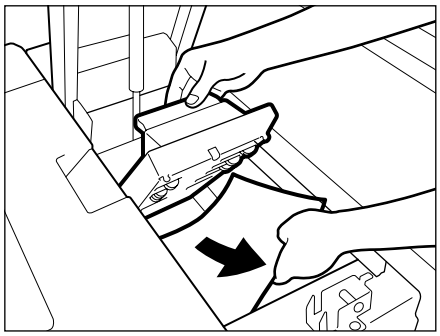

3) Close the upper cover of the folder.

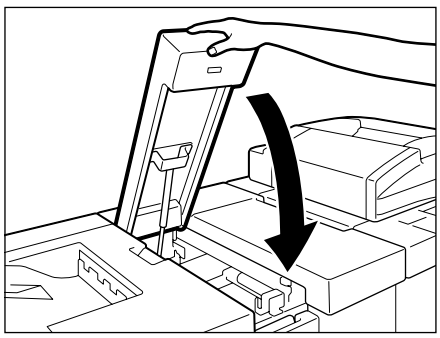

COPYRIGHT © 1997 CANON INC.

2. In Z-Fold Mode

Suspect a paper jam in the location indicated on the display of the control panel. Perform the following to remove the paper jam.

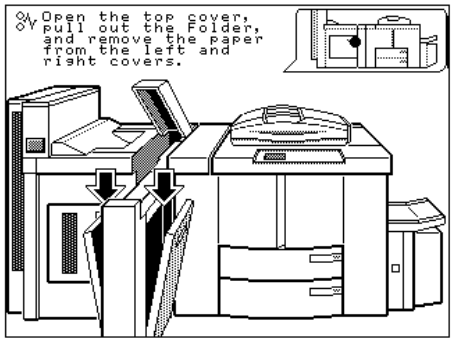

1) Open the upper cover of the folder.

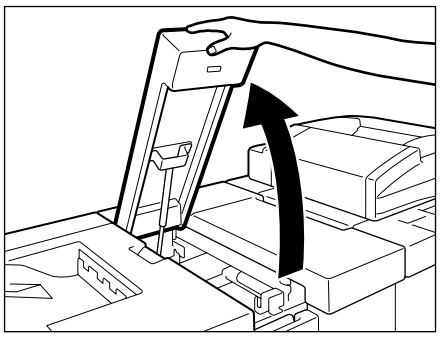

2) Slide out unit 11.

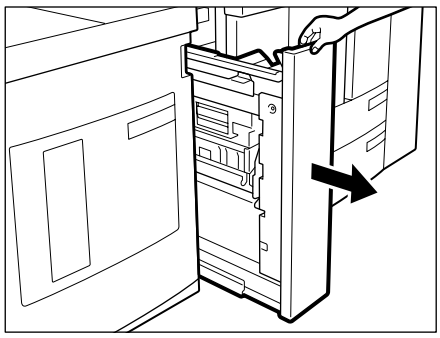

3) Remove the paper jam.
   - If the paper jam is behind the left cover,
     ① Open cover 14.

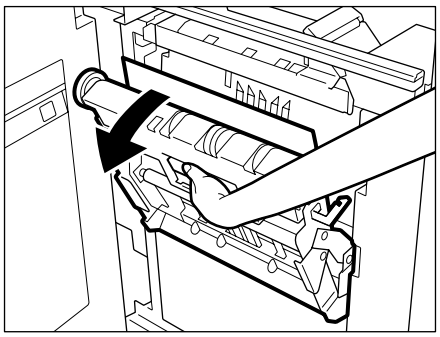

② Remove the paper jam.

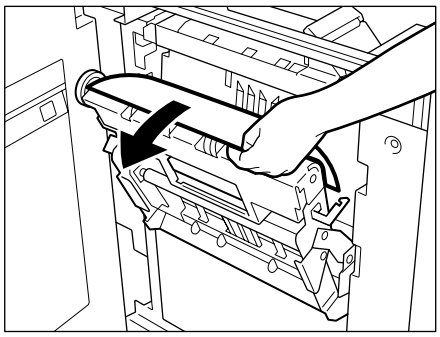

③ Close cover 14.

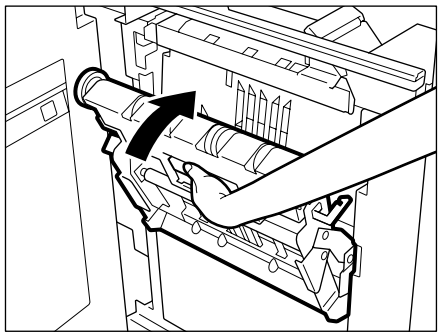

- If the paper jam is behind the right cover,

① Open cover 13.

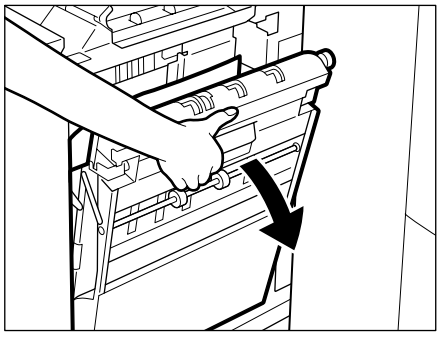

② Remove the paper jam.

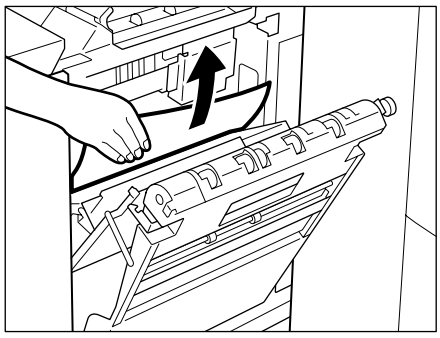

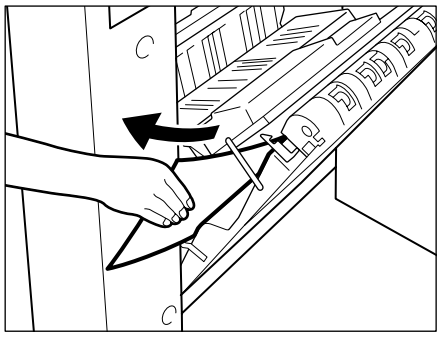

COPYRIGHT © 1997 CANON INC.

③ Close cover 13.

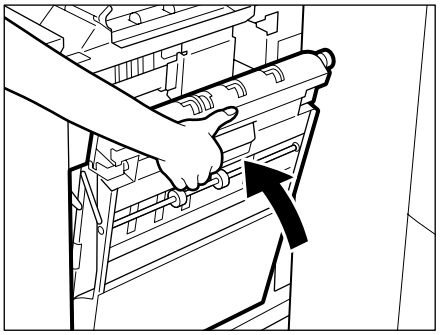

4) Push in unit 11.

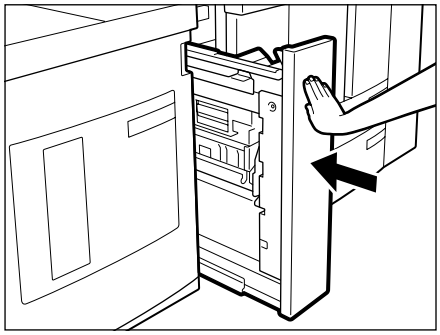

5) Close the upper cover of the folder.

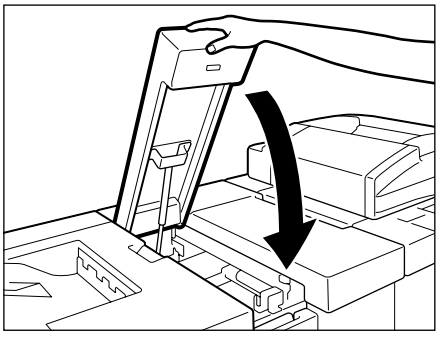

COPYRIGHT © 1997 CANON INC.

CHAPTER 2

OPERATIONS AND TIMING

In outline diagrams, ▬▮▮▮▬ represents mechanical drive paths, and ⟶ indicates electrical signal paths.

Signals in digital circuits are identified as '1' for High and '0' for Low. The voltage of signals, however, depends on the circuit.

Nearly all operations of the product are controlled by a microprocessor; the internal workings of the processor are not relevant to the serviceman's work and, therefore, are left out of the discussions. By the same token, no repairs are prescribed for the PCBs at the user's premises; for this reason, PCBs are discussed by means of block diagrams rather than circuit diagrams.

For the purpose of explanation, discussions are divided into the following: from sensors to DC controller PCB input ports; from DC controller output ports to loads; and minor control circuits and functions.

COPYRIGHT © 1997 CANON INC. CANON FINISHER-B1 REV.0 MAY 1997 PRINTED IN JAPAN (IMPRIME AU JAPON)

I. BASIC CONSTRUCTION 2-1
A. Functional Construction 2-1
B. Outline of the Electrical Circuitry 2-2
C. Inputs to the Finisher Controller PCB.....2-3
D. Outputs from the Finisher Controller PCB 2-13
E. Communication between Copier and Finisher 2-20
II. BASIC OPERATION 2-21
A. Outline.....2-21
B. Basic Operation 2-26
C. Emergency Operation Mode.....2-33
III. FEEDING DRIVE SYSTEM 2-38
A. Outline.....2-38
B. Feeding Path.....2-40
C. Controlling the Feeding Speed 2-42
D. Controlling the Feeding Motor 2-44
E. Paddle.....2-47
F. Limitless Sorting.....2-49
G. Overstacking 2-53
H. Jams 2-57
IV. BIN UNIT DRIVE SYSTEM.....2-67
A. Outline.....2-67
B. Bin Unit 2-69
C. Controlling the Guide Bar 2-85
D. Controlling the Bin Cover.....2-89
V. STACK PROCESSING UNIT.....2-91
A. Outline.....2-91
B. Up/Down Drive System.....2-92
C. Side Gripper Drive System 2-99
D. Stapler Unit Drive System 2-113
E. Front Gripper Drive System 2-128
F. Jams 2-150
G. Sequence of Operations 2-157
VI. STACKER UNIT.....2-159
A. Outline.....2-159
B. Stacker Unit Up/Down Drive System 2-160
C. Stacker Tray Drive System 2-170
D. Leading Edge Stopper Drive System 2-183
E. Lift Wall Drive System.....2-186
F. Emergency Stop Button.....2-190
G. Internal Lamp 2-192
H. Sequence of Operations 2-193
VII. CONTROL PANEL 2-195
A. Outline.....2-195
B. Operation 2-195
VIII. POWER SUPPLY.....2-198
A. Outline of the Power Supply 2-198
B. Power Supply Circuit 2-199
C. Protection Mechanisms for the Power Supply Circuit.....2-202
D. DC Power Supply Rated Outputs ..2-202
IX. PAPER FOLDING UNIT-A1 2-203
A. Outline.....2-203
B. Outline of the Electrical Circuit 2-204
C. Inputs to and Outputs from the Paper Folding Unit.....2-205
D. Basic Operations.....2-207
E. Feeding Drive System 2-209
F. Detecting Jams 2-219
G. Power Supply.....2-222

COPYRIGHT © 1997 CANON INC. CANON FINISHER-B1 REV.0 MAY 1997 PRINTED IN JAPAN (IMPRIME AU JAPON)

I. BASIC CONSTRUCTION

A. Functional Construction

The finisher may be broadly divided into nine functional blocks: control panel, common feeding drive system, upper feeding drive system, lower feeding drive system, stack processing drive system, stacker drive system, upper bin module drive system, lower bin module drive system, and control system.

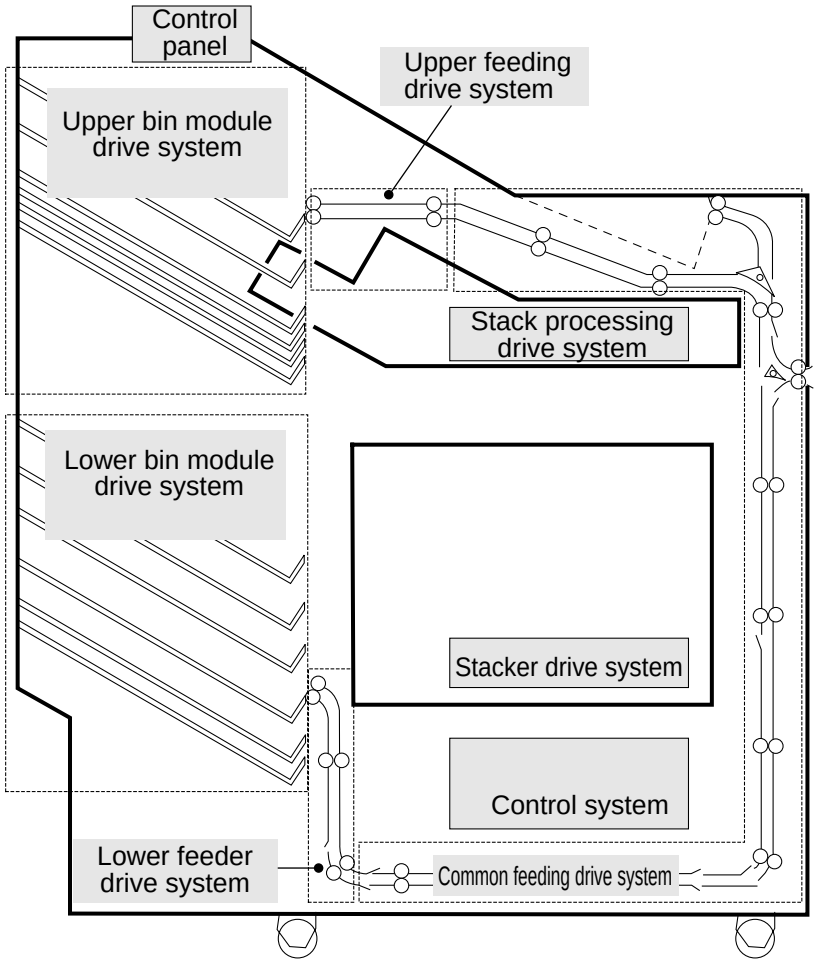

Figure 2-101

B. Outline of the Electrical Circuitry

The finisher's electrical mechanisms are controlled by the finisher controller PCB. The major functions of the IC on the finisher controller PCB are as shown in Table 2-101. The finisher is equipped with two CPUs (IC1, IC8) used to control operating sequences, each with its own areas of control, and both ICs use a communication IC to control various operations.

Notation	Type	Description
IC1	CPU	Controls sequence (feeding drive system, bin module drive system).
IC8	CPU	Controls sequence (stack processing unit drive system, stacker unit drive system).
IC2	ROM	Holds programs for sequence (feeding drive system, bin module drive system).
IC9	ROM	Holds programs for sequence (stack processing unit drive system, stacker unit drive system).
IC3	RAM	Stores sensor adjustment values and operating modes.
IC10	RAM	Stores sensor adjustment values and operating modes.
IC6	Communication IC	Controls communication between IC7 and copier (IPC communication 2).
IC7	Communication IC	Controls communication with IC6.

Table 2-101

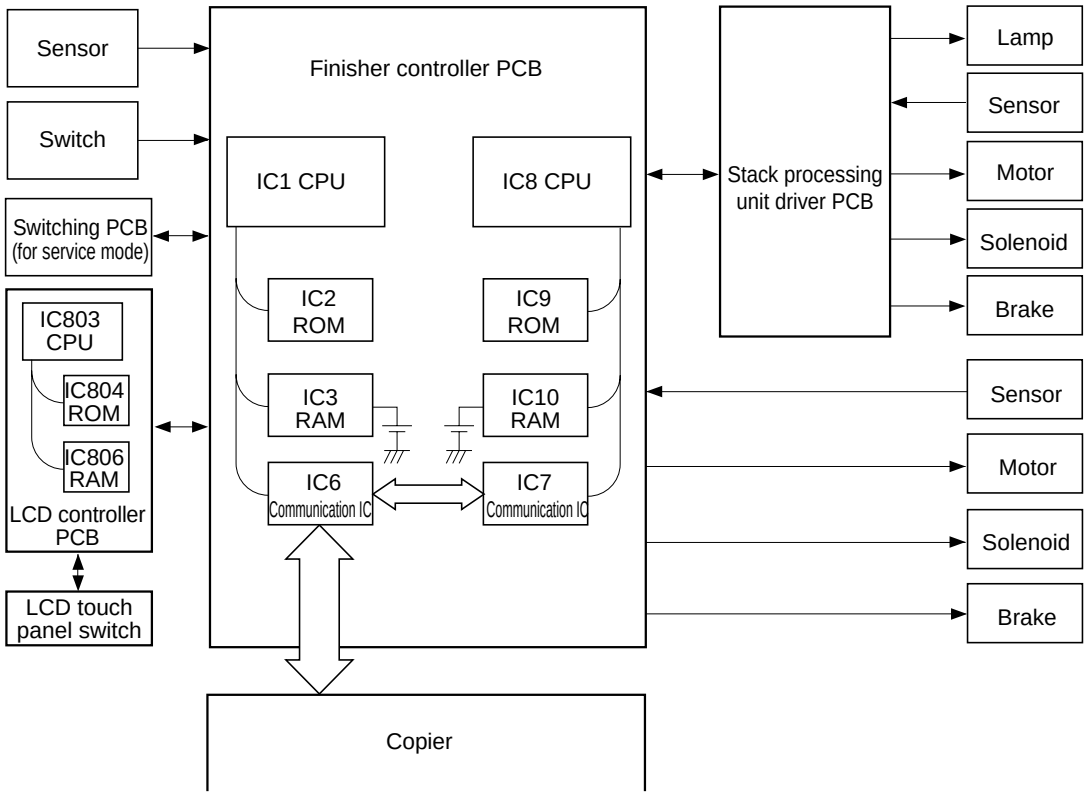

Figure 2-102

COPYRIGHT © 1997 CANON INC.

C. Inputs to the Finisher Controller PCB

Inputs to the Finisher Controller PCB (1/10)

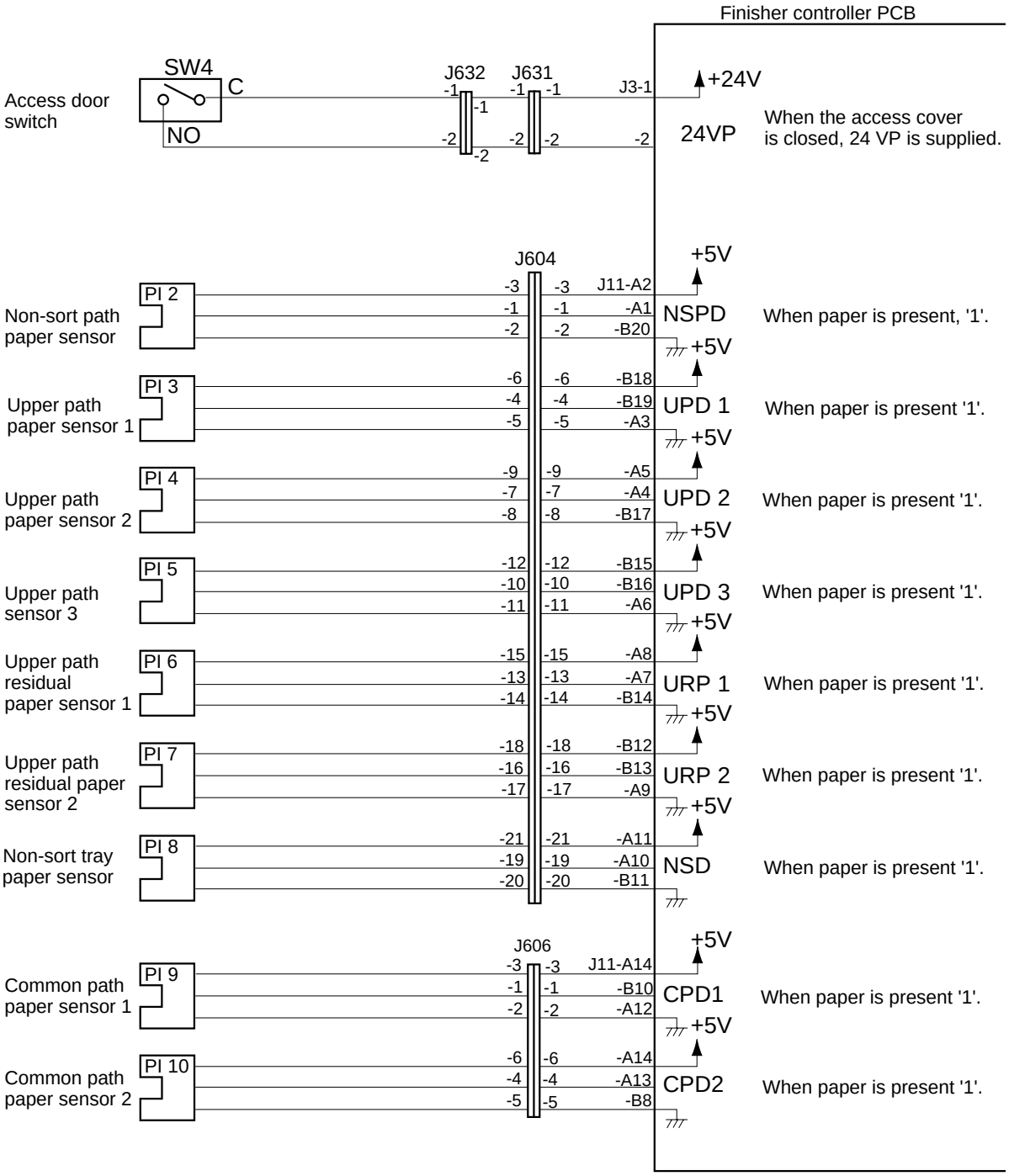

Figure 2-103

Inputs to the Finisher Controller PCB (2/10)

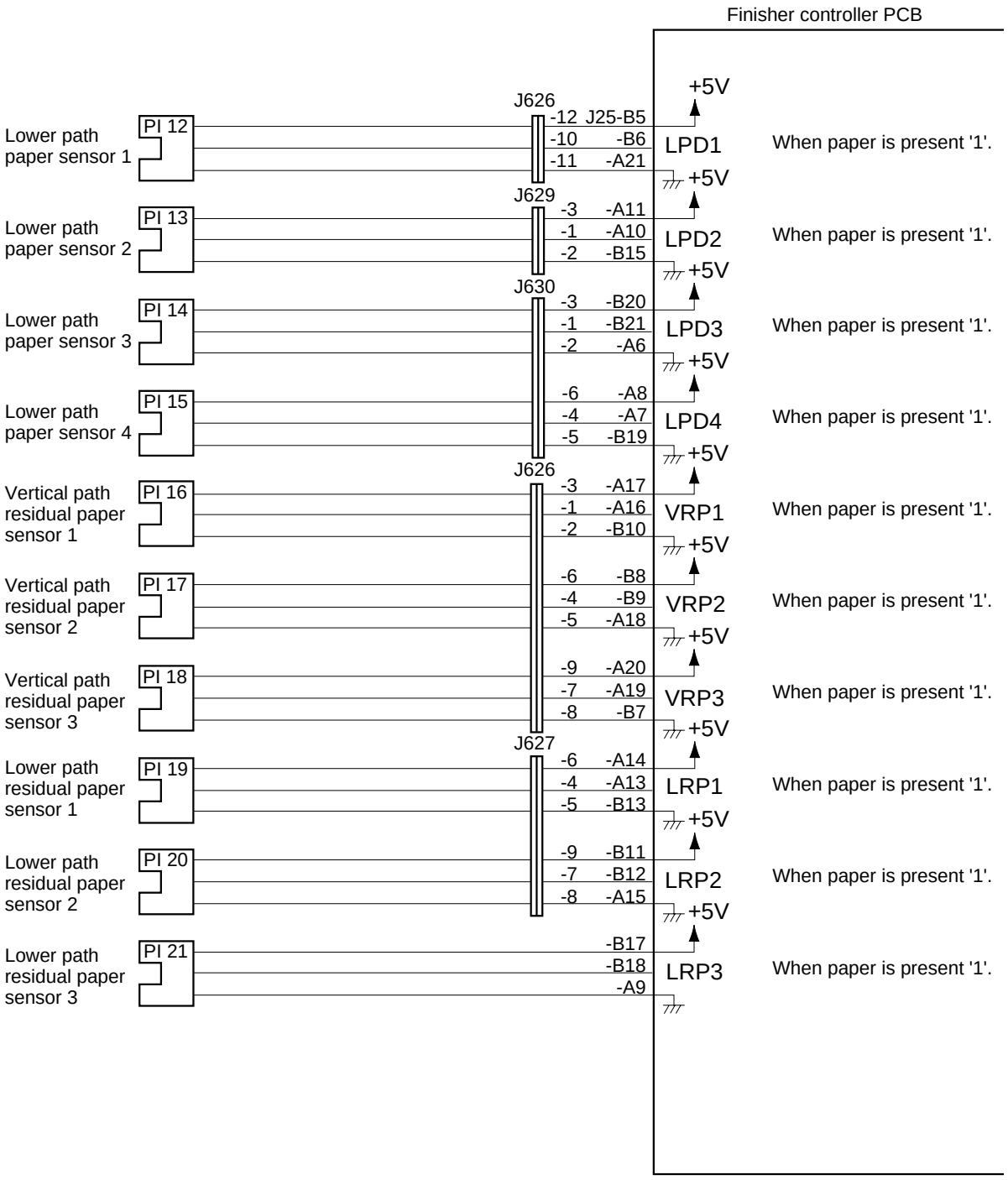

Figure 2-104

COPYRIGHT © 1997 CANON INC.

Inputs to the Finisher Controller PCB (3/10)

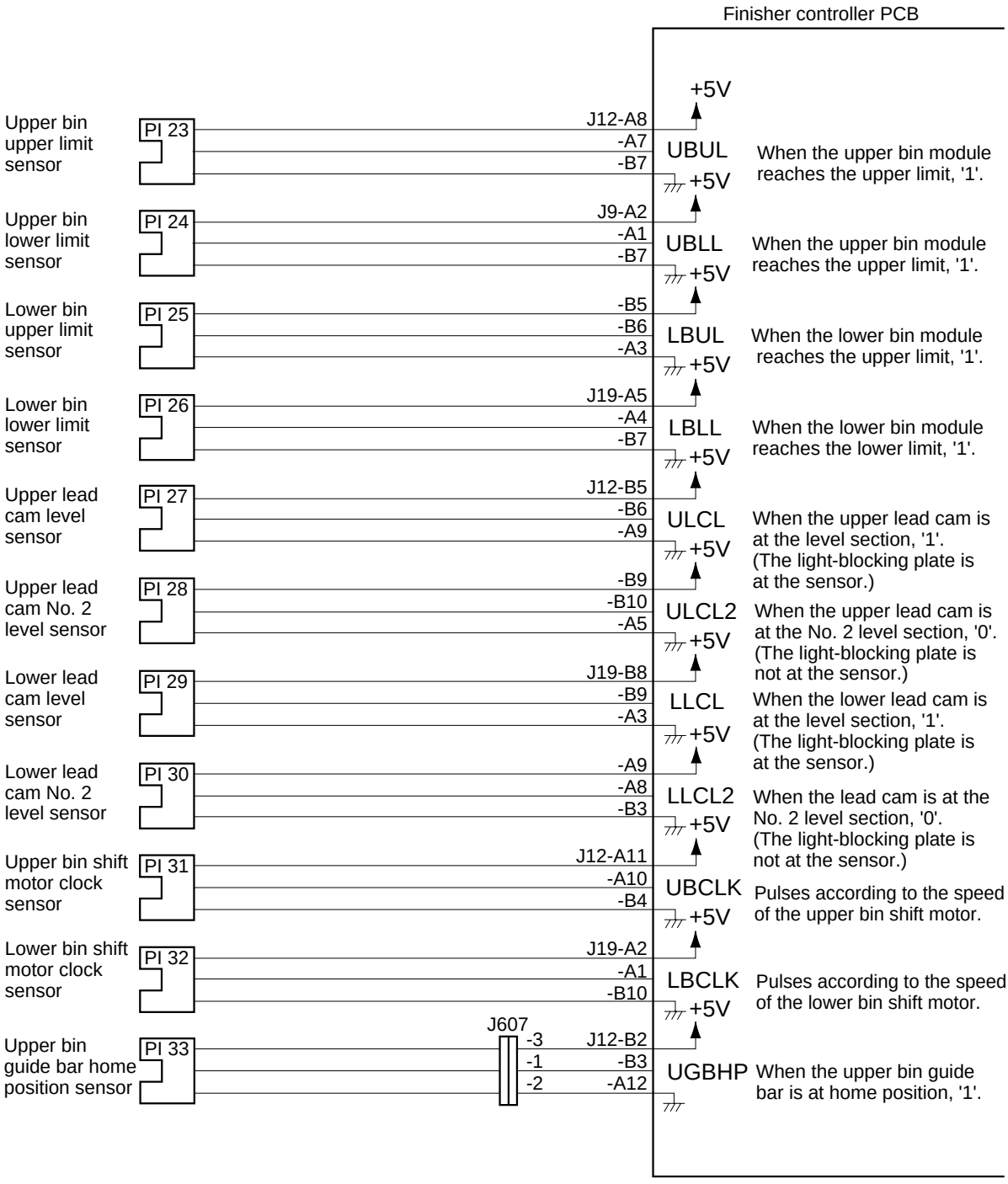

Figure 2-105

Inputs to the Finisher Controller PCB (4/10)

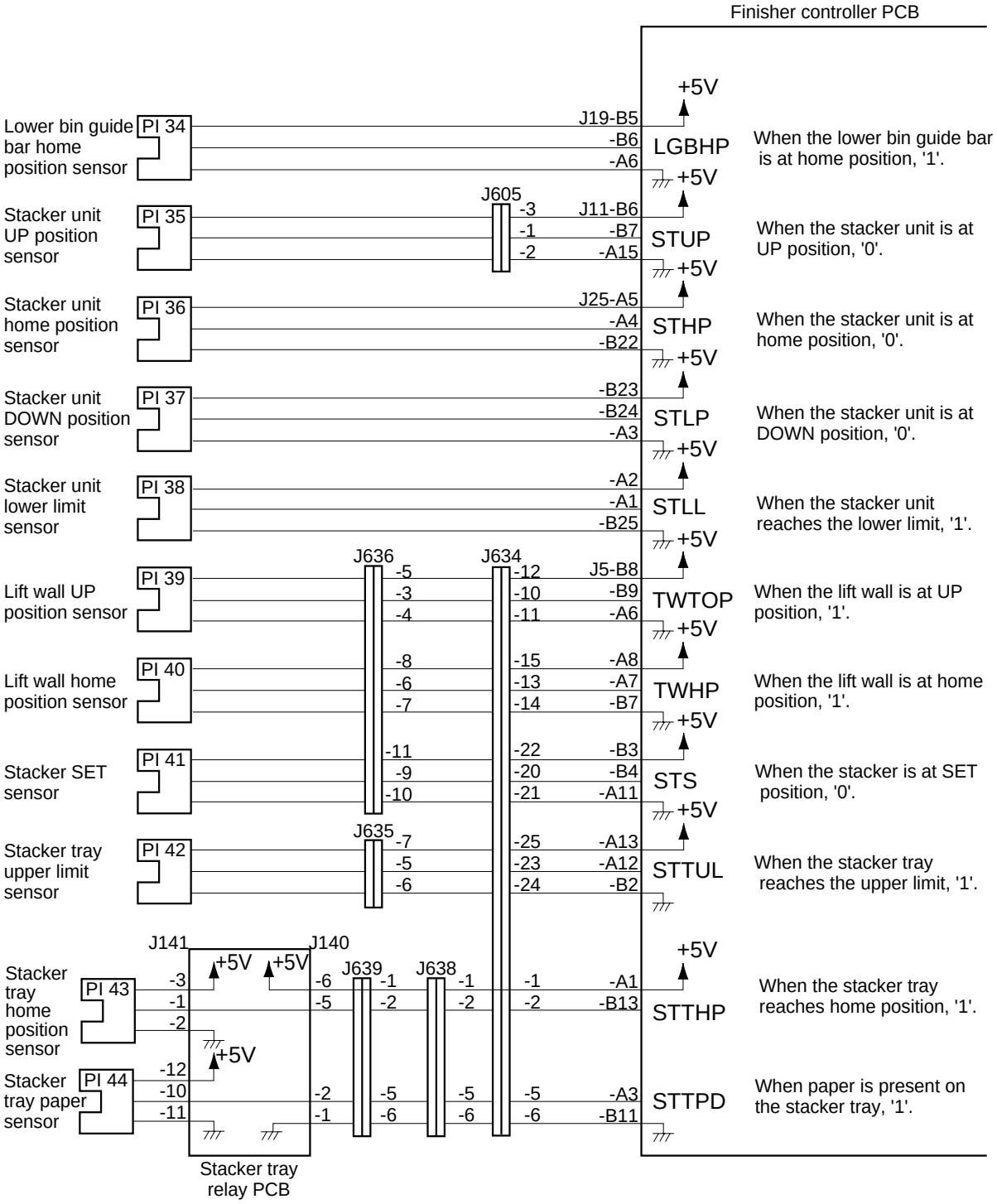

Figure 2-106

COPYRIGHT © 1997 CANON INC.

Inputs to the Finisher Controller PCB (5/10)

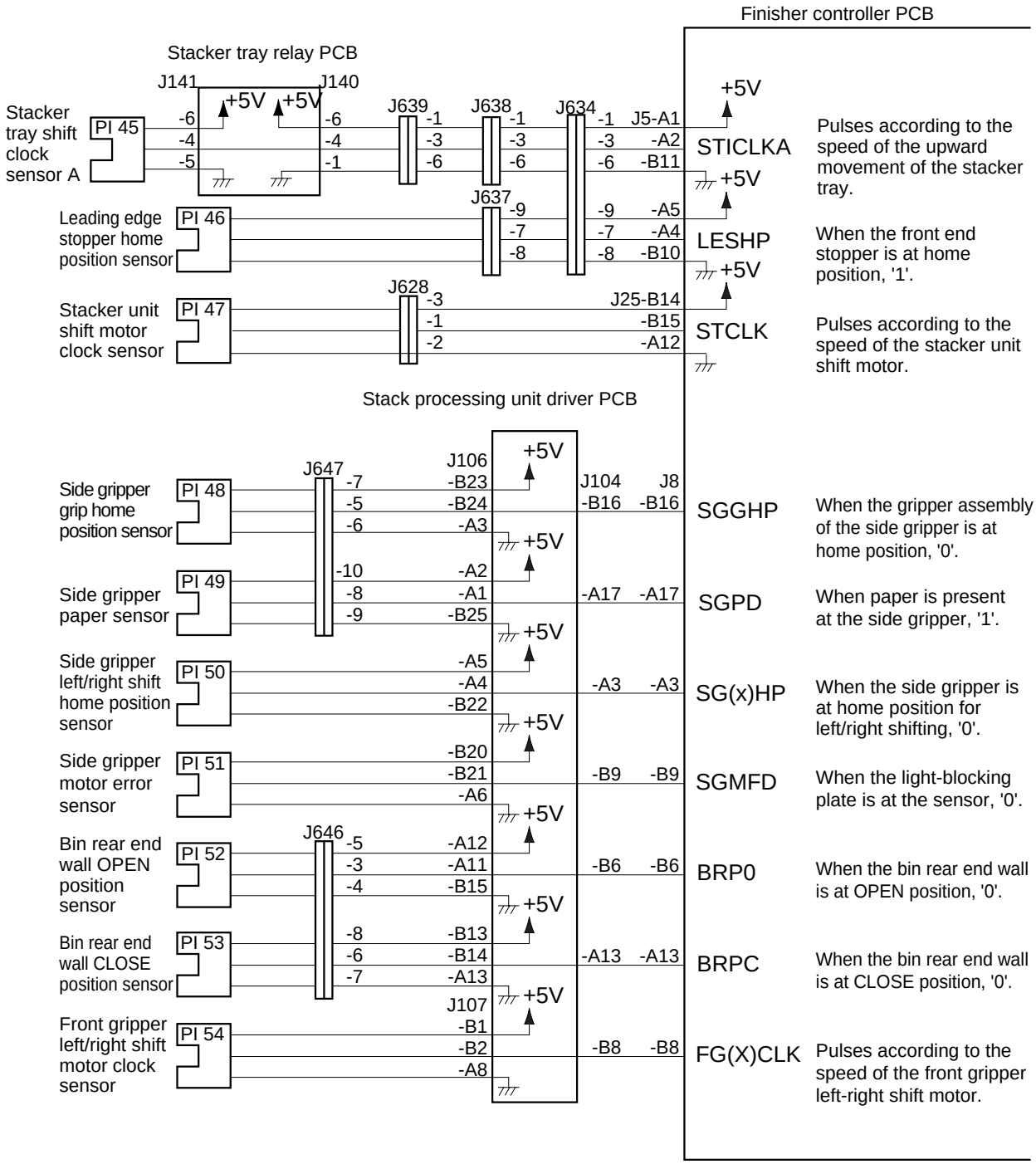

Figure 2-107

Inputs to the Finisher Controller PCB (6/10)

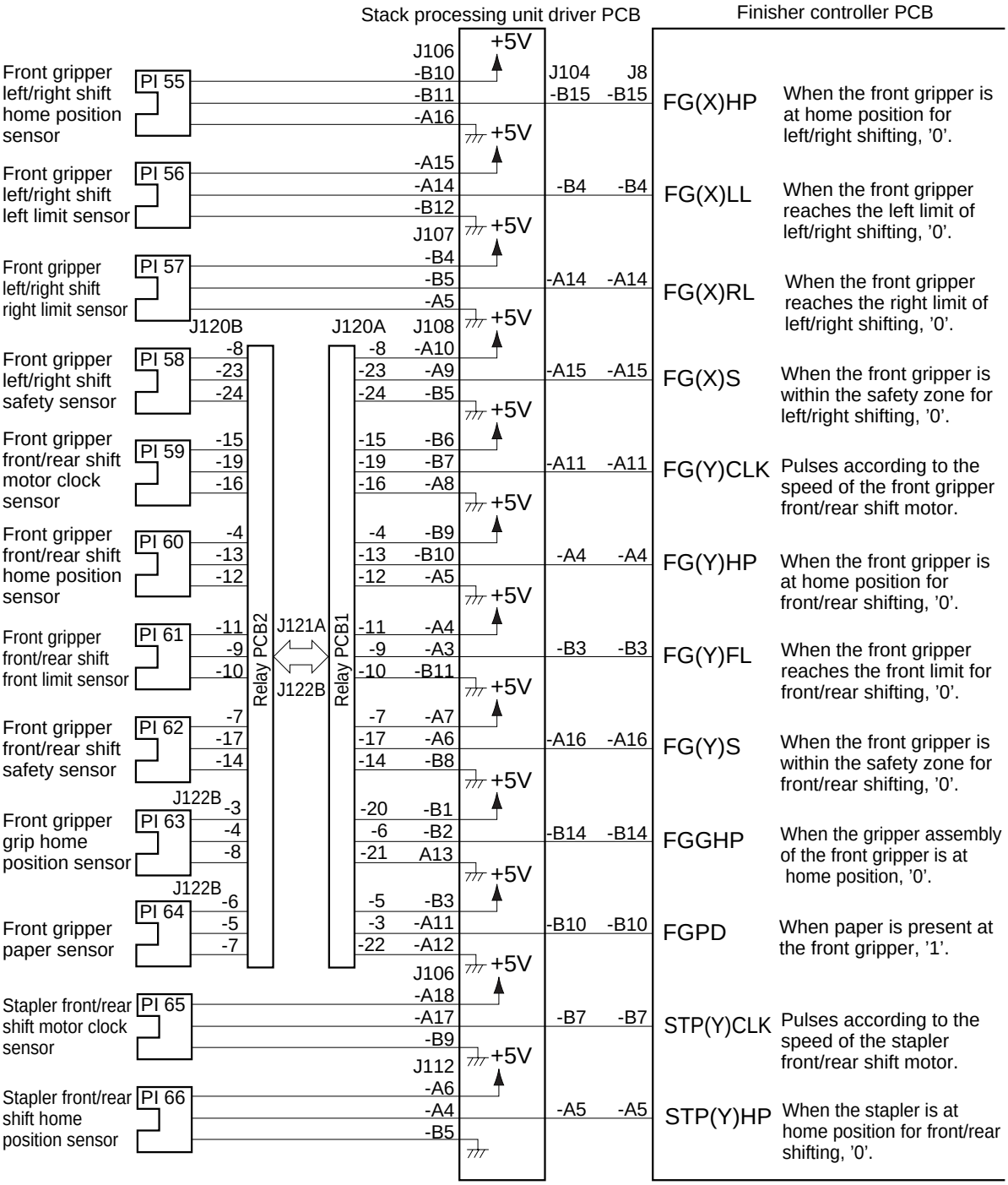

Figure 2-108

COPYRIGHT © 1997 CANON INC.

Inputs to the Finisher Controller PCB (7/10)

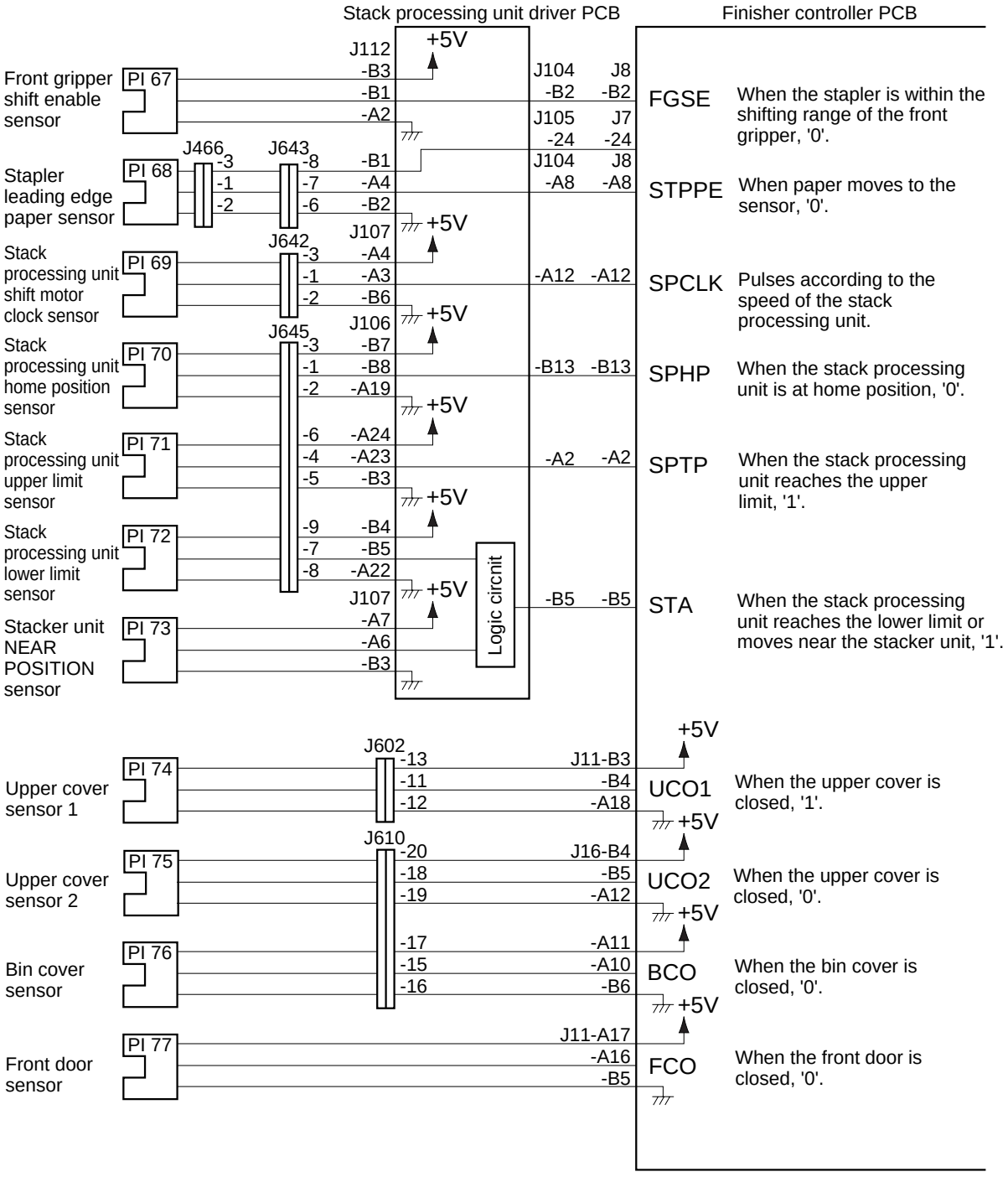

Figure 2-109

Inputs to the Finisher Controller PCB (8/10)

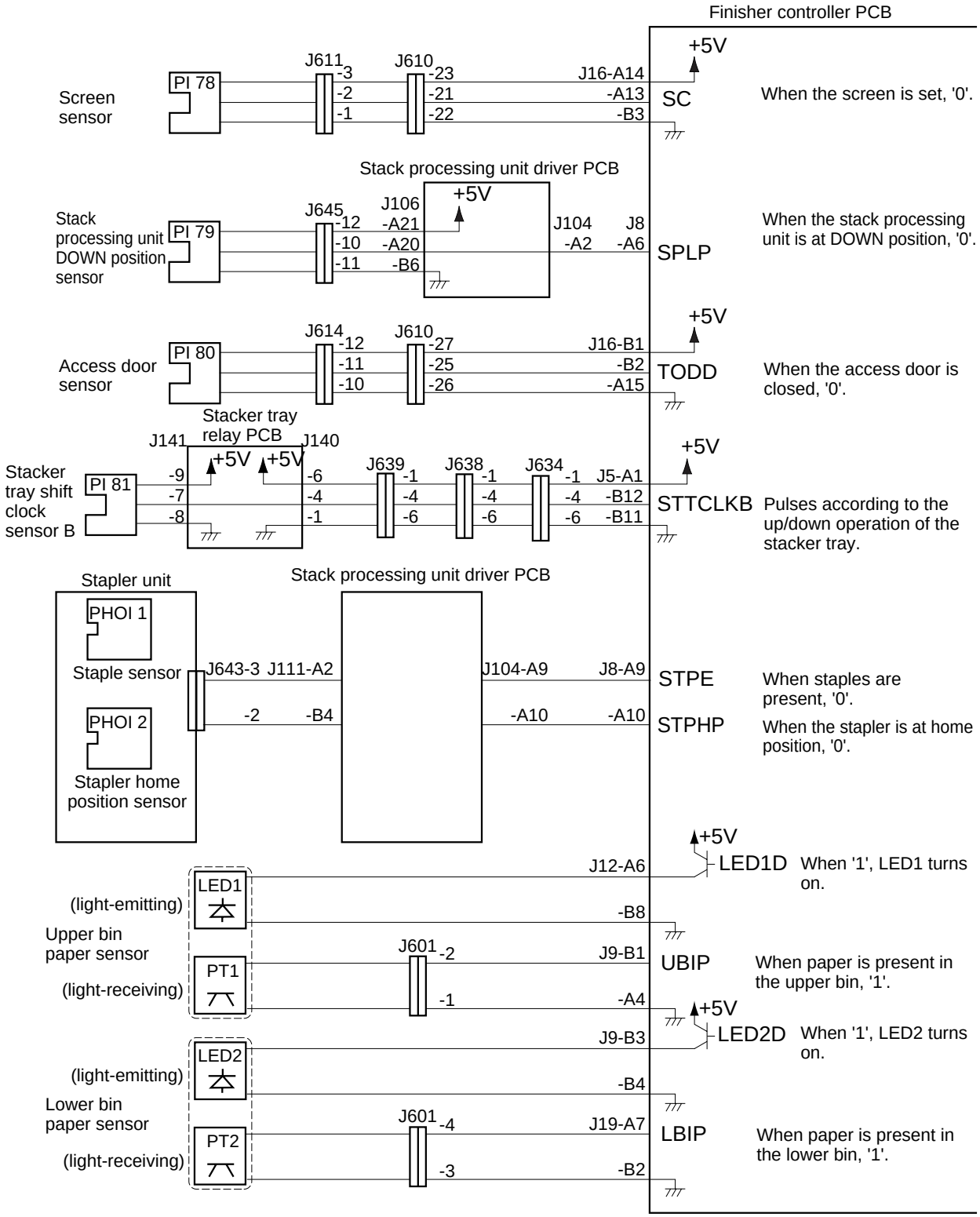

Figure 2-110

COPYRIGHT © 1997 CANON INC.

Inputs to the Finisher Controller PCB (9/10)

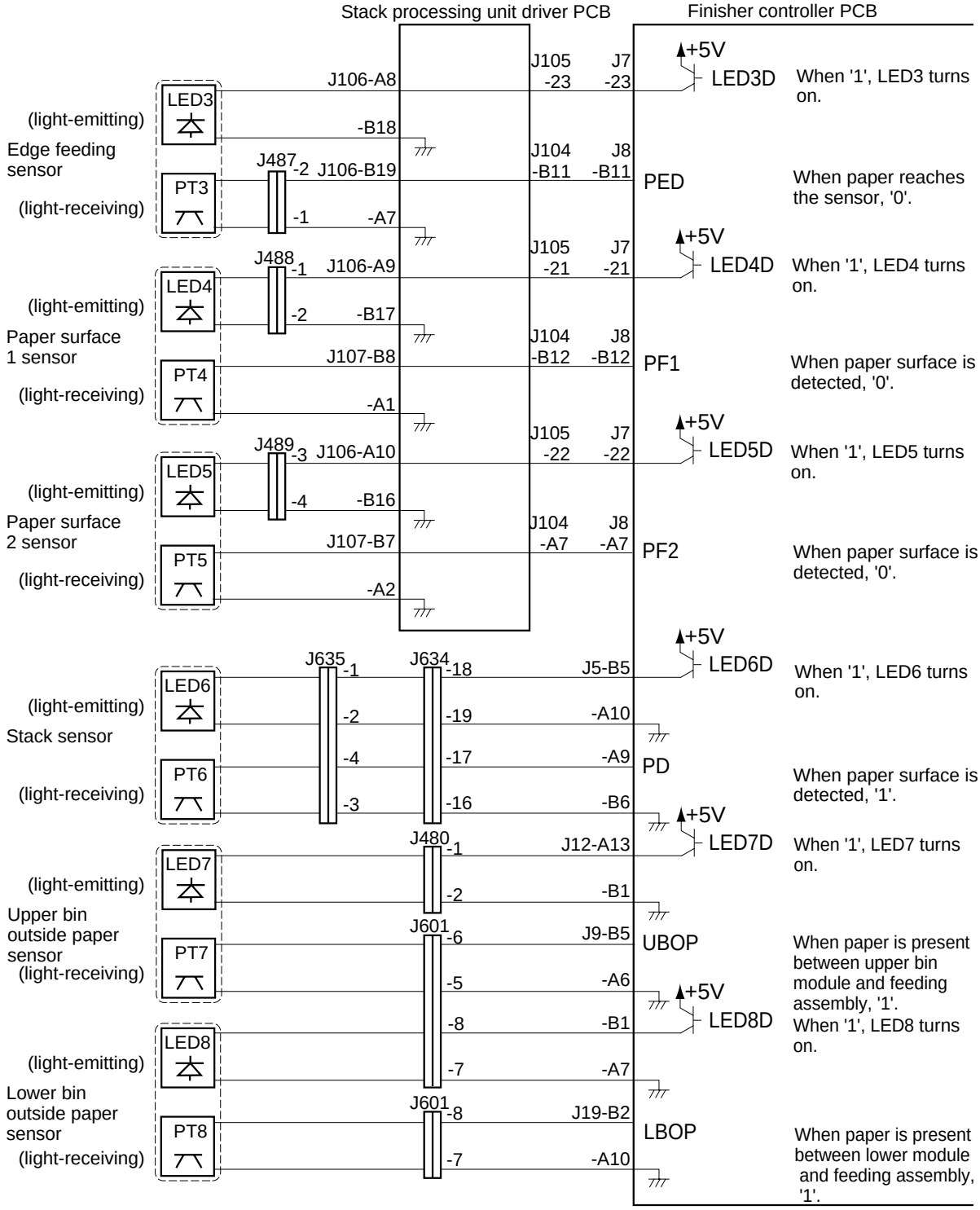

Figure 2-111

Inputs to the Finisher Controller PCB (10/10)

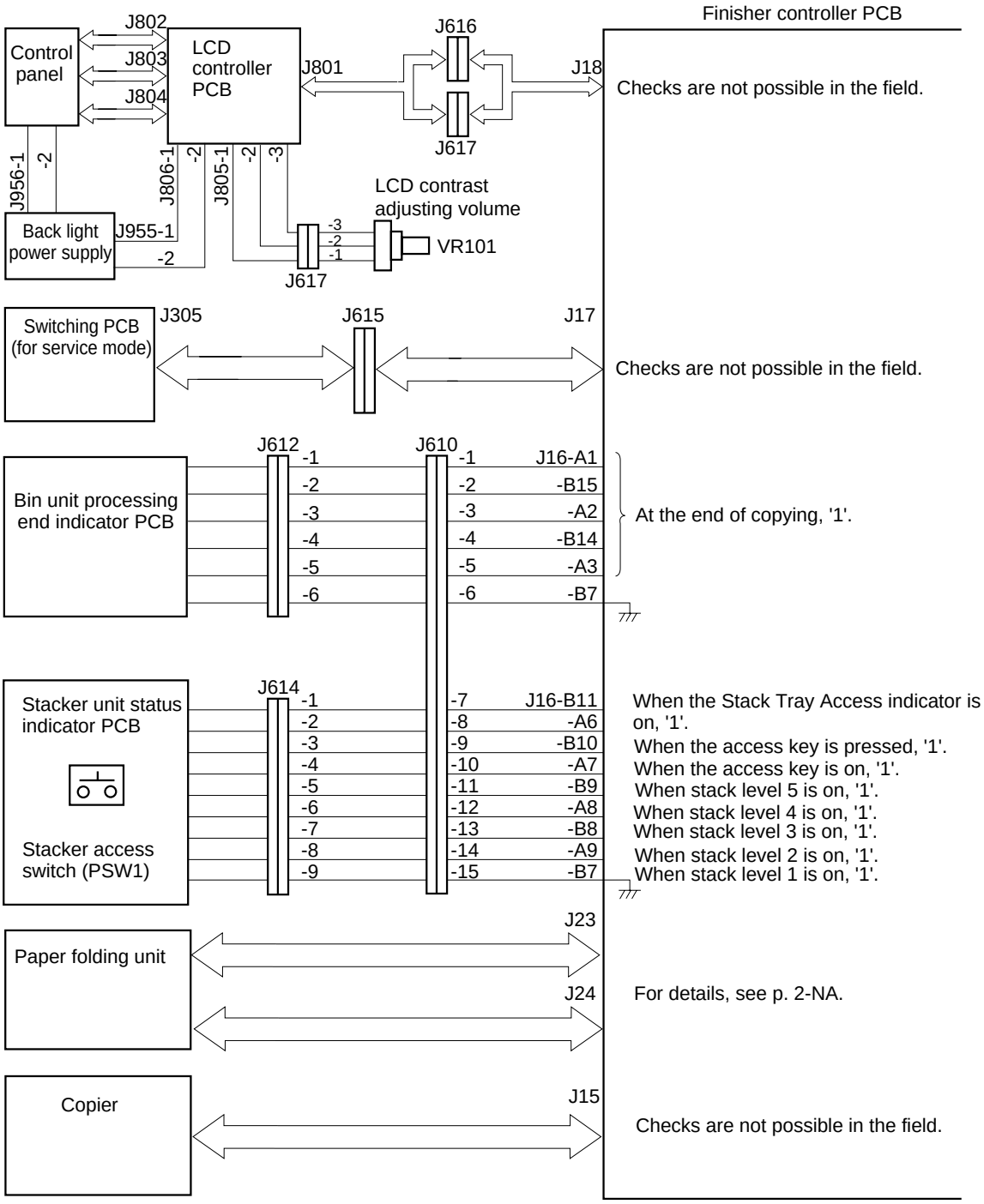

Figure 2-112

COPYRIGHT © 1997 CANON INC.

D. Outputs from the Finisher Controller PCB

Outputs from the Finisher Controller PCB (1/7)

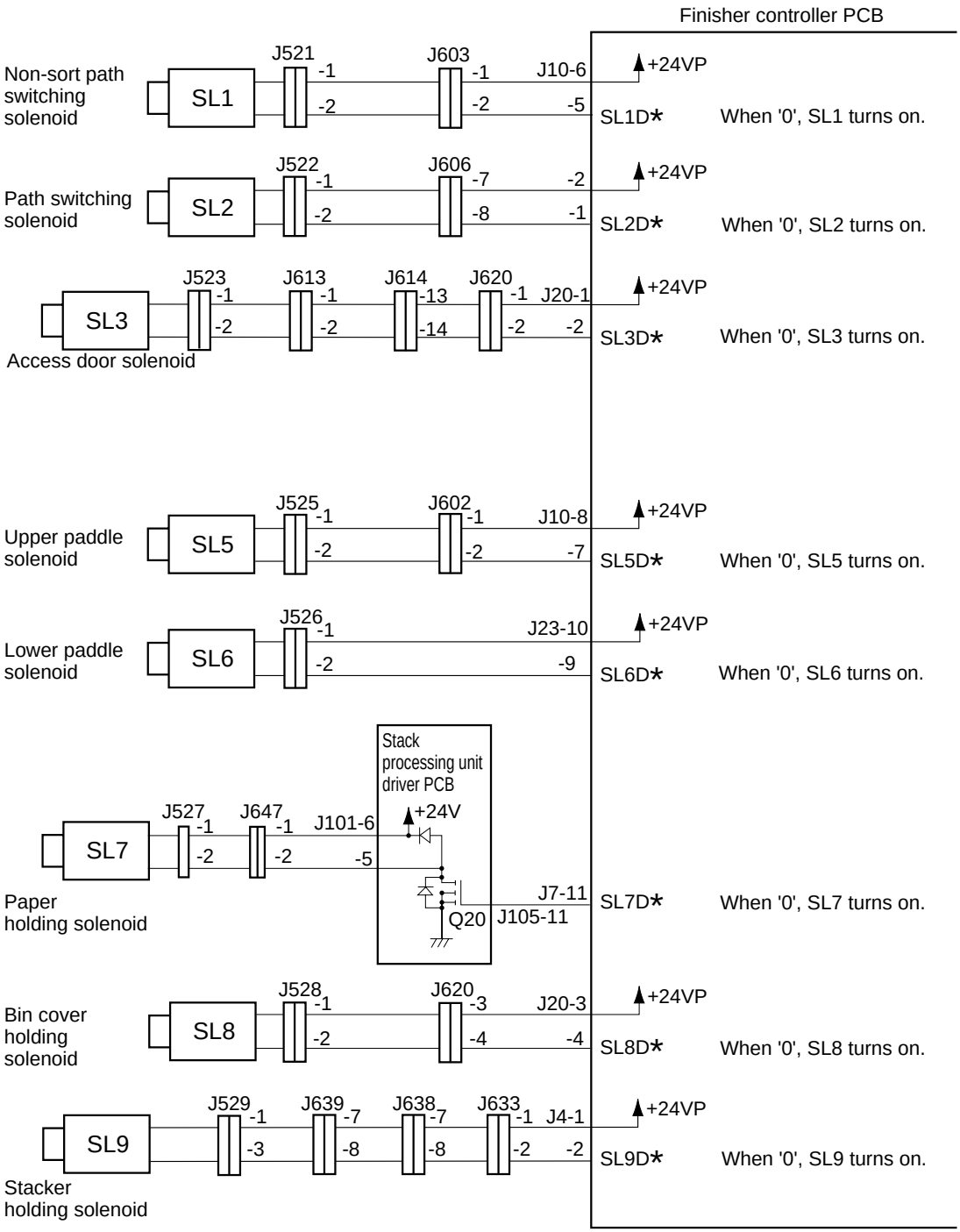

Figure 2-113

Outputs from the Finisher Controller PCB (2/7)

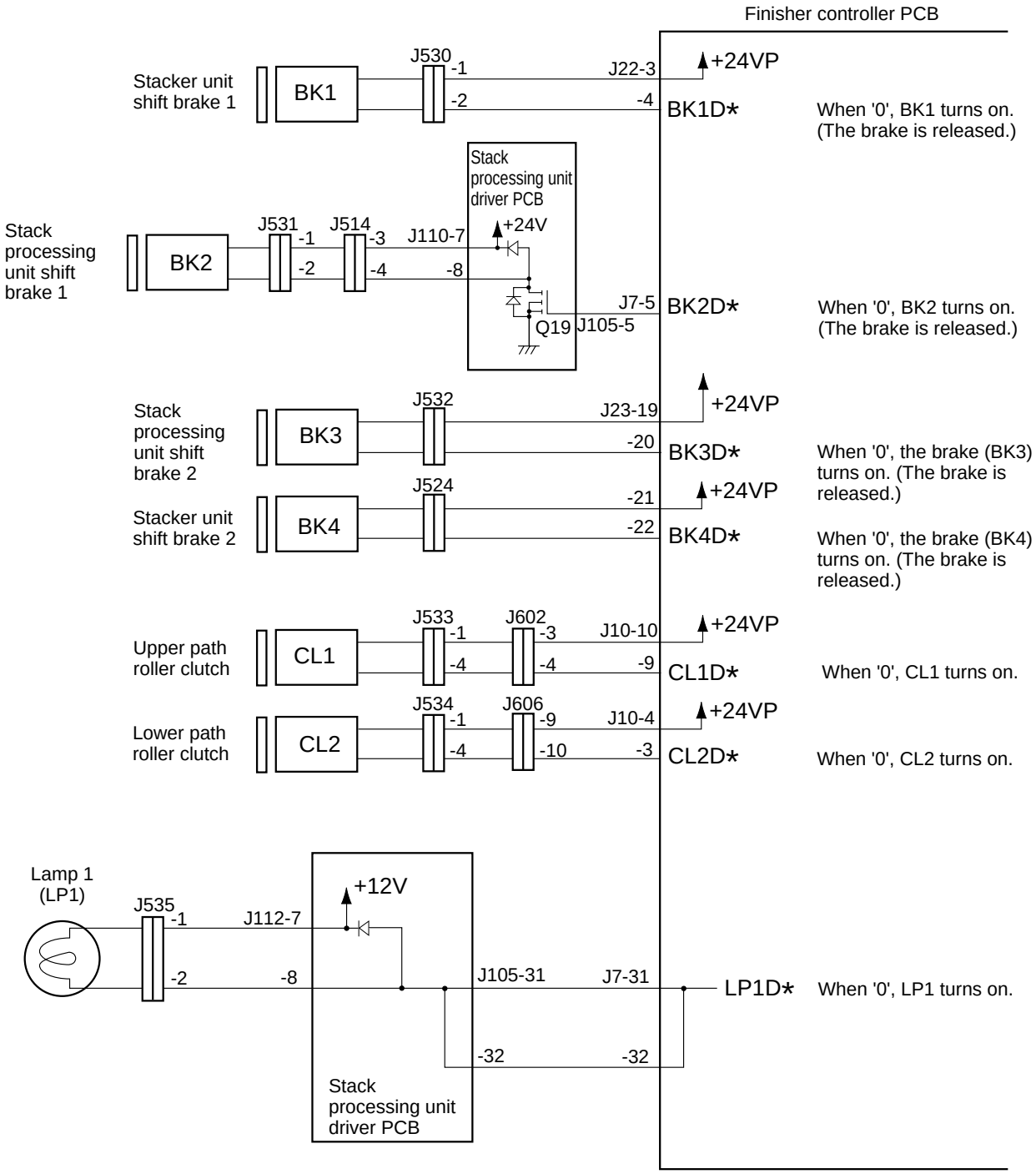

Figure 2-114

COPYRIGHT © 1997 CANON INC.

Outputs from the Finisher Controller PCB (3/7)

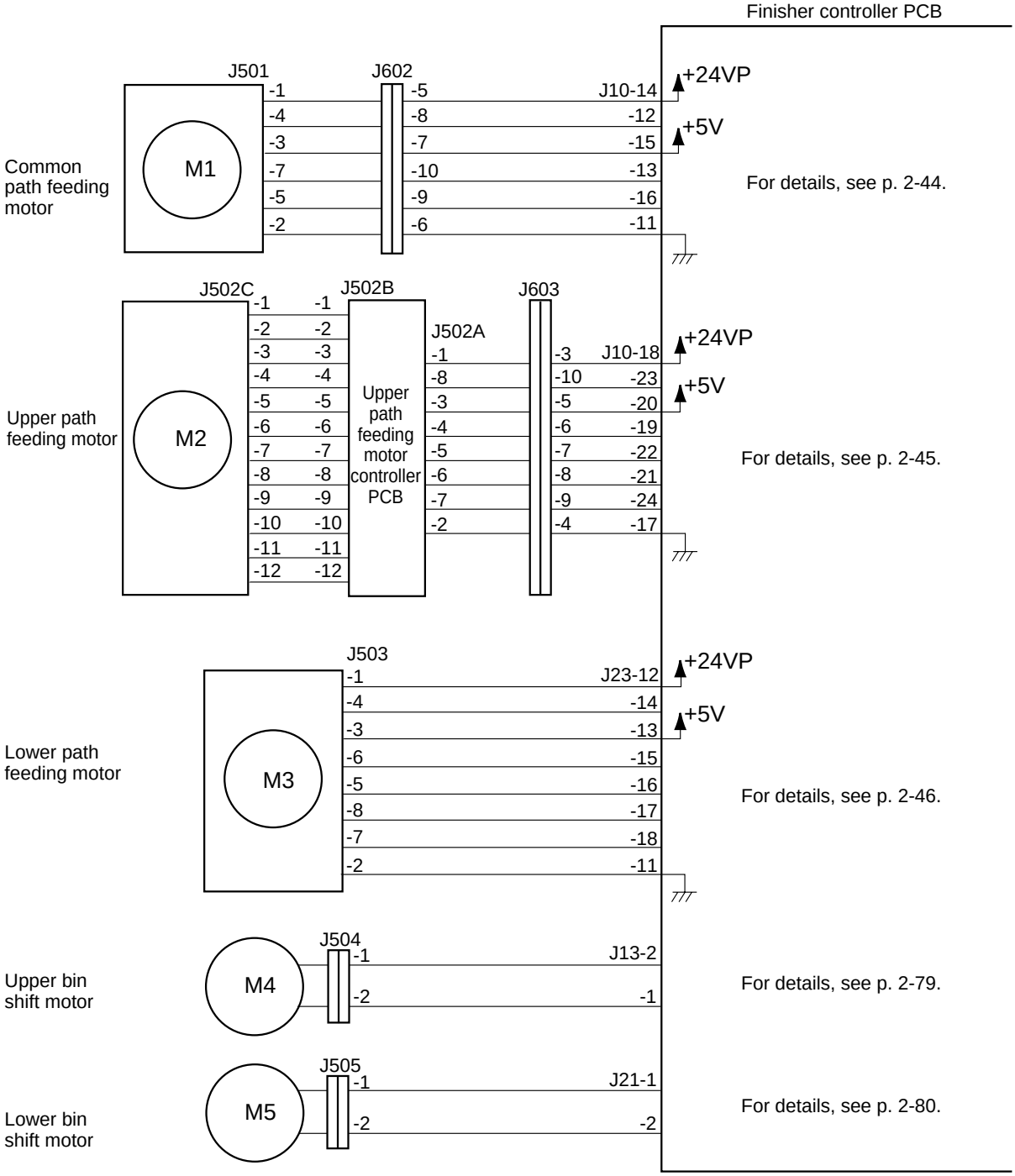

Figure 2-115

Outputs from the Finisher Controller PCB (4/7)

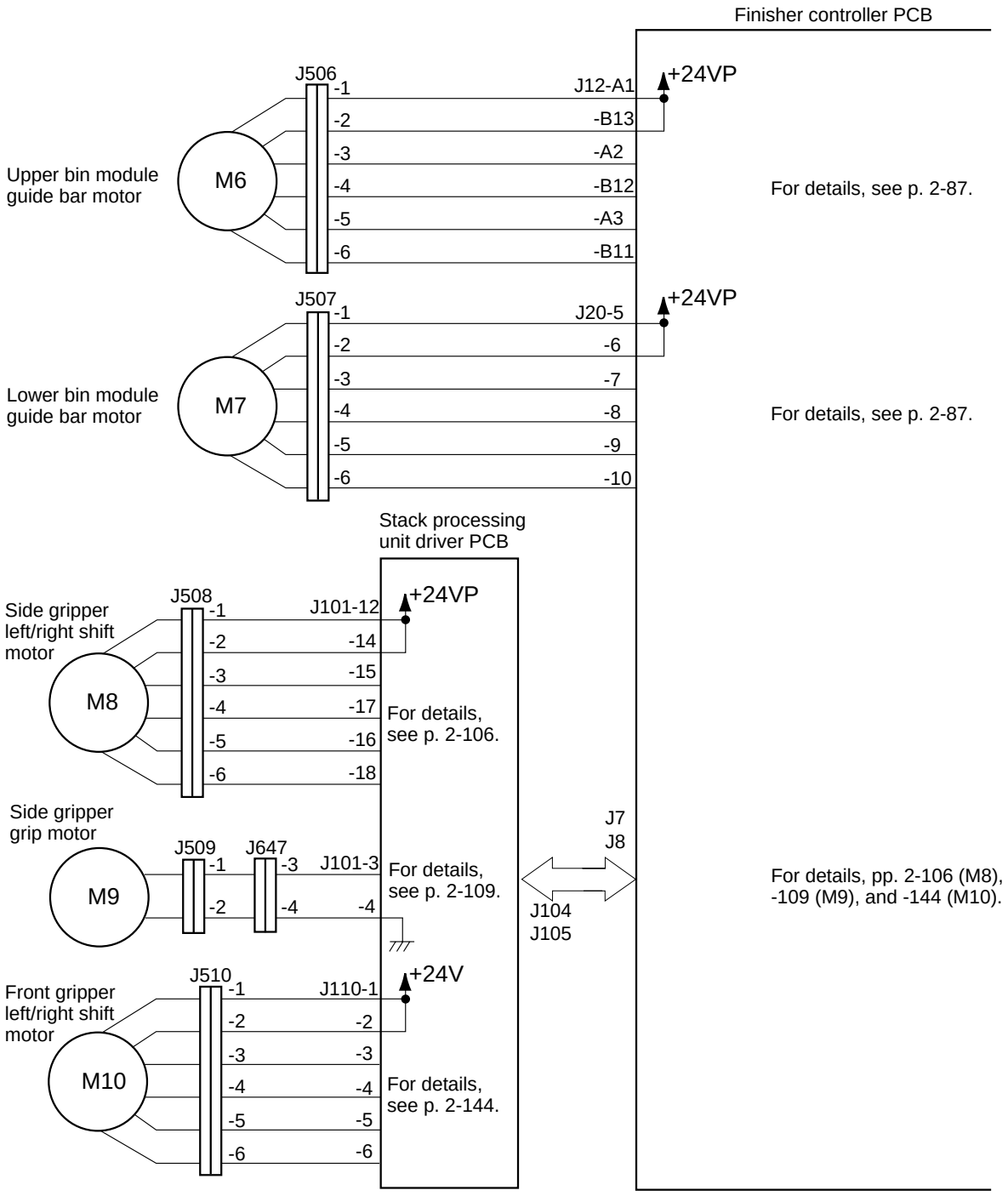

Figure 2-116

COPYRIGHT © 1997 CANON INC.

Outputs from the Finisher Controller PCB (5/7)

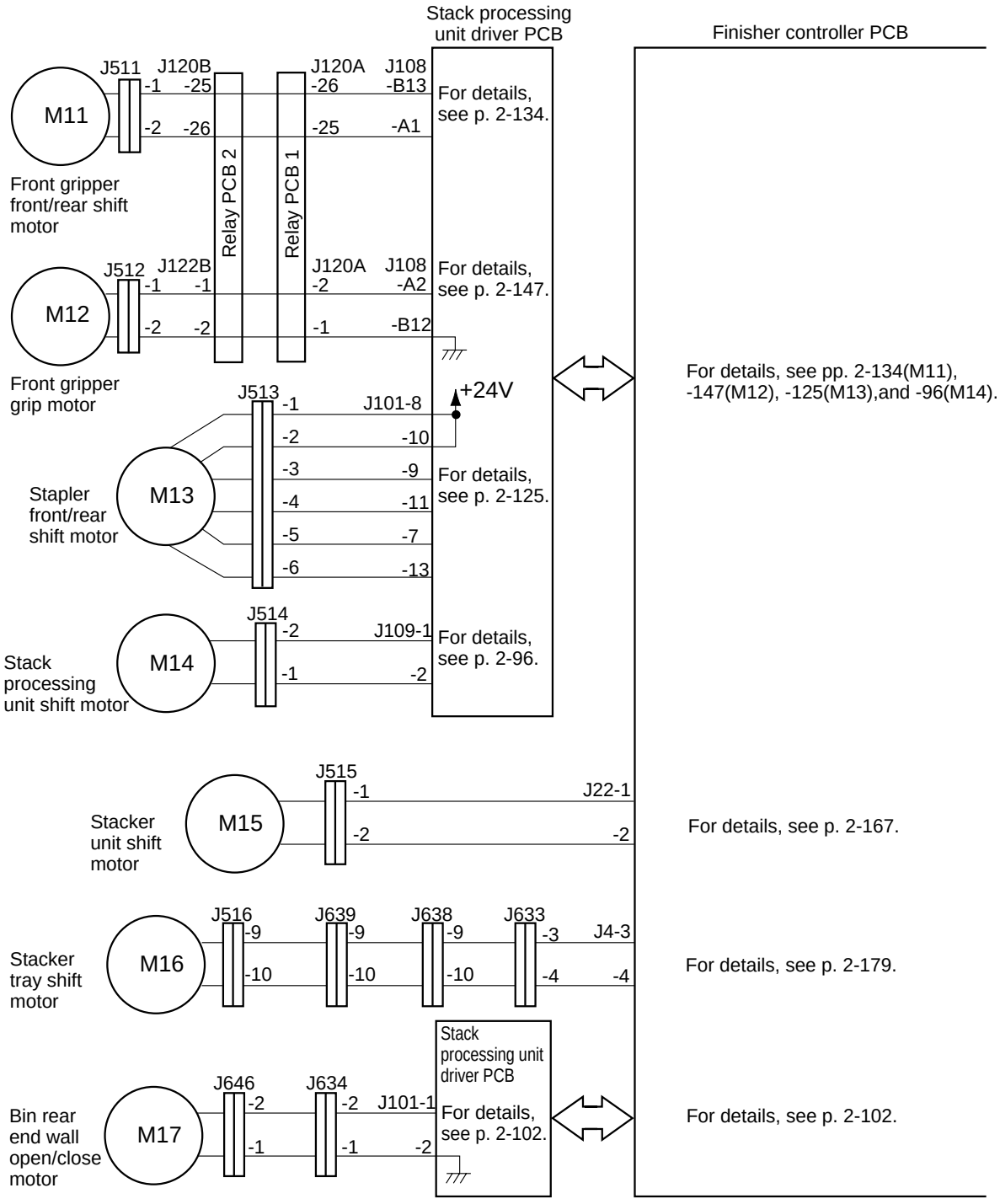

Figure 2-117

Outputs from the Finisher Controller PCB (6/7)

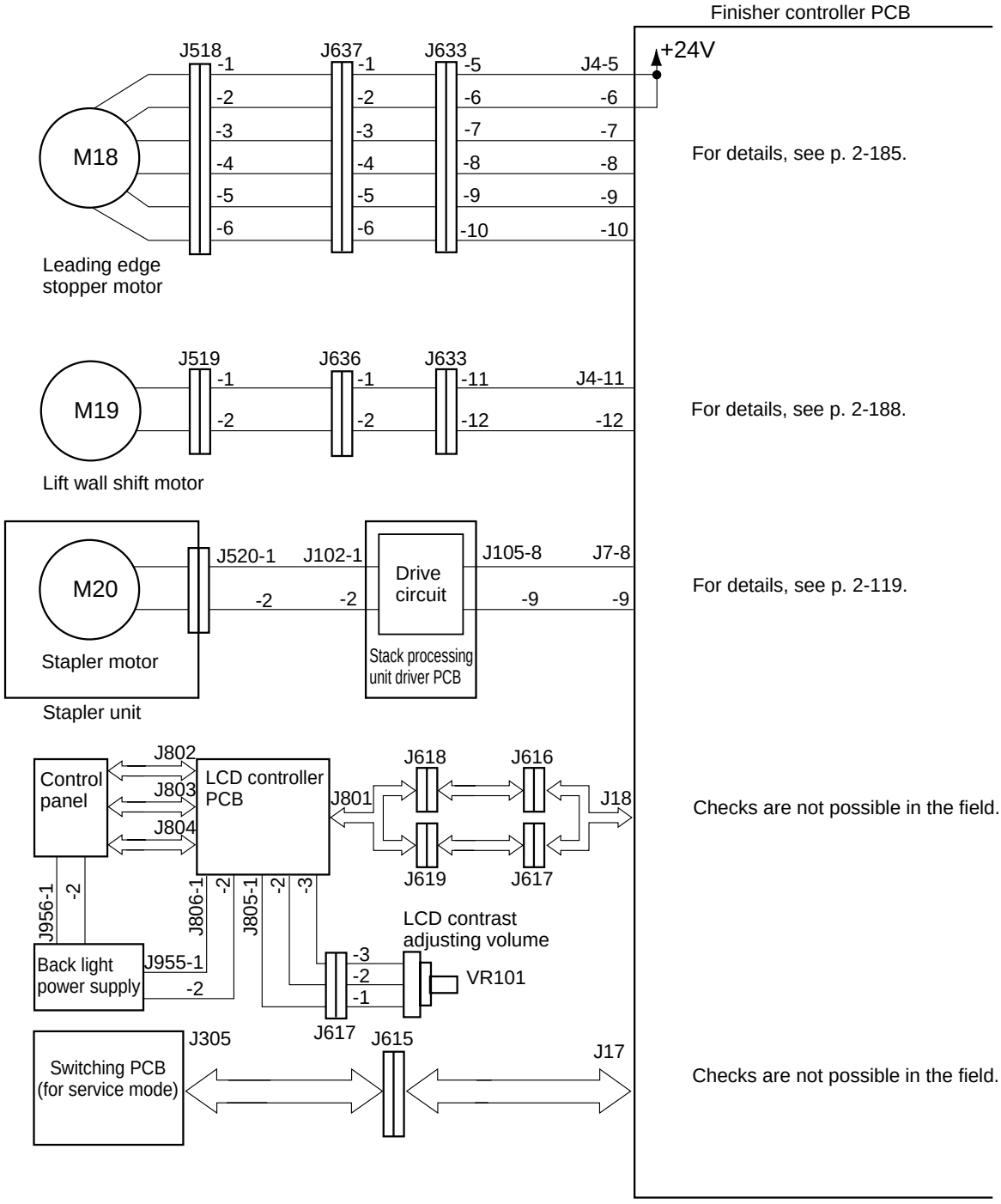

Figure 2-118

COPYRIGHT © 1997 CANON INC.

Outputs from the Finisher Controller PCB (7/7)

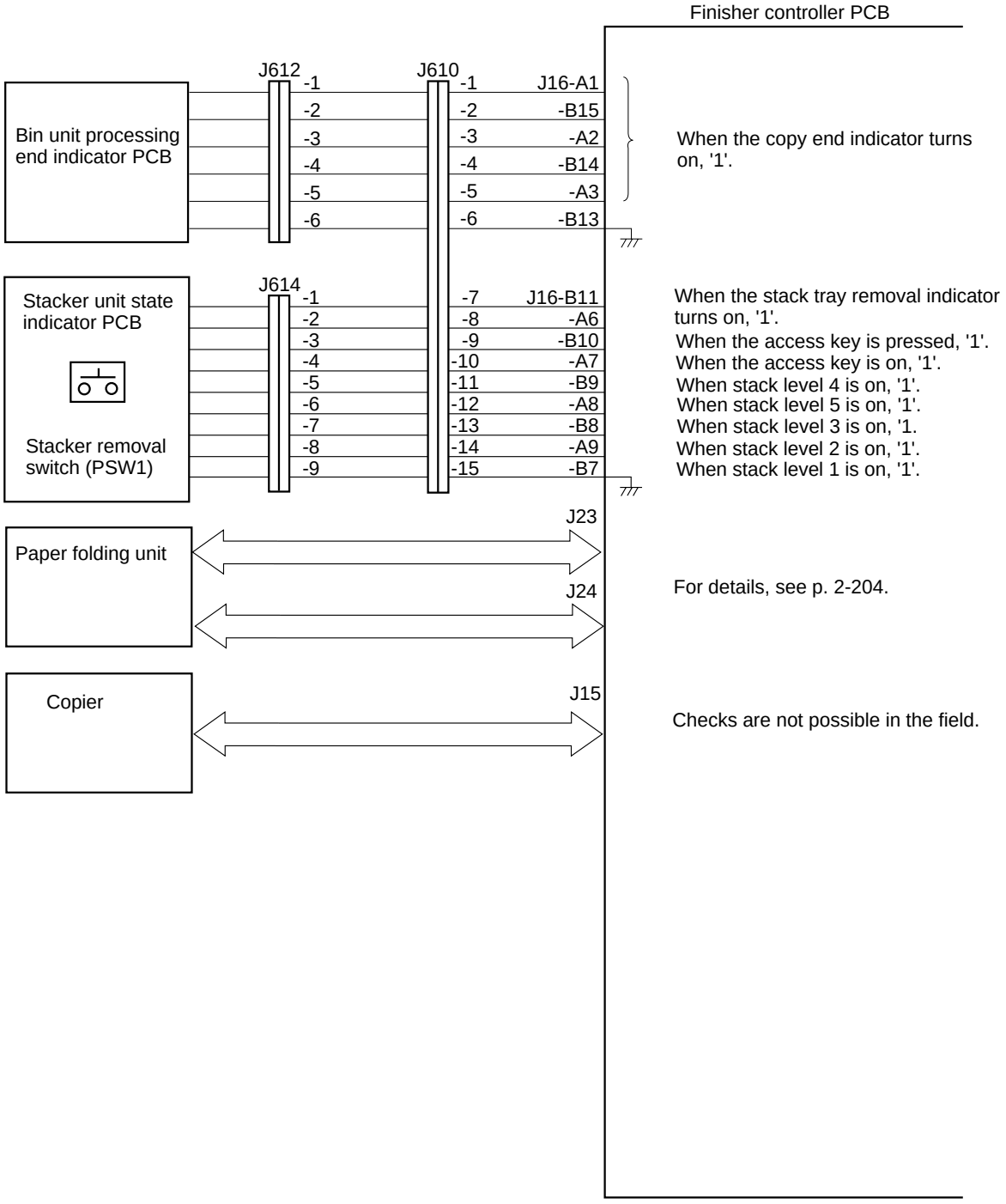

Figure 2-119

E. Communication between Copier and Finisher

1. Outline

The finisher exchanges status signals with the copier in IPC communication mode (using communication ICs).

The status signals are first written in RAM on the finisher controller PCB, and are sent out in response to control signals from the IPU (IC1).

When an error occurs in IPC communication, the copier's self diagnosis function turns on to indicate 'E500' or 'E713' on the copier's control panel. ('E501' represents a communication error within the finisher.)

The finisher's IPC communication may be either IPC communication or IPC communication 2, which provides a faster means of communication than the former.

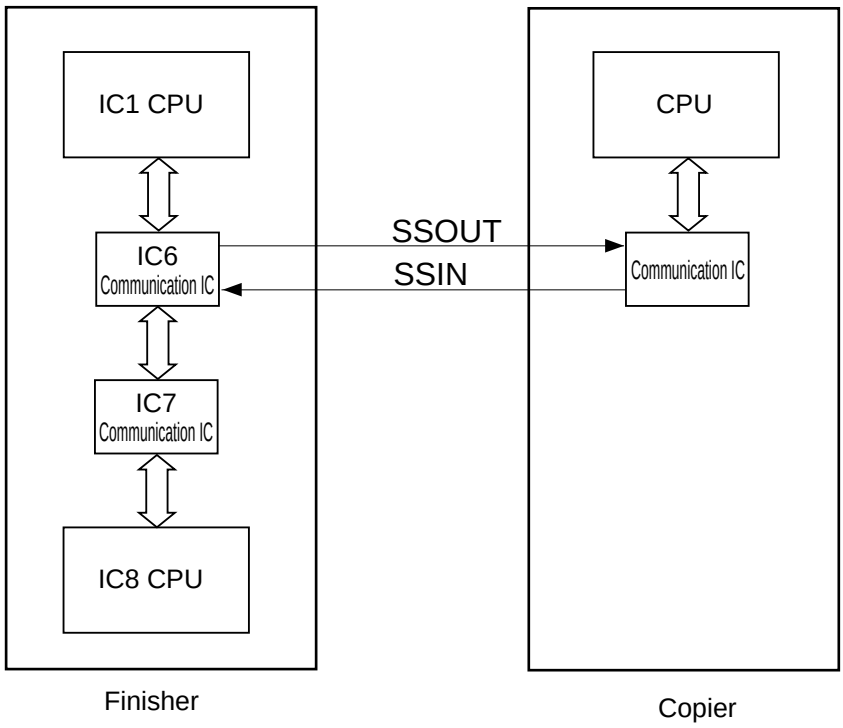

Figure 2-120

COPYRIGHT © 1997 CANON INC.

II. BASIC OPERATION

A. Outline

The finisher sorts, staples, or stacks the delivered copies according to the mode selected on the copier's control panel, operating in either of the following three major modes:

1. Non-sort mode
2. Sort mode
3. Staple sort mode

1. Non-Sort Mode

The copies are delivered to the non-sort tray, and are not sorted.

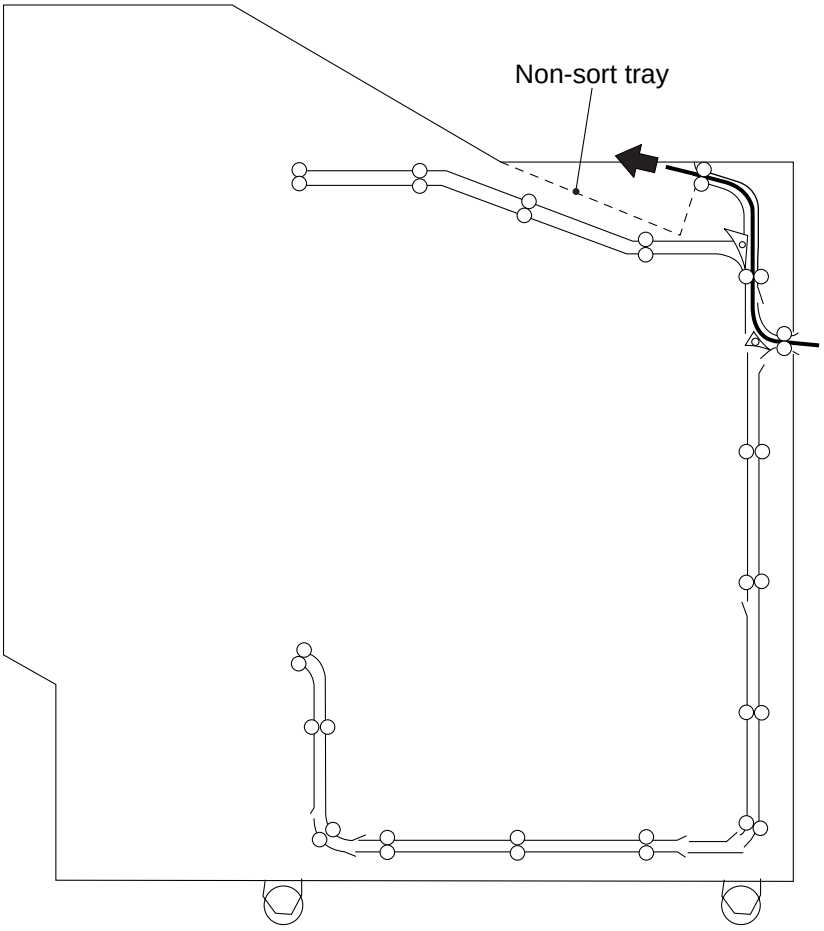

Figure 2-201

2. Sort Mode/Staple Sort Mode

The copies are delivered to the bins; thereafter, they are moved to the stacker unit by the stack processing unit.

Since the copies are sorted in these modes, the upper bin module or the lower bin module moves up or down to suit the number of sets specified on the copier.

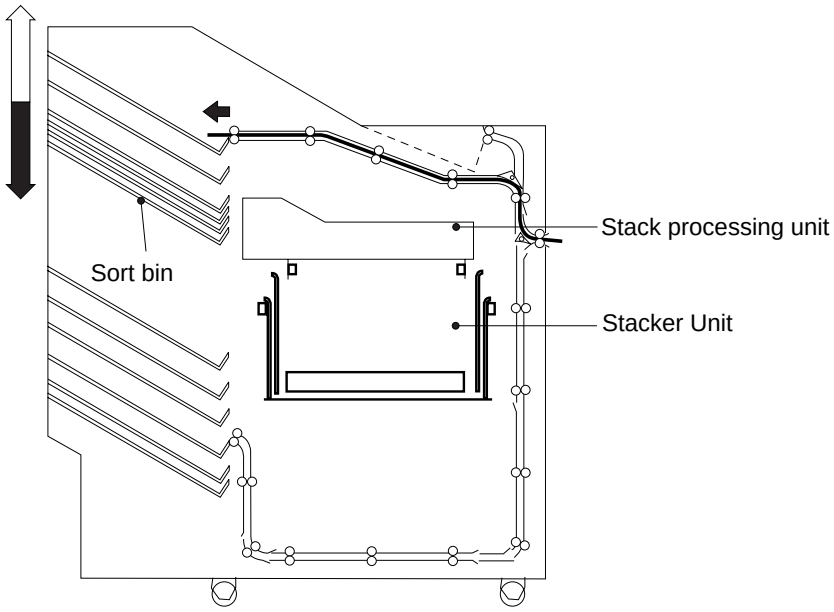

a. Upper Bin Module

Figure 2-202a

b. Lower Bin Module

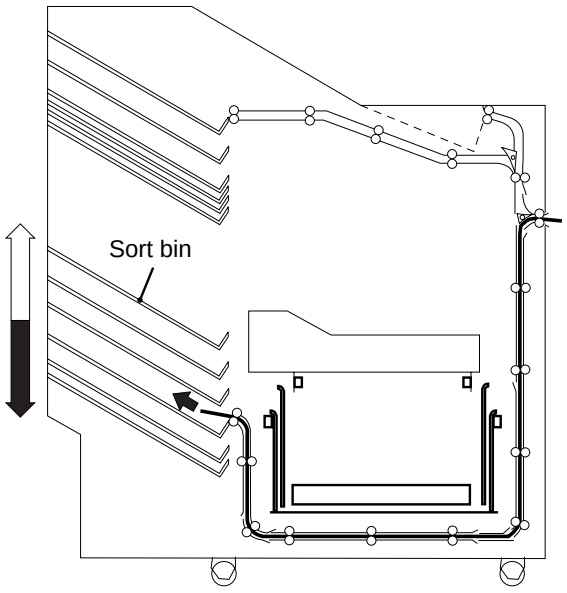

Figure 2-202b

COPYRIGHT © 1997 CANON INC.

c. Stacker

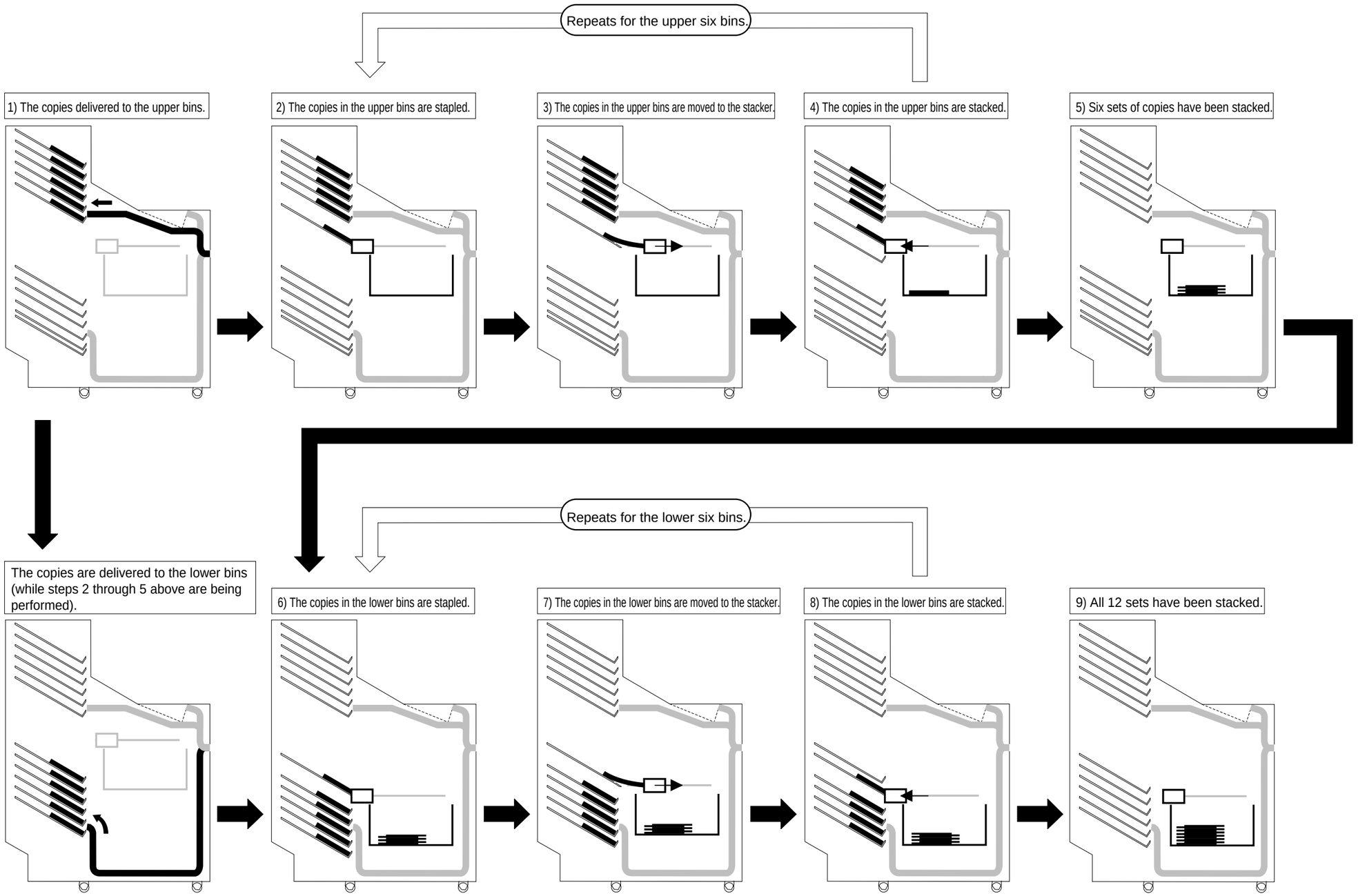

Figure 2-202c

COPYRIGHT © 1997 CANON INC.

COPYRIGHT © 1997 CANON INC. CANON FINISHER-B1 REV.0 MAY 1997 PRINTED IN JAPAN (IMPRIME AU JAPON)

3. Circulating the Original

The finisher is equipped with two modules, each consisting of six bins. Each bin module is capable of operating independently of each other so that six groups of copies may be handled for each set.

When as many as six groups of copies must be processed, the finisher at times would continue to operate after the copier finishes operation. To limit the period of such a type of operation, the originals are circulated for specific numbers of times as noted in Table 2-201, so that the last original is circulated for, whenever possible, fewer than two sets of copies.

Remaining sets	Before 2nd last circulation	Before last circulation	Last circulation
1	–	–	1
2	–	–	2
3	–	–	3
4	–	–	4
5	–	3	2
6	–	4	2
7	–	5	2
8	–	6	2
9	–	6	3
10	–	6	4
11	6	3	2
12	6	4	2
13	6	5	2
14	6	6	2

Table 2-201

COPYRIGHT © 1997 CANON INC.

B. Basic Operation

The finisher operates as follows for each mode.

1. Non-Sort Mode

1) The copier's Copy Start key is pressed.

2) The copy is delivered to the non-sort tray.

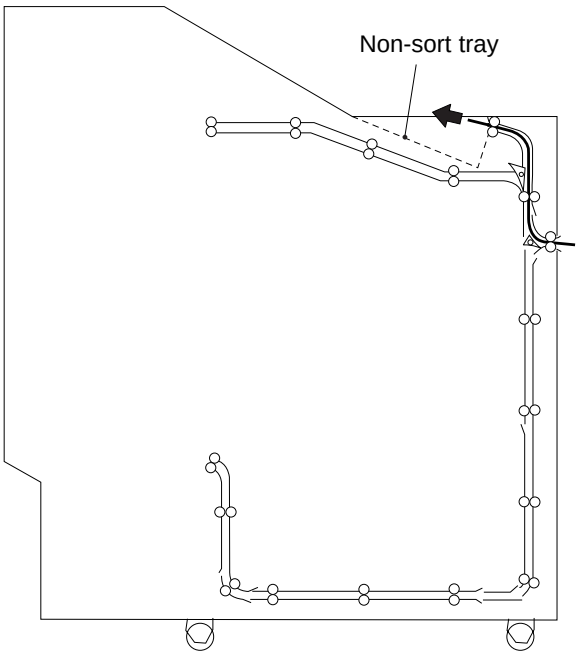

Figure 2-203

3) As many copies as set are delivered, and the operation is ended.

COPYRIGHT © 1997 CANON INC.

2. Sort mode/Staple Sort Mode

1) The copier's Copy Start key is pressed.

2) The guide bar swings to a point 'paper size + 10 mm'.

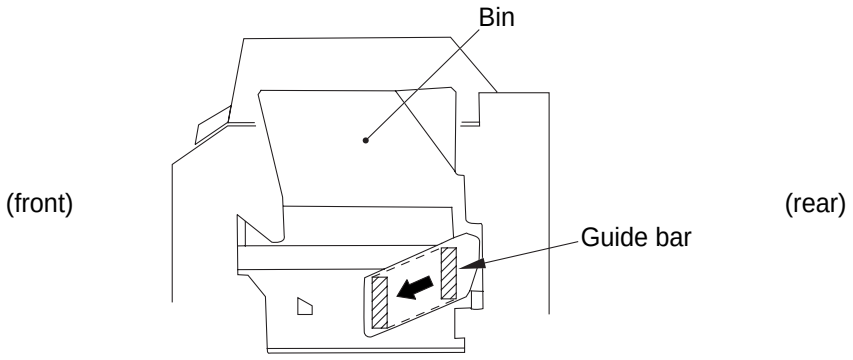

Figure 2-204 (upper view)

3) For each delivery, the guide bar is moved to a point '+3mm* from paper edge', and the copies are put into order, and the bins are shifted by a single bin.

*Varies according to operation mode.

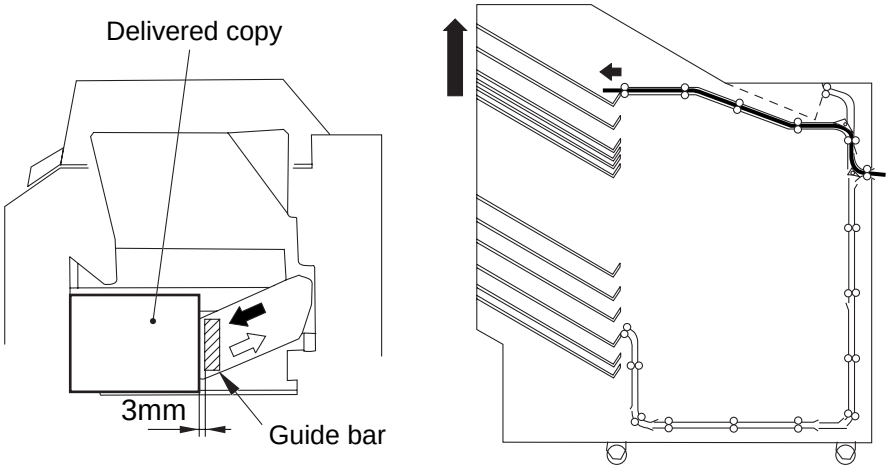

Figure 2-205

4) As many copies as set are made.*

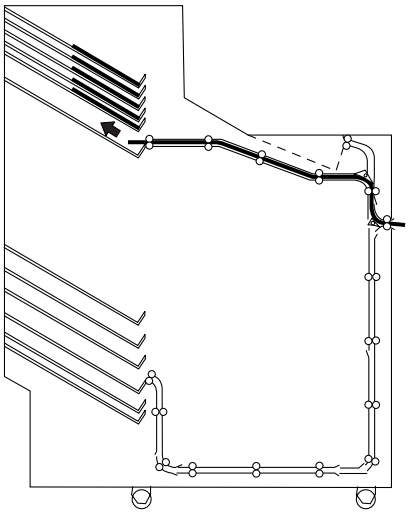

Figure 2-206

5) The original is replaced, and reverse sorting is started.

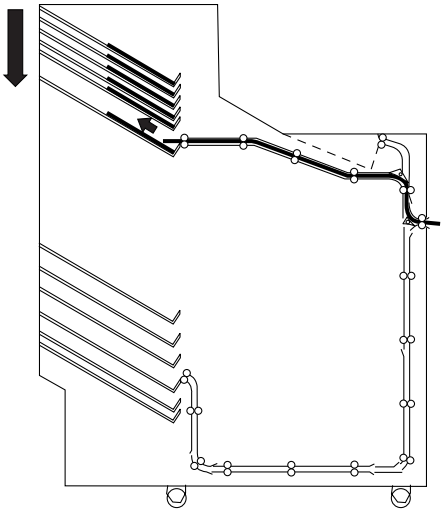

Figure 2-207

6) Steps 3) through 5) are repeated for the number of originals.

COPYRIGHT © 1997 CANON INC.

7) The stack is put into order by the guide bar.

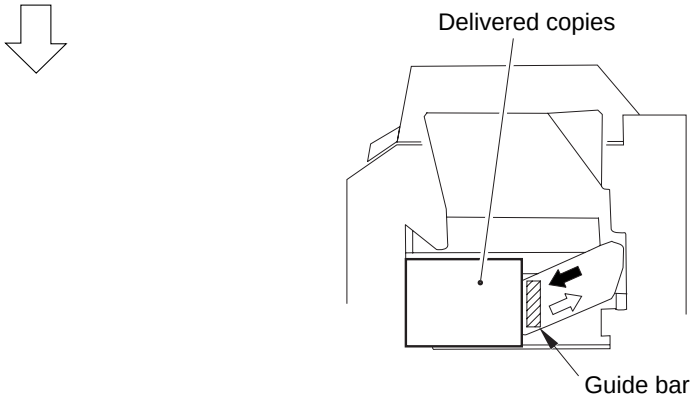

Figure 2-208

8) The stack is held in position by the paper retaining arm, and clasped by the side gripper.**

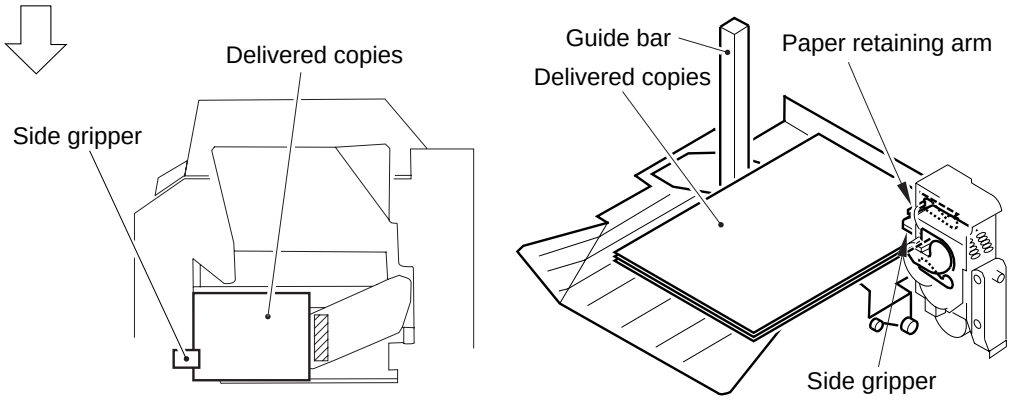

Figure 2-209

9) The bin rear end wall opens, and the stack is drawn out to stapling position by the side gripper.

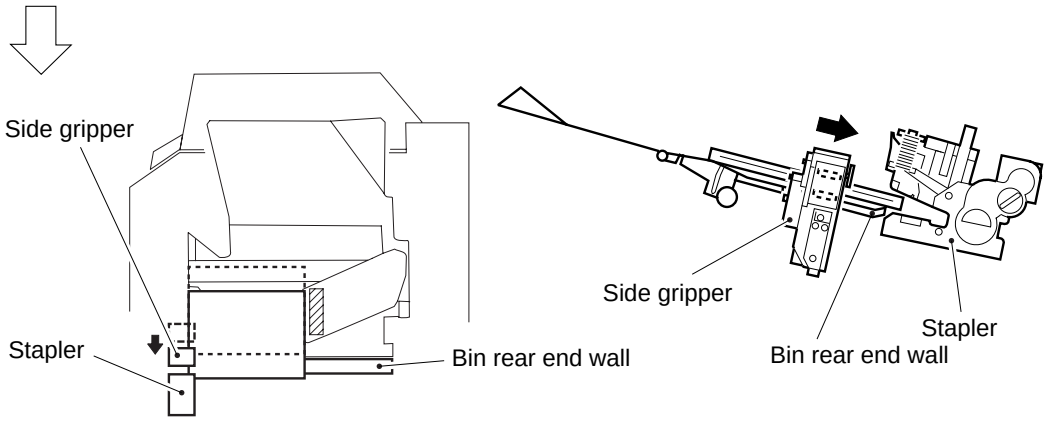

Figure 2-210

COPYRIGHT © 1997 CANON INC.

10) The stapler unit is moved to stapling position, and the stack is stapled (in staple sort mode only).**

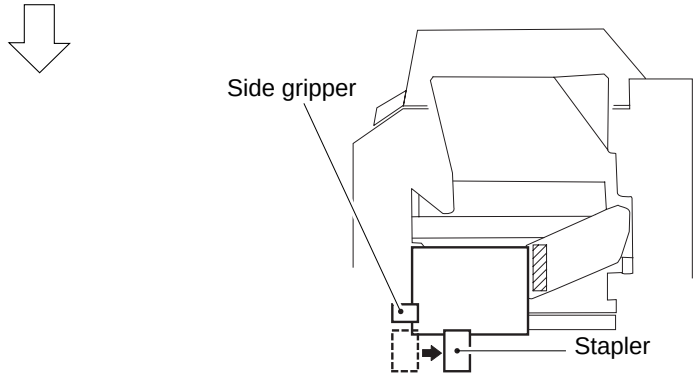

Figure 2-211

11) The stack is clasped by the front gripper, and the side gripper releases the stack.**

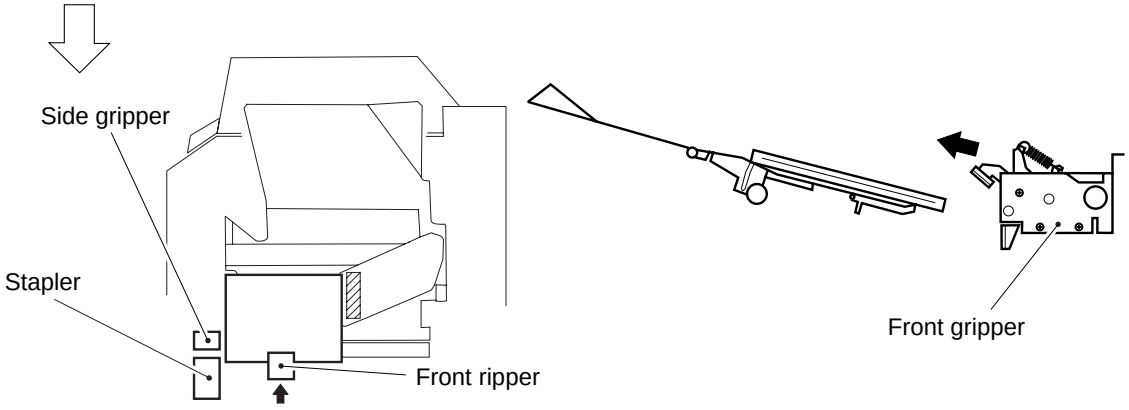

Figure 2-212

12) The stack is moved to the stacker tray by the front gripper.**

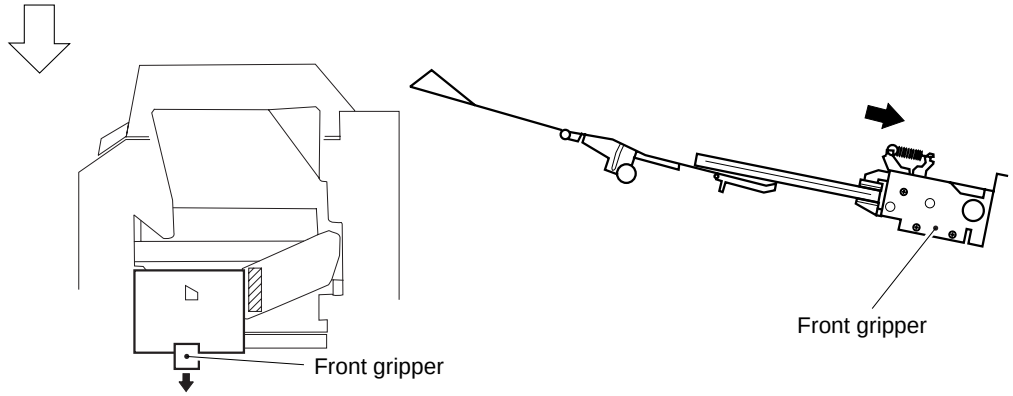

Figure 2-213

COPYRIGHT © 1997 CANON INC.

13) The stack is released by the front gripper, and is dropped on the stacker tray. (The stack of the second set and later consisting of even-number sets is dropped after the front gripper has been moved about 20 mm from the previous stack.)**

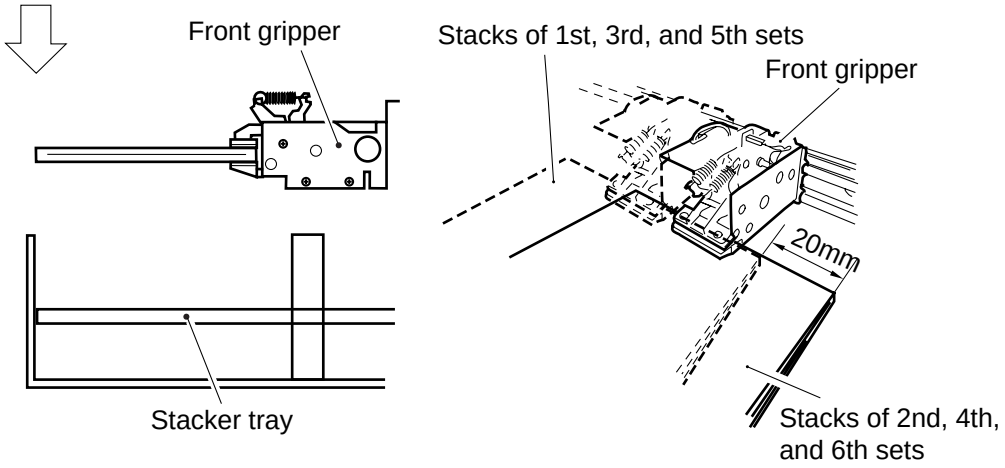

Figure 2-214

14) The bin rear end wall closes.**

15) The guide bar is moved to a point +7 mm from the edge of paper, and the bins are shifted by a single bin.**

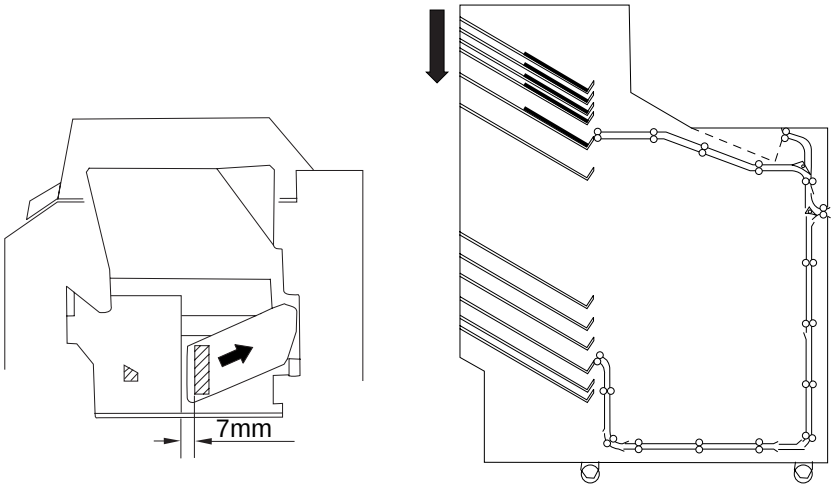

Figure 2-215

16) Steps 8) through 15) are performed for all stacks, and the operation is ended.

* If five or more sets are specified, six (varying according to selected count) sets will be delivered to the upper module; then, the remaining sets will be delivered to the lower module while the sets in the upper module are being stapled and stacked.

** The stacker is used only when the paper in the bins is B4 or smaller. In staple sort mode, stack is returned to the bin after stapling (for sheets larger than B4).

Reference:

When the count of originals is set to '1', the copies are delivered to the non-sort tray. When the count of copies is set to '1' in non-sort mode, the copies will be delivered to the non-sort tray.

COPYRIGHT © 1997 CANON INC.

C. Emergency Operation Mode

1. Outline

The finisher is provided with emergency mode which initiates non-sort operation in response to a minor problem.

The operations in emergency mode are the same as those of non-sort mode, and are executed only when the parts involved are free of the problem in question*, i.e., bin unit, stack processing unit, stacker unit.

*Represented by an error code.

The finisher switches to emergency mode automatically from the current mode when any of the conditions given below exists when its power is turned on; the copier's control panel will indicate a message when such switching is made, while LED4 on the finisher's switch PCB turns on.

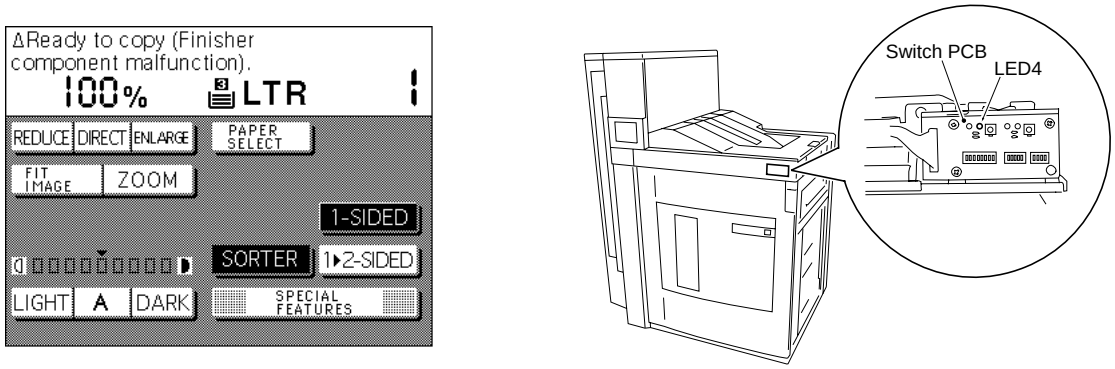

Figure 2-216

Conditions

The same error has occurred twice continuously. (The error must not affect operations of non-sort mode, and there may be normal operations between the first and the second errors.)

See Figure 2-217 to see when the finisher switches to emergency mode.

Pattern 1

An error (A) not affecting non-sort operation occurs. → An error (A) not affecting non-sort operation occurs. → The finisher switches to emergency mode.

Pattern 2

An error (A) not affecting non-sort operation occurs. → The finisher executes normal operation. → An error (A) not affecting non-sort operation occurs. → The finisher switches to emergency mode.

Pattern 3

An error (A) not affecting non-sort operation occurs. → An error (B) not affecting non-sort operation occurs. → An error (B) not affecting non-sort operation occurs. → The finisher switches to emergency mode.

Figure 2-217

COPYRIGHT © 1997 CANON INC.

2. Operation

When an error which does not affect non-sort mode occurs, the nature of the most recent error is stored in RAM (IC10) on the finisher controller PCB. The finisher compares the nature of the next error against that of the previous error stored in memory. If they match, the finisher switches to emergency mode, and the copier's control panel indicates that a switch-over has been made.

When the finisher switches to emergency mode, only the loads related to non-sort mode are supplied with power–switching of power is made in response to the emergency mode ON signal (EMON) from the CPU (Q1a) on the finisher controller PCB.

In normal mode, the emergency mode ON signal (EMON) goes '1', and +24 V (intended for loads not related to non-sort mode) is supplied.

In emergency mode, the emergency mode ON signal (EMON) goes '0', and +24 V is not supplied.

+24 VS (intended for loads related to non-sort mode) is supplied at all times regardless of the state of the emergency mode ON signal (EMON).

Power notation for loads	Description
+ 24VI	Power from the DC power supply PCB
+ 24VS	Power supplied to loads related to non-sort mode
+ 24V	Power supplied to loads not related to non-sort mode

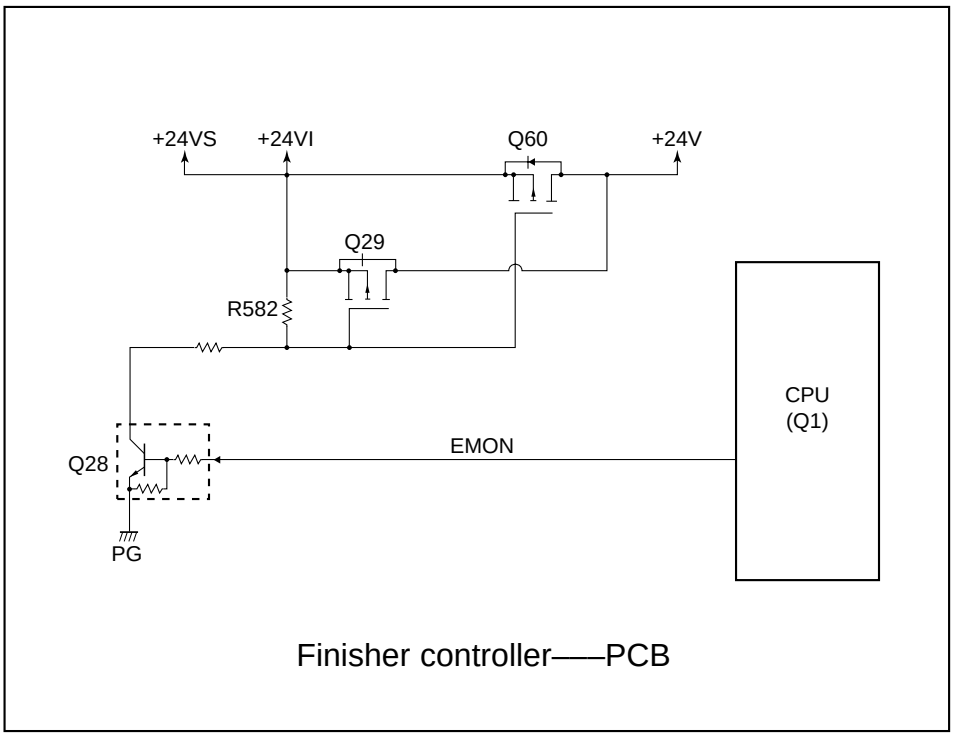

Figure 2-218

COPYRIGHT © 1997 CANON INC.

3. Disabling Emergency Mode

The data used to determine whether the finisher should switch to emergency mode is stored in RAM on the finisher controller PCB, and the user cannot disable it.

To disable emergency mode, you must first remove the cause of the error and erase specific data units in RAM.

Go through the following if you must erase specific data units, thereby disabling emergency mode:

Disabling Emergency Mode

1) Turn off the copier's power switch.
2) Open the finisher's upper cover; then, remove the two screws, and remove the upper cover (front).

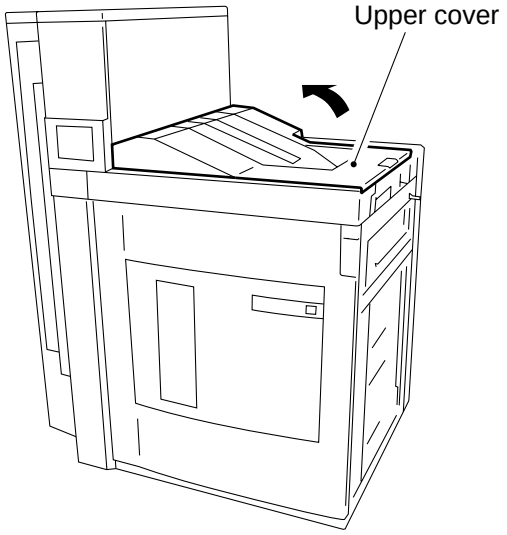

Figure 2-219

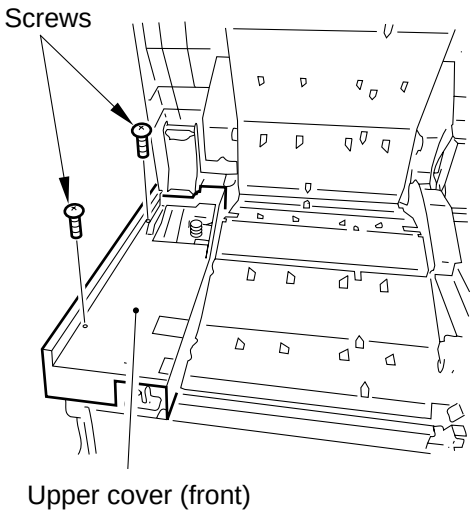

Figure 2-220

3) Shift bit 8 of the DIP switch (SW3) on the switch PCB to ON.

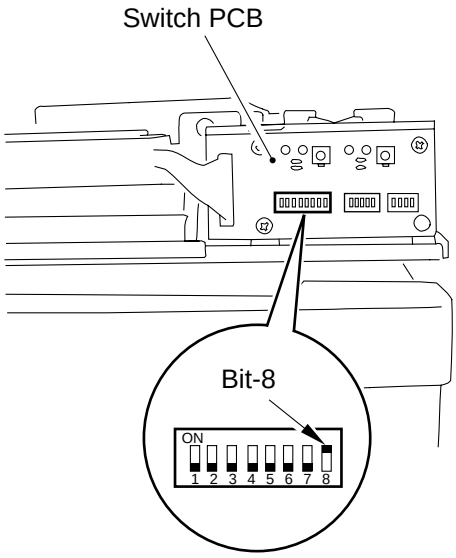

Figure 2-221

4) Turn on the copier's power switch.
5) Press the push switch (PSW2) on the switch PCB.
   • A press on the push switch disables emergency mode. (The switching is instantaneous.)
   • LED4 on the switch PCB turns off when emergency mode is ended.

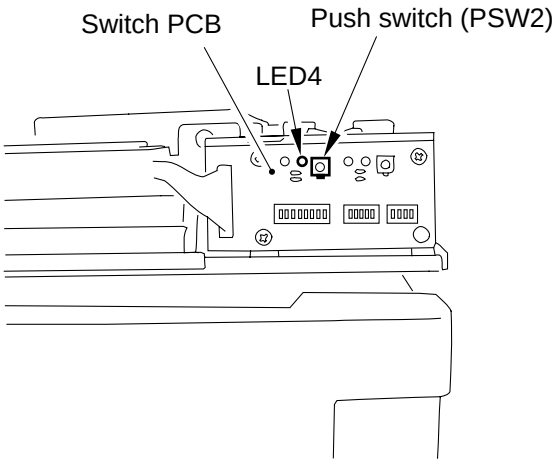

Figure 2-222

6) Turn on the copier's power switch.
7) Shift bit 8 of the DIP switch (SW3) on the switch PCB back to OFF.
8) Install the upper cover (front) you removed in step 3), and close it.

COPYRIGHT © 1997 CANON INC.

You can check whether emergency mode has been disabled or not by referring to LED4 on the switch PCB.

If LED4 is off, the finisher is in normal mode.

If LED4 remains on, the finisher is in emergency mode.

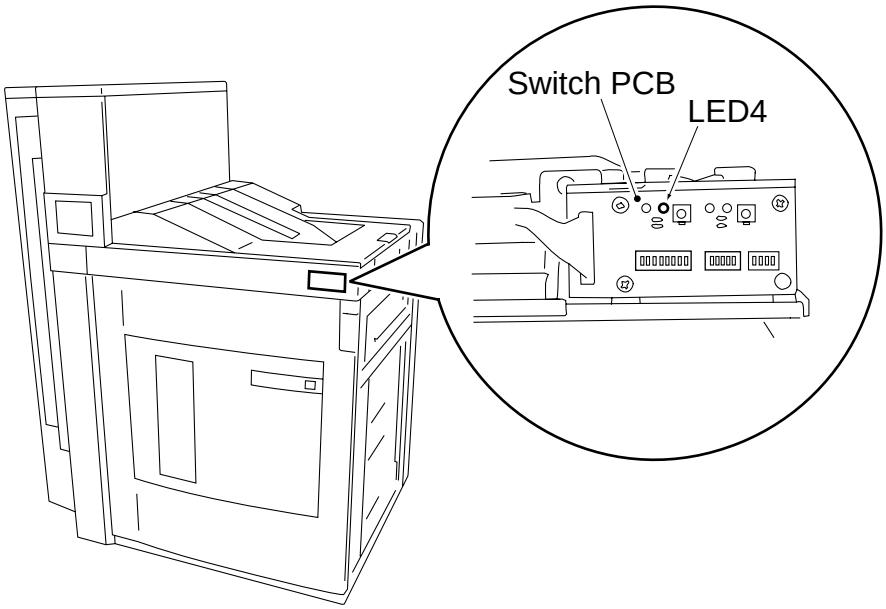

Figure 2-223

III. FEEDING DRIVE SYSTEM

A. Outline

The feeding system uses its appropriate feeding rollers to move the copies from the copier to each bin or the non-sort tray.

The feeding motors are driven by three motors: common path feeding motor (M1), upper path feeding motor (M2), and lower path feeding motor (M3).

The drive to each of the feeding roller in the common, upper, and lower path feeding assemblies is switched by turning on and off the upper path roller clutch (CL1) and the lower path roller clutch (CL2). To ensure good stacking in bins, the delivery slot is equipped with paddles: the upper paddle is driven by the upper paddle solenoid (SL5), and the lower paddle is driven by the lower paddle solenoid (SL6).

Copies are moved through a specific path to suit the mode selected on the copier by turning on and off the path switching solenoid (SL2) and the non-sort path switching solenoid (SL1).

COPYRIGHT © 1997 CANON INC.

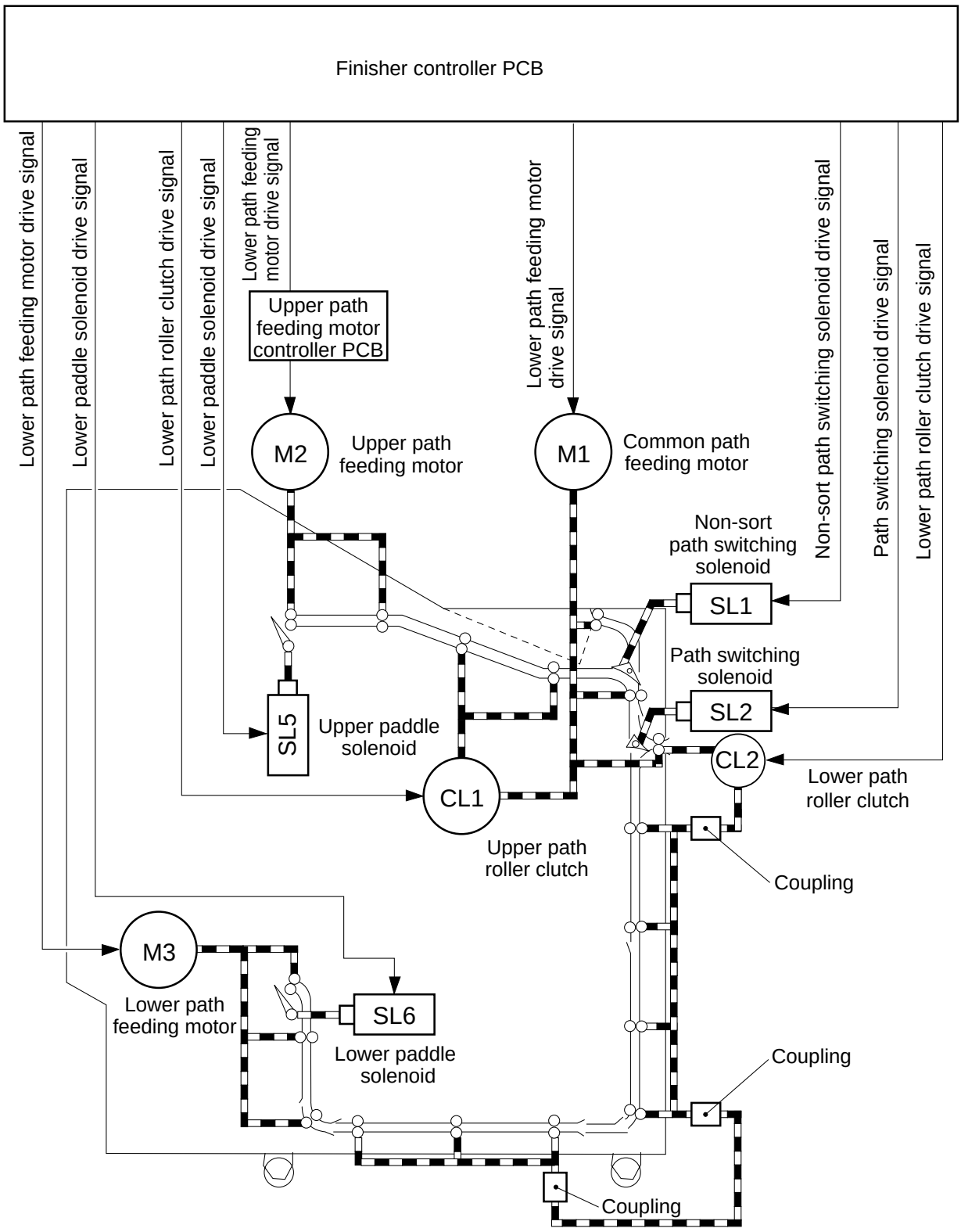
Finisher controller PCB
Lower path feeding motor drive signal
Lower paddle solenoid drive signal
Lower path roller clutch drive signal
Lower paddle solenoid drive signal
Lower path feeding motor drive signal
Upper path feeding motor controller PCB
Lower path feeding motor drive signal
Non-sort path switching solenoid drive signal
Path switching solenoid drive signal
Lower path roller clutch drive signal
M2
Upper path feeding motor
M1
Common path feeding motor
Non-sort path switching solenoid
SL1
Path switching solenoid
SL2
SL5
Upper paddle solenoid
CL2
Lower path roller clutch
CL1
Upper path roller clutch
Coupling
M3
Lower path feeding motor
SL6
Lower paddle solenoid
Coupling
Coupling

Figure 2-301

B. Feeding Path

Copies are moved through specific paths to suit the selected mode as follows:

1. Non-Sort Mode

- The copies are delivered to the non-sort tray.

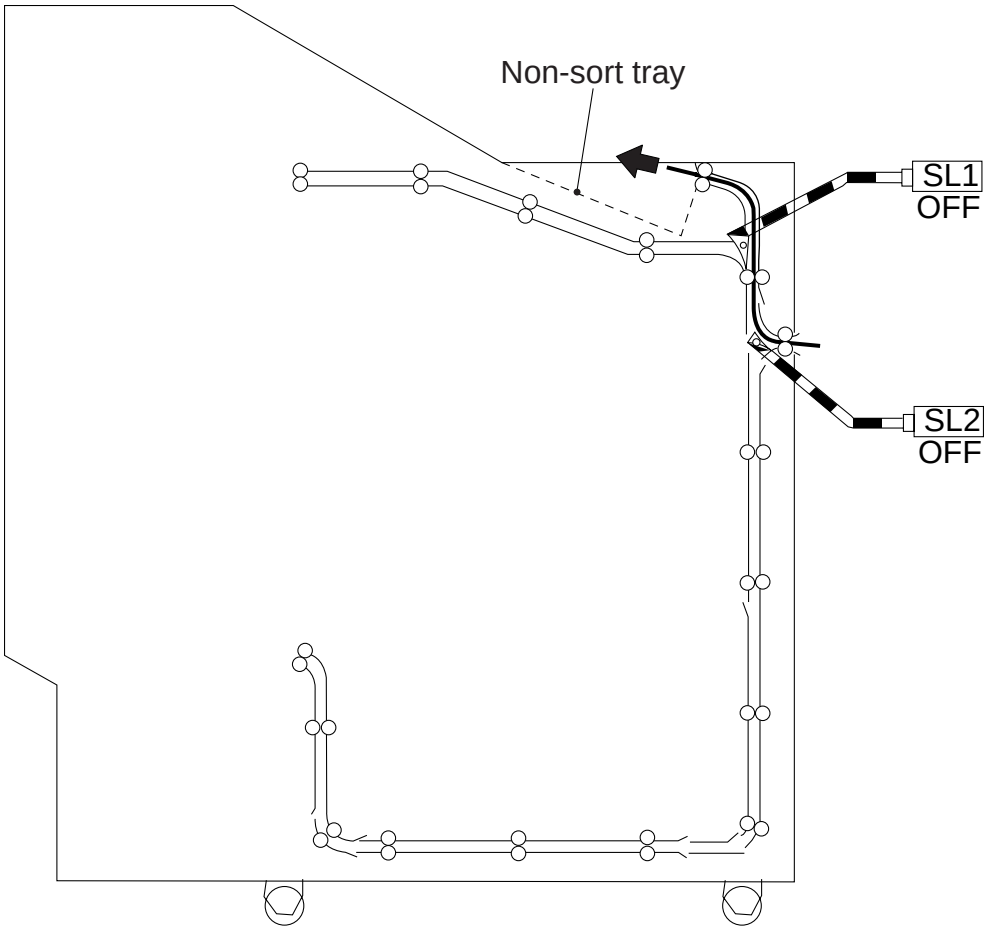

Figure 2-302

COPYRIGHT © 1997 CANON INC.

2. Sort/Staple Sort Mode

- The copies are delivered to the sort bin of the upper module or the lower module.

a. Upper Module

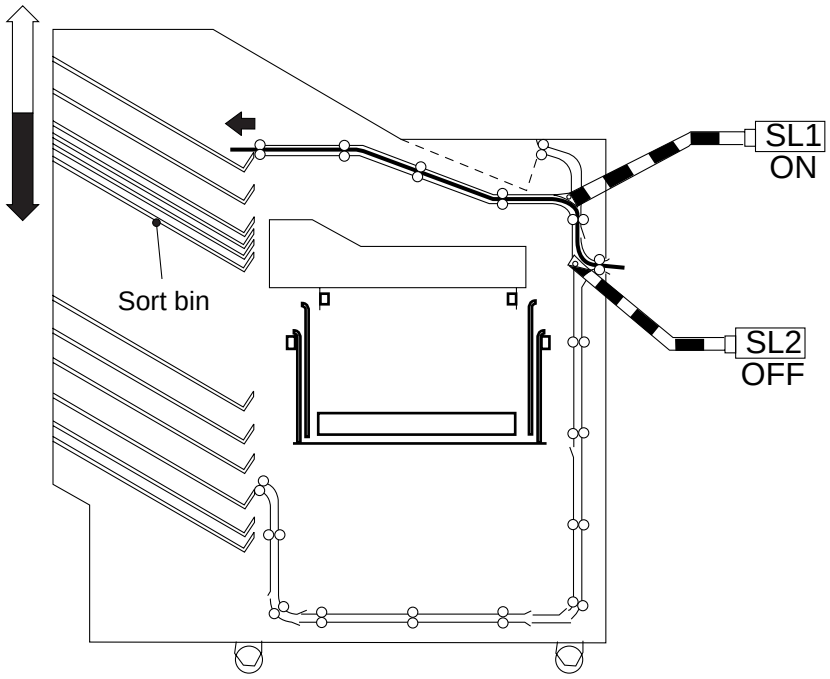

Figure 2-303a

b. Lower Module

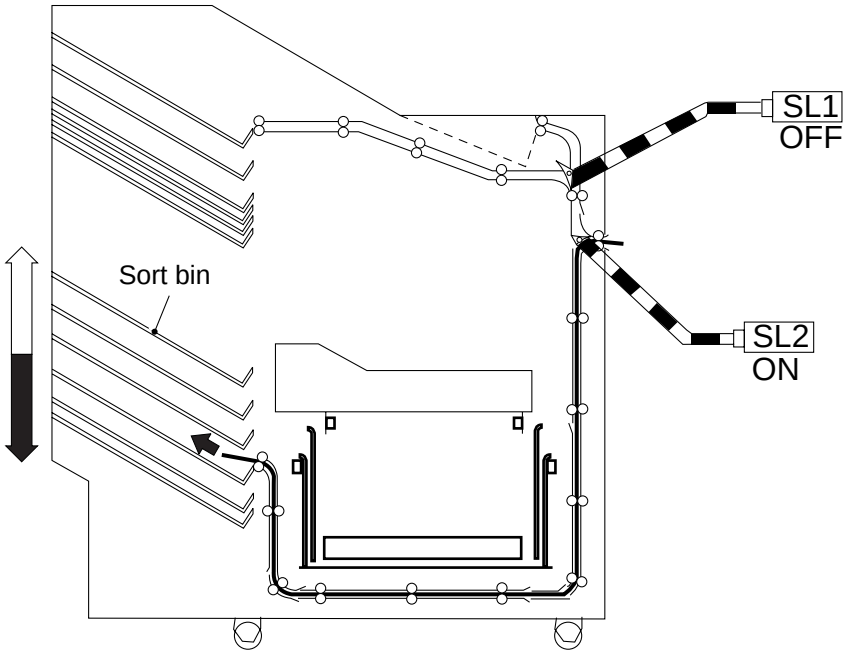

Figure 2-303b

COPYRIGHT © 1997 CANON INC.

C. Controlling the Feeding Speed

1. Outline

The feeding speed is controlled by the common path feeding motor (M1), upper path feeding motor (M2), and lower path feeding motor (M3).

The feeding speed may be either of the three types:

a. Process speed
b. Draw-in speed
c. Delivery speed

Each motor controls the feeding speed in its own range:

Motor	Range of control	Feeding speed
Common path feeding motor (M1)	317 to 528 mm/sec	Process speed
Upper path feeding motor (M2)	317 to 528 mm/sec	Process speed
	1250 mm/sec	Draw-in speed
	450 to 720 mm/sec	Delivery speed
Lower path feeding motor (M3)	317 to 528 mm/sec	Process speed
	1250 mm/sec	Draw-in speed
	450 to 720 mm/sec	Delivery speed

Table 2-301

2. Process Speed

The process speed is identical to the copier's process speed, and is controlled by the common path feeding motor (M1), upper path feeding motor (M2), and lower path feeding motor (M3).

3. Draw-In Speed

When a copy turns on the upper path paper sensor 2 (PI4) or the lower path paper sensor (PI14), the feeding speed is raised to increase the distance from the following copy.

The draw-in speed is controlled at all times by the upper path feeding motor (M2) or the lower path feeding motor (M3) according to the destination of the copy.

COPYRIGHT © 1997 CANON INC.
CANON FINISHER-B1 REV.0 MAY 1997 PRINTED IN JAPAN (IMPRIME AU JAPON)

4. Delivery Speed

When the copy has moved past the upper path paper sensor 2 (PI4) or the lower path paper sensor (PI14) and has moved a specific distance, the feeding speed is lowered to deliver the copy to a specific bin.

The delivery speed is controlled by the upper path feeding motor (M2) or the lower path feeding motor (M3) according to the destination of the copy.

5. Sequence of Operations (feeding in sort/staple sort mode)

a. Upper Bin Module

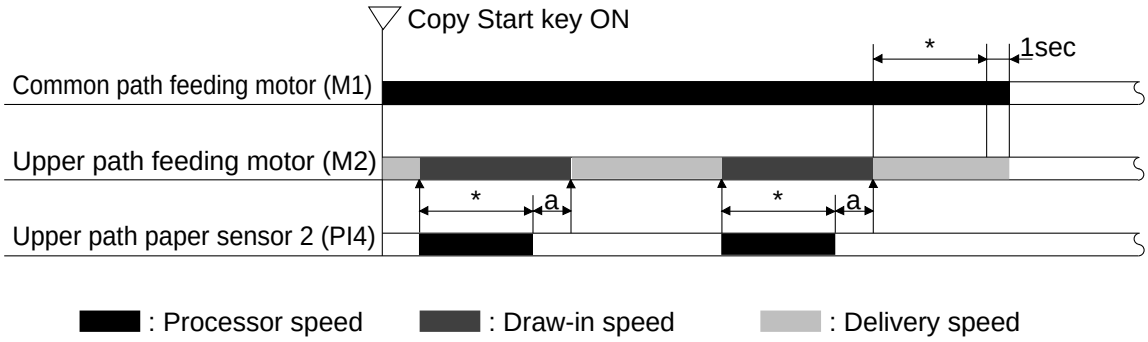

a: The copy is moved about 70 mm.
*: Varies depending on paper size.

Figure 2-304a

b. Lower Bin Module

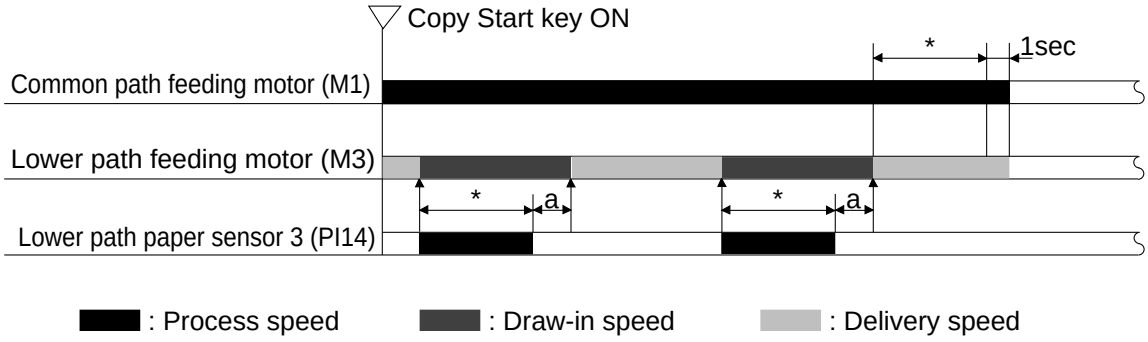

a: The copy paper is moved about 40 mm.
*: Varies depending on paper size.

Figure 2-304b

D. Controlling the Feeding Motor

Go through the following for an idea of the control circuitry of each feeding motor.

1. Common Path Feeding Motor

The common path feeding motor (M1) is a DC brushless motor with a built-in clock pulse generator. The CPU (IC1) on the finisher controller PCB sends to the common path feeding motor driver PCB the common path feeding motor drive signal (M1 ON) and the common path feeding motor feeding speed reference pulse signal (M1 SRP).

When the common path feeding motor (M1) rotates, the clock pulse generator sends clock pulses to the speed control circuit. The speed control circuit in turn compares the pulse signals (M1 SRP) and the clock pulses of the encoder to control the drive circuit so that both sets of pulses match.

Clock pulses are also sent to the finisher controller PCB. The CPU (IC1) monitors these clock pulses. When the number of pulses in a 1-sec period is not a specific value, the CPU will identify the condition as a common path feeding motor error, thereby stopping the motor and at the same time indicating 'E510' on the copier's control panel.

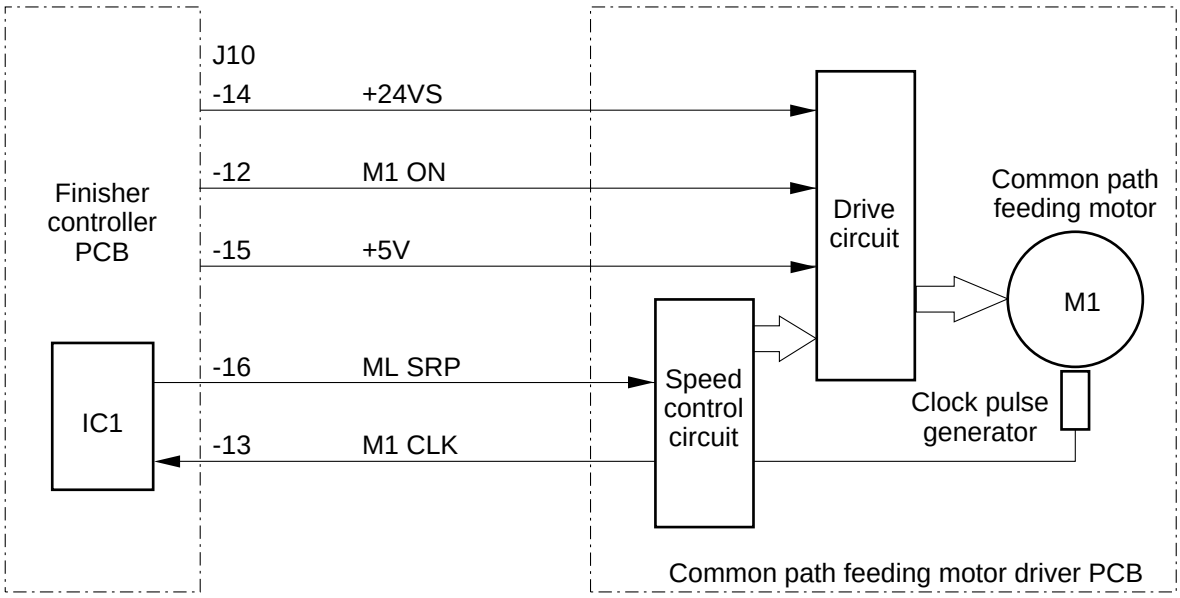

Figure 2-305

COPYRIGHT © 1997 CANON INC.
CANON FINISHER-B1 REV.0 MAY 1997 PRINTED IN JAPAN (IMPRIME AU JAPON)

2. Upper Path Feeding Motor (M2)

The upper path feeding motor (M2) is a DC brushless motor with a built-in clock pulse generator. The CPU (IC1) on the finisher controller PCB sends to the upper path feeding motor driver the upper path feeding motor drive signal (M2 ON), upper path feeding motor rotation direction signal (M2 F/R), and upper path feeding motor reference pulse signal (M2 SRP).

When the upper path feeding motor (M2) rotates, clock pulses (M2CLK) in a number proportional to the rotation of the motor are sent to the speed control circuit. The speed controller circuit, in turn, compares the upper path feeding motor reference pulse signal (M2 SRP) and the clock pulses, and controls the drive circuit so that both sets of pulses match.

When the rotation speed of the upper path feeding motor reaches a specific value, the upper path feeding motor controller PCB sends the constant speed state signal (M2LOCK=0) to the finisher controller PCB.

When a switch-over is made from draw-in speed to delivery speed, the CPU (IC1) causes the motor to rotate temporarily in reverse by sending the rotation signal (M2 F/R) to the upper path feeding motor controller PCB, thereby applying the brakes and instantaneously decreasing the feeding speed.

If the number of clock pulses in a 1-sec period falls short of a specific value, on the other hand, the CPU (IC1) will identify the condition as a motor error, thereby stopping the upper path feeding motor and at the same time indicating ‘E560’ on the copier’s control panel.

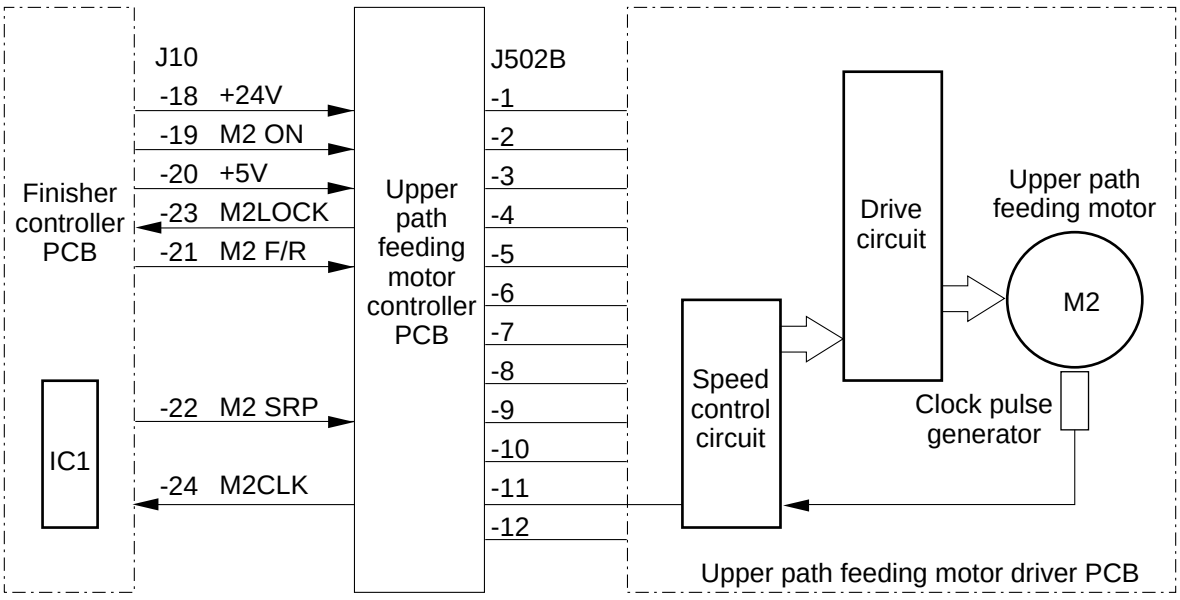

Figure 2-306

3. Lower Feeding Motor (M3)

The lower feeder motor (M3) is a DC brushless motor with a built-in clock pulse generator. The CPU (IC1) on the finisher controller PCB sends to the lower path feeding motor driver PCB the lower path feeding motor drive signal (M3 ON), lower path feeding motor rotation direction signal (M3 F/R), and lower path feeding motor reference pulse signal (M3 SRP).

When the lower path feeding motor (M3) rotates, clock pulses in a number proportional to the rotation of the motor are sent to the speed control circuit. The speed control circuit in turn compares the clock pulses against the lower pulse feeding motor reference pulse signal (M3 SPR), and controls the drive circuit so that both sets of pulses mach.

When the rotation speed of the upper path feeding motor reaches a specific value, the upper path feeding motor controller PCB sends the constant speed state signal (M3LOCK=0) to the finisher controller PCB.

When a switch-over is made from draw-in speed to delivery speed, the CPU (IC1) causes the motor to rotate temporarily in reverse by sending the lower path feeding motor rotation direction signal (M3 F/R) to the drive circuit, thereby applying the brakes and instantaneously decreasing the feeding speed.

The CPU (IC1) monitors the clock pulses (M3CLK). If the number of clock pulses within a 1-sec period fails to reach a specific value, the CPU will identify the condition as a motor error, thereby stopping the lower path feeding motor and at the same time indicating ‘E561’ on the copier’s control panel.

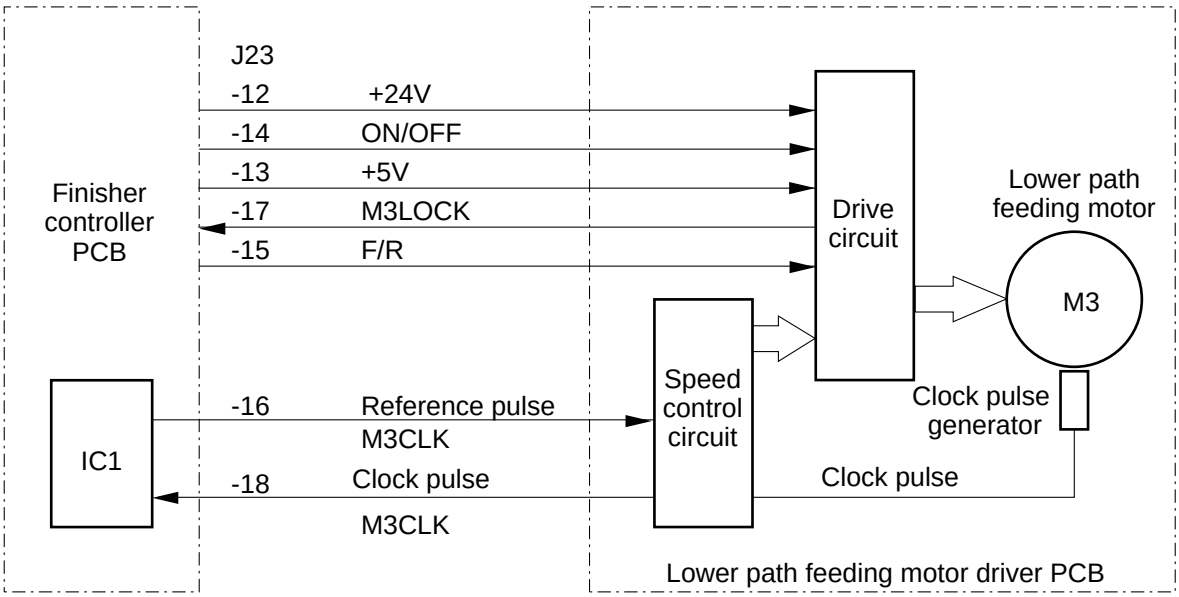

Figure 2-307

COPYRIGHT © 1997 CANON INC.

E. Paddle

1. Outline

The finisher's sort bin delivery slot is equipped with a paddle (upper/lower). Each paddle is used to prevent jams by ensuring proper delivery of copies without collisions. The paddles are driven by paddle solenoids (SL5, SL6) and used to hold the trailing edges of copies in the bins.

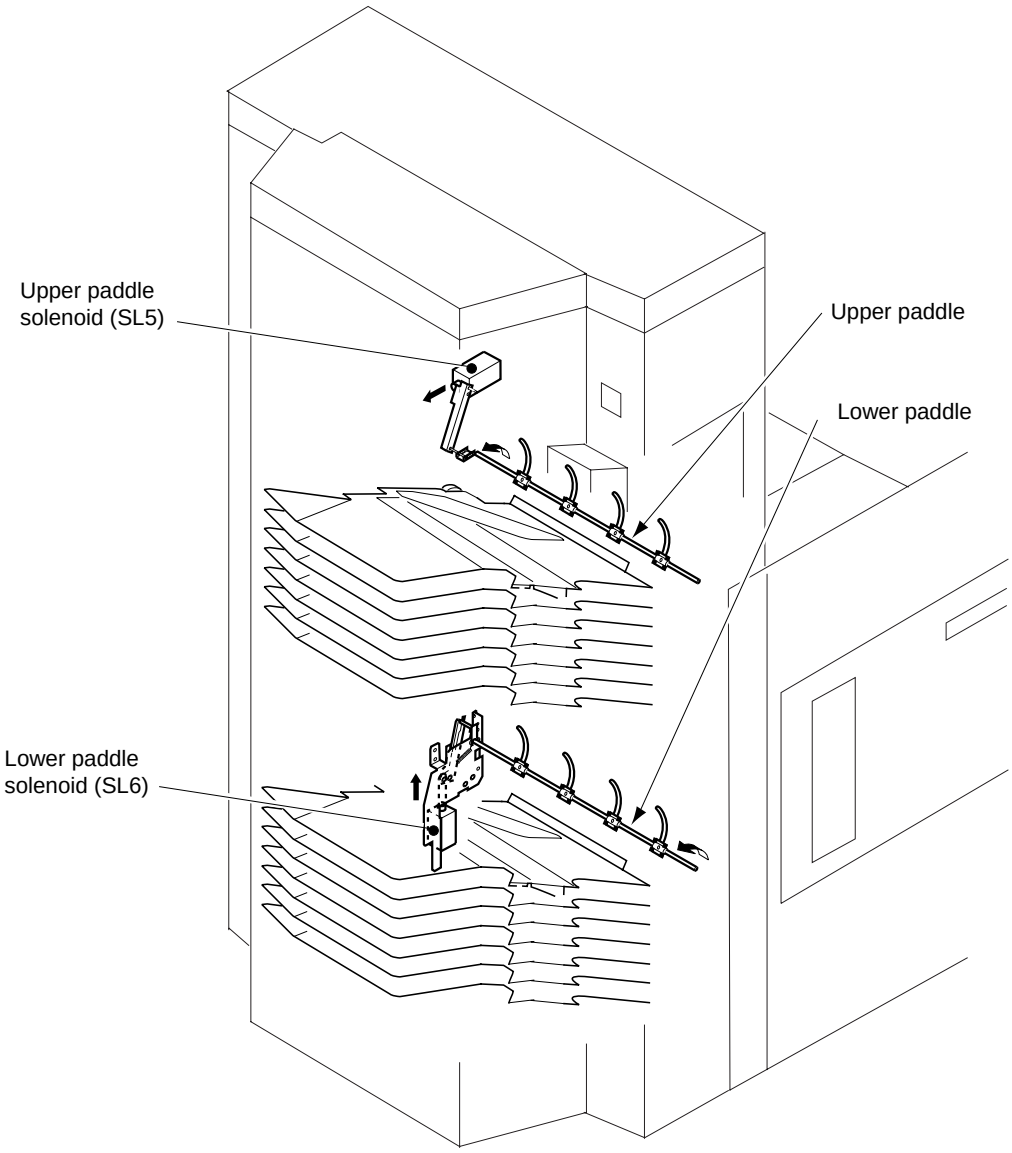

Figure 2-308

2. Operation

The paddle is operated when copy paper is delivered to a bin in fold mode.

When copy paper has been delivered to a bin, the guide bar is operated to keep it in order. The guide bar is then returned to escape position, and the paddle solenoid is turned on for about 100 msec, operating the paddle to make sure that the copy paper is pushed inside the bin if its trailing edge is on the bin rear end wall.

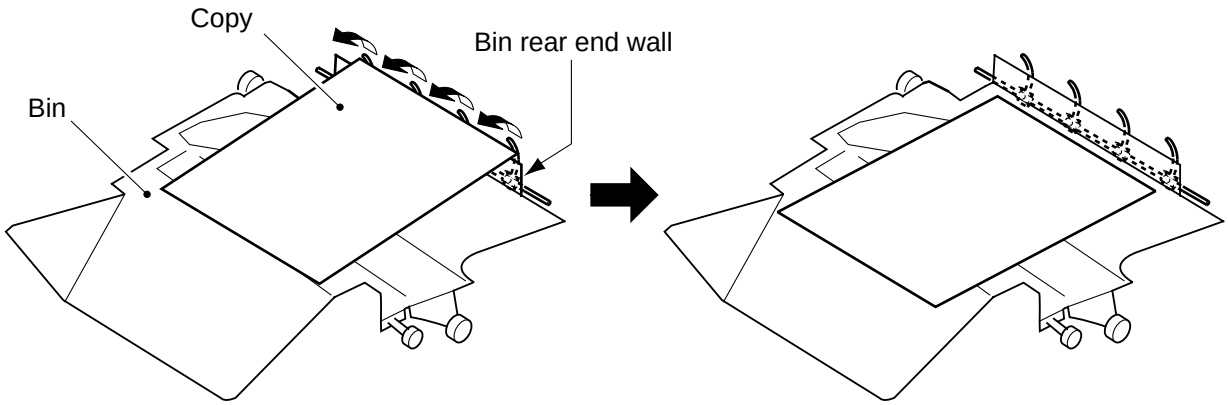

Figure 2-309

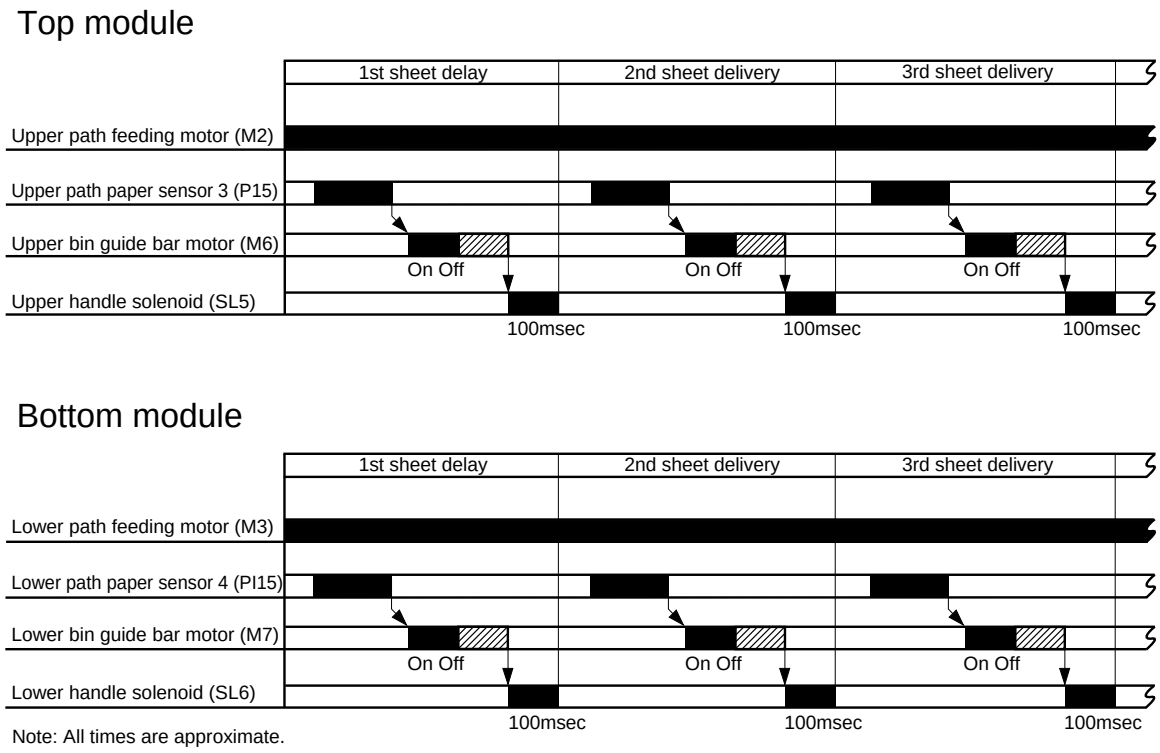

Figure 2-310

COPYRIGHT © 1997 CANON INC.

F. Limitless Sorting

The finisher is provided with a limitless sorting function, and does not impose a limit to the copy count in sort and staple sort modes. (However, the originals set in the feeder must be a specific number according to the maximum number of copies to be stacked in each bin.)

EX : If 110 A4 originals are to be copied for 2 sets and stapling is desired,
100 copies each will be sorted into bin 1 and bin 2 of the upper bin module; then, the remaining 10 copies each will be sorted into bin 6 and bin 5 of the lower bin module. Thereafter, the operation will be ended without stapling.

The finisher's limitless sorting may be of either of two types according to the copy size:

1. maximum size is B4 or smaller.
2. maximum size is larger than B4

1. Maximum Size is B4 or Smaller

The finisher starts limitless sort mode when the following is set on the copier:

1. In sort mode, the copy count is set in such a way that 2000 copies or more (about 260 mm or more) will be stacked on the stacker tray (or, 100 sets or more).
2. In staple sort mode, the copy count is set in such a way that 2000 copies or more (about 260 mm or more) will be stacked on the stacker tray (or, 100 sets or more).
3. In folded paper mode, the copy count is set in such a way that 10 sets or more will be stacked on the stacker tray.

When copying is started under any of the above conditions, the operation will be stopped when the maximum number for the stacker tray is reached. The operation will automatically be resumed when the copies are removed from the stacker tray. As many copies as set are made by repeating this series of operations.

COPYRIGHT © 1997 CANON INC.

Go through the following to learn how the finisher operates in each mode.

Mode Settings
- A4 original
- A4 copy
- Staple sort mode
- Copy count set to 105 sets

1) The Copy Start key is pressed.

2) The originals set in the feeder are copied for 6 sets in staple sort mode and delivered to the upper bin module.

3) The 6 sets of copies delivered to the upper bin module are stapled and stacked for each bin.

4) While step 3) is performed, the 6 sets of copies are made in staple sort mode and delivered to the lower bin module.

5) The 6 sets of copies delivered to the lower module are stapled and stacked for each bin.

6) While step 5) is performed, 6 sets of copies are made in staple sort mode and delivered to the upper bin module.

7) Steps 2) through 6) are repeated until as many as 2000 copies (260 mm high) or 100 sets are stacked on the stacker tray, and the operation is stopped. (The copier's copy count indicator will automatically be '1' at the end of the operation.)*

COPYRIGHT © 1997 CANON INC.
CANON FINISHER-B1 REV.0 MAY 1997 PRINTED IN JAPAN (IMPRIME AU JAPON)



8) When all copies are removed from the stacker tray, copying starts once gain automatically.



9) The remaining 5 sets are made in staple sort mode, and the operation ends.

*When more than 1200 copies (about 156 mm) are stacked on the stacker tray, sorting will be in the upper module only, and the lower bin module will not be used. For details, see p. 2-173.

COPYRIGHT © 1997 CANON INC.

2. Maximum Size is Larger than B4

The following setting will turn on limitless sort mode. The operation will stop temporarily when as many copies as there are bins (12 sets) have been made; the operation will automatically resume as soon as the copies are removed from the bins. As many copies as set are made by repeating these series of operations:

1. In sort or staple sort mode, the copy count is set to '13' sets or higher (more than the number of bins).

Go through the following to learn how the finisher operates in each mode.

Mode Settings

- A3 original
- A3 copy
- Staple sort mode
- Copy count set to '15' sets

1) The Copy Start key is pressed. (The copier's copy count indicator will automatically be '6', and copying will start.)



2) The originals in the feeder are copied in staple sort mode (6 sets to the upper bin module, and 6 sets to the lower bin module), and the operation is ended after stapling. (Thereafter, the copier's copy count indicator will indicate '3'.)



3) The operation will automatically be resumed when all copies are removed from the bins.



4) The remaining 3 sets are copied in staple sort mode, and the operation is ended.

COPYRIGHT © 1997 CANON INC.

G. Overstacking

1. Outline

Each delivery slot has its own limit as to how many sheets may be stacked as shown in Tables 2-302 and -303, and any excess will be identified as an overstacking condition:

a. Without Folded Paper

Paper size	Maximum number of sheets		
	Non-sort tray	Bin	Stacker tray
A3, 279.4mm × 431.8mm (11"×17")	250 sheets	50 sheets	
B4, LGL			Equivalent of 2000 sheets (about 260 mm high) or 100 sets (in staple sort mode)
A4, B5, A4R, LTR, LTRR		100 sheets	

Table 2-302

b. With Folded Paper

Folded paper size	Maximum number of sheets		
	Non-sort tray	Bin	Stacker tray
A3, 279.4mm × 431.8mm (11"×17"), B4	50 sheets (with 10 or fewer folded sheets)	100 sheets (with 10 or fewer folded sheets)*	10 sets

Table 2-303

*Each folded sheet is counted as 10 spread sheets.

COPYRIGHT © 1997 CANON INC.

2. Operation in Response to Overstacking

When the number of sheets exceeds the limit imposed on each delivery slot in a specific mode, the finisher will operate as follows:

a. Non-Sort Mode

Operation

Settings

- Feeder in use
- 10 A3 originals
- A3 copy paper
- Without folded sheet
- Copy count set to '30' sets

1) The Copy Start key is pressed.



2) A set of 30 copies are delivered to the non-sort tray for each original.



3) The operation is stopped as soon as the 250th copy is delivered to the non-sort tray.



4) When the copies delivered to the non-sort tray are removed, copying will start automatically once again to make the remaining number of copies (50) for delivery to the non-sort tray.

Note:

If with folded paper mode is selected for non-sort mode, the operation will stop when

- The 10th folded sheet has been delivered, or
- The 50th copy has been delivered to the non-sort tray (if 9 or fewer folded sheets exist).

COPYRIGHT © 1997 CANON INC.

b. Sort/Staple Sort Mode

Operation 1

Settings

- Feeder in use
- 55 A3 originals (to suit capacity of feeder)
- A3 copy paper
- Copy count set to '15' sets

1) The Copy Start key is pressed.



2) Copies of as many as 50 originals set in the feeder are delivered to each bin of the upper bin module. (Stapling will not be performed even in staple sort mode.)



3) Copies of the remaining originals (5) are delivered to each bin of the lower bin module. (Stapling will not be performed even in staple sort mode.)



4) After step 3), the operation will be stopped. (At this time, the copier's copy count indicator indicates '9'.)



5) When all the copies delivered to each of the bins of the finisher are removed, copying will start automatically once again.



6) The operation will be ended after repeating steps 2) through 5) for as many copies as set.

Note:

If with folded paper mode is selected for sort/staple sort mode, the modules are switched when

- The 10th folded sheet has been delivered to each bin.
- The 100th copy has been delivered to each bin (if 9 or fewer folded sheets exist, a single folded sheet counted as 10 copies).

Operation 2

Settings

- Feeder in use
- 105 small-size originals (to suit capacity of feeder)
- Small-size copy paper
- Copy count set to '15' sets

1) The Copy Start key is pressed.



2) Copies of as many as 100 originals set in the feeder are delivered to each bin of the upper bin module.



3) Stacking operation is repeated for each bin for the stacks delivered to the upper bin module. (Stapling will not be performed even in staple sort mode.)



4) While step 3) is being performed, copies of the remaining originals (5) are delivered to the lower bin module.



5) Stacking operation is repeated for each bin for the stacks delivered to the lower bin module. (Stapling is not performed even in staple sort mode.)



6) While step 5) is being performed, as many as 100 copies are delivered to each bin of the upper module.



7) The operation will be ended after repeating steps 3) through 6) for as many copies as set.

Note:

When as many as 1200 copies (about 156 mm high) have been stacked on the stacker tray while the above steps are performed, the use of the lower bin module will be ended; thereafter, as many as 2000 copies (about 260 mm high) will be handled by the upper bin module. (For details, see p. 2-173.)

COPYRIGHT © 1997 CANON INC.

H. Jams

1. Outline

A jam in the finisher may be either a "copy paper jam" or a "copy paper stack jam." Here, discussiond will be on copy paper jams; for copy paper stack jams, see p. 2-148.

The finisher is equipped with 18 sensors and 2 pairs of sensors as shown in Figure 2-308 to find out whether copy paper is moved properly. The CPU identifies a jam condition at such times as programmed in advance in reference to the signals from these sensors. When the CPU identifies a jam, it sends the jam signal to the copier, which in response will stop copying operation and at the same time indicate the Jam message on its control panel and the finisher's control panel.

The CPU identifies a jam condition for the following:

a. Paper exists at a specific sensor at time of power-on, at the end of warm-up, or during standby. (power-on jam)
b. The copy does not reach a specific sensor within a specific period of time. (delay jam)
c. The copy does not move past a specific sensor within a specific period of time. (stationary jam)
d. The bin outside paper sensor turns on while the copy is being fed. (bin outside jam)
e. When the front cover, upper cover, bin cover (while being locked), access door (while not being accessed), folder unit upper cover, or folder unit is opened while the finisher is in operation. (door open jam)

When the Copy Start key is pressed after any of the above conditions has occurred, the jam recovery function will turn on to automatically make the remaining number of copies, excluding the copies which have reached each bin by then. (This, however, does not apply to bin outside jams power-on jams, and door open jams.)

COPYRIGHT © 1997 CANON INC.

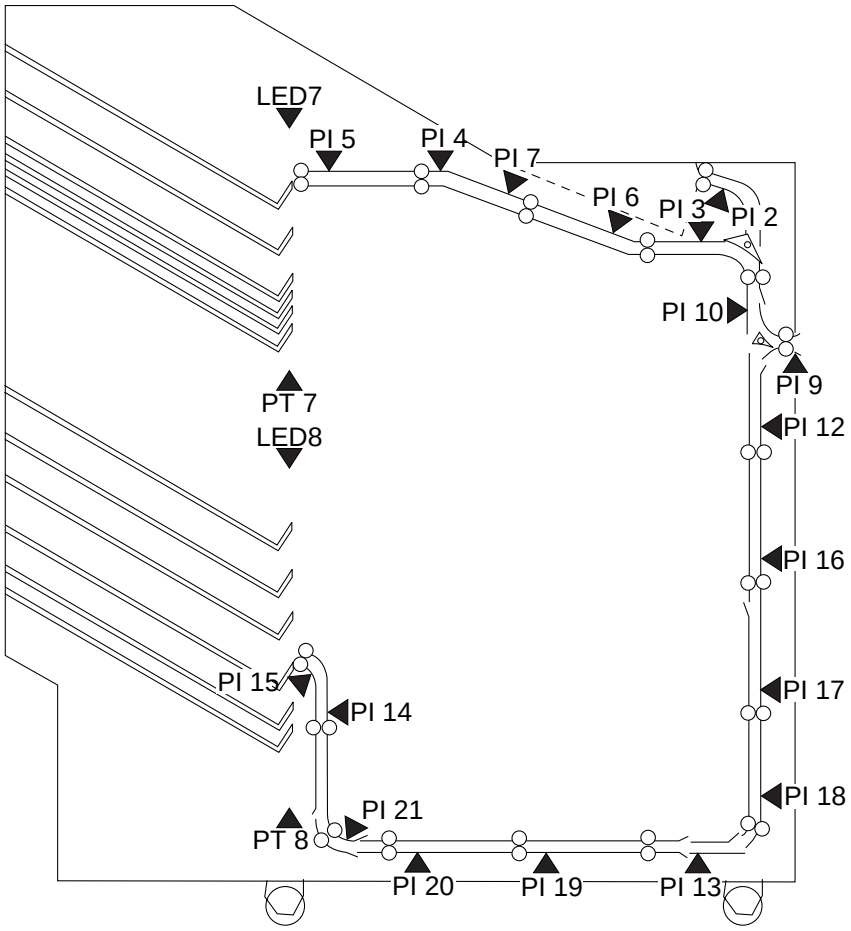

Figure 2-311

	Sensor	Type of jam
PI2	Non-sort path sensor	Delay/ stationary jam
PI3	Upper path paper sensor 1	
PI4	Upper path paper sensor 2	
PI5	Upper path paper sensor 3	
PI6	Upper path stationary paper sensor 1	Power-on jam
PI7	Upper path stationary paper sensor 2	
PI9	Common path paper sensor 1	Delay/ stationary jam
PI10	Common path paper sensor 2	
PI12	Lower path paper sensor 1	
PI13	Lower path paper sensor 2	
PI14	Lower path paper sensor 3	
PI15	Lower path paper sensor 4	

	Sensor	Type of jam
PI16	Vertical path stationary paper sensor 1	Power-on jam
PI17	Vertical path stationary paper sensor 2	
PI18	Vertical path stationary paper sensor 3	
PI19	Lower path stationary paper sensor 1	
PI20	Lower path stationary paper sensor 2	
PI21	Lower path stationary paper sensor 3	
LED7	Upper bin outside sensor	Upper bin outside stationary jam
PT7		
LED8	Lower bin outside paper sensor	Lower bin outside stationary jam
PT8		

Table 2-304

COPYRIGHT © 1997 CANON INC.

2. Checking for Jams

a. Non-Sort Path Delay Jam

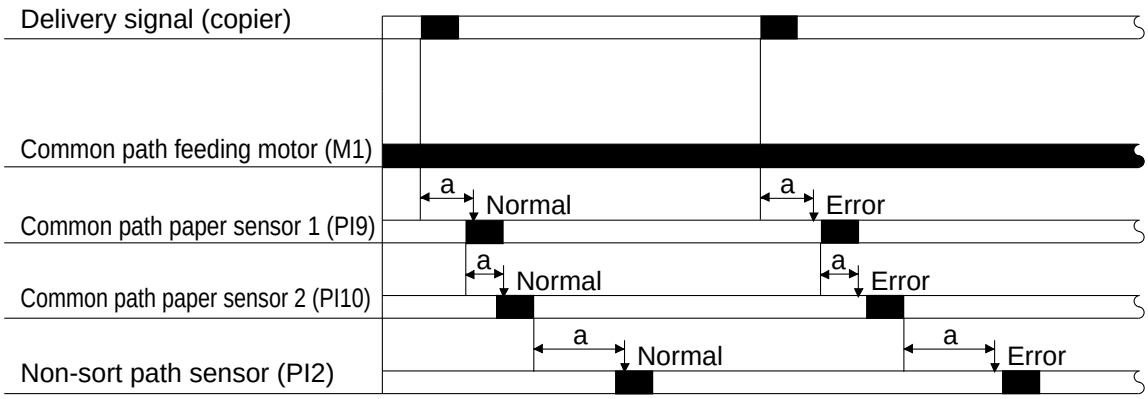

a: Varies depending on paper size.

Figure 2-312

b. Non-Sort Path Delay Jam

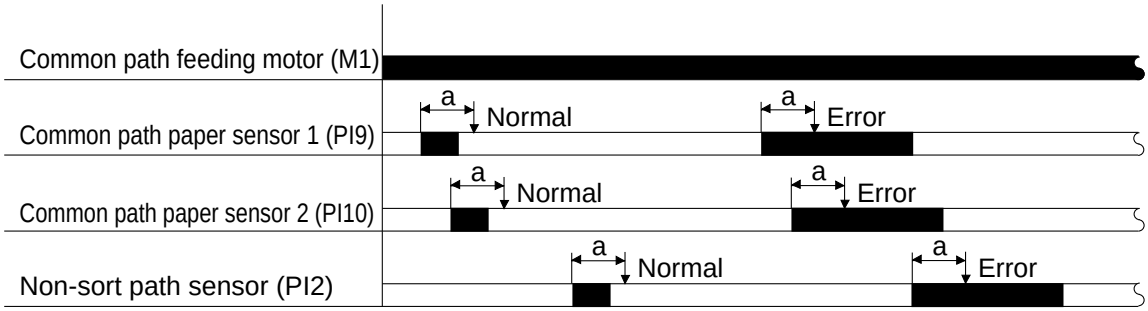

a: Time equivalent to 'paper length+ about 60 mm'.

Figure 2-313

c. Upper Path Delay Jam

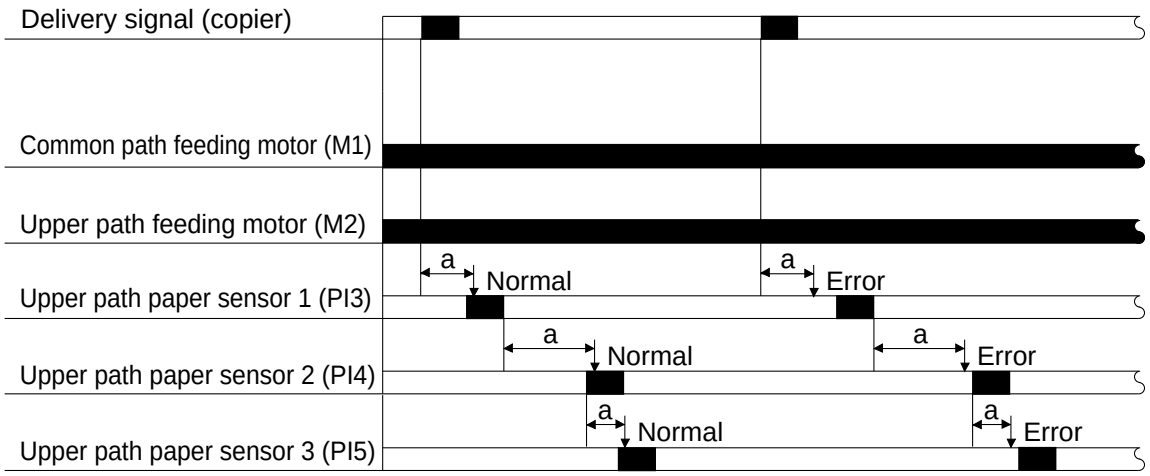

a: Varies depending on paper size.

Figure 2-314

d. Upper Path Stationary Paper Jam

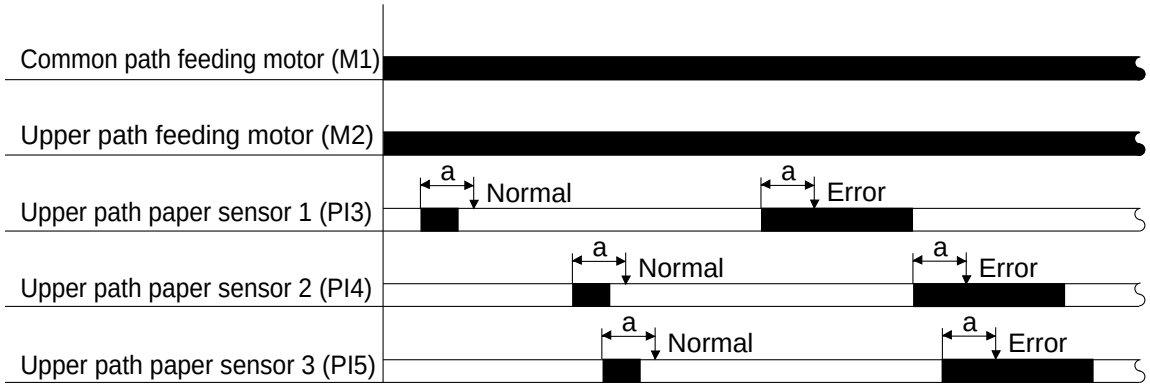

a: Time equivalent to 'paper length + about 60 mm'.

Figure 2-315

COPYRIGHT © 1997 CANON INC.

e. Lower Path Delay Jam

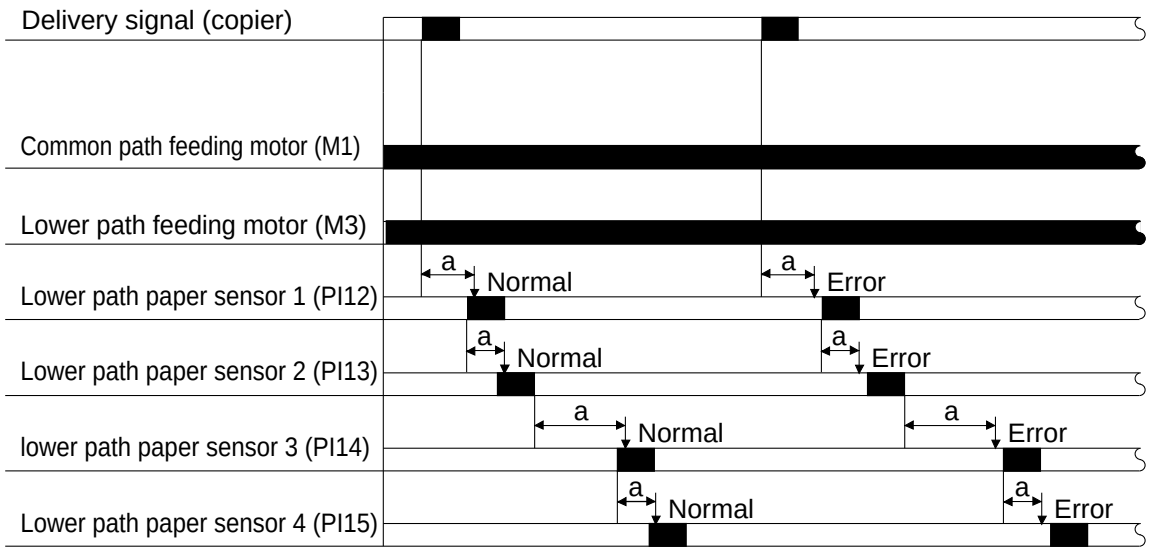

a: Varies depending on paper size.

Figure 2-316

f. Lower Path Delay Jam

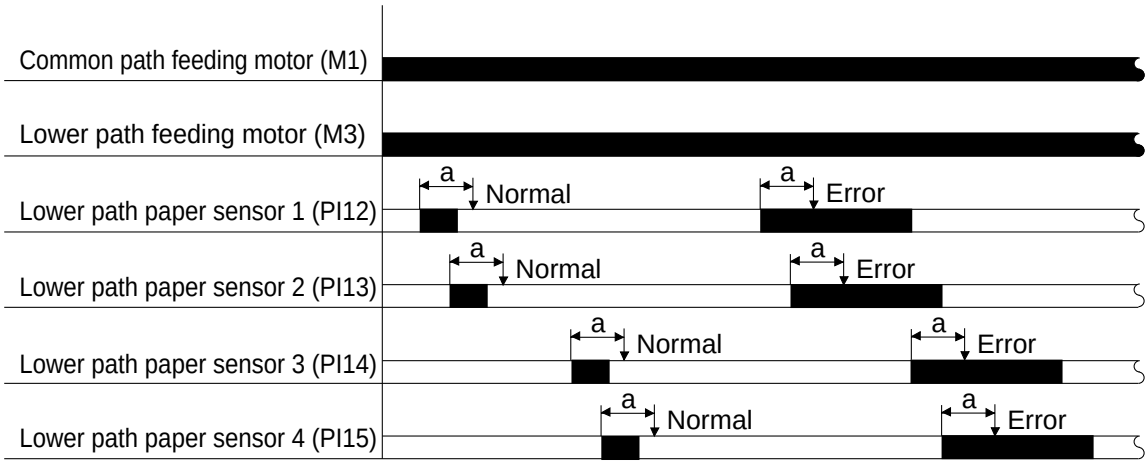

a: Time equivalent to 'paper length + about 60 mm'.

Figure 2-317

COPYRIGHT © 1997 CANON INC.

g. Upper Bin Outside Jam

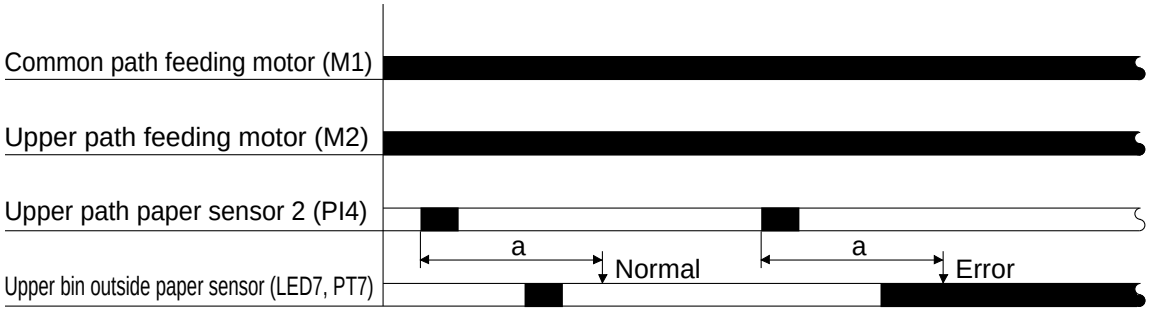

a: End of delivery.

Figure 2-318

h. Lower Bin Outside Jam

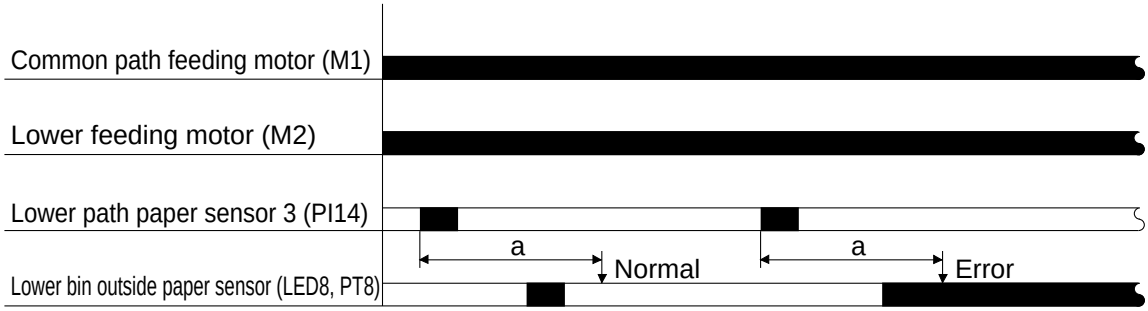

a: End of delivery.

Figure 2-319

COPYRIGHT © 1997 CANON INC.

3. Operation in Response to a Jam

a. Outline

In addition to a sheet feeding system, the finisher is equipped with a stack feeding system, which consists of the stack processing unit and the stacker unit. (For stack jams, see p. 2-150.)

The finisher operates differently for a sheet jam and a stack jam. A jam may take any of the following forms:

1. A single jam of a sheet.
2. A single jam of a stack.
3. A jam of both sheet and stack.

COPYRIGHT © 1997 CANON INC.

b. Single Jam of a Sheet

When a sheet jam occurs, the finisher stops the drive to the sheet feeding system. If a stack is being fed, it will be moved as needed and both the stack processing unit and the stacker unit will be returned to home position. Thereafter, the Jam message (sheet feeding system) will be indicated on the copier's control panel and the finisher's display.

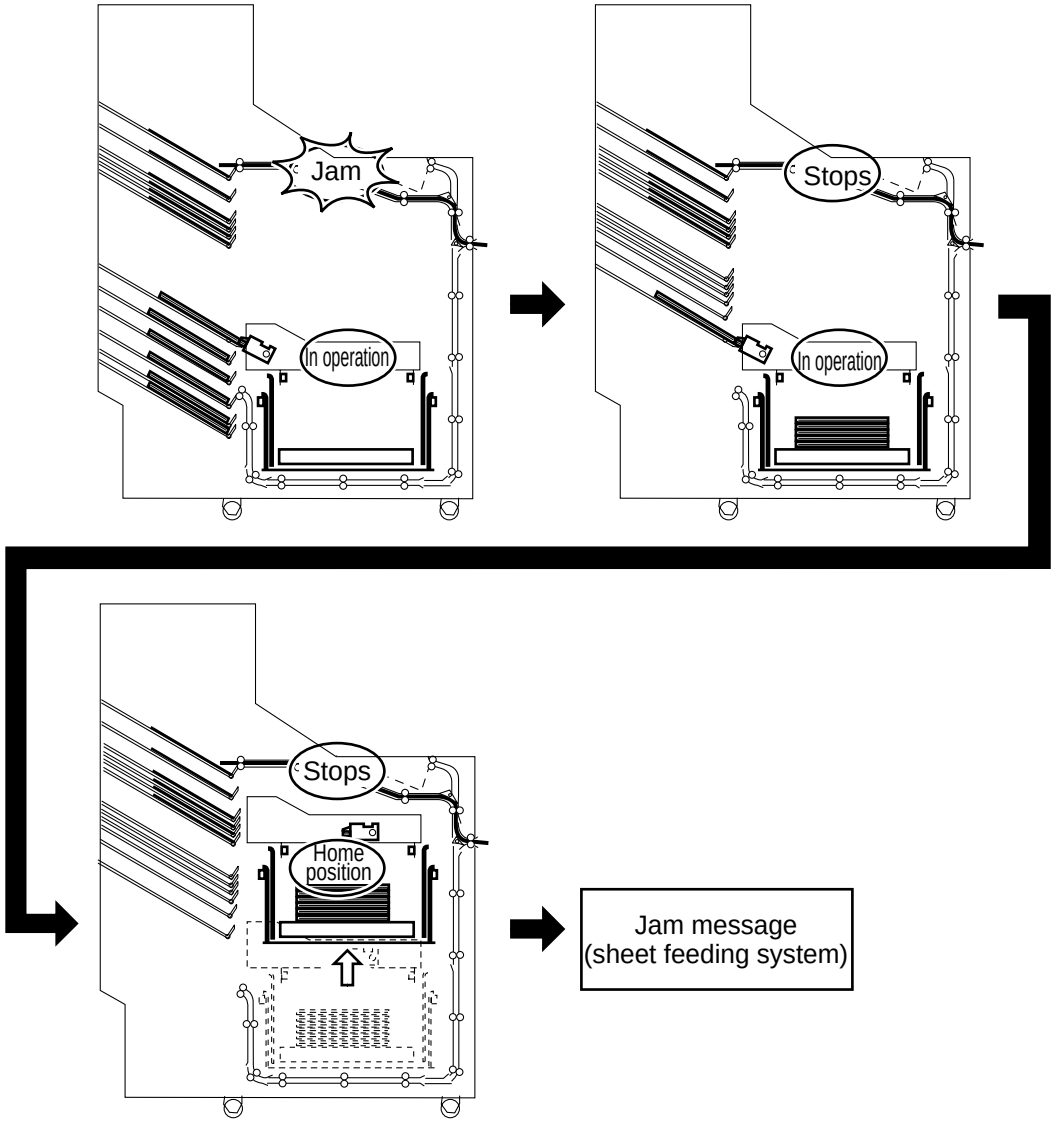

Figure 2-320

COPYRIGHT © 1997 CANON INC.

c. Single Jam of a Stack

When a stack jam occurs, the finisher stops the drive to the stack feeding system. If a sheet is being fed, it will be moved as needed. Thereafter, the Jam message (stack feeding system) will be indicated on the copier's control panel and the finisher's display.

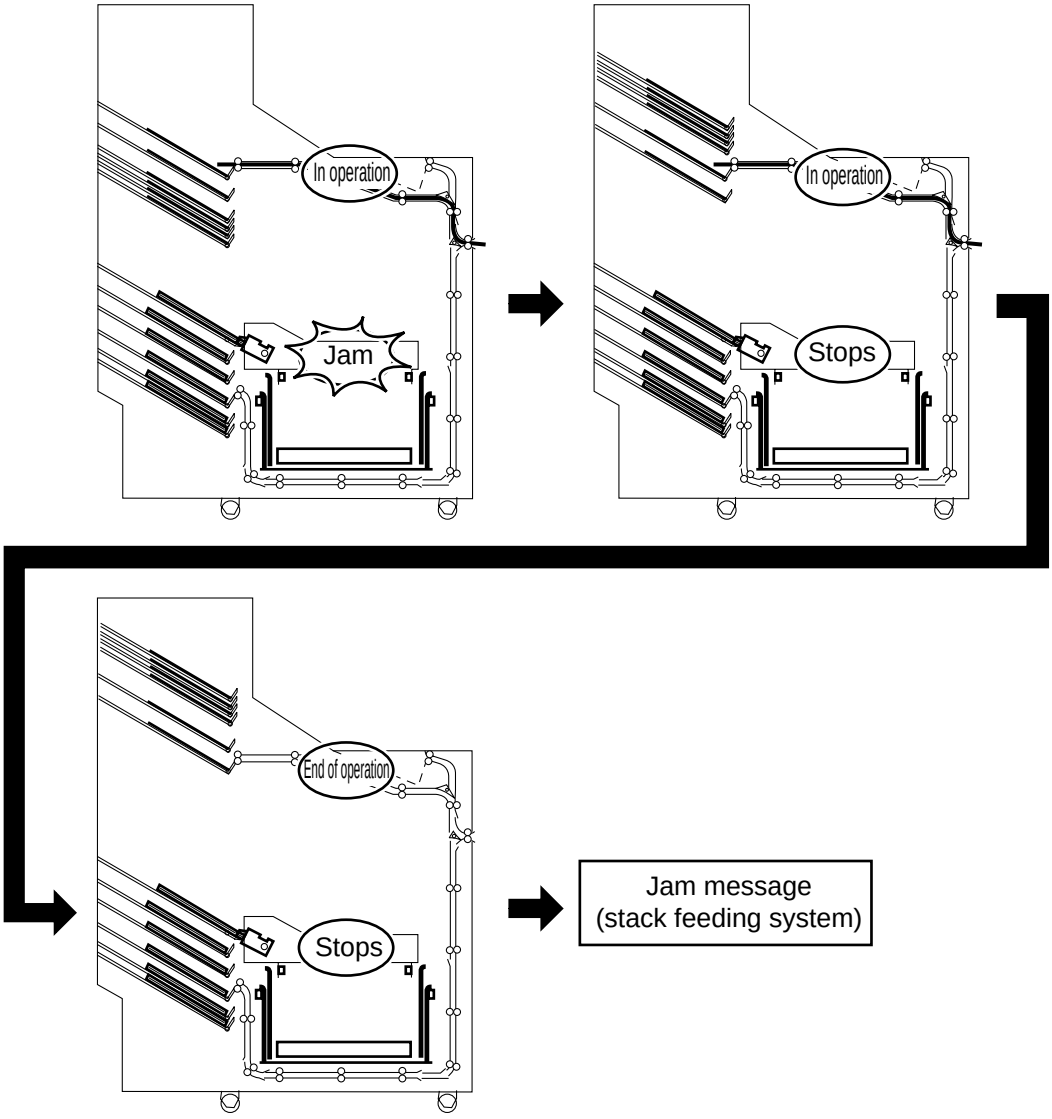

Figure 2-321

d. Simultaneous Jams of a Sheet and a Stack

When both sheet and stack jams occur at the same time, the finisher stops the drive to both sheet feeding system and stack feeding system. Thereafter, the Jam message (stack feeding system) will be indicated on the copier's control panel and the finisher's display.

When the user finishes jam access and closes the finisher's covers, the finisher will return the harness unit and the stacker unit to home position. Thereafter, the jam message (sheet feeding system) will be indicated on the copier's control panel and the finisher's display.

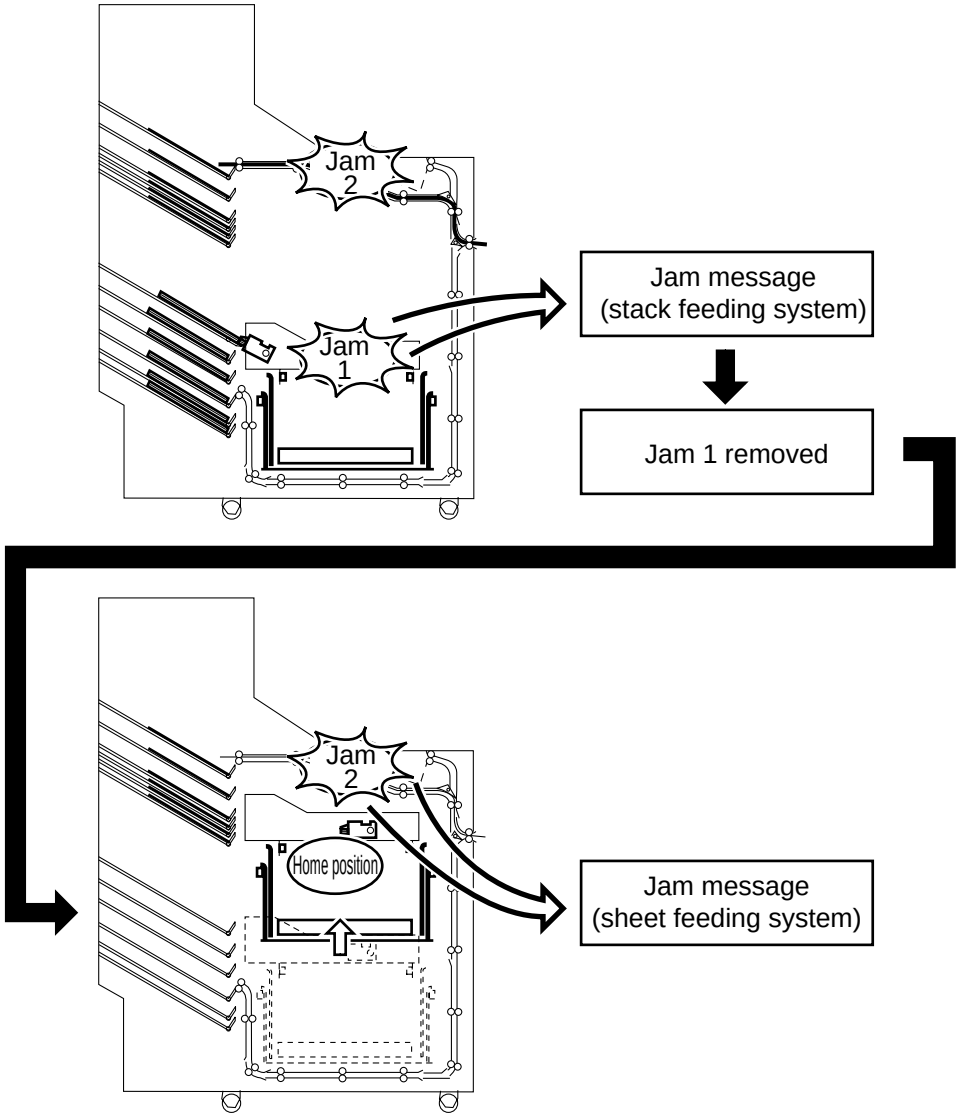

Figure 2-322

COPYRIGHT © 1997 CANON INC.

IV. BIN UNIT DRIVE SYSTEM

A. Outline

The finisher's bin unit consists of two bin modules (upper bin module and lower bin module), and these modules are designed to operate independently of each other.

The drive system of the bin unit consists of the following:

- Upper bin module drive system
- Lower bin module drive system
- Upper bin module guide bar drive system
- Lower bin module guide bar drive system

The bin unit is equipped with a cover used to protect both modules, and the cover is closed while the bin unit is in operation.

The bins in the upper bin module are driven by the upper bin shift motor (M4), and is designed to move up and down. The guide bar is driven by the upper bin guide bar motor (M6), and is deigned to put the copies delivered in each bin into order.

The bins in the lower bin module are driven by the lower bin shift motor (M5), and is designed to move up and down. The guide bar is driven by the lower bin guide bar motor (M7), and is designed to put the copies delivered to each bin into order.

COPYRIGHT © 1997 CANON INC.

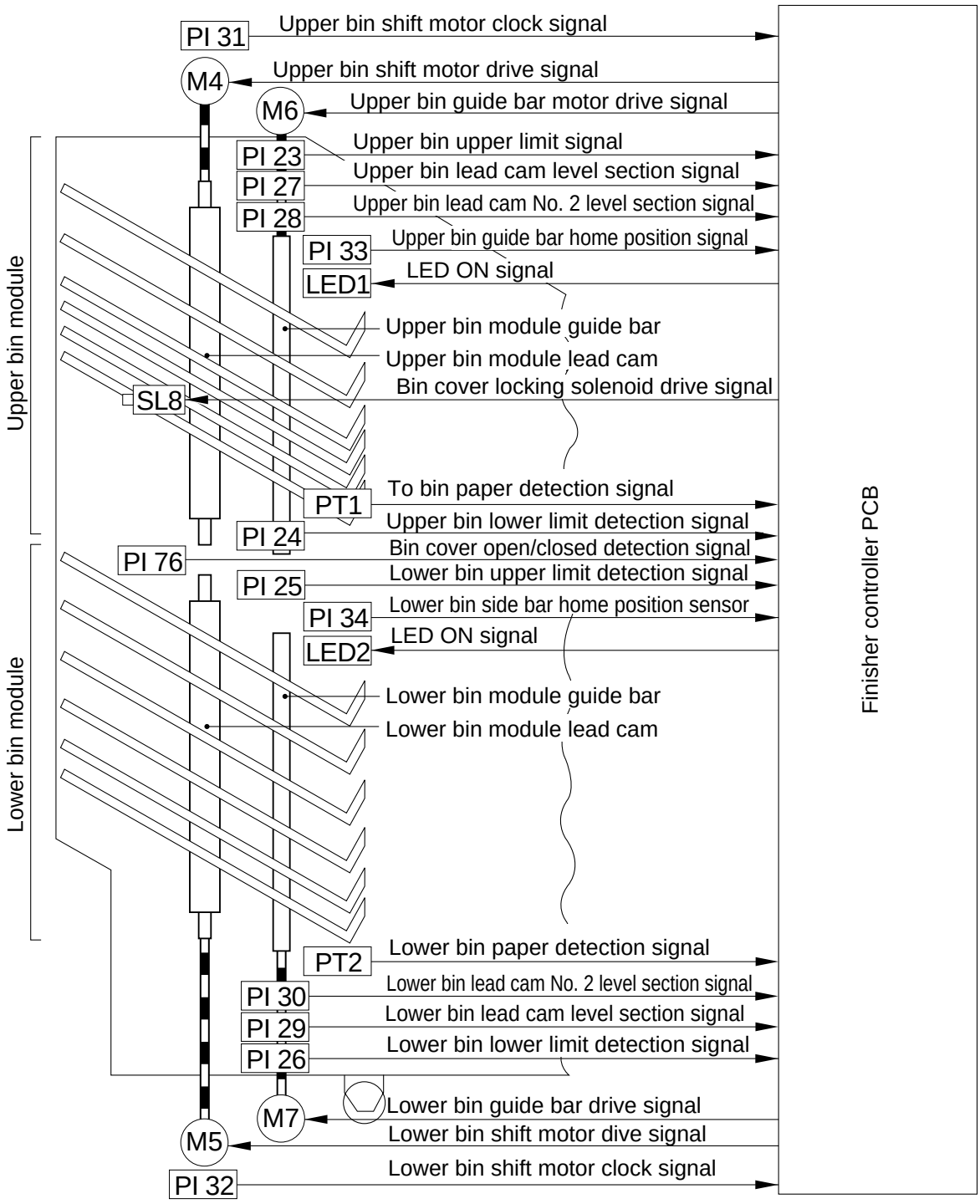

Figure 2-401

COPYRIGHT © 1997 CANON INC.

B. Bin Unit

1. Construction of the Bin Unit

Both the upper bin module and the lower bin module consist of six bins each, and they are fixed in place by engagement of rolls at front and rear and three lead cams as shown.

The position of the upper bin module is monitored by the upper limit sensor PI23 and the lower limit sensor PI24 while that of the lower bin module is monitored by the upper limit sensor PI25 and the lower limit sensor PI26.

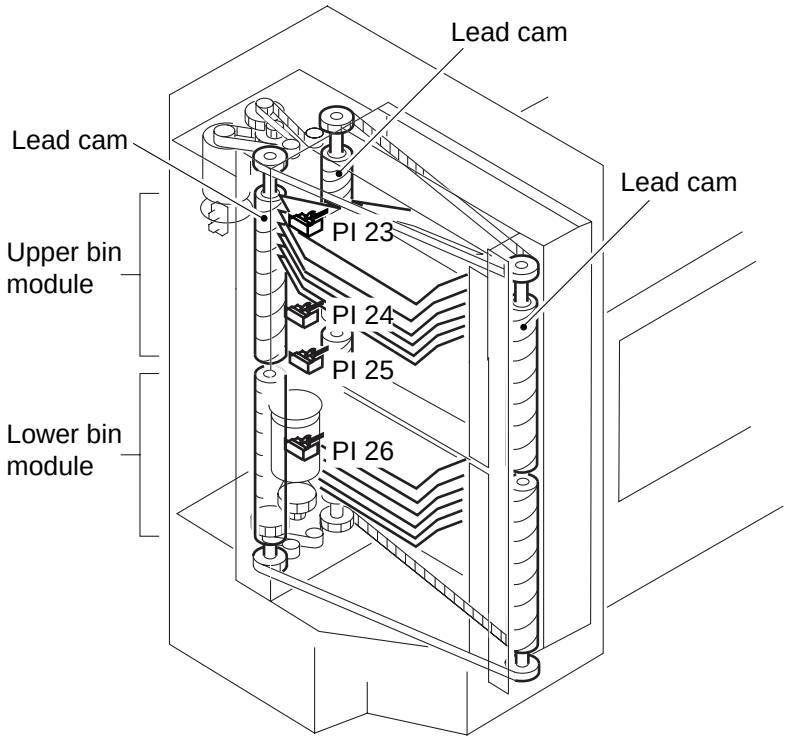

Figure 2-402

2. Operation of the Bin Modules

a. Outline

Both the upper bin module and the lower bin module move up and down for sorting, stapling, and paper removal. If folding paper exists, however, they stop at a specific position and will not move:

Each module may stop at either of the following:

- Home position
- Delivery reception start position (without folded paper)
- Delivery reception start position (with folded paper)
- Stack removal start position

b. Home Position

The home position of the upper bin module is the point away in upward direction by a single bin from where the upper bin lower limit sensor (PI24) detects the upper bin module.

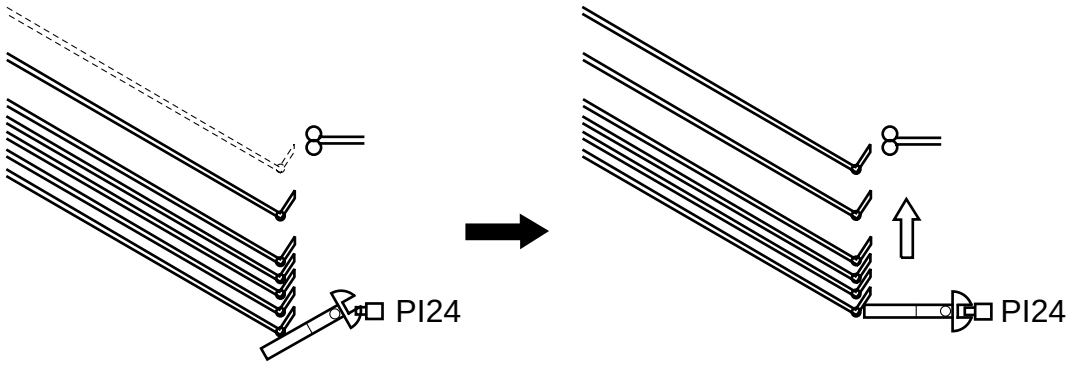

Home position of the upper bin module

Figure 2-403

COPYRIGHT © 1997 CANON INC.

The position of the lower bin module is the point away in upward direction by six bins from where the lower bin limit sensor (PI26) detects the lower bin module.

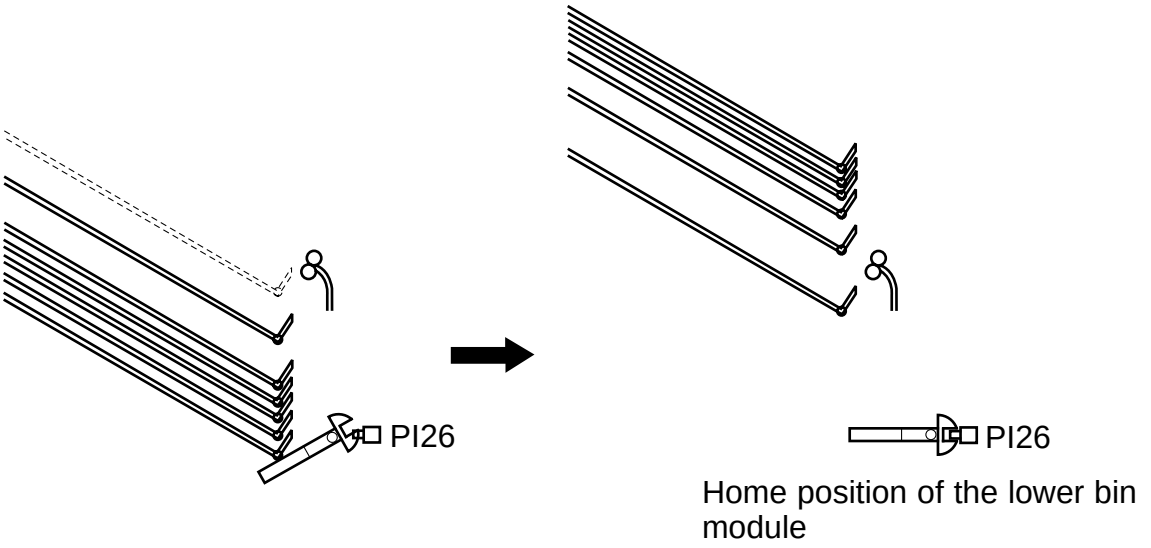

Figure 2-404

c. Delivery Reception Start Position (without folded paper)

The delivery reception start position (without folded paper) of both upper bin module and the lower bin module is the same as the home position of each module.

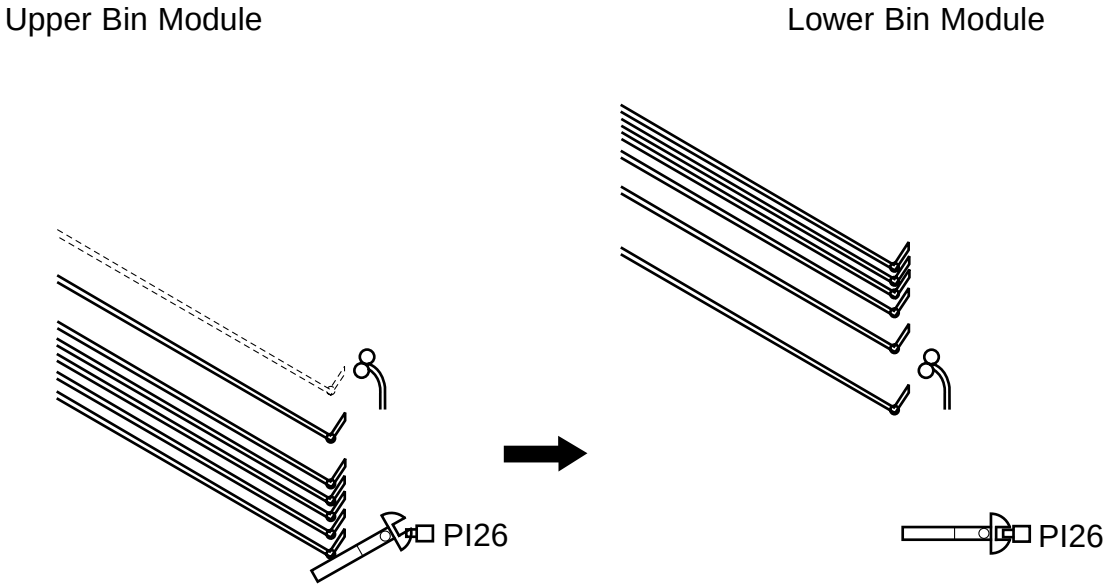

Figure 2-405

COPYRIGHT © 1997 CANON INC.

d. Delivery Reception Start Position (with folded paper)

The delivery reception start position (with folded paper) of the upper bin module is the point away in downward direction by a single bin from the home position. In this position, the lower limit sensor (PI24) of the upper bin module detects the upper bin module.

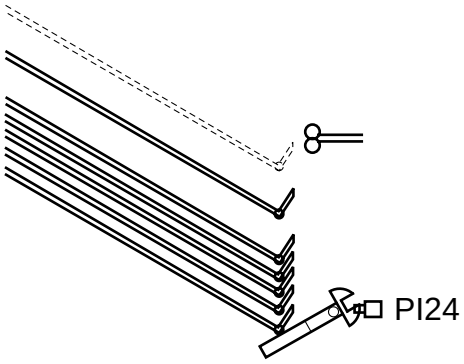

Figure 2-406

The delivery reception start position (with folded paper) of the lower module is the point away in downward direction by six bins from the home position. In this position, the lower limit sensor (PI21) detects the lower bin module.

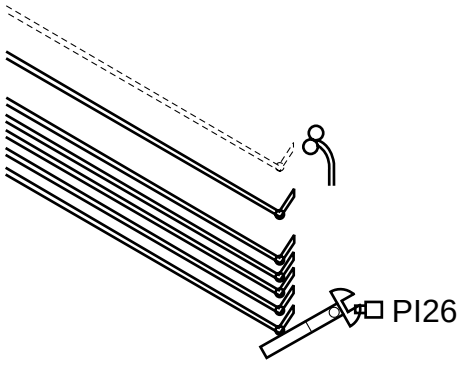

Figure 2-407

COPYRIGHT © 1997 CANON INC.

The finisher shifts the position of the delivery slot as soon as the delivery of copy paper starts. It moves up the bin module by a single bin during delivery, and returns the bin module to the initial position after delivery. This operation is also executed when the stack expects folded paper.

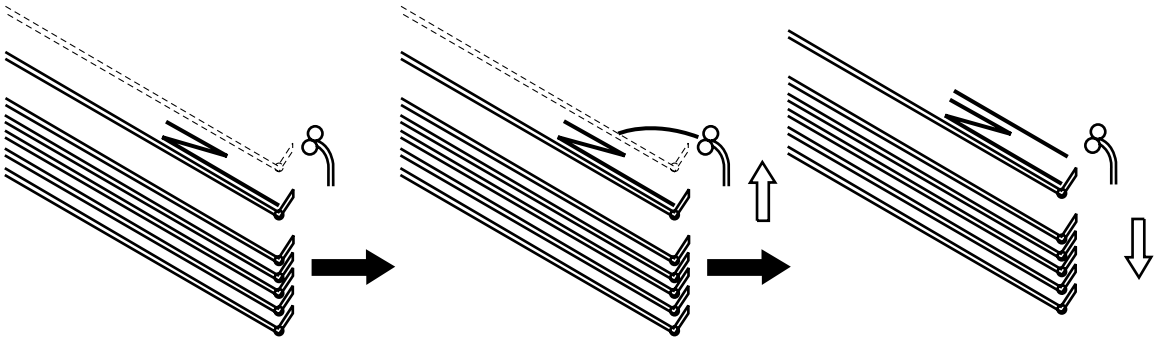

Figure 2-408

Upper Bin Module

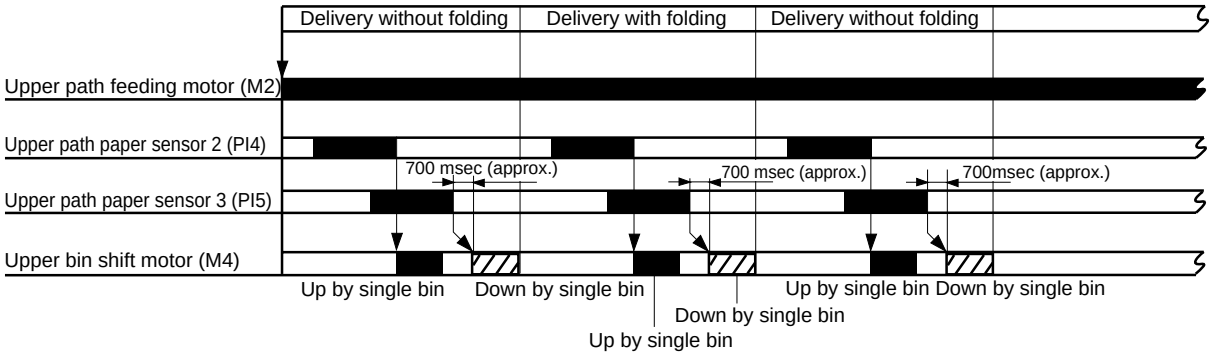

Figure 2-409

Lower Bin Module

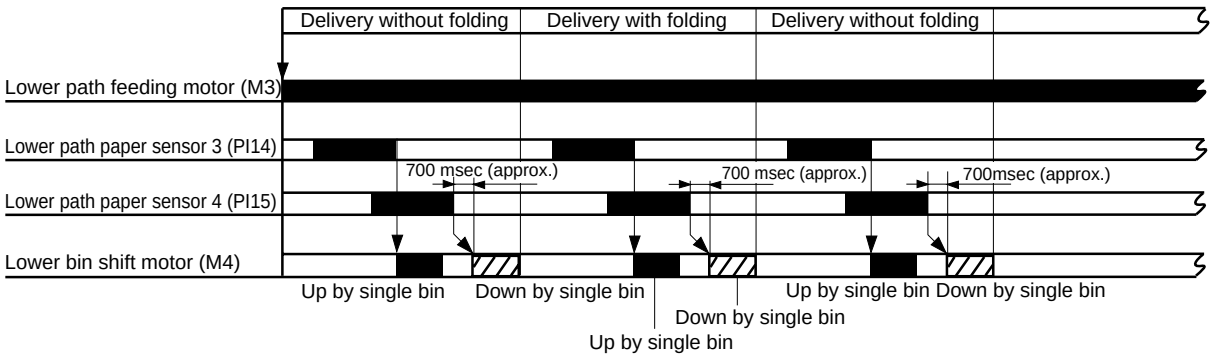

Figure 2-410

COPYRIGHT © 1997 CANON INC.

The operation is performed so as to prevent copies from sliding into the fold of a folded copy.

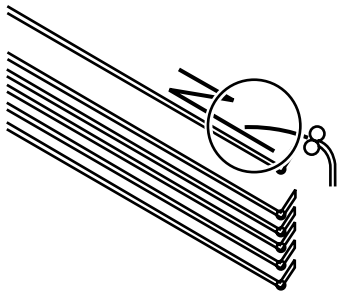

Figure 2-411

e. Stack Removal Start Position

The finisher removes the copies from the bins for stacking. Such removal is possible only when the upper bin module or the lower bin module is at a single specific position.

The stack removal position of the upper bin module is the point where it has moved down for a single bin in relation to the delivery slot.

The stack access position of the lower bin module is the point where it has moved up for three bins in relation to the delivery slot.

Upper Bin Module

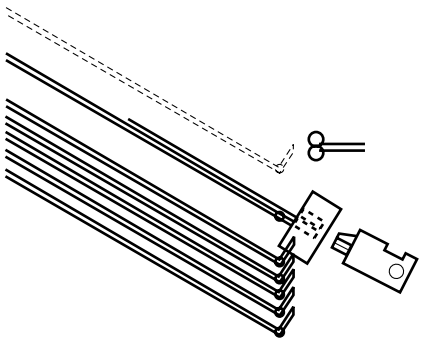

Lower Bin Module

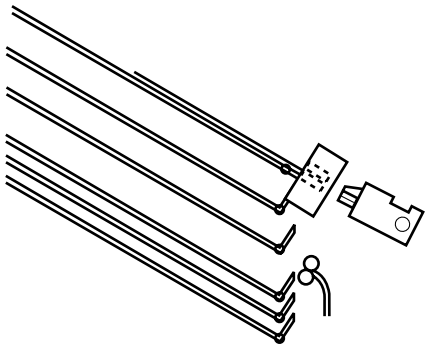

Figure 2-412

COPYRIGHT © 1997 CANON INC.
CANON FINISHER-B1 REV.0 MAY 1997 PRINTED IN JAPAN (IMPRIME AU JAPON)

f. Summary of Bin Module Operations

Go through the diagrams for how each bin module is positioned for a specific operation.

Position	Upper bin module	Lower bin module
Home position	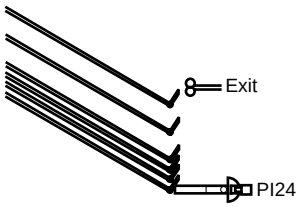	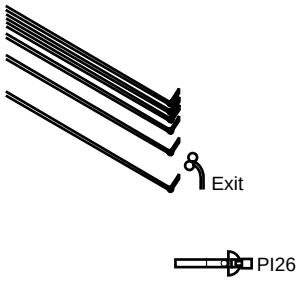
Delivery start position (without folding)	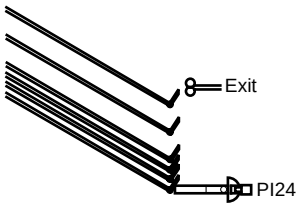	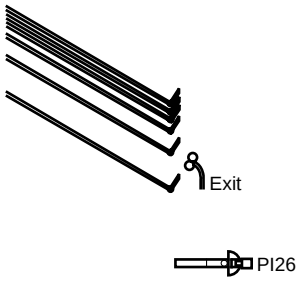
Delivery position for folded paper	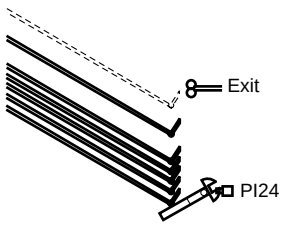	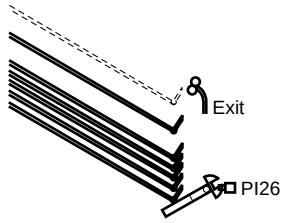
Spread sheets with folded paper	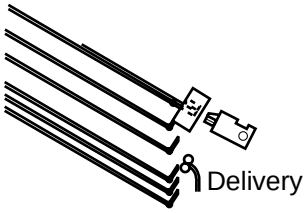 The bin module moves up for a single bin during delivery; it moves down for a single bin at the end of delivery.	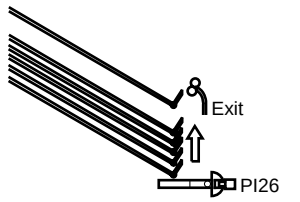 The bin module moves up for a single bin during delivery; it moves down for a single bin at the end of delivery.
Access position	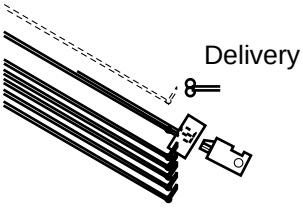 The bin module moves down for a single bin in relation to the delivery slot.	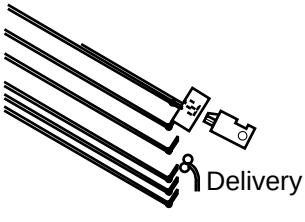 The bin module moves up for three bins in relation to the delivery slot.

3. Movement of the Lead Cam

a. Outline

The lead cams are mounted so that they engage with the rolls of the bin unit, and are driven by the bin shift motor, which is capable of rotating in both clockwise and counterclockwise directions.

The finisher is equipped with two bin modules, and each module is provided with a drive motor (upper bin shift motor M4 and lower bin shift motor M5) for independent operation.

When the lead cams rotate and, as a result, the rolls move up or down along the sloping grooves of the lead cams, the bin connected to the rolls move up or down accordingly.

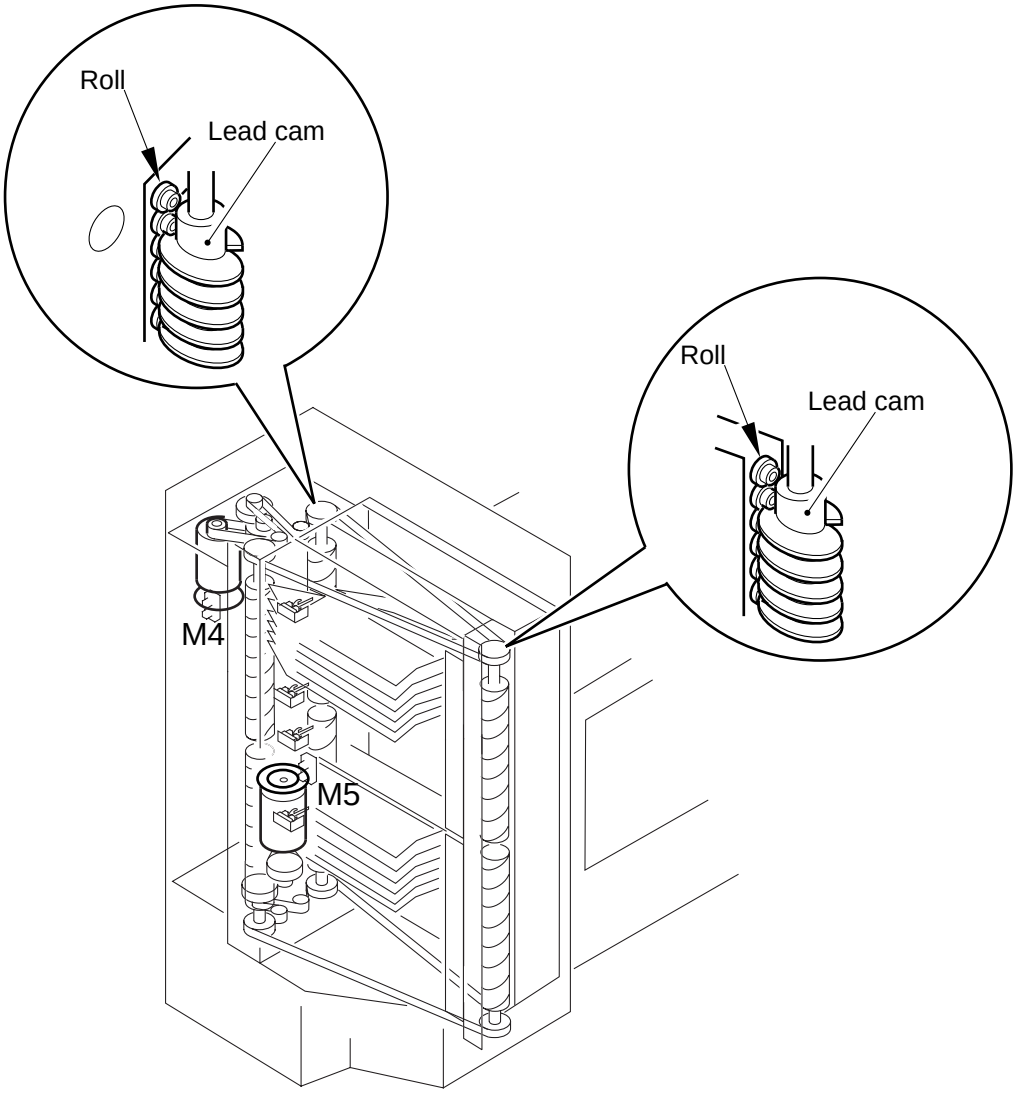

Figure 2-413

COPYRIGHT © 1997 CANON INC.

b. Checking the Position of the Lead Cam

Each bin module of the finisher is equipped with two sensors used to check the position of the lead cams.

- Upper lead cam slope section sensor (PI27)
- Upper lead cam No. 2 level section sensor (PI28)
- Lower lead cam level section sensor (PI29)
- Lower lead cam No. 2 level section sensor (PI30)

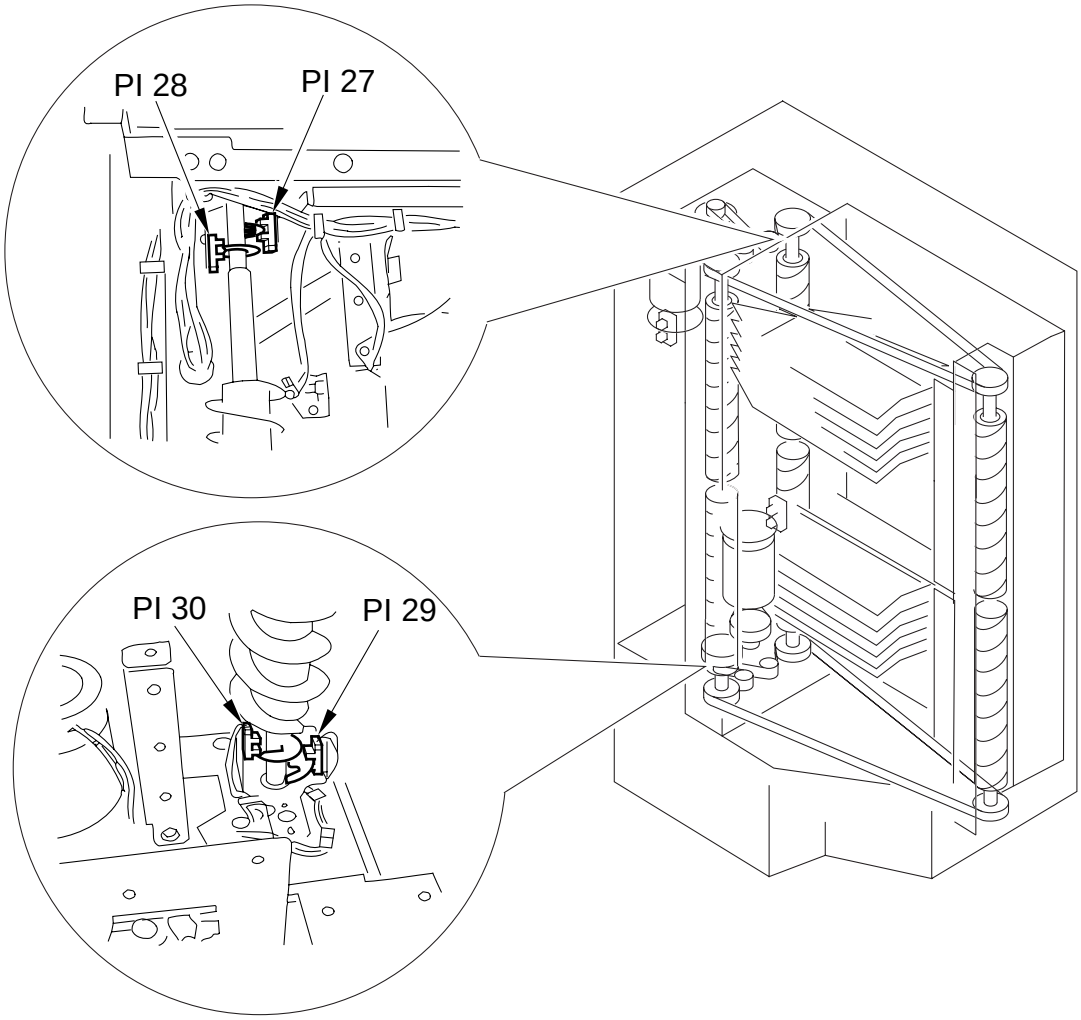

Figure 2-414

The groove of the lead cam consists of a sloping section and a level section. The sloping section is used to move up or down the bin, while the level section is used to keep the bin stationary. The lead cam level section sensor serves to make sure that the roll is at the level section of the lead cam.

The ratio of the level section to the slope section on the lead cam differ between areas near the bin and areas away from the bin. In areas near the bin, both take up the same length, and the level section sensor (PI27, PI29) checks such an area.

In areas away from the bin, the level section is shorter than the slope section, and the No. 2 level section sensor (PI28, PI30) checks such an area.

The slope section is made longer for a gentler slop, limiting the load imposed on the bin shift motor.

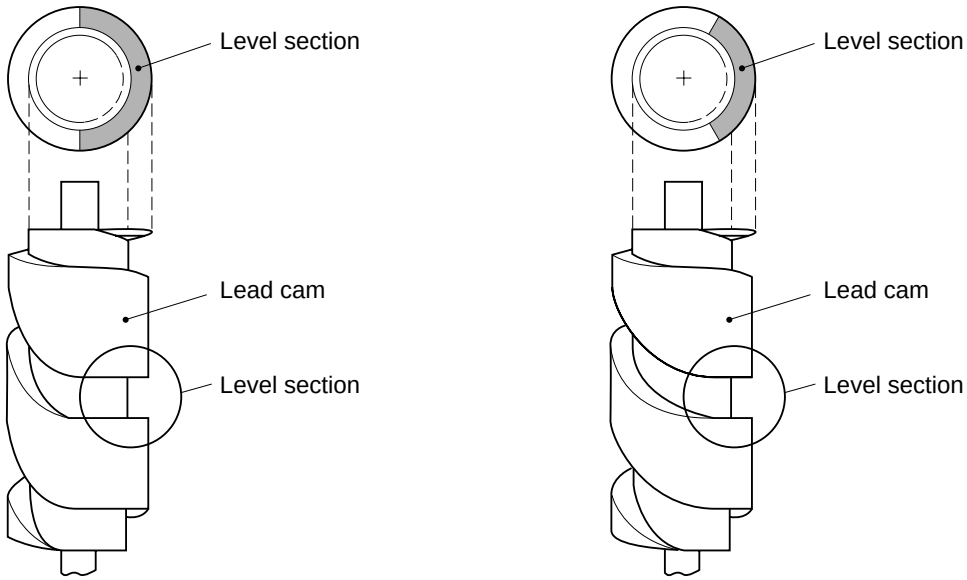

(area near the bin) (area away from the bin)

Figure 2-415

COPYRIGHT © 1997 CANON INC.

4. Controlling the Bin Shift Motor

a. Outline

Figure 2-415 and -416 show the circuits used to control the upper bin shift motor and the lower bin shift motor. The upper bin shift motor (M4) and the lower bin shift motor are both DC motors, and the circuit has the following functions:

- Controlling the speed of the motor.
- Controlling the direction of the motor
- Monitoring the operation of the motor
- Controlling the current

The circuit possesses a logic circuit used to determine whether to start or stop the motor based on combinations of signals from sensors.

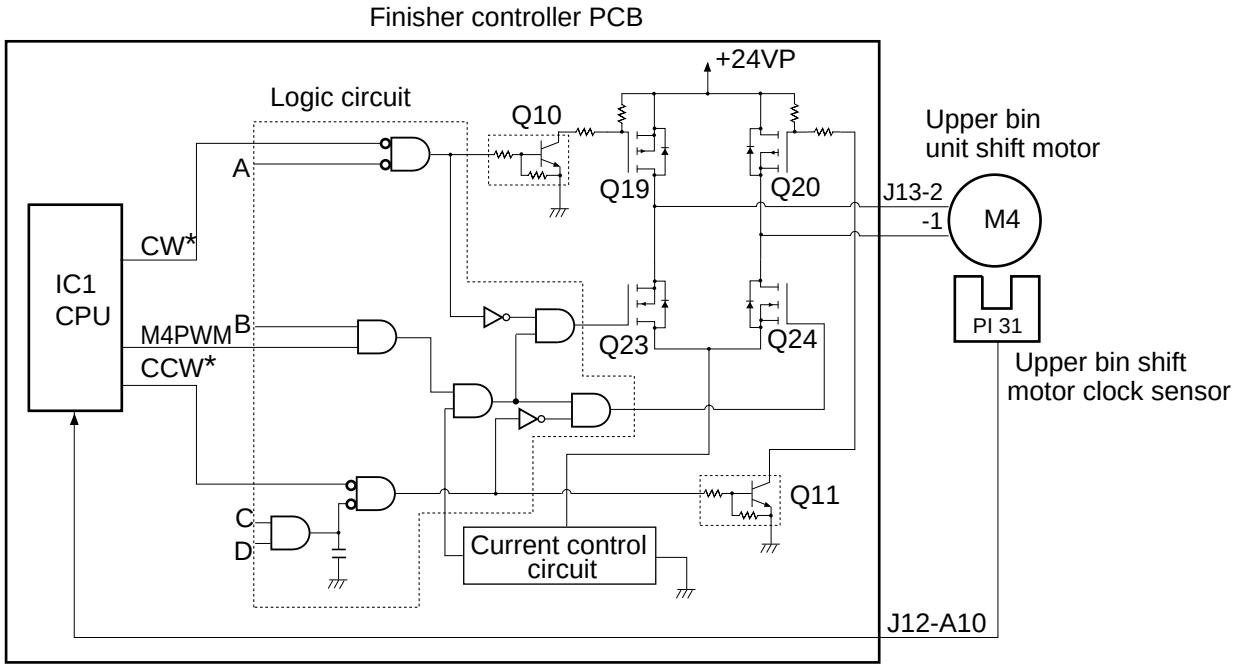

A: Upper bin shift upper limit signal (PI 23) B: Operation disable signal (from CPU)
C: No. 2 level section signal (PI 28) D: Upper bins shift lower limit signal (PI 24)

Figure 2-416

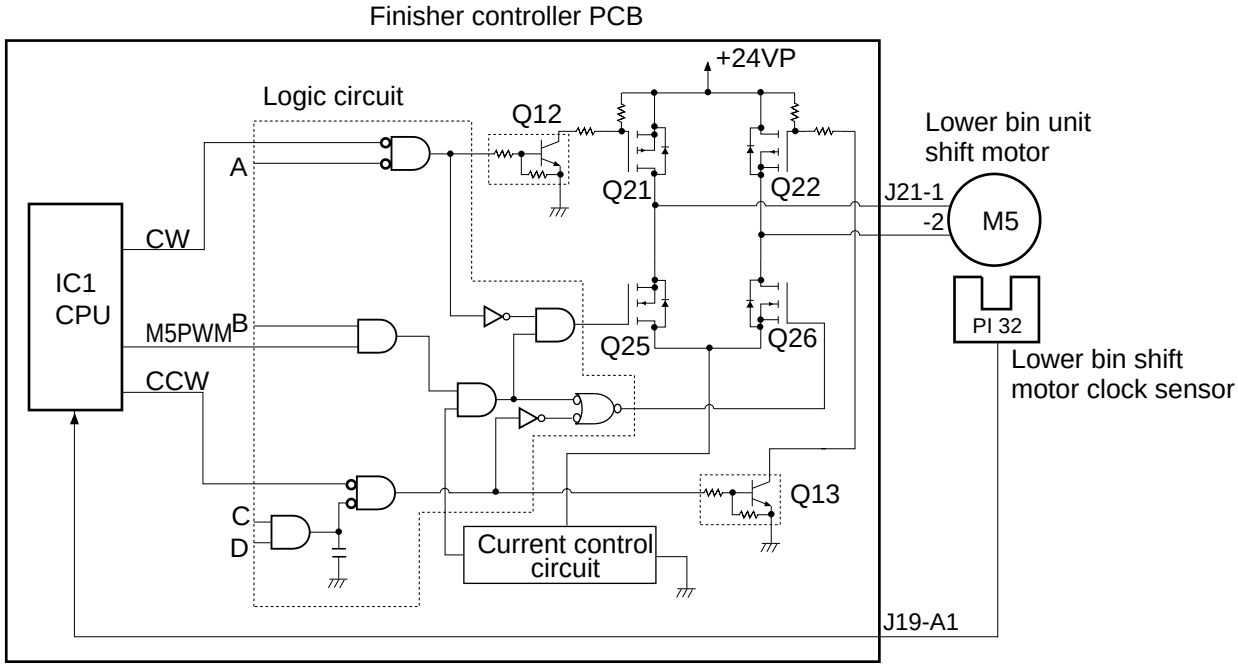

A: Lower bin shift upper limit signal(PI 25) B: Operation prohibit signal (from CPU)
C: No.2 level section signal (PI 30) D: Lower bin shift lower limit signal (PI 26)

Figure 2-417

b. Controlling the Speed and the Direction of the Bin Shift Motor

1. Upper Bin Module

The speed and the direction of rotation of the upper bin shift motor are controlled based on combinations of the following three types of signals:

CW: Upper bin shift motor clockwise rotation signal (upper bin module moves up)
CCW: Upper bin shift motor counterclockwise rotation signal (upper bin module moves down)
M4PWM: Upper bin shift motor rotation speed signal (0: maximum, 1: minimum)

Direction of rotation of upper bin shift motor	CW	CCW	M4PWM
Upper bin module moves down	1	0	Variable pulse
Upper bin module moves up	0	1	Variable pulse
Stops	1	1	1
Brakes on	1	1	0

Table 2-401

COPYRIGHT © 1997 CANON INC.

The circuit possesses a logic circuit, and requires the conditions shown in Table 2-402 for the upper bin shift motor to rotate clockwise or counterclockwise. The upper bin shift motor is allowed to rotate only when specific conditions are met.

Upper bin module moves up

	Condition 1		Condition 2	
Sensor name (notation)	Flag over sensor	I/O display	Flag over sensor	I/O display
The upper bin module is not at the upper limit. (PI23)	No	P131-6 : 0	No	P131-6 : 0
The operation prohibit signal is not generated, i.e (PI-24)	*	P127-5 : *	*	P127-5 : *
The bin rear end wall is not at stapling position. (PI53)	Yes	P145-3 : 1	*	P145-3 : *
The stack processing unit is not at DOWN position. (PI71)	*	P147-0 : *	No	P147-0 : 1

*Either.

For I/O display, use the copier's service mode.

Upper bin module moves down

	Condition 1		Condition 2	
Sensor name (notation)	Flag over sensor	I/O display	Flag over sensor	I/O display
The upper bin module is not at the upper limit. (PI23)	*	P131-6 : *	*	P131-6 : *
The operation prohibit signal is not generated, i.e., (PI24)	No	P127-5 : 0	No	P127-5 : 0
The bin rear end wall is not at stapling position. (PI53)	No	P145-3 : 0	*	P145-3 : *
The stack processing unit is not at DOWN position. (PI71)	*	P147-0 : *	No	P147-0 : 1

*Either.

For I/O display, use the copier's service mode.

Table 2-402

COPYRIGHT © 1997 CANON INC.

1. Lower Bin Module

The speed and the direction of rotation of the lower bin shift motor are controlled based on combinations of the following three types of signals:

CW: Lower bin shift motor clockwise signal (lower bin module moves up)
CCW: Lower bin shift motor counterclockwise signal (lower bin module moves down)
M5PWM: Lower bin shift motor rotation speed signal (0: maximum, 1: minimum)

Direction of lower bin shift motor	CW	CCW	M4PWM
Lower bin module moves down	1	0	Variable pulse
Lower bin module moves up	0	1	Variable pulse
Stop	1	1	1
Brakes on	1	1	0

Table 2-403

The circuit possesses a logic circuit, and requires the conditions shown in Table 2-404 for the lower bin shift motor to rotate clockwise or counterclockwise. The lower bin shift motor is allowed to rotate only when specific conditions are met.

Lower bin module moves up

	Condition 1	
Sensor name (notation)	Flag over sensor	I/O display
The upper bin module is not at the upper limit. (PI25)	No	P131-7 : 0
The operation prohibit signal is not generated, i.e., (PI26)	*	P126-3 : *
The bin rear end wall is not at stapling position. (PI53)	Yes	P145-3 : 1
The stack processing unit is not at DOWN position. (PI71)	No	P147-4 : 1

*Either.

For I/O display, use the copier's service mode.

COPYRIGHT © 1997 CANON INC.

Lower bin module moves down

	Condition 1	
Sensor name (notation)	Flag over sensor	I/O display
The upper bin module is not at the upper limit. (PI23)	*	P131-7 : *
The operation prohibit signal is not generated, i.e., (PI26)	No	P126-3 : 0
The bin rear end wall is not at stapling position. (PI53)	Yes	P145-3 : 1
The stack processing unit is not at DOWN position. (PI71)	No	P147-4 : 1

*Either.

For I/O display, use the copier's service mode.

Table 2-404

c. Monitoring the Operation of the Motors

The motors operate more or less the same way for both upper bin module and the lower bin module; here, discussions will be in reference to the upper bin module.

The upper bin shift motor is equipped with an encoder, and the bin shift motor clock sensor (PI31 for the upper bin module, and PI32 for the lower bin module) sends clock signals to the finisher controller PCB by way of communicating the state of the motor. The finisher controller PCB assumes that the motor is rotating when it receives these clock signals.

If the finisher controller PCB does not receive clock signals in the presence of the motor drive signal, it will assume the condition to be an upper bin shift motor error and indicates 'E541' on the copier's control panel ('E54' in the case of the lower bin module).

d. Controlling the Current

The current is controlled more or less the same way for both upper bin module and lower bin module; here, the discussions will be in reference to the upper bin module.

When an overcurrent is about to flow into the upper bin shift motor, the current control circuit turns on to instantaneously cut off the upper bin shift motor drive signal, preventing overcurrent from flowing into the upper bin shift motor.

If overcurrent occurs in succession, the upper bin shift motor drive signal will also be interrupted accordingly, not allowing the upper bin shift motor to move the upper bin module to a specific position within a specific period of time. As a result, the finisher controller PCB identifies the condition to be an upper bin shift motor error and indicates 'E541' on the copier's control panel ('E543' in the case of the lower bin module).

To reset, remove the cause from the load, and turn off and then on the finisher.

COPYRIGHT © 1997 CANON INC.

5. Detecting Paper

Each bin module has two pairs of sensors used to detect the presence/absence of paper. One pair of sensor serves to check for paper in bins, while the other pair serves to check for paper outside bins.

Bin module	Paper inside bin	Paper outside bin
Upper bin module	Upper bin paper sensor (LED1, PT1)	Upper bin outside paper sensor (LED7, PT7)
Lower bin module	Lower bin paper sensor (LED2, PT2)	Lower bin outside paper sensor (LED8, PT8)

The bin paper sensor and the bin outside paper sensor consist of a LED and a phototransistor.

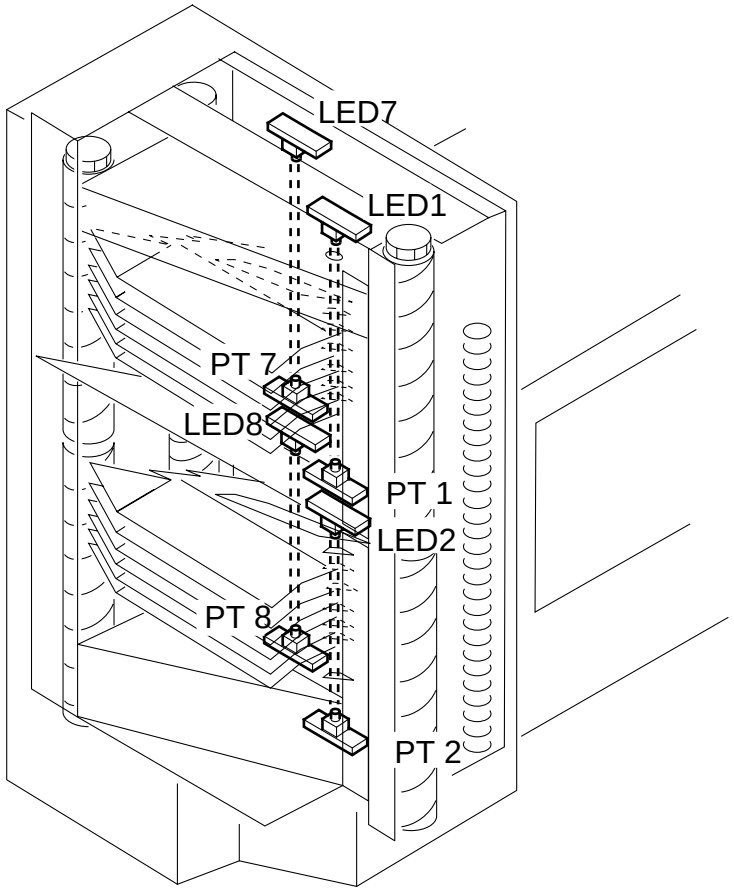

Figure 2-418

COPYRIGHT © 1997 CANON INC.

C. Controlling the Guide Bar

1. Outline

The finisher is equipped with a guide bar in its upper bin module and lower bin module, and the bars are used to put the copies delivered to the bins in order.

The guide bars are driven by the upper bin guide bar motor (M6) or the lower bin guide bar motor (M7). The upper bin guide bar home position sensor (PI33) is used to detect the home position of the upper bin guide bar, while the lower bin guide bar home position sensor (PI34) is used to detect the home position of the lower bin guide bar.

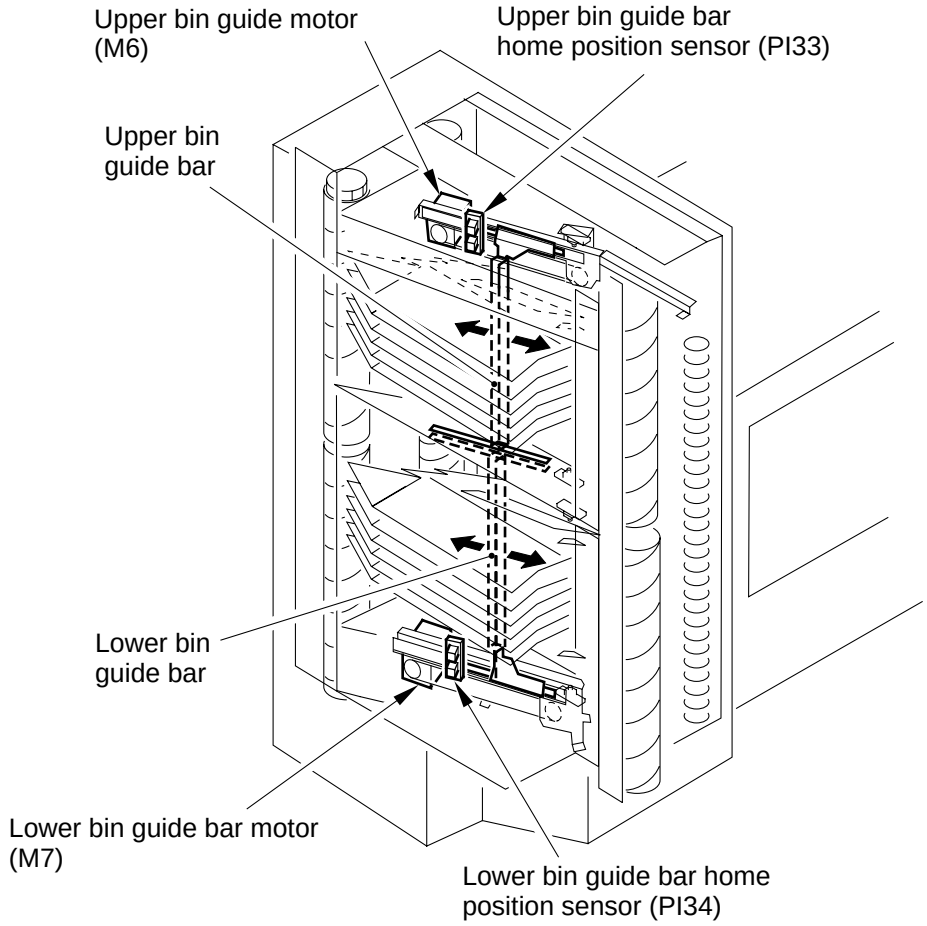

Figure 2-419

2. Putting the Copies into Order

The guide bar is operated each time a copy is delivered.

The guide bar is made to move over a distance (A) determined by the paper size signal from the copier for the number of drive pulses sent by the guide bar motor.

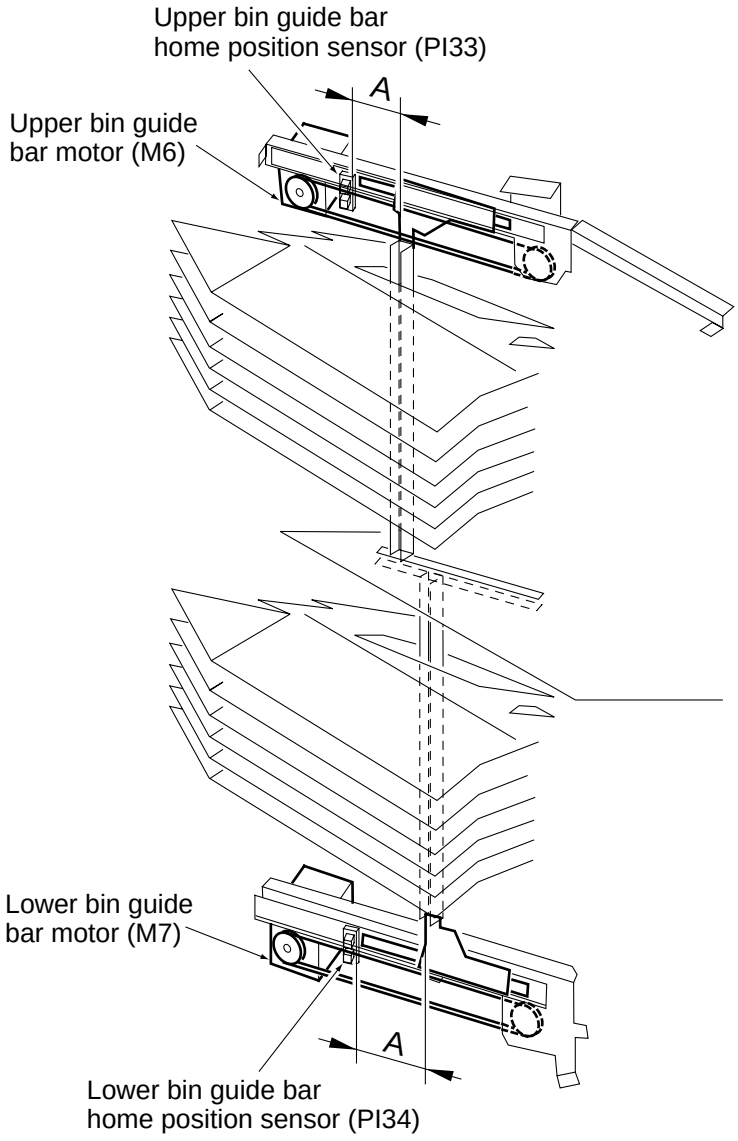

Figure 2-420

COPYRIGHT © 1997 CANON INC.

3. Controlling the Guide Bar

a. Outline

Figures 2-421 and -422 show the circuits used to control the upper bin guide bar motor (M6) and the lower bin guide motor (M7). These guide motors are 4-phase control stepping motors, and the circuits have the following functions:

- Switching current when driving or not driving the motors.
- Controlling the rotation and the speed of the motors.

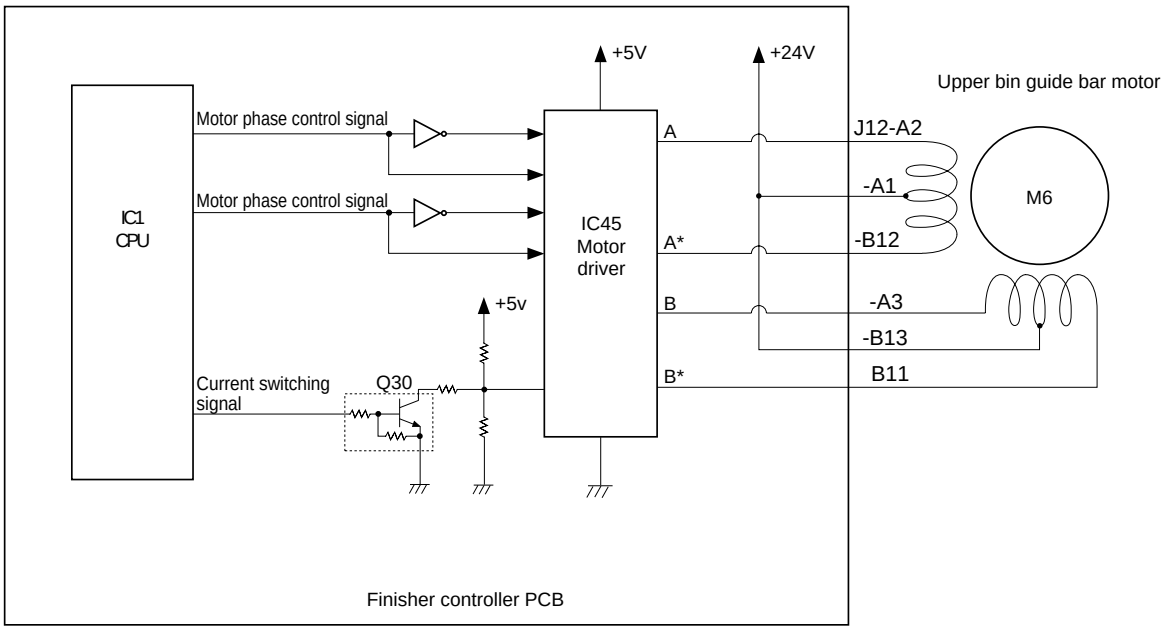

Figure 2-421

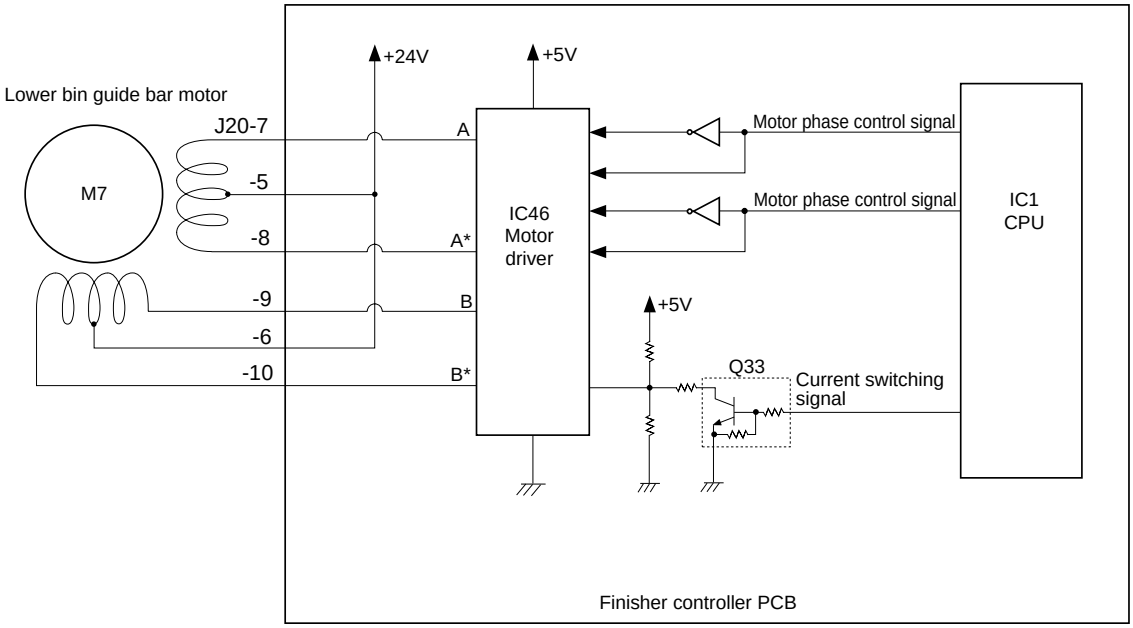

Figure 2-422

b. Operation

The CPU (IC1) on the finisher controller PCB sends each phase control signal of the motor to the motor driver.

In response to these phase control signals, the motor driver controls the output timing of the pulse signals used to switch the direction and the speed of rotation of the guide bar motor.

The current switching signal is used to switch the current levels according to whether the motor is in operation or at rest, thereby preventing overheating of the motor when it is at rest.

COPYRIGHT © 1997 CANON INC.

D. Controlling the Bin Cover

1. Outline

The bin cover covers upper bin unit and the lower bin unit, and remains closed while the bin unit is in operation.

When the finisher is in operation, the bin cover locking solenoid (SL8) is on to hold the bin cover in place, thereby preventing it from opening.

The display is a LED consisting of five blocks, indicating the operating status of the finisher in reference to whether the LED remains on or flashes. All blocks will remain on or off when the bin cover may be opened.

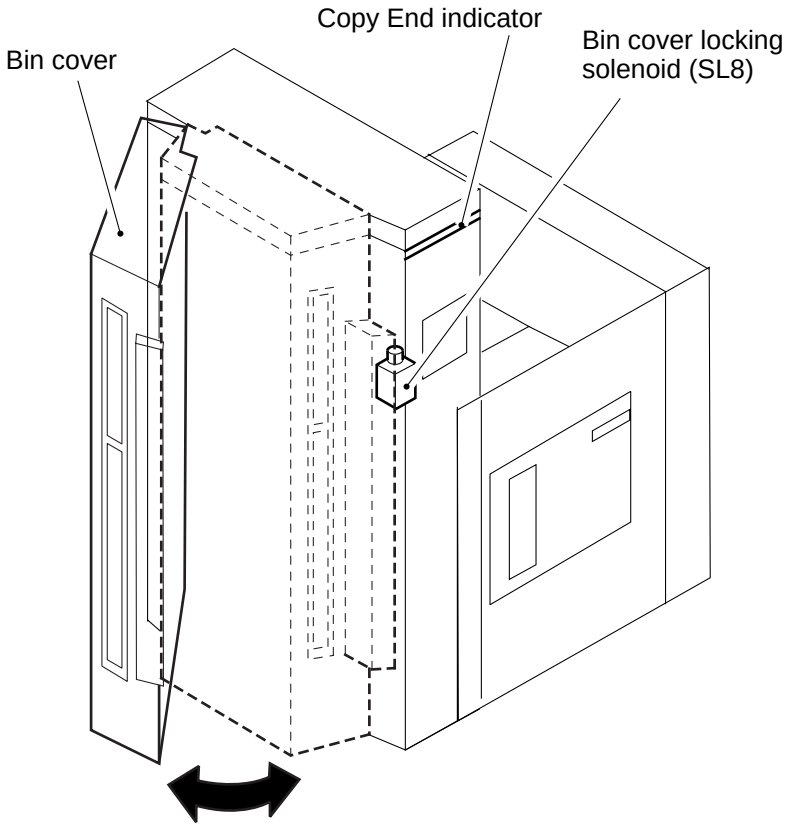

Figure 2-423

COPYRIGHT © 1997 CANON INC.

2. Operation

While the finisher is in operation, the finisher controller PCB generates the bin cover locking solenoid drive signal (SL8D*) to turn on the bin cover locking solenoid (SL8) to keep the bin cover closed.

The Copy End indicator LEDs will flash in sequence or at the same time to indicate that the bin cover cannot be opened. When the Copy End indicator LEDs flash in sequence, both finisher and copier are in operation; when all LEDs flash at the same time, only the finisher is in operation.

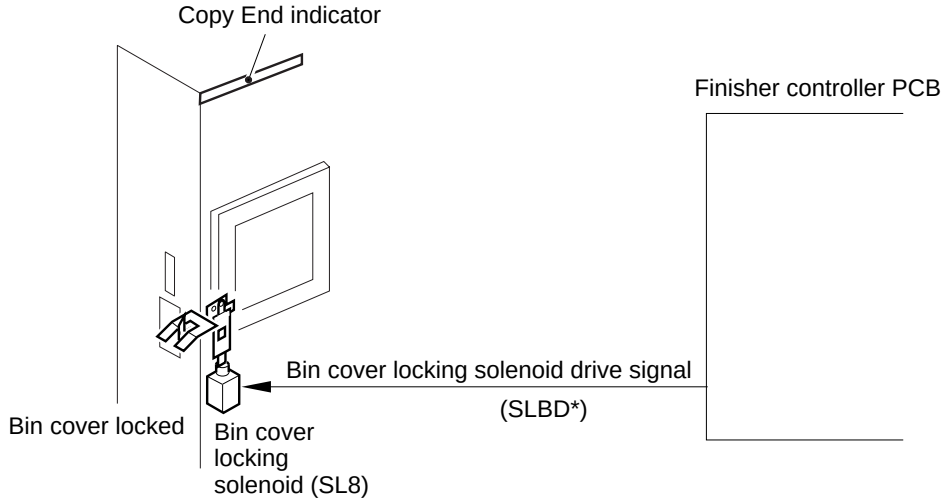

Figure 2-424

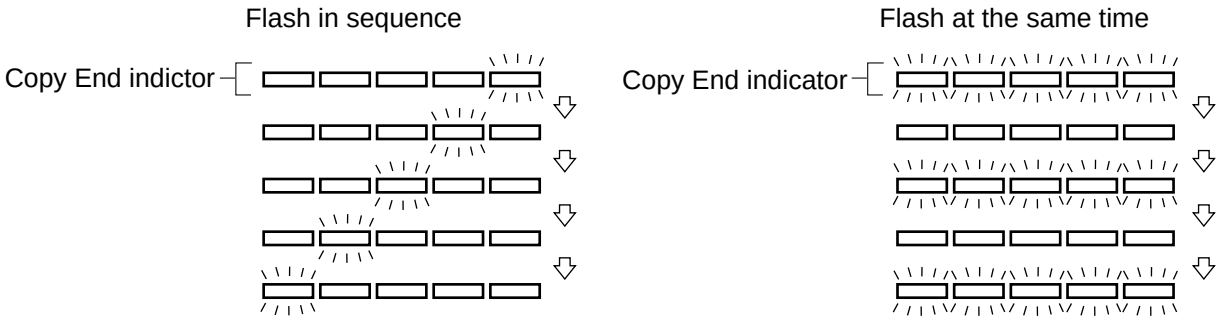

Figure 2-425

When all specific operations of the finisher are over, the bin cover locking solenoid releases the bin cover in the absence of the drive signal (SL8D*). At this time, all LEDs of the Copy End indicator turn on, indicating that the bin cover may be opened.

Table 2-405 shows the status of the finisher and the copier in relation to the Copy End indicator.

Copy End indicator	Opening the bin cover	Status of finisher	Status of copier
Sequential flashing	Not possible	In operation	In operation
Simultaneous flashing	Not possible	In operation	End of operation
Simultaneous flashing	Possible	End of operation	End of operation
Simultaneously off	Possible	End of operation	End of operation

Table 2-405

COPYRIGHT © 1997 CANON INC.

V. STACK PROCESSING UNIT

A. Outline

The stack processing unit is designed to remove the stacks of copies delivered to the upper bin module or the lower bin module and move them to the stacker unit. The stack processing unit consists of the following drive systems:

- Up/down dive system
- Side gripper drive system
- Stapler drive system
- Front gripper drive system

The up/down drive system is used to move up or down the stacker unit to a specific position to enable the removal of stacks from the upper bin module or the lower bin module.

The side gripper is designed to move the stack from the bin to the stapler and to hold the stack in place for stapling.

The stapler serves to staple the stack of copies.

The front gripper is designed to move the stack from the stapler to the stacker unit.

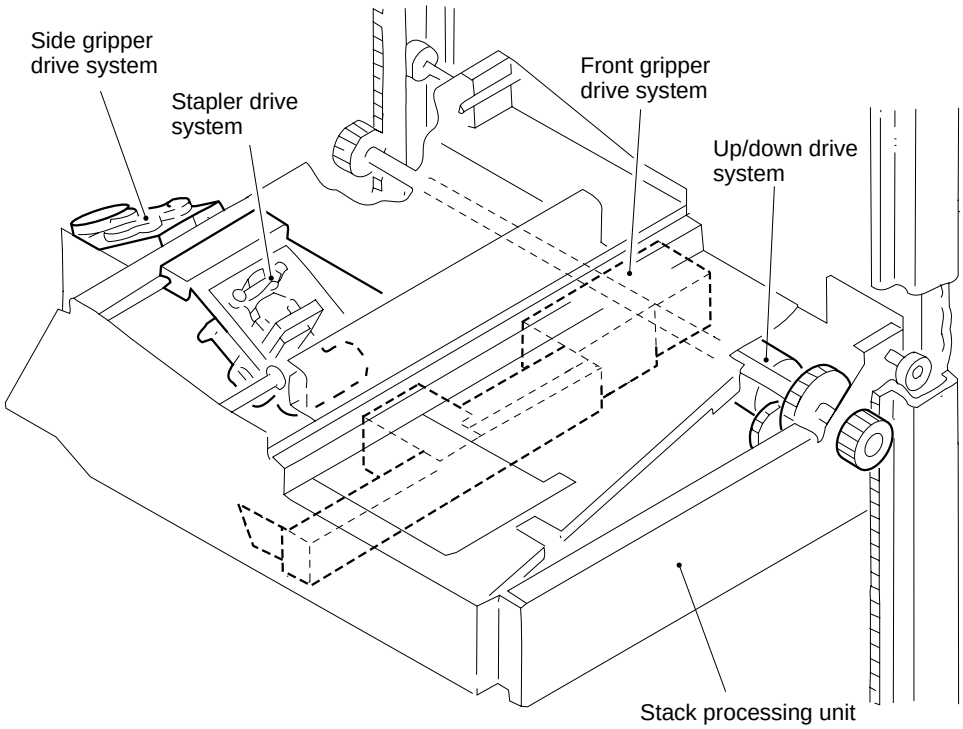

Figure 2-501

B. Up/Down Drive System

1. Outline

Figure 2-502 shows the construction of the up/down drive system.

The stack processing unit is moved up or down by the stack processing unit shift motor (M14) using pinion gears and rack gears.

When the stack processing unit is to be kept stationary, the stack processing unit shift brake 1 (BK2) and the stack processing unit shift brake 2 (BK3) turn on to securely hold it in place. The stack processing unit shift motor clock sensor (PI69) is used to check the status of the motor (operation/rest).

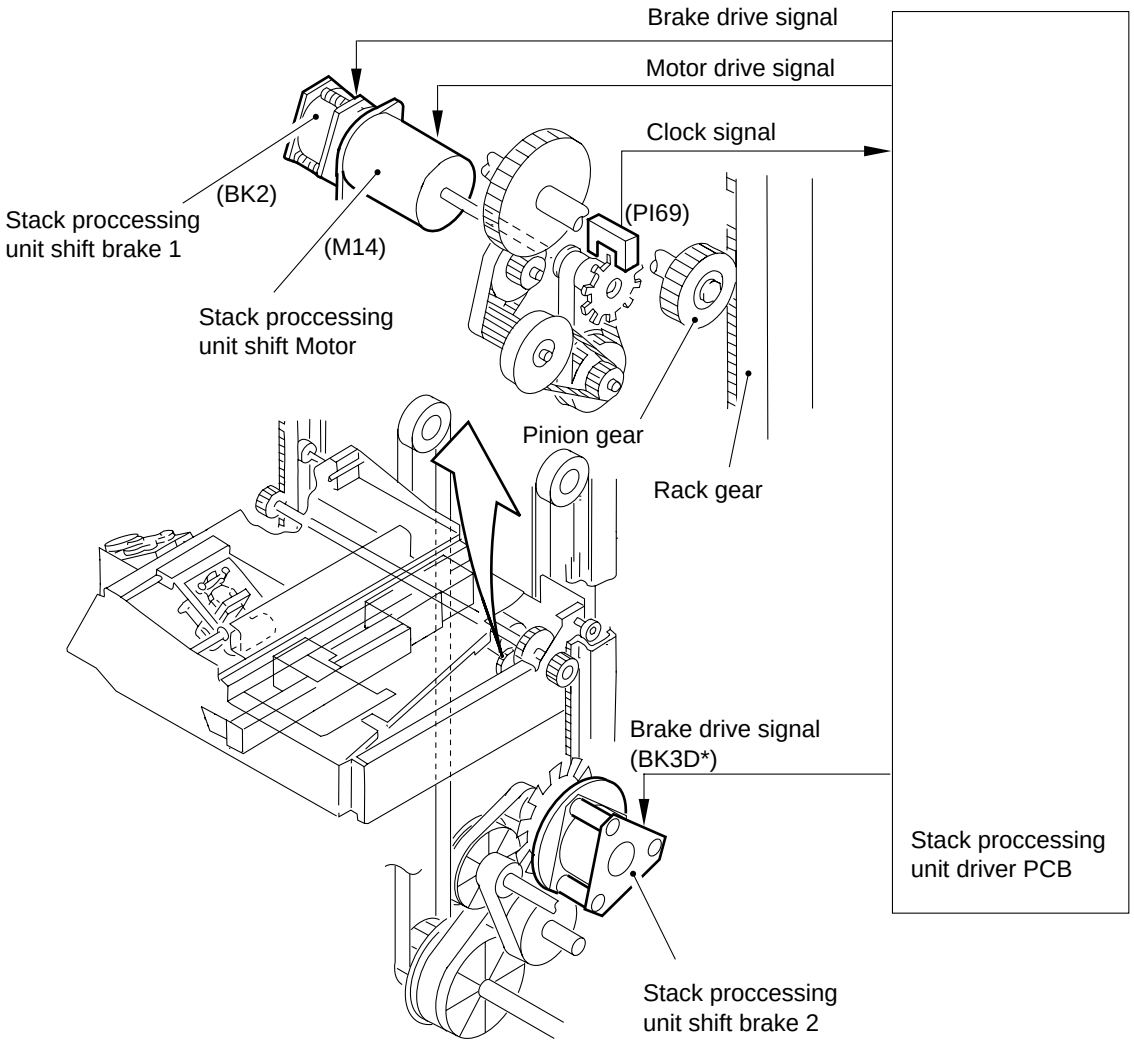

Figure 2-502

COPYRIGHT © 1997 CANON INC.

2. Operation

The up/down movement is executed in sort or staple sort mode, and the movement differs accordingly; the up/down movement is initiated as shown in Table 2-501.

Up/down movement	Stapling	Copy size
Yes	Yes	B5, A4, B4, A3, A4R, B5R, LTR, LGL, 279.4 × 431.8mm (11" × 17"), LTRR
	No	B5, A4, B4, A4R, B5R, LTR, LGL, LTRR
No	No	A3, 279.4 × 431.8mm (11" × 17")

Table 2-501

The stack processing unit shift motor (M14) operates in response to signals from the finisher controller PCB. The stack processing unit may stop either at home position or at DOWN position, and these two positions are checked by two sensors. The stack processing unit operates as shown in Table 2-502 at each of these positions:

Stop position	Sensor (notation)	Description
Home position	Stack processing unit home position sensor (PI70)	Where stacks are removed from the upper bin unit
DOWN position	Stack processing unit DOWN sensor (PI79)	Where stacks are removed from the lower bin unit

Table 2-502

The up/down drive system uses the following three sensors to control the range of movement:

- Stack processing unit upper limit sensor (PI71)
- Stack processing unit lower limit sensor (PI72)
- Stacker unit NEAR sensor (PI73)

The stack processing unit upper limit sensor (PI71) sends the upper limit signal to the finisher controller PCB when the stacker unit moves past the home position and still continues to move up. In response, the finisher controller PCB stops the stack unit shift motor (M14) immediately; since the stack processing unit does not reach its specific position within a specific period of time after the stack processing unit shift motor (M14) has stopped, the finisher controller will assume an error in the stack processing shift motor (M14) and indicate ‘E575’ on the copier’s control panel.

The stack processing unit lower limit sensor (PI72) sends the lower limit signal to the finisher controller PCB if the stack processing unit moves past the lower limit and still continues to move down. In response, the finisher controller PCB stops the stack unit shift motor (M14) immediately; since the stack processing unit does not reach its specific position within a specific period of time after the stack processing unit shift motor (M14) has stopped, the finisher controller will assume an error in the stack processing shift motor (M14) and indicate ‘E575’ on the copier’s control panel.

COPYRIGHT © 1997 CANON INC.

The stacker unit NEAR sensor (PI73) sends the NEAR signal to the finisher controller PCB when the stack processing unit and the stacker unit have moved more than a specific distance. In response, the finisher controller PCB stops the stacker unit in ascent and the stack processing unit in descent.

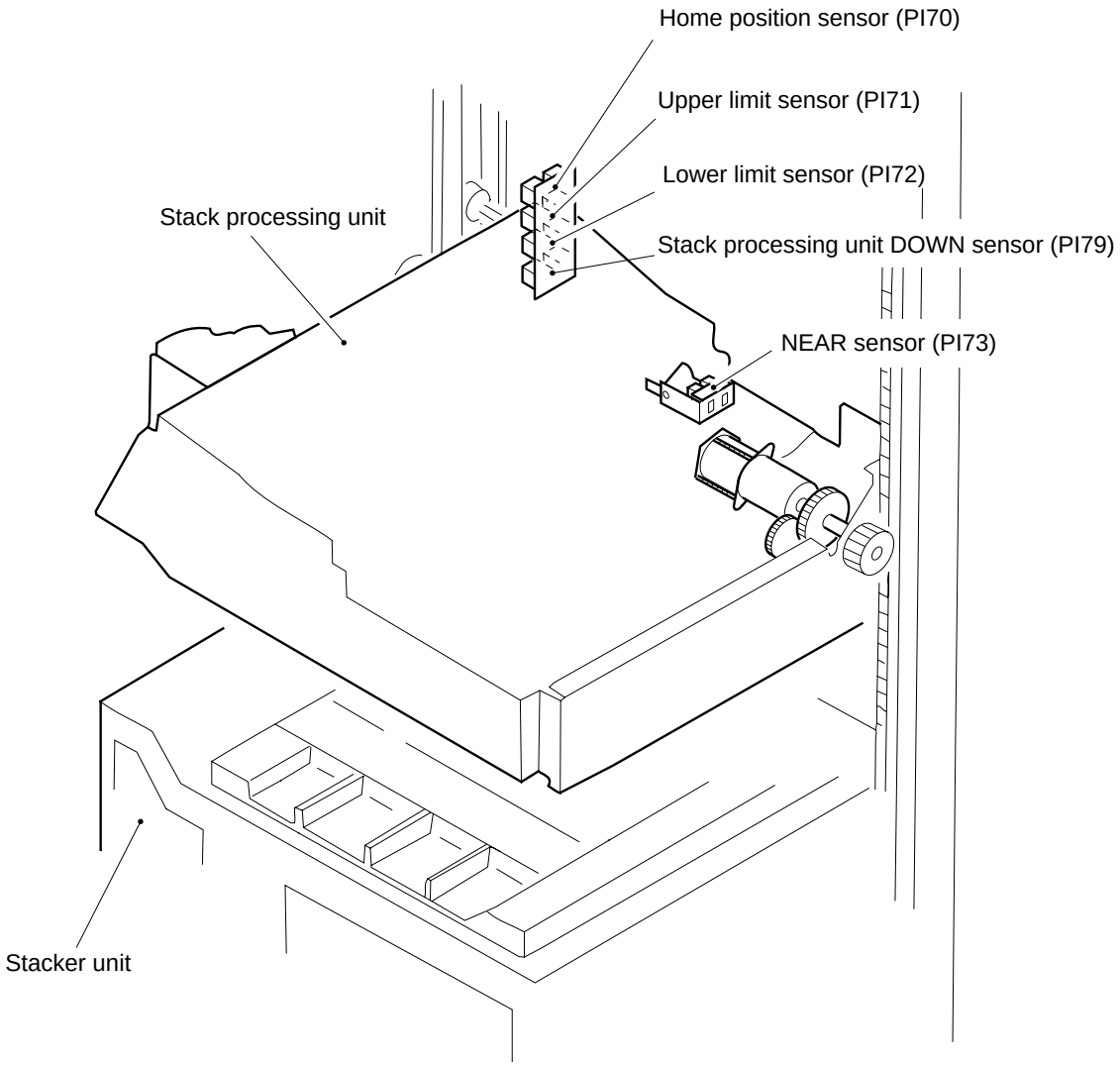

Figure 2-503

COPYRIGHT © 1997 CANON INC.

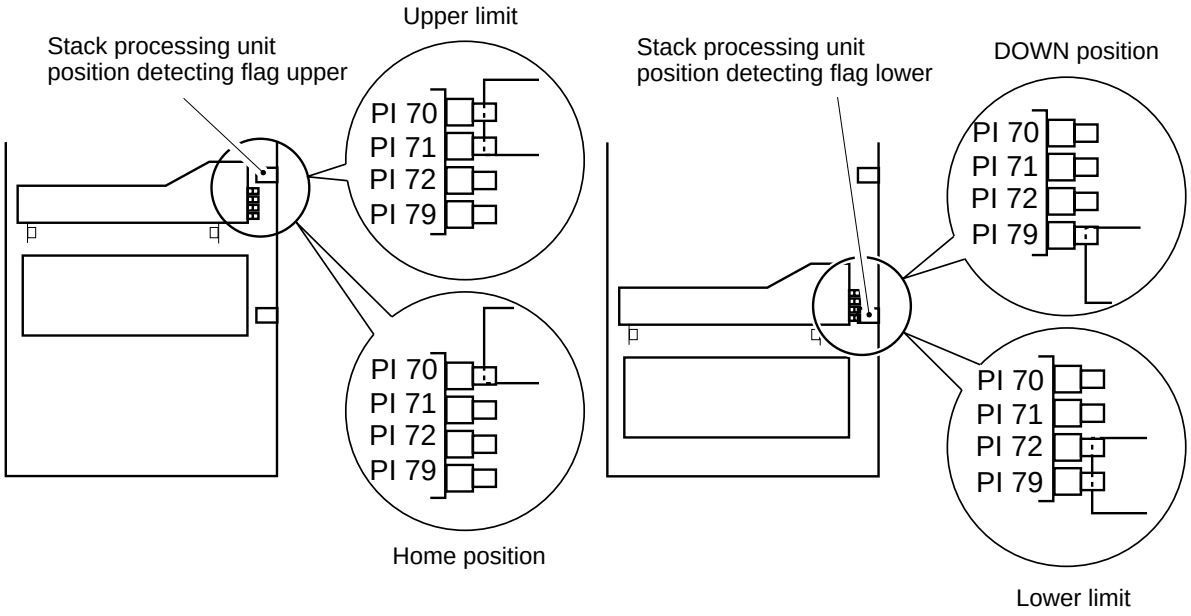

Figure 2-504 (rear view)

3. Controlling the Stack Processing Unit Shift Motor (M14)

a. Outline

Figure 2-505 shows the circuit used to control the stack processing unit shift motor. The motor (M14) is a DC motor, and the circuit has the following functions:

- Controlling the power to the motor.
- Controlling the direction of rotation of the motor.
- Controlling the current.

The circuit has a logic circuit used to determine whether to start or stop the rotation of the motor based on combinations of signals from sensors.

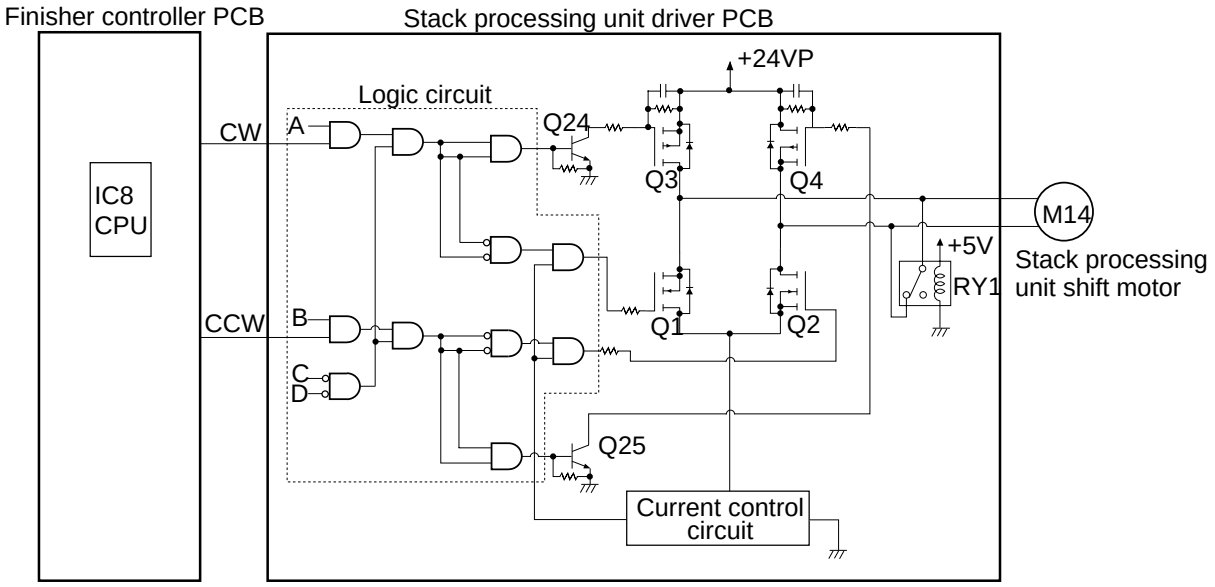

A: Stack processing unit upper limit signal
B: NEAR signal
C: Bin rear end wall CLOSED signal
D: Side gripper left/right home position signal

Figure 2-505

COPYRIGHT © 1997 CANON INC.

b. Controlling the Power to and the Direction of the Stack Processing Unit Motor

The power to and the direction of rotation of the stack processing unit shift motor are controlled based on the combination of the following two signals:

CW: Stack processing unit shift motor clockwise signal (stack processing unit moves up)

CCW: Stack processing unit shift motor counterclockwise signal (stack processing unit moves down)

Stack processing motor status	CW	CCW
Stack processing unit moves down	1	Variable pulse
Stack processing unit moves down	0	1
Stops	1	1

Table 2-503

Since the weight of the unit itself encourages the downward movement, the motor does not need maximum power to move down the stack processing unit so that less power is applied than when moving it up.

The power is controlled by varying the duty ratio (ratio between periods of ON and OFF) of the pulses of the voltage applied to the motor. When much power is needed, the ON period is increased, while when little power is needed the ON period is decreased.

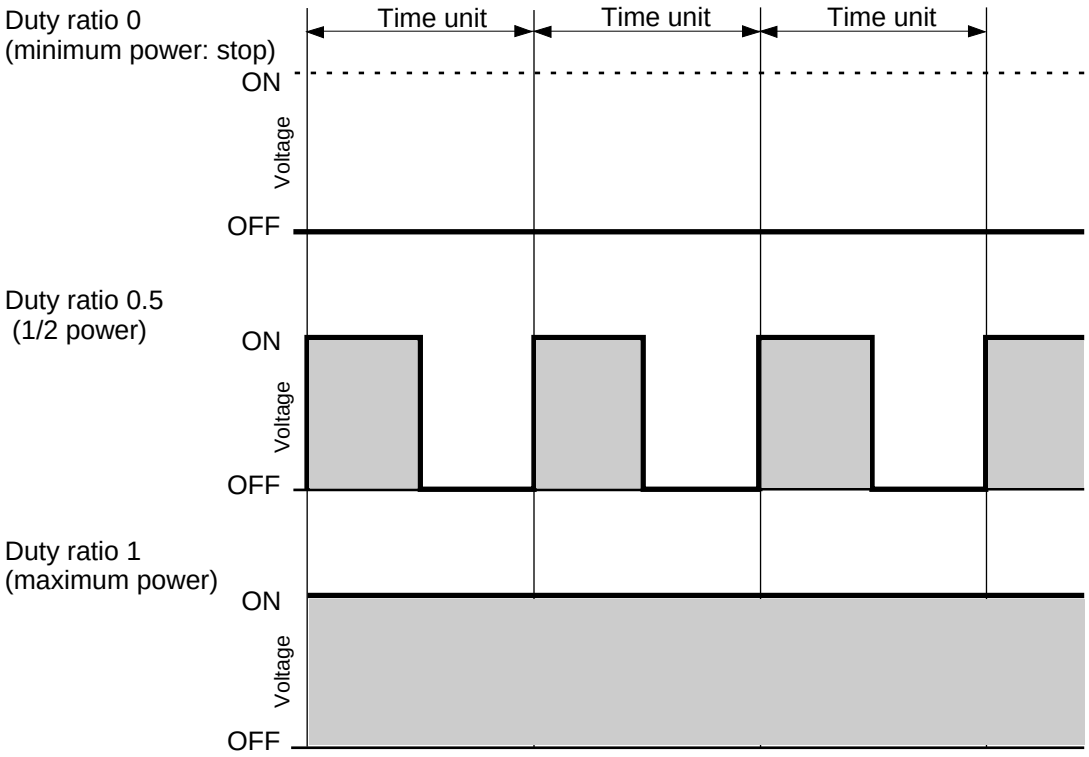

Figure 2-506 Duty Ratio

The circuit possesses a logic circuit, and the stack processing shift motor rotates only when all the conditions in Table 2-504 are met.

Stack processing unit moves up

	Condition 1	
Sensor name (notation)	Flag over sensor	I/O display
The stack unit is not at the upper limit. (PI71)	No	P147-5 : 0
The stack unit is not at the upper limit. (PI67)	Yes	P148-6 : 1
The bin rear end wall is closed. (PI53)	Yes	P145-3 : 1
The side gripper is at left/right home position. (PI50)	Yes	P144-0 : 1
The stack unit is not at the lower limit. (PI72)	*	P145-5 : *
The stack processing unit is not near the stacker unit. (PI73)	*	

*Either.

For I/O display, use the copier's service mode.

Stack processing unit moves down

	Condition 1	
Sensor name (notation)	Flag over sensor	I/O display
The stack unit is not at the upper limit. (PI71)	*	P147-5 : *
The stack unit is not at the upper limit. (PI67)	Yes	P148-6 : 1
The bin rear end wall is closed. (PI53)	Yes	P145-3 : 1
The side gripper is at left/right home position. (PI50)	Yes	P144-0 : 1
The stack unit is not at the lower limit. (PI72)	No	P145-5 : 0
The stack processing unit is not near the stacker unit. (PI73)	No	

*Either.

For I/O display, use the copier's service mode.

Table 2-504

c. Controlling the Current

The circuit is equipped with a current control circuit to prevent current in excess of a specific level from flowing into the stack processing shift motor.

When an overcurrent is about to flow into the stack processing shift motor, the current control circuit turns on to interrupt the stack processing shift motor drive signal, thereby preventing the overcurrent from flowing into the stack processing shift motor.

When an overcurrent occurs in succession, the stack processing shift motor drive signal is interrupted accordingly, preventing the stack processing shift motor to move the stack unit to a specific position within a specific period of time. The finisher controller PCB will identify such a condition to be a stack processing shift motor error, and indicate 'E575' on the copier's control panel.

To reset, remove the cause of the error, and turn off and then on the finisher.

 COPYRIGHT © 1997 CANON INC.

C. Side Gripper Drive System

1. Outline

The side gripper moves the stacks of the bins to the stapler unit, initiated by the following operations:

- Opening/closing the bin rear end wall.
- Moving the side gripper left/right.
- Clasping the stack.

The bin rear end wall is opened/closed by the bin rear end wall open/close motor (M17).

The side gripper is moved left/right by the side gripper left/right shift motor.

The stack is clasped by the gripper from above and below, operated by the side gripper grip motor (M9).

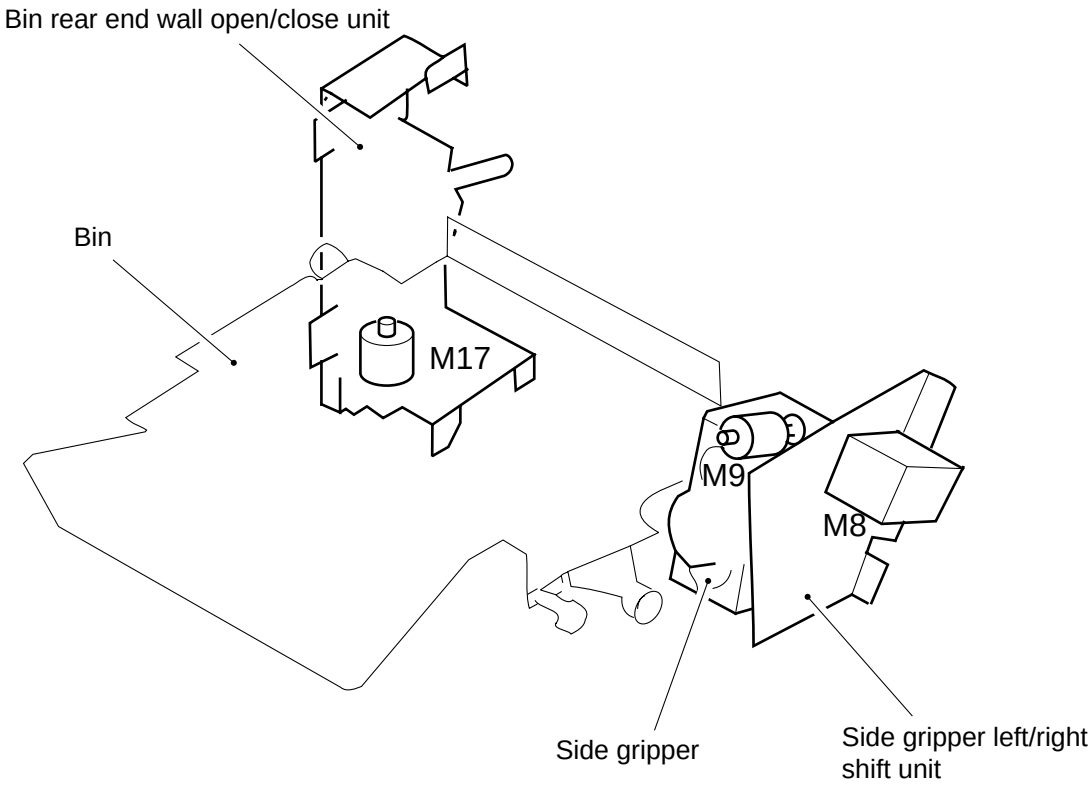

Figure 2-507

2. Opening/Closing the Bin End Wall

a. Outline

The finisher removes the stack from the bin through the rear end of the bin, and moves the stack as far as the stacker unit.

The rear end of the bin is equipped with a bin rear end wall, which must be opened for the side gripper to remove the stack from inside the bin. The bin rear end wall is opened/closed by the bin rear end wall open/close motor (M17).

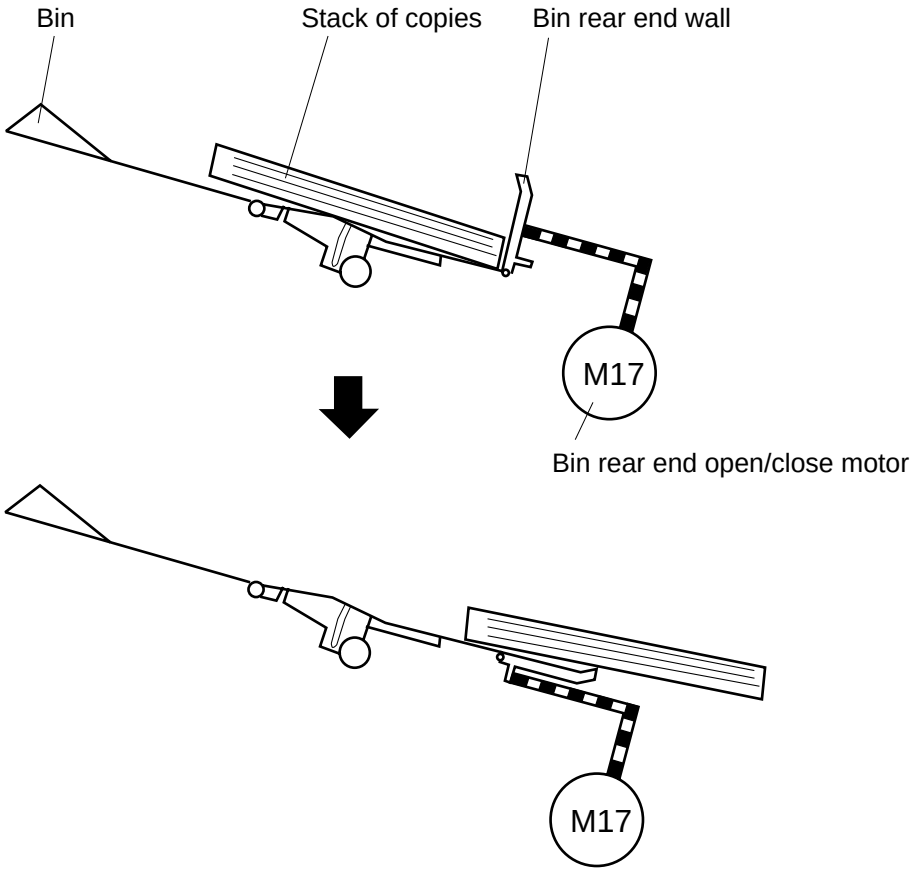

Figure 2-508

COPYRIGHT © 1997 CANON INC.

b. Operation

When the bin shifts and stops at a specific position (if upper bin module, down by 1 bin; if lower module, up by 3 bins in relation to delivery position), the opening/closing arm of the bin rear end wall open/close unit becomes engaged with the hook on the bin rear end wall.

When the bin rear end wall open/close motor (M17) rotates in this condition, the opening/closing arm makes an arc movement, and the bin rear end wall opens/closes in conjunction with the movement.

The status of the bin rear end wall is monitored b the bin rear end wall OPEN position sensor (PI52) and the bin rear end wall CLOSE position sensor (PI53).

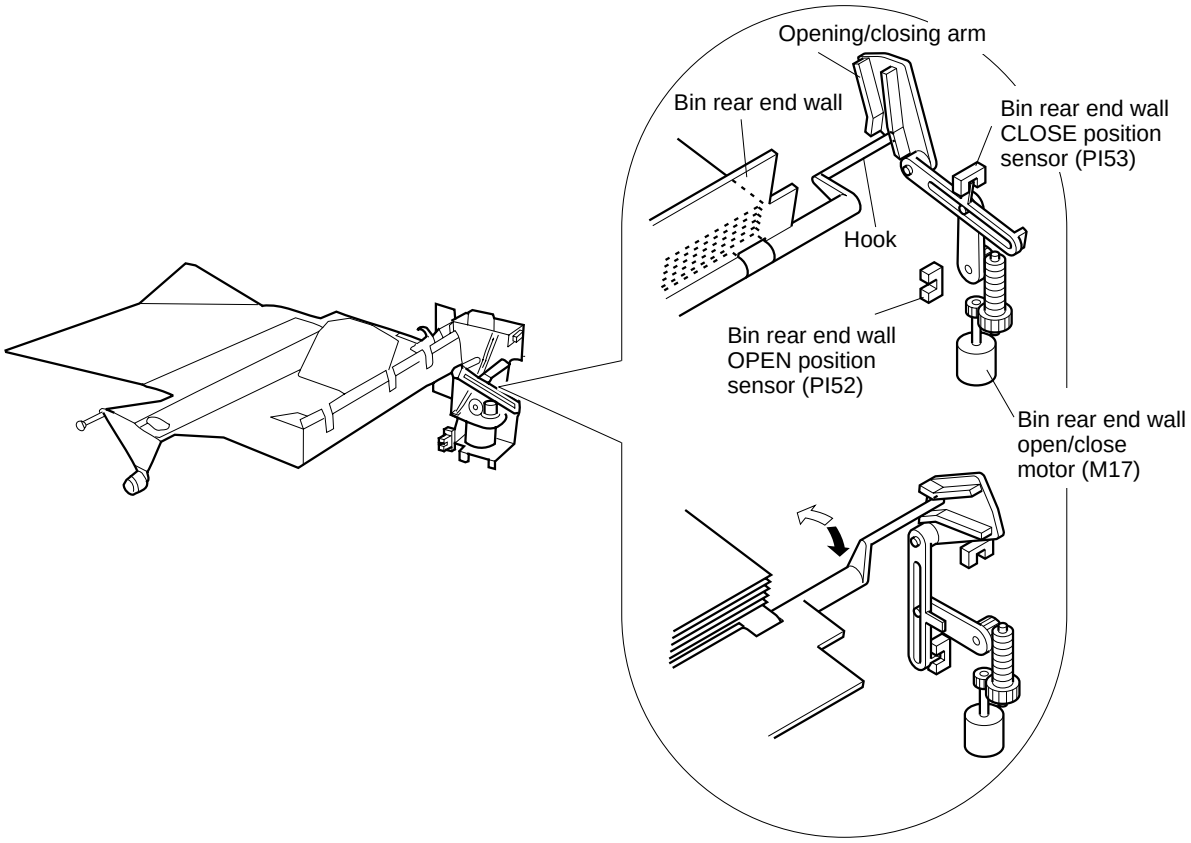

Figure 2-509

c. Controlling the Bin Rear End Wall Open/Close Motor (M17)

Figure 2-510 shows the diagram used to control the bin rear end wall open/close motor (M17). The motor (M17) is a DC motor, and is designed to rotate in one direction only, and the circuit is used to turn on or off the motor.

When the finisher controller PCB sends the motor drive signal (M17D) to the stack processing unit driver PCB, the bin rear end wall open/close motor starts to rotate. If the bin rear end wall OPEN position sensor (PI52) or the bin rear end CLOSE position sensor (PI53) sends signals (M17D) to the finisher controller PCB while the bin rear end wall open/close motor is rotating, the motor drive signal will be cut to stop the motor.

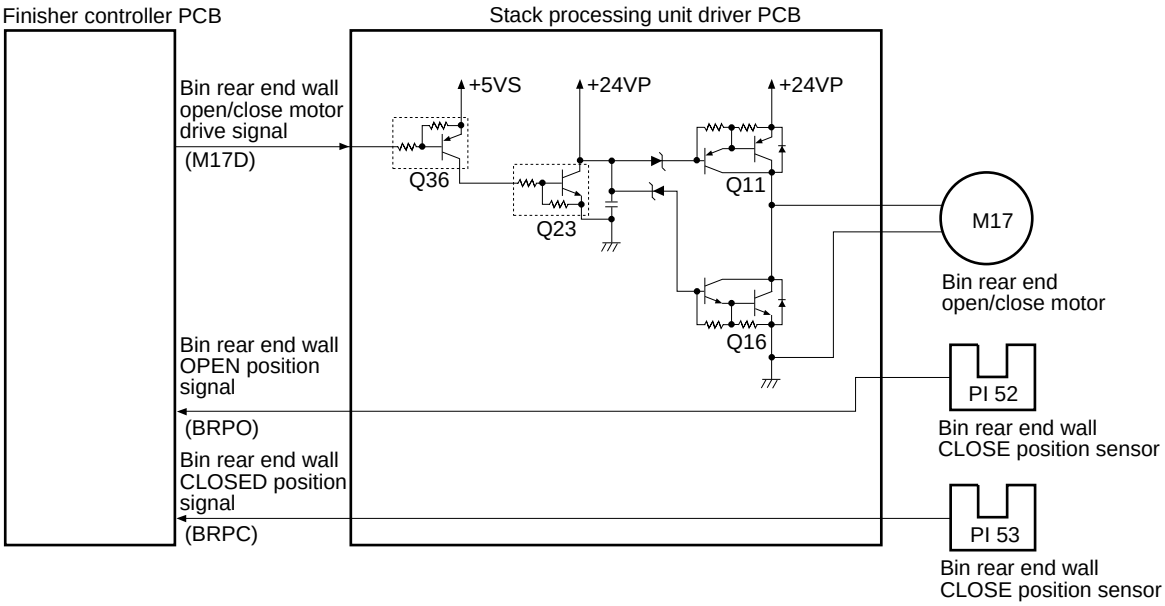

Figure 2-510

d. Sequence of Operations (bin rear end wall open/close motor M17)

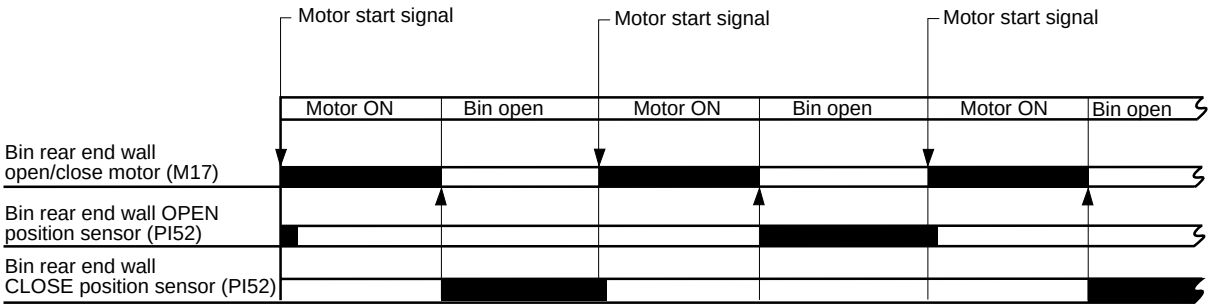

Figure 2-511

COPYRIGHT © 1997 CANON INC.

4. Moving the Side Gripper Left/Right

a. Outline

The side gripper is moved left/right in sort, staple sort, or group mode, and its movement differs accordingly. The finisher moves its side gripper left/right under the conditions shown in Table 2-505 (same as the conditions for moving the stack processing unit).

Up/down movement	Stapling	Copy size
Yes	Yes	B5, A4, B4, A3, A4R, B5R, LTR, LGL, 279.4 × 431.8mm (11" × 17"), LTRR
	No	B5, A4, B4, A4R, B5R, LTR, LGL, LTRR
No	No	A3, 279.4 × 431.8mm (11" × 17")

Table 2-505

The side gripper is moved left/right by the side gripper left/right shift motor (M8). The home position of the side gripper is checked by the side gripper left/right shift home position sensor (PI50). The side gripper left/right shift motor error sensor (PI51) is used to monitor the status of the side gripper left/right shift motor.

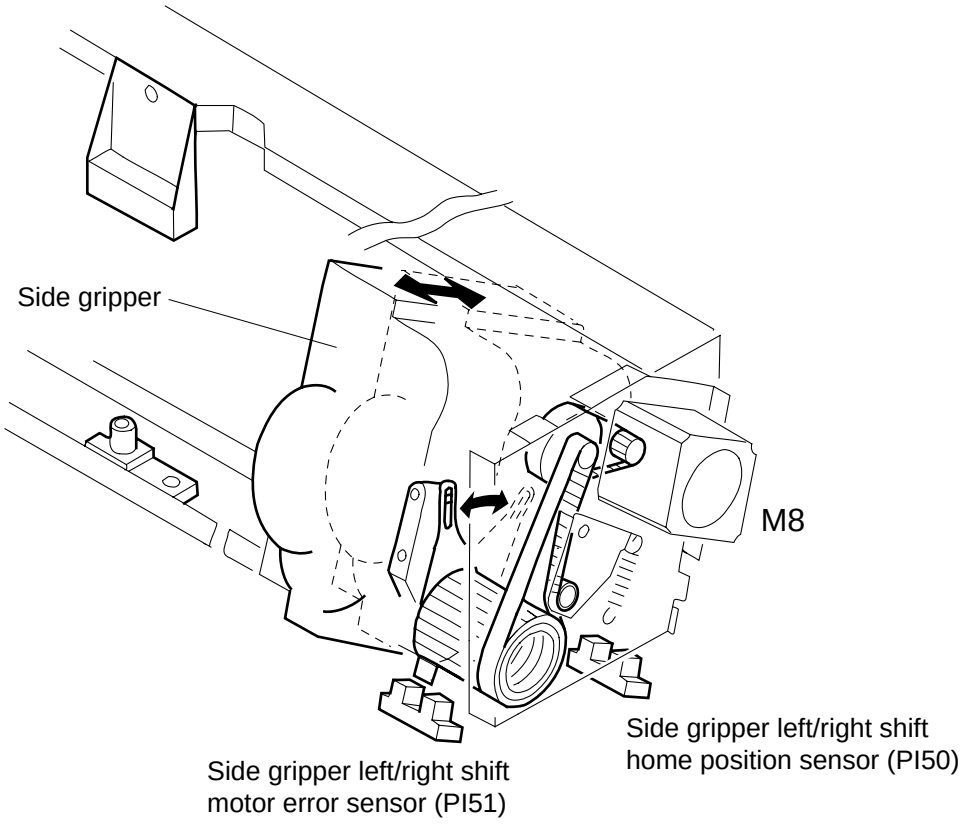

Figure 2-512

b. Operation

When the side gripper left/right shift motor starts to rotate, the side gripper drive arm makes a swinging movement. In response, the side gripper starts to make a left/right shift.

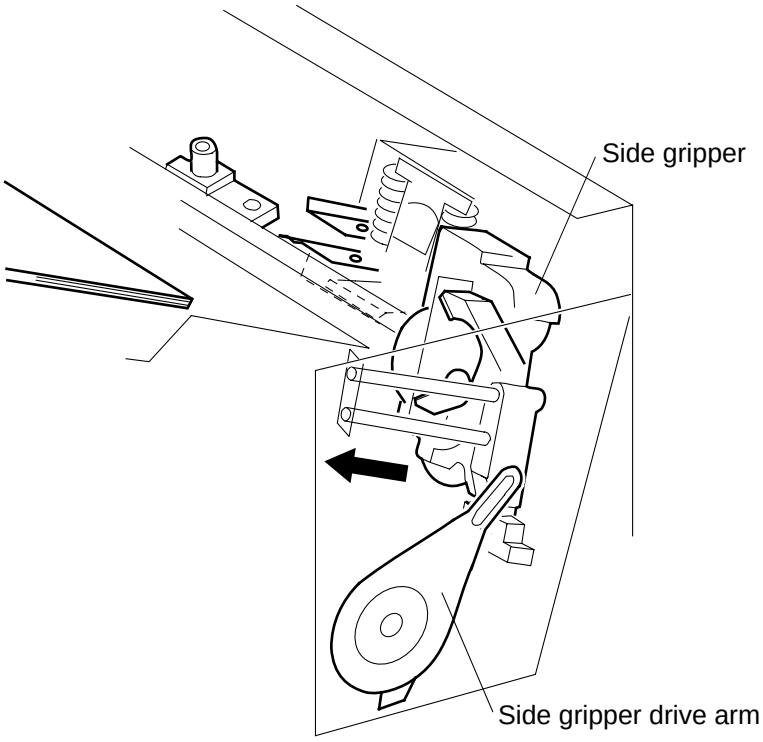

Figure 2-513

COPYRIGHT © 1997 CANON INC.

The side gripper left/right shift motor operates in response to signals from the finisher controller PCB. The stop position of the side gripper is controlled by varying the number of clock pulses of the side gripper left/right shift motor (M8).

The left/right stop position (for clasping the stack inside the bin) is determined by the number of motor drive pulses (travel distance of about 65 mm) from the home position.

The stop position at the right (for releasing the stack) is determined by the number of motor drive pulses (travel distance of about 10 mm) in reference to when the stapler leading edge paper sensor (PI68) detects the leading edge of the stack.

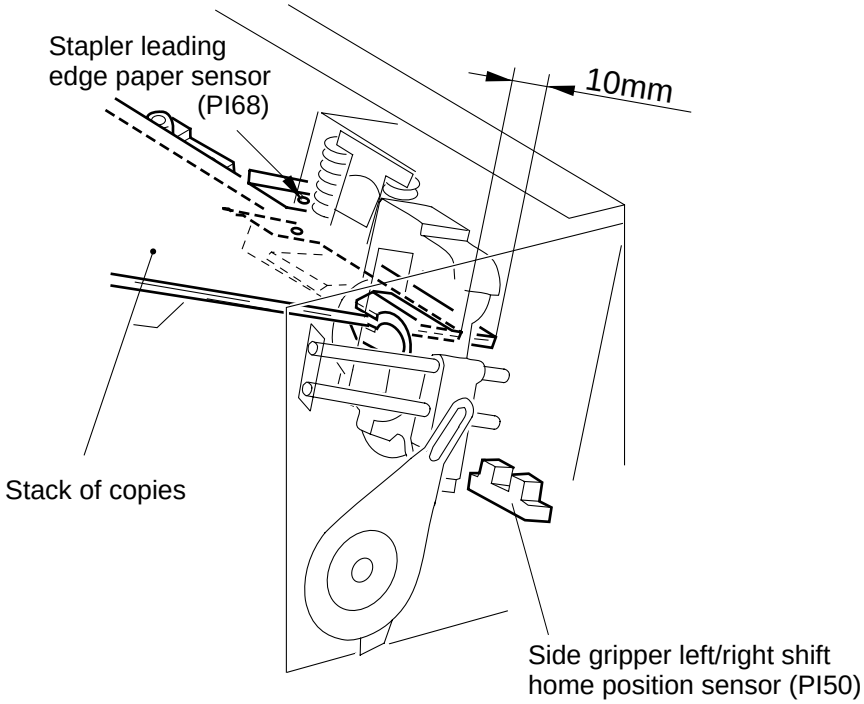

Figure 2-514

c. Controlling the Side Gripper Left/Right Shift Motor (M8)

1) Outline

Figure 2-515 shows the circuit used to control the side gripper left/right shift motor (M8). The motor is a 4-phase control stepping motor, and the circuit has the following functions:

- Switching the current (with motor in operation or at rest).
- Controlling the direction and the speed of the motor.
- Checking for a motor error.

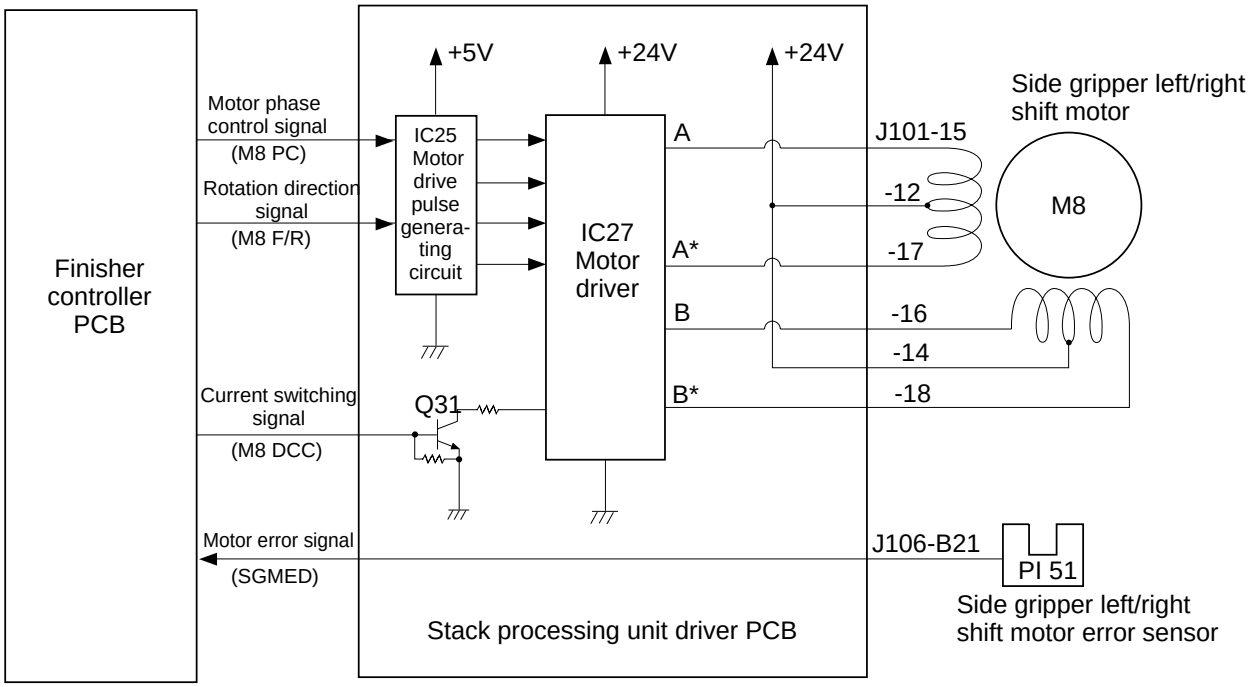

Figure 2-515

2) Operation

The finisher controller PCB sends the motor rotation direction signal and the motor phase control signal (M8PC) to the motor drive pulse generation circuit on the stack processing unit driver PCB.

In response to these signals, the motor drive pulse generation circuit sends the appropriate phase control signal to the motor.

The motor driver is designed to control the output timing of the pulse signals based on the phase control signal of the motor. In response to the output of the pulse signals, the side gripper left/right shift motor switches its direction and speed of rotation.

The current switching signal from the finisher controller PCB, on the other hand, is used to switch the current to suit the status of the motor (in operation or at rest), thereby preventing heating while the motor remains at rest.

 COPYRIGHT © 1997 CANON INC.

3) Detecting a Motor Error

The side gripper left/right shift motor error sensor (PI51) is located where it can monitor the movement of the arm of the drive system of the side gripper, and it sends a signal to indicate the arrival of the arm to the finisher PCB.

The finisher PCB measures the time (A) between when the side gripper left/right shift motor starts to operate and when the signal arrives. At the same time, the finisher controller PCB computes the expected time of arrival (B) of the arm at the side gripper left/right shift motor error sensor (PI51) in relation to the signal sent to drive the side gripper left/right shift motor for comparison against time A.

A and B must match if the side gripper left/right shift motor is operating normally.

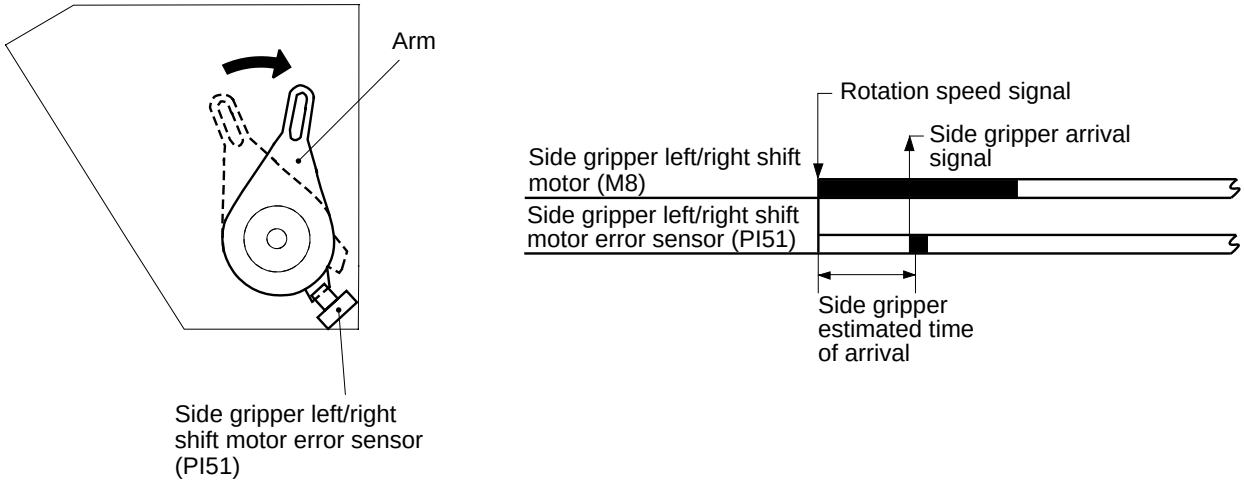

Figure 2-516

An error, if any, results in a discrepancy between the times. If such is the case, the finisher controller PCB will assume a side gripper left/right shift motor (M8) error, and indicate 'E572' on the copier's control panel and stop the operation of the finisher immediately.

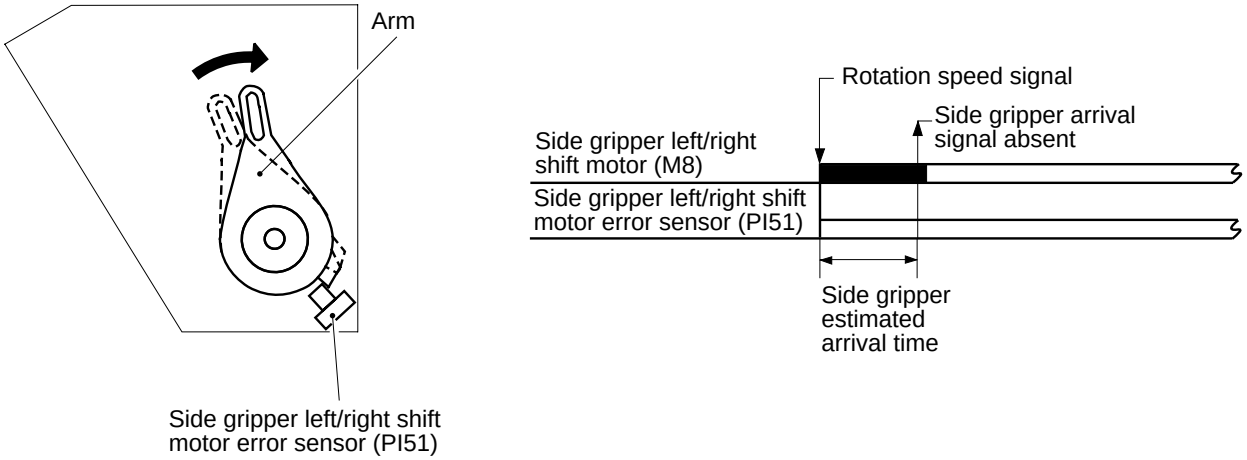

Figure 2-517

5. Clasping the Stack

a. Outline

The clasping movement is executed after a left/right shift of the side gripper, and is driven by the side gripper grip motor (M9). The clasping home position sensor (PI48) is used to detect the home position for clasping operation.

The side gripper paper sensor (PI49) is used to find out the presence/absence of a stack when clasping operation is initiated.

The paper retaining solenoid (S7) is used to hold the stack in place before the stack is clasped by the gripper to help ensure proper clasping.

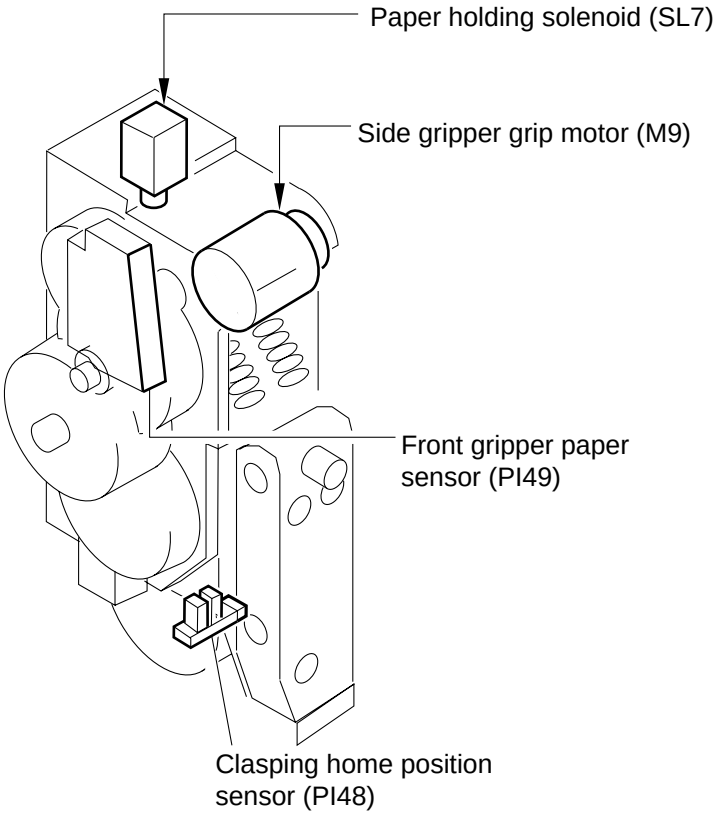

Figure 2-518

COPYRIGHT © 1997 CANON INC.

b. Controlling the Side Gripper Motor (M9)

Figure 2-519 shows the circuit used to control the side gripper grip motor (M9). The motor is a DC motor, and rotates in one direction only. The circuit is used to turn on and off the motor.

When the finisher controller PCB sends the motor drive signal to the stack processing unit driver PCB, the side gripper grip motor starts to rotate. While the side gripper grip motor is rotating, the side gripper clasping home position signal varies its status (ON to OFF/OFF to ON), thereby causing the side gripper grip motor drive signal to go '1' and, as a result, to stop the motor.

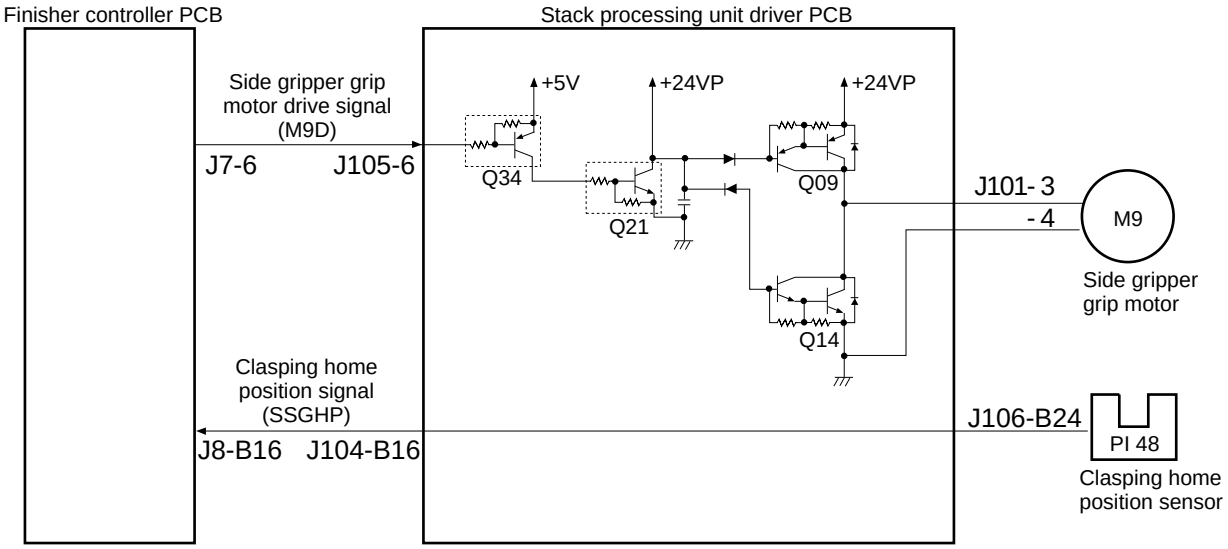

Figure 2-519

c. Sequence of Operations (side gripper grip motor)

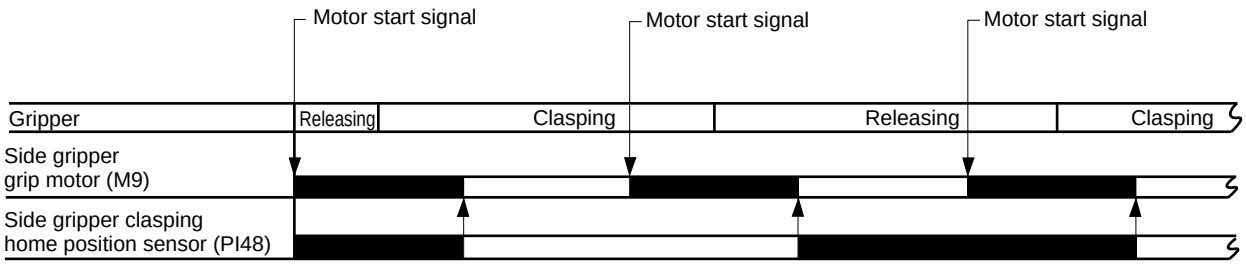

Figure 2-520

d. Holding the Stack in Place

When the side gripper clasps a stack, the stack may have curling. If the side gripper clasped the stack as it is, the sheets in the stack could become displaced. To prevent such a problem, the finisher is equipped with two arms (A, B) which serve to hold down the stack, thereby straightening the curl.

The paper holding arms A and B are driven by the paper holding solenoid (SL7). The paper holding arm A holds down the stack from above, and the paper holding arm B holds down the stack in the lower bin to prevent contact between the lower jaw of the side gripper and the stack.

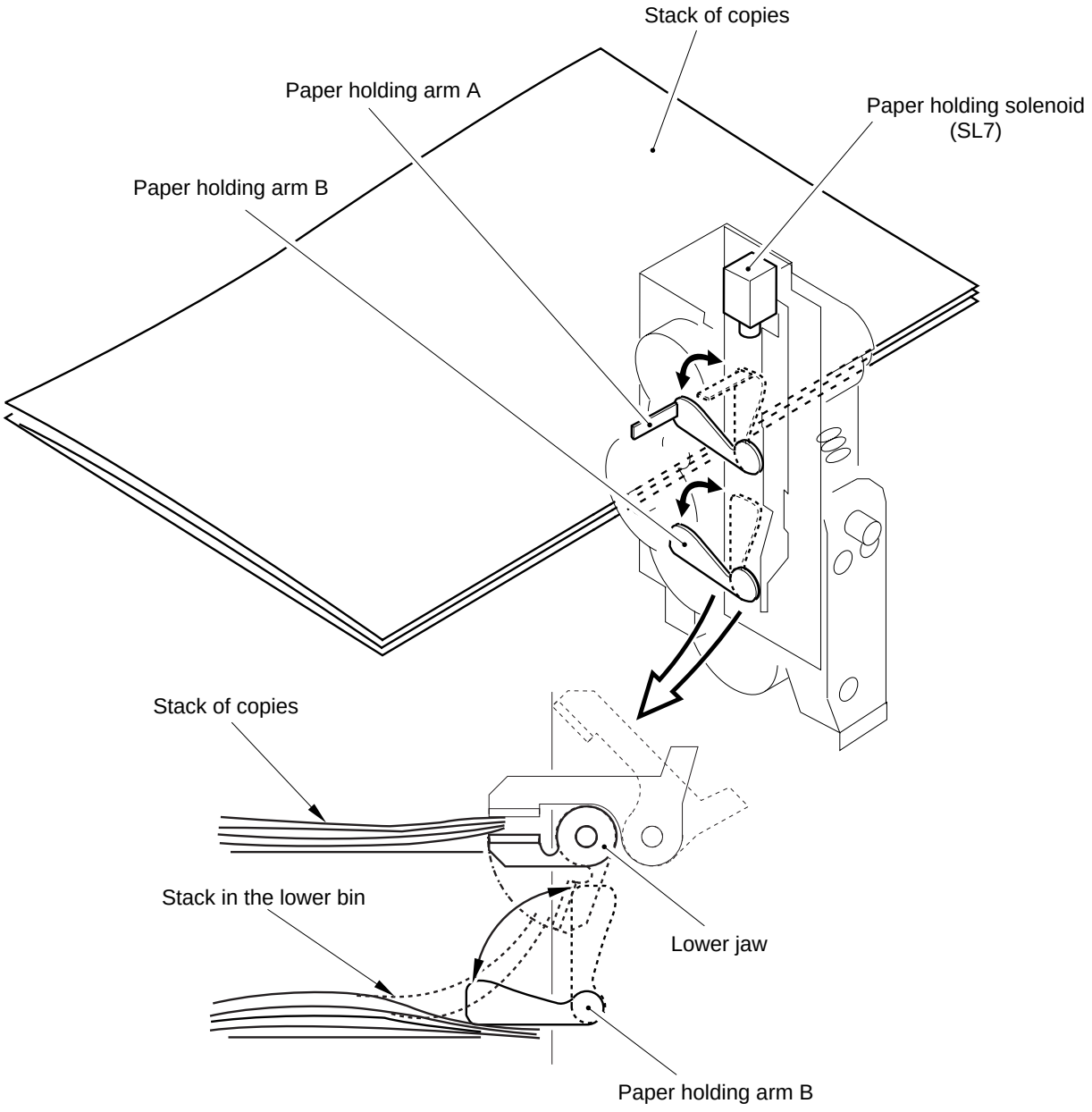

Figure 2-521

COPYRIGHT © 1997 CANON INC.

e. Detecting Paper

After the side gripper has clasped the stack, the side gripper paper sensor (PI49) is used to find out the presence/absence of paper within the side gripper.

Clasping operation causes the paper detecting arm to move out of the side gripper by the work of the rack gear which engages with the gripper gear. If a stack exists within the side gripper, the paper detecting arm will be pushed back, and the side gripper paper sensor detects the movement of the arm.

When the finisher controller PCB identifies the absence of a stack, it will indicate the Jam message on the copier's control panel and immediately stop the operation of the finisher.

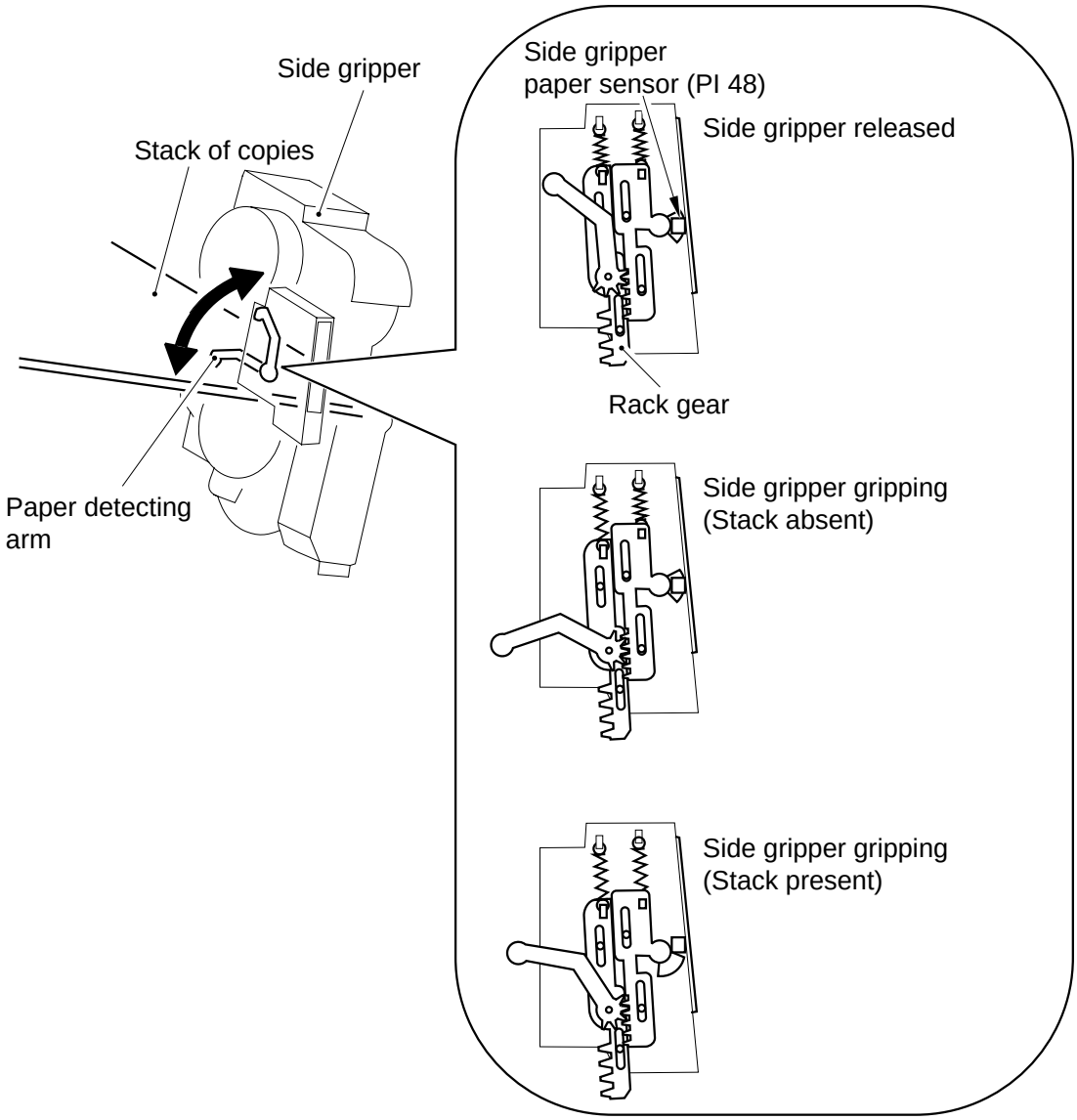

Figure 2-522

f. Sequence of Operations (clasping by side gripper)

Normal

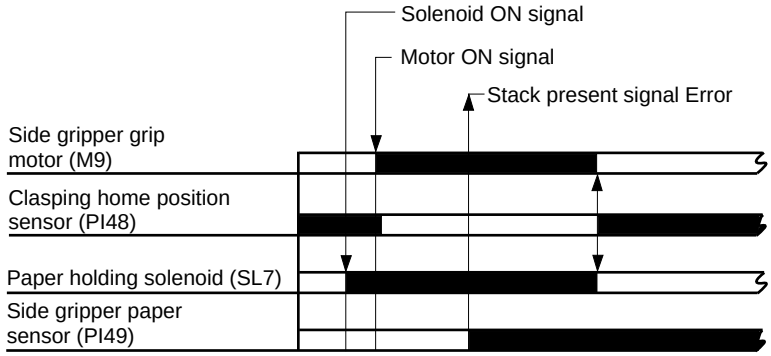

Figure 2-523

Error

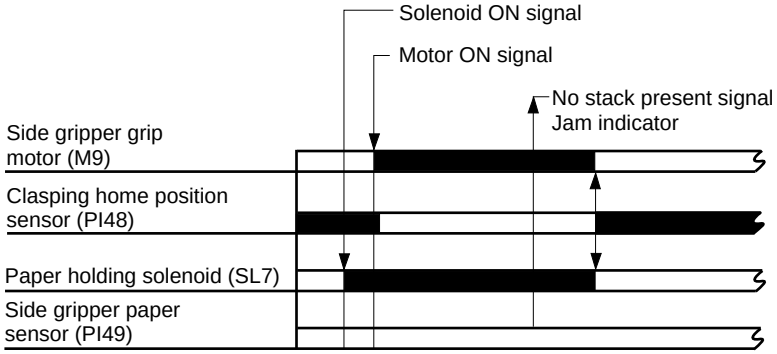

Figure 2-524

COPYRIGHT © 1997 CANON INC.

D. Stapler Unit Drive System

1. Outline

The stapler unit is designed to staple the stack of copies delivered to the bin, and stapling may be any of three types: corner, double, or single.

Stapling	Corner	Double	Double
Paper size	A3, B4, A4, B5, A4R, B5R 279.4 × 431.8mm (11" × 17") LGL, LTR, LTRR	A3, A4, B4, B5 279.4 × 431.8mm (11" × 17"), LTR	A4R, B5R, LTRR
Position	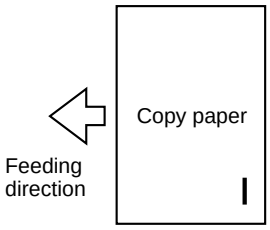	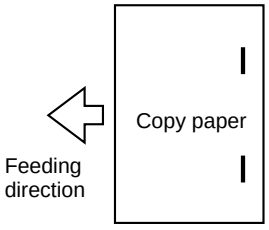	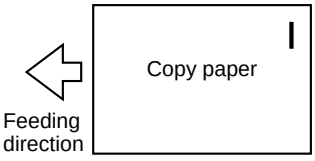

Table 2-506

The finisher's stapler unit performs the following:
- Stapler unit front/rear shifting
- Stapling

The stapler unit is shifted to the front and the rear by the drive of the stapler front/rear shift motor (M13).

The stapler is driven by the stapler motor (M20).

The stapler front/rear shift motor clock sensor (PI65) detects the distance of travel made by the stapler unit in reference to the clock plate mounted to the stapler front/rear shift motor.

The stapler front/rear shift motor home position sensor (PI66) serves to detect the home position of the stapler unit.

The front gripper shift enable sensor (PI67) serves to find out whether the stapler unit is where the front gripper may be safely moved to the left or to the right.

The stapler leading edge paper sensor (PI68), on the other hand, is used to detect insertion of paper into the stapler assembly, thereby preventing problems otherwise caused by idle punching. The stapler leading edge paper detection signal is used to control the movement of a stack by the side gripper.

COPYRIGHT © 1997 CANON INC.

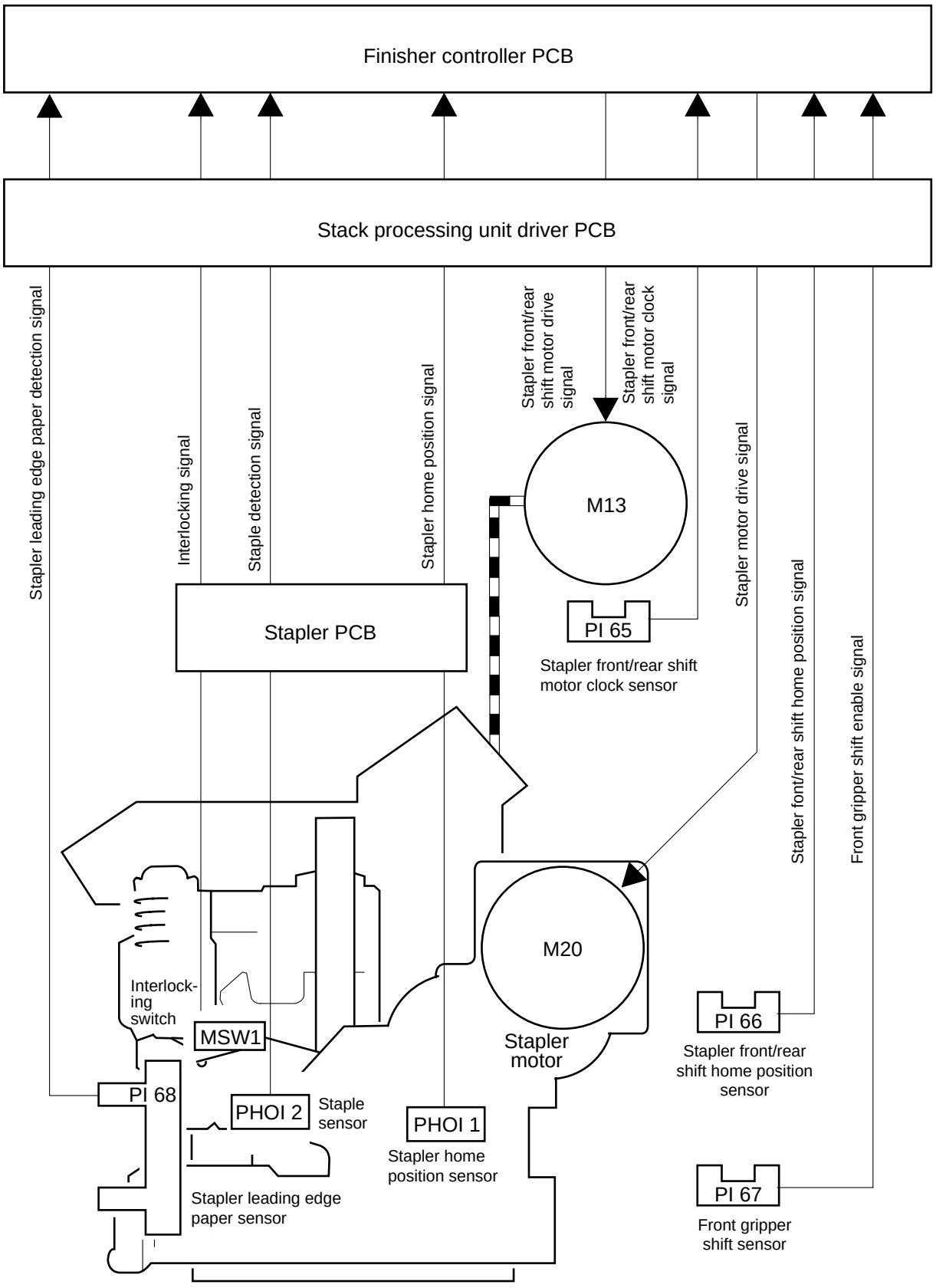

Figure 2-525

COPYRIGHT © 1997 CANON INC.

2. Stapler

a. Outline

Figure 2-526 shows the construction of the stapler.

Stapling is executed by the stapler motor (M20). Specifically, the rotation of a cam initiates stapling, and the stapling home position sensor (PHOI1) detects the end of a single stapling operation.

The staple sensor (PHOI2) is used to detect the presence/absence of staples inside the staple cartridge.

The interlocking switch (MSW1) is used to find out whether the stapler cover used for jam access is open or closed.

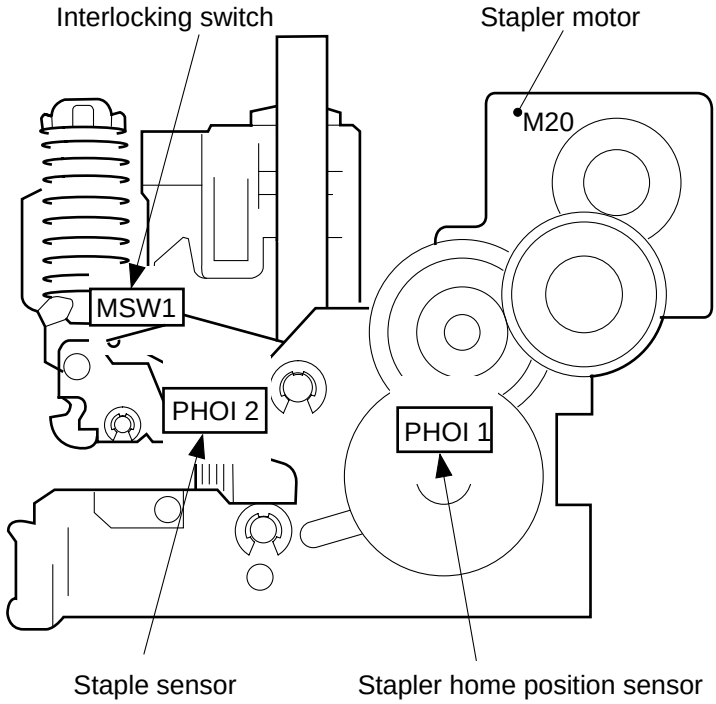

Figure 2-526

b. Operation

The stapler is driven by the stapler motor (M20) operated by two types of cams (cam A and cam B). The cam A is used to drive the head assembly, while the cam B is used to drive the clincher assembly.

The head assembly consists of a shaper and a driver. The shaper serves to bend a staple into a specific shape, and the driver serves to punch the bent staple into a stack of copies.

In the clincher assembly, the staple punched by the driver is cut to suit the thickness of the stack of copies and then bent.

The chips of the staple are collected by the staple chip case, and most jam staples occuring as a result of an error are moved through the stapler unit for collection in the staple jam case.

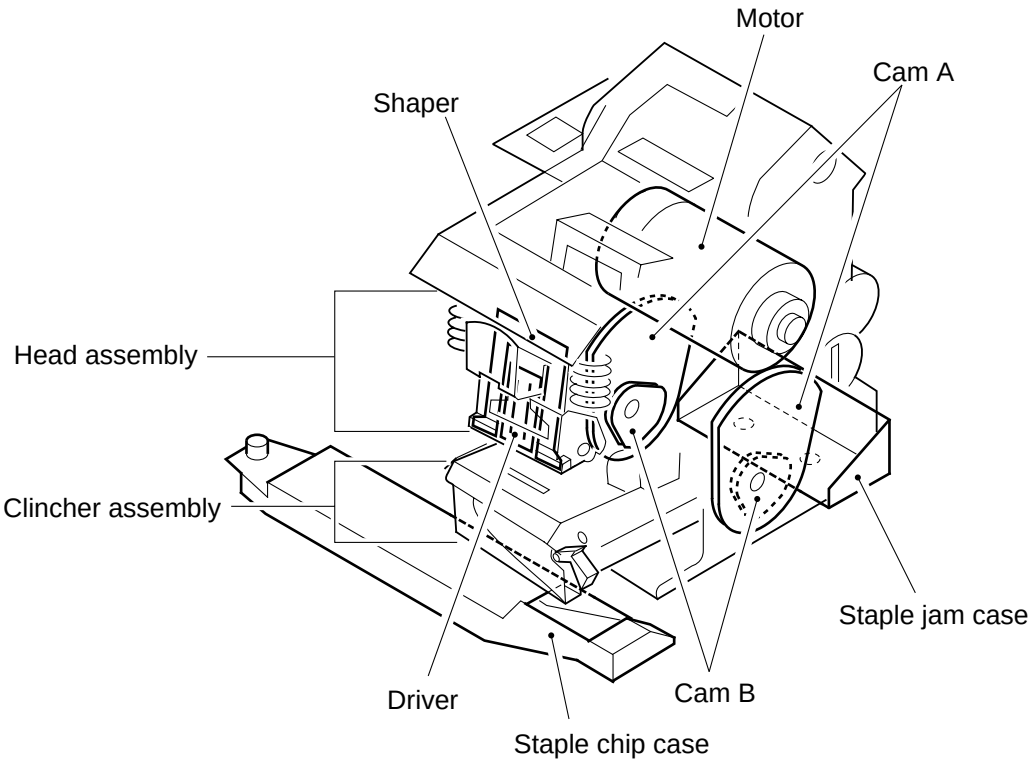

Figure 2-527

COPYRIGHT © 1997 CANON INC.

Stapling is executed as follows:

1) The driver forces the first staple against the upper surface of the stack of copies. At the same time, the former starts to bend the second staple of the stapled sheet.

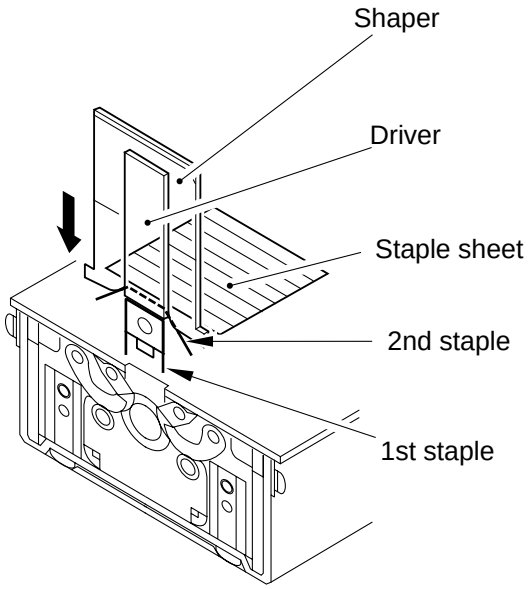

2) The driver pushes in the first staple farther into the stack of copies. At the same time, the shaper ends bending the second staple fully.

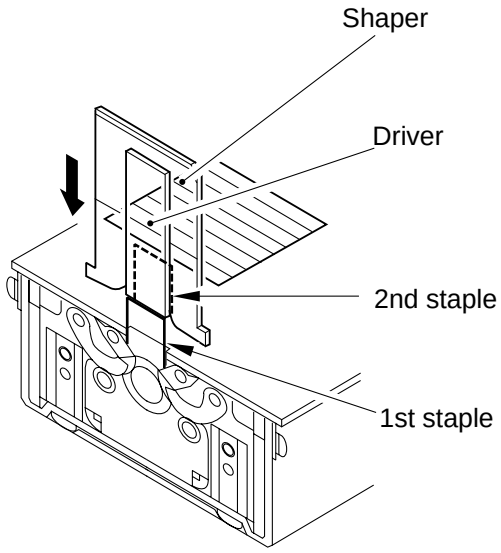

3) The driver pushes in the first staple even farther so that it penetrates through the stack of copies and its ends bend.

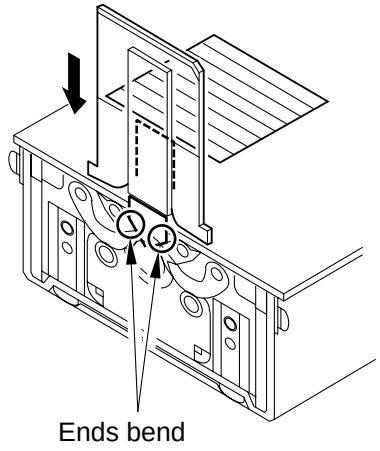

Figure 2-528

4) The cutter cuts the excess ends off the staple. The staple chips are collected to the staple chip case.

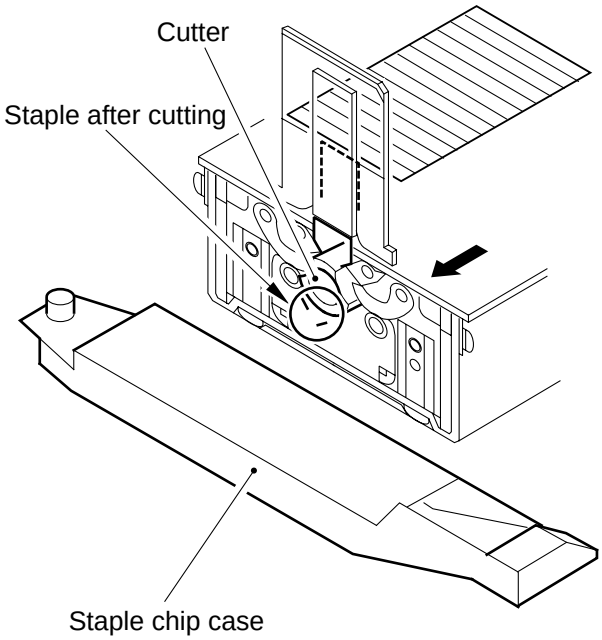

5) The clincher bends the ends of the staple fully.

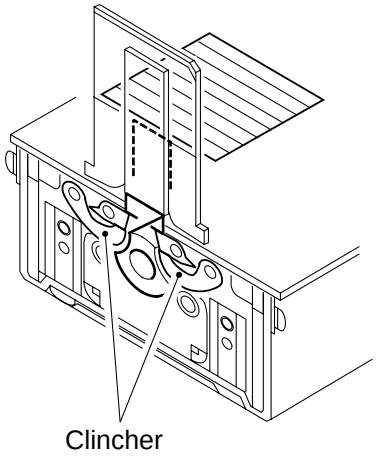

6) The driver and the shaper return to home position, and the 2nd staple is positioned against the lower of the driver in preparation for the next stapling operation.

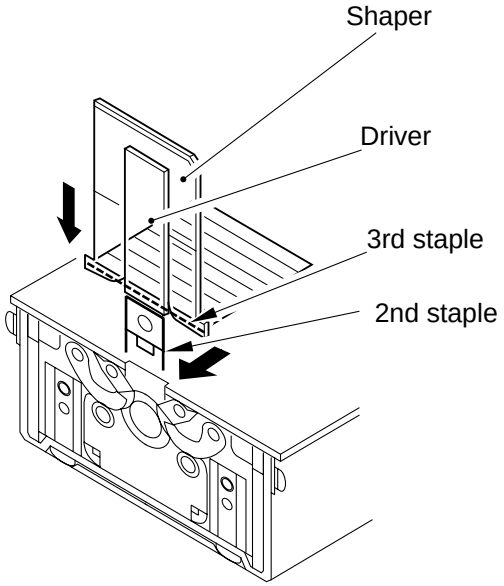

Figure 2-529

COPYRIGHT © 1997 CANON INC.

c. Controlling the Stapler Motor (M20)

Figure 2-530 shows the circuit used to control the stapler motor. The stapler motor is a DC motor, and the circuit has the following functions:

- Turning on and off the stapler motor
- Controlling the direction of rotation of the stapler motor
- Controlling the current

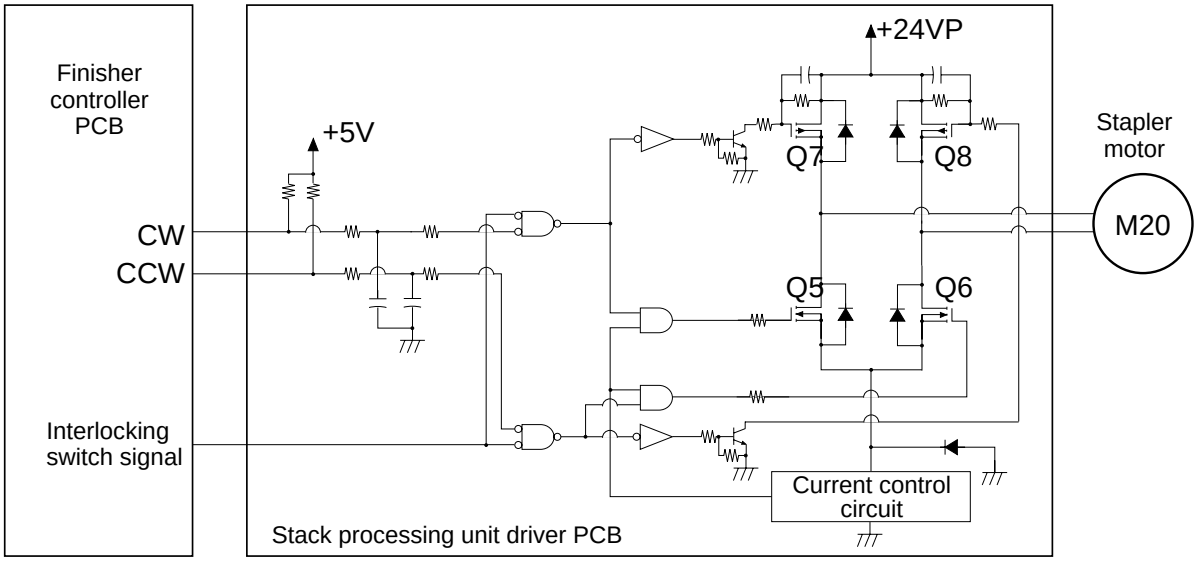

Figure 2-530

- Turning On And Off the Stapler Motor and Controlling the Direction of Rotation

  The stapler motor is turned on/off and its direction is controlled based on the combination of the following two control signals:

  1. Stapler motor clockwise rotation (M20 CW)
  2. Stapler motor counterclockwise rotation (M20 CCW)

Stapler motor direction of rotation	Clockwise rotation signal (M20 CW)	Counterclockwise rotation signal (M20 CCW)
Clockwise	0	1
Counterclockwise	1	0
Stop	1	1

• Controlling the Current
To prevent current above a specific level from flowing into the stapler motor, the circuit is equipped with a current control circuit.
If an overcurrent is about to flow into the stapler motor, the current control circuit turns on to cut out the stapler motor drive signal, thereby preventing the overcurrent from flowing.
If an overcurrent occurs in succession, the stapler motor drive signal will also be cut in succession, not enabling the stapler to move back to its home position within a specific period of time. The finisher controller PCB will identify such a condition as a stapler motor (M20) error, and will indicate 'E531' on the copier's control panel.

d. Controlling the Stapler Motor in Response to a Staple Jam

When a staple jam or an error occurs in the stapler unit, the stapler motor (M20) will be controlled as follows:

1) A staple jam or an error imposes an overload on the stapler motor.

⇩

2) The stapler cannot return to its home position within 0.5 sec after it starts punching a staple.

⇩

3) The stapler motor rotates in reverse to return the stapler to stapling home position.

⇩

4) 'E531' is indicated on the copier's control panel.

COPYRIGHT © 1997 CANON INC.

e. Detecting Staples

The presence/absence of staples within the staple cartridge is checked by the reflecting type staple sensor (PHOI2) built into the lower part of the stapler.

The staples inside the staple cartridge are forced down by the work of a spring and a holding plate. Further, the staples are moved to the end of the stapler by the work of a staple feeding belt.

When staples exist, the staple sensor (PHOI2) receives the light reflected by the staples at the lower part of the staple cartridge so that the finisher controller PCB can identify the presence of staples.

When the staple cartridge starts to run out of staples (about 55 staples remaining), the staple sensor (PHOI2) becomes free of light, causing the finisher controller PCB to identify the absence of staples.

When the absence of staples is detected, the finisher controller PCB will indicate the Add Staple message on the copier's control panel and the finisher's display.

The absence of staples will prevent any further stapling; however, if the condition is detected during continuous stapling, stapling will be continued until all stacks within bins have been stapled.

Reference:

After the absence of staples has been detected, about 23 stapling operations are still possible. Thereafter, the staple sheet will be displaced off the staple feeding belt, most likely preventing proper stapling operation.

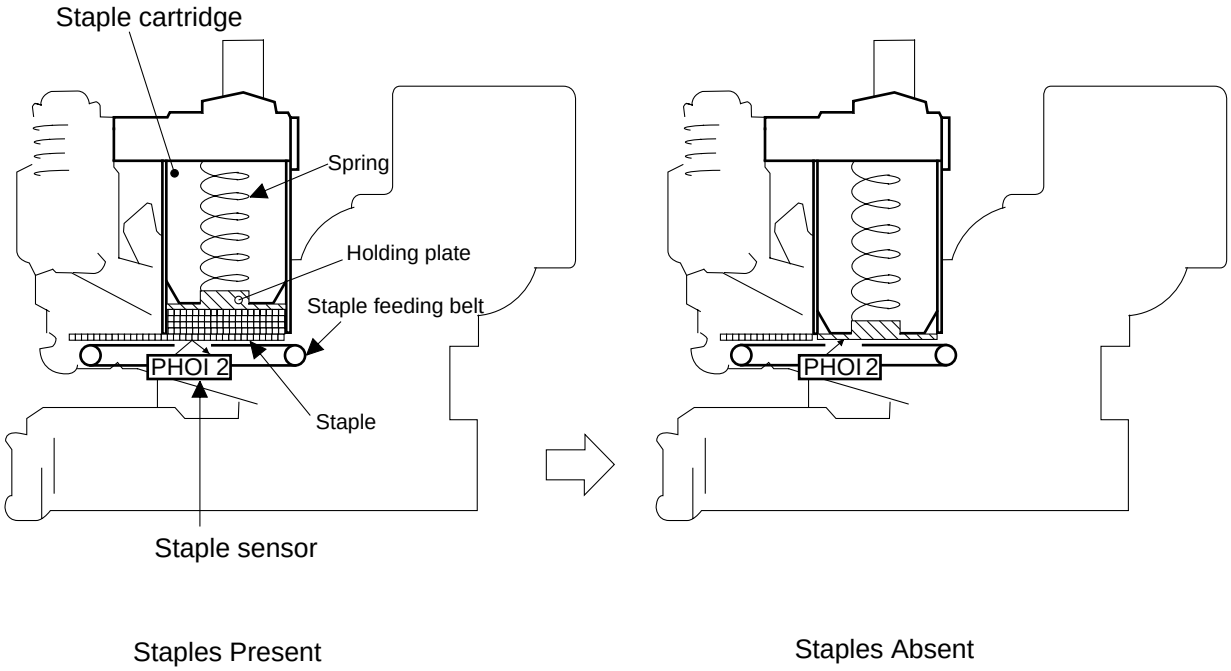

Figure 2-531

3. Shifting the Stapler Unit

a. Outline

Since the finisher executes all stapling operations while keeping the stapler unit in home position, the stapler unit must always be shifted to the front or the rear in staple mode.

b. Operation

The stapler unit is shifted to the front or the rear by the stapler front/rear shift motor (M13) using a belt, and its position is determined in relation to the pulses from the stapler front/rear shift motor (M13).

The stapler unit drive system is equipped with the following sensors to check the position of the stapler unit:

- Stapler front/rear shift motor clock sensor (PI65)
- Stapler front/rear shift home position sensor (PI66)
- Front gripper shift enable sensor (PI67)
- Stapler leading edge paper sensor (PI68)

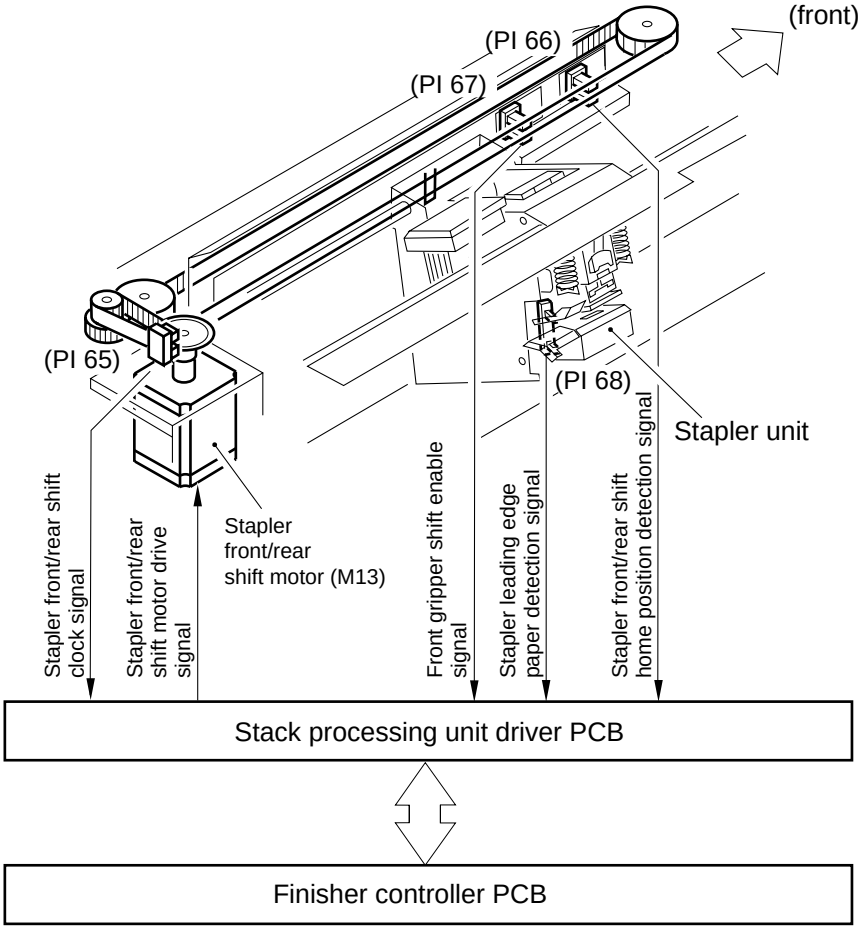

Figure 2-532

COPYRIGHT © 1997 CANON INC.

The stapler front/rear shift motor clock sensor (PI65) monitors the number of rotations made by the clock plate mounted to the stapler font/rear shift motor (M13), checking for an error in the motor operation.

The stop positions for stapling are as shown in Table 2-507, varied according to the size of copy paper and the type of stapling.

Copy paper size	Stop position (distance from home position; mm)			
	Corner	Single	Double	
			Front	Rear
B5	79.5		136.5	256.5
A4	79.5		156.5	276.5
B4	79.5		136.5	256.5
A3	79.5		156.5	276.5
B5R	79.5	238.5		
A4R	79.5	266.5		
LTR	79.5		148.0	267.4
LGL	79.5			
279.4 × 431.8mm (11" × 17")	79.5		148.0	267.4
LTRR	79.5	272.4		

Table 2-507

The stapler front/rear shift home position sensor (PI66) is used to detect the home position of the stapler unit.

The front gripper shift enable sensor (PI67) is used to find out that the stop position of the stapler unit is not in the path taken by the front gripper moving to the left or the right. The front gripper is allowed to move to the left or to the right when the front gripper enable sensor (PI67) is on and, at the same time, the front gripper front/rear shift safety sensor (PI62) is on.

If the front gripper was allowed to move to the left or to the right when the stapler unit is outside the area of detection by the front gripper shift enable sensor (PI67), it could collide with the stapler unit while moving.

COPYRIGHT © 1997 CANON INC.

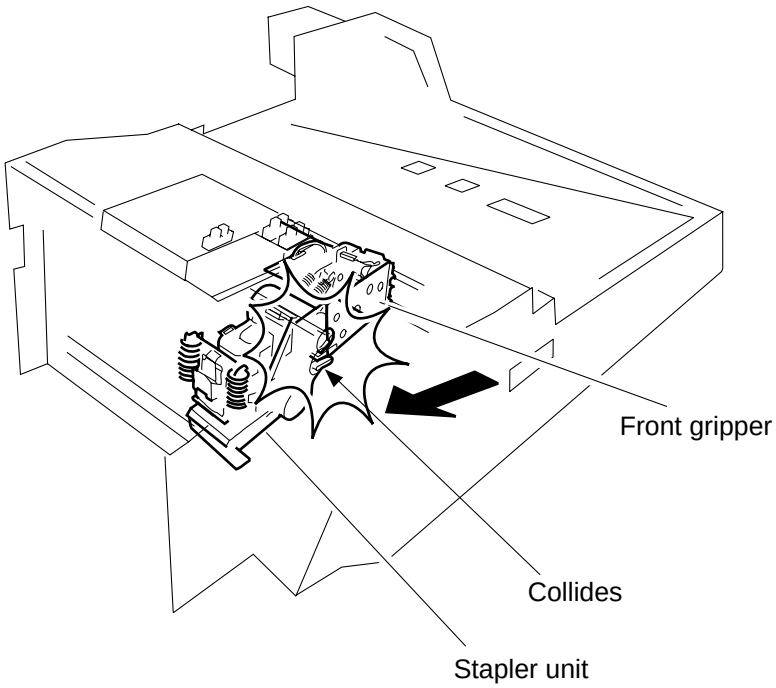

Figure 2-533

The stapler leading edge paper sensor (PI68) is used to find out whether a stack of copies has been drawn out as far as stapling position, thereby preventing problems otherwise caused by idle punching. The stapler leading edge paper detection signal is used to control the movement of a stack by the side gripper.

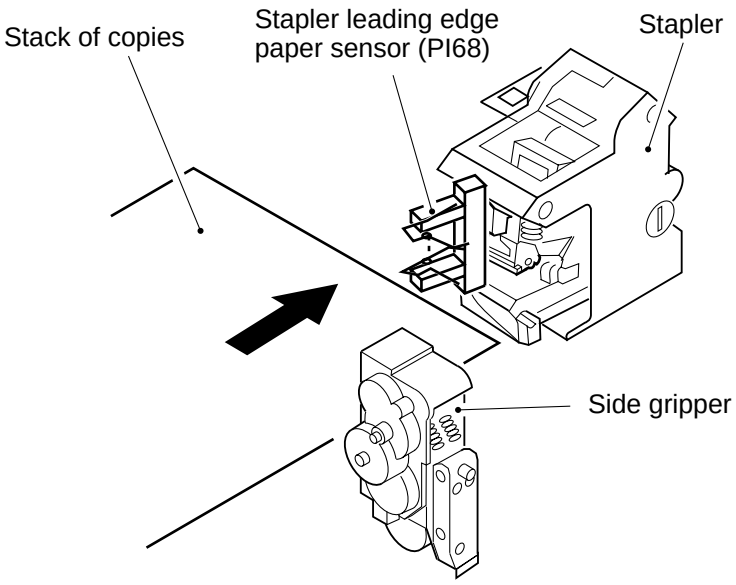

Figure 2-534

COPYRIGHT © 1997 CANON INC.

c. Controlling the Stapler Front/Rear Shift Motor (M13)

1) Outline

Figure 2-535 shows the circuit used to control the stapler front/rear shift motor (M13). The stapler front/rear shift motor is a 4-phase control stepping motor, and the circuit has the following functions:

- Switching the current (with motor in operation or at rest)
- Controlling the direction of rotation and the speed of the motor
- Checking the status of the motor

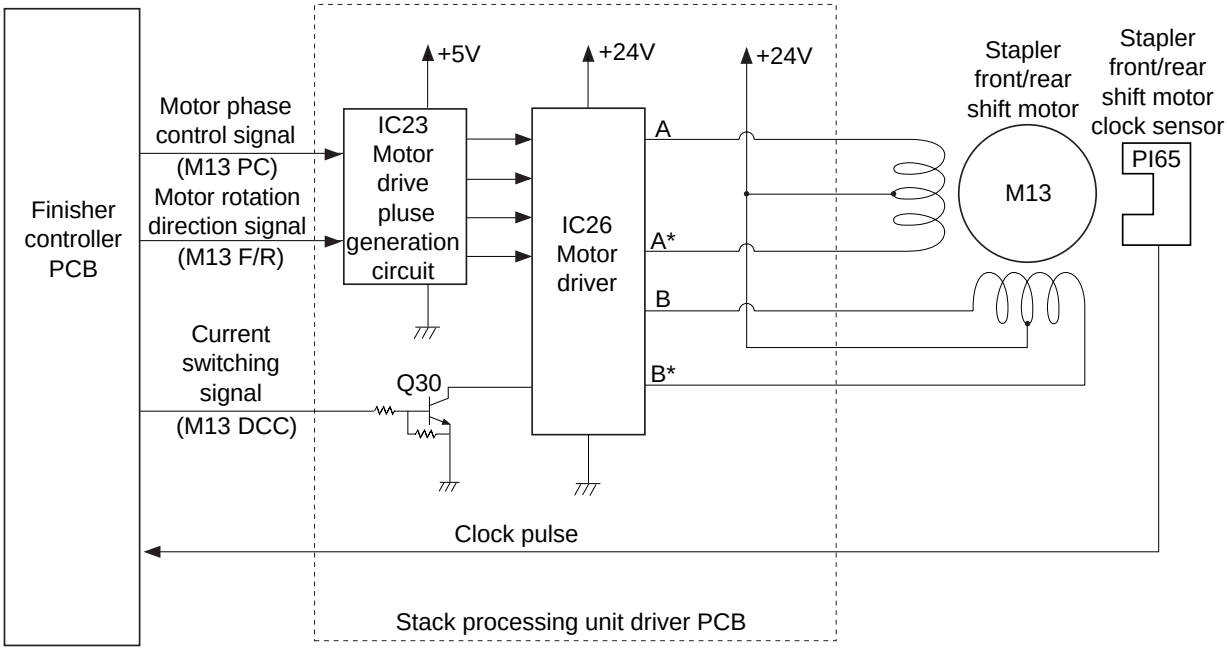

Figure 2-535

2) Operation

The finisher controller PCB sends the motor rotation direction signal (M3 F/R) and the motor phase control signal (M13 PC) to the motor drive pulse generation circuit on the stack processing unit driver PCB.

In response, the motor drive pulse generation circuit sends the appropriate phase control signal for the motor to the motor driver.

The motor driver controls the output timing of pulse signals to suit the phase control signal for the motor.

The staple front/rear shift motor switches its direction of rotation and speed in response to the output of the pulse signals. The current switching signals from the finisher controller PCB, on the other hand, are used to switch the current to suit the status of the motor (in operation or at rest), thereby preventing excess heating.

3) Detecting a Motor Error

The stapler front/rear shift motor clock sensor (PI54) keeps count of the rotation of the disc on the encoder mounted to the drive system used to shift the stapler to the front and the rear, and sends the result to the finisher controller PCB in the form of pulses (A). The finisher controller PCB, on the other hand, compares these incoming pulses against the pulses (B) of the rotation speed signal sent to drive the stapler front/rear shift motor.

As long as the operation of the stapler front/rear shift motor is normal, the ratio between pulses A and B per unit time remains constant.

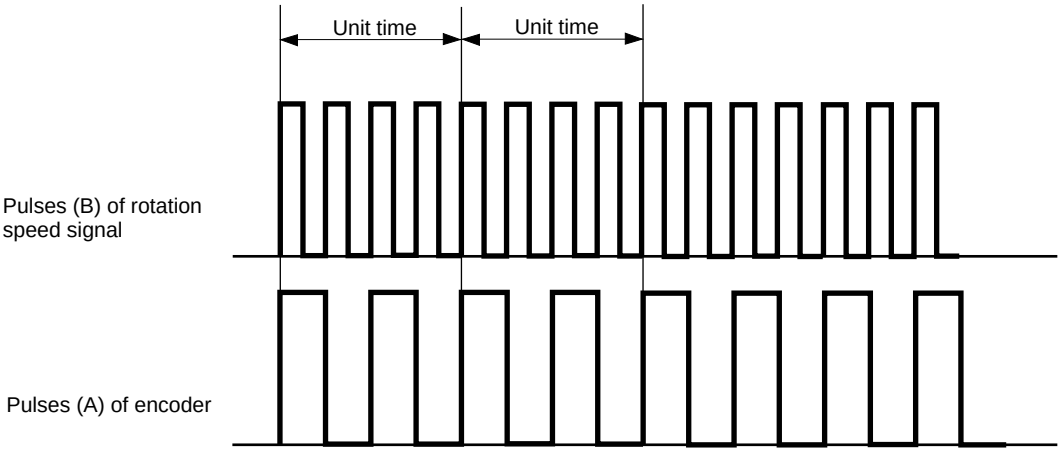

Figure 2-536 (motor operation normal)

If an error occurs in the operation of the stapler front/rear shift motor, the ratio of pulses A and B per unit time will show a discrepancy from a specific ratio; the finisher controller PCB will identify such a condition as a stapler front/rear shift motor (M13) error, and indicate ‘E532’ on the copier’s control panel.

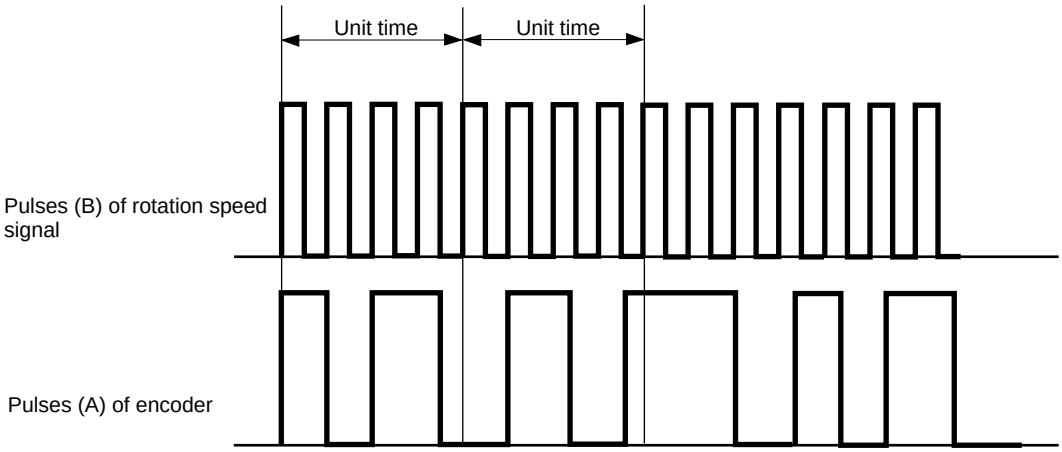

Figure 2-537 (motor operation faulty)

COPYRIGHT © 1997 CANON INC.

4. Sequence of Operations (double stapling)

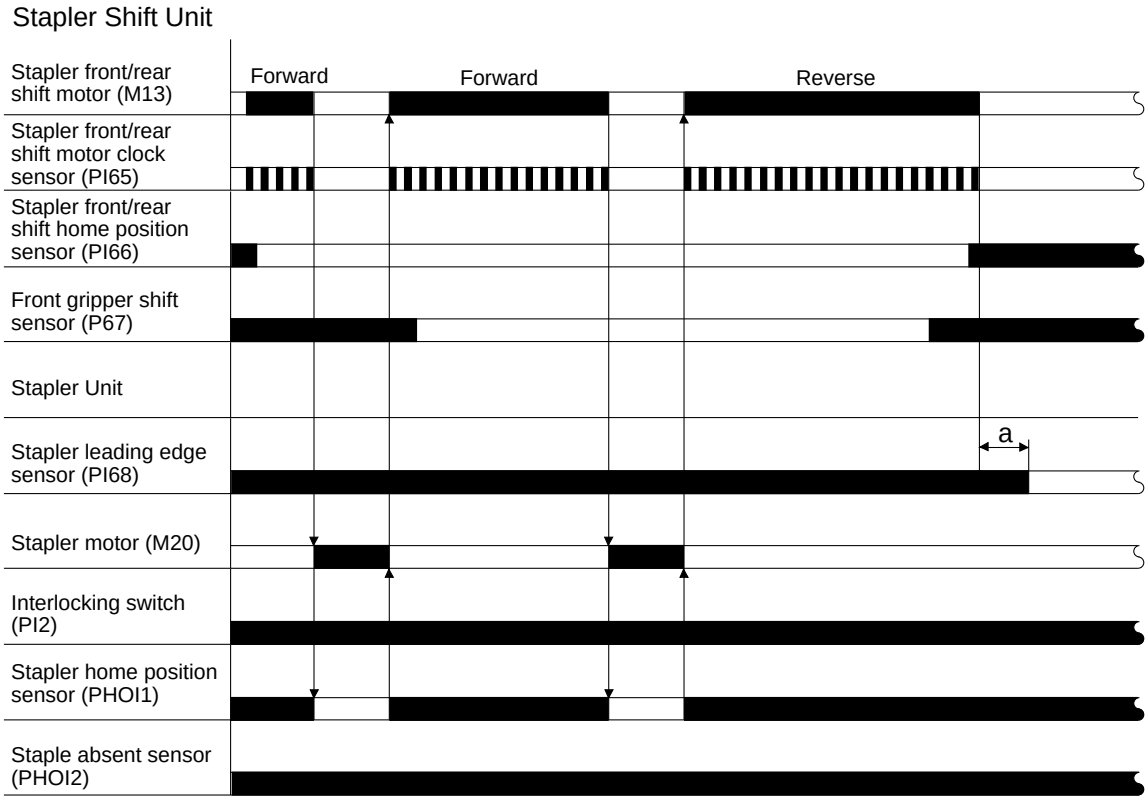

a: Varies depending on paper size.

Figure 2-538

E. Front Gripper Drive System

1. Outline

The front gripper is designed to move the stack of copies carried by the side gripper from the bin to the stacker, and it executes the following operations:

- Shifting to the front and the rear
- Shifting to the left and the right
- Clasping

The front gripper is moved to the front and the rear by the front gripper front/rear shift motor (M11).

The front gripper is moved to the left and the right by the front gripper left/right shift motor (M10).

The front gripper executes clasping operation by the work of the front gripper grip motor (M12).

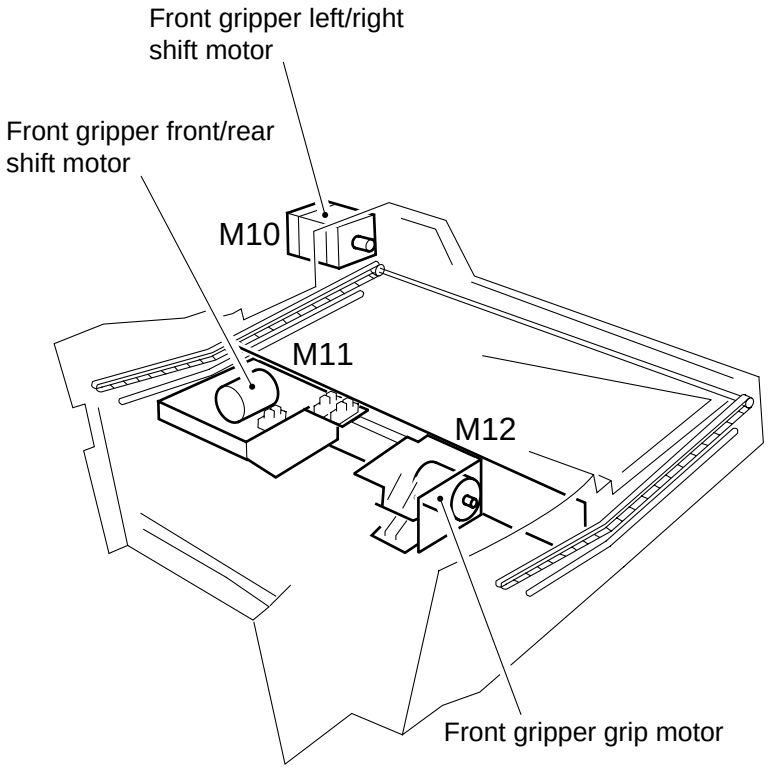

Figure 2-539

COPYRIGHT © 1997 CANON INC.

2. Shifting the Front Gripper to the Front and the Rear

a. Outline

The front gripper is shifted to the front and the rear for the following purpose:

• To ensure that it always clasps the stack of copies at its middle.

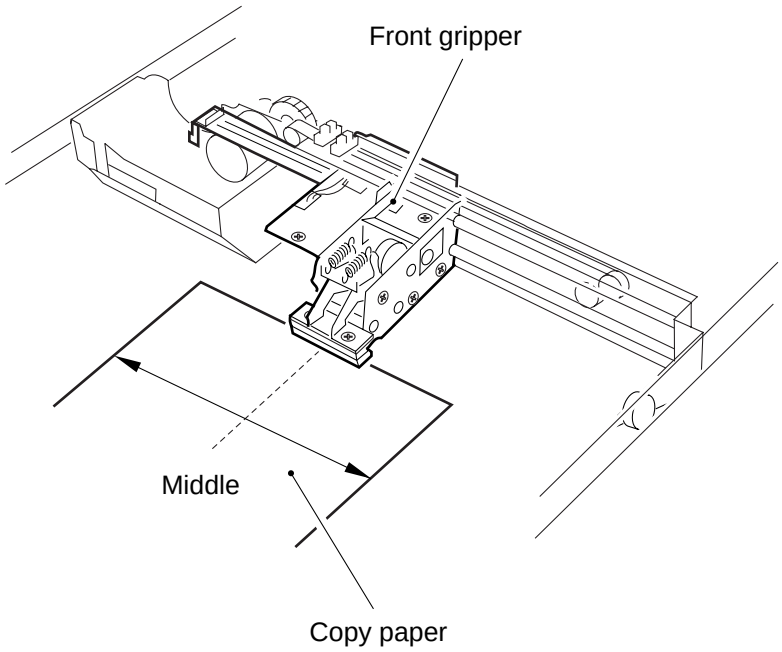

Figure 2-540

• To stagger stacks on the stacker tray.

The front gripper is moved to the front and the rear by means of a belt operated by the front gripper front/rear shift motor (M11). The front gripper front/rear shift motor clock sensor (PI59) monitors the rotation of the clock plate mounted on the front gripper front/rear shift dirve system to find out the movement (travel distance) of the front gripper.

The front/rear shift home position sensor (PI60) is used to monitor the front/rear home position of the front gripper. In addition, the following two sensors are used to check the front/rear position of the front gripper:

- Front gripper front limit sensor (PI61)
- Front gripper front/rear shift safety sensor (PI62)

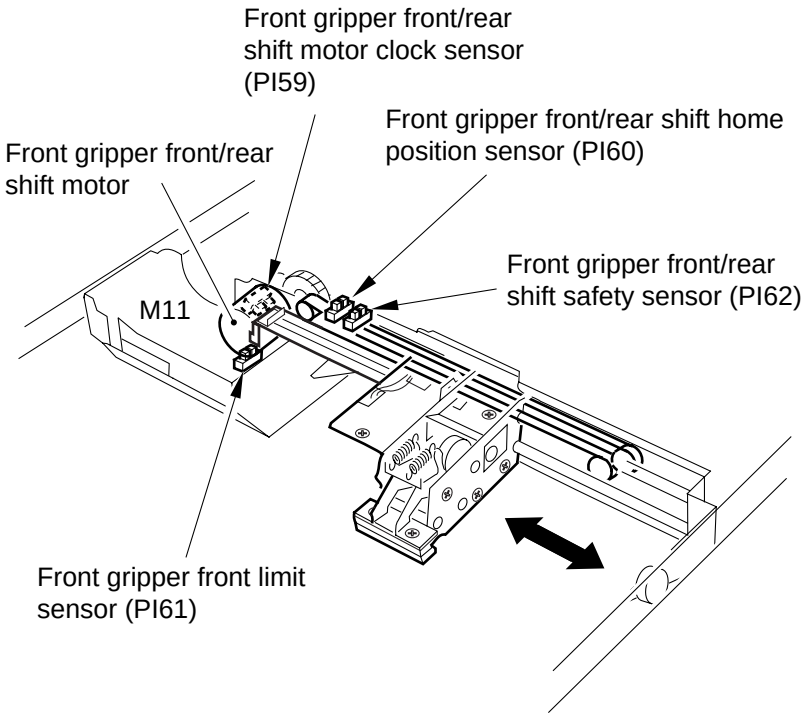

Figure 2-541

COPYRIGHT © 1997 CANON INC.

b. Operation

The front gripper is controlled so that it always clasps the middle of each stack, and it is stopped in reference to the count of the rotation of the encoder disc (mounted to the front gripper front/rear shift motor shaft) kept by the front gripper front/rear shift encoder sensor (PI59). It is stopped at a specific point (A) as determined according to paper size as shown in Table 2-508.

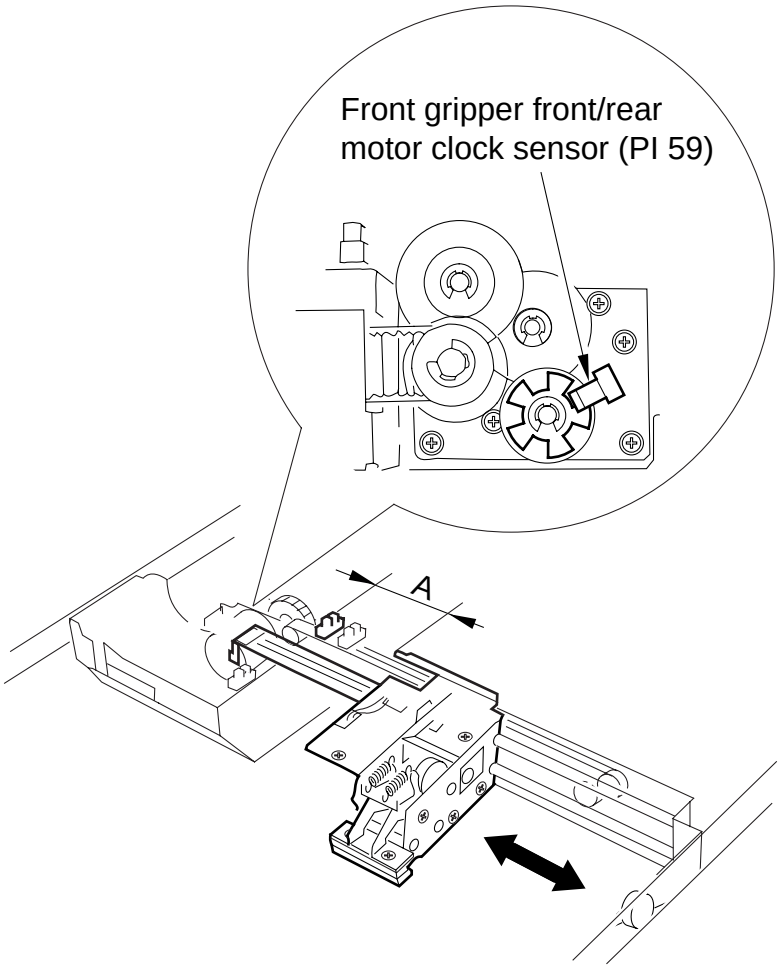

Figure 2-542

Copy paper size	Stop position (A; distance from home position)
A4	0 mm (home position)
B5	20 mm
B4	20 mm
B5R	57.5 mm
A4R	43.5 mm
LTR	8.8 mm
LGL	40.6 mm
LTRR	40.6 mm

Table 2-508

COPYRIGHT © 1997 CANON INC.

When the stack tray is used, the front gripper is shifted starting with stacking of the second stack, and the shift is about 20 mm to the front from where the first stack is placed.

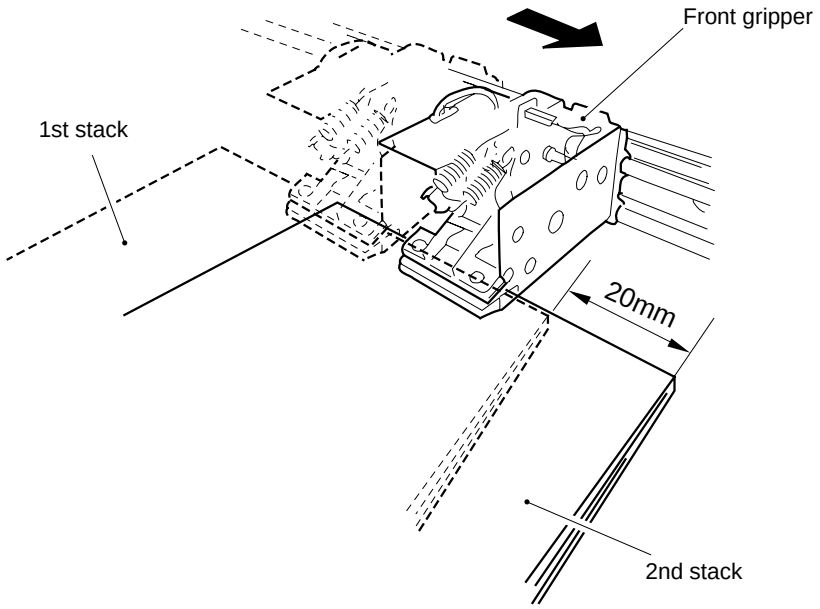

Figure 2-543

c. Detecting the Position of the Front Gripper (front/rear)

The finisher is equipped with a front gripper front limit sensor (PI61) and a front gripper front/rear safety sensor (PI62) to monitor the position of the front gripper in its path.

The front gripper front limit sensor (PI61) serves to detect an excess movement of the front gripper outside its range of travel. The finisher controller PCB will identify such a condition as a front gripper front/rear shift motor (M11) error, and indicate ‘E574’ on the copier’s control panel and stop the operation of the finisher.

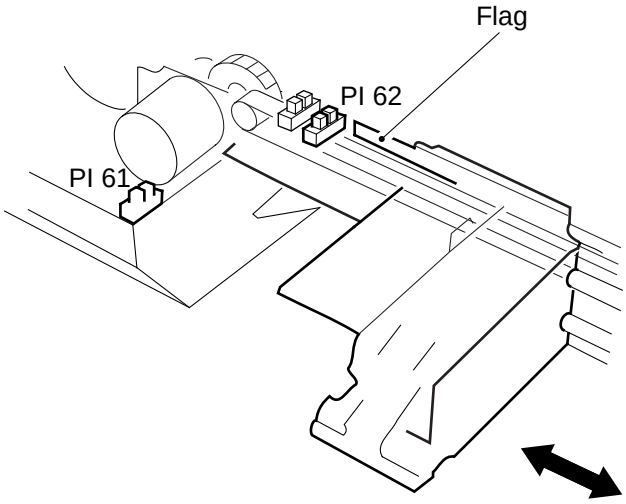

Figure 2-544

COPYRIGHT © 1997 CANON INC.

The front gripper front/rear safety sensor (PI62), on the other hand, serves to check whether the front gripper is at a point from which it may move to the left or to the right. The front gripper is allowed to move to the left or to the right when the front gripper front/rear safety sensor (PI62) is on and, at the same time, when the front gripper shift sensor (PI67) is on.

If the front gripper was allowed to move to the left or to the right while it is outside the range of detection by the front gripper front/rear safety sensor, it could collide with the stapler unit.

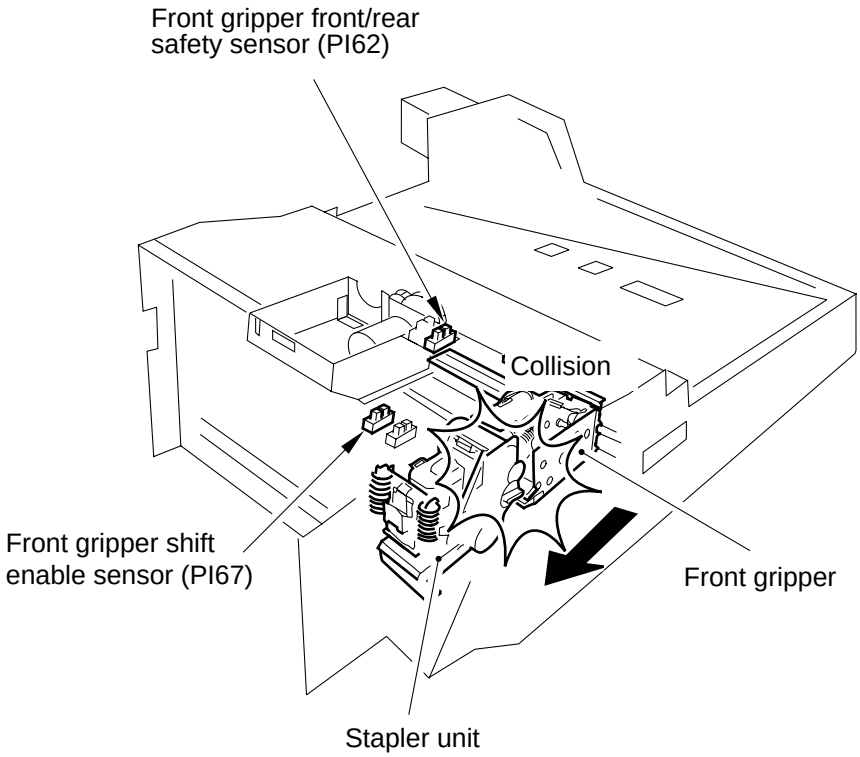

Figure 2-545

d. Controlling the Front Gripper Front/Rear Shift Motor (M11)

1) Outline

Figure 2-546 shows the circuit used to control the front gripper front/rear shift motor (M11). The motor is a DC motor, and the circuit has the following functions:

- Turning on and off the motor.
- Controlling the direction of rotation of the motor.

The circuit possesses a logic circuit used to determine whether to drive or stop the motor based on combinations of signals from sensors.

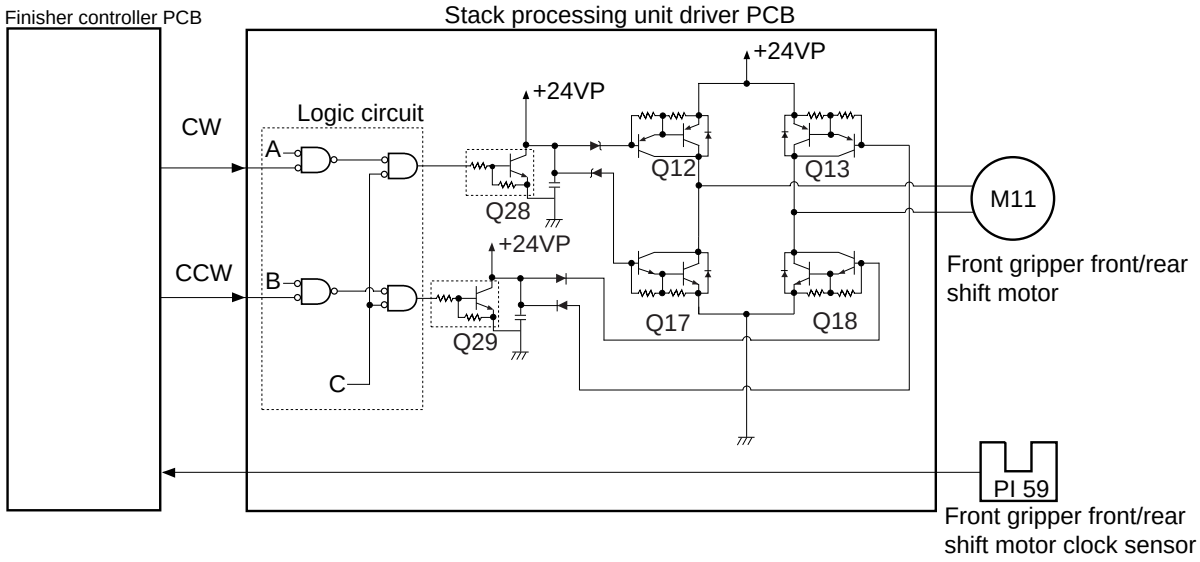

A: Front gripper front/rear shift home position signal (PI 60)
B: Front gripper front/rear limit signal (PI 61)
C: Front gripper front/rear shift safety signal (PI 61) , front gripper left/right safety signal (PI 58) , front gripper shift signal (PI 67) ; combination of these signals.

Figure 2-546

COPYRIGHT © 1997 CANON INC.

2) Turning On and Off the Front Gripper Front/Rear Shift Motor and Controlling the Direction of Rotation

The front gripper front/rear shift motor is turned on or off and its direction of rotation is controlled based on combinations of the following two types of signals:

CW: Front gripper front/rear shift motor clockwise signal (front gripper moves to the rear)

CCW: Front gripper front/rear shift motor counterclockwise signal (front gripper moves to the front)

Front gripper front/rear shift motor status	CW	CCW
Front gripper is moved to the front	0	1
Front gripper is moved to the rear	1	0
Stopped	1	1

Table 2-509

The logic circuit calls for the conditions shown in Table 2-510 for the front gripper front/rear shift motor to rotate clockwise or counterclockwise. The motor is allowed to rotate only when each of the conditions is met:

Front gripper is moved to the rear

	Condition 1		Condition 2		Condition 3	
Sensor name (notation)	Flag over sensor	I/O display	Flag over sensor	I/O display	Flag over sensor	I/O display
Front gripper front/rear shift home position sensor (PI60)	No	P144-3 : 0	No	P144-3 : 0	No	P144-3 : 0
Front gripper front/rear shift front limit sensor (PI61)	*	P148-4 : *	*	P148-4 : *	*	P148-4 : *
Front gripper front/rear shift safety sensor (PI62)	Yes	P148-5 : 0	No	P148-5 : 1	Yes	P148-5 : 0
Front gripper shift enable sensor (PI67)	Yes	P148-6 : 0	*	P148-6 : *	No	P148-6 : 1
Front gripper left/right shift safety sensor (PI58)	*	P148-3 : *	Yes	P148-3 : 0	Yes	P148-3 : 0

*Either.

For I/O display, use the copier's service mode.

Front gripper is moved to the front

	Condition 1		Condition 2		Condition 3	
Sensor name (notation)	Flag over sensor	I/O display	Flag over sensor	I/O display	Flag over sensor	I/O display
Front gripper front/rear shift home position sensor (PI60)	*	P144-3 : *	*	P144-3 : *	*	P144-3 : *
Front gripper front/rear shift front limit sensor (PI61)	No	P148-4 : 1	No	P148-4 : 1	No	P148-4 : 1
Front gripper front/rear shift safety sensor (PI62)	Yes	P148-5 : 0	No	P148-5 : 1	Yes	P148-5 : 0
Front gripper shift enable sensor (PI67)	Yes	P148-6 : 0	*	P148-6 : *	No	P148-6 : 1
Front gripper left/right shift safety sensor (PI58)	*	P148-3 : *	Yes	P148-3 : 0	Yes	P148-3 : 0

*Either.

For I/O display, use the copier's service mode.

Table 2-510

COPYRIGHT © 1997 CANON INC.

3. Shifting the Front Gripper to the Left and the Right

a. Outline

The front gripper is shifted to the left or the right so that the stack carried from the bin by the side gripper may be moved to the stack tray.

The front gripper is shifted to the front and the rear by a belt operated by the front gripper left/right shift motor (M10).

The left/right shift home position sensor (PI55) is used to detect the home position of the front gripper.

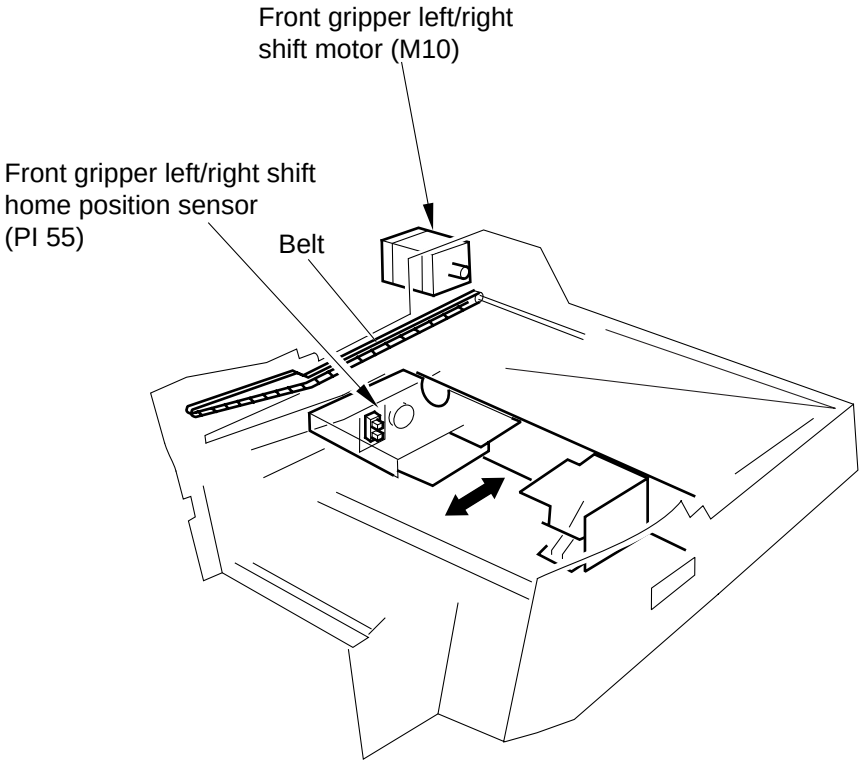

Figure 2-547

b. Operation

The stop position of the front gripper is determined in reference to the count taken of the rotation of the encoder disc (mounted to the front gripper left/right shift drive system) by the front gripper left/right shift clock sensor (PI54).

The stop position in left direction is the same regardless of copy size (about 220 mm from the home position).

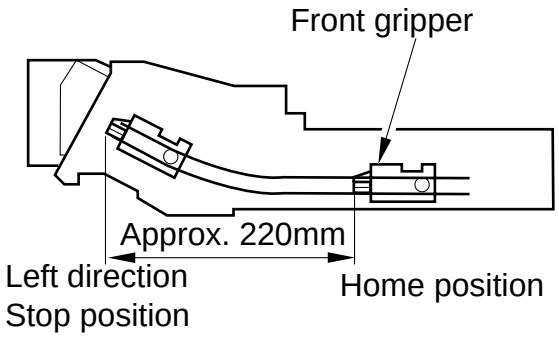

Figure 2-548

The stop position (A) in right position varies according to copy paper size and depending on the presence/absence of folded paper. The stop position of the front gripper in relation to copy paper size and the presence/absence of folded paper is as shown in Table 2-511

COPYRIGHT © 1997 CANON INC.

Copy paper size (final size)	Folding	Stop position (A; from home position)
B5	No	0 mm (home position)
	Yes	0 mm (home position)
A4	No	28 mm
	Yes	28 mm
B4	No	177 mm
B5R	No	75 mm
A4R	No	115 mm
LTR	No	33.9 mm
	Yes	33.9 mm
LGL	No	173.6 mm
LTRR	No	97.4 mm

Table 2-511

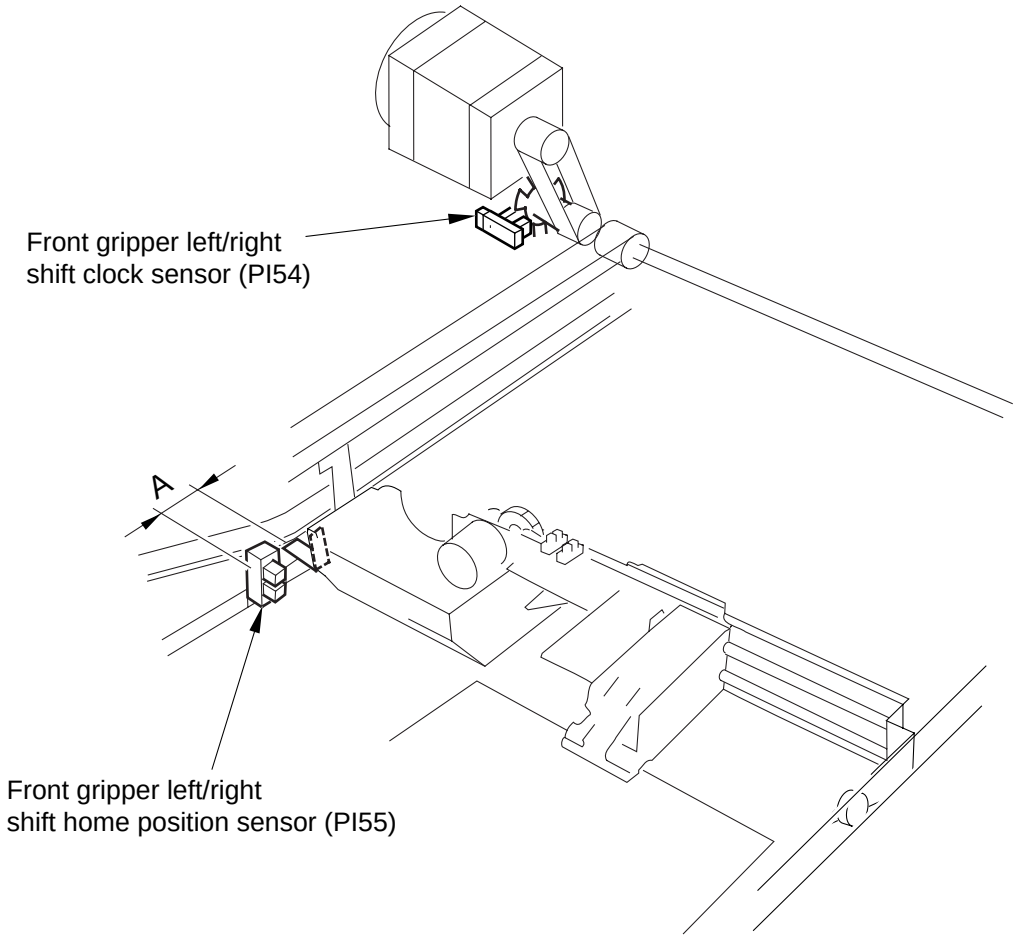

Figure 2-549

c. Detecting the Position of the Front Gripper in Left/Right Direction

The finisher is equipped with the following sensors to check the position of the front gripper in its left/right shift path:

- Front gripper left shift limit sensor (PI56)
- Front gripper right shift limit sensor (PI57)
- Front gripper left/right safety sensor (PI58)

The front gripper left shift limit sensor (PI56) and the front gripper right shift sensor (PI57) are used to check excess shifts by the front gripper over its range of travel. When the front gripper reaches the front gripper limit sensor, finisher controller will identify such a condition as a front gripper left/right shift motor (M10) error, and indicate 'E573' on the copier's control panel and stop the operation of the finisher.

If, after having reached the front gripper right limit sensor, the front gripper attempts to move farther to the right, the finisher controller will assume an error in the front gripper left/right shift motor (M10), indicating 'E573' on the copier's control panel and, at the same time, stopping the machine's operation.

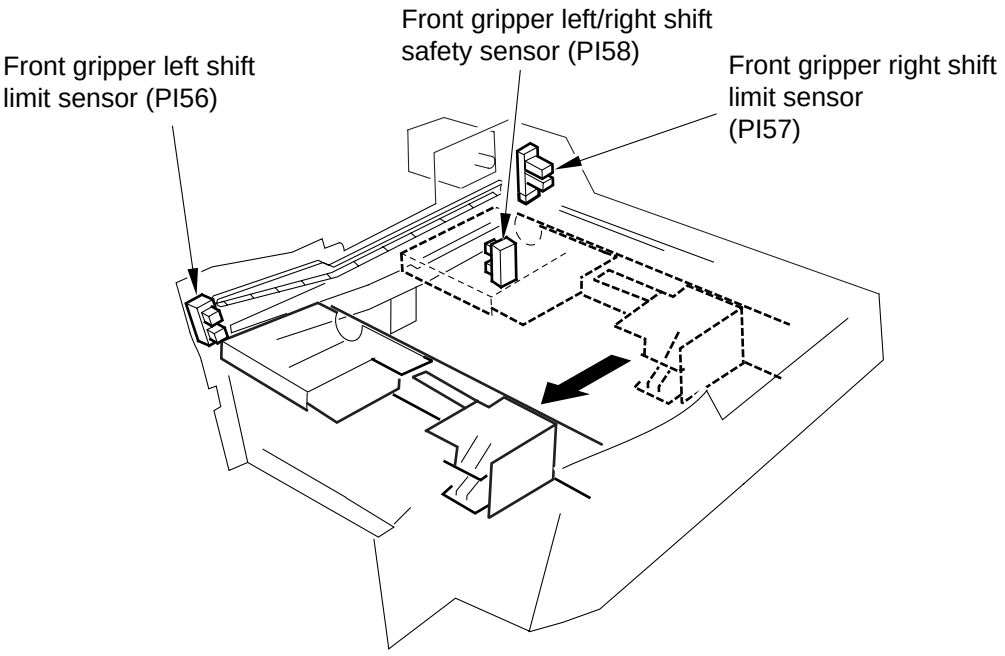

Figure 2-550

COPYRIGHT © 1997 CANON INC.

The front gripper left/right shift safety sensor (PI58) is used to check whether the stapler is at a point from which it may be shifted to the front or the rear. If the front gripper was allowed to move when it is outside the range of detection by the front gripper front/rear shift safety sensor (PI58), it could collide with the front gripper.

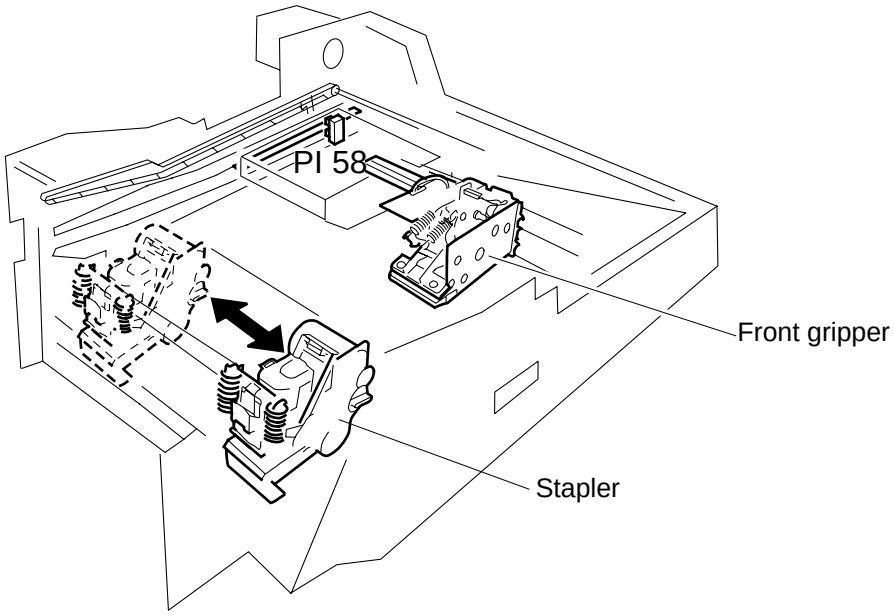

Figure 2-551

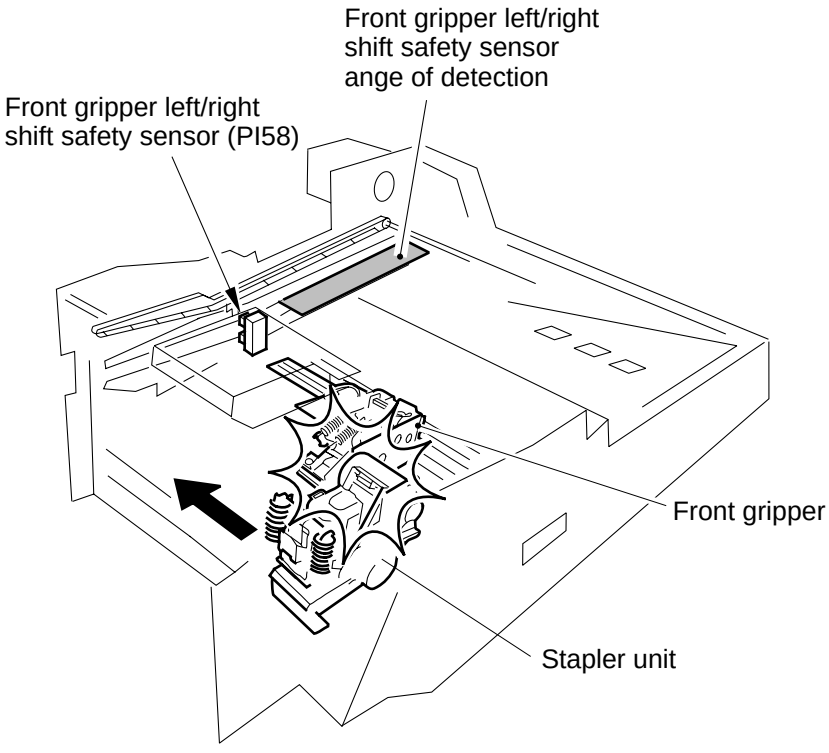

Figure 2-552

d. Safety Area of the Front Gripper and the Stapler Unit

Both the front gripper and the stapler unit move within the stack processing unit.

The front gripper moves in front/rear and left/right directions (about 397 mm in front/rear; about 77.5 mm in left/right).

The stapler unit moves only in front/rear direction (about 276.5 mm).

There is an area where two overlap (A of the figure), making collision a possibility if not controlled properly. Safety areas are provided to avoid such collision.

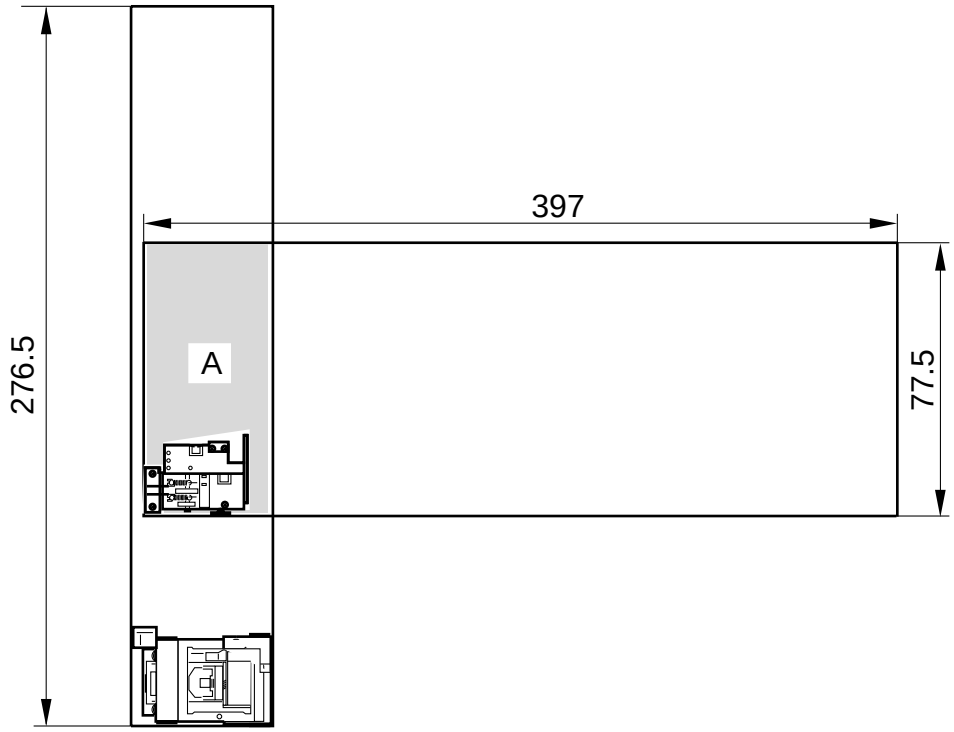

Figure 2-553 (top view)

COPYRIGHT © 1997 CANON INC.

The safety areas of the front gripper refer to the areas where the front gripper stops but will not affect the movement of the stapler unit. These areas are found in both front/rear and left/right directions for the front gripper.

The area in the front/rear direction is found about 18 mm from the home position (YHP) in the front direction, where collision will not occur even when the stapler unit executes corner stapling. This area (B) is monitored by the front gripper front/rear safety sensor (PI62).

The safety area in the left/right direction is about 15 mm to the left and about 177 mm to the right from the home position (XHP), about 192 mm from the right end of the movement range of the front gripper, where collision will not occur even when the stapler unit executes double stapling. This area (C) is monitored by the front gripper left/right safety sensor (PI58).

The safety area of the stapler unit refers to the area where the stapler unit stops but will not affect the movement of the front gripper. The safety area of the stapler unit is only in the front/rear direction, and is about 82.5 mm toward the rear from the home position. The area is where collision will not occur even when the front gripper moves to collect stacks of copy paper, and is monitored by the front gripper movement enable sensor (PI67).

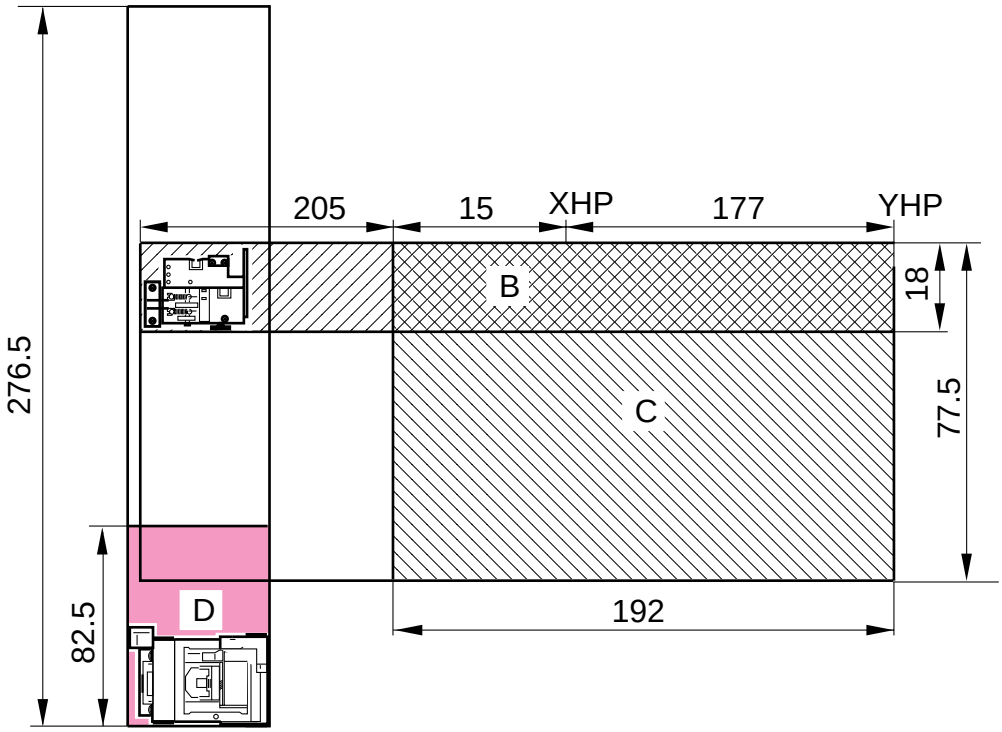

Safety area B : front gripper front / rear safty sensor (PI 62)
Safety area C : front gripper left / rear safty sensor (PI 58)
Safety area D : front gripper front / rear safty sensor (PI 67)

Figure 2-554 (top view)

e. Controlling the Front Gripper Left/Right Shift Motor (M10)

1) Outline

Figure 2-555 shows the circuit used to control the front gripper left/right shift motor (M10). The motor is a 4-phase control stepping motor, and the circuit has the following functions:

- Switching the current (with motor in operation and at rest)
- Controlling the direction and the speed of rotation of the motor
- Detecting motor errors

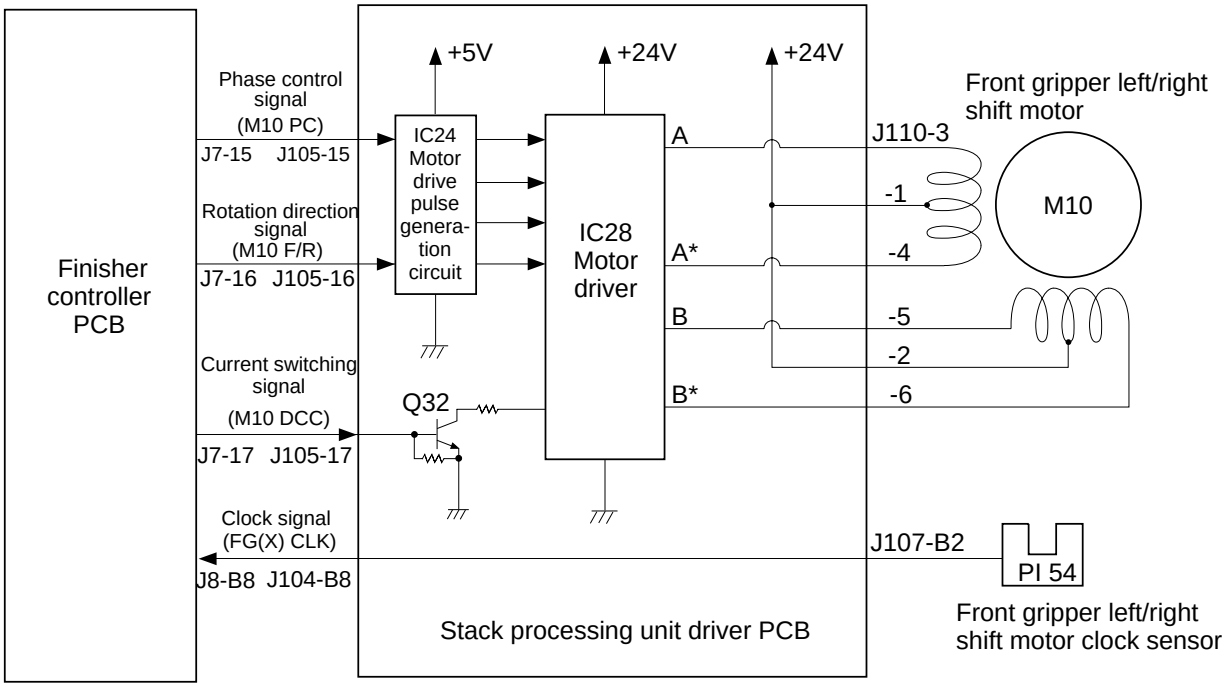

Figure 2-555

2) Operation

The finisher controller PCB sends the motor rotation direction signal (M10 F/R) and the motor phase control signal (M10 PC) to the motor drive pulse generation circuit on the stack processing unit driver PCB.

The motor drive pulse generation circuit sends the appropriate control signal for the motor according to the incoming signal.

The motor driver controls the output timing of pulse signals according to the motor phase control signal, thereby switching the direction and the speed of rotation of the front gripper left/right shift motor.

The current switching signal from the finisher controller PCB is used to switch the level of current to drive or to stop the motor, thereby preventing excess heating of the motor.

COPYRIGHT © 1997 CANON INC. CANON FINISHER-B1 REV.0 MAY 1997 PRINTED IN JAPAN (IMPRIME AU JAPON)

3) Detecting Motor Errors

The front gripper left/right shift clock sensor (PI54) keeps count of the rotation of the encoder disc mounted to the front gripper left/right shift drive shaft, and communicates the count as pulses (A) to the finisher controller PCB, which in turn compares these pulses against the pulses (B) of the rotation speed signal sent to drive the front gripper left/right shift motor.

As long as the operation of the front gripper left/right shift motor is normal, the ratio between pulses A and B per unit time is identical.

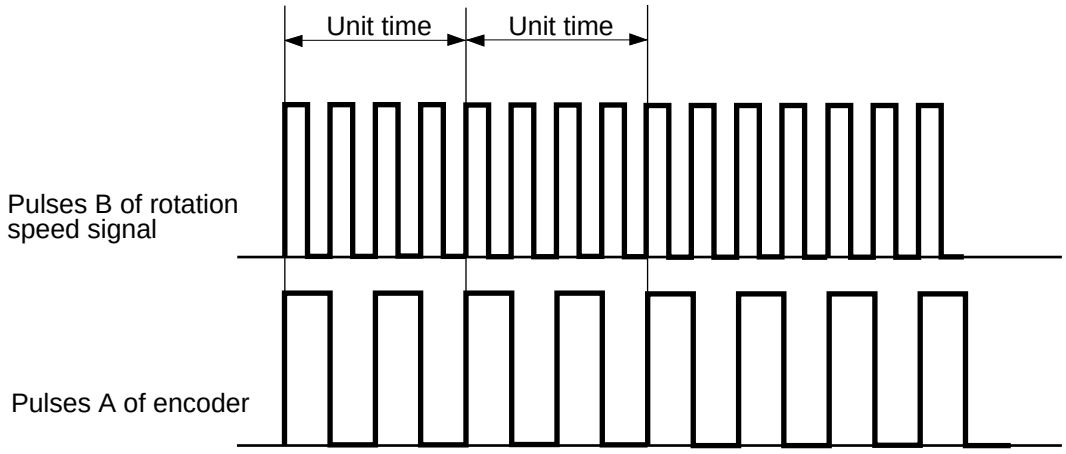

Figure 2-556 (motor operation is normal)

If an error occurs in the operation of the front gripper left/right shift motor, however, the ratio between pulses A an B will show a discrepancy. The finisher controller PCB will identify such a condition as a front gripper left/right shift motor (M10) error, and indicate 'E573' on the copier's control panel.

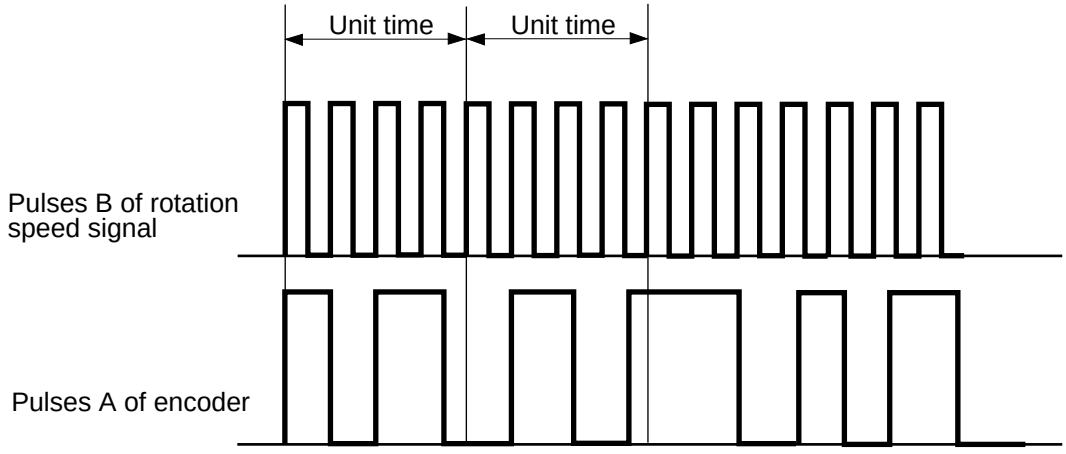

Figure 2-557 (motor operation is faulty)

COPYRIGHT © 1997 CANON INC.

4. Clasping Operation of the Front Gripper

a. Outline

The front gripper clasps a stack of copies after making a left/right shift, and it is executed by the front gripper grip motor (M12).

The clasping home position sensor (PI63) is used to check home position for clasping, and the front gripper paper sensor (PI64) checks the presence/absence of a stack after clasping operation.

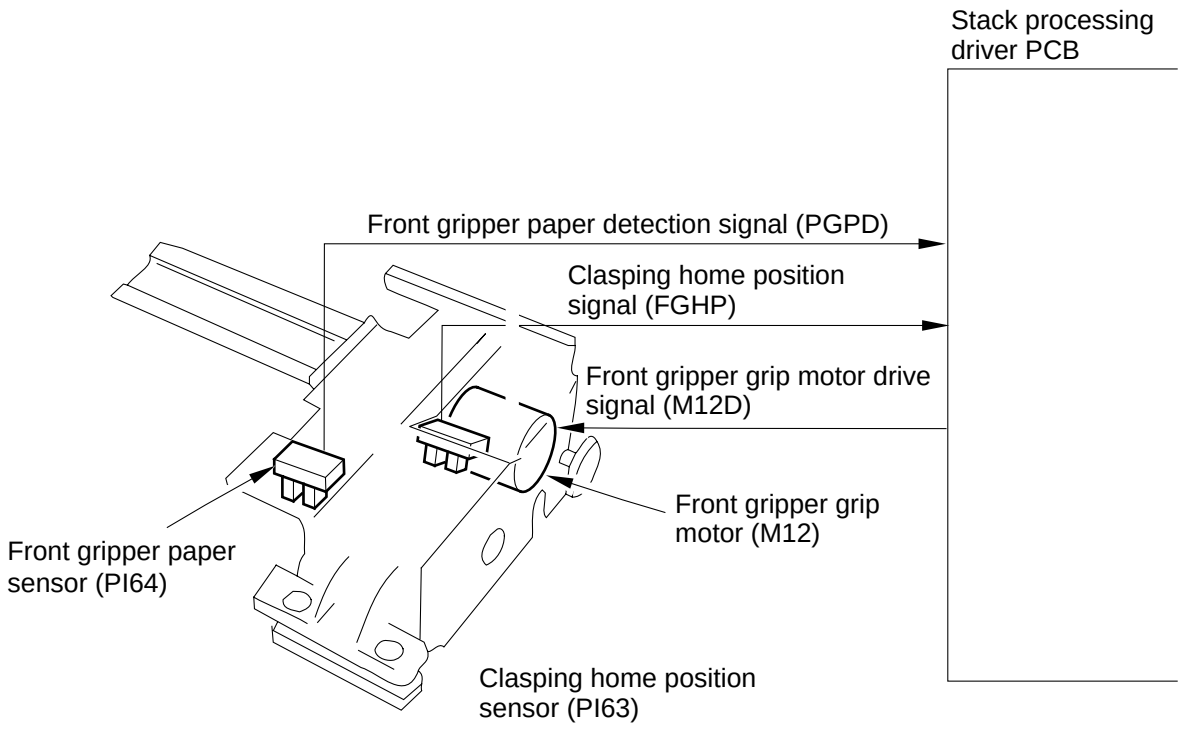

Figure 2-558

COPYRIGHT © 1997 CANON INC.

b. Controlling the Front Gripper Grip Motor (M12)

Figure 2-559 shows the circuit used to control the front gripper motor (M12). The motor is a DC motor, and rotates in one direction only, and the circuit is used to turn on and off the motor.

The front gripper grip motor starts to rotate when the finisher controller PCB sends the motor drive signal (M12D) to the stack processing unit driver PCB. When the front gripper clasping home position sensor (PI63) sends signals (FGHP) to the finisher controller PCB while the front gripper grip motor is rotating, the front gripper grip motor drive signal (M12D) will be cut out to stop the motor.

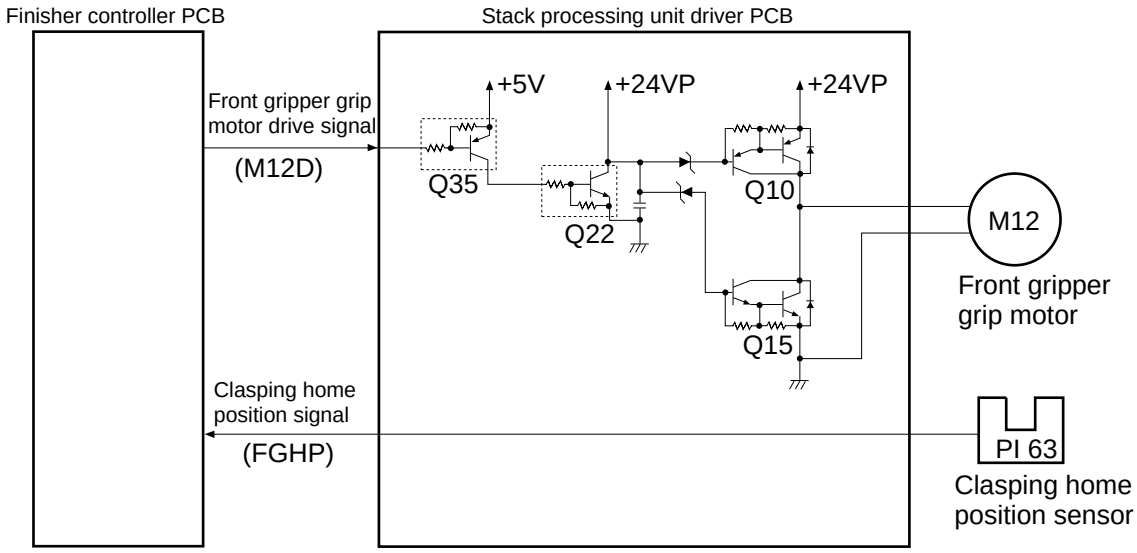

Figure 2-559

c. Sequence of Operations (front gripper motor)

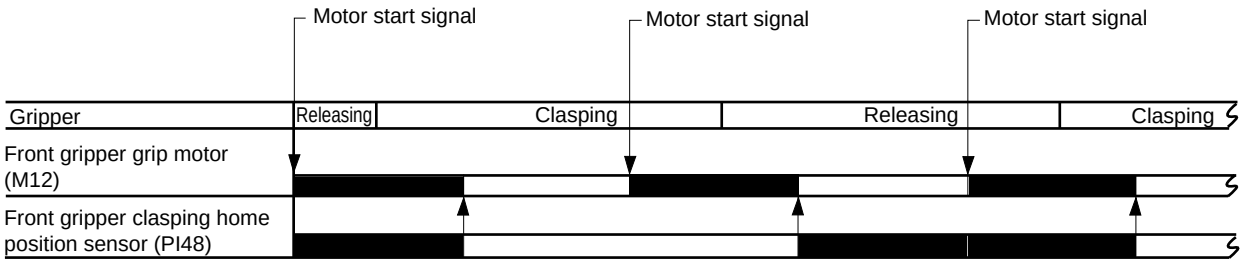

Figure 2-560

COPYRIGHT © 1997 CANON INC.

d. Detecting a Stack

The front gripper paper sensor (PI64) is used to detect the presence/absence of a stack in the front gripper after finishing clasping operation.

When the front gripper ends clasping operation, the detecting arm is pushed by the stack and the movement is detected by the front gripper paper sensor (PI64). If the front gripper paper sensor detects the absence of a stack, the finisher controller PCB will indicate the Jam message on the copier's control panel and immediately stop the operation of the finisher.

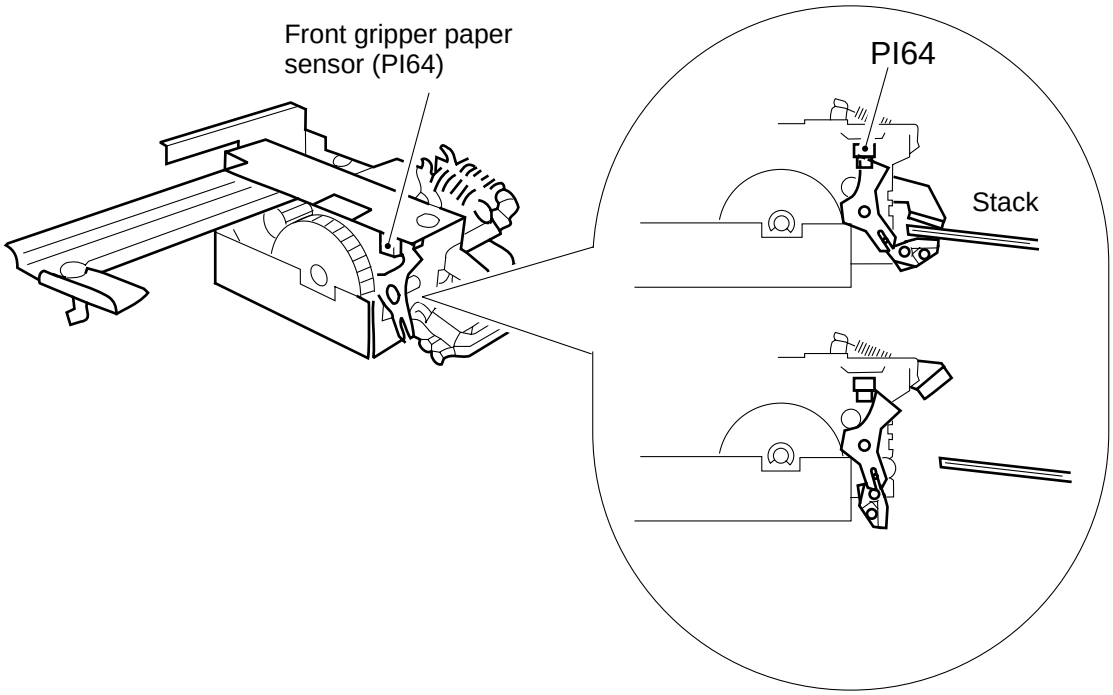

Figure 2-561

COPYRIGHT © 1997 CANON INC.

e. Sequence of Operations (detecting a stack)

Normal

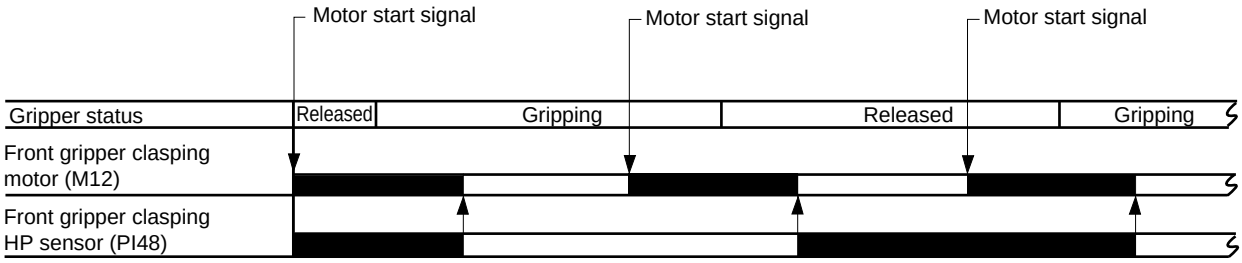

Figure 2-562

F. Jams

1. Outline

The finisher's paper paths include the common path and the special paths formed by the side gripper and the front gripper. For this reason, the finisher is equipped with the three sensors and a pair of sensors shown in Figure 2-563 to find out whether paper is moving properly in the paths formed by the side gripper and the front gripper.

The CPU checks the signals from these sensors at such times as programmed in advance to check for a jam; and, when it identifies a jam, it will send the jam signal to the copier, causing the copier to stop copying operation and indicate the Jam message. (The CPU will also indicate the Jam message on the finisher's display.)

If a jam occurs while paper is moving through the stack processing unit, the CPU will indicate the Jam message on the copier's control panel and the finisher's display after having moved all the copies in the stack.

The CPU will identify the following conditions as jams:

a. Paper exists at a specific sensor when the power is turned on or when the doors are closed. (power-on jam)
b. Copy paper does not reach a specific sensor within a specific period of time. (delay jam)
c. Copy paper does not move past a specific sensor within a specific period of time. (stationary jam)
d. The edge feeding sensor turns on when copy paper is moved by the side gripper. (skew jam)
e. The paper sensor for each gripper does not turn on after "narrow" clasping operation of the side gripper or the front gripper. (faulty alignment jam)
f. The edge feeding sensor turns on before the side gripper starts to operate. (faulty stacking jam)
g. The stapler leading edge sensor turns on after the end of operation by the side gripper. (faulty return jam)
h. The front cover or the non-sort tray is opened while the finisher is in operation. (door open jam)

The recovery function will not turn on for jams occurring in the stack processing unit.

Notation	Sensor	Type
PI49	Side gripper paper sensor	Power-on jam
PI64	Front gripper paper sensor	
PI68	Stapler leading edge paper sensor	
LED3/PT3	Edge feeding sensor	
PI68	Stapler leading edge paper sensor	Delay/faulty return jam

Notation	Sensor	Type
LED3/PT3	Edge feeding sensor	Stationary/ skew/faulty stacking jam
PI49	Side gripper paper sensor	Faulty alignment jam
PI64	Front gripper paper sensor	

COPYRIGHT © 1997 CANON INC.

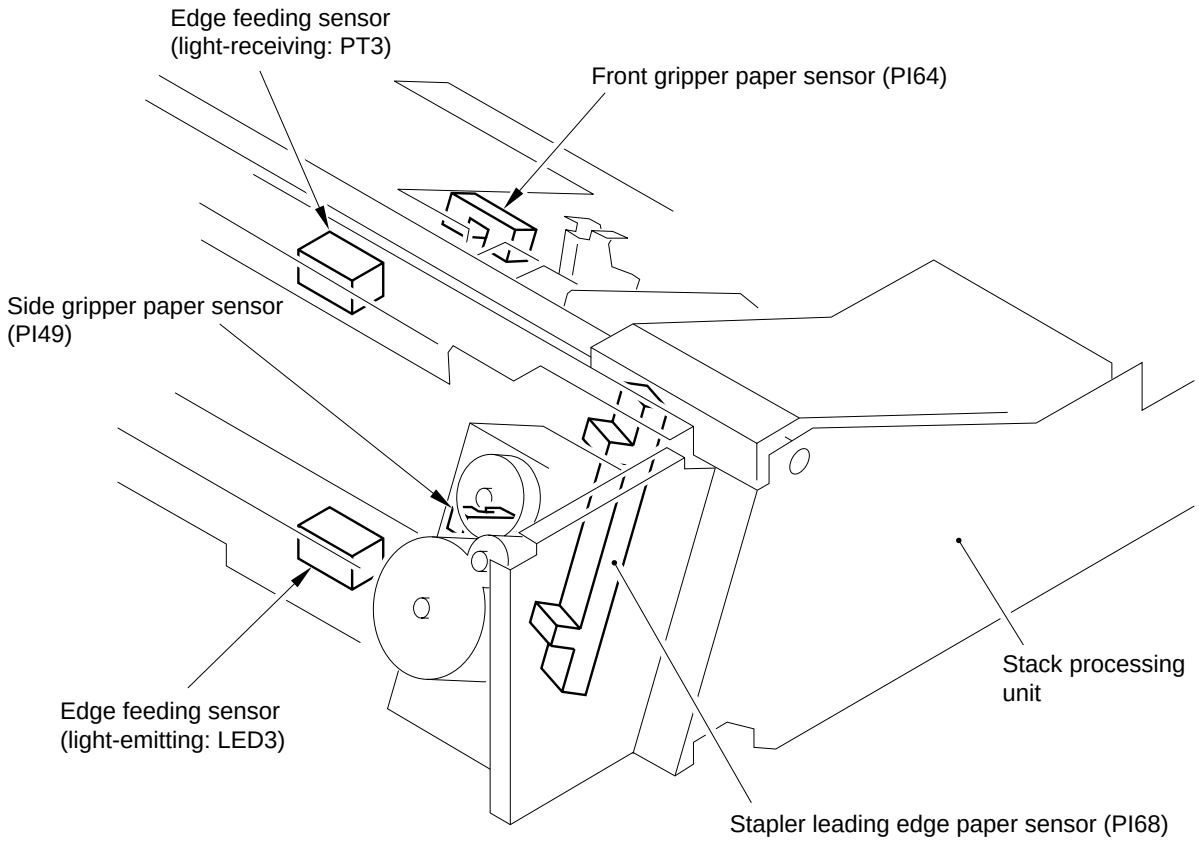
Edge feeding sensor
(light-receiving: PT3)
Front gripper paper sensor (PI64)
Side gripper paper sensor
(PI49)
Edge feeding sensor
(light-emitting: LED3)
Stack processing
unit
Stapler leading edge paper sensor (PI68)

Figure 2-563

2. Sequence of Operations (jam detection)

a. Side Gripper Feeding Delay Jam

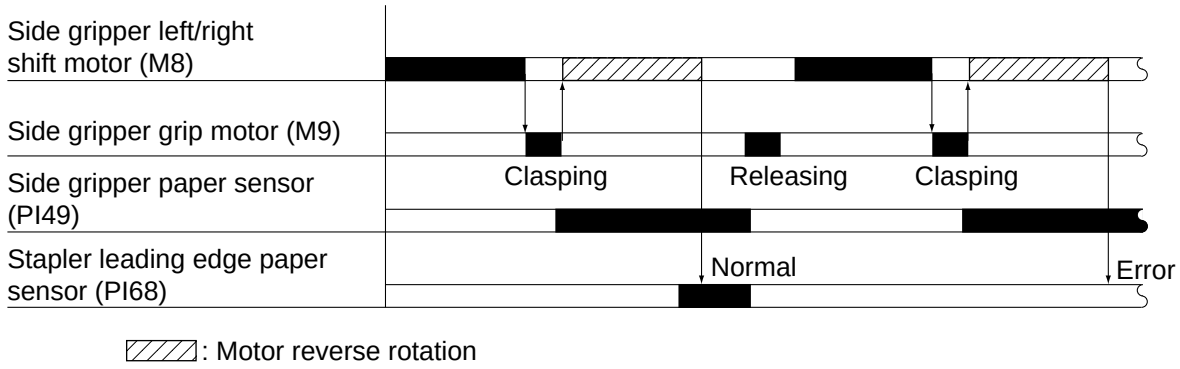

Figure 2-564

b. Side Gripper Skew Jam

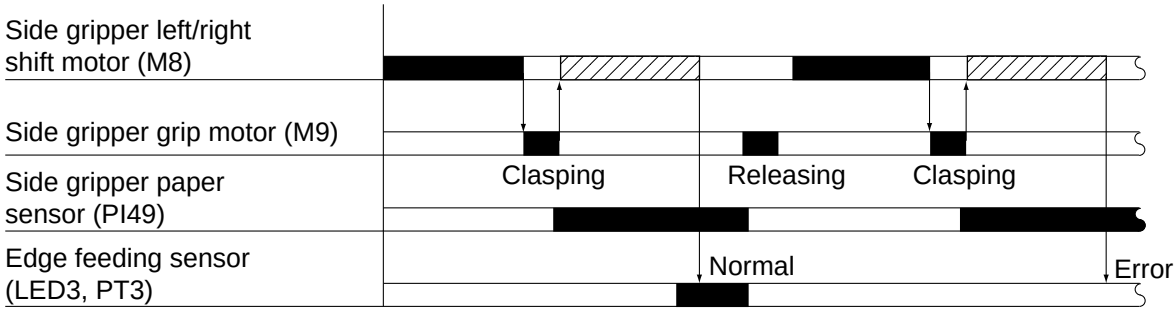

Figure 2-565

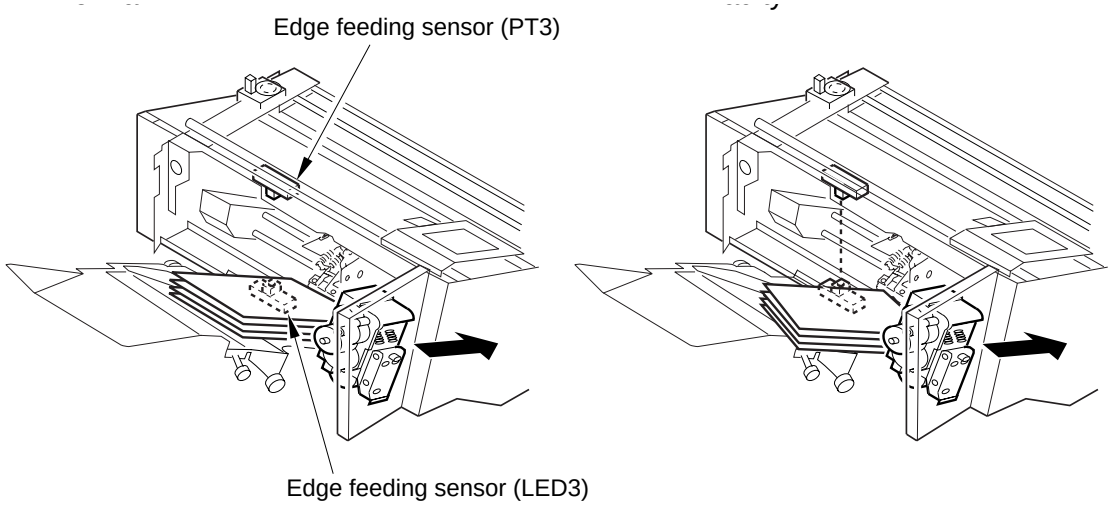

Figure 2-566

COPYRIGHT © 1997 CANON INC.

c. Front Gripper Stationary Jam

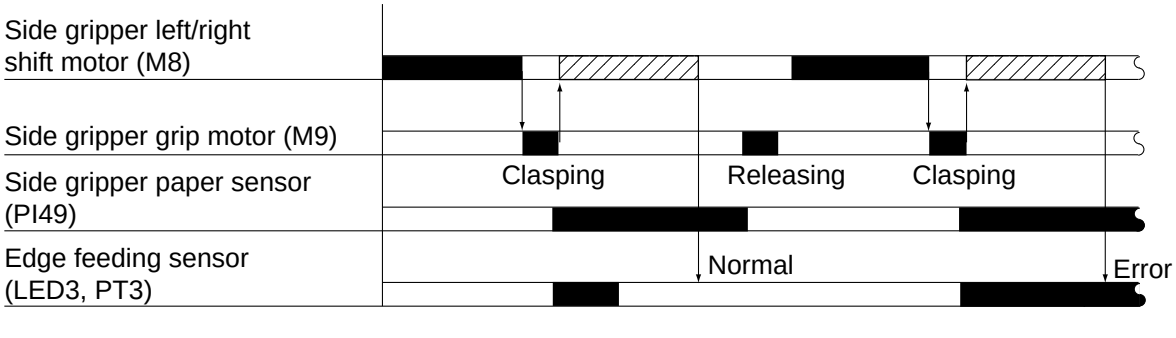

Figure 2-567

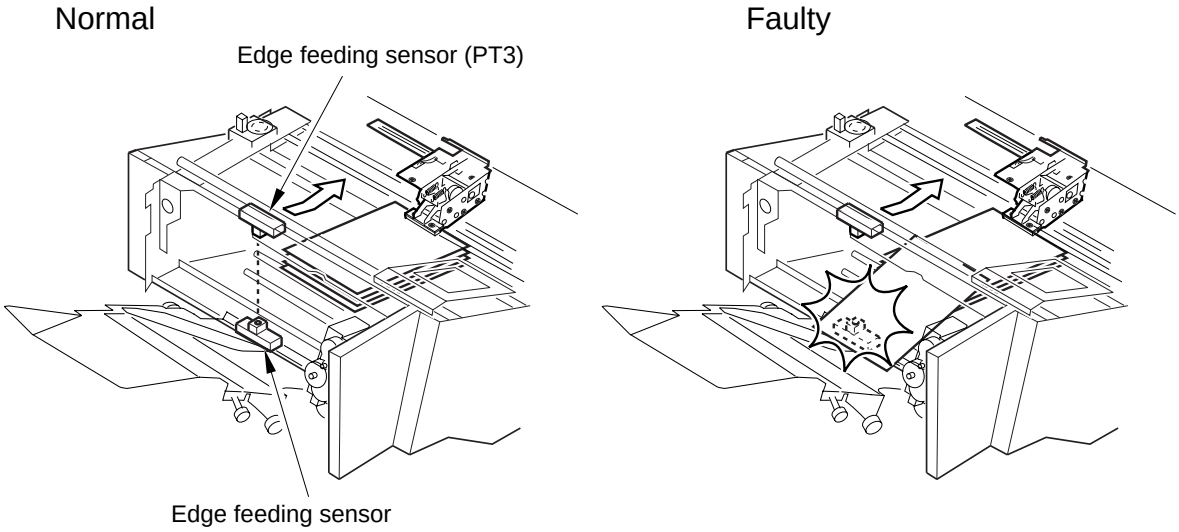

Figure 2-568

d. Faulty Alignment Jam (during clasping operation by side gripper)

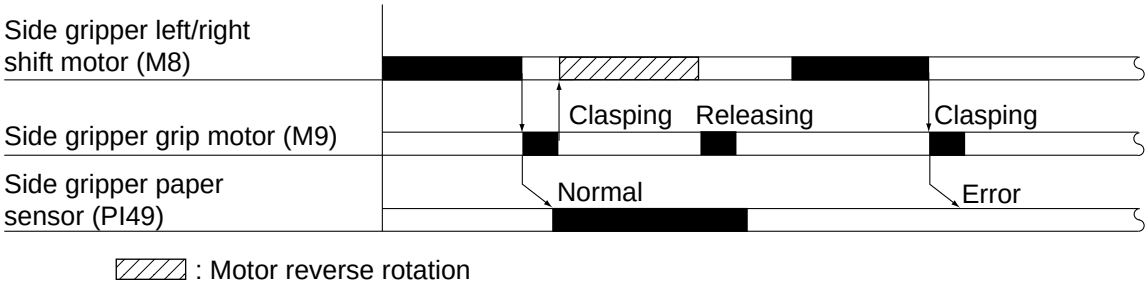

Figure 2-569

e. Faulty Alignment Jam (during clasping by front gripper)

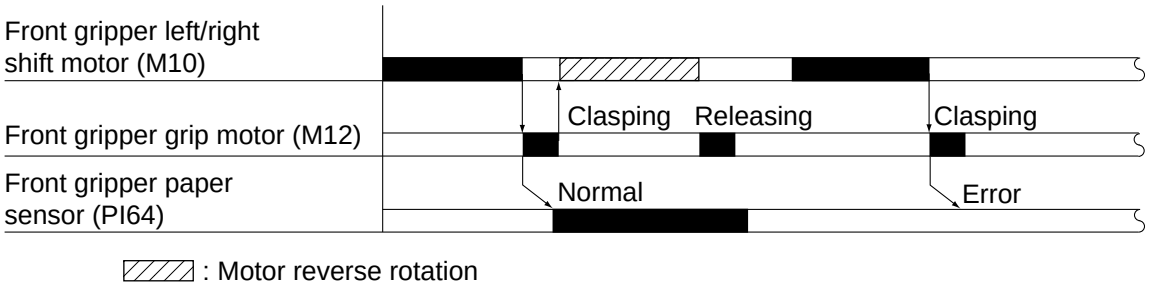

Figure 2-570

f. Faulty Stacking Jam (before clasping by side gripper)

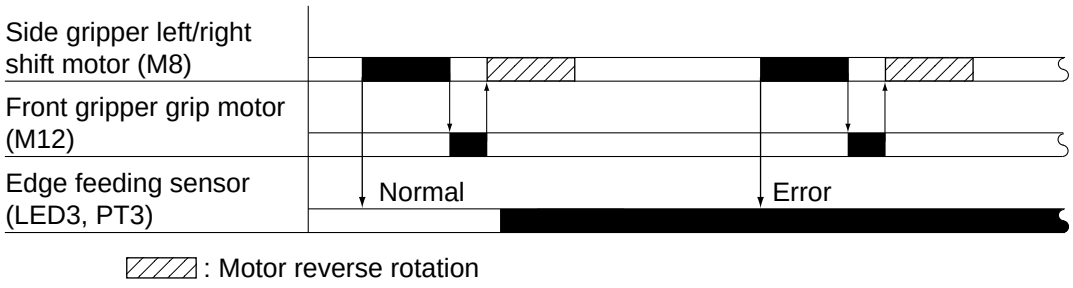

Figure 2-571

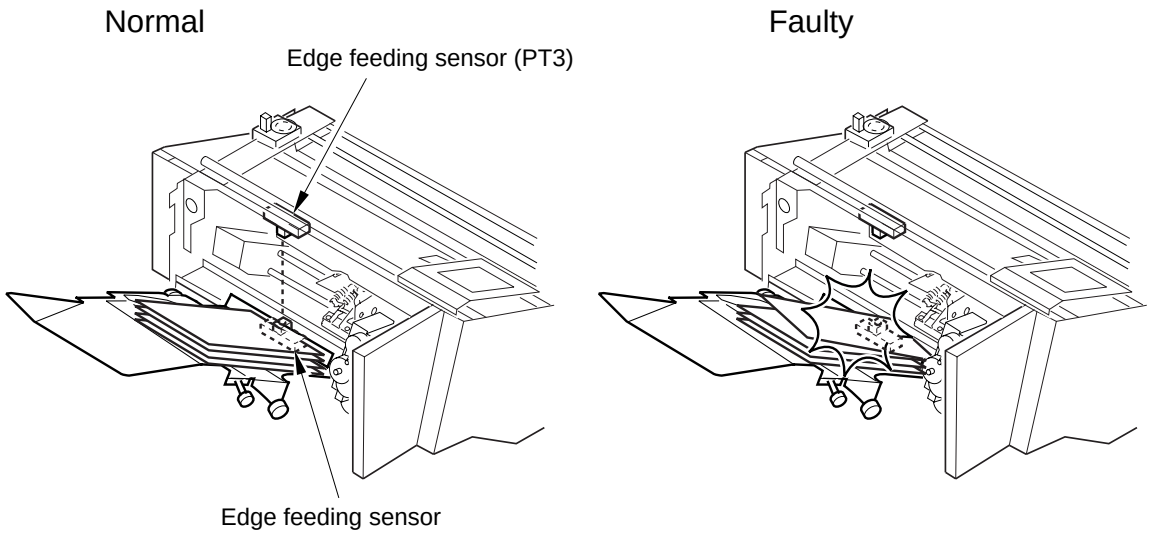

Figure 2-572

COPYRIGHT © 1997 CANON INC.

g. Faulty Return Jam (during stapling of L-size paper)

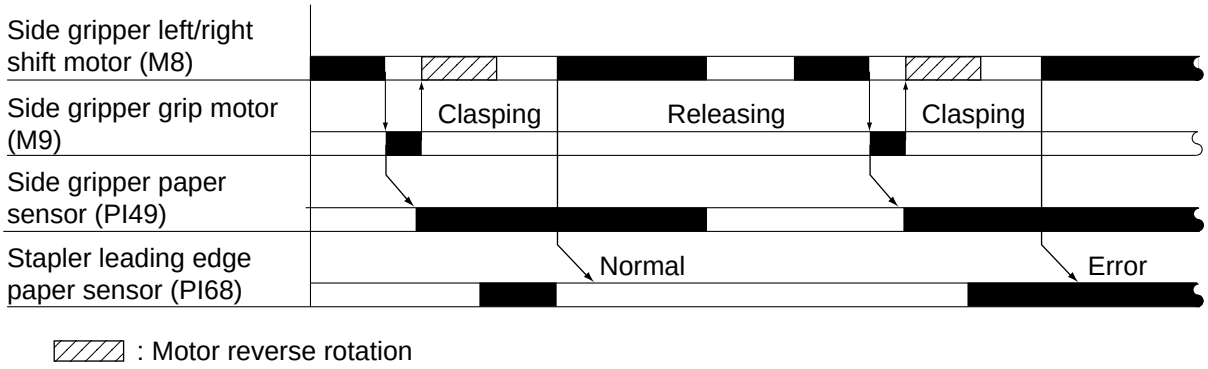

Figure 2-573

COPYRIGHT © 1997 CANON INC.
CANON FINISHER-B1 REV.0 MAY 1997 PRINTED IN JAPAN (IMPRIME AU JAPON)

G. Sequence of Operations

1. A4, Double Stapling, Sort Mode

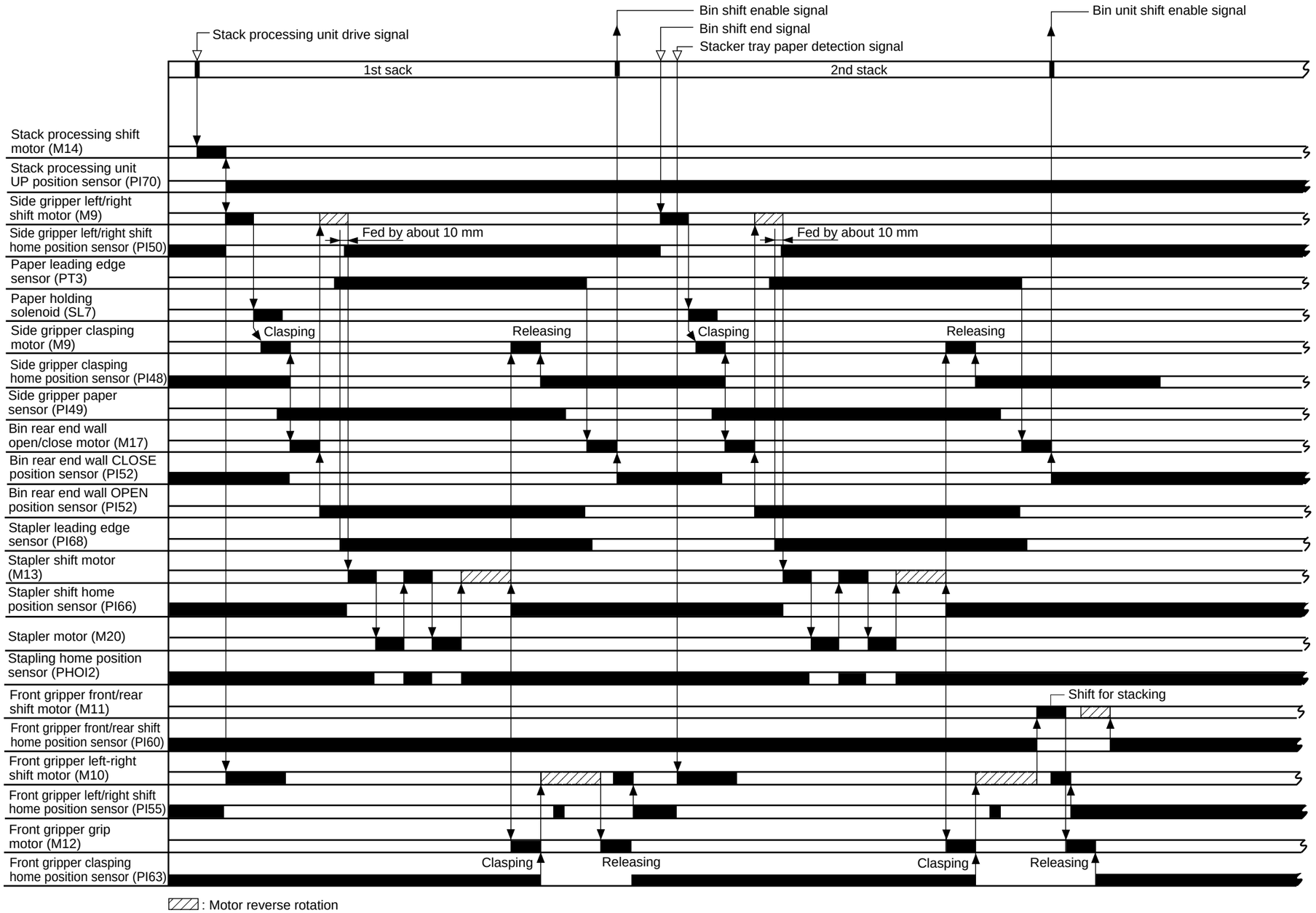

Figure 2-574

COPYRIGHT © 1997 CANON INC.

2. A3, Stapling, Sort Mode

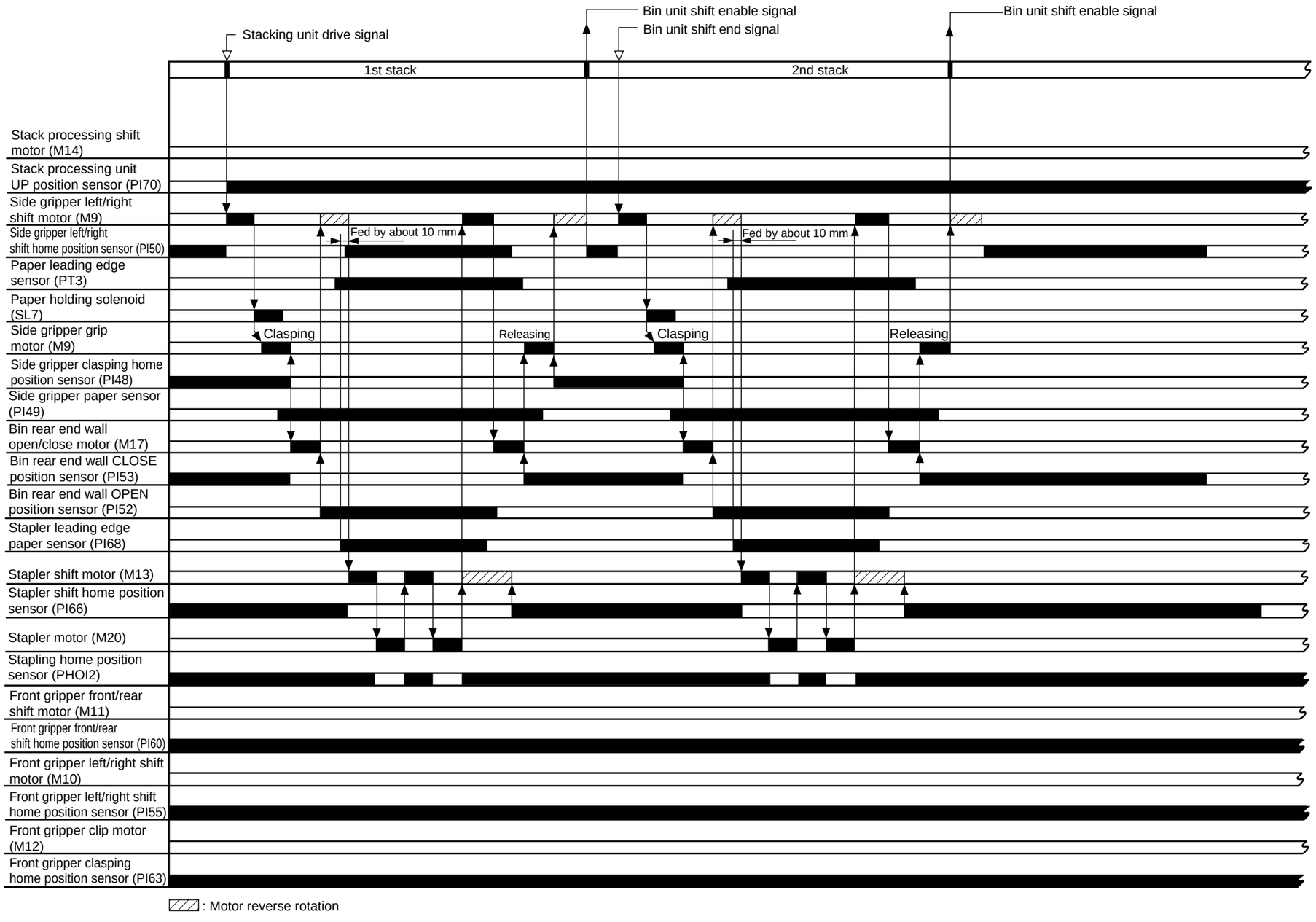

Figure 2-575

COPYRIGHT © 1997 CANON INC. CANON FINISHER-B1 REV.0 MAY 1997 PRINTED IN JAPAN (IMPRIME AU JAPON)

VI. STACKER UNIT

A. Outline

The stacks of copies carried by the stack processing unit are stacked in the stacker unit. Once stacked in the stacker unit, the stacks may be removed by opening the access door even while the copier is making copies.

The stacker unit consists of the following drive systems:

- Stacker unit up/down drive system
- Stacker tray up/down drive system
- Leading edge stopper drive system
- Lift wall drive system

The stacker unit is equipped with an emergency stop button which may be used to immediately stop any on-going operation of the copier or the finisher. (For details, see p.2-190.)

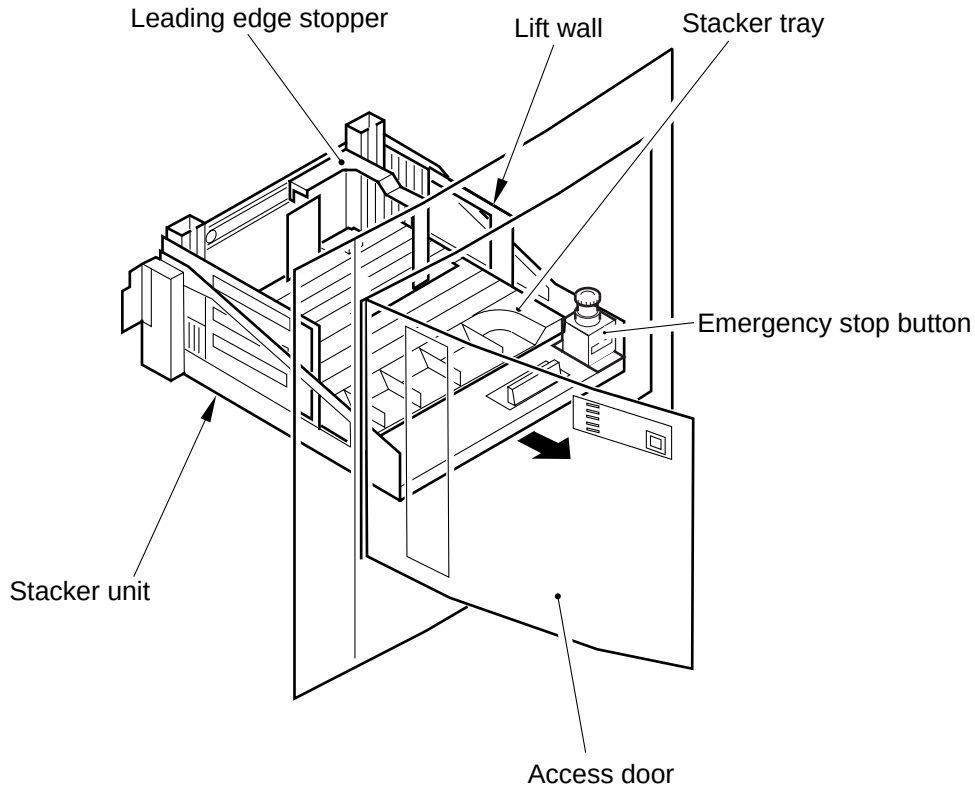

Figure 2-601

B. Stacker Unit Up/Down Drive System

1. Outline

Figure 2-602 shows the construction of the up/down drive system of the stacker unit.

The stacker unit moves up and down to receive stacks of copies from the stack processing unit.

The stacker unit is moved up and down by means of a belt operated by the stacker unit shift motor (M15).

The stacker unit is suspended by two springs so as to limit the load imposed on the stacker unit shift motor.

To determine the stop position of the stacker unit, three sensors (PI35, PI36, PI37) are used.

The stacker unit shift brake 1 (BK1) and the stacker unit shift brake 2 (BK4) used to make sure that the stacker unit is stopped at a specific position.

The stacker unit shift motor clock sensor (PI47) is used to check the status (in operation/at rest) and the speed of the motor and to obtain signals for reference when turning on the stacker unit shift brake 1 (BK1) and the stacker unit shift brake 2 (BK4).

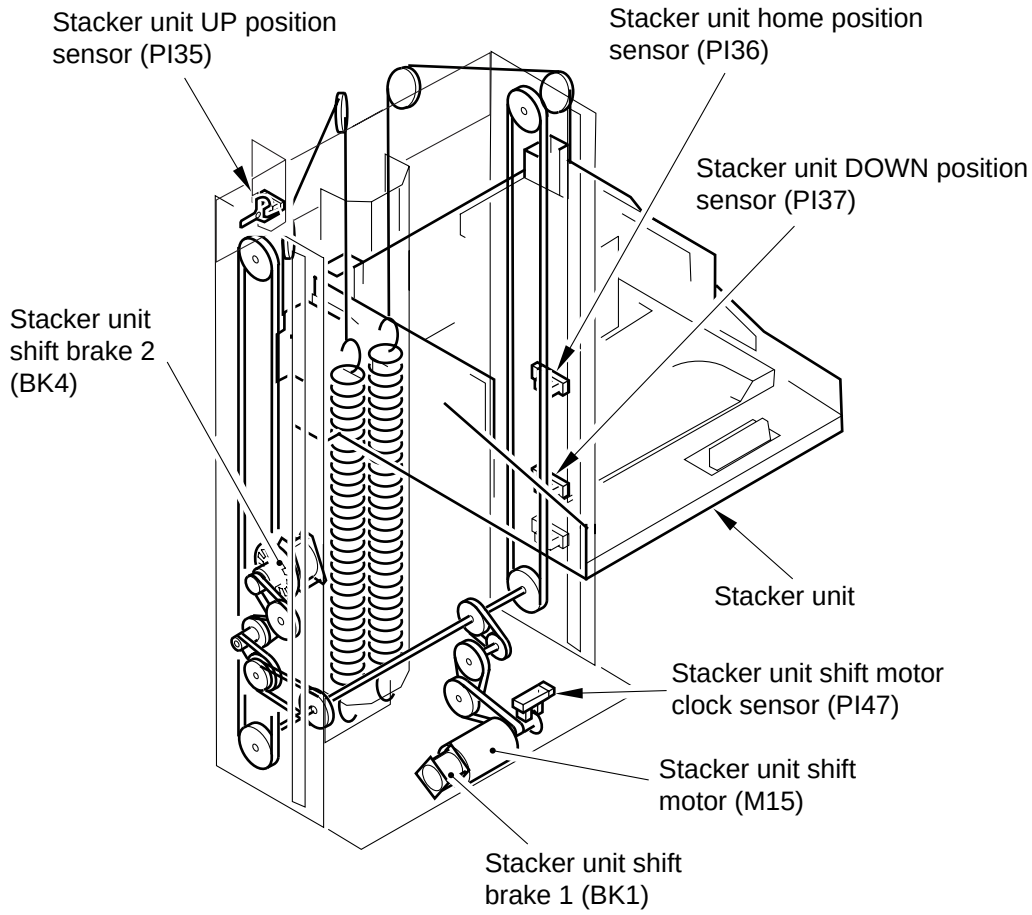

Figure 2-602

COPYRIGHT © 1997 CANON INC.

2. Operation

Although the stacker unit is moved up/down in sort or staple sort mode, it may not be moved for certain copy paper sizes. The stacker unit is moved as shown in Table 2-601.

Up/down movement	Stapling	Copy size
Yes	Yes	B5, A4, B4, A3, A4R, B5R, LTR, LGL, 279.4 × 431.8mm (11" × 17"), LTRR
	No	B5, A4, B4, A4R, B5R, LTR, LGL, LTRR
No	No	A3, 279.4 × 431.8mm (11" × 17")

Table 2-601

The stacker unit shift motor (M15) is driven by signals from the finisher controller PCB. The stacker unit stops when it has moved to a specific position and specific sensors detect it.

In addition to home position, the stacker unit may be stopped at either of three points; UP position 1/UP position 2 and DOWN position.

Stop position	Distance from home position (approx.)	Sensor (notation)
UP position 1	129 mm in upward direction	Stacker unit UP position sensor (PI35)
UP position 2	25 mm in upward direction	Stacker unit UP position sensor (PI35)
DOWN position	240 mm in downward position	Stacker unit DOWN position sensor (PI37)

Table 2-602

COPYRIGHT © 1997 CANON INC.

UP position 1 is the point of reference used when the stacker unit (with contracted lift wall) receives and places stacks of copies from the stack processing unit located at UP position.

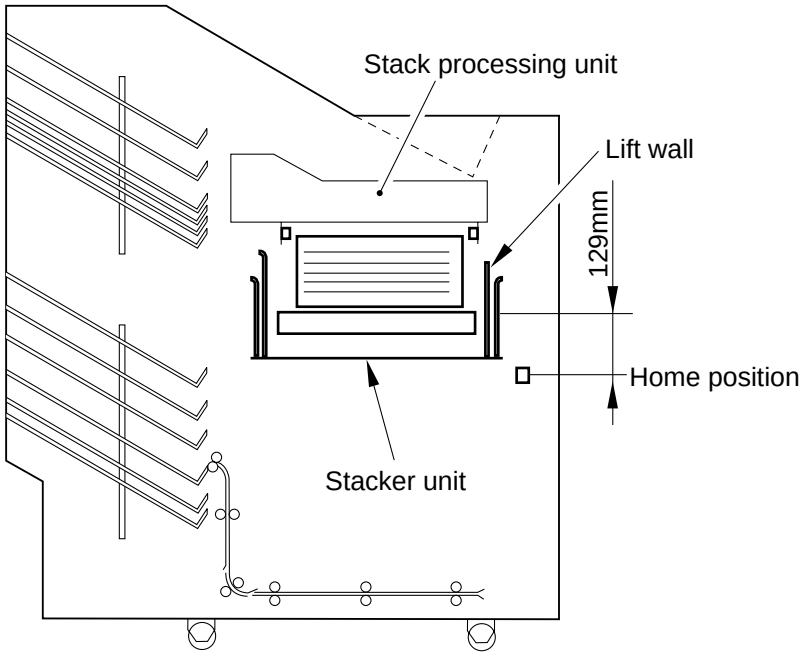

Figure 2-603

UP position 2 is the point of reference used when the stacker unit (with extended lift wall) receives and places stacks of copies from the stack processing unit located at UP position.

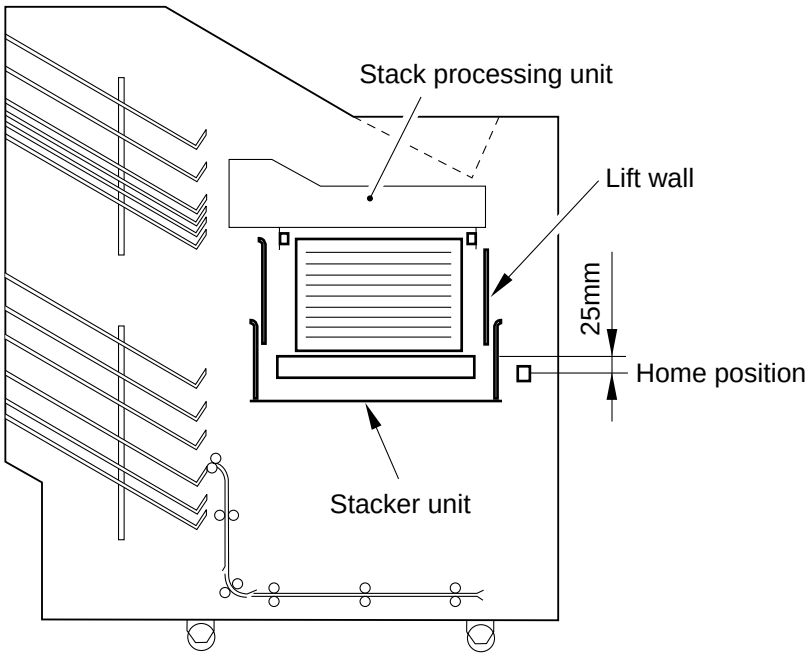

Figure 2-604

COPYRIGHT © 1997 CANON INC.

DOWN position is the point of reference used when the stacker unit receives and places stacks of copies from the stack processing unit located at DOWN position.

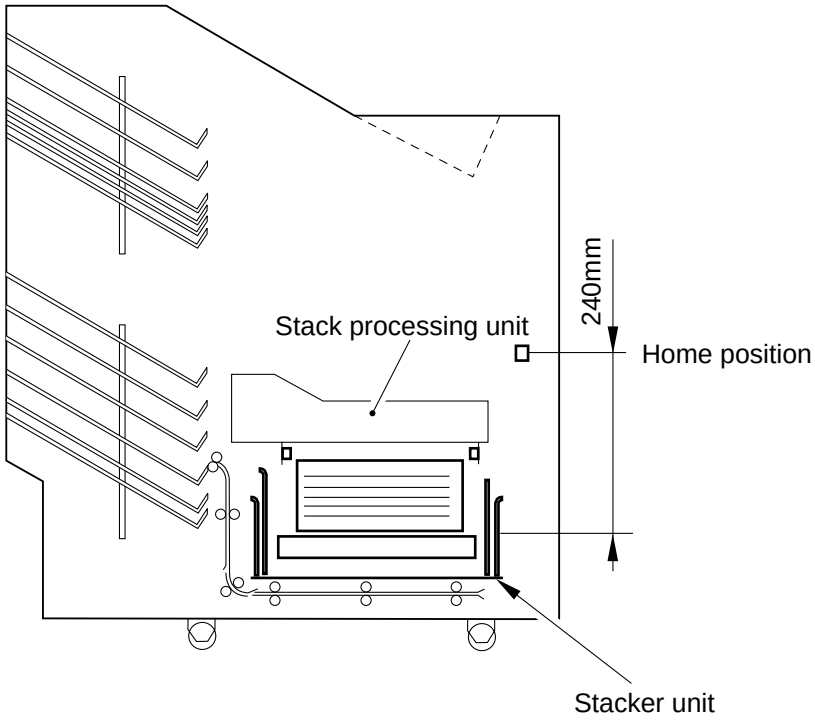

Figure 2-605

The home position of the stacker unit is where the stacks of copies may be removed. The finisher's access door can be opened only when the stacker unit is at home position, as controlled by the access door solenoid (SL3). When the access key (PSW1) on the finisher is pressed, the access door solenoid (SL3) turns on to open the access door.

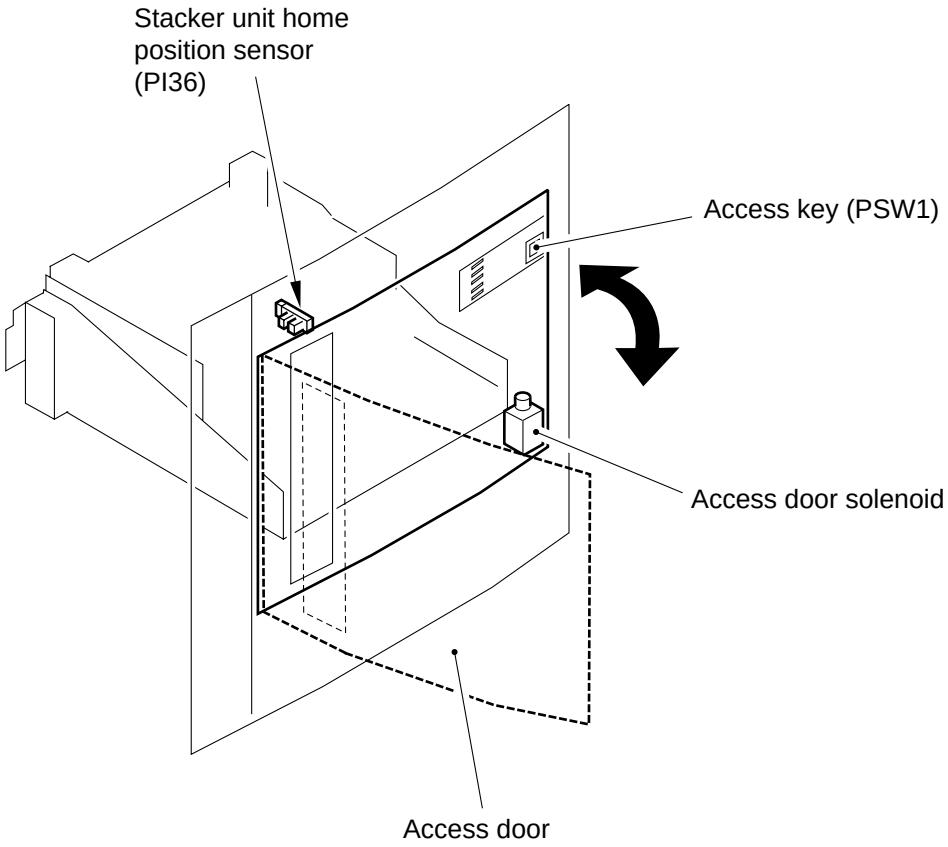

Figure 2-606

When the door switch is pressed, the access key starts to flash, indicating that the stacker unit is moving to its home position. The door switch stops flashing and remains on when the move is complete, turning on the access door solenoid to open the access door.

COPYRIGHT © 1997 CANON INC.

The stacker unit drive system is equipped with two sensors to limit the range of stacker unit movement:

- Stacker unit lower limit sensor (PI38)
- Stacker unit NEAR position sensor (PI73)

The stacker unit NEAR position sensor is mounted on the stack processing unit.

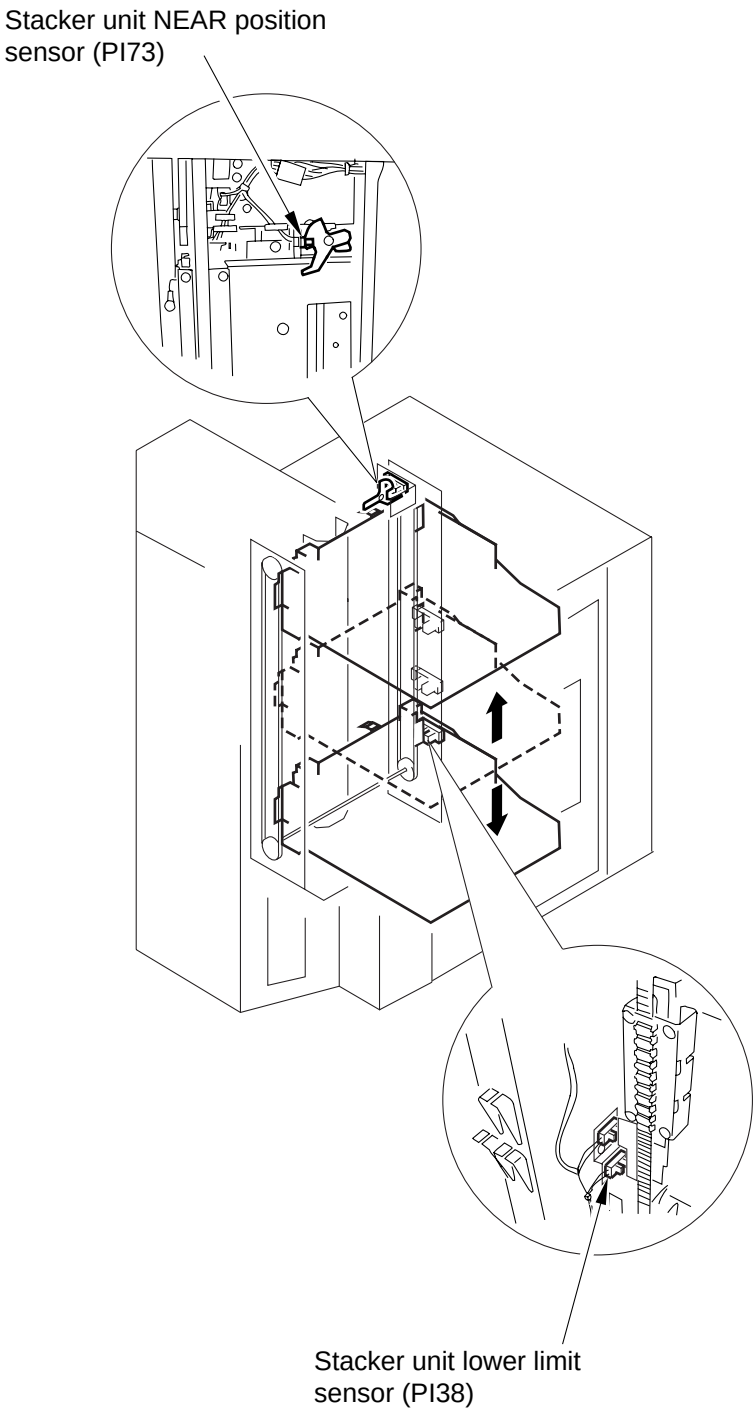

Figure 2-607

If the stacker unit moves beyond the lower limit, the stacker unit lower limit sensor (PI38) sends the lower limit signal to the finisher controller PCB.

In response to the lower limit signal, the finisher controller PCB immediately will stop the operation of the stacker unit shift motor (M15). If the stacker unit does not reach a specific position within a specific period of time after the stacker shift motor (M15) has stopped, the finisher controller will identify the condition as a stacker unit shift motor (M15) error, indicating 'E581' on the copier's control panel.

The stacker unit NEAR sensor (PI73) is mounted on the stack unit and sends the NEAR signal to the finisher controller PCB when the stack processing unit or the stacker unit moves more than a specific distance for possible collision.

When the NEAR signal arrives, the finisher controller PCB will immediately stop the operation of the stacker unit shift motor (M15) and the stack processing unit shift motor (M14). If the stacker unit or the stack processing unit is moving up, the stack processing unit is let to move up first and then the stacker unit; if they are moving down, on the other hand, the stacker unit is let to move down first and then the stack processing unit.

COPYRIGHT © 1997 CANON INC.

3. Controlling the Stacker Unit Shift Motor (M15)

a. Outline

Figure 2-608 shows the circuit used to control the stacker unit shift motor. The motor is a DC motor, and the circuit has the following functions:

- Controlling the speed of rotation of the motor.
- Controlling the direction of rotation of the motor.
- Controlling overcurrent.

The circuit has a logic circuit used to determine whether to rotate or stop the motor.

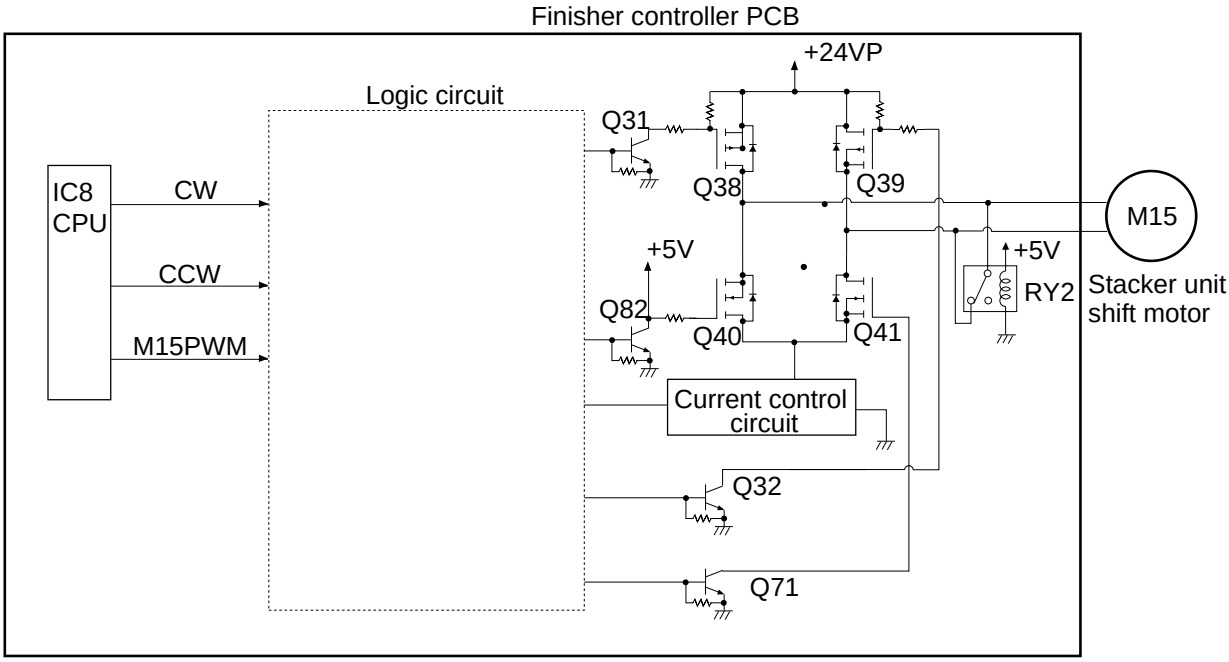

Figure 2-608

b. Controlling the Speed and the Direction of Rotation of the Stacker Unit Shift Motor

The speed and the direction of rotation of the stacker unit shift motor are controlled based on combinations of the following three types of signals:

CW: Stacker unit shift motor clockwise rotation signal (stacker unit moves up)

CCW: Stacker unit shift motor counterclockwise rotation (stacker unit moves down)

M15PWM: Stacker unit shift motor rotation speed signal (0: maximum, 1: minimum)

Stacker shift motor	CW	CCW	M15PWM
Stacker unit moves down	1	0	Variable
Stacker unit moves up	0	1	Variable
Stops	1	1	1

Table 2-603

Because of the logic circuit, the conditions in Table 2-604 must be met for the stacker unit shift motor to rotate clockwise or counterclockwise; in other words, the stacker unit shift motor cannot rotate unless each of the conditions is met.

Stacker unit moves up

	Condition 1	
Sensor name (notation)	Flag over sensor	I/O display
The upper bin module is not at the upper limit. (PI38)	No	P147-1 : 0
The operation prohibit signal is not generated, i.e., (PI73):	No	P145-5 : 0
The bin rear end wall is not at stapling position. (PI80)	Yes	P152-7 : 0

*Either.

For I/O display, use the copier's service mode.

Stacker unit moves down

	Condition 1	
Sensor name (notation)	Flag over sensor	I/O display
The upper bin module is not at the upper limit. (PI38)	No	P147-1 : 0
The operation prohibit signal is not generated, i.e., (PI73)	*	P145-5 : *
The bin rear end wall is not at stapling position. (P180)	Yes	P152-7 : 0

*Either.

For I/O display, use the copier's service mode

Table 2-604

COPYRIGHT © 1997 CANON INC.

c. Controlling the Current

If an overcurrent flows into the stacker unit shift motor, the current limit circuit turns on to cut out the signals used to drive the stacker unit shift motor, thereby blocking out overcurrent.

If an overcurrent occurs in succession, the signals used to drive the stacker unit shift motor are cut out accordingly, not allowing the stacker unit shift motor to move the stacker unit to a specific position within a specific period of time. The finisher controller PCB will identify such a condition as a stacker unit shift motor (M15) error, and indicate 'E581' on the copier's control panel.

d. Controlling the Stacker Unit Shift Brake (BK1, BK4)

1) Outline

The stacker unit is rather heavy, and therefore it is difficult to stop it in a short time (about 24 kg without copy paper).

To stop the stacker unit accurately at a specific point, the finisher controls the stacker shift motor and the stacker unit shift brake (BK1, BK4) with reference to signals from the stacker unit shift motor clock sensor (PI47).

2) Operation

When the stacker unit UP position sensor (PI35), stacker unit DOWN position sensor (PI37), or stacker unit home position sensor (PI36) detects the stacker unit while the unit is in operation, the finisher immediately decreases the speed of the stacker shift motor.

After decreasing the speed of the stacker shift motor, the finisher controller PCB starts counting the pulses from the stacker unit shift motor clock sensor (PI47). When the number of pulses reaches a specific value, the finisher controller PCB stops the drive of the stacker shift motor and, at the same time, turns on the stacker unit shift brake (BK1, BK4).

3) Sequence of Operations

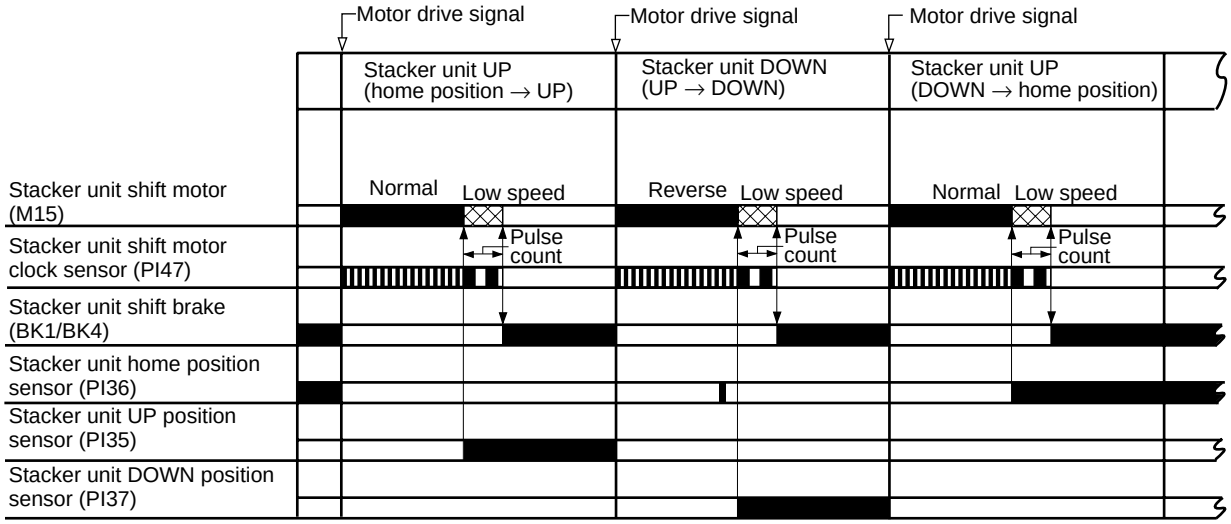

Figure 2-609

C. Stacker Tray Drive System

1. Outline

Figure 2-610 shows the drive system of the stacker tray.

The stacker tray moves up or down to suit the thickness of the stack of copies placed on it. The up/down movement is driven by the stack tray shift motor (M16), and stopped by the locking arm operated by the stacker tray locking solenoid (SL9).

The stacker tray stack sensor (PI44) is used to check the presence/absence of a stack of copies on the stacker tray.

The stacker tray home position sensor (PI43) and the upper limit sensor (PI42) are used to limit the range of movement of the stacker tray.

The stacker SET sensor (PI41) turns on if the tray is not properly set after it has received a stack of copies.

The presence/absence of a stack and the thickness of the stack, if any, are indicated on the display on the door in 5 levels.

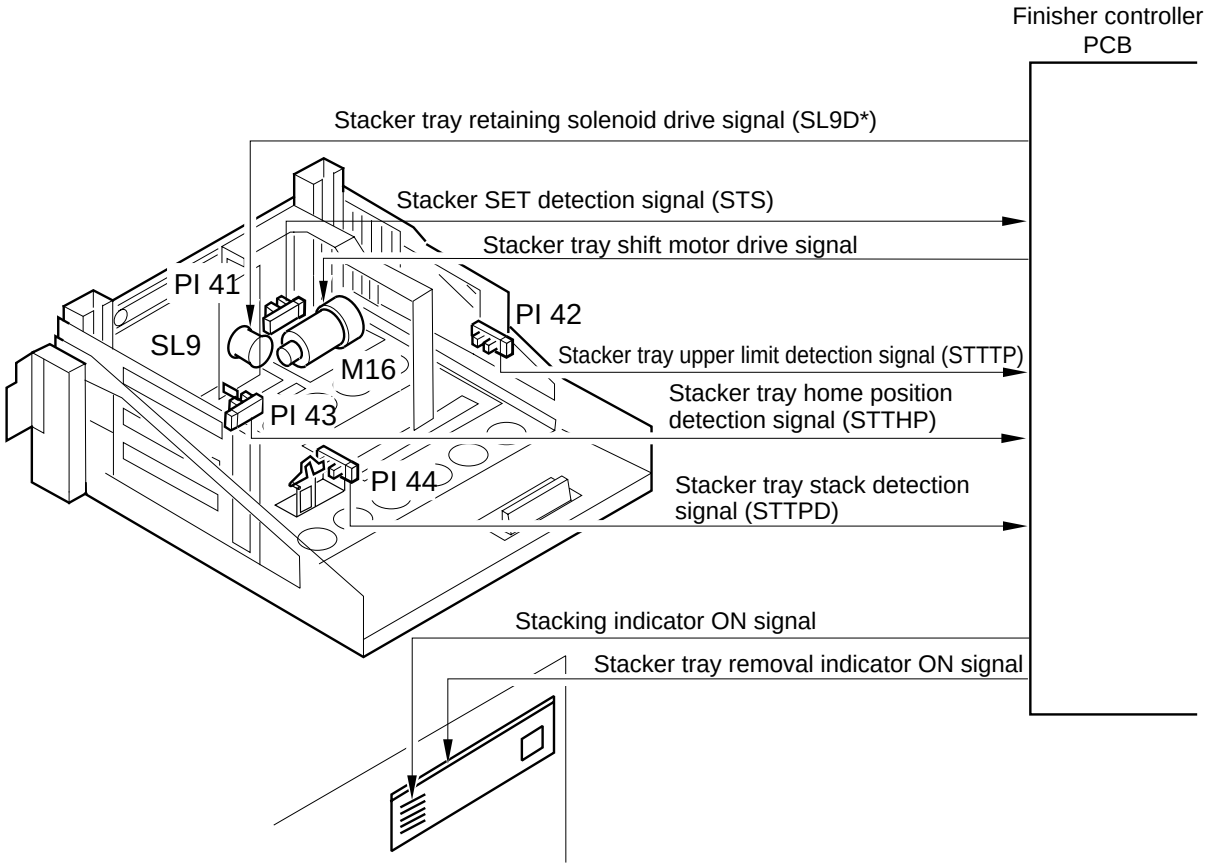

Figure 2-610

COPYRIGHT © 1997 CANON INC.

2. Up/Down Movement

a. Outline

The stacker tray is moved up or down so that the upper surface of the stack of copies is a specific distance away from the stack processing unit.

When the stack processing unit drops a stack of copies, the stacker tray moves down until the two pairs of paper surface sensors (LED4, PT4/LED5, PT5) no longer detect paper.

Then, the stacker tray is moved up until either of the two paper surface sensors detects the upper surface of the stack of copies.

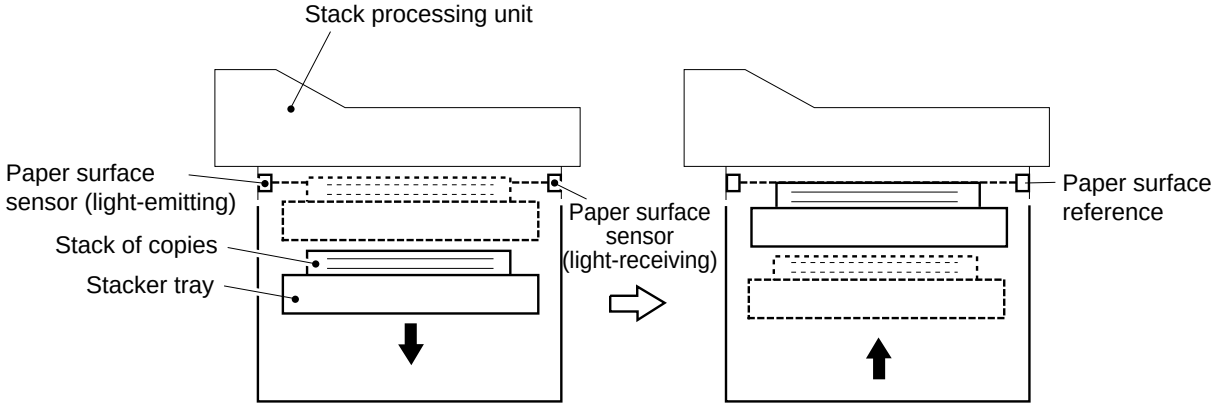

Figure 2-611

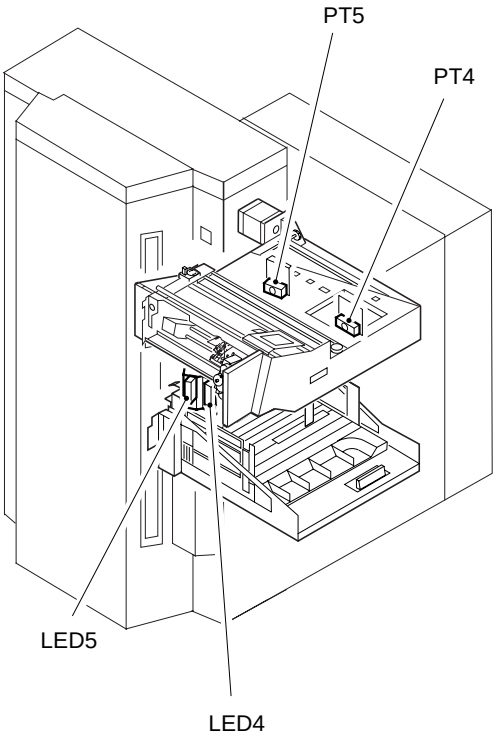

Figure 2-612

b. Operation

When the stacker tray has repeated up/down movements and the stacker tray has reached home position, the stacker unit is moved back to its home position. Thereafter, the lift wall is extended and the stacker tray is moved up to the paper surface reference point to be ready for the next stack of copies.

In this condition, the finisher will not handle stacks of copies from the lower bin unit.

Stacking operation is continued using the upper bin module only; then, when the stacker tray home position sensor (PI43) detects the stacker tray, the finisher stops operation and causes the copier to indicate the Remove Paper message on its control panel. At this time, the stack on the stacker tray holds about 2,000 copies (about 260 mm high).

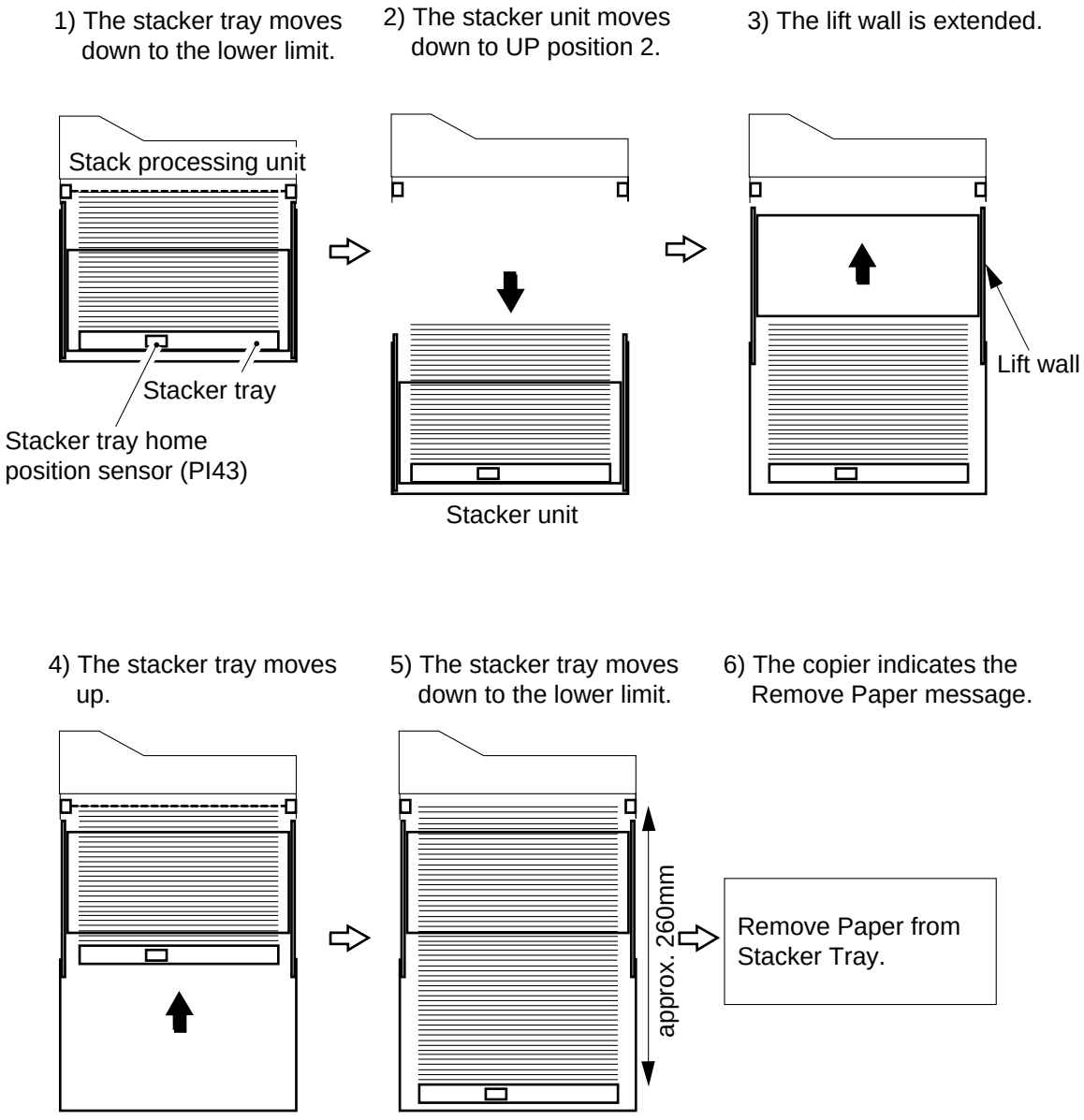

Figure 2-613

COPYRIGHT © 1997 CANON INC.

When the stacker unit extends the lift wall, the topmost surface of the stacker unit is higher than the stack access position of the lower bin module, preventing the finisher from collecting copies from the lower bin module.

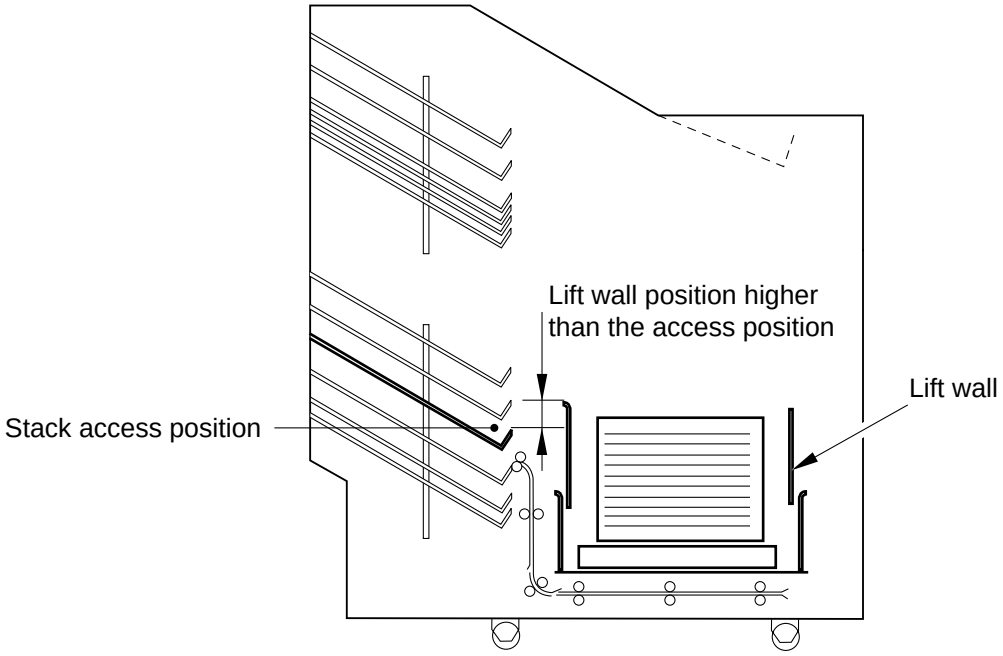

Figure 2-614

This is why the finisher uses the upper bin module only when handling copies, even though the speed is not as high as when using both upper and lower bin modules (with the rate of decrease varying according to copy mode).

Ex.

- If the time for sorting and the time for handling copies by the stack processing unit (stapling, carrying the stack of copies to the stacker tray) are identical, the rate of decrease will be about 50%.

COPYRIGHT © 1997 CANON INC.

c. Detecting the Thickness of the Stack

The finisher is equipped with a stack sensor (LED6/PT6) to control the operation that follows the removal of copies from the stacker tray. The finisher operates the stacker unit differently according to the height of the copies inadvertently left behind on the stacker unit.

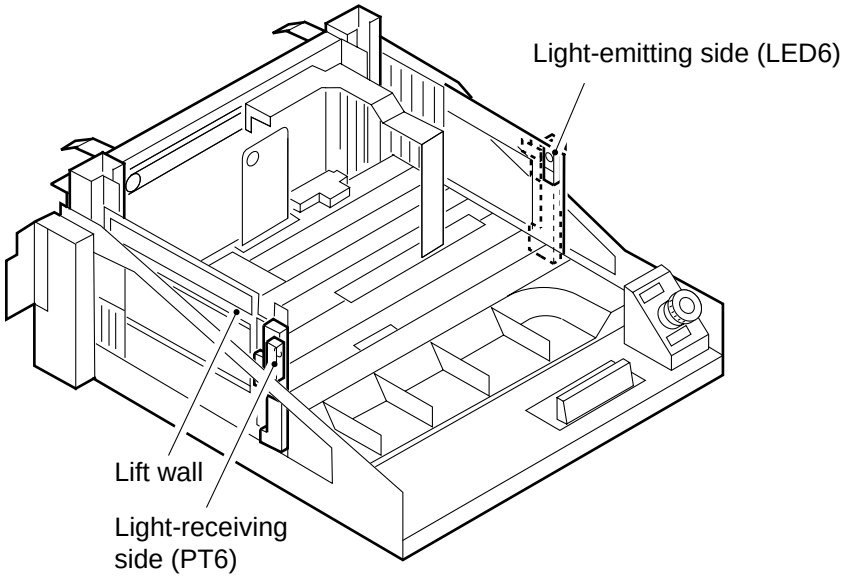

Figure 2-615

COPYRIGHT © 1997 CANON INC.

If some copies are left behind on the stacker tray, the stacker unit will operate as described:

Ⓐ: Stack of copies removed
Ⓑ: Stack of copies left behind on the stack tray

1) With the Lift Wall Contracted
   • If the stack Ⓑ of copies left behind on the stack tray is not detected by the stack sensor (LED6/PT6),

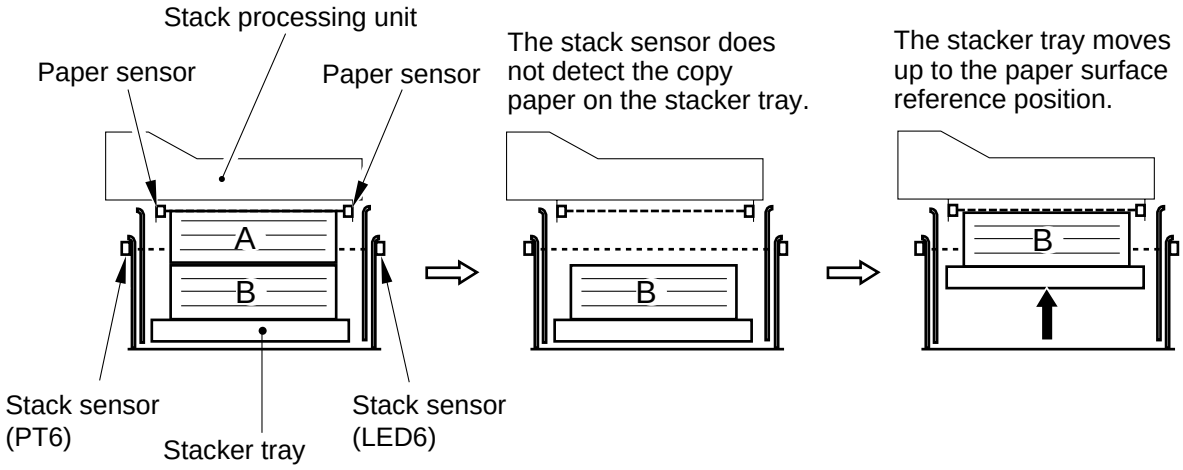

Figure 2-616

2) With the Lift Wall Extended
   • If the stack copies left behind on the stack tray is detected by the stack sensor (LED6/PT6),

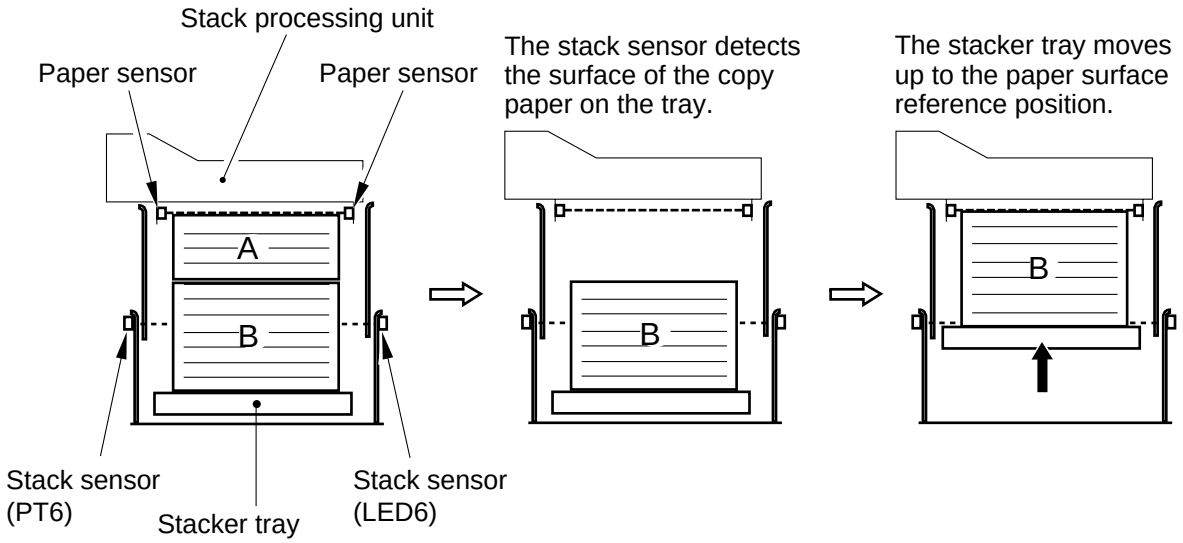

Figure 2-617

- If the stack of copies left behind on the stacker tray is not detected by the stack sensor (LED6/PT6),

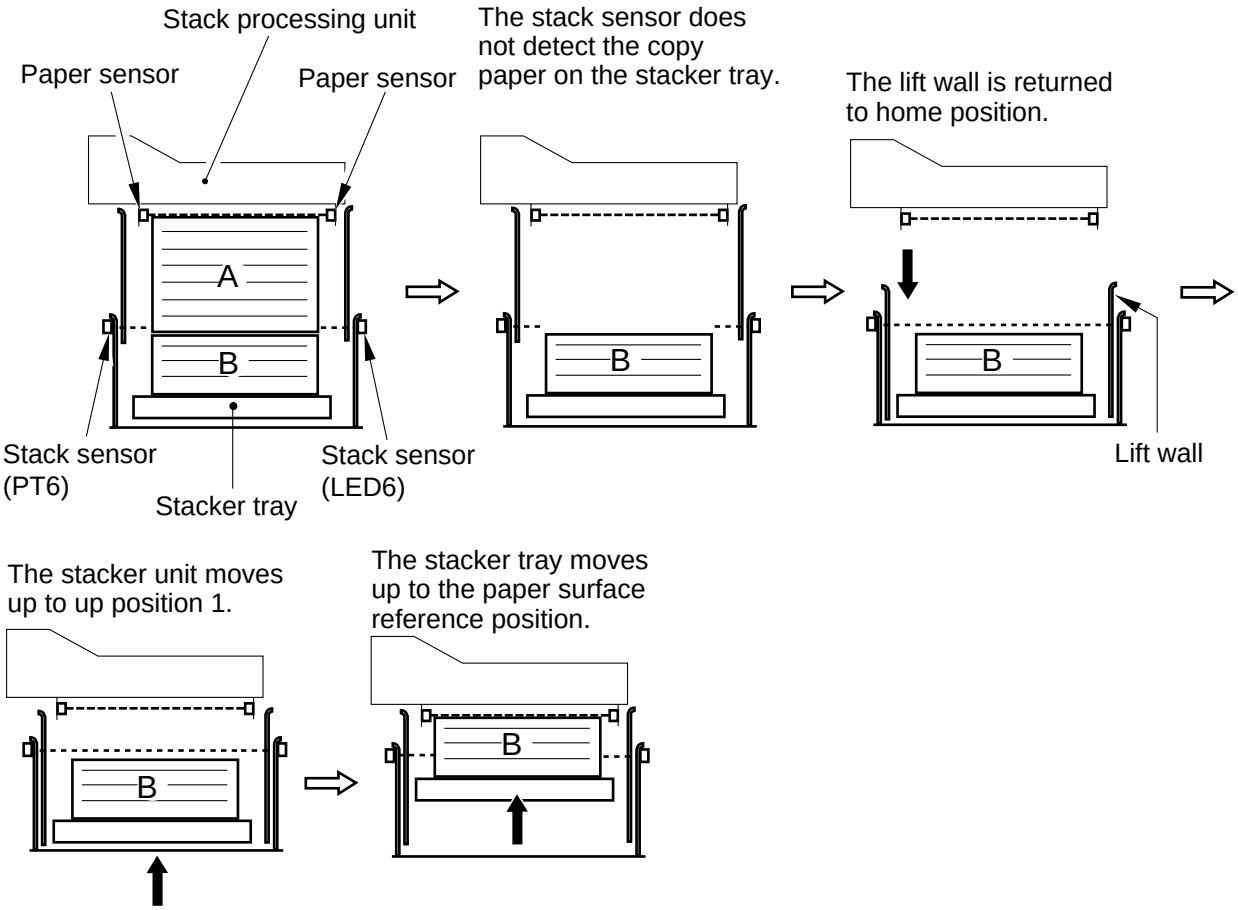

Figure 2-618

COPYRIGHT © 1997 CANON INC.

3. Detecting the Presence/Absence of Copy Paper and the Level

The finisher detects the presence/absence, and the level if any, of copy paper on the stacker and indicates the results on the access door.

The presence/absence of copy paper is detected by the stacker tray power sensor (PI44) of the stacker tray. When the finisher controller PCB receives signals from the stacker tray stack sensor, it turns on the stack tray access indicator on the access door to indicate the presence of copy paper on the stacker tray.

The level of copy paper is detected by the stacker tray shift clock sensors A and B (PI45, PI81), and is indicated by means of the LEDs on the access door in terms of five levels.

The stacker tray shift clock sensors A and B monitor the rotation of the encoder disc mounted to the shaft of the stacker tray shift motor (M16), and sends the results to the finisher controller PCB.

The finisher controller PCB identifies the position of the stacker tray (drop distance) in reference to the combination of signals from the two sensors. The finisher controller PCB uses LEDs to indicate the changes in the position of the tray in terms of changes in the level of copy paper.

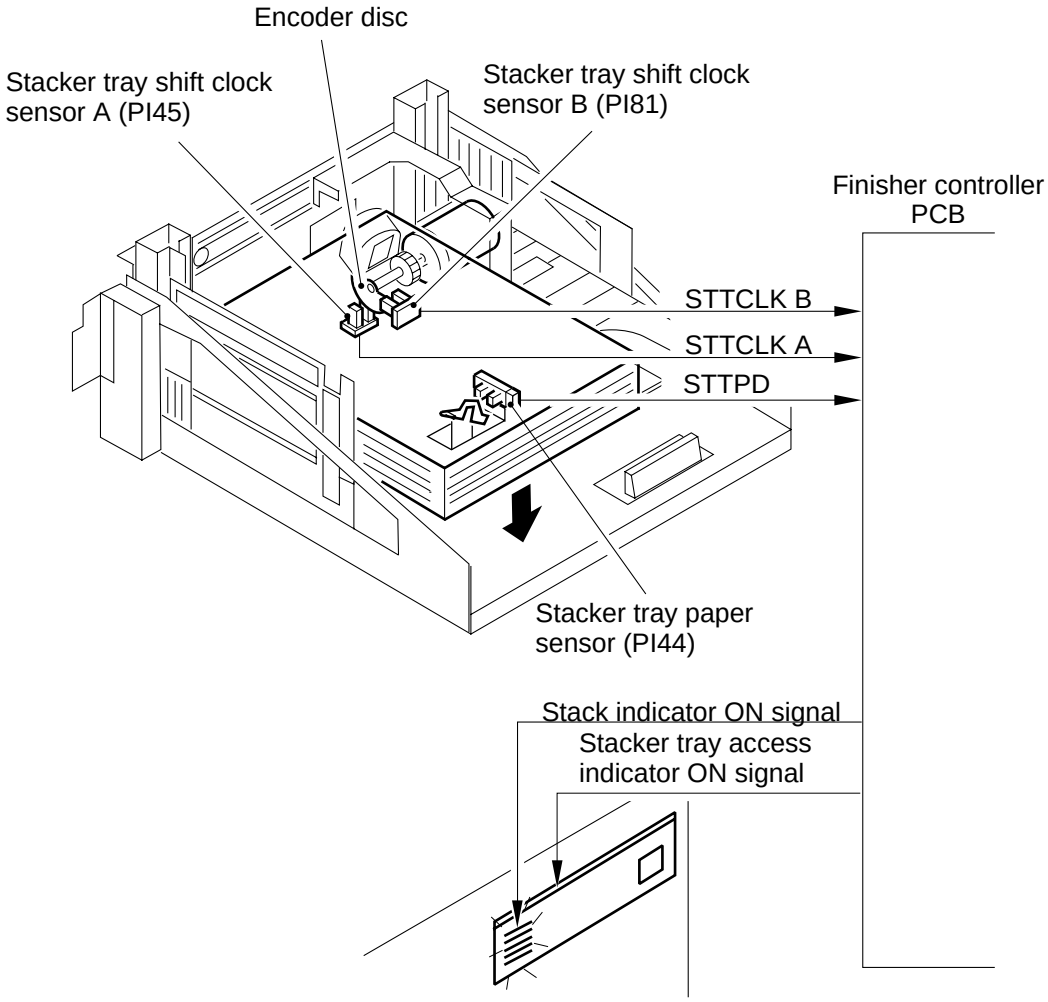

Figure 2-619

Table 2-605 shows the level of copy paper in relation to the number of LEDs which are turned on.

Number of LEDs	Level (height) of copy paper (approx.)	Lift wall
1	Less than 65 mm	Contracted
2	Less than 130 mm	
3	Less than 195 mm	
4	Less than 260 mm	Extended
5	260 mm	

Table 2-605

COPYRIGHT © 1997 CANON INC.

4. Controlling the Stacker Shift Motor (M16)

a. Outline

Figure 2-620 shows the circuit used to control the stacker tray shift motor. The motor is a DC motor, and the circuit has the following functions:

- Turning on and off the motor.
- Controlling the rotation of direction of the motor.

The circuit has a logic circuit used to determine whether to drive or stop the motor based on combinations of signals from sensors.

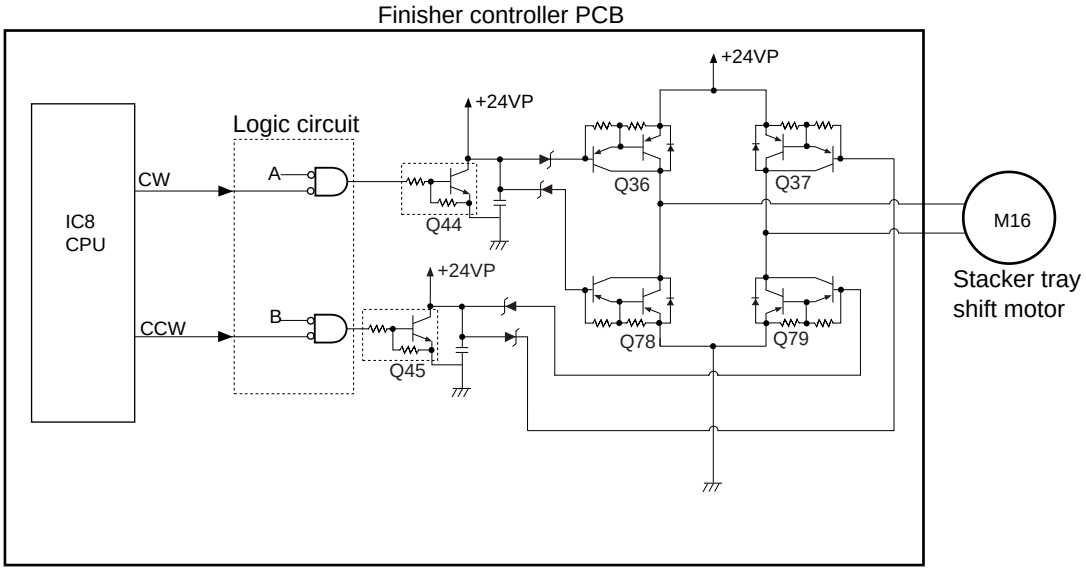

A: Stacker tray upper limit detection signal (PI42)
B: Stacker tray home position signal (PI43)

Figure 2-620

b. Turning On and Off the Stacker Tray Shift Motor and Controlling the Direction of Rotation

The stacker shift motor is turned on or off and its direction of rotation is controlled based on the combinations of the following two types of signals:

CW: Stacker tray shift motor clockwise signal (stacker tray moves up)

CCW: Stacker tray shift motor counterclockwise signal (stacker tray moves down)

Stacker tray motor	CW	CCW
Stacker tray moves down	1	0
Stacker tray moves up	0	1
Stops	1	1

Table 2-606

COPYRIGHT © 1997 CANON INC.

Because of the presence of the logic circuit, the conditions shown in Table 2-607 must be met for the stacker tray shift motor to rotate clockwise or counterclockwise. The stacker tray shift motor is allowed to rotate only when each of these conditions is met.

Stacker tray moves up

	Condition 1	
Sensor name (notation)	Flag over sensor	I/O display
The stacker tray has not reached the upper limit. (PI42)	No	P140-4 : 1
The stacker tray has not reached home position. (PI43)	*	P145-0 : *

*Either.

For I/O display, use the copier's service mode

Stacker tray moves down

	Condition 1	
Sensor name (notation)	Flag over sensor	I/O display
The stacker tray has not reached the upper limit. (PI42)	*	P140-4 : *
The stacker tray has not reached home position. (PI43)	Yes	P145-0 : 1

*Either.

For I/O display, use the copier's service mode

Table 2-607

COPYRIGHT © 1997 CANON INC.

5. Controlling the Access Door

a. Outline

The access door must be opened to remove the copy paper on the stacker tray. The access door, however, must not be opened to prevent problems as long as the stacker unit is in operation.

The finisher's access door is designed so that it can be opened only when certain conditions are met:

Conditions for Access

- Each unit of the stack processing unit is at home position, and is at rest.
- Each unit of the stacker unit is at rest.

The access door locking solenoid (SL3) is used to lock or release the access door.

The stacker SET sensor (PI41) is used to find out whether the stacker tray is drawn out to the front.

The access door sensor (PI80) on the other hand is used to find out whether the access door is open or closed.

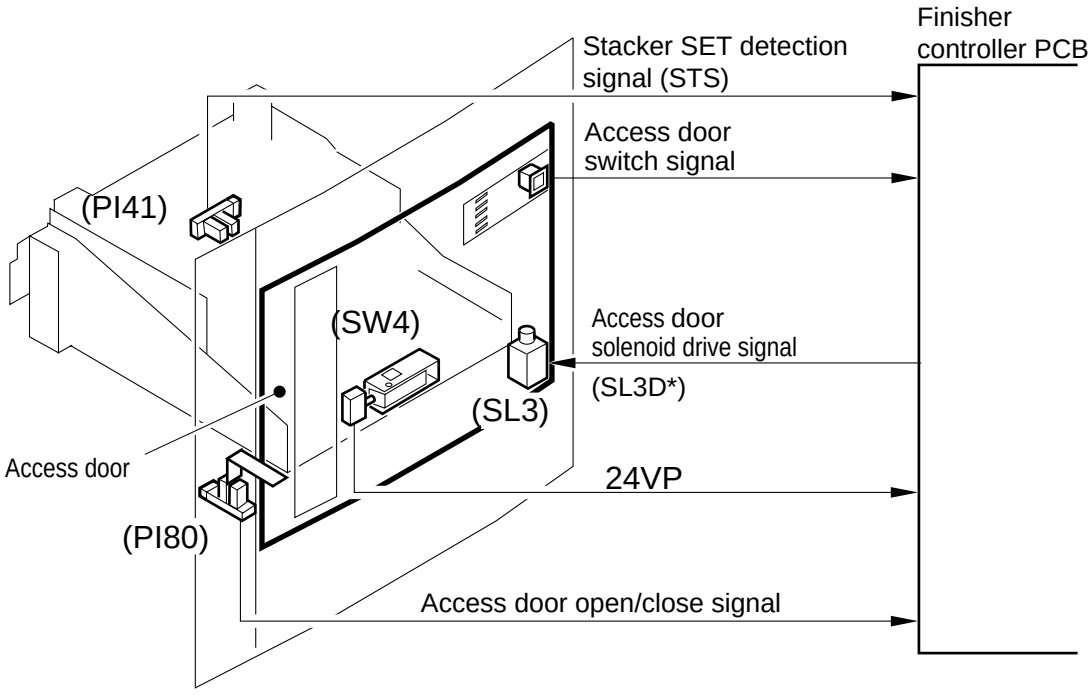

Figure 2-621

b. Operation

When the access door switch is pressed (SW4), the finisher controller PCB assumes that a request has been made for releasing of the access door and, at the same time, causes the stacker removal indicator to flash.

The finisher controller PCB returns each unit of the stack processing unit to home position, and stops any ongoing operation (for instance, handing of a stack). Thereafter, the finisher controller PCB returns the stacker unit to home position, and drives the access door locking solenoid (SL3); at the same time, it causes the stacker access indicator to stop flashing and remain on.

When the access door locking solenoid (SL3) turns on, the access cover will open automatically so that the stacker tray may be slid out to the front. When the stacker tray is slid out to the front, the stacker tray SET sensor (PI41) turns off so that the finisher controller PCB can identify the condition.

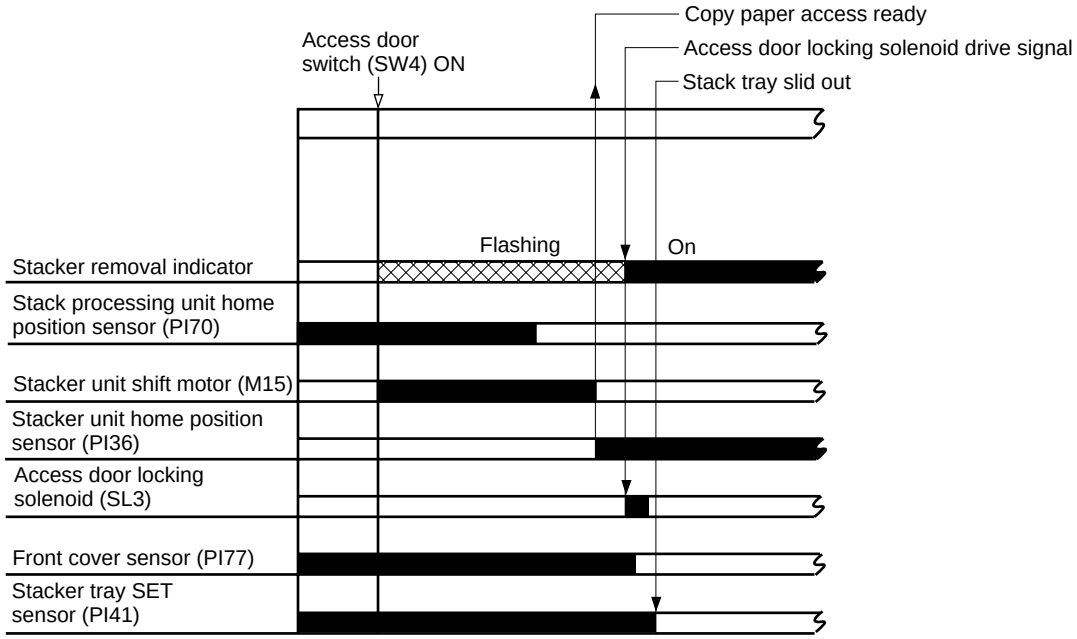

Figure 2-622

When the access door is opened, the access door switch (SW4) turns off to cut off the power (24 VP) to the loads of the stack processing unit and the stacker unit. (The power to the feeding drive systems and the bin unit drive system will not be cut off.)

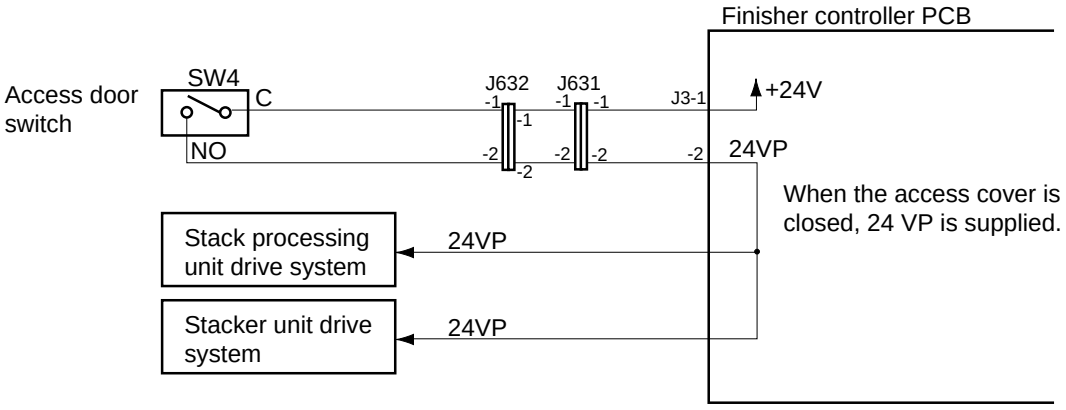

Figure 2-623

COPYRIGHT © 1997 CANON INC.

D. Leading Edge Stopper Drive System

1. Outline

Figure 2-624 shows the drive system of the leading edge stopper.

The leading edge stopper is used to determine a specific point of stacking copies on the stacker tray so that it must be moved to the left or to the right to suit the length (feeding direction) of the stack of copies and always stopped to suit the copy paper size.

It is moved by the leading edge stopper motor (M18), and the leading edge stopper home position sensor (PI46) is used to detect the home position of the leading edge stopper.

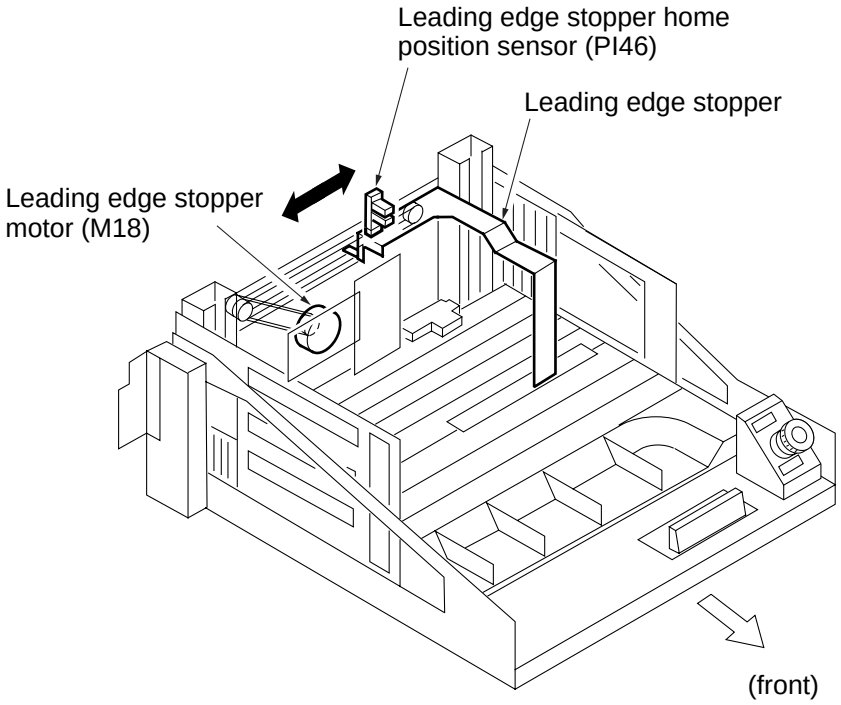

Figure 2-624

2. Operation

The point where the leading edge stopper must be stopped is determined based on the pulses from the leading edge stopper motor (M18) and in relation to the home position.

The point (A) is also varied according to the size of copy paper sent by the copier and the need of folding, as shown in Table 2-608.

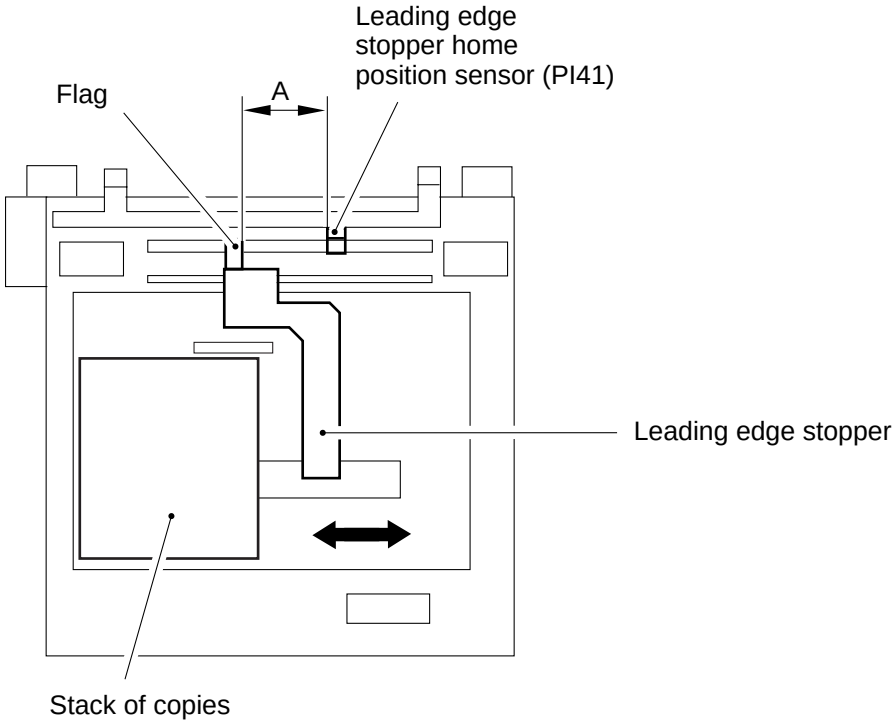

Figure 2-625 (upper view)

Copy paper size (final size)	Folding	Stop position (A; distance from home position)
B5	No	182 mm
	Yes	182 mm
A4	No	154 mm
	Yes	154 mm
B4	No	0 mm (home position)
B5R	No	107 mm
A4R	No	67 mm
LTR	No	148.1 mm
	Yes	148.1 mm
LGL	No	8.4 mm
LTRR	No	84.6 mm

Table 2-608

COPYRIGHT © 1997 CANON INC.

3. Controlling the Leading Edge Stopper Motor (M18)

a. Outline

Figure 2-626 shows the circuit used to control the leading edge stopper motor (M18). The motor is a 4-phase control stepping motor, and the circuit has the following functions:

- Turning on and off the motor
- Controlling the direction of rotation of the motor
- Switching the voltage

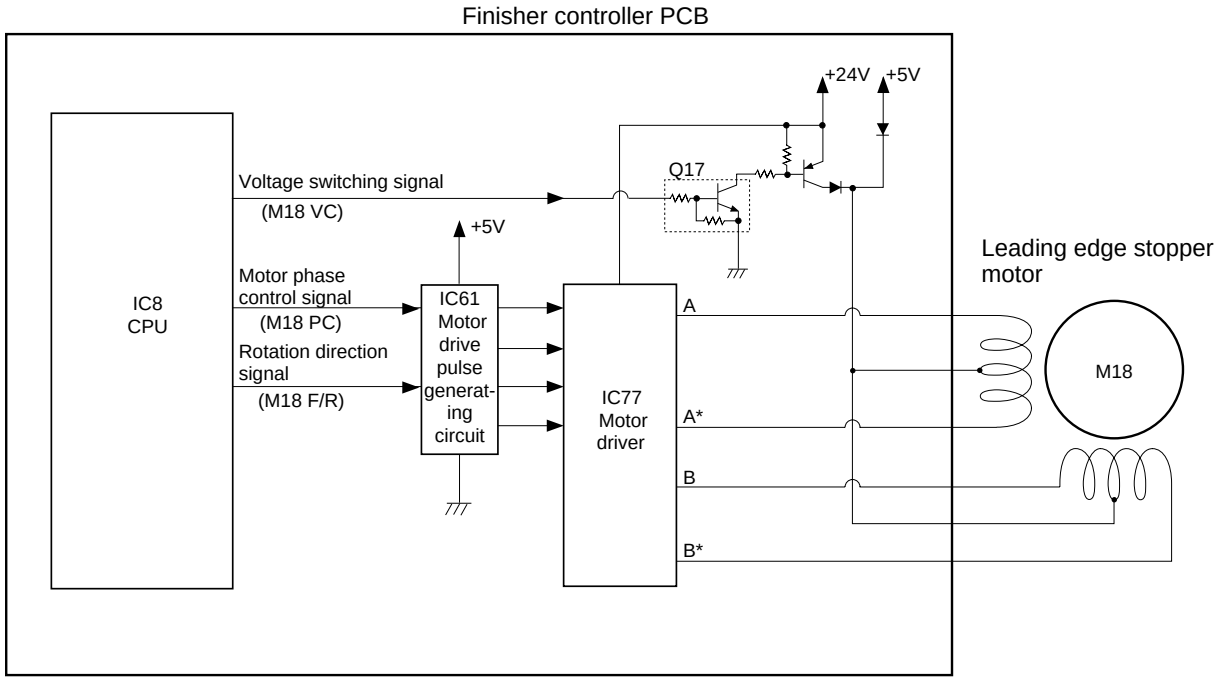

Figure 2-626

b. Operation

The finisher controller PCB sends the motor rotation direction signal (M8 F/R) and the motor phase control signal (M18 F/R) to the motor drive pulse generation circuit of the stack processing unit driver PCB.

The motor drive pulse generating circuit sends the appropriate control signal for the motor according to the input signal.

The motor driver controls the output timing of pulse signals based on the phase control signal for the motor. The leading edge stopper motor switches its direction and speed of rotation based on the output timing of the pulse signals. The voltage used when the motor is driven and when it is kept at rest is monitored to prevent excess heating of the motor while it is at rest.

COPYRIGHT © 1997 CANON INC.

E. Lift Wall Drive System

1. Outline

Figure 2-626 shows the drive system of the lift wall.

The lift wall extends upward when the stacker tray reaches the stacker tray home position sensor (PI43) after repeating up/down movements to suit the existing stack of copies. The lift wall is driven by the lift wall motor (M19), and the following two sensors are used to check the position of the extended lift wall:

- Lift wall UP position sensor (PI39)
- Lift wall home position sensor (PI40)

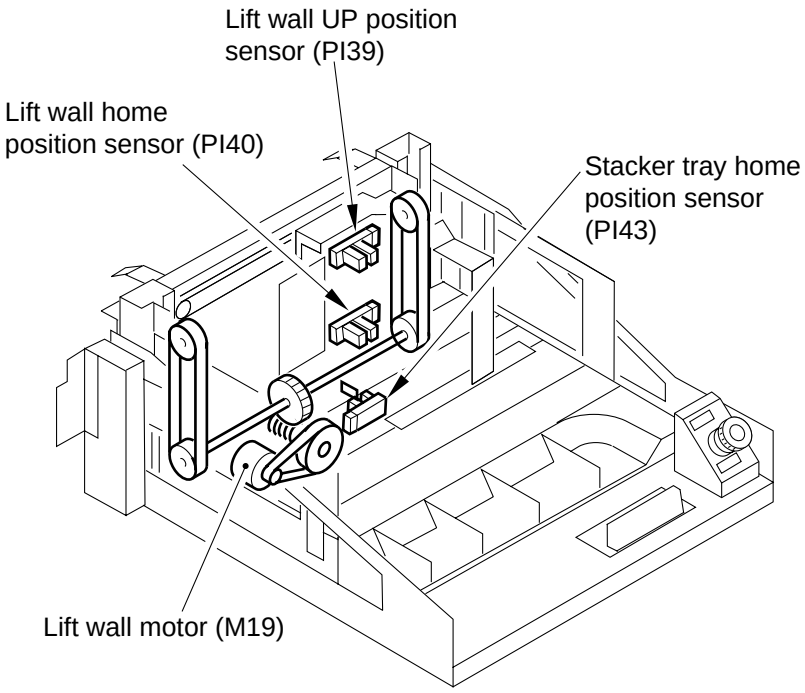

Figure 2-627

COPYRIGHT © 1997 CANON INC.

2. Operation

The lift wall is stopped at either of two points: home position or UP position. Each position is detected by a specific sensor.

Stop position	Sensor (No.)
UP position	Lift wall UP position sensor (PI39)
Home position	Lift wall home position sensor (PI40)

Table 2-609

When copying is started, the lift wall is at home position. It then extends as far as UP position when the stacker tray reaches home position.

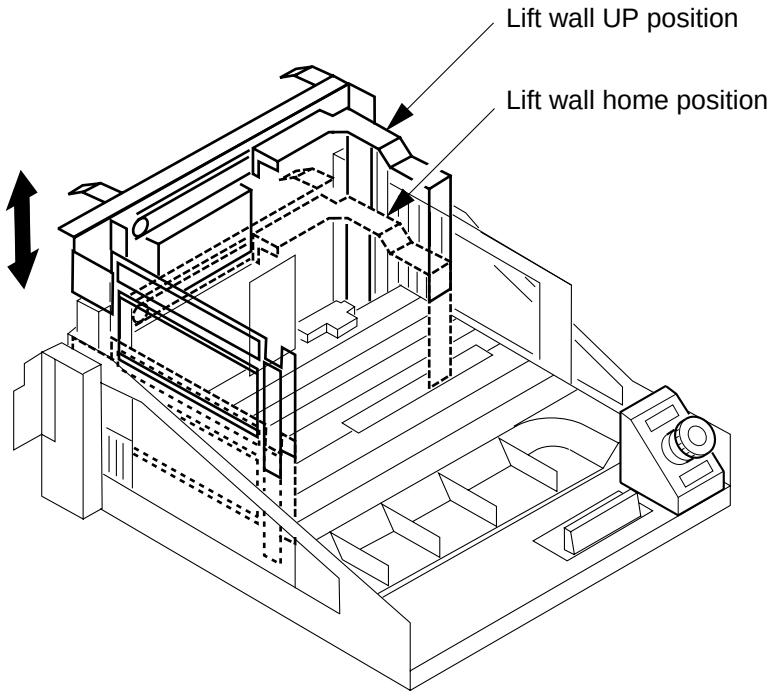

Figure 2-628

3. Controlling the Lift Wall Motor (M19)

a. Outline

Figure 2-629 shows the circuit used to control the lift wall motor (M19). The motor is a DC motor, and the circuit has the following functions:

- Turning on and off the motor.
- Controlling the direction of rotation of the motor.

The circuit possesses a logic circuit used to determine whether to drive or stop the motor based on the combinations of signals from the sensors.

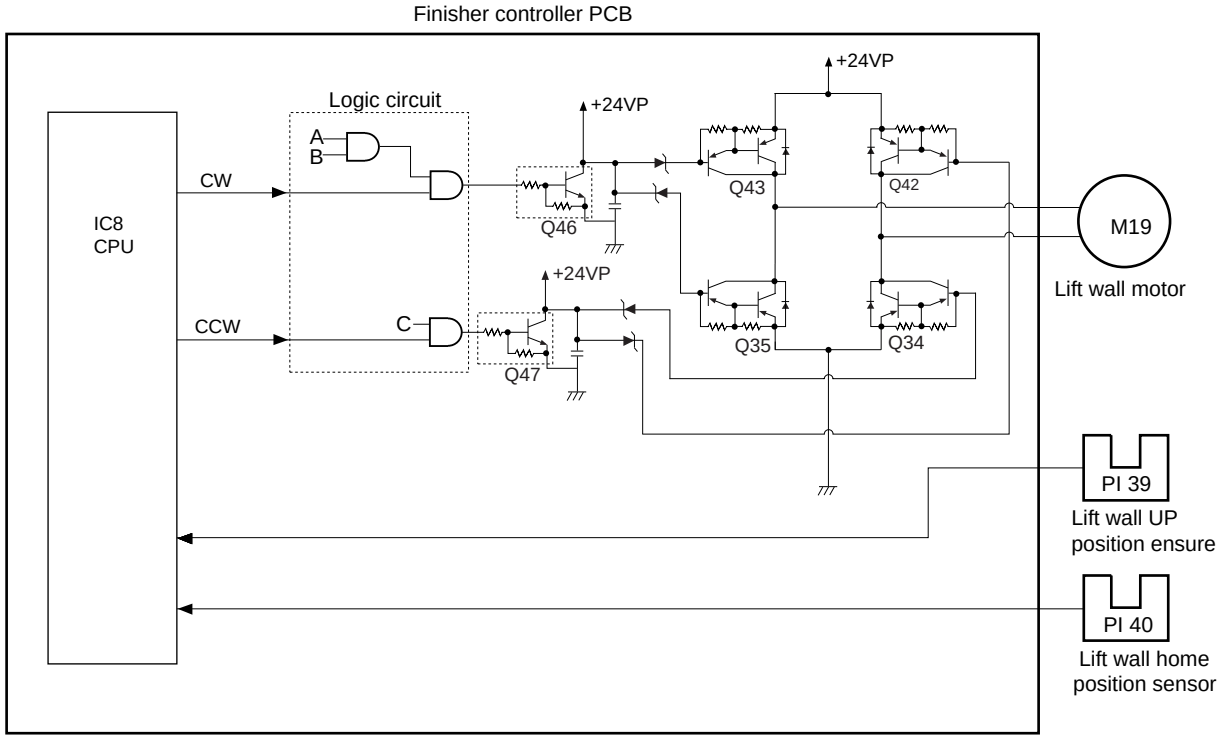

A: Lift wall home position signal (PI 39)
B: Stacker unit NEAR signal (PI 73)
C: Lift wall DOWN signal (PI 40)

Figure 2-629

COPYRIGHT © 1997 CANON INC.

b. Turning On and Off the Lift Wall Motor and Controlling the Direction of Rotation

The lift wall motor is turned on and off and its direction of rotation is controlled based on the combination of the following two signals:

CW: Lift wall motor clockwise rotation (extends the lift wall)

CCW: Lift wall motor counterclockwise signal (contracts the lift wall)

Lift wall motor	CW	CCW
Extends the lift wall	1	0
Contracts the lift wall	0	1
Stops	0	0

Table 2-610

The motor starts to rotate in response to signals from the finisher controller PCB. If the finisher controller PCB receives signals from the lift wall UP position sensor (PI39) or the lift wall home position sensor (PI40) while the motor is rotating, it stops the rotation of the motor.

Because of the logic circuit, certain conditions must be met for the lift wall motor to rotate clockwise or counterclockwise. The lift wall motor is allowed to rotate only when each of the conditions in Table 2-611 is met.

Lift wall extends

	Condition 1	
Sensor name (notation)	Flag over sensor	I/O display
Lift wall UP position sensor (PI39)	No	P147-6 : 0
Stacker unit NEAR position sensor (PI73)	No	P145-5 : 0
Lift wall home position sensor (PI40)	*	P147-7 : *

*Either.

For I/O display, use the copier's service mode

Lift wall contacts

	Condition 1	
Sensor name (notation)	Flag over sensor	I/O display
Lower bin upper limit sensor (PI25)	*	P131-7 : *
Lower bin lower limit sensor (PI26)	No	P126-3 : 0
Bin rear end wall CLOSE position sensor (PI53)	Yes	P145-3 : 1
Stack processing unit home position sensor (PI70)	No	P147-4 : 1

*Either.

For I/O display, use the copier's service mode

Table 2-611

COPYRIGHT © 1997 CANON INC.

F. Emergency Stop Button

1. Outline

The emergency stop button is found on the stacker tray assembly, and may be used to immediately stop the operation of the finisher and the copier as when removing copies.

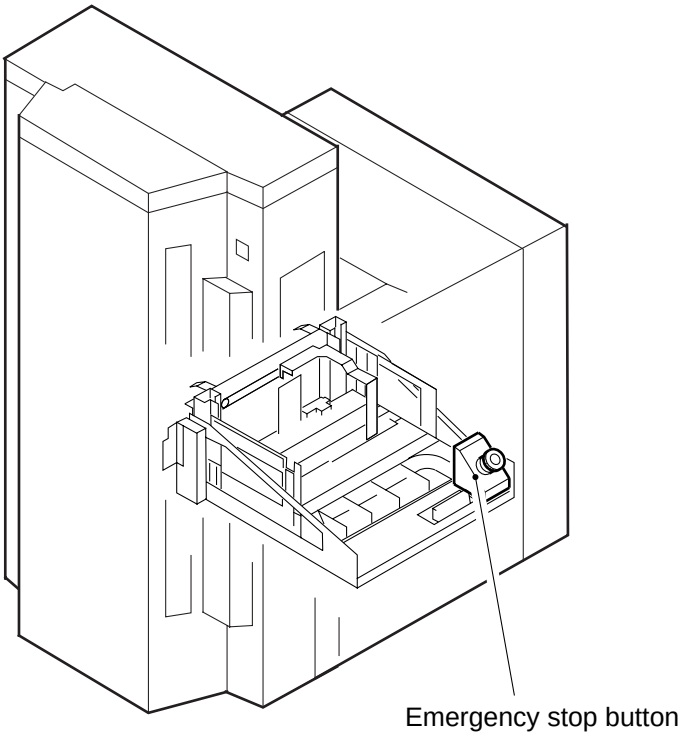

Figure 2-630

COPYRIGHT © 1997 CANON INC.

2. Using the Emergency Button

When the emergency stop button is pressed, power to all loads of the finisher is cut off so that the finisher will stop operating and, at the same time, the copier will indicate 'E713' on its control panel.

To reset the finisher, remove all jams from the finisher and the copier, and turn the red dial on the emergency stop button clockwise. The red dial will return to its initial position to reset the condition.

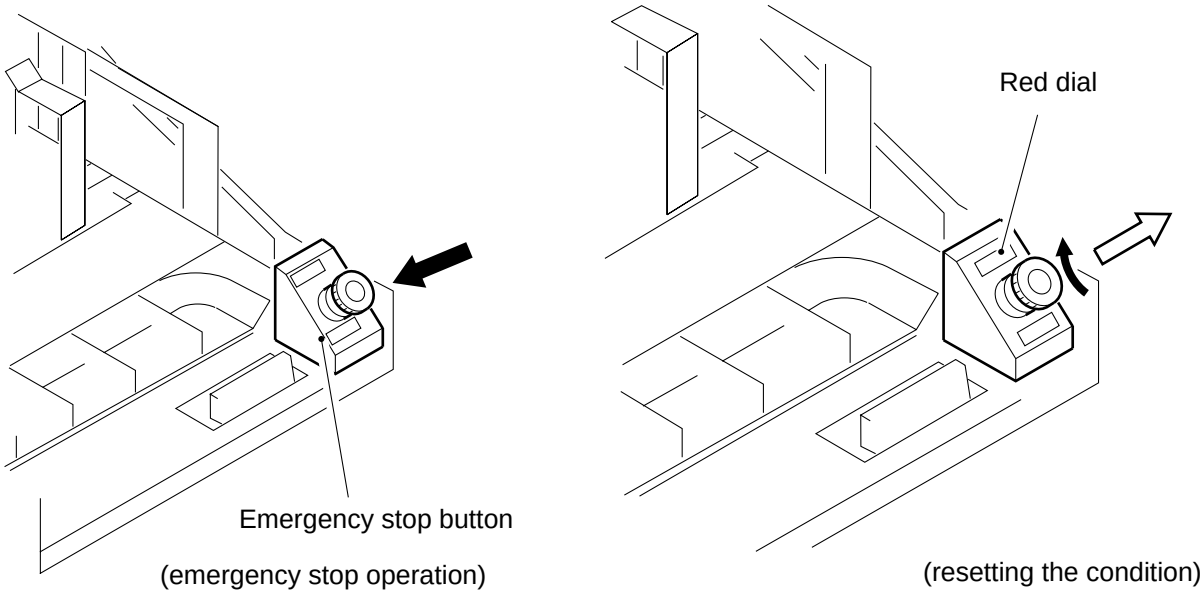

Figure 2-631

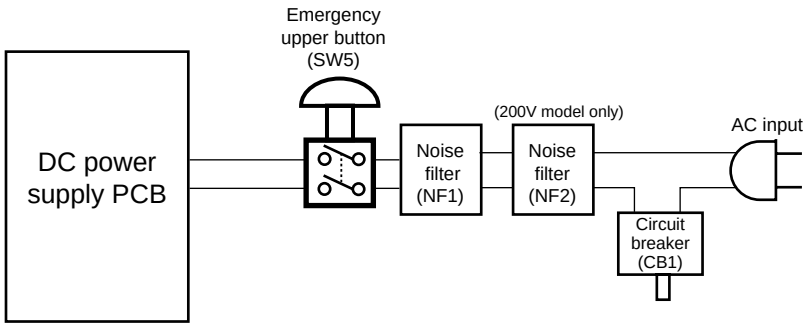

Figure 2-632

COPYRIGHT © 1997 CANON INC.

G. Internal Lamp

1. Outline

The finisher is equipped with a lamp (LP1) in its stack processing unit. The lamp is designed to turn on when the upper cover or the front door is opened (the scanning lamp will not turn on).

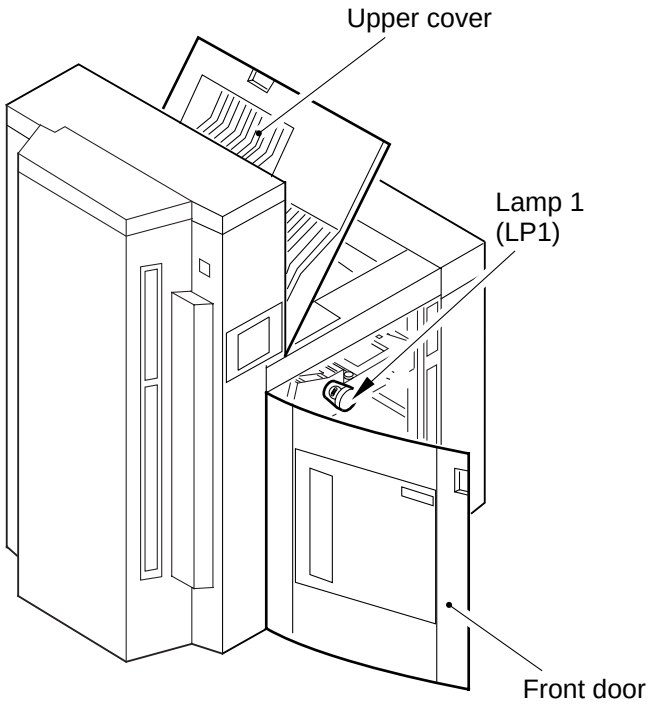

Figure 2-633

COPYRIGHT © 1997 CANON INC.

H. Sequence of Operations

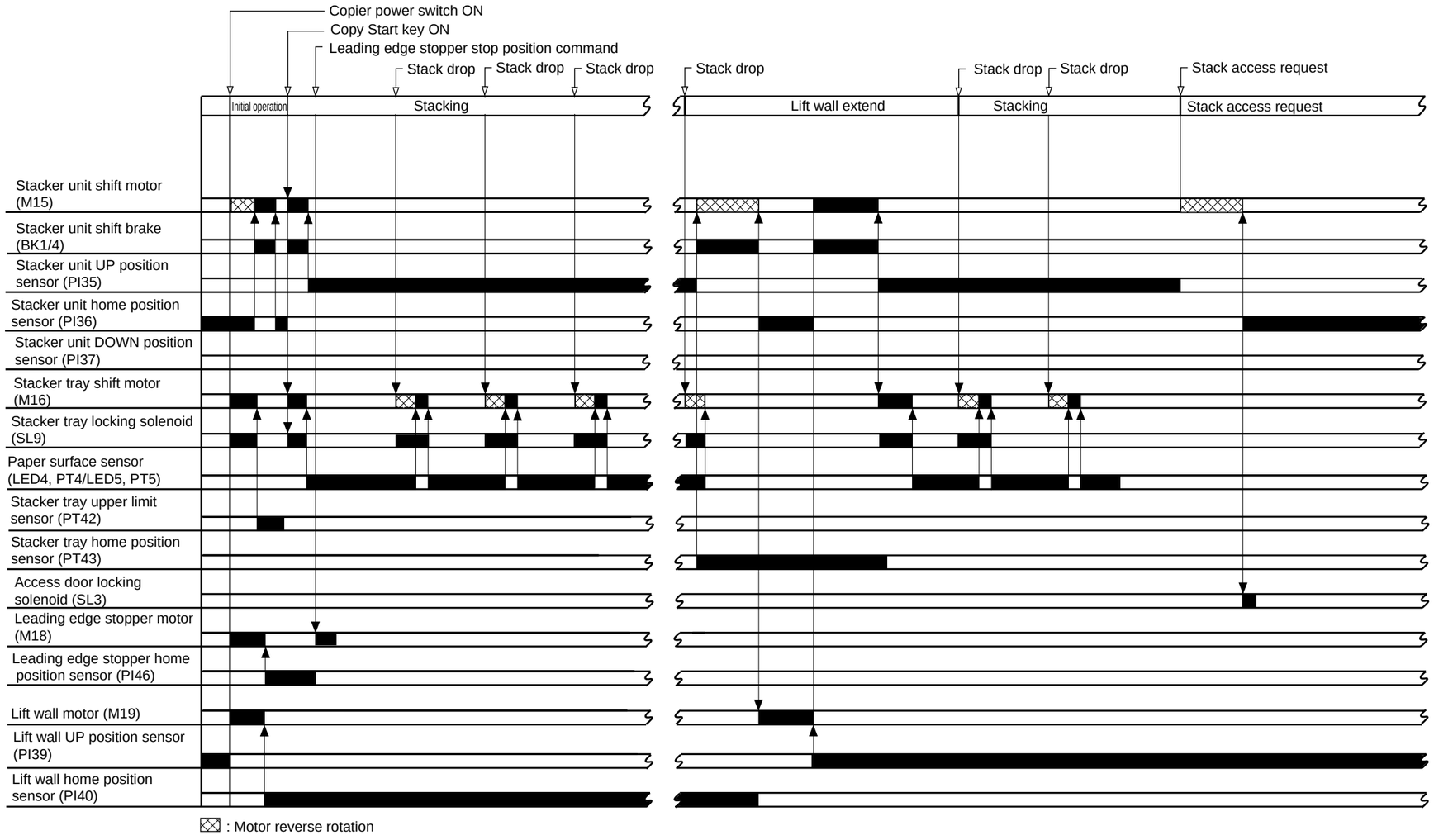

Figure 2-634

COPYRIGHT © 1997 CANON INC.

COPYRIGHT © 1997 CANON INC.

VII. CONTROL PANEL

A. Outline

The finisher's control panel consists of a transparent touch switch panel, controller PCB, and a 320x240-dot display, and has the following functions:

① Processing date for the LCD.
② Adjusting LCD contrast automatically.
③ Processing inputs on the touch switch.

B. Operation

1. Processing Data for the LCD

The CPU on the controller PCB sends commands to the LCD controller as needed according to the programs stored in advance in response to the signals from the finisher controller.

The LCD controller then interprets and executes these commands, by turning on and off the display and selecting a specific character font.

The LCD controller writes display character codes in sequence into display memory. The display memory data is then shown on the LCD panel in response to the timing signals generated by the LCD controller.

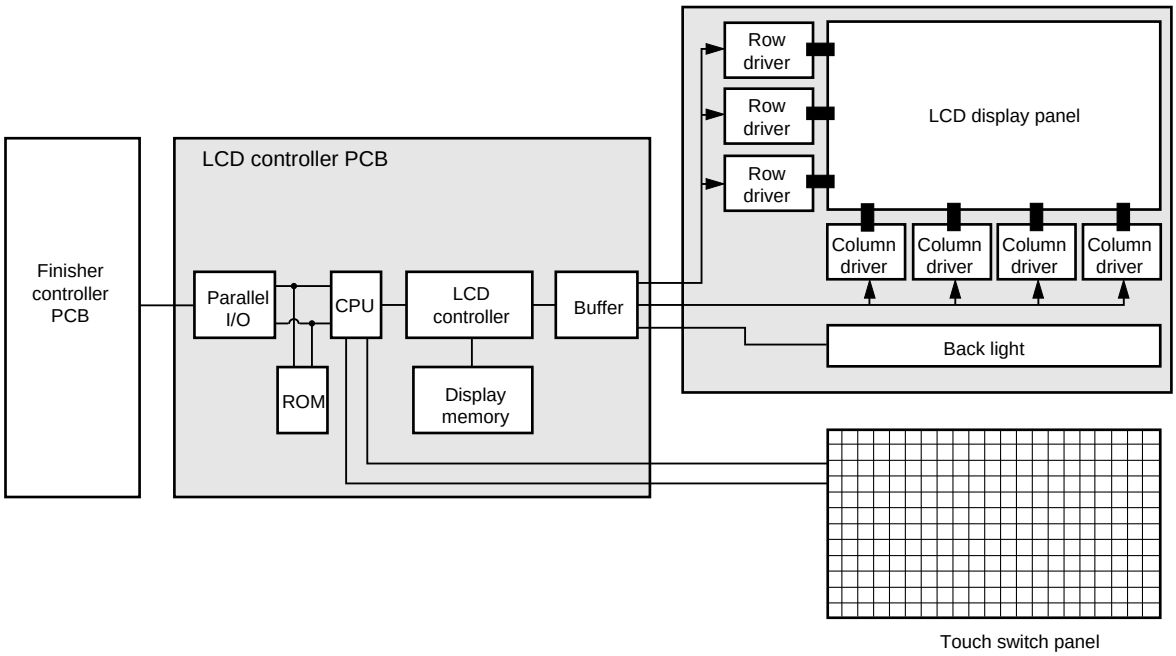

Figure 2-701

2. Automatic Adjustment of the LCD Contrast

The control panel controller PCB is equipped with a function capable of automatically correcting the changes in the LCD contrast caused by changes in the ambient temperature.

The control panel controller PCB is equipped with a thermistor (TH801) used to monitor the temperature around the control panel. The thermistor varies the voltage supplied to the LCD according to the changes in the resistance caused by changes in the ambient temperature so as to keep the LCD contrast at the appropriate level at all times.

When the temperature around the control panel rises, the resistance of the thermistor lowers, thus increasing the voltage supplied to the LCD. When the temperature around the control panel lowers, on the other hand, the resistance of the thermistor rises, thus decreasing the voltage supplied to the LCD.

The user may adjust the contrast to suit his/her preference by using the contrast adjusting volume found behind the finisher's bin cover.

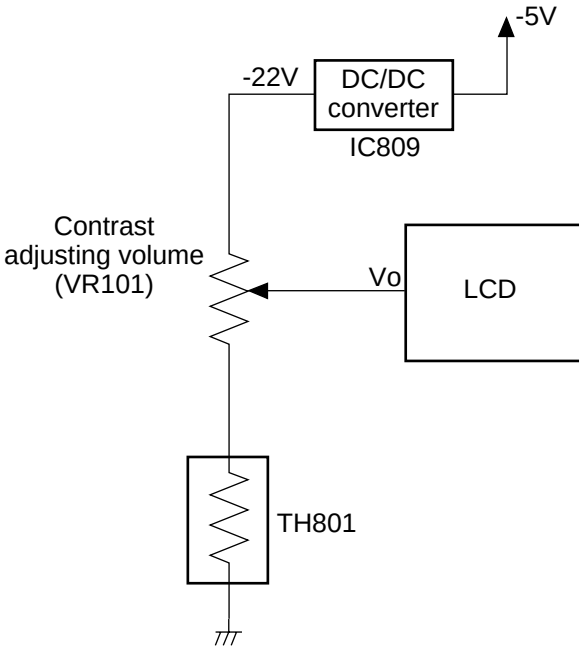

Figure 2-702

COPYRIGHT © 1997 CANON INC.

3. Inputs by the Touch Switch

The keys on the touch panel and the LCD controller panel are connected as shown in Figure 2-701.

The touch panel consists of two sheets of glass coated with transparent conducting material glued together with spacers in between, and it has a construction in which 20 × 15 keys are arranged in a matrix.

When the glass surface is pressed by a finger, the two glass plates come into contact to provide a path for electricity, enabling the identification of corresponding coordinates in reference to the electrodes, i.e., the LCD controller PCB can find out which key has been pressed in relation to the key scan signal from the LCD controller PCB and the input signal to the LCD controller PCB.

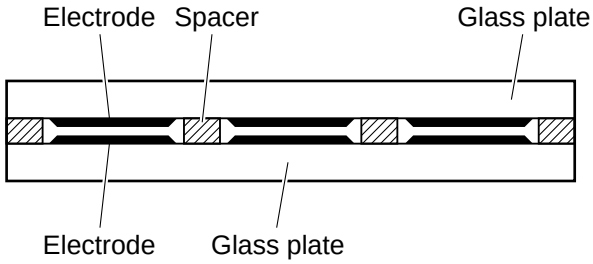

Figure 2-703

VIII. POWER SUPPLY

A. Outline of the Power Supply

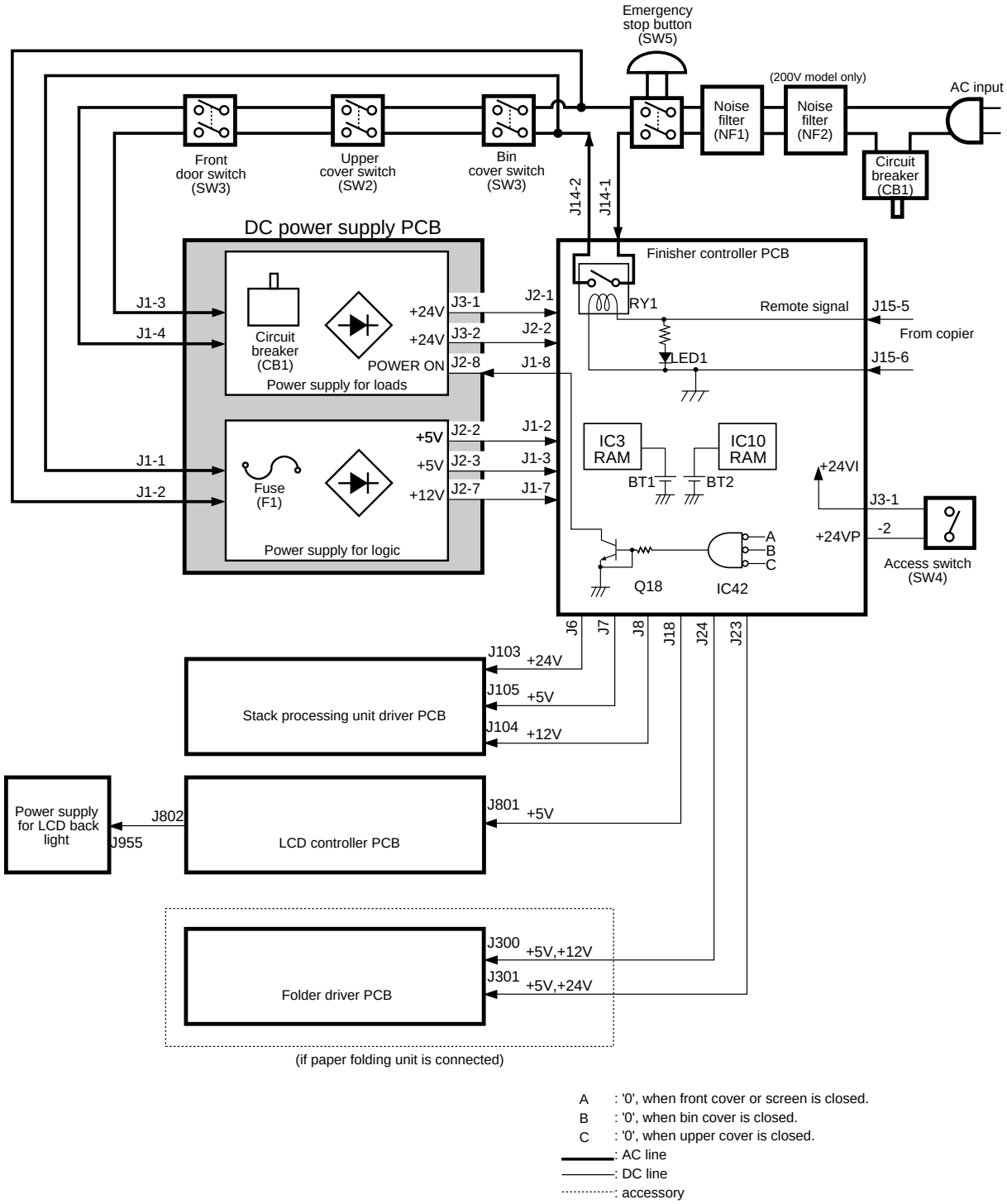

Figure 2-801

COPYRIGHT © 1997 CANON INC.

B. Power Supply Circuit

The finisher's DC power supply PCB generates power fo three different channels: 24 V, 12 V, and 5 V, each DC power type intended for the following:

DC power	Destination
24 V	Loads (motors, solenoids, brakes, etc.)
12 V	Machine internal lighting (to assist clearing jams)
5 V	Logic devices, sensors, etc.

Table 2-801

When the power plug is connected, and the remote signal (issued at all times while the copier is operating) is received, LED1 on the finisher controller PCB lights and the relay (RY1) turns on.

When the relay (RY1) turns on, the AC power is divided into two channels and supplied to the DC power supply PCB: power in one channel is used to generate power for loads, while power in the other is used to generate power for logic devices.

The AC power used to generate power for loads is cut off when the bin cover, upper cover, or front cover is opened (SW1, SW2, or SW3 opens).

The +24 V power supplied by the DC power supply PCB is divided into three types (+24 VI, +24 V, +24 VP) on the finisher controller PCB according to the type of load. After division, the power is cut when the access door is opened, when emergency mode is started, or when the paper folding unit top cover is opened (i.e., when the unit is connected).

COPYRIGHT © 1997 CANON INC.

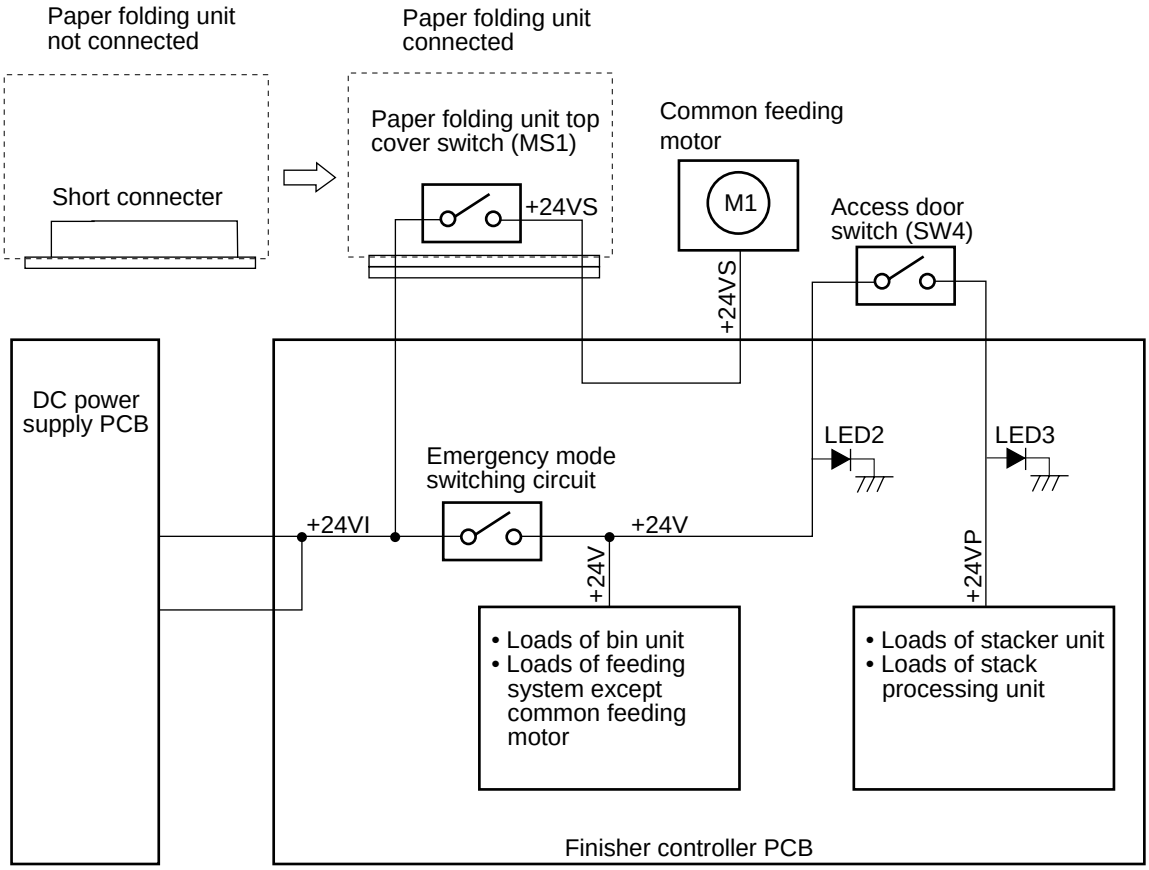

+24 VI : Power from the DC power supply PCB.
+24 V Power subject to the emergency operation mode switching circuit.
+24 VS : Power subject to the paper folding unit top cover switch.
+24 VP : Power subject to the access door switch.

Figure 2-802

When the access door is opened (SW4 opens), the power for loads (+24 VP) for the stack processing unit and the stacker unit is cut off. When emergency operation mode is started, on the other hand, power to the loads not related to non-sort mode (+24 V, +24 VP) will be cut. When the paper folding unit top cover is opened (MS1 opens), further, the power for the common feeding motor (M1; +24 VS) will be cut off.

The power for loads (+24 VI) is turned on and off by the POWER ON signal. When all the following three conditions are met, the transistor (Q18) will be grounded, and the light-emitting side (PC5) of the photocoupler will turn on.

The DC power supply PCB generates +24 VI when the light receiving side (PC5) turns on in response to the activation of light-emitting side.

The emergency stop button is capable of simultaneously cutting AC power for both loads and logic devices.

COPYRIGHT © 1997 CANON INC.

No.	Condition	Associated sensor (sensor No.)
1	A; The front door or the screen in closed.	Front door sensor (PI77), screen sensor (PI78)
2	B: The bin cover is closed.	Bin cover sensor (PI76)
3	C: The top cover is closed.	Upper cover sensor 1 (PI74), upper cover sensor 2 (PI75)

Table 2-802

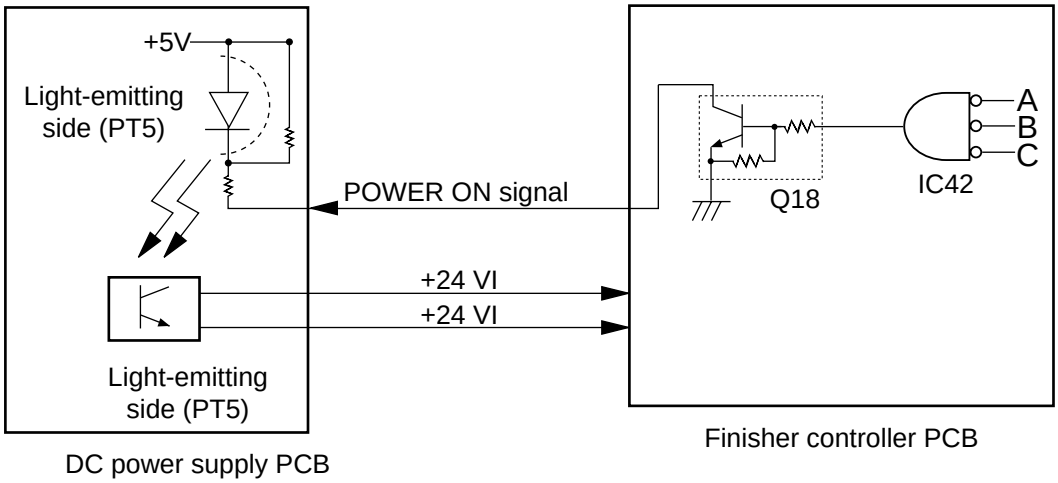

Figure 2-803

When the finisher's power plug is disconnected, the emergency stop button is pressed, or the copier is turned off, the DC power supply to the finisher controller PCB will be cut off. For this reason, the two RAMs (IC3, IC10) on the finisher controller PCB are equipped with two lithium batteries (BT1, BT2).

Caution:

Replace the lithium battery only with the one listed in the Parts Catalog. Use of a different battery may present a risk of fire or explosion. The battery may present a fire or chemical burn hazard if mistreated. Do not recharge, disassemble, or dispose of it in fire.
Keep the battery out of reach of children and discard any used battery promptly.

C. Protection Mechanisms for the Power Supply Circuit

The finisher's DC power supply PCB is equipped with an overcurrent detection circuit, which turns on protection mechanisms to cut off the output when a short circuit occurs because of a fault in any of the loads.

When the output is stopped, disconnect the power plug from the outlet, correct the load, and connect the power plug to the outlet so that the output recovers automatically.

D. DC Power Supply Rated Outputs

The DC power supply circuit provides the types of DC power shown in Table 2-803 in return for rated AC inputs (85 to 133 VAC for 100 V model; 187 to 276 VAC for 200 V models).

Connector No.	J2								J3			
Pin No.	1	2	3	4	5	6	7	8	1	2	3	4
Output	GND	+ 5V	+ 5V	GND	GND	GND	+ 12V	Remote	+ 24V	+ 24V	GND	GND
Tolerance (%)	–	+ 3.5 – 1.5	+ 3.5 – 1.5	–	–	–	± 5.0	–	± 5.0	± 5.0	–	–

Table 2-803

COPYRIGHT © 1997 CANON INC.

IX. PAPER FOLDING UNIT-A1

A. Outline

The paper folding unit is designed to fold A3, B4, or 279.4×431.8 mm (11”×17”) paper into Z according to the mode set on the copier for feeding to the finisher.

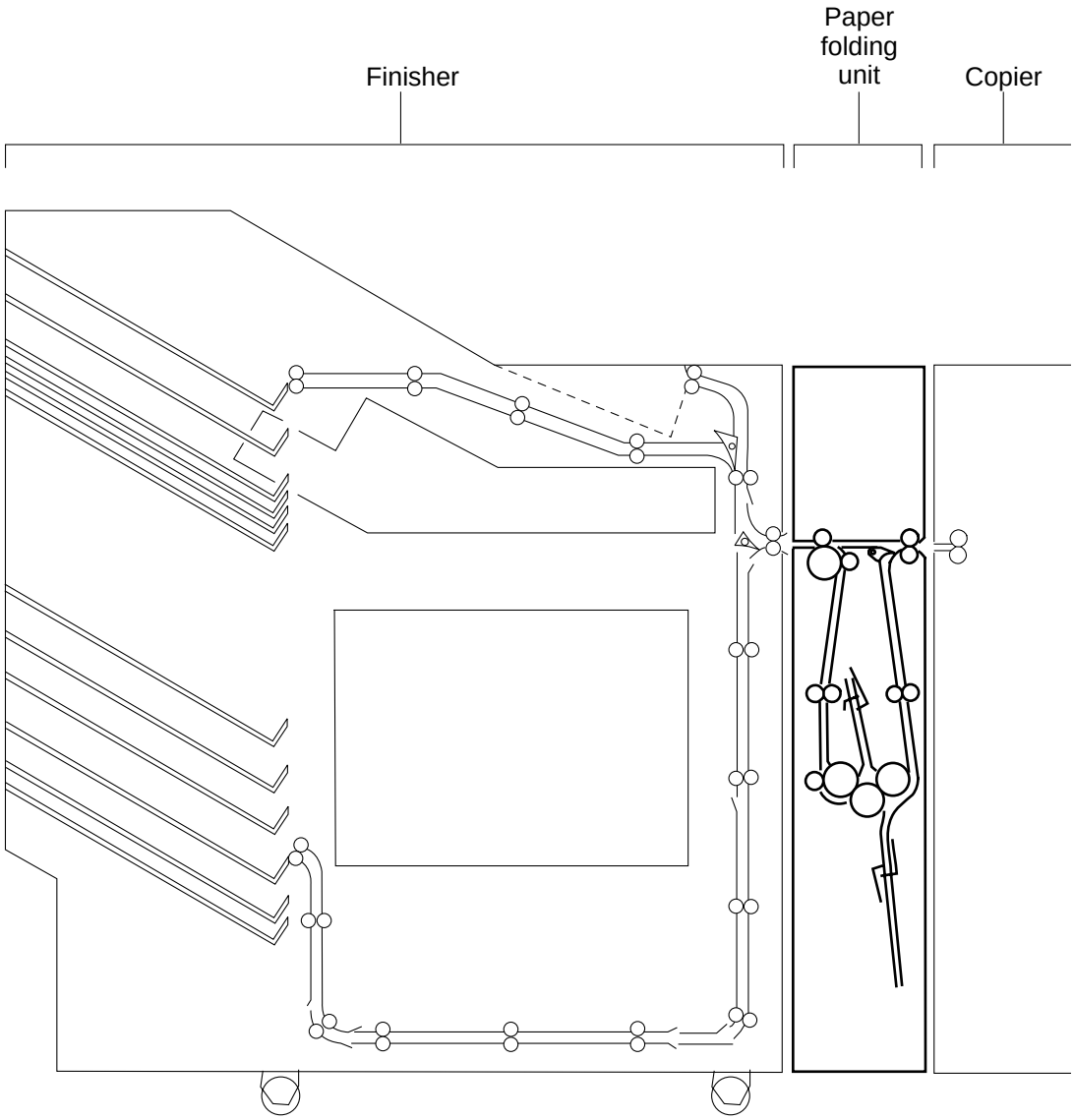

Figure 2-901

B. Outline of the Electrical Circuit

The finisher is controlled by the finisher controller PCB so that it is not equipped by any other specific PCB.

The signals from the finisher are received by the folder driver PCB to drive the motor and the solenoid.

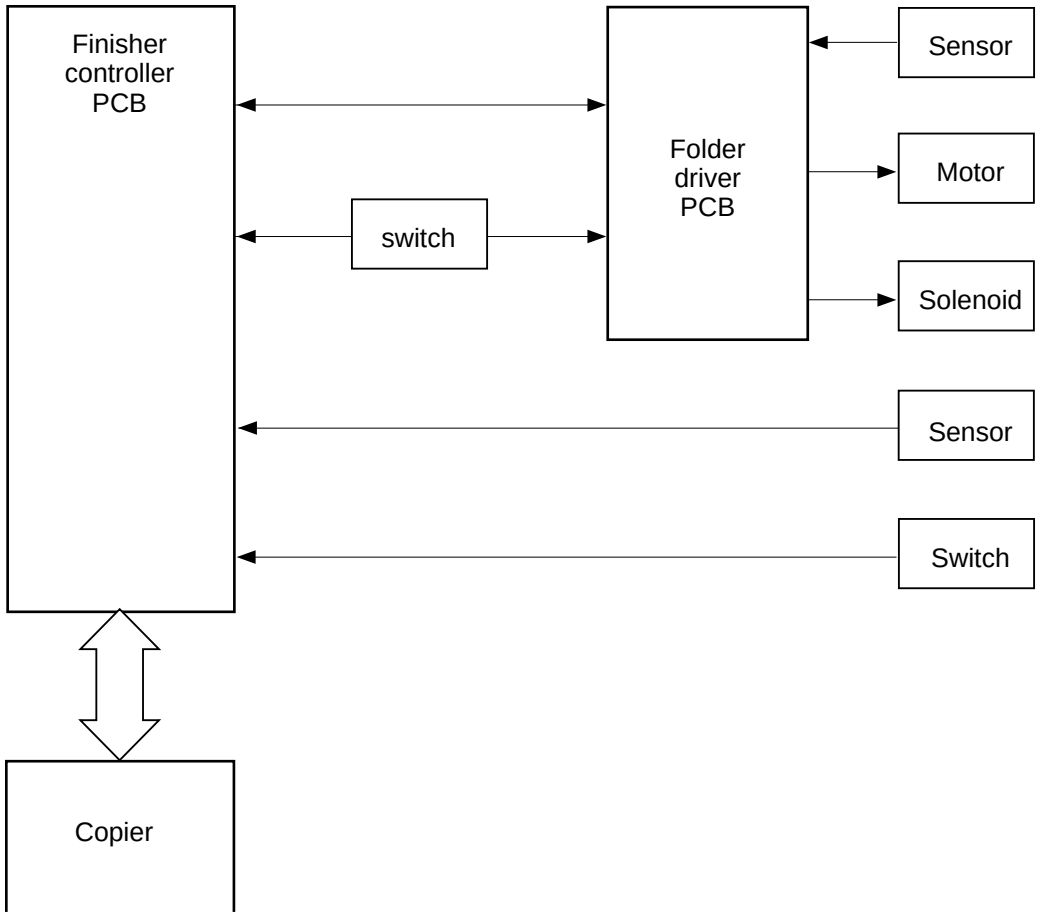

Figure 2-902

COPYRIGHT © 1997 CANON INC.

C. Inputs to and Outputs from the Paper Folding Unit

1. Inputs to the Paper Folding Unit

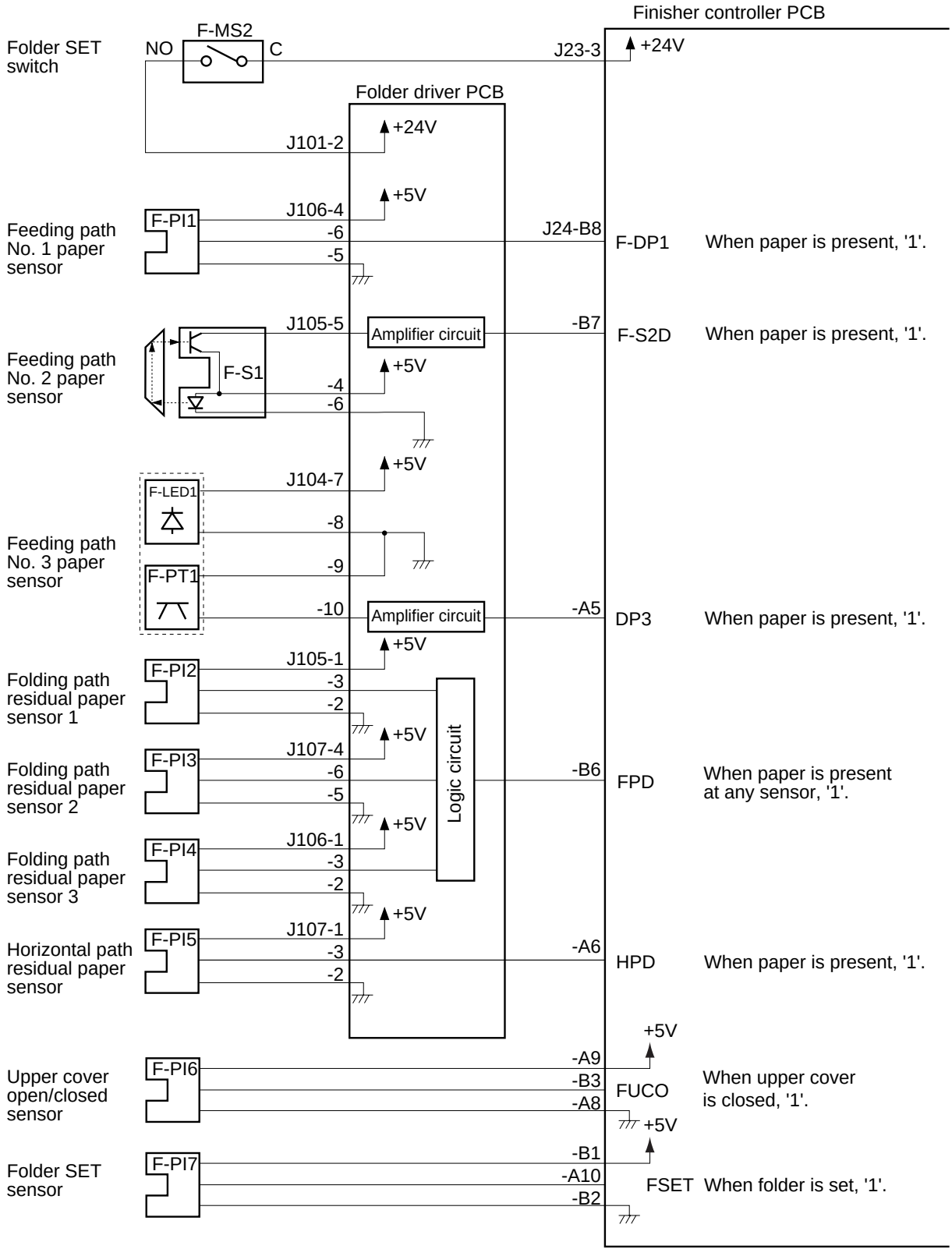

Figure 2-903

2. Outputs from the Paper Folding Unit

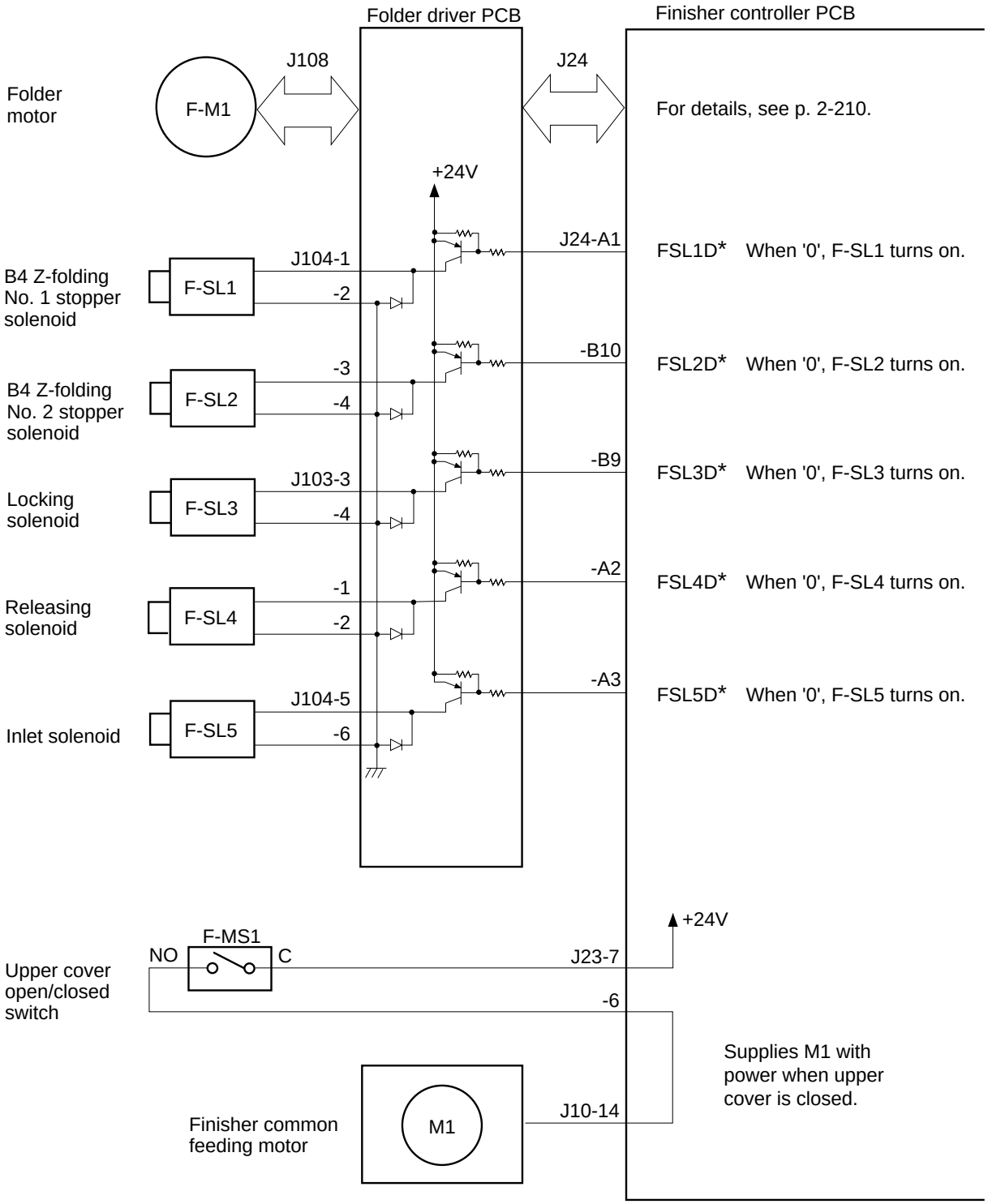

Figure 2-904

COPYRIGHT © 1997 CANON INC.

D. Basic Operations

The finisher folds delivered copies into Z according to the mode set on the copier.

1. No-Folding Mode

1) The copier's Copy Start key is pressed.

2) The copy is moved through the horizontal path, and is delivered to the finisher.

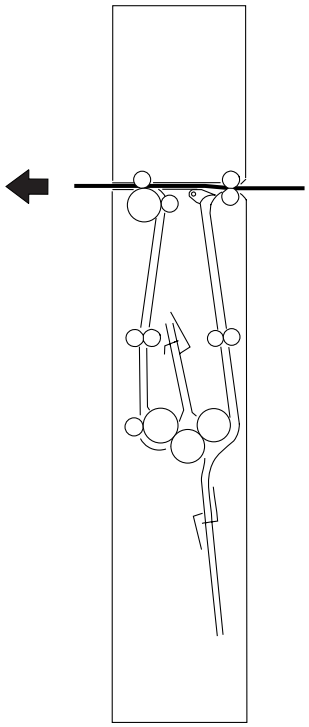

Figure 2-905

COPYRIGHT © 1997 CANON INC.

2. Z-Folding Mode

1) The copier's Copy Start key is pressed.

2) The copy paper (capable of being folded) is moved as shown in Figure 2-906 within the paper feeding unit, and is folded into Z. (Fro details, see p. 2-209.)

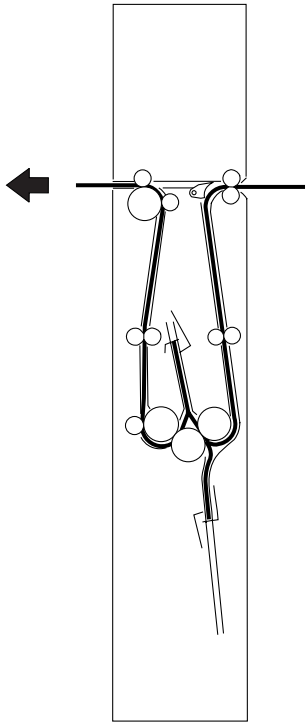

Figure 2-906

3) The Z-folded copy is delivered to the finisher.

 COPYRIGHT © 1997 CANON INC.

E. Feeding Drive System

1. Outline

The feeding system uses feeding rollers to forward copies from the copier to the finisher.

The feeding rollers are driven by the finisher's common path feeding motor (M1).

The skew correcting roller, folding rollers A, B, and C and the No. 2 folding roller are driven by the folder motor (F-M1).

The feeding paths are switched over by turning on and off the inlet solenoid (SL5) according to the mode selected on the copier.

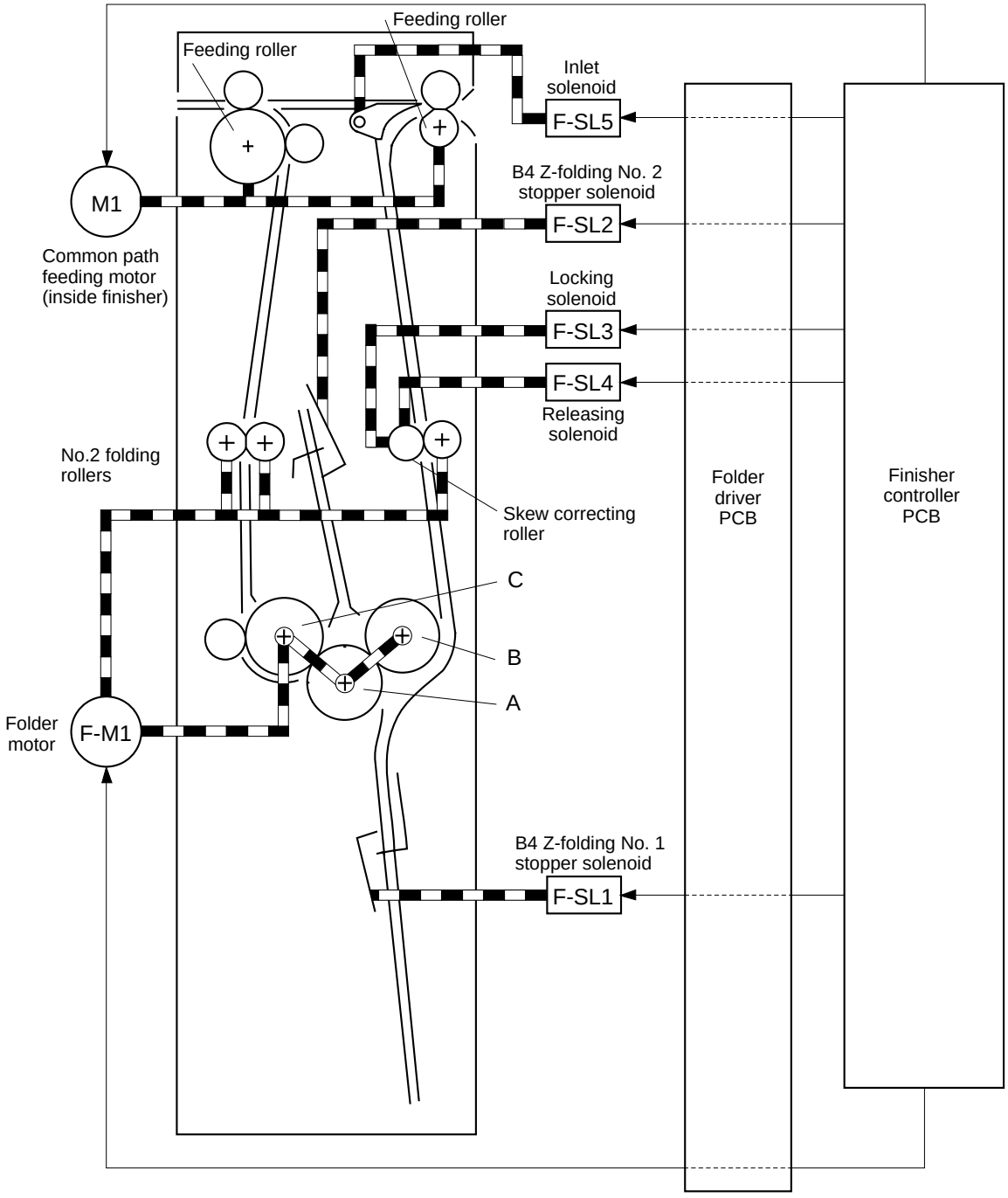

Figure 2-907

2. Feeding Path

The feeding path will be as follows according to the selected mode.

a. Non-Folding

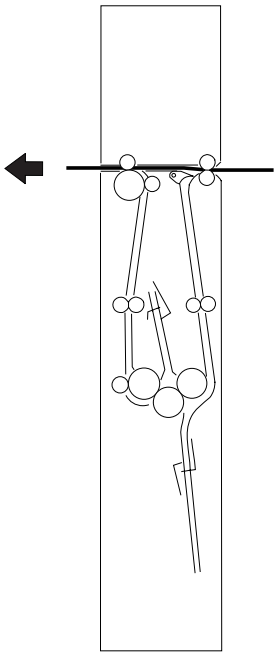

Figure 2-908

b. Z-Folding Mode

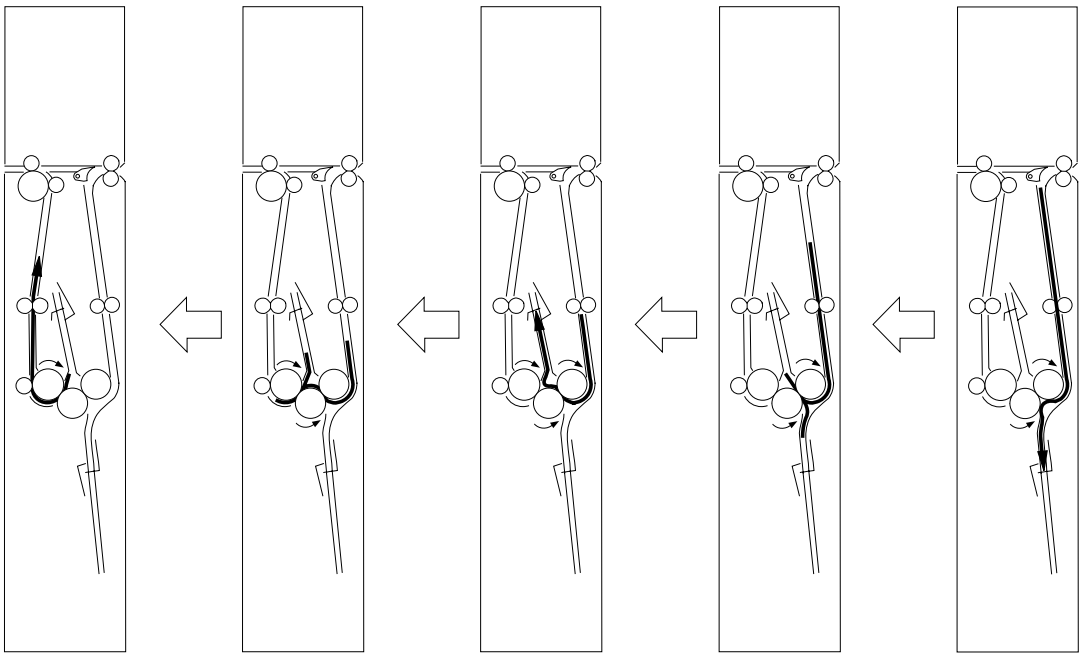

Figure 2-909

COPYRIGHT © 1997 CANON INC.

3. Controlling the Feeding Speed

The feeding speed mode in folding mode is controlled by the folder motor (F-M1) and the common path feeding motor (M1) inside the finisher.

The feeding speed is always identical to the process speed, and copies are moved at the same speed as the copier's process speed (between 317 and 528 mm/sec).

The feeding speed in non-folding mode is controlled by the common path feeding motor (M1) inside the finisher.

4. Controlling the Folder Motor

The folder motor (F-M1) is a DC brushless motor. The CPU (IC1) on the finisher controller PCB sends reference pulses (FM1SRP) and the folder motor drive signal (FM1D) to the folder motor controller PCB.

When the folder motor (F-M1) starts to rotate, the encoder starts to send clock pulses (FM1CLK) to the speed control PCB. The speed control circuit compares the clock pulses from the encoder against the reference pulses (FM1SRP) to control the drive circuit so that both match.

The clock pulse signals (FM1CLK) are also sent to the finisher controller PCB. The CPU (IC1) monitors the clock pulse signals; if the number of pulses within 1 sec fails to reach a specific value, it will identify the condition as a folder motor error and will stop the motor while at the same time causing the copier to indicate 'E518' on its control panel.

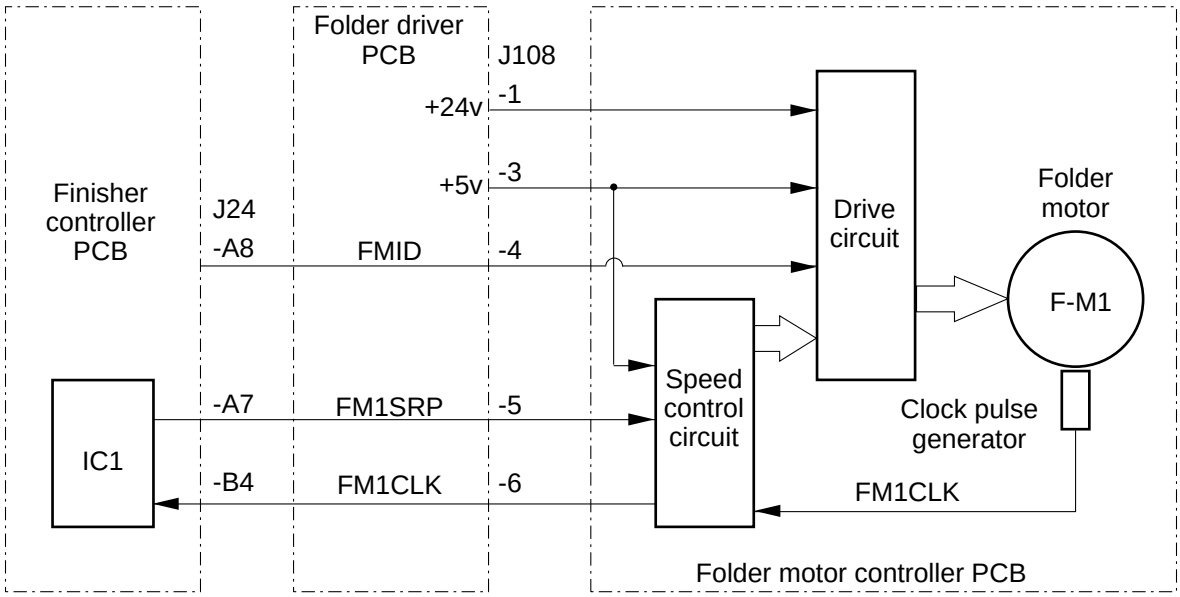

Figure 2-910

5. Movement of the Folding Stoppers

The stoppers operate to suit the size of copy paper, thereby stopping copy paper. The stoppers shift as shown in Figure 2-911 in response to the activation of solenoids.

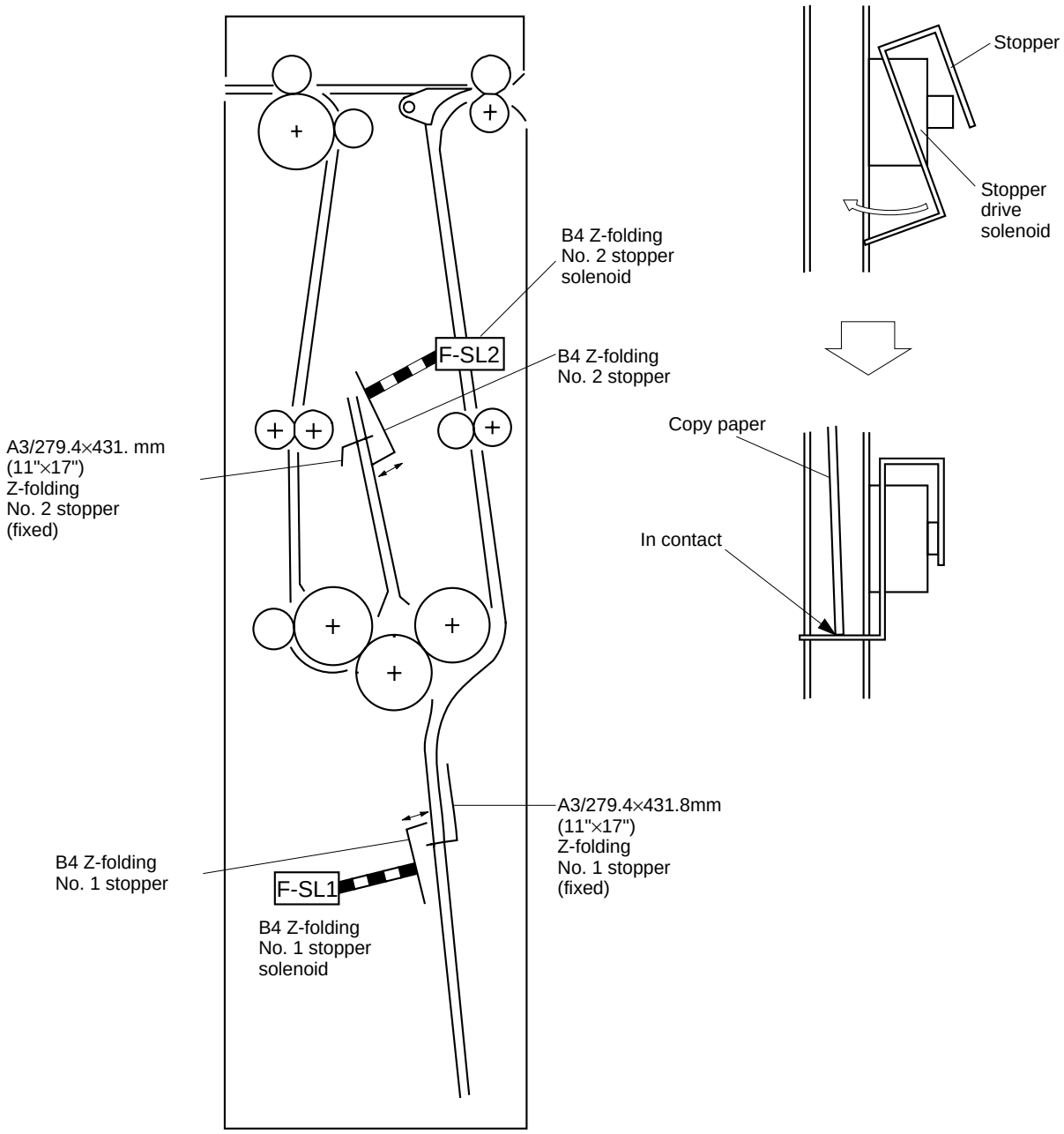

Figure 2-911

COPYRIGHT © 1997 CANON INC.

6. Folding Positions

Copy paper is folded at position A or B as shown in Figure 2-912.

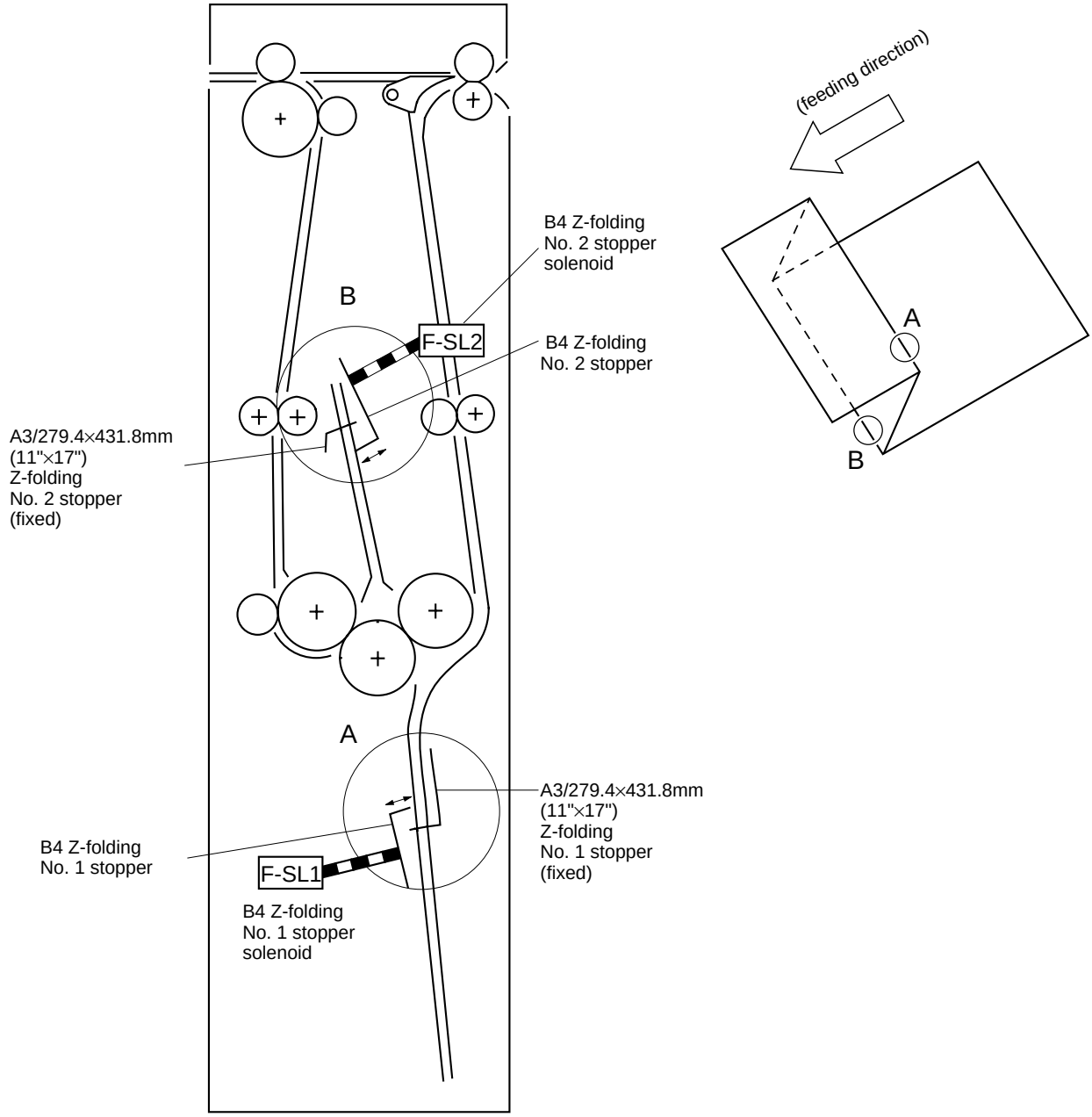

Figure 2-912

7. Correcting the Skew

Before folding operation is started, the skew correcting roller and the pressure roller are used to remove the skew from the paper arriving from the copier.

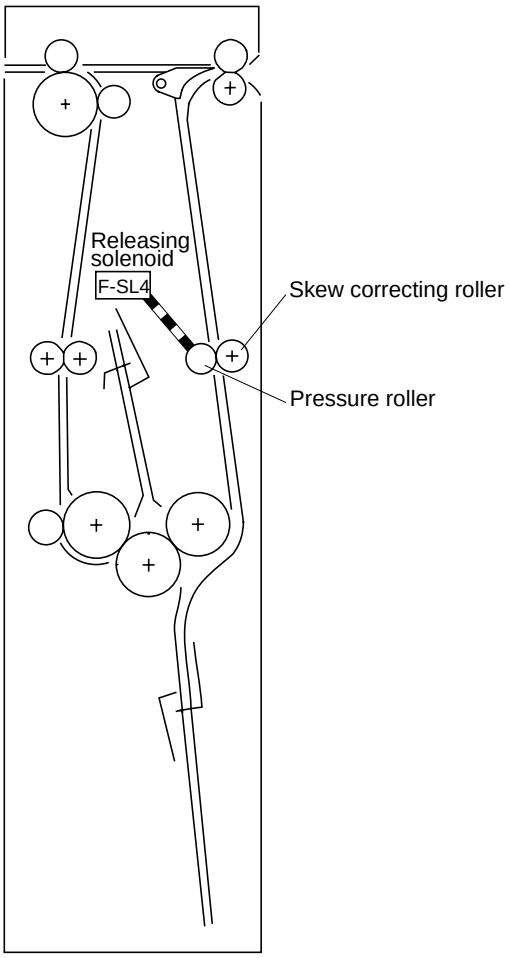

Figure 2-913

1) The copy paper butts against the No. 1 stopper.
2) The copy paper is moved farther so that it butts against the No. 1 stopper and arches.

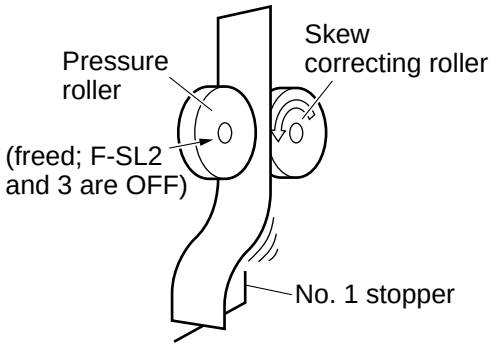

Figure 2-914

COPYRIGHT © 1997 CANON INC.

3) The releasing solenoid (F-SL4) turns on so that the pressure roller moves away from the copy paper, removing the skew.

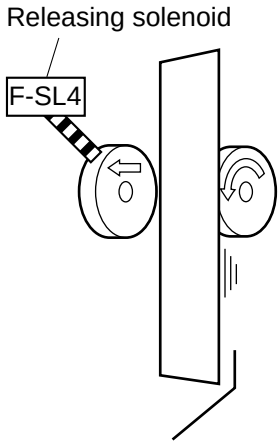

Figure 2-915

8. Folding Operation

When skew correction is over, the folding rollers A, B, and C operate to fold the copy paper into a Z.

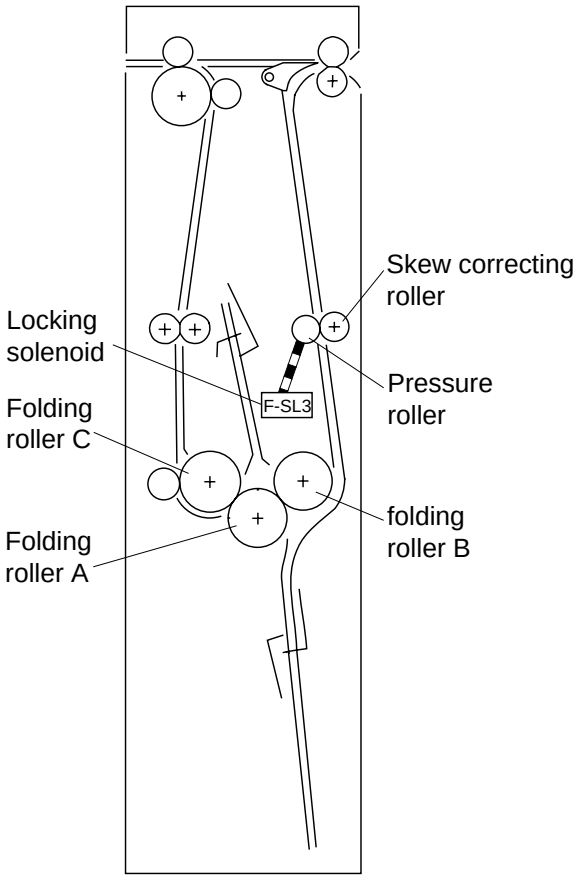

Figure 2-916

1) When skew correction is over, the locking solenoid (F-SL3) turns on, causing the pressure roller to butt against the skew correcting roller; the copy paper is moved once again and made to arch.

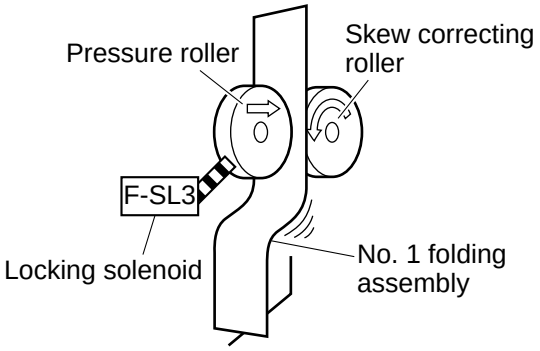

Figure 2-917

2) When the copy paper arches more, it is drawn between the folding rollers A and B and folded.

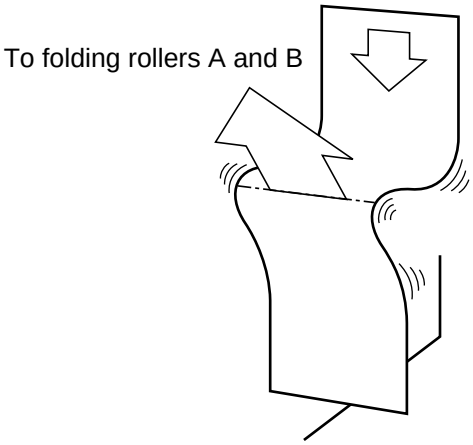

Figure 2-918

COPYRIGHT © 1997 CANON INC.

3) The copy paper is moved to the folding rollers A and B, and is made to butt against the No. 2 stopper.

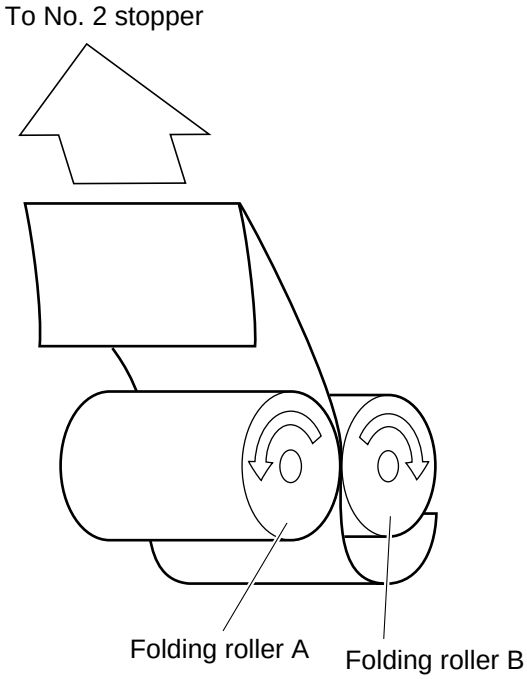

Figure 2-919

4) The copy paper is moved farther by the folding rollers A and B, and is made to arch.
5) When the copy paper arches more, it is drawn between the folding rollers A and C and folded.

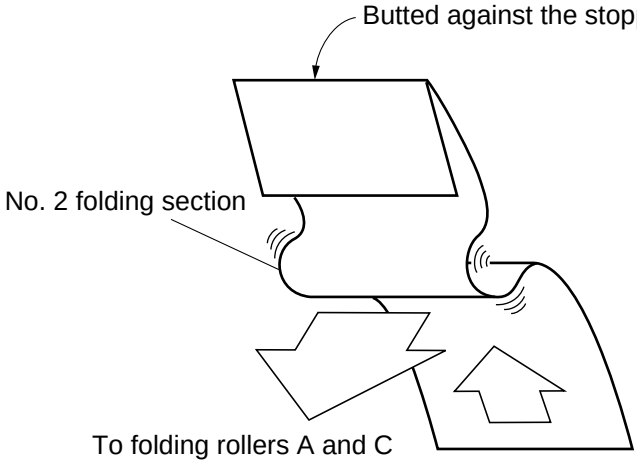

Figure 2-920

COPYRIGHT © 1997 CANON INC.

9. Sequence of Operations

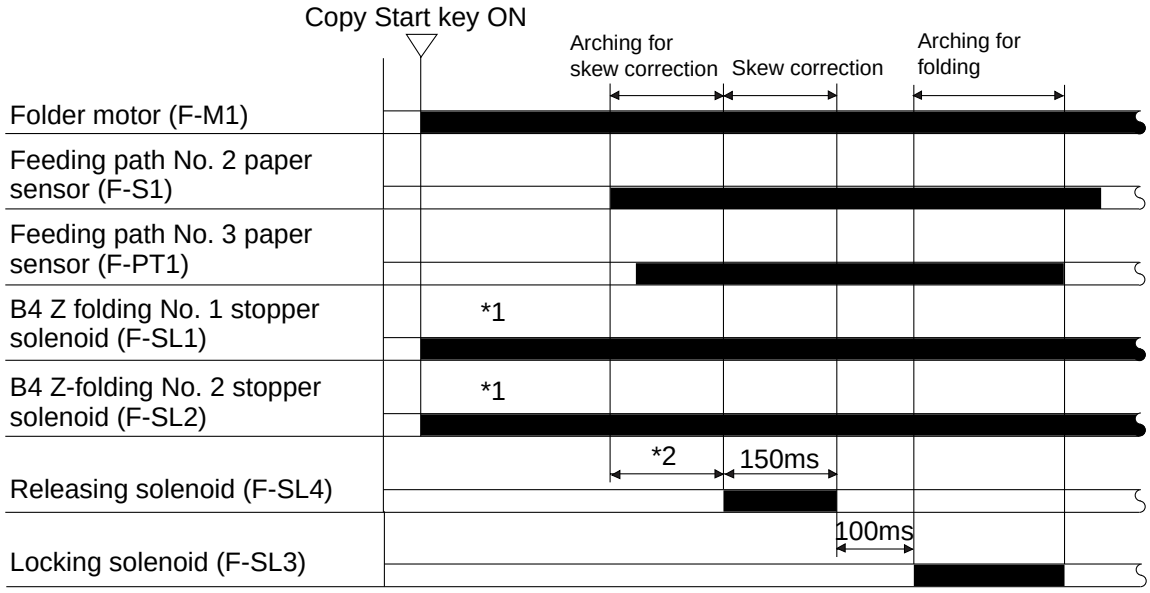

*1: ON only for B4.
*2: Varies depending to paper size.

Figure 2-921

COPYRIGHT © 1997 CANON INC.

F. Detecting Jams

1. Outline

The finisher is equipped with the seven sensors shown in Figure 2-922 to make sure that copies are moving properly.

The CPU reads the signals from these sensors at such times as programmed in advance to check for jams. When it finds a jam, it sends the jam signal to the copier, which in response will stop the on-going operation and indicate the jam message on its control panel.

The CPU identifies a jam for the following conditions:

a. Paper exists at a specific sensor at time of power-on, at the end of warm-up, and during stand-by. (power-on jam)
b. The copy does not reach a specific sensor within a specific period of time. (delay jam)
c. The copy does not move past a specific sensor within a specific period of time. (stationary jam)
d. The upper cover is opened while the finisher is in operation. (door open jam)

When any of the above jams has occurred, the jam recover mechanism will turn on in response to a press on the Copy Start key to make the remaining number of copies.

COPYRIGHT © 1997 CANON INC.

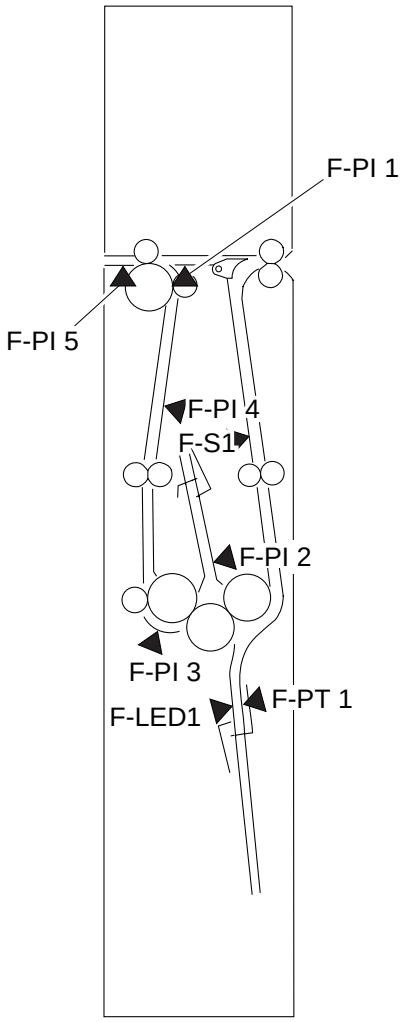

Figure 2-922

	Sensor	Type of jam
F-PI1	Feeding path No. 1 paper sensor	Delay/
F-S1	Feeding path No. 2 paper sensor	stationary jam
F-LED1	Feeding path No. 3 paper sensor (light-emitting)	
F-PT1	Feeding path No. 3 paper sensor (light-receiving)	
F-PI2	Folding path residual paper sensor 1	Power-on jam
F-PI3	Folding path residual paper sensor 2	
F-PI4	Folding path residual paper sensor 3	
F-PI5	Horizontal path residual paper sensor	

Table 2-901

COPYRIGHT © 1997 CANON INC.

2. Sequence of Operations

a. Feeding Delay Jam

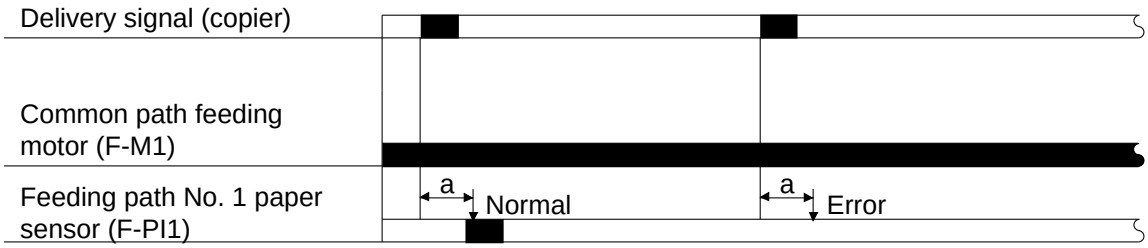

Figure 2-923

b. Feeding Stationary Jam

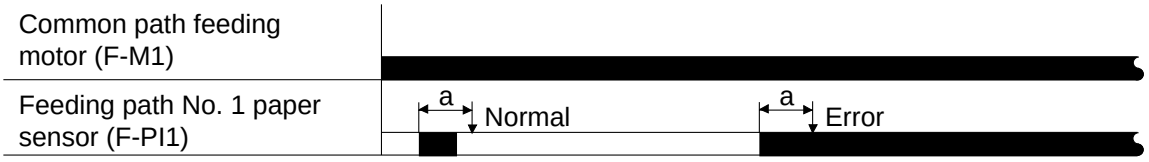

Figure 2-924

c. Folding Delay jam

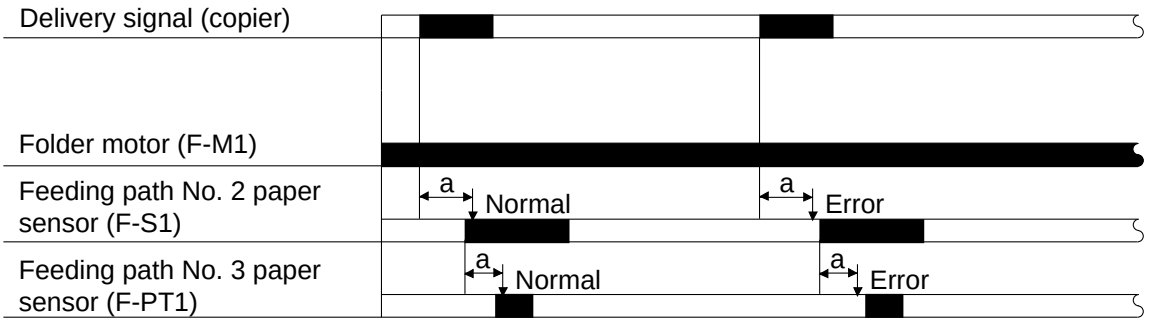

Figure 2-925

d. Folding Stationary Jam

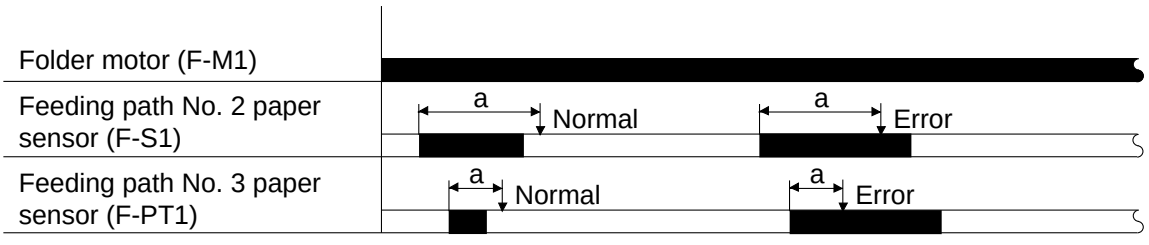

Figure 2-926

COPYRIGHT © 1997 CANON INC.

G. Power Supply

1. Outline

Figure 2-927 shows the route of power supply.

The paper folding unit is supplied with +5 V, +12 V (for operation amplifier), and +24V by the finisher; +24 V is supplied to the loads by way of the upper cover open/close switch (F-MS1), and +24V used by loads is cut off as soon as the drawer connector (J202) becomes disconnected when the folder is slid out (i.e., when the folder SET switch F-MS2 turns off).

When the upper cover is opened, the upper cover switch (F-MS1) turns off to cut the power used to drive the finisher's common feeding motor (M1).

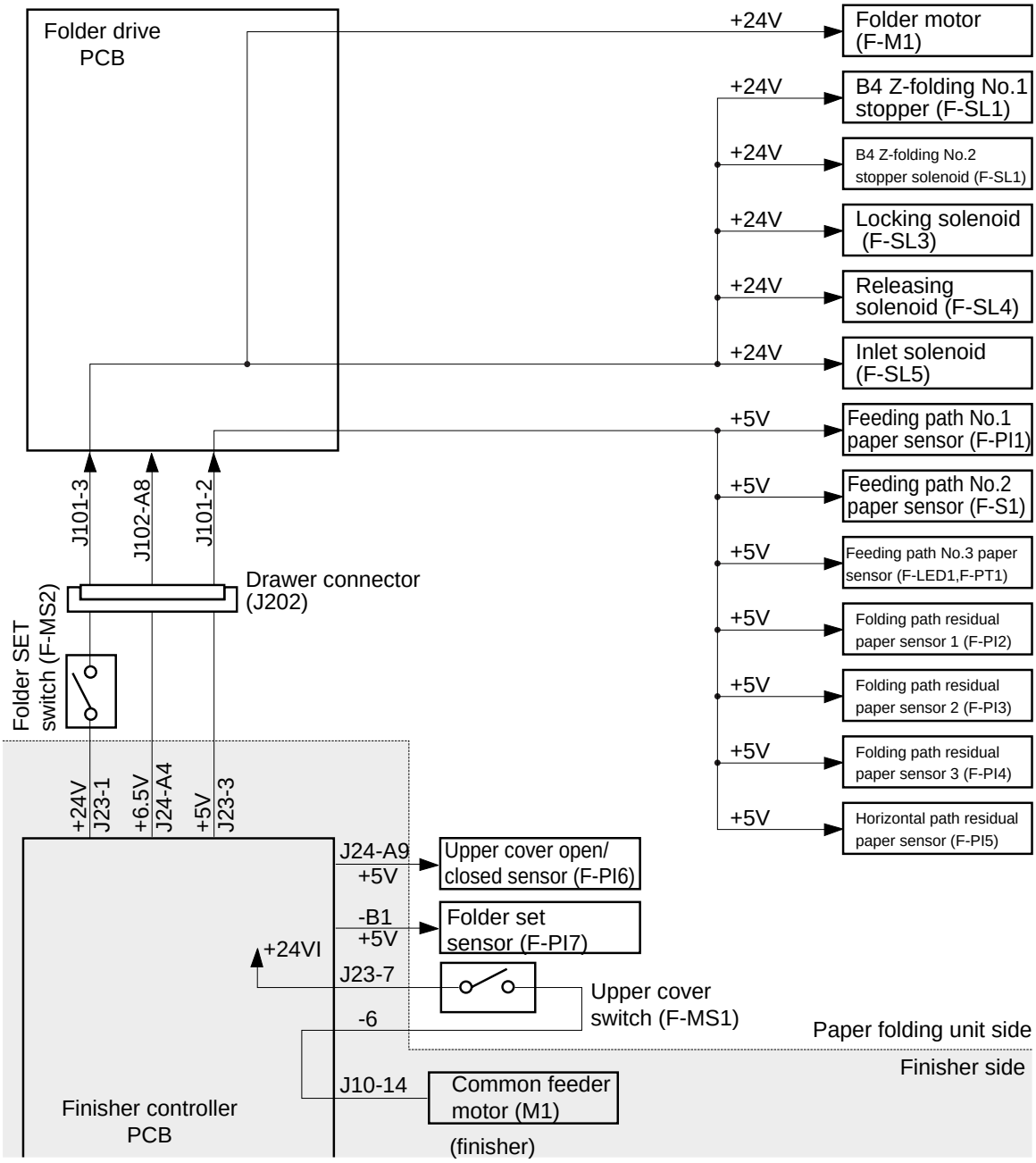

Figure 2-927

COPYRIGHT © 1997 CANON INC.

CHAPTER 3

MECHANICAL SYSTEM

1. ⚠ Disconnect the power cord for safety before disassembly or reassembly work.
2. Group the screws by type (length and diameter) and location.
3. The fixing screw for the grounding wire and varistors is fitted with a washer to ensure electric continuity; be sure to use the washer for reassembly.
4. If possible, avoid operating the machine with any of its parts removed.
5. Unless otherwise noted, reassembly is the reverse of disassembly.

COPYRIGHT © 1997 CANON INC. CANON FINISHER-B1 REV.0 MAY 1997 PRINTED IN JAPAN (IMPRIME AU JAPON)

I. USING THE DOOR SWITCH ACTUATORS 3-1
A. Outline.....3-1
B. Using the Door Switch Actuators.....3-2
C. Using the Stapler 3-4
II. RELOCATING THE MACHINE 3-5
A. Fixing the Stack Processing Unit and the Stacker Unit in Place 3-5
B. Separating from the Copier.....3-9
C. Taping the Covers in Place.....3-12
III. EXTERNALS AND CONTROLS.....3-13
A. External Covers 3-13
B. Separating the Finisher and the Copier 3-20
C. Display 3-21
D. Bin Cover Switch Assembly.....3-24
E. Access Door Switch Assembly 3-26
F. Installing the Service Screen 3-28
IV. BIN MODULE.....3-30
A. Bin.....3-30
B. Bin Shift Motor 3-38
C. Lead Cam 3-46
D. Guide Bar Unit 3-64
E. Guide Bar Motor 3-70
V. FEEDING UNIT.....3-71
A. Upper Feeding Mobile Assembly.....3-71
B. Vertical Path Unit 3-78
C. Lower Feeding Assembly 3-81
D. Inlet Unit.....3-85
E. Removing the Common Path Feeding Motor (M1) 3-87
F. Removing the Upper Path Feeding Motor (M2) 3-88
G. Removing the Lower Path Feeding Motor (M3) 3-91
VI. STACK PROCESSING UNIT 3-93
A. Stack Processing Unit.....3-93
B. Removing the Side Gripper Left/Right Shift Drive Assembly 3-100
C. Side Gripper.....3-102
D. Bin Rear End Wall Open/Close Unit.....3-109
E. Stapler Front/Rear Shift Drive System.....3-111
F. Removing the Stapler Unit.....3-120
G. Front Gripper.....3-124
H. Front Gripper Left/Right Shift Motor (M10).....3-128
I. Front Gripper Front/Rear Shift Drive System 3-134
J. Stack Processing Unit Screen 3-138
VII. STACKER UNIT 3-142
A. Stacker Unit 3-142
B. Removing the Stacker Tray Drive System 3-150
C. Removing the Leading Edge Stopper Drive System.....3-159
D. Removing the Lifter Wall Drive System 3-165
E. Adjusting the Tension of the Stacker Unit Shift Brake 2 Belt 3-169
F. Adjusting the Orientation of the Stack Tray 3-170
VIII. ELECTRICAL SYSTEM 3-171
A. Removing the Finisher Controller PCB.....3-171
B. Removing the Stack Processing Unit Drive PCB 3-172
C. Removing the Power Supply PCB.....3-174
D. Noise Filter Unit 3-175
IX. PAPER FOLDING UNIT-A1 3-176
A. External Covers 3-176
B. Paper Folding Unit 3-177
C. Feeding System 3-183
D. Drive System.....3-192
E. Removing the Folder Drive PCB ...3-198

COPYRIGHT © 1997 CANON INC.

I. USING THE DOOR SWITCH ACTUATORS

A. Outline

The finisher is equipped with three types of doors which may be opened to check its operation. (Do not open the access door while the finisher is in operation.)

- Bin cover
- Upper cover
- Front door

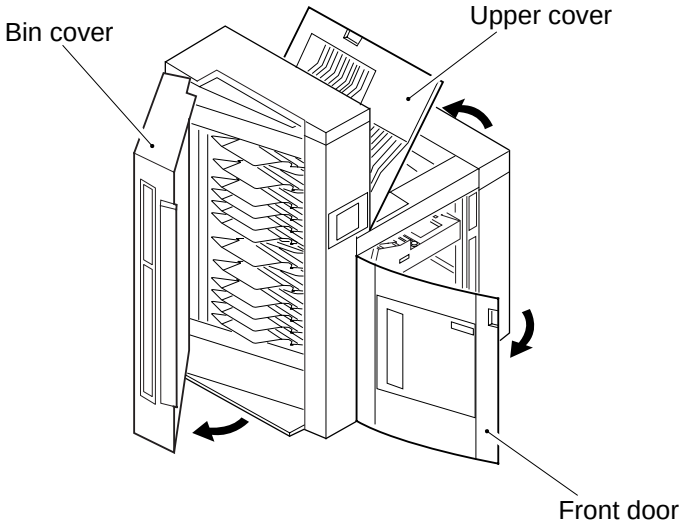

Figure 3-101

Caution:

Do not make checks on the operation by opening the access door.
If the stack processing unit operates while the access door is open, the cover plate will hit the stack processing unit, causing problems.

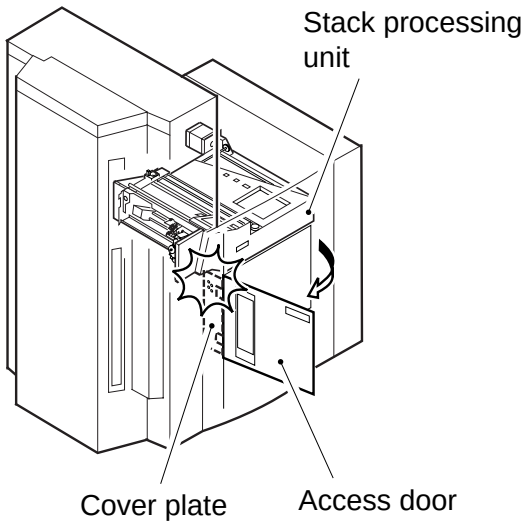

Figure 3-102

Each door is equipped with a switch which turns on and off the AC power and a sensor which checks the state (open or closed) of the door, requiring multiple door switch actuators for checks with all the doors open.

The finisher comes with five door switch actuators, each designed for a specific door.

COPYRIGHT © 1997 CANON INC.

B. Using the Door Switch Actuators

Figure 3-101 shows where the door switch actuators are stored and used and how to use them.

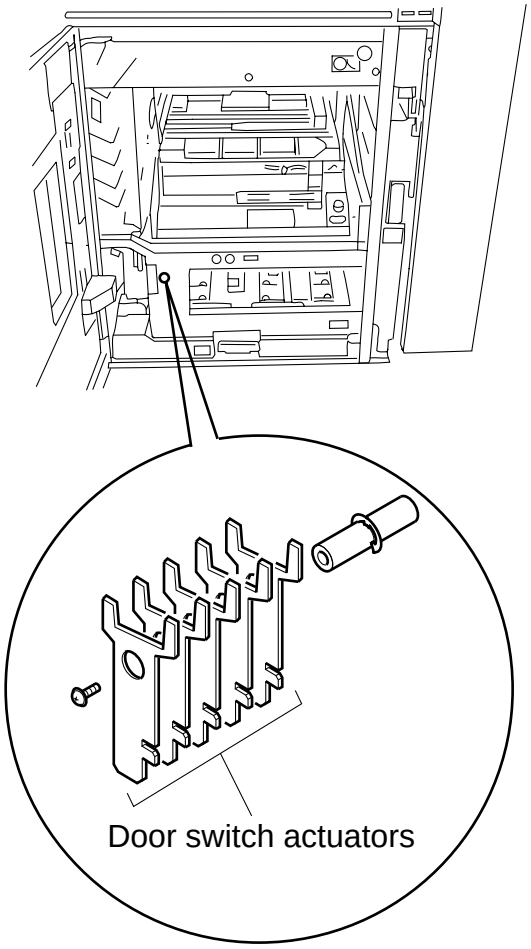

Figure 3-103

COPYRIGHT © 1997 CANON INC.
CANON FINISHER-B1 REV.0 MAY 1997 PRINTED IN JAPAN (IMPRIME AU JAPON)

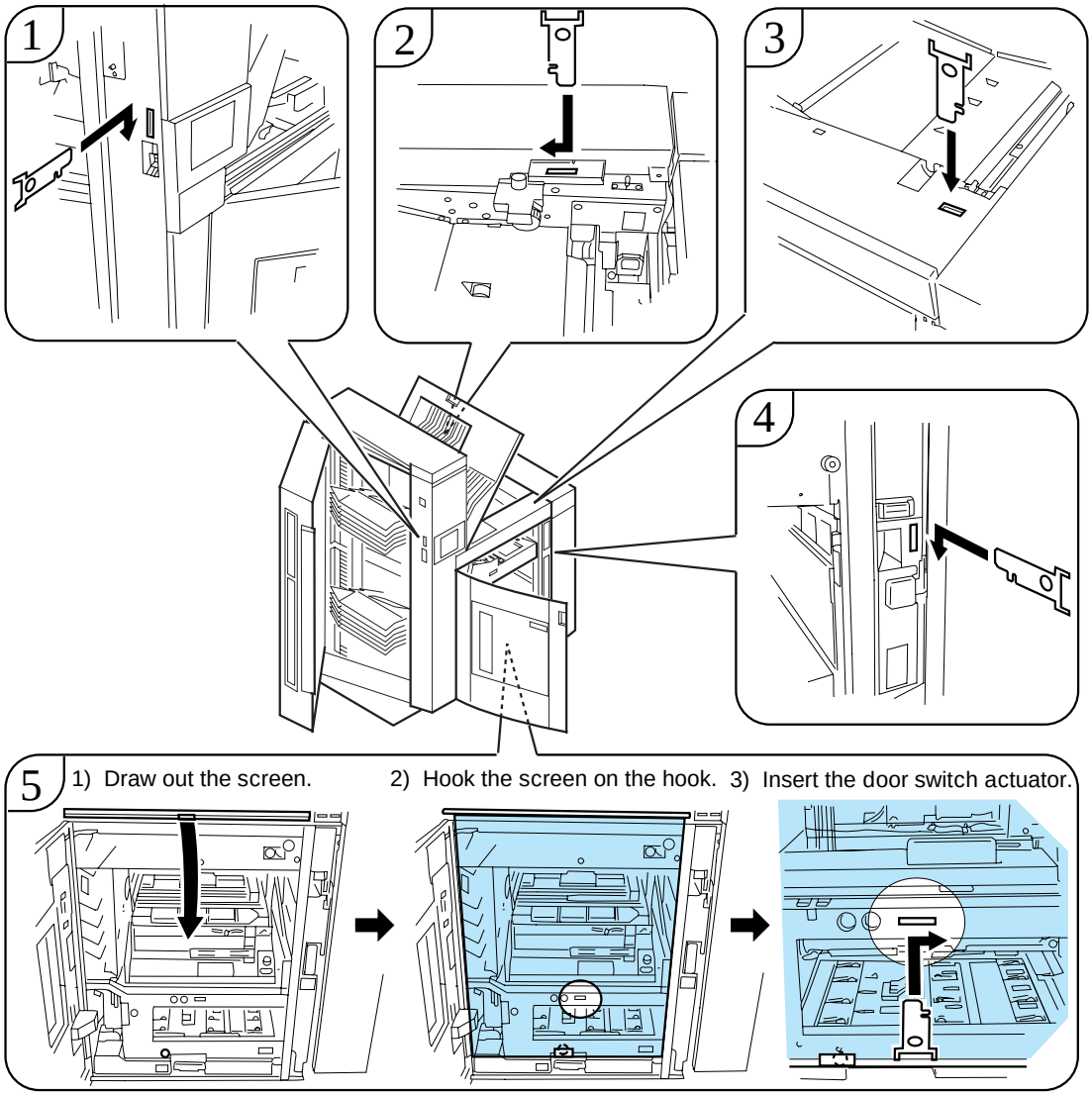

Figure 3-104

Caution:

Be sure to pull down the service screen before using the door switch actuator in the front cover assembly.

See the following tables for the switches and sensors found on the doors.

No.	1	2	3	4	5
Door	Bin cover	Upper cover	Upper cover	Front cover	Access door
Switch (notation)	Bin cover switch (SW1)	Upper cover switch (SW2)	—	Front door switch (SW3)	Access door switch (SW4)
Sensor (notation)	Bin cover sensor (PI76)	Upper cover sensor 1 (PI74)	Upper cover sensor 2 (PI75)	Front door sensor (PI77)	—

Table 3-101

COPYRIGHT © 1997 CANON INC.

C. Using the Stapler

Work as follows using the door switch actuator that comes with the finisher whenever you have to move the stapler by hand.

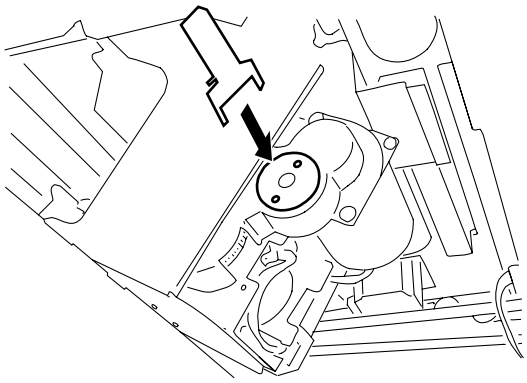

counterclockwise: stapler clockwise rotation
clockwise: stapler counterclockwise rotation

Figure 3-105

COPYRIGHT © 1997 CANON INC.

II. RELOCATING THE MACHINE

You must perform the following when relocating the finisher by truck or other means of transportation (in the order indicated):

1. Fixing the stack processing unit and the stacker unit in place
2. Separating the finisher from the copier
3. Taping the covers in place

A. Fixing the Stack Processing Unit and the Stacker Unit in Place

1) Turn off and then on the copier so that the finisher executes initialization.
2) Turn off the copier, and disconnect the finisher's power plug from the power outlet.
3) Disconnect the finisher cable from the copier.
4) Open the finisher's upper cover, and remove the two screws; then, detach the upper cover (front).

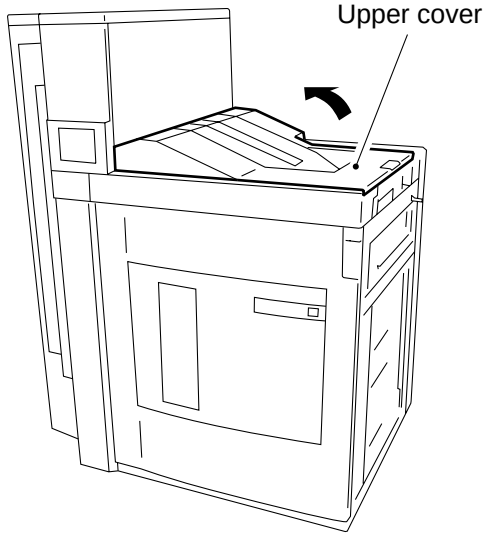

Figure 3-201

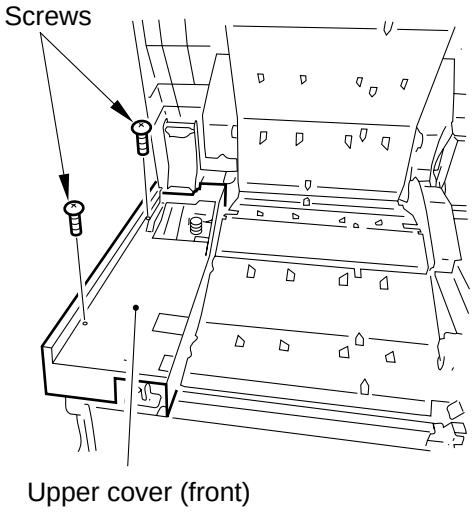

Figure 3-202

5) Remove the five screws from the finisher's rear right cover; then, loosen the screw, and detach it by sliding the cover to the left.

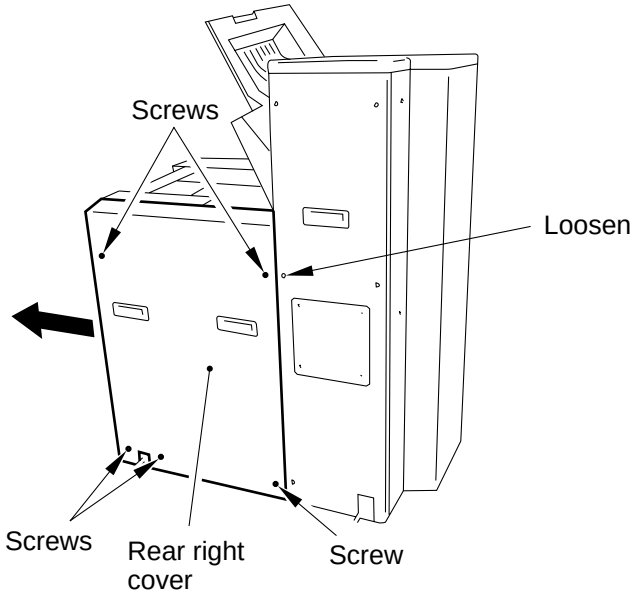

Figure 3-203

6) Remove the five screws, and detach the belt cover.

Caution:

When detaching the belt cover, take care not to impose force on the harness.

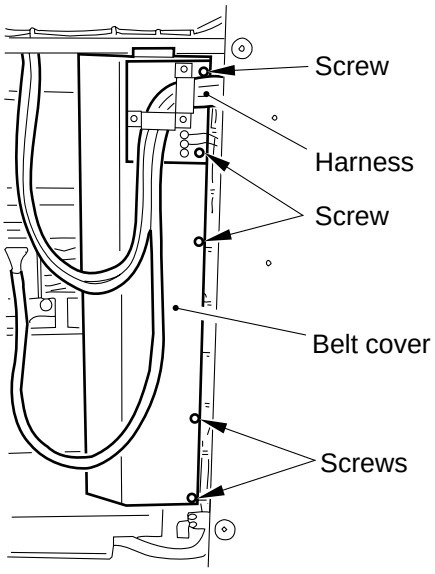

Figure 3-204

COPYRIGHT © 1997 CANON INC.

7) Remove the seven metal fixings and the eleven screws from the finisher's frame.

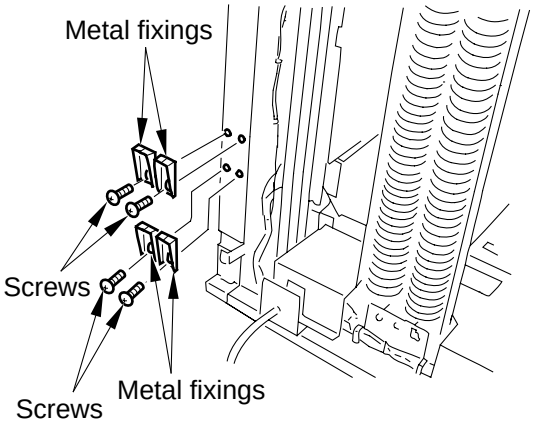

Figure 3-205

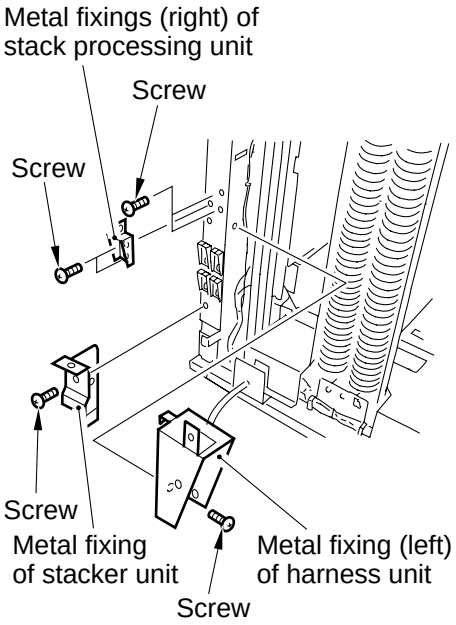

Figure 3-206

8) Move to the rear of the finisher. Fix the harness unit and the stacker unit using the metal fixings and the screws removed in step 7). (See Figures 3-207 and -208 for the locations; use the metal fixings at the lower part of each unit.)

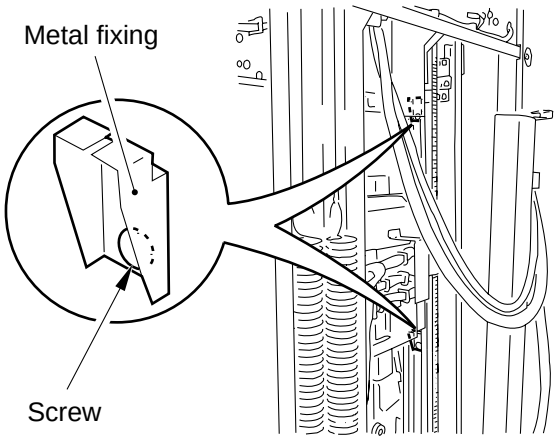

Figure 3-207

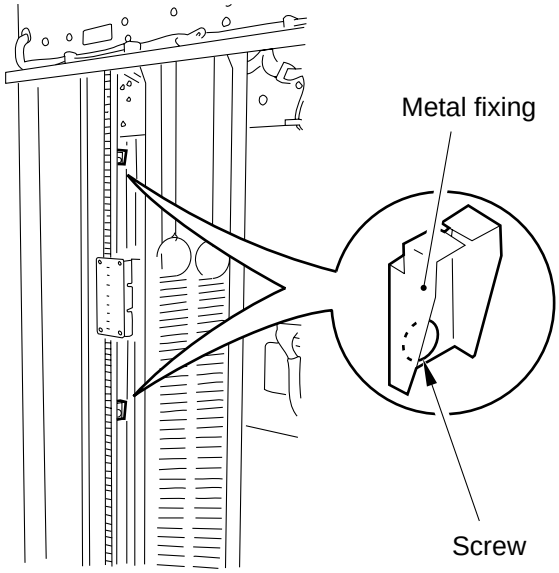

Figure 3-208

9) Open the finisher's front cover, and fix the stack processing unit and the stacker unit using the metal fixings and the screws removed in step 7).

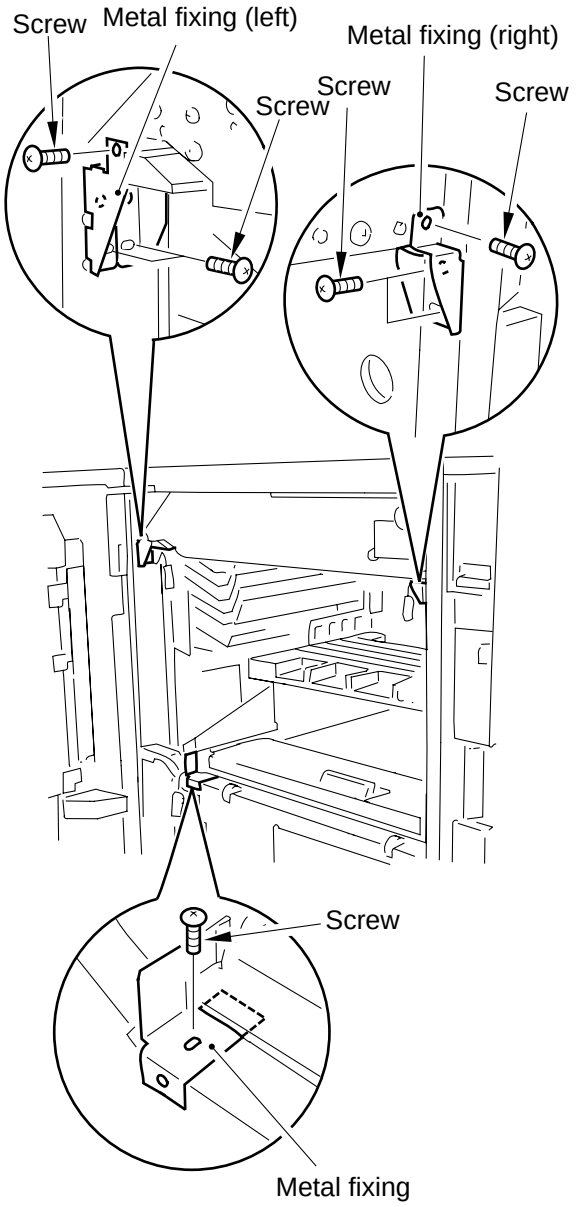

Figure 3-209

COPYRIGHT © 1997 CANON INC.

B. Separating from the Copier

1. Finisher and Paper Folding Unit

1) Open the upper cover of the paper folding unit; then, remove the two screws, and detach the rear cover by lifting.

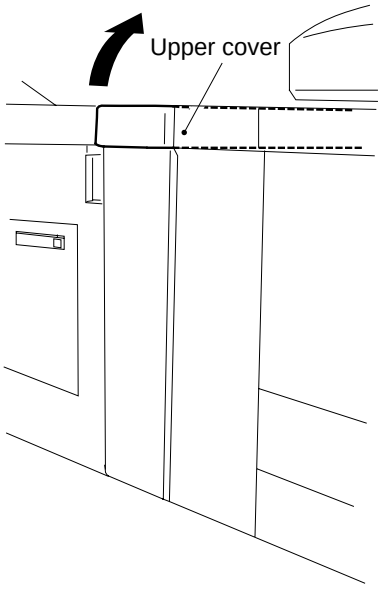

Figure 3-210

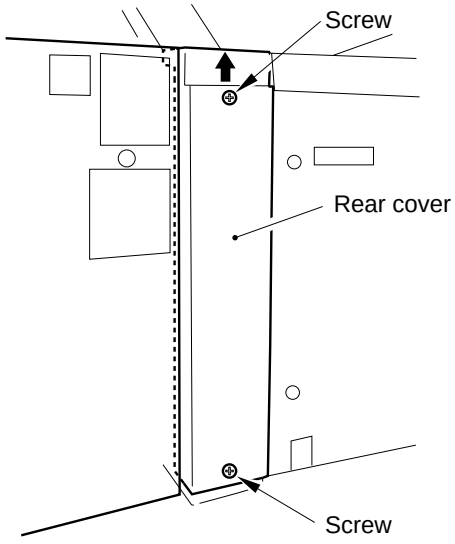

Figure 3-211

2) Remove the two screws, and detach the inner cover; then, remove the hook (front) from the copier.

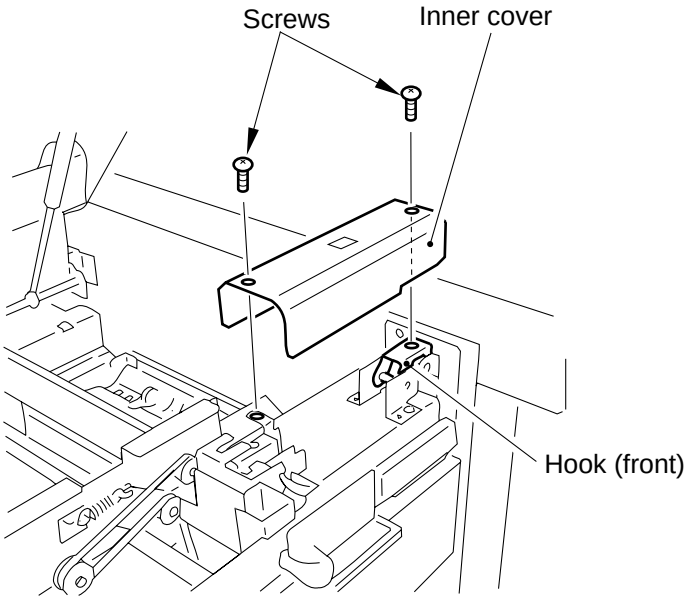

Figure 3-212

3) Remove the screw, and remove the hook (rear) from the copier.

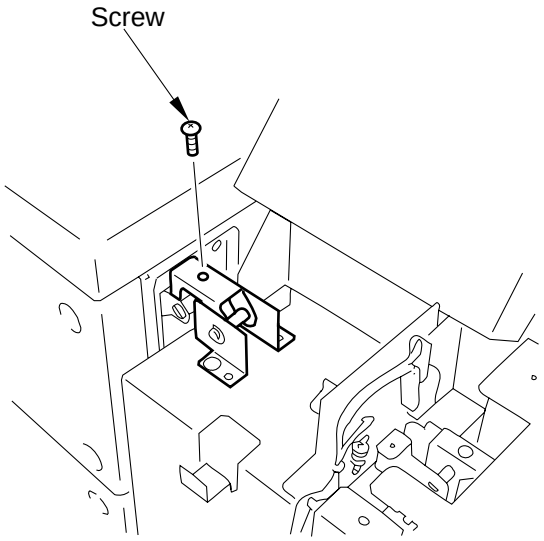

Figure 3-213

COPYRIGHT © 1997 CANON INC.

2. Finisher Only

1) Remove the two screws, and detach the finisher's upper cover (rear).

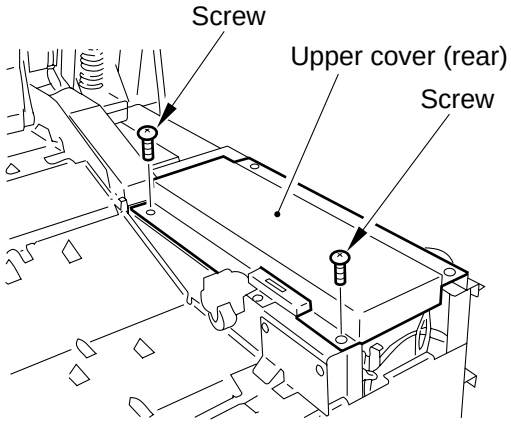

Figure 3-214

2) Remove the screw each (one each), remove the finisher's hooks (front, rear).

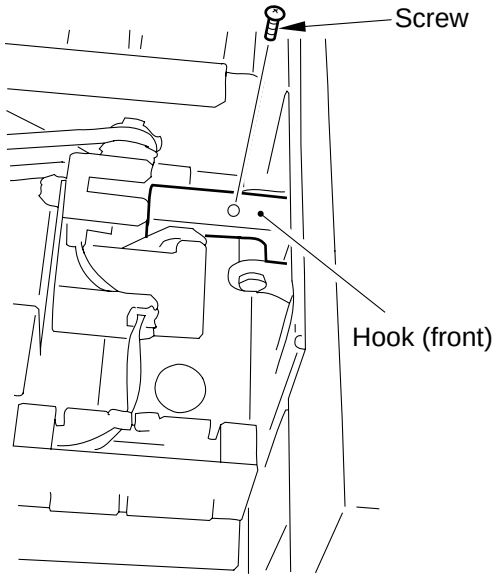

Figure 3-215

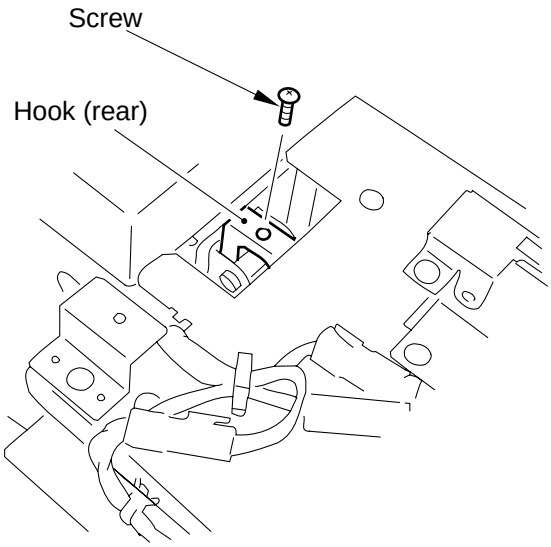

Figure 3-216

C. Taping the Covers in Place

1) Fit the hook fixing screws used for joining the finisher to the copier at the appropriate locations; then, install all covers in their original positions.

2) Tape the following so that they will not become loose during transportation: upper cover, bin cover, front cover, and the access door of the finisher, upper cover of the folding unit, and the folder unit.

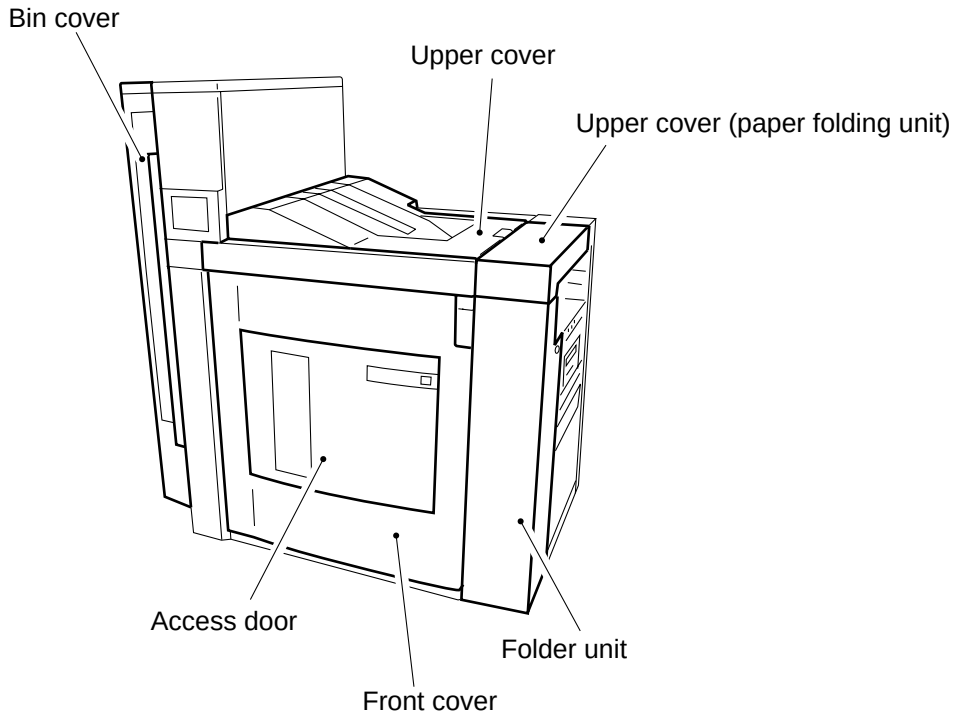

Figure 3-217

COPYRIGHT © 1997 CANON INC.
CANON FINISHER-B1 REV.0 MAY 1997 PRINTED IN JAPAN (IMPRIME AU JAPON)

III. Externals and Controls

A. External Covers

Remove the covers as necessary when cleaning, checking, or repairing the inside of the machine. Those covers that may be detached by mere removal of mounting screws are left out of the discussions.

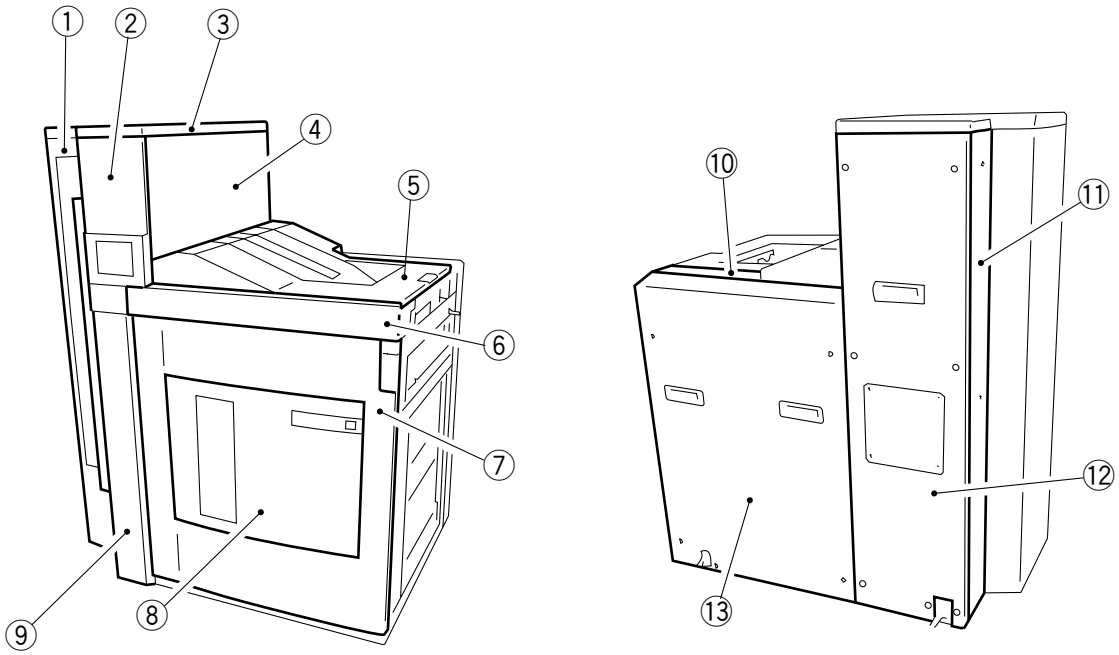

① Bin cover (1)
② Front upper right cover
③ Bin upper cover (3)
④ Bin right cover
⑤ Upper cover
⑥ Front upper cover (2)
⑦ Front cover
⑧ Access door
⑨ Front lower left cover
⑩ Rear upper cover (2)
⑪ Bin left cover
⑫ Rear left cover (7)
⑬ Rear right cover (5)

Figure 3-301

The number in parentheses indicates the number of mounting screws used.

1. Removing the Bin Left Cover

1) Remove the rear left cover.
2) Remove the bin left cover ① by removing the three screws ②.

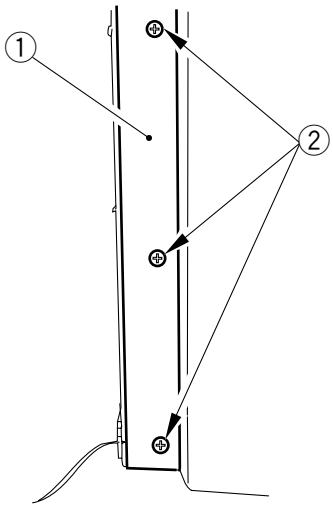

Figure 3-302

2. Removing the Bin Right Cover

1) Open the bin cover, and remove the bin upper cover.
2) Remove the bin right cover ① by removing the three screws ②.

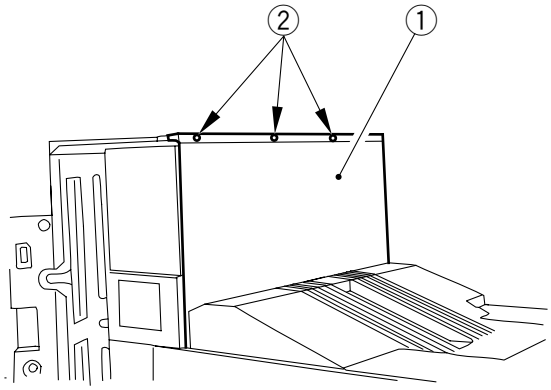

Figure 3-303

COPYRIGHT © 1997 CANON INC.

3. Removing the Upper Cover

1) Open the upper cover ①, and remove the six screws ②.

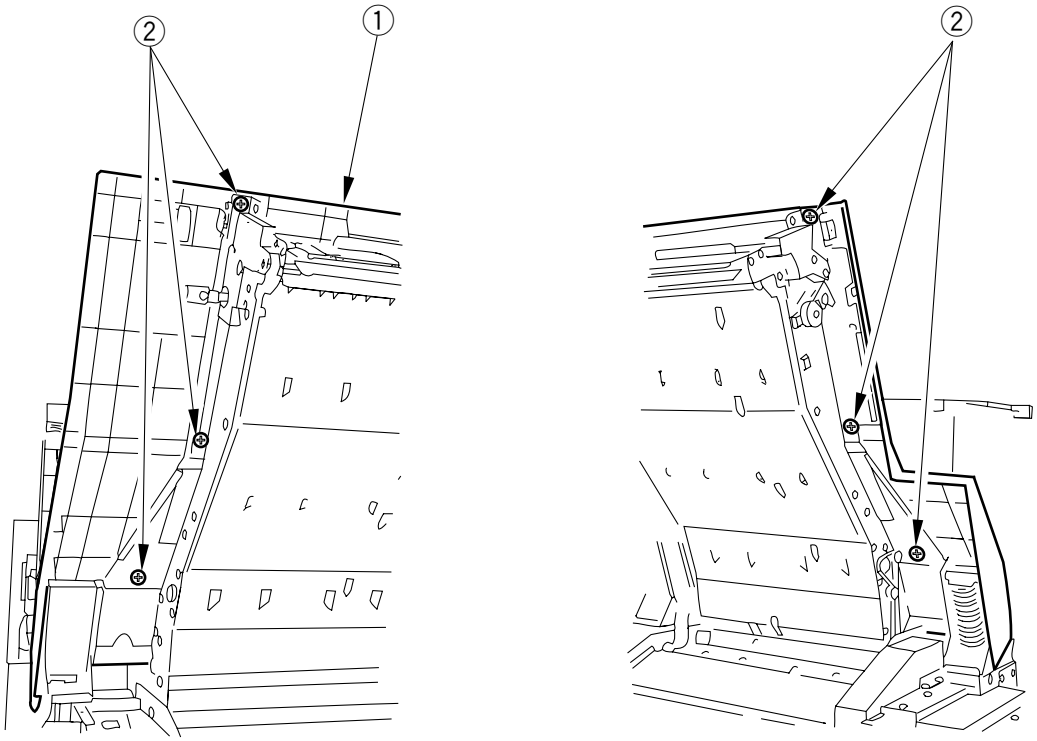

Figure 3-304

2) Close the upper cover.
3) Lift to remove the rear of the upper cover ③ as shown.

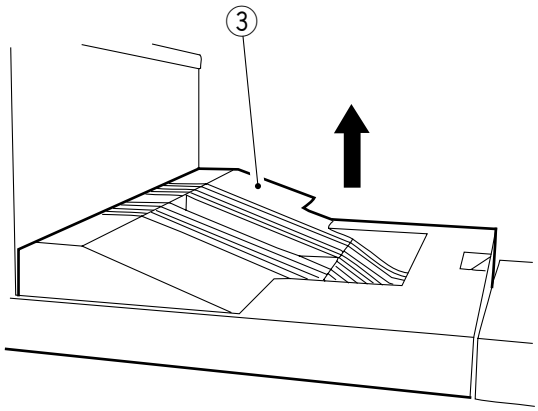

Figure 3-305

COPYRIGHT © 1997 CANON INC.

4. Removing the Front Upper Left Cover

1) Open the bin cover, and remove the bin upper cover.
2) Remove the bin right cover.
3) Disconnect the connector ①.

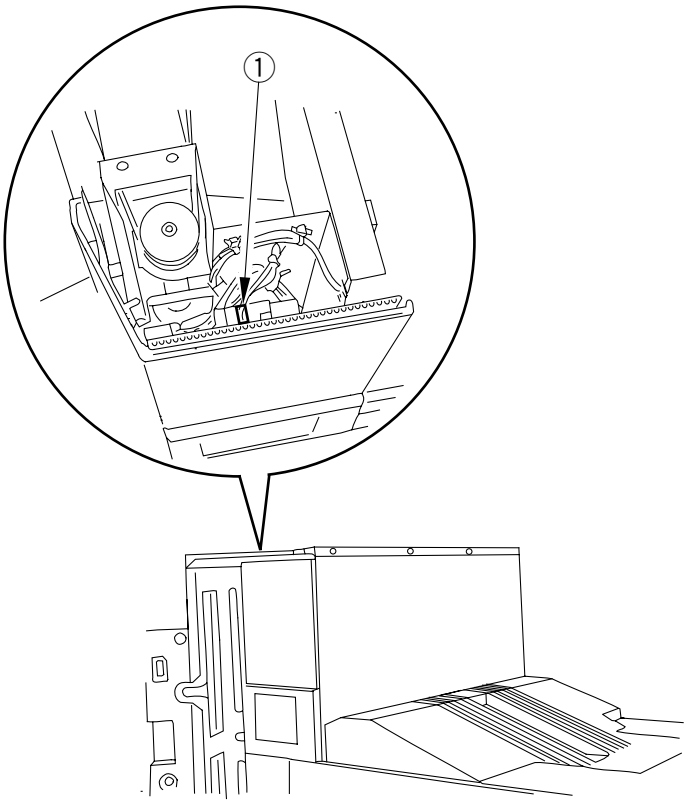

Figure 3-306

4) Remove the front upper left cover ② by removing the three screws ③.

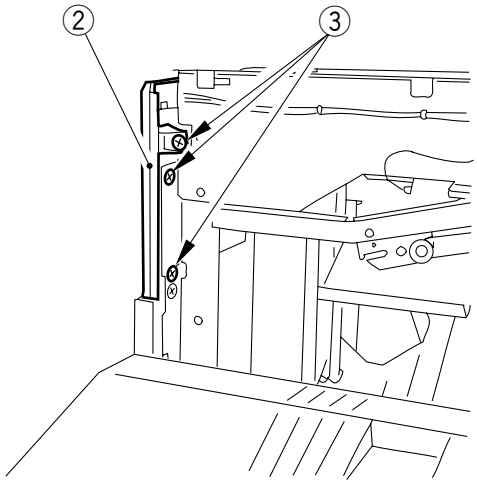

Figure 3-307

COPYRIGHT © 1997 CANON INC.

5. Removing the Front Lower Left Cover

1) Remove the front upper left cover.
2) Disconnect the connector ①, and remove the screw ②.

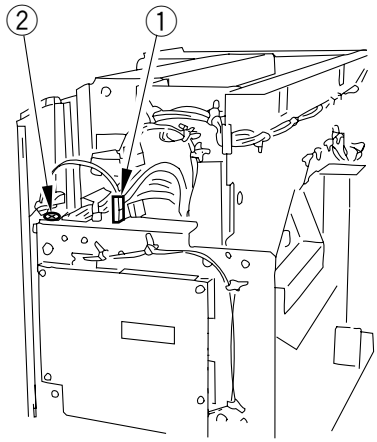

Figure 3-308

3) Remove the four screws ③, and remove the front lower left cover ④ by sliding it to the left.

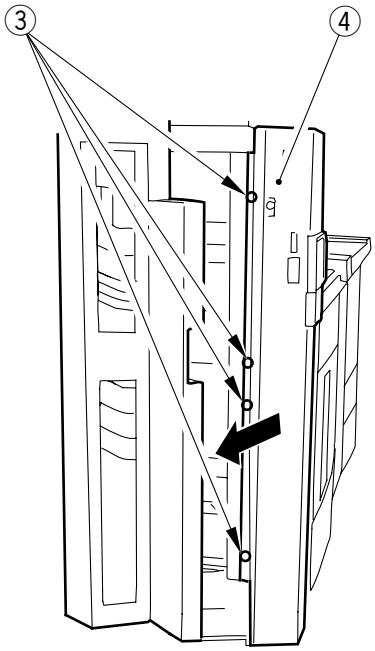

Figure 3-309

6. Removing the Front Cover

1) Remove the upper left cover and the lower left cover.
2) Disconnect the connector ①, open the harness retainer ②, and remove the tie-wrap with an anchor ③.

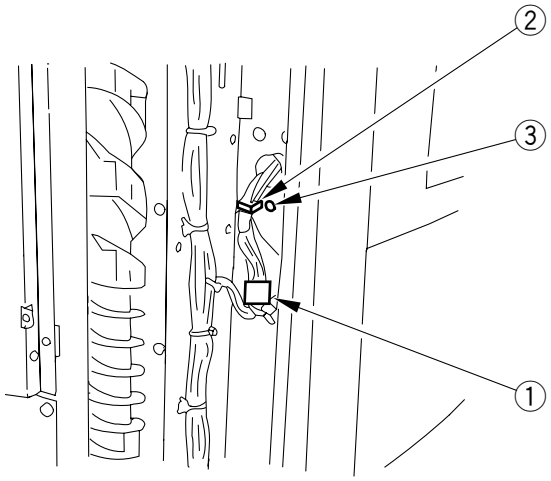

Figure 3-310

3) Lead out the harness ① through the hole ②.

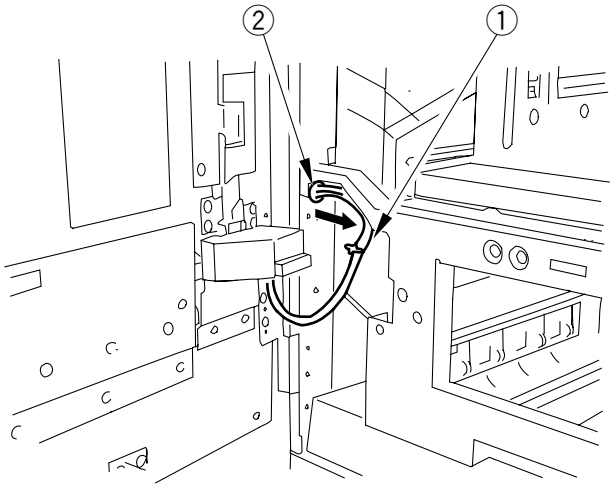

Figure 3-311

COPYRIGHT © 1997 CANON INC.

4) Remove the screw ③, and pull out the two hinge pins ④; then, remove the front door ⑤.

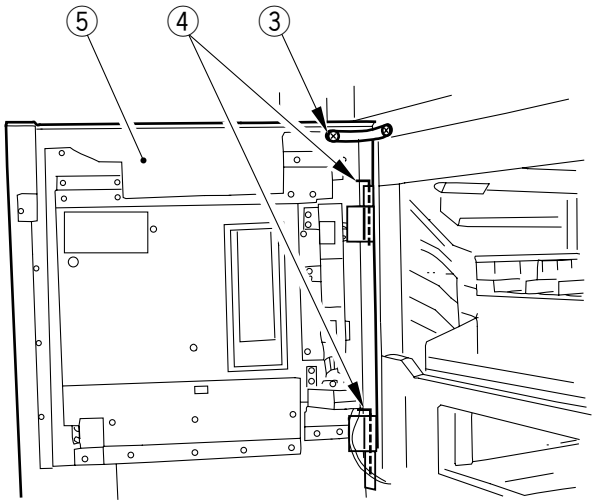

Figure 3-312

B. Separating the Finisher and the Copier

1) Disconnect the finisher cable from the copier.
2) Open the upper cover, and remove the front upper cover and the rear upper cover.
3) Disengage the hook (front) ① and the hook (rear) ② by removing the screw ③ (one each).

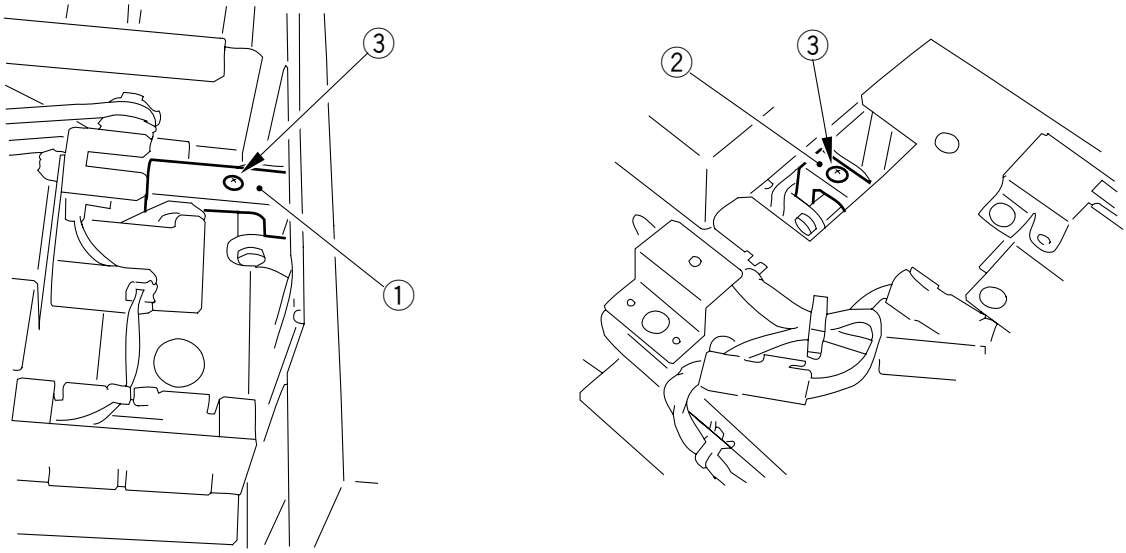

Figure 3-313

4) Separate the finisher from the copier.

COPYRIGHT © 1997 CANON INC.

C. Display

1. Removing the Control Panel

1) Remove the front upper left cover and the front lower left cover.
2) Remove the front upper cover.
3) Remove the six screws ①.

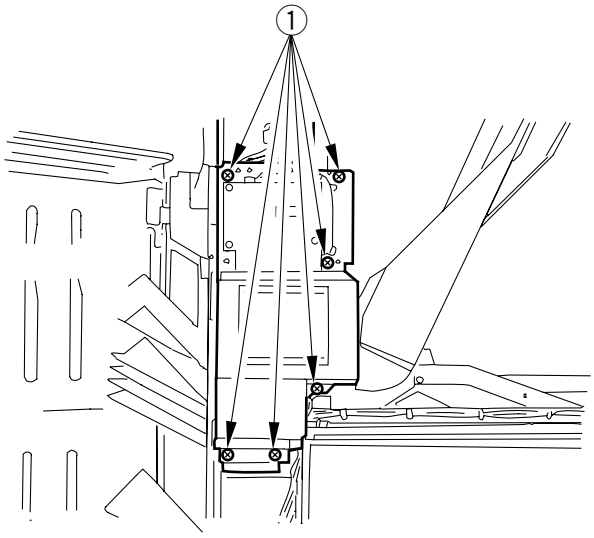

Figure 3-314

4) Disconnect the connector ②, and remove the tie-wrap with an anchor ③; then, remove the control panel ④.

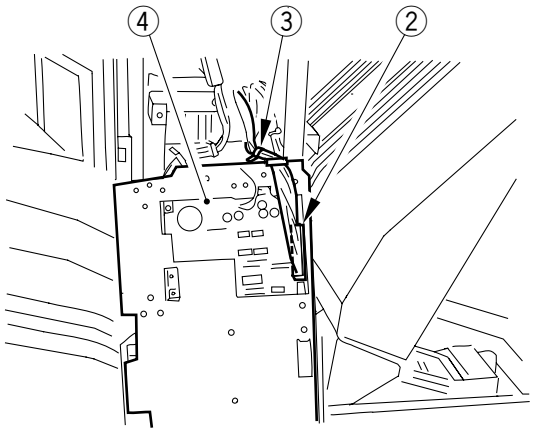

Figure 3-315

2. Removing the Copy End Indicator Display

1) Remove the front upper left cover.
2) Remove the Copy End indicator assembly ① by disconnecting the connector ② and removing the two screws ③.
3) Remove the Copy End indicator PCB ④ by removing the two screws ⑤.

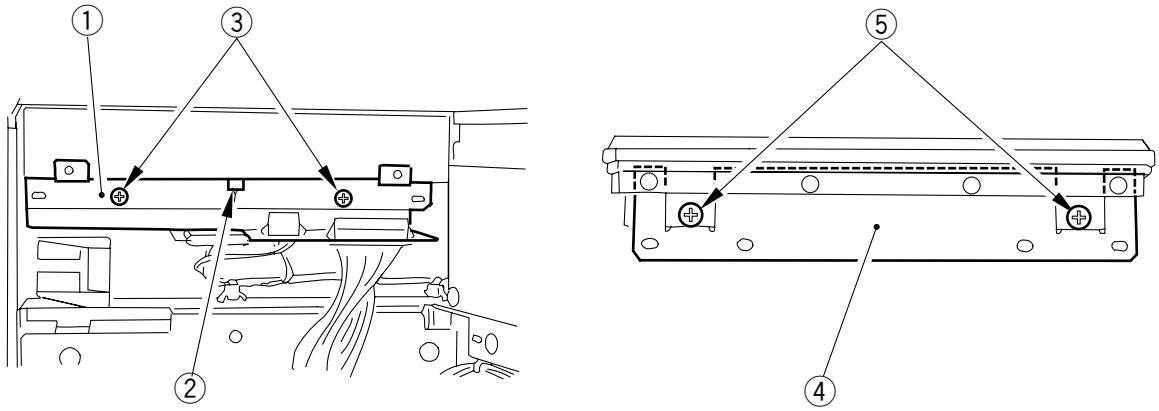

Figure 3-316

3. Removing the Stacker Unit Sate Indicator PCB

1) Remove the cover ① by removing the screw ②.
2) Remove the four screws ③.

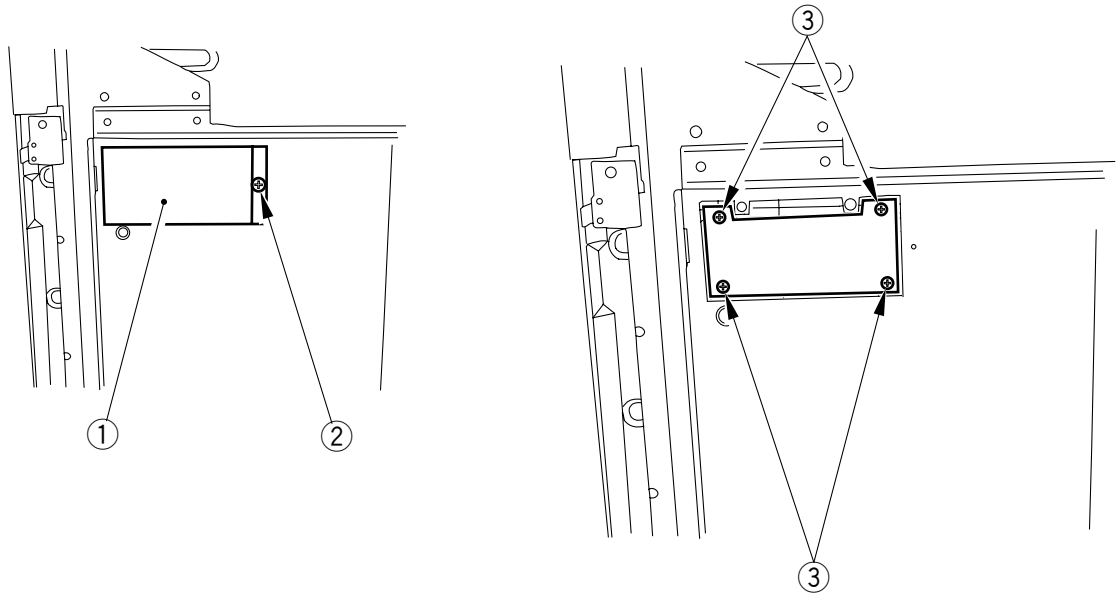

Figure 3-317

COPYRIGHT © 1997 CANON INC.

3) Remove the stacker unit state indicator PCB ④ by disconnecting the connector ⑤.

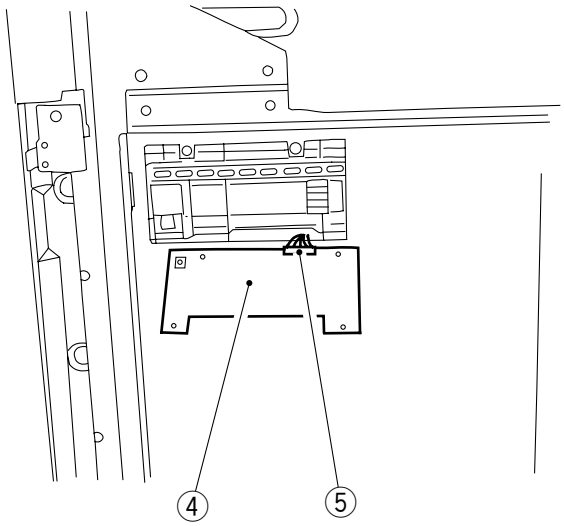

Figure 3-318

D. Bin Cover Switch Assembly

1. Removing the Bin Cover Switch Unit

1) Open the bin cover, and remove the front left bin.
2) Remove the rear upper cover, front lower left cover, front upper left cover, upper front cover, and control panel.
3) Remove the bin cover switch unit ① by disconnecting the six connectors ② and removing the tie-wrap with an anchor ③ and three screws ④.

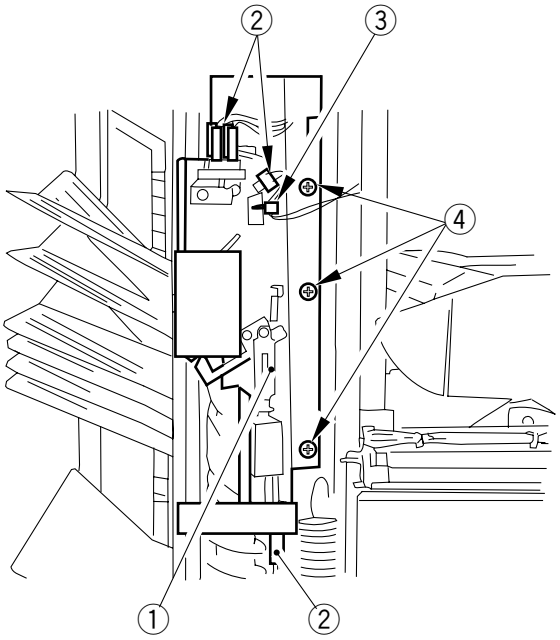

Figure 3-319

COPYRIGHT © 1997 CANON INC.

2. Adjusting the Stroke of the Bin Cover Locking Solenoid (SL8)

Loosen the two adjusting screws ①, and adjust the position of the solenoid ② so that the stroke of the plunger is 5 +0.5, -0 mm.

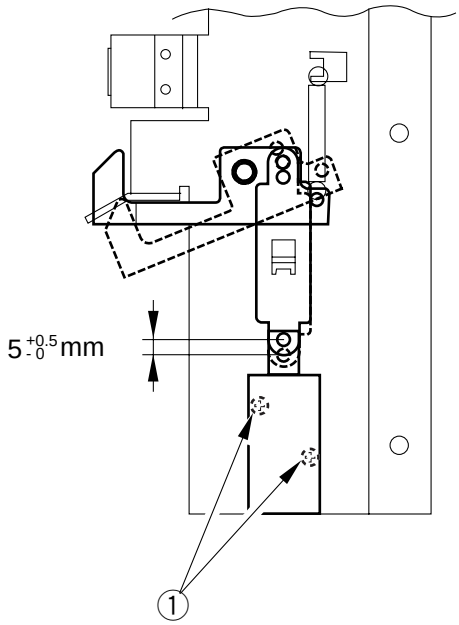

Figure 3-320

E. Access Door Switch Assembly

1. Removing the Stacker Access Solenoid (SL3)

1) Open the front cover.
2) Release the lock, and open the access door ① by pushing the hook ②.

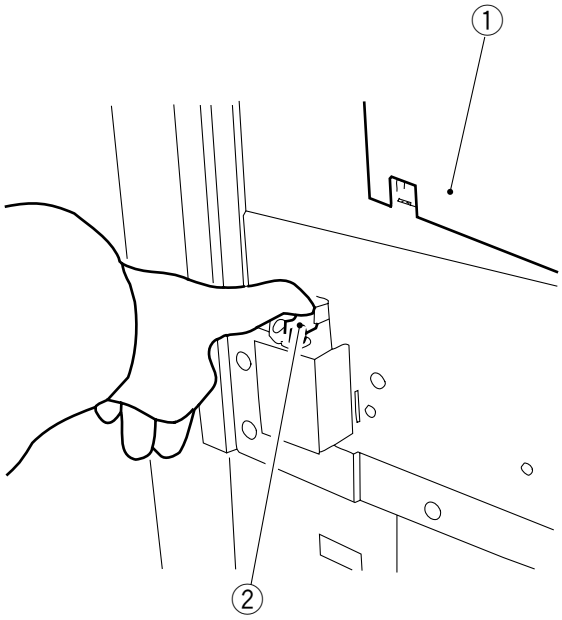

Figure 3-321

3) Remove the two screws ③.
4) Remove the stacker access solenoid (SL3) ④ by disconnecting the connector ⑤.

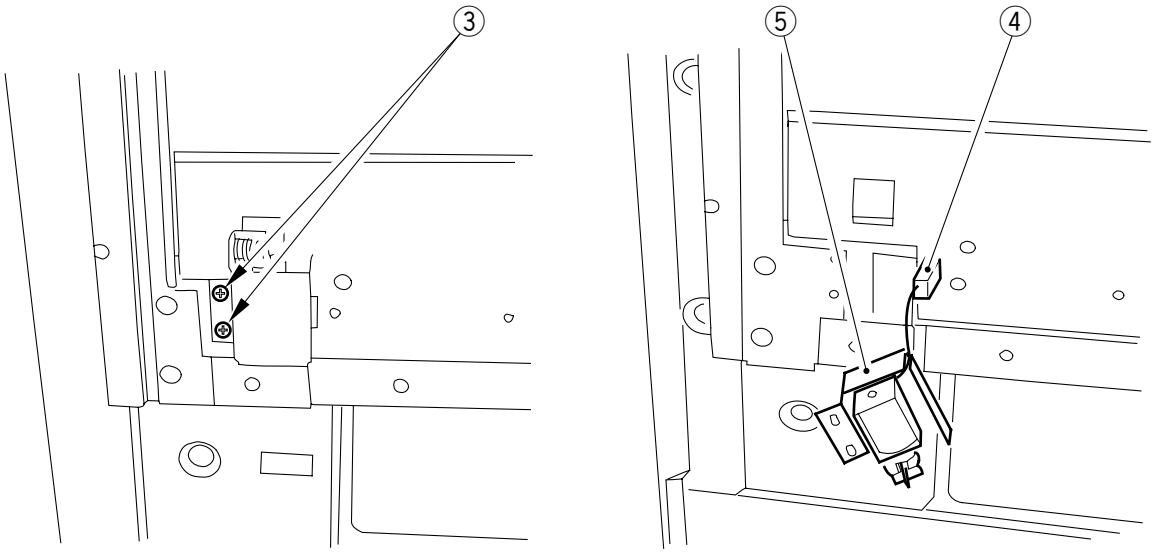

Figure 3-322

COPYRIGHT © 1997 CANON INC.

2. Adjusting the Position of the Stacker Access Solenoid (SL3)

Loosen the two adjusting screws ①, and adjust the height of the solenoid unit ② so that the hinge comes into contact with the bottom of the locking lever groove.

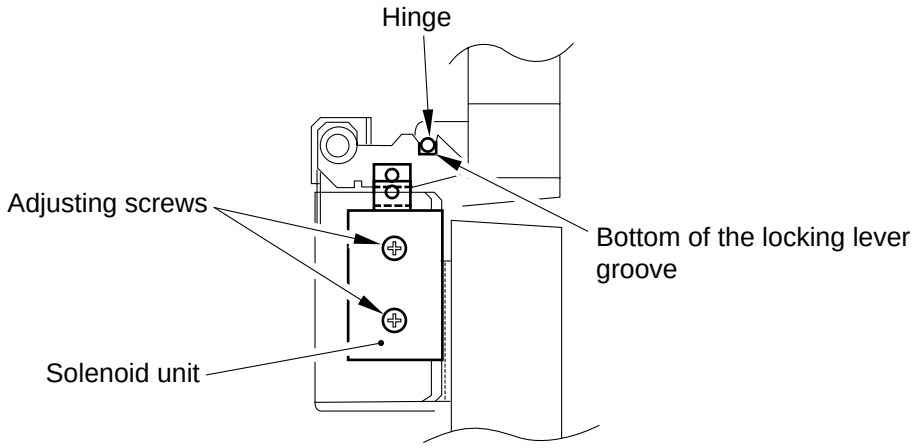

Figure 3-323

F. Installing the Service Screen

1) Insert the fixing shaft (longer) ② into the shaft ① of the screen.

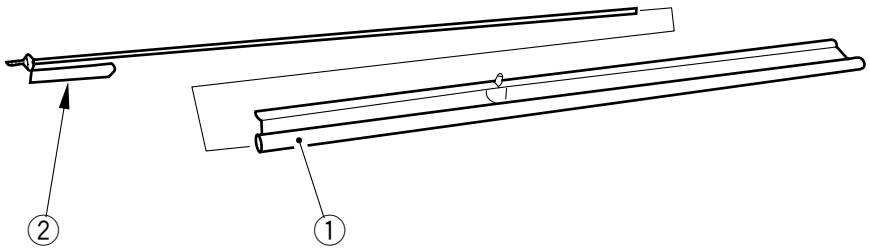

Figure 3-324

2) While holding the shaft ① of the screen, turn the fixing shaft (longer) ② counter-clockwise 33 times to provide winding power.

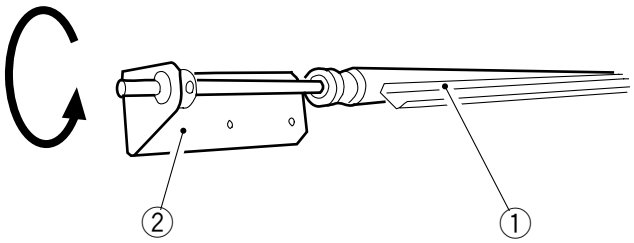

Figure 3-325

COPYRIGHT © 1997 CANON INC.

3) While maintaining the condition of step 2), install the screen.

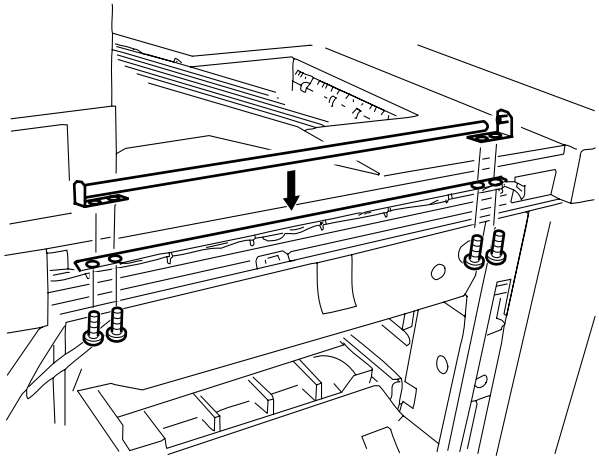

Figure 3-326

4) Slide out the screen to check its movement.

COPYRIGHT © 1997 CANON INC.

IV. Bin Module

A. Bin

1. Removing the Upper Bins

Be sure to move each bin to the bottommost level in advance.

1) Remove the bin cover, rear left cover, bin upper cover, bin left cover, bin right cover, front upper left cover, front lower left cover, upper front cover, and control panel.
2) Remove the bin roll guide upper ① by removing two screws ②.

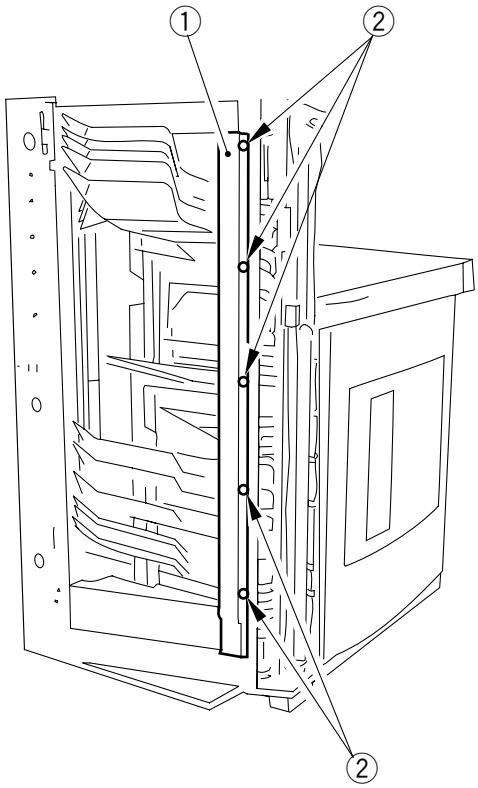

Figure 3-401

COPYRIGHT © 1997 CANON INC.
CANON FINISHER-B1 REV.0 MAY 1997 PRINTED IN JAPAN (IMPRIME AU JAPON)

3) Remove the stay ③ by removing the four screws ④.

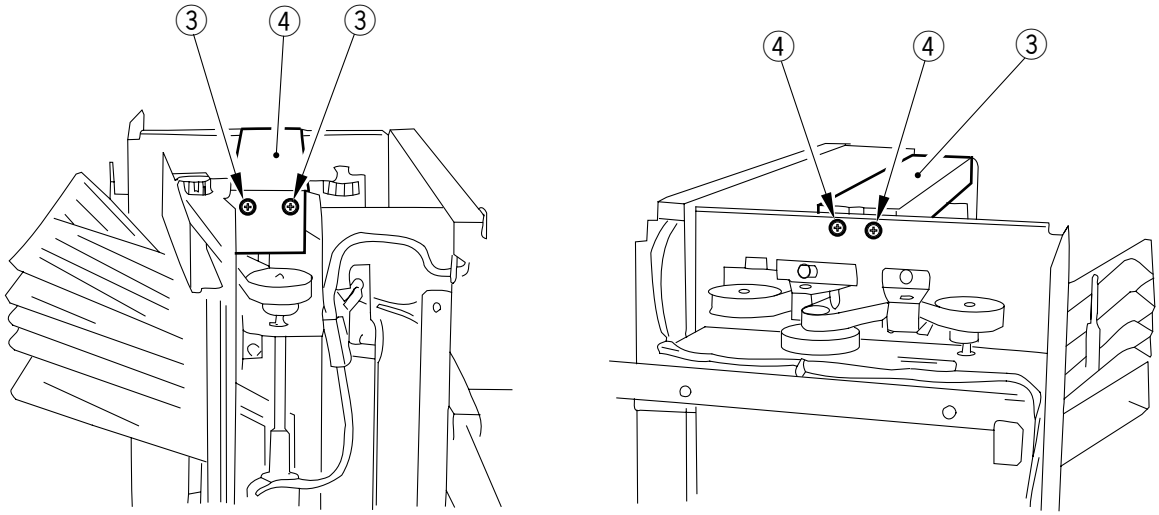

Figure 3-402

4) Remove the upper belt cover ⑤ by removing the five screws ⑥.

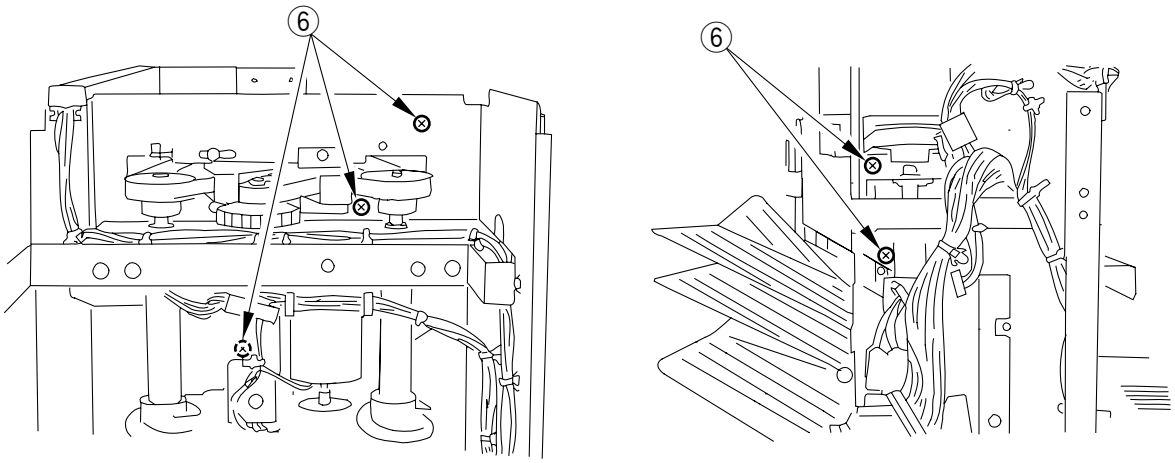

Figure 3-403

5) Remove the reference bar retainer upper ⑦ by removing the screw ⑧.
6) Remove the reference bar (upper) ⑨.

Caution:

Take care not to lose the bushing ⑩.

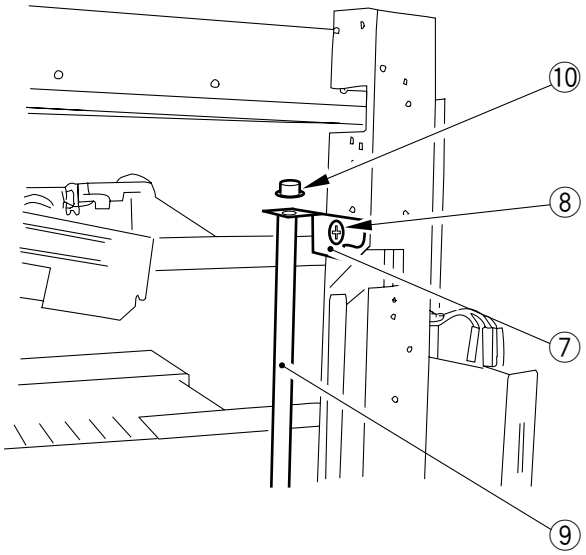

Figure 3-404

7) Remove the guide bar unit upper ⑫ by disconnecting the two connectors ⑬ and removing the two screws ⑭.

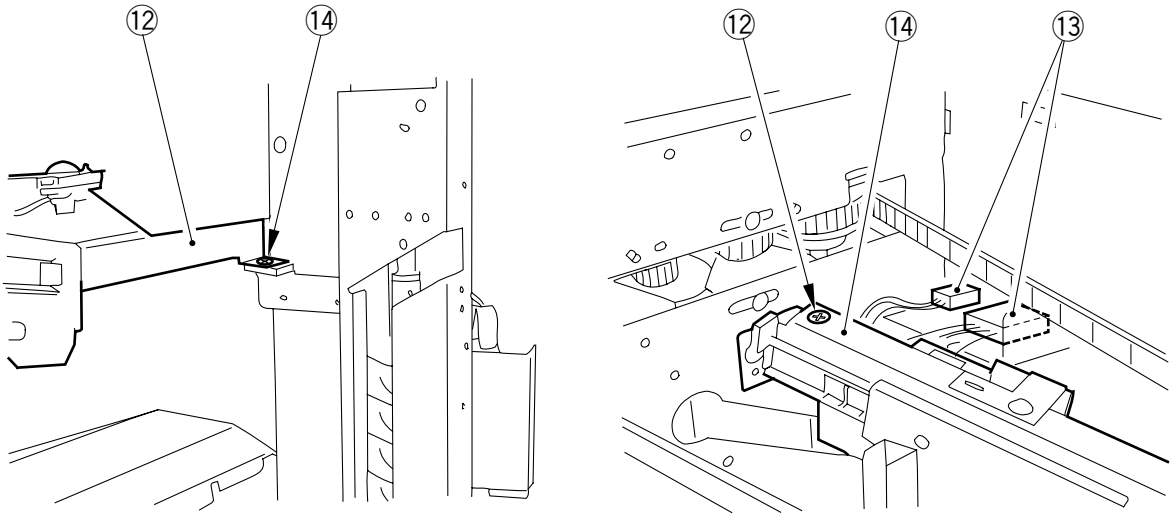

Figure 3-405

COPYRIGHT © 1997 CANON INC.

8) Remove the upper bin upper limit sensor (PI23) ⑮ by removing the screw ⑯.

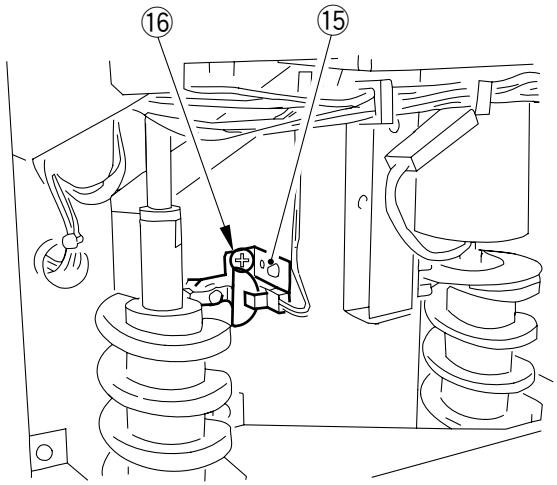

Figure 3-406

9) Move the upper bin drive belt ⑰ by hand to move up the upper bin ⑱; then, remove the bins one by one.

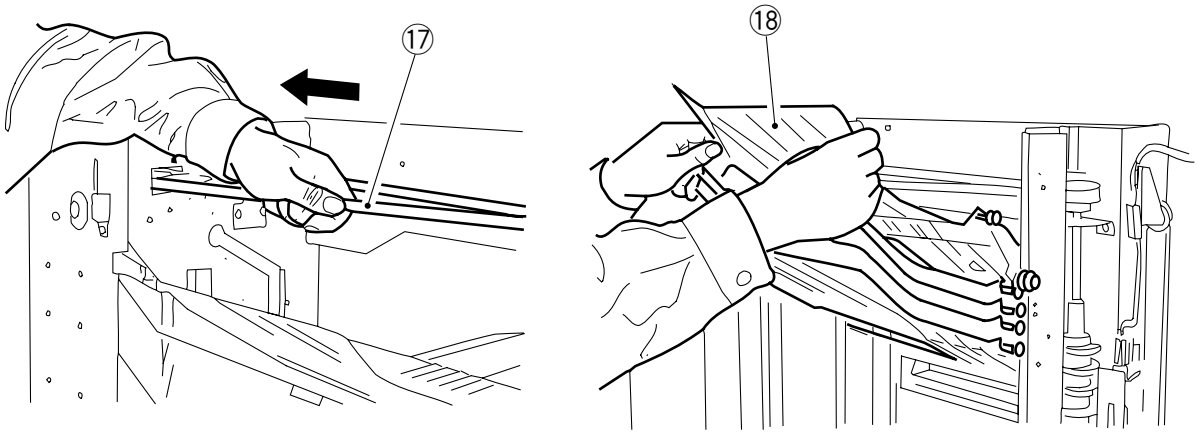

Figure 3-407

2. Removing the Lower Bins

1) Remove all the upper bins.
2) Remove the bin left cover.
3) Disconnect all 28 connectors of the finisher controller PCB ① and the power supply PCB ②.
4) Remove the PCB unit ③ by removing the four screws ④.

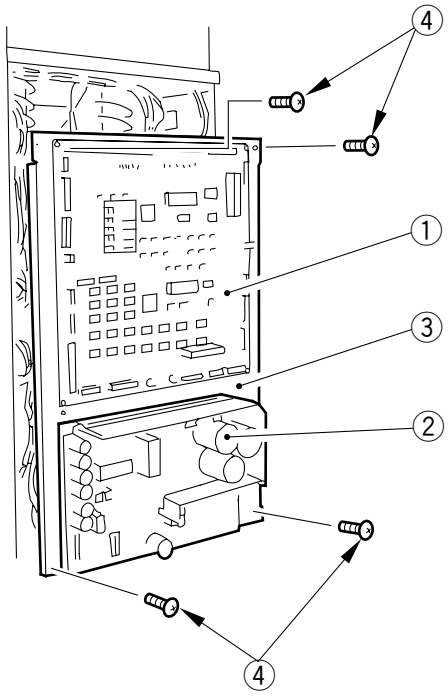

Figure 3-408

COPYRIGHT © 1997 CANON INC.

5) Remove the lower bin upper limit sensor (PI25) ⑤ and the upper bin lower limit sensor (PI24) ⑥ by removing the screw ⑧ (one each).

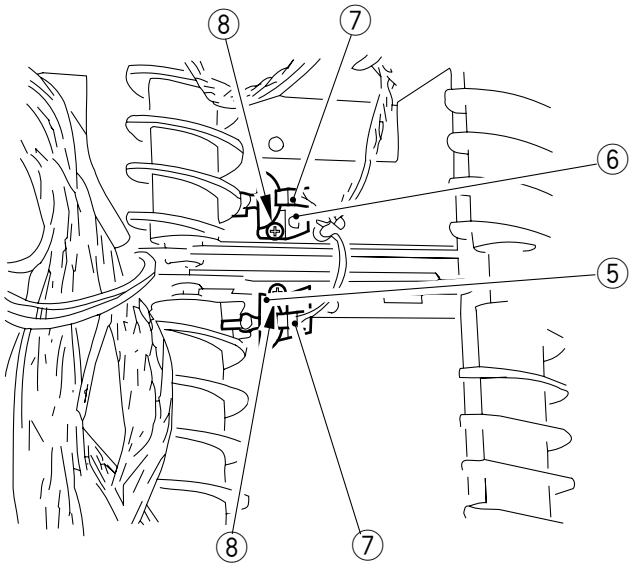

Figure 3-409

6) Remove the bin roll guide lower ⑨ by removing the two screws ⑩.

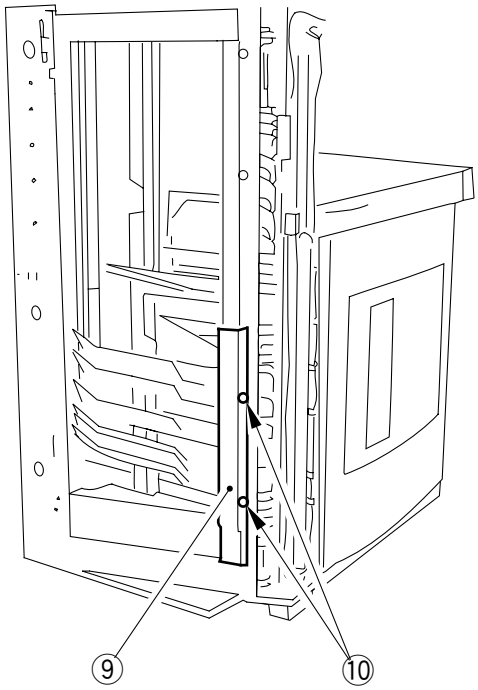

Figure 3-410

7) Remove the guide bar mount ⑪ by disconnecting the connector ⑫ and removing the four screws ⑬.

Caution:

The guide bar ⑭ will come loose. Take care not to loose the spacer ⑮ and the bushing ⑯.

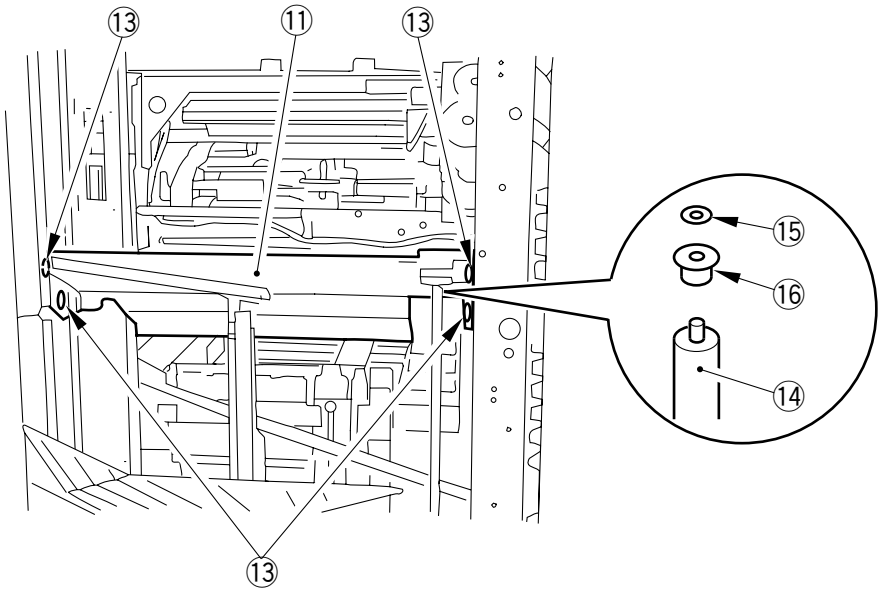

Figure 3-411

8) Remove the lower belt cover ⑰ by removing the two screws ⑱.

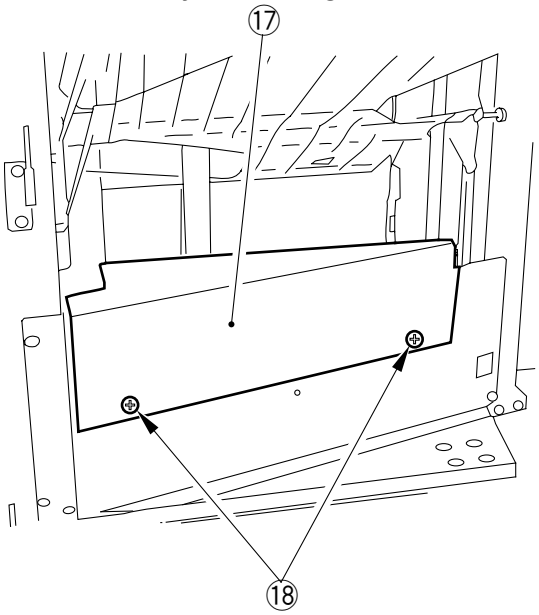

Figure 3-412

COPYRIGHT © 1997 CANON INC.

9) Move the lower bin drive belt ⑲ by hand to move up the lower bin ⑳ so that it is on the upper lead cam ⑲.
10) Move the upper bin drive belt ㉑ by hand to move up the lower bin ㉒; then, remove the bins one by one.

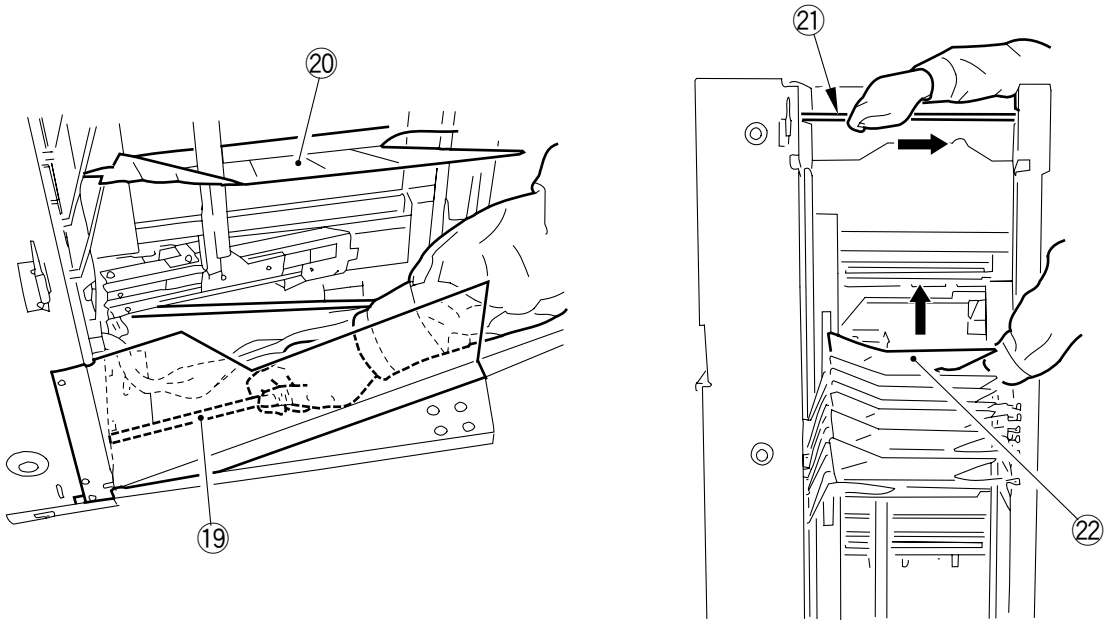

Figure 3-413

B. Bin Shift Motor

1. Removing the Bin Shift Motor

1) Remove the tensioner ① by removing the four screws ②.

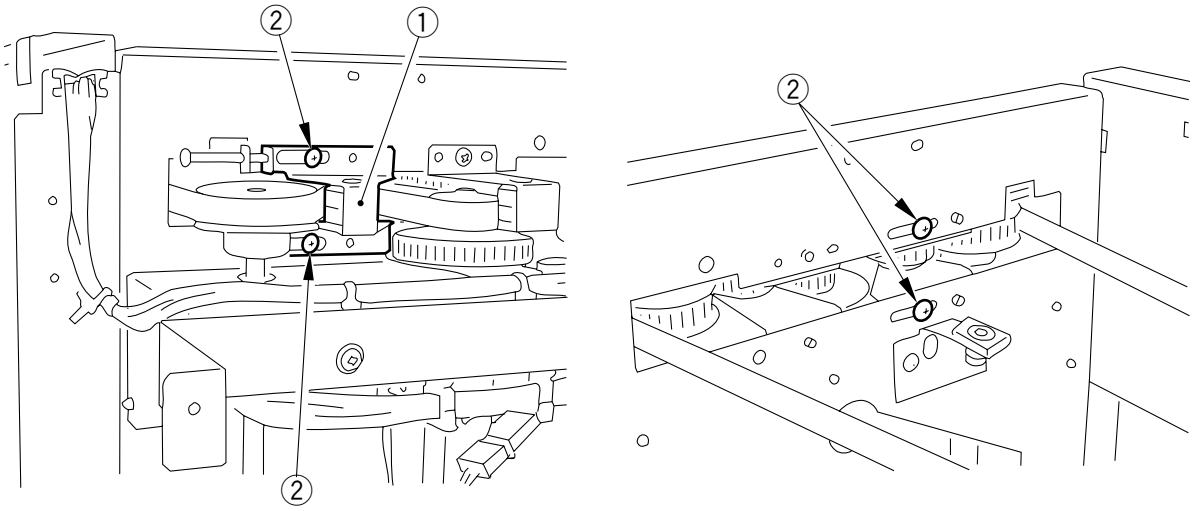

Figure 3-414

2) Remove the idler ③ by removing the two screws ④.
3) Remove the upper bin drive belt ⑤.

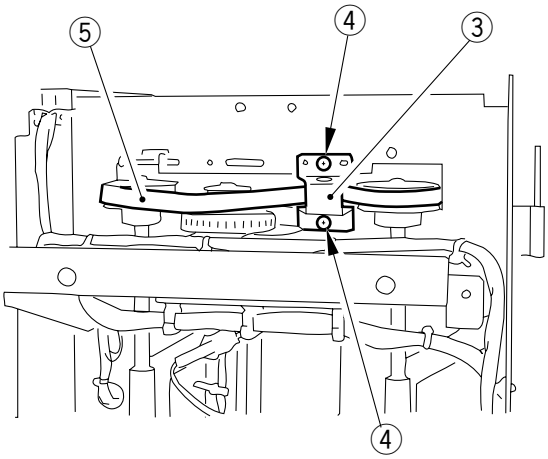

Figure 3-415

COPYRIGHT © 1997 CANON INC.

4) Remove the upper bin shift motor unit ⑥ by cutting the two tie-wraps with an anchor ⑦, disconnecting the two connectors ⑧, and removing the three tie-wraps ⑨ and four screws ⑩.

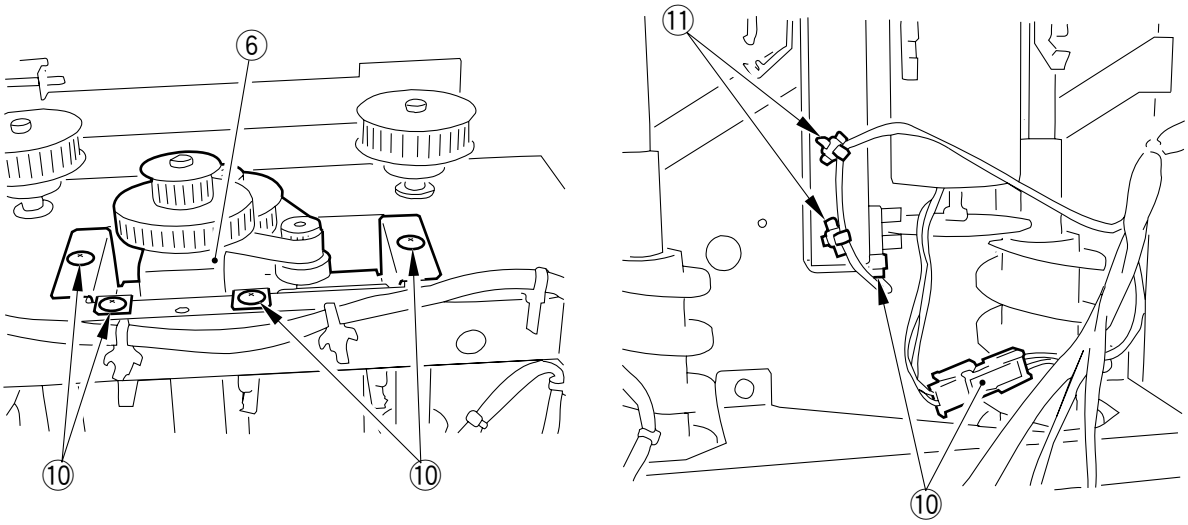

Figure 3-416

5) Remove the gear ⑪ of the upper bin shift motor unit ⑥ by removing the two screws ⑫ and the support plate ⑬.

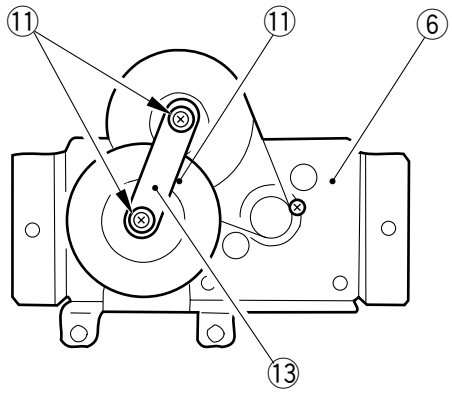

Figure 3-417

6) Remove the gear ⑭ and the belt ⑮ by removing the E-ring ⑯.

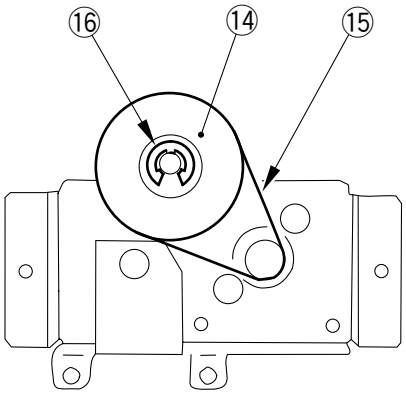

Figure 3-418

7) Remove the motor gear ⑰ by loosening the set screw ⑱.

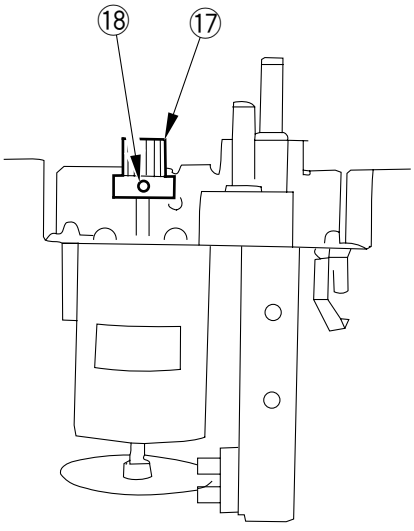

Figure 3-419

COPYRIGHT © 1997 CANON INC.

8) Remove the upper bin shift motor ⑲ by removing the two screws ⑳.

Caution:

When removing the upper bin shift motor, take care not to damage the encoder plate ㉑ at the rear.

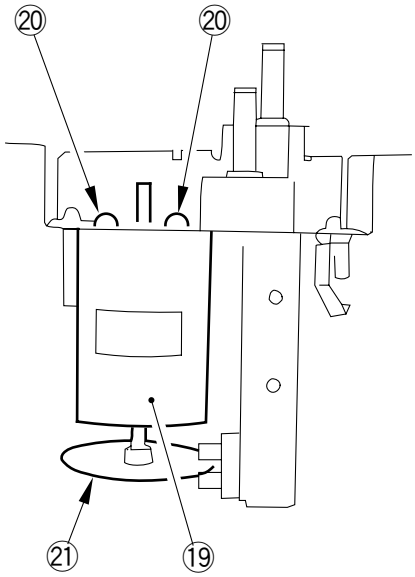

Figure 3-420

Caution:

When installing the upper bin shift motor, be sure to adjust the tension of the drive belt and check the phase of each lead cam after the work.

2. Removing the Lower Bin Shift Motor

1) Loosen the two fixing screws ② and the adjusting screw ③ on the tensioner ①.
2) Detach the lower bin drive belt ④ from the pulley ⑤.

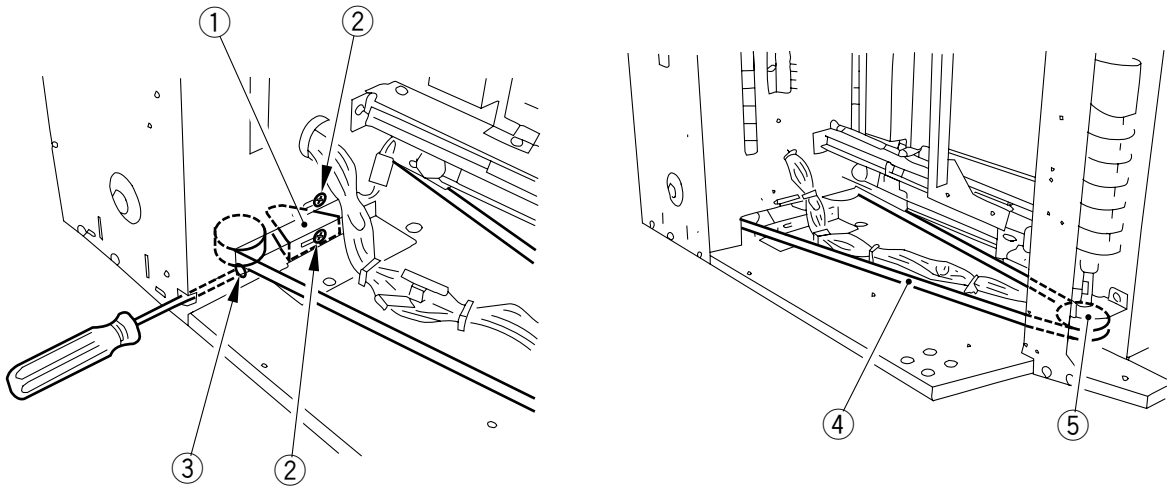

Figure 3-421

3) Remove the noise filter unit ⑥ by disconnecting the connector ⑦ and removing the three screws ⑧.

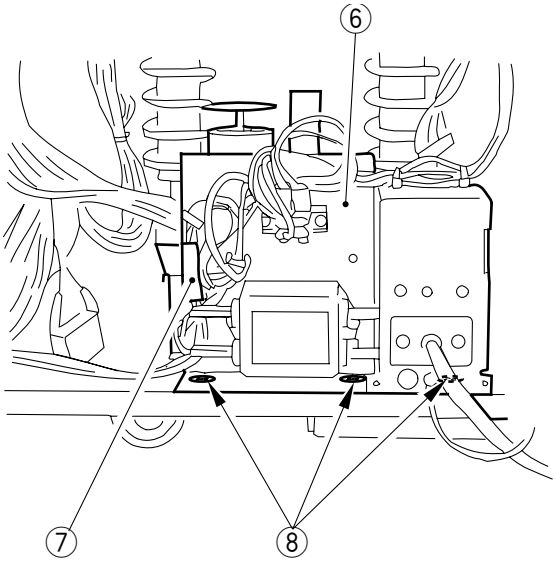

Figure 3-422

COPYRIGHT © 1997 CANON INC.

4) Remove the idler ⑨ by removing the two screws ⑩.

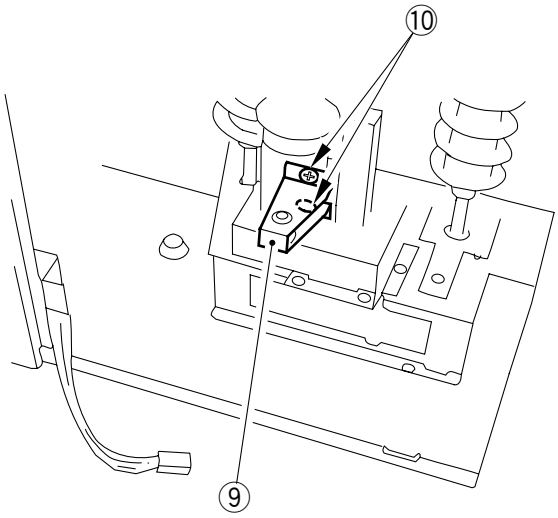

Figure 3-423

5) Remove the lower bin shift motor unit ⑪ by cutting the two tie-wraps with a clasp ⑫, disconnecting the two connectors ⑬, and removing the two harness bands ⑭ and four screws ⑮.

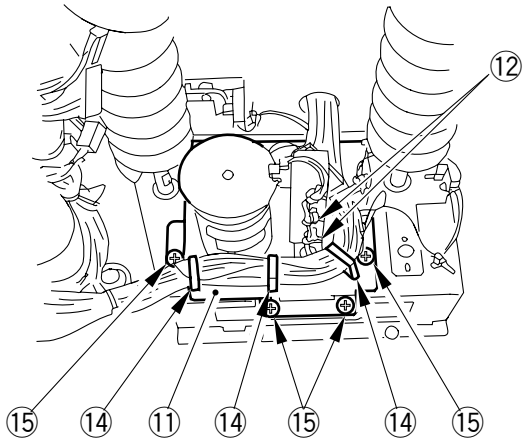

Figure 3-424

6) Remove the gear ⑯ by removing the two screws ⑰ and the support plate ⑱.

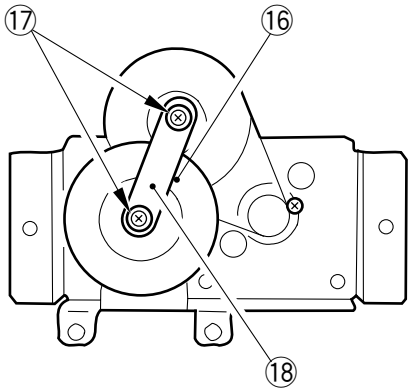

Figure 3-425

7) Remove the gear ⑲ and the belt ⑳ by removing the E-ring ㉑.

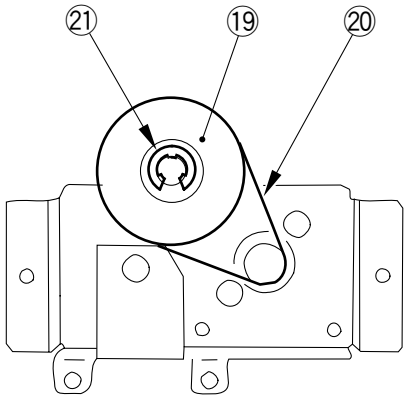

Figure 3-426

8) Remove the motor gear ㉒ by loosening the set screw ㉓.

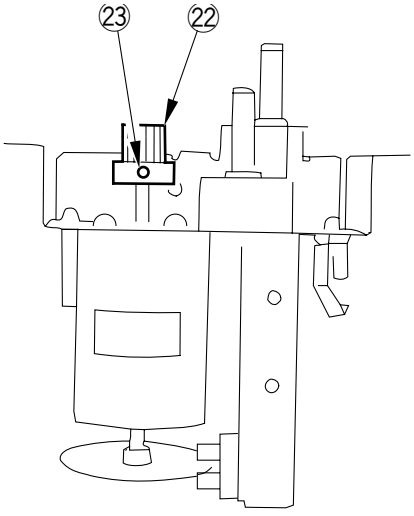

Figure 3-427

COPYRIGHT © 1997 CANON INC.

9) Remove the lower bin shift motor ㉔ by removing the two screws ㉕.

Caution:

When removing the lower bin shift motor, take care not to damage the encoder plate ㉖ at the rear.

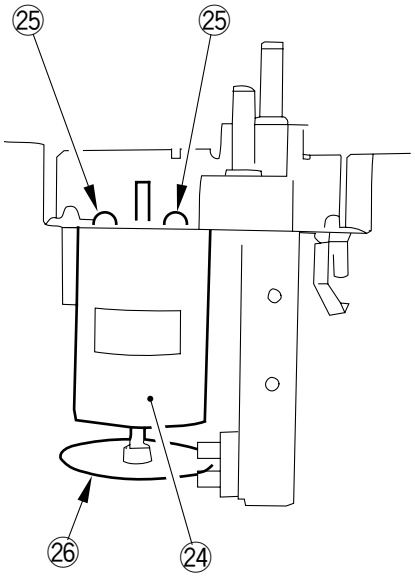

Figure 3-428

Caution:

When installing the lower bin shift motor, be sure to adjust the tension of the drive belt and check the phase of each lead cam after the work.

C. Lead Cam

1. Removing the Upper Lead Cam (front)

1) Remove all upper bins.
2) Remove the tensioner ① by removing the four screws ②.

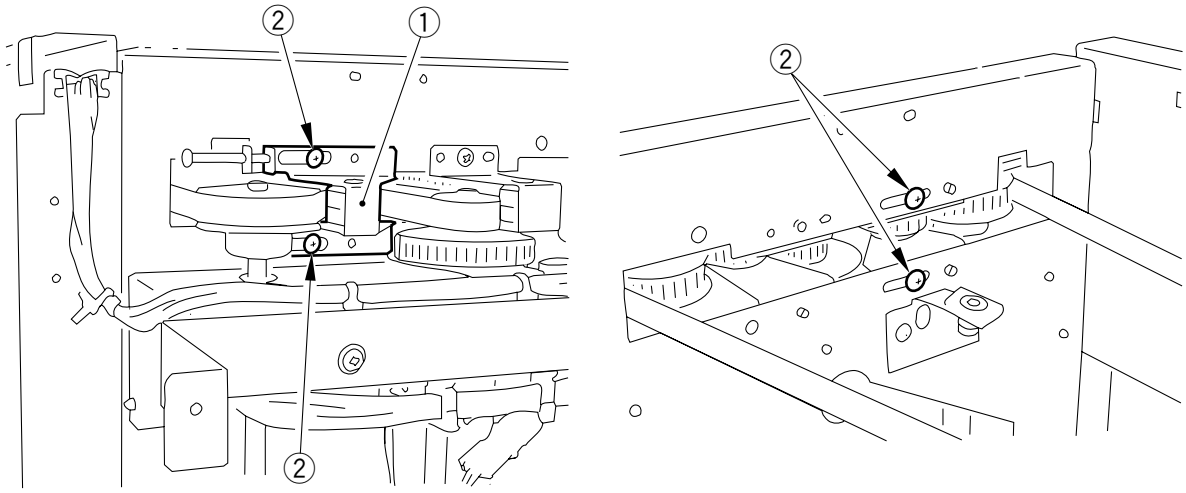

Figure 3-429

3) Remove the idler ③ by removing the two screws ④.
4) Remove the upper bin drive belt ⑤.

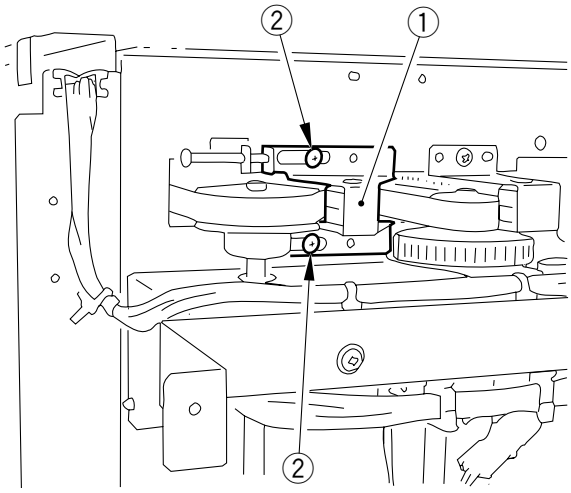

Figure 3-430

COPYRIGHT © 1997 CANON INC.

5) Remove the upper lead cam bushing mount (front) ⑥ by removing the two screws ⑦.

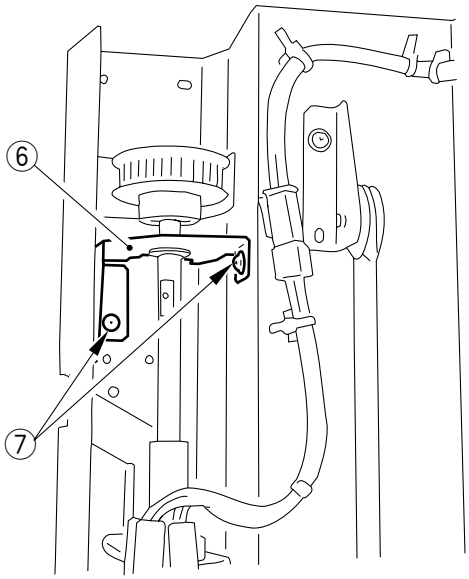

Figure 3-431

6) Remove the pulley ⑧ by loosening the two set screws ⑨; then, remove the upper lead cam (front) ⑩.

Caution:

Take care not to lose the bushing ⑪.

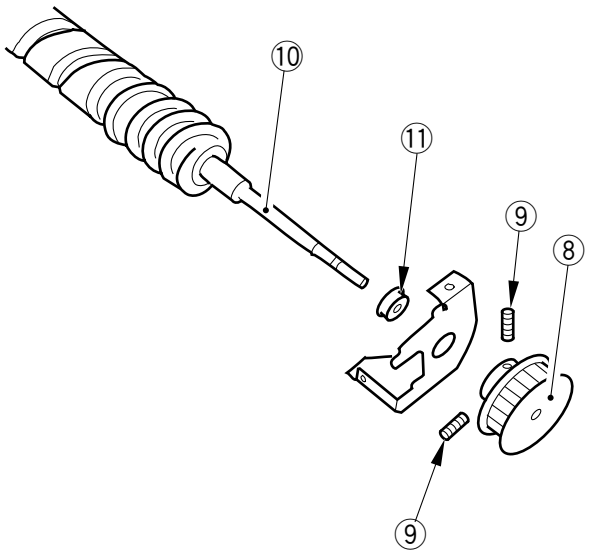

Figure 3-432

2. Removing the Upper Lead Cam (rear)

1) Remove all upper bins.
2) Remove the tensioner ① by removing the four screws ②.

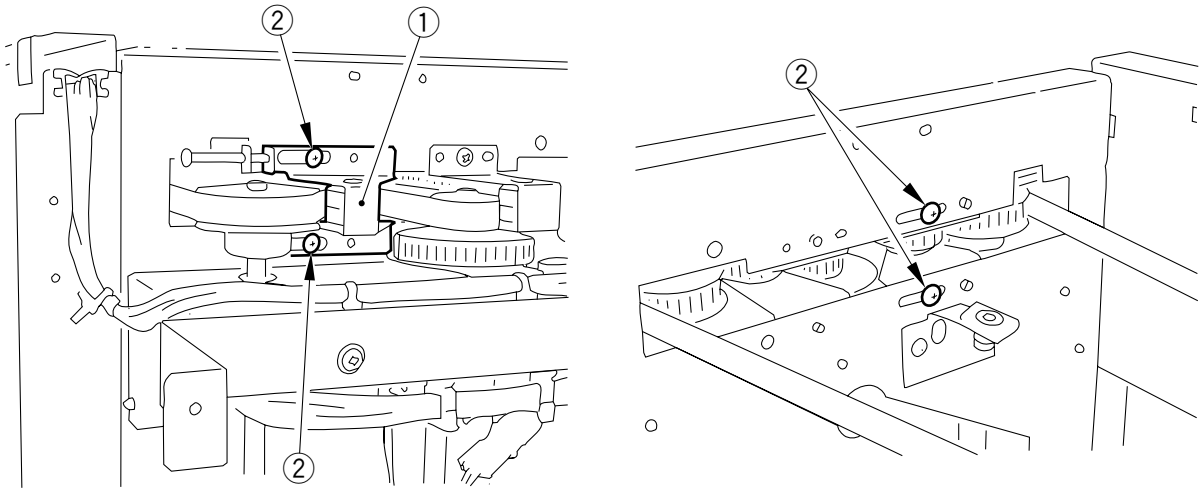

Figure 3-433

3) Remove the idler ③ by removing the two screws ④.
4) Remove the upper bin drive belt ⑤.

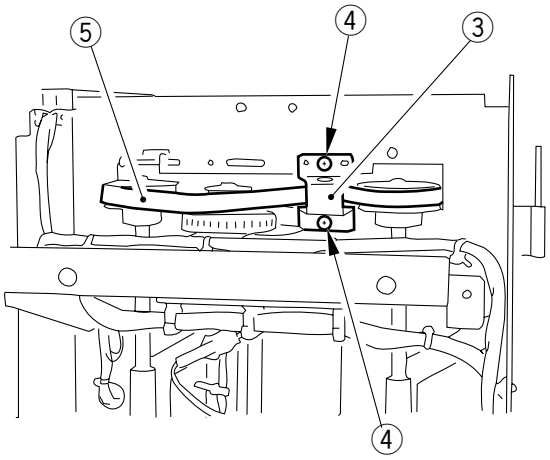

Figure 3-434

COPYRIGHT © 1997 CANON INC.

5) Remove the sensor mount ⑥ by removing the screw ⑦.

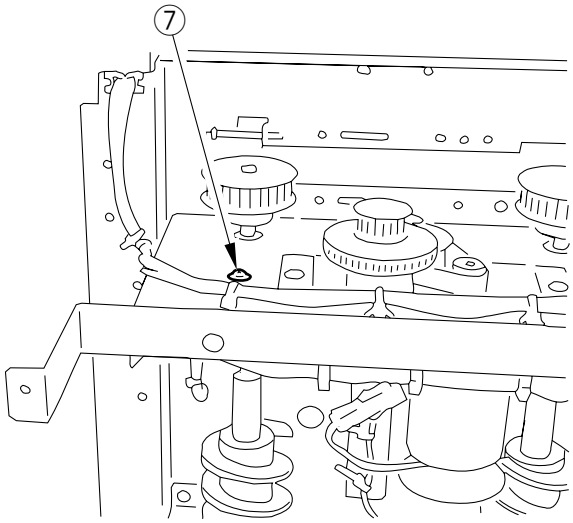

Figure 3-435

6) Remove the nine harness retainers ⑧.

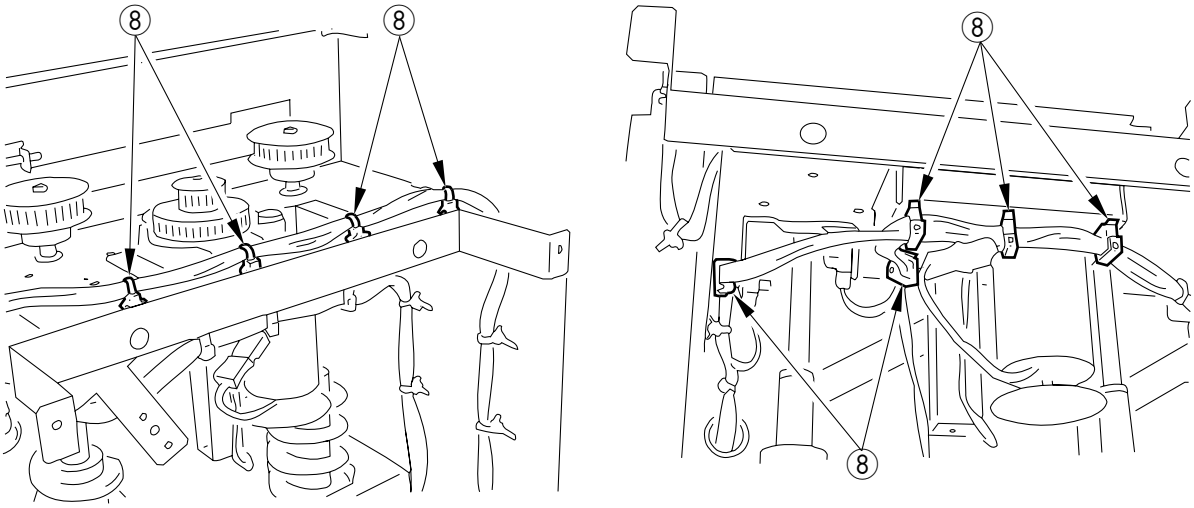

Figure 3-436

7) Remove the upper bin shift motor unit ⑨ by disconnecting the two connectors ⑩ and removing the five harness retainers ⑪ and the four screws ⑫.

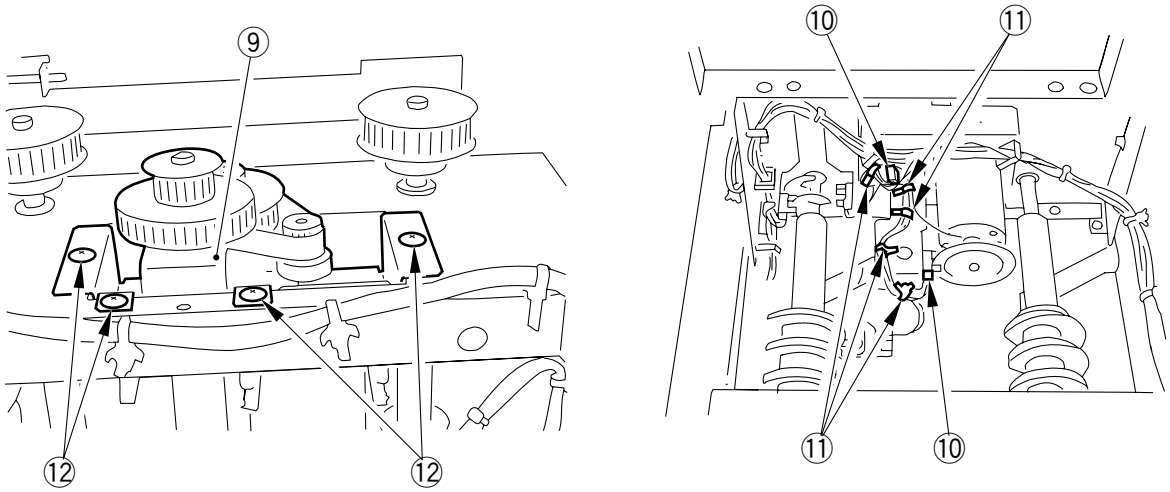

Figure 3-437

8) Remove the lead cam guard ⑬ by removing the six screws ⑭.

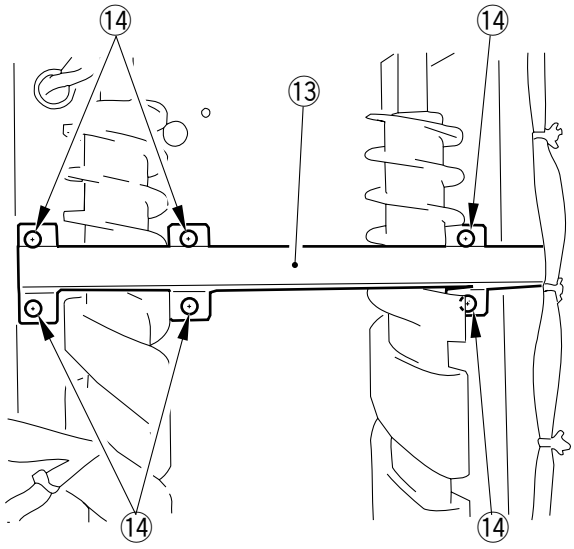

Figure 3-438

COPYRIGHT © 1997 CANON INC.

9) Remove the upper lead cam bushing mount (rear) ⑮ by removing the six screws ⑯.

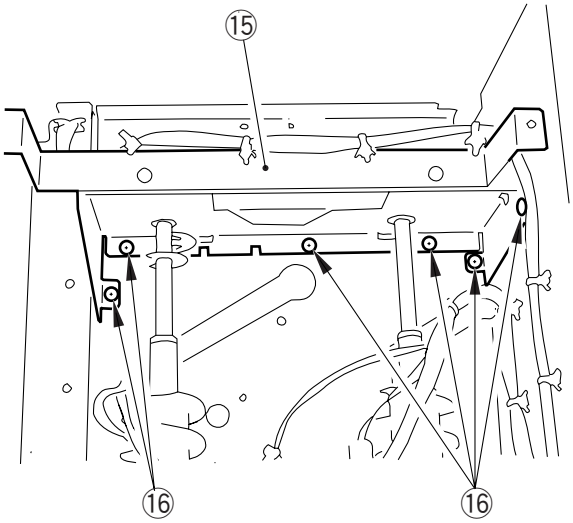

Figure 3-439

10) Remove the two pulleys ⑰ by loosening the two set screws ⑱ each; then, remove the two upper lead cams (rear) ⑲.

Caution:

- Take care not to lose the pin ⑳ and the bushing ㉑. (The pin is found only on the shaft equipped with a sensor flag.)
- Keep in mind that the upper lead cam (rear) equipped with a sensor flag is installed on the right side of the machine when viewing the machine from the front.

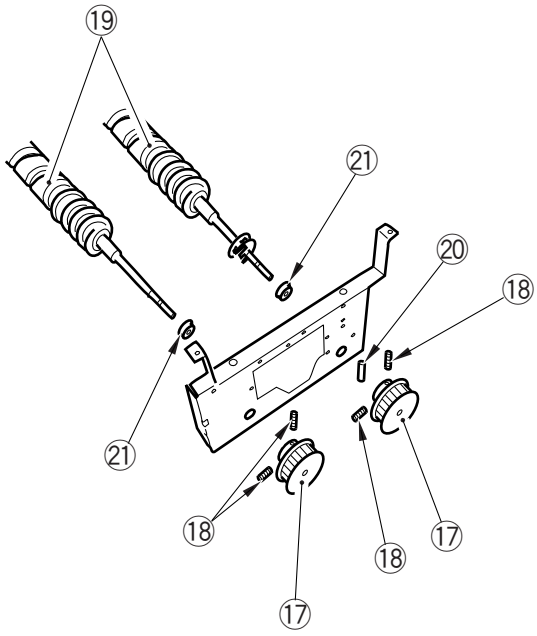

Figure 3-440

3. Removing the Lower Lead Cam (front)

1) Remove all lower bins.
2) Remove the stay ① by removing the six screws ②.

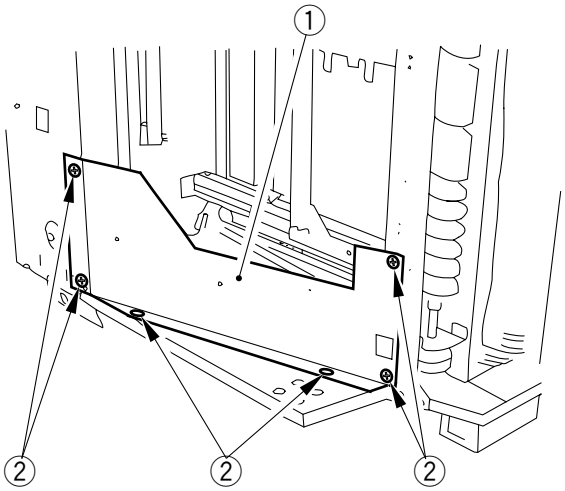

Figure 3-441

3) Loosen the two fixing screws ④ and the adjusting screw ⑤ on the tensioner ③.
4) Detach the lower bin drive belt ⑥ from the pulley ⑦.

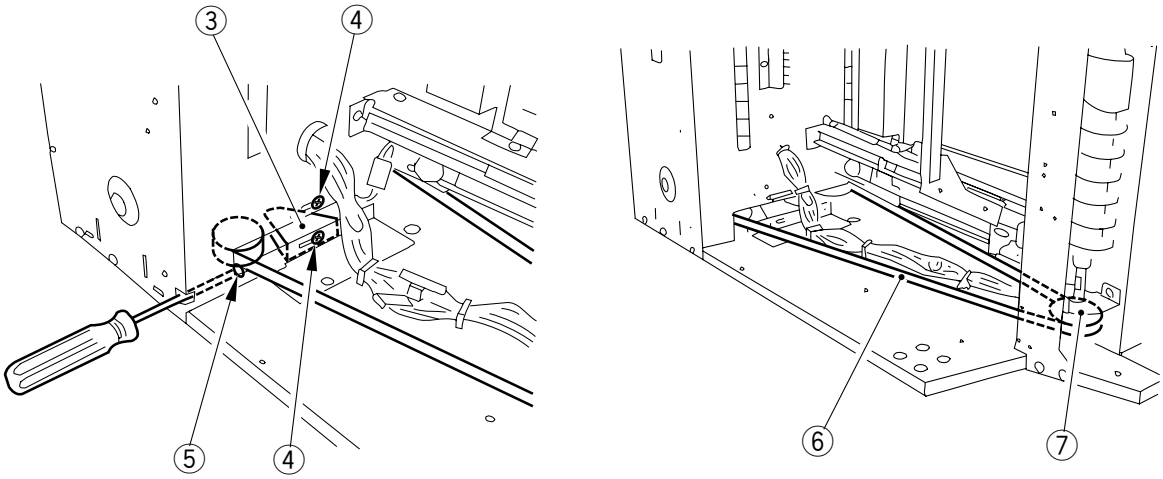

Figure 3-442

COPYRIGHT © 1997 CANON INC.

5) Remove the lower lead cam bushing mount (front) ⑧ by removing the two screws ⑨.

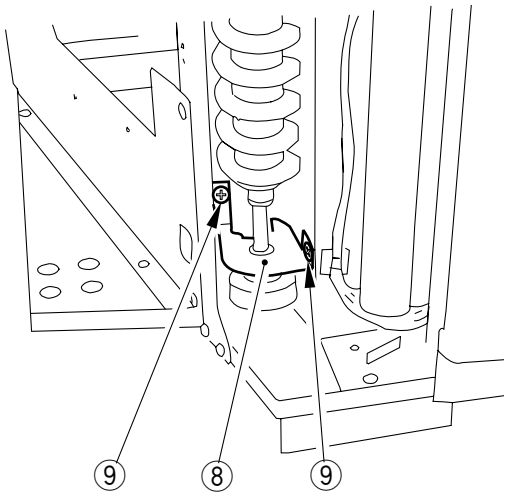

Figure 3-443

6) Remove the pulley ⑩ by loosening the two set screws ⑪; then, remove the lower lead cam (front) ⑫.

Caution:

Take care not to lose the bushing ⑬.

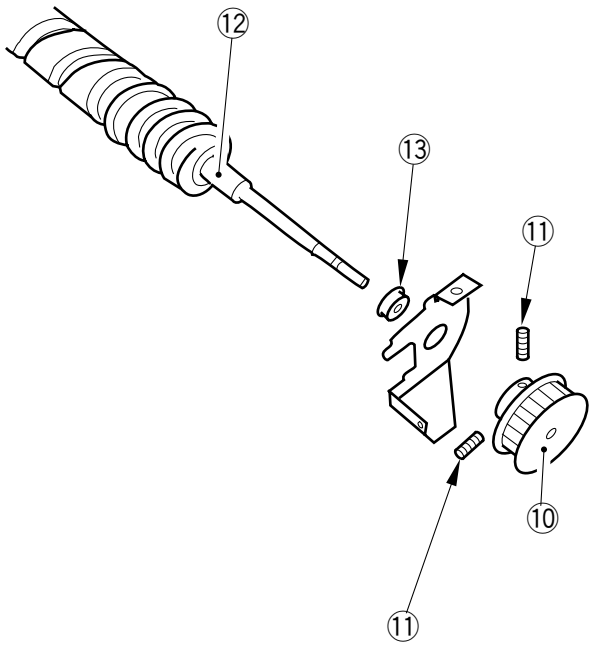

Figure 3-444

4. Removing the Lower Lead Cam (rear)

1) Remove all lower bins.
2) Remove the stay ① by removing the six screws ②.

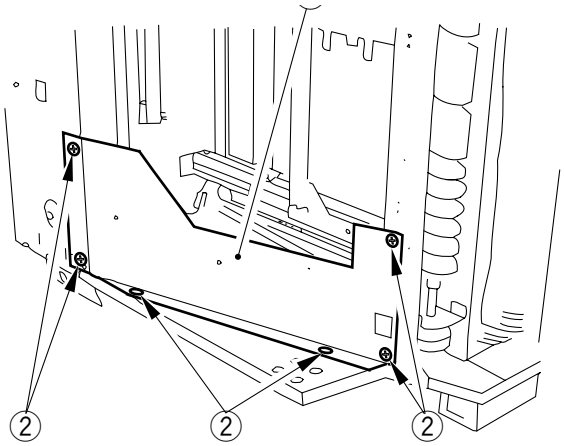

Figure 3-445

3) Loosen the two fixing screws ④ and the adjusting screw ⑤ on the tensioner ③.
4) Detach the lower bin drive belt ⑥ from the pulley ⑦.

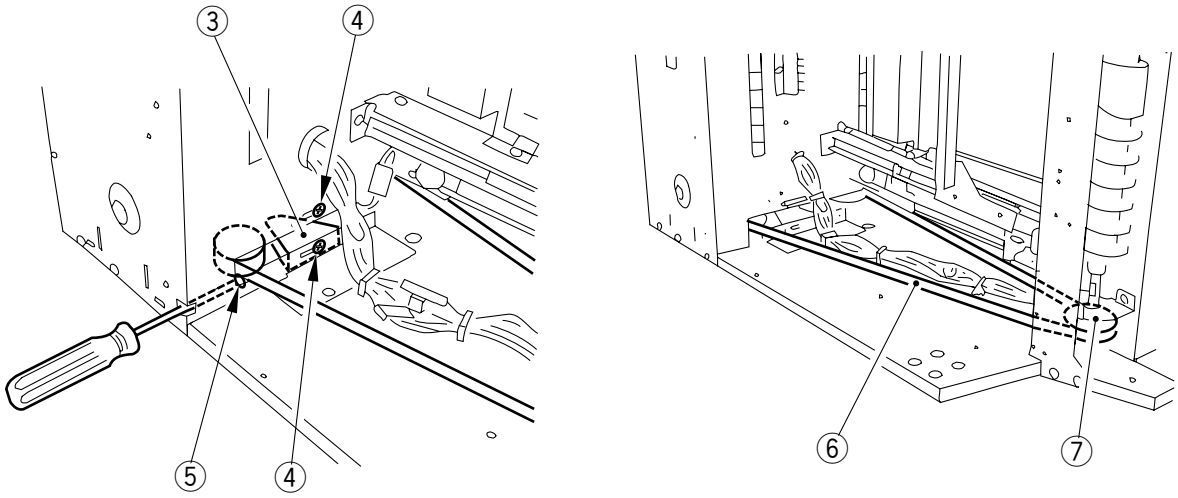

Figure 3-446

COPYRIGHT © 1997 CANON INC.

5) Remove the lead cam guard ⑧ by removing the six screws ⑨.

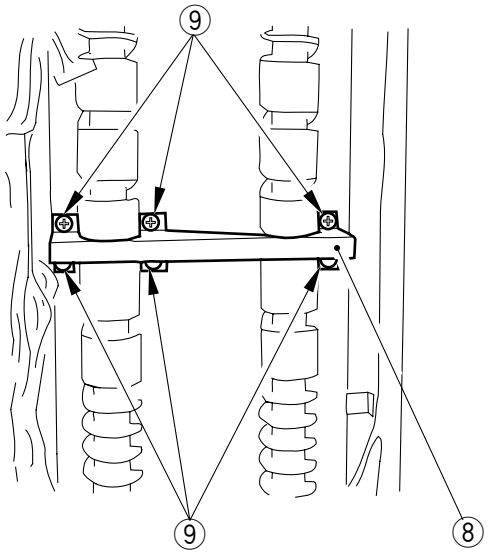

Figure 3-447

6) Disconnect the connector ⑪, and remove the three screws ⑫; then, remove the noise filter unit ⑩.

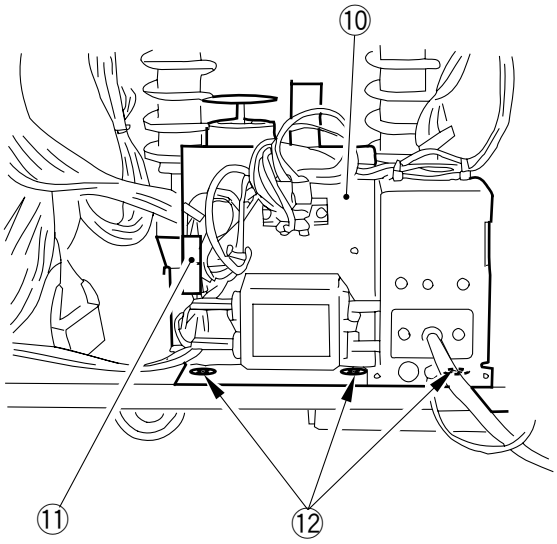

Figure 3-448

7) Remove the idler ⑬ by removing the two screws ⑭.

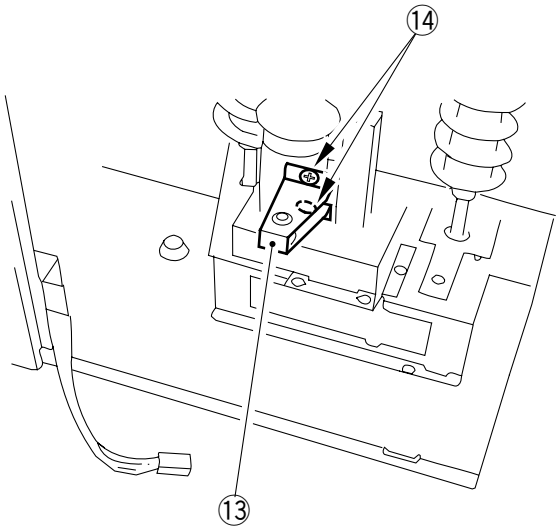

Figure 3-449

8) Remove the lower bin shift motor unit ⑮ by disconnecting the two connectors ⑯ and removing the seven harness bands ⑰ and the four screws ⑱.

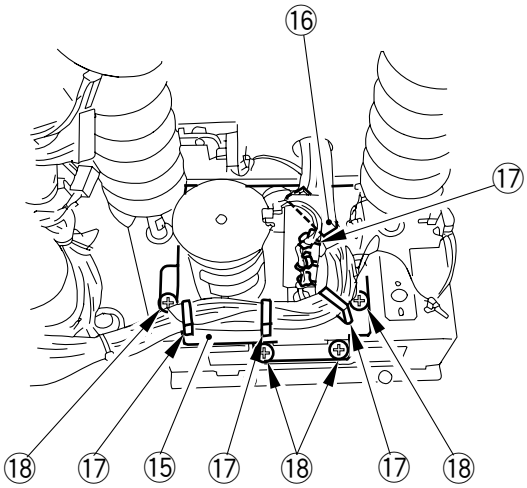

Figure 3-450

COPYRIGHT © 1997 CANON INC.

9) Remove the lower bin lower limit sensor (PI26) ⑲ by removing the screw ⑳.

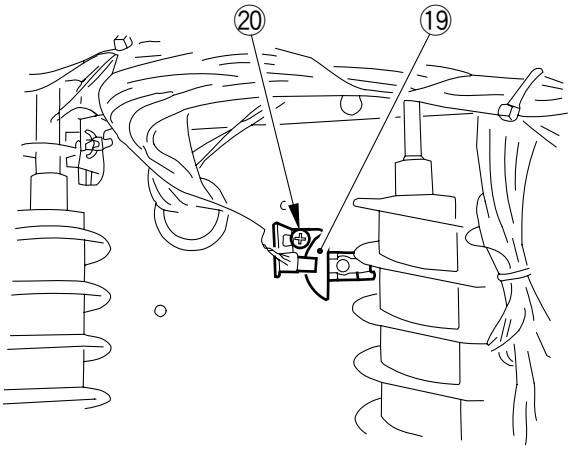

Figure 3-451

10) Remove the sensor mount fixing screw ㉑.

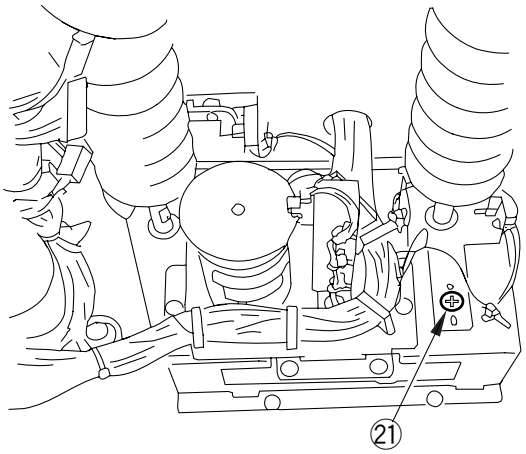

Figure 3-452

11) Cut the four harness bands ㉒.

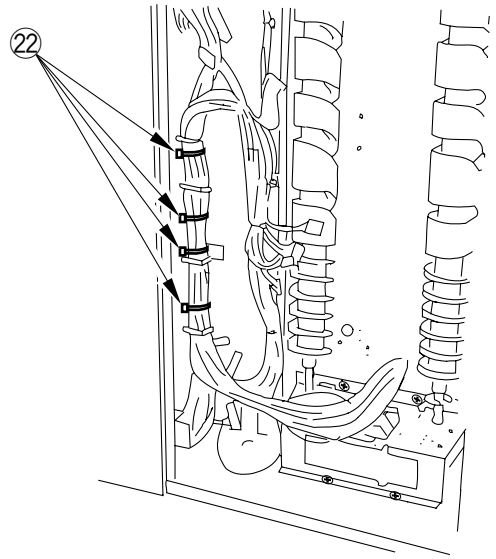

Figure 3-453

12) Remove the harness retainer ㉓.

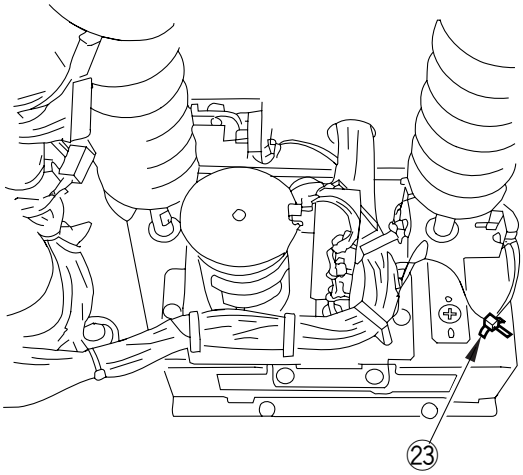

Figure 3-454

COPYRIGHT © 1997 CANON INC.

13) Remove the lower lead cam bushing mount (rear) ㉔ by removing four screws ㉕.

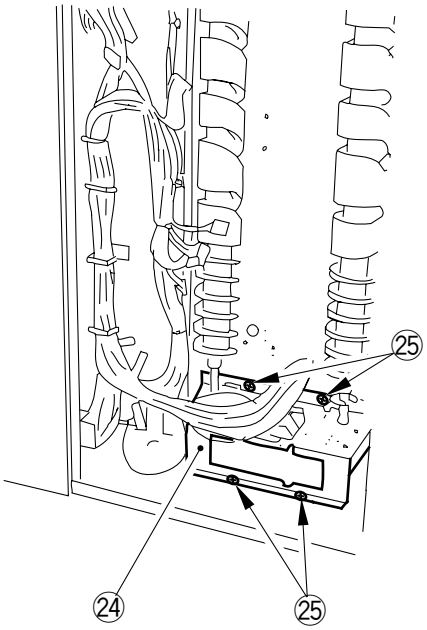

Figure 3-455

14) Remove the two pulleys ㉖ by loosening the two set screws ㉗ each; then, remove the two lower lead cams (rear) ㉘.

Caution:

- Take care not to lose the pin ㉙ and the bushing ㉚. (The pin is found only on the shaft equipped with a sensor flag.)
- Keep in mind that the lower lead cam (rear) equipped with a sensor flag is installed on the left side of the machine when viewing the machine from the front.

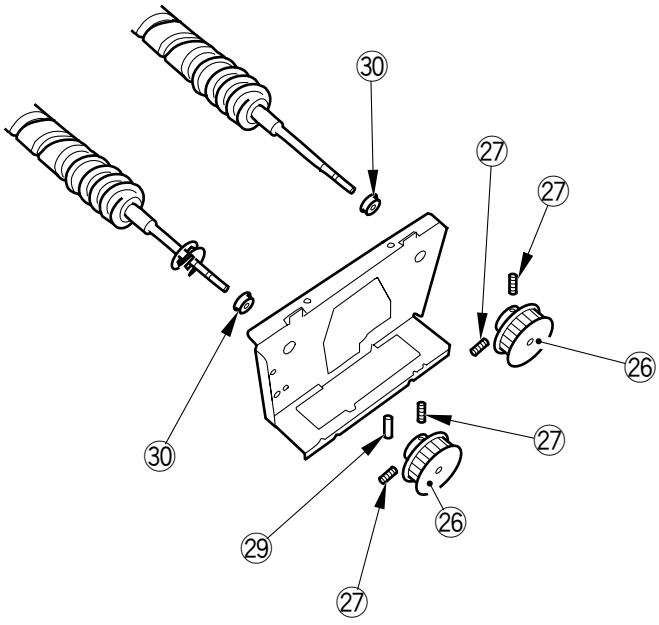

Figure 3-456

5. Installing the Upper/Lower Lead Cam

Install the upper/lower lead cam by reversing the steps used to remove it. Thereafter, make the following adjustments:

a. Adjusting the Tension of the Upper/Lower Bin Drive Belt

As indicated in Figure 3-457, push the drive belt at a point 200 ±5 mm from the rear side plate down a length of 10 mm with a tension gauge. Then, adjust the tensioner so that the reading is 200 to 250 g.

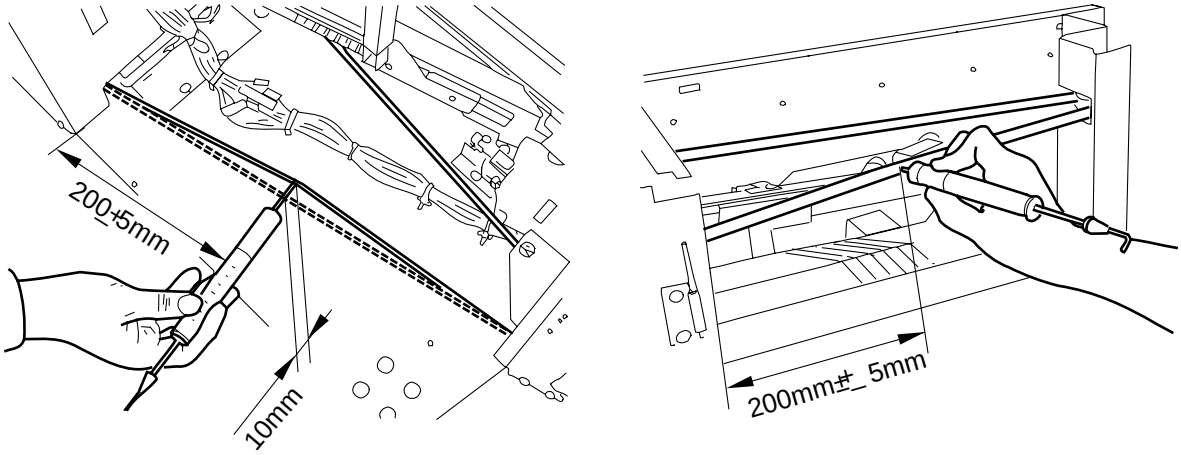

Figure 3-457

COPYRIGHT © 1997 CANON INC.

b. Adjusting the Phase of the Upper/Lower Lead Cam

1) Loosen the two set screws for the lead cam.

Caution:

Adjust the phase only after adjusting the tension of the upper/lower bin drive belt.

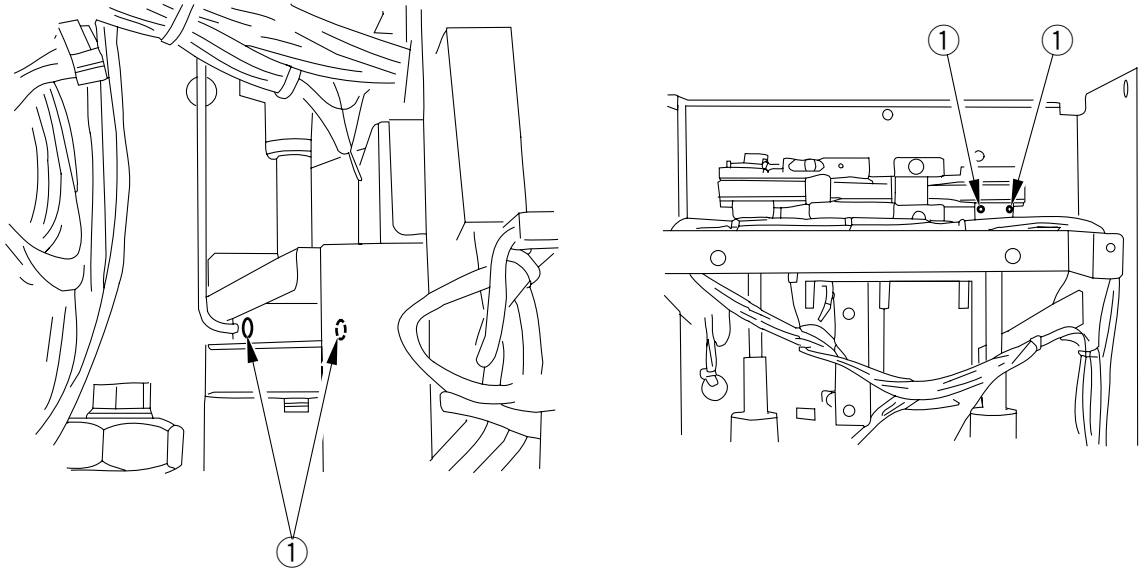

Figure 3-458

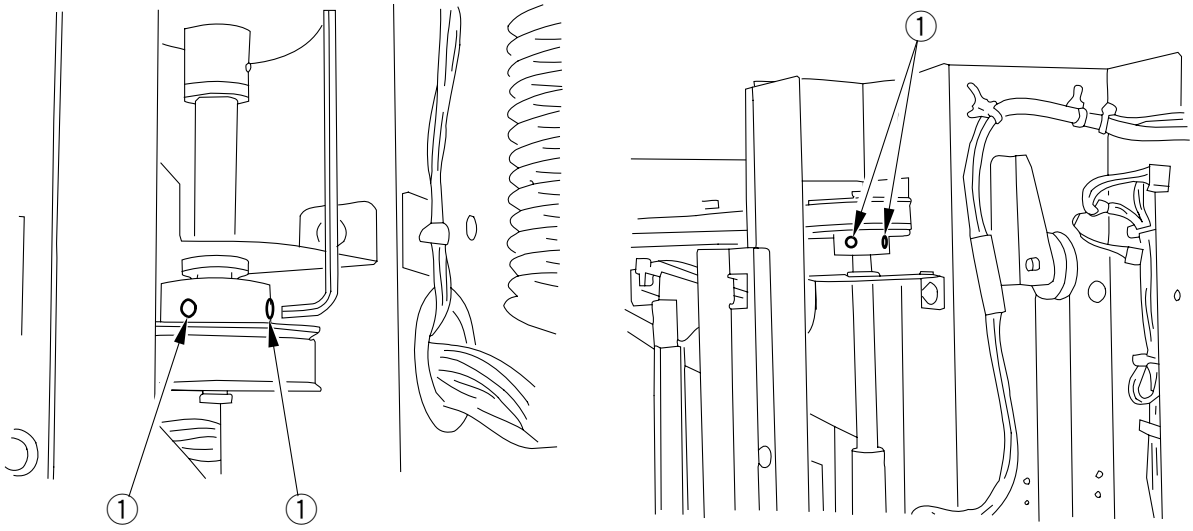

Figure 3-459

2) Make adjustments so that the distance between the start edges of left and right is 160 mm (actual measurement); then, fix the right lead cam in place using the set screw.

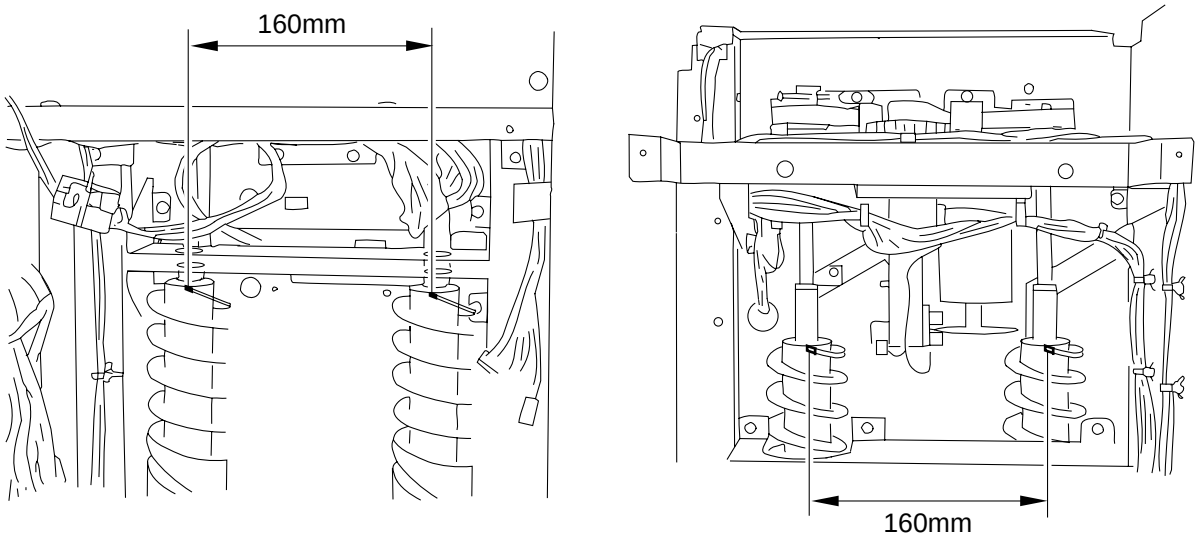

Figure 3-460

3) Turn the left lead cam so that the right start edge is centered in the slit.

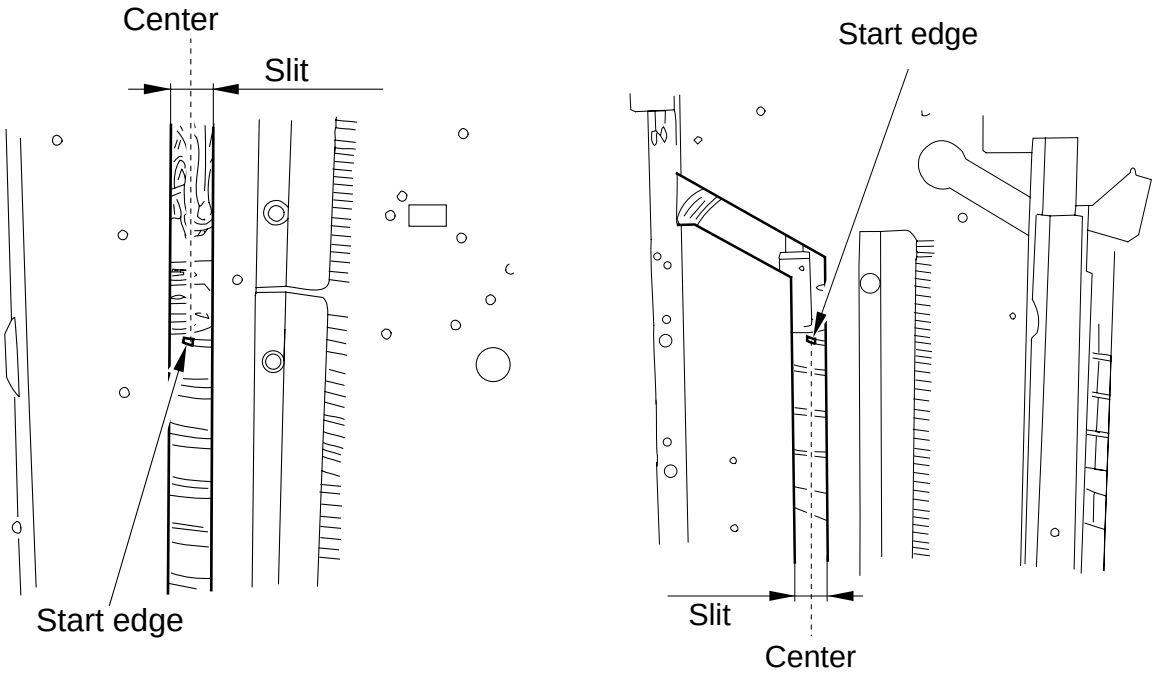

Figure 3-461

COPYRIGHT © 1997 CANON INC.

4) While maintaining the condition of step 3), turn the lead cam at the front so that the front start edge is centered in the slit.

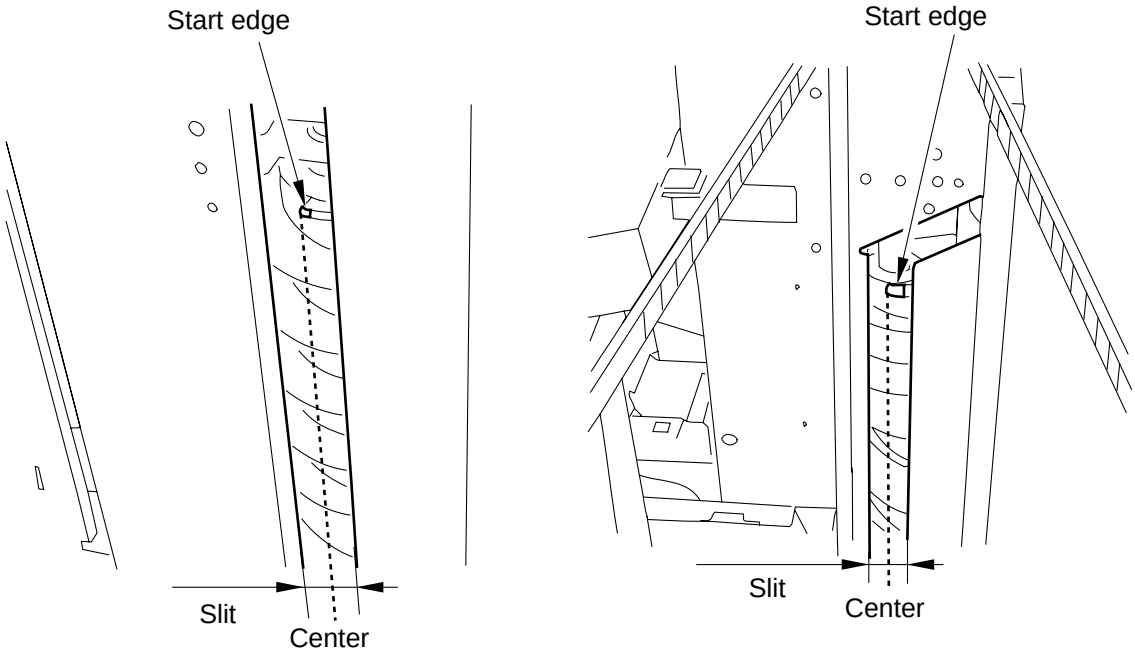

Figure 3-462

D. Guide Bar Unit

1. Removing the Upper Guide Bar Unit

Be sure to move all bins to their bottommost level in advance.

1) Remove the bin cover.
2) Remove the rear left cover.
3) Remove the bin upper cover.
4) Remove the bin left cover and the bin right cover.
5) Remove the upper belt cover ① by removing the four screws ②.

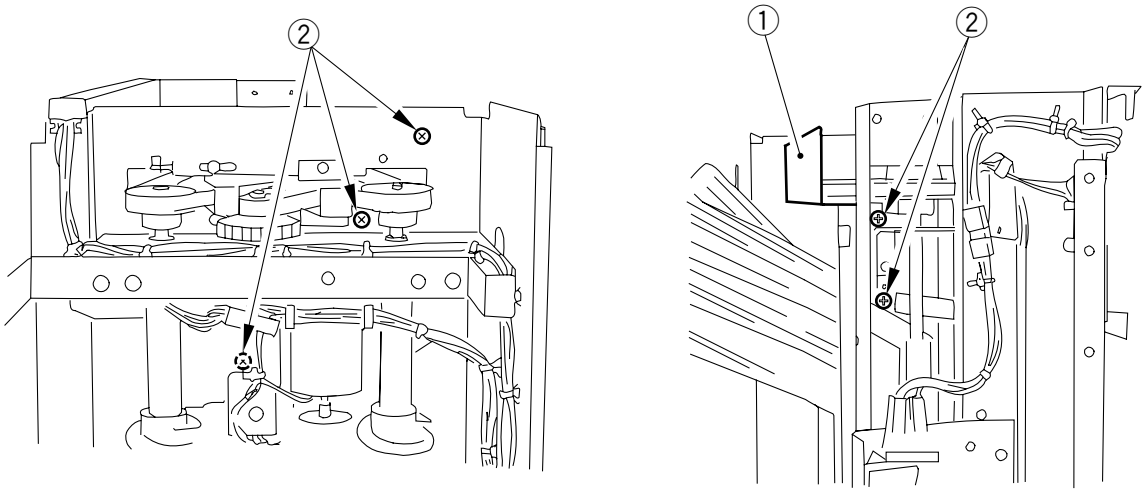

Figure 3-463

COPYRIGHT © 1997 CANON INC.

6) Remove the reference bar retainer (upper) ③ by removing the screw ④.
7) Remove the reference bar (upper) ⑤.

Caution:

Take care not to lose the bushing ⑥.

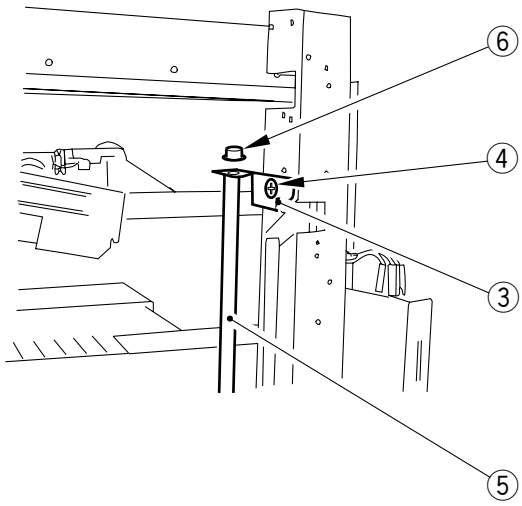

Figure 3-464

8) Remove the upper guide bar unit ⑦ by disconnecting the two connectors ⑧ and removing the three screws ⑨.

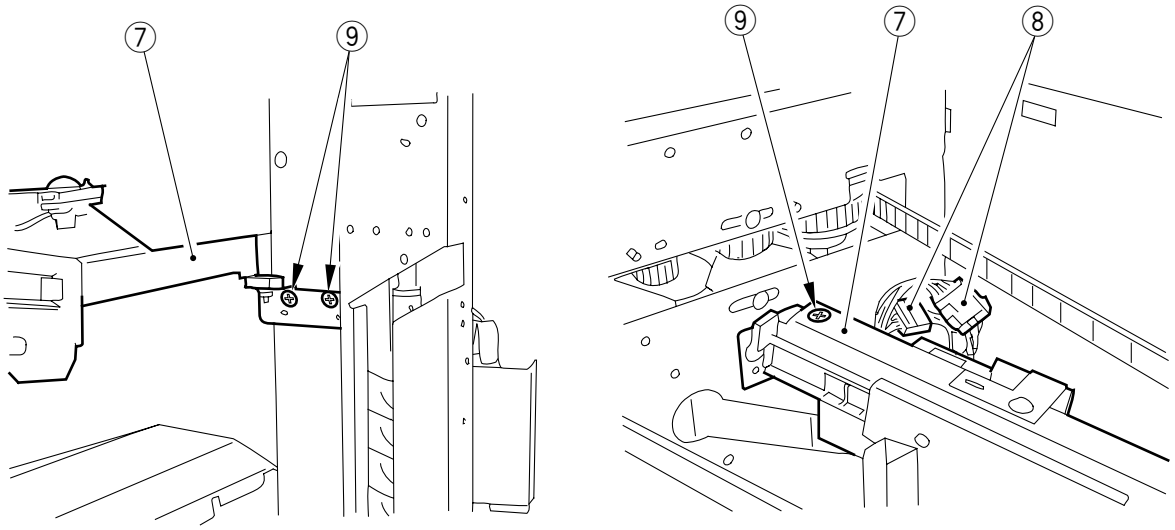

Figure 3-465

2. Removing the Lower Guide Bar Unit

Be sure to move all bins to their bottommost level.

1) Remove the bin cover.
2) Remove the rear left cover.
3) Remove the lower belt cover ① by removing the two screws ②.

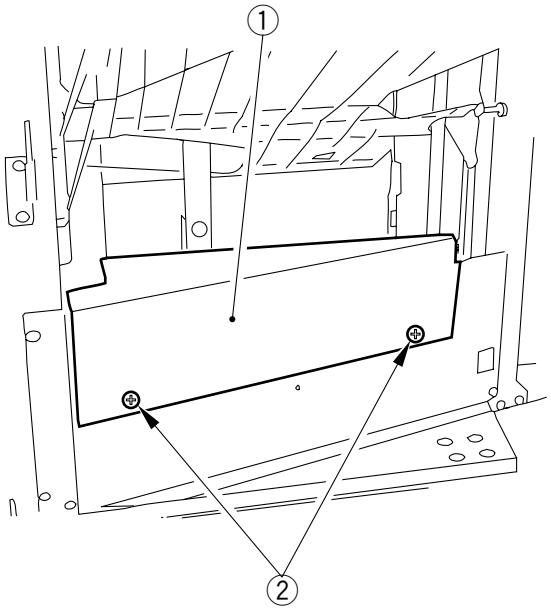

Figure 3-466

4) Remove the lower guide bar ③ by removing the two screws ④.

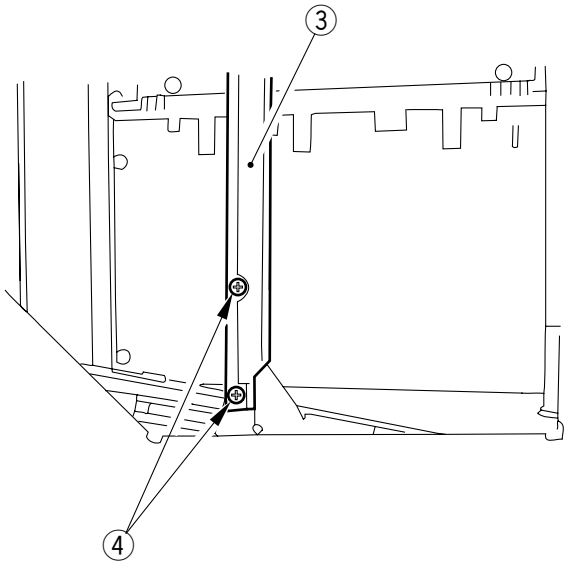

Figure 3-467

COPYRIGHT © 1997 CANON INC.

5) Remove the screw ⑤, and remove the motor cover ⑥.

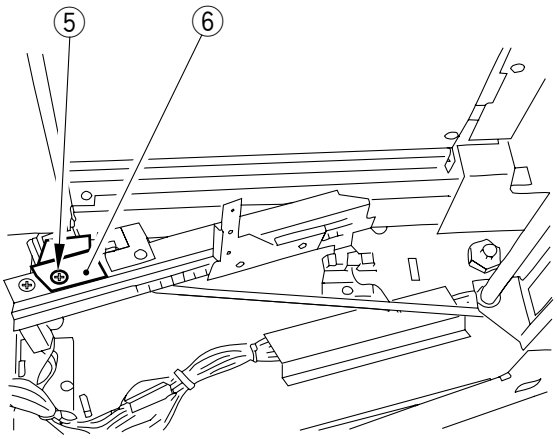

Figure 3-468

6) Remove the lower guide bar unit ⑦ by cutting the harness band ⑧, disconnecting the two connectors ⑨, and removing the three screws ⑩.

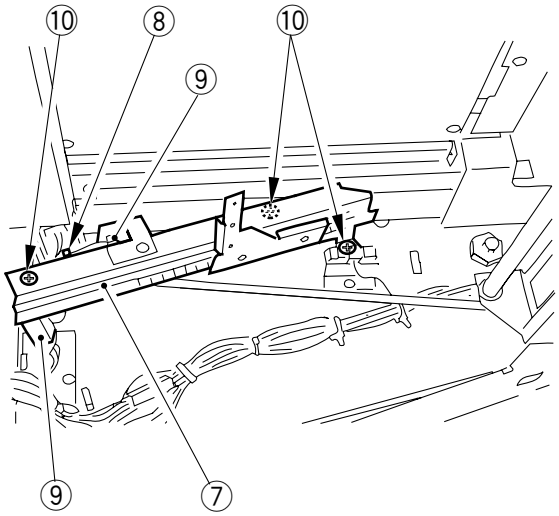

Figure 3-469

3. Installing the Upper/Lower Guide Bar Unit

Install the upper/lower guide bar unit by reversing the steps used to remove it. Then, make the following adjustments:

a. Adjusting the Position of the Upper Guide Bar Unit

Loosen or tighten the two screws 1 so that the guide bar and the reference bar are parallel.

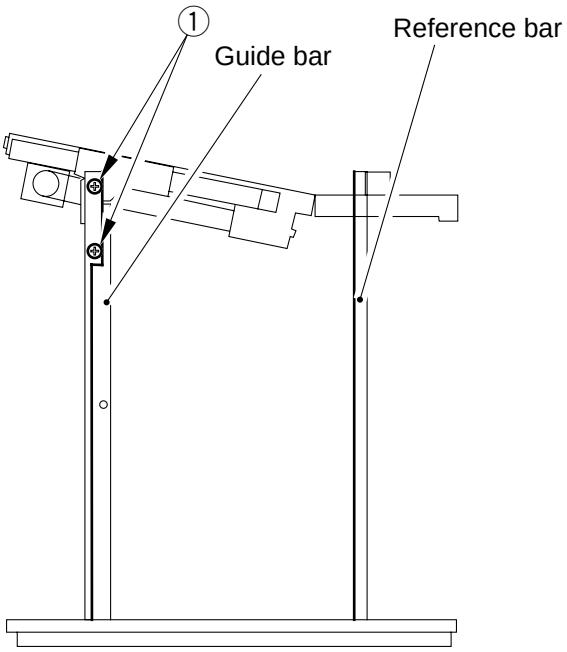

Figure 3-470

COPYRIGHT © 1997 CANON INC.

b. Adjusting the Position of the Lower Guide Bar Unit

Loosen or tighten the two screws ① so that the guide bar and the reference bar are parallel.

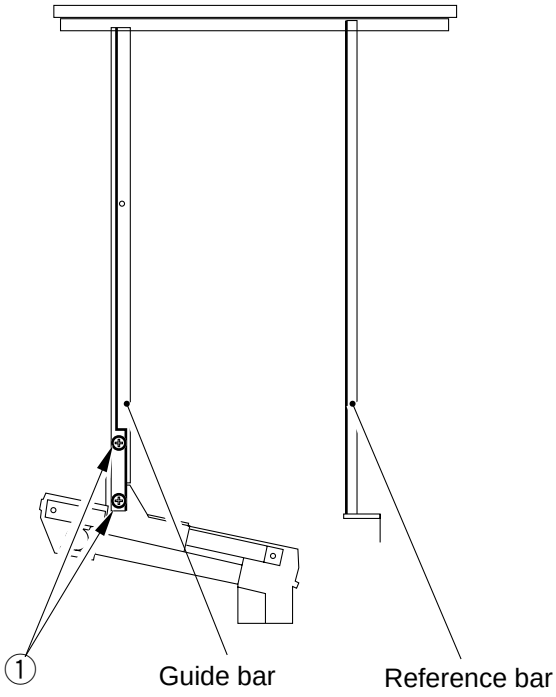

Figure 3-471

E. Guide Bar Motor

1. Removing the Upper/Lower Guide Bar Motor

1) Remove the guide bar unit.
2) Slide the guide bar mount away from the motor.

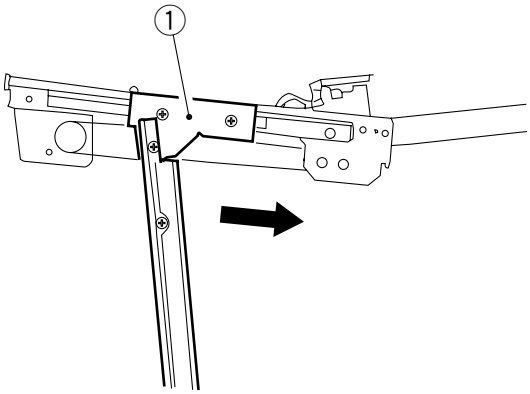

Figure 3-472

3) Remove the guide bar motor ① by cutting the harness band ② and removing the two screws ③.

Caution:

When removing the lower guide bar motor, keep in mind that the harness band ② was cut when removing the lower guide bar unit.

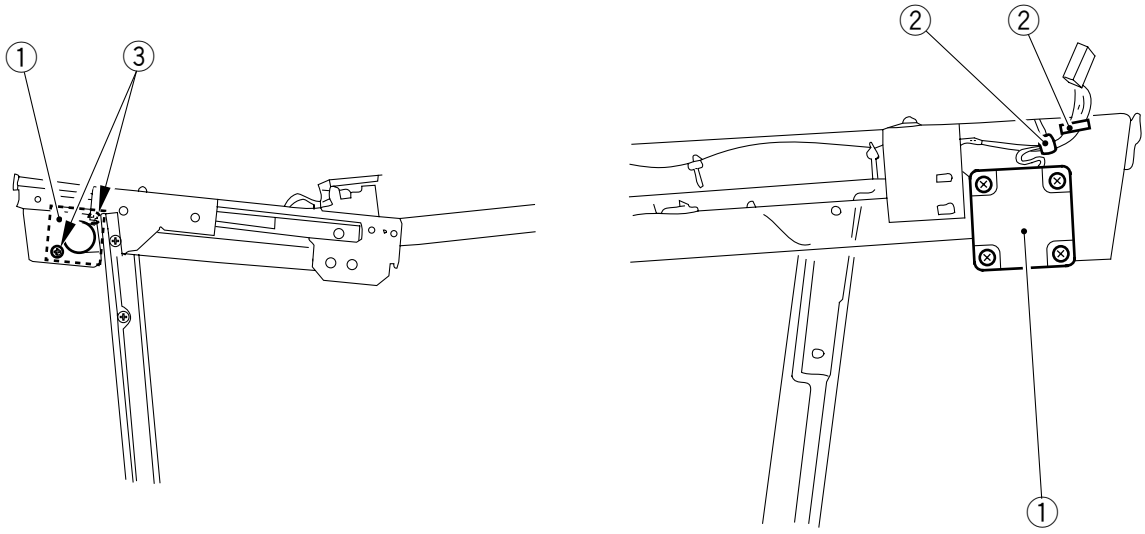

Figure 3-473

COPYRIGHT © 1997 CANON INC.

V. FEEDING UNIT

A. Upper Feeding Mobile Assembly

1. Removing the Upper Feeding Mobile Assembly

1) Remove the bin upper cover, bin right cover, rear left cover, rear right cover, and non-sort delivery assembly.
2) Remove the connector mount ③ by disconnecting the three connectors ④ and removing the two screws ⑤.

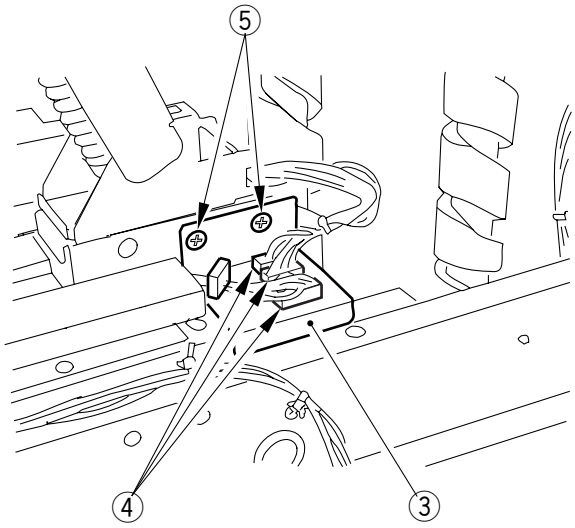

Figure 3-501

COPYRIGHT © 1997 CANON INC.

3) Remove the upper feeding mobile assembly ⑥ in the direction of the arrow by removing the two screws ⑦ (each at front and rear).

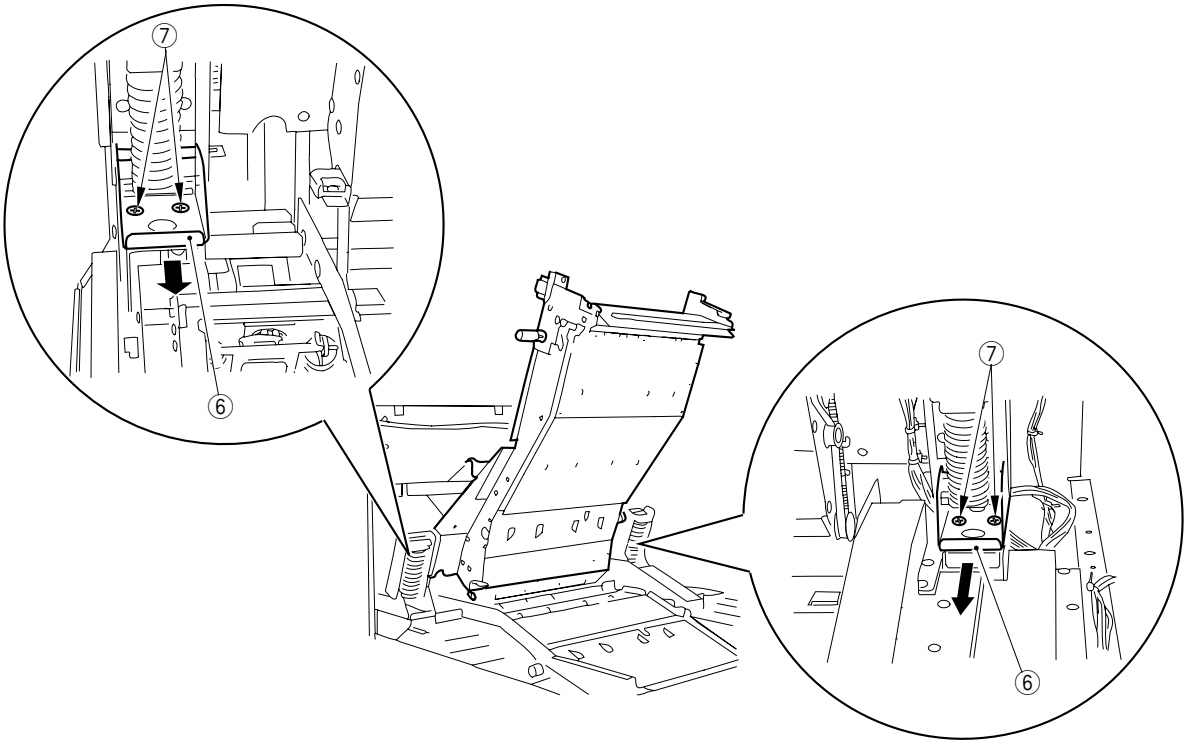

Figure 3-502

Caution:

When installing the upper feeding mobile assembly, make sure that the positioning pin indicated in Figure 3-503 securely fits in the receiving hole when the upper feeding mobile assembly is closed.

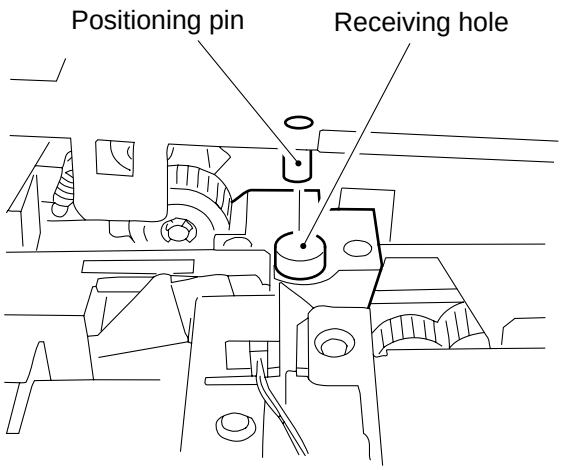

Figure 3-503

COPYRIGHT © 1997 CANON INC.

2. Removing the Upper Feeding Fixed Assembly

1) Lower the stack processing unit in service mode.
2) Separate the finisher from the copier.
3) Detach the paper folding unit (entire unit).
4) Remove the lever (F11).
5) Open the non-sort delivery assembly, and remove the front upper cover.
6) Remove the upper feeding mobile assembly.
7) Remove the common path feeding motor assembly.
8) Remove the mount (rear) ① by removing the four screws ②.
9) Disconnect the two connectors ③, and free the harness from the three harness retainers ④.

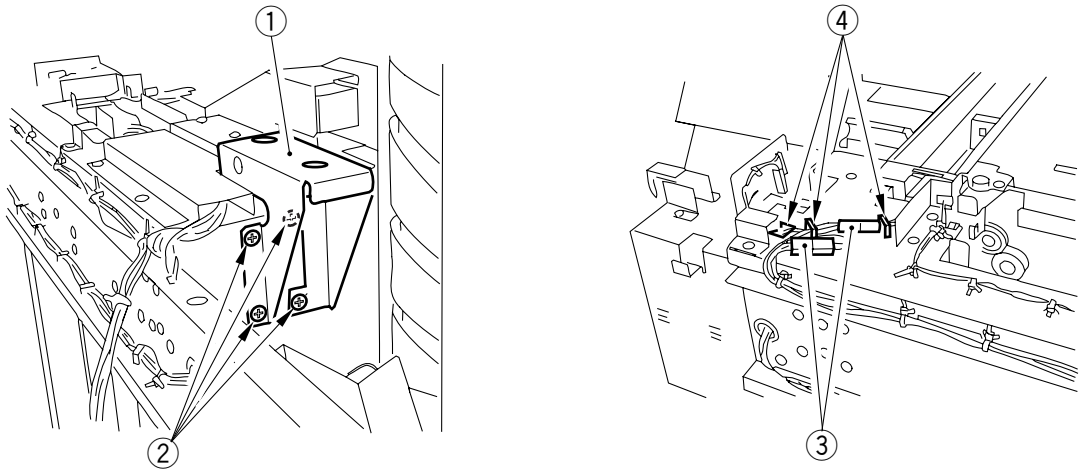

Figure 3-504

10) Remove the belt cover ⑤ by removing the screw ⑥.
11) Remove the timing belt ⑦ by loosening the screw ⑧.

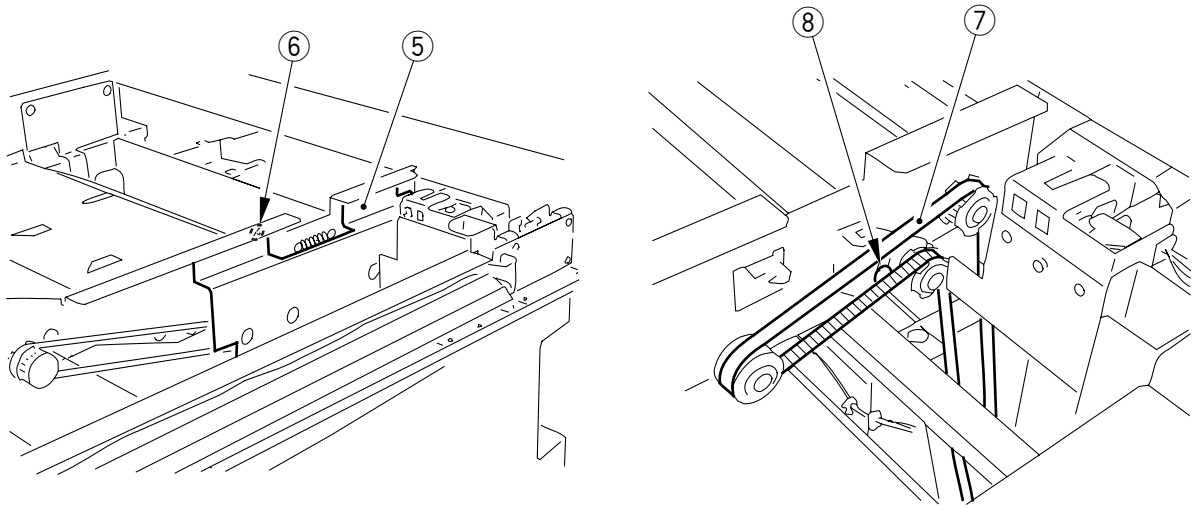

Figure 3-505

12) Remove the upper feeding assembly ⑨ by removing the seven screws ⑩.

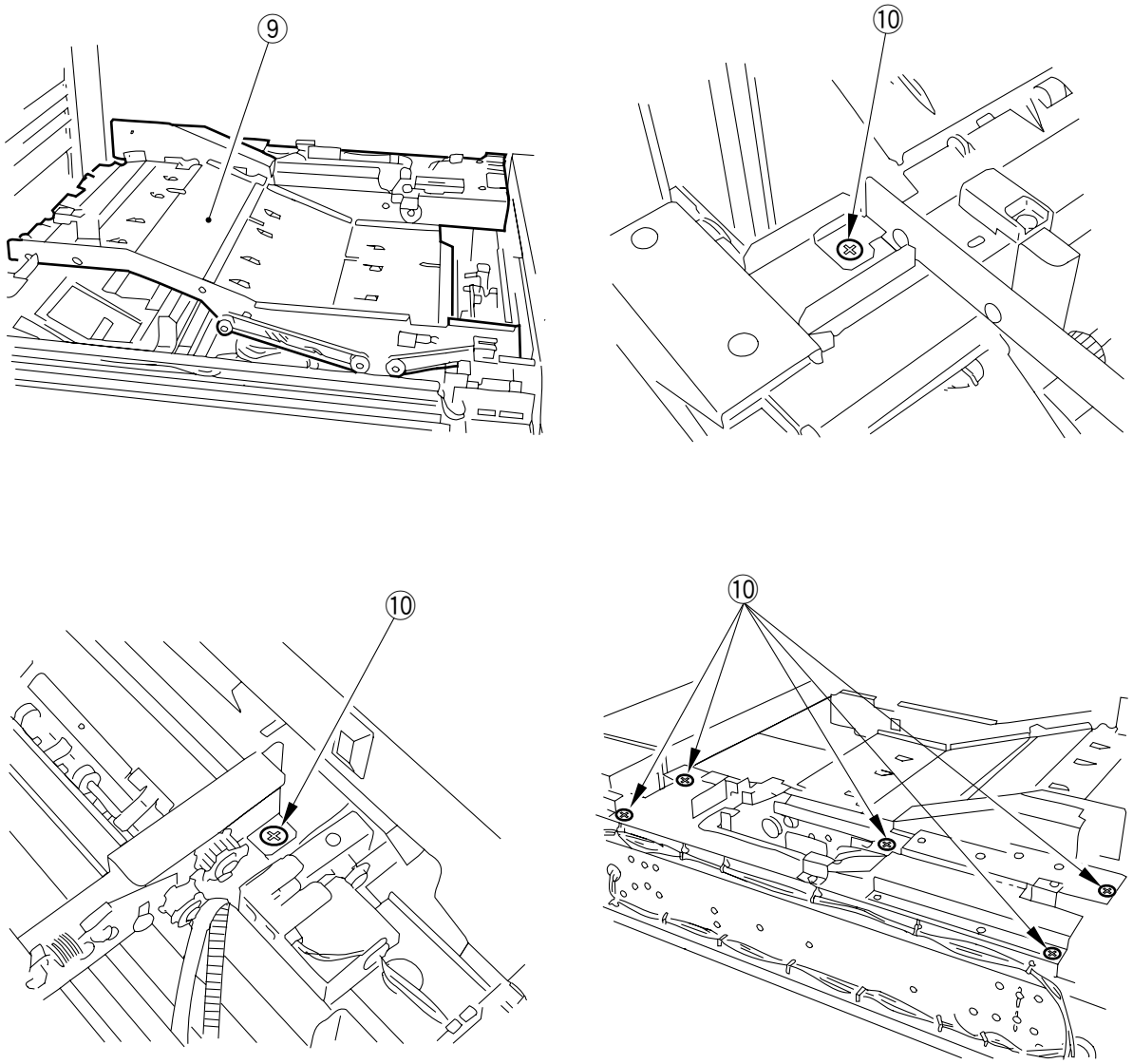

Figure 3-506

COPYRIGHT © 1997 CANON INC.

3. Adjusting the Stroke of the Non-Sort Path Switching Solenoid (SL1)

1) Open the non-sort delivery assembly.
2) Remove the solenoid cover ① by removing the two screws ②.

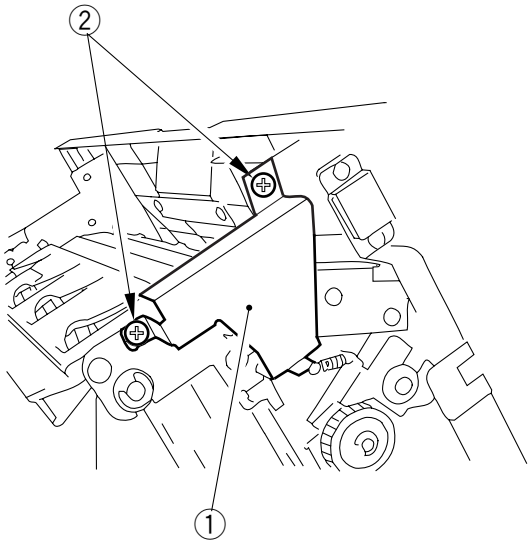

Figure 3-507

3) Loosen the two adjusting screws ③, and turn on the non-sort path switching solenoid (SL1) ④. Adjust the position of the non-sort path switching solenoid (SL1) so that the tip of the flapper ⑤ butts against the stopper rubber ⑥. (approximate stroke of 4 ±0.5 mm).

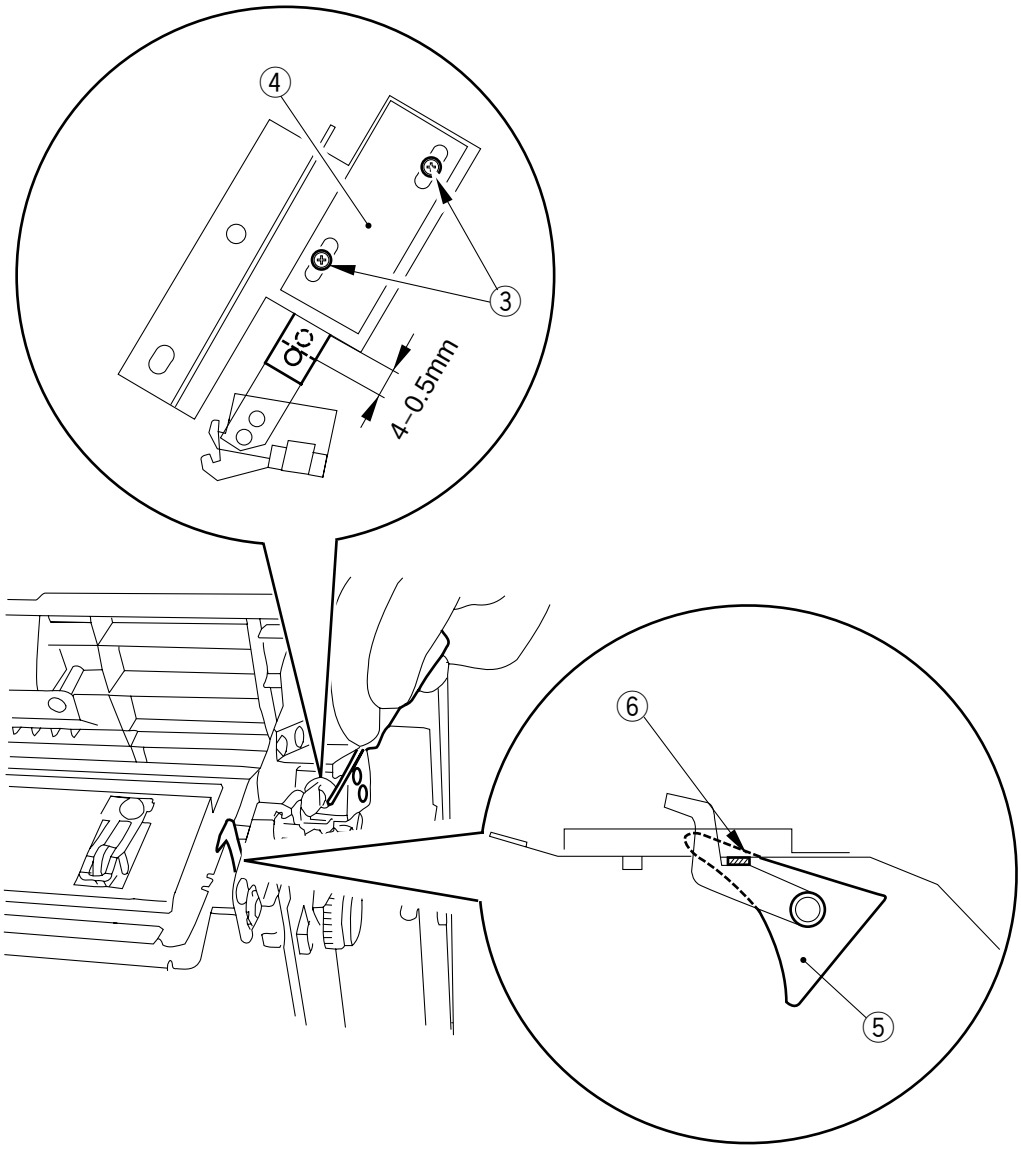

Figure 3-508

COPYRIGHT © 1997 CANON INC.

4. Adjusting the Stroke of the Upper Paddle Solenoid (SL5)

1) Remove the upper feeding mobile assembly.
2) Remove the upper rear cover.
3) Remove the solenoid cover ① by removing the four screws ②.
4) Loosen the two adjusting screws ③, and adjust the position of the upper paddle solenoid (SL5) ④ so that its stroke is 4 ±0.5 mm.

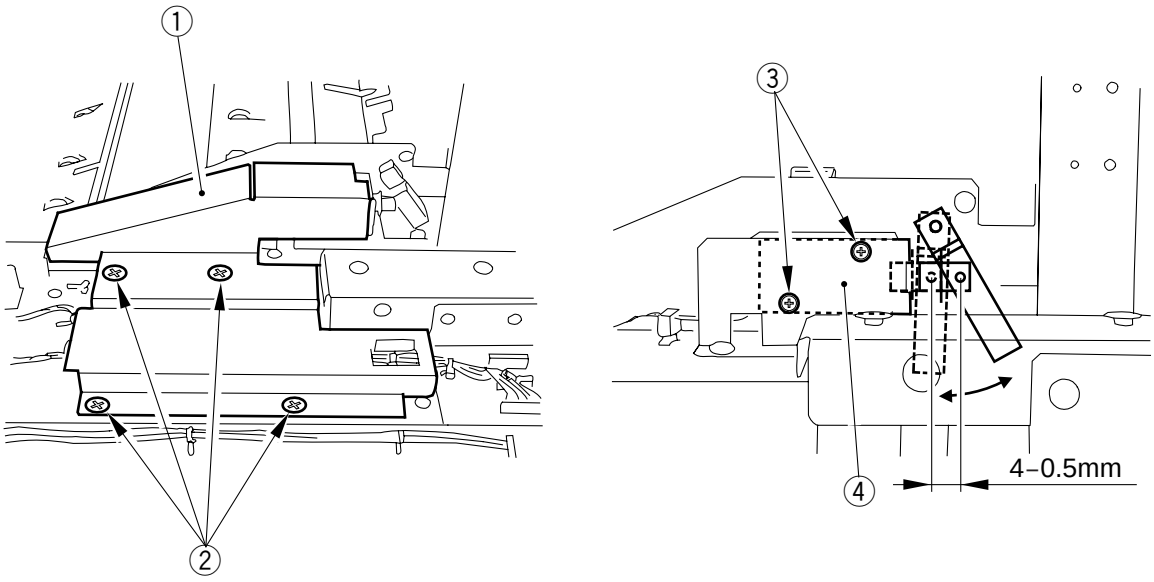

Figure 3-509

B. Vertical Path Unit

1. Removing the Vertical Path Unit

1) Open the front cover, and slide out the vertical path unit.
2) Remove the vertical path unit ① by removing the four screws ②. (Lift the unit to remove.)

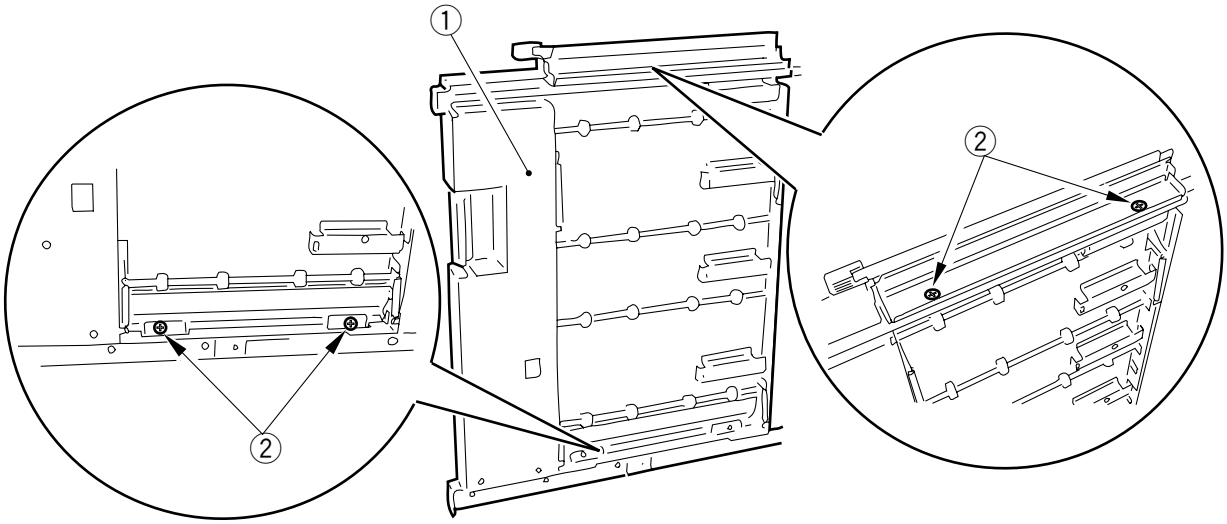

Figure 3-510

COPYRIGHT © 1997 CANON INC.

2. Correcting the Vertical Path Skew

1) Open the front cover, and slide out the vertical path unit.
2) Remove the vertical path cover ① by removing the six screws ②.

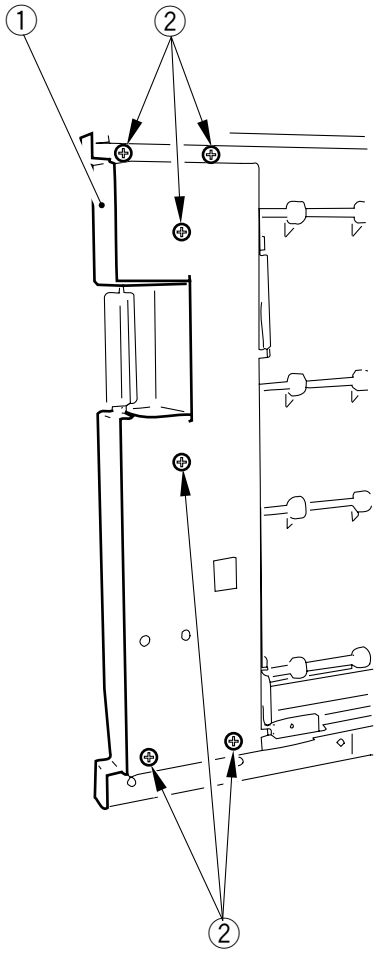

Figure 3-511

3) Loosen the adjusting screw, and make adjustments by moving the adjusting plate left and right.

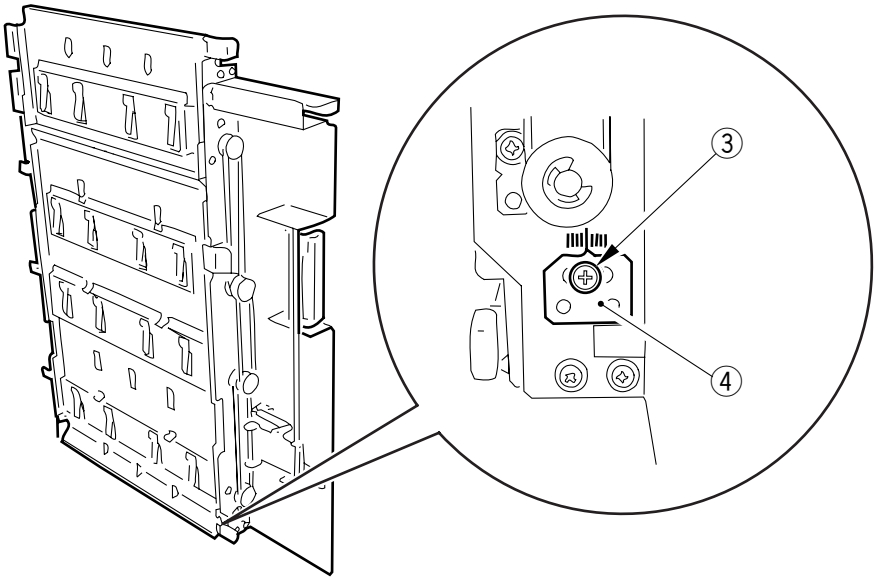

Figure 3-512

COPYRIGHT © 1997 CANON INC.

C. Lower Feeding Assembly

1. Removing the Lower Feeding Assembly

1) Open the front cover, and slide out the lower feeding assembly.
2) Remove the two screws ①.
3) Remove the lower feeding assembly ② by removing the two stepped screws ③.

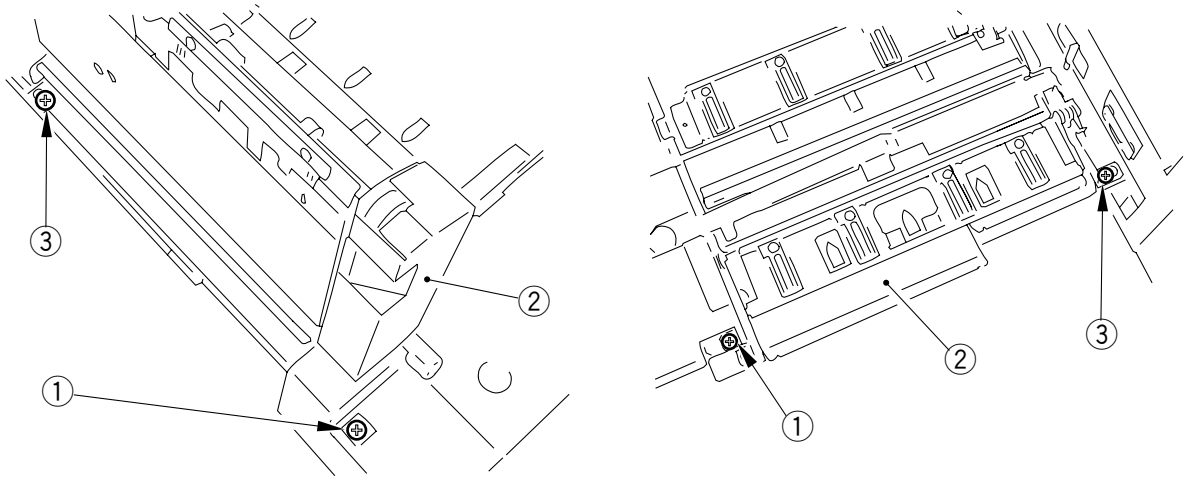

Figure 3-513

2. Removing the Lower Paddle Unit

1) Open the front cover, and slide out the lower feeding assembly.
2) Remove the rear right cover.
3) Remove the belt cover.
4) Open the bin cover, and remove the lower belt cover ① by removing the two screws ②.

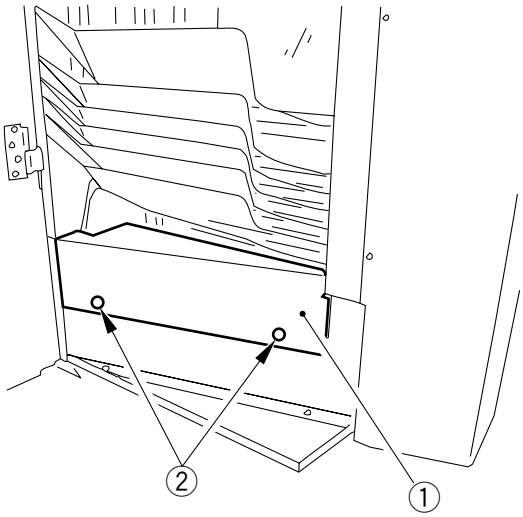

Figure 3-514

5) Move the lower bin drive belt ⑤ in the direction of the arrow by hand so that all lower bins are at the topmost position.



figure 3-515

COPYRIGHT © 1997 CANON INC.

6) Remove the screw ⑥, and disconnect the two connectors ⑦; then, free the harness from the two harness guides ⑧.

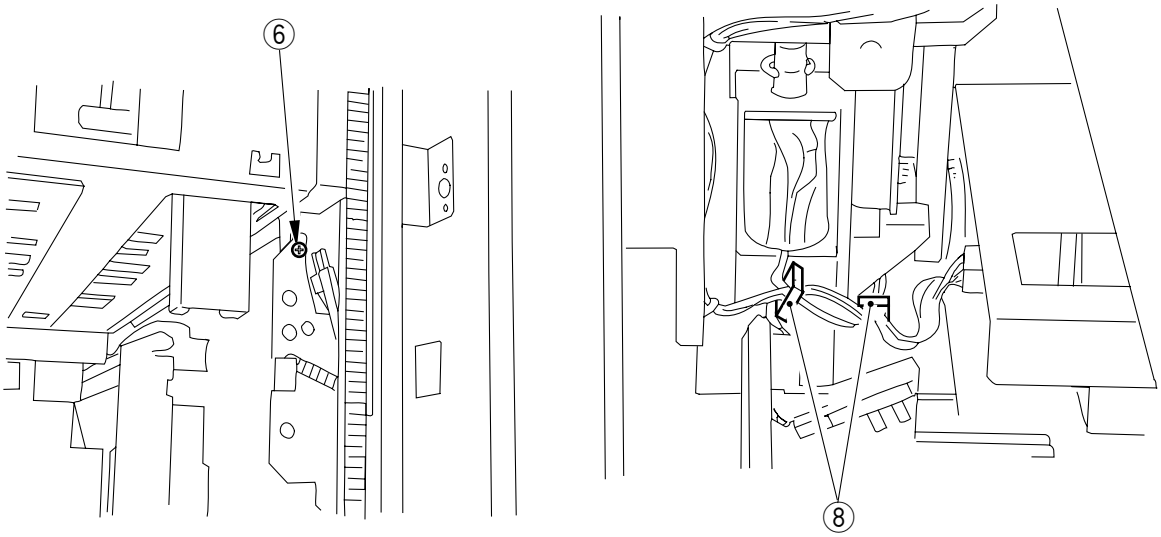

Figure 3-516

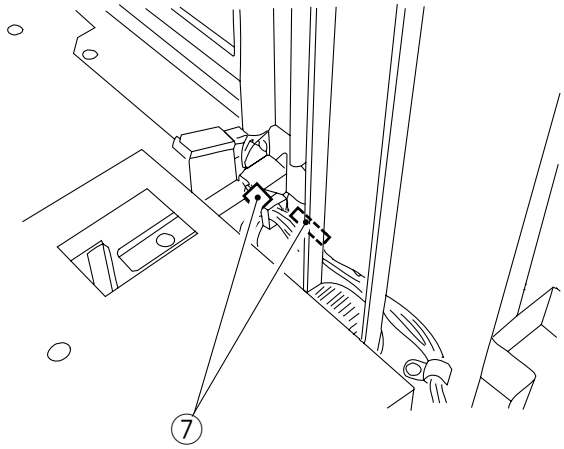

Figure 3-517

7) Remove the lower paddle unit ⑨ by removing the two screws ⑩.

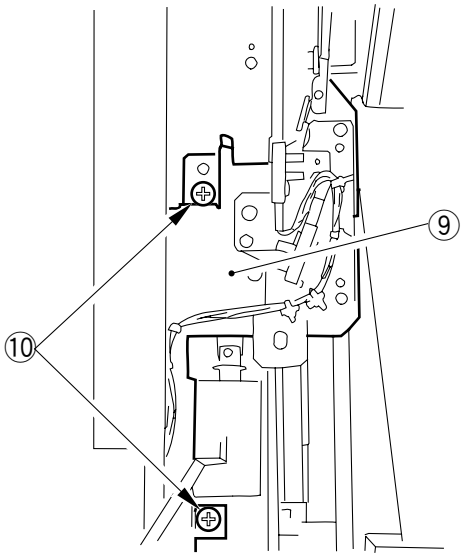

Figure 3-518

3. Adjusting the Stroke of the Lower Paddle Solenoid (SL6)

1) Remove the lower paddle unit.
2) Loosen the two adjusting screws ①, and butt the lower paddle arm ② against section Ⓐ. adjust the position of the lower paddle solenoid (SL6) ③ so that the lower paddle solenoid (SL6) and the E-ring ④ of the plunger are in contact with each other without a gap.

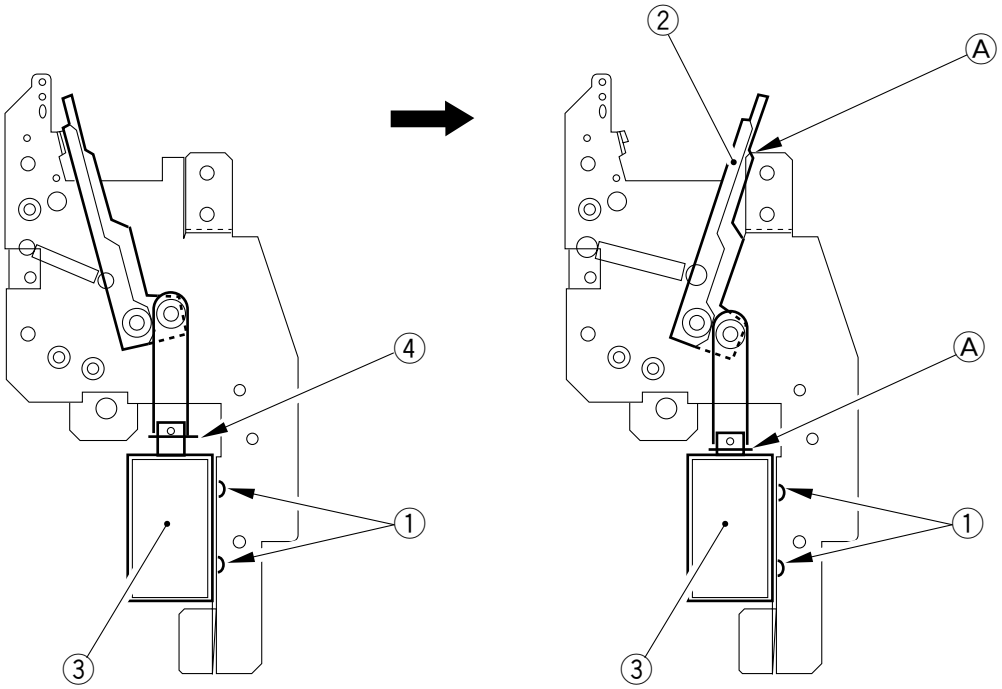

Figure 3-519

COPYRIGHT © 1997 CANON INC.

D. Inlet Unit

1. Removing the Inlet Unit

1) Separate the finisher from the copier.
2) Detach the paper folding unit (entire unit).
3) Remove the gear cover ① by removing the three screws ②.

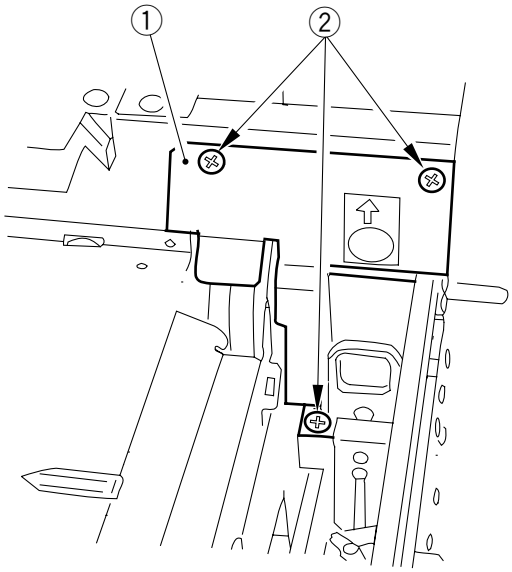

Figure 3-520

4) Remove the inlet unit ③ by disconnecting the connector ④, and removing the five screws ⑤ and the timing belt ⑥.

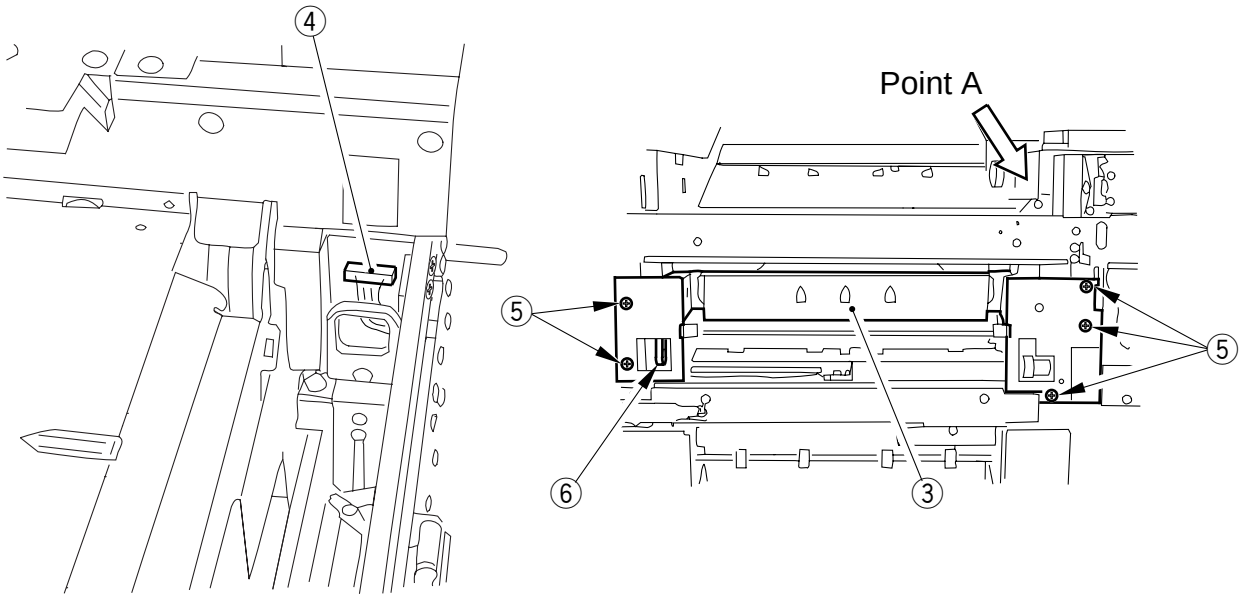

(As viewed from point A)

Figure 3-521

2. Adjusting the Stroke of the Path Switching Solenoid (SL2)

Loosen the two adjusting screws, and turn on the path switching solenoid (SL2). Adjust the position of the path switching solenoid (SL2) so that the tip of the flapper butts against the stopper rubber. (stroke reference of 4.5 ±0.5 mm)

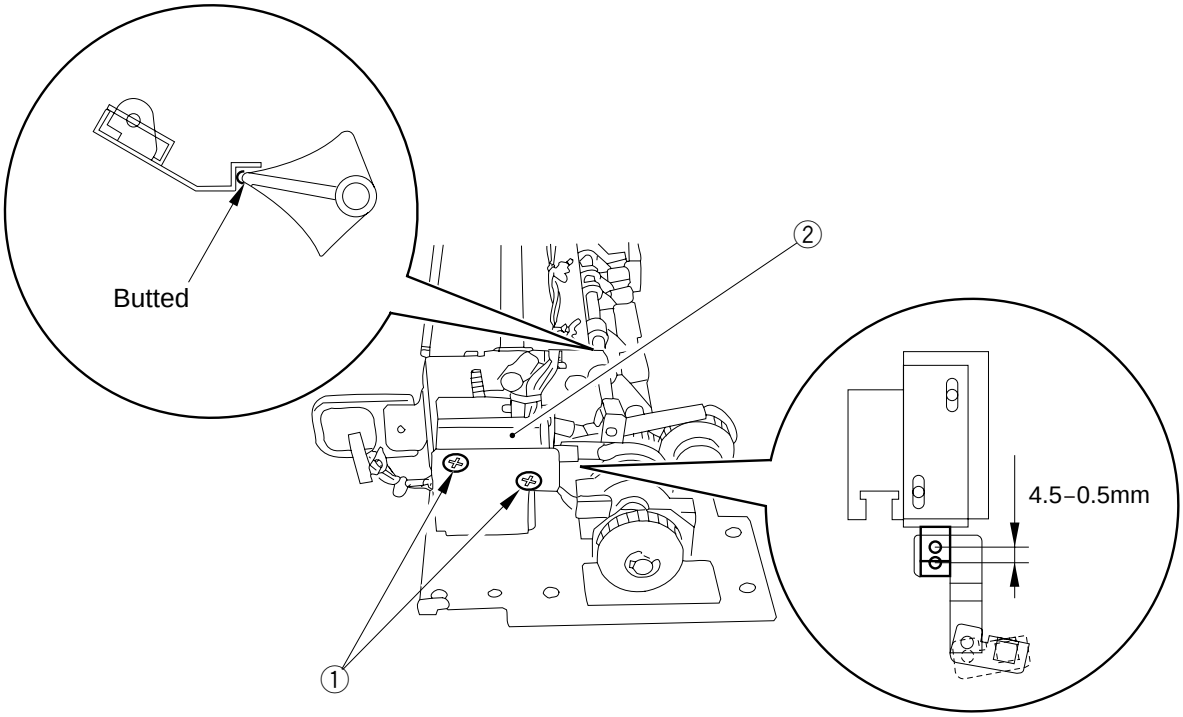

Figure 3-522

COPYRIGHT © 1997 CANON INC.

E. Removing the Common Path Feeding Motor (M1)

1) Open the non-sort delivery assembly, and remove the rear upper cover.
2) Remove the common path feeding motor assembly ① by removing the four screws ②.
3) Remove the common path feeding motor assembly ③ by disconnecting the connector ④ and removing the harness retainer ⑤.

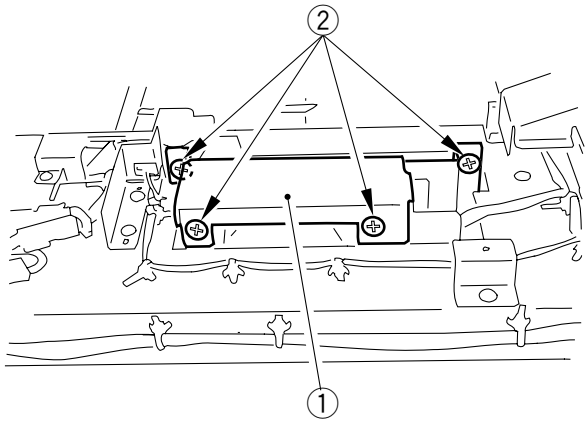

Figure 3-523

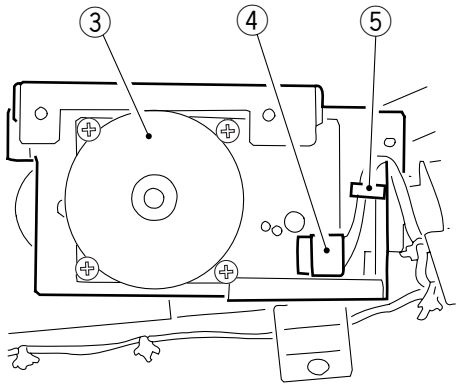

Figure 3-524

COPYRIGHT © 1997 CANON INC.

F. Removing the Upper Path Feeding Motor (M2)

1) Remove the non-sort delivery assembly.
2) Remove the upper path feeding motor PCB ① by disconnecting the two connectors ② and removing the screw and three spacers ④.

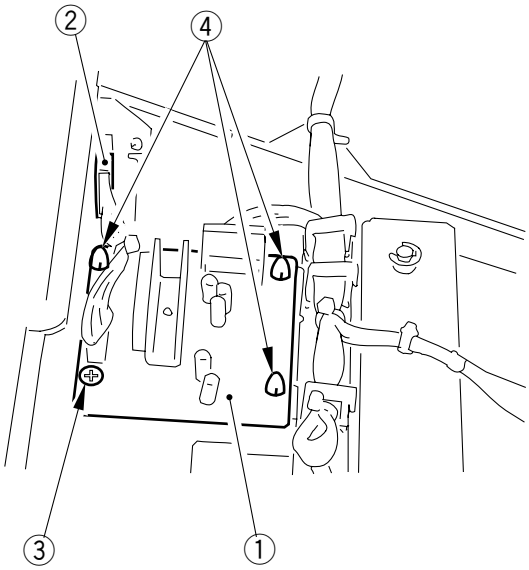

Figure 3-525

3) Open the upper feeding assembly.
4) Remove the drive belt ⑤ by loosening the screw ⑥ on the tensioner.

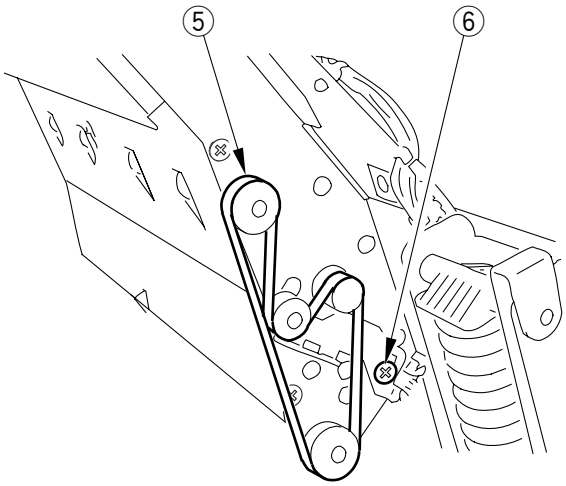

Figure 3-526

COPYRIGHT © 1997 CANON INC.

5) Remove the feeding guide ⑦ by removing the seven screws ⑧.

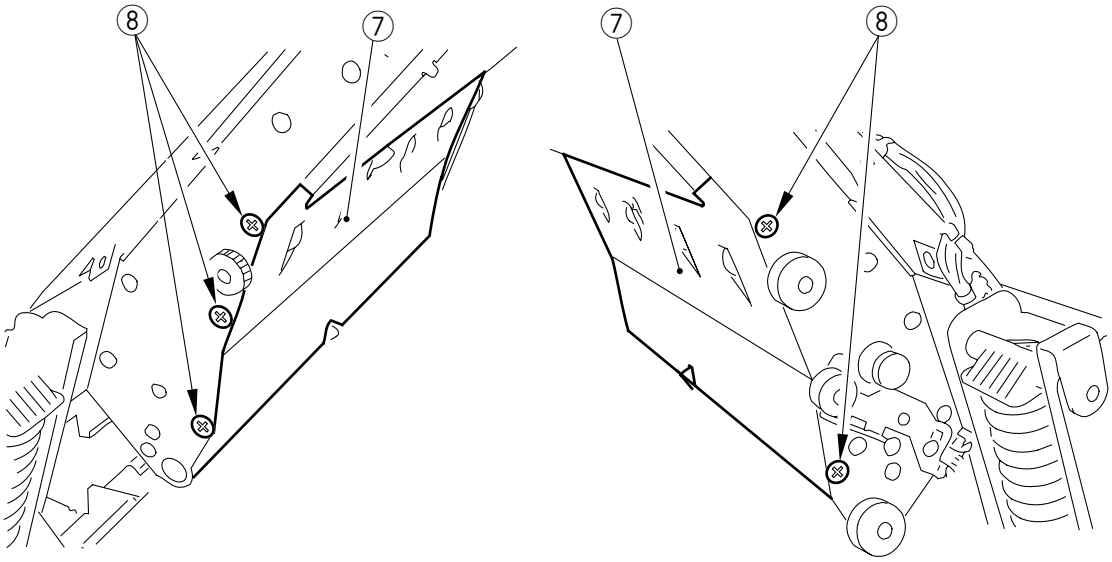

Figure 3-527

6) Remove the upper path feeding motor ⑨ by removing the two screws ⑩.

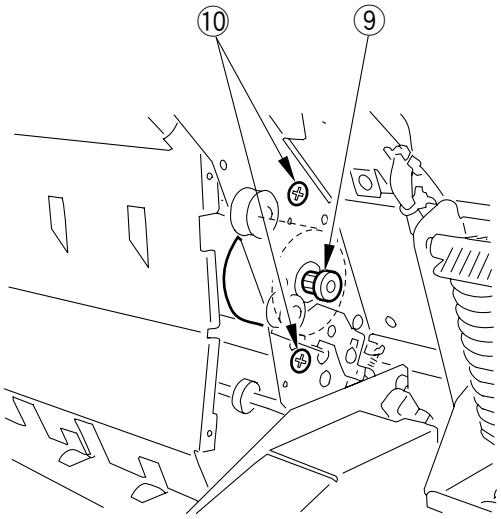

Figure 3-528

COPYRIGHT © 1997 CANON INC.

G. Removing the Lower Path Feeding Motor (M3)

1) Open the front cover, and slide out the lower feeding assembly.
2) Remove the rear right cover.
3) Remove the belt cover ① by removing the five screws ②.

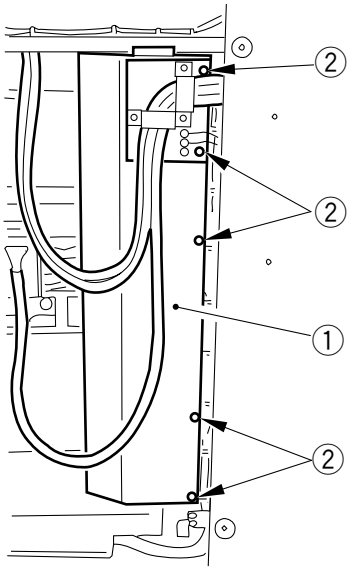

Figure 3-529

4) Remove the drive assembly cover ③ by removing the four screws ④.

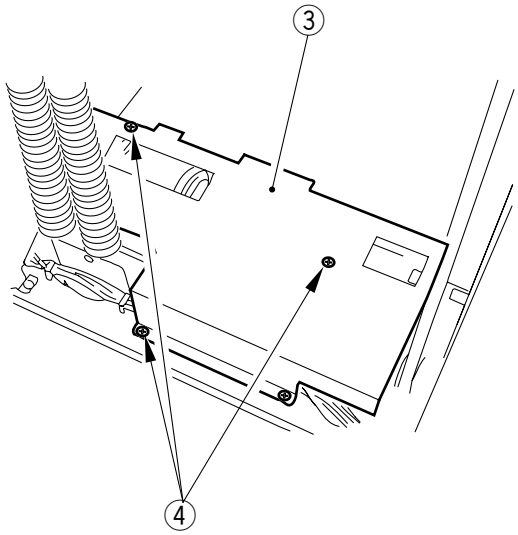

Figure 3-530

5) Remove the lower path feeding motor assembly ⑤ by disconnecting the connector ⑥ and removing the three screws ⑦.

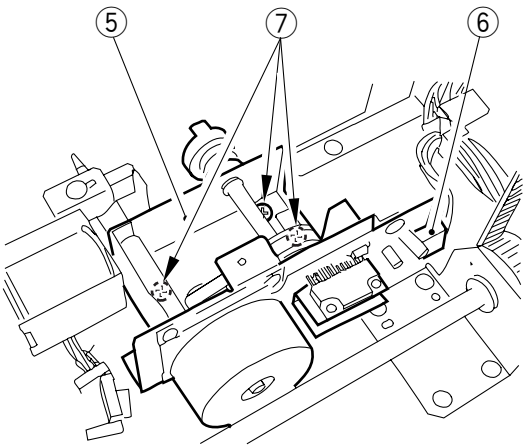

Figure 3-531

6) Remove the lower path feeding motor (M3) ⑧ by removing the six screws ⑨.

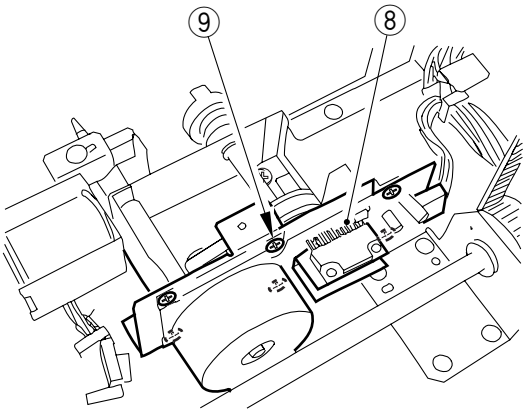

Figure 3-532

COPYRIGHT © 1997 CANON INC.

VI. Stack Processing Unit

A. Stack Processing Unit

1. Fixing the Stack Processing Unit in Place

1) Turn on and then off the power switch; then, move the stack processing unit to home position.
2) Disconnect the power cord from the power outlet; then, remove the rear right cover.
3) Remove the belt cover ① by removing the five screws ②.
4) Remove the two metal fixings D ③ by removing the screw ④ (one each).

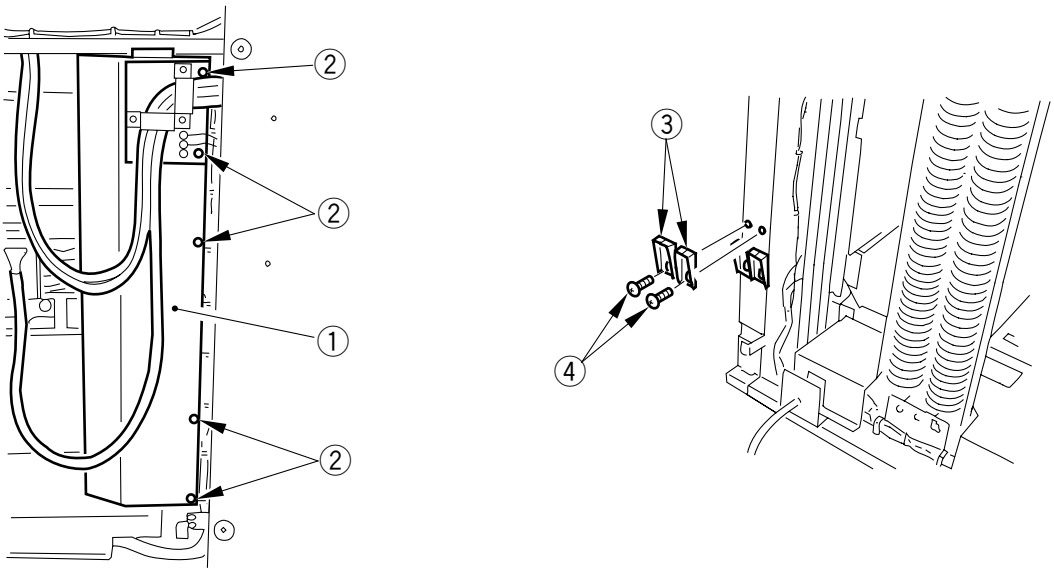

Figure 3-601

5) Install the two metal fixings D ⑤ to the left/right rail assembly of the stack processing unit using the screws ⑥ removed in step 4) as indicated.

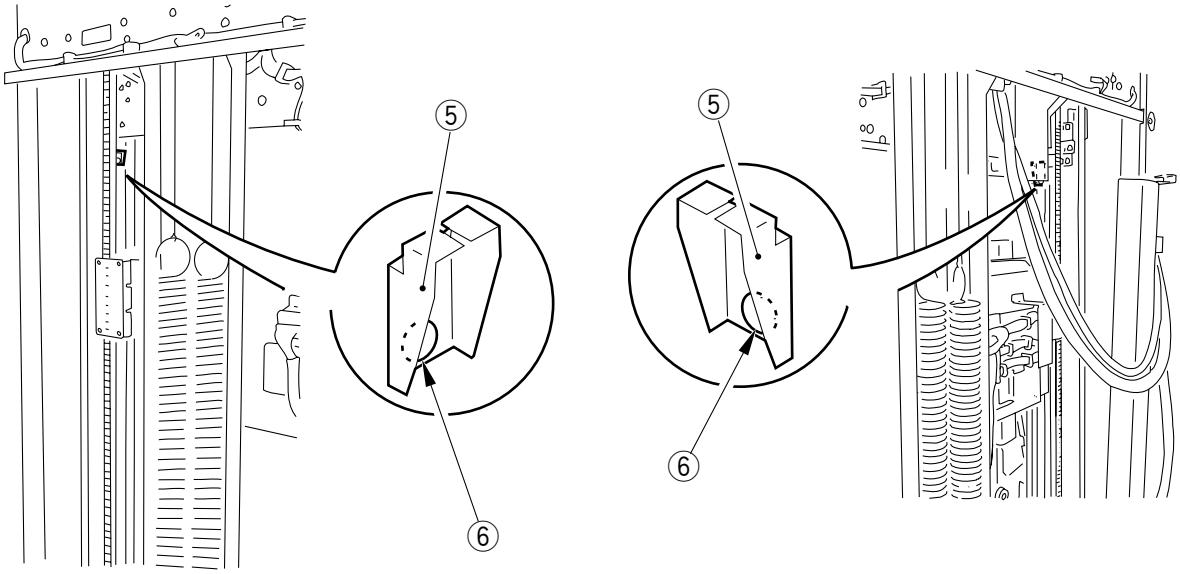

Figure 3-602

6) Remove the metal fixing A ⑦ and the metal fixing B ⑧ by removing the six screws ⑨.

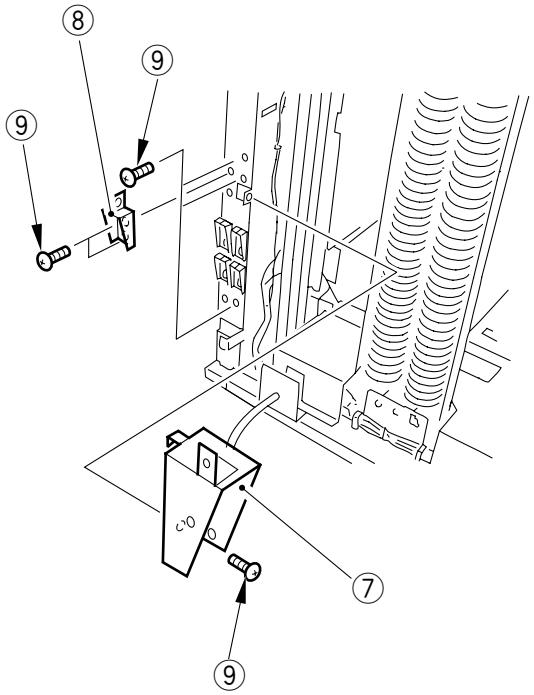

Figure 3-603

COPYRIGHT © 1997 CANON INC.

7) Open the front cover, and install the metal fixing A ⑦ and the metal fixing B ⑧ to the finisher's frame as indicated using the six screws ⑨ removed in step 6).

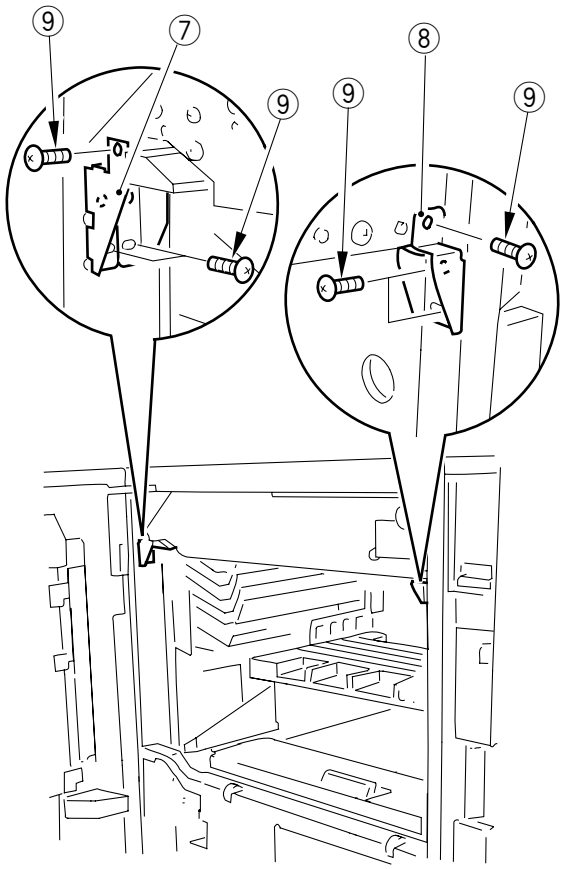

Figure 3-604

2. Removing the Stack Processing Unit Shift Motor Assembly

1) Fix the stack processing unit in place using a metal fixing.
2) Move the front gripper ① by hand to the left end.

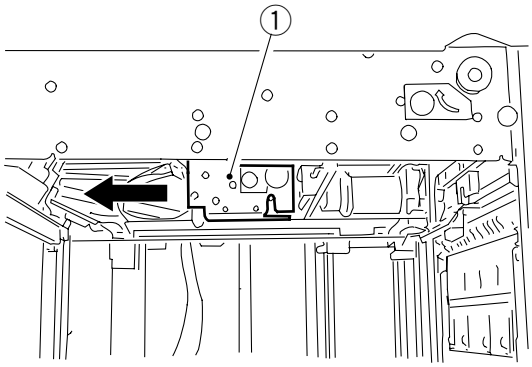

Figure 3-605

3) Remove the spring cover ② by removing the three screws.
4) Remove the sensor assembly ④ by disconnecting the connector ⑤ and removing the two screws ⑥.

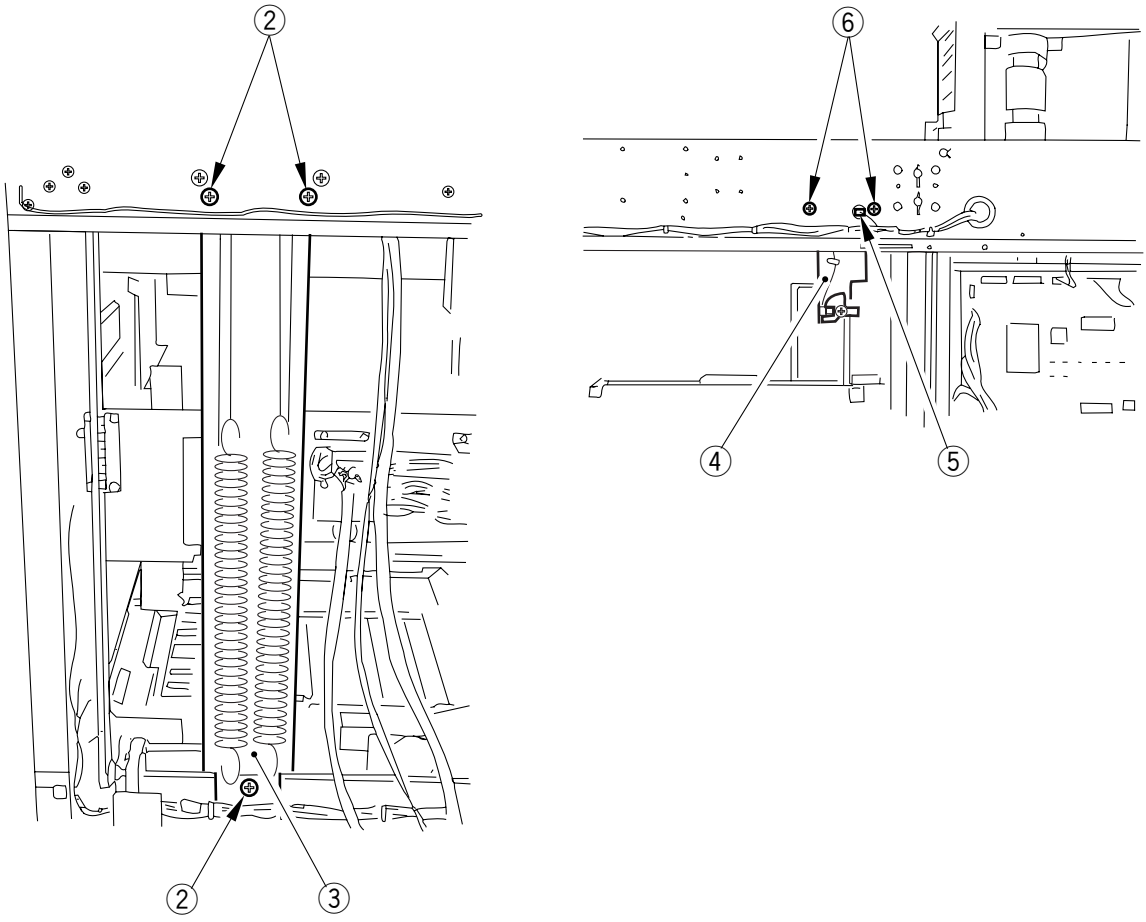

Figure 3-606

COPYRIGHT © 1997 CANON INC.

5) Remove the guide ⑦ by removing the four screws ⑧.
6) Remove the sensor ⑨ by removing the screw ⑩ and disconnecting the connector ⑪.

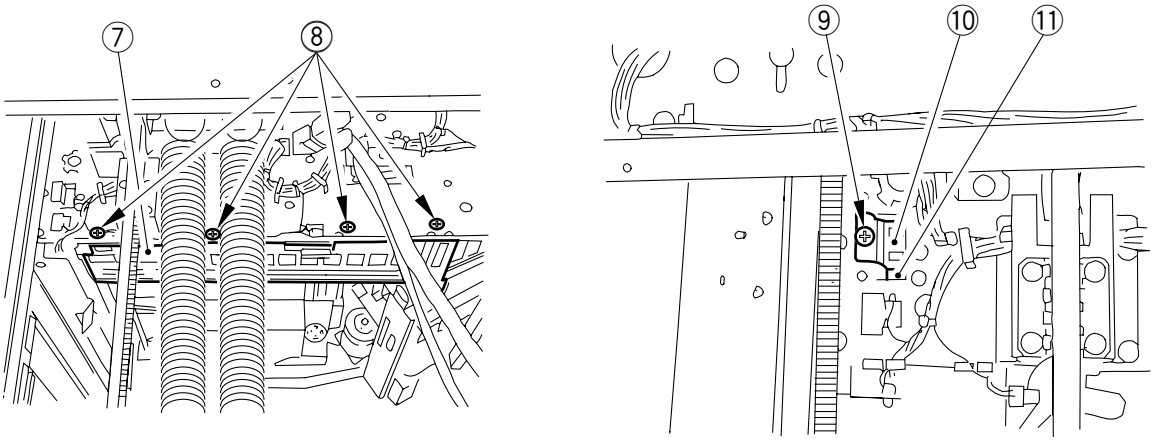

Figure 3-607

7) Remove the harness cover ⑫ by removing the screw ⑬.

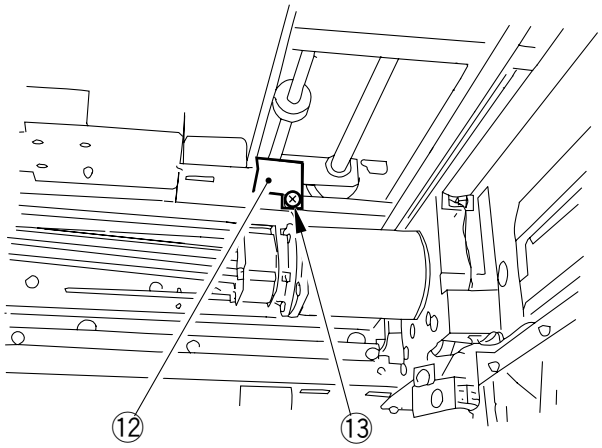

Figure 3-608

8) Remove the harness guide plate ⑭ by disconnecting the connector ⑮, removing the screw ⑯, and freeing the harness from the edge saddle ⑰.
9) Disconnect the two connectors ⑱, and free the harness from the edge saddle ⑲.

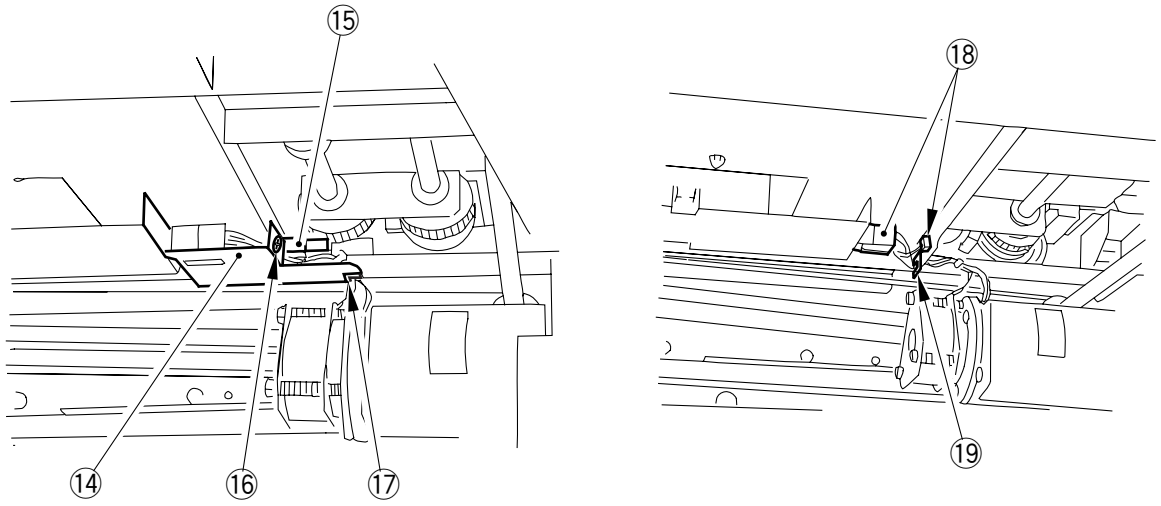

Figure 3-609

10) Remove the connector cover ⑳ by removing the screw ㉑.

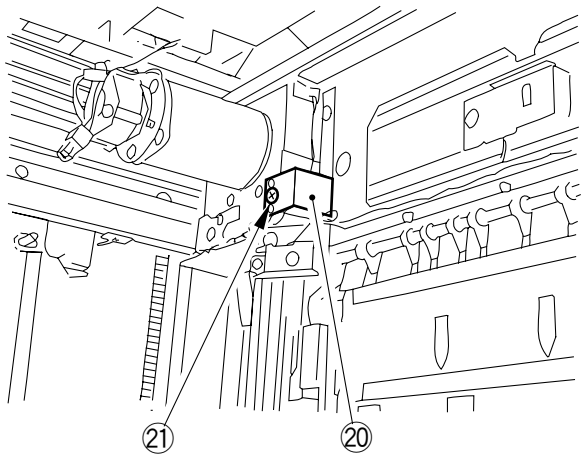

Figure 3-610

COPYRIGHT © 1997 CANON INC.

11) Remove the stack processing unit shift motor assembly ㉒ by disconnecting the connector ㉓ and removing the four screws ㉔.

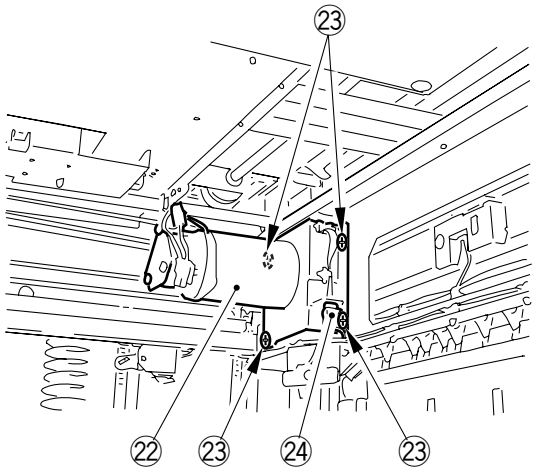

Figure 3-611

Caution:

When installing the stack processing unit shift motor assembly, be sure to attach the drive belt to the gear securely. Further, be sure to fit the shaft of the gear in the receiving hole as indicated.

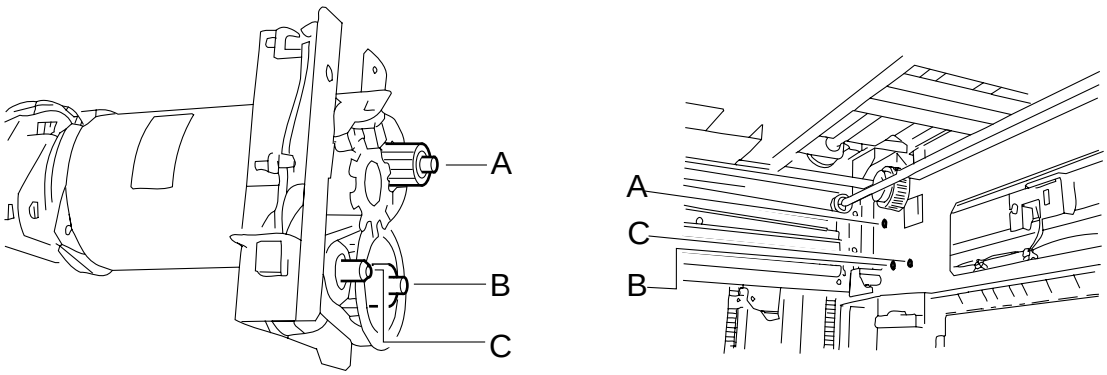

Figure 3-612

B. Removing the Side Gripper Left/Right Shift Drive Assembly

1) Lower the stack processing unit and the stacker unit in service mode.
2) Remove the two screws ①, and remove the cover ②.

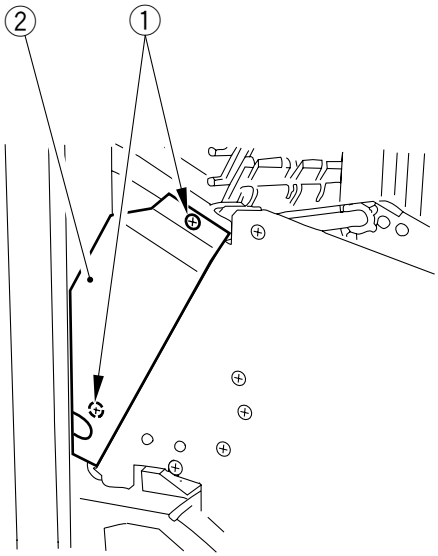

Figure 3-613

3) Disconnect the connector ③.

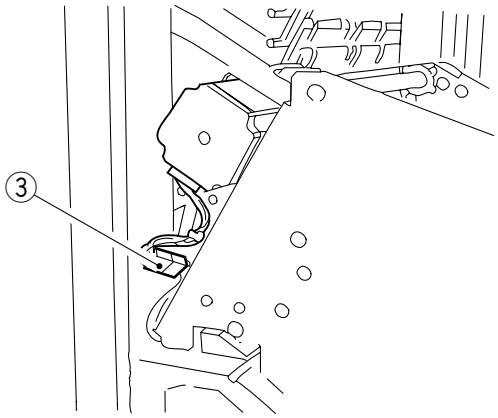

Figure 3-614

COPYRIGHT © 1997 CANON INC.

4) Remove the side gripper left/right shift drive assembly ④ by removing the four screws ⑤.

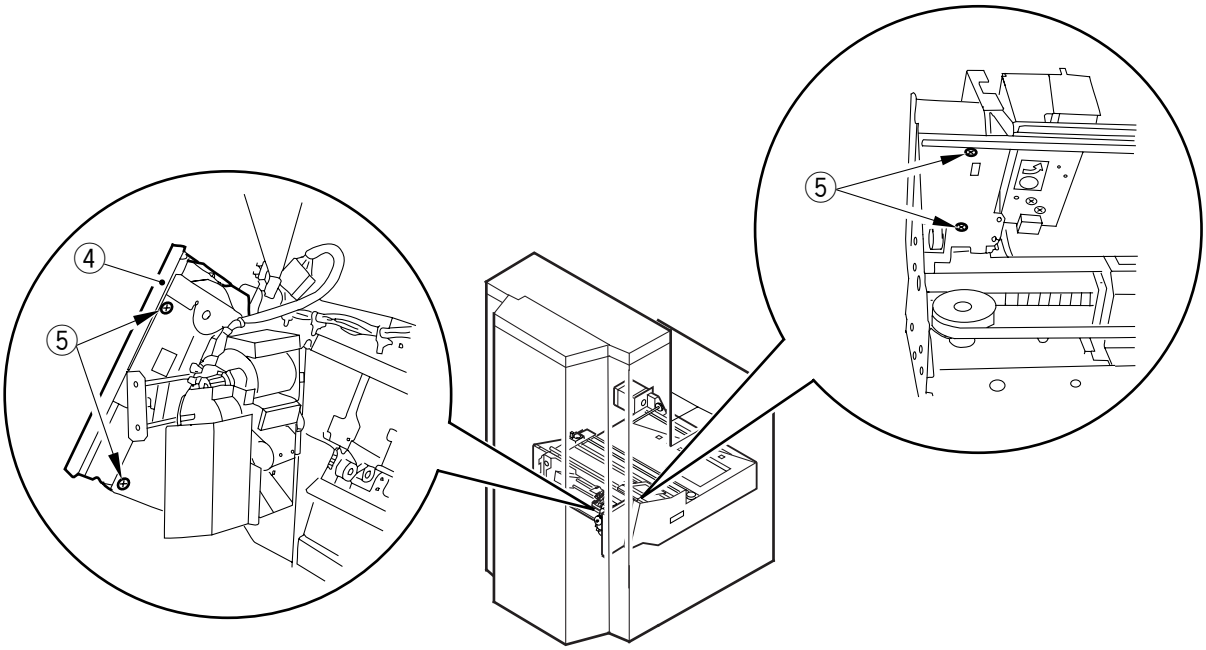

Figure 3-615

Caution:

When installing the side gripper left/right shift drive assembly, check to make sure that the pin ⑥ of the side gripper is securely engaged with the arm ⑦.

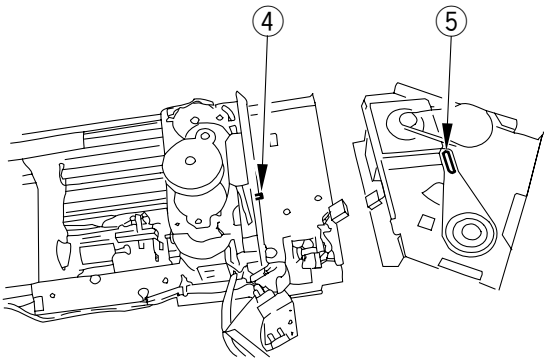

Figure 3-616

C. Side Gripper

1. Removing the Side Gripper

1) Lower the harness unit and the stacker unit in service mode.
2) Move the lower bin drive belt ① by hand so that all upper bins are at the topmost position.

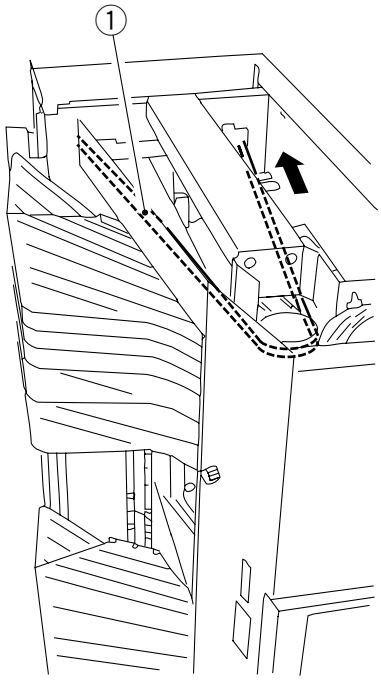

Figure 3-617

3) Remove the screw ②, and remove the connector cover ③.

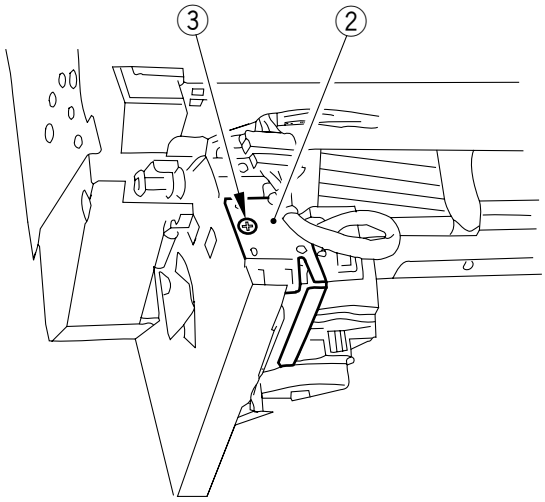

Figure 3-618

COPYRIGHT © 1997 CANON INC.

4) Move the side gripper ④ by hand to the left until the screw comes into view.
5) While holding the side gripper unit ④ by hand, remove the two screws ⑤.

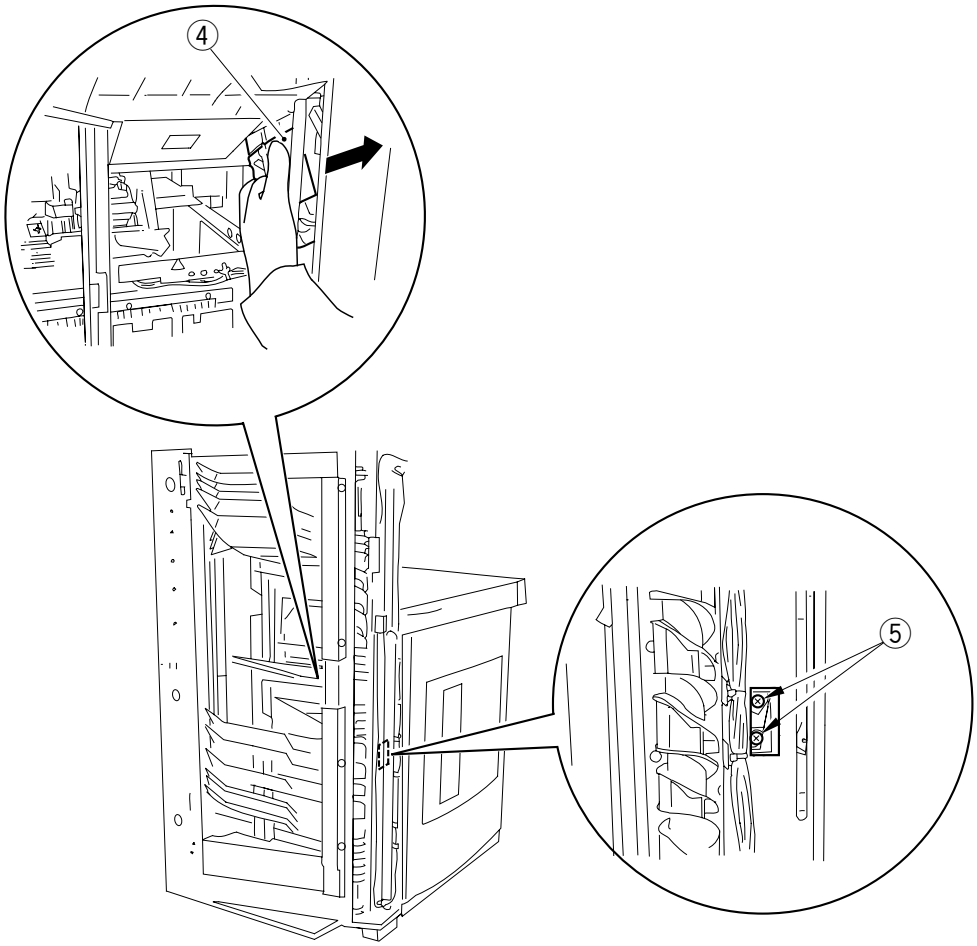

Figure 3-619

6) Remove the side gripper unit ④ by cutting the two tie-wraps ⑥, disconnecting the connector ⑦, and removing the screw ⑧ and the tie-wrap ⑨.

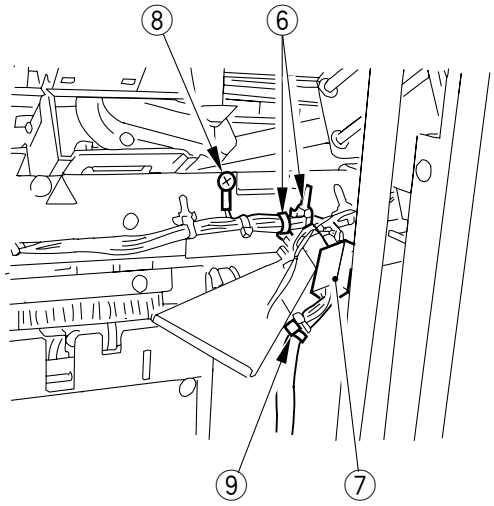

Figure 3-620

Caution:

When installing the side gripper, be sure to connect the bearing of the side gripper to the groove of the arm.

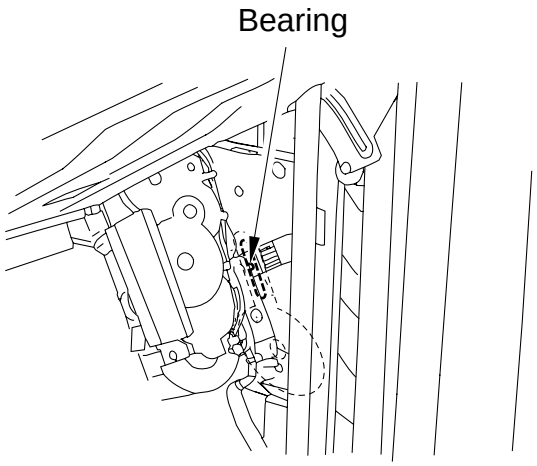

Figure 3-621

2. Removing the Side Gripper Clasping Motor (M9)

1) Remove the side gripper.
2) Open the paper edge retaining solenoid assembly ① by removing the two screws ②.
3) Remove the paper edge retaining solenoid assembly ③ by disconnecting the connector ④.
4) Disconnect the two connectors ④.

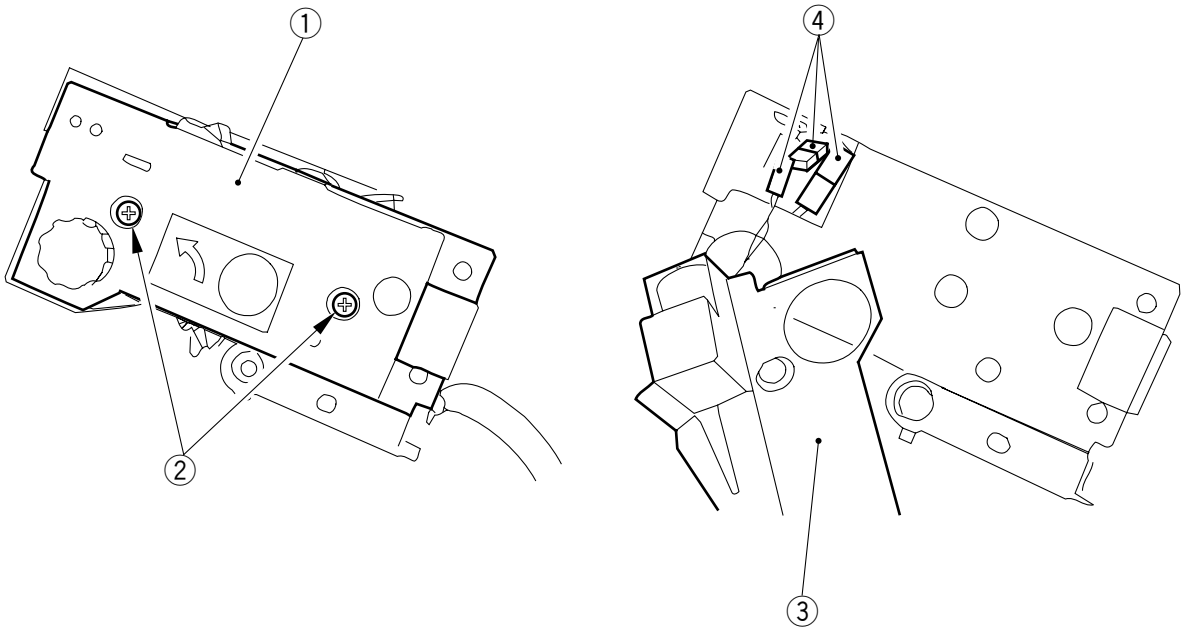

Figure 3-622

COPYRIGHT © 1997 CANON INC.

5) Remove the gear cover ⑥ by removing the harness ⑦ and the four screws ⑧.
6) Remove the side gripper clasping motor (M9) ⑨ by removing the gear ⑩ and the two screws ⑪.

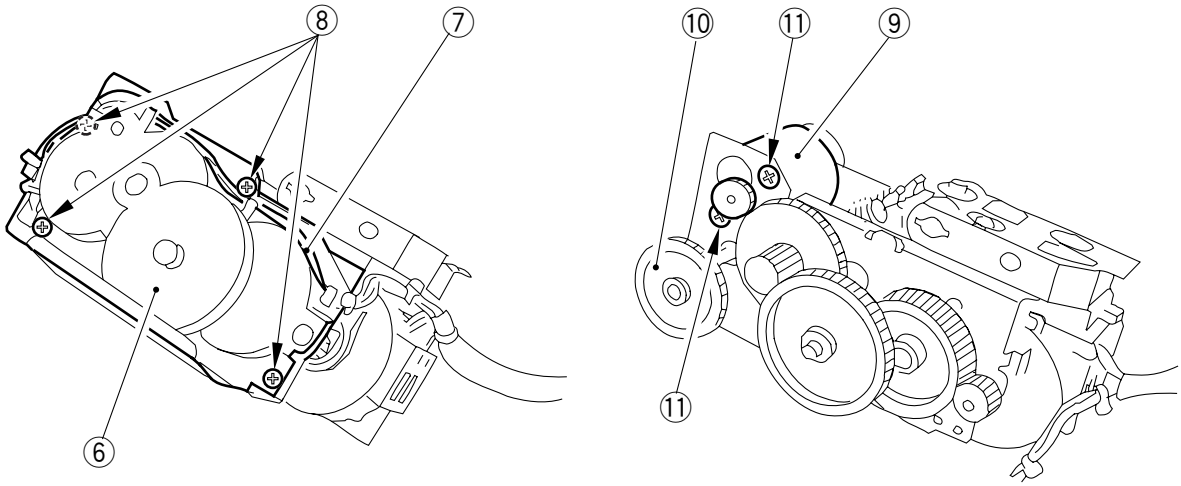

Figure 3-623

3. Side Gripper Paper Sensor

1) Remove the side gripper
2) Remove the gear cover ① by removing the three screws ② and loosening the screw ③.

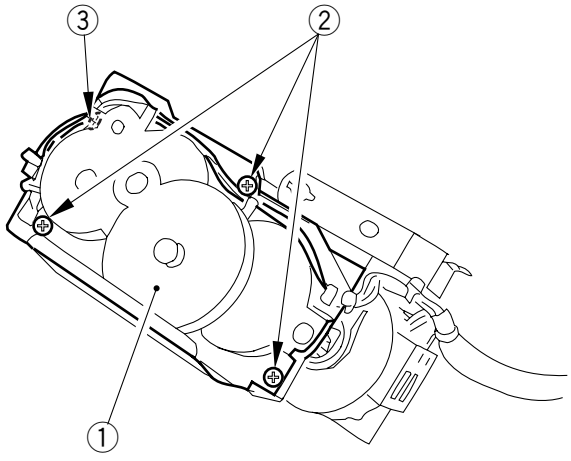

Figure 3-624

3) Remove the paper sensor unit ④ by disconnecting the connector ⑤ of the sensor cable and removing the screw ⑥.

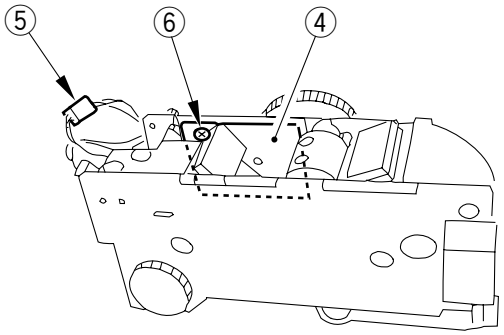

Figure 3-625

4) Remove the side gripper paper sensor ⑦ from the paper sensor unit ④ by removing the screw ⑧.

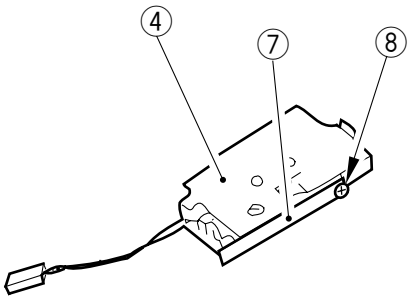

Figure 3-626

COPYRIGHT © 1997 CANON INC.

4. Adjusting the Stroke of the Paper Edge Holding Solenoid (SL7)

1) Remove the side gripper, and remove the paper edge holding solenoid assembly.
2) Loosen the two adjusting screws, and adjust the position of the paper edge holding solenoid (SL7) so that the angle made by the bottom face of the guide arm A and the side of the arm cover when the solenoid is on is 90 ±2° (plunger stroke reference of 5.4 mm).
3) Install the guide arm B so that it is displaced by a single tooth in relation to the guide arm A.

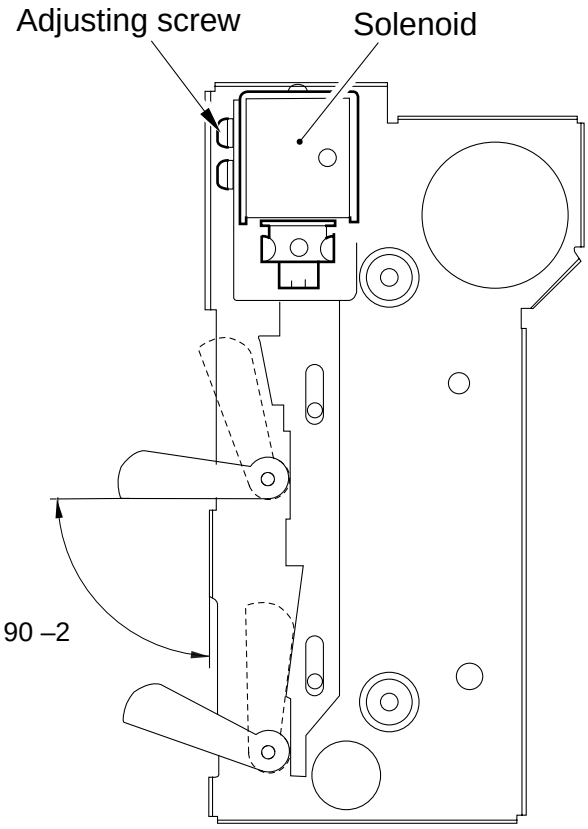

Figure 3-627

5. Adjusting the Spatial Relationship between Side Gripper and Bin Face

1) Move the side gripper to clasping position in service mode so that the gripper is closed.
2) Open the bin cover, and remove the bin upper cover, bin right cover, and front left cover.
3) Loosen the two adjusting screws, and adjust the height of the side gripper so that the distance between the clasping face of the lower gripper and the bin face is 0 to 2 mm.

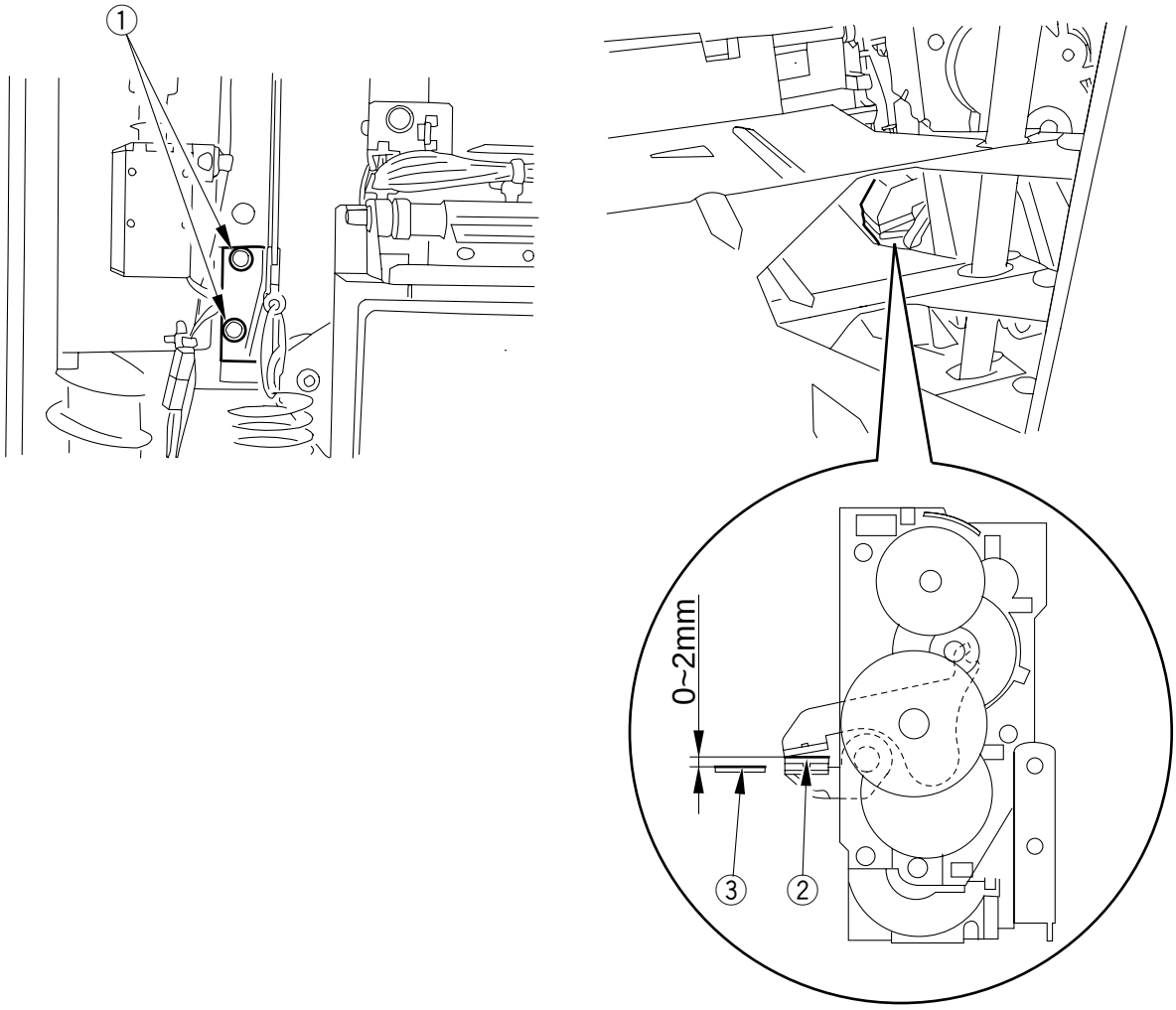

Figure 3-628

COPYRIGHT © 1997 CANON INC.

D. Bin Rear End Wall Open/Close Unit

1. Removing the Bin Rear End Wall Open/Close Unit

1) Fix the stack processing unit in place with a metal fixing.
2) Open the upper cover, and open the lever (F12).
3) Remove the harness cover ① by removing the screw ②.
4) Disconnect the connector ③.

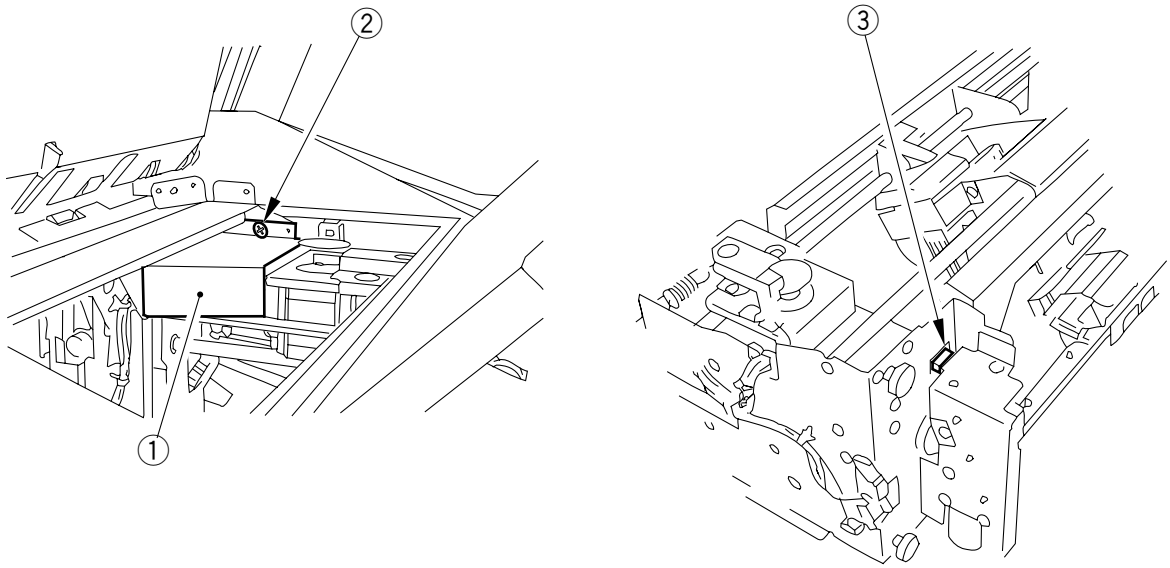

Figure 3-629

5) Turn the gear ④ by hand so that the bin rear end wall open/close arm ⑤ is in OPEN position.

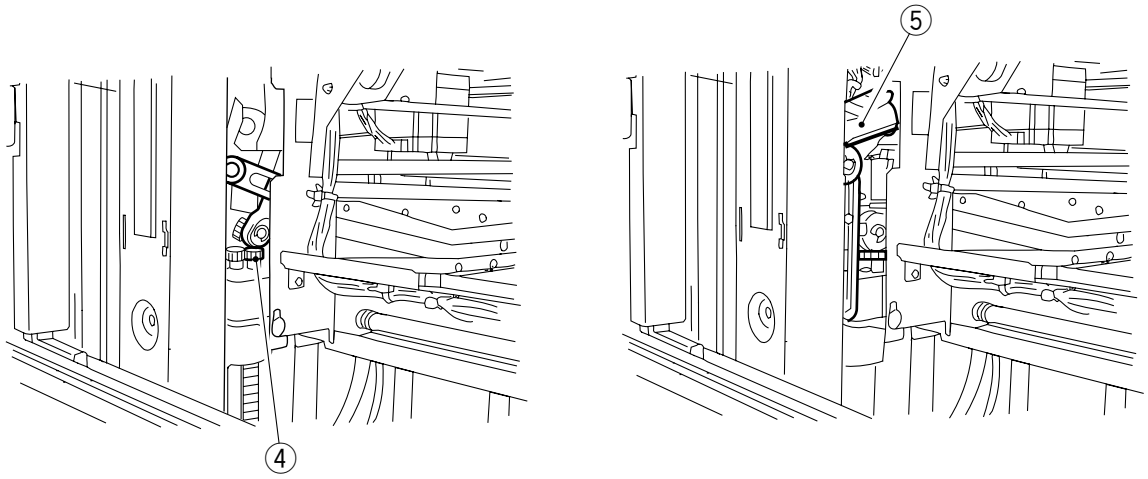

Figure 3-630

6) Remove the bin rear end wall open/close unit ⑥ by removing the three screws ⑦.

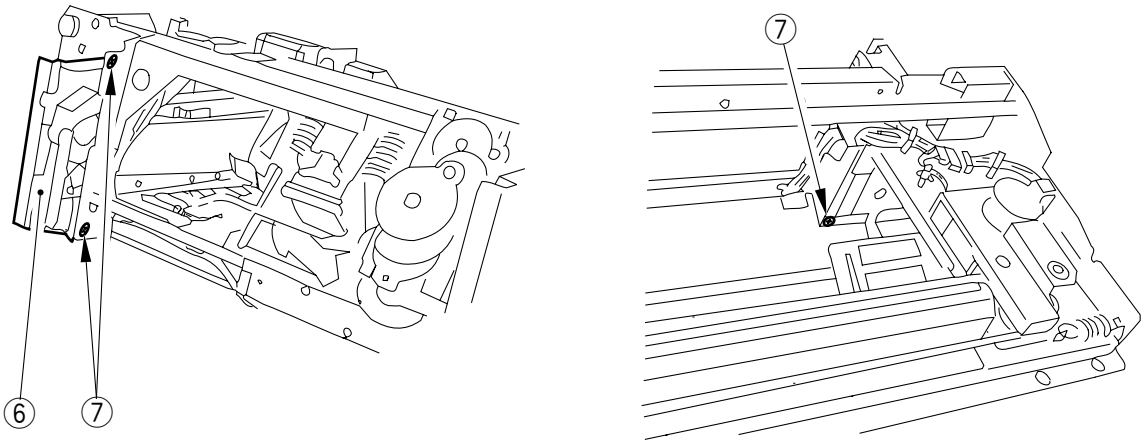

Figure 3-631

Caution:

When installing the bin rear end wall open/close unit, be sure to adjust the angle at which the bin rear end wall opens.

2. Adjusting the Position of the Bin Rear End Wall Open/Close Unit

1) Put the bin rear end wall into OPEN position in service mode.
2) Loosen the three adjusting screws, and adjust the position of the bin rear end wall open/close unit so that the tip of the bin rear end wall moves down 0 to 2 mm lower than the bin face.

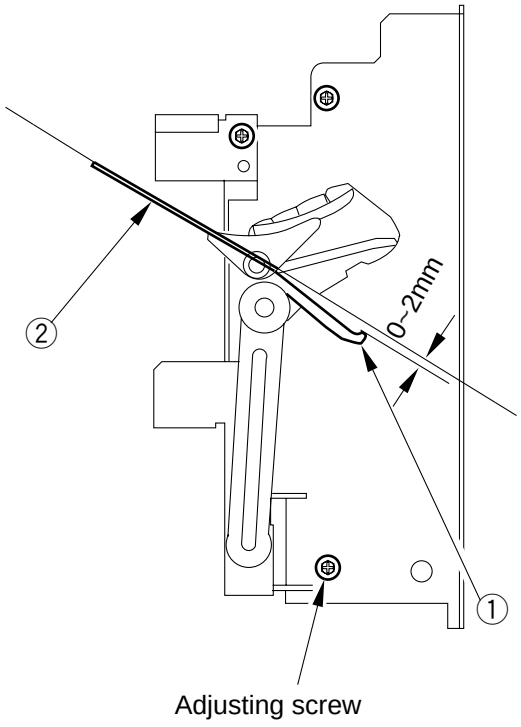

Figure 3-632

COPYRIGHT © 1997 CANON INC.

E. Stapler Front/Rear Shift Drive System

1. Removing the Stapler Front/Rear Shift Motor (M13)

1) Lower the stacker unit and the stack processing unit in service mode.

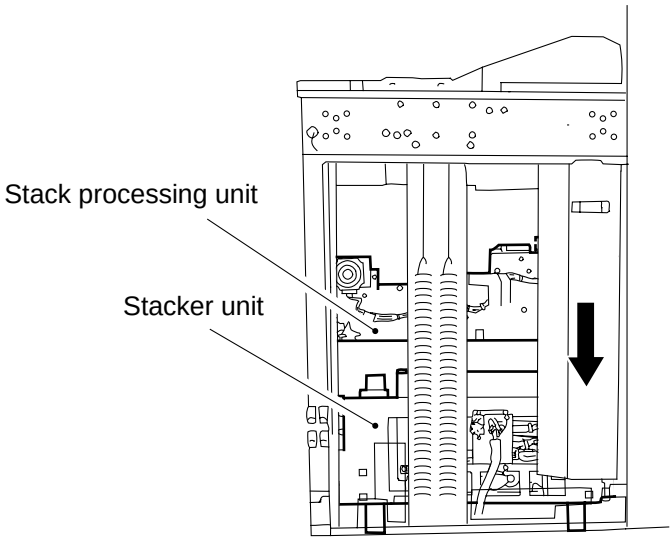

Figure 3-633

2) Remove the rear right cover, and remove the belt cover.
3) Remove the sensor assembly ① by removing the screw ②.
4) Remove the harness cover ③ by removing the screw ④.
5) Disconnect the connector ⑤, and remove the tie-wrap with an anchor ⑥; then, free the harness ⑦ from the edge saddle ⑧.

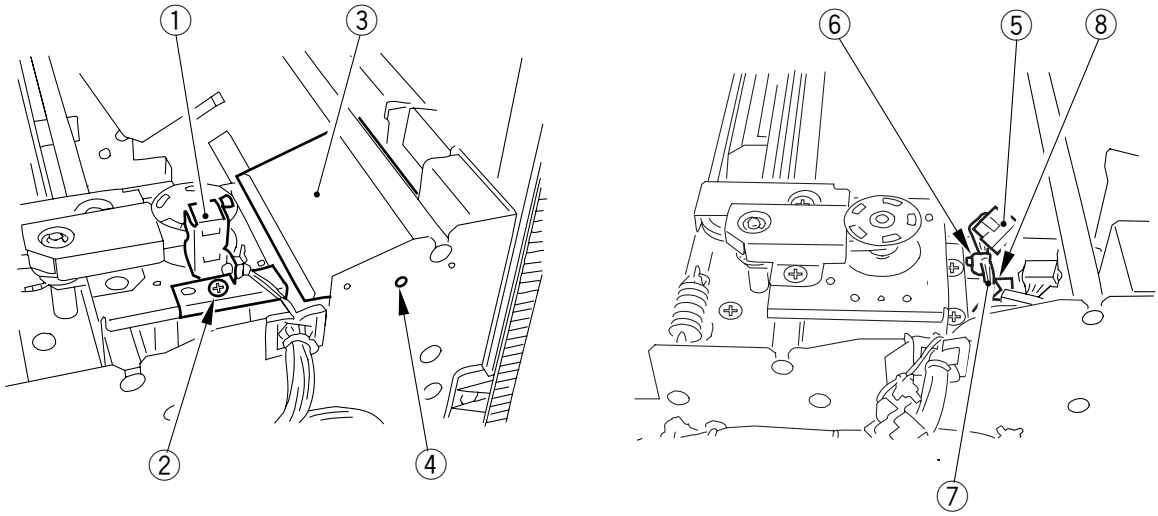

Figure 3-634

6) Remove the spring ⑨ and three screws ⑩.
7) Remove the gear cover ⑪ by removing the two screws ⑫.

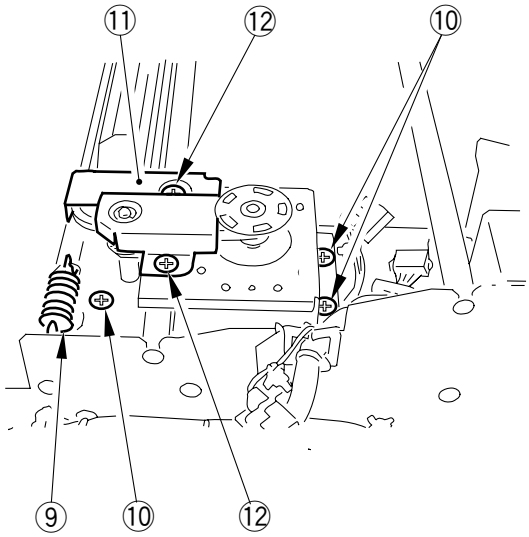

Figure 3-635

Caution:

When installing the spring, temporarily tighten the three screws; tighten them fully after hooking the spring.

COPYRIGHT © 1997 CANON INC.

8) Remove the E-ring ⑬, and remove the drive belt ⑭, gear ⑮, gear ⑯, drive belt ⑰, and pulley ⑱.
9) Remove the motor unit ⑲.

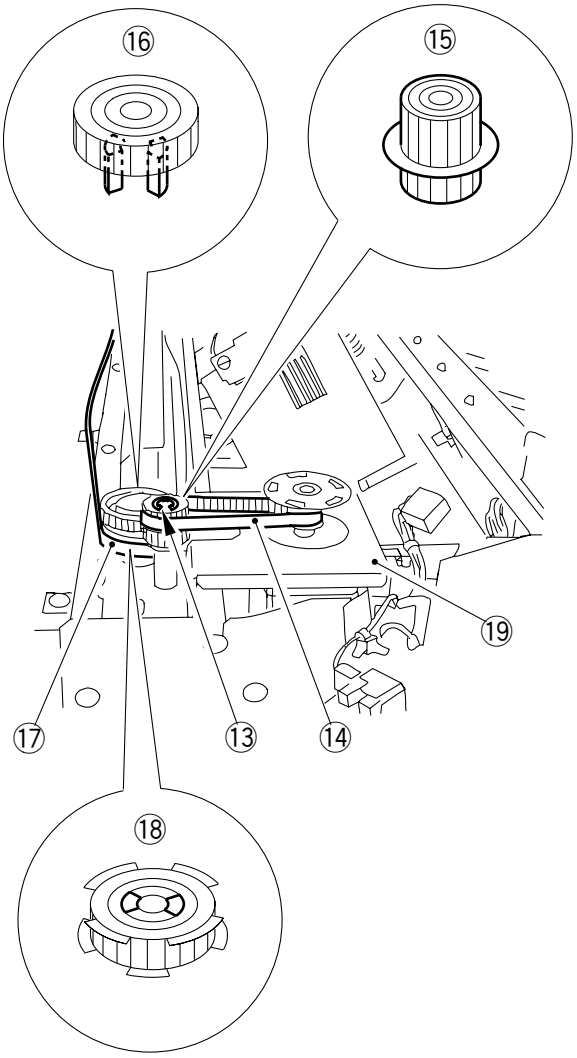

Figure 3-636

Caution:

Each of the gears and the pulleys has its own orientation. Take note.

10) Remove the stapler front/rear shift motor (M13) ⑳ by removing the four screws ㉑.

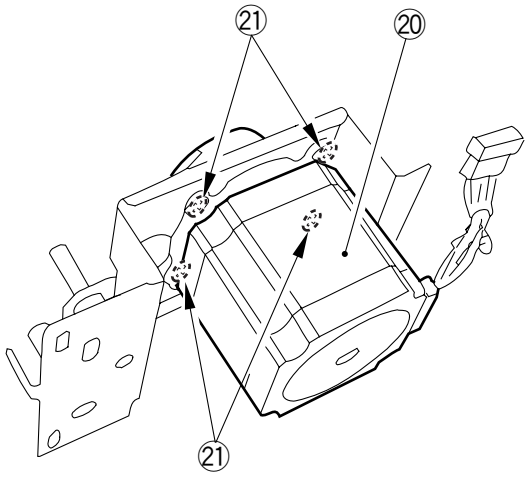

Figure 3-637

2. Adjusting the Position of the Stapler Front/Rear Shift Home Position Sensor (PI66)

1) Open the non-sort delivery assembly, and remove the front upper cover.
2) Execute front single stapling. Loosen the adjusting screw ② and adjust the position of the stapler front/rear home position sensor (PI66) ① so that stapling occurs at a point 5 ±1 mm from the edge of paper.

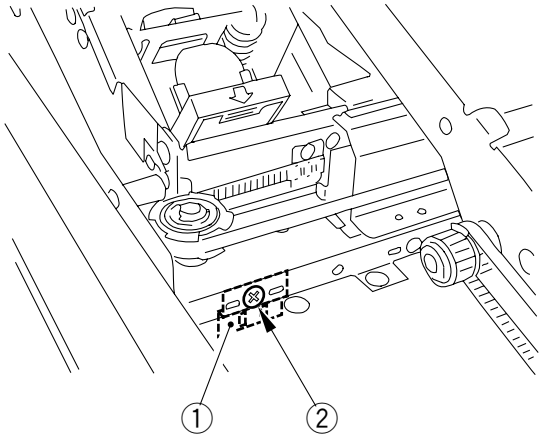

Figure 3-638

COPYRIGHT © 1997 CANON INC.

3. Removing the Stapler Front/Rear Shift Drive Belt

1) Lower the stacker unit and the stack processing unit in service mode.

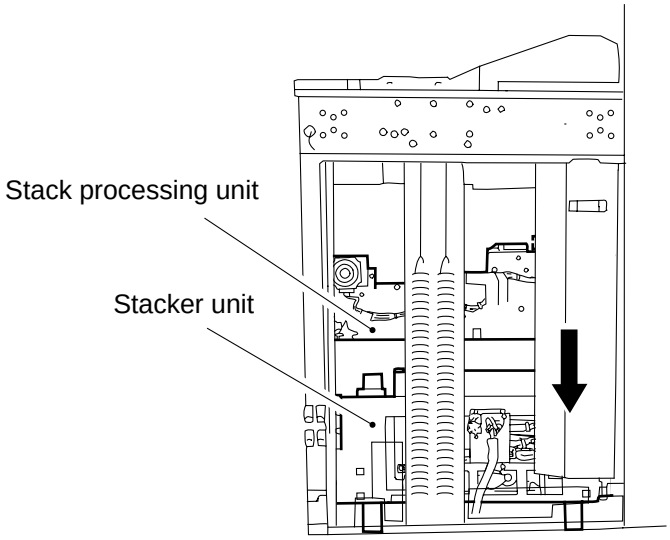

Figure 3-639

2) Remove the rear right cover, and remove the belt cover.
3) Remove the sensor assembly ① by removing the screw ②.
4) Remove the harness cover ③ by removing the screw ④.

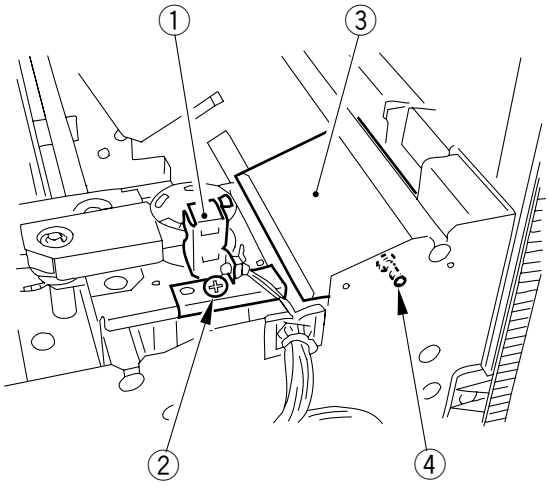

Figure 3-640

5) Disconnect the connector ⑤, and remove the tie-wrap with an anchor ⑥; then, free the harness ⑦ from the edge saddle ⑧.

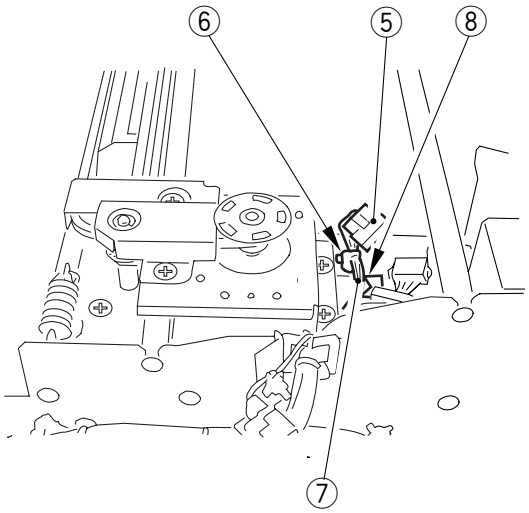

Figure 3-641

6) Remove the spring ⑨ and three screws ⑩.
7) Remove the gear cover ⑪ by removing two screws ⑫.

Caution:

When installing the spring, temporarily tighten the three screws first, and tighten them fully after hooking the spring.

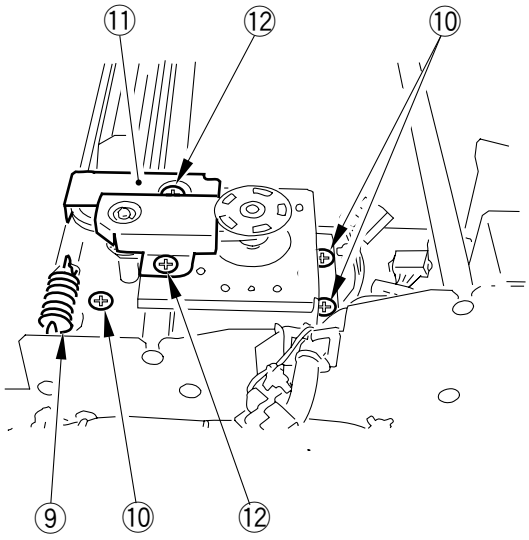

Figure 3-642

COPYRIGHT © 1997 CANON INC.

8) Remove the E-ring ⑬, and remove the drive belt ⑭, gear ⑮, gear ⑯, drive belt ⑰, and pulley ⑱.
9) Remove the motor unit ⑲.

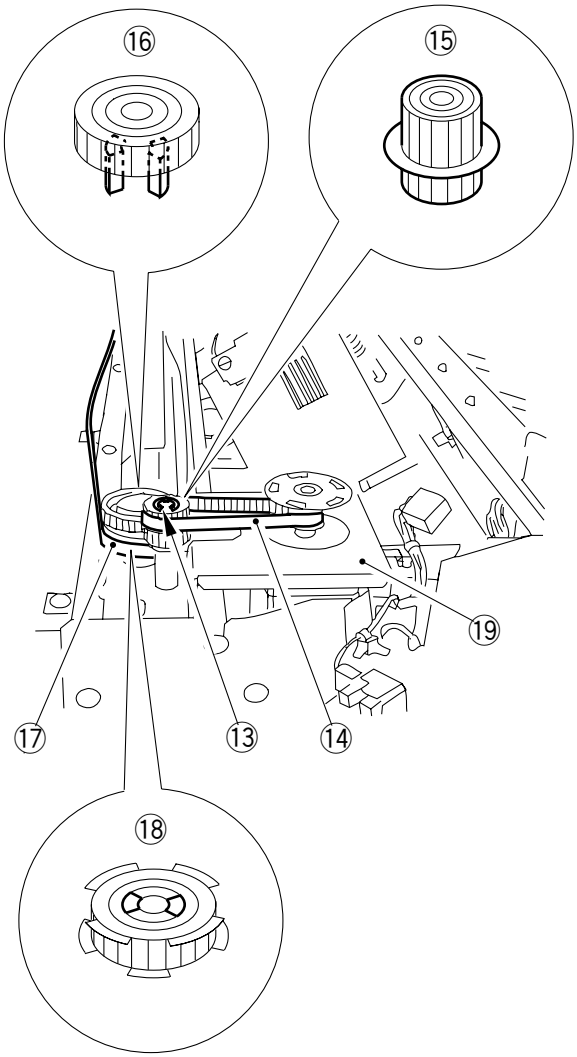

Figure 3-643

Caution:

Each of the gears and the pulleys has its own orientation. Take note.

10) Remove the two screws ⑳, and remove the harness cover ㉑.

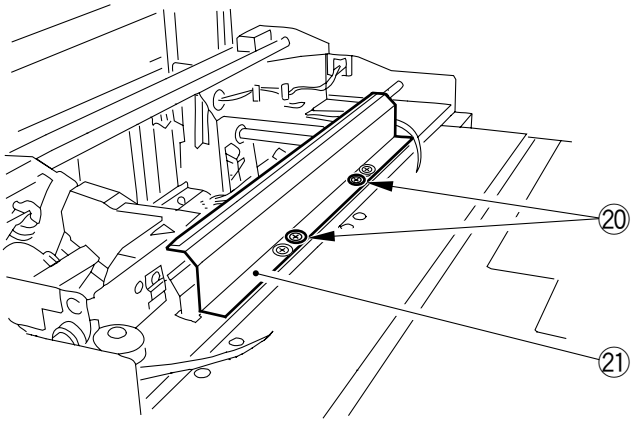

Figure 3-644

11) Remove the screw ㉒, and remove the harness cover ㉓.

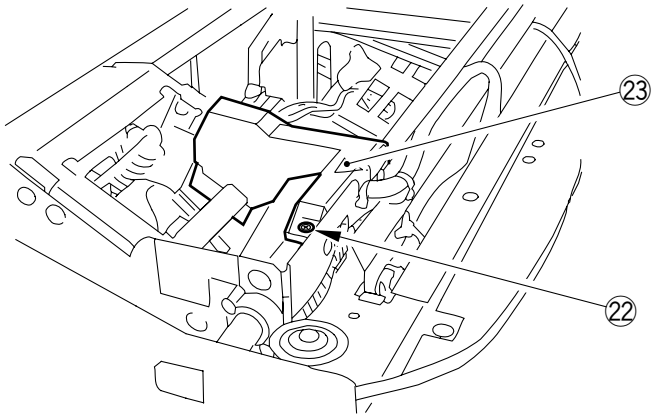

Figure 3-645

COPYRIGHT © 1997 CANON INC.

12) Disconnect the two connectors ㉔, and remove the two screws ㉕; then, remove the harness ㉖.

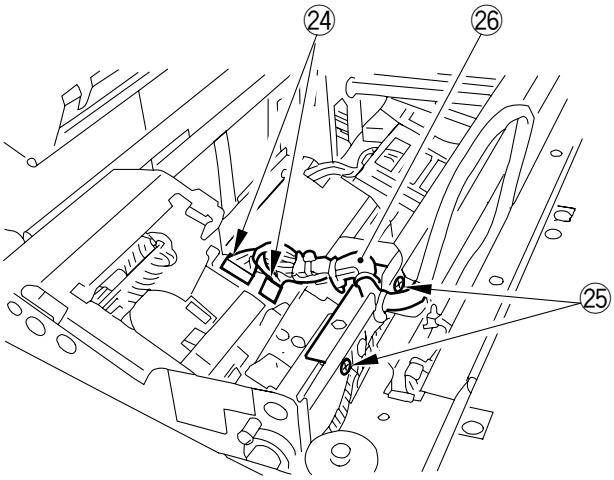

Figure 3-646

13) Remove the screw ㉗, and remove the drive belt ㉘.

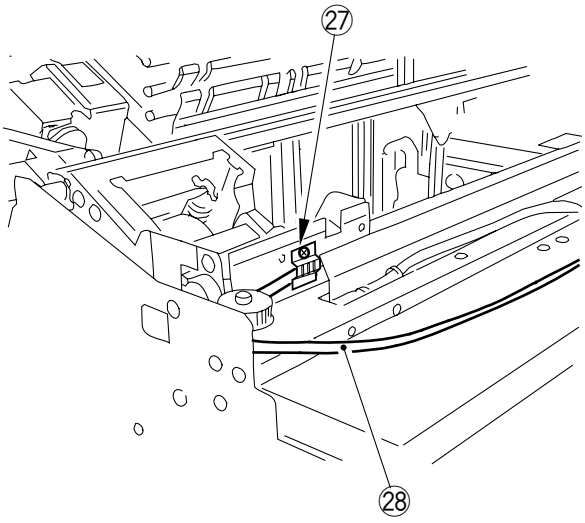

Figure 3-647

F. Removing the Stapler Unit

1) Fix the stack processing unit in place with a metal fixing.
2) Move the front gripper to the right end.
3) Open the non-sort delivery assembly, and remove the staple cartridge.
4) Open the lever (F12).
5) Remove the cover ① by removing the two screws ②.

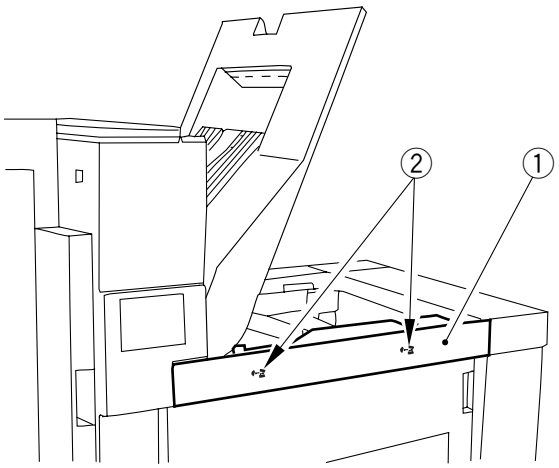

Figure 3-648

6) Remove the connector cover ③ by removing the screw ④. (Work as if to lift and swing up the right side when removing the cover.)

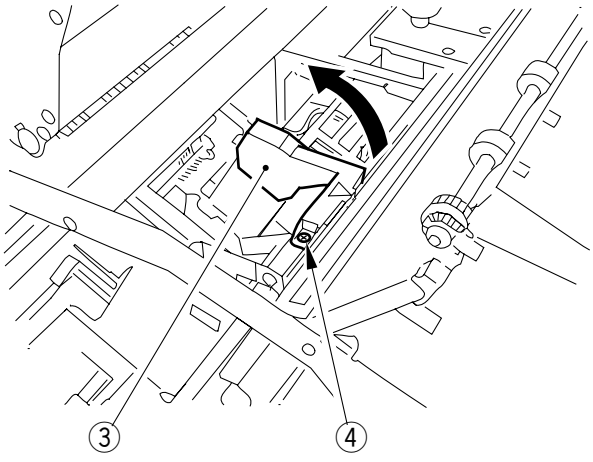

Figure 3-649

COPYRIGHT © 1997 CANON INC.

7) Disconnect the two connectors ⑤.

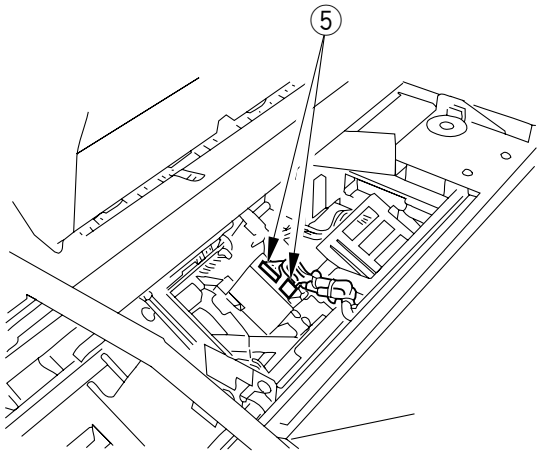

Figure 3-650

8) Remove the two screws ⑥.

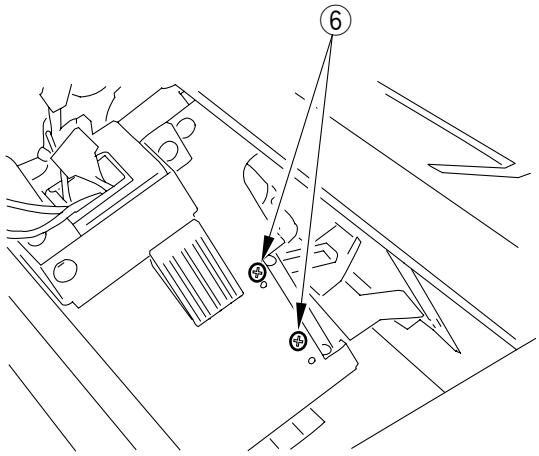

Figure 3-651

COPYRIGHT © 1997 CANON INC.

9) Remove the staple dish ⑦ by removing the screw ⑧.
10) Remove the two screws ⑦.

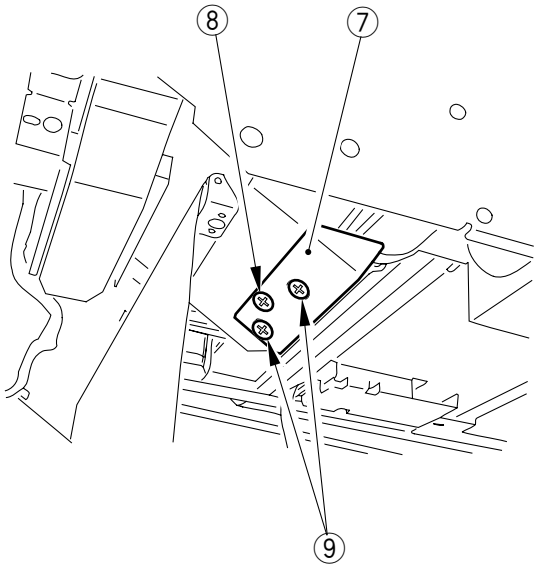

Figure 3-652

11) Move the stapler ⑩ to the center to remove.

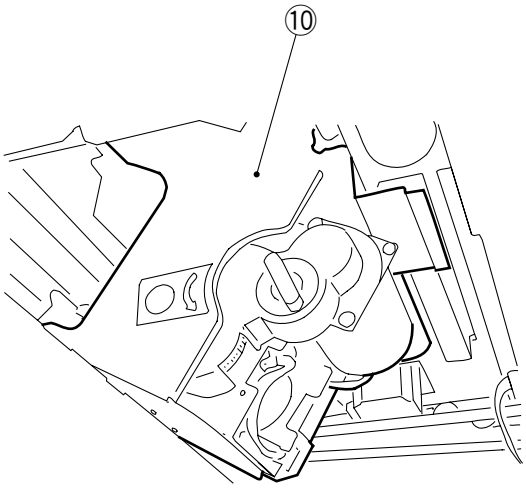

Figure 3-653

COPYRIGHT © 1997 CANON INC.

Caution:

If you must place the stapler unit on a desk or a floor after removal, take extra care so that the waste staple outlet at its bottom will not be damaged.

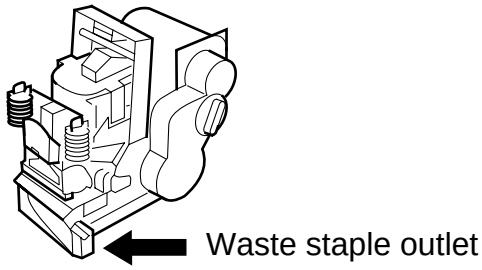

Figure 3-653-1

G. Front Gripper

1. Removing the Front Gripper

1) Fix the stack processing unit in place with a metal fixing.
2) Move the front gripper ① by hand to the left end.

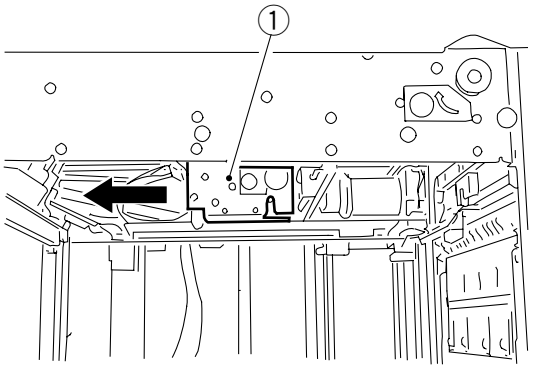

Figure 3-654

3) Open the non-sort delivery assembly, and open the lever (F12) ②.
4) Move the front gripper ③ by hand to the front.

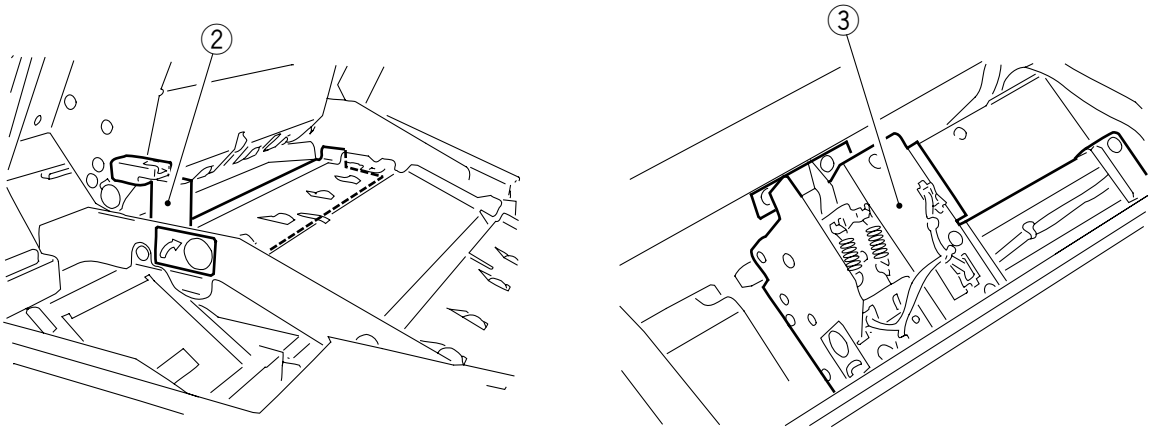

Figure 3-655

COPYRIGHT © 1997 CANON INC.

5) Remove the two screws ⑤, and remove the PCB cover ④.
6) Disconnect the connector ⑥, and remove the screw ⑦ and the tie-wrap ⑧ with an anchor ⑧ from the relay PCB.

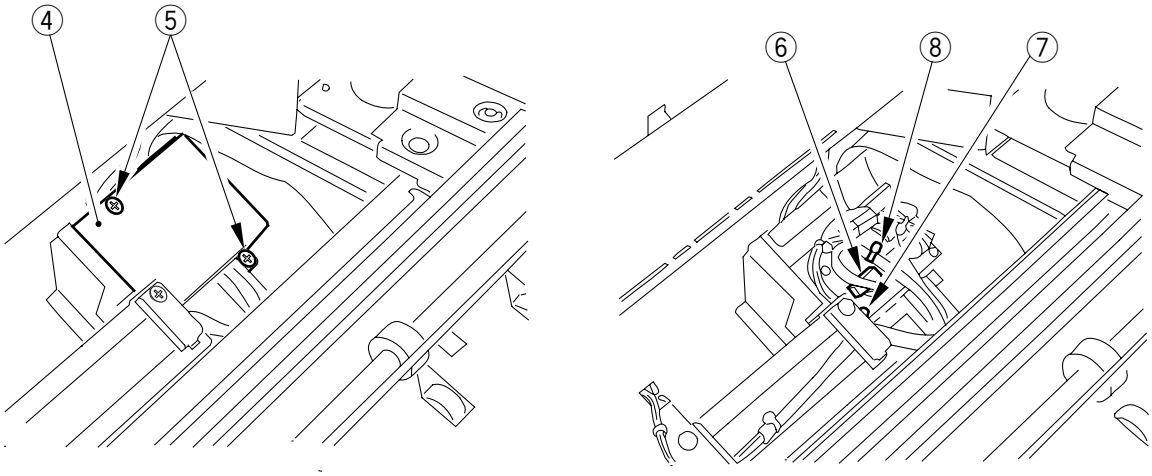

Figure 3-656

7) Move the front gripper ⑨ by hand to where the four screws ⑩ are visible.
8) Remove the front gripper ⑨ by removing the four screws ⑩.

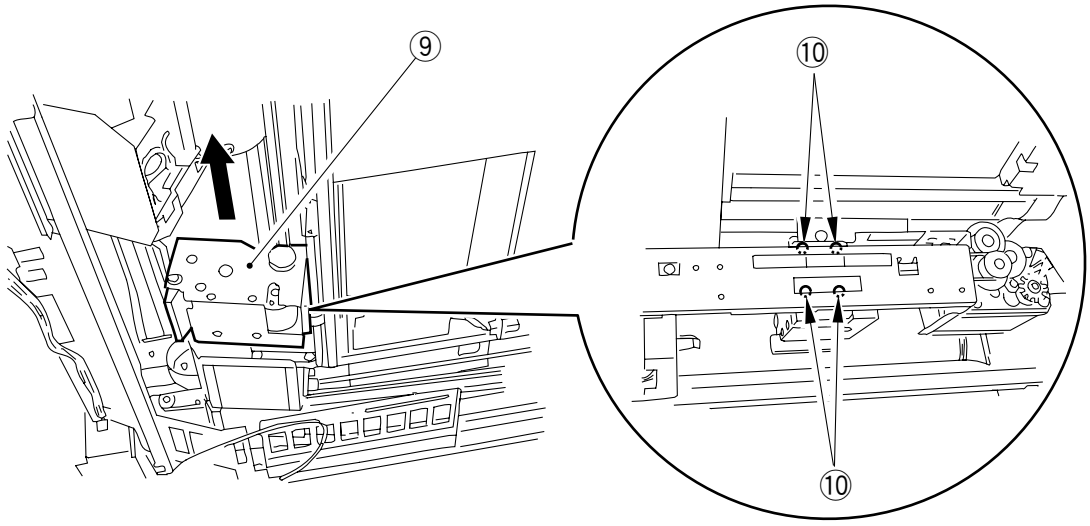

Figure 3-657

2. Removing the Front Gripper Clasping Motor (M12)

1) Remove the front gripper.
2) Remove the gear cover ① by removing the four screws ②.

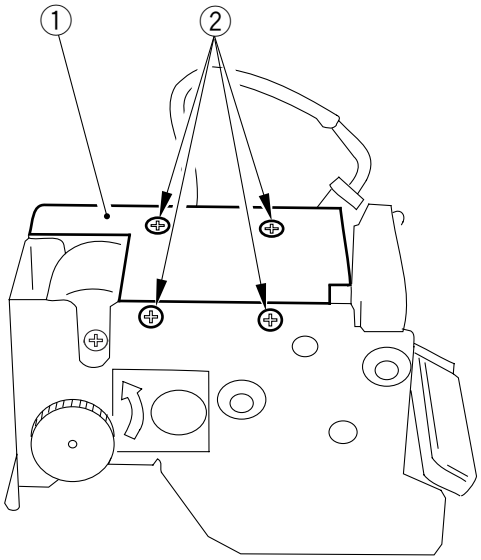

Figure 3-658

3) Remove the sensor mount ③ by disconnecting the connector ④ and removing the screw ⑤.

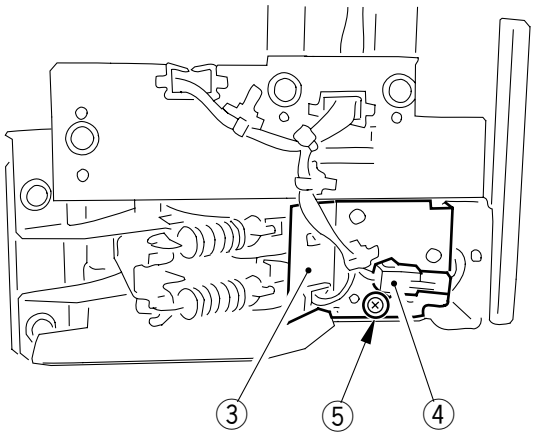

figure 3-659

COPYRIGHT © 1997 CANON INC.

4) Remove the front gripper clasping motor (M12) ④ by removing the two screws ⑤.

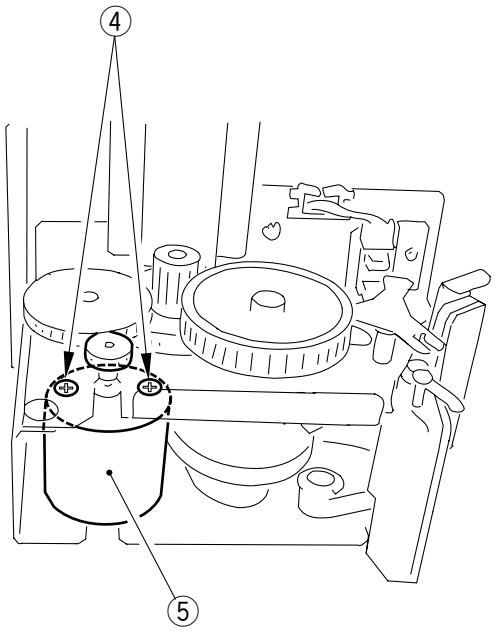

Figure 3-660

COPYRIGHT © 1997 CANON INC.

H. Front Gripper Left/Right Shift Motor (M10)

1. Removing the Front Gripper Left/Right Shift Motor (M10)

1) Lower the stack processing unit in service mode.

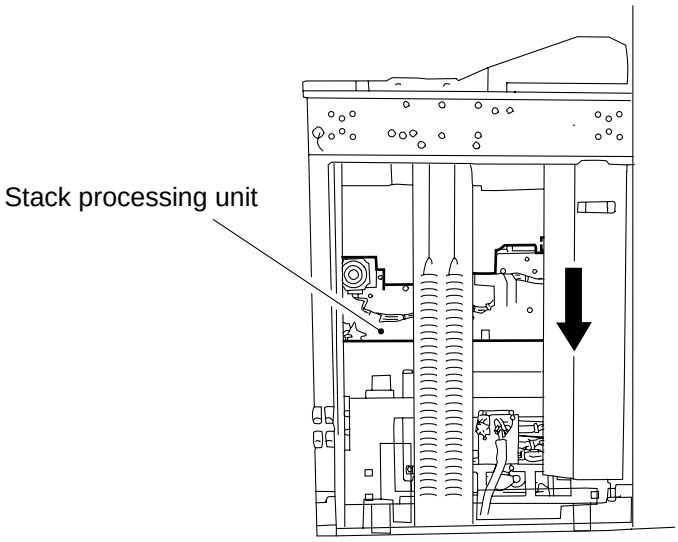

Figure 3-661

2) Remove the rear right cover.
3) Cut the harness band ①. Remove the harness retainer ②, and disconnect the connector ②.
4) Remove the front gripper left/right shift motor (M10) ③ by removing the two screws ④.

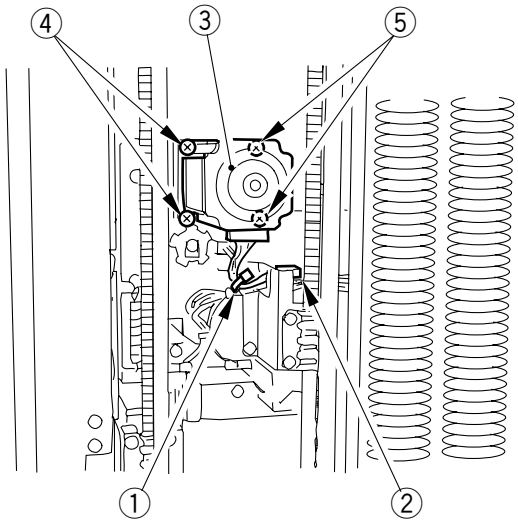

Figure 3-662

COPYRIGHT © 1997 CANON INC.

2. Removing the Front Gripper Left/Right Shift Drive Belt

1) Lower the stack processing unit in service mode.

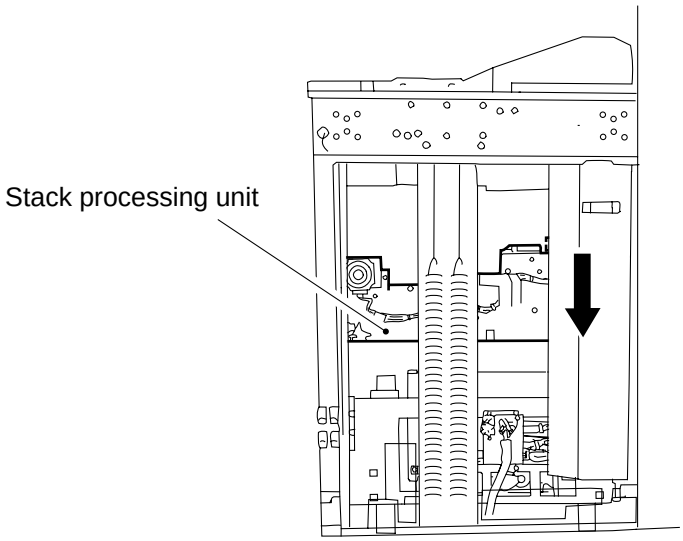

Figure 3-663

2) Remove the front gripper left/right shift motor (M10).
3) Remove the front gripper left/right shift clock sensor (PI54) ① by removing the screw ② and disconnecting the connector ③.

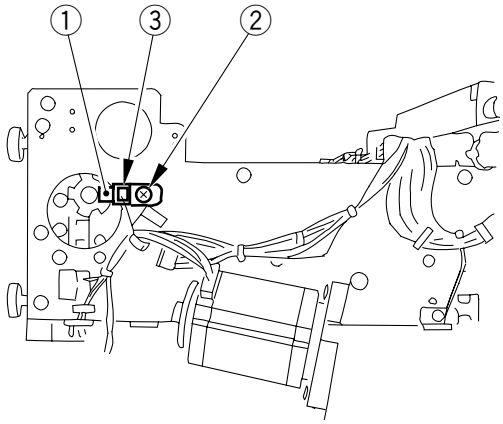

Figure 3-664

4) Remove the two screws ④, and remove the harness guide ⑤.

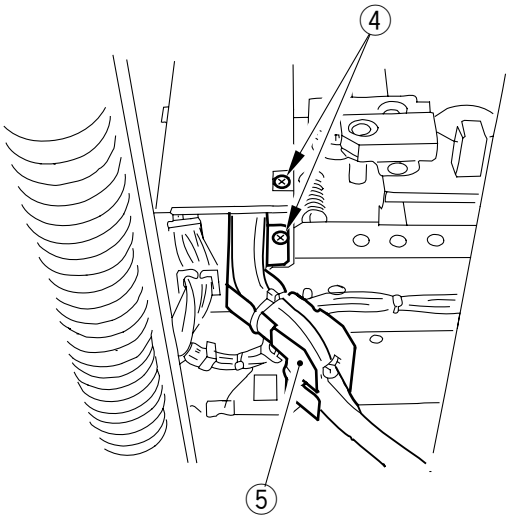

Figure 3-665

5) Remove the screw ⑥ (front, rear; one each); then, loosen the tensioner ⑦ (front, rear; one each).

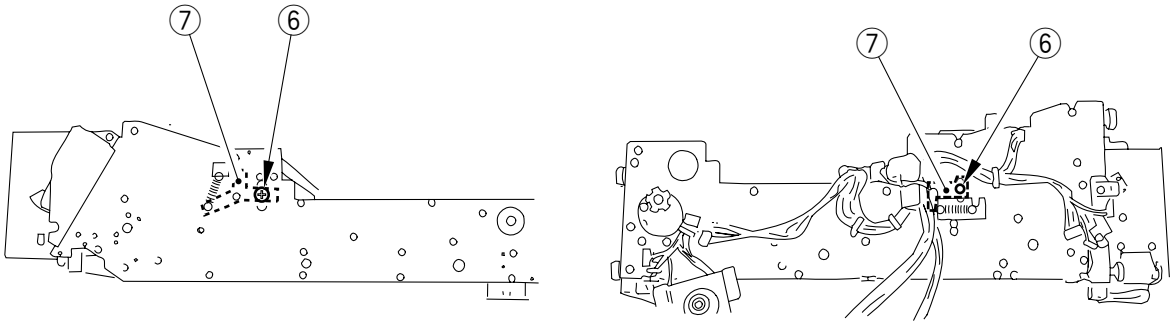

Figure 3-666

COPYRIGHT © 1997 CANON INC.

6) Remove the belt metal fixing ⑥ (front, rear) by removing the two screws ⑦ (each).

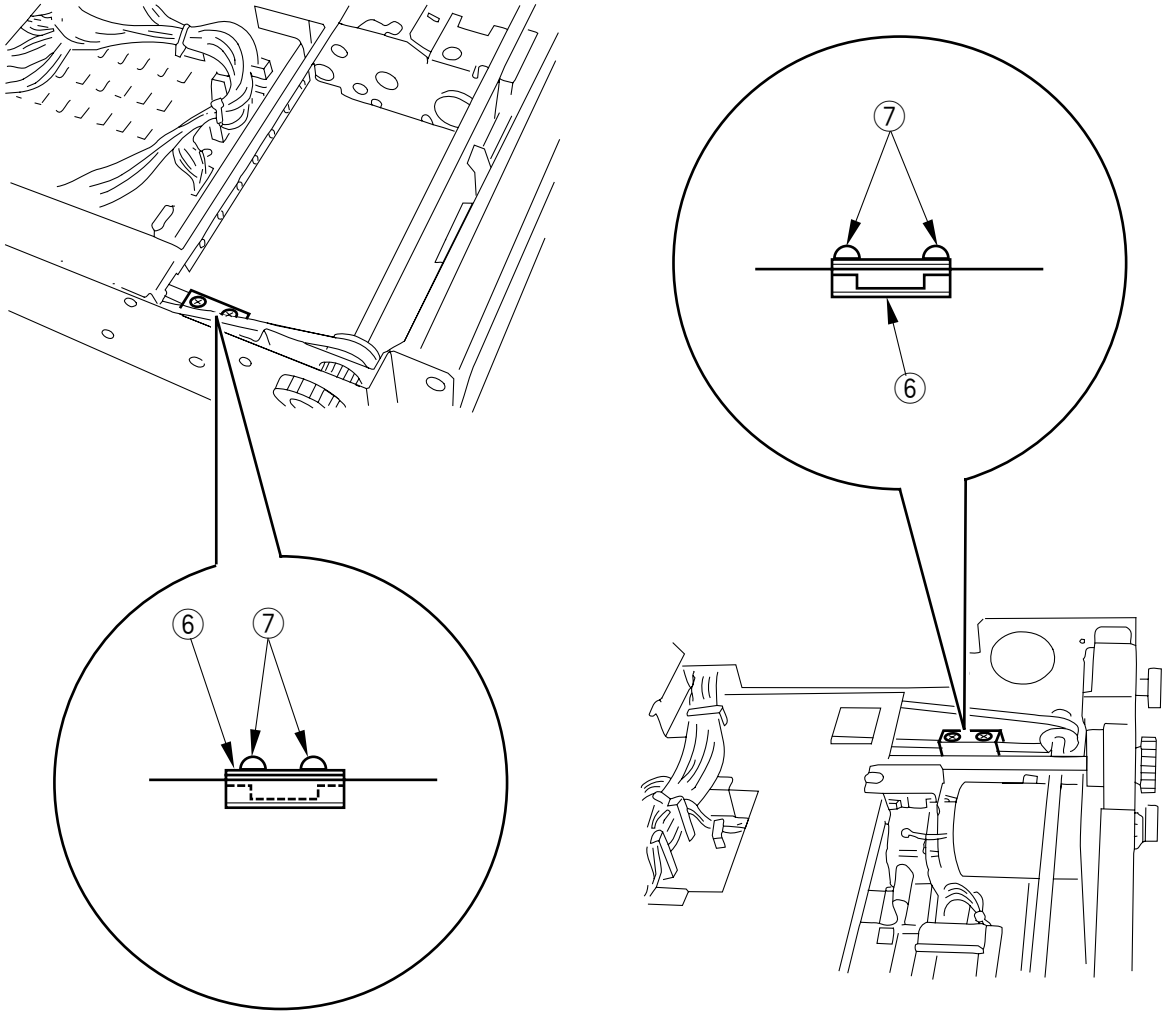

Figure 3-667

Caution:

When installing the belt metal fixing, fix it in place so that the front gripper is parallel to the stack processing unit.

Making Checks

a) Slide out the vertical path unit.
b) Fit the belt metal fixing where the frame of the front gripper is parallel to the frame of the stack processing unit.

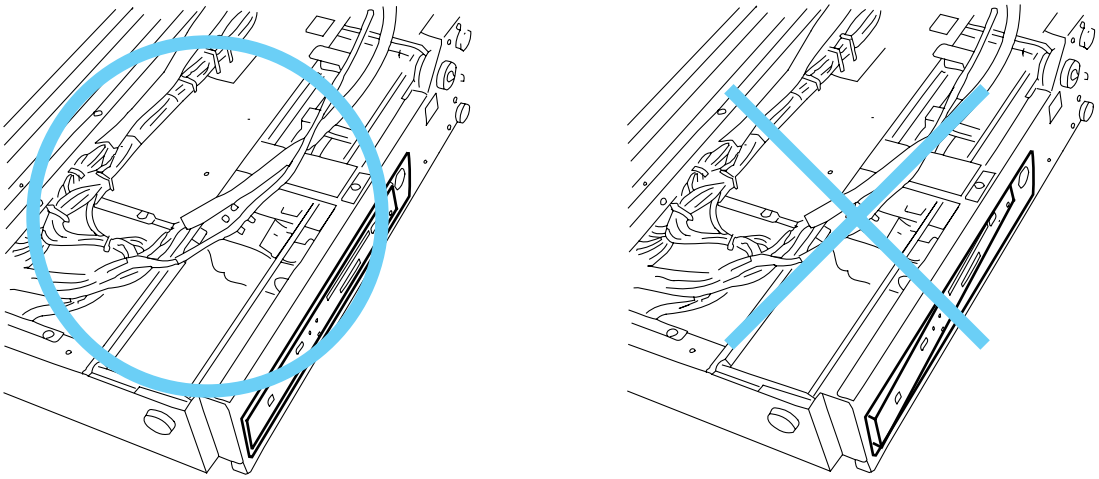

Figure 3-668

7) Remove the knob ⑧ by removing the grip ring ⑨.
8) Remove the mounting plate ⑩ by removing the two screws ⑪.

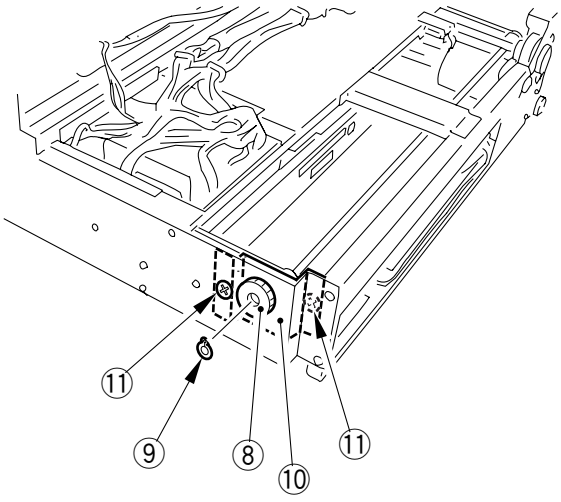

Figure 3-669

COPYRIGHT © 1997 CANON INC.

9) Remove the E-ring ⑫, and slide the gear ⑬ to the front; then, pull out the pin ⑭.
10) While detaching the drive belt (front) ⑮, move the drive shaft ⑯ to the rear.

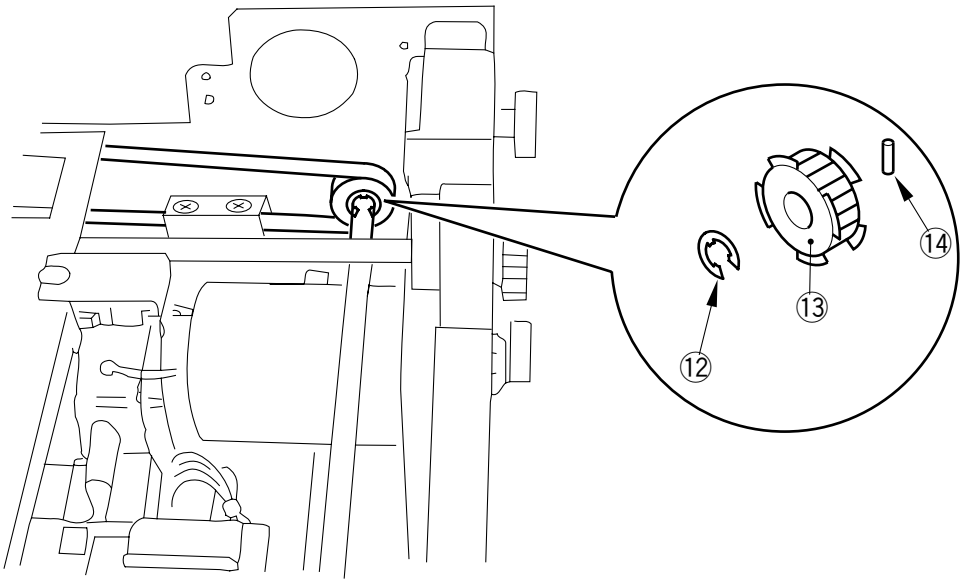

Figure 3-670

11) Remove the drive belt (rear) ⑰.

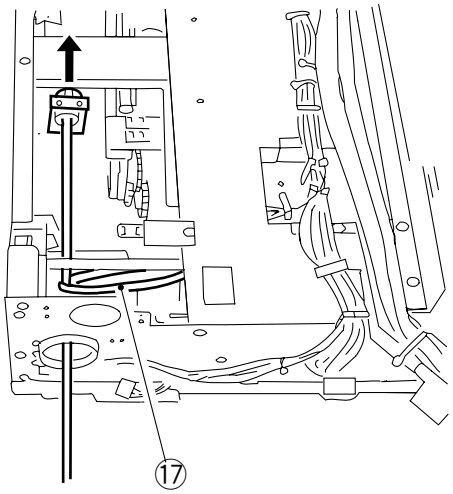

Figure 3-671

I. Front Gripper Front/Rear Shift Drive System

1. Removing the Front Gripper Front/Rear Shift Motor Assembly

1) Fix the stack processing unit in place with a metal fixing.
2) Loosen the screw ①, and remove the spring ②; then, remove the tensioner ③.
3) Remove the front gripper front/rear shift clock sensor ④ (PI 59) by removing the screw ⑤ and disconnecting the connector ⑤.

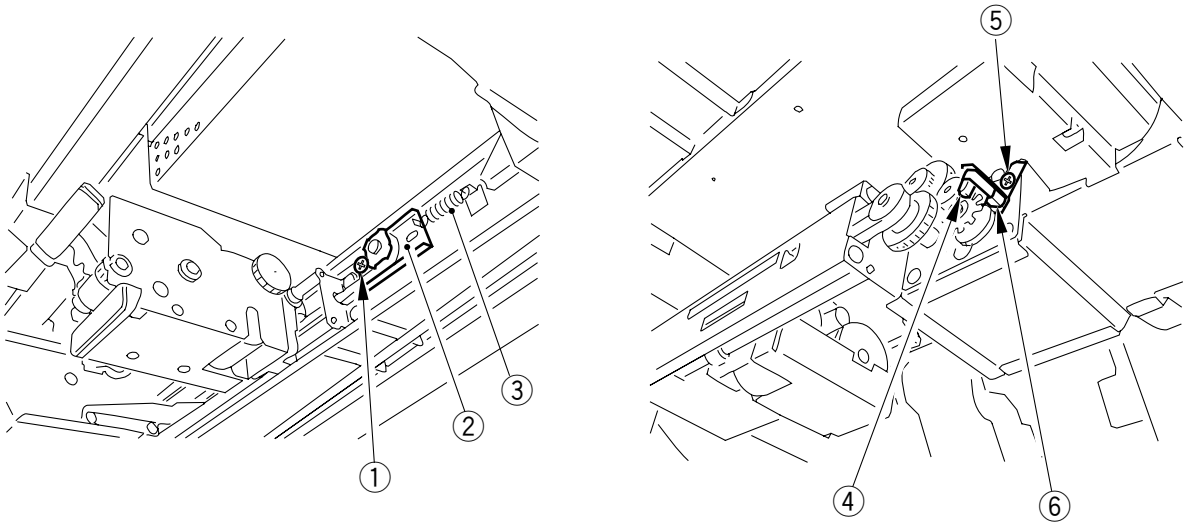

Figure 3-672

4) Remove the three screws ⑦, and slide out the front gripper front/rear shift motor assembly ⑧.
5) Remove the PCB cover ⑧ by removing the screw ⑨.

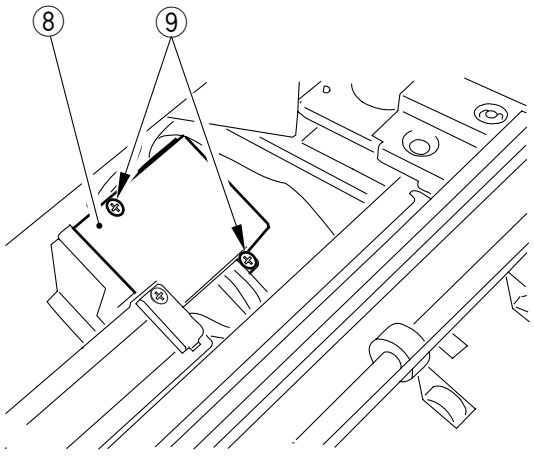

Figure 3-673

COPYRIGHT © 1997 CANON INC.

6) Disconnect the connector ⑩, and remove the front gripper front/rear shift motor assembly ⑨.

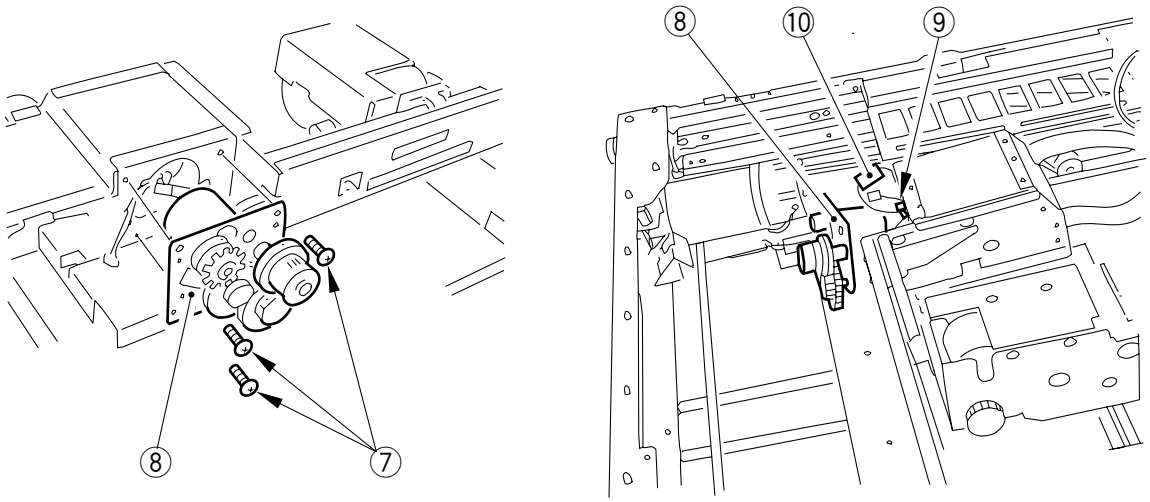

Figure 3-674

2. Removing the Front Gripper Front/Rear Shift Drive Belt

1) Fix the stack processing unit in place with a metal fixing.
2) Remove the front gripper.
3) Move the front gripper ① by hand to the right edge.

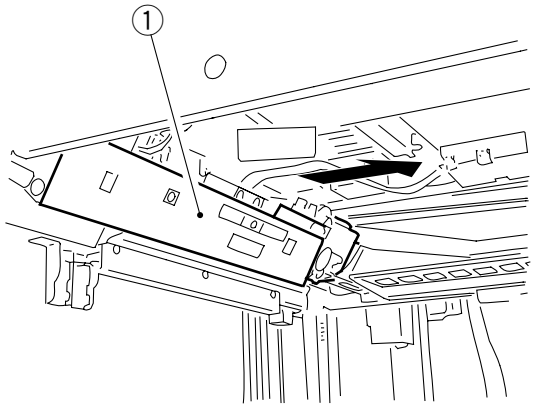

Figure 3-675

COPYRIGHT © 1997 CANON INC.

4) Remove the tensioner ② by removing the spring ③ and the screw ④.

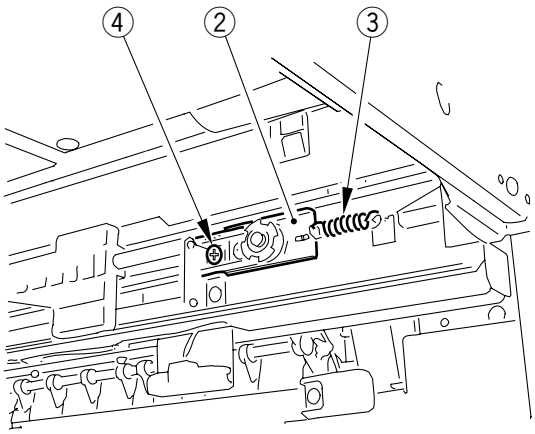

Figure 3-676

5) Remove the slider assembly ⑤, two slide rails ⑥, and fixing plate ⑦ by removing the two screws ⑧.

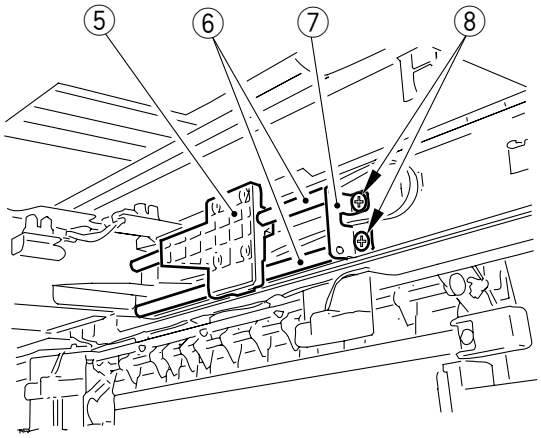

Figure 3-677

COPYRIGHT © 1997 CANON INC. CANON FINISHER-B1 REV.0 MAY 1997 PRINTED IN JAPAN (IMPRIME AU JAPON)

6) Remove the belt retainer ⑨ by removing the screw ⑩.
7) Remove the front gripper front/rear shift drive belt ⑪.

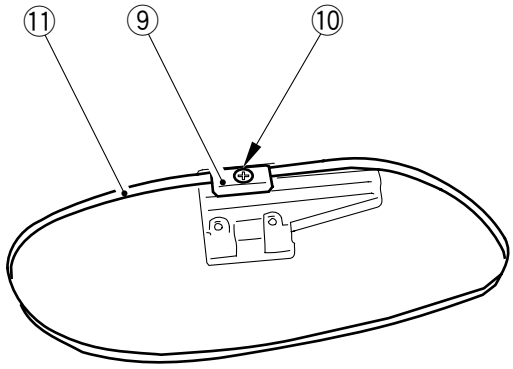

Figure 3-678

J. Stack Processing Unit Screen

1. Removing the Screen

1) Remove the rear right cover.
2) Remove the five screws, and remove the belt cover.
3) Remove the cable cover ① by removing the three screws ②.

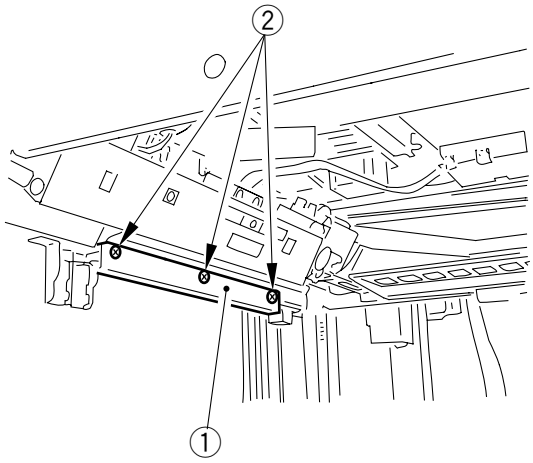

Figure 3-679

4) Remove the leading edge ③ of the stack processing unit by removing the two screws ④.

Caution:

Exercise care. The screen starts to roll up as soon as its tip is removed.

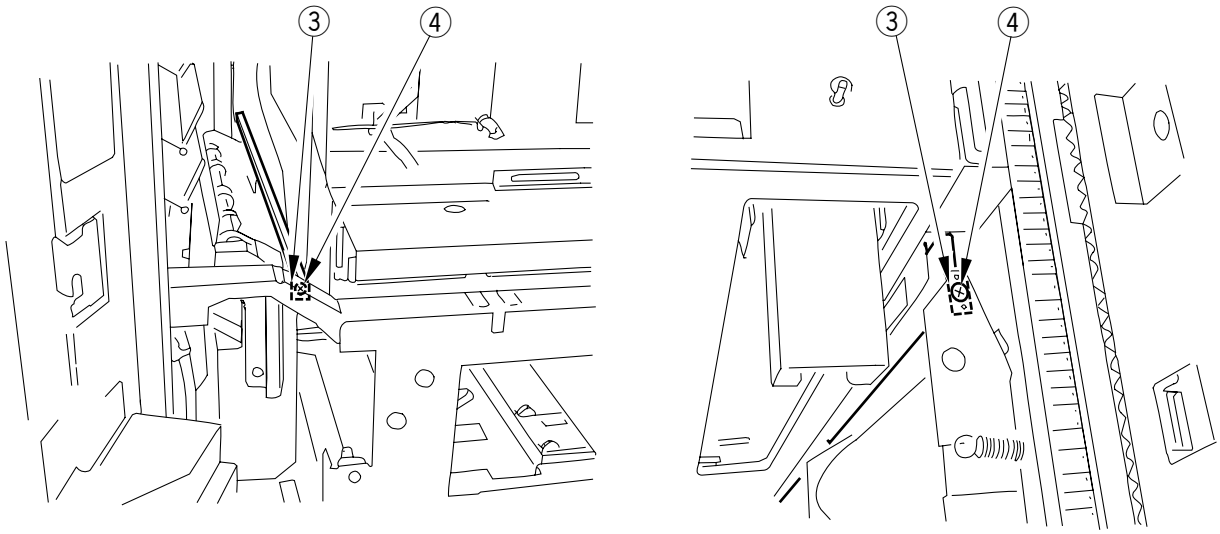

Figure 3-680

COPYRIGHT © 1997 CANON INC.

5) Remove the stack processing unit screen ⑤ by removing the two screws ⑥.

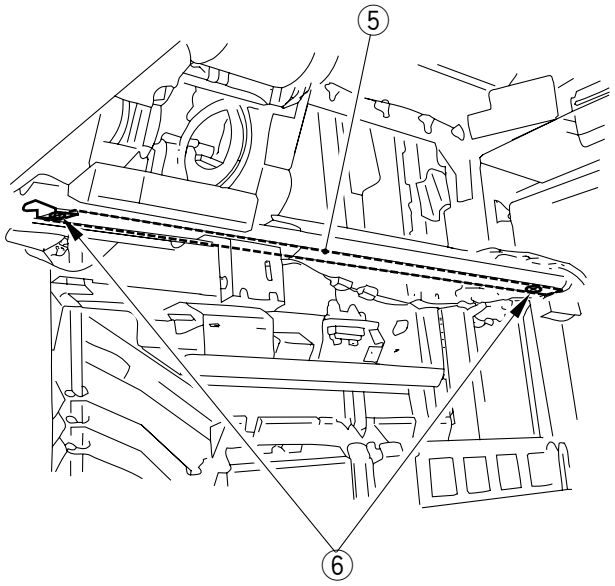

Figure 3-681

2. Installing the Screen

1) Insert the fixing shaft (longer) ② into the shaft ① of the screen.

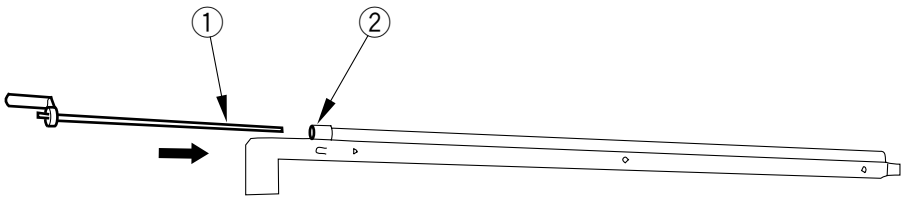

Figure 3-682

2) While holding down the shaft ① of the screen, turn the fixing shaft (longer) ② counterclockwise 20 times to provide winding power.

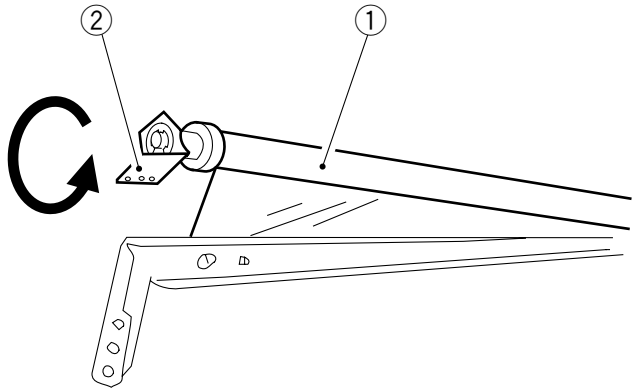

Figure 3-683

3) While maintaining the condition of step 2), install the screen to the stack processing unit ③ together with the fixing shaft (longer) ②.

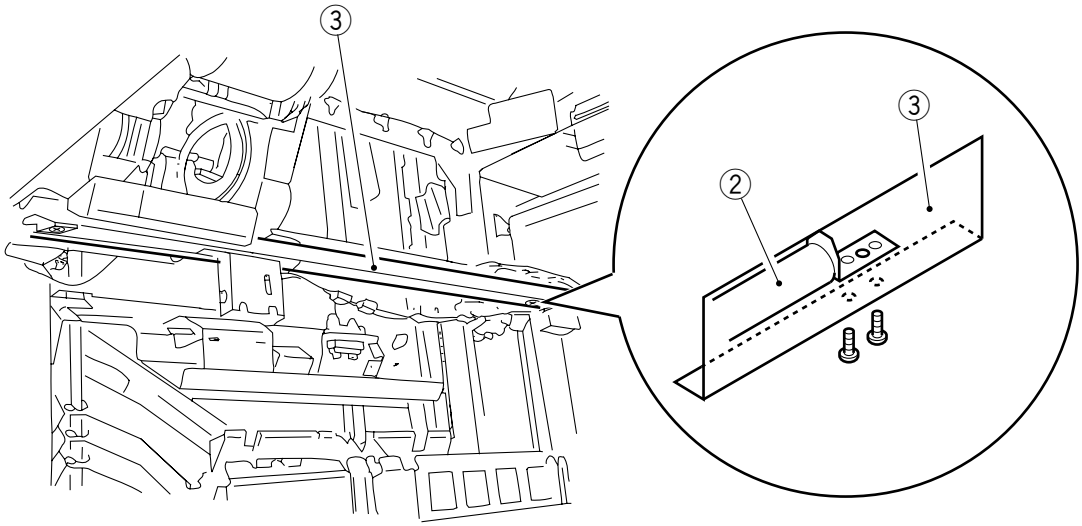

Figure 3-684

COPYRIGHT © 1997 CANON INC.

4) Install the fixing shaft at the front of the screen.

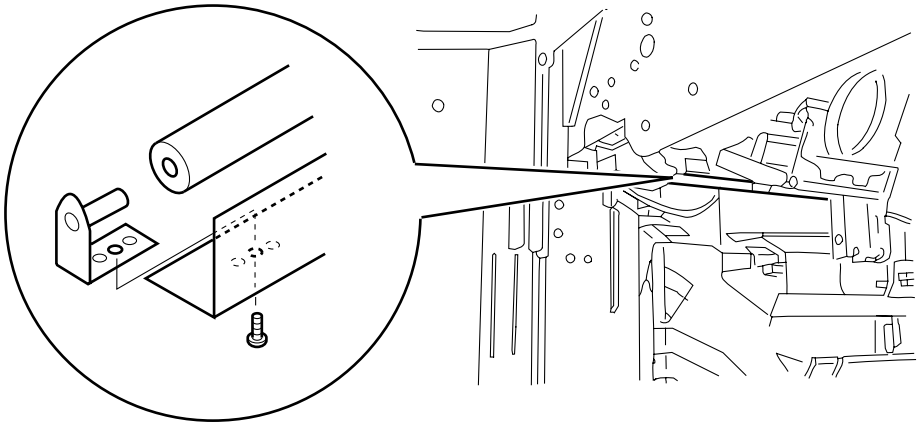

Figure 3-685

5) Slide out the screen, and fix its tip as indicated with two screws ③.

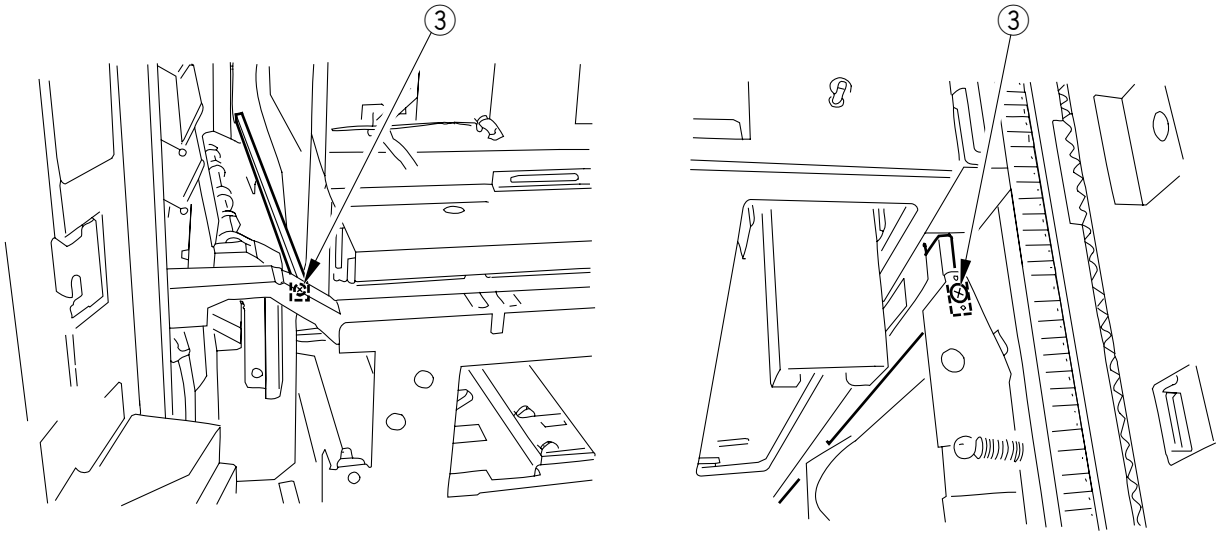

Figure 3-686

VII. STACKER UNIT

A. Stacker Unit

1. Fixing the Stacker Unit in Place

1) Turn on and then off the power switch, and move the stacker unit to home position.
2) Disconnect the copier's power cord from the outlet, and remove the rear right cover.
3) Remove the belt cover ① by removing the five screws ②.

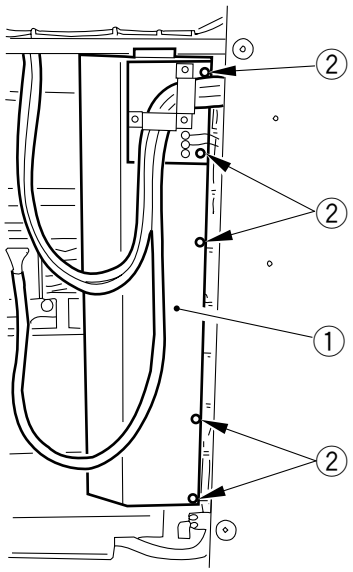

Figure 3-701-1

4) Remove the two metal fixings D ③ by removing the screw ④ (one each).

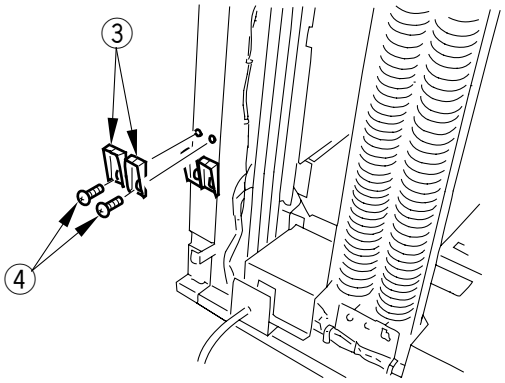

Figure 3-701-2

COPYRIGHT © 1997 CANON INC.

5) Install the two metal fixings D ⑤ to the left and right rail assemblies of the stacker unit using the screws ⑥ removed in step 4).

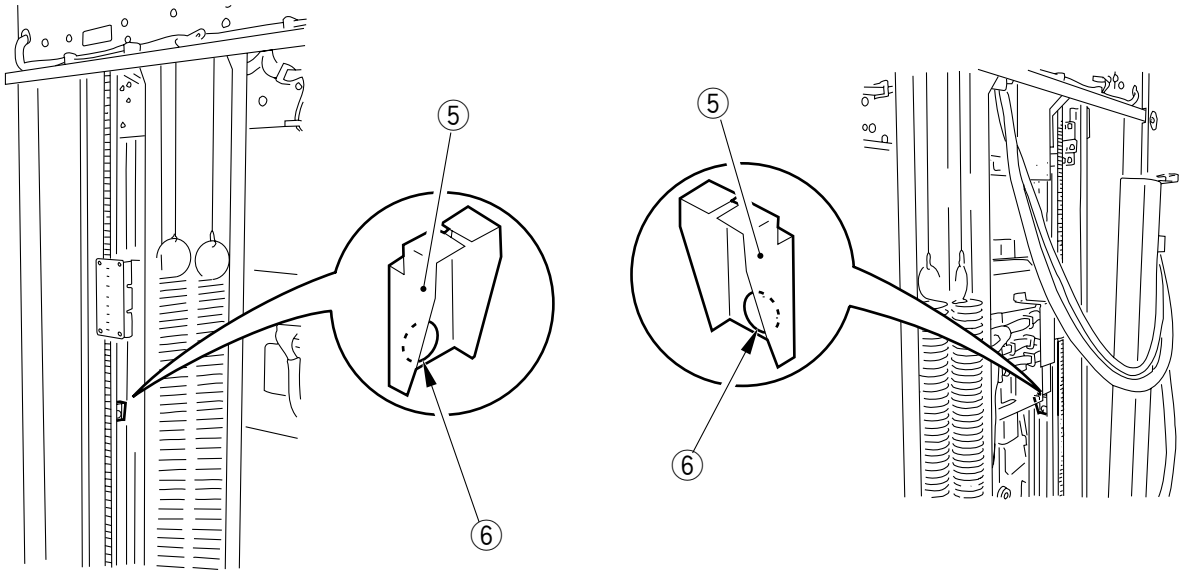

Figure 3-702

6) Remove the metal fixing C ⑦ by removing the screw ⑧.

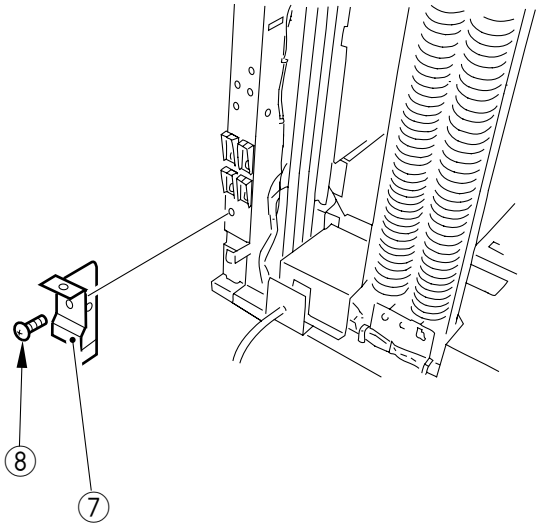

Figure 3-703

7) Open the front cover, and install the metal fixing C ⑨ to the frame of the finisher with the screw ⑩ removed in step 6).

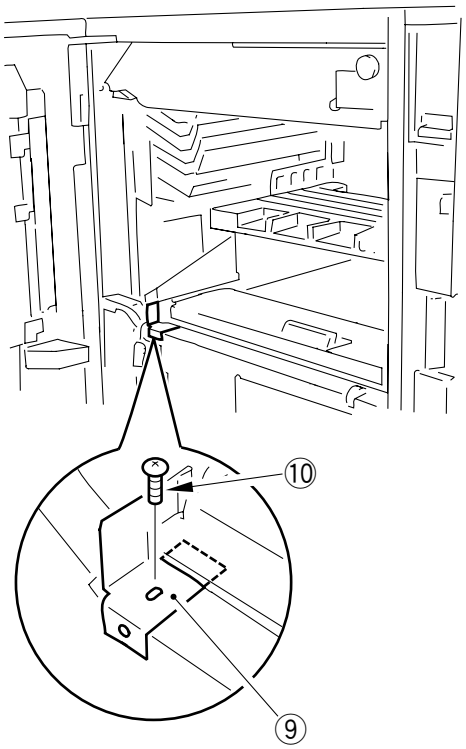

Figure 3-704

COPYRIGHT © 1997 CANON INC.

2. Removing the Stacker Tray Unit

1) Remove the rear right cover.
2) Remove the belt cover ① by removing the five screws ②.

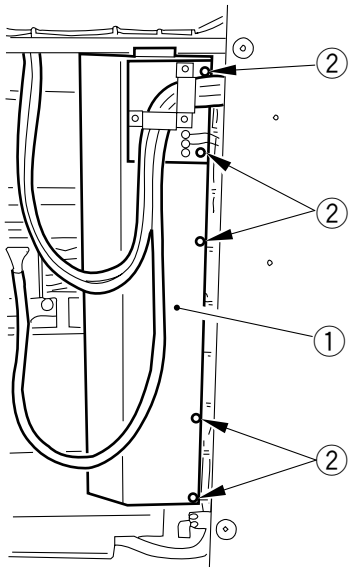

Figure 3-705

3) Open the front cover, and slide out the stacker tray unit about 10 cm.
4) Turn the belt ③ of the lift wall motor to move the lift wall to upper position. At this time, take care so that the lift wall ⑤ will not come into contact with the paper face sensor ④.

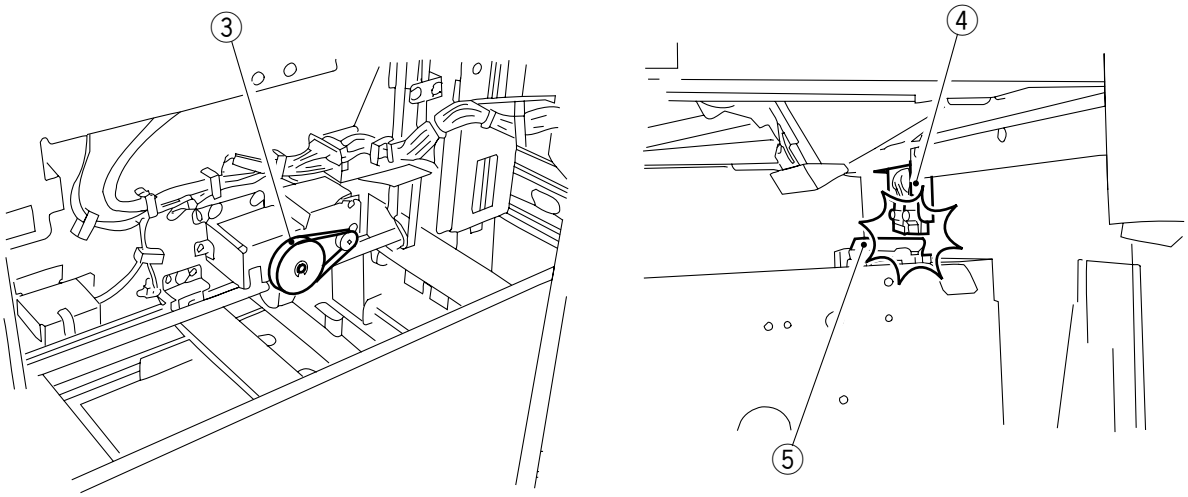

Figure 3-706

5) Remove the cable guide ⑥ by removing the stepped screw ⑦, disconnecting the four connectors ⑧, and removing the two cable retainers ⑨.

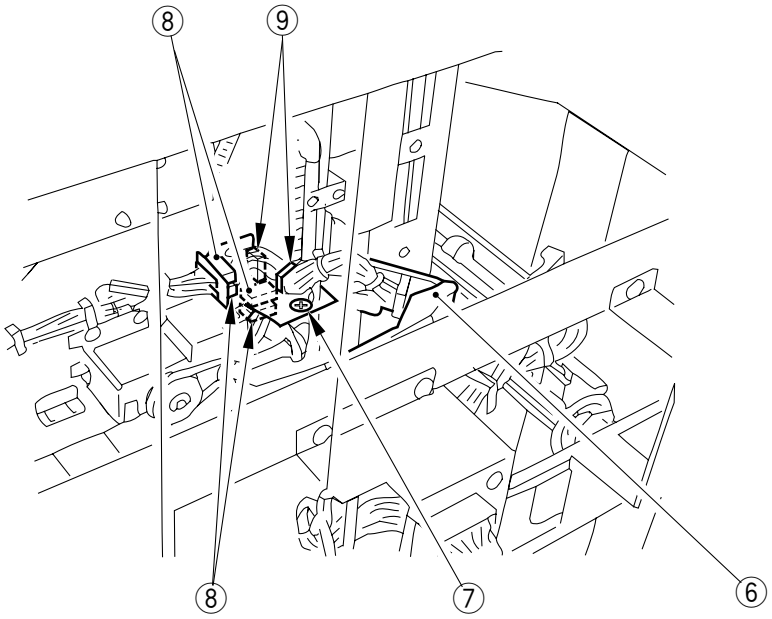

Figure 3-707

6) Remove the left/right lifter wall rail ⑩ by removing the three screws ⑪ (each on left and right).

Caution:

- Work while holding the lift wall rail in place so as to avoid dropping it.
- Use M4×4 fixing screws for the lift wall rail; otherwise, the screw shaft can interfere with the roller.

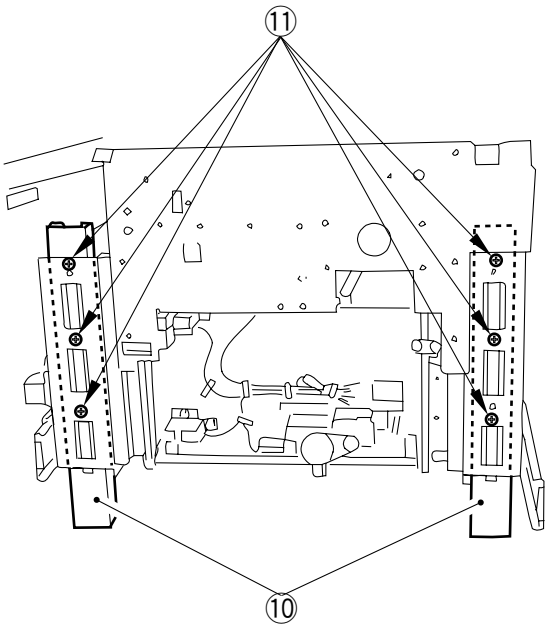

Figure 3-708

COPYRIGHT © 1997 CANON INC.

7) Remove the slide bar ⑫ and the stay ⑬ by removing the four screws ⑭.
8) Remove the stacker tray ⑮.

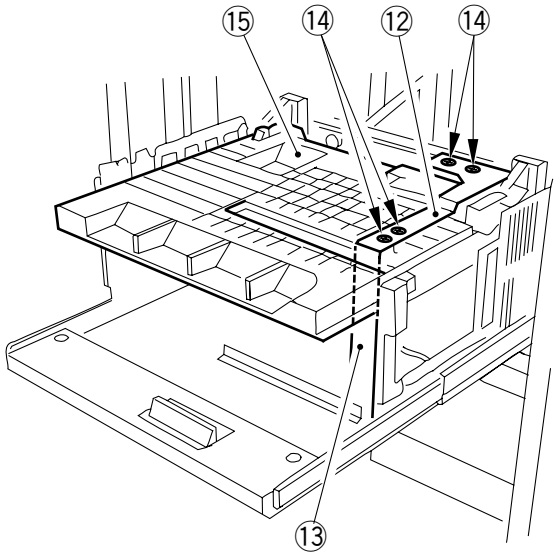

Figure 3-709

9) Remove the motor cover ⑯ by removing the screw ⑰.
10) Remove the screw ⑱ and remove the harness retainer ⑲ and disconnect the connector ⑳.

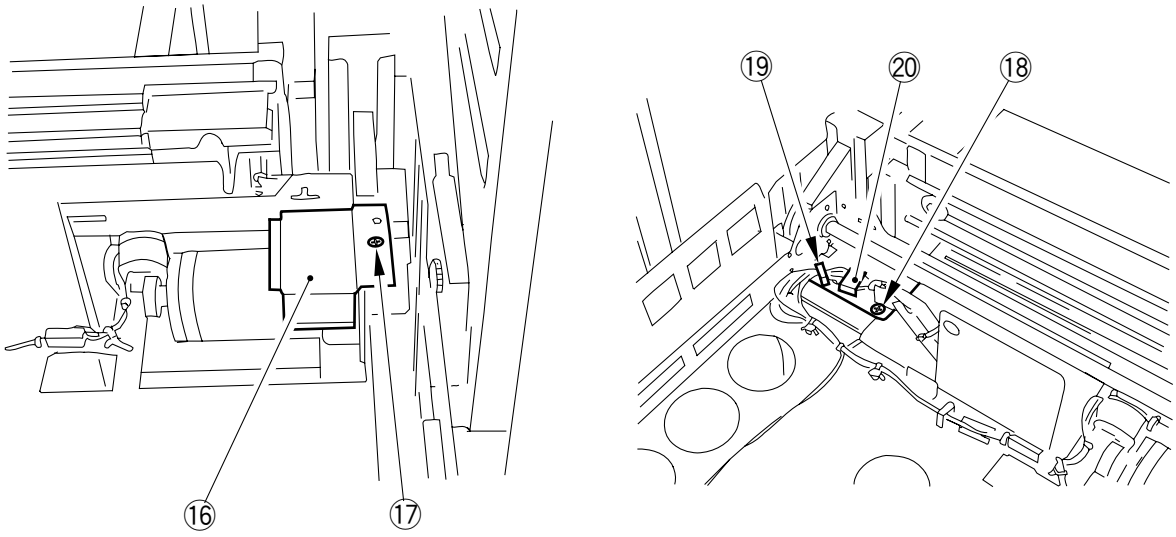

Figure 3-710

11) Remove the stacker tray locking solenoid (SL9) ㉑ by removing the two screws ㉒.

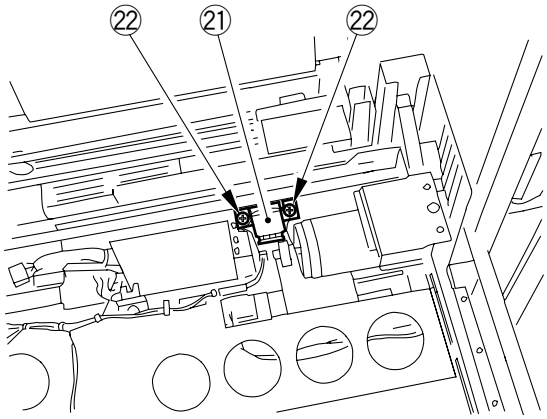

Figure 3-711

12) Turn the stacker tray shift motor (M16) ㉓ in the direction of the arrow, and remove the tray base ㉔.

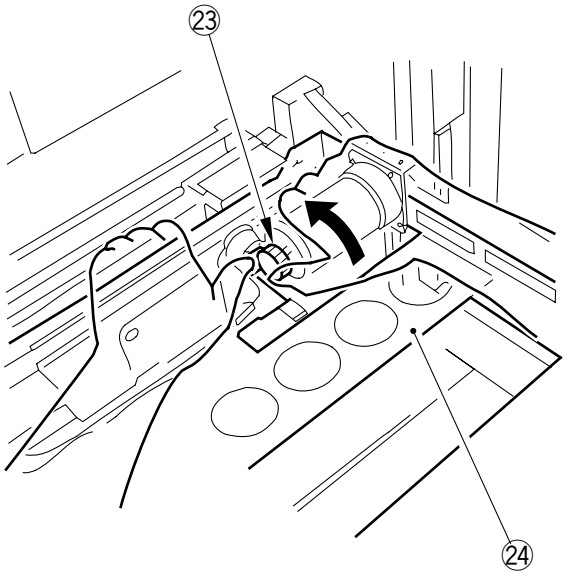

Figure 3-712

COPYRIGHT © 1997 CANON INC.

13) Remove the stacker tray unit ㉕ by removing the eight screws ㉖.

Caution:

When removing the stacker unit, lift the rack gear assembly A shown in Figure 3-713 to disengage the claw B found on the bottom of the stacker tray unit. Work with care.

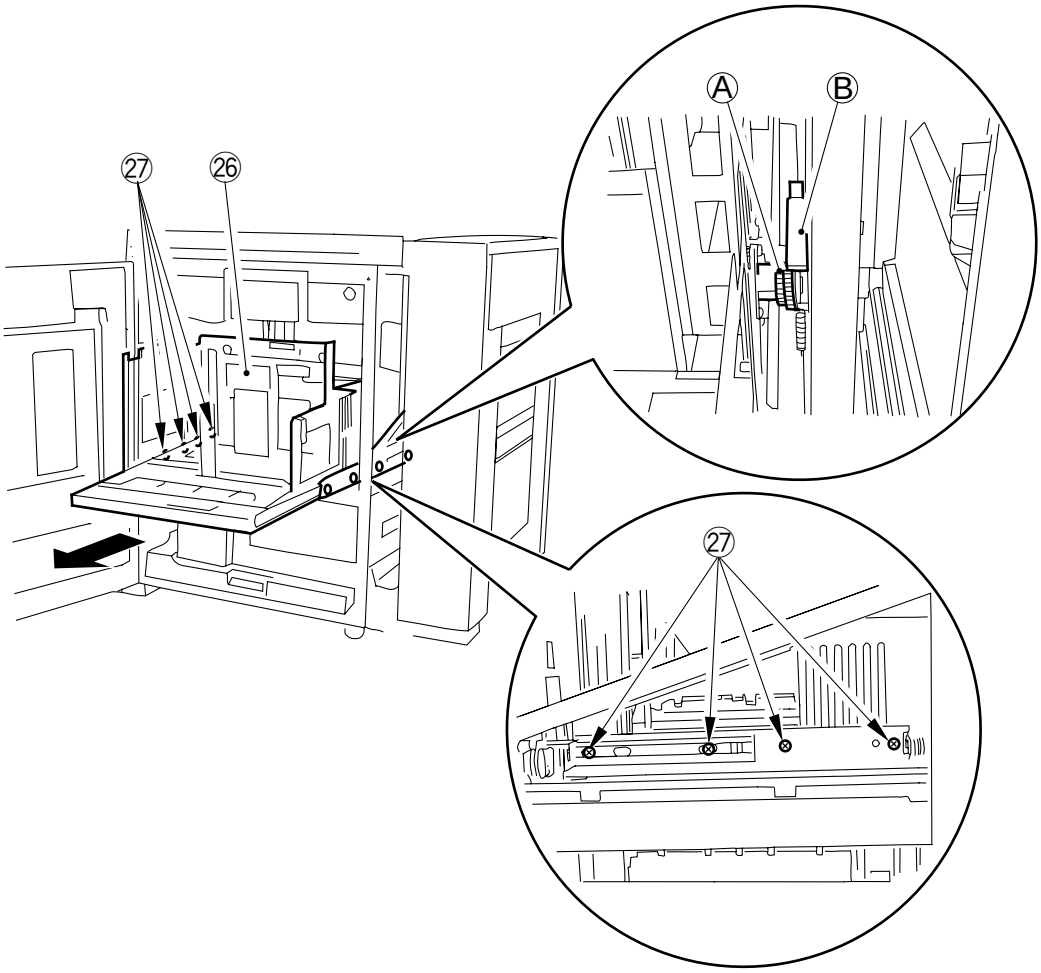

Figure 3-713

3. Installing the Stacker Tray Unit

Install the stacker tray unit by reversing the steps used to remove it with the following in mind:

- When fixing the rail in place, set the stacker tray inside the machine, and then slide it out before securing it.

B. Removing the Stacker Tray Drive System

1. Removing the Stacker Tray Shift Motor (M16)

1) Turn on and then off the power switch to move the stacker unit to home position.
2) Open the front cover ①, and slide out the stacker tray ②.
3) Remove the slide bar ③ and the stay ④ by removing the three screws ⑤. Remove the stacker tray ⑥ by removing the two screws ⑦.

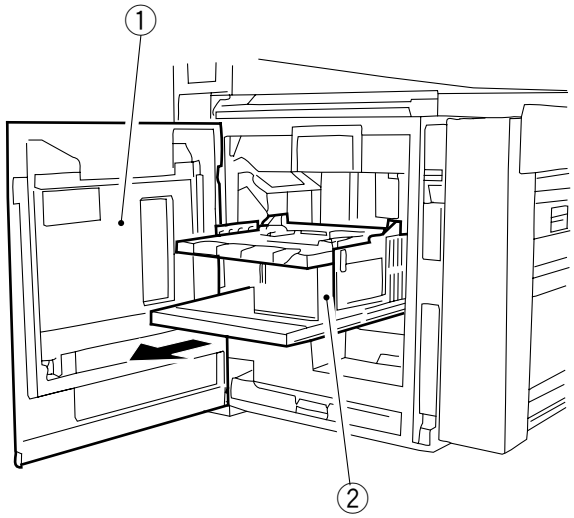

Figure 3-714

4) Remove the motor cover ⑧ by removing the screw ⑨.
5) Remove the harness retainer ⑩ by removing the screw ⑪ and disconnecting the connector ⑫.

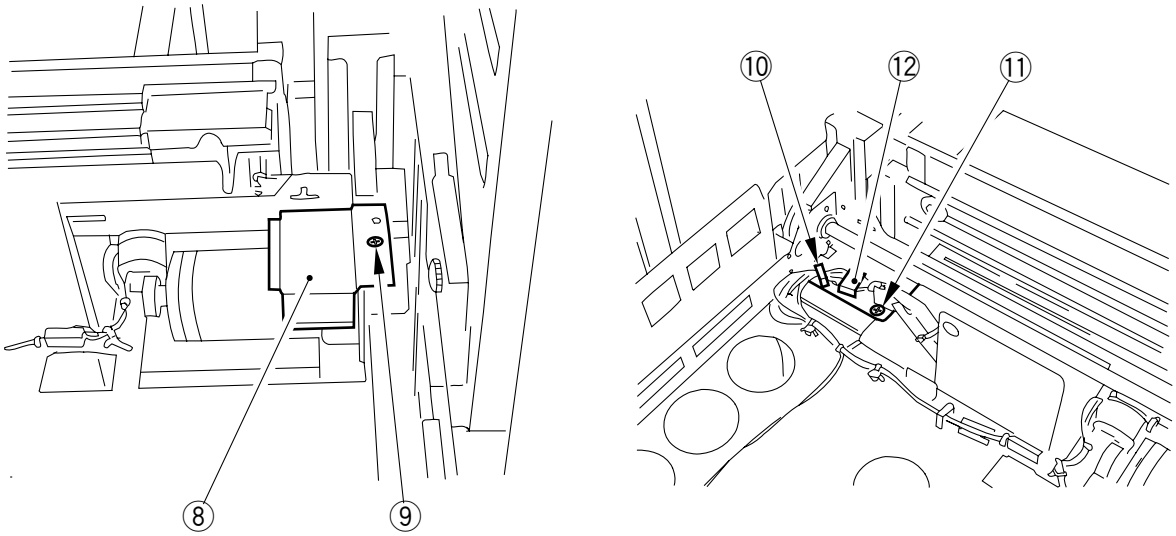

Figure 3-715

COPYRIGHT © 1997 CANON INC.

6) Remove the stacker tray locking solenoid (SL9) ⑫ by removing the two screws ⑬.

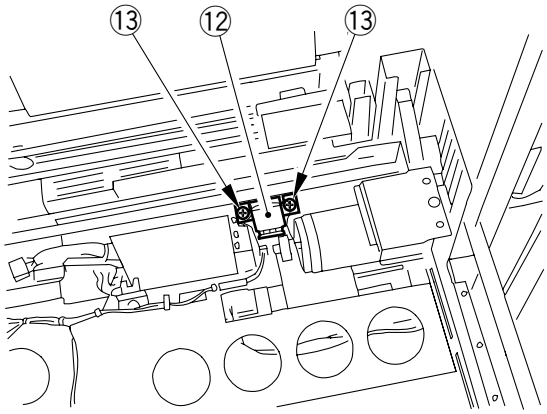

Figure 3-716

7) Turn the ratchet gear ⑭ of the stacker tray shift motor (M16) in the direction of the arrow, and remove the tray base ⑮.

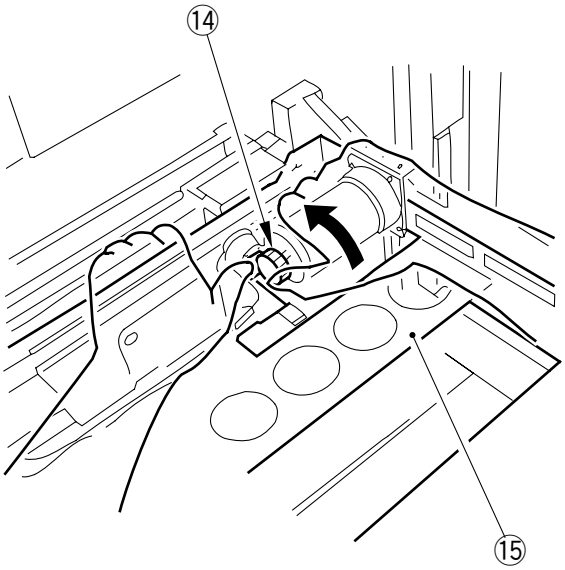

Figure 3-717

8) Remove the gear ⑯ and the belt ⑰ by removing the set screw ⑱.

Caution:

Take care not to leave grease on the gear ⑲ to the belt.

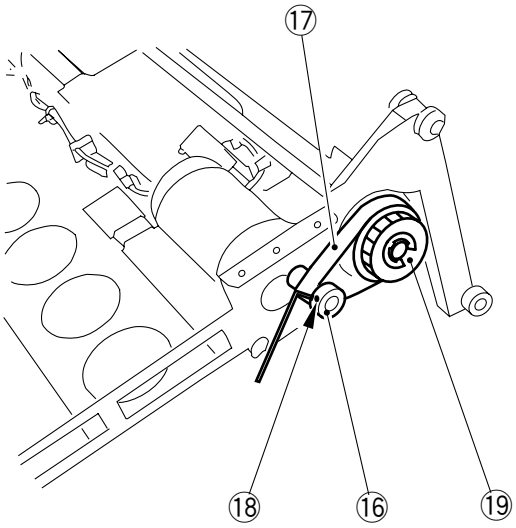

Figure 3-718

9) Remove the stacker tray shift motor ⑳ by removing the four screws ㉑, disconnecting the connector ㉒, and cutting the three harness retainers ㉓.

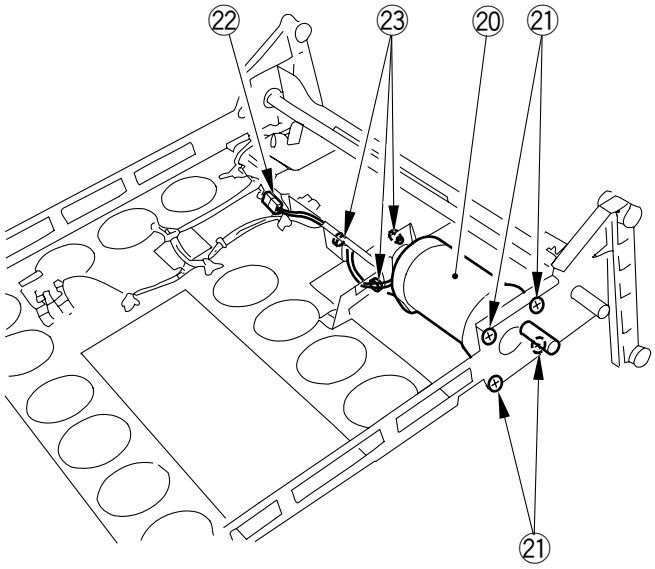

Figure 3-719

COPYRIGHT © 1997 CANON INC.

2. Removing the Stacker Unit Shift Motor (M15)

1) Fix the stacker unit in place with a metal fixing.
2) Remove the belt retainer ① (upper, lower, left, right; one each) and the drive belt ② by removing the four screws ④ (upper, lower, right, left; one each).

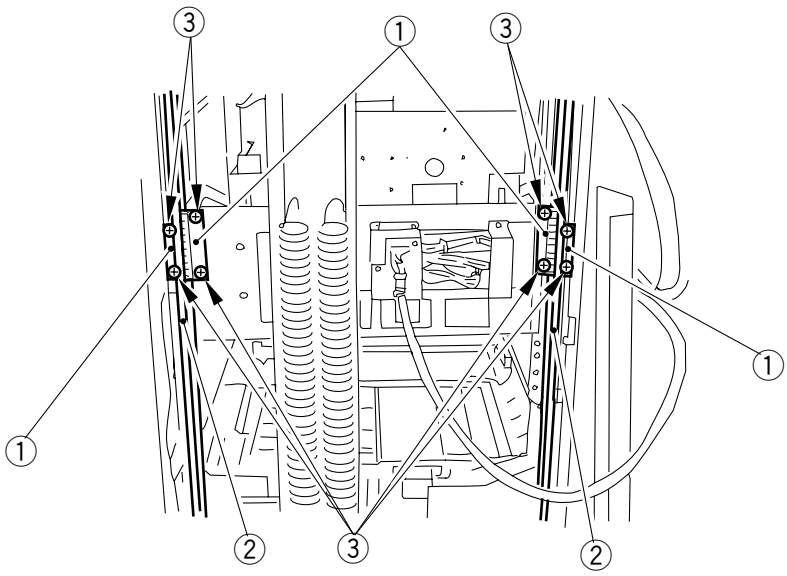

Figure 3-720

3) Remove the stacker unit drive assembly ④ by removing the nine screws ⑤ and disconnecting the three connectors ⑥.

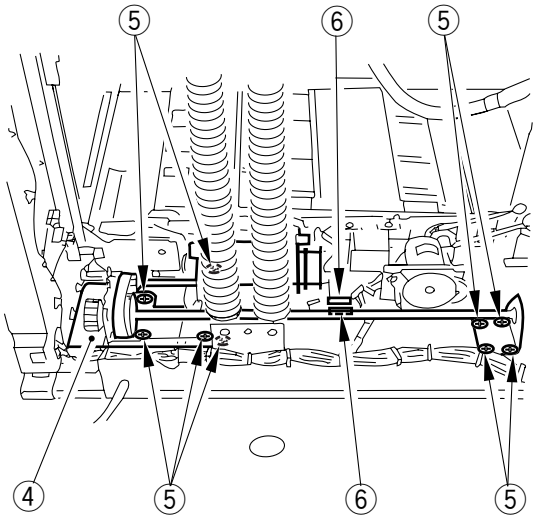

Figure 3-721

COPYRIGHT © 1997 CANON INC.

4) Remove the brake ⑦ by removing the three screws ⑧.
5) Remove the sensor mount ⑨ by removing the screw ⑩.

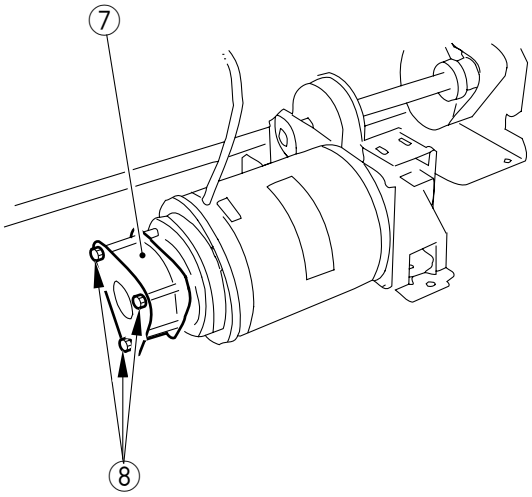

Figure 3-722

6) Remove the two screws ⑪, and loosen the locking screw ⑫; then, remove the gear ⑬ and the belt ⑭ to remove the stacker unit shift motor (M15) ⑮.

Caution:

When installing the gear, be sure to match the position A of the D-cut and the stop position B of the locking screw.

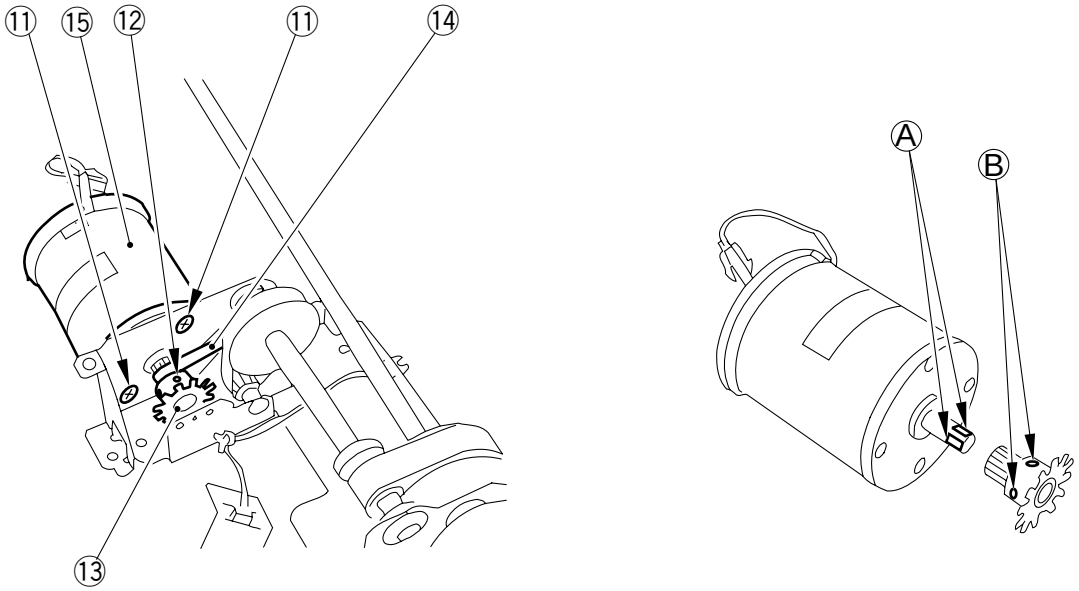

Figure 3-723

COPYRIGHT © 1997 CANON INC.

3. Installing the Stacker Unit Shift Motor (M15)

a. Installing the Stacker Unit Drive Belt

1) Loosen the two fixing screws ① (left, right; two each).
2) Loosen the tension adjusting nut ②.

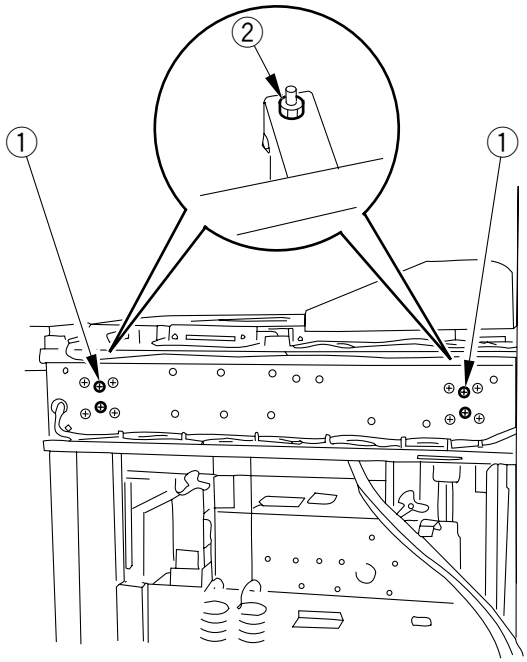

Figure 3-724

3) Check to make sure that the stacker unit is on the metal fixing ③.

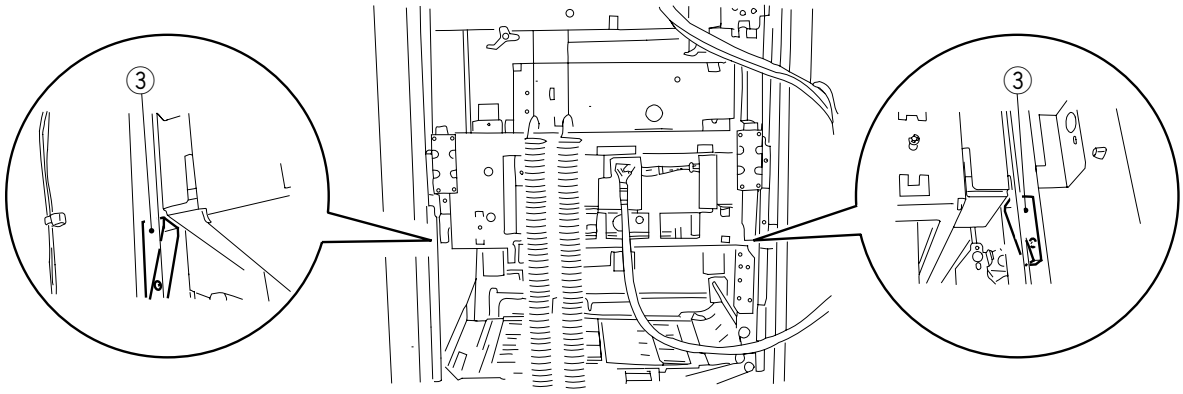

Figure 3-725

4) Match the let/right drive belt ④ against the end of the belt retainer lower ⑤ to engage.

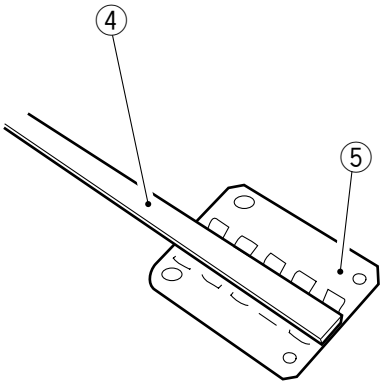

Figure 3-726

5) Fix the drive belt ④ and the belt retainer lower ⑤ temporarily on the stacker unit with four screws ⑥.

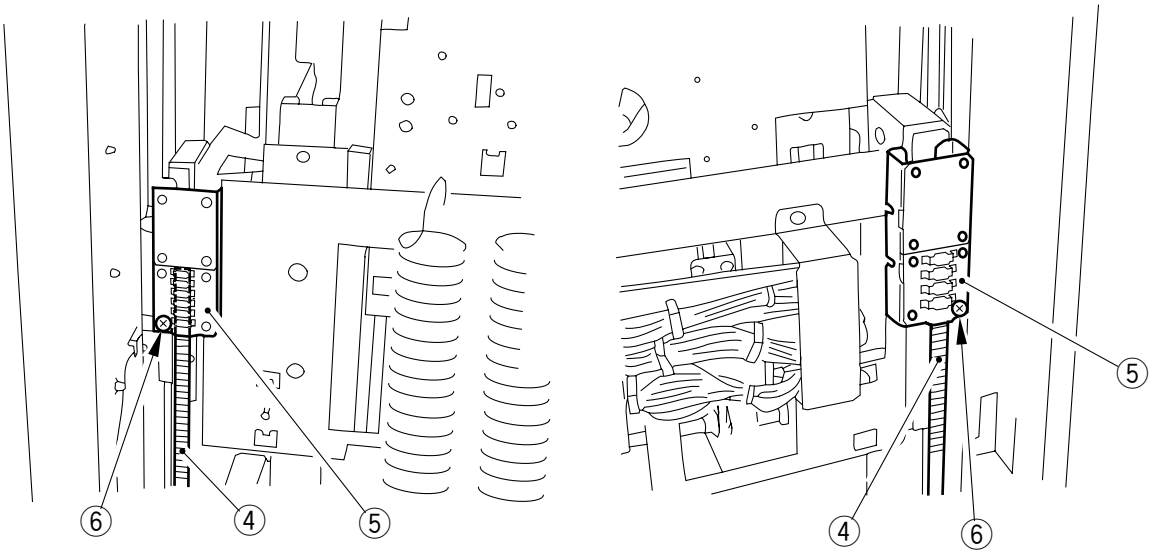

Figure 3-727

COPYRIGHT © 1997 CANON INC.

6) Attach the drive belt ④ in the order indicated.

Caution:

When fixing the drive belt ④ in place by the belt retainers upper and lower ⑤, be sure to match the ends of the drive belts.

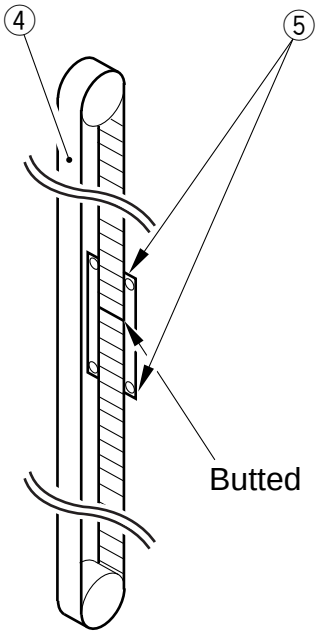

Figure 3-728

7) Fix the belt retainer ⑤ in place with four screws ⑦.

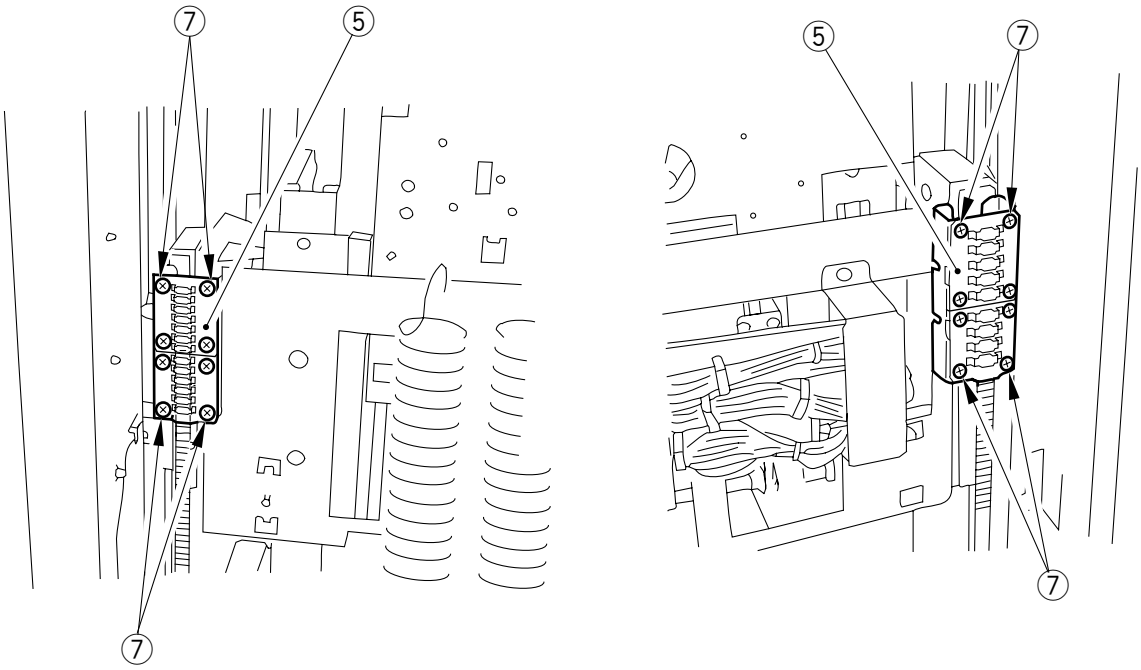

Figure 3-729

COPYRIGHT © 1997 CANON INC.

b. Adjusting the Tension of the Stacker Unit Drive Belt

As shown, turn the tension adjusting nut so that the reading is 1000 g when the center of the drive belt (about 20 mm from the lower end of the belt metal fixing) is pushed down over a length of 10 to 15 mm with a tension gauge.

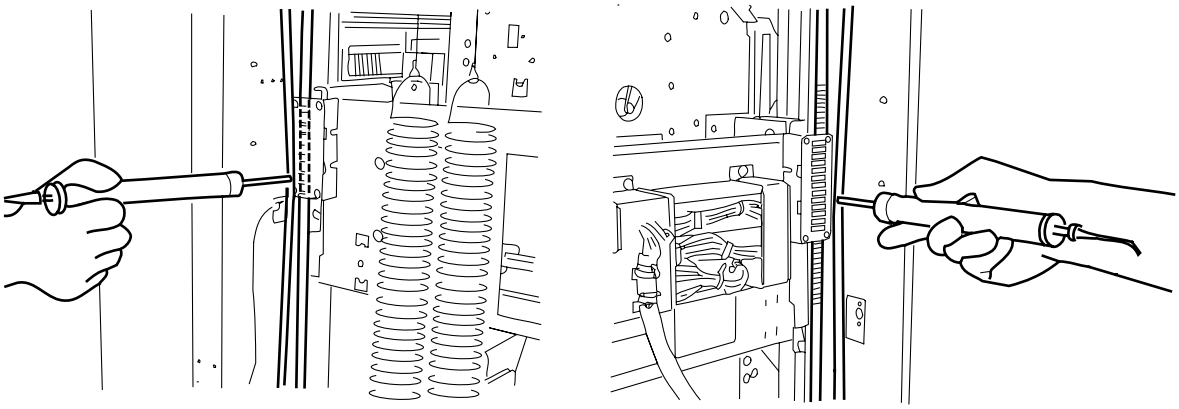

Figure 3-730

COPYRIGHT © 1997 CANON INC.

C. Removing the Leading Edge Stopper Drive System

1. Removing the Leading Edge Stopper Motor (M18)

1) Remove the rear right cover.
2) Remove the belt cover ① by removing the five screws ②.

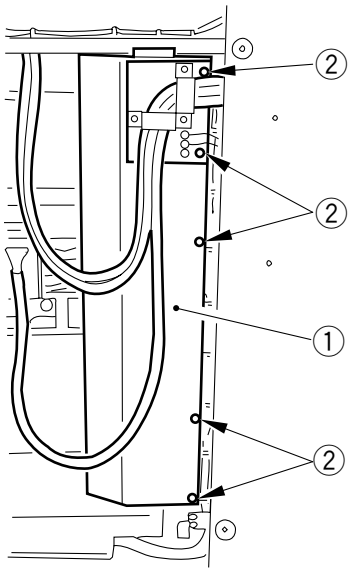

Figure 3-731

3) Open the front cover, and slide out the stacker tray unit about 10 cm.
4) Turn the belt ③ of the lifter wall shift motor to move the lift wall ④ to upper position. At this time, take care so that the lifter wall will not come into contact with the paper face sensor ⑤.

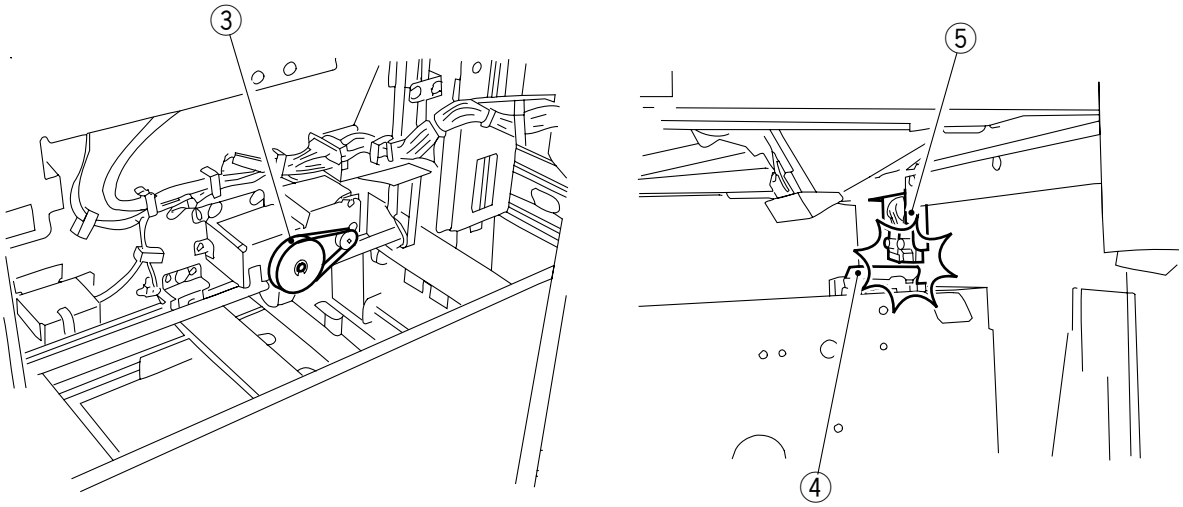

Figure 3-732

5) Remove the leading edge stopper motor cover ⑥ by removing the three screws ⑦.

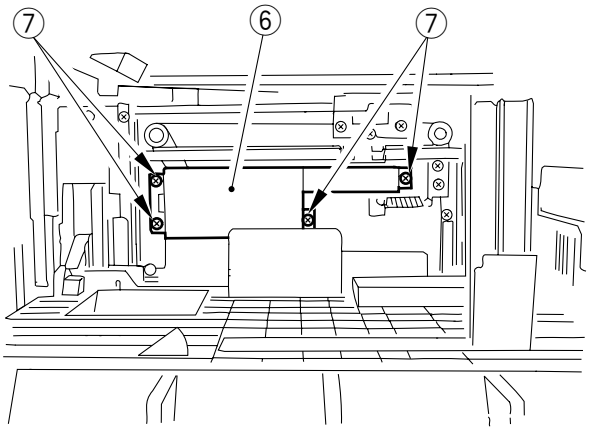

Figure 3-733

6) Remove the spring ⑩, and disconnect the connector ⑪.
7) Remove the four screws ⑬, and remove the leading edge stopper motor (M18) ⑫.

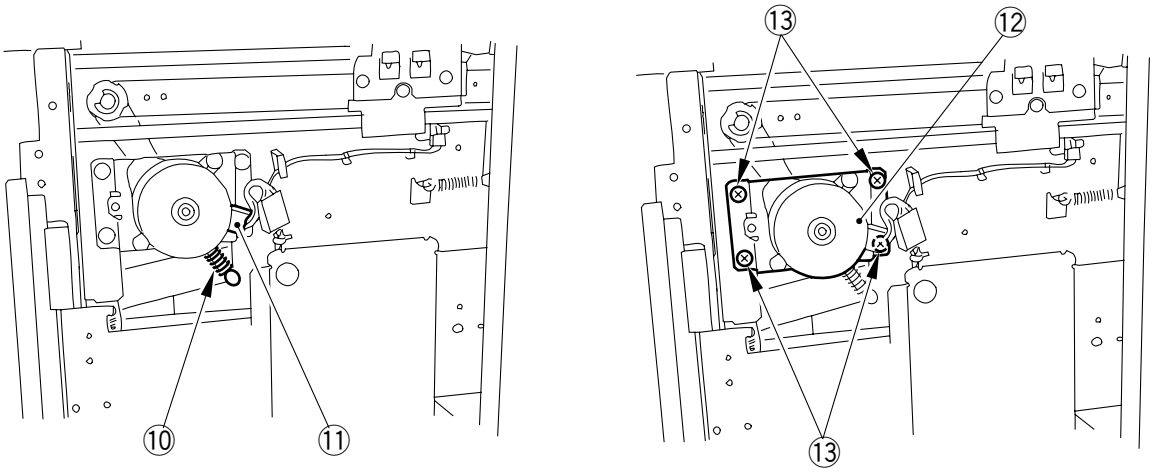

Figure 3-734

COPYRIGHT © 1997 CANON INC.

2. Removing the Leading Edge Stopper Drive Belt

1) Remove the rear right cover.
2) Remove the belt cover ① by removing the five screws ②.

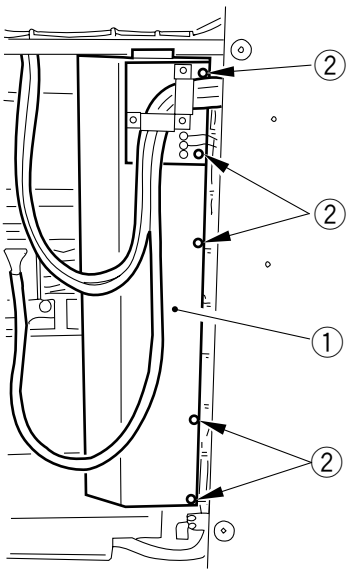

Figure 3-735

3) Open the front cover, and slide out the stacker tray unit about 10 cm.
4) Turn the belt ③ of the lifter wall shift motor to move the lifter wall up about 5 cm.

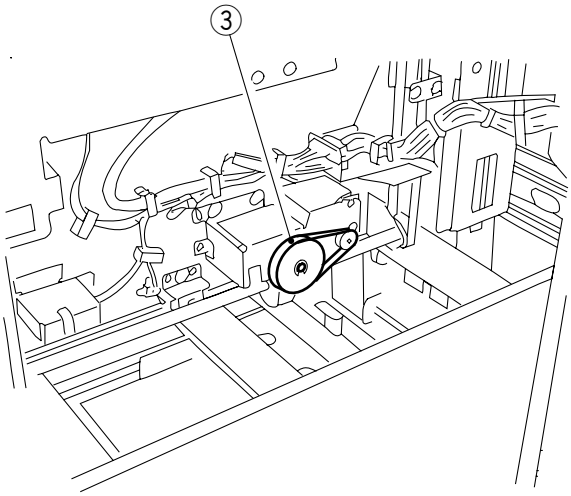

Figure 3-736

COPYRIGHT © 1997 CANON INC.

5) Remove the leading edge stopper stay ④ by removing the three screws ⑤.
6) Remove the slide rail (upper) ⑥ by removing the two E-rings ⑦.

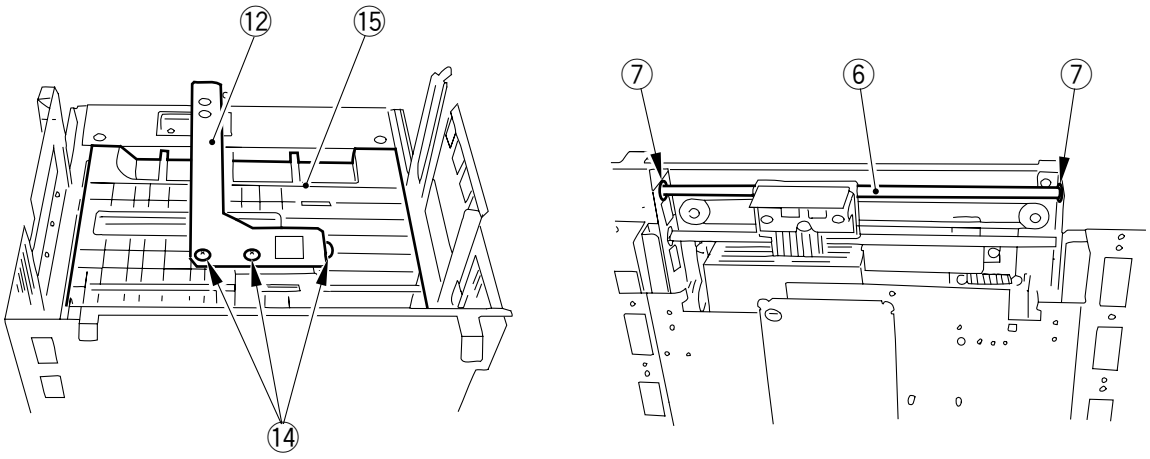

Figure 3-737

7) Remove the belt metal fixing ⑧ from the slider ⑩ by removing the screw ⑨.

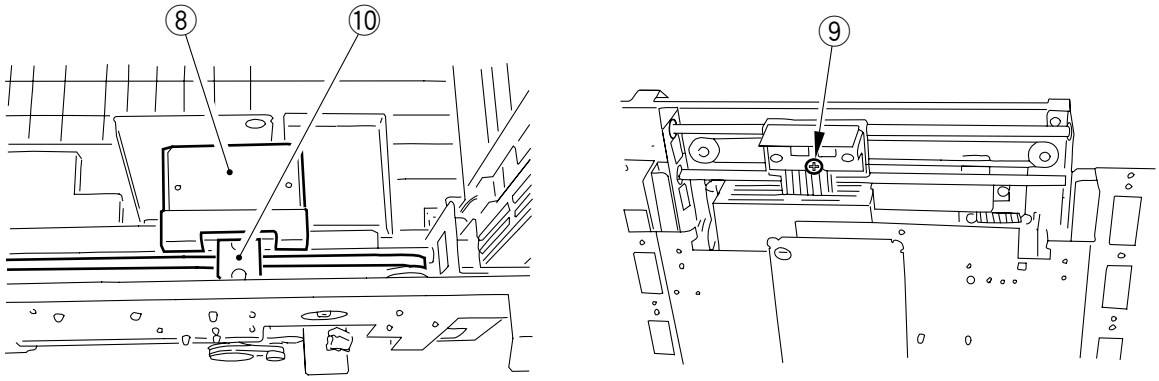

Figure 3-738

COPYRIGHT © 1997 CANON INC.

8) Remove the belt metal fixing ⑧ by removing the two screws ⑪ and the spring ⑫; then, loosen the screw ⑭ on the tensioner ⑬, and remove the leading edge stopper drive belt ⑮.

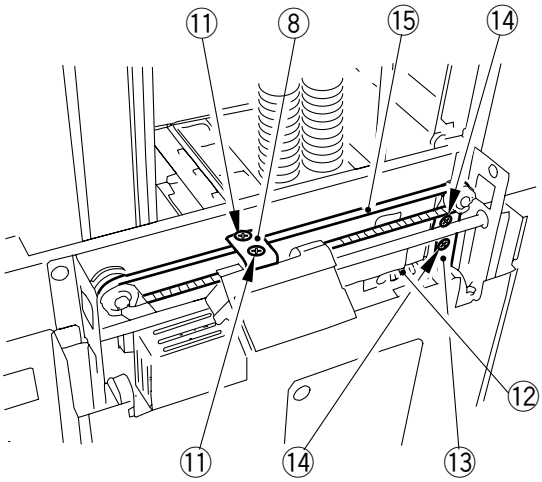

Figure 3-739

3. Adjusting the Angle of the Leading Edge Stopper

1) Move the stacker tray to the upper limit in service mode.
2) Check to make sure that the leading edge stopper is at home position.
3) Loosen the two adjusting screws ③ to make adjustments so that the top face ① of the stacker tray and the leading edge stopper adjusting plate ② are parallel.

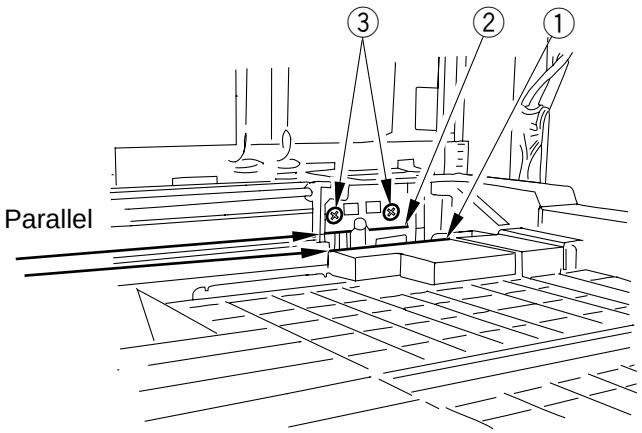

Figure 3-740

4. Adjusting the Leading Edge Stopper Home Position

1) Move the leading edge stopper to home position in service mode.
2) Loosen the adjusting screw to make adjustments so that the distance between leading edge stopper and reference wall is 367 ±0.5 mm.

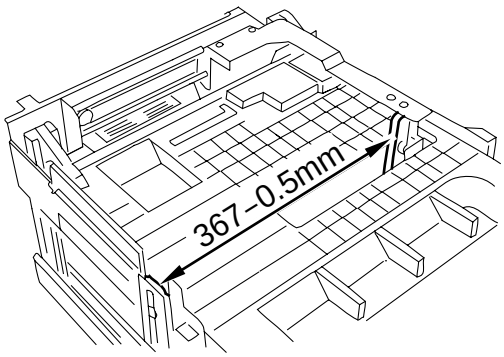

Figure 3-741

COPYRIGHT © 1997 CANON INC.

D. Removing the Lifter Wall Drive System

1. Removing the Lifter Wall Shift Motor (M19)

1) Remove the rear right cover.
2) Remove the belt cover ① by removing the five screws ②.

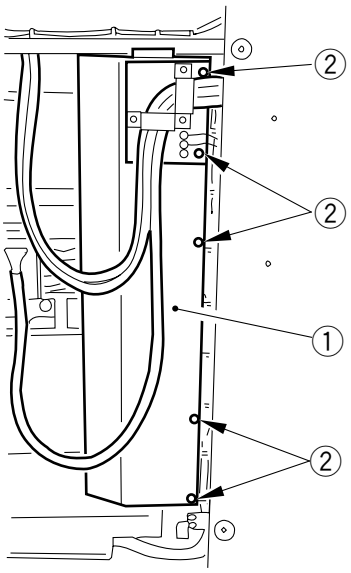

Figure 3-742

3) Open the front cover, and slide out the stacker tray unit about 10 cm.
4) Remove the lifter wall shift motor ③ by removing the four screws ④ and disconnecting the connector ⑤.

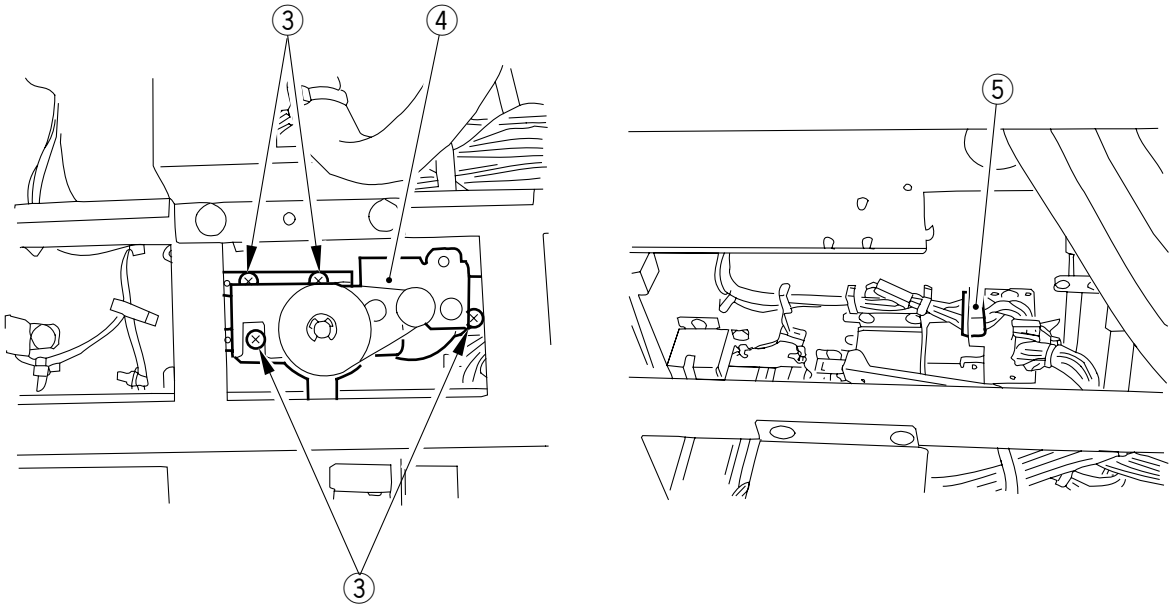

Figure 3-743

2. Removing the Lifter Wall Drive Belt

1) Remove the stacker tray unit.
2) Remove the guide roller ① by removing the E-ring ②.

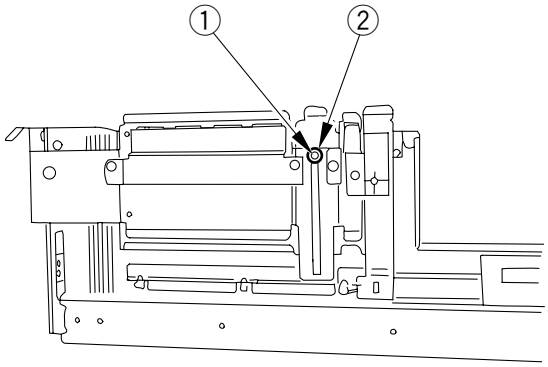

Figure 3-744

3) Remove the belt retainer ③ by removing the two screws ④ each at left and right.

Caution:

Be sure to support the lifter wall unit while working to prevent the lifter wall unit ⑤ from dropping.

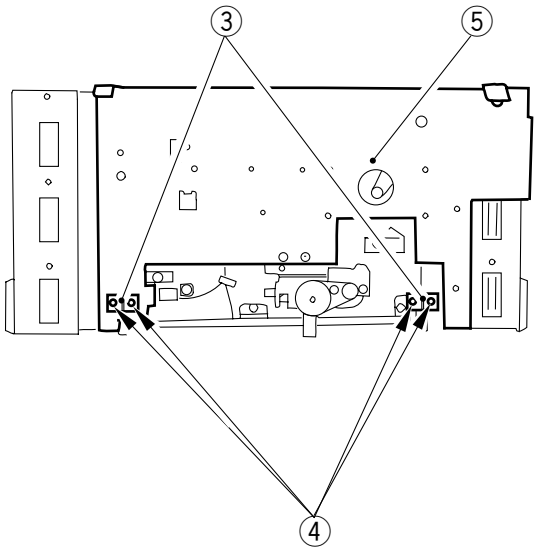

Figure 3-745

COPYRIGHT © 1997 CANON INC.

4) Lift the lifter wall unit; then, remove the three harness retainers ⑥, and disconnect the connector ⑦.
5) Remove the lifter wall drive belt ⑧ by removing the two screws ⑨ (each on left and right) and removing the spring ⑩.

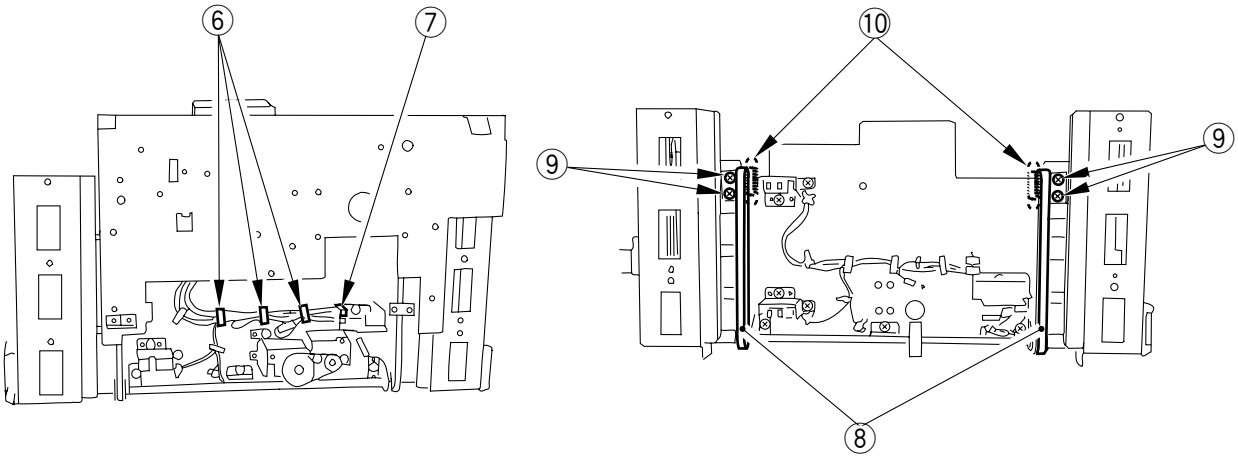

Figure 3-746

Caution:

Be sure to adjust the phase of the lifter wall unit whenever you have installed the lifter wall drive belt.

3. Adjusting the Phase of the Lifter Wall Unit

1) Remove the rear right cover.
2) Remove the belt cover ① by removing the five screws ②.

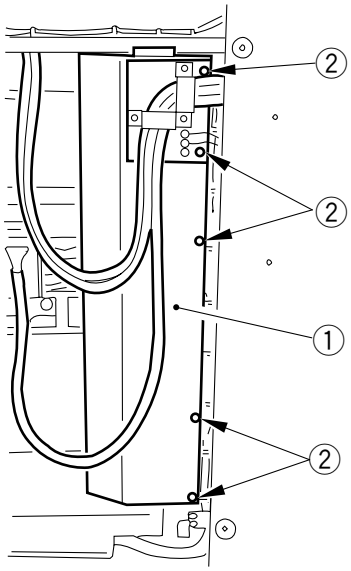

Figure 3-747

3) Open the front cover, and slide out the stacker tray unit about 10 cm.
4) Turn the belt ③ of the lifter wall shift motor so that the top face of the left end of the lifter wall matches the height of the tray guide rail.

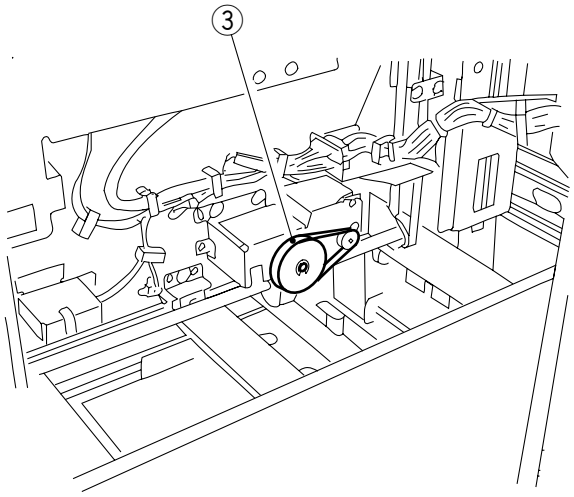

Figure 3-748

5) Loosen the two fixing screws ⑥ to make adjustments so that the top face ④ of the right edge of the lifter wall and the height of the tray guide rail ⑤ match. At this time, the discrepancy in height between the left and right lifter walls must be 1.5 mm or less.

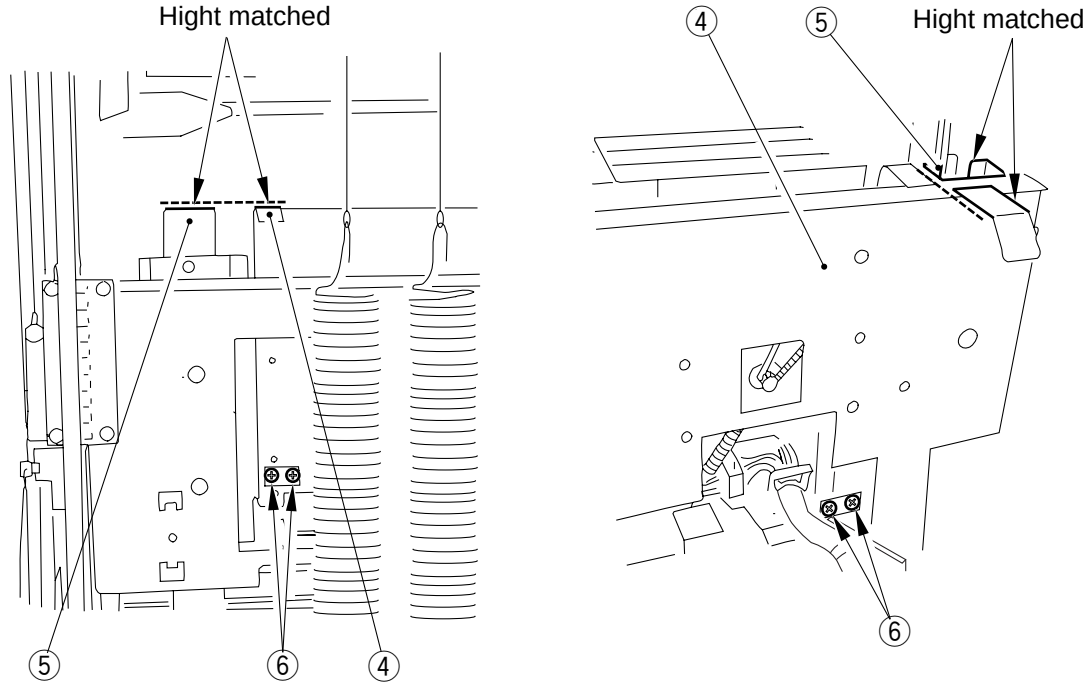

Figure 3-749

COPYRIGHT © 1997 CANON INC.

E. Adjusting the Tension of the Stacker Unit Shift Brake 2 Belt

1) Remove the common feeding motor.
2) As shown, loosen the tension fixing screw ① and turn the tension adjusting nut ② to make adjustments so that the reading is 100 g when the center of the brake belt is pushed by a tension gauge about 10 to 15 mm.

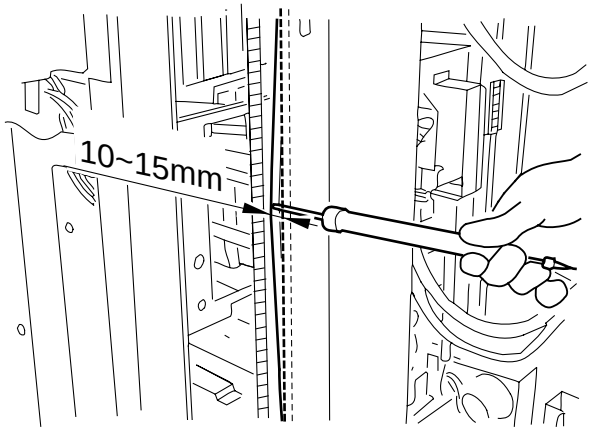

Figure 3-750

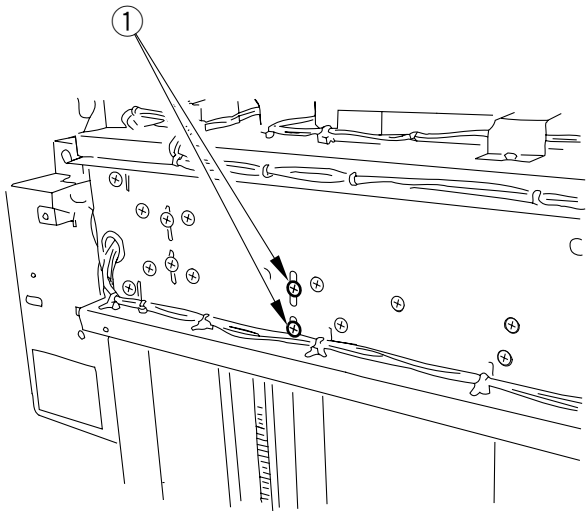

Figure 3-751

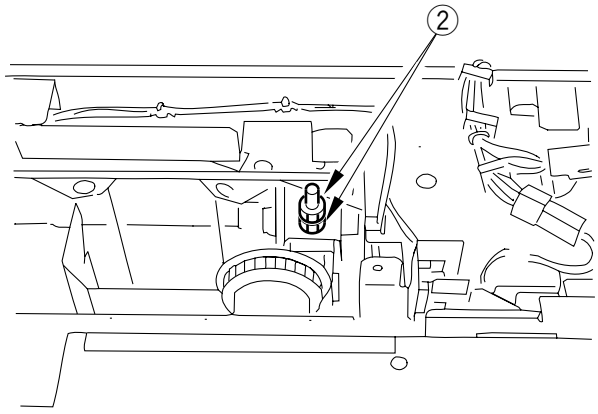

Figure 3-752

F. Adjusting the Orientation of the Stack Tray

1) Move the stack tray to upper position in service mode.
2) Slide out the stacker unit.
3) Loosen the two screws ①.

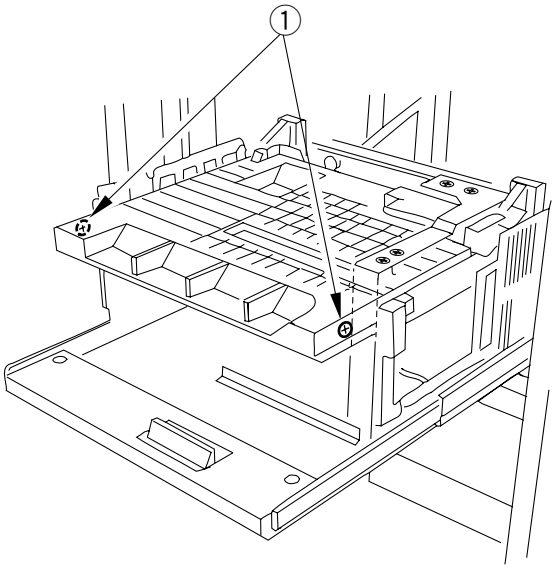

Figure 3-753

4) Adjust the mounting angle of the stack tray so that the difference in distance between the top face of the stack tray and the top end of the reference wall is in 1 mm or less at the end and the front (A - B ≦ 1 mm).

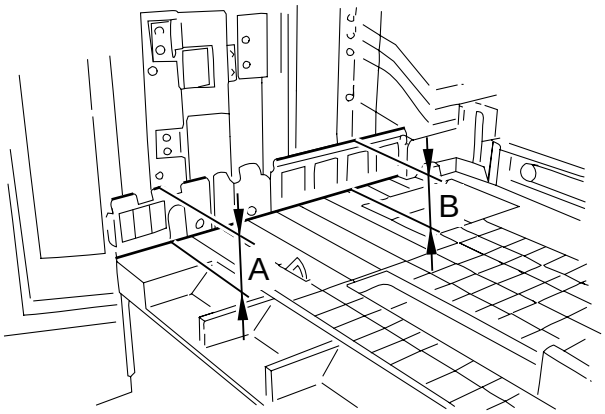

Figure 3-754

COPYRIGHT © 1997 CANON INC.

VIII. ELECTRICAL SYSTEM

A. Removing the Finisher Controller PCB

1) Remove the rear left cover.
2) Disconnect all connectors from the finisher controller PCB.
3) Remove the finisher controller PCB ① by removing the nine locking supports ②.

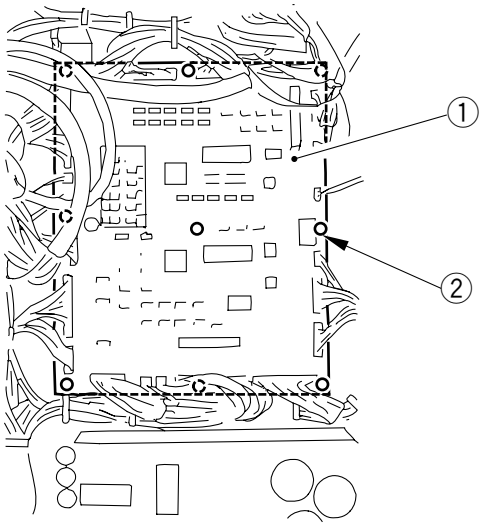

Figure 3-801

B. Removing the Stack Processing Unit Drive PCB

1) Lower the stacker unit and the stack processing unit in service mode.

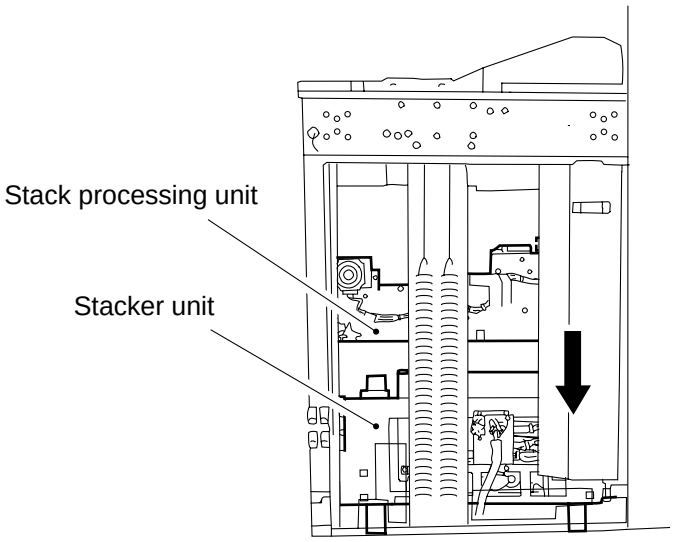

Figure 3-802

2) Turn off the copier, and disconnect the finisher's power cable from the power outlet.
3) Remove the PCB cover ① by removing the four screws ②.

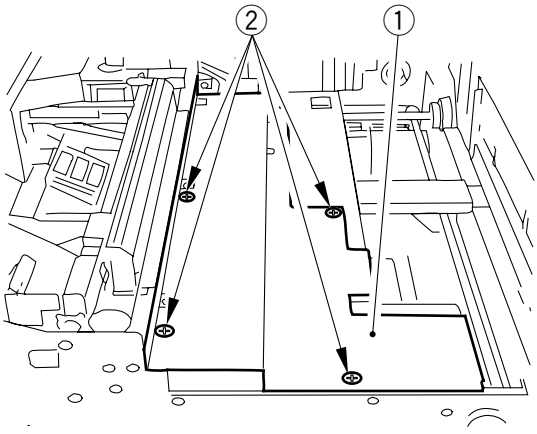

Figure 3-803

COPYRIGHT © 1997 CANON INC.

4) Remove the grounding wire ③ by removing the screw ④.
5) Remove the four screw ⑤, and remove the two harness retainers ⑥; then, slide out the stack processing unit drive PCB ⑦.
6) Disconnect all connectors of the PCB, and remove the stack processing unit drive PCB ⑧.

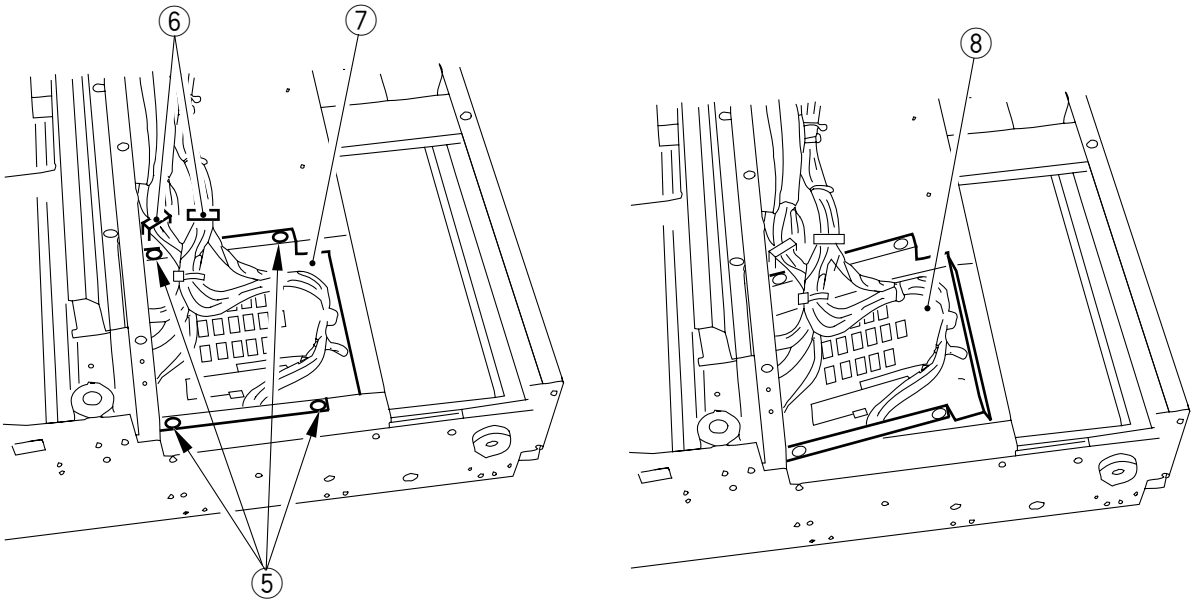

Figure 3-804

C. Removing the Power Supply PCB

1) Remove the rear left cover.
2) Disconnect all connectors from the power supply PCB.
3) Remove the power supply PCB ① by removing the four screws ②.

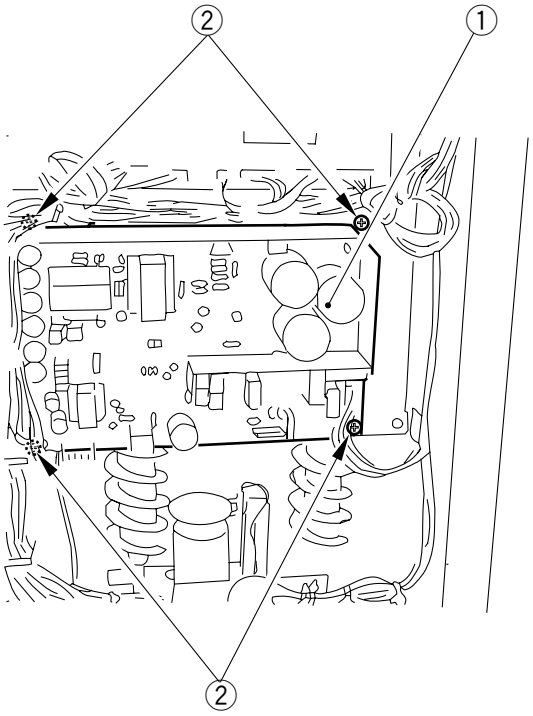

Figure 3-805

COPYRIGHT © 1997 CANON INC.

D. Noise Filter Unit

1) Remove the rear left cover.
2) Disconnect the connector ①, and remove the eight receptacles ② and the three screws ③.
3) Remove the noise filter unit ④ by removing the six harness bands ⑤.

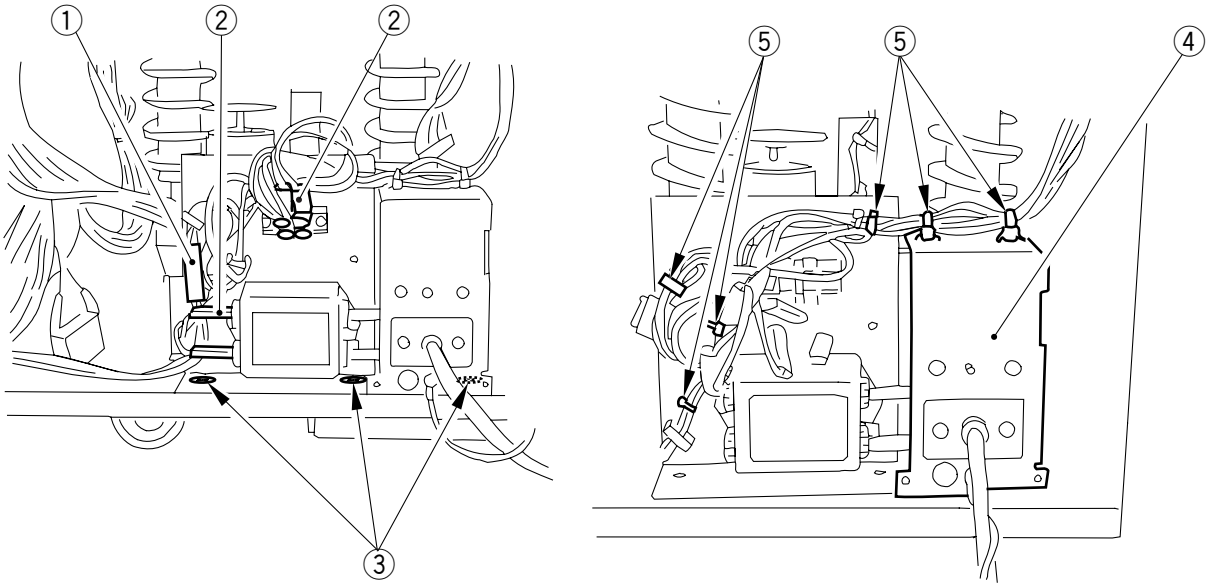

Figure 3-806

IX. PAPER FOLDING UNIT-A1

A. External Covers

Remove the covers as necessary when cleaning, checking, or repairing the inside of the machine. Those covers that may be detached by mere removal of mounting screws are left out of the discussions.

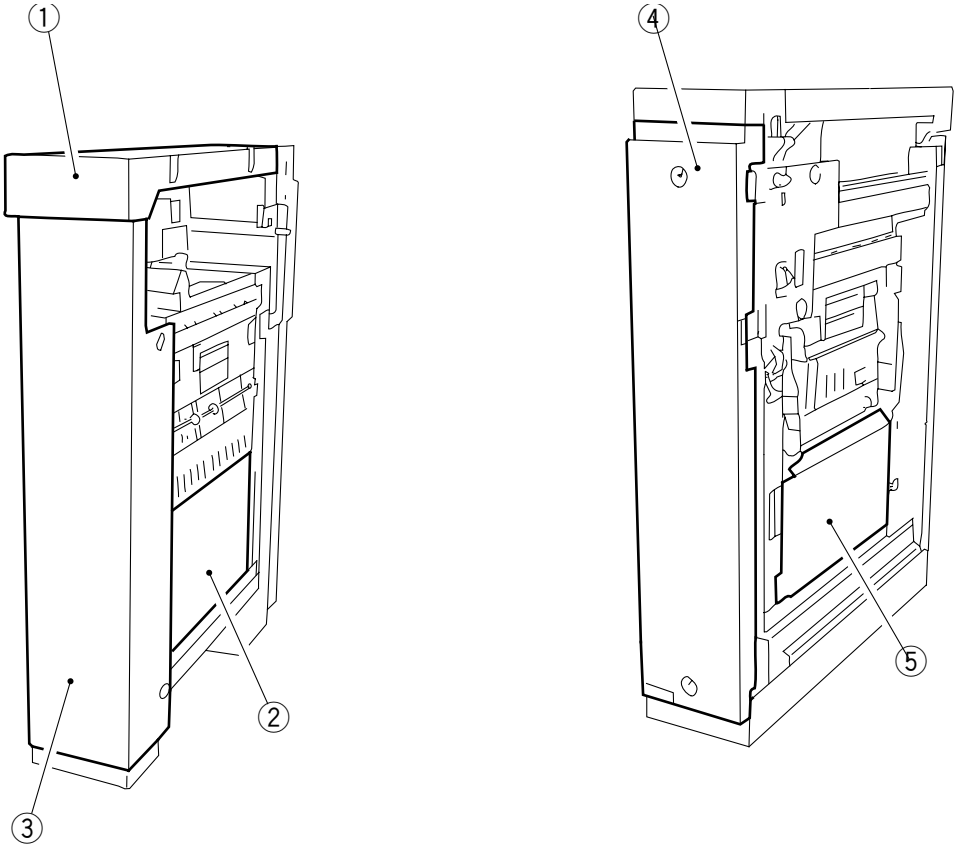

① Upper cover (4)
② Lower right cover (2)
③ Front cover (3)
④ Rear cover (2)
⑤ Lower left cover (2)

Figure 3-901

The number in parentheses indicates the number of mounting screws used.

COPYRIGHT © 1997 CANON INC.

B. Paper Folding Unit

1. Separating the Paper Folding Unit and the Copier

1) Disconnect the lattice connector from the copier.
2) Open the upper cover, and remove the rear cover.
3) Disengage the hook (rear) ① by removing the screw ②.
4) Remove the inner cover ③ by removing the two screws ④.
5) Disengage the hook (front) ⑤, and separate the paper folding unit from the copier.

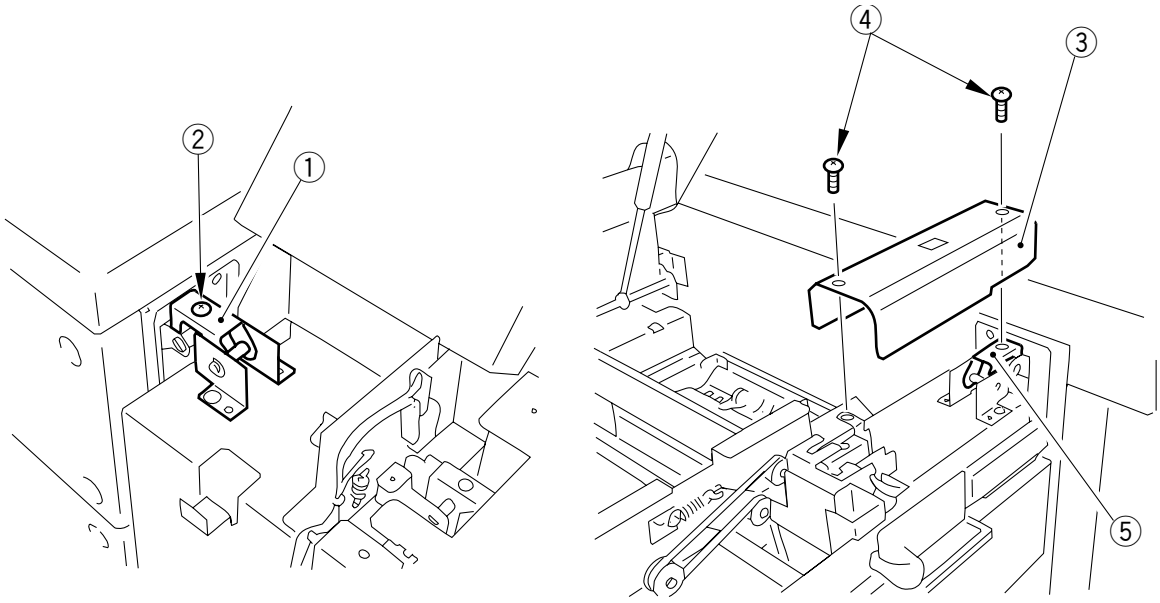

Figure 3-902

COPYRIGHT © 1997 CANON INC.

2. Removing the Paper Folding Unit (lower)

1) Separate the paper folding unit from the copier.
2) Remove the front cover and the rear cover, and push in the folder unit.
3) Remove the two screws ①.

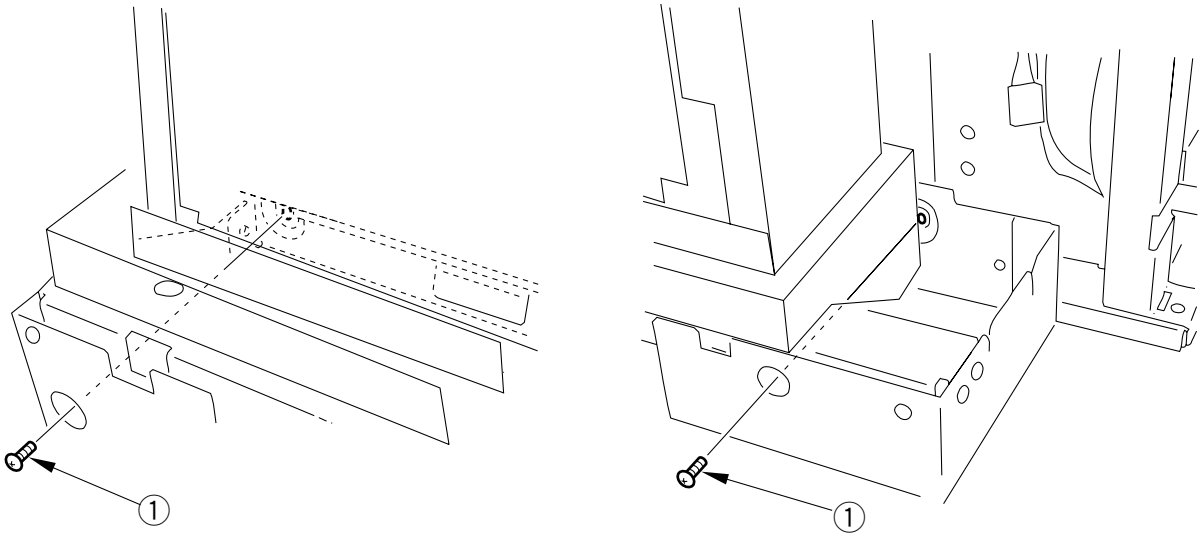

Figure 3-903

4) Remove the four screws ②.
5) Slide out the folder unit slightly, and lift the paper folding unit ③ (lower) to remove.

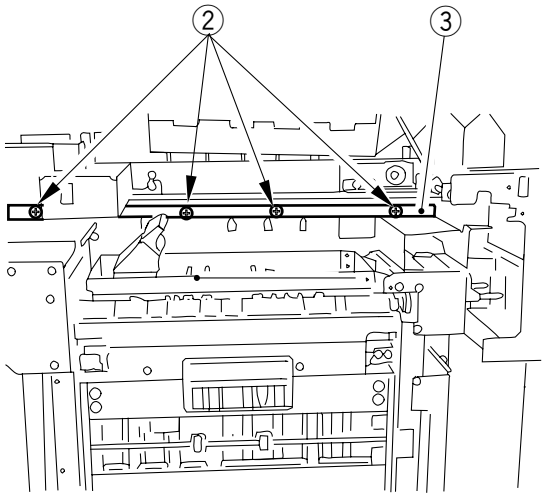

Figure 3-904

COPYRIGHT © 1997 CANON INC.

Caution:

- Be sure to support the paper folding unit (lower) while working.
- When installing the paper folding unit (lower), be sure to fit the bend-up of the stay in the receiving hole in the rail mounting plate.

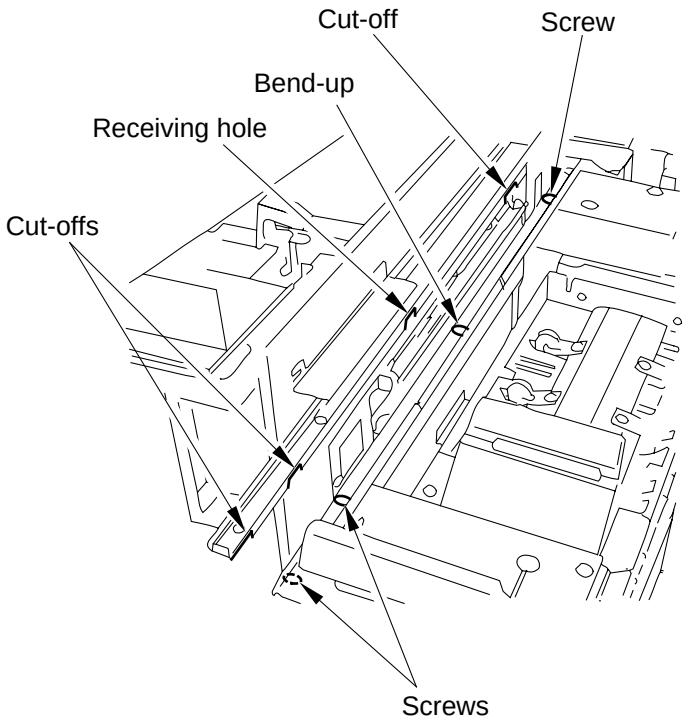

Figure 3-905

- Be sure to adjust the horizontal path drive coupling assembly whenever you have installed the paper folding unit (lower).

3. Removing the Paper Folding Unit (upper)

1) Remove the finisher's front upper cover, rear upper cover, and rear right cover.
2) Remove the rear cover.
3) Disconnect the two connectors ①.

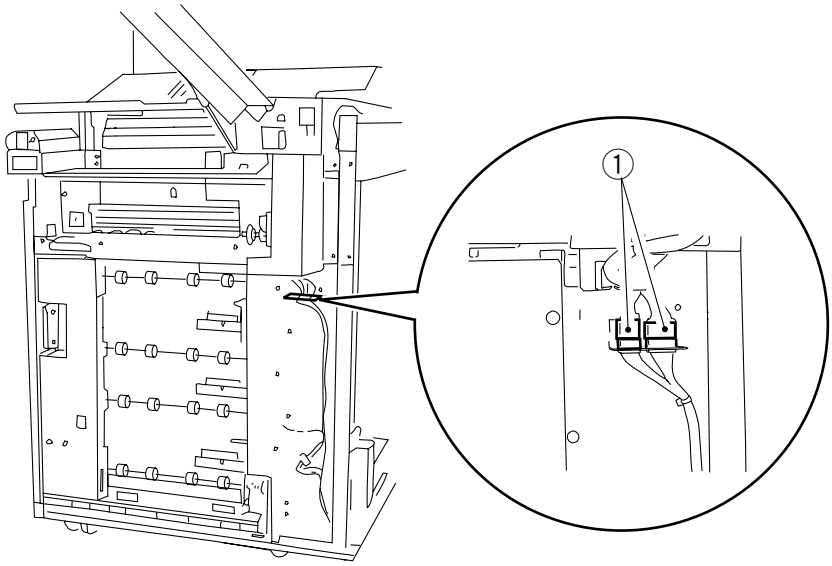

Figure 3-906

4) Remove the guide retaining spring (rear) ② by removing the two screws ③.
5) Remove the six screws ④.

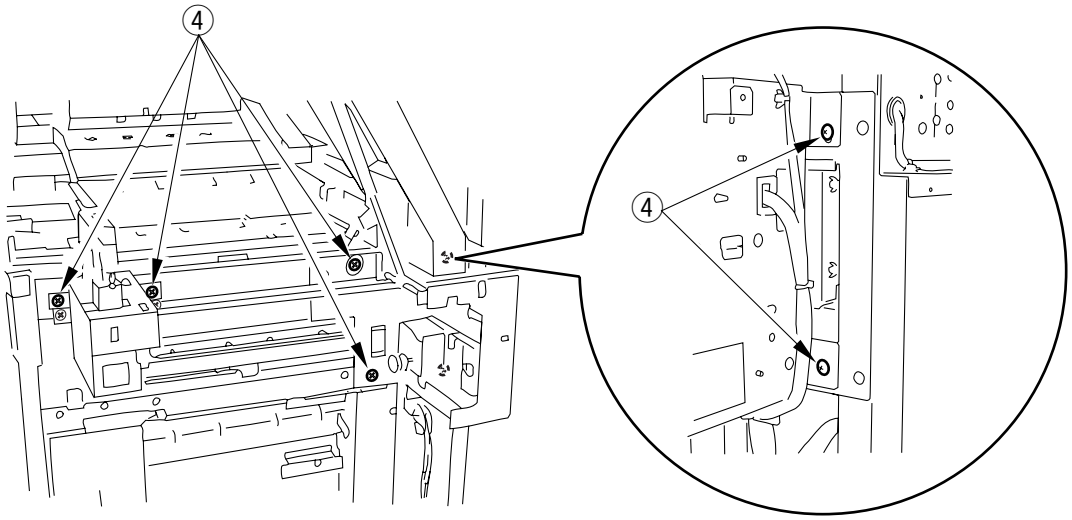

Figure 3-907

COPYRIGHT © 1997 CANON INC.

6) Remove the hook (front) ⑤ and the hook (rear) ⑥ by removing the screw ⑦.

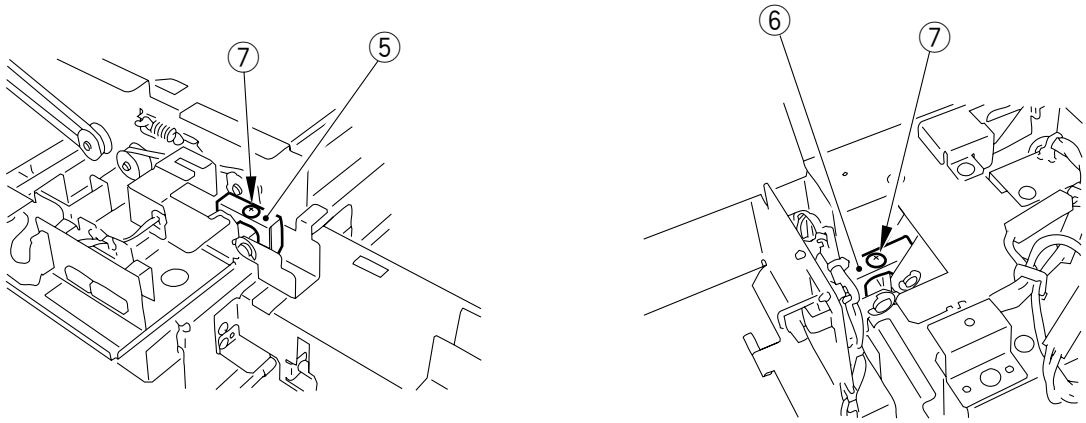

Figure 3-908

7) Remove the paper folding unit (upper) ⑧.

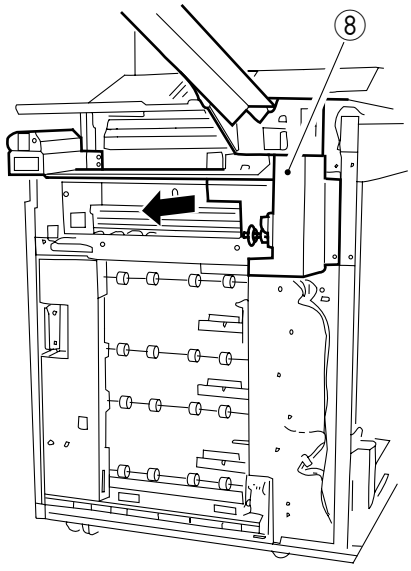

Figure 3-909

Caution:

- When performing steps 5) and 6), be sure to hold the paper folding unit (upper).
- When installing the paper folding unit (upper), be sure to fit the positioning pin in the receiving hole. Further, be sure to set the connection switch lever properly.

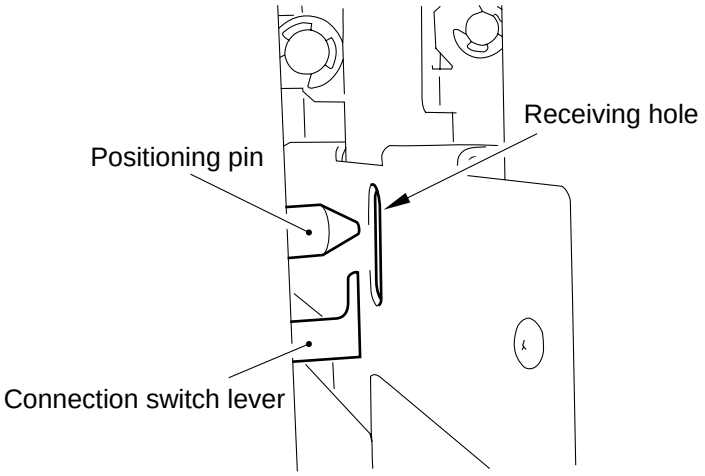

Figure 3-910

COPYRIGHT © 1997 CANON INC.

C. Feeding System

1. Positioning the Folding Stopper

Make a check by feeding paper. If the folding position does not satisfy the specification, adjust the position of the appropriate stopper.

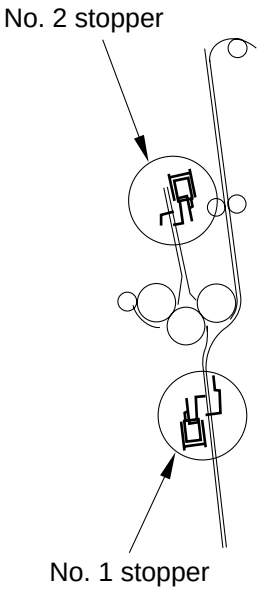

Figure 3-911

a. No. 1 Stopper

1) Slide out the folding unit ①, and remove the lower left cover ② and the lower right cover ③.
2) Loosen the two adjusting screws ⑤, and adjust the position of the stopper ④.

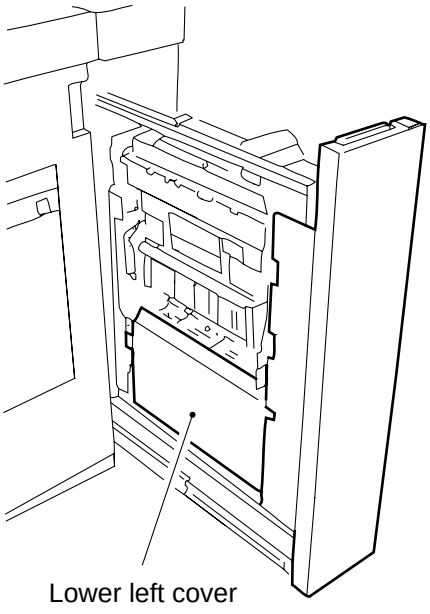

Figure 3-912

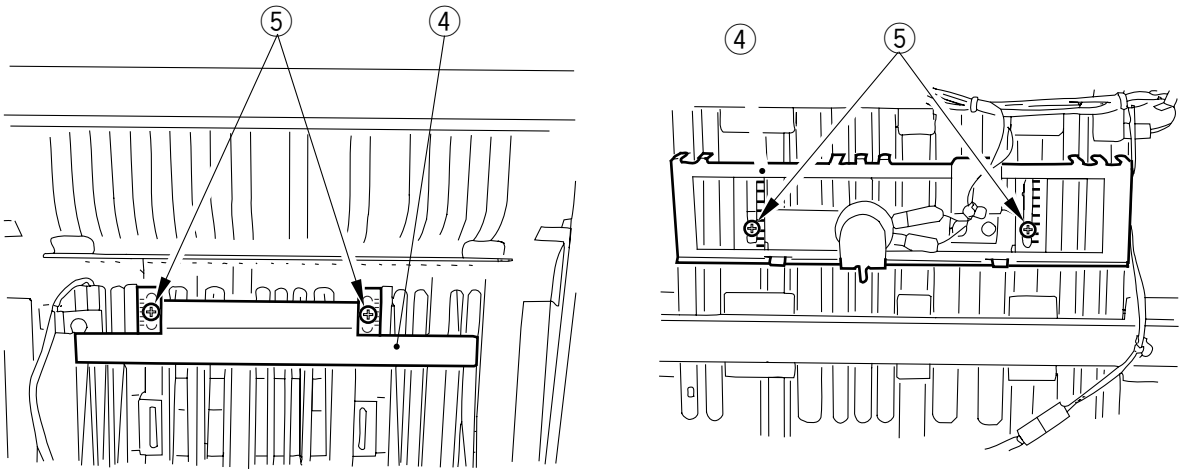

Figure 3-913

b. No. 2 Stopper

1) Slide out the folder unit, and open the right guide (lever 13).
2) Remove the cover ① by removing the two screws ②.

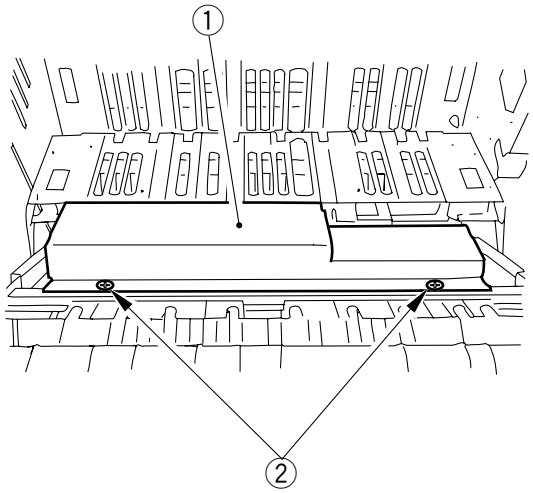

Figure 3-914

COPYRIGHT © 1997 CANON INC.

3) Remove the guide plate ③ from the arm ⑤ by removing the E-ring ④ (front, rear; one each).

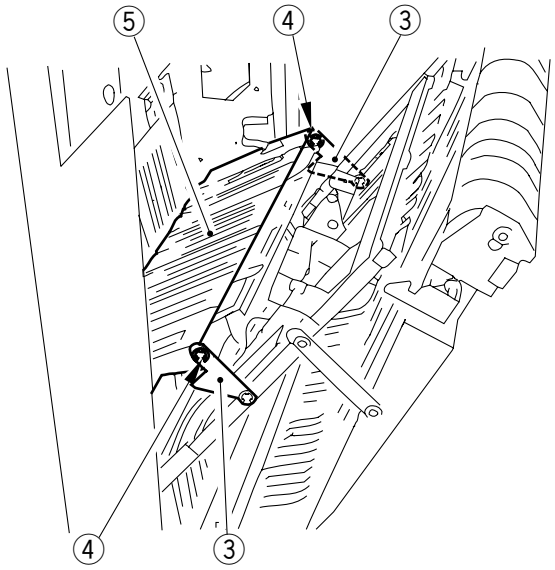

Figure 3-915

4) Loosen the two adjusting screws ⑦, and adjust the position of the stopper ⑥.

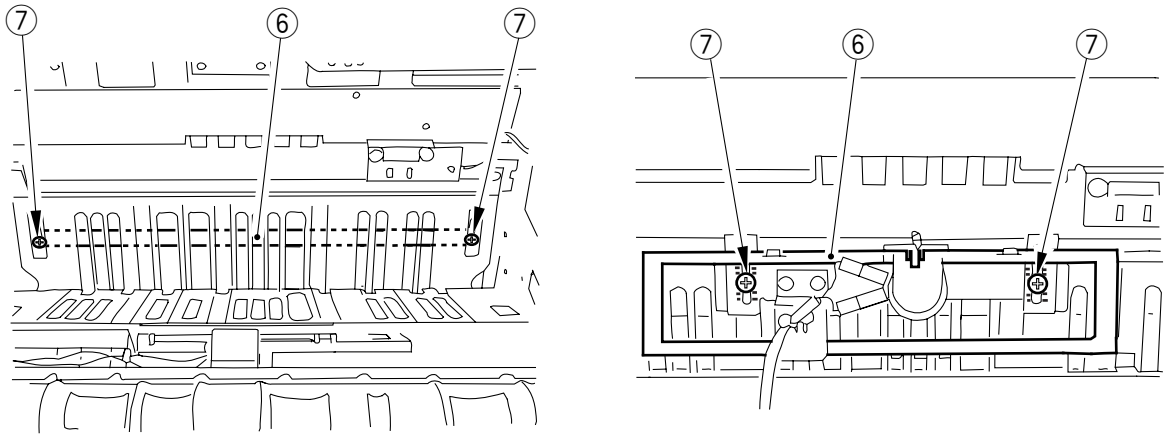

Figure 3-916

2. Adjusting the Inlet Guide

1) Remove the front cover.
2) Loosen the two adjusting screws ①, and loosen the adjusting screw and make adjustments so that the tip of the inlet guide ② is 4 ±1 mm from the lower guide plate ③ (not the rib top).
3) Loosen the adjusting screw ⑥ and make adjustments so that the distance between the upper guide plate and the inlet guide ⑤ when the inlet solenoid (SL5) ④ is on is 4 ±1 mm.

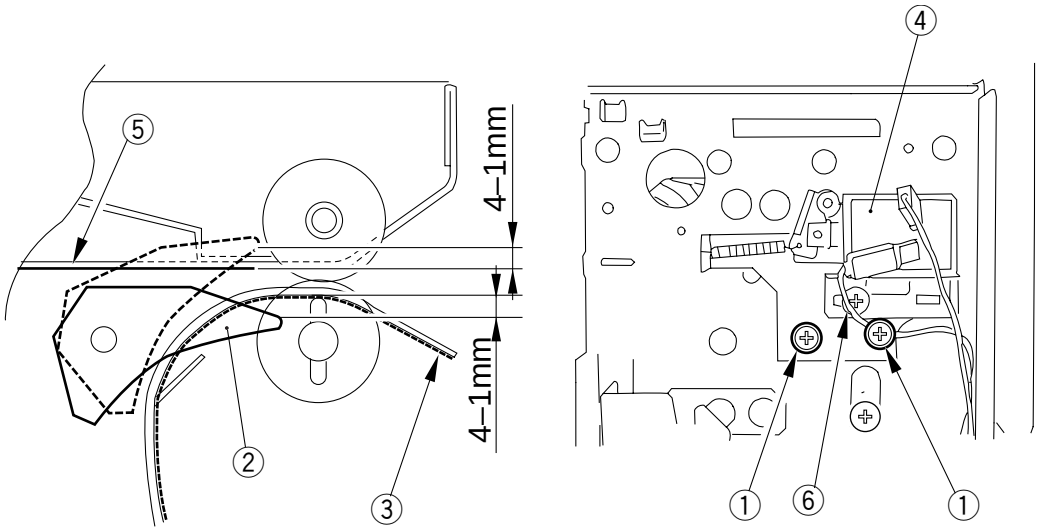

Figure 3-917

3. Adjusting the Pressure of the Folding Roller

1) Remove the front cover and the rear cover.
2) Remove the two screws, and remove the belt cover.

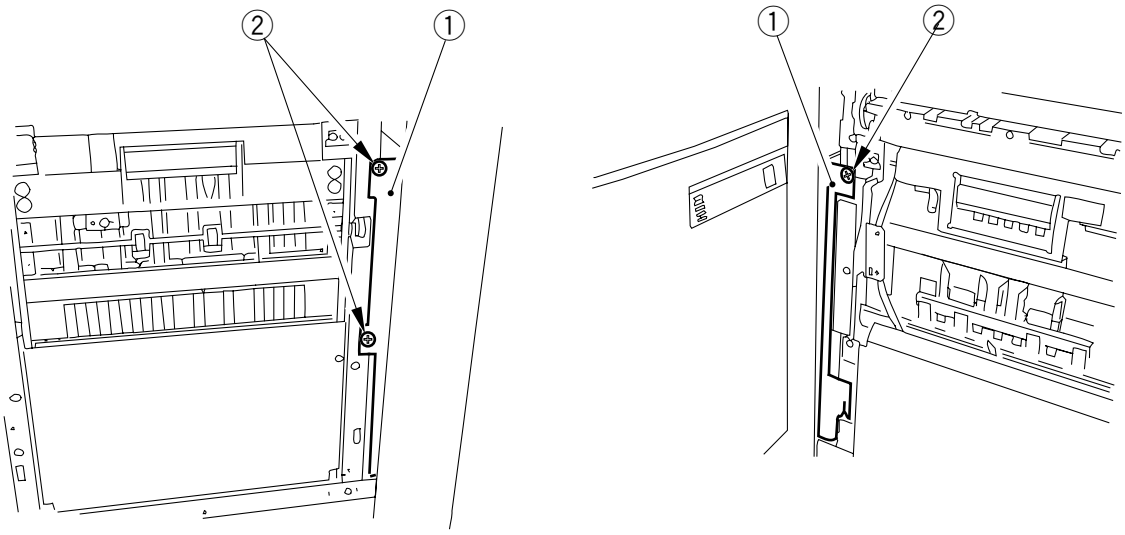

Figure 3-918

COPYRIGHT © 1997 CANON INC.

3) Loosen the fixing nut, and turn the adjusting screw ⑤ so that the length of the pressure spring is 17.5 ±3 mm.

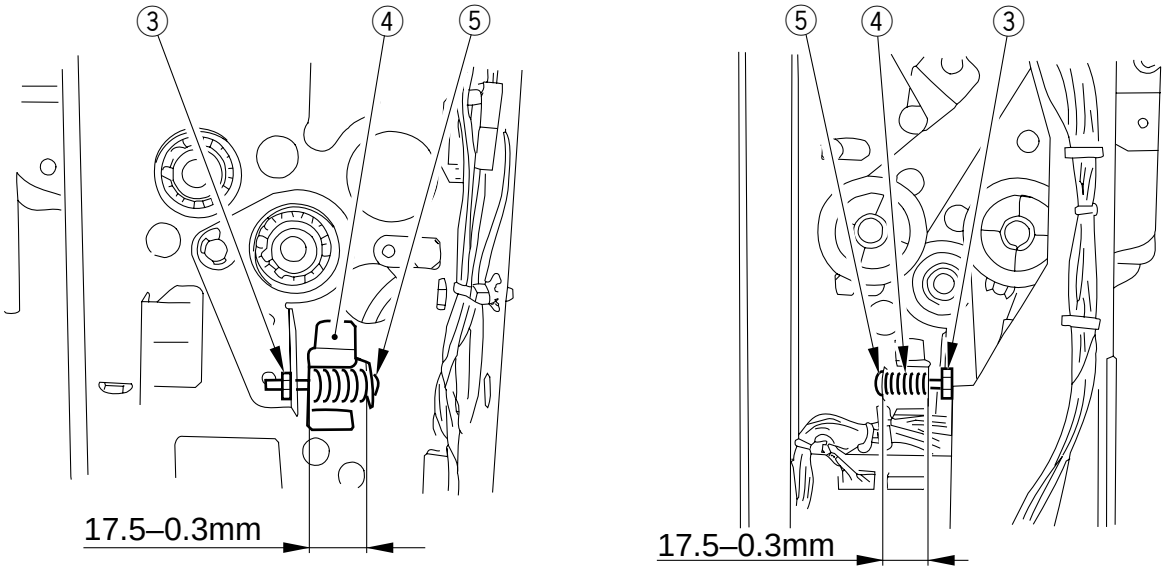

Figure 3-919

4. Adjusting the No. 1 Folding Path Guide

1) Remove the front cover and the rear cover.
2) Remove the belt cover ① by removing the three screws ②.

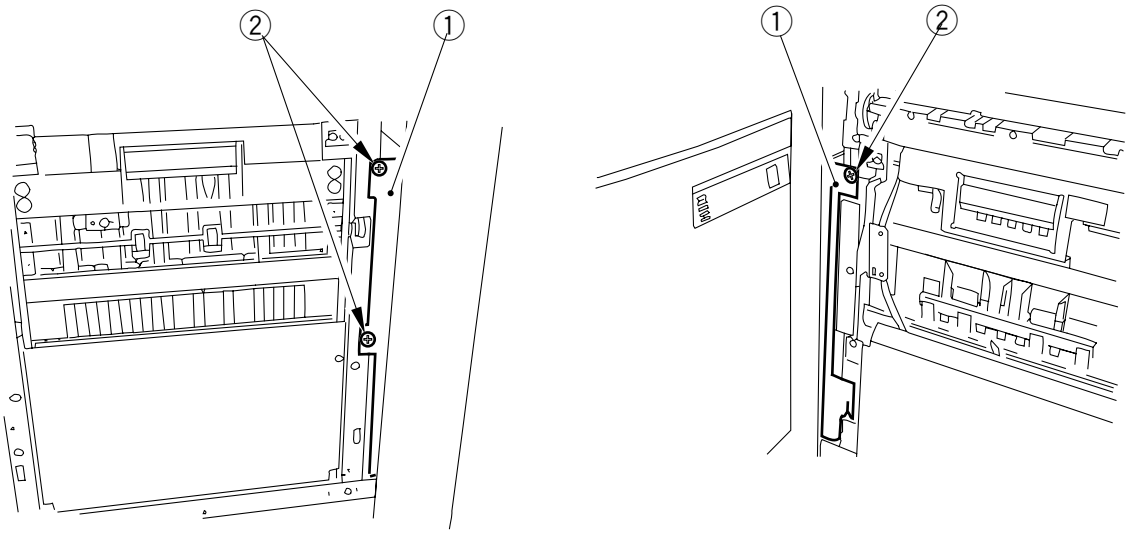

Figure 3-920

3) Remove the folding drive PCB.
4) Fix both adjusting screws ④ at the front and the rear (two each) temporarily in place.

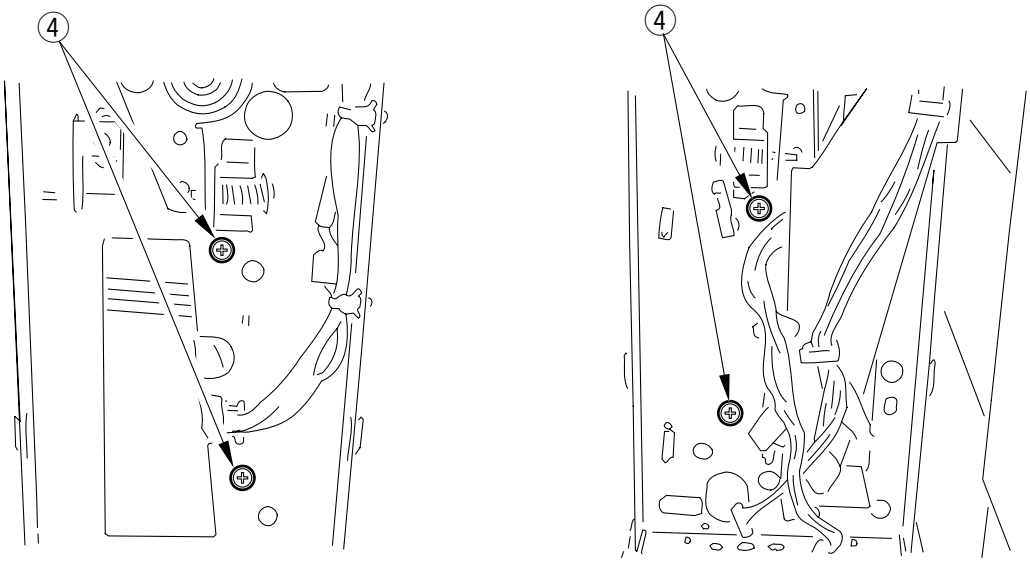

Figure 3-902

5) Turn the four adjusting screws discussed in step 4) to make adjustments so that the gap A between the top end of the lower left guide ⑤ and the roller Ⓐ ⑥ and the gap Ⓑ (rib top) between the lower end of the lower left guide and the right guide ⑦ is 1.6 ±0.3mm.

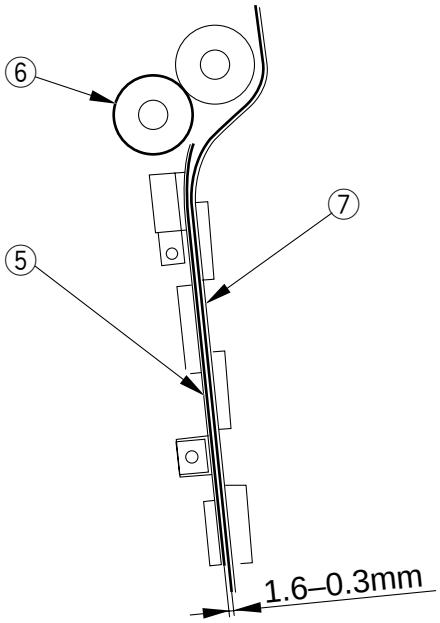

Figure 3-922

COPYRIGHT © 1997 CANON INC.

5. Adjusting the Position of the Right Guide Static Eliminator

1) Open the upper cover and slide out the folder unit.
2) Remove the lower right cover, and open the right guide (lever 13).
3) Loosen the two adjusting screws ①, and make adjustments so that the protrusion of the static eliminator ② from the guide face (not the rib top) of the right guide is 1 ±0.3 mm.

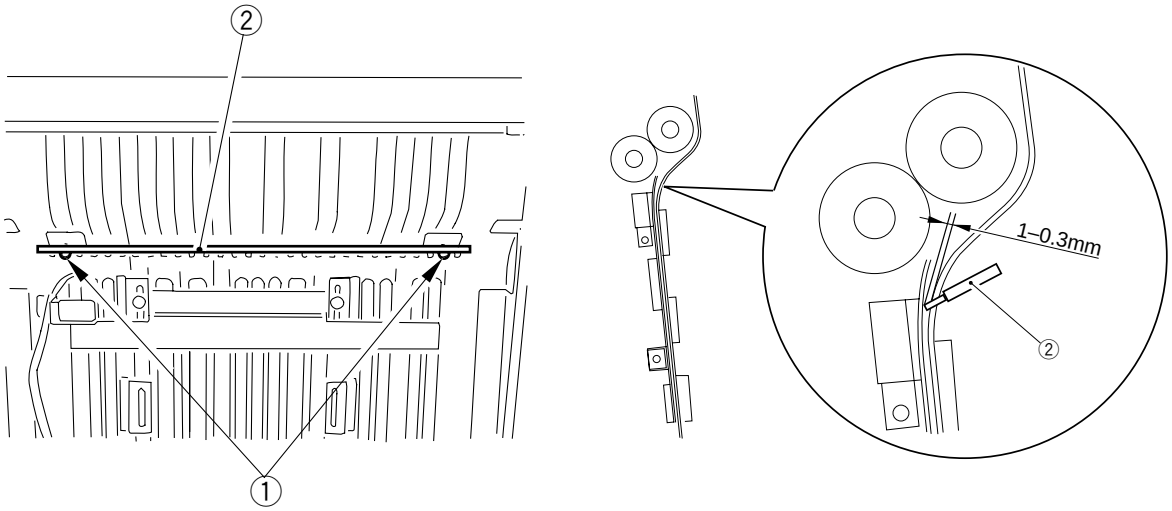

Figure 3-923

6. Adjusting the No. 2 Folding Roller Pressure

1) Remove the two springs ①.

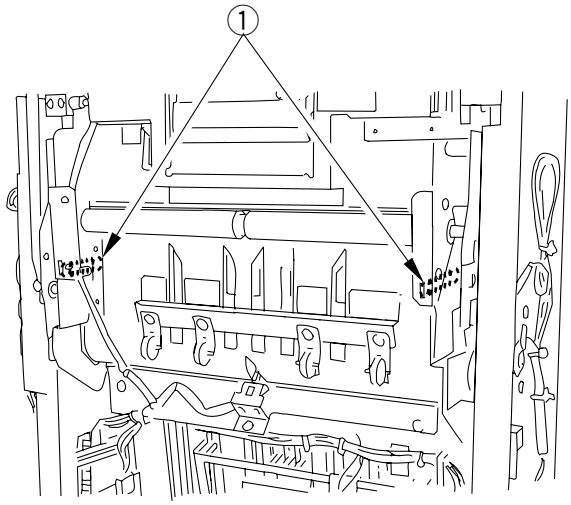

Figure 3-924

2) Remove the spring ②.

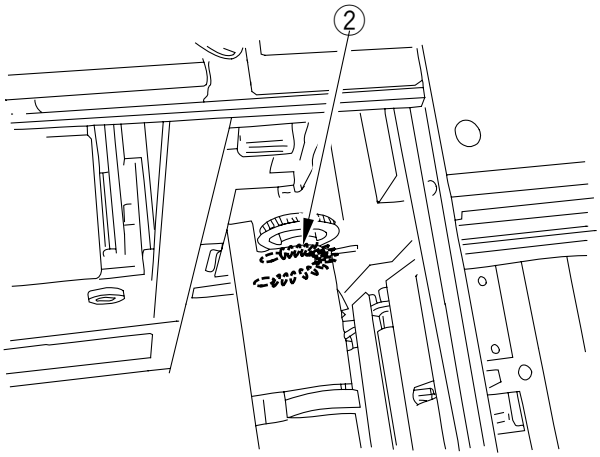

Figure 3-925

3) Remove the screw ③, and remove the belt cover ④.

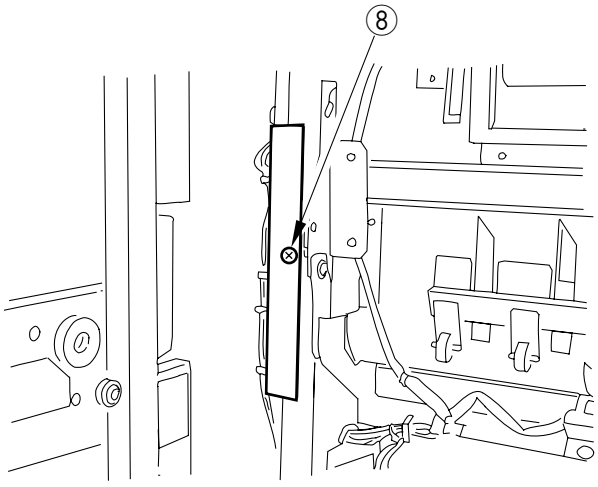

Figure 3-926

COPYRIGHT © 1997 CANON INC.

4) Loosen the two adjusting screws ⑤ (front, rear; one each).

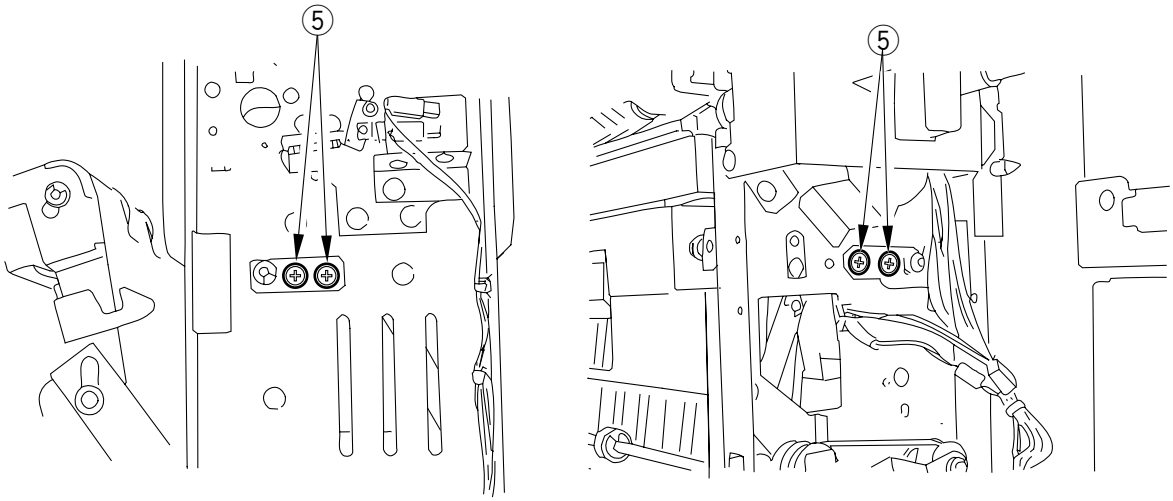

Figure 3-927

5) Butt the outlet guide plate, and check to make sure that the latch ⑥ (front, rear) and the bearing ⑦ are engaged; then, fix it in place by turning the screws loosened in step 4).

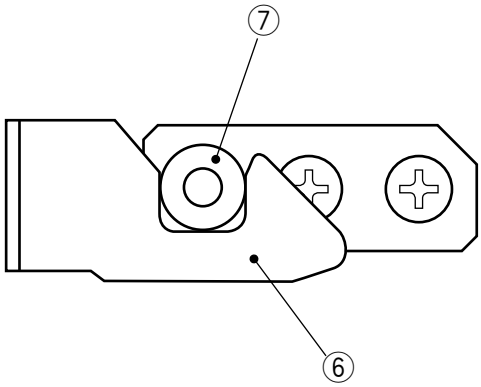

Figure 3-928

D. Drive System

1. Removing the Folder Motor (FM1)

1) Open the upper cover, and remove the rear cover.
2) Remove the lower left cover.
3) Remove the belt cover ① by removing the screw ②.

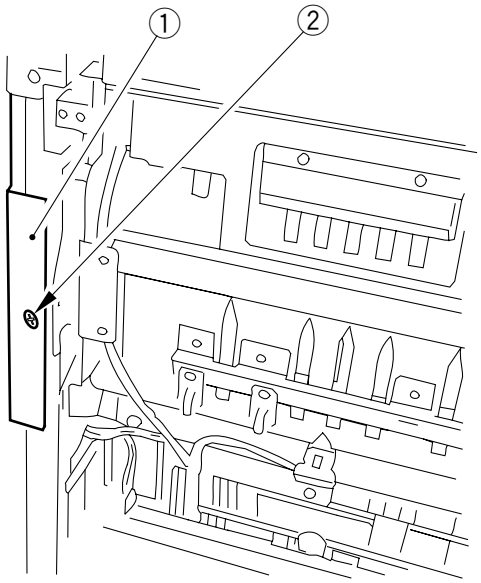

Figure 3-929

4) Push in the folder unit.
5) Remove the three screws ③, and remove the drive belt ④ from the gear ⑤.

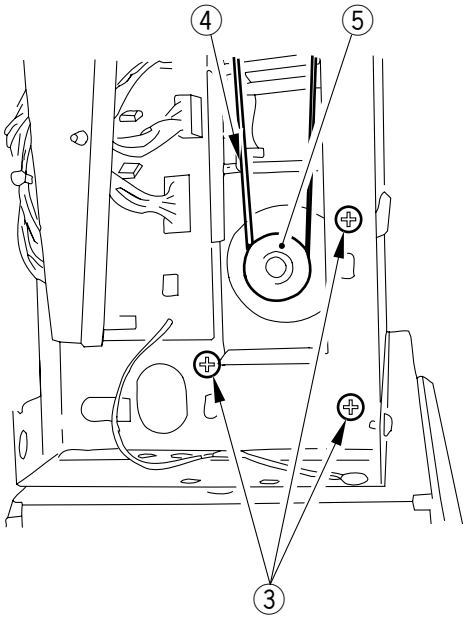

Figure 3-930

COPYRIGHT © 1997 CANON INC.

6) Slide out the folder unit.
7) Remove the folder motor ⑥ by disconnecting the connector ⑦.

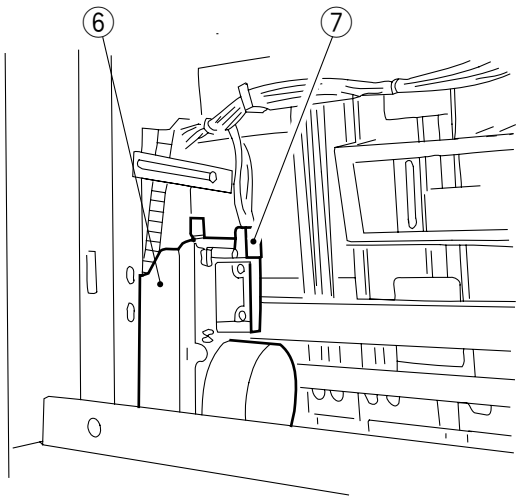

Figure 3-931

2. Positioning the Horizontal Path Drive Coupling Assembly

1) Remove the rear cover.
2) Loosen the two screws ①.
3) Slide in and out the folder unit ② twice or three times to position the horizontal path drive coupling assembly ③.

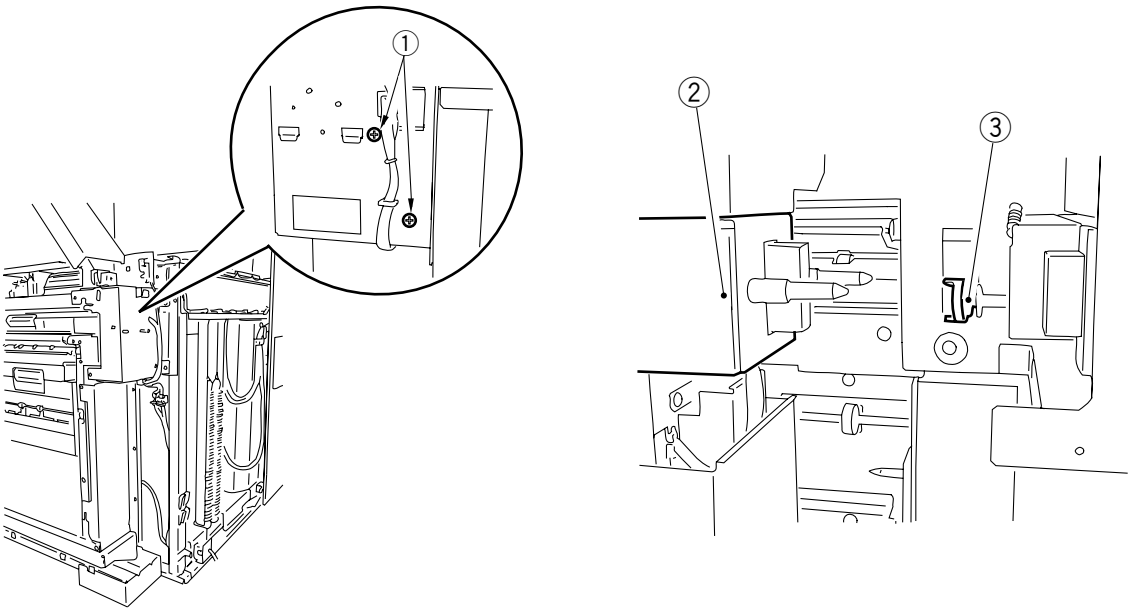

Figure 3-932

4) Push in the folder unit, and tighten the two screws loosened in step 2).

3. Adjusting the Tension of the Feeding Belt

1) Separate the paper folding unit from the copier.
2) Remove the belt cover ① by removing the three screws ②.

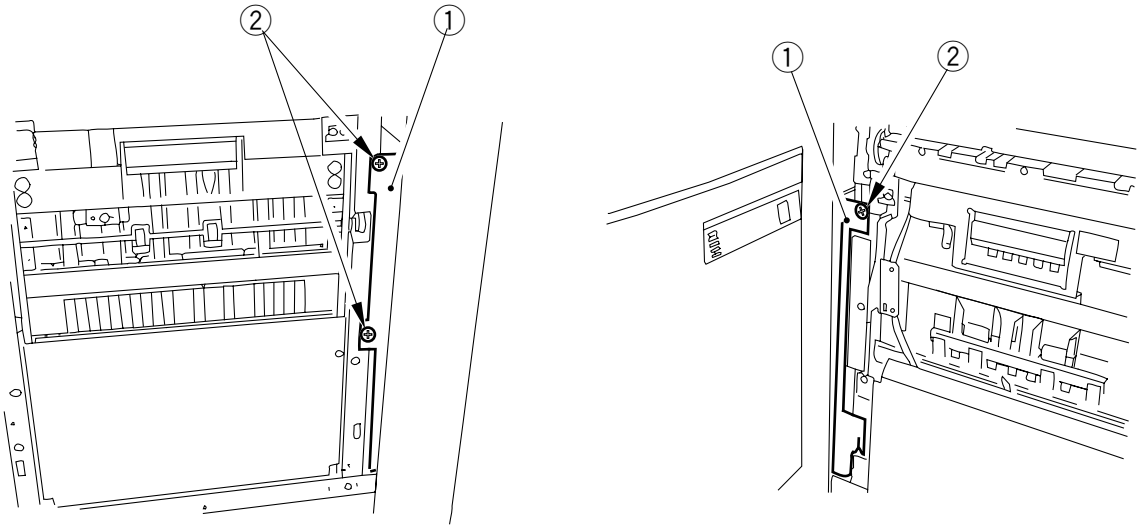

Figure 3-933

3) Remove the upper feeding guide ③ by removing the E-ring ④ and the shift ⑤.

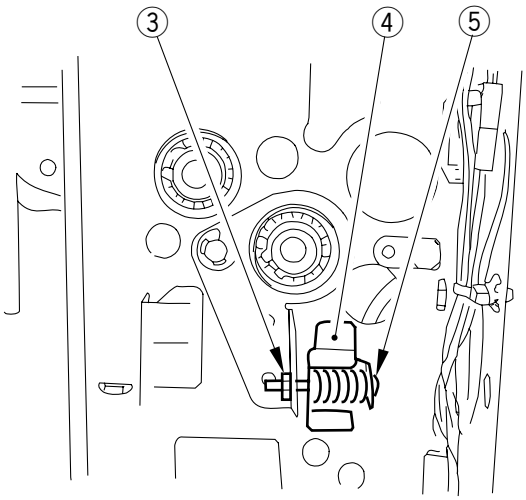

Figure 3-934

COPYRIGHT © 1997 CANON INC.

4) Remove the six screws ⑥, and disconnect the five connectors ⑦.

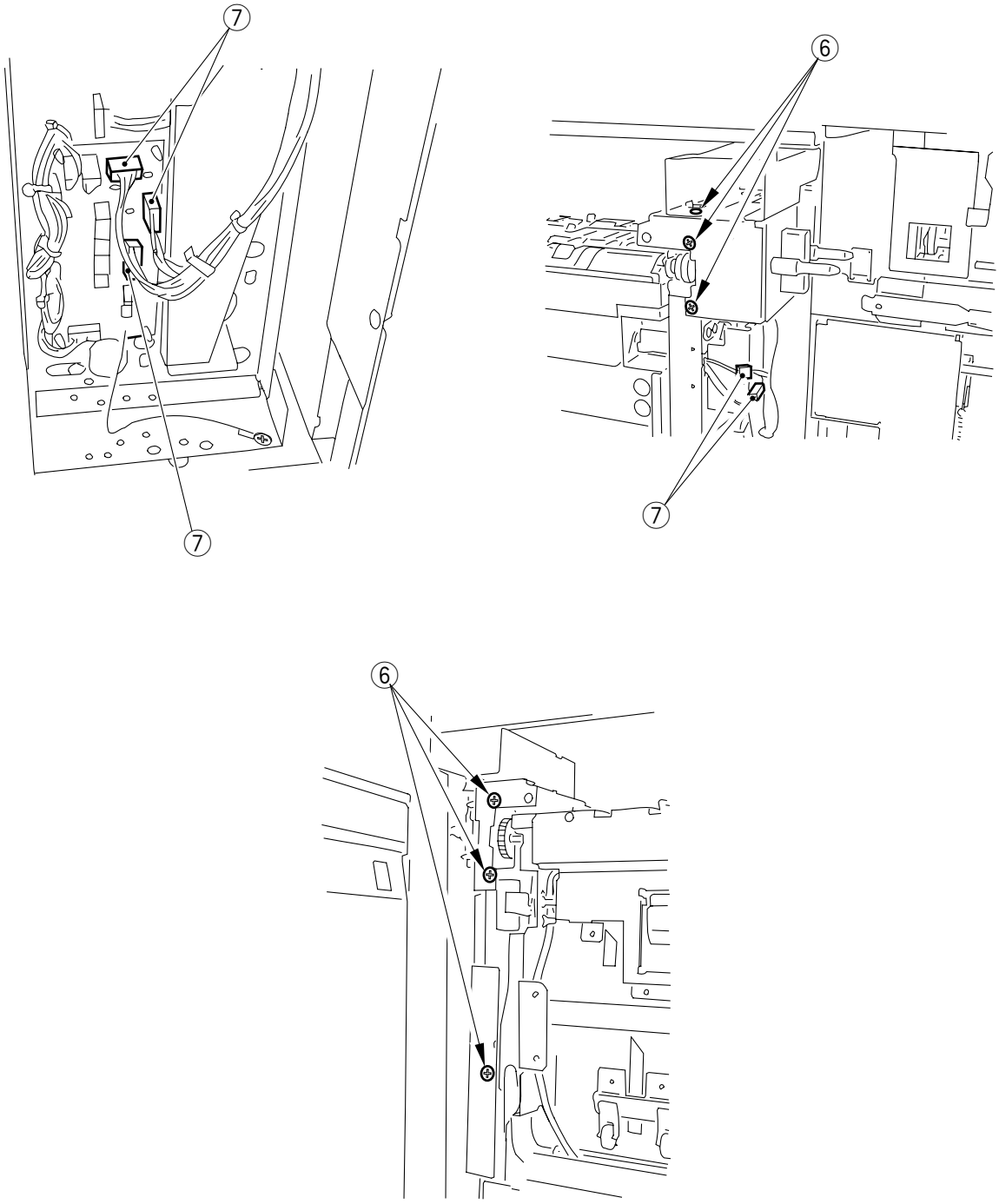

Figure 3-935

5) Push in the folder unit halfway.
6) Remove the connector assembly ⑧ and the harness guide ⑨ by removing the four screws ⑩.

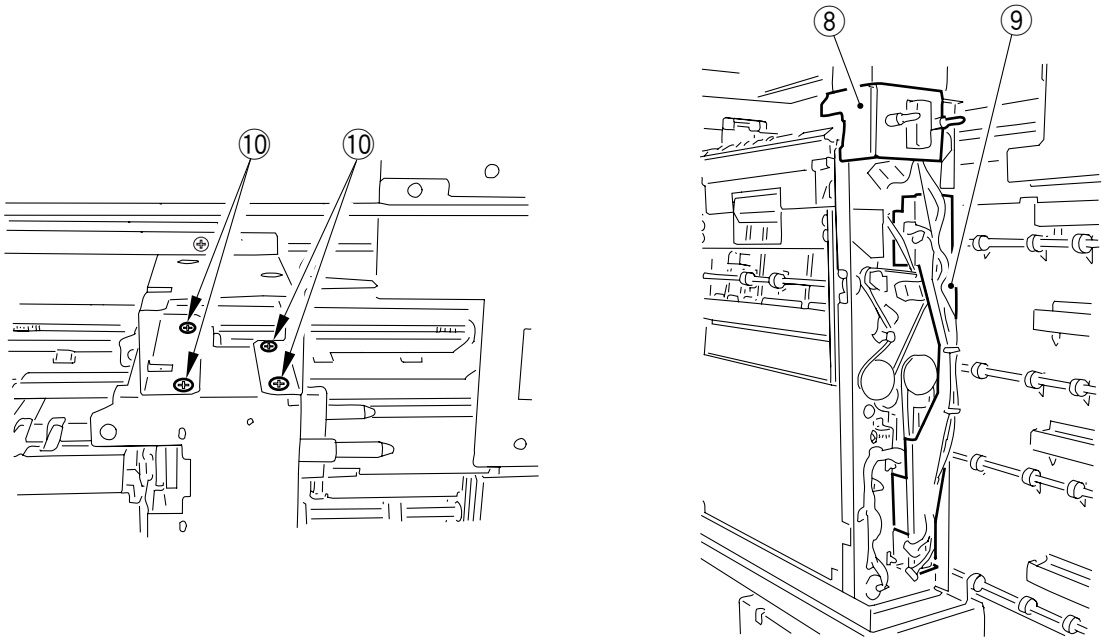

Figure 3-936

7) Remove the guide plate ③ from the arm ⑤ by removing the E-ring ④ (front, rear; one each).

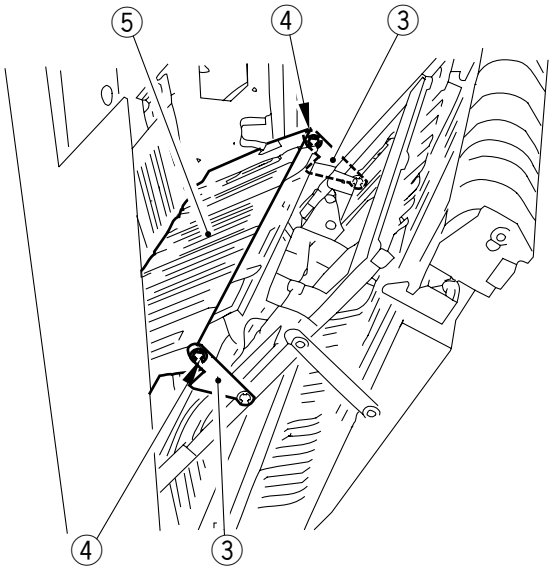

Figure 3-937

COPYRIGHT © 1997 CANON INC.

8) Loosen the two adjusting screws ⑦ to adjust the position of the pressure releasing solenoid ⑥ (SL4) so that the reading of A is 2 ±0.3 mm when the solenoid turns on.

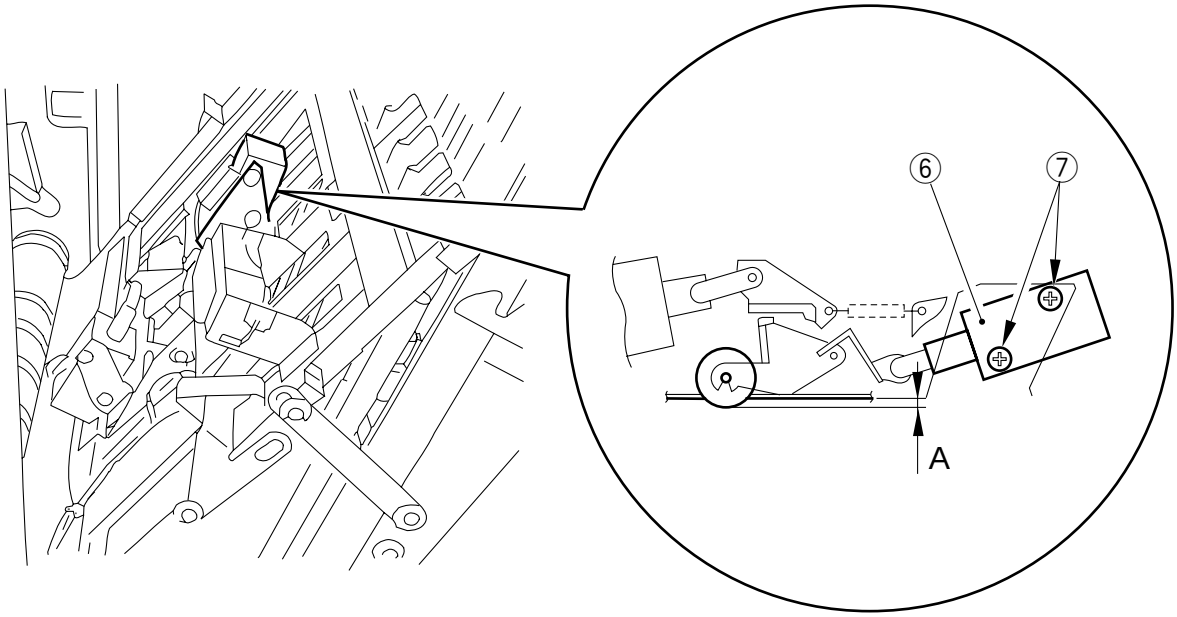

Figure 3-938

E. Removing the Folder Drive PCB

1) Open the upper cover, and remove the rear cover.
2) Slide out the folder unit.
3) Remove the three screws ①.
4) Push in the folder unit, and remove the belt cover ② by lifting it at the rear.

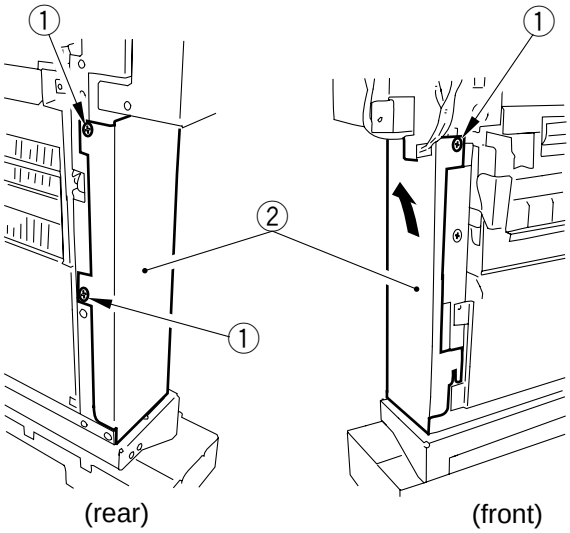

Figure 3-939

COPYRIGHT © 1997 CANON INC.

5) Remove the grounding wire ③ by removing the screw ④.
6) Remove the folder driver PCB ⑤ by removing the four locking supports ⑥ and disconnecting all connectors from the PCB.

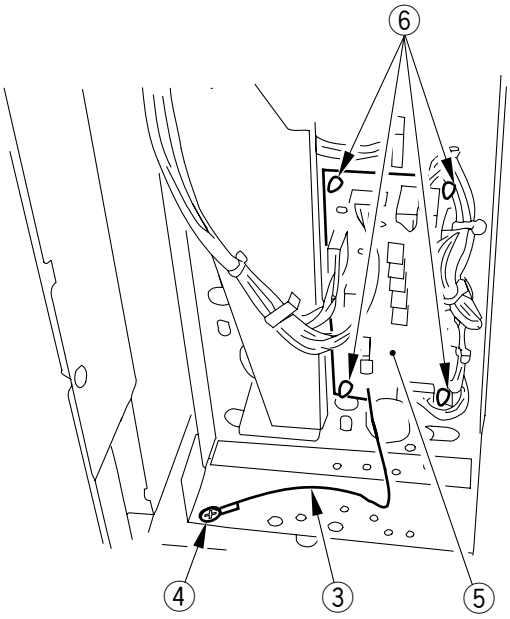

Figure 3-940

a. Feeding Belt A
Loosen the screw ⓐ, and adjust the tensioner so that the flange distance is 5 ±1 mm.

b. Feeding Belt B
Adjust the tensioner so that the slack of the belt is 10 mm when F2 is pushed by a tension gauge at 500 ±100 g.

c. Feeding Belt C
Adjust the tensioner so that the slack of the belt is 10 mm when F3 is pushed by a tension gauge at 500 ±100 g.

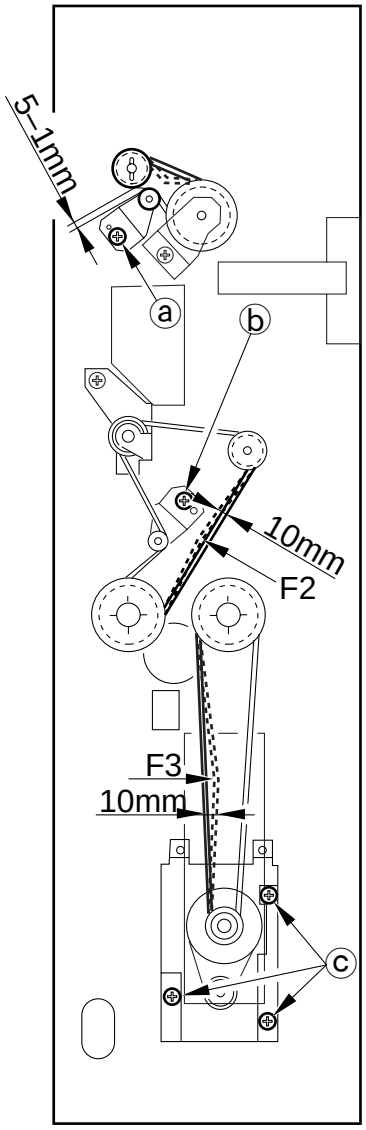

Figure 3-941

COPYRIGHT © 1997 CANON INC.

4. Adjusting the Position of the Locking Solenoid (SL3)

1) Slide out the folder unit, and open the right guide (lever 13).
2) Remove the cover ① by removing the two screws ②.

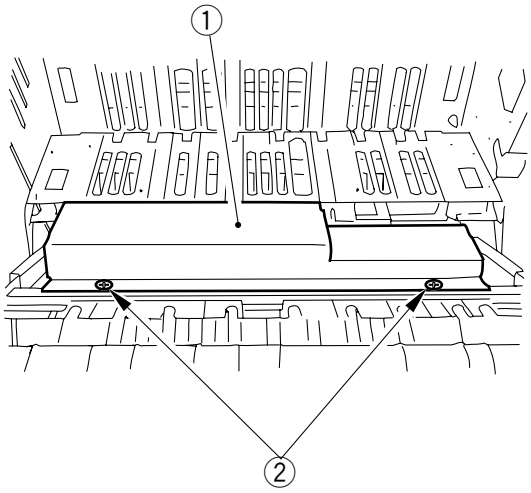

Figure 3-942

3) Remove the guide plate ③ from the arm ⑤ by removing the E-ring ④ (front, ear; one each).

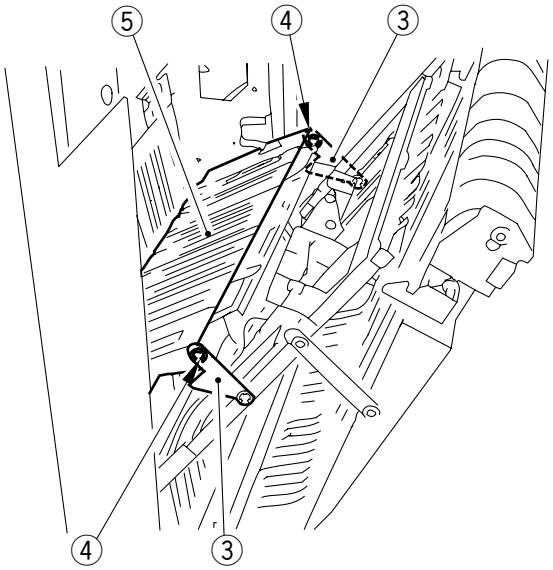

Figure 3-943

4) Loosen the two adjusting screws ⑨ to adjust the position of the releasing solenoid (SL4) ⑧ so that the locking roll arm ⑥ and the pressure spring ⑦ come into contact with each other at A when the solenoid turns on.

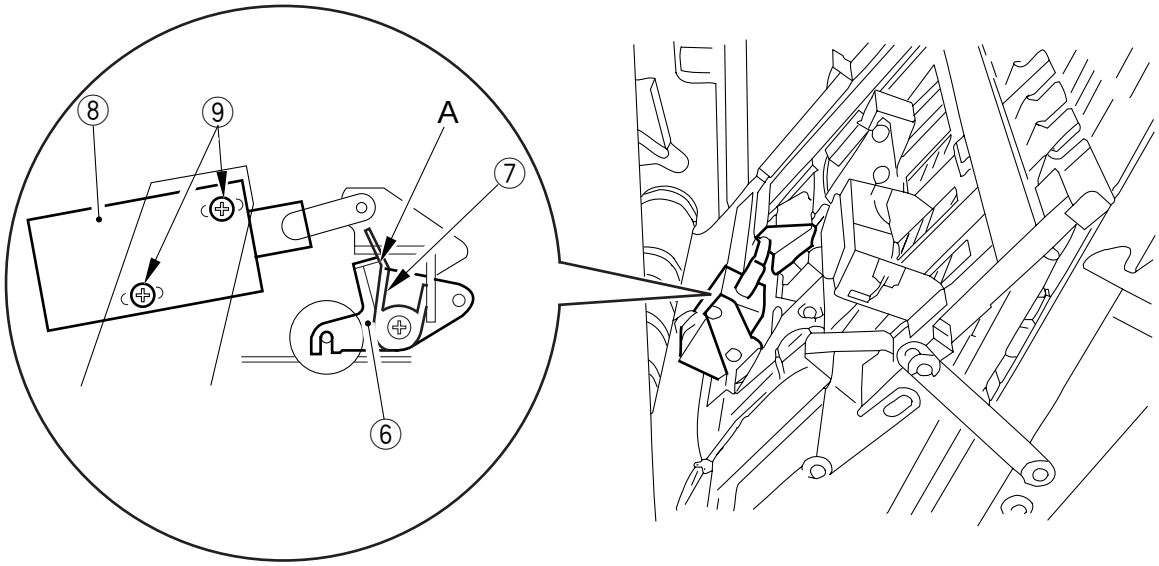

Figure 3-944

5. Adjusting the Position of the Releasing Solenoid

1) Slide out the folder unit, and open the right guide (lever 13).
2) Remove the cover ① by removing the two screws ②.

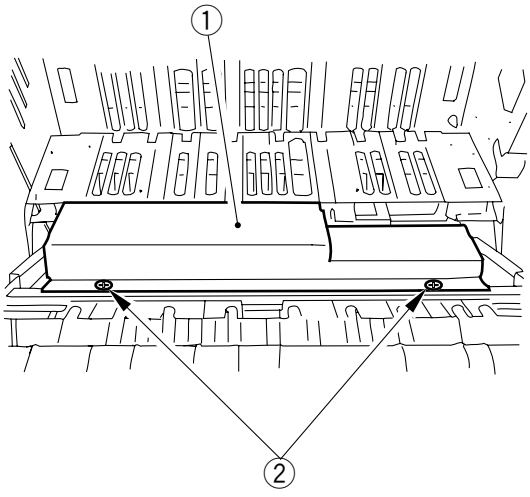

Figure 3-945

COPYRIGHT © 1997 CANON INC.

CHAPTER 4

MAINTENANCE AND SERVICING

I. PERIODICALLY REPLACED PARTS 4-1
II. CONSUMABLES AND DURABLES 4-1
A. Finisher-B1.....4-1
B. Paper Folding Unit-A1 4-7
III. SCHEDULED SERVICING 4-8
A. Finisher-B1.....4-8
B. Paper Folding Unit-A1 4-20

COPYRIGHT © 1997 CANON INC. CANON FINISHER-B1 REV.0 MAY 1997 PRINTED IN JAPAN (IMPRIME AU JAPON)

I. PERIODICALLY REPLACED PARTS

The finisher does not have parts that must be replaced on a periodical basis.

II. CONSUMABLES AND DURABLES

Some parts of the machine may have to be replaced once or more because of deterioration or damage over the period of warranty. Replace them as necessary.

A. Finisher-B1

Ref.	Parts name	Parts No.	Q'ty	Life (approx.)	Remarks
1	Static eliminating brush (sort bin)	FC2-4775	2	1,000,000 copies	
2	Static eliminating brush (delivery slot)	FC2-4941	4	1,000,000 copies	
3	Static eliminating brush (non-sort delivery slot)	FC2-4914	1	1,000,000 copies	
4	Static eliminating brush (copier delivery slot)	FC2-5566	1	1,000,000 copies	
5	Stapler unit	FG2-8372		500,000 staples	5,000 stapling operations per cartridge

Table 4-201

COPYRIGHT © 1997 CANON INC.

1. Arrangement of Static Eliminating Brushes

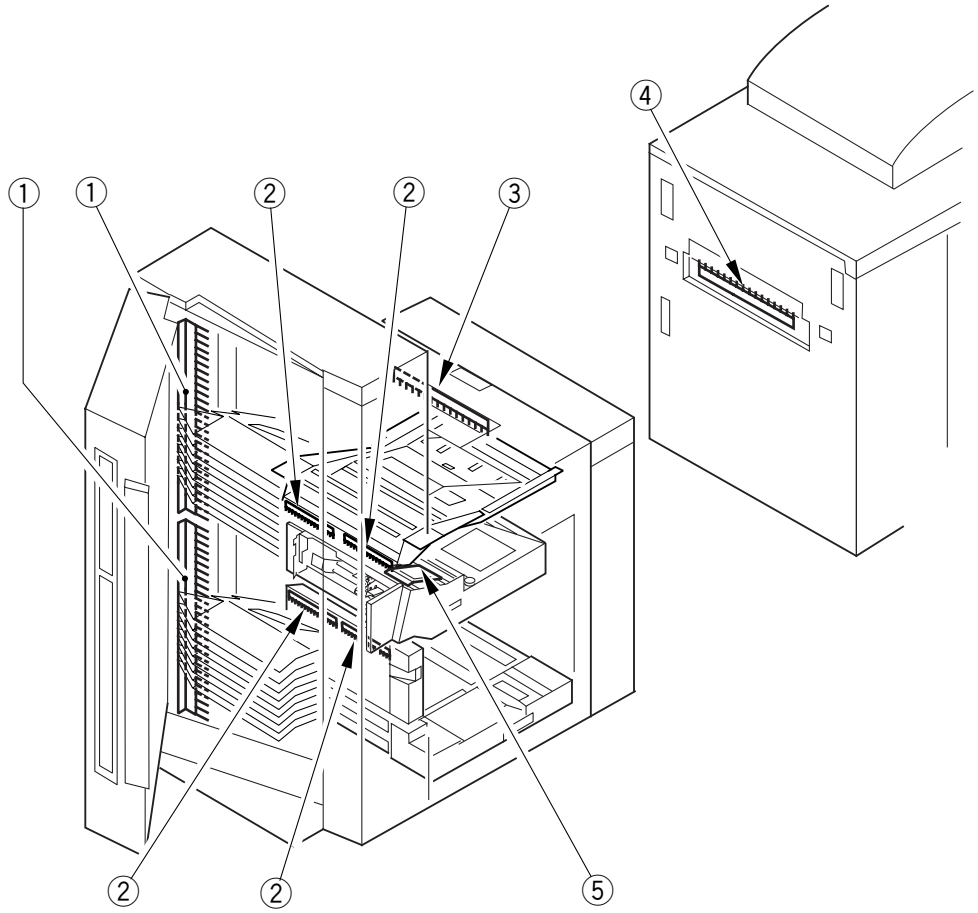

Figure 4-201

COPYRIGHT © 1997 CANON INC.

2. Removing the Stapler Unit

1) Fix the stack processing unit in place with a metal fixing.
2) Move the front gripper to the right end.
3) Open the non-sort delivery assembly, and remove the staple cartridge.
4) Shift the lever (F12).
5) Remove the cover ① by removing the two screws ②.

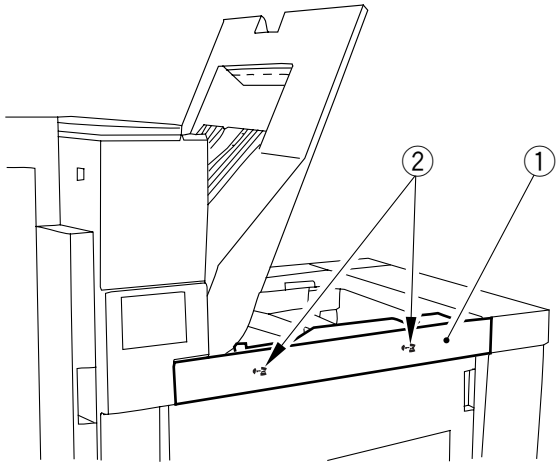

Figure 4-202

6) Remove the connector cover ③ by removing the screw ④. (To remove the connector cover, lift its right as if to swing.)

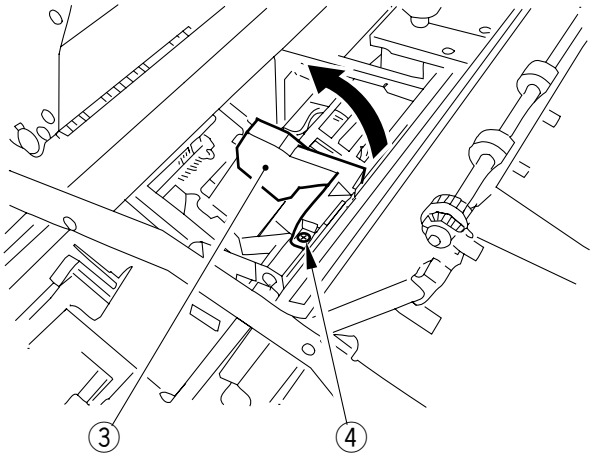

Figure 4-203

7) Disconnect the two connectors ⑤.

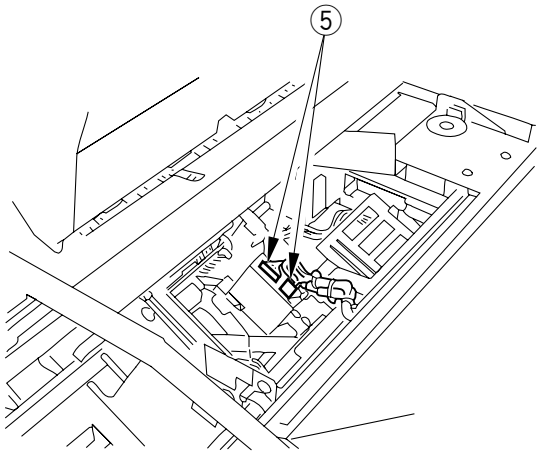

Figure 4-204

8) Remove the tow screws ⑥.

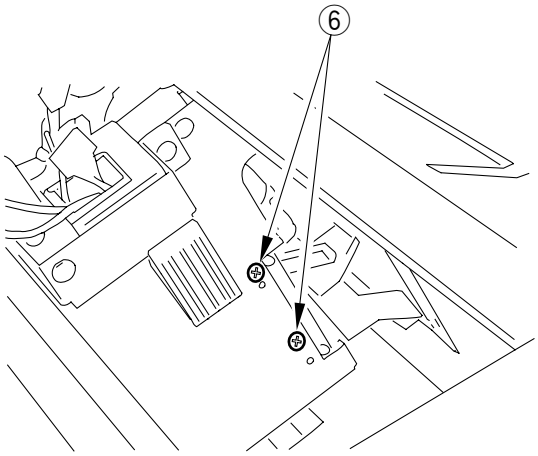

Figure 4-205

COPYRIGHT © 1997 CANON INC.

9) Remove the staple dish ⑦ by removing the screw ⑧.
10) Remove the two screws ⑦.

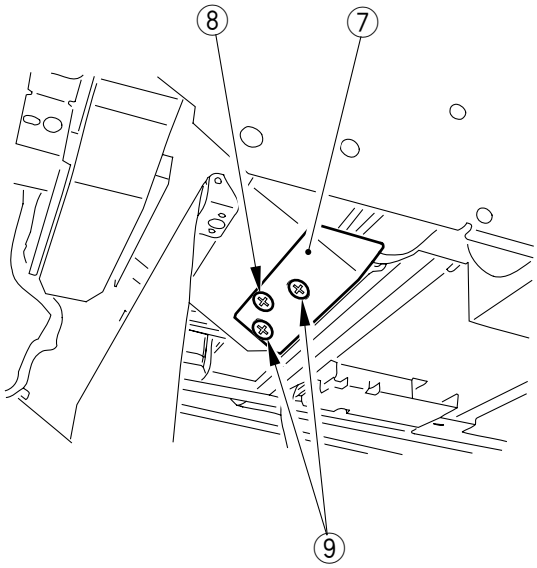

Figure 4-206

11) Remove the stapler ⑩ by moving it to the center.

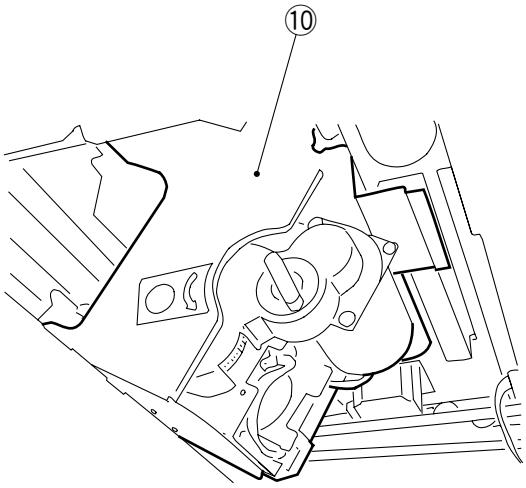

Figure 4-207

Caution:

When placing the stapler unit on a desk or floor after removing it, be sure to exercise care so that the waste staple outlet at the bottom of the unit will not be damaged.

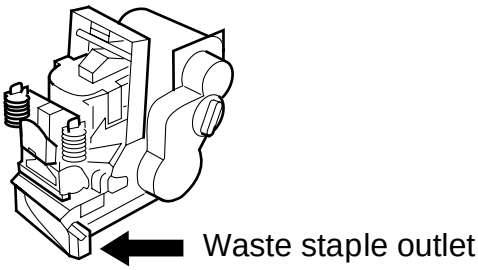

Figure 4-208

COPYRIGHT © 1997 CANON INC.
CANON FINISHER-B1 REV.0 MAY 1997 PRINTED IN JAPAN (IMPRIME AU JAPON)

B. Paper Folding Unit-A1

Ref.	Parts name	Parts No.	Q'ty	Life (approx.)	Remarks
1	Static eliminating brush (right)	FA4-2371	1	1,000,000 copies	Needs adjustment after installation; see p. 5-19 for details.
2	Static eliminating brush (left)	FA1-4842	1	1,000,000 copies	

Table 4-202

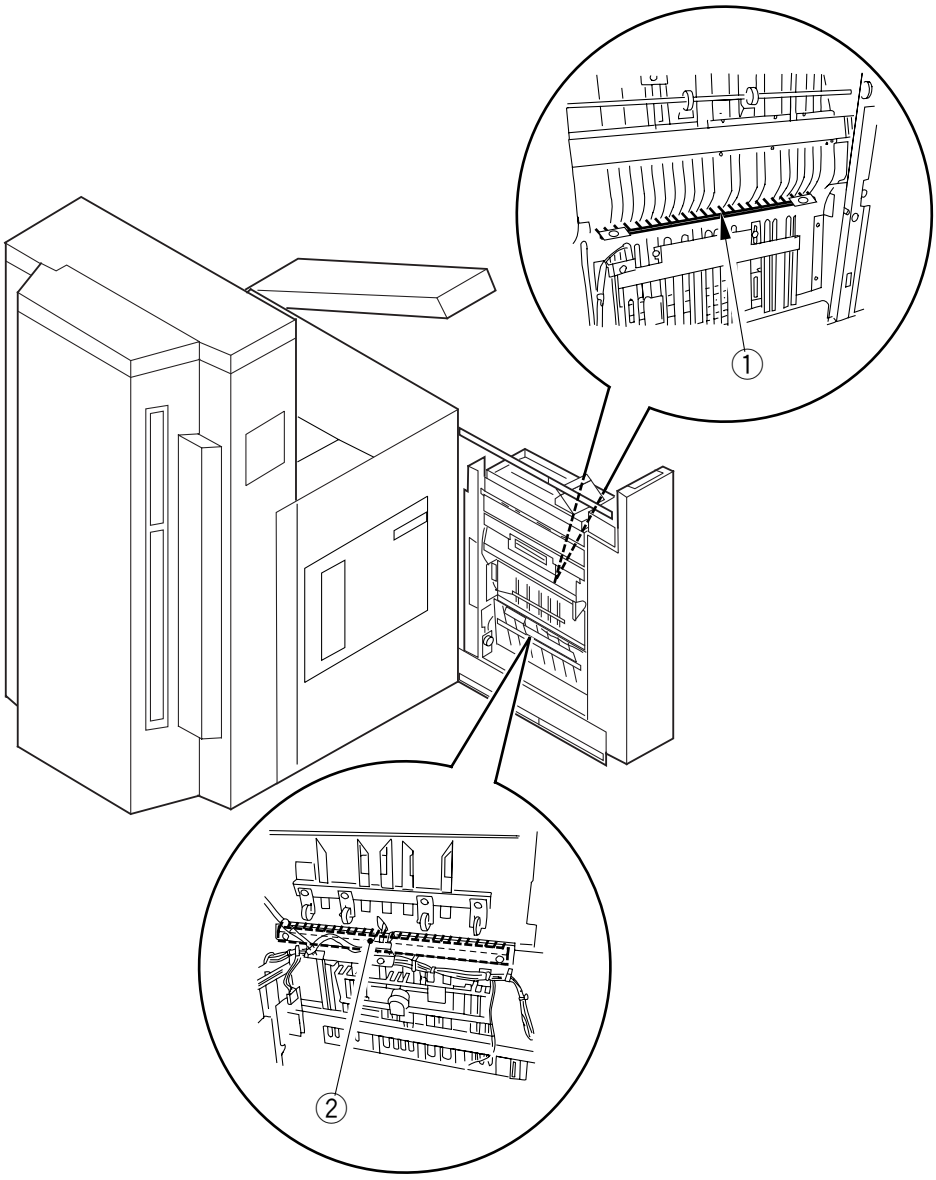

Figure 4-209

COPYRIGHT © 1997 CANON INC.

III. SCHEDULED SERVICING

A. Finisher-B1

△: Clean ●: Replace ×: Lubricate □: Adjust ◎: Inspect

No.	Parts	Intervals*	Remarks
1	Cut staple	△	
2	Stapler unit	×	Silicone oil (CK-0551)
		×	Silicone oil (CK-0551)
		×	Mineral oil (CK-0451)
3	Stapler unit rail	500,000 sheets	Silicone oil (CK-0551)
4	Upper bin Lower bin		Wipe with alcohol the surface coming into contact with copy paper. Do NOT use water. If soiled, stacking faults may occur.

*Same as the minimum intervals for the host copier.

Table 4-301

1. Removing the Staple Chips

1) Slide out the staple chip case to the front, and dispose of the staple chips.
2) Remove the screw, and detach the jam staple case; then, dispose of the jam staples.

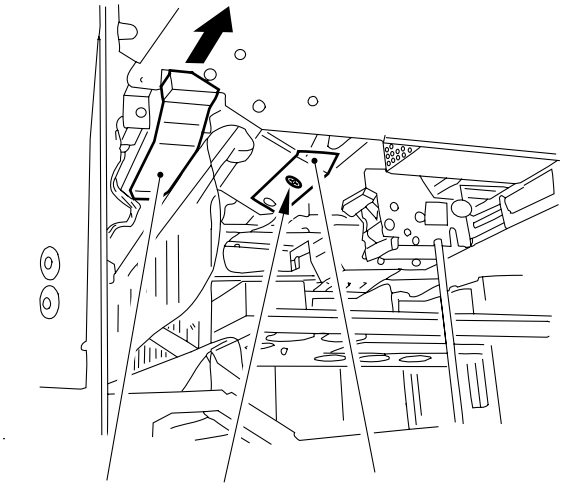

Figure 4-301

COPYRIGHT © 1997 CANON INC.

2. Lubricating the Stapler Unit

a. Outline

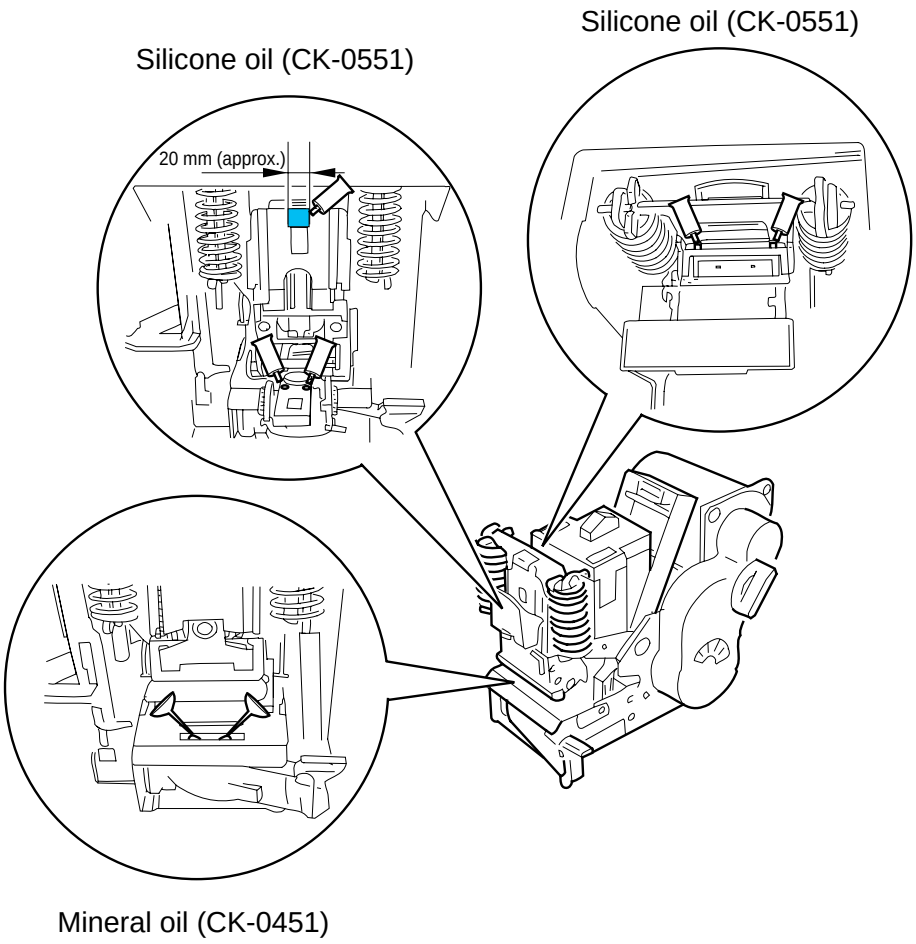

Figure 4-302

b. Lubricating

Caution:
You must always perform the following steps (lubrication) whenever you have executed the feed staple function.

Perform the following:
1. moving the upper/lower module bin
2. lubricating
3. executing the feed staple function

Moving the Upper/Lower Module

1) Touch the finisher's display to bring up the screen. Press the [?] key appearing in the lower right corner of the screen.

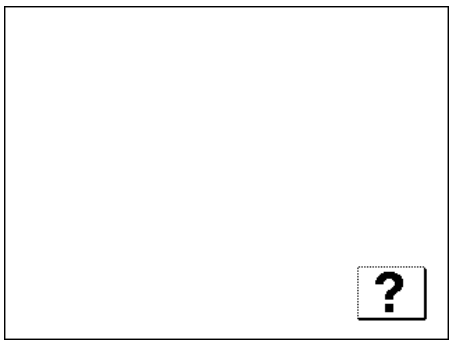

Figure 4-303

2) Press [WHEN STAPLING FAILS].

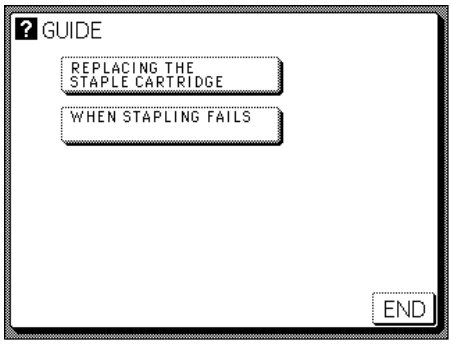

Figure 4-304

COPYRIGHT © 1997 CANON INC.

3) Press [BIN SHIFT].
- The upper bin module will move up and stop at a specific position.
- The lower bin module will lower and stop at a specific position.

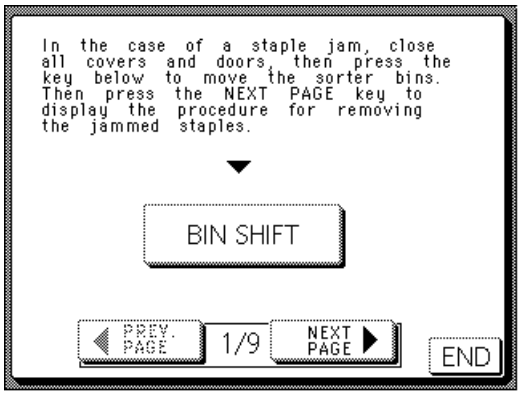

Figure 4-305

Lubricating
1) Open the bin cover.

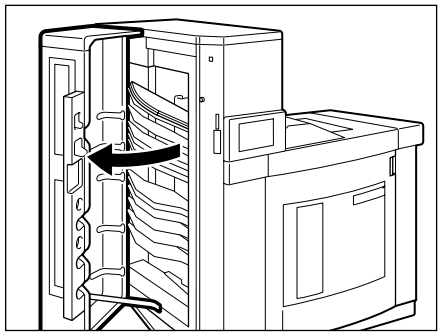

Figure 4-306

2) Holding the stapler unit grip, move the stapler unit toward the rear.
• Match ▼ of the stapler unit and ▲ of the finisher.

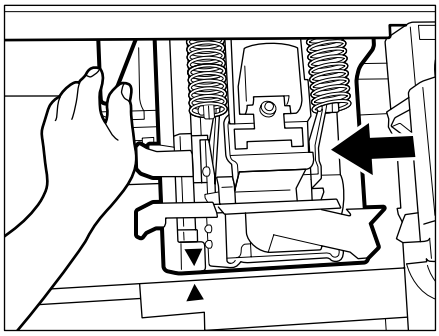

Figure 4-307



Figure 4-308

3) Release the locking lever of the stapler.

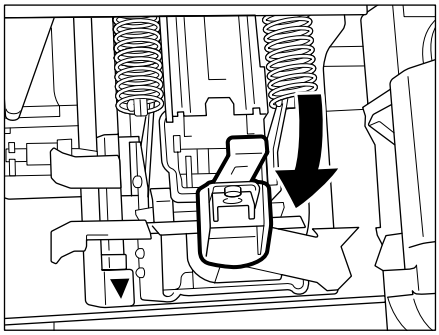

Figure 4-309

COPYRIGHT © 1997 CANON INC.

4) Apply lubricant where indicated.

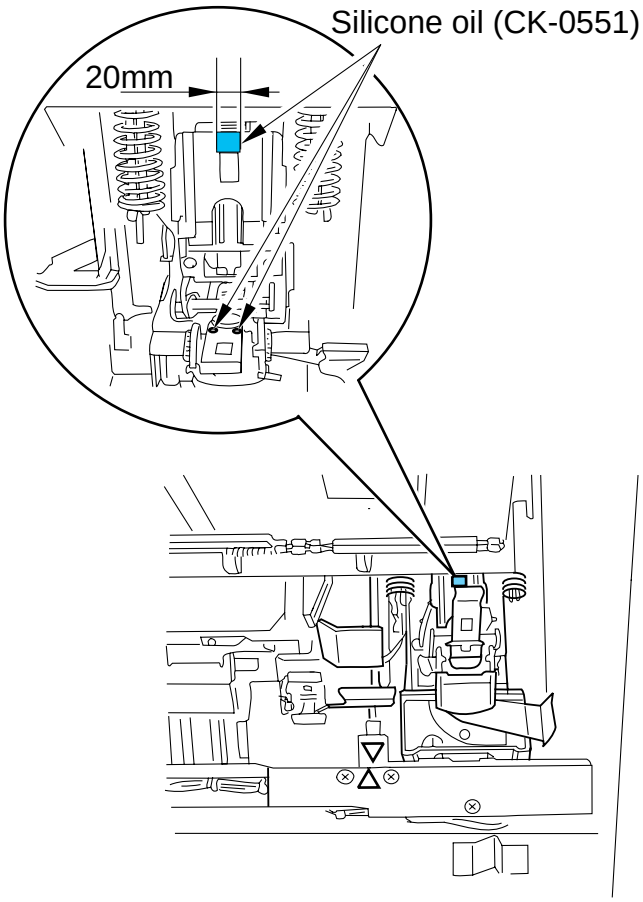

Figure 4-310

5) Lock the locking lever of the stapler.

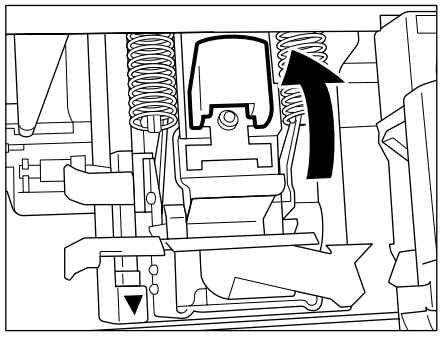

Figure 4-311

6) Close the bin cover.
7) Open the finisher's upper cover and upper feeding cover.

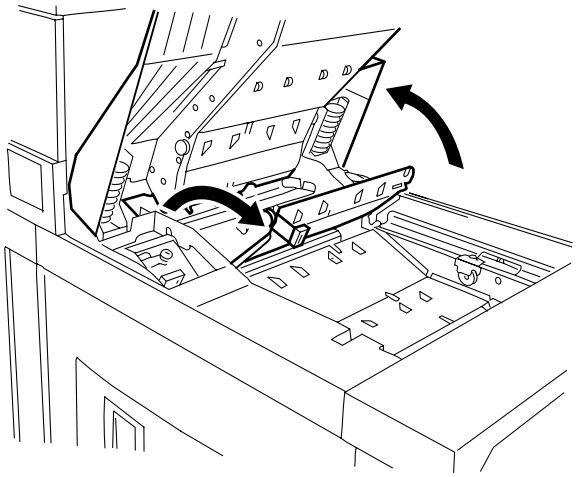

Figure 4-312

8) Remove the stapler cartridge from the stapler unit.

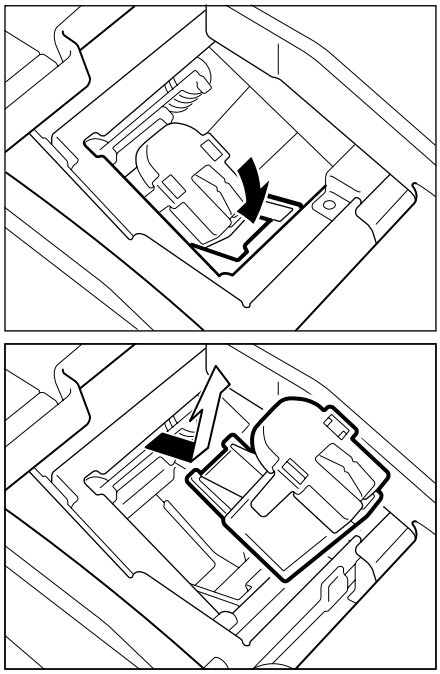

Figure 4-313

COPYRIGHT © 1997 CANON INC.

9) Apply lubrication to the clinching assembly and lubrication to the driver assembly of the stapler unit.



Figure 4-314

10) Close the finisher's upper feeding cover and upper cover.

Executing the Feed Staple Function

1) Press the Additional Function key on the copier's control panel.

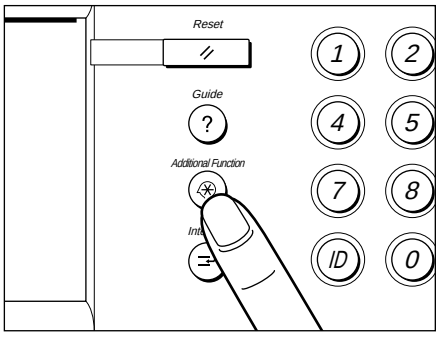

Figure 4-315

2) Press [ADJUSTMENT/CLEANING].

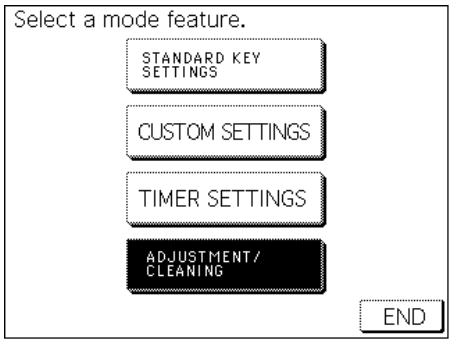

Figure 4-316

3) Select [REPOSITIONIG STAPLES].

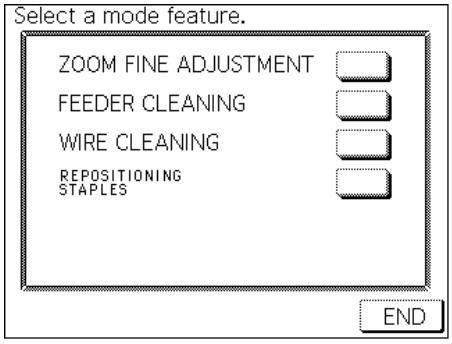

Figure 4-317

4) Press [START].
- Copy paper will automatically be drawn in from the copier's tray, and stapling will occur five times. Upon completion of the feed staple function, the display returns to the Basic screen.

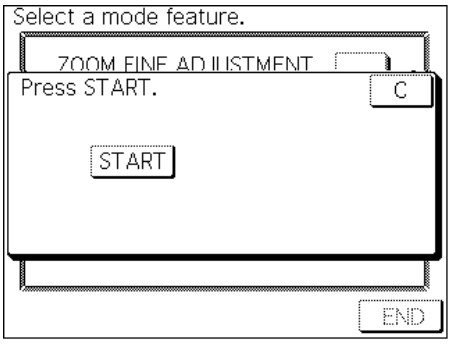

Figure 4-318

COPYRIGHT © 1997 CANON INC.

Reference:

The copier's side tray top will be given priority when drawing in copy paper.
The sheets used for the feed staple function will not be counted.

5) Press the access key, and open the access door; then, remove the stapled paper.

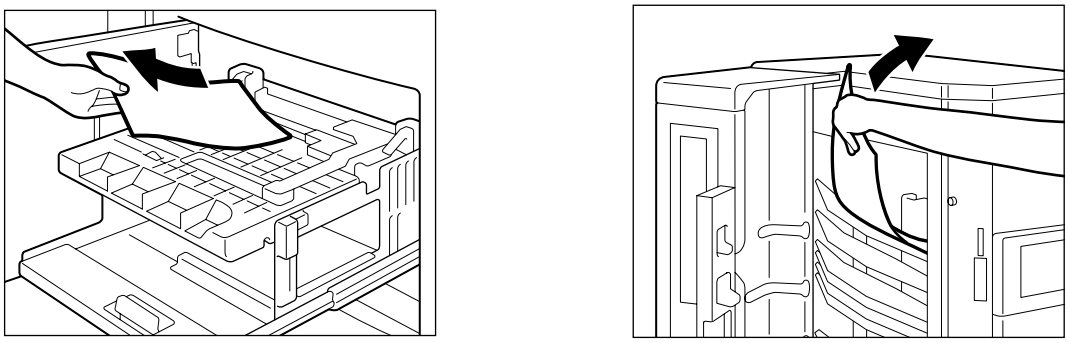

Figure 4-319

Reference:

If the copier's tray has only A3 copy paper, A3 paper will be stapled. If such is the case, open the bin cover to remove the stapled paper.

3. Lubricating the Stapler Unit Rail

1) Open the finisher's upper cover and the upper feeding cover.

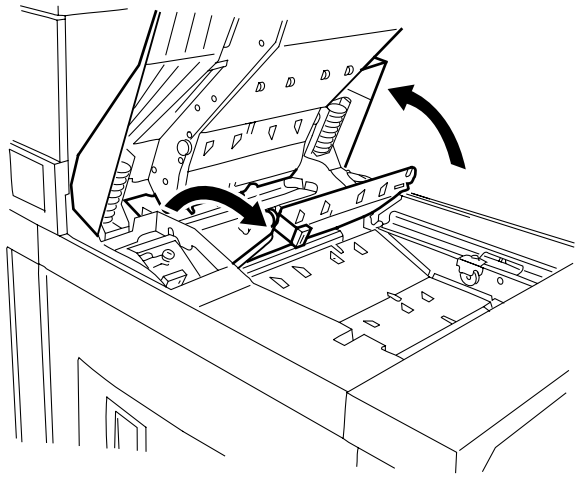

Figure 4-320

2) Dry wipe both left and right stapler unit rails to remove dirt.

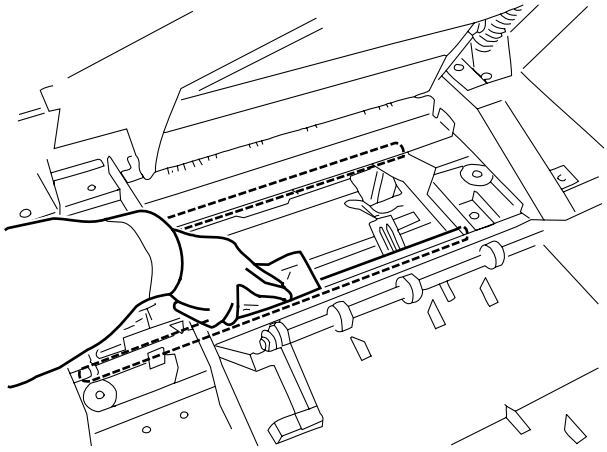

Figure 4-321

COPYRIGHT © 1997 CANON INC.

3) Apply specified grease along the stapler unit rail (right) in a thin layer.
   - Recommended grease: PermaLube G2 (CK-0551)
   - Do not apply grease to the stapler rail (left).

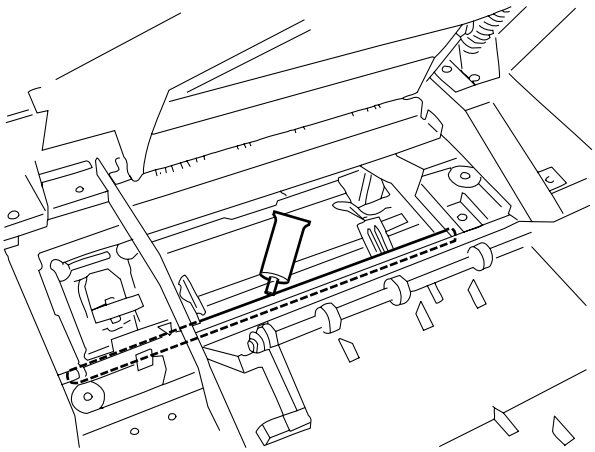

Figure 4-322

4) Move the stapler unit by hand so as to even out the grease.

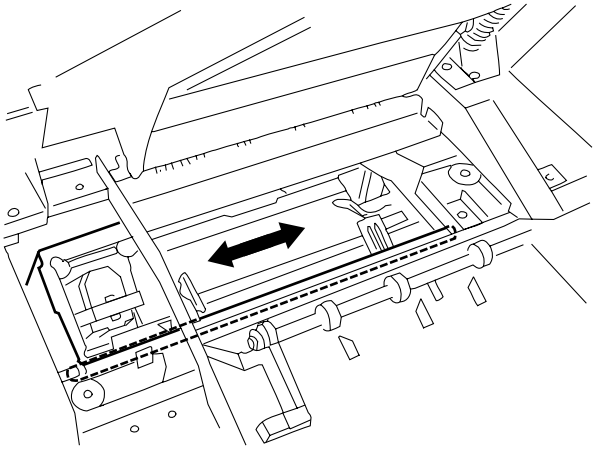

Figure 4-323

5) Close the upper cover and the upper feeding cover.

COPYRIGHT © 1997 CANON INC.

B. Paper Folding Unit-A1

△: Clean ●: Replace ×: Lubricate □: Adjust : Inspect

No.	Parts	Intervals*	Remarks
1	Folding roller (A, B, C)	△	Dry wipe with moist cloth; then, dry wipe.
2	No. 2 folding roller	△	

*Same as the minimum intervals for the host copier.

Table 4-302

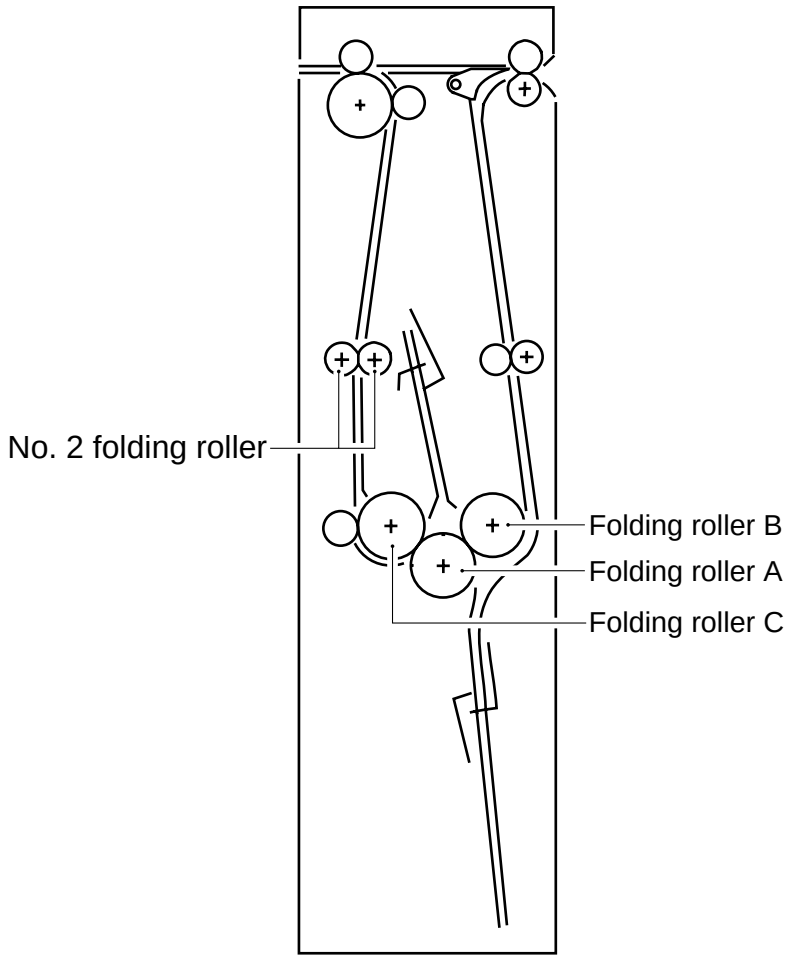

Figure 4-324

COPYRIGHT © 1997 CANON INC.

1. Cleaning the Folding Roller (paper folding unit)

a. Cleaning the Folding Rollers A and B

1) Open the top cover of the paper folding unit, and slide out the folder unit.

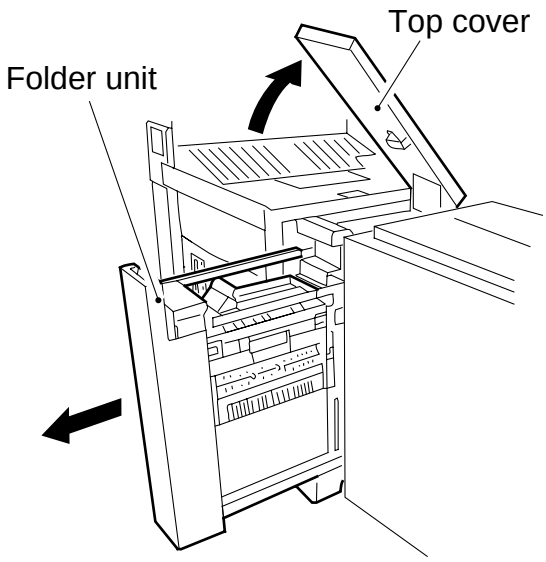

Figure 4-325

2) Remove the lower left cover.

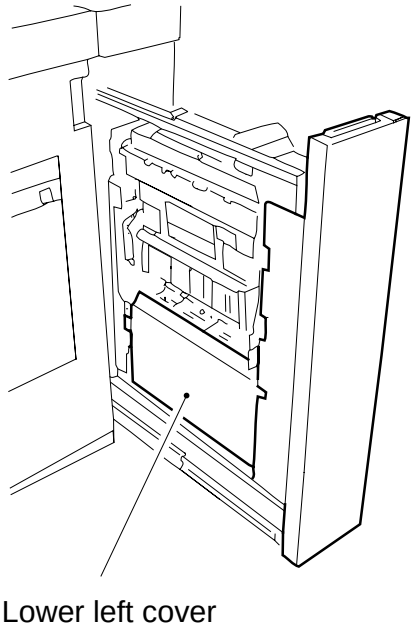

Figure 4-326

3) Open the right door.

4) While rotating the folder motor clockwise, clean the folding rollers A and B.

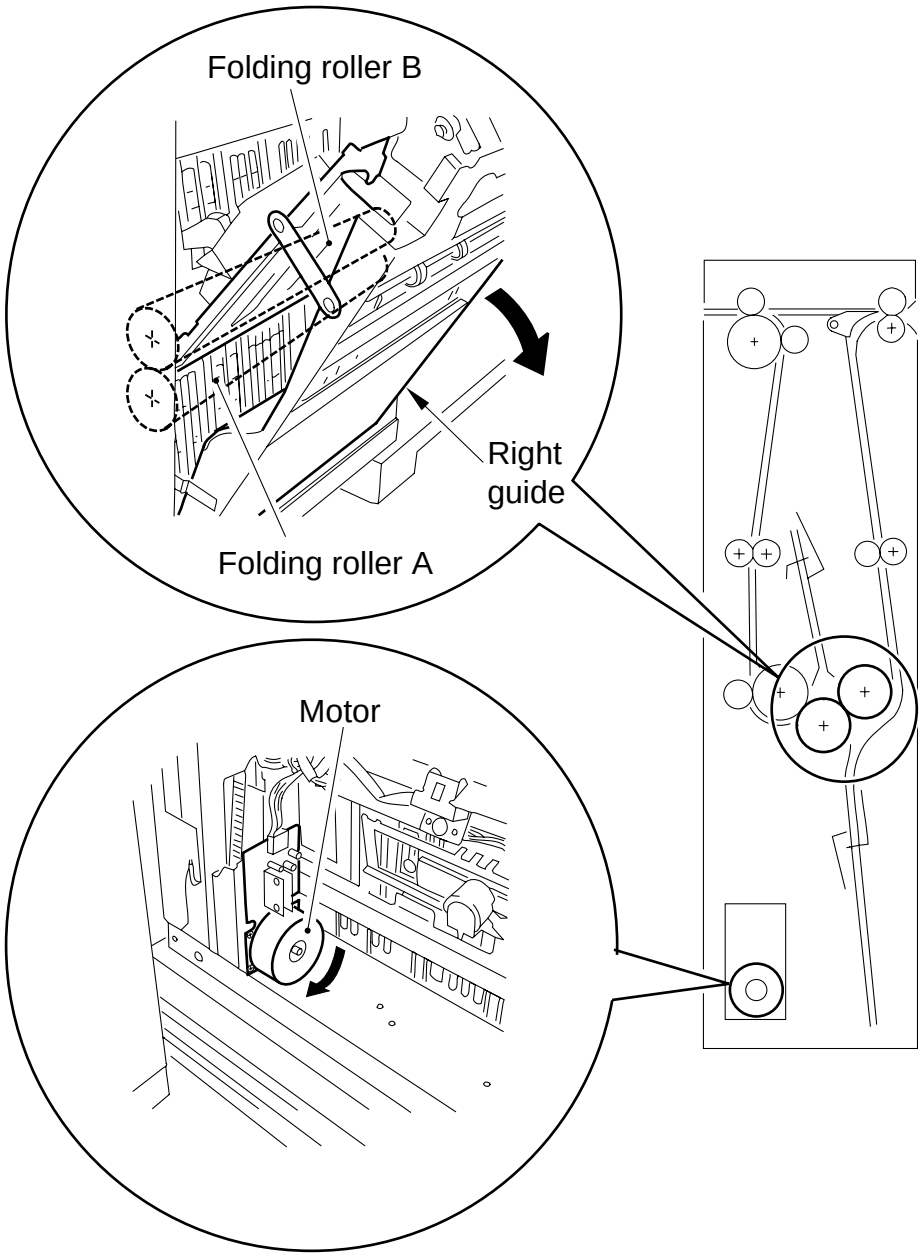

Figure 4-327

Caution:
Keep in mind that rotating the folder motor counterclockwise can cause the folding roller B to trap the sheet mounted under it, leading to deformation of the sheet.

COPYRIGHT © 1997 CANON INC.

b. Cleaning the Folding Roller C and No. 2 Folding Roller

1) Open the top cover of the paper folding unit, and slide out the folder unit.

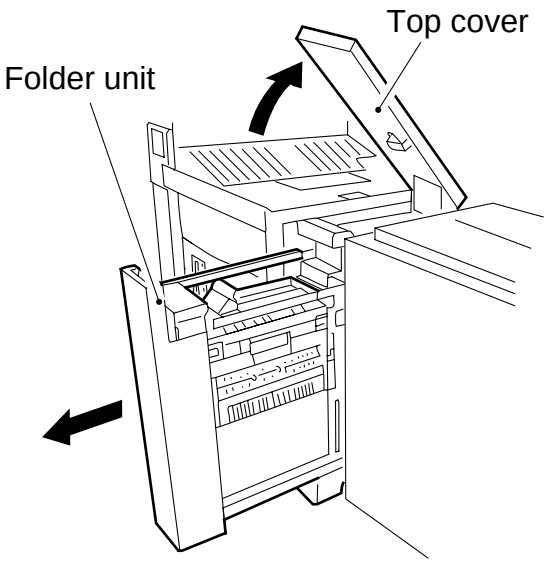

Figure 4-328

2) Remove the lower left cover.

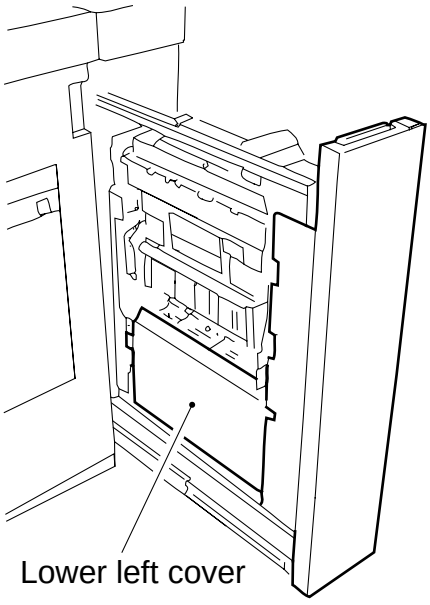

Figure 4-329

3) Open the left guide.

4) While rotating the folder motor clockwise, clean the folding roller C and the No. 2 folding roller.

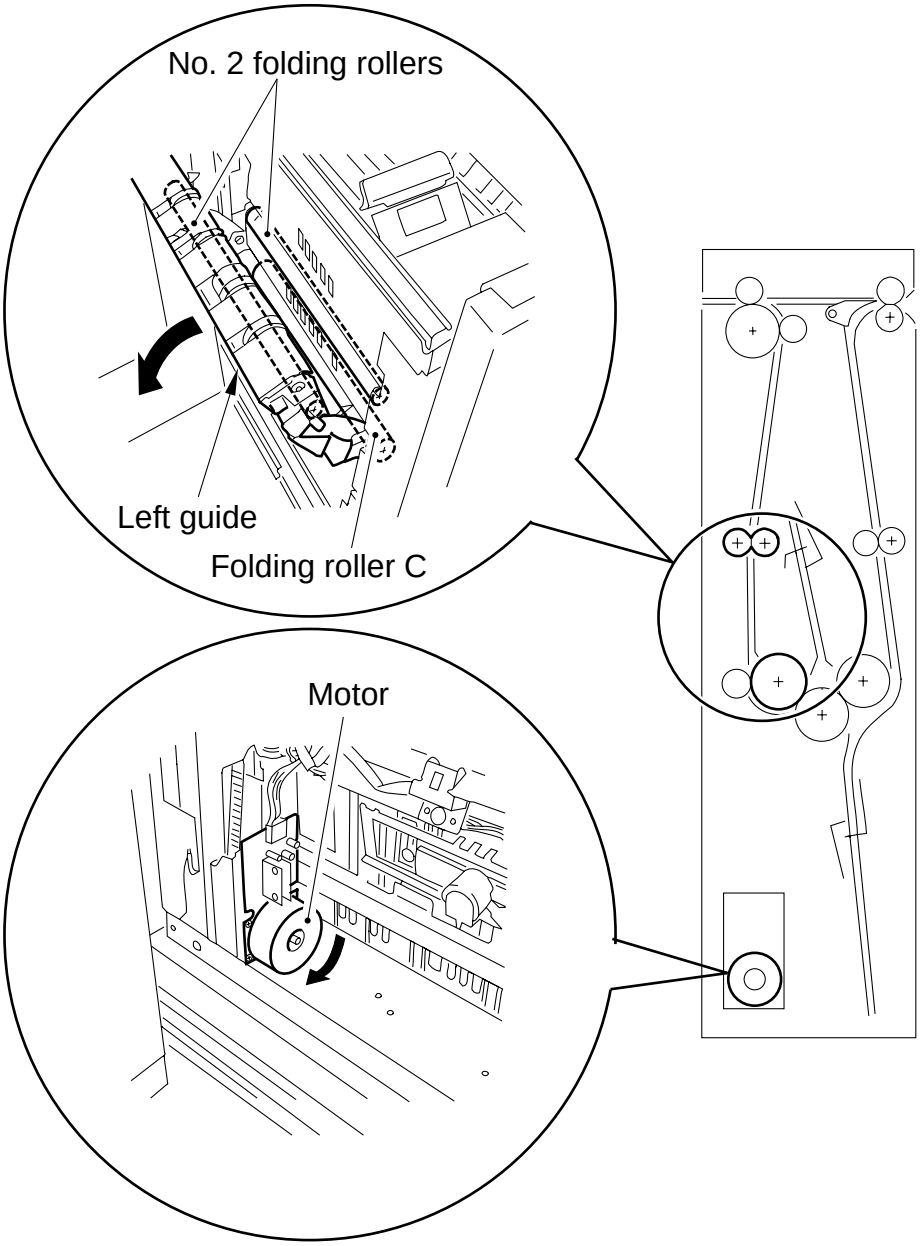

Figure 4-330

Caution:
Keep in mind that rotating the folder motor counterclockwise can cause the folding roller B to trap the sheet mounted under it, leading to the deformation of the sheet.

COPYRIGHT © 1997 CANON INC.

CHAPTER 5

TROUBLESHOOTING

I. STANDARDS AND ADJUSTMENTS 5-1
A. Mechanical System 5-1
B. Electrical System 5-25
II. TROUBLESHOOTING 5-53
A. Troubleshooting Malfunctions 5-53
III. ARRANGEMENT OF ELECTRICAL PARTS 5-90
A. Sensors 5-90
B. Motors, Clutches, Solenoids, and Brakes 5-98
C. Switches and Lamps 5-100
D. Paper Folding Unit-A1 5-102
E. Variable Resistors (VR), Light-Emitting Diodes (LED), and Check Pins by PCB 5-104
IV. SERVICE MODE 5-118
A. Outline 5-118
B. Using Service Mode 5-118
C. Checking the Operation 5-121
D. Adjustment 5-129
E. Job Mix Switch/Staple Position Adjustment 5-147
V. SELF DIAGNOSIS 5-154
A. Jam Alarm 5-155
D. Errors 5-162

COPYRIGHT © 1997 CANON INC. CANON FINISHER-B1 REV.0 MAY 1997 PRINTED IN JAPAN (IMPRIME AU JAPON)

I. STANDARDS AND ADJUSTMENTS

A. Mechanical System

1. Finisher

a. Adjusting the Upper Guide Bin Guide Bar
Turn the two screws ① so that the guide bar and the reference bar are parallel.

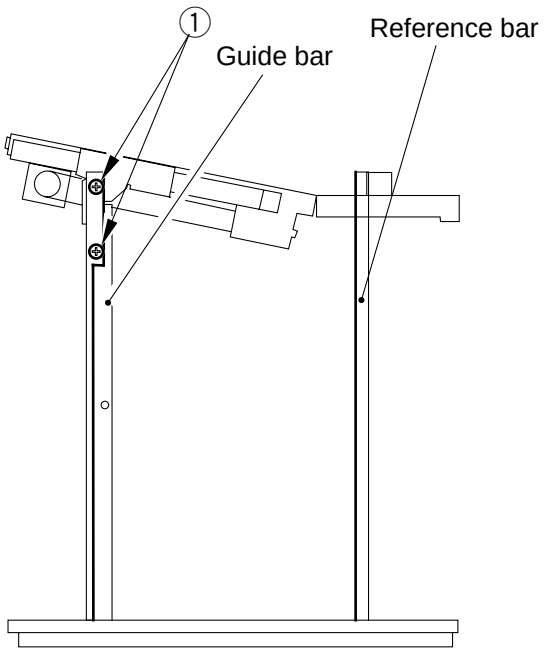

Figure 5-101

COPYRIGHT © 1997 CANON INC.

b. Adjusting the Lower Bin Guide Bar

Turn the two screws ① so that the guide bar and the reference bar are parallel.

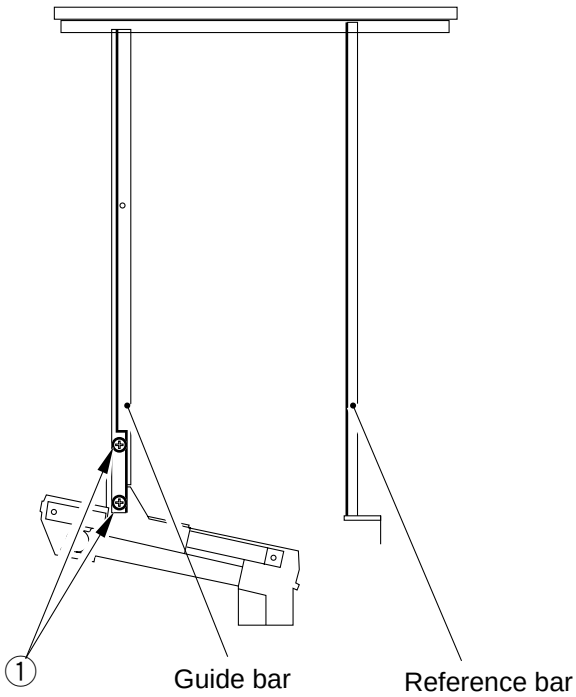

Figure 5-102

COPYRIGHT © 1997 CANON INC.

c. Adjusting the Stroke of the Non-Sort Path Solenoid (SL1)

Loosen the two adjusting screws ③, and push in the non-sort path switching solenoid (SL1) ④ into the direction of the arrow. Then, adjust the position of the non-sort path switching solenoid (SL1) so that the end of the flapper ⑤ butts against the stopper rubber ⑥ (approx. stroke: 4 ±0.5 mm).

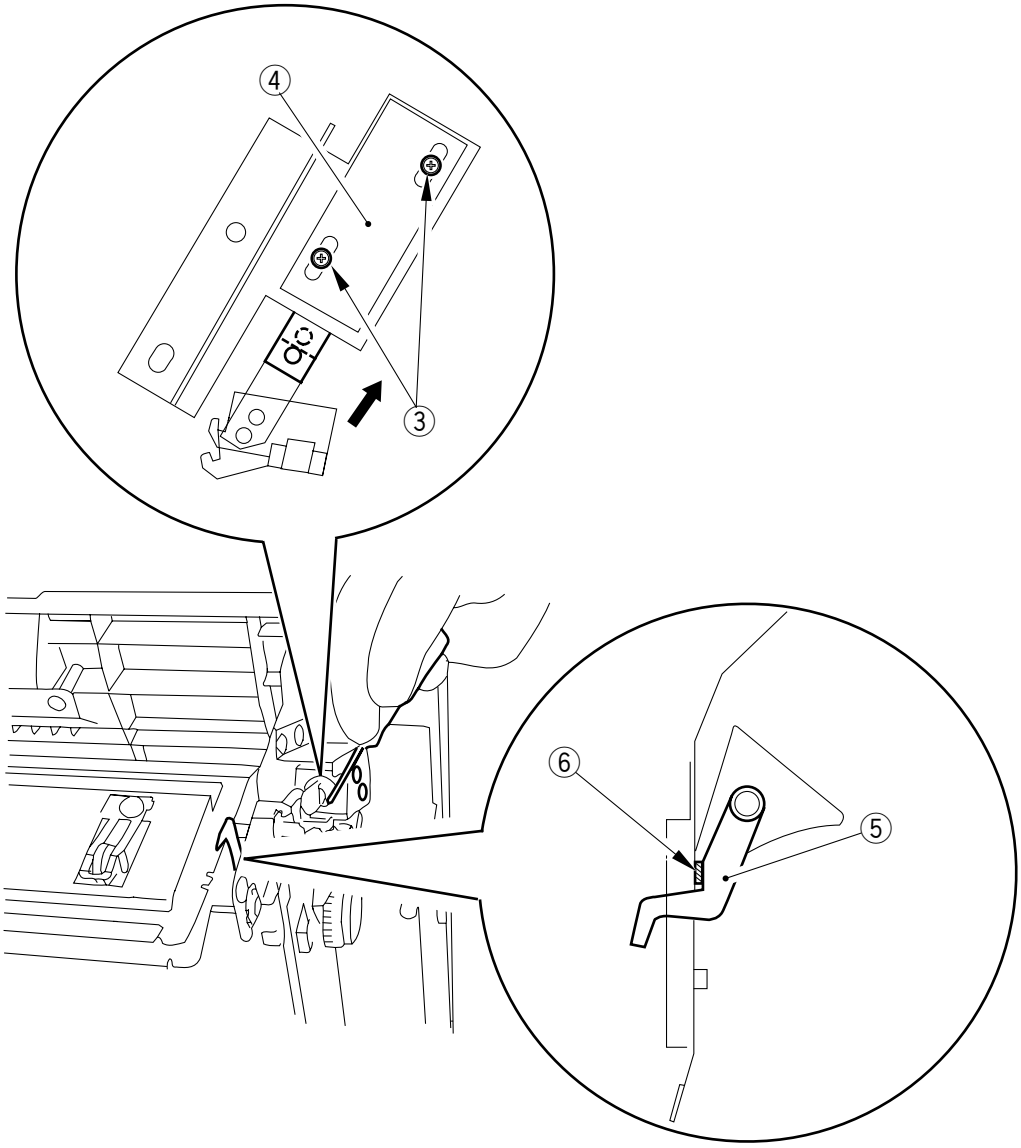

Figure 5-103

d. Adjusting the Stroke of the Path Switching Solenoid (SL2)

Loosen the two adjusting screws ①, and push the path switching solenoid (SL2) ② in the direction of the arrow. Then, adjust the position of the path switching solenoid (SL2) so that the end of the flapper ③ butts against the stopper rubber ④ (approx. stroke: 4.5 ±0.5 mm)

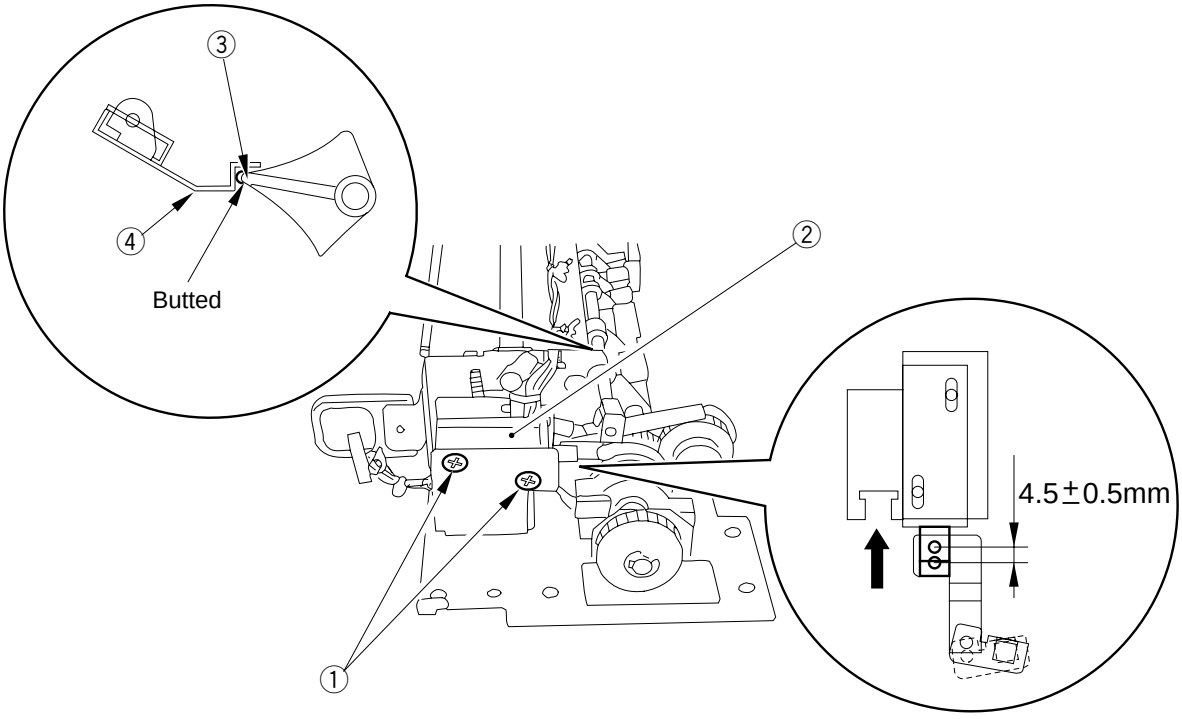

Figure 5-104

e. Adjusting the Stroke of the Stacker Access Solenoid (SL3)

Loosen the two adjusting screws ①, and adjust the height of the solenoid unit ② so that the hinge butts against the lower of the groove in the locking lever.

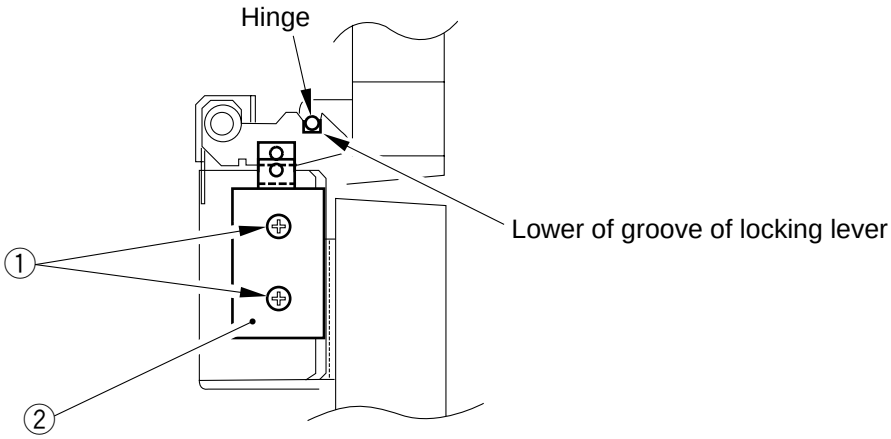

Figure 5-105

COPYRIGHT © 1997 CANON INC.

f. Adjusting the Stroke of the Upper Paddle Solenoid (SL5)

Loosen the two adjusting screws ③, and adjust the position of the upper paddle solenoid (SL5) so that the stroke of the upper paddle solenoid (SL5) ④ is 8 ±0.5 mm.

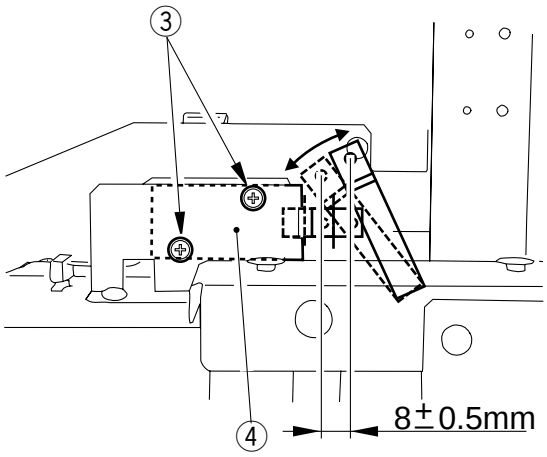

Figure 5-106

g. Adjusting the Stroke of the Lower Paddle Solenoid (SL6)

Loosen the two adjusting screws ①, and butt the lower paddle arm ② against section A. Then, adjust the position of the lower paddle solenoid (SL6) so that there is no gap between the lower paddle solenoid (SL6) ③ and the E-ring of the plunger.

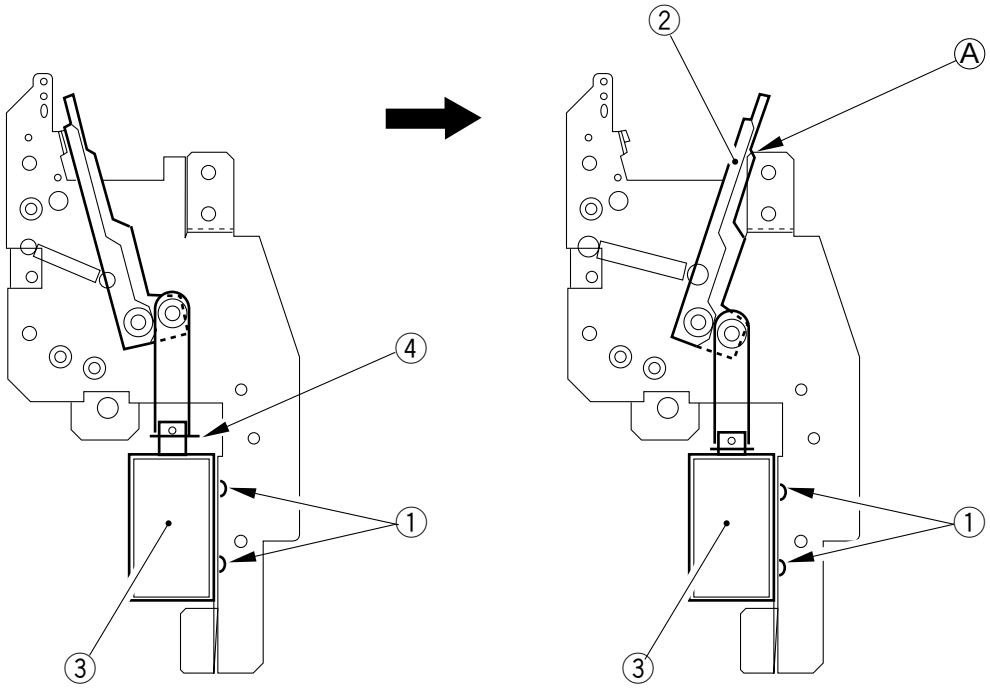

Figure 5-107

h. Adjusting the Stroke of the De-Curling Solenoid (SL7)

1) Loosen the two adjusting screws ①, and push the solenoid ② in the direction of the arrow. Then, adjust the position of the de-curling solenoid (SL7) so that the angle formed by the lower face of the guide arm A ③ and the side of the arm cover is 90° ±2°. (Keep in mind that the plunger stroke is about 5.4 mm.)
2) Install the guide arm ④ by offsetting the gear for a single tooth in relation to the guide arm A ③.

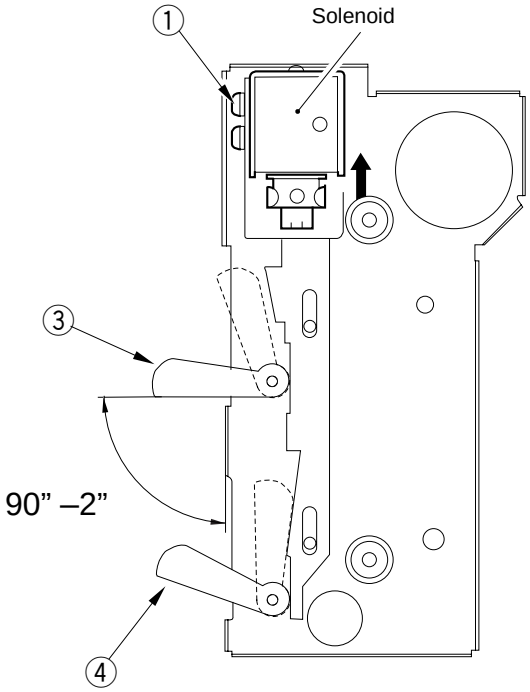

Figure 5-108

i. Adjusting the Stroke of the Bin Cover Releasing Solenoid (SL8)

Loosen the two adjusting screws ①, and adjust the position of the solenoid ② so that the stroke of the plunger is 5 +0.5, -0 mm.

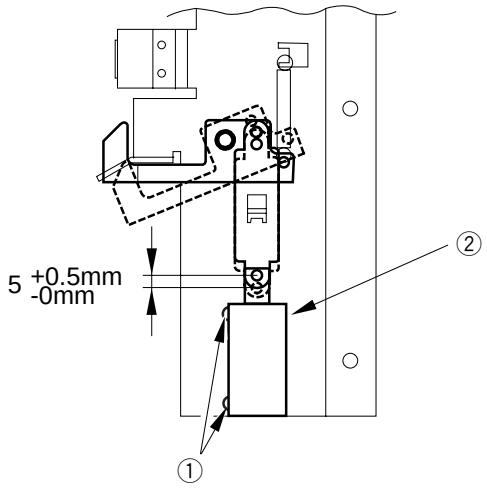

Figure 5-109

COPYRIGHT © 1997 CANON INC.

j. Adjusting the Tension of the Stacker Unit Up/Down Drive Belt

As shown, loosen the tension fixing screw ①, and turn the tension adjusting nut ② so that the reading of the tension gauge is 1000 g when the middle of the drive belt is pushed down by 10 to 15 mm (about 20 mm up from the lower end of the belt metal fixing).

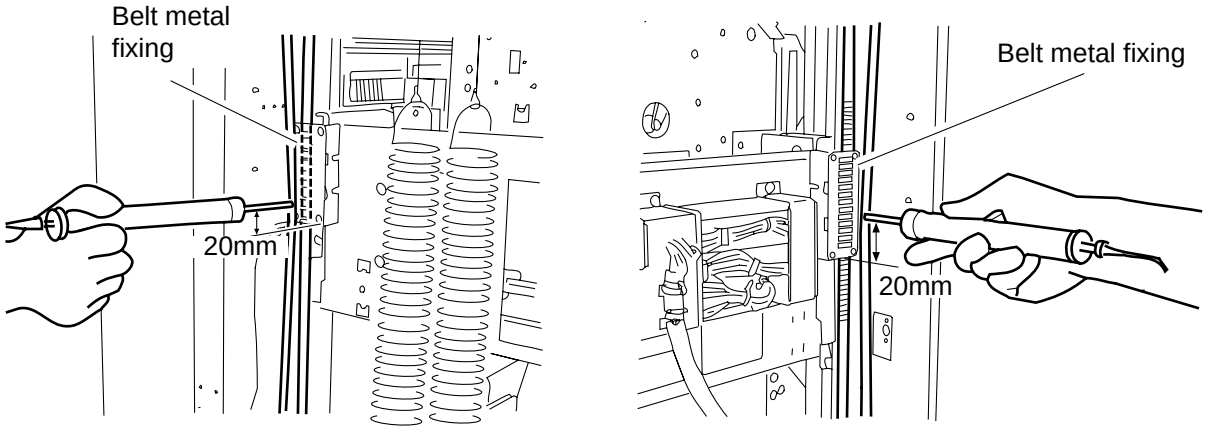

Figure 5-110

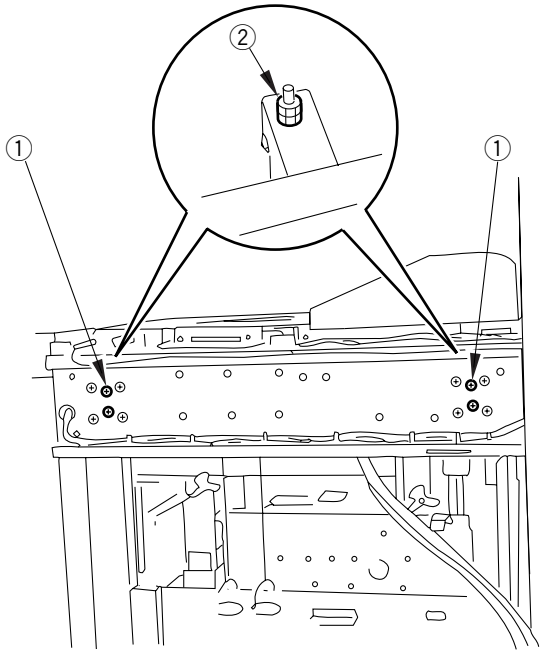

Figure 5-111

k. Adjusting the Belt Tension of the Stack Processing Unit Shift Brake 2

1) Remove the common feeder motor.
2) Loose the tension fixing screw ①, and turn the tension adjusting nut ② so that the reading of the tension gauge is 100 g when the center of the brake belt is push down by the tension gauge about 10 to 15 mm.

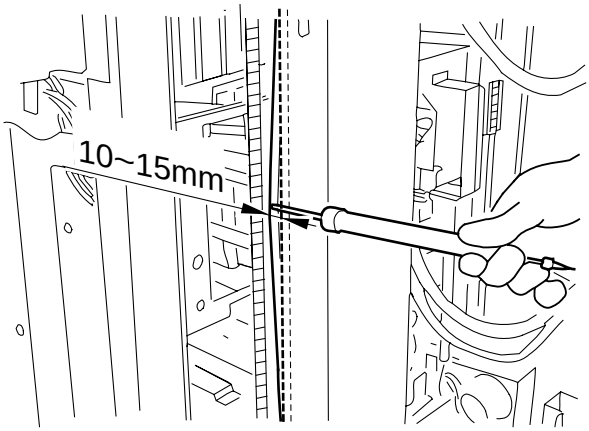

Figure 5-112

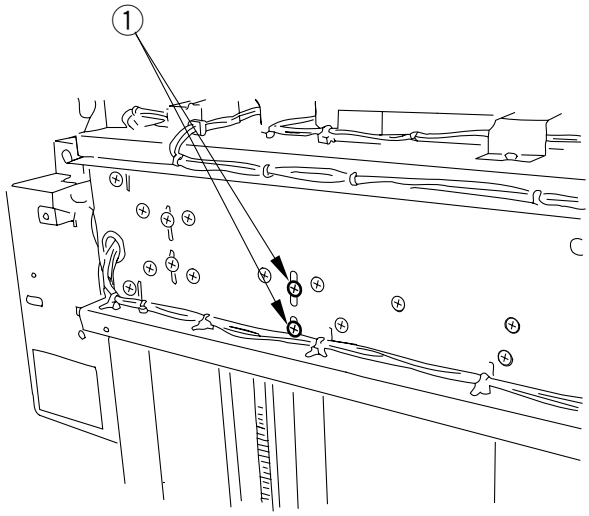

Figure 5-113

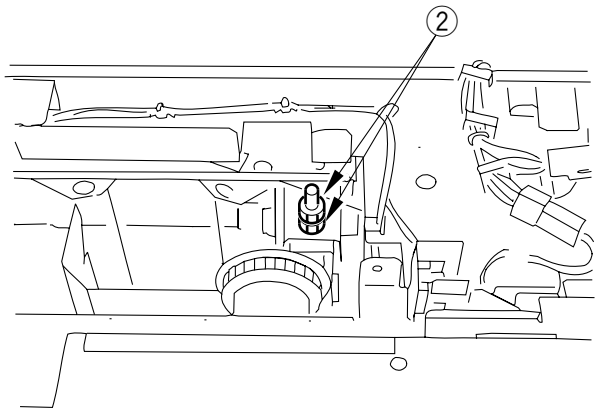

Figure 5-114

COPYRIGHT © 1997 CANON INC.

l. Adjusting the Tension of the Upper/Lower Bin Lead Cam Drive Belt

As shown, push the belt ① at a point 200 ±5 mm from the finisher's rear side plate about 10 mm in the direction of the arrow with a tension gauge. Adjust the tensioner so that the reading is 200 to 250 g.

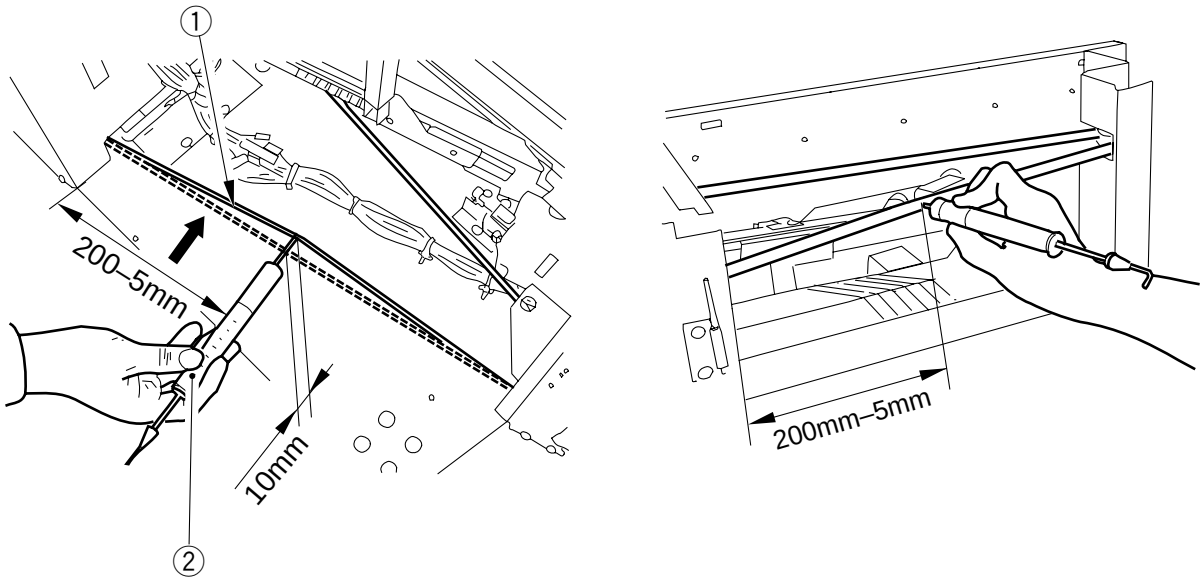

Figure 5-115

m. Adjusting the Phase of the Lift Wall

As shown, turn the drive belt fixing screw ③ so that the left/right edge of the lift wall matches the edge ② of the stacker tray rail.

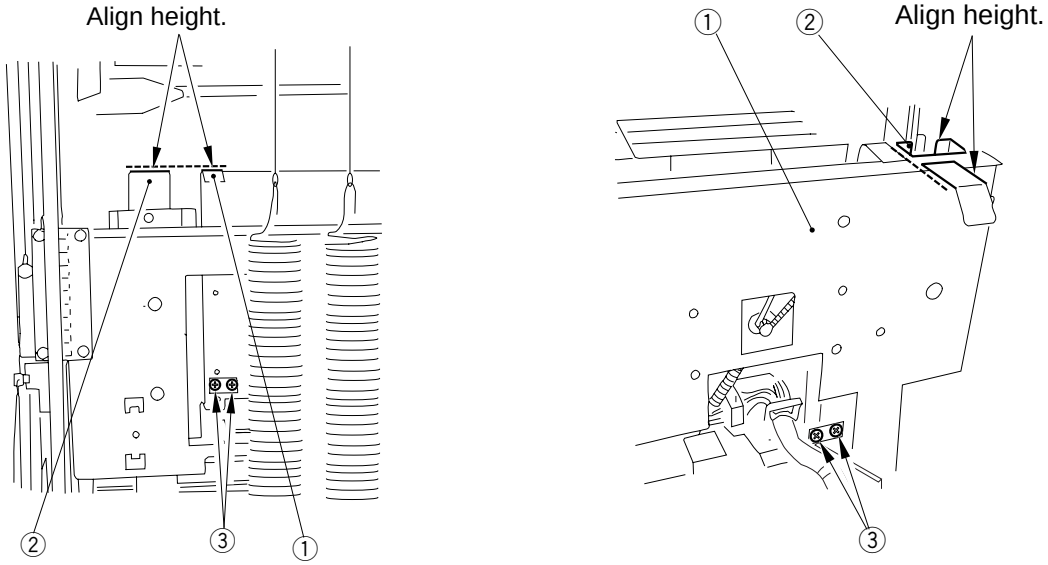

Figure 5-116

n. Adjusting the Angle of the Stacker Unit Leading Edge Stopper

1) In service mode, raise the stacker tray as far as it moves.
2) Check to make sure that the leading edge stopper is at home position.
3) As shown, loosen and turn the two adjusting screws ③ so that the upper face ① of the stacker tray and the leading edge stopper adjusting plate ② are parallel.

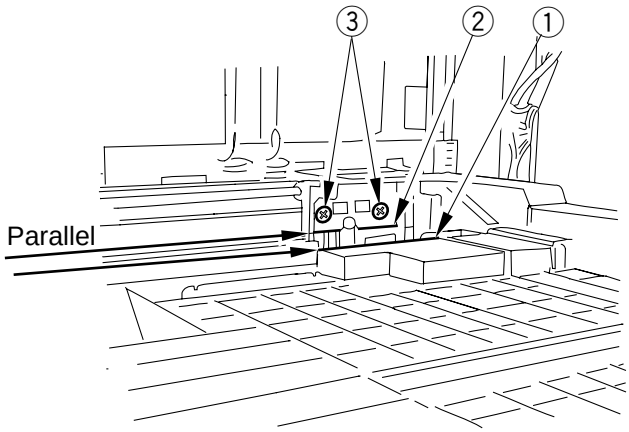

Figure 5-117

o. Adjusting the Leading Edge Stopper Home Position

1) In service mode, move the leading edge stopper to home position.
2) Loosen and turn the fixing screw ① and turn the adjusting screw ② so that the distance between the leading edge stopper and the reference wall is 367 ±0.5 mm.
3) After adjustment, tighten the fixing screw ①.

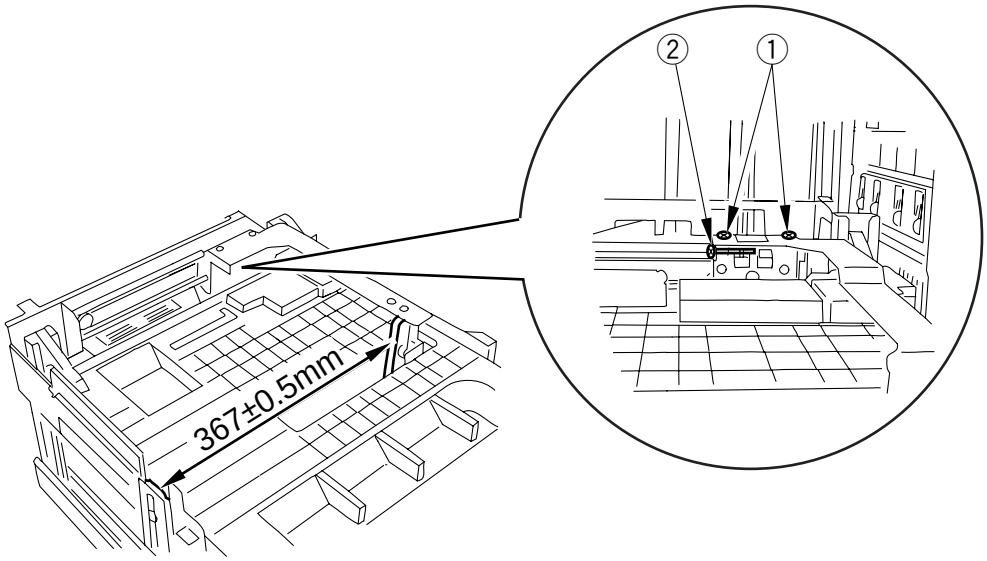

Figure 5-118

COPYRIGHT © 1997 CANON INC.

p. Adjusting the Position of the Side Gripper and the Bin Surface

1) In service mode, move the stack processing unit to the bottom position.
2) In service mode, move the side gripper to clasping position.
3) Open the bin cover; then, remove the bin upper cover, bin right cover, and front left cover.
4) Move the gripper to closing position.
5) Loosen and turn the two adjusting screws to adjust the height of the side gripper so that the clasping face of the lower gripper and the bin surface is 0 to 2 mm.
   • Be sure to check to make sure that the bin roll is at the level section of the lead cam.

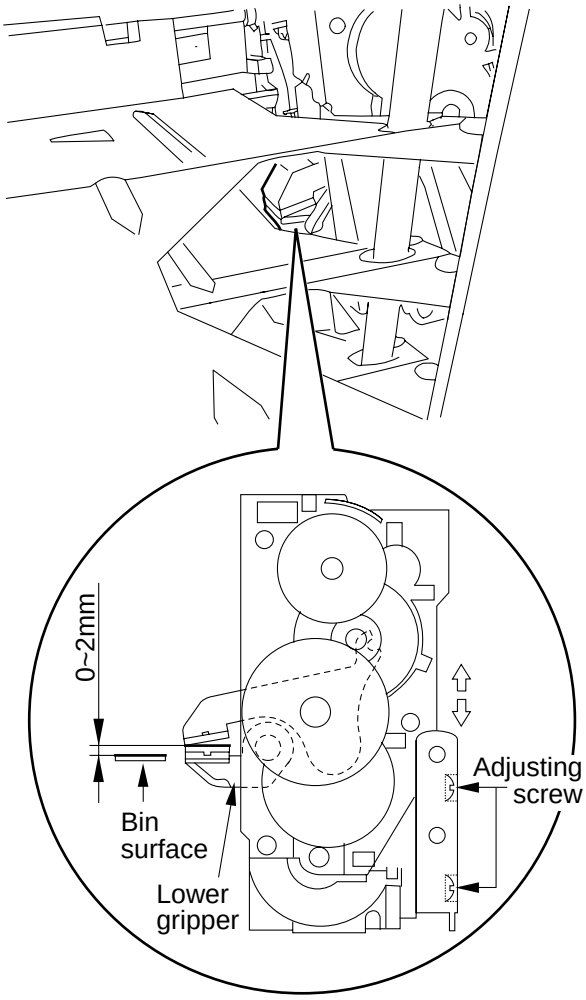

Figure 5-119

q. Adjusting the Opening Angle of the Bin Open/Close Unit

1) In service mode, cause the bin rear end wall to assume OPEN position.
2) Loosen and turn the three adjusting screws ① to adjust the position of the bin rear end wall open/close unit so that the edge is 0 to 2 mm below the bin surface.

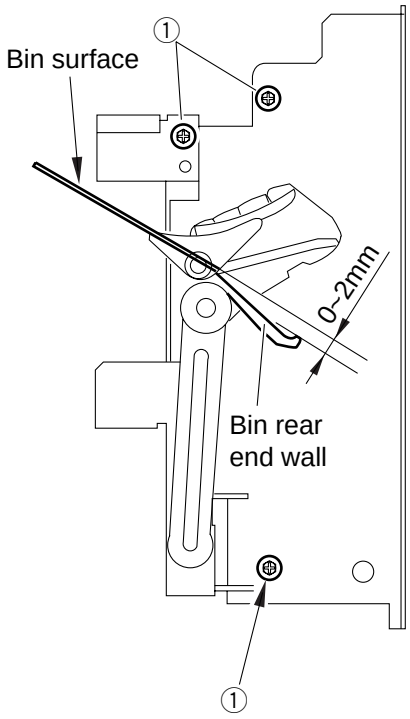

Figure 5-120

COPYRIGHT © 1997 CANON INC.

r. Skew Correction in the Vertical Path

Loosen the adjusting screw ①, and move the adjusting plate ② to the left and the right to make adjustments.

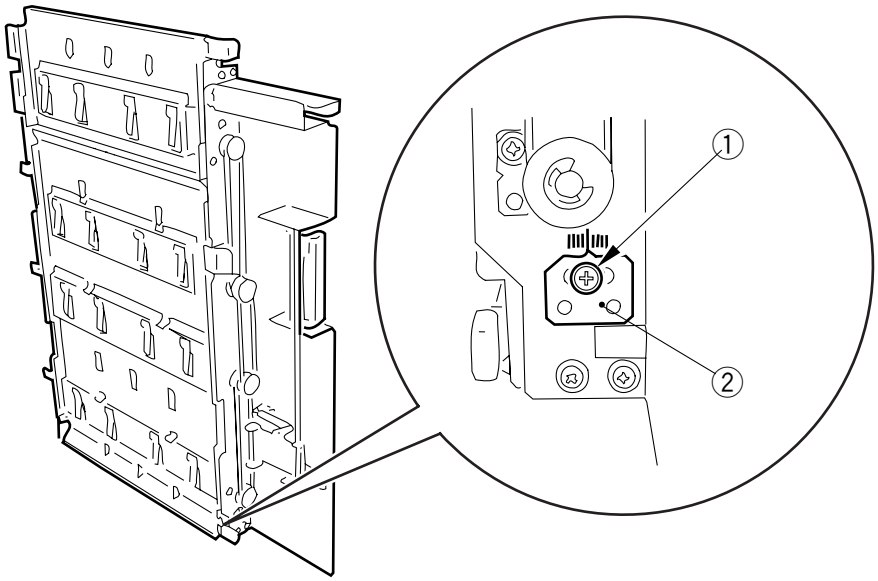

Figure 5-121

s. Adjusting the Orientation of the Stacker Unit

1) Move the stack tray to the top position in service mode.
2) Slide out the stacker unit.
3) Loosen the two screws ①.

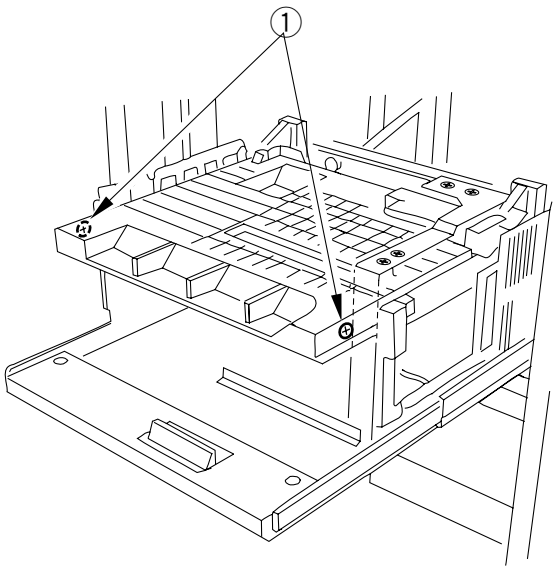

Figure 5-122

4) Adjust the angle at which the stack tray is installed so that the difference in distance at front and rear betwee the top face of the stack tray the top end of the reference wall is less thatn 1 mm.

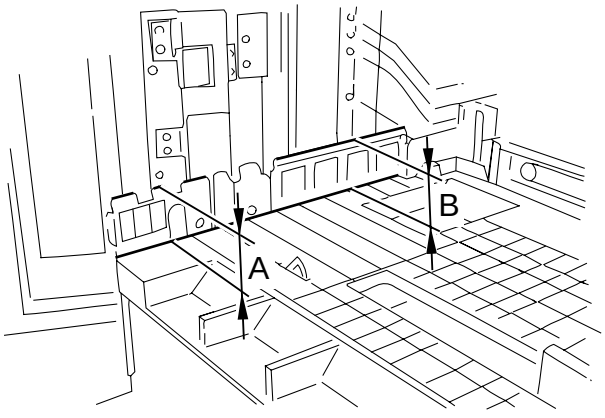

Figure 5-123

COPYRIGHT © 1997 CANON INC.

2. Paper Folding Unit

a. Adjusting the Position of the Folding Stopper

If the folding position is not as specified after making checks, adjust the position of all stoppers that are involved.

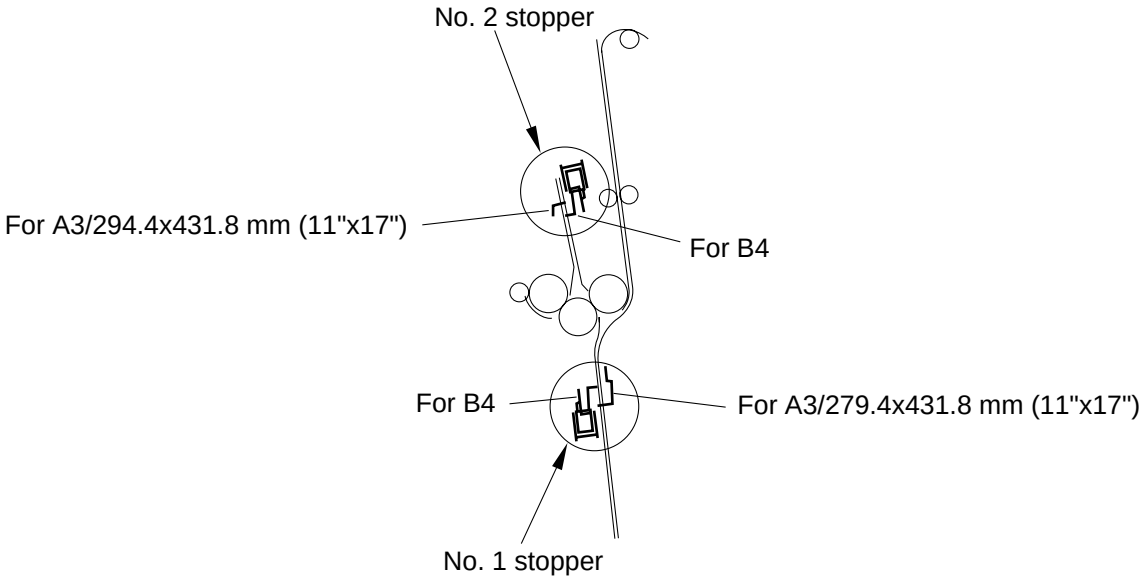

Figure 5-124

Study Figure 5-123 for changes in the position of folding and direction caused by adjusting the stoppers. (The directions of the arrows in the figure above and those in the figure below match.)

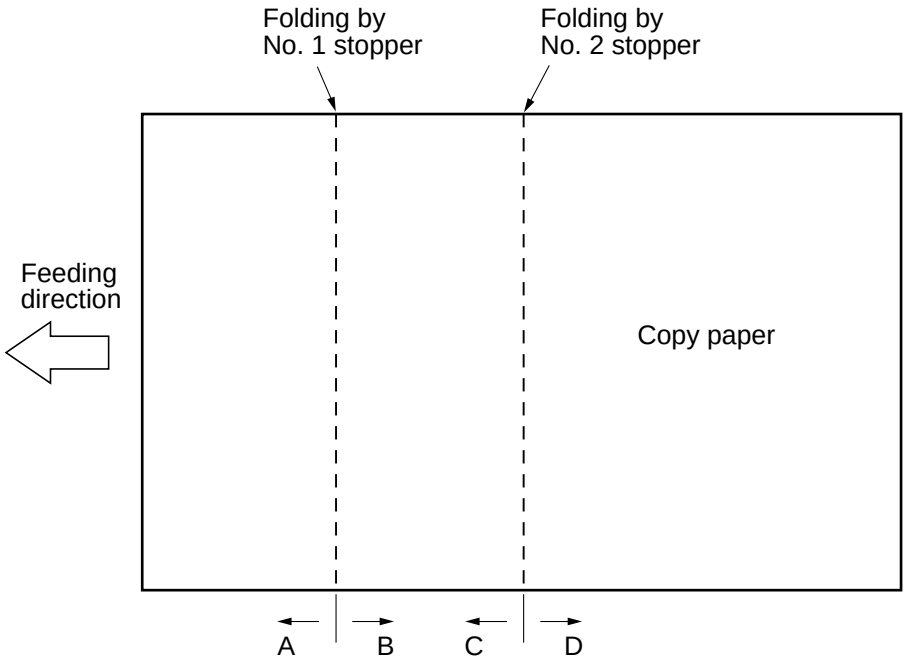

Figure 5-125

• No. 1 Stopper

1) Loosen and turn the two adjusting screws ② to adjust the position of the stopper.

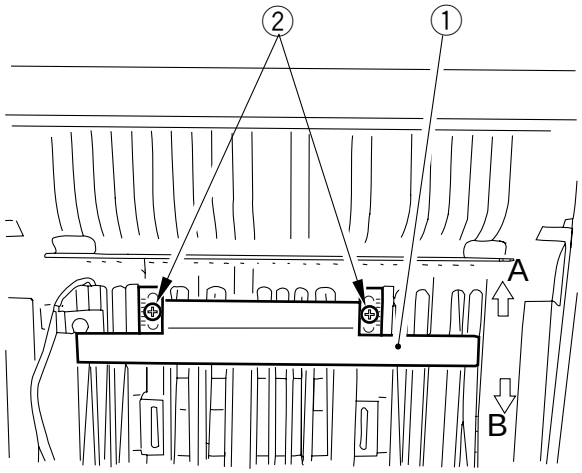

Switching between A3 and 279.4x431.8 mm (11"x17")

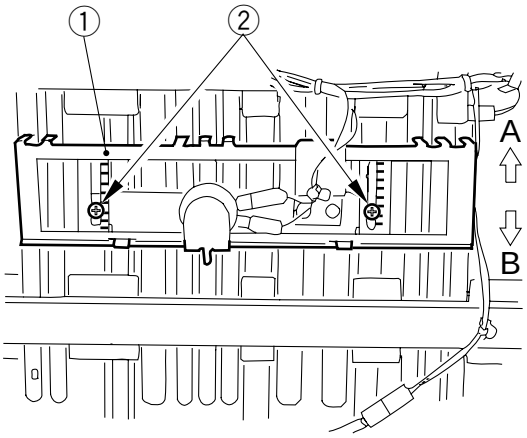

For B4

Figure 5-126

• No. 2 Stopper

1) Loosen and adjust the two adjusting screws ② to adjust the position of the stopper.

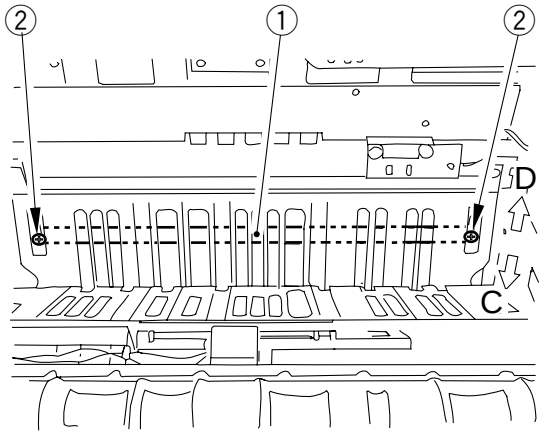

Switching between A3 and 279.4x431.8 mm (11"x17")

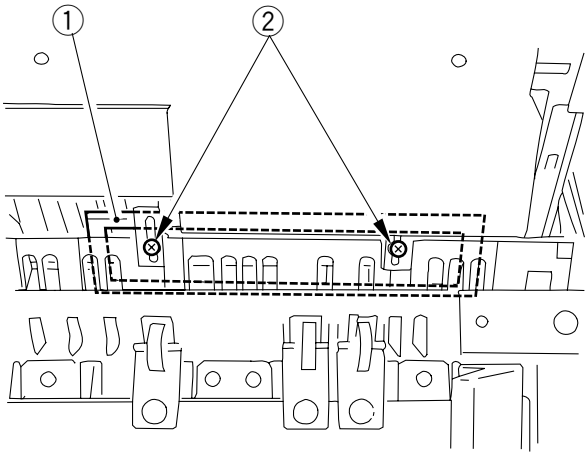

Figure 5-127

COPYRIGHT © 1997 CANON INC.

b. Adjusting the Inlet Guide

1) Loosen and turn the two adjusting screws ① so that the height of the end of the inlet guide ② from the lower guide plate (not the rib upper) ③ is 4 +1, -0 mm.
2) Loosen and turn the adjusting screw ⑥ so that the height from the upper guide plate to the inlet guide ⑤ is 4 +1, -0 mm when the inlet solenoid (SL5) ④ turns on.

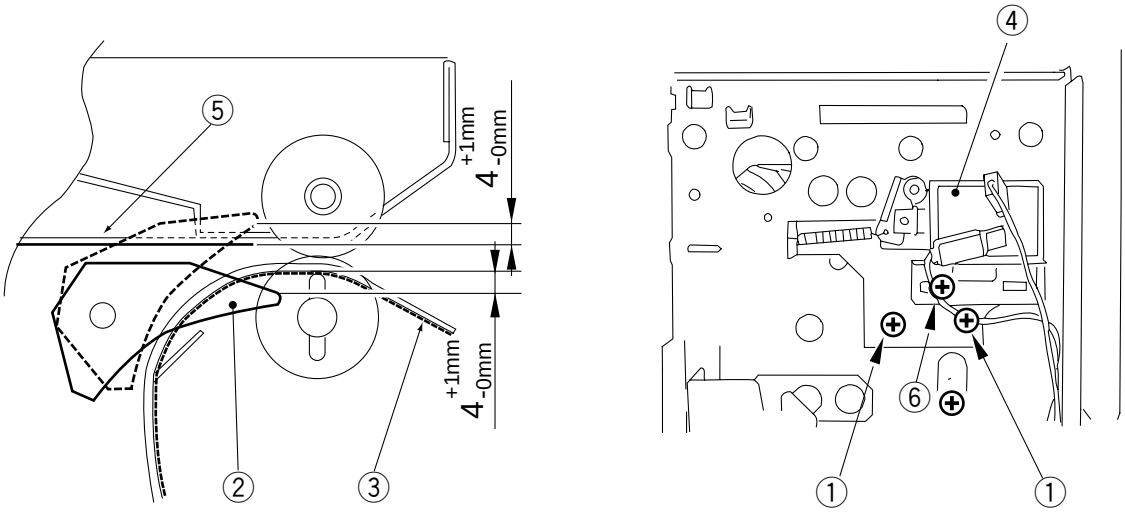

Figure 5-128

c. Adjusting the Pressure of the Folding Roller

1) Loosen the fixing nut ①, and turn the adjusting screw ③ so that the length of the pressure spring ② is 17.5 +3 mm.

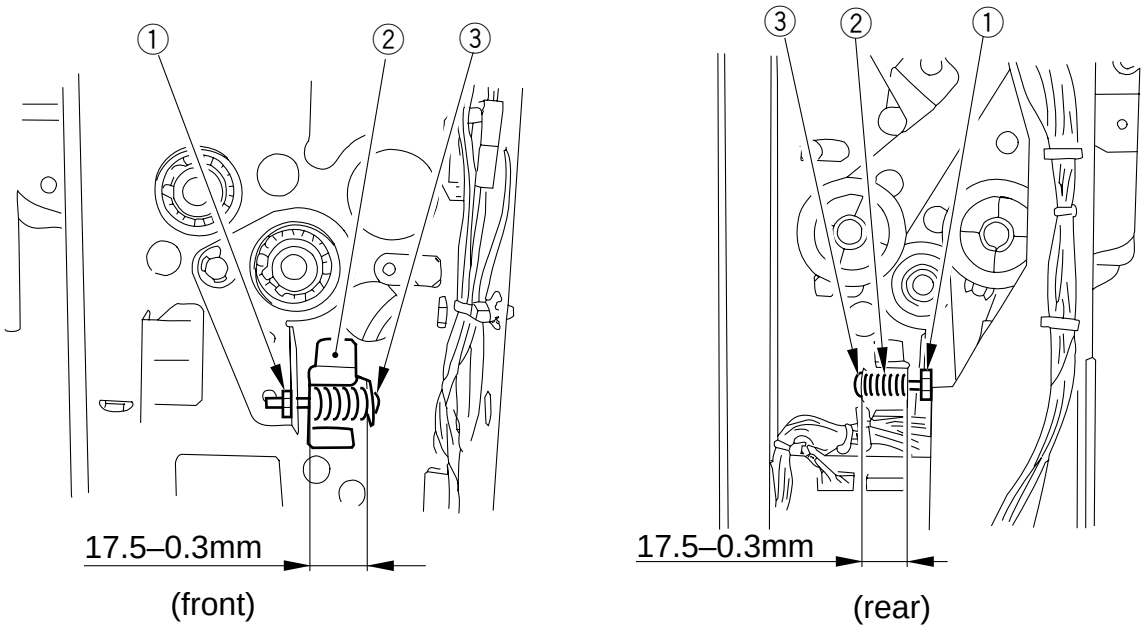

Figure 5-129

d. Adjusting the Position of the No. 1 Folding Path Guide Plate

1) Turn the two screws ① each at the front and the rear so that they are tightened halfway.

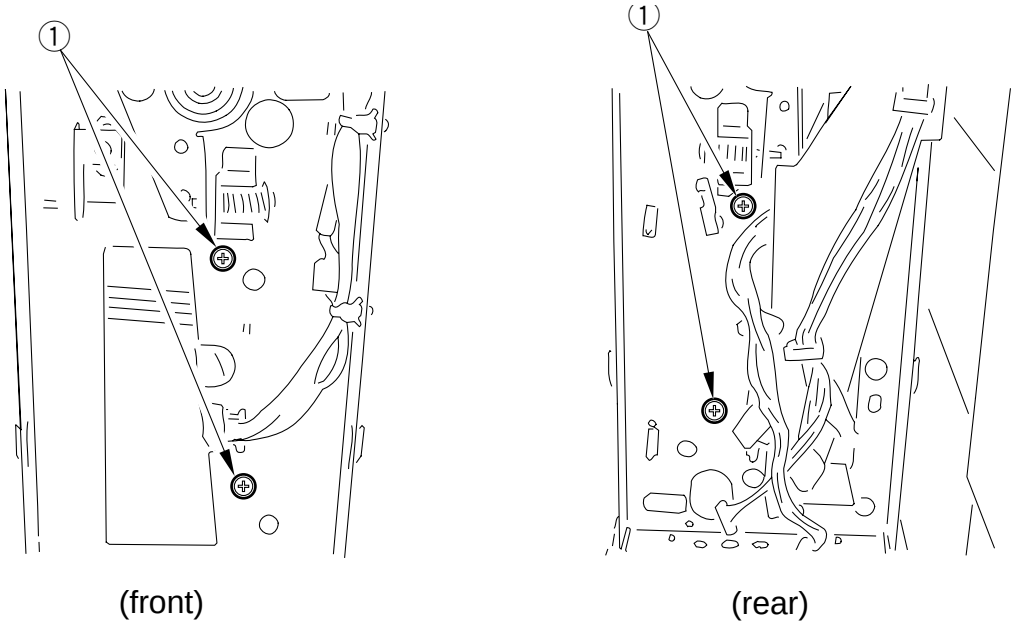

Figure 5-130

2) Turn the four adjusting screws used in step ① so that the gap Ⓐ between the upper end of the lower left guide ② and the folding roller A ③ and the gap Ⓑ between the lower end of the lower left guide and the right guide ④ (between rib tops) is 1.6 ±0.3 mm.

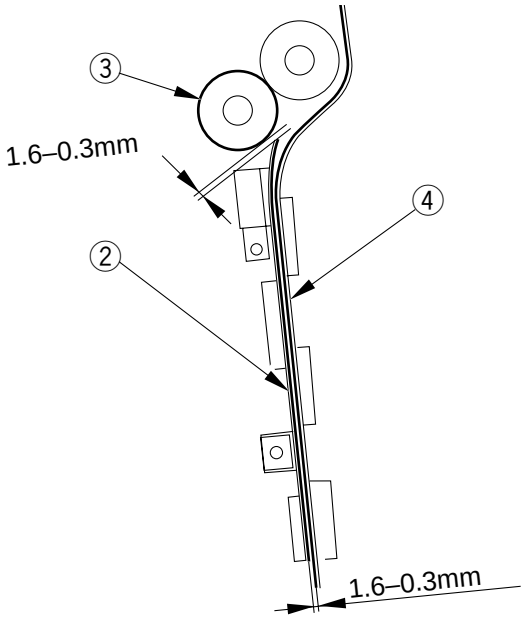

Figure 5-131

COPYRIGHT © 1997 CANON INC.

e. Adjusting the Position of the Right Guide Static Eliminating Brush

1) Loosen and turn the two adjusting screws ① so that the protrusion of the static eliminating brush ② from the guide face (not the rib upper) of the right guide is 1 ±0.3 mm.

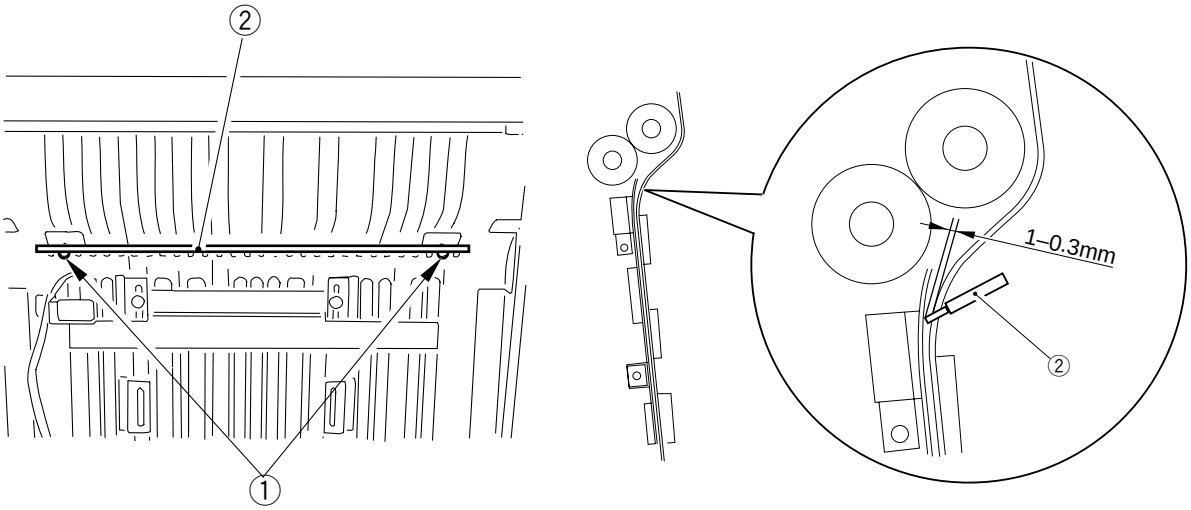

Figure 5-132

f. Adjusting the No. 2 Folding Roller Pressure

1) Remove the two springs ①.

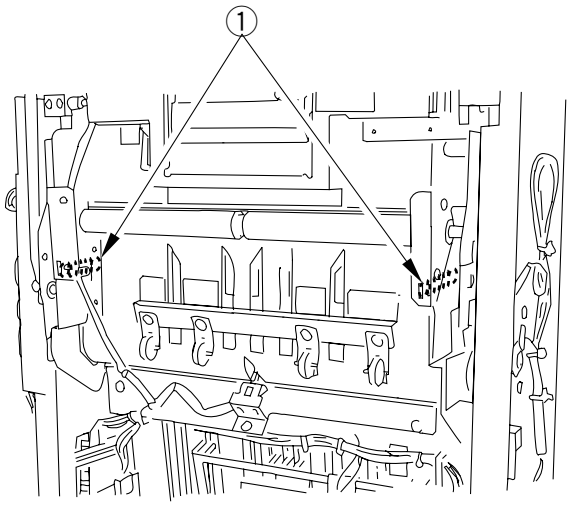

Figure 5-133

2) Remove the spring ②.

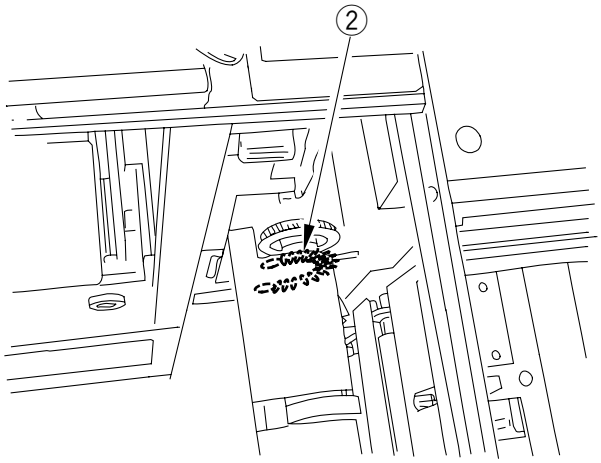

Figure 5-134

COPYRIGHT © 1997 CANON INC.

3) Remove the screw ③, and remove the belt cover ④.

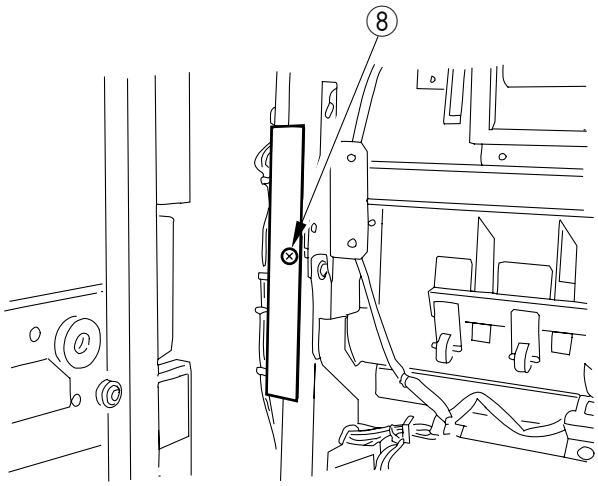

Figure 5-135

4) Loosen the two adjusting screws ⑤ (each at front and rear).

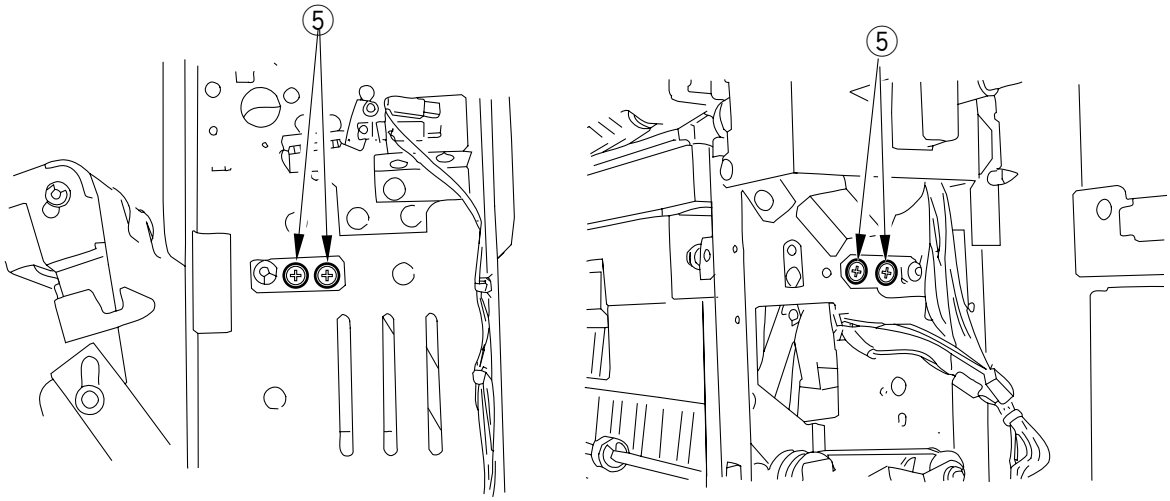

Figure 5-136

5) Butt the outlet guide plate, and check to make sure that the latch ⑥ (front, rear) and the bearing ⑦ are engaged; then, fix it in place by turning the screws loosened in step 4).

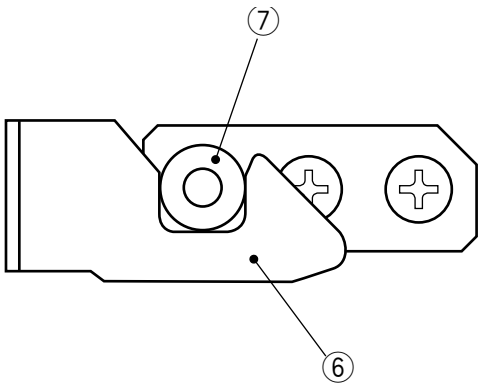

Figure 5-137

COPYRIGHT © 1997 CANON INC.

g. Adjusting the Position of the Coupling for the Horizontal Path

1) Loosen the two screws ①.
2) Slide out and then in the paper folding unit ② two to three times until the position of the coupling ③ used to drive the horizontal path is appropriate.

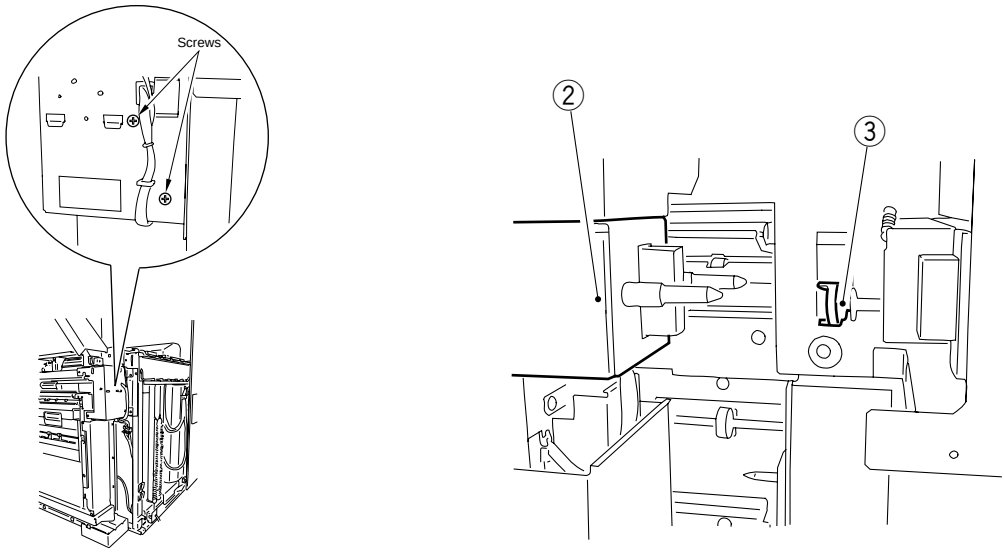

Figure 5-138

3) Push in the paper folding unit, and tighten the two screws loosened in step 1)

COPYRIGHT © 1997 CANON INC.

h. Adjusting the Tension of the Feeding Belt

• Feeding Belt A

Loosen and turn the screw ⓐ to adjust the tension so that any distance ℓ1' is 5 ±1 mm.

• Feeding Belt B

Loosen and turn the screw ⓑ so that the slack of the belt ℓ2 is 10 mm when F2 is pressed by a tension gauge with a force of 500 ±100 g.

• Feeding Belt C

Loosen and turn the screw ⓒ so that the slack of the belt ℓ3 is 10 mm when F3 is pressed by a tension gauge with a force of 500 ±100 g.

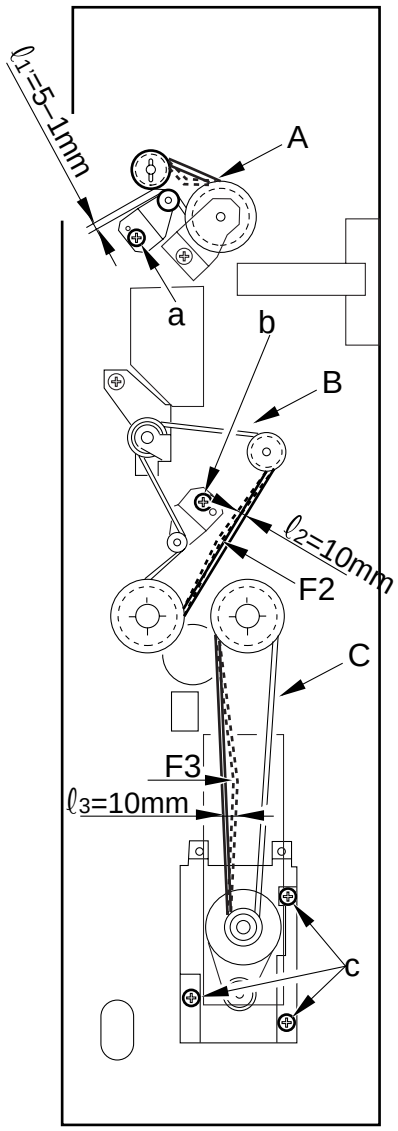

Figure 5-139

i. Adjusting the Position of the Locking Solenoid (SL3)

1) Loosen and turn the two adjusting screws ④ to adjust the position of the locking solenoid (SL3) ③ so that the locking roll arm ① and the pressure spring ② come into contact with section A when the solenoid is pushed in the direction of the arrow.

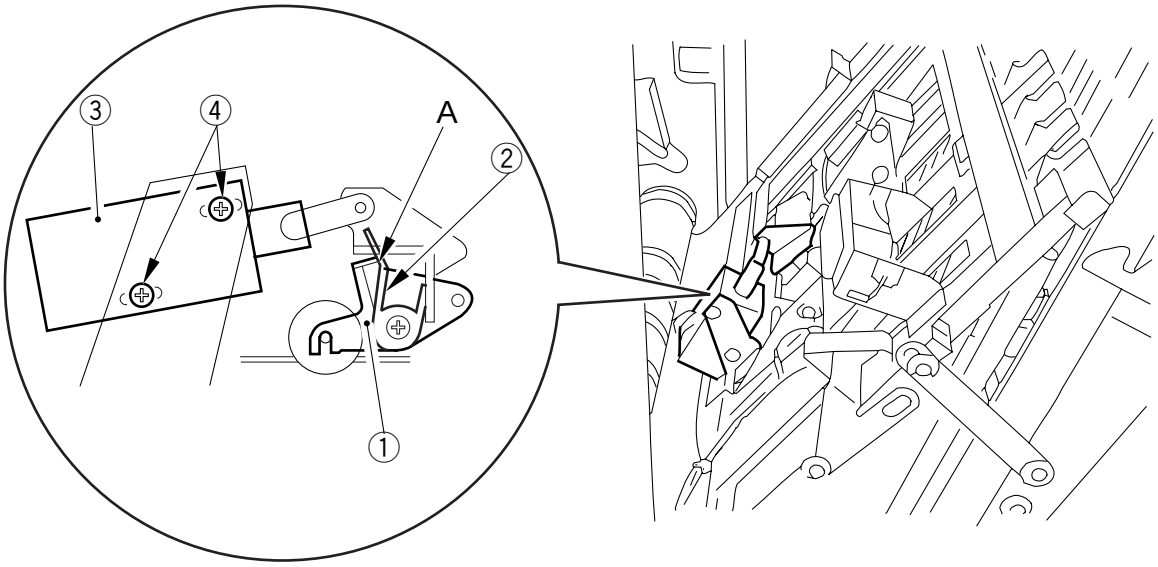

Figure 5-140

j. Adjusting the Position of the Releasing Solenoid (SL4)

1) Loosen and turn the two adjusting screws ② to adjust the position of the releasing solenoid (SL4) ① so that A is 2 ±0.3mm when the solenoid is pushed in the direction of the arrow.

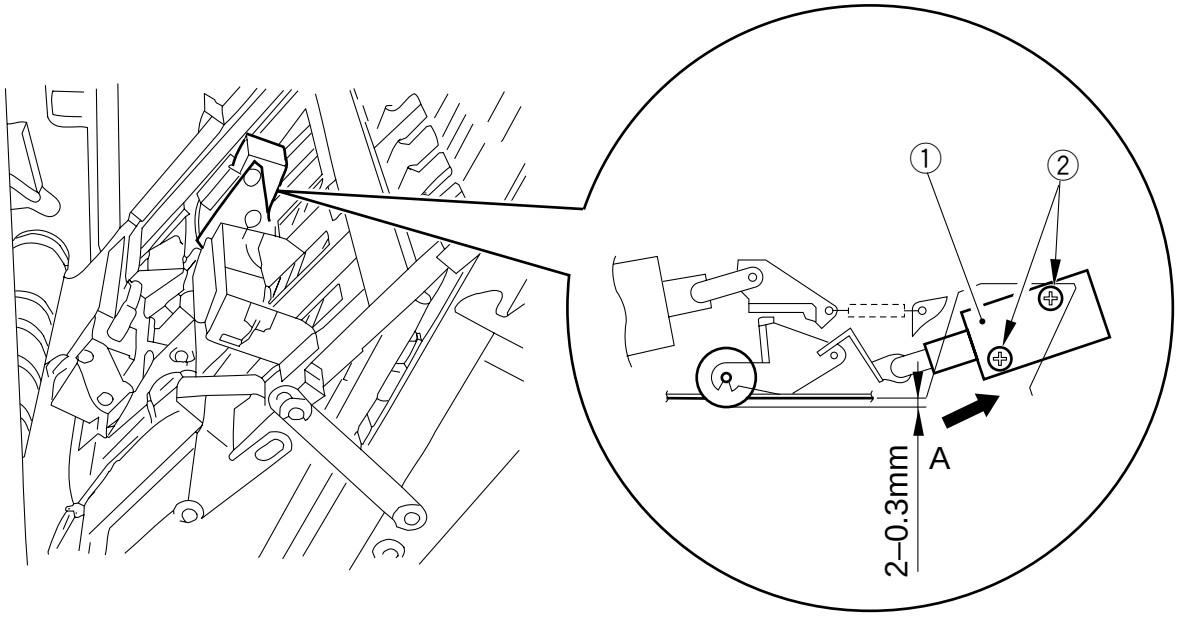

Figure 5-141

COPYRIGHT © 1997 CANON INC.

B. Electrical System

1. After Replacing Major Parts

Parts	Work
• Finisher controller PCB	① Adjusting the Guide Bar Swing Range ② Adjusting the paper side 1/2 sensor sensitivity
• Paper 1 sensor (LED4/PT4) • Paper 2 sensor (LED5/PT5)	① Adjusting the paper side 1/2 sensor sensitivity
• Upper guide bar motor (M6) • Lower bin guide home position sensor (PI34) • Lower guide bar motor (M7) • Upper bin guide bar home position sensor (PI33)	① Adjusting the Guide Bar Swing Range

COPYRIGHT © 1997 CANON INC.

2. Adjusting the Guide Bar Swing Range

Make the following adjustments whenever you have replaced any of the following parts:

- Finisher controller PCB
- Upper bin guide bar home position sensor (PI33)
- Lower bin guide bar home position sensor (PI34)
- Upper bin guide bar
- Lower bin guide bar

Making Adjustments

a. Upper Bin Guide Bar

1) Obtain a sheet of A4 or LTR copy paper free of curling.
   - You will be using the copy paper for adjustment.
2) Open the bin cover, and remove all copies from the upper bins; then, insert the door switch actuator.
3) Turn off the copier's power switch.
4) Open the finisher's upper cover; then, remove the two screws, and detach the upper cover (front).

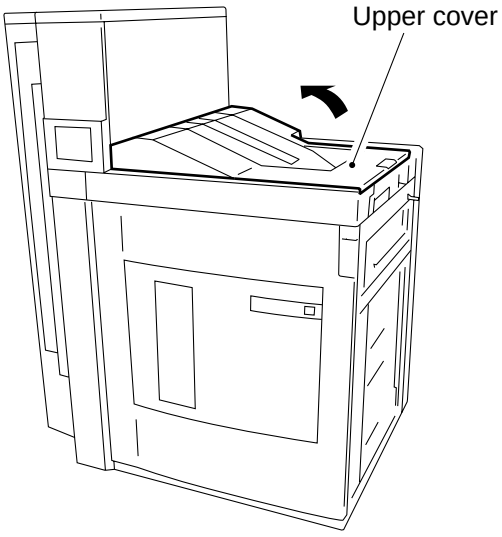

Figure 5-142

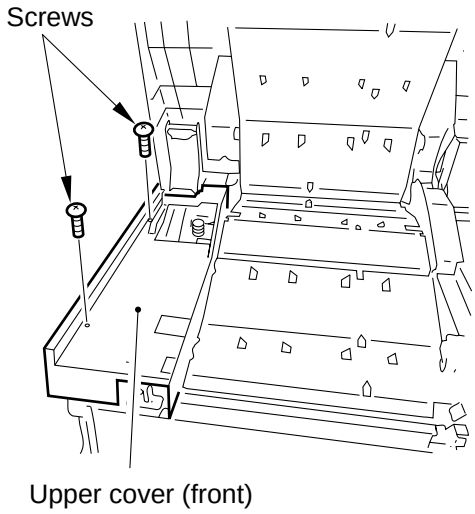

Figure 5-143

COPYRIGHT © 1997 CANON INC.

5) Shift bit 3 of the DIP switch SW2 and bit 1 of the DIP switch SW3 on the switch PCB to ON; then, turn on the copier's power switch. (LED1 and 3 on the switch PCB will start to flash.)

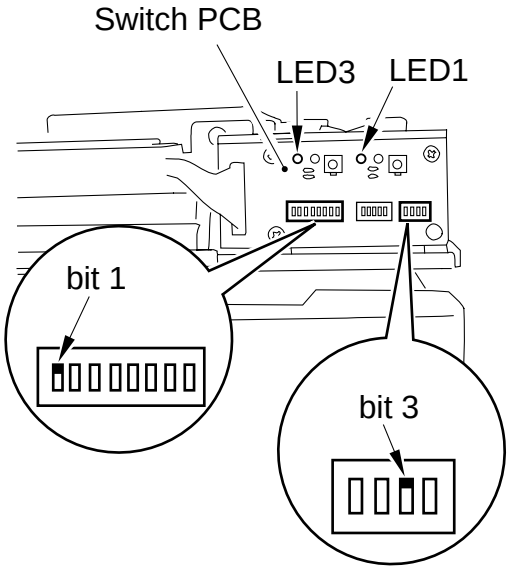

Figure 5-144

6) Set the bits of the DIP switch SW1 and the DIP switch SW2 as shown.
• Take care. You must use different DIP switch settings for different paper sizes.

A4		LTR	
SW1	SW2	SW1	SW2
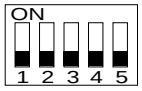	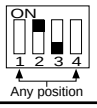	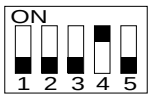	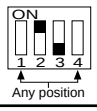

Table 5-101

7) Place the copy paper you have prepared in the topmost bin of the upper bin module, and press the push switch (PSW1) on the switch PCB.
• If the guide bar is not at home position, the guide bar will return to home position.

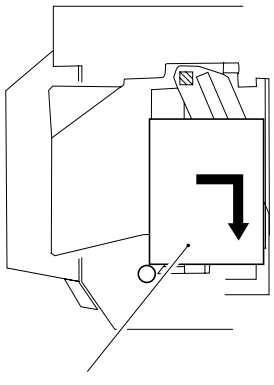

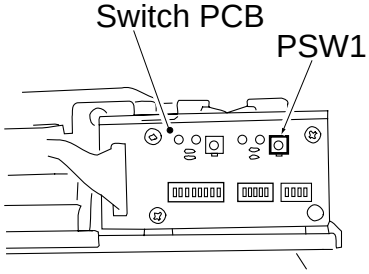

Figure 5-145

COPYRIGHT © 1997 CANON INC.

8) Operate the push switch (PSW1) so that the guide bar is in contact with the edge of the copy paper.

Reference:

The guide bar moves toward the copy paper about 7 mm in response to the first press on the push switch; it then moves toward the copy paper by about 0.3 mm in response to the second and subsequent presses.

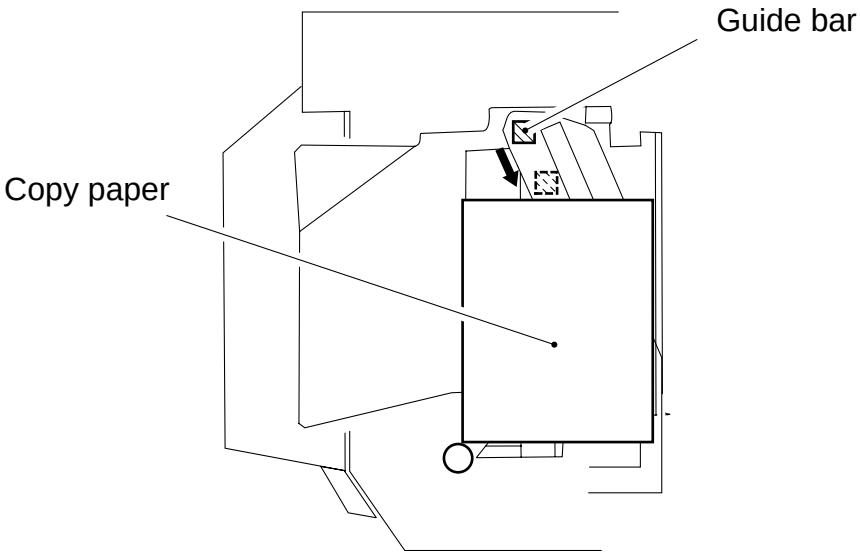

Top view

Figure 5-146

- To move the guide bar away from the copy paper, set the bits of the DIP switches SW1 and SW2 on the switch PCB as follows:

A4		LTR	
SW1	SW2	SW1	SW2
	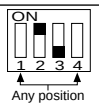	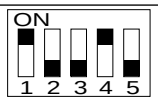	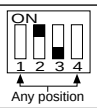

Table 5-102

9) While keeping the condition of step 8), shift bit 2 to ON and press the push switch (PSW1).
   - The guide bar returns to home position.
   - If the adjustment has been correct, LED1 on the switch PCB keeps flashing at the same speed.
   - If the adjustment has been wrong, LED1 on the switch PCB changes its speed of flashing temporarily (for about 3 sec.).

COPYRIGHT © 1997 CANON INC.

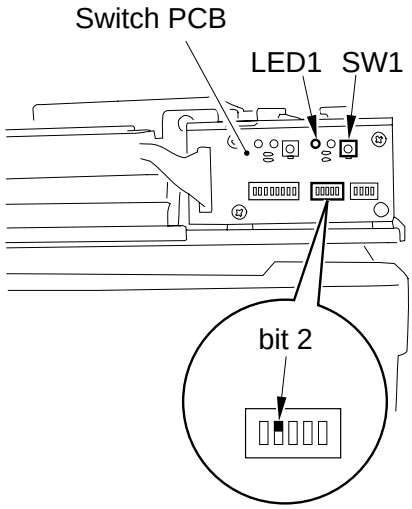

Figure 5-147

b. Lower Bin Guide Bar

1) Obtain a single sheet of LTR copy paper. (Make sure it is free of curling.)
2) Open the bin cover, and remove all copies from the upper bins; then, insert the door switch actuator.
3) Turn off the copier.
4) Open the finisher's upper cover; then, remove the two screws, and remove the upper cover (front).

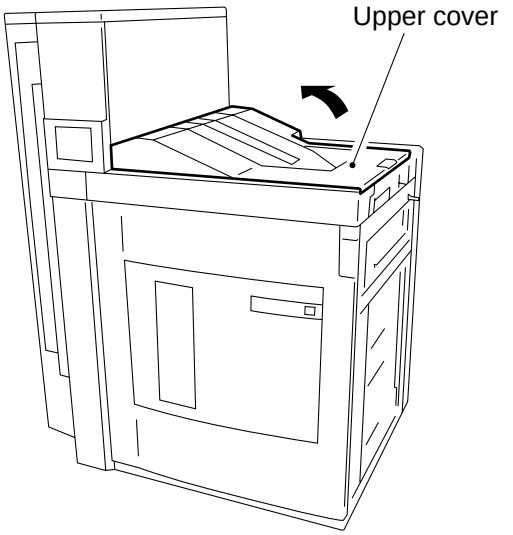

Figure 5-148

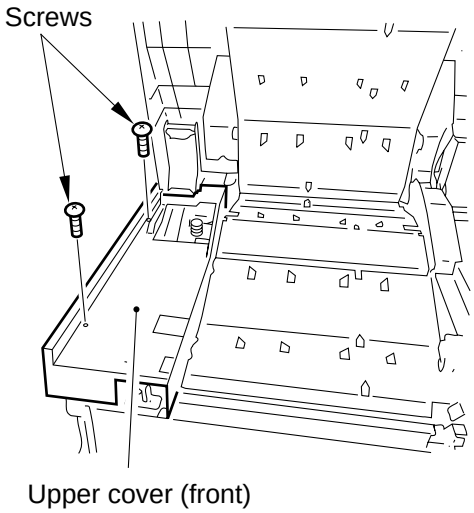

Figure 5-149

5) Shift bit 3 of the DIP switch SW2 and bit 1 of the DIP switch SW3 to ON on the switch PCB; then, turn on the copier. (LED1 and LED3 on the switch PCB will start to flash.)

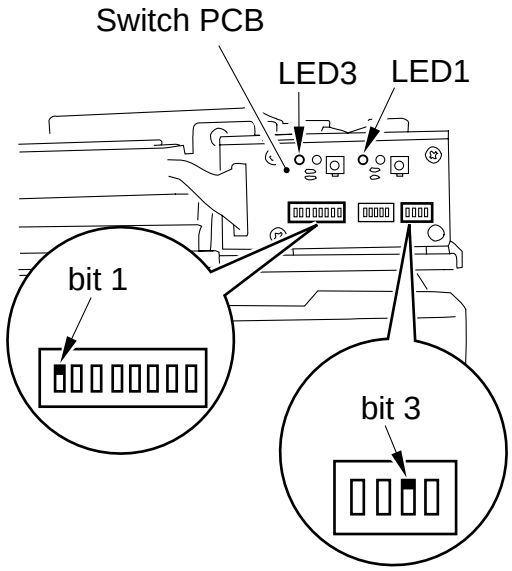

Figure 5-150

6) Sheet the bits on the DIP switch SW1 and DIP switch SW2 on the switch PCB as shown.
   • The settings differ depending on the size of the copy paper used for adjustment.

A4		LTR	
SW1	SW2	SW1	SW2
	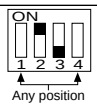	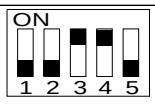	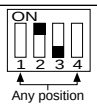

Table 5-103

7) Place copy paper in the topmost bin of the upper bin module, and press the push switch SW1 on the switch PCB.
   • If the guide bar is not at home position, it will return to home position.

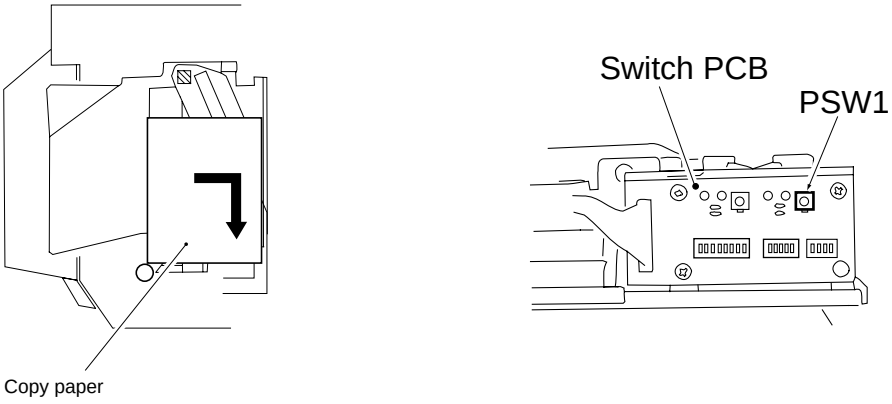

Figure 5-151

COPYRIGHT © 1997 CANON INC.

8) Operate the push switch PSW1 so that the guide bar will come in contact with the edge of the copy paper.

Reference:

The first press on the push switch will move the guide bar about 7 mm toward the copy paper; the second and subsequent presses on the switch will move the bar about 0.3 mm toward the paper.

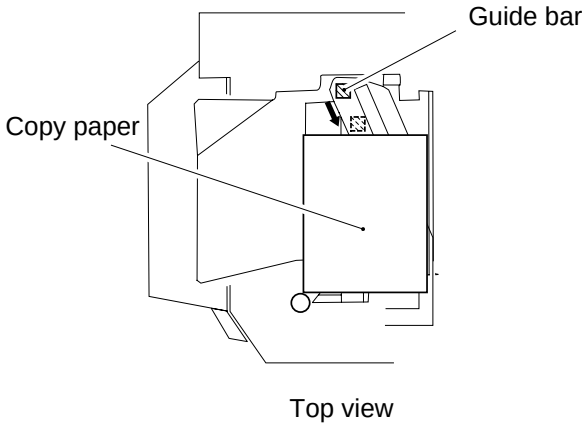

Figure 5-152

- To move the guide bar away from the copy paper, set the DIP switch SW1 and the DIP switch SW2 on the switch PCB as shown.

A4		LTR	
SW1	SW2	SW1	SW2
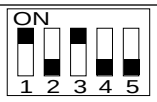	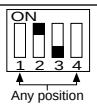	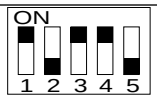	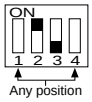

Table 5-104

9) While maintaining the condition of step 6), shift bit 2 of the DIP switch SW1 to ON; then press the push switch PSW1.
   - If the adjustment is successful, LED1 on the switch PCB flashes at the same intervals.
   - If the adjustment is not successful, LED1 on the switch PCB flashes at shorter intervals temporarily (about 3 sec.).

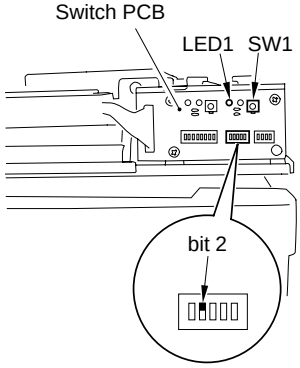

Figure 5-153

3. Checking the Guide Bar Movement Range

The orientation of the guide bar can be checked using copy paper.

Steps

a. Upper Bin Guide Bar

1) Obtain a single sheet of A4 or LTR copy paper.
   • The copy paper will be used for making checks.
2) Open the bin cover, and remove all copy paper from the upper bin; then, insert the door switch actuator.

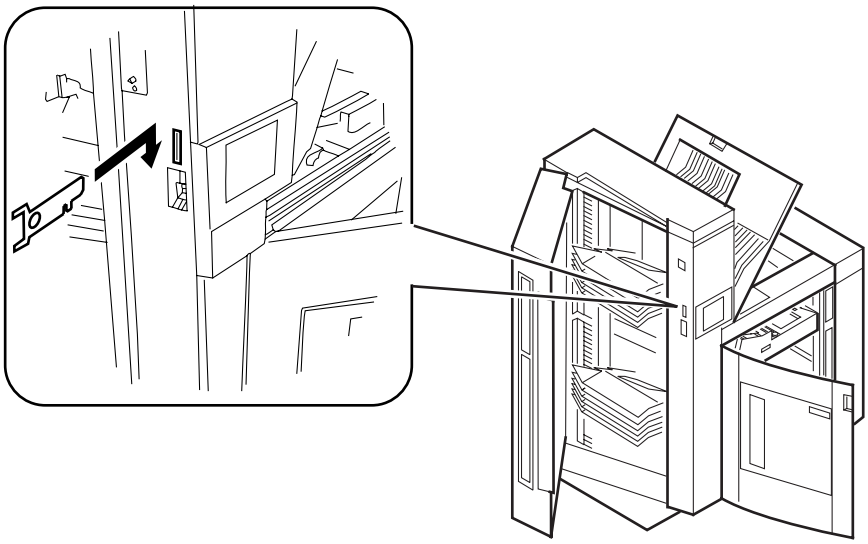

Figure 5-154

3) Turn off the copier.
4) Open the finisher's upper cover; then, remove the two screws, and remove the upper cover (front).

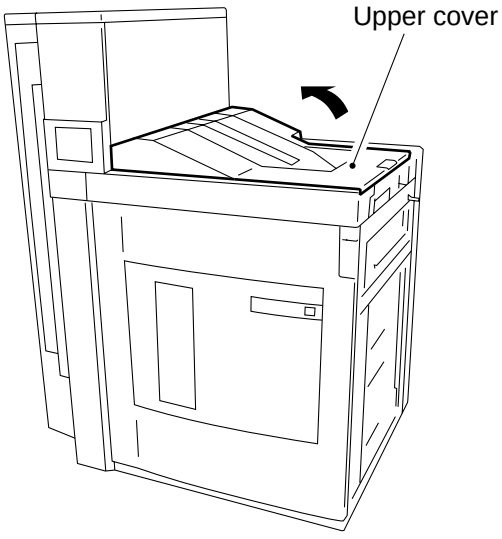

Figure 5-155

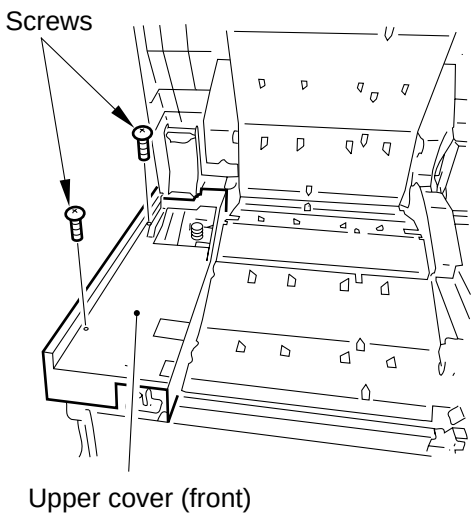

Figure 5-156

COPYRIGHT © 1997 CANON INC.

5) Shift bit 3 on the DIP switch SW2 and bit 1 of the DIP switch SW3 on the switch PCB to ON; then, turn on the copier. (LED1 and LED 3 on the switch PCB will start to flash.)

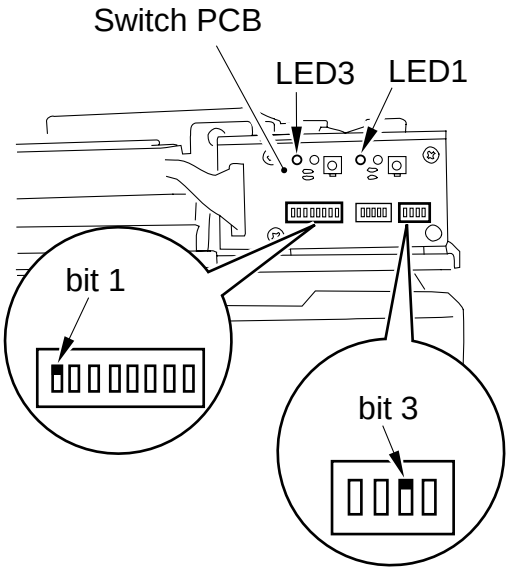

Figure 5-157

6) Set the bits on the DIP switch SW1 and the DIP switch SW2 on the switch PCB as shown.
   • The settings differ depending on the size of the copy paper used for adjustment.

A4		LTR	
SW1	SW2	SW1	SW2
	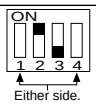	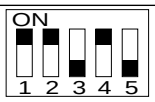	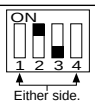

Table 5-105

7) Place the copy paper in the topmost bin of the upper bin module, and press the push switch PSW1 on the switch PCB.
   • The guide bar will move to the point of alignment.
   • If the guide bar is not at home position, press the push switch once again.

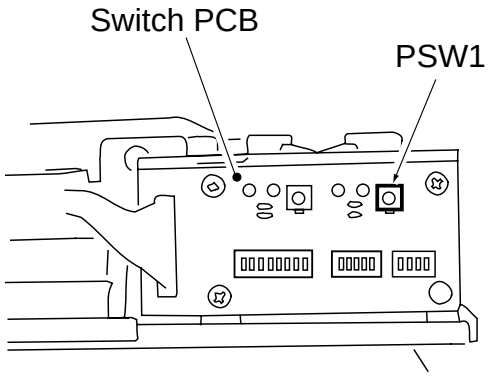

Figure 5-158

8) Check the distance (L) between the guide bar and the copy paper.
   standard: L = 0 ±0.15 mm

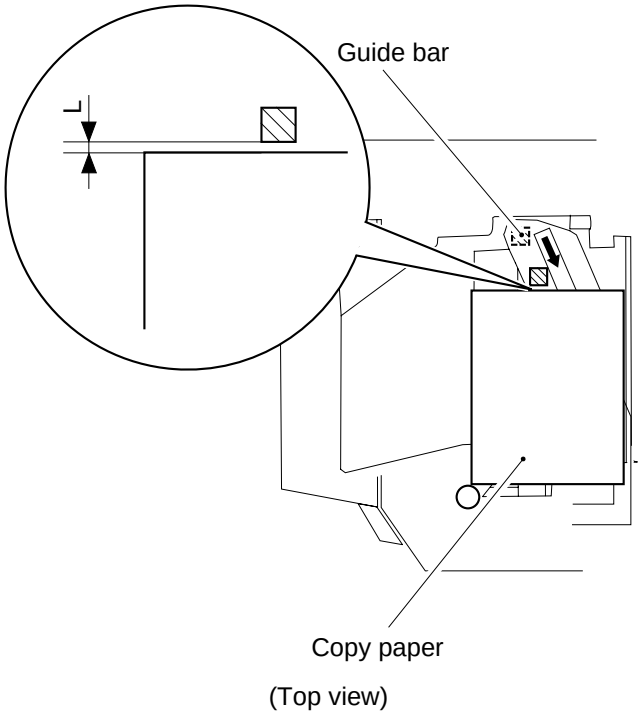

Figure 5-159

9) If the distance L between the guide bar and the copy paper is as indicated, shift the bits of the DIP switches (SW1, SW2, SW3) back to their initial positions; then,tuen off and then on the copier. (Be sure to wait more than 1 sec before turning it on.)
10) If the distance (L) between the guide bar and the copy paper is not as specified, execute “Adjusting the Guide Bar Movement Range.”

COPYRIGHT © 1997 CANON INC.

b. Lower Bin Guide Bar

1) Obtain a single sheet of A4 or LTR copy paper.
   • The copy paper will be used to make checks.
2) Open the bin cover, and remove all copy paper from the lower bin; then, insert the door switch actuator.

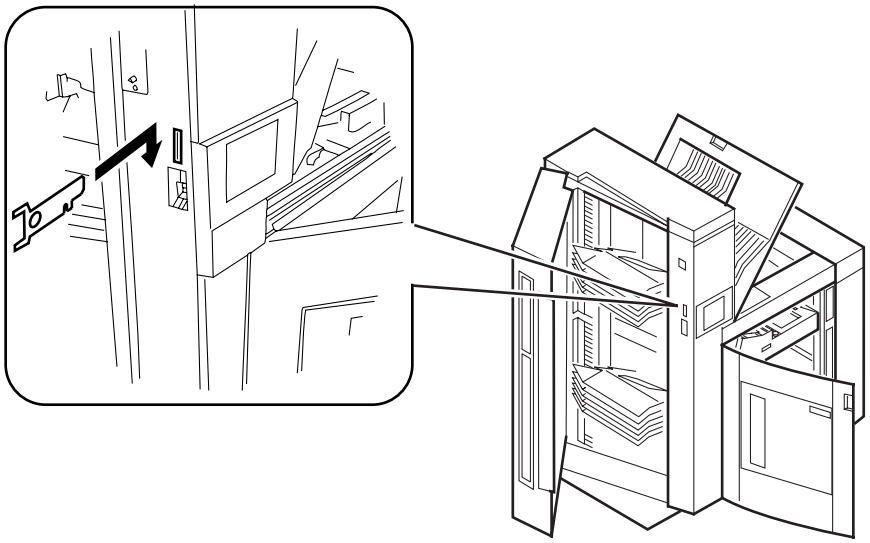

Figure 5-160

3) Turn off the copier.
4) Open the finisher's upper cover; then, remove the two screws, and remove the upper cover.

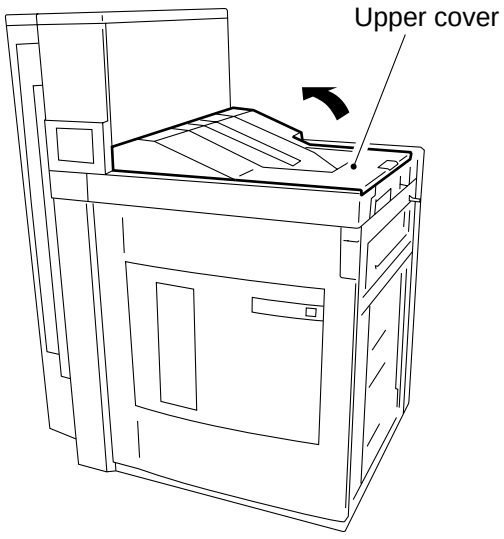

Figure 5-161

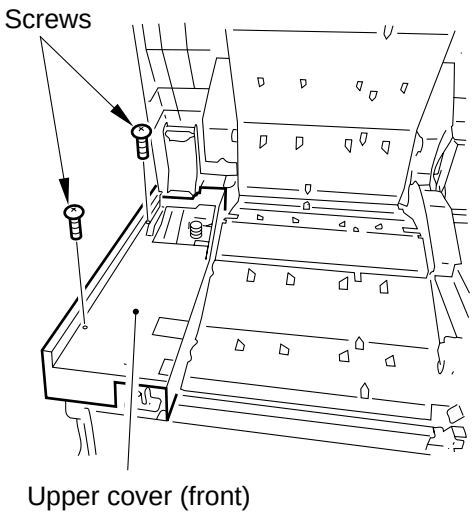

Figure 5-162

5) Shift bit 3 of the DIP switch SW2 and bit 1 of the DIP switch SW3 on the switch PCB to ON, and turn on the copier. (LED1 and LED3 on the switch PCB will start to flash.)

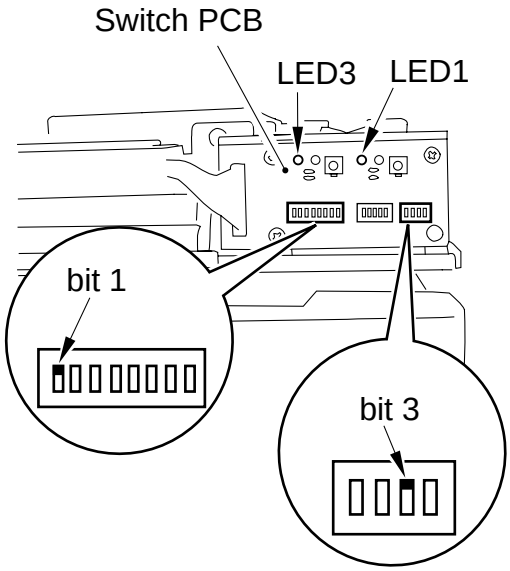

Figure 5-163

6) Set the bits of the DIP switch SW1 and the DIP switch SW2 on the switch PCB as shown.
   • The settings differ depending on the size of copy paper used for adjustment.

A4		LTR	
SW1	SW2	SW1	SW2
	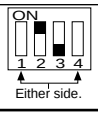	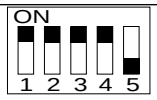	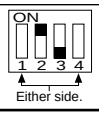

Table 5-106

COPYRIGHT © 1997 CANON INC.

7) Place the copy paper in the topmost bin of the upper bin module, and press the push switch PSW1 on the switch PCB.
   - The guide bar will move to the point of alignment.
   - If the guide bar is not at home position, press the push switch PSW1 once again.

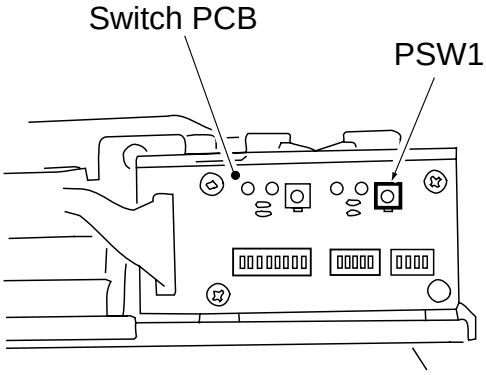

Figure 5-164

8) Check the distance (L) between the guide bar and the copy paper.
   standard: L = 0 ±0.15 mm

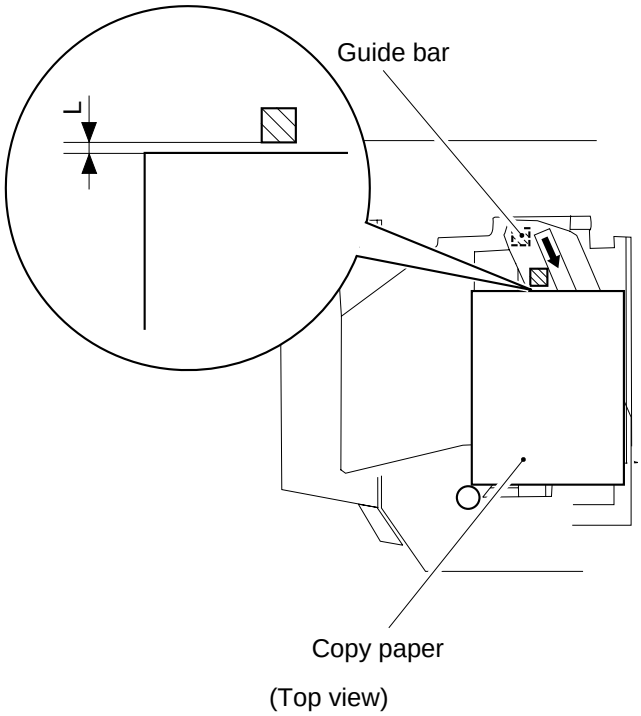

Figure 5-165

9) If the distance (L) between the guide bar and the copy paper is not as specified, execute “Adjusting the Guide Bar Movement Range.

4. Adjusting the Paper Side 1/2 Sensor Sensitivity

Adjust the sensitivity of the paper side 1/2 sensor whenever you have replaced any of the following parts:

- Finisher controller PCB
- Paper side 1 sensor (LED4/PT4)
- Paper side 2 sensor (LED5/PT5)

Making Adjustments

1) Turn off the copier's power switch.
2) Remove the seven screws from the rear left cover of the finisher, and remove the cover.

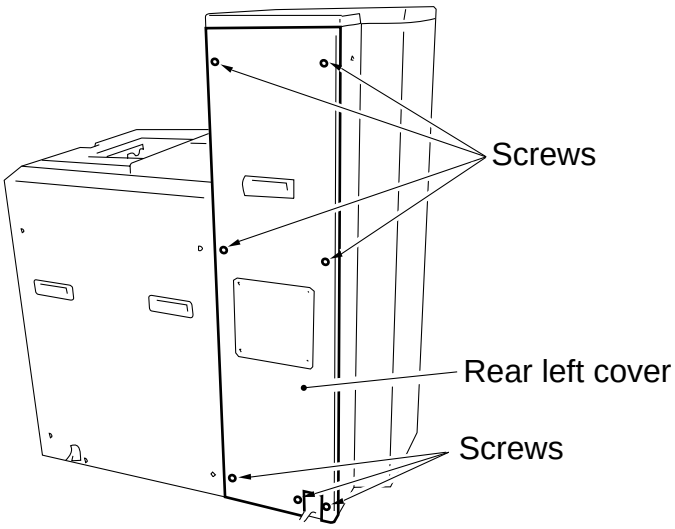

Figure 5-166

3) Shift all bits on the DIP switch (SW1) on the finisher controller PCB to OFF.

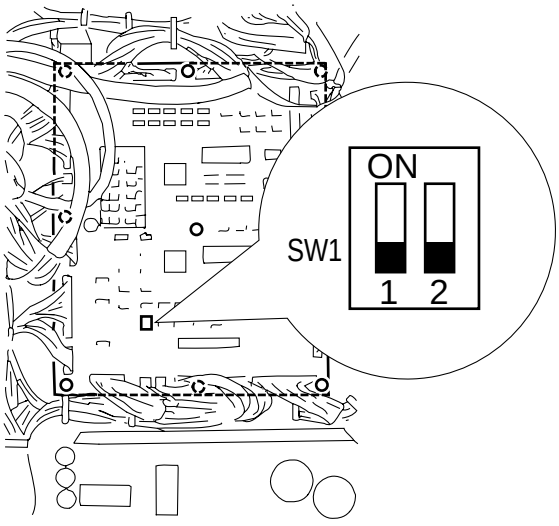

figure 5-167

 COPYRIGHT © 1997 CANON INC.

4) Turn on the copier.
   • Check to make sure that the finisher's initialization mechanism has ended.
5) Open the copier's front door, and insert the door switch actuator into the door switch assembly.
6) Push the service switch over the cover with a clip or the like.

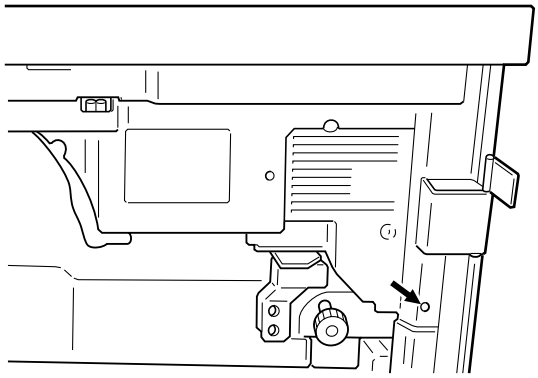

Figure 5-168

7) Press ✻, 2, and ✻ in sequence on the control panel.
8) Using the keypad on the copier's control panel, enter the address of each sensor (avoid alphabet characters), and check the display.

Sensor (notation)	Address
Paper side 1 sensor (LED4/PT4)	PI74
Paper side 2 sensor (LED5/PT5)	PI75

Table 5-107

9) Shift the bits of the DIP switch (SW1) on the finisher controller PCB as indicated in Table 5-108.

Address	Reading	Settings on DIP switch (SW1)
PI74	00D9 or higher	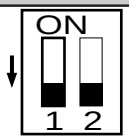 Shift bit 1 to OFF.
	Lower than 00D9	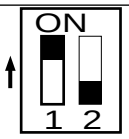 Shift bit 1 to ON.
PI75	00D9 or higher	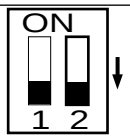 Shift bit 2 to OFF.
	Less than 00D9	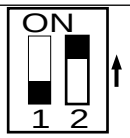 Shift bit 2 to ON.

Table 5-108

10) Turn off and then on the copier.
11) Execute ‘check sensor sensitivity’, and check the reading.

COPYRIGHT © 1997 CANON INC.

5. Checking the Sensor Sensitivity

a. Outline

You can check the sensitivity in relation to the sensors shown in Table 5-109, thereby finding out whether each of the sensors is normal or faulty.

Sensor (notation)	Remarks
Stapler edge sensor (PI68)	Needs adjustment.
Upper bin inside paper sensor (LED1/PT1)	Needs adjustment.
Lower bin inside paper sensor (LED2/PT2)	Needs adjustment.
Edge feed sensor (LED3/PT3)	Needs adjustment.
Paper side 1 sensor (LED4/PT4)	Needs adjustment; for instructions, see "Adjusting the Paper Size 1/2 Sensitivity."
Paper side 2 sensor (LED5/PT5)	
Stack sensor (LED6/PT6)	Needs adjustment.
Upper bin outside paper sensor (LED7/PT7)	Needs adjustment.
Lower bin outside sensor (LED8/PT8)	Needs adjustment.

Table 5-109

If you have found a fault in the results of the check on the sensitivity of any sensor, check if that sensor is mounted correctly; if it is, replace it.

For the paper side 1/2 sensor, be sure to perform the steps given under "Adjusting the Paper Side 1/2 Sensor Sensitivity."

COPYRIGHT © 1997 CANON INC.

b. Making Adjustments

4) Turn on the copier.
   • Check to make sure that the finisher's initialization has ended.
5) Open the copier's front door, and insert the door switch actuator into the door switch assembly.
6) Press the service switch over the cover with a clip.

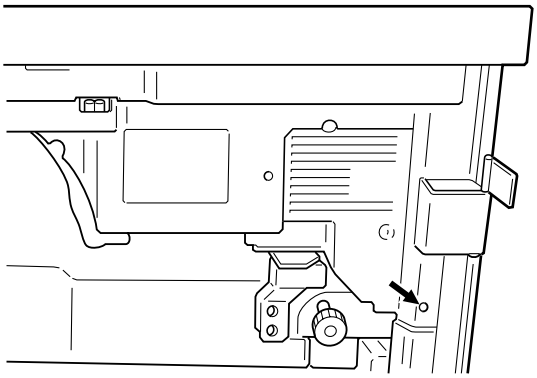

Figure 5-169

COPYRIGHT © 1997 CANON INC.

7) Press ✻, 2, and ✻ in sequence on the control panel.
8) Using the keypad on the copier's control panel, enter the address of each sensor (avoiding alphabet characters), and check the display. If the reading is not correct, replace the sensor. (The notation is in hexadecimal.)

Screen Display

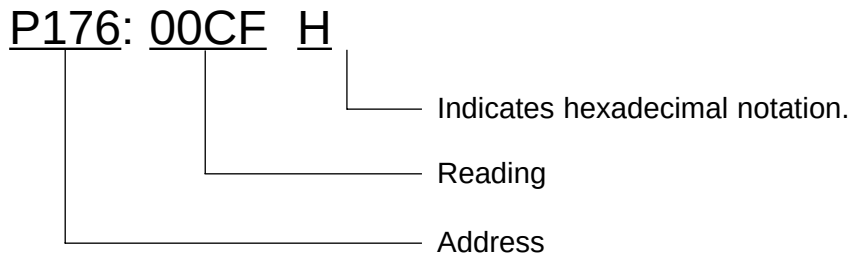

Sensor (notation)	Address	Normal
Stapler edge sensor (PI68)	PI78	00CF or higher
Upper bin inside paper sensor (LED1/PT1)	PI80	00D3 or higher
Lower bin inside paper sensor (LED2/PT2)	PI81	00D3 or higher
Edge feed sensor (LED3/PT3)	PI76	00D3 or higher
Paper side 1 sensor (LED4/PT4)	PI74	00D3 or higher
Paper side 2 sensor (LED5/PT5)	PI75	00D3 or higher
Stack sensor (LED6/PT6)	PI77	00D3 or higher
Upper bin outside paper sensor (LED7/PT7)	PI82	00CF or higher
Lower bin outside sensor (LED8/PT8)	PI83	00CF or higher

Table 5-110

COPYRIGHT © 1997 CANON INC.

6. Checking the Photointerrupters

The finisher's photointerrupers may be checked either by a conventional meter or by the copier's service mode.

a. Using a Meter
1) Set the meter to the 12VDC range.
2) Connect the - probe of the meter to TP19 (labeled SG) of the finisher controller PCB.
3) Connect the + probe of the meter to the terminals (on the finisher controller PCB) shown in the table.
4) Make checks as instructed.

b. Using the Copier's Service Mode
1) Open the copier's front door, and insert the door switch actuator into the door switch assembly.
2) Press the service switch over the cover.

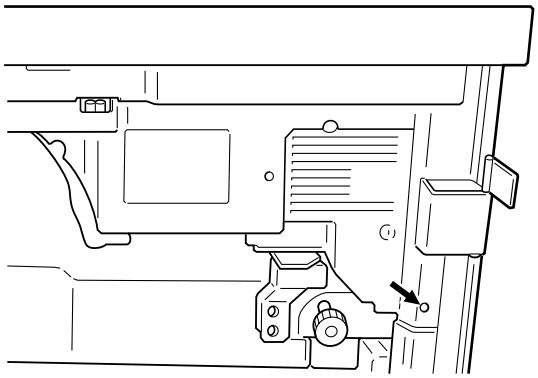

Figure 5-170 (service mode switch)

3) Press ✻, 2, and ✻ on the control panel.
4) Using the numeric keypad on the control panel, enter the address of the photointerrupter in question; then, check the display.

Caution:
Exercise care. Turning off and on the sensors can start the machine's motors.

COPYRIGHT © 1997 CANON INC.

Sensor	Connector ✻2✻ address	Checks		✻2✻ indication	Voltage (approx.)
PI 2 Non-sort path paper sensor (NSPD)	J11-A1	Move the detecting lever while in stand-by.	When the detecting lever is not moved.	1	0V
	P128-3		When the detecting lever is moved.	0	5V
PI 3 Upper path paper sensor 1 (UPD1)	JJ11-B19	Move the detecting lever while in stand-by.	When the detecting lever is not moved.	1	0V
	P128-4		When the detecting lever is moved.	0	5V
PI 4 Upper path paper sensor 2 (UPD2)	J11-A4	Move the detecting lever while in stand-by.	When the detecting lever is not moved.	1	0V
	P128-5		When the detecting lever is moved.	0	5V
PI 5 Upper path paper sensor 3 (UPD3)	J11-B16	Move the detecting lever while in stand-by.	When the detecting lever is not moved.	1	0V
	P128-6		When the detecting lever is moved.	0	5V
PI 6 Upper path residual paper sensor 1 (URP1)	J11-A7	Move the detecting lever while in stand-by.	When the detecting lever is not moved.	0	0V
	P131-0		When the detecting lever is moved.	1	5V
PI 7 Upper path residual paper sensor 2 (URP2)	J11-B13	Move the detecting lever while in stand-by.	When the detecting lever is not moved.	0	0V
	P131-0		When the detecting lever is moved.	1	5V
PI 8 Non-sort delivery assembly paper sensor (NSD)	J11-A10	Move the detecting lever while in stand-by.	When the detecting lever is not moved.	0	0V
	P134-7		When the detecting lever is moved.	1	5V
PI 9 Common path paper sensor 1 (CPD1)	J11-B10	Move the detecting lever while in stand-by.	When the detecting lever is not moved.	1	0V
	P128-1		When the detecting lever is moved.	0	5V
PI 10 Common path paper sensor 2 (CPD2)	J11-A13	Move the detecting lever while in stand-by.	When the detecting lever is not moved.	1	0V
	P121-7		When the detecting lever is moved.	0	5V
PI 12 Lower path paper sensor 1 (LPD1)	J25-B6	Move the detecting lever while in stand-by.	When the detecting lever is not moved.	1	5V
	P123-7		When the detecting lever is moved.	0	5V
PI 13 Lower path paper sensor 2 (LPD2)	J25-A10	Move the detecting lever while in stand-by.	When the detecting lever is not moved.	1	0V
	P121-4		When the detecting lever is moved.	0	5V

COPYRIGHT © 1997 CANON INC.

Sensor	Connector *2* address	Checks		*2* indication	Voltage (approx.)
PI 14 Lower path paper sensor 3 (LPD3)	J25-B21	Move the detecting lever while in stand-by.	When the detecting lever is not moved.	1	0V
	P121-5		When the detecting lever is moved.	0	5V
PI 15 Lower path paper sensor 4 (LPD4)	J25-A7	Move the detecting lever while in stand-by.	When the detecting lever is not moved.	1	0V
	P121-6		When the detecting lever is moved.	0	5V
PI 16 Vertical path residual paper sensor 1 (VRP1)	J25-A16	Move the detecting lever while in stand-by.	When the detecting lever is not moved.	0	0V
	P131-1		When the detecting lever is moved.	1	5V
PI 17 Vertical path residual paper sensor 2 (VRP2)	J25-B9	Move the detecting lever while in stand-by.	When the detecting lever is not moved.	0	0V
	P131-0		When the detecting lever is moved.	1	5V
PI 18 Vertical path residual paper sensor 3 (VRP3)	J25-A19	Move the detecting lever while in stand-by.	When the detecting lever is not moved.	0	0V
	P131-0		When the detecting lever is moved.	1	5V
PI 19 Lower path residual paper sensor 1 (LRP1)	J25-A13	Move the detecting lever while in stand-by.	When the detecting lever is not moved.	0	0V
	P131-2		When the detecting lever is moved.	1	5V
PI 20 Lower path residual paper sensor 2 (VRP2)	J25-B12	Move the detecting lever while in stand-by.	When the detecting lever is not moved.	0	0V
	P131-2		When the detecting lever is moved.	1	5V
PI 21 Lower path residual paper sensor 3 (VRP3)	J25-B18	Move the detecting lever while in stand-by.	When the detecting lever is not moved.	0	0V
	P131-2		When the detecting lever is moved.	1	5V
PI 23 Upper bin upper limit sensor (UBTP)	J12-A7	Move the detecting lever while in stand-by.	When the detecting lever is not moved.	0	0V
	P131-6		When the detecting lever is moved.	1	5V
PI 24 Upper bin lower limit sensor (UBBP)	J9-A1	Move the detecting lever while in stand-by.	When the detecting lever is not moved.	0	0V
	P127-5		When the detecting lever is moved.	1	5V
PI 25 Lower bin upper limit sensor (LBTP)	JJ9-B6	Move the detecting lever while in stand-by.	When the detecting lever is not moved.	0	0V
	P131-7		When the detecting lever is moved.	1	5V

COPYRIGHT © 1997 CANON INC.

Sensor	Connector ✻2✻ address	Checks		✻2✻ indication	Voltage (approx.)
PI 26 Lower bin lower limit sensor (LBBP)	JJ19-A4	Move the detecting lever while in stand-by.	When the detecting lever is not moved.	0	0V
	P126-3		When the detecting lever is moved.	1	5V
PI 27 Upper lead cam level section sensor (ULCL)	J12-B6	Turn the upper bin lead cam while in stand-by.	When the upper bin is at level.	0	5V
	P127-3		When the upper bin is not at level.	1	0V
PI 28 Upper lead cam level section No. 2 sensor (ULCL2)	JJ12-B10	Turn the upper bin lead cam while in stand-by.	When the upper bin is at level.	1	5V
	P134-0		When the upper bin is not at level.	0	0V
PI 29 Lower lead am level section sensor (LLCL)	J19-B9	Turn the lower bin lead cam while in stand-by.	When the lower bin is at level.	0	5V
	P126-7		When the lower bin is not at level.	1	5V
PI 30 Lower lead cam level section No. 2 sensor (LLCL2)	J19-A8	Turn the lower bin lead cam while in stand-by.	When the lower bin is at level.	1	0V
	P134-1		When the lower bin is not at level.	0	5V
PI 31 Upper bin shift motor clock sensor (UBCLK)	J12-A10	Turn the upper bin lead cam while in stand-by.	When the motor rotates.	Alternates 0/1.	Alternates 0/5. 5V
	P126-4				
PI 32 Lower bin shift motor clock sensor (LBCLK)	J19-A1	Turn the lower bin lead cam while in stand-by.	When the motor rotates.	Alternates 0/1.	Alternates 0/5. 5V
	P126-6				
PI 33 Upper bin guide bar home position sensor (UGBHP)	J12-B3	Move the upper bin guide cover while in stand-by.	At home position.	1	5V
	P127-4		Not at home position.	1	0V
PI 34 Lower bin guide bar home position sensor (LGBHP)	J19-B6	Move the lower bin guide bar while in stand-by.	At home position.	0	5V
	P126-2		Not at home position.	1	0V
PI 35 Stacker unit UP position sensor (STUP)	J11-B6	Move the detecting lever while in stand-by.	When the detecting lever is not moved.	0	5V
	P137-4		When the detecting lever is moved.	1	0V
PI 36 Stacker unit home position sensor (STHP)	J25-A4	Remove the sensor flag from the sensor while in stand-by.	When the sensor flag is not removed.	1	0V
	P137-6		When the sensor flag is removed.	0	5V

COPYRIGHT © 1997 CANON INC.

Sensor	Connector *2* address	Checks		*2* indication	Voltage (approx.)
PI 37 Stacker unit DOWN position sensor (STLP)	J25-B24	Block the sensor while in stand-by.	When the sensor is blocked.	1	0V
	P137-5		When the sensor is not blocked.	0	5V
PI 38 Stacker unit lower limit sensor (STLL)	J25-A1	Block the sensor while in stand-by.	When the sensor is blocked.	1	5V
	P147-1		When the sensor is not blocked.	0	0V
PI 39 Lift wall UP position sensor (TWTP)	J5-B9	Rotate the wall motor by hand while in stand-by.	When the wall is at top.	1	5V
	P147-6		When the wall is not at top.	0	0V
PI 40 Lift wall home position sensor (TWHP)	J5-A7	Rotate the wall motor by hand while in stand-by.	At home position.	0	5V
	P147-7		Not at home position.	1	0V
PI 41 Stacker SET sensor (STS)	J5-B4	Slide out the stack tray while in stand-by.	When the tray is out.	1	5V
	P152-1		When the tray is in.	0	0V
PI 42 Stacker tray upper limit sensor (STTTP)	J5-A12	Block the sensor while in stand-by.	When the sensor is blocked.	0	5V
	P140-4		When the sensor is not blocked.	1	0V
PI 43 Stacker tray home position sensor (STTHP)	J5-B13	Execute initial operation and see if the state (0,1) changes.	At home position.	1	5V
	P145-0		Not at home position.	0	0V
PI 44 Stacker tray paper sensor (STTPD)	J5-B11	Move the detecting lever while in stand-by.	When the detecting lever is not moved.	0	0V
	P152-5		When the detecting lever is not moved.	1	5V
PI 45 Stacker tray shift clock sensor A (STTCLKA)	J5-A2	Move the stacker tray while in stand-by.	When the stacker tray is moved.	Alternates 0/1.	Alternates 0/5V.
	———				
PI 46 Leading edge stopper home position sensor (LESHP)	J5-A4	Move the end stopper while in stand-by.	At home position.	1	5V
	P145-4		Not at home position.	0	0V
PI 47 Stack unit shift motor clock sensor (STCLK)	J25-B15	Move the detecting tray while in stand-by.	When the detecting lever is moved.	Alternates 0/1.	Alternates 0/5V.
	P144-6		When the detecting lever is moved.		

COPYRIGHT © 1997 CANON INC.

Sensor	Connector *2* address	Checks		*2* indication	Voltage (approx.)
PI 48 Side gripper clasping home position sensor (SGGHP)	J8-B16	Turn the knob of the side gripper while in stand-by.	At home position.	1	0V
	P144-1		Not at home position.	0	5V
PI 49 Side gripper paper sensor (SGPD)	J8-A17	Move the detecting lever while in stand-by.	When the detecting lever is not moved.	0	5V
	P145-7		When the detecting lever is moved.	1	0V
PI 50 Side gripper left/right shift home position sensor (SG(X)HP)	J8-A3	Move the side gripper left/right while in stand-by.	At home position.	1	5V
	P144-0		Not at home position.	0	5V
PI 51 Side gripper motor error sensor (SGMF-D)	J8-B9	Move the side gripper left/right while in stand-by.	When the sensor detects the gripper.	1	0V
	P147-3		When the sensor does not detect the gripper.	0	5V
PI 52 Bin rear wall OPEN position sensor (BRPU)	J8-B6	Move the wall in service mode while in stand-by.	At OPEN.	1	0V
	P145-2		When the detecting lever is moved.	0	5V
PI 53 Bin rear wall CLOSE position sensor (BRPC)	J8-A13	Move the wall in service mode while in stand-by.	At CLOSE.	1	0V
	P145-3		Not at CLOSE.	0	5V
PI 54 Rear end wall CLOSED position sensor (FG(X)CLK)	J8-B8	Move the front gripper left/right while in stand-by.	When the motor is rotating.	Alternates 0/1.	Alternates 0/5 V.
	P140-0				
PI 55 Front gripper left/right shift home positions sensor FG(X)HP)	J8-B15	Move the front gripper left/right while in stand-by.	At home position.	1	0V
	P144-2		Not at home position.	0	5V
PI 56 Front gripper left/right shift left limit sensor (FG(X)LL)	J8-B4	Move the front gripper left/right while in stand-by.	At left limit.	0	0V
	P148-2		Not at left limit.	1	5V
PI 57 Front gripper left/right shift right limit sensor (FG(X)RL)	J8-A14	Move the front gripper left/right while in stand-by.	At right limit.	0	0V
	P148-1		Not at right limit.	1	5V
PI 58 Front gripper left/right shift safety sensor (FG(X)S)	J8-A15	Move the front gripper left/right while in stand-by.	Within safety range.	0	0V
	P148-3		Not within safety range.	1	5V

COPYRIGHT © 1997 CANON INC.

Sensor	Connector *2* address	Checks		*2* indication	Voltage (approx.)
PI 59 Front gripper front/rear shift motor clock sensor (FG(Y)CLK)	J8-A11 P140-1	Move the front gripper front/rear while in stand-by.	While the motor is rotating.	Alternates 0/1.	Alternates 0/5 V. 5V
PI 60 Front gripper front/rear shift home position sensor (FG(Y)HP)	J8-A4 P144-3	Move the front gripper front/rear while in stand-by.	At home position. Not at home position.	1 0	0V 5V
PI 61 Front gripper front/rear shift front limit sensor (FG(Y)FL)	J8-B3 P148-4	Move the front gripper front/rear while in stand-by.	At front limit. Not at front limit.	0 1	0V 5V
PI 62 Front gripper front/rear shift safety sensor (FG(Y)S)	J8-A16 P148-5	Move the front gripper front/rear while in stand-by.	Within safety range. Not within safety range.	0 1	0V 5V
PI 63 Front gripper clasping home position sensor (FGGHP)	J8-B10 P144-4	Turn the knob of the front gripper while in stand-by.	At home position. Not at home position.	1 0	0V 5V
PI 64 Front right paper sensor (FGPD)	J8-B10 P145-6	Move the detecting lever while in stand-by.	When the detecting lever is not moved. When the detecting lever is moved.	0 1	0V 5V
PI 65 Stapler front/rear shift motor clock sensor (STP(Y)CLK)	J8-B7 P140-2	Move the stapler unit front/rear while in stand-by.	While the motor is rotating.	Alternates 0/1.	Alternates 0/5 V.
PI 66 Stapler front/rear shift home position sensor (STP(Y)HP)	J8-A5 P144-2	Move the stapler unit front/rear while in stand-by.	At home position. Not at home position.	1 0	0V 5V
PI 67 Front gripper shift enable sensor (STPSE)	J8-B2 P148-6	Move the stapler unit front/rear while in stand-by.	Within safety zone. Not within safety zone.	0 1	0V 5V
PI 68 Stapler leading edge paper sensor (STPPE)	J8-A8 P141-5	Block the sensor while in stand-by.	When the sensor is blocked. When the sensor is not blocked.	0 1	0V 5V
PI 69 Stack processing unit shift motor clock sensor (SPCLK)	J8-A12 P144-3	Operate the stack processing unit in service mode while in stand-by.	When the unit is operating.	Alternates 0/1.	Alternates 0/5 V.

COPYRIGHT © 1997 CANON INC.

Sensor	Connector ✻2✻ address	Checks		✻2✻ indication	Voltage (approx.)
PI 70 Stack processing unit UP position sensor (SPTP)	J8-B13	Block the sensor while in stand-by.	When the sensor is blocked.	0	5V
	P147-4		When the sensor is not blocked.	1	0V
PI 71 Stack processing unit upper limit sensor (SPTP)	J8-A2	Block the sensor while in stand-by.	When the sensor is blocked.	0	5V
	P147-0		When the sensor is not blocked.	1	0V
PI 72 Stack processing unit lower limit sensor (SPBP)	J8-B5	Block the sensor while in stand-by.	When the sensor is blocked.	1	5V
	P145-5		When the sensor is not blocked.	0	0V
PI 73 Stacker unit NEAR positon sensor (STA)	J8-B5	Move the detecting lever while in stand-by.	When the detecting lever is not moved.	0	0V
	P145-5		When the detecting lever is moved.	1	5V
PI 74 Upper cover sensor 1 (UCO1)	J11-B4	Open/close the upper cover while in stand-by.	When the cover is closed.	1	0V
	P129-2		When the cover is opened.	0	5V
PI 75 Upper cover sensor 2 (UCO2)	J16-B5	Open/close the upper cover while in stand-by.	When the cover is closed.	1	0V
	P129-2		When the cover is opened.	0	5V
PI 76 Bin cover sensor (BCO)	J16-A10	Open/close the bin cover while in stand-by.	When the cover is closed.	1	0V
	P129-1		When the cover is opened.	0	5V
PI 77 Front door sensor (FCO)	J11-A16	Open/close the front cover while in stand-by.	When the cover is closed.	1	0V
	P129-0		When the cover is opened.	0	5V
PI 78 Screen sensor (SC)	J16-A13	Install the screen while in stand-by.	When the screen is installed.	———	0V
	———		When the screen is not installed.	———	5V
PI 79 Stack processing unit DOWN position sensor (SPLP)	J8-A2	Block the sensor while in stand-by.	When the sensor is blocked.	1	0V
	P147-5		When the sensor is not blocked.	0	5V
PI 80 Access cover sensor (TOCO)	J16-B2	Open/close the access cover while in stand-by.	When the cover is opened.	1	0V
	P152-3		When the cover is closed.	0	5V

COPYRIGHT © 1997 CANON INC.

Sensor	Connector ✻2✻ address	Checks		✻2✻ indication	Voltage (approx.)
PI 81 Stack tray shift clock sensor B (STTCLKB)	J5-B12	Move the stacker tray while in stand-by.	When the stacker tray is moved.	———	Alternates 0/5V.
	———				
PHOI 1 Staple sensor (STPE)	J8-A9	Block the sensor while in stand-by.	When the sensor is blocked.	0	5V
	P152-4		When the sensor is not blocked.	1	0V
PHOI 2 Stapler home position sensor (STPHP)	J8-A10	Move the stapler while in stand-by.	When the stapler is at home position.	1	0V
	P137-7		When the stapler is not at home position.	0	5V

COPYRIGHT © 1997 CANON INC.

II. TROUBLESHOOTING

A. Troubleshooting Malfunctions

1	E501

Cause	Step	Checks	Yes/No	Action
	1	Turn off and then on the copier's power switch. Is the problem corrected?	YES	The connector may have poor contact. Check the connector.
Connector	2	Is the connection of the communication cable connecting the finisher and the copier normal?	NO	Connect the communication cable securely.
Front cover, bin cover, upper cover	3	Is the front cover, bin cover, and upper cover closed securely?	NO	Close the front cover, bin cover, and upper cover securely.
Front door sensor (PI77), screen sensor (PI78), bin cover sensor (PI76), upper cover sensor 1 (PI74), upper cover sensor 2 (PI75)	4	Is each of the following sensors mounted properly, and is the harness normal? • Front door sensor (PI77) • Screen sensor (PI78) • Bin cover sensor (PI76) • Upper cover sensor 1 (PI74) • Upper cover sensor 2 (PI75)	NO	Mount the sensors properly, and correct the harness.
DC power supply PCB	5	Is each output of the DC power supply normal?	YES	Remove the cause of the problem; then, replace the DC power supply PCB.
Finisher controller PCB			YES	Replace the finisher controller PCB, and make necessary adjustments. (For details, see p.5-25)

COPYRIGHT © 1997 CANON INC.

2 | E510

Cause	Step	Checks	Yes/No	Action
Circuit breaker (CB1)	1	Has the circuit breaker (CB1) on the DC power supply PCB operated?	YES	Remove the cause of the activation; then, press the button on the circuit breaker.
24 V (absent)	2	Set the meter to the 50V range. Is the voltage between connectors J10-12 (+) and J10-11 (-) on the finisher controller PCB 24 V?	NO	Check to see if the voltage between connectors J2-1 (+) and J2-3 (-) and between connectors J2-2 (+) and J2-3 (-) on the finisher control PCB is 24 V. If not 24 V, see “DC power is absent.”
Common feeder motor (M1)	3	Set the meter to the $\times 1\Omega$ range. Disconnect the connector J10 from the finisher controller PCB. Is there electrical continuity between J10-14 and J10-11 on the harness side?	NO	Check the wiring to the feeder motor; if normal, replace the common feeder motor (M1).
Finisher controller PCB	4	Replace the finisher controller PCB. Is the problem corrected?	YES	Replace the finisher controller PCB, and make necessary adjustments. For details, see p.5-25

COPYRIGHT © 1997 CANON INC.

3 | E518

Cause	Step	Checks	Yes/No	Action
Circuit breaker (CB1)	1	Has the circuit breaker (CB1) on the DC power supply PCB operated?	YES	Remove the cause of the activation, and press the button on the circuit breaker.
24 V (absent)	2	Set the meter to the 50V range. Is the voltage between connectors J108-1 (+) and J108-2 (-) on the folder driver PCB 24 V?	NO	Check to see if the voltage between connectors J2-1 (+) and J2-3 (-) and between connectors J2-2 (+) and J2-3 on the finisher controller PCB is 24 V. If not 24 V, see “DC power is absent.”
Folder motor (FM1)	3	Set the meter to the $\times 1\Omega$ range. Disconnect the connector J108 from the folder driver PCB. Is there electrical continuity between J108-1 and J10-2 and between J108-3 and J10-2 on the harness side?	NO	Check the wiring up to the folder motor; if normal, replace the folder motor (FM1).
Folder driver PCB	4	Replace the folder driver PCB. Is the problem corrected?	YES	End.
Finisher controller PCB			NO	Replace the finisher controller PCB, and make necessary adjustments. (For details, see p.5-25.)

COPYRIGHT © 1997 CANON INC.

4 E525

Cause	Step	Checks	Yes/No	Action
Cable	1	Are the cables on the light-emitting side (LED1) and the light-receiving side (PT1) of the bin paper sensor connected to the finisher controller PCB properly? (J9-A7, B1/J12-A6, B8)	NO	Connect them properly.
Light-emitting side (LED1) and light-receiving side (PT1) of bin paper sensor	2	Are the light-emitting side (LED1) and the light-receiving side (PT1) of the bin paper sensor mounted properly?	NO	Connect them properly.
Light-emitting side (LED1) and light-receiving side (PT1) of bin paper sensor	3	Replace the light-emitting side (LED1) and light-receiving side (PT1) of the bin paper sensor, and adjust the sensitivity of the bin paper sensor. Is the problem corrected?	YES	End.
Finisher controller PCB			NO	Replace the finisher controller PCB, and make necessary adjustments. (For details, see p.5-25.)

COPYRIGHT © 1997 CANON INC.
CANON FINISHER-B1 REV.0 MAY 1997 PRINTED IN JAPAN (IMPRIME AU JAPON)

5	E526

Cause	Step	Checks	Yes/No	Action
Cable	1	Are the cables of the light-emitting side (LED2) and the light-receiving side (PT2) of the bin paper sensor connected to the finisher controller PCB properly? (J9-B2, B3/J19-A7, B4)	NO	Connect them properly.
Light-emitting side (LED2) and light-receiving side (PT2) of bin paper sensor	2	Are the light-emitting side (LED2) and the light-receiving side (PT2) of the bin paper sensor connected properly?	NO	Connect them properly.
Light-emitting side (LED2) and light-emitting side (PT2) of bin paper sensor	3	Replace the light-emitting side (LED2) and the light-receiving side (PT2) of the bin paper sensor, and adjust the sensitivity of the bin paper sensor. Is the problem corrected?	YES	End.
Finisher controller PCB			NO	Replace the finisher controller PCB, and make necessary adjustments. (For details, see p.5-25.)

COPYRIGHT © 1997 CANON INC.

6 E527

Cause	Step	Checks	Yes/No	Action
Cable	1	Is the cable between the stack processing unit driver PCB and the finisher controller PCB connected properly?	NO	Connect it properly.
Cable	2	Are the cables of the light-emitting side (LED4) and the light-receiving side (PT4) of the paper 1 sensor connected to the stack processing unit driver properly? (J106, J107)	NO	Connect them properly.
Light-emitting side (LED4) and light-receiving side (PT4) of paper 1 sensor	3	Are the light-emitting side (LED4) and the light-receiving side of the paper 1 sensor (LED4) connected properly?	NO	Connect them properly. If you have replaced the light-emitting side (LED4) or the light-receiving side (PT4), be sure to adjust the sensitivity of the paper 1 sensor. (For instructions, see p.5-38.)
Light-emitting side (LED4) and light-receiving side (PT4) of paper 1 sensor	4	Replace the light-emitting side (LED4) and the light-receiving side (PT4) of the paper 1 sensor, and adjust the sensitivity of the paper 1 sensor. Is the problem corrected? (For steps, see p.5-40.)	YES	End.
Finisher controller			NO	Replace the finisher controller PCB, and make necessary adjustments. (For details, see p.5-25.)

COPYRIGHT © 1997 CANON INC.
CANON FINISHER-B1 REV.0 MAY 1997 PRINTED IN JAPAN (IMPRIME AU JAPON)

7	E528

Cause	Step	Checks	Yes/No	Action
Cable	1	Is the cable between the stack processing unit driver PCB and the finisher controller connected properly?	NO	Connect it properly.
Cable	2	Are the cables on the light-emitting side (LED5) and the light-receiving side (PT5) of the paper 2 sensor connected to the stack processing unit driver PCB properly? (J106, J107)	NO	Connect them properly.
Light-emitting side (LED5) and light-receiving side of paper 2 sensor	3	Are the light-emitting side (LED5) and the light-receiving side (PT5) of the paper 2 sensor connected properly?	NO	Connect them properly. If you have replaced the light-emitting side (LED5) or the light-receiving side (PT5) of the paper 2 sensor, be sure to adjust the sensitivity of the paper 2 sensor. (For instructions, see p.5-38.)
Light-emitting side (LED5) and light-receiving side (PT5) of paper 2 sensor	4	Replace the light-emitting side (LED5) and the light-receiving side (PT5) of the paper 2 sensor, and adjust the sensitivity of the paper 2 sensor. Is the problem corrected?	YES	End.
Finisher controller PCB			NO	Replace the finisher controller PCB, and make necessary adjustments. (For details, see p.5-25.)

COPYRIGHT © 1997 CANON INC.

8	E529

Cause	Step	Checks	Yes/No	Action
Cable	1	Are the cables of the light-emitting side (LED6) and the light-receiving side (PT6) of the stack sensor connected to the finisher controller PCB? (J5-19, -20, -21, -22)	NO	Connect them properly.
Light-emitting side (LED6) and light-receiving side (PT6) of stack sensor	2	Are the light-emitting side (LED6) and the light-receiving side (PT6) of the stack sensor mounted properly?	NO	Mount them properly.
Light-emitting side (LED6) and light-receiving side (PT6) of stack sensor	3	Replace the light-emitting side (LED6) and the light-receiving side (PT6) of the stack sensor. Is the problem corrected?	YES	End.
Finisher controller PCB			NO	Replace the finisher controller PCB, and make necessary adjustments. (For details, see p.5-25.)

COPYRIGHT © 1997 CANON INC.
CANON FINISHER-B1 REV.0 MAY 1997 PRINTED IN JAPAN (IMPRIME AU JAPON)

9	E530

Cause	Step	Checks	Yes/No	Action
Circuit breaker (CB1)	1	Has the circuit breaker (CB1) on the DC power supply PCB operated?	YES	Remove the cause of the activation, and press the button on the circuit breaker.
24 V (absent)	2	Set the meter to the 50V range. Is the voltage between the following connectors on the finisher controller PCB 24 V? • J12-A1 (+) and J12-A5 (-) • J12-B13 (+) and J12-A5 9 (-)	NO	See “DC power is absent.”
Upper bin guide bar motor (M6)	3	Set the meter to the ×1Ω range. Disconnect the connector J12 from the finisher controller PCB. Is there electrical continuity between J12-A2 and J12-B12 and between J12-A3 and J12-B11?	NO	Check the wiring up to the upper bin guide bar motor; if normal, replace the upper bin guide bar motor (M6).
Finisher controller PCB	4	Replace the finisher controller PCB. Is the problem corrected?	YES	Replace the finisher controller PCB, and make necessary adjustments. (For details, see p.5-25.) End.

COPYRIGHT © 1997 CANON INC.

10 E531

Cause	Step	Checks	Yes/No	Action
Circuit breaker (CB1)	1	Has the circuit breaker (CB1) on the DC power supply PCB operated?	YES	Remove the cause of the activation, and press the button on the circuit breaker.
Staple jam	2	Is there a staple jam in the stapler?	YES	Remove all staple jams from inside the stapler.
24 V (absent)	3	Set the tester to the 50V range. Is the voltage between connectors J103-1 (+) and J103-3 (-) and between connectors J103-2 (+) and J103-4 (-) on the stack processing unit driver PCB 24 V?	NO	Check to see if the voltage between J6-1 (+) and J6-3 (-) and between J6-2 (+) and J6-4 (-) on the finisher controller PCB is 24 V. If it is not 24 V, see “DC power is absent.”
Stapler unit	4	Replace the stapler unit. Is the problem corrected?	YES	End.
Stack processing unit driver PCB	5	Replace the stack processing unit driver PCB. Is the problem corrected?	YES	End.
Finisher controller PCB			NO	Replace the finisher controller PCB, and make necessary adjustments. (For details, see p.5-25.)

COPYRIGHT © 1997 CANON INC.

11 E532

Cause	Step	Checks	Yes/No	Action
Circuit breaker (CB1)	1	Has the circuit breaker on the DC power supply PCB operated?	YES	Remove the cause of the activation, and press the button on the circuit breaker.
24 V (absent)	2	Set the tester to the 50V range. Is the voltage between the following connectors on the stack processing unit driver PCB 24 V? • J101-7 (+) and J101-5 (-) • J101-8 (+) and J101-5 (-)	NO	Check to see if the voltage between connectors J6-1(+) and J6-3 (-) and between connectors J6-2 (+) and J6-4 (-) on the finisher control PCB is 24 V. If it is not 24 V, see "DC power is absent."
Stapler front/rear shift motor (M13)	3	Disconnect the connector J101 from the stack processing unit driver PCB. Is there electrical continuity between the following connectors on the harness side? • J101-9 and J101-10 • J101-11 and J101-12	NO	Check the harness up to the stapler front/rear shift motor; if normal, replace the stapler front/rear shift motor (M13).
Stack processing unit driver PCB	4	Replace the stack processing unit driver PCB. Is the problem corrected?	YES	End.
Finisher controller PCB			NO	Replace the finisher controller PCB, and make necessary adjustments. (For details, see p.5-25.) End.

COPYRIGHT © 1997 CANON INC.

12 E534

Cause	Step	Checks	Yes/No	Action
Circuit breaker (CB1)	1	Has the circuit breaker (CB1) on the DC power supply PCB operated?	YES	Remove the cause of the activation, and press the button on the circuit breaker.
24 V (absent)	2	Set the meter to the 50V range. Is the voltage between the following connectors on the stack processing unit driver PCB 24 V? • J101-7 (+) and J101-5 (-) • J101-8 (+) and J101-5 (-)	NO	Check to see if between connectors J6-1 (+) and J6-3 (-) and between connectors J6-2 (+) and J6-4 (-) on the finisher controller PCB is 24 V. If it is not 24 V, see "DC power is absent."
Bin rear end wall OPEN position sensor (PI52), bin rear end CLOSE position sensor (PI53)	3	Replace the bin rear end OPEN position sensor (PI52) or the bin rear end wall CLOSE position sensor (PI53). Is the problem corrected?	YES	End.
Bin open/close motor (M17)	4	Disconnect the connector J101 from the stack processing unit. Is there electrical continuity between the following connectors? • J101-1 and J101-2	NO	Check the harness up to the bin rear end wall open/close motor; if normal, replace the bin rear end wall open/close motor (M17).
Stack processing unit driver PCB	5	Replace the stack unit driver PCB. Is the problem corrected?	YES	End.
Finisher controller PCB			NO	Replace the finisher controller PCB, and make necessary adjustments. (For details, see p.5-25.) End.

COPYRIGHT © 1997 CANON INC.

13 E536

Cause	Step	Checks	Yes/No	Action
Cable	1	Is the cable of the stapler leading edge sensor (PI68) connected to the stack processing unit driver PCB properly? (J111)	NO	Connect it properly.
Cable	2	Is the cable between the finisher controller PCB and the stack processing unit driver PCB connected properly? J7, J8 on the finisher controller PCB J104, J105 on the stack processing unit driver PCB	NO	Connect it properly.
Stapler leading edge sensor (PI68)	3	Is the stapler leading edge sensor (PI68) mounted properly?	NO	Mount it properly.
Stapler leading edge sensor (PI68)	4	Replace the stapler leading edge sensor (PI68), and adjust the sensitivity of the stapler leading edge sensor. Is the problem corrected?	YES	End.
Stack processing unit driver PCB	5	Replace the stack processing unit driver PCB. Is the problem corrected?	YES	End.
Finisher controller PCB			NO	Replace the finisher controller PCB, and make necessary adjustments. (For details, see p.5-25.) End.

COPYRIGHT © 1997 CANON INC.

14 E537

Cause	Step	Checks	Yes/No	Action
Circuit breaker (CB1)	1	Has the circuit breaker (CB1) on the DC power supply PCB operated?	YES	Remove the cause of the activation, and press the button on the circuit breaker.
24 V (absent)	2	Set the meter to the 50V range. Is the voltage between the following connectors on the finisher controller PCB 24 V? • J205- (+) and GND (-) • J20-6 (+) and GND (-)	NO	See “DC power supply is absent.”
Lower bin guide bar motor (M7)	3	Set the meter to the ×1Ω range. Disconnect the connector J20 from the finisher controller PCB. Is there electrical continuity between J20-7 and J20-8 and between J20-9 and J20-10 on the harness side?	NO	Check the wiring up to the lower bin guide bar motor; if normal, replace the guide bar motor (M7).
Finisher controller PCB	4	Replace the finisher controller PCB. Is the problem corrected?	YES	Replace the finisher controller PCB, and make necessary adjustments. (For details, see p.5-25.) End.

COPYRIGHT © 1997 CANON INC.

15 E540

Cause	Step	Checks	Yes/No	Action
Circuit breaker (CB1)	1	Has the circuit breaker (CB1) on the DC power supply PCB operated?	YES	Remove the cause of the activation, and press the button on the circuit breaker.
24 V (absent)	2	Set the meter to the 50V range. Is the voltage between the following connectors 24 V? • J20-5 (+) and GND (-) • J20-6 (+) and GND (-)	NO	See “DC power is absent.”
Upper bin shift motor (M4)	3	Set the meter to the ×1Ω range. Disconnect the connector J13 from the finisher controller PCB. Is there electrical continuity between connectors J13-1 and J13-2 on the harness side?	NO	Check the wiring up to the upper bin shift motor; if normal, replace the upper bin shift motor (M4).
Finisher controller PCB	4	Replace the finisher controller PCB. Is the problem corrected?	YES	Replace the finisher controller PCB, and make necessary adjustments. (For details, see p.5-25.) End.

COPYRIGHT © 1997 CANON INC.

16 E541

Cause	Step	Checks	Yes/No	Action
Upper bin shift motor clock sensor (PI31)	1	Is the upper bin shift motor clock sensor mounted properly?	NO	Mount it properly.
Cable	2	Is the cable of the upper bin shift motor clock sensor connected to the finisher controller PCB properly? (connectors J12-A11, -A10, -B4)	NO	Connect it properly.
Upper bin shift motor clock sensor (PI31)	3	Replace the upper bin shift motor clock sensor. Is the problem corrected?	YES	Replace the upper bin shift moor clock sensor.
Finisher controller PCB			NO	Replace the finisher controller PCB, and make necessary adjustments. (For details, see p.5-25.) End.

COPYRIGHT © 1997 CANON INC.

17 E542

Cause	Step	Checks	Yes/No	Action
Circuit breaker (CB1)	1	Has the circuit breaker (CB1) on the DC power supply PCB operated?	YES	Remove the cause of the circuit breaker (CB1), and press the button on the circuit breaker.
24 V (absent)	2	Set the meter to the 50V range. Is the voltage between the following connectors on the finisher controller PCB 24 V? • J20-5 (+) and GND (-) • J20-6 (+) and GND (-)	NO	See “DC power supply is absent.”
Lower bin shift motor (M5)	3	Set the tester to the $\times 1\Omega$ range. Disconnect the connector J21 from the finisher controller PCB. Is there electrical continuity between J21-1 and J21-2 on the harness side?	NO	Check the wiring up to the lower bin shift motor; if normal, replace the lower bin shift motor (M5).
Finisher controller PCB	4	Replace the finisher controller PCB. Is the problem corrected?	YES	Replace the finisher controller PCB, and make necessary adjustments. (For details, see p. 5-25.) End.

COPYRIGHT © 1997 CANON INC.

18 E543

Cause	Step	Checks	Yes/No	Action
Lower bin shift motor clock sensor (PI32)	1	Is the lower bin shift motor clock sensor mounted properly?	NO	Mount it properly.
Cable	2	Is the cable of the lower bin shift motor clock sensor connected to the finisher controller PCB properly? (connectors J19-A2, -A1, -B10)	NO	Connect it properly.
Lower bin shift motor clock sensor (PI32)	3	Replace the lower bin shift motor clock sensor. Is the problem corrected?	YES	Replace the lower bin shift moor clock sensor.
Finisher controller PCB			NO	Replace the finisher controller PCB, and make necessary adjustments. (For details, see p.5-25.) End.

COPYRIGHT © 1997 CANON INC.

19 E560

Cause	Step	Checks	Yes/No	Action
Circuit breaker (CB1)	1	Has the circuit breaker (CB1) on the DC power supply PCB operated?	YES	Remove the cause of the activation, and press the button on the circuit breaker.
24 V (absent)	2	Set the meter to the 50V range. Is the voltage between the following connectors on the stack processing unit driver PCB 24 V?	NO	See “DC power is absent.”
Upper path feeder motor (M2)	3	Replace the upper path feeder motor (M2). Is the problem corrected?	YES	End.
Finisher controller PCB			NO	Replace the finisher controller PCB, and make necessary adjustments. (For details, see p.5-25.) End.

COPYRIGHT © 1997 CANON INC.

20 E561

Cause	Step	Checks	Yes/No	Action
Circuit breaker (CB1)	1	Has the circuit breaker on the DC power supply PCB operated?	YES	Remove the cause of the activation, and press the button on the circuit breaker.
24 V (absent)	2	Set the meter to the 50V range. Is the voltage between the following connectors on the stack processing unit driver PCB 24 V? • J23-14 (+) and J23-13 (-)	NO	See “DC power supply is absent.”
Lower path feeder motor (M3)	3	Replace the lower path feeding motor (M3). Is the problem corrected?	YES	End.
Finisher controller PCB			NO	Replace the finisher, and make necessary adjustments. (For details, see p.5-25.) End.

COPYRIGHT © 1997 CANON INC.

21 E564

Cause	Step	Checks	Yes/No	Action
Cable	1	Are the cables of the light-emitting side (LED7) and the light-receiving side (PT7) of the upper bin outside paper sensor connected to the finisher controller PCB properly? (J12-A12, B2/J9-A5, B5)	NO	Connect them properly.
Light-emitting side (LED7) and light-receiving side (PT7) of upper bin outside paper sensor	2	Are the light-emitting side (LED7) and the light-receiving side (PT7) of the upper bin outside mounted properly?	NO	Mount them properly.
Light-emitting side (LED7) and light-receiving side (PT7) of upper bin outside paper sensor	3	Replace the light-emitting side (LED7) and the light-receiving side (PT7) of the upper bin outside paper sensor, and adjust the sensitivity of the upper bin outside sensor. Is the problem corrected?	YES	End.
Finisher controller PCB			NO	Replace the finisher controller PCB, and make necessary adjustments. (For details, see p.5-25.)

COPYRIGHT © 1997 CANON INC.

22 E565

Cause	Step	Checks	Yes/No	Action
Cable	1	Are the cables of the light-emitting side (LED8) and the light-receiving side (PT8) of the lower bin outside paper sensor (LE8) connected to the finisher controller PCB properly? (J12-A12, B2/J9-A5, B5)	NO	Connect them properly.
Light-emitting side (LED8) and light-receiving side (PT8) of lower bin outside paper sensor	2	Are the light-emitting side (LED8) and the light-receiving side (PT8) of the lower bin outside paper sensor mounted properly?	NO	Mount them properly.
Light-emitting side (LED8) and light-receiving side (PT8) of lower bin outside paper sensor	3	Replace the light-emitting side (LED8) and the light-receiving side (PT8) of the lower bin outside paper sensor, and adjust the sensitivity of the lower bin outside sensor. Is the problem corrected?	YES	End.
Finisher controller PCB			NO	Replace the finisher controller PCB, and make necessary adjustments. (For details, see p.5-25.)

COPYRIGHT © 1997 CANON INC.

23 E570

Cause	Step	Checks	Yes/No	Action
Circuit breaker (CB1)	1	Has the circuit breaker (CB1) on the DC power supply PCB operated?	YES	Remove the cause of the activation, and press the button of the circuit breaker.
24 V (absent)	2	Set the meter to the 50V range. Is the voltage between the following connectors 24 V? • J103-1 (+) and J103-3 (-) • J103-2 (+) and J103-4 (-)	NO	Check to make sure that the voltage between J6-1 (+) and J6-3 (-) and between J6-2 (+) and J6-4 (-) on the finisher controller PCB is 24 V. If the voltage is not 24 V, see “DC power is absent.”
Side gripper clasping home position sensor (PI48)	3	Replace the side gripper clasping home position sensor (PI48). Is the problem corrected?	YES	End.
Side gripper grip motor (M9)	4	Set the meter to the $\times 1\Omega$ range. Disconnect the connector J101 from the stack processing unit driver PCB. Is there electrical continuity between J101-5 and J101-6 on the harness side?	NO	Check the wiring up to the side gripper motor; if normal, replace the side gripper grip motor (M9).
Stack processing unit driver PCB	5	Replace the stack processing unit driver PCB. Is the problem corrected?	YES	End.
Finisher controller PCB			NO	Replace the finisher controller PCB, and make necessary adjustments. (For details, see p.5-25.) End.

COPYRIGHT © 1997 CANON INC.

24 E571

Cause	Step	Checks	Yes/No	Action
Circuit breaker (CB1)	1	Has the circuit breaker (CB1) on the DC power supply PCB operated?	YES	Remove the cause of the activation, and press the button on the circuit breaker.
24 V (absent)	2	Set the meter to the 50V range. Is the voltage between the following connectors on the stack processing unit driver PCB 24 V? • J103-1 (+) and J103-3 (-) • J103-2 (+) and J103-4 (-)	NO	Check to see if the voltage between connectors J6-1 (+) and J6-3 (-) and between connectors J62 (+) and J6-4 (-) on the finisher controller PCB is 24 V. If the voltage is not 24 V, see “DC power is absent.”
Front gripper clasping home position sensor (PI63)	3	Replace the front gripper clasping home position sensor (PI63). Is the problem corrected?	YES	End.
Front gripper grip motor (M12)	4	Set the tester to the ×1Ω range. Disconnect the connector J122 from the relay PCB 2. Is there electrical continuity between J122-1 and J122-2 on the harness side?	NO	Check the wiring up to the front gripper grip motor; if normal, replace the front gripper grip motor (M12).
Stack processing unit driver PCB	5	Replace the stack processing unit driver PCB. Is the problem corrected?	YES	End.
Finisher controller PCB			NO	Replace the finisher controller PCB, and make necessary adjustments. (For details, see p.5-25.) End.

COPYRIGHT © 1997 CANON INC.

25 E572

Cause	Step	Checks	Yes/No	Action
Circuit breaker (CB1)	1	Has the circuit breaker (CB1) on the DC controller PCB activated?	YES	Remove the cause of the activation, and press the button on the circuit breaker.
24 V (absent)	2	Set meter to the 50V range. Is the voltage between the following connectors on the stack processing unit driver PCB 24 V? • J23-14 (+) and J23-13 (-)	NO	See “DC power is absent.”
Side gripper left/right shift motor sensor (PI51)	3	Replace the side gripper left/right shift motor sensor (PI51). Is the problem corrected?	YES	End.
Side gripper left/right shift motor (M8)	4	Set the meter to the $\times 1\Omega$ range. Disconnect the connector J101 from the stack processing driver PCB. Is there electrical continuity between J101-15 and J101-16 and between J101-17 and J101-18?	NO	Check the wiring up to the side gripper left/right shift motor; if normal, replace the side gripper left/right shift motor (M8).
Stack processing unit driver PCB	5	Replace the stack processing unit driver PCB. Is the problem corrected?	YES	End.
Finisher controller PCB			NO	Replace the finisher controller PCB, and make necessary adjustments. (For details, see p.5-25.) End.

COPYRIGHT © 1997 CANON INC.

26 E573

Cause	Step	Checks	Yes/No	Action
Circuit breaker (CB1)	1	Has the circuit breaker (CB1) on the DC power supply PCB operated?	YES	Remove the cause of activation, and press the button on the circuit breaker.
24 V (absent)	2	Set the mete to the 50V range. Is the voltage between the following connectors on the stack processing unit driver 24 V? • J23-14 (+) and J23-13 (-)	NO	See “DC power is absent.”
Front gripper left/right shift motor error sensor (PI54)	3	Replace the front gripper left/right shift motor error sensor (PI54). Is the problem corrected?	YES	End.
Front gripper left/right shift motor (M10)	4	Set the meter to the $\times 1\Omega$ range. Disconnect the connector J110 from the stack processing unit driver PCB. Is there electrical continuity between connectors J110-3 and J110-4 and between connectors J110-5 and J110-6?	NO	Check the wiring up to the front gripper left/right shift motor; if normal, replace the front gripper left/right shift motor (M10).
Stack processing unit driver PCB	5	Replace the stack processing unit driver PCB. Is the problem corrected?	YES	End.
Finisher controller PCB			NO	Replace the finisher controller PCB, and make necessary adjustments. (For details, see p.5-25.) End.

COPYRIGHT © 1997 CANON INC.

27 E574

Cause	Step	Checks	Yes/No	Action
Circuit breaker (CB1)	1	Has the circuit breaker (CB1) on the DC power supply PCB operated?	YES	Remove the cause of activation, and press the button on the circuit breaker.
24 V (absent)	2	Set the meter to the 50V range. Is the voltage between the following connectors 24 V? • J23-14 (+) and J23-13 (-)	NO	See “DC power is absent.”
Front gripper front/rear shift motor clock sensor (PI54)	3	Replace the front gripper front/rear shift motor clock sensor (PI54). Is the problem corrected?	YES	End.
Front gripper front/rear shift motor (M11)	4	Set the meter to the ×1Ω range. Disconnect the connector J120 from the relay PCB 2. Is there electrical continuity between J120-25 and J120-26 on the harness side?	NO	Check the wiring up to the front gripper front/rear shift motor; if normal, replace the front gripper front/rear shift motor (M11).
Stack processing unit driver PCB	5	Replace the stack processing unit driver PCB. Is the problem correct?	YES	End.
Finisher controller PCB			NO	Replace the finisher controller PCB, and make necessary adjustments. (For details, see p.5-25.) End.

COPYRIGHT © 1997 CANON INC.

28 E575

Cause	Step	Checks	Yes/No	Action
Circuit breaker (CB1)	1	Has the circuit breaker (CB1) on the DC power supply PCB operated?	YES	Remove the cause of the activation, and press the button on the circuit breaker.
24 V (absent)	2	Set the meter to the 50V range. Is the voltage between the following connectors on the stack processing unit driver PCB 24 V? • J23-14 (+) and J23-13 (-)	NO	See “DC power is absent.”
Stack processing unit shift brake (BK2)	3	Set the tester range to ×1Ω range. Disconnect the connector (J110) from the relay PCB 2. Is there electrical continuity between connectors J110-7 and J110-8 on the harness?	NO	Check the wiring up to the stack processing unit; if normal, replace the stack processing unit shift brake (BK2).
Stack processing unit clock sensor (PI69)	4	Replace the stack processing unit clock sensor (PI69). Is the problem corrected?	YES	End.
Stack processing unit shift motor (M14)	5	Set the meter to the ×1Ω range. Disconnect the connector J109 from the stack processing unit driver PCB. Is there electrical continuity between J109-1 and J109-2?	NO	Check the wiring up to the stack processing unit shift motor; if normal, replace the stack processing unit shift motor (M14).
Stack processing unit driver PCB Finisher controller PCB	6	Replace the stack processing unit driver PCB. Is the problem corrected?	YES	End.
			NO	Replace the finisher controller PCB, and make necessary adjustments. (For details, see p.5-25.) End.

COPYRIGHT © 1997 CANON INC.

29 E576

Cause	Step	Checks	Yes/No	Action
Cable	1	Are cables of the light-emitting side (LED3) and the light-receiving side (PT3) of the edge feeding sensor connected to the stack processing unit driver PCB properly? (J106-A8, B18/J106-A7, B19)	NO	Connect them properly.
Light-emitting side (LED3) and light-receiving side (PT3) of edge feeding sensor	2	Are the light-emitting side (LED3) and the light-receiving side (PT3) of the edge feeding sensor mounted properly?	NO	Mount them properly.
Light-emitting side (LED3) and light-receiving side (PT3) of edge feeding sensor	3	Replace the light-emitting side (LED3) and the light-receiving side (PT3) of the edge feeding sensor, and adjust the sensitivity. Is the problem corrected?	YES	End.
Finisher controller PCB			NO	Replace the finisher controller PCB, and make necessary adjustments. (For details, see p.5-25.)

COPYRIGHT © 1997 CANON INC.

30 E580

Cause	Step	Checks	Yes/No	Action
Circuit breaker (CB1)	1	Has the circuit breaker on the DC power supply PCB operated?	YES	Remove the cause of the activation, and press the button on the circuit breaker.
24 V (absent)	2	Set the meter to the 50V range. Is the voltage between the following connectors on the finisher controller PCB 24 V? • J20-5 (+) and GND (-) • J20-6 (+) and GND (-)	NO	See “DC power is absent.”
Stacker tray motor (M16)	3	Set the meter to the ×1Ω range. Disconnect the connector J4 from the finisher controller PCB. Is there electrical continuity between J4-3 and J4-4 on the harness side?	NO	Check the wiring up to the stacker tray motor; if normal, replace the stacker tray motor (M16).
Finisher controller PCB	4	Replace the finisher controller PCB. Is the problem corrected?	YES	Replace the finisher controller PCB, and make necessary adjustments. (For details, see p.5-25.) End.

COPYRIGHT © 1997 CANON INC.
CANON FINISHER-B1 REV.0 MAY 1997 PRINTED IN JAPAN (IMPRIME AU JAPON)

31 E581

Cause	Step	Checks	Yes/No	Action
Circuit breaker (CB1)	1	Has the circuit breaker (CB1) on the DC power supply operated?	YES	Remove the cause of the activation, and press the button on the circuit breaker.
24 V (absent)	2	Set the meter to the 50V range. Is the voltage between the following connectors on the stack processing unit driver PCB 24 V? • J23-14 (+) and J23-13 (-)	NO	See “DC power is absent.”
Stacker unit shift brake (BK1)	3	Set the tester to the ×1Ω range. Disconnect the connector J23 from the finisher controller PCB. Is there electrical continuity between connectors J23-7 and J23-8 on the harness side?	NO	Check the wiring up to the stacker unit shift brake; if normal, replace the stacker unit shift brake (BK1).
Stacker unit shift motor clock sensor (PI47)	4	Replace the stacker unit shift motor clock sensor (PI47). Is the problem corrected?	YES	End.
Stacker unit shift motor (M15)	5	Set the tester to the ×1Ω range. Disconnect the connector J22 from the finisher controller PCB. Is there electrical continuity between connectors J22-1 and J22-2 on the harness side?	NO	Check the wiring up to the stacker unit shift motor; if normal, replace the stacker unit shift motor (M15).
Stack processing unit driver PCB	6	Replace the stack processing unit diver PCB. Is the problem corrected?	YES	End.
Finisher controller PCB			NO	Replace the finisher controller PCB, and make necessary adjustments. (For details, see p.5-25.) End.

COPYRIGHT © 1997 CANON INC.

32 E582

Cause	Step	Checks	Yes/No	Action
Circuit breaker (CB1)	1	Has the circuit breaker on the DC power supply PCB operated?	YES	Remove the cause of the activation, and press the button on the circuit breaker.
24 V (absent)	2	Set the meter to the 50V range. Is the voltage between the following connectors on the stack processing unit driver PCB 24 V? • J23-14 (+) and J23-13 (-)	NO	See “DC power is absent.”
Leading edge stopper home position sensor (PI46)	3	Replace the leading edge home position sensor. Is the problem corrected?	YES	End.
Leading edge stopper motor (M18)	4	Set the meter to the ×1Ω range. Disconnect the connector J4 from the finisher controller PCB. Is there electrical continuity between connectors J4-7 and J4-8 and between connectors J4-NA and J4-10?	NO	Check the wiring up to the leading edge stopper; if normal, replace the leading edge stopper motor (M18).
Stack processing unit driver PCB	5	Replace the stacker unit driver PCB. Is the problem corrected?	YES	End.
Finisher controller PCB			NO	Replace the finisher controller PCB, and make necessary adjustments. (For details, see p.5-25.) End.

COPYRIGHT © 1997 CANON INC.
CANON FINISHER-B1 REV.0 MAY 1997 PRINTED IN JAPAN (IMPRIME AU JAPON)

33 E583

Cause	Step	Checks	Yes/No	Action
Circuit breaker (CB1)	1	Has the circuit breaker (CB1) on the DC power supply PCB operated?	YES	Remove the cause of the activation, and press the button on the circuit breaker.
24 V (absent)	2	Set the meter to the 50V range. Is the voltage between the following connectors on the DC stack processing unit driver PCB 24 V? • J23-14 (+) and J23-13 (-)	NO	See “DC power is absent.”
Lift wall home position sensor (PI40)	3	Replace the lift wall home position sensor (PI40). Is the problem corrected?	YES	End.
Lift wall UP position sensor (PI39)	4	Replace the lift wall UP position sensor (PI39). Is the problem corrected?	YES	End.
Lift wall motor (M19)	5	Set the meter to the $\times 1\Omega$ range. Disconnect the connector J4 from the finisher controller PCB. Is there electrical continuity between connectors J4-11 and J4-12 on the harness side?	NO	Check the wiring up to the lift wall motor; if normal, replace the lift wall motor (M19).
Stack processing unit driver PCB	6	Replace the stack processing unit driver PCB. Is the problem corrected?	YES	End.
Finisher controller PCB			NO	Replace the finisher controller PCB, and make necessary adjustments. (For details, see p.5-25.)

COPYRIGHT © 1997 CANON INC.

34 E713

Cause	Step	Checks	Yes/No	Action
	1	Turn off and then on the copier's power switch. Is the problem corrected?	YES	The connector may have poor contact. Check the connector.
Front cover, bin cover, upper cover	2	Is the front cover, bin cover, and upper cover closed securely?	NO	Close the front cover, bin cover, and upper cover securely.
Front cover sensor (PI77), screen sensor (PI78), bin cover sensor (PI76), upper cover sensor 1 (PI74), upper cover sensor 2 (PI75)	3	Is each of the following sensors mounted properly and is the harness normal? • Front cover sensor (PI77) • Screen sensor (PI78) • Bin cover sensor (PI78) • Bin cover sensor (PI76) • Upper cover sensor 1 (PI74) • Upper cover sensor 2 (PI75)	NO	Mount the sensors properly, and correct the harness.
Fuse (F1)	4	Is the output of the DC power supply PCB normal?	YES	Remove the cause of the problem; then, replace the DC power supply PCB.
Emergency stop button	5	Is the emergency stop button pressed?	YES	Remove any jam from the copier and the finisher, and reset the emergency stop button.
Finisher controller PCB			NO	Replace the finisher controller PCB, and make necessary adjustments. (For details, see p.5-25.) End.

COPYRIGHT © 1997 CANON INC.
CANON FINISHER-B1 REV.0 MAY 1997 PRINTED IN JAPAN (IMPRIME AU JAPON)

35 AC power is absent.

Cause	Step	Checks	Yes/No	Action
Power switch (copier)	1	Is the copier's power switch turned on?	NO	Turn on the copier's power switch.
Auto shut-off (copier)	2	Has the copier's auto shut-off function operated?	YES	Turn off and then on the copier's power switch.
Power plug	3	Is the power plug connected to the power outlet?	NO	Connect the power plug to the power outlet.
Cable (finisher)	4	Is the finisher's cable connected to the copier?	NO	Connect the finisher's cable to the copier.
Covers	5	Are the front cover, upper cover, and bin cover closed securely?	NO	Close all covers securely.
Main power supply	6	Is the rated voltage present at the power outlet? 100V model: 85 to 133 VAC 200V model: 187 to 276 VAC	NO	The problem is not of the finisher. Advise the user.
Circuit breaker (CB1)	7	Check the circuit breaker (CB1) for electrical continuity across both its terminals. Is it 0 ?	NO	Disconnect the finisher's power plug, and press the button on the circuit breaker; then, check for electrical continuity once again. If not 0Ω, replace the circuit breaker (CB1).
Power cord, noise filter (NF1)			YES	Check the electrical cord and the noise filter; if there is no electrical continuity, replace them.
Finisher controller PCB	8	Is the connector terminals on the DC power supply supplied with AC power? • between J1-1 and J1-2 • between J1-3 and J1-4	NO	If LED1 on the finisher controller PCB is off, check the finisher cable for connection, and replace the finisher controller PCB. Thereafter, perform the work for the needed adjustments. (For details, see p.5-25.)
AC line			YES	Check the wiring from the finisher controller PCB to the DC power supply PCB; correct any faults.

COPYRIGHT © 1997 CANON INC.

36 DC power is absent.

Cause	Step	Checks	Yes/No	Action
AC power supply	1	Are the following connector terminals on the DC power supply PCB supplied with AC power? • J1-1 and J1-2 • J1-3 and J1-4	NO	See “AC power is absent.”
Wiring, DC load		Turn off the copier’s power switch, and disconnect the following connectors from the DC power supply PCB. • J2 • J3 Set the meter to the 30VDC range, connect the finisher’s power plug, turn on the copier’s power plug, and measure the voltage between the terminals shown in Table NA. Are the voltages as indicated?	YES	Turn off the copier’s power switch, connect one connector at a time, and turn on the power switch. Repeat this work for all the connectors to find out which activates the protection circuit. Then, check the wiring and loads related to that connector.
DC power supply PCB		Replace the DC power supply PCB. Is the problem corrected?	YES	Repalce the DC power supply PCB.

Connector	J2								J3			
Pin	1	2	3	4	5	6	7	8	1	2	3	4
Output	GND	+ 5V	+ 5V	GND	GND	GND	+ 12V	Remote	+ 24V	+ 24V	GND	GND
Tolerance (%)	–	+ 3.5 – 1.5	+ 3.5 – 1.5	–	–	–	± 5.0	–	± 5.0	± 5.0	–	–

COPYRIGHT © 1997 CANON INC.
CANON FINISHER-B1 REV.0 MAY 1997 PRINTED IN JAPAN (IMPRIME AU JAPON)

MEMO

COPYRIGHT © 1997 CANON INC.

III. ARRANGEMENT OF ELECTRICAL PARTS

A. Sensors

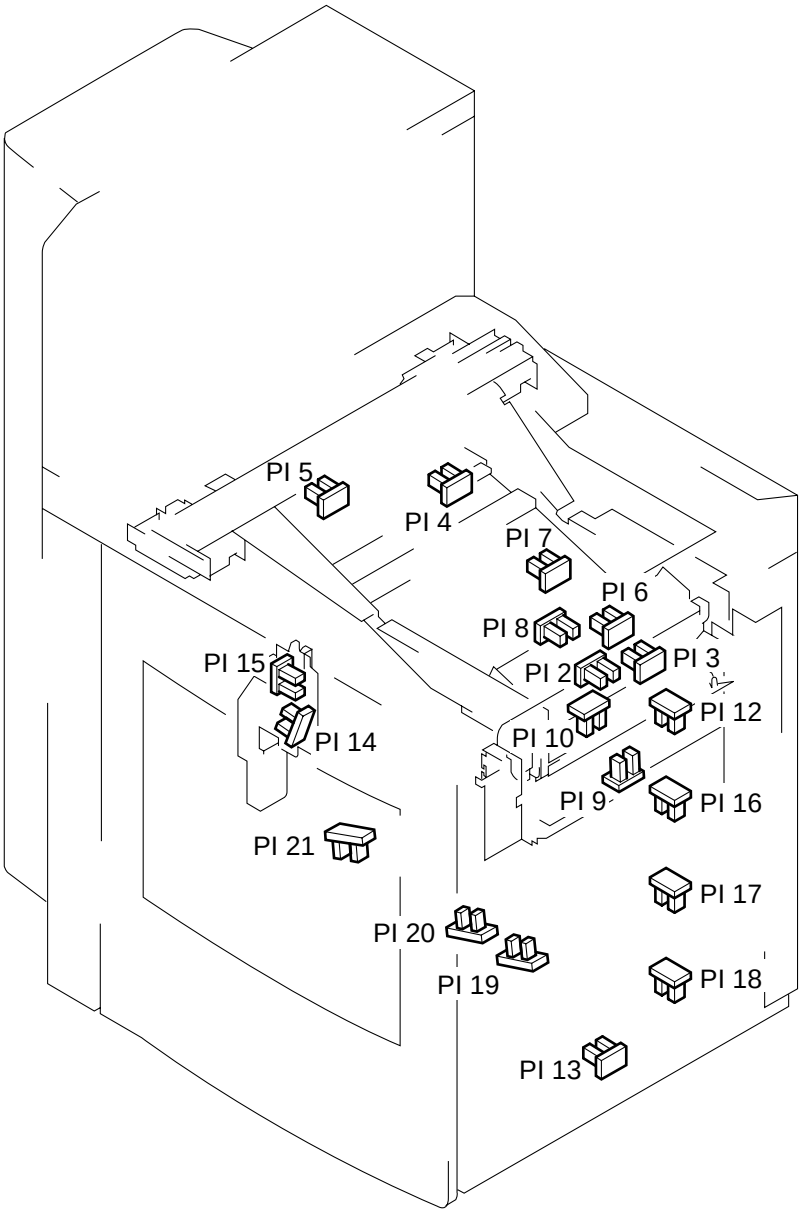

Figure 5-301

COPYRIGHT © 1997 CANON INC.

Symbol	Name	Notation	Description
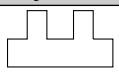	Photointer-rupter	PI 2	Non-sort path paper detection
		PI 3	Upper path paper detection 1
		PI 4	Upper path paper detection 2
		PI 5	Upper path paper detection 3
		PI 6	Upper path residual paper detection 1
		PI 7	Upper path residual paper detection 2
		PI 8	Non-sort path delivery assembly paper detection
		PI 9	Common path paper detection 1
		PI 10	Common path paper detection 2
		PI 12	Lower path paper detection 1
		PI 13	Lower path paper detection 2
		PI 14	Lower path paper detection 3
		PI 15	Lower path paper detection 4
		PI 16	Vertical path residual paper detection 1
		PI 17	Vertical path residual paper detection 2
		PI 18	Vertical path residual paper detection 3
		PI 19	Lower path residual paper detection 1
		PI 20	Lower path residual paper detection 2
		PI 21	Lower path residual paper detection 3

Table 5-301

COPYRIGHT © 1997 CANON INC.

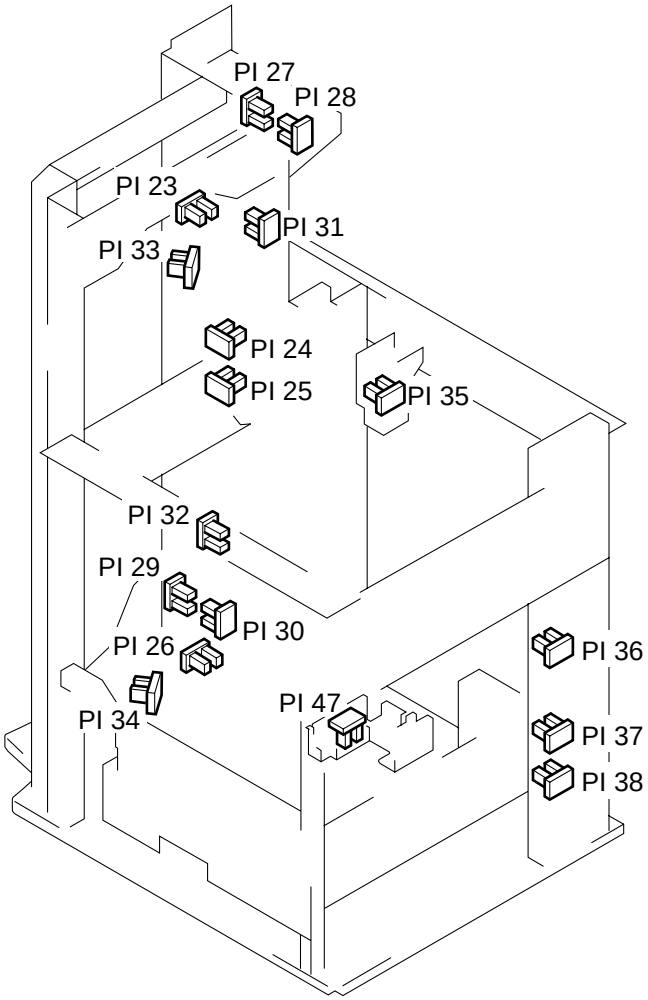

Figure 5-302

COPYRIGHT © 1997 CANON INC.

Symbol	Name	Notation	Description
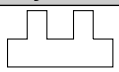	Photointer-rupter	PI 23	Upper bin upper limit detection
		PI 24	Upper bin lower limit detection
		PI 25	Lower bin upper limit detection
		PI 26	Lower bin lower limit detection
		PI 27	Upper lead cam level section detection
		PI 28	Upper lead cam No. 2 level section detection
		PI 29	Lower lead cam level section detection
		PI 30	Lower lead cam No. 2 level section detection
		PI 31	Upper bin shift clock detection
		PI 32	Lower bin shift clock detection
		PI 33	Upper bin guide bar home position detection
		PI 34	Lower bin guide bar home position detection
		PI 35	Stacker unit UP position detection
		PI 36	Stacker unit home position detection
		PI 37	Stacker DOWN position detection
		PI 38	Stacker lower limit detection
		PI 47	Stacker unit shift clock detection

Table 5-302

COPYRIGHT © 1997 CANON INC.

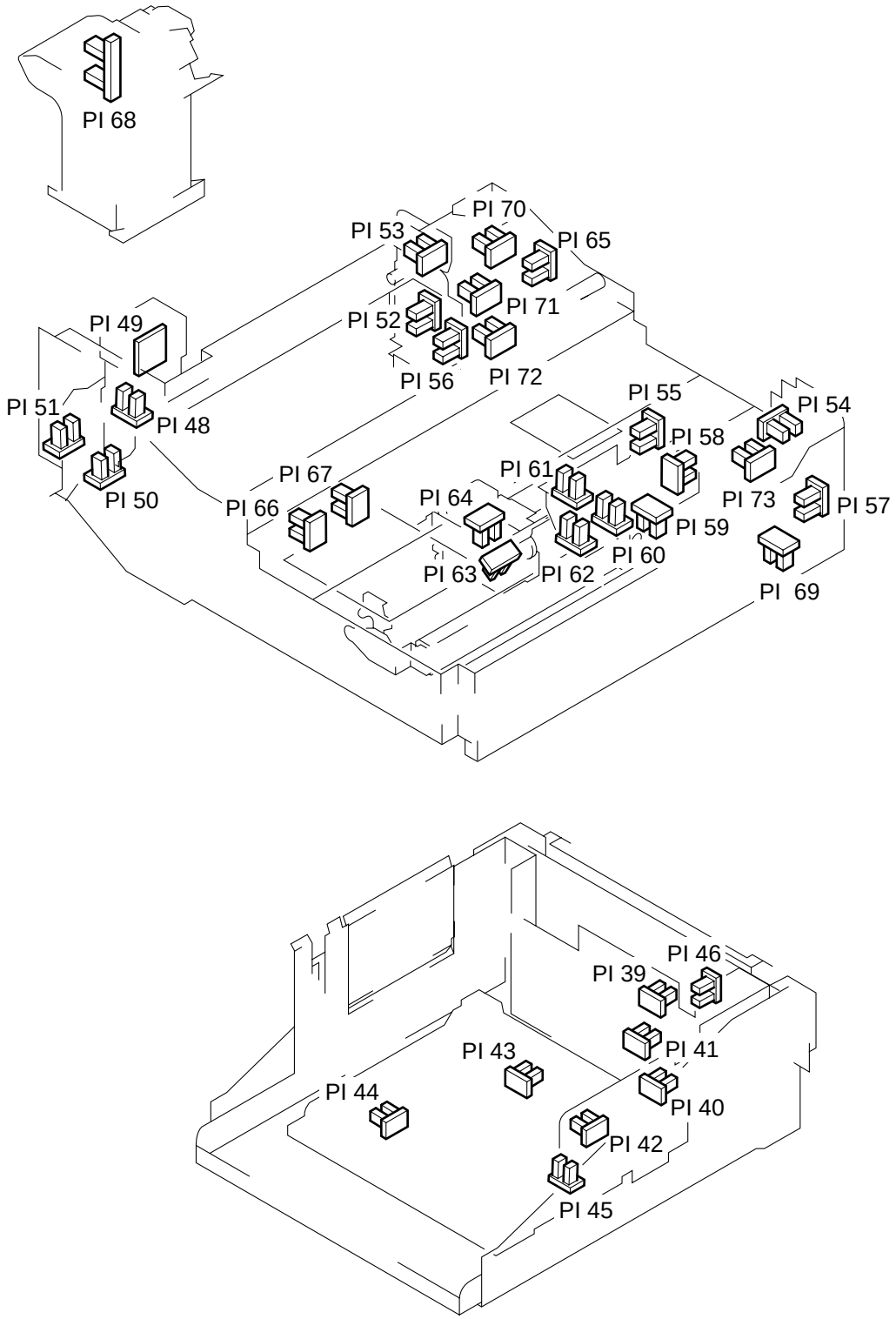

Figure 5-303

COPYRIGHT © 1997 CANON INC.

Symbol	Name	Notation	Description
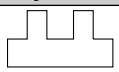	Photointer-rupter	PI 39	Lift wall UP position detection
		PI 40	Lift wall DOWN position detection
		PI 41	Stacker SET detection
		PI 42	Stacker tray upper limit detection
		PI 43	Stacker tray lower limit detection
		PI 44	Stacker tray paper detection
		PI 45	Stacker tray shift clock detection A
		PI 46	Leading edge stopper home position detection
		PI 48	Side gripper clasping home position detection
		PI 49	Side gripper paper detection
		PI 50	Side gripper left/right shift home position detection
		PI 51	Side gripper motor error detection
		PI 52	Bin rear end wall OPEN position detection
		PI 53	Bin rear end wall CLOSE position detection
		PI 54	Front gripper left/right shift clock detection
		PI 55	Front gripper left/right shift home position detection
		PI 56	Front gripper left/right shift left limit detection
		PI 57	Front gripper left/right shift right limit detection
		PI 58	Front gripper left/right shift safety detection
		PI 59	Front gripper front/rear shift clock detection
		PI 60	Front gripper front/rear shift home position detection
		PI 61	Front gripper front/rear shift front limit detection
		PI 62	Front gripper front/rear shift safety detection
		PI 63	Front gripper clasping home position detection
		PI 64	Front gripper paper detection
		PI 65	Stapler front/rear shift clock detection
		PI 66	Stapler front/rear shift home position detection
		PI 67	Front gripper shift enable detection
		PI 68	Stapler leading edge detection
		PI 69	Stack processing unit shift clock detection
		PI 70	Stack processing unit home position detection
		PI 71	Stack processing unit home position detection
		PI 72	Stack processing unit lower limit detection
		PI 73	Stacker unit NEAR detection

Table 5-303

COPYRIGHT © 1997 CANON INC.

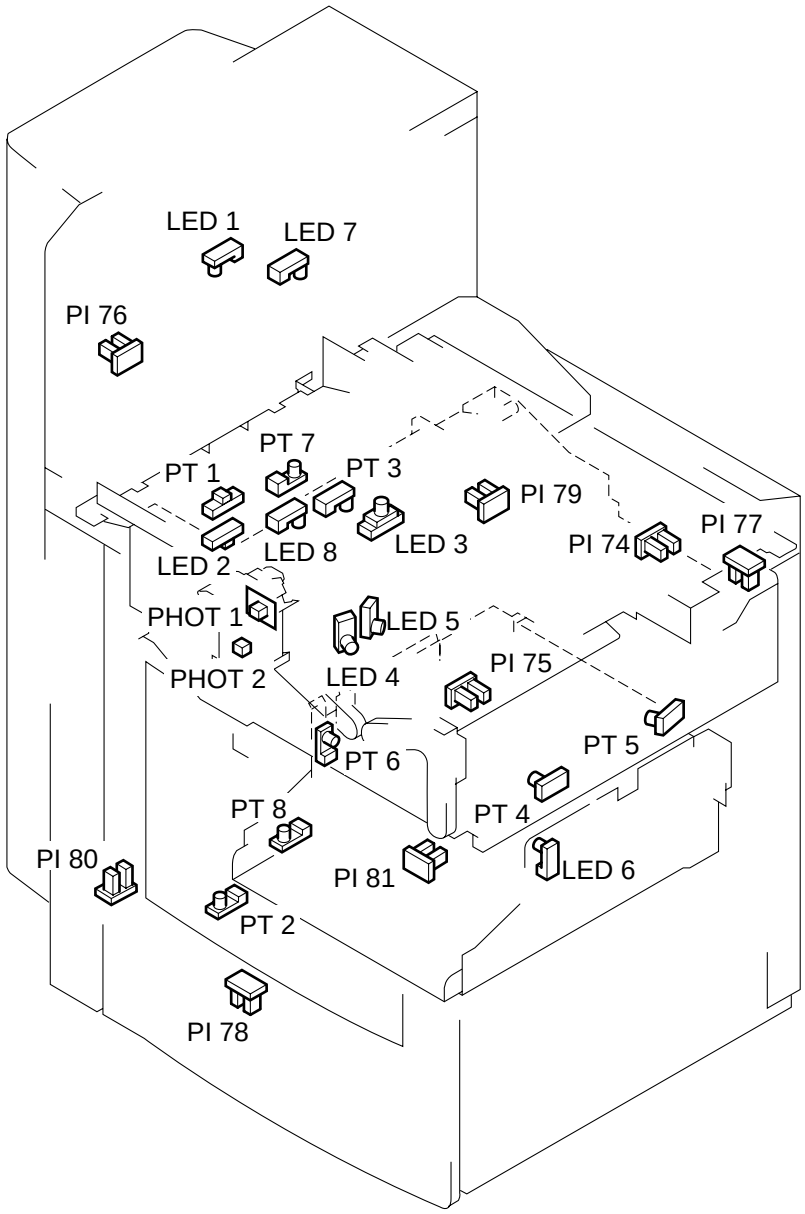

Figure 5-304

COPYRIGHT © 1997 CANON INC.

Symbol	Name	Notation	Description
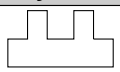	Photointer-rupter	PI 74	Upper cover detection 1
		PI 75	Upper cover detection 2
		PI 76	Bin cover detection 1
		PI 77	Front cover detection
		PI 78	Screen detection
		PI 79	Stack processing unit DOWN position detection
		PI 80	Access cover open/close detection
		PI 81	Stacker tray shift clock detection B
		PHOT1	Stapler home position sensor
		PHOT2	Staple sensor
		LED1/ PT1	Upper bin paper detection
		LED2/ PT2	Lower bin paper detection
		LED3/ PT3	Edge feeding detection
		LED4/ PT4	Paper surface 1 detection
		LED5/ PT5	Paper surface 2 detection
		LED6/ PT6	Stack detection
		LED7/ PT7	Upper bin outside paper detection
		LED8/ PT8	Lower bin outside paper detection

Table 5-304

COPYRIGHT © 1997 CANON INC.

B. Motors, Clutches, Solenoids, and Brakes

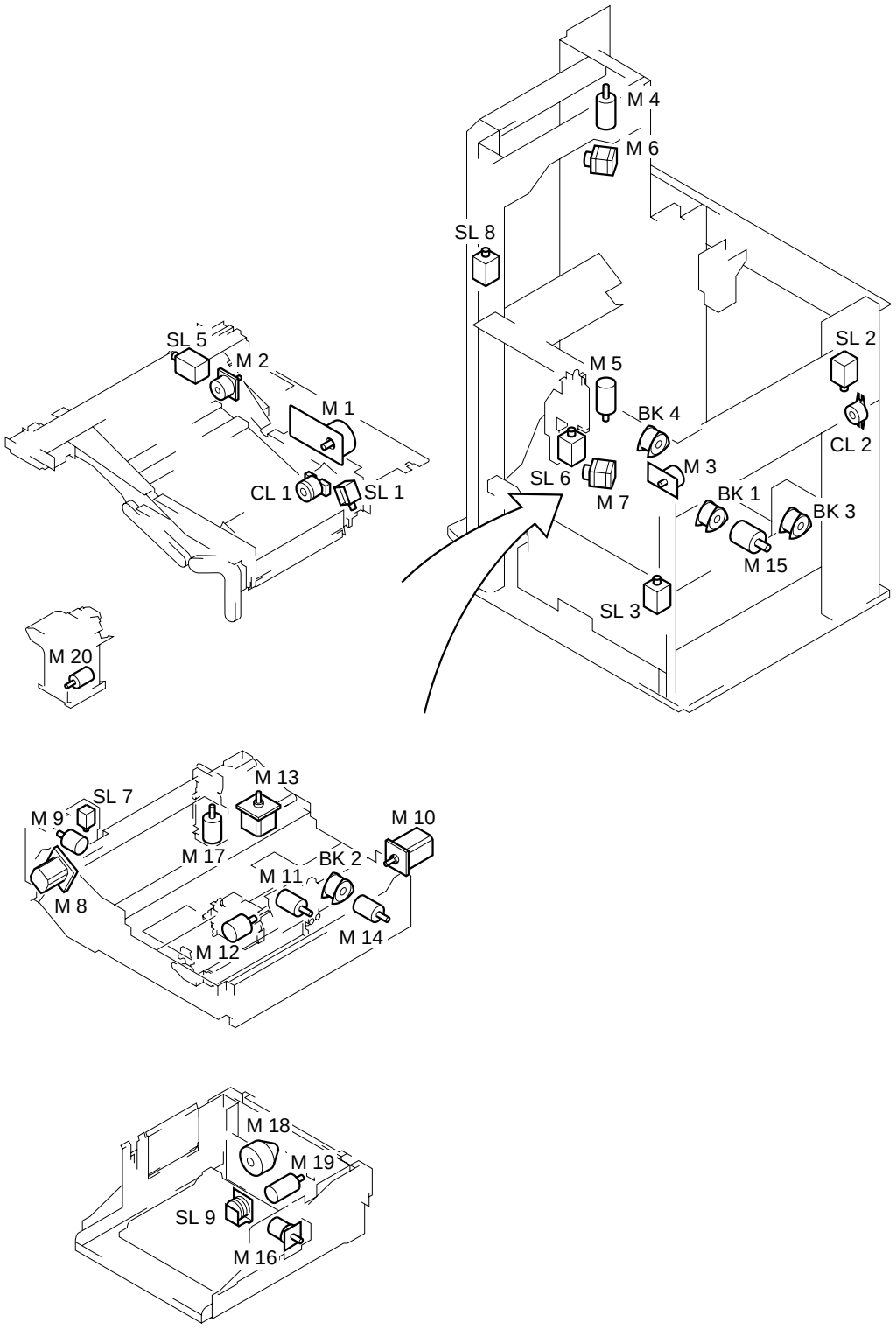

Figure 5-305

COPYRIGHT © 1997 CANON INC.

Symbol	Name	Notation	Description
M	Motor	M1	Common path feeder motor
		M2	Upper path feeder motor
		M3	Lower path feeder motor
		M4	Upper bin shift motor
		M5	Lower bin shift motor
		M6	Upper bin guide bar motor
		M7	Lower bin guide bar motor
		M8	Side gripper left/right shift motor
		M9	Side gripper grip motor
		M10	Front gripper left/right shift motor
		M11	Front gripper front/rear shift motor
		M12	Front gripper grip motor
		M13	Stapler front/rear shift motor
		M14	Stacker processing unit shift motor
		M15	Stacker unit shift motor
		M16	Stacker tray shift motor
		M17	Bin rear end wall open/close motor
		M18	Leading edge stopper motor
		M19	Lift wall shift motor
		M20	Stapler motor
CL	Clutch	CL1	Upper path roller clutch
		CL2	Lower path roller clutch
SL	Solenoid	SL1	Non-sort path switching solenoid
		SL2	Path switching solenoid
		SL3	Access door solenoid
		SL5	Upper paddle solenoid
		SL6	Lower paddle solenoid
		SL7	De-curling solenoid
		SL8	Bin cover locking solenoid
		SL9	Stacker tray retaining solenoid
BK	Brake	BK1	Stacker unit shift brake
		BK2	Stack processing unit shift brake 1
		BK3	Stack processing unit shift brake 2
		BK4	Stacker unit shift brake 2

Table 5-305

COPYRIGHT © 1997 CANON INC.

C. Switches and Lamps

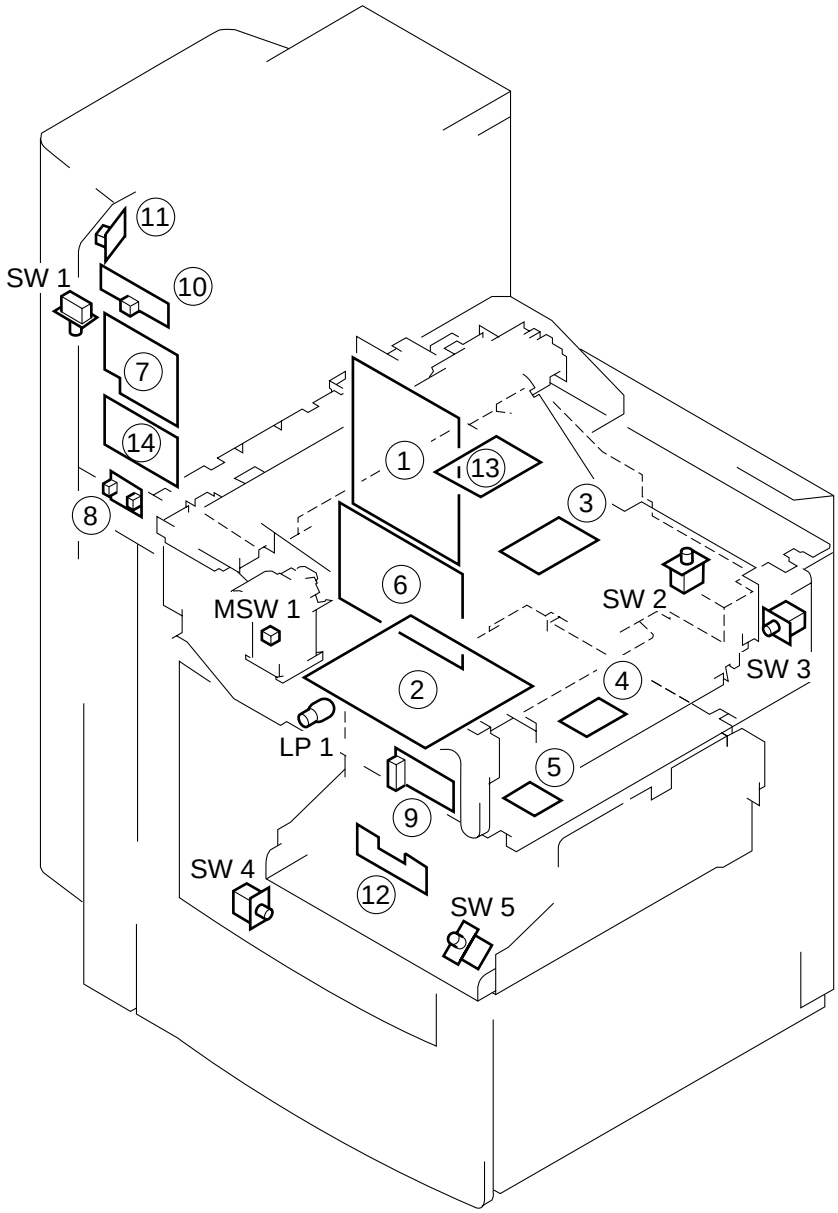

Figure 5-306

COPYRIGHT © 1997 CANON INC.

Symbol	Name	Notation	Description
	Lamp	LP1	Lamp 1
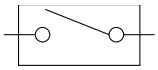	Microswitch	SW1 SW2 SW3 SW4 SW5 MSW1	Bin cover switch Upper cover switch Front cover switch Access door switch Emergency stop button Interlocking switch

Table 5-306 a

Ref.	Name
①	Finisher controller PCB
②	Stack processing unit driver PCB
③	Stack processing unit driver relay PCB 1
④	Stack processing unit driver relay PCB 2
⑤	Stacker tray relay PCB
⑥	Power supply PCB
⑦	LCD controller PCB
⑧	Back light power supply PCB
⑨	Switch PCB
⑩	Copy end indicator PCB
⑪	LCD volume PCB
⑫	Stacker unit status indicator PCB
⑬	Upper path feeder motor controller PCB
⑭	LCD unit

Table 5-306 b

COPYRIGHT © 1997 CANON INC.

D. Paper Folding Unit-A1

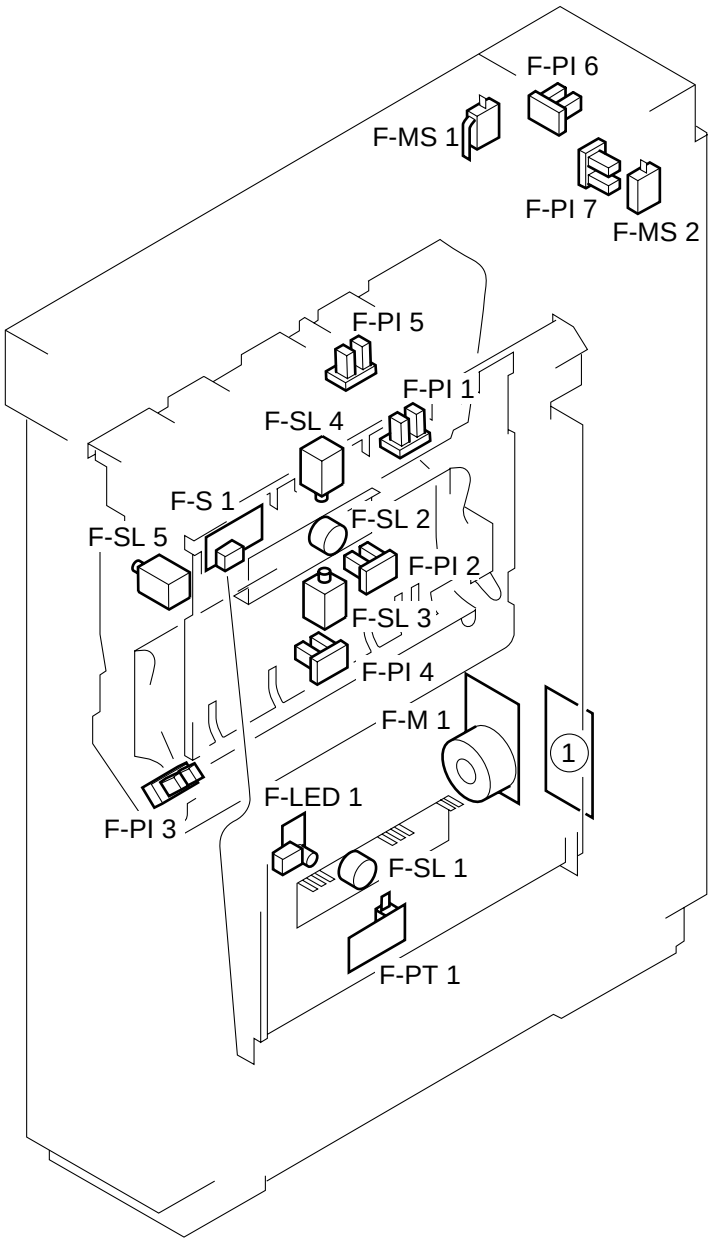

Figure 5-307

COPYRIGHT © 1997 CANON INC.

Symbol	Name	Notation	Description
	Motor	F-FM1	Folder motor
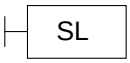	Solenoid	F-SL1 F-SL2 F-SL3 F-SL4 F-SL5	B4 Z-folding No. 1 stopper solenoid B4 Z-folding No. 2 stopper solenoid Locking solenoid Releasing solenoid Inlet solenoid
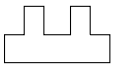	Photointer-rupter	F-PI1 F-PI2 F-PI3 F-PI4 F-PI5 F-PI6 F-PI7 F-S1 F-LED1 F-PT1	Feeding path No. 1 paper detection Folding path residual paper detection 1 Folding path residual paper detection 2 Folding path residual paper detection 3 Level section path residual paper detection Upper cover open/closed detection Folder SET detection Feeding path No. 2 paper detection Feeding path No. 3 paper detection Feeding path No. 3 paper detection
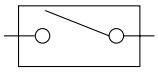	Switch	MS1 MS2	Upper cover open/close switch Folder SET switch
	Folder driver PCB	①	Paper folding unit drive

Table 5-307

COPYRIGHT © 1997 CANON INC.

E. Variable Resistors (VR), Light-Emitting Diodes (LED), and Check Pins by PCB

Of the LEDs and check pins used in the machine, those needed in the field are discussed.

Caution:

Do not touch any check pins that are not found herein. They are intended for use in the factory, and must be adjusted to high accuracy requiring special tools and instruments.

COPYRIGHT © 1997 CANON INC.

1. Finisher Controller PCB

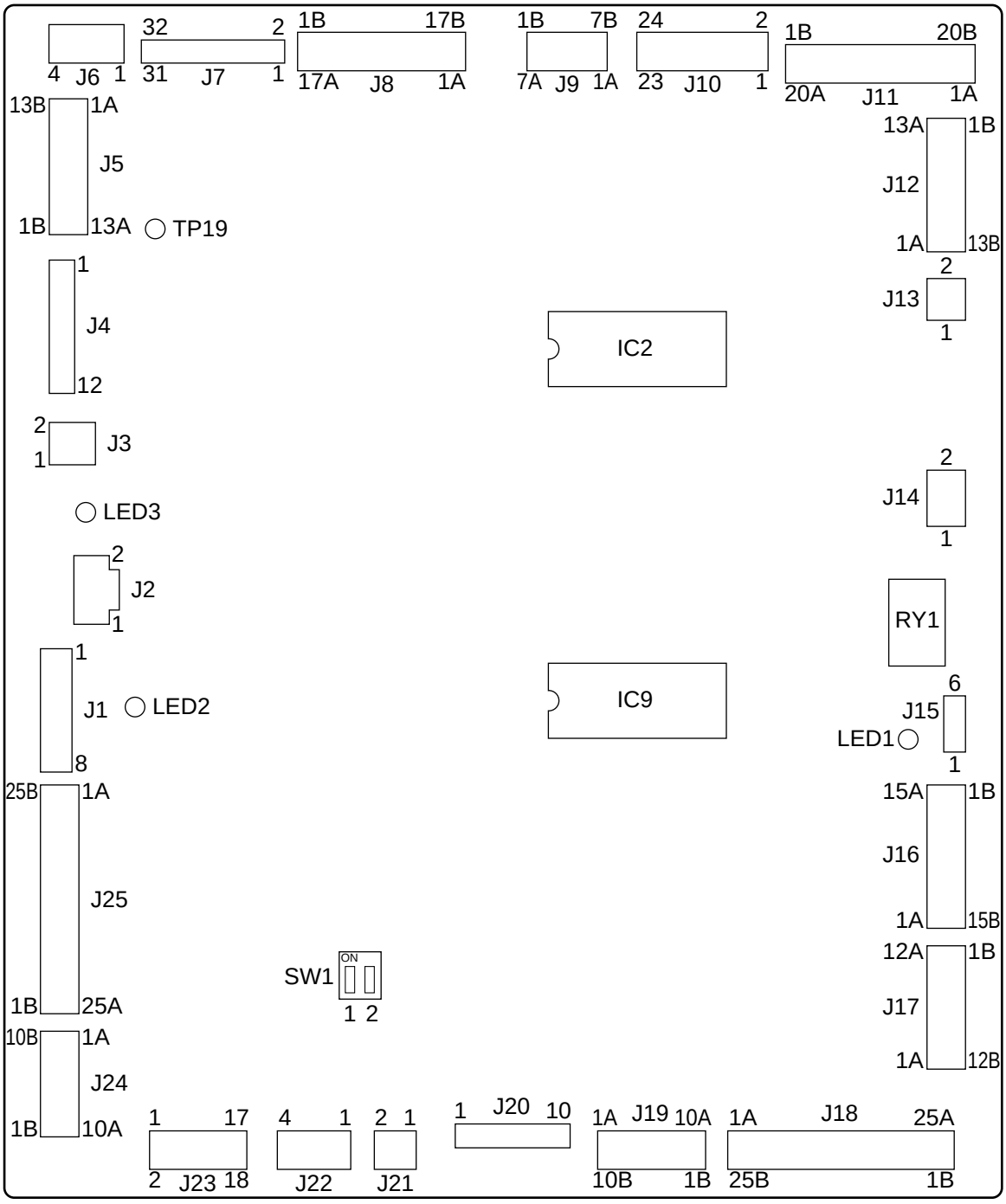

Figure 5-308

Functions of LEDs

The LEDs on the finisher controller PCB are used to indicate the status of power supplied to the finisher's loads.

LED	ON	OFF	Remarks
LED1	• The finisher is connected to the copier, and the REMOTE signal from the copier is received. (The relay RY1 is ON.)	• The REMOTE signal from the copier is not received.	• In response to the REMOTE signal, the finisher turns on the DC power supply PCB.
LED2	• The power (+24 V) to all loads of the feeding system except the common feeder motor is being supplied.	• The power (+24 V) to all loads of the feeding system except the common feeder motor is not being supplied.	• When OFF, the finisher's operation mode is in emergency mode.
LED3	• The power for the loads of the stacker unit and the power (+24 VP) for the loads of the stack processing unit are being supplied.	• The power for the loads of the stacker unit and the power (+24 VP) for the loads of the stack processing unit are not being supplied.	

COPYRIGHT © 1997 CANON INC.

2. Stack Processing Unit Driver PCB

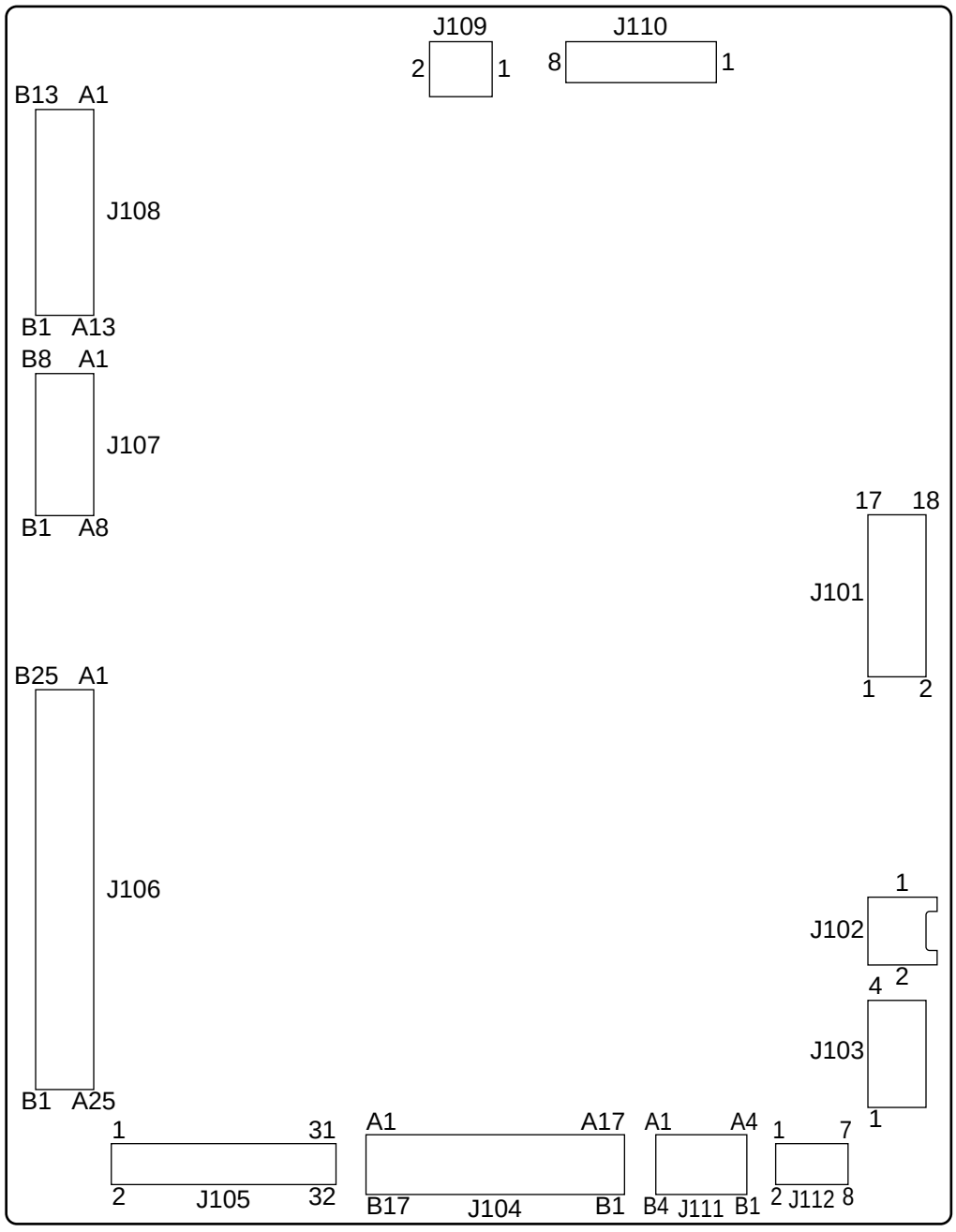

Figure 5-309

3. LCD Controller PCB

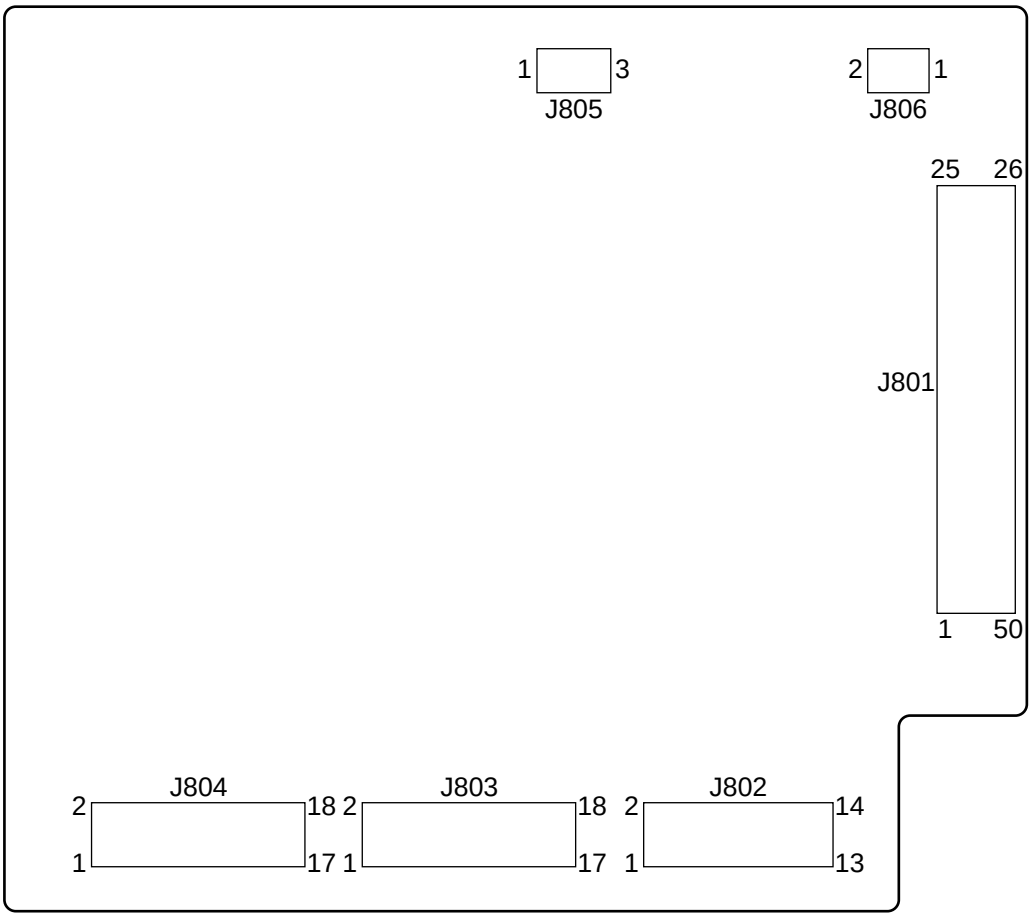

Figure 5-310

4. Switch PCB

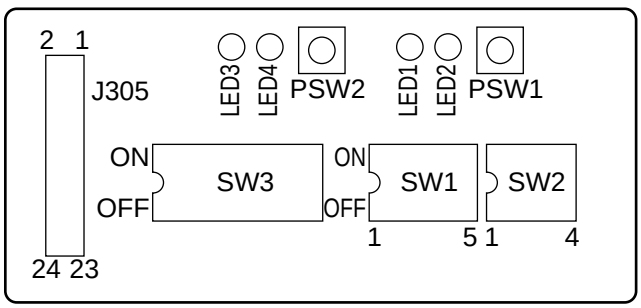

Figure 5-311

COPYRIGHT © 1997 CANON INC.

Functions of LEDs

The LEDs on the switch PCB indicate the status of the two CPUs (IC1, IC8) of the finisher.

CPU	LED	ON	Flashing	OFF
IC1	LED1	—	• Normal (flashes at about 1-sec intervals) • Jam (between copy slot and bin; flashes at about 0.3-sec intervals)	• Power OFF or IC1 error.
	LED2	• Any of the doors is open. Stacker set (PI41) Upper cover (PI74, PI75) Bin cover (PI76) Front door (PI77) Screen (PI78) Access cover Interlock switch (PI80)	—	• Power OFF, or • All doors are closed.
IC8	LED3	• IC8 error	• Normal (flashes at about 1-sec intervals) • Jam (between bin and stack tray; flashes at about 0.3-sec intervals)	• Power OFF or IC8 error.
	LED4	• An error has occurred and emergency mode has turned on.	• Error (flashes at about 0.3-sec intervals)	• Power OFF, or • Normal

COPYRIGHT © 1997 CANON INC.

Sw1 and Sw2 Configuration

Mode	SW1	SW2	Description
Common feeding operation	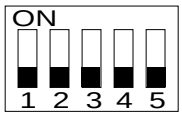	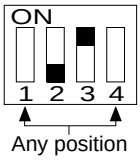	• Rotates the common feeding motor (M1).
Folding feeding operation	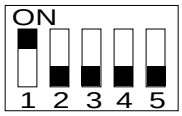	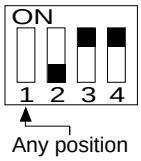	• Rotates the folder motor (FM1) of the paper folding unit.
Upper feeding operation	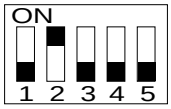		• Turns on the upper path roller clutch (CL1), and rotates the common feeding motor (M1).
Lower feeding operation	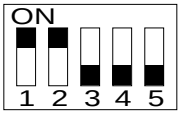	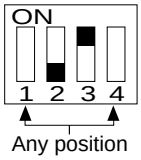	• Turns on the lower path roller clutch (CL2), and rotates the common feeding motor (M1).
Common feeding operation (turning on both CL1 and CL2)	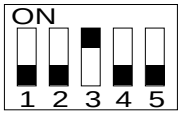	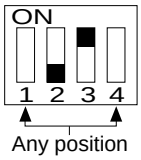	• Turns on both upper path roller clutch (CL1) and lower path roller clutch (CL2), and rotates the common feeding motor (M1).
Upper module feeding operation	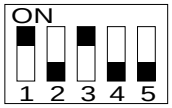	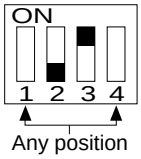	• Turns on the upper path roller clutch (CL1), and rotates the common feeding motor (M1). • Rotates the upper path feeding motor (M2).
Lower module feeding operation	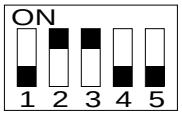	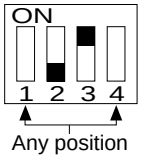	• Turns on the lower path roller clutch (CL2), and rotates the common feeding motor (M1)). • Rotates the lower path feeding motor (M3).
Full feeding operation.	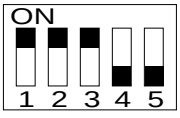	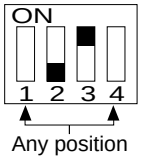	• Turns on both upper path roller clutch (CL1) and lower path roller clutch (CL2), and rotates the common feeding motor (M1). • Rotates the upper path feeding motor (m2). • Rotates the lower path feeding motor (M3).

Table 5-308a

COPYRIGHT © 1997 CANON INC.

Mode	SW1	SW2	Description
Solenoid operation 1	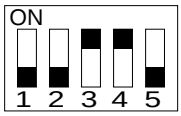	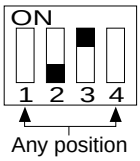	• Each press on the push switch (PSW1) turns on and off the following solenoids inside the finisher in sequence: non-sort path switching solenoid (SL1), path switching solenoid (SL2), upper paddle solenoid (SL5), lower paddle solenoid (SL6), bin cover releasing solenoid (SL8)
Solenoid operation 2	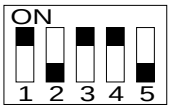	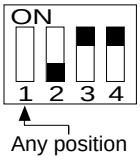	• Each press on the push switch (PSW1) turns on and off the following solenoids inside the paper folding unit in sequence: inlet solenoid (SL5), B4 Z-folding No. 1 stopper solenoid (SL1), B4 Z-folding No. 2 stopper solenoid (SL2), releasing solenoid (SL4), locking solenoid (SL3)
Top bin module ascent operation	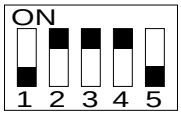	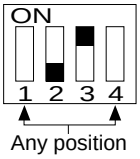	• Each press on the push switch (PSW1) moves up the top bin module by a single step.
Top bin module descent operation	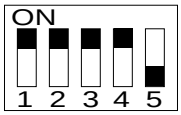	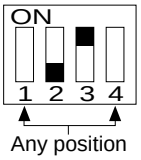	• Each press on the push switch (PSW1) moves down the top bin module by a single step.
Bottom bin module ascent operation	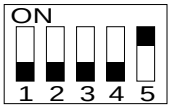	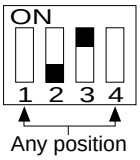	• Each press on the push switch (PSW1) move up the bottom bin module by a single step.
Bottom bin module descent operation		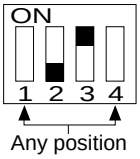	• Each press on the push switch (PSW1) moves down the bottom bin module by a single step.
Copy End indicator check		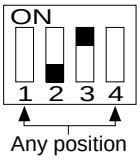	• The Copy End indicator flashes.

Table 5-308b

COPYRIGHT © 1997 CANON INC.

Mode	SW1	SW2	Description
Upper bin module bar movement range adjustment (NEAR direction for A4)	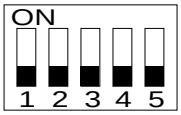	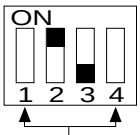	For details, see p. 5-26.
Upper bin module bar movement range adjustment (AWAY direction for A)	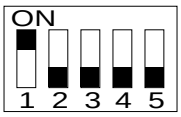	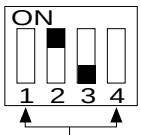	For details, see p. 5-26.
Lower bin module guide cover movement range adjustment (NEAR direction for A4)	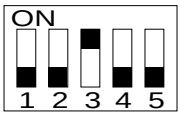	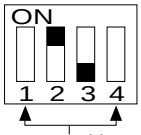	For details, see p. 5-29.
Lower bin module guide cover movement range adjustment (AWAY direction for A4)	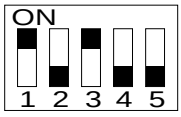		For details, see p. 5-29.
Upper bin module guide bar movement range registration (for A4)	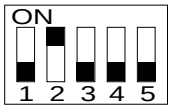		For details, see p. 5-26.
Lower bin module guide bar movement range registration (for A4)	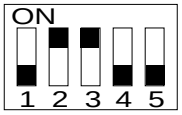	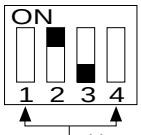	For details, see p. 5-29.
Upper bin module guide bar movement range check (for A4)	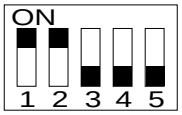	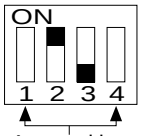	For details, see p. 5-32.
Lower bin module guide bar movement range check (for A4)	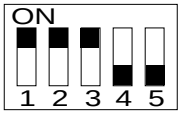	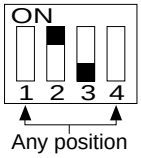	For details, see p. 5-32.

Table 5-308c

COPYRIGHT © 1997 CANON INC.

Mode	SW1	SW2	Description
Upper bin module guide bar movement range adjustment (NEAR direction for LTR)	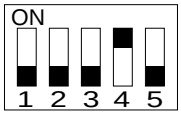	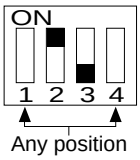	For details, see p. 5-26.
Upper bin module guide bar movement range adjustment (AWAY direction for LTR)		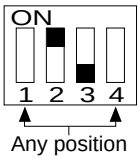	For details, see p. 5-26.
Lower bin module guide bar movement range adjustment (NEAR direction for LTR)		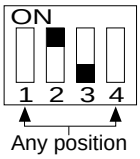	For details, see p. 5-29.
Lower bin module guide bar movement range adjustment (AWAY direction for LTR)		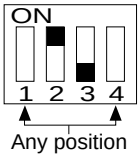	For details, see p. 5-29.
Upper bin module guide movement range registration (for LTR)	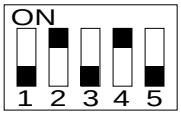	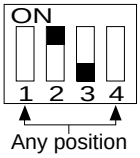	For details, see p. 5-26.
Lower bin module guide bar movement range registration (for LTR)	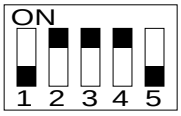	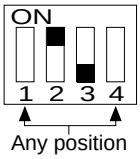	For details, see p. 5-29.
Upper bin module guide bar movement range check (for LTR)	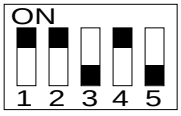	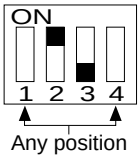	For details, see p. 5-32.
Lower bin module guide bar movement range check (for LTR)	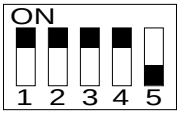	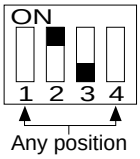	For details, see p. 5-32.

Table 5-308d

COPYRIGHT © 1997 CANON INC.

Item	SW3 setting	Description
Normal copying	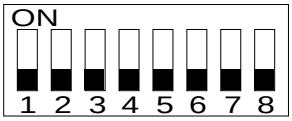	• When all bits are set to OFF, normal copying mode turns on.
Side gripper left/right shift operation	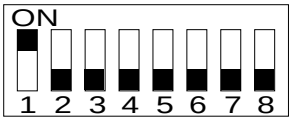	If the side gripper is at home position, • It moves to clasping position (cannot be stopped in the middle). If the side gripper is not at home position, • It moves to home position.
Side gripper clasping operation	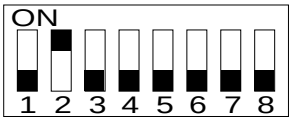	• The side gripper opens (cannot be stopped in the middle).
	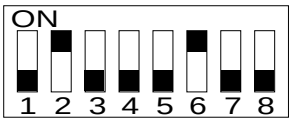	• The side gripper closes (cannot be stopped in the middle).
Front gripper left/right shift operation	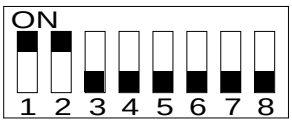	If the front gripper is at home position, • It moves to the point of reception (cannot be stopped in the middle). If the front gripper is at the right limit, • It moves to home position (cannot be stopped in the middle). If the front gripper is at the left limit, • It moves to the point of reception for A4 stacking (cannot be stopped in the middle). If the front gripper is at a position other than the above, • It moves to the right limit.
Front gripper front/rear shift operation	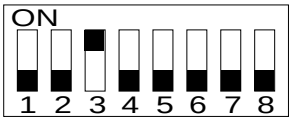	If the front gripper is at home position, • It moves to the front sensor. If the front gripper is not at home position, • It moves to home position.
Front gripper clasping operation	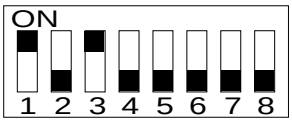	• The front gripper opens (cannot be stopped in the middle).
	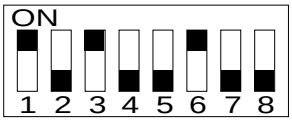	• The front gripper closes (cannot be stopped in the middle).
Stapler front/rear shift operation	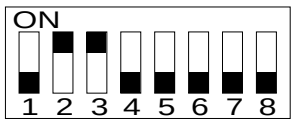	If the stapler is at home position, • It moves to the LTR2 rear position (cannot be stopped in the middle). If the stapler is not at home position, • It moves to home position.

Table 5-309a

COPYRIGHT © 1997 CANON INC.

Item	SW3 setting	Description
Stack processing unit up/down operation	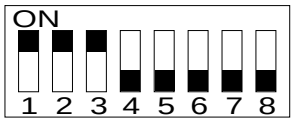	• It moves to home position.
	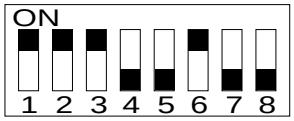	• It moves to DOWN position.
Stack unit up/down operation mode		• It moves to UP position 1.
		• It moves to DOWN position.
Stacker tray up/down operation	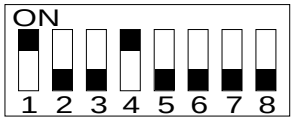	If the stacker tray is at the lower limit, • It moves to the point of paper surface detection or to UP position. If the stacker tray is not at the lower limit, • It moves to DOWN position.
Stapling operation	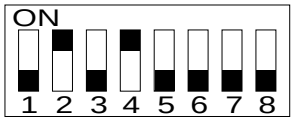	• Stapling is executed.
Bin rear end wall open/close operation	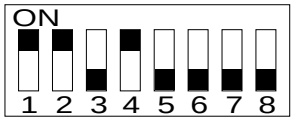	• The bin rear end wall closes (cannot be stopped in the middle).
		• The bin rear end wall opens (cannot be stopped in the middle).
Leading edge stopper operation mode	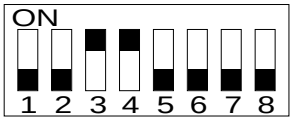	If the leading edge stopper is at home position, • It moves to a point suited to B5 size. If the leading edge stopper is not at home position, • It moves to home position.

Table 5-309b

COPYRIGHT © 1997 CANON INC.

Item	SW3 setting	Description
Lift wall up/down operation	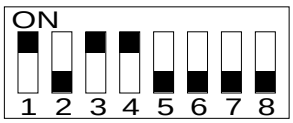	• It moves to home position (cannot be stopped in the middle).
	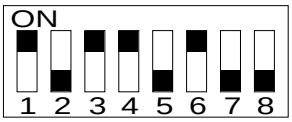	• It moves to UP position (cannot be stopped in the middle).
Stacker solenoid ON	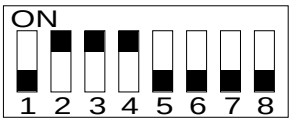	• The stacker solenoid remains on for 1 sec.
Curling solenoid ON	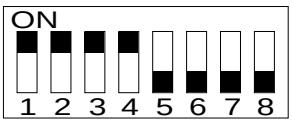	• The curling solenoid remains on for 0.5 sec.
Stack processing unit/stacker unit up/down operation	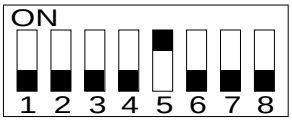	• The stack processing unit moves to UP position, and the stacker unit moves to the point of access.
Indicator test	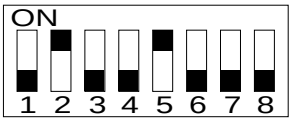	• The stack level LEDs turn on for 0.5 sec in sequence.
Stack processing unit/stacker unit up/down operation		• The stack processing unit and the stacker unit moves to the upper stacking position at the same time.
	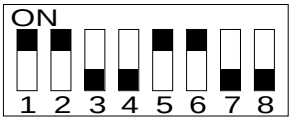	• The stack processing unit and the stacker unit move to the lower stacking position at the same time.
Back-up RAM reset	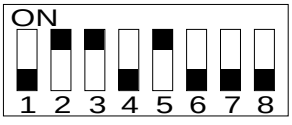	• The back-up RAM is initialized.

Table 5-309c

COPYRIGHT © 1997 CANON INC.

5. Folder Driver PCB

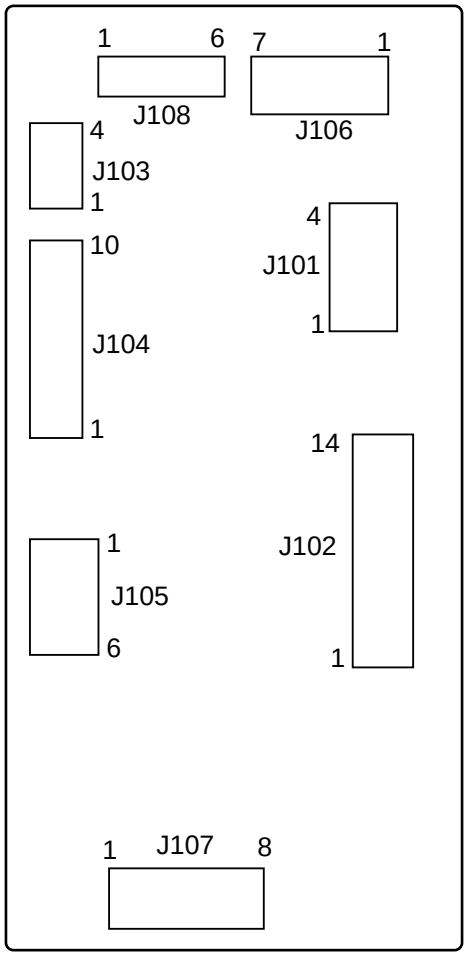

Figure 5-312

IV. SERVICE MODE

A. Outline

The finisher has the following modes:

Mode	Description
Operation check	The finisher may be operated on its own for checking its operation.
Adjustment	The finisher's major parts may be adjusted.
Job mix switch/ stapling position adjustment	• The job mix function may be enabled or disabled. • The stapling position may be adjusted in each direction.
Emergency operation mode disable	The finisher's operation mode may be returned to normal mode.

B. Using Service Mode

1. Operation Check and Adjustment Mode

1) Turn off the copier's power switch.
2) Open the upper cover; then, remove the two screws, and detach the upper cover (front).

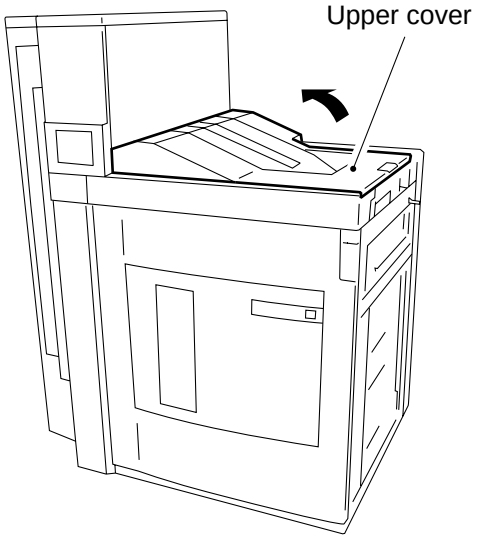

Figure 5-401

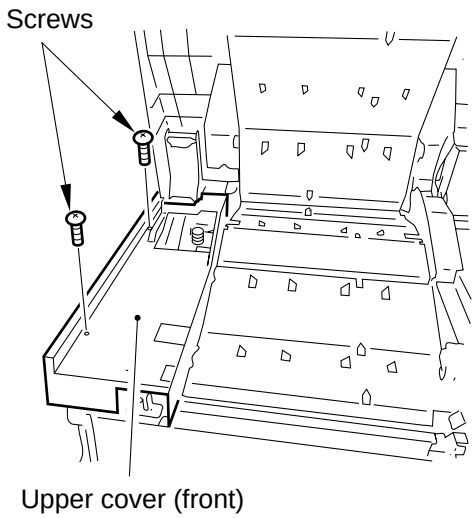

Figure 5-402

COPYRIGHT © 1997 CANON INC.

3) Shift bit 3 of SW2 and bit 1 of SW3 on the switch PCB to ON, and turn on the copier's power switch. (LED1 and LED3 on the switch PCB will flash.)

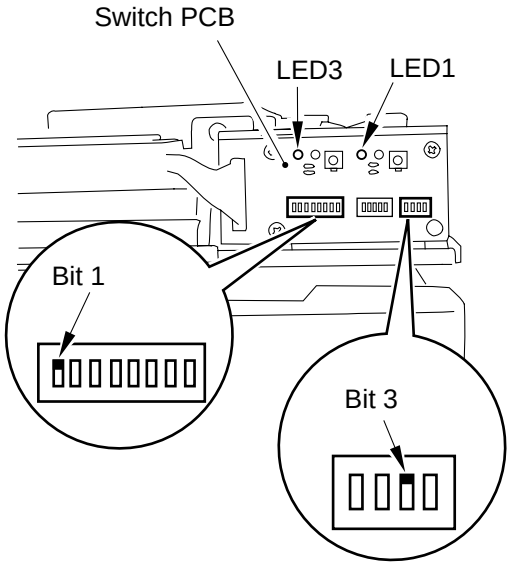

Figure 5-403

4) Set the DIP switch to suit the desired function, and press the appropriate push switch (PSW1 or PSW2).
5) To end service mode, shift bit 3 of SW2 and all bits of SW3 to OFF, and turn off and on the copier's power switch.

2. Job Mix Switch/Stapling Position Adjustment, and Emergency Operation Disable Mode

1) Turn off the copier's power switch.
2) Open the upper cover; then, remove the two screws, and detach the upper cover (front).

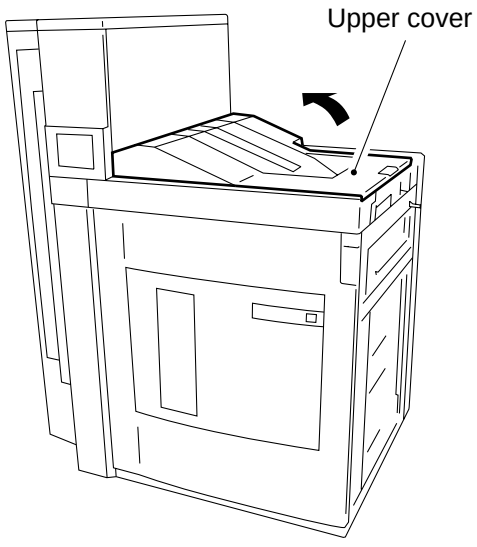

Figure 5-404

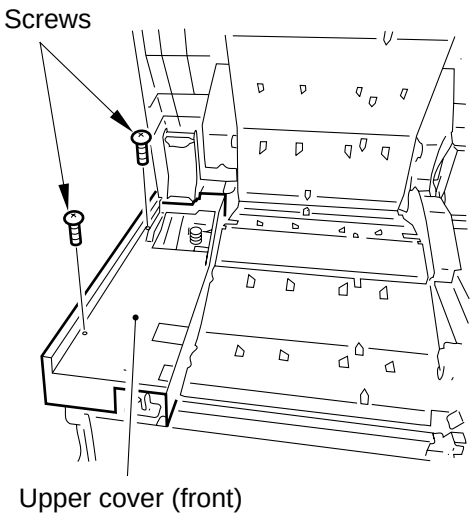

Figure 5-405

3) Shift bit 8 of SW3 on the switch PCB to ON, and turn on the copier's power switch. (The finisher's display will show the Job Mix Switch screen and the Stapling Position Adjustment screen.)

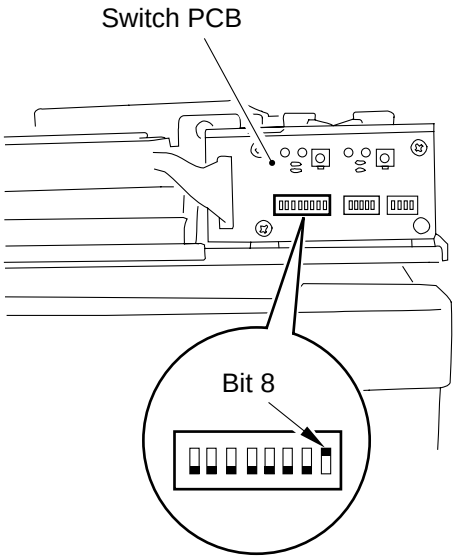

Figure 5-406

4) To end service mode, shift bit 8 of SW3 to OFF, and turn off and then on the copier's power switch. (Be sure to wait at least 1 sec before turn it on.)

COPYRIGHT © 1997 CANON INC.

C. Checking the Operation

1. Sorter Unit (upper feeding assembly, lower feeding assembly, common feeding assembly, upper/lower bin module) and the Paper Folding Unit

The operation of the sorter unit and the paper folding unit may be checked using the DIP switches (SW1, SW2) and the push switch (PSW1).

SW1 is used to check the sorter unit and the paper folding unit, while SW2 is used to specify the presence/absence of the paper folding unit as well as to set SW1 to operation check mode, adjustment mode, or normal operation.

When using SW1, go through the following after performing up to step 4) of 1. “Operation Check Mode and Adjustment Mode” under “Using Service Mode.”

1) Set SW1 and SW2 to suit the desired function.

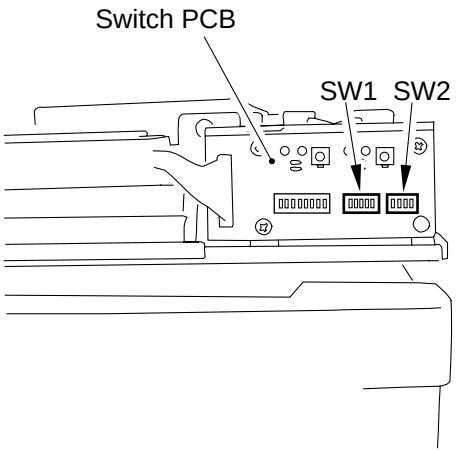

Figure 5-407

2) Press the push switch (PSW1) corresponding to SW1. (Operation will start.)

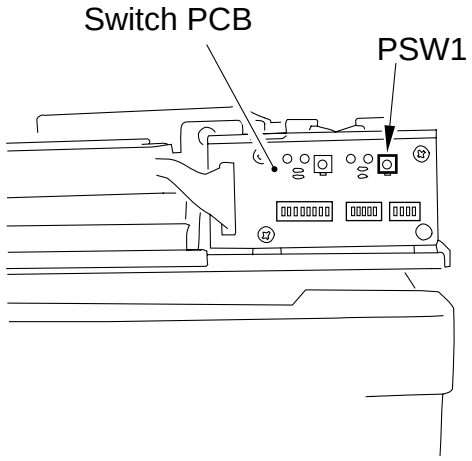

Figure 5-408

3) To stop the operation, press the push switch (PSW1) once again.
4) To use a different function, set SW1 to the desired function, and press the push switch (PSW1) twice to start operation.

Mode	SW1	SW2	Description
Common feeding operation	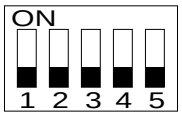	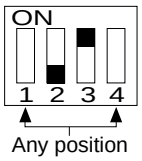	• The common feeder motor (M1) rotates.
Folding feeding operation	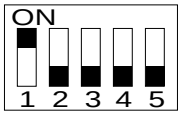	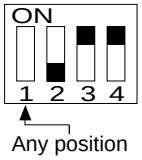	• The folder motor (FM1) of the paper folding unit rotates.
Upper feeding operation	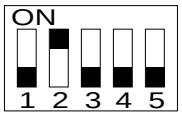	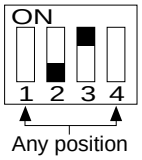	• The upper path roller clutch (CL1) turns on, and the common feeder motor (M1) rotates.
Lower feeding operation	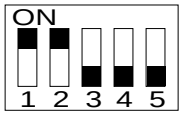	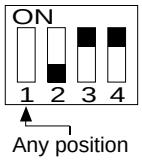	• The lower path roller clutch (CL2) turns on, and the common feeder motor (M1) rotates.

Table 5-401a

COPYRIGHT © 1997 CANON INC.

Mode	SW1	SW2	Description
Common feeding operation (both CL1 and CL2 are on)	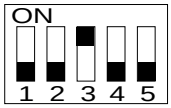	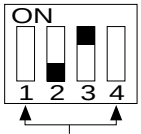	• The upper roller clutch (CL1) and the lower path roller clutch (CL2) turn on, and the common feeder motor (M1) rotates.
Upper module feeding operation	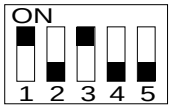	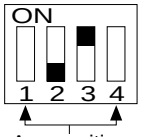	• The upper path roller clutch (CL1) turns on, and the common feeder motor (M1) rotates. • The upper path feeder motor (M2) rotates.
Lower module feeding operation		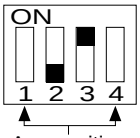	• The lower path roller clutch (CL2) turns on, and the common feeder motor (M1) rotates. • The lower path feeder motor (M3) rotates.
Full feeding operation		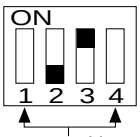	• The upper path roller clutch (CL1) and the lower roller clutch (CL2) turn on, and the common feeder motor (M1) rotates. • The upper path feeder motor (M2) rotates. • The lower path feeder motor (M3) rotates.
Solenoid operation 1	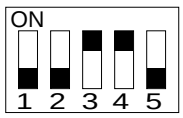	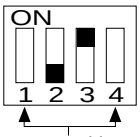	• Each press on the push switch (PSW1) turns on and off the following solenoids of the finisher in sequence: non-sort path switching solenoid (SL1), path switching solenoid (SL2), upper paddle solenoid (SL5), lower paddle solenoid (SL6), bin cover releasing solenoid (SL8).
Solenoid operation 2		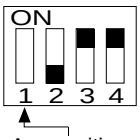	• Each press on the push switch (PSW1) turns on and off the following solenoids of the paper folding unit in sequence: inlet solenoid (SL5), B4 Z-folding No. 1 stopper solenoid (SL1), B4 Z-folding No. 2 stopper solenoid (SL2), releasing solenoid (SL4), locking solenoid (SL3).
Upper bin module up operation		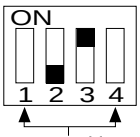	• Each press on the push switch (PSW1) causes the upper bin module to move up for a single bin.

Table 5-401b

COPYRIGHT © 1997 CANON INC.

Mode	SW1	SW2	Description
Upper bin module down operation	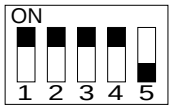	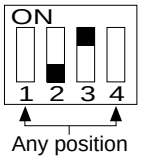	• Each press on the push switch (PS1) causes the upper bin module to move down for a single bin.
Lower bin module up operation	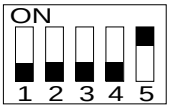	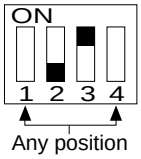	• Each press on the push switch (PSW1) causes the lower bin module to move up for a single bin.
Lower bin module down operation	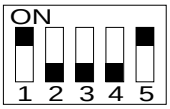	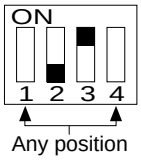	• Each press on the push switch (PSW1) causes the lower bin module to move down for a single bin.
Copy End indicator check operation	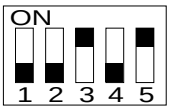	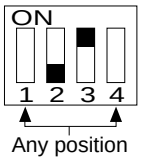	The Copy End indicator flashes.

Table 5-401c

COPYRIGHT © 1997 CANON INC.

2. Finisher Unit (stack processing unit, stacker unit)

To check the operation of the finisher unit, use the DIP switch (SW3) and the push switch (PSW2).

When using SW3, go through the following after performing up to step 4) of 1. “Operation Check Mode and Adjustment Mode” under “Using Service Mode.”

1) Set SW3 to suit the desired function.

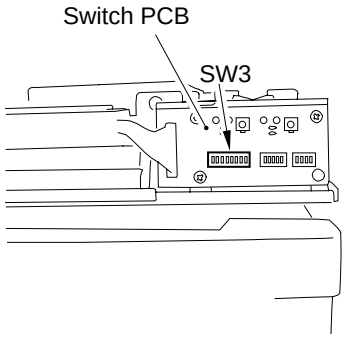

Figure 5-409

2) Press the push switch (PSW2) corresponding to SW3.

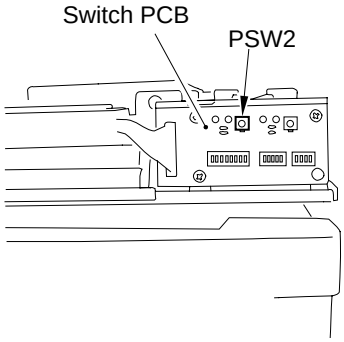

Figure 5-410

3) The operation in question will be executed. (With the exception of a few modes, you may stop most on-going operations by pressing PSW2.)
4) To use a different function, set SW3 to the desired function, and press the push switch (PSW2) twice to start operation.

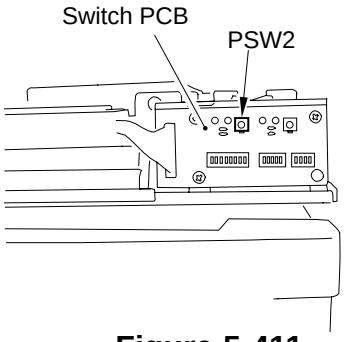

Figure 5-411

Item	SW3 setting	Description
Normal copying		• When all bits are set to OFF, normal copying mode turns on.
Side gripper left/right shift operation	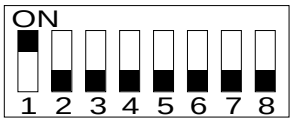	If the side gripper is at home position, • It moves to clasping position (cannot be stopped in the middle). If the side gripper is not at home position, • It moves to home position.
Side gripper clasping operation		• The side gripper opens (cannot be stopped in the middle).
	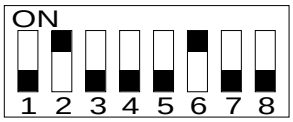	• The side gripper closes (cannot be stopped in the middle).
Front gripper left/right shift operation	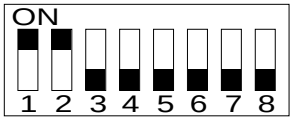	If the front gripper is at home position, • It moves to the point of reception (cannot be stopped in the middle). If the front gripper is at the right limit, • It moves to home position (cannot be stopped in the middle). If the front gripper is at the left limit, • It moves to the point of reception for A4 stacking (cannot be stopped in the middle). If the front gripper is at a position other than the above, • It moves to the right limit.
Front gripper front/rear shift operation	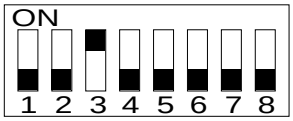	If the front gripper is at home position, • It moves to the front sensor. If the front gripper is not at home position, • It moves to home position.
Front gripper clasping operation	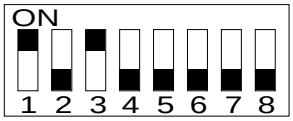	• The front gripper opens (cannot be stopped in the middle).
	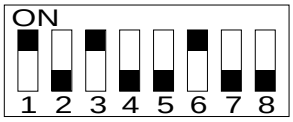	• The front gripper closes (cannot be stopped in the middle).
Stapler front/rear shift operation	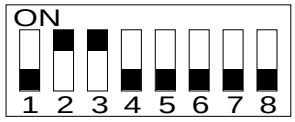	If the stapler is at home position, • It moves to the LTR2 rear position (cannot be stopped in the middle). If the stapler is not at home position, • It moves to home position.

Table 5-402a

COPYRIGHT © 1997 CANON INC.

Item	SW3 setting	Description
Stack processing unit up/down operation	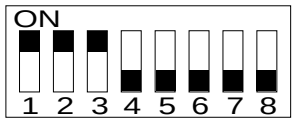	• It moves to home position.
	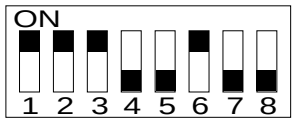	• It moves to DOWN position.
Stack unit up/down operation mode	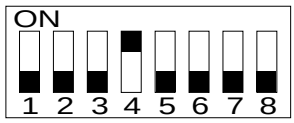	• It moves to UPPER 1 position.
	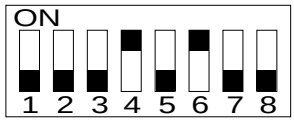	• It moves to DOWN position.
Stacker tray up/down operation	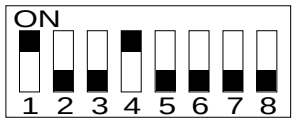	If the stacker tray is at the lower limit, • It moves to the point of paper surface detection or to UP position. If the stacker tray is not at the lower limit, • It moves to DOWN position.
Stapling operation	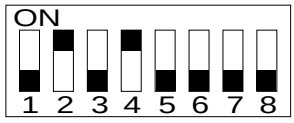	• Stapling is executed.
Bin rear end wall open/close operation		• The bin rear end wall closes (cannot be stopped in the middle).
	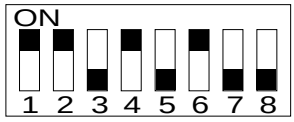	• The bin rear end wall opens (cannot be stopped in the middle).
Leading edge stopper operation mode	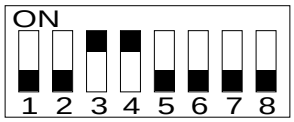	If the leading edge stopper is at home position, • It moves to a point suited to B5 size. If the leading edge stopper is not at home position, • It moves to home position.

Table 5-402b

COPYRIGHT © 1997 CANON INC.

Item	SW3 setting	Description
Lift wall up/down operation	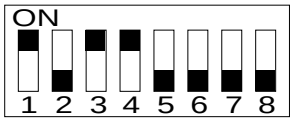	• It moves to home position (cannot be stopped in the middle).
	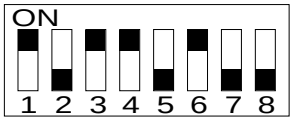	• It moves to UP position (cannot be stopped in the middle).
Stacker solenoid ON	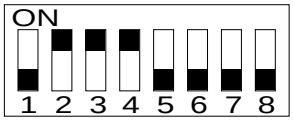	• The stacker solenoid remains on for 1 sec.
Curling solenoid ON	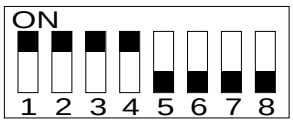	• The curling solenoid remains on for 0.5 sec.
Stack processing unit/stacker unit up/down operation		• The stack processing unit moves to UP position, and the stacker unit moves to the point of access.
Indicator test		• The stack level LEDs turn on for 0.5 sec in sequence.
Stack processing unit/stacker unit up/down operation		• The stack processing unit and the stacker unit moves to the upper stacking position at the same time.
	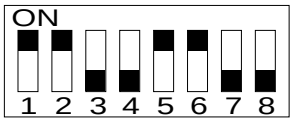	• The stack processing unit and the stacker unit move to the lower stacking position at the same time.
Back-up RAM reset	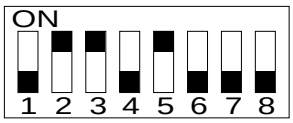	• The back-up RAM is initialized.

Table 5-402c

COPYRIGHT © 1997 CANON INC.

D. Adjustment

1. Outline

The adjustment work consists of the following five items:
a. adjusting the guide bar swing range.
b. checking the guide bar swing range.
c. adjusting the paper face 1/2 sensor sensitivity.
d. checking the sensor sensitivity.

2. Adjusting the Guide Bar Swing Range

Make the following adjustments whenever you have replaced any of the following parts:

- Finisher controller PCB
- Upper bin guide bar home position sensor (PI33)
- Lower bin guide bar home position sensor (PI34)
- Upper bin guide bar
- Lower bin guide bar

Making Adjustments

a. Upper Bin Guide Bar

1) Obtain a sheet of A4 or LTR copy paper free of curling.
   - You will be using the copy paper for adjustment.
2) Open the bin cover, and remove all copies from the upper bins; then, insert the door switch actuator.
3) Turn off the copier's power switch.
4) Open the finisher's upper cover; then, remove the two screws, and detach the upper cover (front).

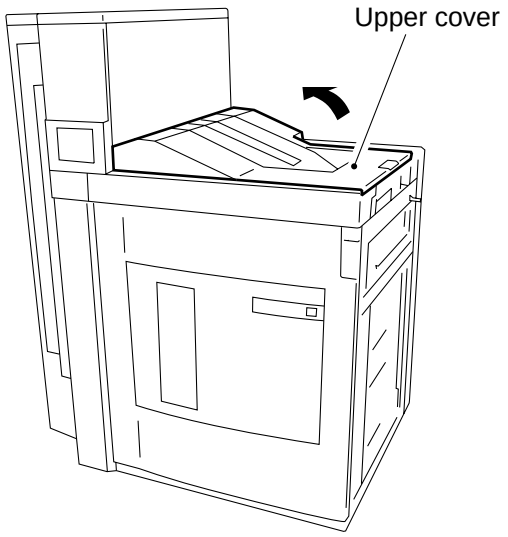

Figure 5-412

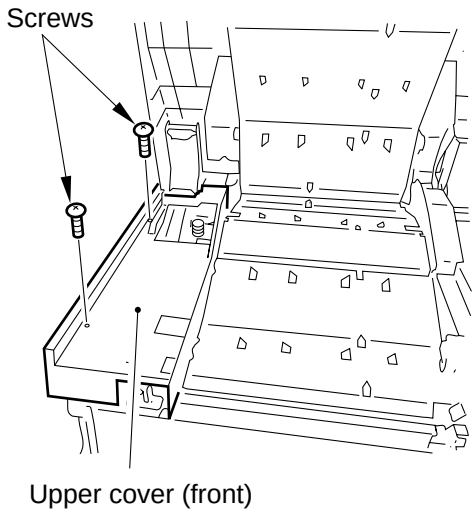

Figure 5-413

5) Shift bit 3 of the DIP switch SW2 and bit 1 of the DIP switch SW3 on the switch PCB to ON; then, turn on the copier's power switch. (LED1 and 3 on the switch PCB will start to flash.)

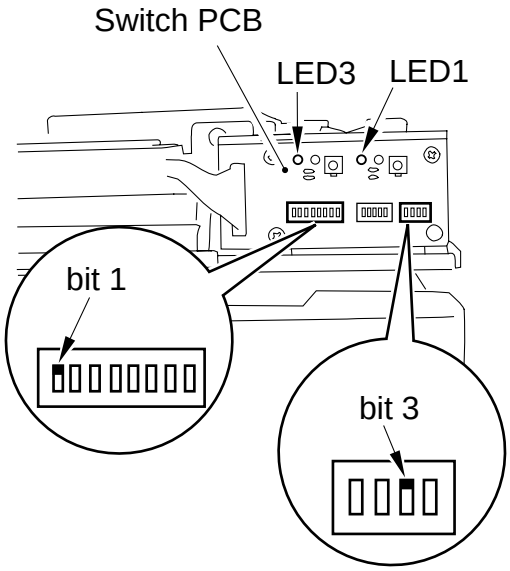

Figure 5-414

6) Set the bits of the DIP switch SW1 and the DIP switch SW2 as shown.
• Take care. You must use different DIP switch settings for different paper sizes.

A4		LTR	
SW1	SW2	SW1	SW2
	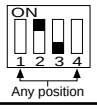	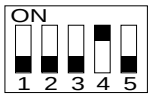	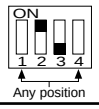

Table 5-403

7) Place the copy paper you have prepared in the topmost bin of the upper bin module, and press the push switch (PSW1) on the switch PCB.
• If the guide bar is not at home position, the guide bar will return to home position.

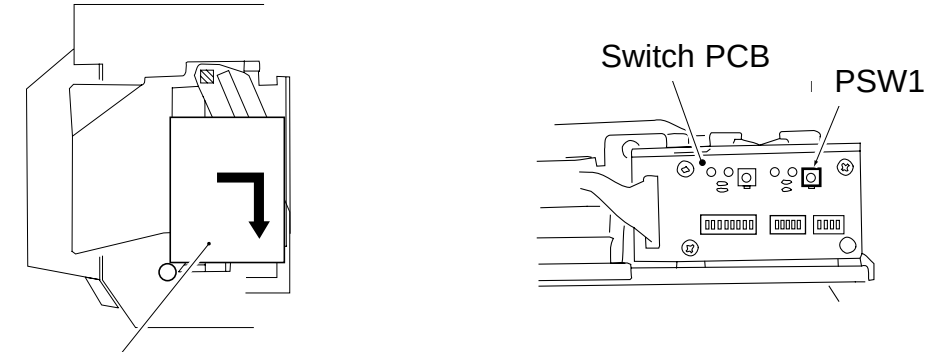

Figure 5-415

COPYRIGHT © 1997 CANON INC.

8) Operate the push switch (PSW1) so that the guide bar is in contact with the edge of the copy paper.

Reference:

The guide bar moves toward the copy paper about 7 mm in response to the first press on the push switch; it then moves toward the copy paper by about 0.3 mm in response to the second and subsequent presses.

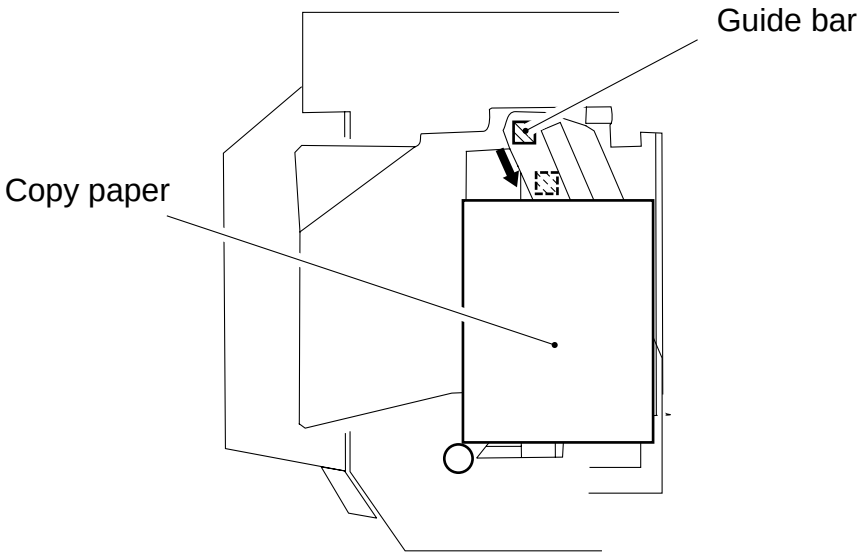

Top view

Figure 5-416

- To move the guide bar away from the copy paper, set the bits of the DIP switches SW1 and SW2 on the switch PCB as follows:

A4		LTR	
SW1	SW2	SW1	SW2
			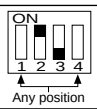

Table 5-404

9) While keeping the condition of step 8), shift bit 2 to ON and press the push switch (PSW1).
   - The guide bar returns to home position.
   - If the adjustment has been correct, LED1 on the switch PCB keeps flashing at the same speed.
   - If the adjustment has been wrong, LED1 on the switch PCB changes its speed of flashing temporarily (for about 3 sec).

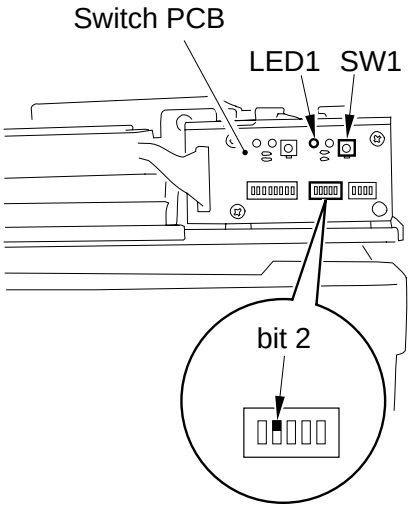

Figure 5-417

b. Lower Bin Guide Bar

1) Obtain a single sheet of LTR copy paper. (Make sure it is free of curling.)
2) Open the bin cover, and remove all copies from the upper bins; then, insert the door switch actuator.
3) Turn off the copier.
4) Open the finisher's upper cover; then, remove the two screws, and remove the upper cover (front).

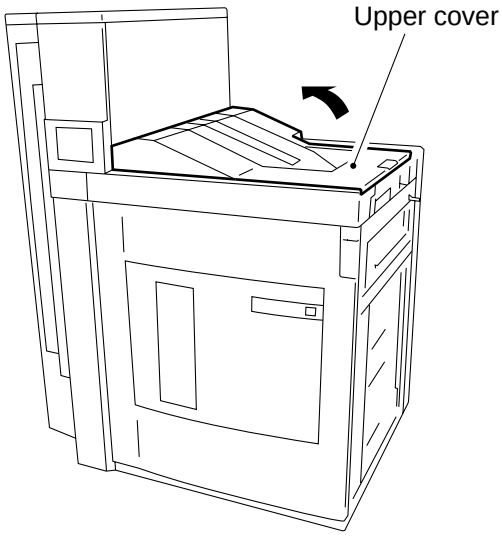

Figure 5-418

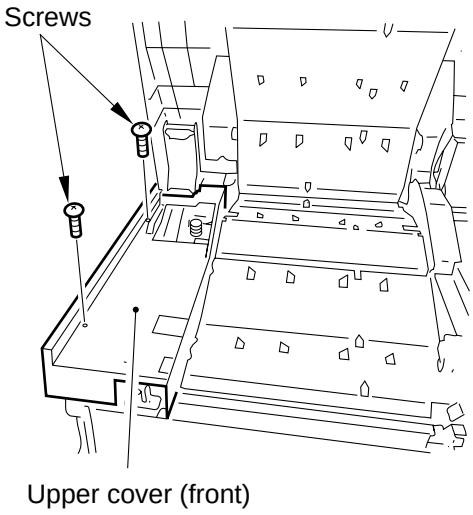

Figure 5-419

COPYRIGHT © 1997 CANON INC.

5) Shift bit 3 of the DIP switch SW2 and bit 1 of the DIP switch SW3 to ON on the switch PCB; then, turn on the copier. (LED1 and LED3 on the switch PCB will start to flash.)

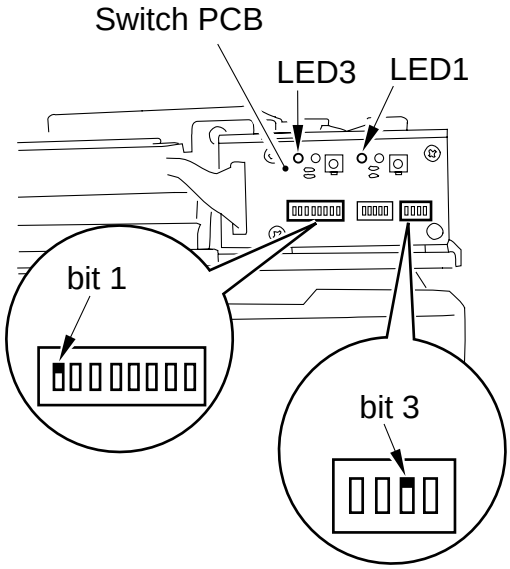

Figure 5-420

6) Sheet the bits on the DIP switch SW1 and DIP switch SW2 on the switch PCB as shown.
   • The settings differ depending on the size of the copy paper used for adjustment.

A4		LTR	
SW1	SW2	SW1	SW2
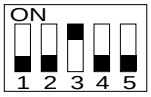	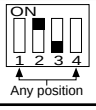	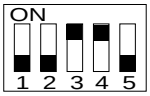	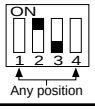

Table 5-405

7) Place copy paper in the topmost bin of the upper bin module, and press the push switch SW1 on the switch PCB.
   • If the guide bar is not at home position, it will return to home position.

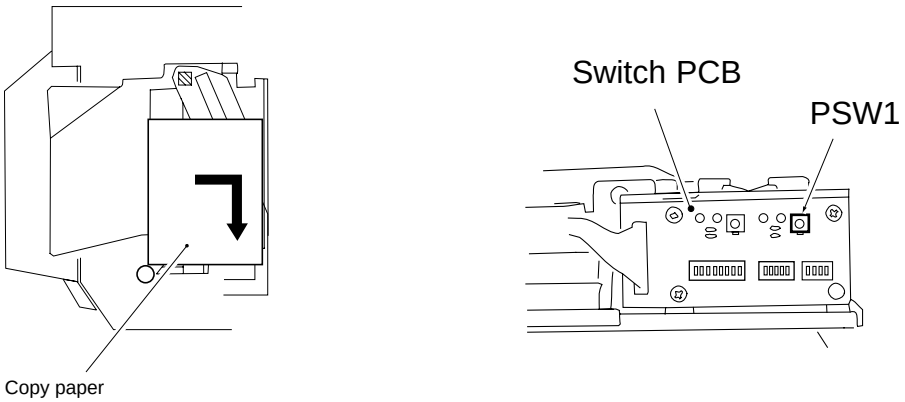

Figure 5-421

8) Operate the push switch PSW1 so that the guide bar will come in contact with the edge of the copy paper.

Reference:

The first press on the push switch will move the guide bar about 7 mm toward the copy paper; the second and subsequent presses on the switch will move the bar about 0.3 mm toward the paper.

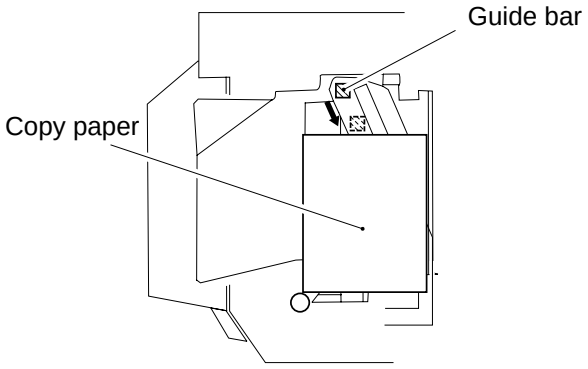

Figure 5-422

- To move the guide bar away from the copy paper, set the DIP switch SW1 and the DIP switch SW2 on the switch PCB as shown.

A4		LTR	
SW1	SW2	SW1	SW2
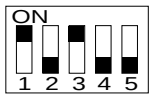	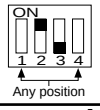	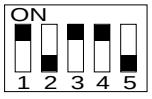	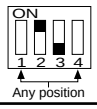

Table 5-406

9) While maintaining the condition of step 8), shift bit 2 of the DIP switch SW1 to ON; then press the push switch PSW1.
   - If the adjustment is successful, LED1 on the switch PCB flashes at the same intervals.
   - If the adjustment is not successful, LED1 on the switch PCB flashes at shorter intervals temporarily (about 3 sec).

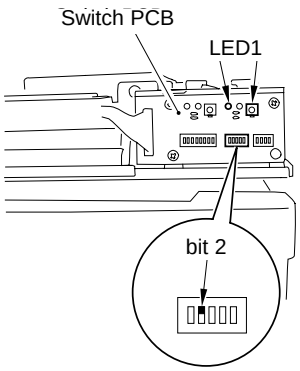

Figure 5-423

COPYRIGHT © 1997 CANON INC.

3. Checking the Guide Bar Movement Range

The orientation of the guide bar can be checked using copy paper.

Steps

a. Upper Bin Guide Bar

1) Obtain a single sheet of A4 or LTR copy paper.
   • The copy paper will be used for making checks.
2) Open the bin cover, and remove all copy paper from the upper bin; then, insert the door switch actuator.

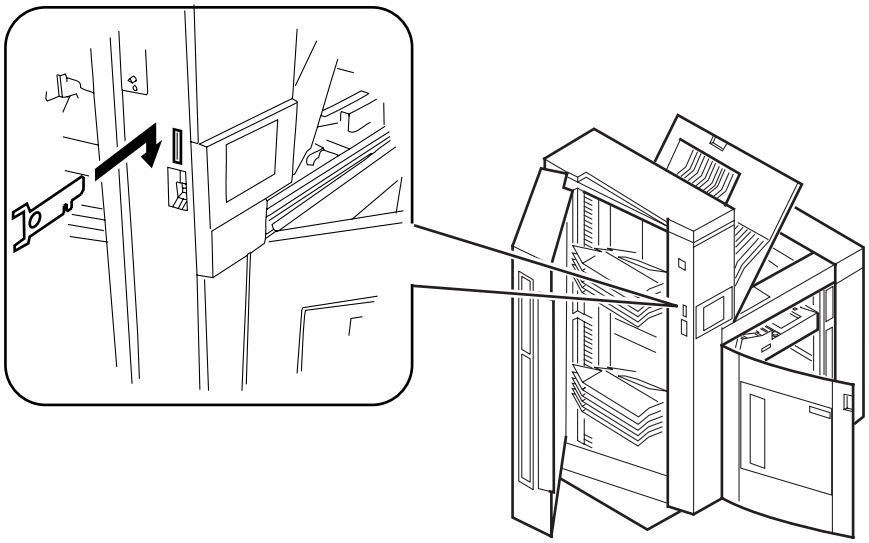

Figure 5-424

3) Turn off the copier.
4) Open the finisher's upper cover; then, remove the two screws, and remove the upper cover (front).

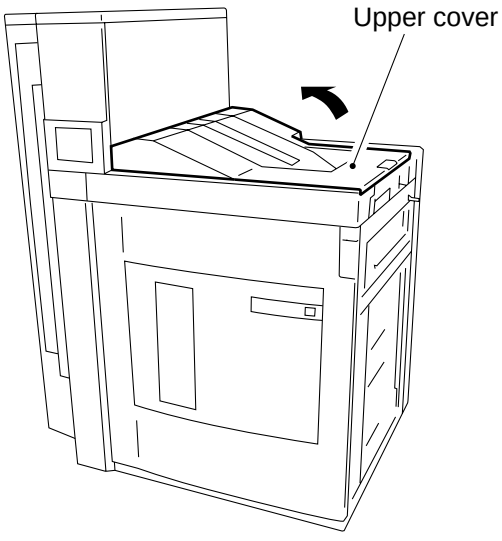

Figure 5-425

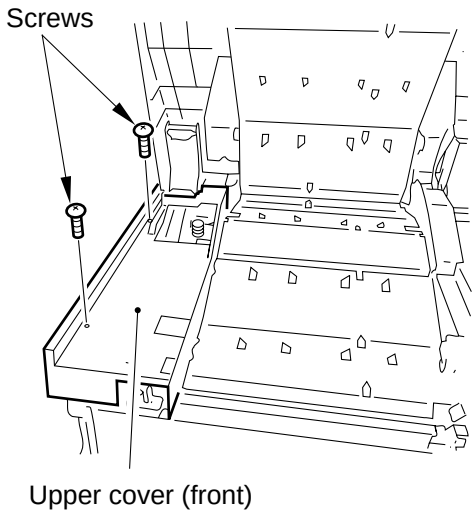

Figure 5-426

5) Shift bit 3 on the DIP switch SW2 and bit 1 of the DIP switch SW3 on the switch PCB to ON; then, turn on the copier. (LED1 and LED 3 on the switch PCB will start to flash.)

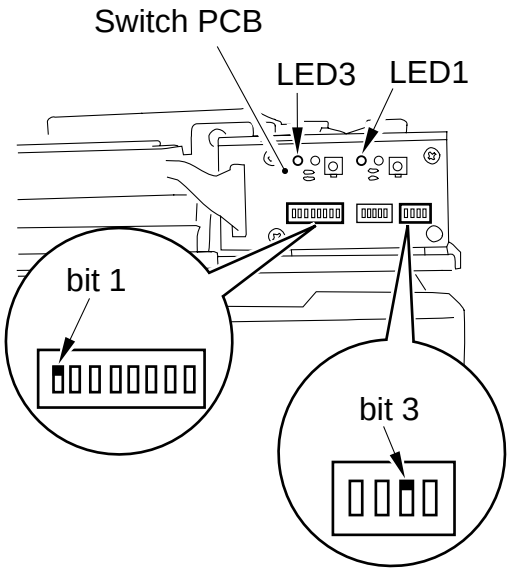

Figure 5-427

6) Set the bits on the DIP switch SW1 and the DIP switch SW2 on the switch PCB as shown.
   • The settings differ depending on the size of the copy paper used for adjustment.

A4		LTR	
SW1	SW2	SW1	SW2
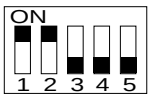	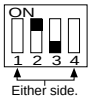	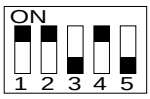	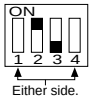

Figure 5-407

COPYRIGHT © 1997 CANON INC.

7) Place the copy paper in the topmost bin of the upper bin module, and press the push switch PSW1 on the switch PCB.
   • The guide bar will move to the point of alignment.
   • If the guide bar is not at home position, press the push switch once again.

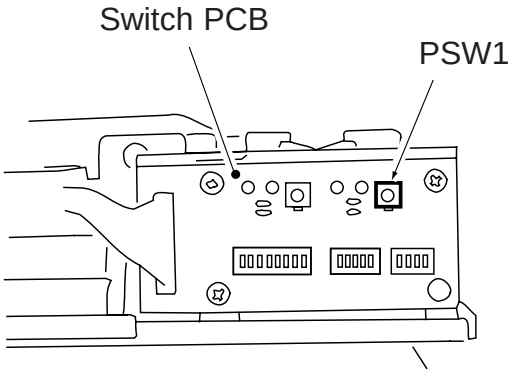

Figure 5-428

8) Check the distance (L) between the guide bar and the copy paper.
   standard: L = 0 ±0.15 mm

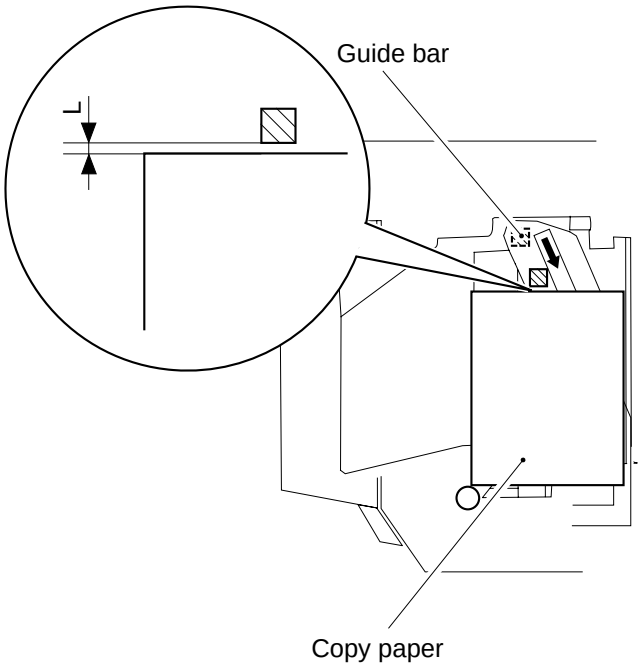

(Top view)

Figure 5-429

9) If the distance L between the guide bar and the copy paper is as indicated, shift the bits of the DIP switches (SW1, SW2, SW3) back to their initial positions; then, turn off and then on the copier. (Be sure to wait more than 1 sec before turning it on.)
10) If the distance (L) between the guide bar and the copy paper is not as specified, execute “Adjusting the Guide Bar Movement Range.”

b. Lower Bin Guide Bar

1) Obtain a single sheet of A4 or LTR copy paper.
   • The copy paper will be used to make checks.
2) Open the bin cover, and remove all copy paper from the lower bin; then, insert the door switch actuator.

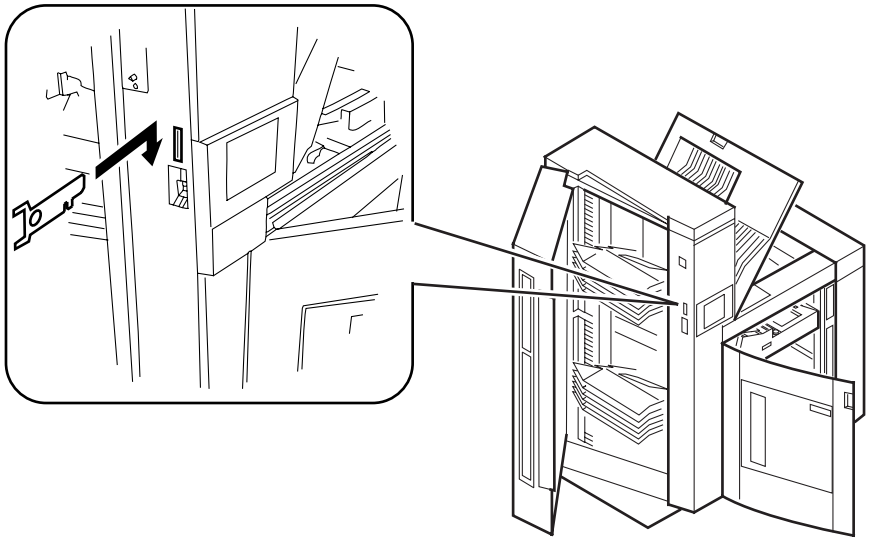

Figure 5-430

3) Turn off the copier.
4) Open the finisher's upper cover; then, remove the two screws, and remove the upper cover.

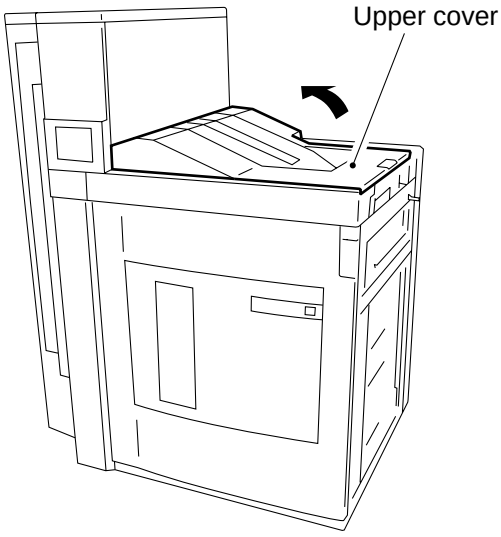

Figure 5-431

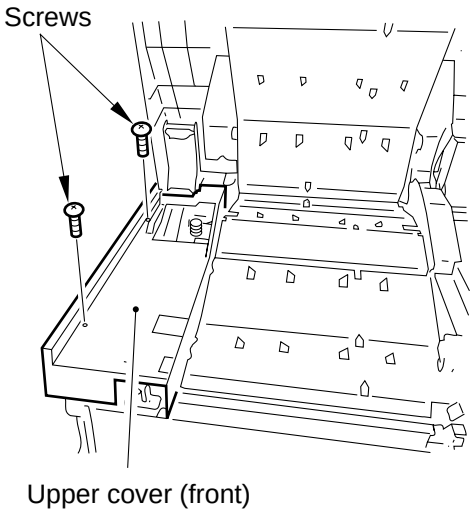

Figure 5-432

COPYRIGHT © 1997 CANON INC.

5) Shift bit 3 of the DIP switch SW2 and bit 1 of the DIP switch SW3 on the switch PCB to ON, and turn on the copier. (LED1 and LED3 on the switch PCB will start to flash.)

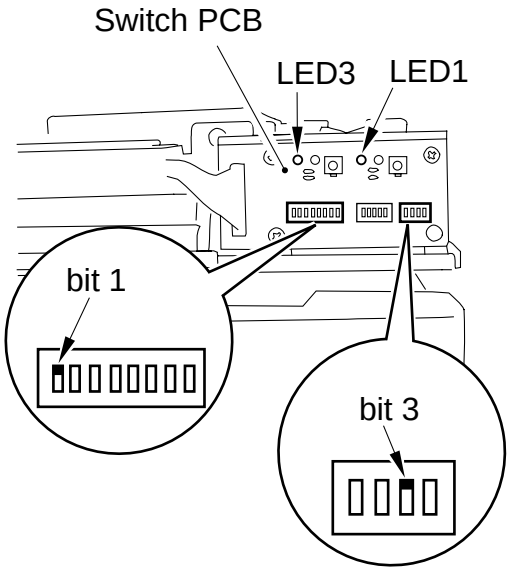

Figure 5-433

6) Set the bits of the DIP switch SW1 and the DIP switch SW2 on the switch PCB as shown.
   • The settings differ depending on the size of copy paper used for adjustment.

A4		LTR	
SW1	SW2	SW1	SW2
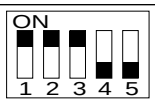	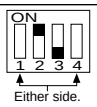	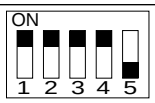	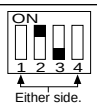

Table 5-408

7) Place the copy paper in the topmost bin of the upper bin module, and press the push switch PSW1 on the switch PCB.
   • The guide bar will move to the point of alignment.
   • If the guide bar is not at home position, press the push switch PSW1 once again.

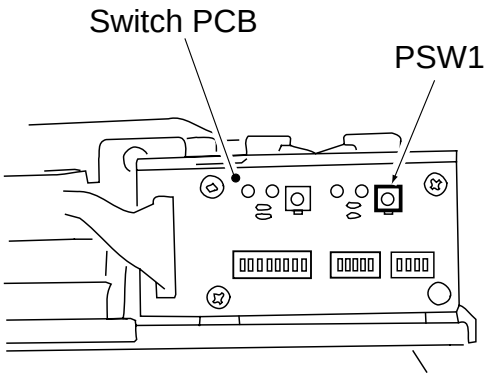

Figure 5-434

8) Check the distance (L) between the guide bar and the copy paper.
   standard: L = 0 ±0.15 mm

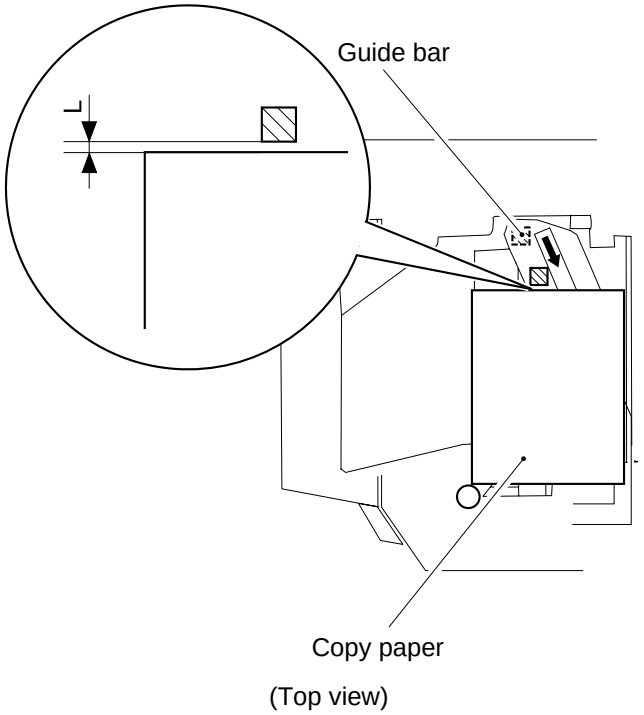

Figure 5-435

9) If the distance L between the guide bar and the copy paper is as indicated, shift the bits of the DIP switches (SW1, SW2, SW3) back to their initial positions; then, turn off and then on the copier. (Be sure to wait more than 1 sec before turning it on.)
10) If the distance (L) between the guide bar and the copy paper is not as specified, execute “Adjusting the Guide Bar Movement Range.

COPYRIGHT © 1997 CANON INC.

4. Adjusting the Paper Side 1/2 Sensor Sensitivity

Adjust the sensitivity of the paper side 1/2 sensor whenever you have replaced any of the following parts:

- Finisher controller PCB
- Paper side 1 sensor (LED4/PT4)
- Paper side 2 sensor (LED5/PT5)

Making Adjustments

1) Turn off the copier's power switch.
2) Remove the seven screws from the rear left cover of the finisher, and remove the cover.

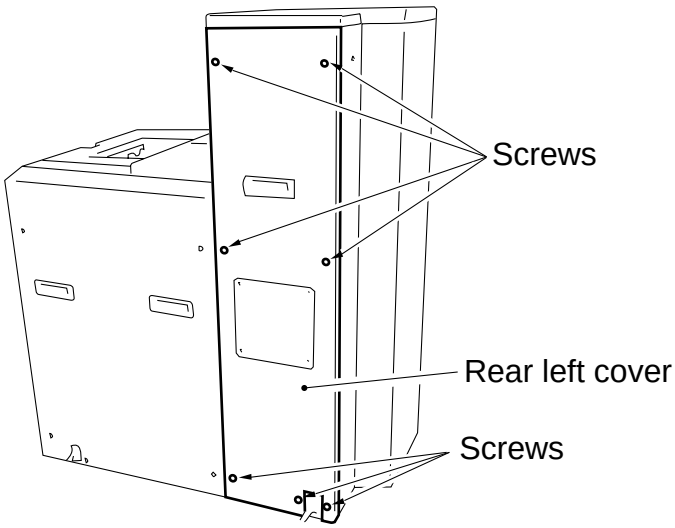

Figure 5-436

3) Shift all bits on the DIP switch (SW1) on the finisher controller PCB to OFF.

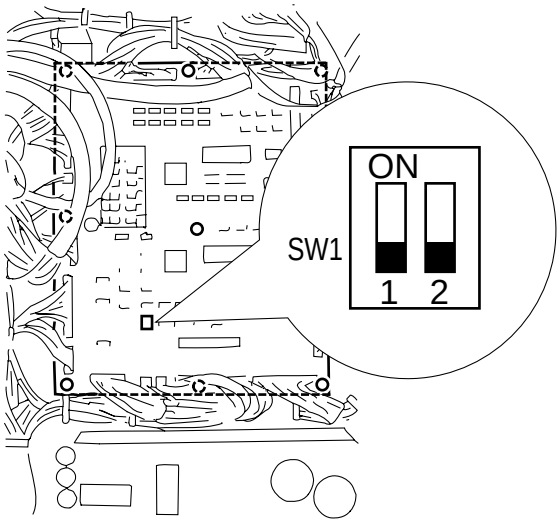

Figure 5-437

4) Turn on the copier.
   • Check to make sure that the finisher's initialization mechanism has ended.
5) Open the copier's front door, and insert the door switch actuator into the door switch assembly.
6) Push the service switch over the cover with a clip or the like.

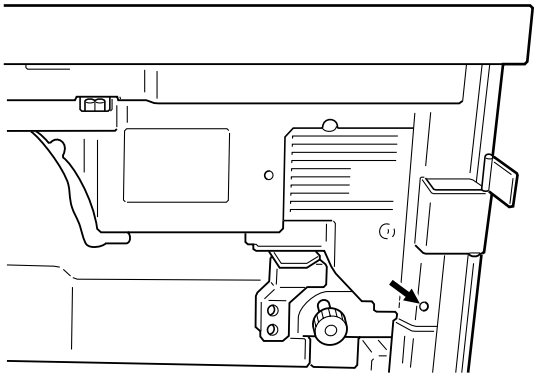

Figure 5-438

7) Press ✻, 2, and ✻ in sequence on the control panel.
8) Using the keypad on the copier's control panel, enter the address of each sensor (avoid alphabet characters), and check the display.

Sensor (notation)	Address
Paper side 1 sensor (LED4/PT4)	PI74
Paper side 2 sensor (LED5/PT5)	PI75

Table 5-409

COPYRIGHT © 1997 CANON INC.

9) Shift the bits of the DIP switch (SW1) on the finisher controller PCB as indicated in Table 5-108.

Address	Reading	Settings on DIP switch (SW1)
PI74	00D9 or higher	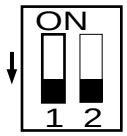 Shift bit 1 to OFF.
	Lower than 00D9	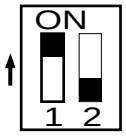 Shift bit 1 to ON.
PI75	00D9 or higher	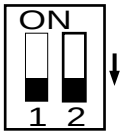 Shift bit 2 to OFF.
	Less than 00D9	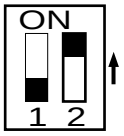 Shift bit 2 to ON.

Table 5-410

10) Turn off and then on the copier.
11) Execute ‘check sensor sensitivity’, and check the reading.

5. Checking the Sensor Sensitivity

a. Outline

You can check the sensitivity in relation to the sensors shown in Table 5-109, thereby finding out whether each of the sensors is normal or faulty.

Sensor (notation)	Remarks
Stapler edge sensor (PI68)	Needs no adjustment.
Upper bin inside paper sensor (LED1/PT1)	Needs no adjustment.
Lower bin inside paper sensor (LED2/PT2)	Needs no adjustment.
Edge feed sensor (LED3/PT3)	Needs no adjustment.
Paper side 1 sensor (LED4/PT4)	Needs adjustment; for instructions, see "Adjusting the Paper Size 1/2 Sensitivity."
Paper side 2 sensor (LED5/PT5)	
Stack sensor (LED6/PT6)	Needs no adjustment.
Upper bin outside paper sensor (LED7/PT7)	Needs no adjustment.
Lower bin outside sensor (LED8/PT8)	Needs no adjustment.

Table 5-411

If you have found a fault in the results of the check on the sensitivity of any sensor, check if that sensor is mounted correctly; if it is, replace it.

For the paper side 1/2 sensor, be sure to perform the steps given under "Adjusting the Paper Side 1/2 Sensor Sensitivity."

COPYRIGHT © 1997 CANON INC.

b. Making Adjustments

4) Turn on the copier.
   • Check to make sure that the finisher's initialization has ended.
5) Open the copier's front door, and insert the door switch actuator into the door switch assembly.
6) Press the service switch over the cover with a clip.

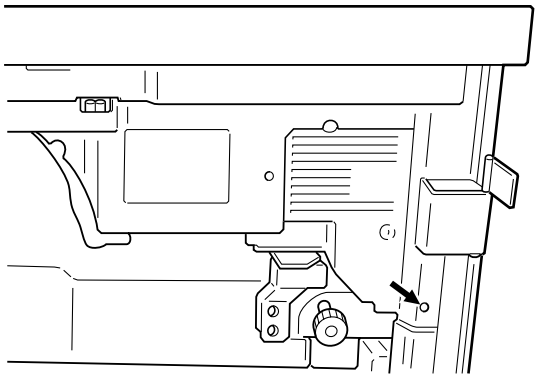

Figure 5-439

7) Press ✻, 2, and ✻ in sequence on the control panel.
8) Using the keypad on the copier's control panel, enter the address of each sensor (avoiding alphabet characters), and check the display. If the reading is not correct, replace the sensor. (The notation is in hexadecimal.)

Screen Display

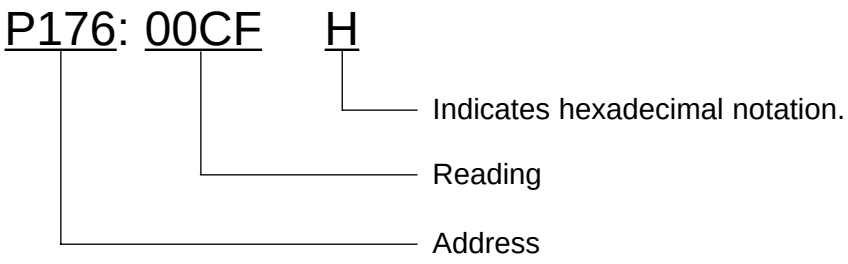

Sensor (notation)	Address	Normal
Stapler edge sensor (PI68)	PI78	00CF or higher
Upper bin inside paper sensor (LED1/PT1)	PI80	00D3 or higher
Lower bin inside paper sensor (LED2/PT2)	PI81	00D3 or higher
Edge feed sensor (LED3/PT3)	PI76	00D3 or higher
Paper side 1 sensor (LED4/PT4)	PI74	00D3 or higher
Paper side 2 sensor (LED5/PT5)	PI75	00D3 or higher
Stack sensor (LED6/PT6)	PI77	00D3 or higher
Upper bin outside paper sensor (LED7/PT7)	PI82	00CF or higher
Lower bin outside sensor (LED8/PT8)	PI83	00CF or higher

Table 5-412

COPYRIGHT © 1997 CANON INC.

E. Job Mix Switch/Staple Position Adjustment

1. Job Mix Switch

Use the finisher's touch panel for job mix switch mode and staple position adjustment mode.

When using job mix switch mode, go through the following after performing up to step 4) of 2. "Job Mix Switch/Stapling Position Adjustment, and Emergency Operation Mode " under "Using Service Mode."

If you selected "enable job mix", be sure to install the stack sub cover.

Reference:

The term *job* refers to a series of operations executed in response to a press on the Copy Start key.

The finisher is set to 'disable job mix' at time of shipment, and will not accept a command for a second job if paper remains in a bin or stacker tray.

When it is set to 'enable job mix', the finisher will accept a command for a second job even if paper remains in the bin, non-sort delivery assembly, or the stacker tray. However, stacking may not be as efficient as otherwise if 'enable mix job' is selected.

a. Making Settings

1) Press "multiple jobs" on the touch panel.

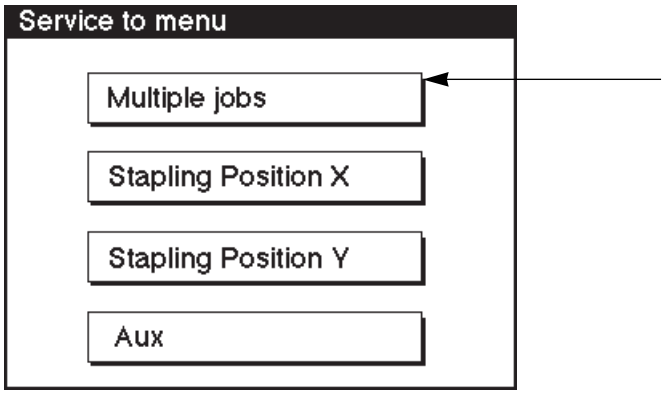

Figure 5-440

2) Press the appropriate job notation on the touch panel.
   • The notation on the touch panel turns to ‘1’ or ‘0’.
   No: enable job mix
   Yes: disable job mix

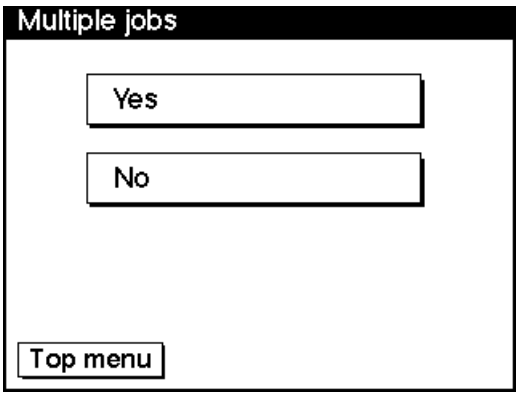

Figure 5-441

3) Turn off/on the finisher.

COPYRIGHT © 1997 CANON INC.

b. Installing the Stacker Support Bar

1) Open the finisher's front cover; remove the screw ②, and remove the stacking support bar ①.

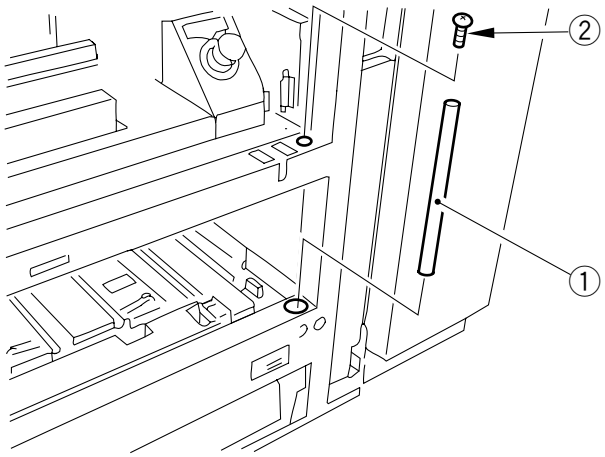

Figure 5-442

2) Slide out the stacker tray, and install the stacking support bar ① with a screw ②.

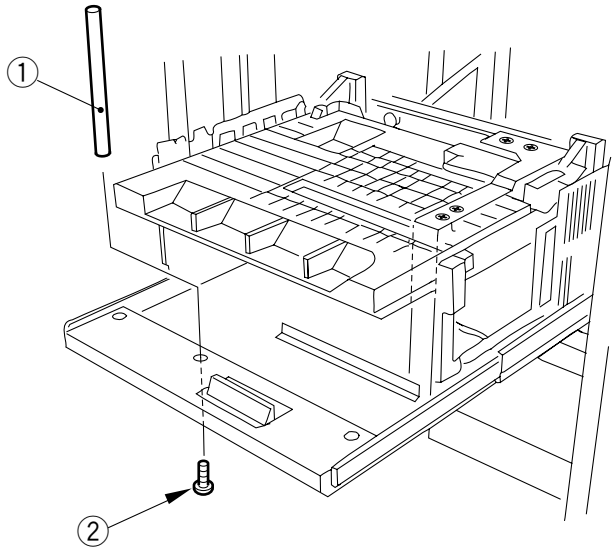

Figure 5-443

COPYRIGHT © 1997 CANON INC.

2. Stapling Position Adjustment Mode

a. Stapling Position X

For stapling position X, the position (A) shown in Figure 5-444 may be varied in units of about 0.25 mm in + and - directions in relation to the default (6 mm; each '1' on the touch panel represents about 0.25 mm). The setting may be changed between -6 (-1.5 mm) and +6 (+1.5 mm).

For double stapling, both rear and front are adjusted simultaneously (not independently of each other).

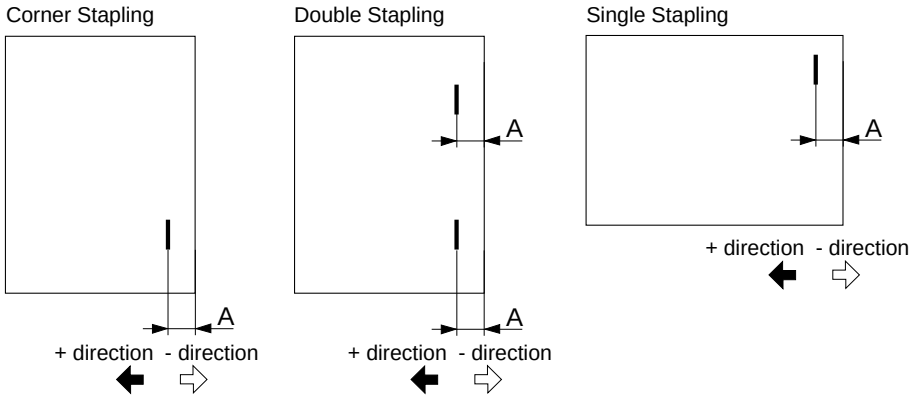

Figure 5-444

1) Press Stapling position X' on the touch panel.
   • The Stapling Position X Update screen will appear.

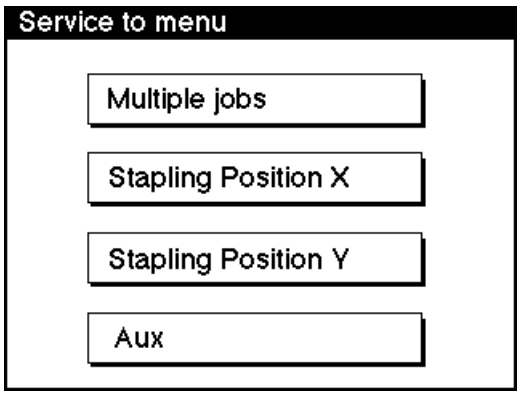

Figure 5-445

COPYRIGHT © 1997 CANON INC.

2) Enter the new setting using the symbols and numbers on the keypad of the touch panel.
   • The entered setting will appear in section A of the touch panel.

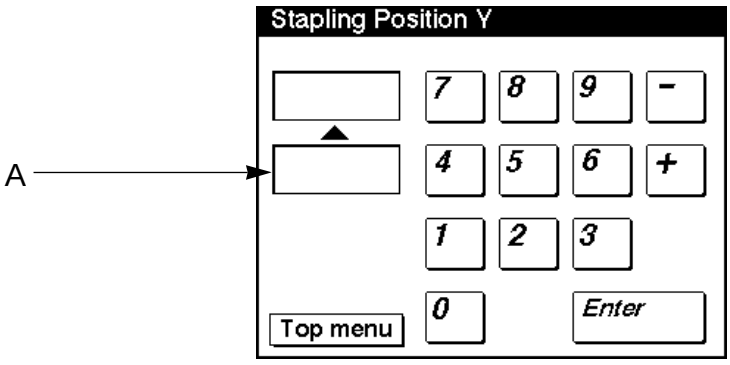

Figure 5-446

3) After checking the setting indicated in section A of the touch panel, press 'ENTER'.
   • The setting indicated in section A of the touch panel will also appear in section B, indicating the end of the setting operation.

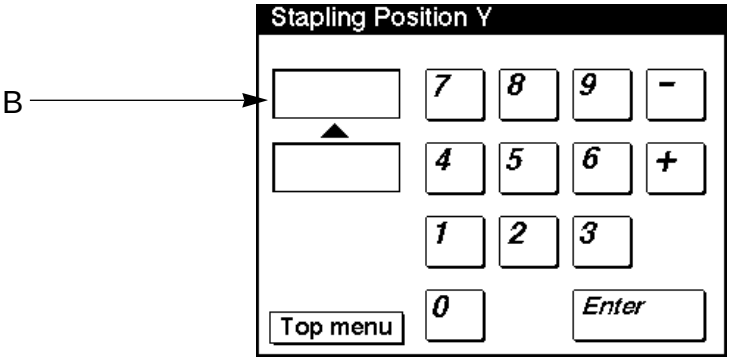

Figure 5-447

4) Shift bit 8 of SW2 to OFF, and turn off and then on the copier; then, execute staple sorting to check the stapling position.

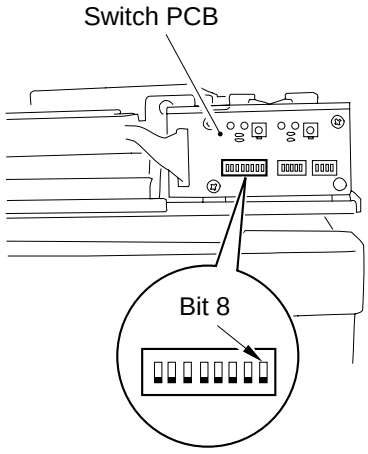

Figure 5-448

b. Stapling Position Y

For stapling position Y, the position (A) shown in Figure 5-449 may be varied in units of about 0.17 mm in + and - directions (each '1' on the touch panel represents about 0.17 mm). The setting may be changed between -31(-5.3mm) and +32(+5.3mm).

Both rear and front directions for double stapling are affected, and independent adjustment is not possible.

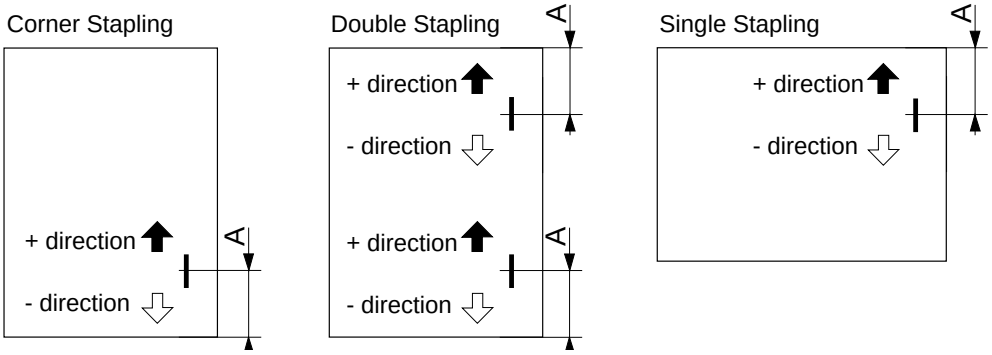

Figure 5-449

1) Press 'stapling position Y' on the touch panel.
   • The Stapling Position Y Update screen will appear.

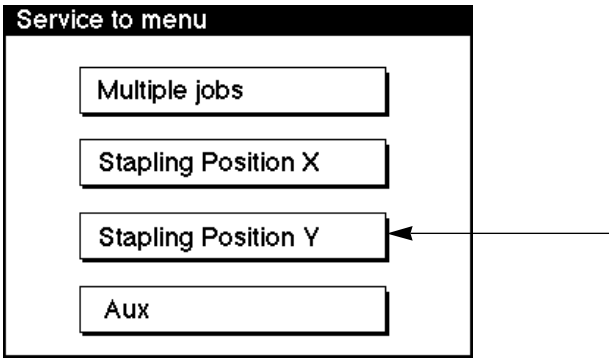

Figure 5-450

2) Enter the new setting using the symbols and numbers on the keypad of the touch panel.
   • The entered setting will appear in section A of the touch panel.

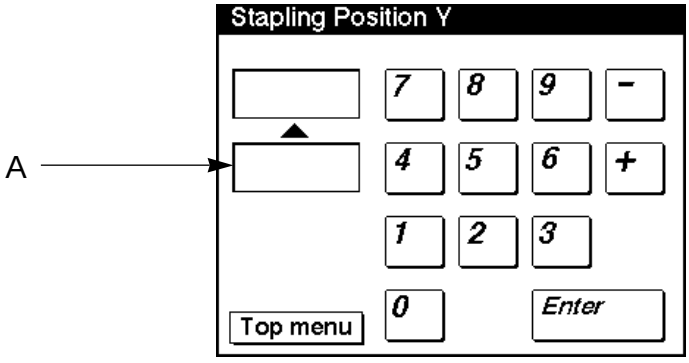

Figure 5-451

COPYRIGHT © 1997 CANON INC.

3) After checking the setting indicated in section A of the touch panel, press 'ENTER'.
   • The setting indicated in section A of the touch panel will also appear in section B, indicating the end of the setting operation.

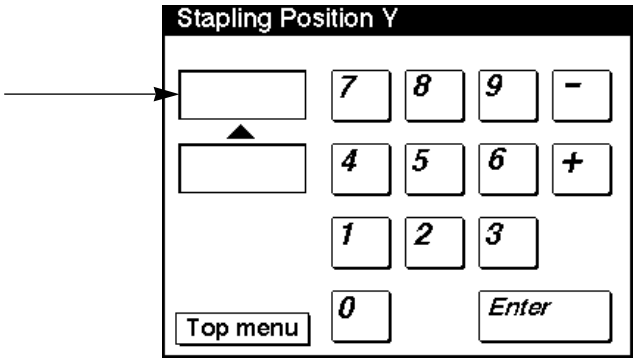

Figure 5-452

4) Shift bit 8 of SW2 to OFF, and turn off and then on the copier; then, execute staple sorting to check the stapling position.

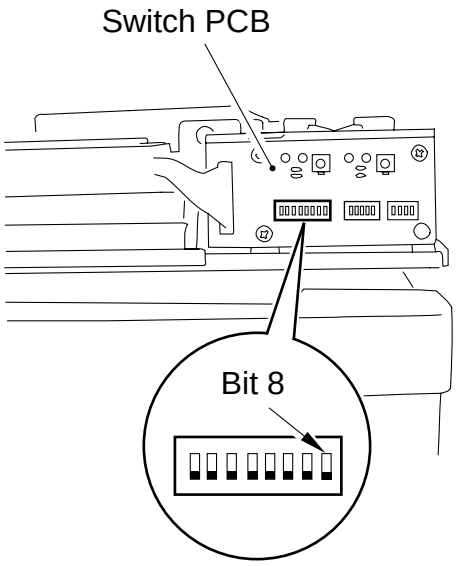

Figure 5-453

V. SELF DIAGNOSIS

The CPU (IC1) on the finisher's controller CPB is equipped with a function to check the condition of the machine as needed, indicating an appropriate code upon detection of a fault.

The copier indicates the state of the finisher on the control panel as necessary. For jams, you can make use of the copier's service mode for checks (*1*; control display mode).

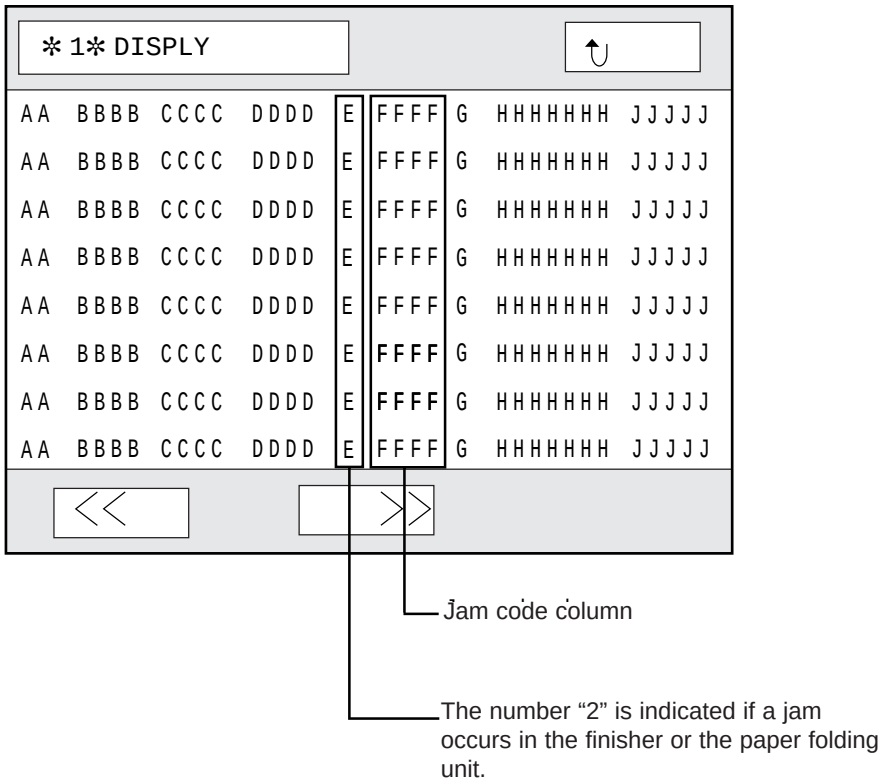

COPYRIGHT © 1997 CANON INC.

A. Jam Alarm

1. Power-On Jam

Power-On Jam (1/2)

Code	Error	Sensors	Finisher	Copier
xx07	See p. 2-57	• Feeding path No. 1 sensor (PI1)* • Feeding path No. 2 sensor (S1)* • Feeding path No. 3 sensor (LED1/PT1)* • Folding path residual paper sensor (PI2)* • Folding path residual paper sensor 2 (PI3)* • Folding path residual paper sensor 3 (PI4)* • Level section path residual paper sensor (PI5)* • Non-sort path sensor (PI2) • Upper path paper sensor 1 (PI3) • Upper path paper sensor 2 (PI4) • Upper path paper sensor 3 (PI5) • Upper path residuals paper sensor 1 (PI6) • Upper path residual paper sensor 2 (PI7) • Common path paper sensor 1 (PI9) • Common path paper sensor 2 (PI10) • Lower path paper sensor 1 (PI12) • Lower path paper sensor 2 (PI13) • Lower path paper sensor 3 (PI14) • Lower path paper sensor 4 (PI15) • Vertical path residual paper sensor 1 (PI16) • Vertical path residual paper sensor 2 (PI17) • Vertical path residual paper sensor 3 (PI18) • Lower path residual path sensor 1 (PI19) • Lower path residual path sensor 2 (PI20) • Lower path residual path sensor 3 (PI21) • Upper bin outside paper sensor (LED7/PT7) • Lower bin outside paper sensor (LED8/PT8)	Does not operate	Stops

*Sensor inside the paper folding unit.

COPYRIGHT © 1997 CANON INC.

Power-On Jam (2/2)

Code	Error	Sensors	Finisher	Copier
xx80	See p. 2-57.	• Side gripper paper sensor (PI49) • Front gripper paper sensor (PI64) • Stapler leading edge sensor (PI68) • Edge feeding sensor (LED3/PT3)	Does not operate	Does not operate

2. Door Open Jam

Code	Error	Sensors	Finisher	Copier
xx08	The cover in question is opened during operation.	• Stacker SET sensor (PI41) • Upper cover sensor 1 (PI74) • Upper cover sensor 2 (PI75) • Bin cover sensor (PI76) • Front cover sensor (PI77) • Access cover switch (SW4) • Interlocking switch (MSW1) • Upper cover open/closed sensor (PI6)* • Folder SET switch (MS1)*	Does not operate	Stops

*Sensor inside the paper folding unit.

COPYRIGHT © 1997 CANON INC.
CANON FINISHER-B1 REV.0 MAY 1997 PRINTED IN JAPAN (IMPRIME AU JAPON)

3. Delay Jam

Code	Error	Sensors	Finisher	Copier
xx11	See p. 2-57.	Feeding path No. 1 sensor (PI1)*	• If a copy, stops feeding operation immediately. • If a stack, stops feeding operation after finishing delivery to the upper or lower bin module.	Stops
xx12	See p. 2-57.	Feeding path No. 2 sensor (S1)*	• If a copy, stops feeding operation immediately. • If a stack, stops feeding operation after finishing delivery to the upper or lower bin module.	Stops
xx13	See p. 2-57.	Feeding path No. 3 sensor (LED1/PT1)*	• If a copy, stops feeding operation immediately. • If a stack, stops feeding operation after finishing delivery to the upper or lower bin module.	Stops
xx14	See p. 2-57.	Common path paper sensor 1 (PI9)	• If a copy, stops feeding operation immediately. • If a stack, stops feeding operation after finishing delivery to the upper or lower bin module.	Stops
xx15	See p. 2-57.	Common path paper sensor 2 (PI10)	• If a copy, stops feeding operation immediately. • If a stack, stops feeding operation after finishing delivery to the upper or lower bin module.	Stops
xx16	See p. 2-57.	Non-sort path sensor (PI2)	• If a copy, stops feeding operation immediately. • If a stack, stops feeding operation after finishing delivery to the upper or lower bin module.	Stops
xx17	See p. 2-57.	Upper path paper sensor 1 (PI3)	• If a copy, stops feeding operation immediately. • If a stack, stops feeding operation after finishing delivery to the upper or lower bin module.	Stops
xx18	See p. 2-57.	Upper path paper sensor 2 (PI4)	• If a copy, stops feeding operation immediately. • If a stack, stops feeding operation after finishing delivery to the upper or lower bin module.	Stops
xx19	See p. 2-57.	Upper path paper sensor 3 (PI5)	• If a copy, stops feeding operation immediately. • If a stack, stops feeding operation after finishing delivery to the upper or lower bin module.	Stops

COPYRIGHT © 1997 CANON INC.

Code	Error	Sensors	Finisher	Copier
xx1A	See p. 2-57.	Lower path paper sensor 1 (PI12)	• If a copy, stops feeding operation immediately. • If a stack, stops feeding operation after finishing delivery to the upper or lower bin module.	Stops
xx1B	See p. 2-57.	Lower path paper sensor 2 (PI13)	• If a copy, stops feeding operation immediately. • If a stack, stops feeding operation after finishing delivery to the upper or lower bin module.	Stops
xx1C	See p. 2-57.	Lower path paper sensor 3 (PI14)	• If a copy, stops feeding operation immediately. • If a stack, stops feeding operation after finishing delivery to the upper or lower bin module.	Stops
xx1D	See p. 2-57.	Lower path paper sensor 4 (PI15)	• If a copy, stops feeding operation immediately. • If a stack, stops feeding operation after finishing delivery to the upper or lower bin module.	Stops

*Sensor inside the paper folding unit.

COPYRIGHT © 1997 CANON INC.

4. Stationary Jams

Code	Error	Sensors	Finisher	Copier
xx21	See p. 2-57.	Feeding path No. 1 sensor (PI1)*	• If a copy, stops feeding operation immediately. • If a stack, stops feeding operation after finishing delivery to the upper or lower bin module.	Stops
xx22	See p. 2-57.	Feeding path No. 2 sensor (S1)*	• If a copy, stops feeding operation immediately. • If a stack, stops feeding operation after finishing delivery to the upper or lower bin module.	Stops
xx23	See p. 2-57.	Feeding path No. 3 sensor (LED1/PT1)*	• If a copy, stops feeding operation immediately. • If a stack, stops feeding operation after finishing delivery to the upper or lower bin module.	Stops
xx24	See p. 2-57.	Common path paper sensor 1 (PI9)	• If a copy, stops feeding operation immediately. • If a stack, stops feeding operation after finishing delivery to the upper or lower bin module.	Stops
xx25	See p. 2-57.	Common path paper sensor 2 (PI10)	• If a copy, stops feeding operation immediately. • If a stack, stops feeding operation after finishing delivery to the upper or lower bin module.	Stops
xx26	See p. 2-57.	Non-sort path sensor (PI2)	• If a copy, stops feeding operation immediately. • If a stack, stops feeding operation after finishing delivery to the upper or lower bin module.	Stops
xx27	See p. 2-57.	Upper path paper sensor 1 (PI3)	• If a copy, stops feeding operation immediately. • If a stack, stops feeding operation after finishing delivery to the upper or lower bin module.	Stops
xx28	See p. 2-57.	Upper path paper sensor 2 (PI4)	• If a copy, stops feeding operation immediately. • If a stack, stops feeding operation after finishing delivery to the upper or lower bin module.	Stops
xx29	See p. 2-57.	Upper path paper sensor 3 (PI5)	• If a copy, stops feeding operation immediately. • If a stack, stops feeding operation after finishing delivery to the upper or lower bin module.	Stops

COPYRIGHT © 1997 CANON INC.

Code	Error	Sensors	Finisher	Copier
xx2A	See p. 2-57.	Lower path paper sensor 1 (PI12)	• If a copy, stops feeding operation immediately. • If a stack, stops feeding operation after finishing delivery to the upper or lower bin module.	Stops
xx2B	See p. 2-57.	Lower path paper sensor 2 (PI13)	• If a copy, stops feeding operation immediately. • If a stack, stops feeding operation after finishing delivery to the upper or lower bin module.	Stops
xx2C	See p. 2-57.	Lower path paper sensor 3 (PI14)	• If a copy, stops feeding operation immediately. • If a stack, stops feeding operation after finishing delivery to the upper or lower bin module.	Stops
xx2D	See p. 2-57.	Lower path paper sensor 4 (PI1)	• If a copy, stops feeding operation immediately. • If a stack, stops feeding operation after finishing delivery to the upper or lower bin module.	Stops
xx2E	See p. 2-57.	Upper bin outside sensor (LED7/PT7)	• If a copy, stops feeding operation immediately. • If a stack, stops feeding operation after finishing delivery to the upper or lower bin module.	Stops
xx2F	See p. 2-57.	Lower bin outside sensor (LED8/PT8)	• If a copy, stops feeding operation immediately. • If a stack, stops feeding operation after finishing delivery to the upper or lower bin module.	Stops

*Sensor inside the paper folding unit.

COPYRIGHT © 1997 CANON INC.

5. Stack Feeding Jam

Code	Error	Sensors	Finisher	Copier
xx81	When the side gripper moves a stack from the bin, the stapler leading edge sensor (PI6*) does not detect the leading edge of the stack even after travel over a specific distance.	• Stapler leading edge sensor (PI68)	• If a copy, stops feeding operation immediately. • If a stack, stops feeding operation immediately.	Stops
xx82	When the side gripper moves a stack from the bin and stops at a specific position, the edge feeding sensor (LED3/PT3) detects the leading edge of the sack (skew).	• Edge feeding sensor (LED3/PT3)	• If a copy, stops feeding operation immediately. • If a stack, stops feeding operation immediately.	Stops
xx83	When the front gripper moves a stack to the stacker tray, the edge feeding sensor (LED3, PT3) detects the trailing edge of the stack even after travel over a specific distance.	• Edge feeding sensor (LED3/PT3)	• If a copy, stops feeding operation immediately. • If a stack, stops feeding operation immediately.	Stops
xx84	Even though the side gripper has ended clasping operation, the side gripper paper sensor (PI49) does not detect a stack.	• Side gripper paper sensor (PI49)	After the side gripper ends opening operation, • If a copy, stops feeding operation immediately. • If a stack, stops feeding operation immediately.	Stops
xx85	Even though the side gripper has ended clasping operation, the front gripper paper sensor (PI64) does not detect a stack.	• Front gripper paper sensor (PI74)	After the front gripper ends opening operation, • If a copy, stops feeding operation immediately. • If a stack, stops feeding operation immediately.	Stops
xx86	Before the side gripper left/right shift motor (M8) starts to operate, the edge feeding sensor (LED3/PT3) detects a stack.	• Edge feeding sensor (LED3/PT3)	• If a copy, stops feeding operation immediately. • If a stack, stops feeding operation immediately.	Stops
xx87	After the side gripper has returned a stapled stack to the bin, the stapler leading edge sensor (PI68) detects the trailing edge of the	• Stapler leading edge sensor (PI68)	• If a copy, stops feeding operation immediately. • If a stack, stops feeding operation immediately.	Stops

COPYRIGHT © 1997 CANON INC.

B. Errors

Code	Cause	Description
E501	Communication failure (finisher)	An error has occurred in the communication within the finisher.
E510	Common path feeder motor (M1) failure	After the motor drive signal has been generated, the common path feeder motor does not generate clock signals within 1 sec for a feed length of 100 mm.
E518	Folder motor (M1) failure	After the motor drive signal has been generated, the common path feeder motor does not generate clock signals within 1 sec for a feed length of 100 mm.
E525	Upper bin paper sensor (LED1/PT1) auto adjustment failure	Auto adjustment of the upper bin paper sensor (LED1/PT1) has failed. Or, an error has occurred in the auto adjustment value.
E526	Lower bin paper sensor (LED2/PT2) automatic adjustment failure	Automatic adjustment of the lower bin paper sensor (LED2/PT2) has failed. Or, an error has occurred in the auto adjustment value.
E527	Paper surface 1 sensor (LED4/PT4) automatic adjustment failure	Automatic adjustment of the paper surface 1 sensor (LED4/PT4) has failed. Or, an error has occurred in the automatic adjustment value.
E528	Paper surface 2 sensor (LED5/PT5) automatic adjustment failure	Automatic adjustment of the paper surface 2 sensor (LED5/PT5) has failed. Or, an error has occurred in the automatic adjustment value.
E529	Stack sensor (LED6/PT6) automatic adjustment failure	The stack sensor (LED6/PT6) has failed. Or, an error has occurred in the automatic adjustment value.
E530	Upper bin guide bar motor (M6) failure	After the motor drive signal has been generated, the operation does not end within 2.5 sec.
E531	Stapler motor (M20) failure	After the motor drive signal has been generated, the operation does not end within 0.5 sec.

COPYRIGHT © 1997 CANON INC.

Code	Cause	Description
E532	Stapler front/rear shift motor (M13) failure	Although specific pulse signals have been generated to drive the motor, clock signals corresponding to the pulse signals are not received from the stapler front/rear shift motor clock sensor (PI65).
E534	Bin rear end wall open/close motor (M17) failure	After the motor drive signal has been generated, the operation does not end within 0.3 sec.
E536	Stapler leading edge sensor (PI68) automatic adjustment failure	Automatic adjustment of the stapler leading edge sensor (PI68) has failed. Or, an error has occurred in the automatic adjustment value.
E537	Lower bin guide bar motor (M7) failure	After the motor drive signal has been generated, the operation does not end within 2.5 sec.
E540	Upper bin shift motor (M4) failure	After the motor drive signal has been generated, the following condition has occurred: • The signal of the upper lead cam level section sensor (PI27) has not changed. • Both upper bin lower limit sensor (PI23) and lower bin lower limit sensor (PI24) have turned on at the same time. • During upward movement, the upper bin upper limit sensor (PL23) has turned on. • During a search for home position, the upper bin lower limit sensor (PI24) has turned on, and it has remained on even after a shift by a single bin.

COPYRIGHT © 1997 CANON INC.

Code	Cause	Description
E541	Upper bin shift motor (clock) failure	Pulse signals do not arrive from the upper bin shift motor clock sensor (PI31).
E542	Lower bin shift motor (M5) failure	After the motor drive signal has been generated, the following condition has occurred: • The signal of the lower lead cam level section sensor (PI29) has not changed. • Both lower bin upper limit sensor (PI25) and lower bin lower limit sensor (PI26) have turned on at the same time. • During upward movement, the lower bin lower limit sensor (PL25) has turned on. • During a search for home position, the lower bin lower limit sensor (PI26) has turned on, and it has remained on even after a shift by a single bin.
E543	Lower bin shift motor (clock) failure	Pulse signals does not arrive from the lower bin shift motor clock sensor (PI32).
E560	Upper feeder motor (M2) failure	After the motor drive signal has been generated, the common path feeder motor does not generate clock signals within 1 sec for a feed length of 100 mm.
E561	Lower path feeder motor (M3) failure	After the motor drive signal has been generated, the common path feeder motor does not generate clock signals within 1 sec for a feed length of 100 mm.
E564	Upper bin outside paper sensor (LED7/PT7) automatic adjustment failure	Automatic adjustment of the upper bin paper sensor (LED7/PT7) has failed. Or, an error has occurred in the automatic adjustment value.
E565	Lower bin outside paper sensor (LED8/PT8) automatic adjustment failure	Automatic adjustment of the lower bin sensor (LED8/PT7) has failed. Or, an error has occurred in the automatic adjustment value.

COPYRIGHT © 1997 CANON INC.

Code	Cause	Description
E570	Side gripper grip motor (M9) failure	After the motor drive signal has been generated, the operation does not end in 520 ms.
E571	Front gripper grip motor (M12) failure	After the motor drive signal has been generated, the operation does not end in 0.5 sec.
E572	Side gripper left/right shift motor (M8) failure	Although specific pulse signals have been generated to drive the motor, signals do not arrive from the side gripper error sensor (PL51).
E573	Front gripper left/right shift motor (M10) failure	Although specific pulses have been generated to drive the motor, corresponding clock signals do not arrive from the front gripper left/right shift motor clock sensor (PI54).
E574	Front gripper front/rear shift motor (M11) failure	After the motor drive signal has been generated, the operation does not end within 0.5 sec.
E575	Stack processing unit shift motor (M14) failure	After the motor drive signal has been generated, the operation does not end within 2.5 sec.
E576	Edge feeding sensor (LED3, PT3) automatic adjustment failure	Automatic adjustment of the edge feeding sensor (LED3/PT3) has failed. Or, an error has occurred in the automatic adjustment value.
E580	Stacker tray shift motor (M16) failure	After the motor rive signal has been generated, the operation does not end within 8 sec.
E581	Stacker unit shift motor (M15) failure	After the motor drive signal has been generated, the operation does not end within 2.5 sec.
E582	Leading edge stopper motor (M18) failure	After specific pulse signals have been generated to drive the motor, signals do not arrive from the leading edge stopper home position sensor (PI46).
E583	Shift motor (M19) failure	After the motor drive signal has been generated, the operation does not end within 2.3 sec.
E713	Communication failure	An error has occurred in the communication between the finisher and the copier.

COPYRIGHT © 1997 CANON INC.

COPYRIGHT © 1997 CANON INC.

APPENDIX

A. GENERAL TIMING CHART A-1
B. SIGNAL AND ABBREVIATIONS A-5
C. GENERAL CIRCUIT DIAGRAM A-7
D. PAPER FOLDING UNIT GENERAL CIRCUIT DIAGRAM.....A-11
E. SPECIAL TOOLS A-13
F. SOLVENTS AND OILS.....A-13

COPYRIGHT © 1997 CANON INC. CANON FINISHER-B1 REV.0 MAY 1997 PRINTED IN JAPAN (IMPRIME AU JAPON)

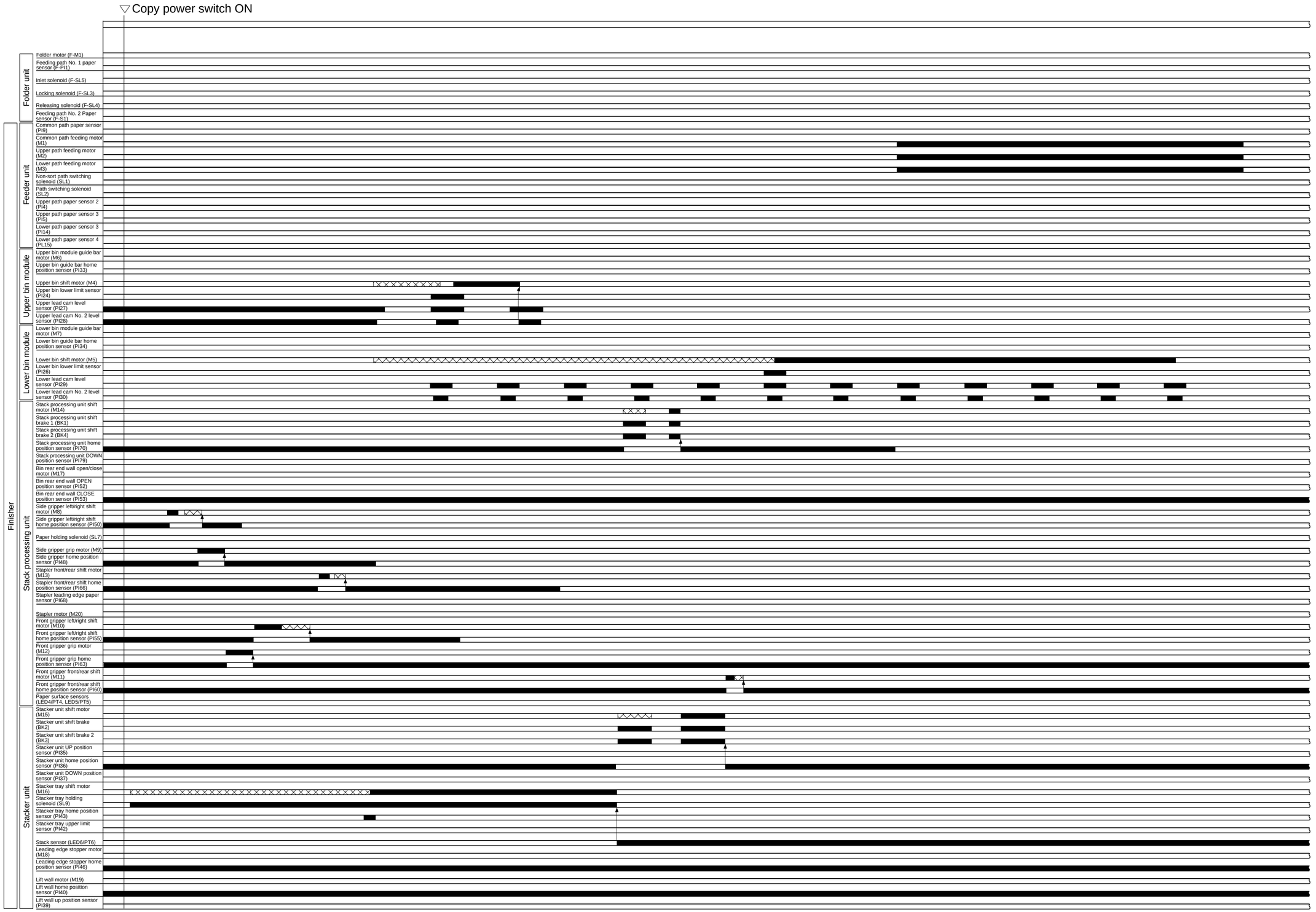

COPYRIGHT © 1997 CANON INC. CANON FINISHER-B1 REV.0 MAY 1997 PRINTED IN JAPAN (IMPRIME AU JAPON)

2. A3 Size 2 Originals 2 Stapling (double stapling) Sort Copy

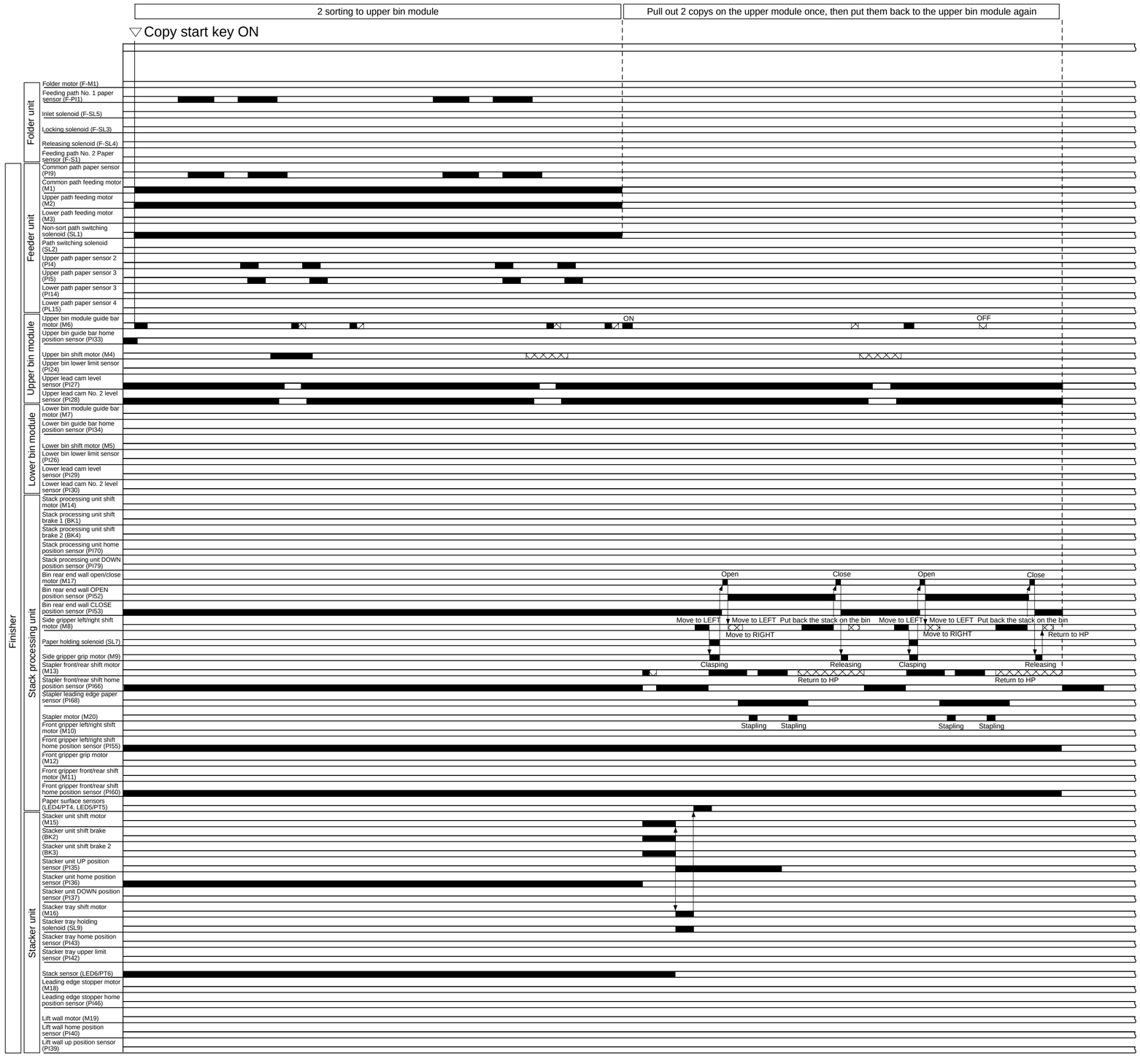

COPYRIGHT © 1997 CANON INC. CANON FINISHER-B1 REV.0 MAY 1997 PRINTED IN JAPAN (IMPRIME AU JAPON)

3. A3 Size 2 Originals 2 Staplings Z folding (double stapling) Sort Copy

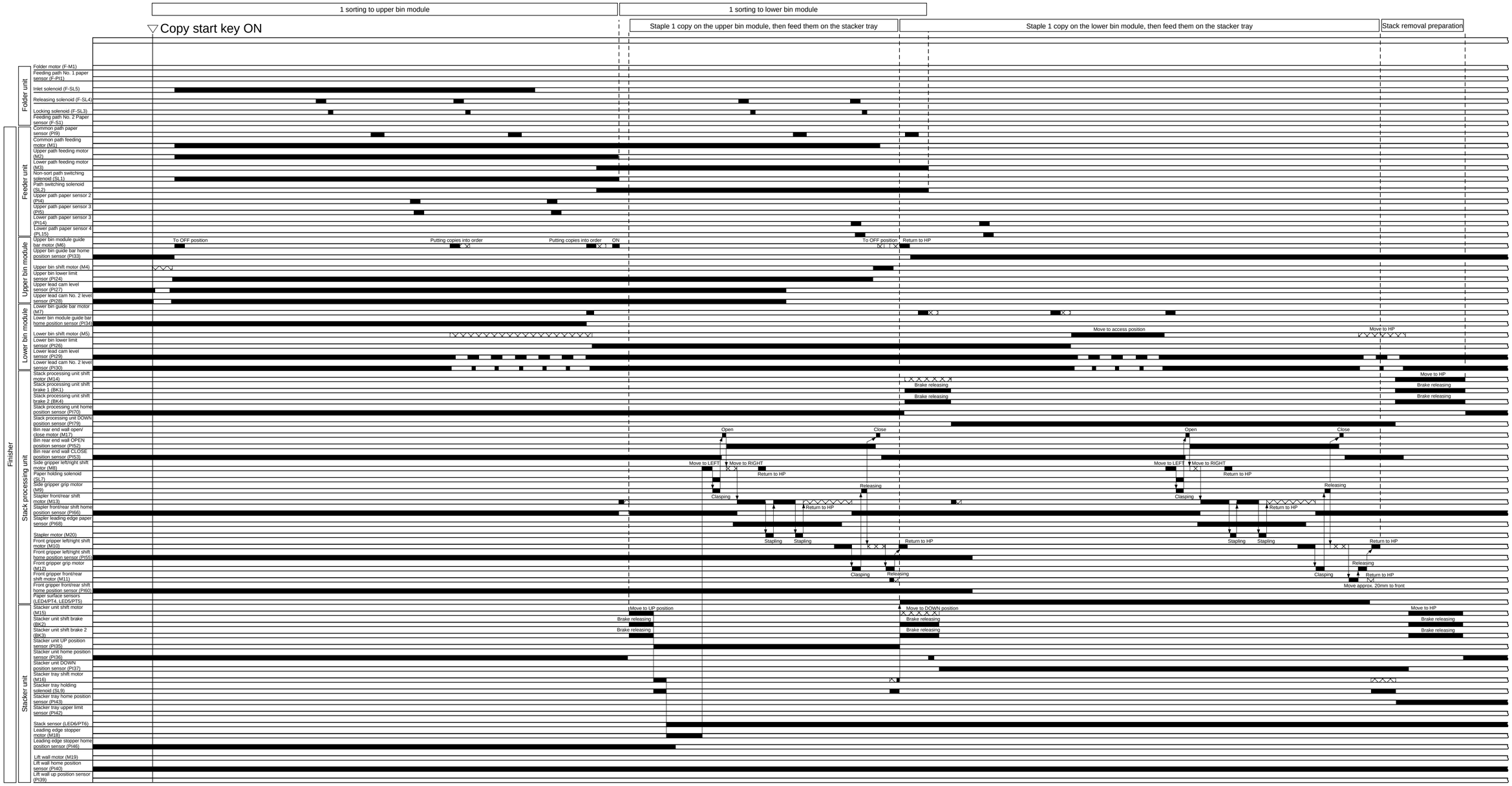

COPYRIGHT © 1997 CANON INC. CANON FINISHER-B1 REV.0 MAY 1997 PRINTED IN JAPAN (IMPRIME AU JAPON)

4. A4 Size 2 Originals 7 Staplings (double stapling) Sort Copy

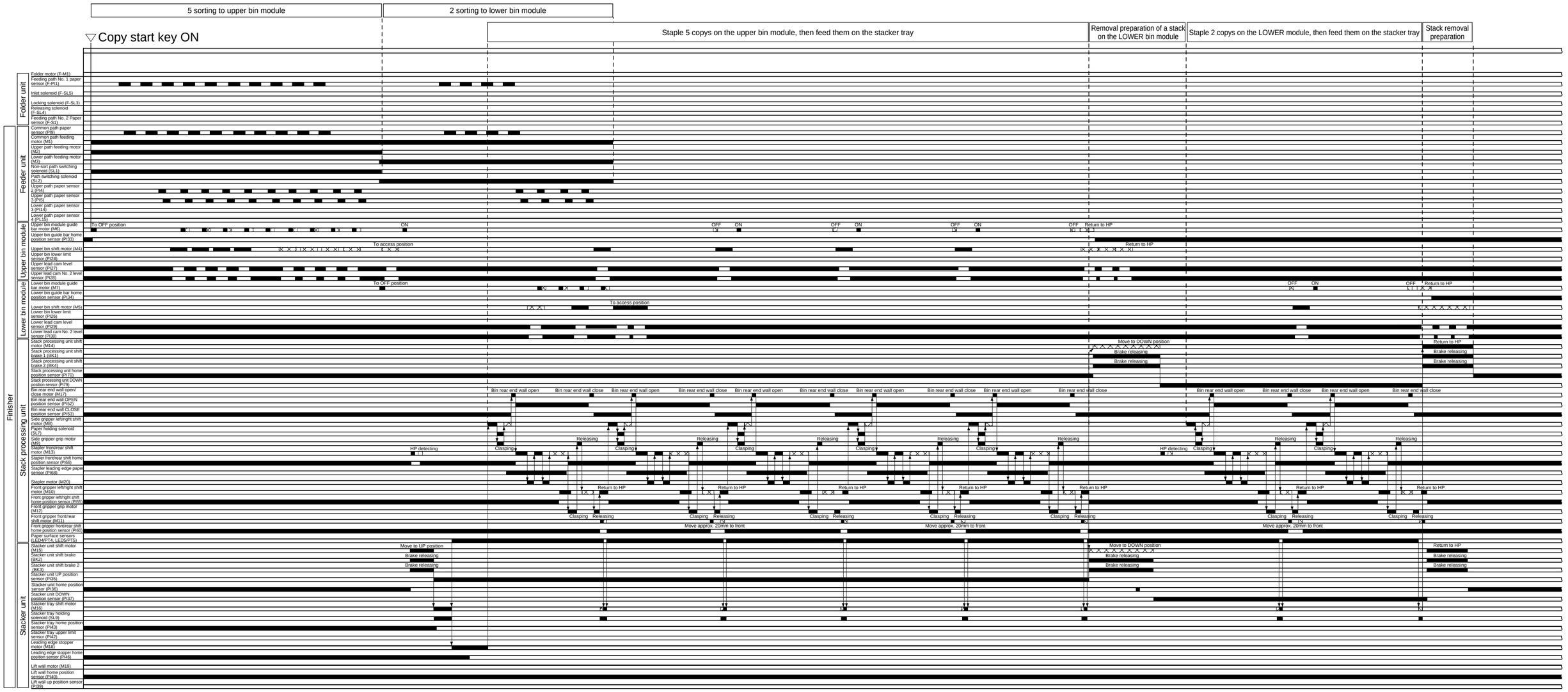

COPYRIGHT © 1997 CANON INC. CANON FINISHER-B1 REV.0 MAY 1997 PRINTED IN JAPAN (IMPRIME AU JAPON)

BCO	Bin Cover Open/Closed Detection signal
BK1D	Stacker Unit Shift Brake Drive signal
BK2D	Stack Processing Unit Brake 1 Drive signal
BK3D	Stack Processing Unit Shift Brake 2 Drive signal
BK4D	Stacker Unit Shift Brake 2 Drive signal
BRPC	Bin Shift Close Position Detection signal
BRPO	Bin Shift Open Position Detection signal
CL1D	Upper Path Roller Clutch Drive signal
CL2D	Lower Path Roller Clutch Drive signal
CPD1	Common Path Paper Detection signal 1
CPD2	Common Path Paper Detection signal 2
DP3	Feed Path No. 3 Detection signal
EMON	Emergency Mode ON signal
FCO	Front Cover Open/Closed Detection signal
F-DP1	Feed Path No. 1 Paper Detection signal
F-S2D	Feed Path No. 2 Paper Sensor LED ON signal
F-SL1D	B4 Z-Fold No. 1 Stopper Solenoid Drive signal
F-SL2D	B4 Z-Fold No. 2 Stopper Solenoid Drive signal
F-SL3D	Lock Solenoid Drive signal
F-SL4D	Release Solenoid Drive signal
F-SL5D	Inlet Solenoid Drive signal
FG (X) CLK	Front Gripper Left/Right Shift Clock signal
FG (X) HP	Front Gripper Left/Right Shift Home Position Detection signal
FG (X) LL	Front Gripper Left/Right Shift Left Limit Detection signal
FG (X) RL	Front Gripper Left/Right Shift Right Limit Detection signal
FG (X) SE	Front Gripper Left/Right Shift Safety Detection signal
FG (Y) CLK	Front Gripper Front/Rear Shift Clock signal
FG (Y) FL	Front Gripper Front/Rear Shift Front Limit Detection signal
FG (Y) HP	Front Gripper Front/Right Shift Home Position Detection signal
FG (Y) SE	Front Gripper Front/Rear Shift Safety Detection signal
FGGHP	Front Gripper Clasp Home Position Detection signal
FGPD	Front Gripper Paper Detection signal
FPD	Folded Paper Detection signal
FSET	Fold Path Set Detection signal
FUCO	Upper Cover Open/Closed Detection signal
HPD	Horizontal Path Paper Detection signal
LBBP	Lower Bin Lower Limit Detection signal
LBCLK	Lower Bin Shift Clock signal
LBGHP	Lower Guide Home Position Detection signal
LBIP	Lower Bin Inside Paper Detection signal
LBOP	Lower Bin Outside Paper Detection signal
LBTP	Lower Bin Upper Limit Detection signal
LED1D	Upper Bin Inside Paper Sensor LED ON signal
LED2D	Lower Bin Inside Sensor LED ON signal
LED3D	Edge Feed Sensor LED ON signal
LED4D	Paper Side 1 Sensor LED ON signal
LED5D	Paper Side 2 Sensor LED ON signal
LED6D	1.2K Sensor LED ON signal
LED7D	Upper Bin Outside Paper Sensor LED ON signal
LED8D	Lower Bin Outside Paper Sensor LED ON signal
LESHP	Leading Edge Stopper Home Position Detection signal
LLCL	Lower Lead Cam Level Detection signal
LLCL2	Lower Lead Cam No. 2 Level Detection signal
LP1D	Lamp ON signal
LPD1	Lower Path Paper Detection signal 1
LPD2	Lower Path Paper Detection signal 2
LPD3	Lower Path Paper Detection signal 3
LPD4	Lower Path Paper Detection signal 4
LRP1	Lower Path Paper Detection signal 1
LRP2	Lower Path Paper Detection signal 2
LRP3	Lower Path Paper Detection signal 3
M1 CLK	Common Path Feed Motor Clock signal
M1 ON	Common Path Feed Motor Drive signal
M1 SRP	Common Path Speed Reference signal
M12D	Front Gripper Clasp Motor Drive signal
M17D	Bin Shift Motor Drive signal
M2 CLK	Upper Path Feed Motor Clock signal
M2 F/R	Upper Path Feed Motor Rotation Direction signal
M2 LOCK	Upper Path Feed Motor Lock signal
M2 ON	Upper Path Feed Motor Drive signal
M2 SRP	Upper Path Feed Motor Speed Reference signal
M3LOCK	Lower Path Feeder Motor Constant Speed State signal
M3SRP	Lower Path Feeder Motor Reference Pulse
M3CLK	Lower Path Feeder Motor Clock Pulse
M3ON	Lower Path Feeder Motor Drive signal
MSF/R	Lower Path Feeder Motor Rotation Direction signal
M4PWM	Upper Bin Shift Motor Rotation Speed signal
M5PWM	Lower Bin Shift Motor Rotation Speed signal
M8PC	Side Gripper Left/Right Shift Motor Phase Control signal
M8F/R	Side Gripper Left/Right Shift Motor Rotation Direction signal
M8DCC	Side Gripper Left/Right Shift Motor Current Switch signal
M9D	Side Gripper Clasp Motor Drive signal
M10PC	Front Gripper Left/Right Shift Motor Phase Control signal
M10F/R	Front Gripper Left/Right Shift Motor Rotation Direction signal
M10DCC	Front Gripper Left/Right Shift Motor Current Switch signal
M13PC	Stapler Front/Rear Shift Motor Phase Control signal
M13F/R	Stapler Front/Rear Shift Motor Rotation Direction signal
M13DCC	Stapler Front/Rear Shift Motor Current Switch signal
M15PWM	Stacker Unit Shift Motor Rotation Speed signal
M18VC	Leading Edge Stopper Motor Voltage Switch signal
M18PC	Leading Edge Stopper Motor Phase Control signal
M18F/R	Leading Edge Stopper Motor Rotation Direction signal
NSD	Non-Sort Delivery Assembly Paper Detection signal
NSPD	Non-Sort Path Paper Detection signal
PD	Stack Detection signal
PED	Edge Feed Detection signal
PF1	Paper Side 1 Detection signal
PF2	Paper Side 2 Detection signal
SC	Screen Detection signal
SG (X) HP	Side Gripper Left/Right Shift Home Position Detection signal
SGGHP	Side Gripper Clasp Home Position Detection signal
SGMED	Side Gripper Motor Error Detection signal
SGPD	Side Gripper Paper Detection signal
SL1D	Non-Sort Path Switch Solenoid Drive signal
SL2D	Path Switch Solenoid Drive signal
SL3D	Stacker Access Solenoid Drive signal
SL5D	Upper Paddle Solenoid Drive signal
SL6D	Lower Paddle Solenoid Drive signal
SL7D	De-curling Solenoid Drive signal
SL8D	Bin Cover Lock Solenoid Drive signal
SL9D	Stacker Tray Hold Solenoid Drive signal
SPCLK	Stack Processing Unit Shift Clock signal
SPHP	Stack Processing Unit Up Position Detection signal
SPLP	Stack Processing Unit Upper Limit Detection signal
SPTP	Stack Processing Unit Down Position Detection signal
STA	Stacker Unit Near Position Detection signal
STBP	Stacker Lower Limit Detection signal
STCLK	Stacker Unit Shift Clock signal
STHP	Stacker Home Position Detection signal
STLP	Stacker Down Position Detection signal
STP (Y) CLK	Stapler Front/Rear Shift Clock signal
STP (Y) HP	Stapler Front/Rear Shift Home Position Detection signal
STPED	Stapler Staple Absent Detection signal
STPHP	Stapler Home Position Detection signal
STPPE	Stapler Leading Edge Detection signal (light-emitting, receiving)
STPSE	Stapler Front/Rear Shift Safety Detection signal
STS	Stacker Cassette Detection signal
STTCLKA	Stacker Tray Shift Clock signal
STTCLKB	Stacker Tray Shift Clock signal B
STTHP	Stacker Tray Home Position Detection signal
STTPD	Stacker Tray Stack Detection signal
STTTP	Stacker Tray Upper Limit Detection signal
STUTOP	Stacker Unit Up Position Detection signal
TODD	Access Door Detection signal
TWHP	Reference Wall Home Position Detection signal
TWTP	Reference Wall Up Position Detection signal
UBBP	Upper Bin Lower Limit Detection signal
UBCLK	Upper Bin Shift Clock signal
UBGHP	Upper Guide Home Position Detection signal
UBIP	Upper Bin Inside Paper Detection signal
UBOP	Upper Bin Outside Paper Detection signal
UBTP	Upper Bin Upper Limit Detection signal
UCO1	Upper Cover Open/Closed Detection signal 1
UCO2	Upper Cover Open/Closed Detection signal 2
ULCL	Upper Lead Cam Level Detection signal
ULCL2	Upper Lead Cam No. 2 Level Detection signal
UPD1	Upper Path Paper Detection signal 1
UPD2	Upper Path Paper Detection signal 2
UPD3	Upper Path Paper Detection signal 3
URP1	Upper Path Paper Detection signal 1
URP2	Upper Path Paper Detection signal 2
VRP1	Vertical Path Paper Detection signal 1
VRP2	Vertical Path Paper Detection signal 2
VRP3	Vertical Path Paper Detection signal 3

COPYRIGHT © 1997 CANON INC.
CANON FINISHER-B1 REV.0 MAY 1997 PRINTED IN JAPAN (IMPRIME AU JAPON)

COPYRIGHT © 1997 CANON INC.
CANON FINISHER-B1 REV.0 MAY 1997 PRINTED IN JAPAN (IMPRIME AU JAPON)

Not available

COPYRIGHT © 1997 CANON INC.

COPYRIGHT © 1997 CANON INC.
CANON FINISHER-B1 REV.0 MAY 1997 PRINTED IN JAPAN (IMPRIME AU JAPON)

GENERAL CIRCUIT DIAGRAM (2/2)

Stack processing unit driver PCB

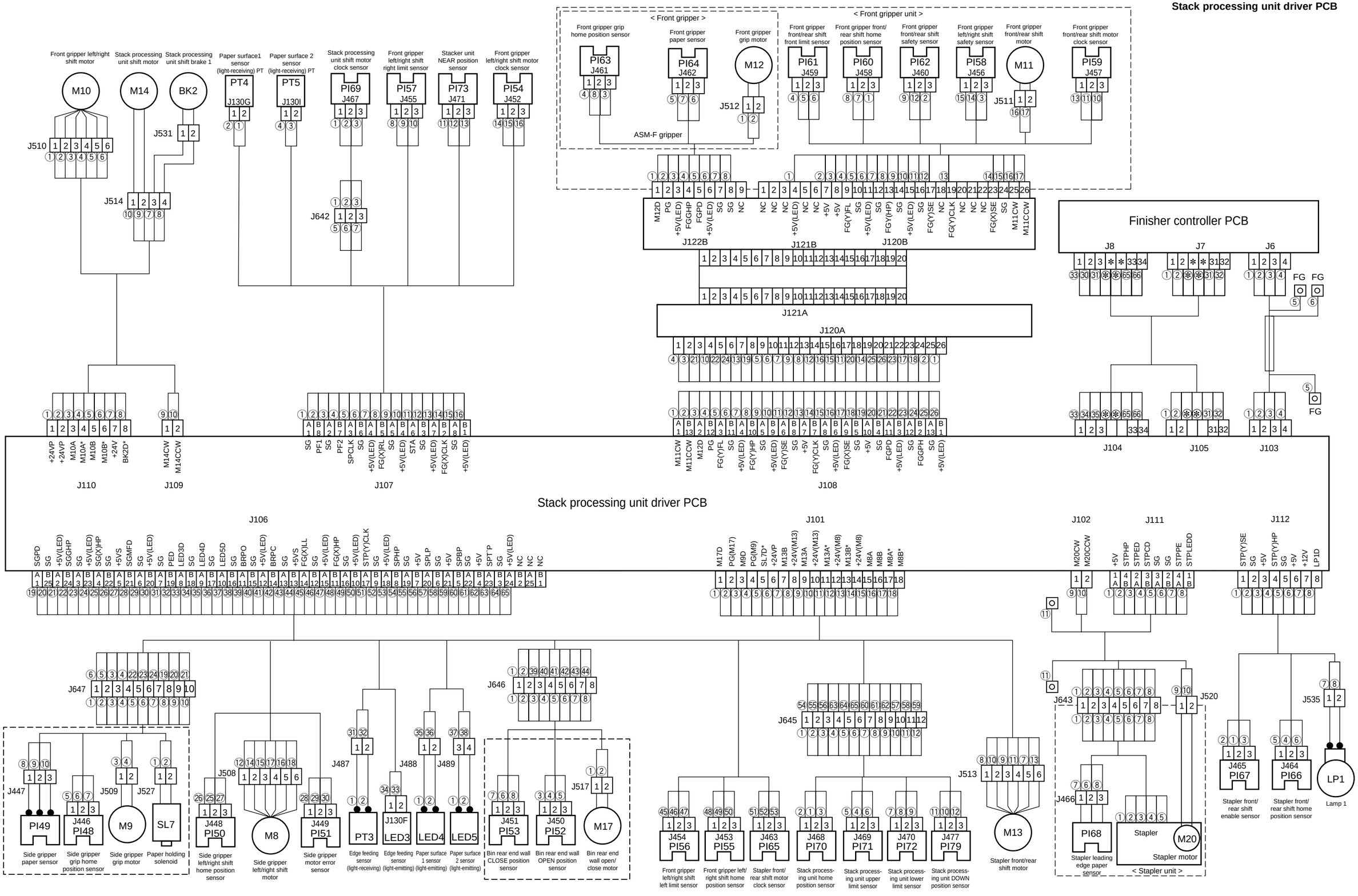

COPYRIGHT © 1997 CANON INC.

COPYRIGHT © 1997 CANON INC.
CANON FINISHER-B1 REV.0 MAY 1997 PRINTED IN JAPAN (IMPRIME AU JAPON)

D. PAPER FOLDING UNIT GENERAL CIRCUIT DIAGRAM

Not available

COPYRIGHT © 1997 CANON INC.
CANON FINISHER-B1 REV.0 MAY 1997 PRINTED IN JAPAN (IMPRIME AU JAPON)

E. SPECIAL TOOLS

You will need the following special tools in addition to the standard tools set.

No.	Name	Use	Composition	Remarks	Use
1	Spring gauge	CK-0054-000	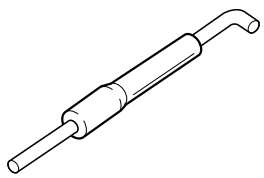	B	For adjusting the tension of the drive belt.

F. SOLVENTS AND OILS

No.	Name	Use	Composition	Remarks
1	Alcohol	Cleaning: e.g., glass, plastic, bin, and rubber parts; external covers.	Carbon sulfide of fluorine family, Alcohol, Surface active agent, Water	• Do not bring near fire.
2	Lubricant	Preventing wear: e.g., friction parts; stapler.	Silicone oil	Tool No.: CK-0551 (20 g)
3	Lubricant	Stapler	Mineral oil (paraf-fin family)	Tool No.: CK-0451 (100 cc)

COPYRIGHT © 1997 CANON INC.

COPYRIGHT © 1997 CANON INC.

Prepared by
Office Imaging Products Technical Support Department 1
Office Imaging Products Quality Assurance Center
CANON INC
Printed in Japan

REVISION 0 (MAY 1997) (28353/30359)

7-5-1, Hakusan, Torideshi, Ibaraki 302 Japan

Canon

This publication is printed on
70% reprocessed paper.

PRINTED IN JAPAN (IMPRIME AU JAPON) 0597AB2.21-1