Saddle Finisher-D2

PARTS CATALOG

REVISION 0

Canon

JULY 1999 FY8-31ED-000

COPYRIGHT©1999 CANON INC.
CANON Saddle Finisher-D2 REV.0 JULY 1999 PRINTED IN JAPAN [IMPRIME AU JAPON]

PREFACE

This Parts Catalog contains listings of parts used in the Canon Saddle Finisher-D2. Diagrams are provided with the listings to aid the service technician in identifying clearly, the item to be orderd.

Whenever ordering parts, consult this Parts Catalog for all of the information pertaining to each item. Be sure to include, in the Parts Request, the full item description, the item part number, and the quantity.

Canon Inc.

Office Imaging Products Technical Support Div.
5-1, Hakusan 7-chome,
Toride-city, Ibaraki 302-8501, Japan

COPYRIGHT © 1999 CANON INC.

Printed in Japan
Imprimé au Japon

Use of this manual should be strictly supervised to avoid disclosure of confidential information.

CONTENTS

-Saddle Finisher-D2-

QA. ASSEMBLY LOCATION DIAGRAM

Q01. ATTACHMENT PARTS
Q02. SPECIAL TOOLS

Q10. EXTERNAL COVERS, PANELS, ETC.
Q11. INTERNAL COMPONENTS 1
Q12. INTERNAL COMPONENTS 2
Q13. INTERNAL COMPONENTS 3
Q14. SADDLE DELIVERY TRAY ASSEMBLY
Q15. POWER CORD TERMINAL ASSEMBLY
Q16. MAIN BODY CABLE ASSEMBLY
Q17. HOPPER ASSEMBLY
Q18. STACKER TRAY FRAME ASSEMBLY
Q19. SAMPLE TRAY FRAME ASSEMBLY

Q20. OPERATION ASSEMBLY
Q21. TRAY ASSEMBLY
Q22. TRAY FRAME ASSEMBLY
Q23. TRAY AUXILIARY PLATE ASSEMBLY
Q24. SWING GUIDE ASSEMBLY

Q30. FEEDER ASSEMBLY
Q31. SORT GUIDE ASSEMBLY
Q32. PAPER FEED LOWER GUIDE ASSEMBLY
Q33. SORT LEFT LOWER GUIDE ASSEMBLY
Q34. ADJUSTMENT LEVER ASSEMBLY
Q35. RELAY GUIDE ASSEMBLY
Q36. DELIVERY MOTOR ASSEMBLY
Q37. UPPER FEEDER ASSEMBLY

Q40. STAPLER MOUNT ASSEMBLY
Q41. STAPLER ASSEMBLY
Q45. PUNCH ASSEMBLY
Q46. PUNCH WASTE FEED MOTOR ASSEMBLY

Q50. SADDLE ASSEMBLY
Q52. SADDLE INLET ASSEMBLY
Q53. SADDLE GUIDE ASSEMBLY
Q54. SADDLE STAPLER ASSEMBLY
Q55. SADDLE INLET DRIVE ASSEMBLY
Q56. PASS LOWER GUIDE ASSEMBLY
Q57. INNER SIDE PLATE ASSEMBLY
Q58. SADDLE DELIVERY ASSEMBLY
Q59. MOTOR MOUNT ASSEMBLY

Q90. FINISHER CONTROLLER PCB ASSEMBLY
Q91. SADDLE CONTROLLER PCB ASSEMBLY
Q92. AC FUSE BOX PCB ASSEMBLY

QB. LIST OF CONNECTORS

-Paper Folding Unit-B1-

QA. ASSEMBLY LOCATION DIAGRAM

Q01. ATTACHMENT PARTS 1
Q02. ATTACHMENT PARTS 2
Q03. ATTACHMENT PARTS 3

Q10. UPPER COVER ASSEMBLY
Q11. INTERNAL COMPONENTS 1
Q12. INTERNAL COMPONENTS 2
Q13. INTERNAL COMPONENTS 3

Q20. FOLDER MOTOR ASSEMBLY
Q21. COUPLING ASSEMBLY

Q31. RIGHT GUIDE ASSEMBLY
Q32. RIGHT INNER GUIDE ASSEMBLY
Q33. LEFT GUIDE ASSEMBLY
Q34. LEFT INNER GUIDE ASSEMBLY
Q35. FEED UPPER GUIDE ASSEMBLY
Q36. INNER LEFT GUIDE ASSEMBLY
Q37. LOWER LEFT GUIDE ASSEMBLY

Q90. FOLDER DRIVER PCB ASSEMBLY

QB. LIST OF CONNECTORS

-Cover Insertion Unit-A1-

PA. ASSEMBLY LOCATION DIAGRAM

P01. MOUNTING HARDWARE 1

COPYRIGHT©1999 CANON INC.

CONTENTS

P02. MOUNTING HARDWARE 2

P10. EXTERNAL COVERS, PANELS, ETC.
P11. INTERNAL COMPONENTS
P12. PICK-UP TRAY ASSEMBLY
P14. UPPER PANEL ASSEMBLY

P20. SEPARATION MOTOR ASSEMBLY

P30. SEPARATION ASSEMBLY

PB. LIST OF CONNECTORS

C. LIST OF STANDARD FASTENERS

D1. NUMERICAL INDEX (Saddle Finisher-D2)
D2. NUMERICAL INDEX (Paper Folding Unit-B1)
D3. NUMERICAL INDEX (Cover Insertion Unit-A1)

 COPYRIGHT©1999 CANON INC.

Saddle Finisher-D2

100V	50/60Hz	F24 - 9501	LLJ00001 -
120V	60Hz	F24 - 9511	NLJ00001 -
220/240V	50Hz	F24 - 9521	ULJ00001 -

COPYRIGHT © 1999 CANON INC.
CANON Saddle Finisher-D2 REV.0 JULY 1999 PRINTED IN JAPAN [IMPRIME AU JAPON]

CONTENTS

QA. ASSEMBLY LOCATION DIAGRAM

Q01. ATTACHMENT PARTS
Q02. SPECIAL TOOLS

Q10. EXTERNAL COVERS, PANELS, ETC.
Q11. INTERNAL COMPONENTS 1
Q12. INTERNAL COMPONENTS 2
Q13. INTERNAL COMPONENTS 3
Q14. SADDLE DELIVERY TRAY ASSEMBLY
Q15. POWER CORD TERMINAL ASSEMBLY
Q16. MAIN BODY CABLE ASSEMBLY
Q17. HOPPER ASSEMBLY
Q18. STACKER TRAY FRAME ASSEMBLY
Q19. SAMPLE TRAY FRAME ASSEMBLY

Q20. OPERATION ASSEMBLY
Q21. TRAY ASSEMBLY
Q22. TRAY FRAME ASSEMBLY
Q23. TRAY AUXILIARY PLATE ASSEMBLY
Q24. SWING GUIDE ASSEMBLY

Q30. FEEDER ASSEMBLY
Q31. SORT GUIDE ASSEMBLY
Q32. PAPER FEED LOWER GUIDE ASSEMBLY
Q33. SORT LEFT LOWER GUIDE ASSEMBLY
Q34. ADJUSTMENT LEVER ASSEMBLY
Q35. RELAY GUIDE ASSEMBLY
Q36. DELIVERY MOTOR ASSEMBLY
Q37. UPPER FEEDER ASSEMBLY

Q40. STAPLER MOUNT ASSEMBLY
Q41. STAPLER ASSEMBLY
Q45. PUNCH ASSEMBLY
Q46. PUNCH WASTE FEED MOTOR ASSEMBLY

Q50. SADDLE ASSEMBLY
Q52. SADDLE INLET ASSEMBLY
Q53. SADDLE GUIDE ASSEMBLY
Q54. SADDLE STAPLER ASSEMBLY
Q55. SADDLE INLET DRIVE ASSEMBLY
Q56. PASS LOWER GUIDE ASSEMBLY
Q57. INNER SIDE PLATE ASSEMBLY
Q58. SADDLE DELIVERY ASSEMBLY
Q59. MOTOR MOUNT ASSEMBLY

Q90. FINISHER CONTROLLER PCB ASSEMBLY
Q91. SADDLE CONTROLLER PCB ASSEMBLY

Q92. AC FUSE BOX PCB ASSEMBLY

QB. LIST OF CONNECTORS

D1. NUMERICAL INDEX

COPYRIGHT © 1999 CANON INC.
CANON Saddle Finisher-D2 REV.0 JULY 1999 PRINTED IN JAPAN [IMPRIME AU JAPON]

FIGURE QA ASSEMBLY LOCATION DIAGRAM (1/2)

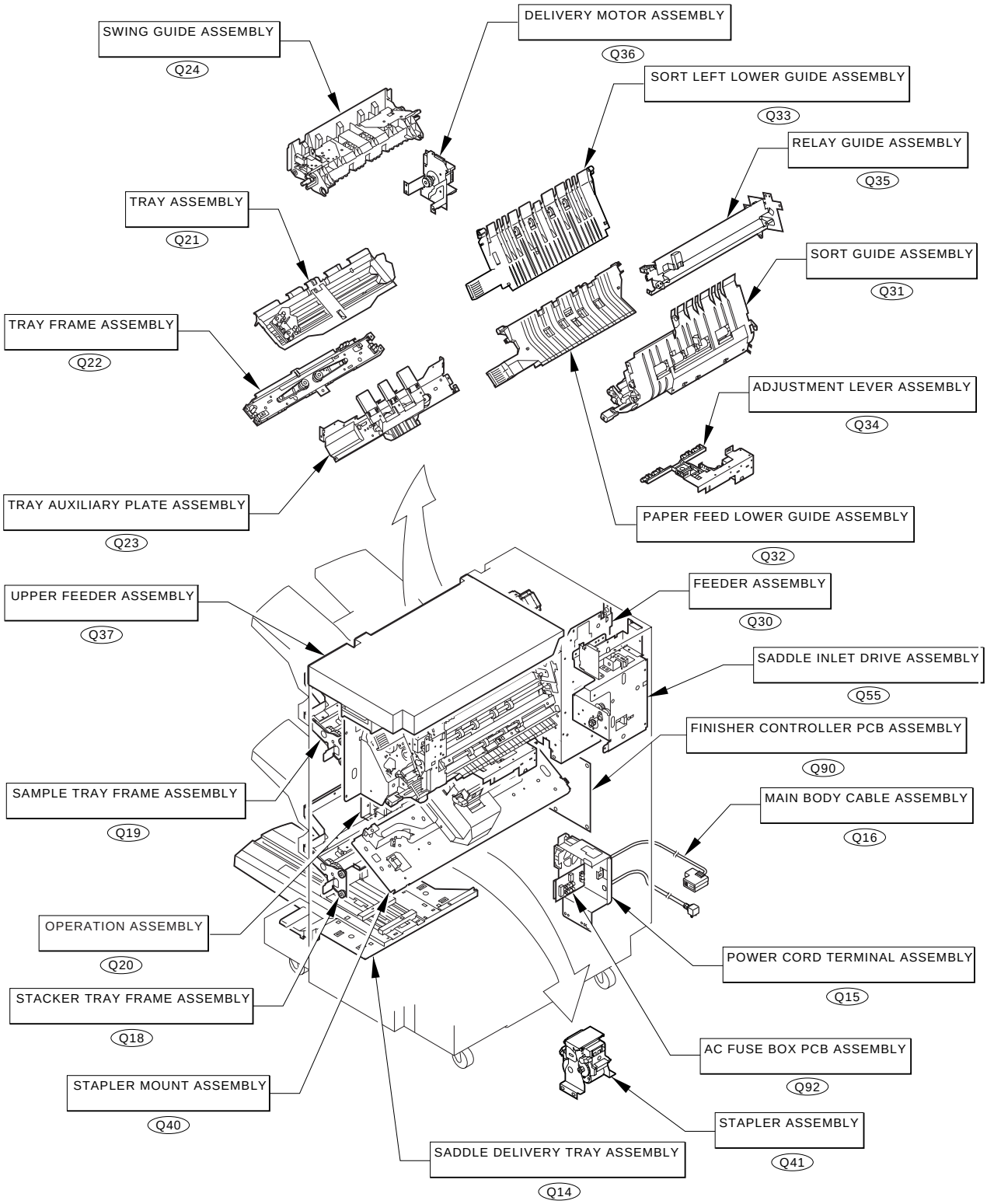

COPYRIGHT © 1999 CANON INC.

FIGURE QA ASSEMBLY LOCATION DIAGRAM (2/2)

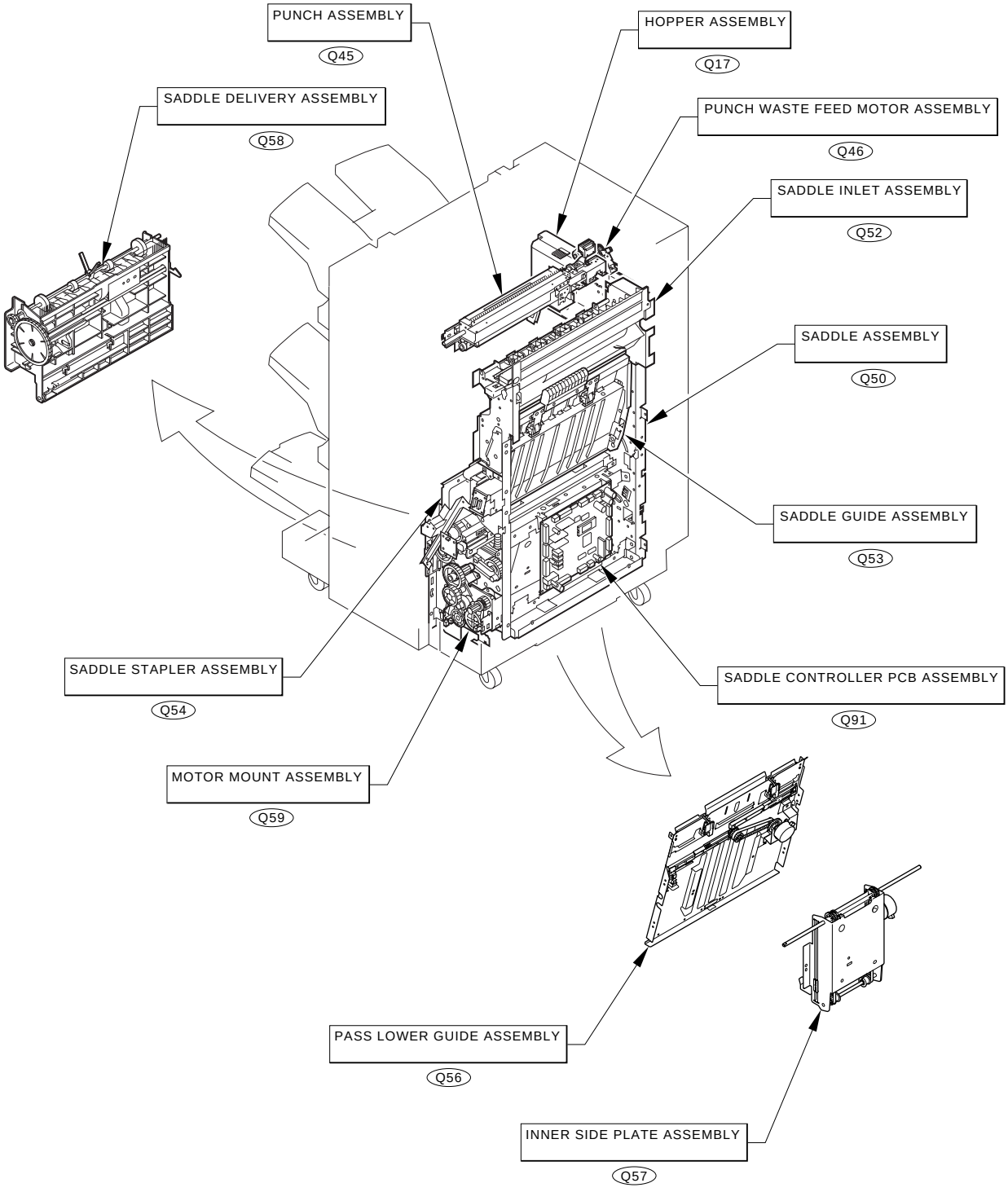

COPYRIGHT © 1999 CANON INC.

FIGURE Q01 ATTACHMENT PARTS

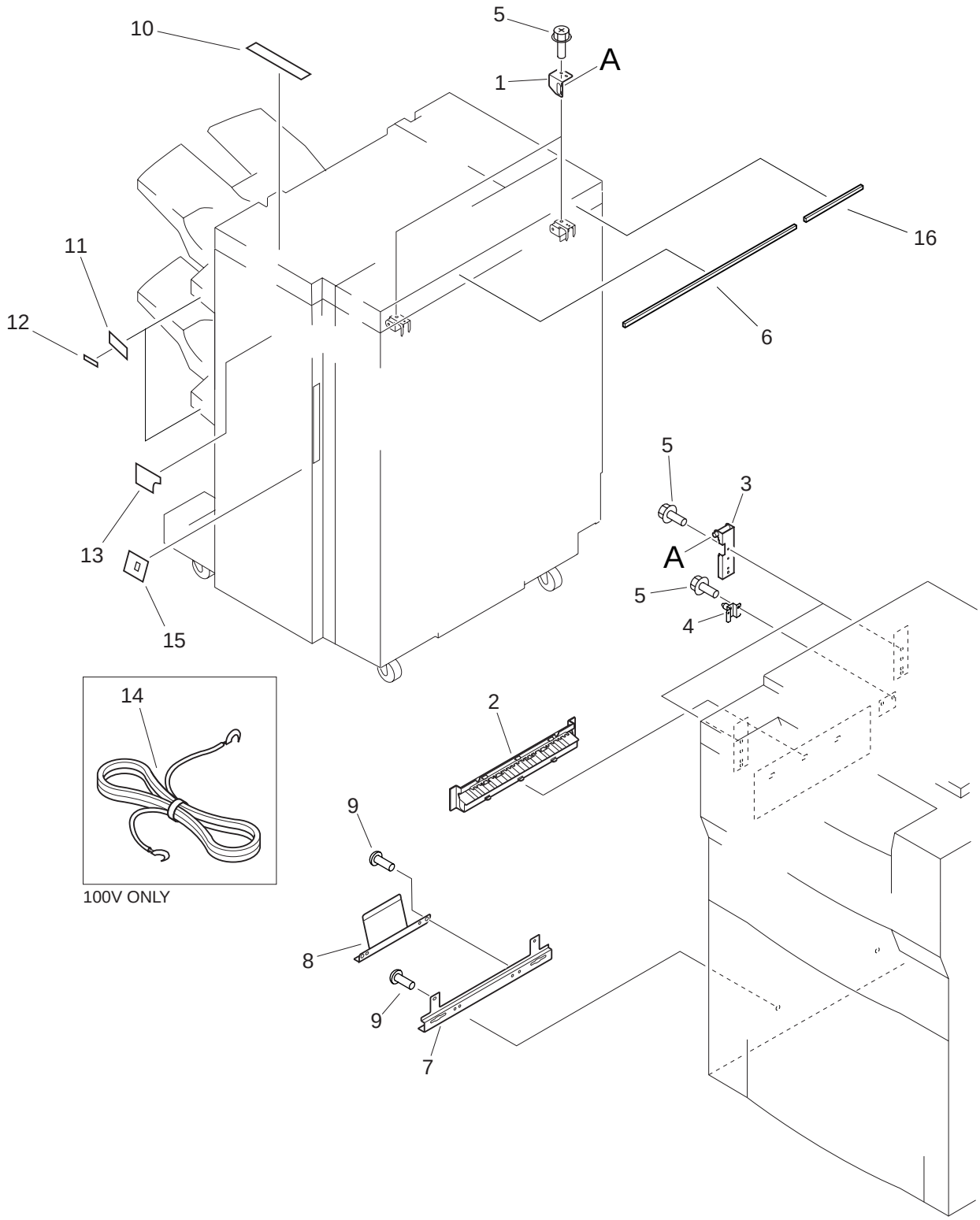

COPYRIGHT © 1999 CANON INC.

FIGURE & KEY NO.	PART NUMBER	RANK	QTY	DESCRIPTION	SERIAL NUMBER / REMARKS
Q01 -	NPN		RF	ATTACHMENT PARTS	
1	FB4-8246-000		2	PLATE	
2	FB4-8724-000		1	GUIDE, AUXILIARY	
3	FF5-8463-000		2	PLATE, LATCH	
4	FF5-8464-000		1	PLATE, PIN	
5	XA9-0949-000		10	SCREW,RS,M4X10	
6	FB4-8722-000		1	GAP TAPE	
7	FB4-8265-000		1	MOUNT, GROUNDING	
8	FB4-8266-000		1	PLATE, GROUNDING	
9	XA9-0633-000		4	SCREW,W/WASHER,M4X8	
10	FB4-8602-000		1	LABEL	
11	FB4-8340-000		1	LABEL	
12	FB4-8345-000		1	LABEL	
13	FB5-2672-000		1	LABEL, JAM	
14	FH2-5006-000		1	CABLE, GROUNDING	100V ONLY
15	FB5-2693-000		1	LABEL	
16	FB4-8933-000		1	SPACER, COVER, B	

COPYRIGHT © 1999 CANON INC.

FIGURE Q02 SPECIAL TOOLS

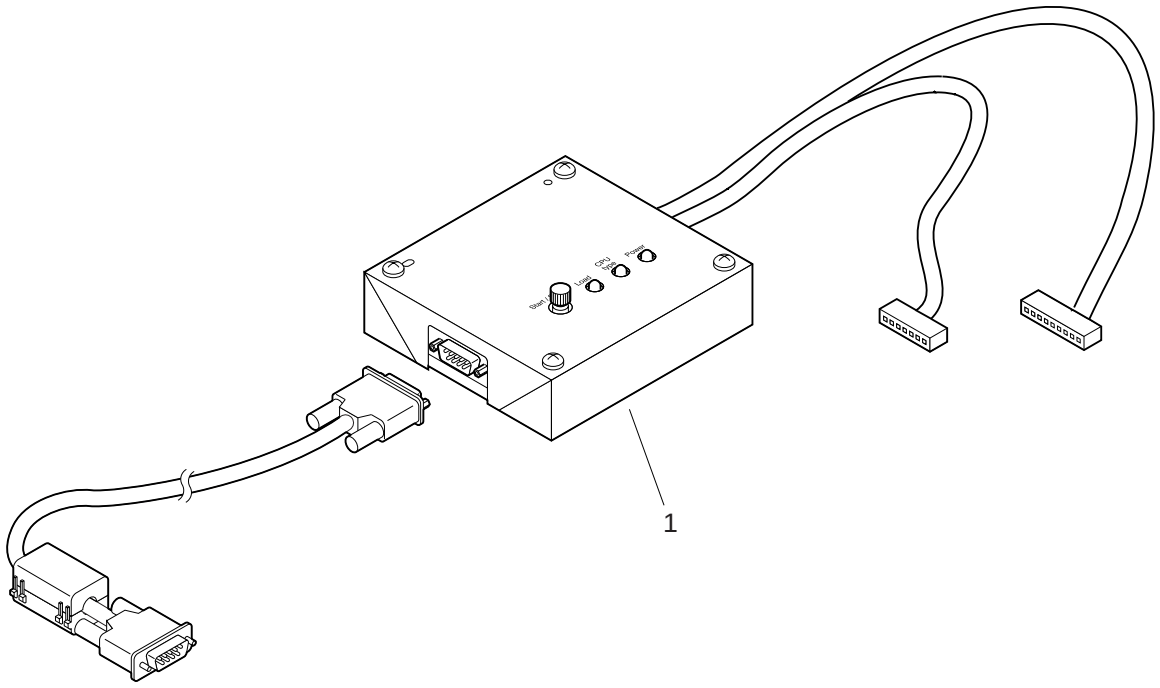

FIGURE & KEY NO.	PART NUMBER	RANK	QTY	DESCRIPTION	SERIAL NUMBER / REMARKS
Q02 -	NPN		RF	SPECIAL TOOLS	
1	FY9-2034-000		1	DOWNLOADER PCB ASSEMBLY	

COPYRIGHT © 1999 CANON INC.

FIGURE Q10 EXTERNAL COVERS, PANELS, ETC. (1/2)

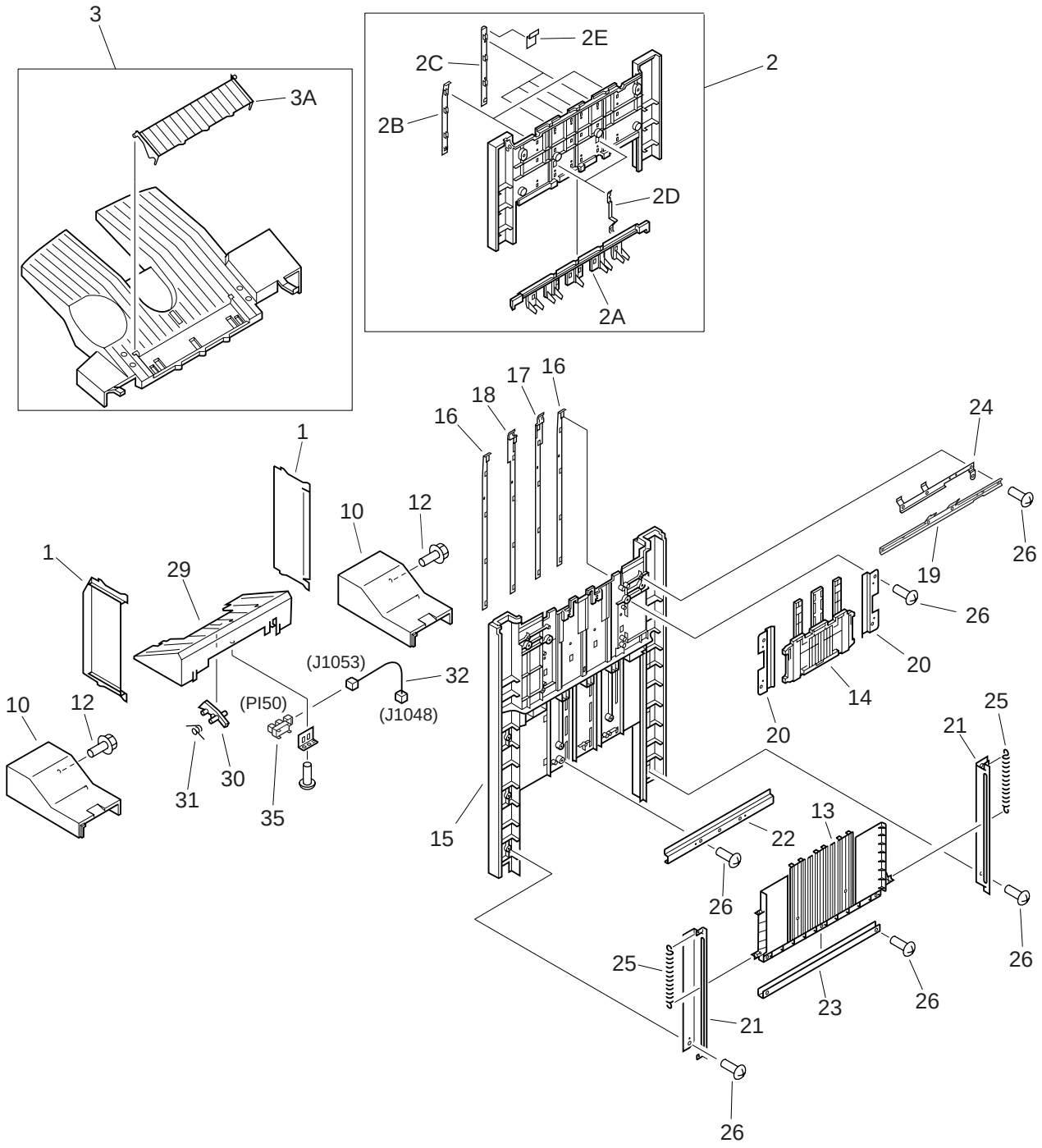

COPYRIGHT © 1999 CANON INC.

FIGURE Q10 EXTERNAL COVERS, PANELS, ETC. (2/2)

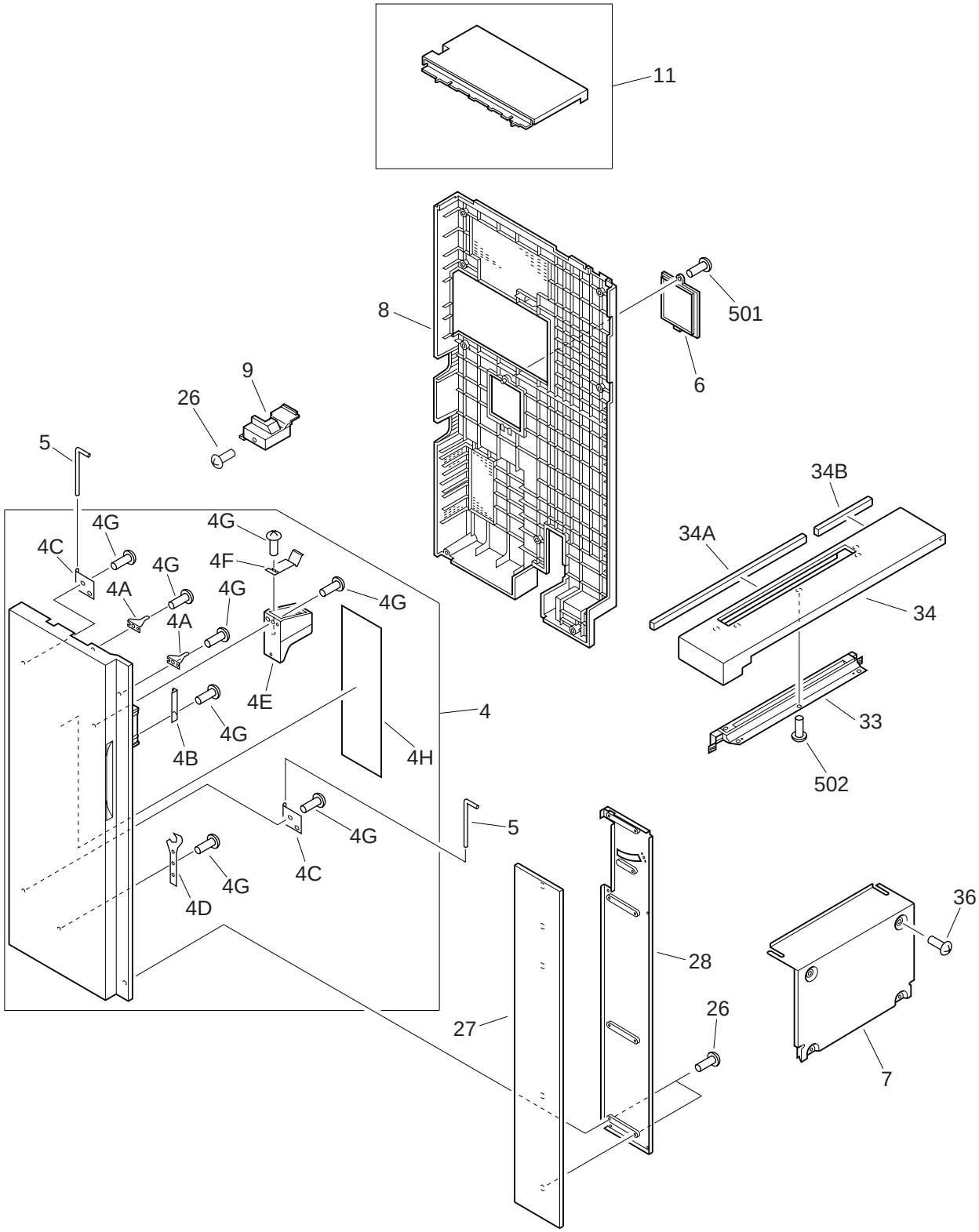

FIGURE & KEY NO.	PART NUMBER	RANK	QTY	DESCRIPTION	SERIAL NUMBER / REMARKS
Q10 -	NPN		RF	EXTERNAL COVERS, PANELS, ETC.	
1	FB4-8813-000		2	PLATE, SIDE GUIDE	
2	FG6-3051-000		1	SLIDE GUIDE ASSEMBLY	
2A	FB4-8271-000		1	GUIDE, SLIDE, UPPER	
2B	FB4-8284-000		2	PLATE, SLIDE, 1	
2C	FB4-8285-000		4	PLATE, SLIDE, 2	
2D	FB4-8286-000		2	SPRING, LEAF	
2E	FB4-8287-000		4	SHEET	
3	FG6-3076-000		2	TRAY ASSEMBLY	
3A	FB4-8298-000		1	TRAY, AUXILIARY	
4	FG6-3248-000		1	FRONT DOOR ASSEMBLY	
4A	FB4-8604-000		2	PLATE, DOOR SWITCH	
4B	FB4-8237-000		1	PLATE	
4C	FB4-8239-000		2	PLATE, HINGE	
4D	FB4-8248-000		1	SPANNER, ADJUSTING	
4E	FB4-8697-000		1	COVER, SPRING	
4F	FB4-8698-000		1	SPRING, LEAF	
4G	XA9-0605-000		12	SCREW,P,M4X8	
4H	FB4-8710-000		1	LABEL, STAPLER	
5	FB2-0037-000		2	PIN, HINGE	
6	FB3-0122-000		1	COVER, PCB	
7	FB4-8828-000		1	PANEL, SADDLE, RIGHT	
8	FB4-8726-000		1	PANEL, REAR	
9	FB4-8727-000		1	COVER, PILLAR	
10	FB4-8728-000		2	COVER, FOOT	
11	FF5-8527-000		1	COVER, UPPER, REAR	
12	XA9-0629-000		AR	SCREW,RS,M4X8	
13	FB4-8274-000		1	WALL, LOADING, LOWER	
14	FB4-8275-000		1	SHUTTER	
15	FB4-8273-000		1	WALL, LOADING, CENTER	

COPYRIGHT©1999 CANON INC.

FIGURE & KEY NO.	PART NUMBER	RANK	QTY	DESCRIPTION	SERIAL NUMBER / REMARKS
Q10 - 16	FB4-8276-000		2	PLATE, HURDLE, 1	
17	FB4-8277-000		1	PLATE, HURDLE, 2	
18	FB4-8278-000		1	PLATE, HURDLE, 3	
19	FB4-8279-000		1	GUIDE, SHUTTER	
20	FB4-8280-000		2	MOUNT, SHUTTER	
21	FB4-8282-000		2	MOUNT	
22	FB4-8283-000		1	SUPPORT	
23	FB4-8288-000		1	PLATE	
24	FB4-8344-000		1	PLATE, GROUNDING	
25	FS7-2082-000		2	SPRING, TENSION	
26	XA9-0605-000		AR	SCREW,P,M4X8	
27	FB4-8953-000		1	DOOR, FRONT	
28	FB4-8954-000		1	PLATE, FRONT DOOR	
29	FB4-8861-000		1	TRAY, DELIVERY SUB	
30	FB4-8871-000		1	LEVER, TRAY SENSOR, 2	
31	FB4-8874-000		1	SPRING, TORSION	
32	FF3-3865-000		1	CABLE, SADDLE SUB TRAY	J1048,1053
33	FB4-8931-000		1	PANEL, UPPER, 2	
34	FF5-8621-000		1	PANEL, UPPER, 1	
34A	FB4-8722-000		1	GAP TAPE	
34B	FB4-8933-000		1	SPACER, COVER, B	
35	WG8-5362-000		1	IC, TLP1241, PHOTO-INTERRUPTER	PI50 J1053
36	XA9-0629-000		4	SCREW,RS,M4X8	
501	XB4-7401-207		1	SCREW,TAPPING,TRUSS HEAD,M4X12	
502	XB4-7401-009		2	SCREW,TAPPING,TRUSS HEAD,M4X10	

COPYRIGHT©1999 CANON INC.

FIGURE Q11 INTERNAL COMPONENTS 1

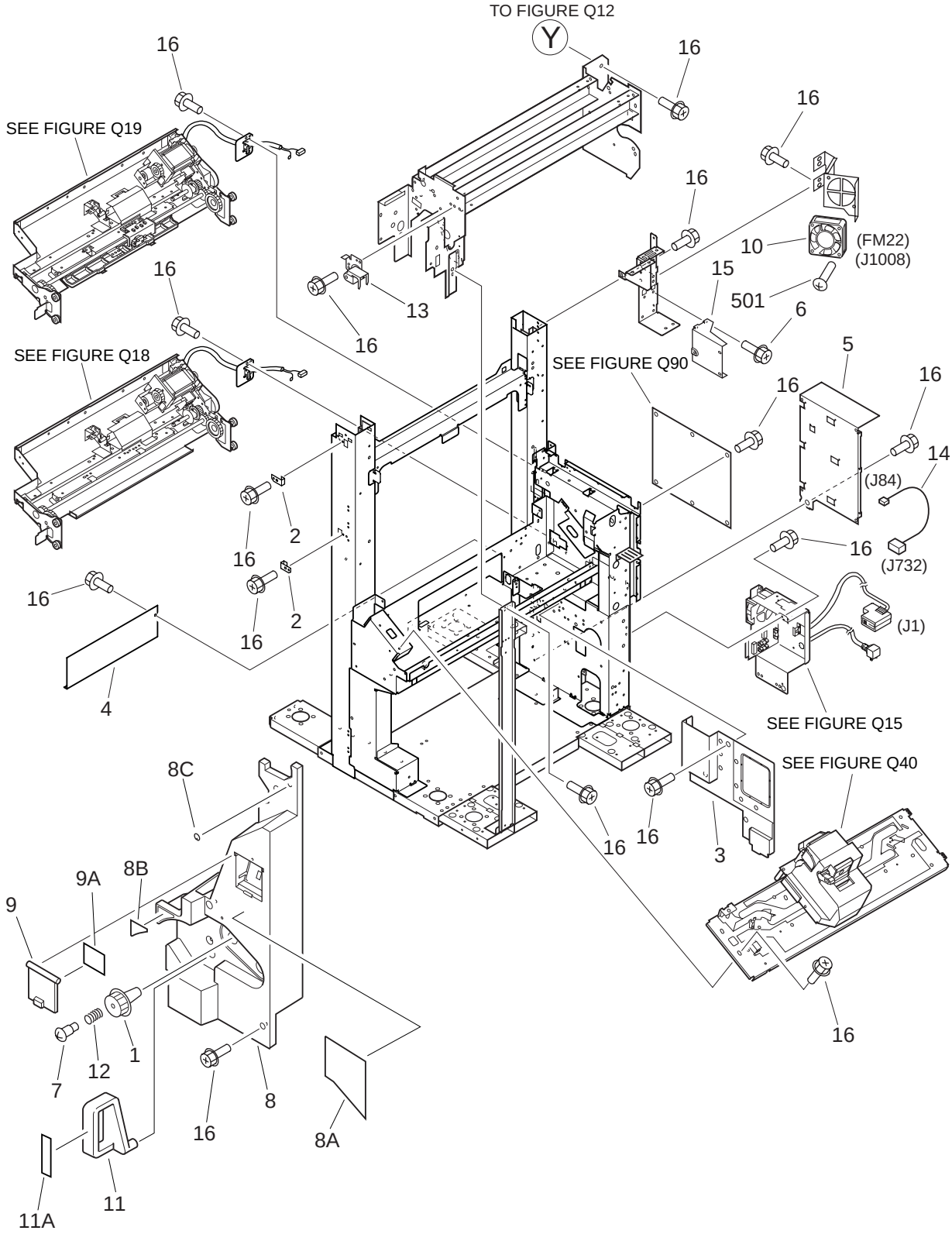

COPYRIGHT © 1999 CANON INC.
CANON Saddle Finisher-D2 REV.0 JULY 1999 PRINTED IN JAPAN [IMPRIME AU JAPON]

FIGURE & KEY NO.	PART NUMBER	RANK	QTY	DESCRIPTION	SERIAL NUMBER / REMARKS
Q11 -	NPN		RF	INTERNAL COMPONENTS 1	
1	FB3-7881-000		1	KNOB	
2	FB4-8250-000		2	STOPPER, TRAY	
3	FB4-8350-000		1	COVER, CONNECTOR	
4	FB4-8538-000		1	COVER, STAPLER	
5	FH3-2553-000		1	REGULATOR, SWITCHING	100/120V
	FH3-2554-000		1	REGULATOR, SWITCHING	220/240V
6	XA9-0983-000		5	SCREW,M1.6X4.6	
7	FS5-9579-000		1	SCREW, STEPPED, M3	
8	FF5-9616-000		1	COVER, SADDLE INNER	
8A	FB5-2690-000		1	LABEL	
8B	FB5-2691-000		1	LABEL	
8C	FB5-2709-000		1	LABEL	
9	FF5-9618-000		1	COVER, SWITCH	
9A	FB5-2694-000		1	LABEL, WARNING	
10	RH7-1289-000		1	FAN	FM2 J1008
11	FF5-9617-000		1	HANDLE	
11A	FB5-2692-000		1	LABEL, HANDLE	
12	FS7-2171-000		1	SPRING, COMPRESSION	
13	FF5-8461-000		1	LATCH, FRONT	
14	FF3-3610-000		1	CABLE, AC	J84,732
15	FB5-2726-000		1	PLATE, MOTOR REINFORCEMENT	
16	XA9-0629-000		AR	SCREW,RS,M4X8	
501	XB1-2403-009		2	SCREW,MACH.,TRUSS HEAD,M4X30	

COPYRIGHT © 1999 CANON INC.

FIGURE Q12 INTERNAL COMPONENTS 2

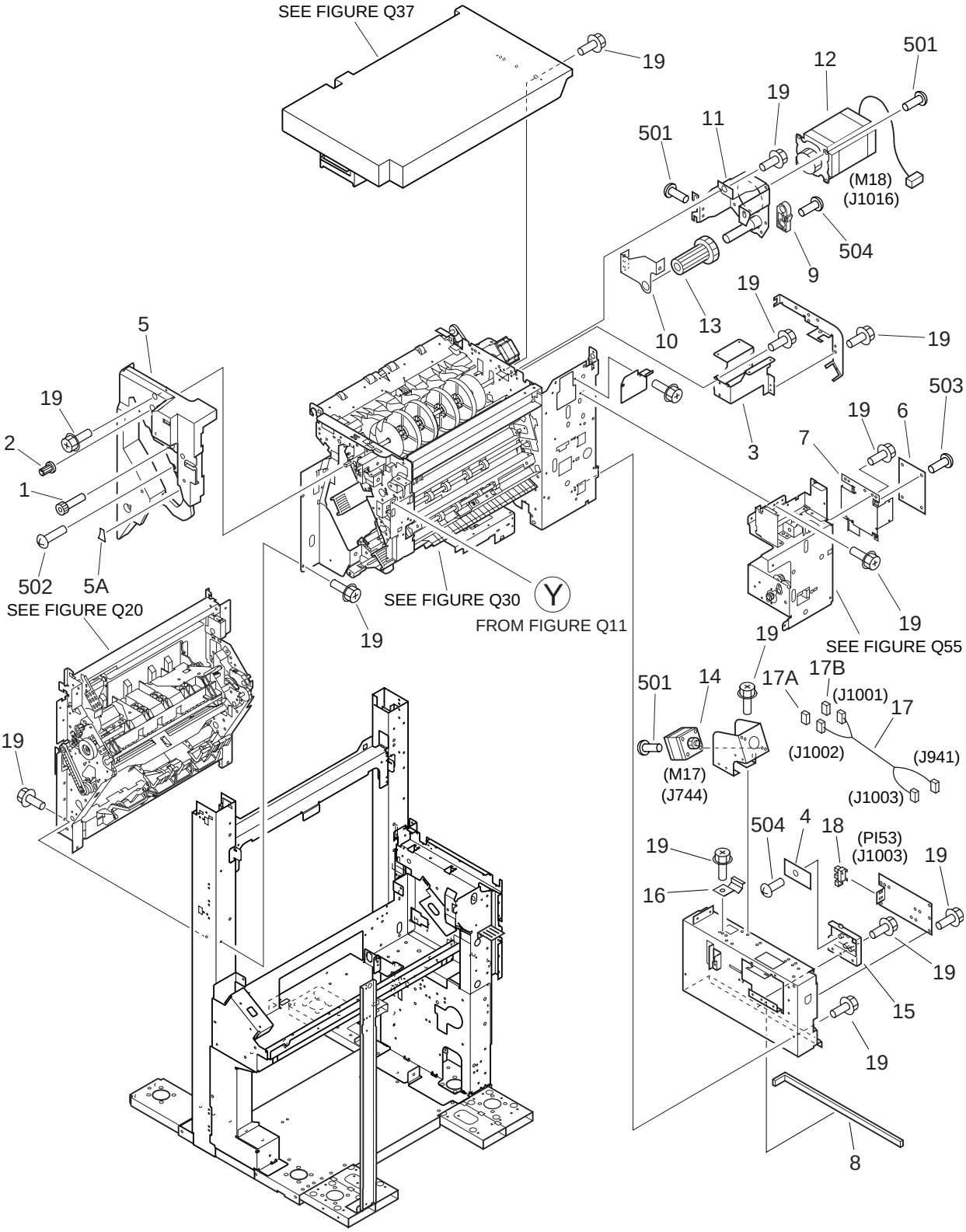

COPYRIGHT © 1999 CANON INC. CANON Saddle Finisher-D2 REV.0 JULY 1999 PRINTED IN JAPAN [IMPRIME AU JAPON]

FIGURE & KEY NO.	PART NUMBER	RANK	QTY	DESCRIPTION	SERIAL NUMBER / REMARKS
Q12 -	NPN		RF	INTERNAL COMPONENTS 2	
1	FB4-6333-000		1	KNOB, PUNCHER	
2	FB1-7214-000		1	KNOB	
3	FB4-8929-000		1	MOUNT, HINGE	
4	FG3-0089-000		1	PUNCH WASTE SENSOR PCB ASS'Y	
5	FF5-8520-000		1	COVER, INNER	
5A	FB4-8717-000		1	LABEL, GUIDE, 1	
6	FG3-0086-000		1	PUNCH DRIVER PCB ASSEMBLY	
7	FB5-2677-000		1	MOUNT, PCB	
8	FB5-2636-000		1	SPACER, WASTE	
9	FB5-2653-000		1	BLOCK	
10	FB5-2675-000		1	PLATE, SUPPORT	
11	FF5-8623-000		1	MOUNT, MOTOR	
12	FH6-1511-000		1	MOTOR, STEPPING	M18 J1016
13	FS7-0402-000		1	GEAR, 20T/36T	
14	FH6-1648-000		1	MOTOR, STEPPING, DC24V	M17 J744
15	FB5-2658-000		1	MOUNT, SENSOR	
16	FB5-2662-000		1	SPRING, LEAF	
17	FF3-3872-000		1	CABLE, HOPPER CROSSMEMBER	J941,1001-1003
17A	VS1-5057-004		1	CONNECTOR, SNAP TIGHT	J1002
17B	VS1-5057-005		1	CONNECTOR, SNAP TIGHT	J1001
18	WG8-5362-000		1	IC, TLP1241, PHOTO-INTERRUPTER	PI53 J1003
19	XA9-0629-000		AR	SCREW,RS,M4X8	
501	XB1-2400-609		AR	SCREW,MACH.,TRUSS HEAD,M4X6	
502	XB1-2401-206		1	SCREW,MACH.,TRUSS HEAD,M4X12	
503	XB1-2300-609		4	SCREW,MACH.,TRUSS HEAD,M3X6	
504	XB4-7400-809		1	SCREW,TAPPING,TRUSS HEAD,M4X8	

FIGURE Q13 INTERNAL COMPONENTS 3

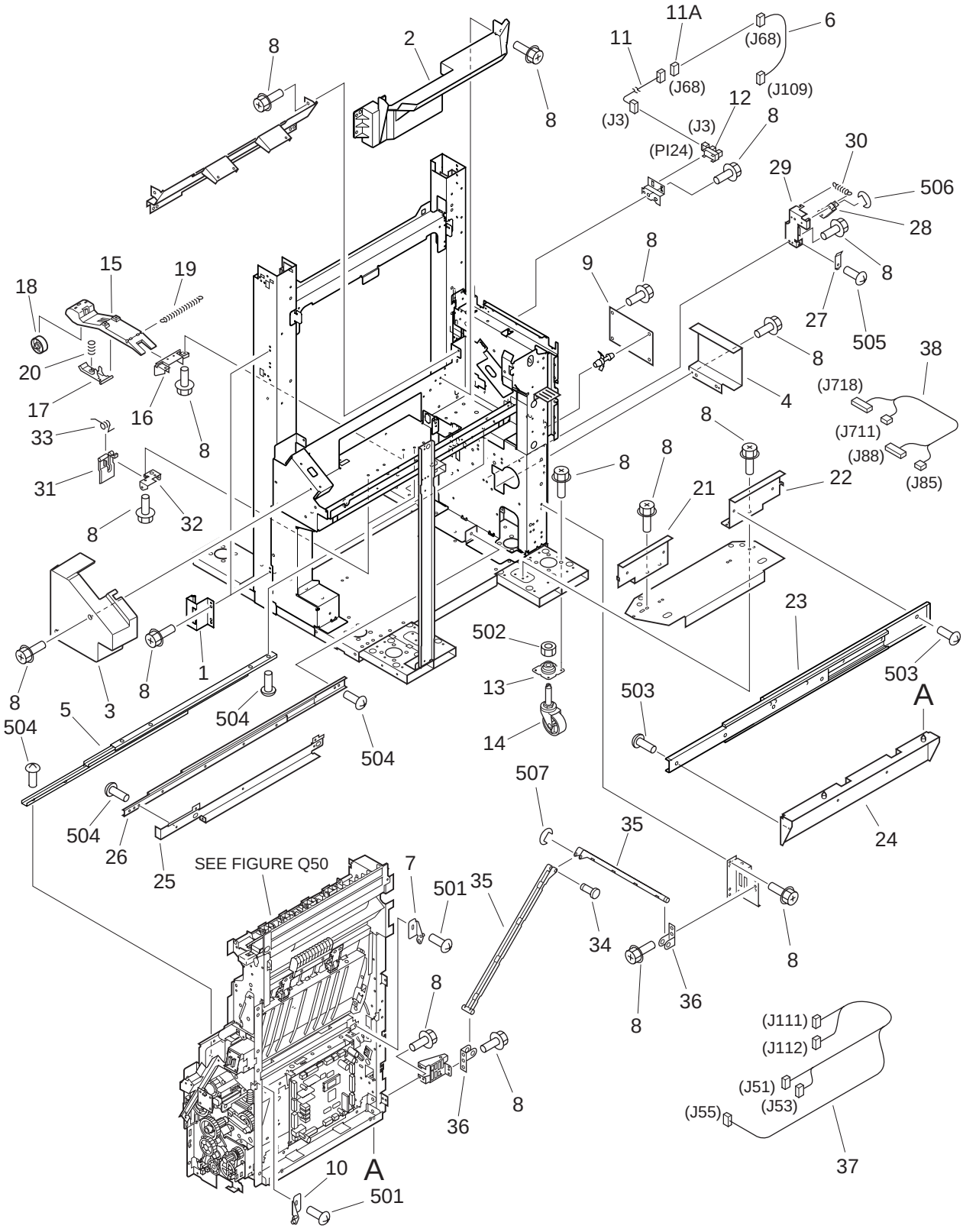

COPYRIGHT © 1999 CANON INC.

FIGURE & KEY NO.	PART NUMBER	RANK	QTY	DESCRIPTION	SERIAL NUMBER / REMARKS
Q13 -	NPN		RF	INTERNAL COMPONENTS 3	
1	FB4-8240-000		2	HINGE, DOOR, LOWER	
2	FB4-8524-000		1	COVER, STAPLER CABLE, 1	
3	FB4-8528-000		1	COVER, STAPLER, FRONT	
4	FB5-2687-000		1	COVER, POWER SUPPLY	
5	FC2-4262-000		1	RAIL, SLIDE, UPPER	
6	FF3-3603-000		1	CABLE, TRAY DOWN CONNECT	J68,109
7	FF5-5812-000		1	SUPPORT, RELEASE, REAR	
8	XA9-0629-000		AR	SCREW,RS,M4X8	
9	FG3-0983-000		1	FUSE BOX PCB ASSEMBLY	
10	FF5-5811-000		1	SUPPORT, RELEASE, FRONT	
11	FF3-3602-000		1	CABLE, TRAY DOWN	J3,68
11A	VS1-5057-003		1	CONNECTOR, SNAP TIGHT	J68
12	WG8-5428-000		1	PHOTO-INTERRUPTER, KI1215-AA03	PI24 J3
13	FB4-8238-000		4	PLATE, CASTER	
14	XZ9-0465-000		4	CASTER	
15	FB4-8817-000		1	ARM, DELIVERY TENSION	
16	FB4-8818-000		1	MOUNT, TENSION ARM	
17	FB4-8819-000		1	ARM, DELIVERY TENSION, 2	
18	FS5-6545-000		1	ROLLER	
19	FS7-2143-000		1	SPRING, TENSION	
20	FS7-2148-000		1	SPRING, COMPRESSION	
21	FB5-2681-000		1	MOUNT, FRONT RAIL, 1	
22	FB5-2682-000		1	MOUNT, REAR RAIL, 1	
23	FC2-4260-000		1	RAIL, SLIDE, LOWER	
24	FF5-9615-000		1	MOUNT, RAIL, 4	
25	FB4-8807-000		1	MOUNT, RAIL, 2	
26	FB4-8811-000		1	RAIL, SLIDE, 2	
27	FB2-4117-000		1	SPRING, LEAF	
28	FB2-4120-000		1	ARM, SWITCH, C	

COPYRIGHT © 1999 CANON INC.

FIGURE & KEY NO.	PART NUMBER	RANK	QTY	DESCRIPTION	SERIAL NUMBER / REMARKS
Q13 - 29	FF5-4231-000		1	ARM, SWITCH, C	
30	FS6-2368-000		1	SPRING, TENSION	
31	FB4-8814-000		2	PLATE, UPPER GUIDE	
32	FB4-8815-000		2	MOUNT, UPPER GUIDE	
33	FB4-8816-000		2	SPRING, TORSION	
34	FB3-9717-000		1	SHAFT, MOVABLE CABLE GUIDE	
35	FB3-9233-000		2	GUIDE, CABLE	
36	FB3-9234-000		2	HOLDER, CABLE GUIDE	
37	FG3-0176-000		1	CABLE, STAPLER MAIN CONNECTOR	J51,53,55,111,112
38	FG3-0181-000		1	CABLE, DC POWER	J85,88,711,718
501	XB1-2401-209		2	SCREW,MACH.,TRUSS HEAD,M4X12	
502	XB7-2201-209		4	NUT,HEX,M12	
503	XB1-2500-609		7	SCREW,MACH.,TRUSS HEAD,M5X6	
504	XB1-2400-609		AR	SCREW,MACH.,TRUSS HEAD,M4X6	
505	XB6-7400-609		1	SCREW,TP,M4X6	
506	XD2-1100-502		1	RING,E	
507	XD2-1100-642		1	RING,E	

COPYRIGHT©1999 CANON INC.

FIGURE Q14 SADDLE DELIVERY TRAY ASSEMBLY

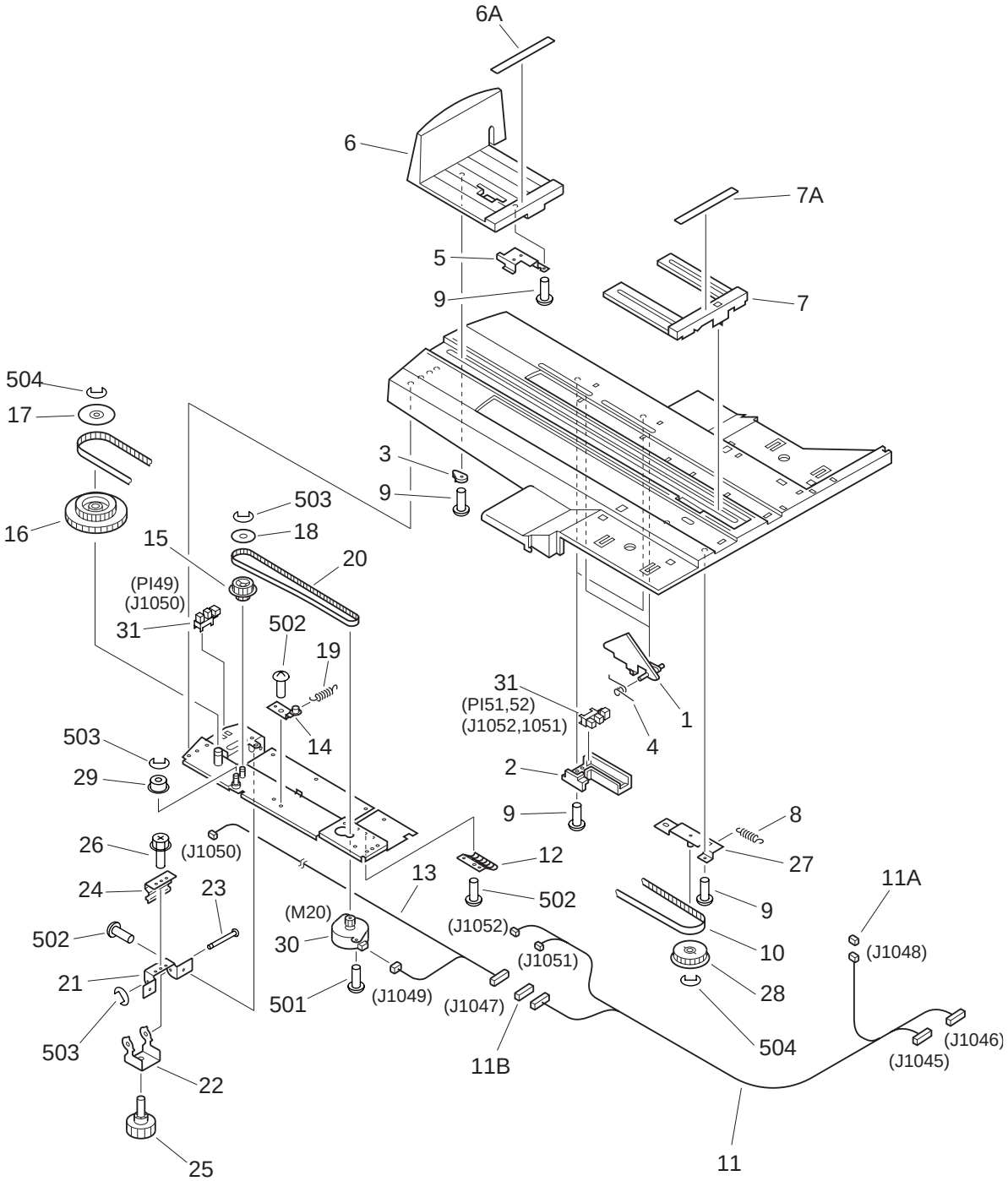

COPYRIGHT © 1999 CANON INC.

FIGURE & KEY NO.	PART NUMBER	RANK	QTY	DESCRIPTION	SERIAL NUMBER / REMARKS
Q14 -	FG6-3297-000		1	SADDLE DELIVERY TRAY ASSEMBLY	
1	FB4-8863-000		2	LEVER, TRAY SENSOR	
2	FB4-8864-000		2	COVER, TRAY SENSOR	
3	FB4-8865-000		1	FLAG, TRAY	
4	FB4-8866-000		2	SPRING, TORSION	
5	FB4-8868-000		1	PLATE, BELT LOCK	
6	FF5-8584-000		1	STOPPER, TRAY	
6A	FB4-8873-000		1	RUBBER, STOPPER	
7	FF5-8585-000		1	STOPPER, TRAY, 2	
7A	FB4-8873-000		1	RUBBER, STOPPER	
8	FS7-2142-000		1	SPRING, TENSION	
9	XA9-0605-000		12	SCREW,P,M4X8	
10	XF2-1330-360		1	BELT, TIMING	
11	FG3-0973-000		1	CABLE, SADDLE TRAY	J1045-1048,1051,1052
11A	VS1-5057-003		1	CONNECTOR, SNAP TIGHT	J1048
11B	VS1-5057-008		1	CONNECTOR, SNAP TIGHT	J1047
12	FB4-8872-000		1	SPRING, GROUNDING	
13	FF3-3866-000		1	CABLE, SADDLE TRAY MOTOR	J1074,1049,1050
14	FF5-8583-000		1	PLATE, TENSION, 2	
15	FS5-3795-000		1	GEAR, 14T/PULLEY, 40T	
16	FS5-3796-000		1	GEAR, 80T/PULLEY, 36T	
17	FS5-6381-000		1	FLANGE	
18	FS5-6547-000		1	FLANGE	
19	FS7-2149-000		1	SPRING, TENSION	
20	XF2-1121-340		1	BELT, TIMING	
21	FB2-7897-000		1	PLATE, ADJUSTING, FRONT	
22	FB2-7898-000		1	PLATE, PIVOT, FRONT	
23	FB2-7899-000		1	SHAFT, PIVOT, FRONT	
24	FB2-7900-000		1	SPRING, LEAF	
25	FB2-8506-000		1	ADJUSTER	

COPYRIGHT © 1999 CANON INC.

FIGURE & KEY NO.	PART NUMBER	RANK	QTY	DESCRIPTION	SERIAL NUMBER / REMARKS
Q14 - 26	XA9-0628-000		1	SCREW,RS,M4X8	
27	FF5-8586-000		1	PLATE, TRAY TENSION	
28	FS6-0066-000		1	PULLEY, 35T	
29	FC1-7883-000		1	ROLLER, TENSIONER	
30	FH6-1649-000		1	MOTOR, STEPPING, DC24V	M20 J1049
31	WG8-5362-000		3	IC, TLP1241, PHOTO-INTERRUPTER	PI49,51,52 J1050,1052,1051
501	XB1-2300-609		2	SCREW,MACH.,TRUSS HEAD,M3X6	
502	XB1-2400-609		AR	SCREW,MACH.,TRUSS HEAD,M4X6	
503	XD2-1100-502		3	RING,E	
504	XD2-1100-642		2	RING,E	

COPYRIGHT©1999 CANON INC.

FIGURE Q15 POWER CORD TERMINAL ASSEMBLY

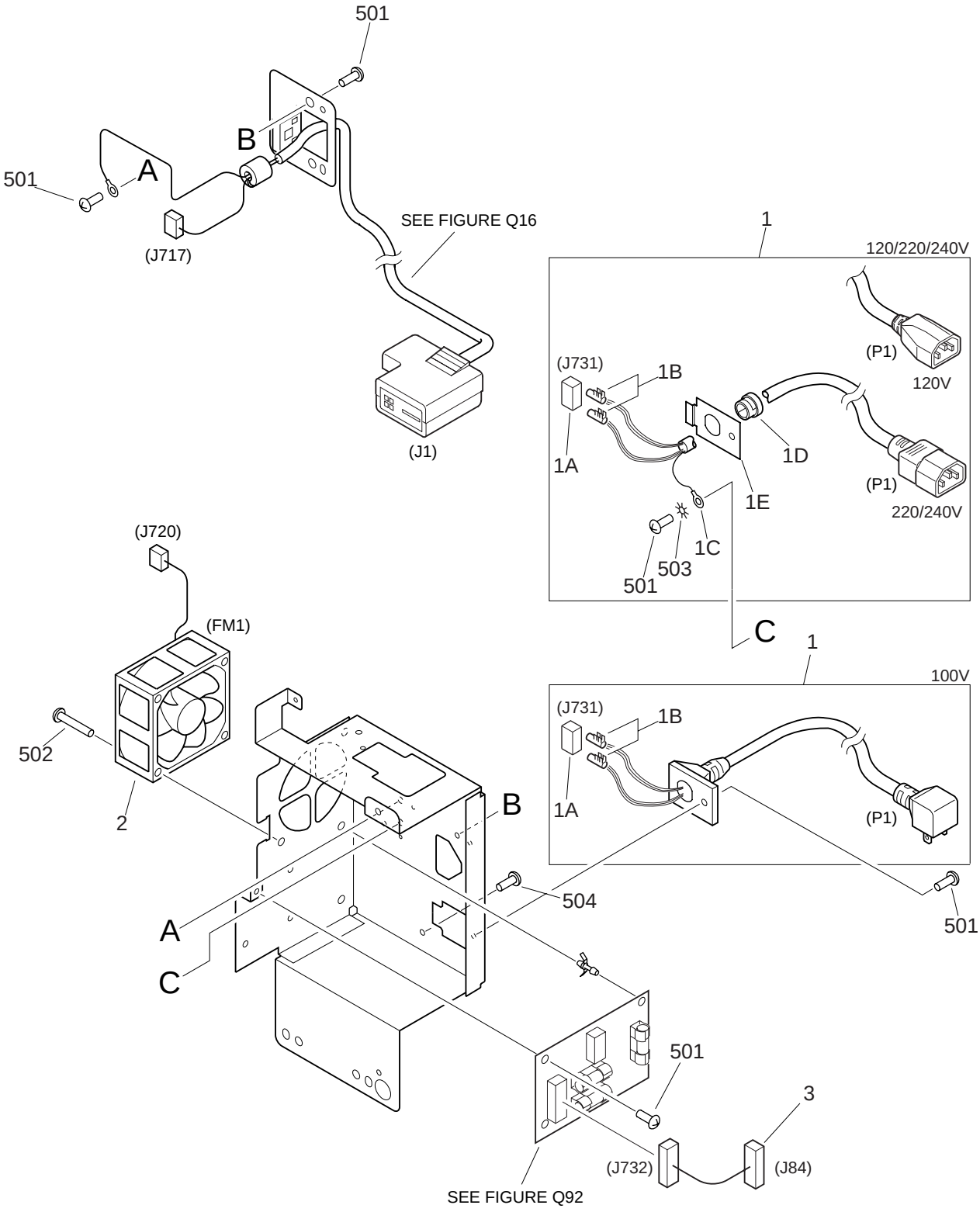

NOTE : This assembly includes the assemblies shown in Figure Q16 and Q92.

COPYRIGHT © 1999 CANON INC.

FIGURE & KEY NO.	PART NUMBER	RANK	QTY	DESCRIPTION	SERIAL NUMBER / REMARKS
Q15 -	FG6-3222-000		1	POWER CORD TERMINAL ASSEMBLY	100V SEE NOTE
	FG6-3223-000		1	POWER CORD TERMINAL ASSEMBLY	120V SEE NOTE
	FG6-3224-000		1	POWER CORD TERMINAL ASSEMBLY	220/240V SEE NOTE
1	FF3-3613-000		1	CORD, POWER	100V
	FF3-3611-000		1	CORD, POWER	120V
	FF3-3612-000		1	CORD, POWER	220/240V
1A	VS1-6380-003		1	CONNECTOR, 3P, MALE	
1B	WS3-5292-000		2	SOCKET CONTACT	
1C	WT1-5156-000		1	TERMINAL, RING	EXCEPT 100V
1D	X62-9681-000		1	STOPPER, CORD	EXCEPT 100V
1E	FB4-8254-000		1	PLATE, BUSHING	EXCEPT 100V
2	RH7-1289-000		1	FAN	
3	FF3-3610-000		1	CABLE, AC	J84,732
501	XB1-2400-606		5	SCREW,MACH.,TRUSS HEAD,M4X6	100V
	XB1-2400-606		6	SCREW,MACH.,TRUSS HEAD,M4X6	120/220/240V
502	XB1-2403-009		2	SCREW,MACH.,TRUSS HEAD,M4X30	
503	XD1-4200-402		1	WASHER,TOOTHED LOCK	EXCEPT 100V
504	XB2-7400-607		1	SCREW,W/WASHER,M4X6	

COPYRIGHT©1999 CANON INC.

FIGURE Q16 MAIN BODY CABLE ASSEMBLY

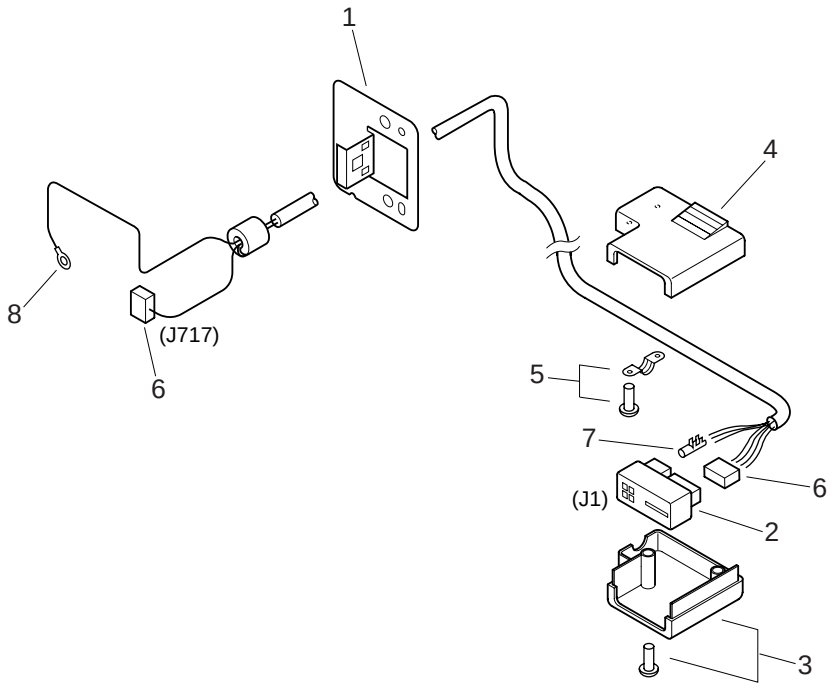

NOTE : This assembly is included in the assembly shown in Figure Q15.

FIGURE & KEY NO.	PART NUMBER	RANK	QTY	DESCRIPTION	SERIAL NUMBER / REMARKS
Q16 -	FG3-0976-000		1	MAIN BODY CABLE ASSEMBLY	SEE NOTE
1	FB4-8236-000		1	PLATE, CABLE, HOLDER	
2	FH2-6481-000		1	HOUSING	J1
3	FH2-6482-000		1	COVER, PLUG, A	
4	FH2-6483-000		1	COVER, PLUG, B	
5	FH2-6487-000		1	CLAMP, CABLE	
6	VS1-5452-007		2	CONNECTOR, 7P, FEMALE	J1,717
7	WS3-5044-000		1	SOCKET, CONTACT, 18-24AWG	
8	WT1-0237-000		1	TERMINAL, RING	

COPYRIGHT © 1999 CANON INC.

FIGURE Q17 HOPPER ASSEMBLY

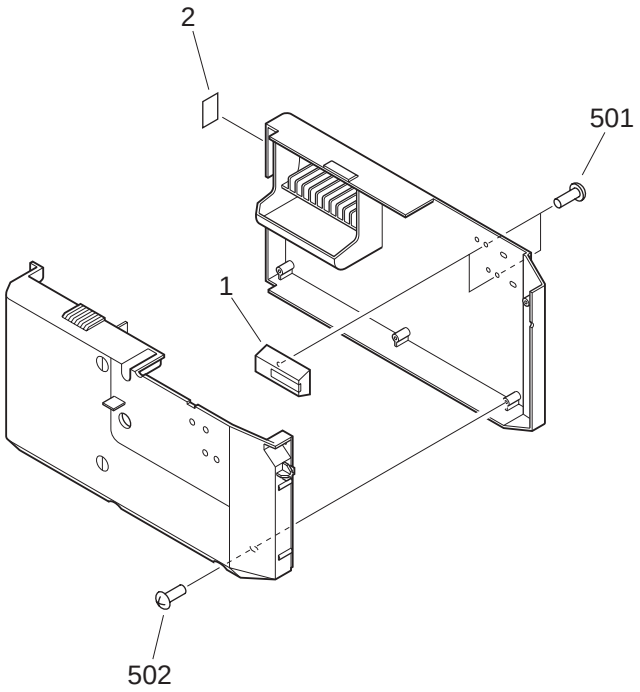

FIGURE & KEY NO.	PART NUMBER	RANK	QTY	DESCRIPTION	SERIAL NUMBER / REMARKS
Q17 -	FG6-3326-000		1	HOPPER ASSEMBLY	
1	FF5-8626-000		2	PRISM	
2	FB5-2647-000		1	LABEL	
501	XB4-7300-609		2	SCREW,TAPPING,TRUSS HEAD,M3X6	
502	XB4-7401-009		6	SCREW,TAPPING,TRUSS HEAD,M4X10	

COPYRIGHT © 1999 CANON INC.

FIGURE Q18 STACKER TRAY FRAME ASSEMBLY

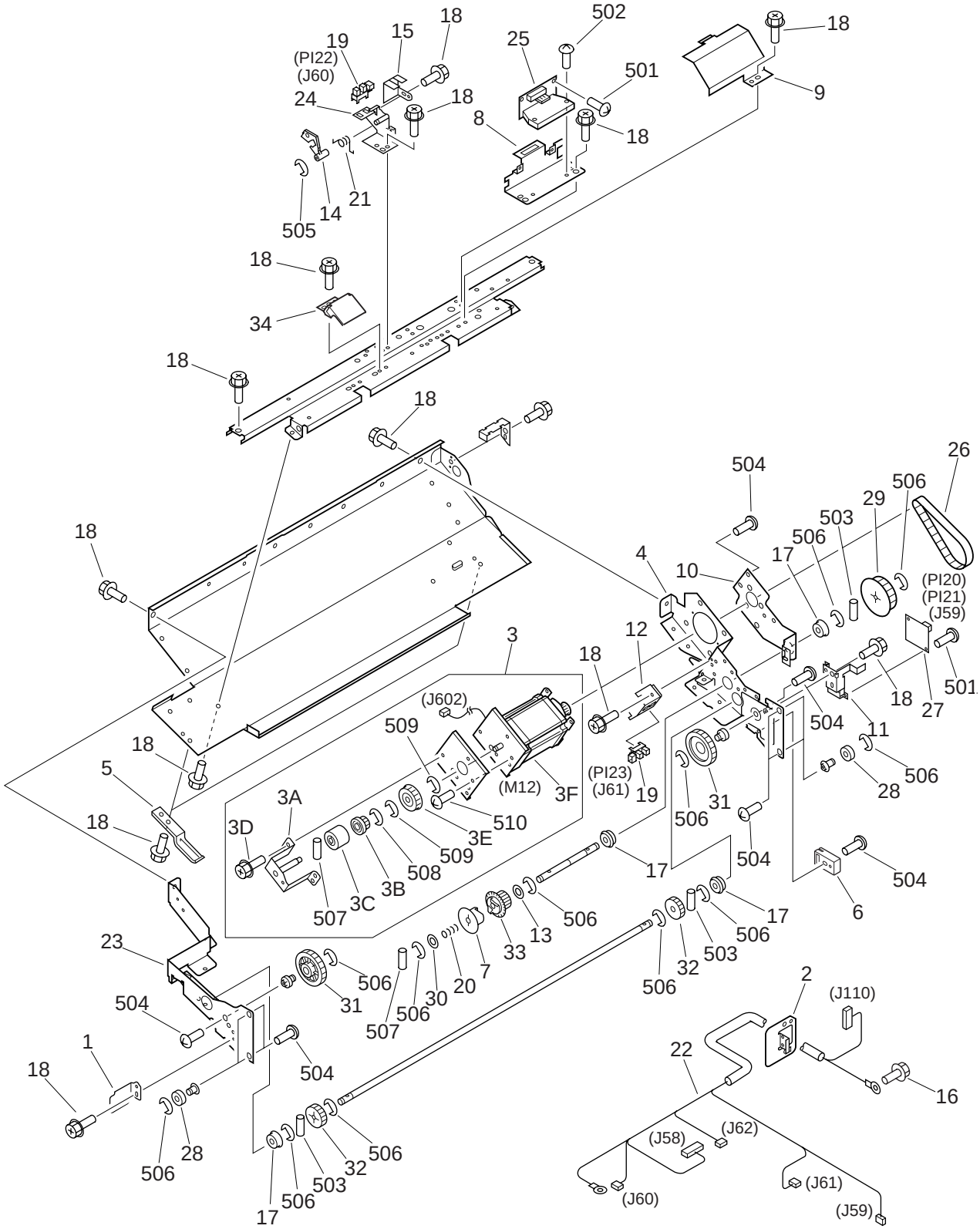

COPYRIGHT © 1999 CANON INC.

FIGURE & KEY NO.	PART NUMBER	RANK	QTY	DESCRIPTION	SERIAL NUMBER / REMARKS
Q18 -	FG6-3055-000		1	STACKER TRAY FRAME ASSEMBLY	
1	FB4-8337-000		1	PLATE, TRAY STOP	
2	FB4-8236-000		1	PLATE, CABLE, HOLDER	
3	FG6-3063-000		1	MOTOR ASSEMBLY	
3A	FF5-8452-000		1	BRACKET, TORQUE LIMITER	
3B	FS7-0350-000		1	GEAR, 14T	
3C	FB4-8339-000		1	TORQUE LIMITER	
3D	XA9-0629-000		2	SCREW,RS,M4X8	
3E	FS7-0351-000		1	GEAR, 27T	
3F	FH6-1647-000		1	MOTOR, STEPPING, DC24V	M12 J602
4	FB4-8291-000		1	MOUNT, TRAY, REAR	
5	FB4-8302-000		2	COVER, GEAR	
6	FB4-8303-000		1	STOPPER, TRAY	
7	FB4-8307-000		1	RATCHET	
8	FB4-8309-000		1	BRACKET, DRIVER	
9	FB4-8310-000		1	COVER, DRIVER	
10	FB4-8311-000		1	MOUNT, SHAFT	
11	FB4-8314-000		1	BRACKET, SENSOR	
12	FB4-8316-000		1	BRACKET, SENSOR	
13	XD9-0151-000		1	WASHER	
14	FB4-8320-000		1	LEVER, SENSOR	
15	FB4-8321-000		1	COVER, SENSOR	
16	XA9-0633-000		1	SCREW,W/WASHER,M4X8	
17	XG9-0365-000		4	BEARING, BALL	
18	XA9-0629-000		AR	SCREW,RS,M4X8	
19	WG8-5362-000		2	IC, TLP1241, PHOTO-INTERRUPTER	PI22,23 J60,61
20	FS7-2081-000		1	SPRING, COMPRESSION	
21	FB4-8328-000		1	SPRING, TORSION	
22	FG3-0178-000		1	CABLE, STACKER, TRAY	J58-62,110
23	FB4-8290-000		1	MOUNT, TRAY, FRONT	

COPYRIGHT © 1999 CANON INC.

FIGURE & KEY NO.	PART NUMBER	RANK	QTY	DESCRIPTION	SERIAL NUMBER / REMARKS
Q18 - 24	FF5-8453-000		1	BRACKET, TRAY SENSOR	
25	FG2-9785-000		1	DRIVER PCB ASSEMBLY	
26	XF9-0696-000		1	BELT, TIMING	
27	FH7-7497-000		1	SENSOR PCB ASSEMBLY	PI20,21 J59
28	FS2-1617-000		4	BEARING, BALL	
29	FS5-3744-000		1	PULLEY, 50T	
30	FS5-6307-000		1	WASHER	
31	FS7-0346-000		2	GEAR, 40T	
32	FS7-0347-000		2	GEAR, 24T	
33	FS7-0349-000		1	GEAR, RATCHET, 20T	
34	FB4-8306-000		1	PLATE, STOP	
501	XB1-2300-409		4	SCREW,MACH.,TRUSS HEAD,M3X4	
502	XB1-2301-209		2	SCREW,MACH.,TRUSS HEAD,M3X12	
503	XD3-2300-162		3	PIN,DOWEL	
504	XB6-7400-609		10	SCREW,TP,M4X6	
505	XD2-1100-322		1	RING,E	
506	XD2-1100-642		AR	RING,E	
507	XD3-2200-142		2	PIN,DOWEL	
508	XD2-1100-402		1	RING,E	
509	XD2-1100-502		2	RING,E	
510	XB2-6300-607		3	SCREW,W/WASHER,M3X6	

COPYRIGHT©1999 CANON INC.

FIGURE Q19 SAMPLE TRAY FRAME ASSEMBLY

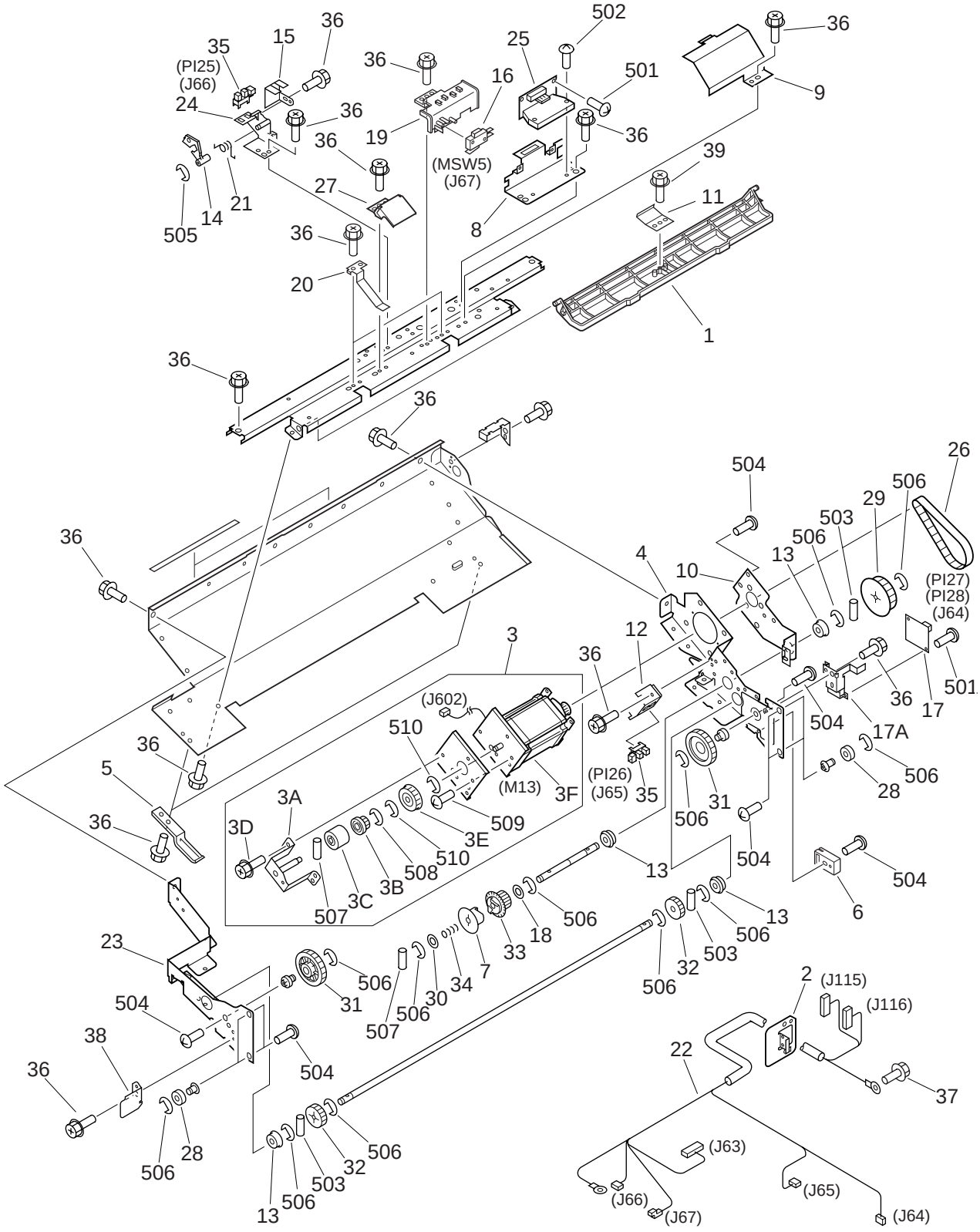

COPYRIGHT © 1999 CANON INC.
CANON Saddle Finisher-D2 REV.0 JULY 1999 PRINTED IN JAPAN [IMPRIME AU JAPON]

FIGURE & KEY NO.	PART NUMBER	RANK	QTY	DESCRIPTION	SERIAL NUMBER / REMARKS
Q19 -	FG6-3232-000		1	SAMPLE TRAY FRAME ASSEMBLY	
1	FB4-8297-000		1	COVER	
2	FB4-8236-000		1	PLATE, CABLE, HOLDER	
3	FG6-3063-000		1	MOTOR ASSEMBLY	
3A	FF5-8452-000		1	BRACKET, TORQUE LIMITER	
3B	FS7-0350-000		1	GEAR, 14T	
3C	FB4-8339-000		1	TORQUE LIMITER	
3D	XA9-0629-000		2	SCREW,RS,M4X8	
3E	FS7-0351-000		1	GEAR, 27T	
3F	FH6-1647-000		1	MOTOR, STEPPING, DC24V	M13 J602
4	FB4-8291-000		1	MOUNT, TRAY, REAR	
5	FB4-8302-000		2	COVER, GEAR	
6	FB4-8303-000		1	STOPPER, TRAY	
7	FB4-8307-000		1	RATCHET	
8	FB4-8309-000		1	BRACKET, DRIVER	
9	FB4-8310-000		1	COVER, DRIVER	
10	FB4-8311-000		1	MOUNT, SHAFT	
11	FB4-8304-000		1	STOPPER	
12	FB4-8316-000		1	BRACKET, SENSOR	
13	XG9-0365-000		4	BEARING, BALL	
14	FB4-8320-000		1	LEVER, SENSOR	
15	FB4-8321-000		1	COVER, SENSOR	
16	WC4-5159-000		1	SWITCH, MICRO	MSW5 J67
17	FG6-3067-000		1	AREA SENSOR PCB ASSEMBLY	PI27,28 J64
17A	FB4-8314-000		1	BRACKET, SENSOR	
18	XD9-0151-000		1	WASHER	
19	FB4-8315-000		1	MOUNT, SENSOR	
20	FB4-8329-000		1	SPRING, LEAF	
21	FB4-8328-000		1	SPRING, TORSION	
22	FG3-0179-000		1	CABLE, SAMPLE TRAY	J63-67,115,116

COPYRIGHT © 1999 CANON INC.

FIGURE & KEY NO.	PART NUMBER	RANK	QTY	DESCRIPTION	SERIAL NUMBER / REMARKS
Q19 - 23	FB4-8290-000		1	MOUNT, TRAY, FRONT	
24	FF5-8453-000		1	BRACKET, TRAY SENSOR	
25	FG2-9785-000		1	DRIVER PCB ASSEMBLY	
26	XF9-0696-000		1	BELT, TIMING	
27	FB4-8306-000		1	PLATE, STOP	
28	FS2-1617-000		4	BEARING, BALL	
29	FS5-3744-000		1	PULLEY, 50T	
30	FS5-6307-000		1	WASHER	
31	FS7-0346-000		2	GEAR, 40T	
32	FS7-0347-000		2	GEAR, 24T	
33	FS7-0349-000		1	GEAR, RATCHET, 20T	
34	FS7-2081-000		1	SPRING, COMPRESSION	
35	WG8-5362-000		2	IC, TLP1241, PHOTO-INTERRUPTER	PI25,26 J66,65
36	XA9-0629-000		AR	SCREW,RS,M4X8	
37	XA9-0633-000		1	SCREW,W/WASHER,M4X8	
38	FB4-8336-000		1	PLATE, TRAY STOPPER	
39	XA9-0605-000		1	SCREW,P,M4X8	
501	XB1-2300-409		4	SCREW,MACH.,TRUSS HEAD,M3X4	
502	XB1-2301-209		2	SCREW,MACH.,TRUSS HEAD,M3X12	
503	XD3-2300-162		3	PIN,DOWEL	
504	XB6-7400-609		10	SCREW,TP,M4X6	
505	XD2-1100-322		1	RING,E	
506	XD2-1100-642		13	RING,E	
507	XD3-2200-142		2	PIN,DOWEL	
508	XD2-1100-402		1	RING,E	
509	XB2-6300-607		3	SCREW,W/WASHER,M3X6	
510	XD2-1100-502		2	RING,E	

COPYRIGHT©1999 CANON INC.

FIGURE Q20 OPERATION ASSEMBLY (1/3)

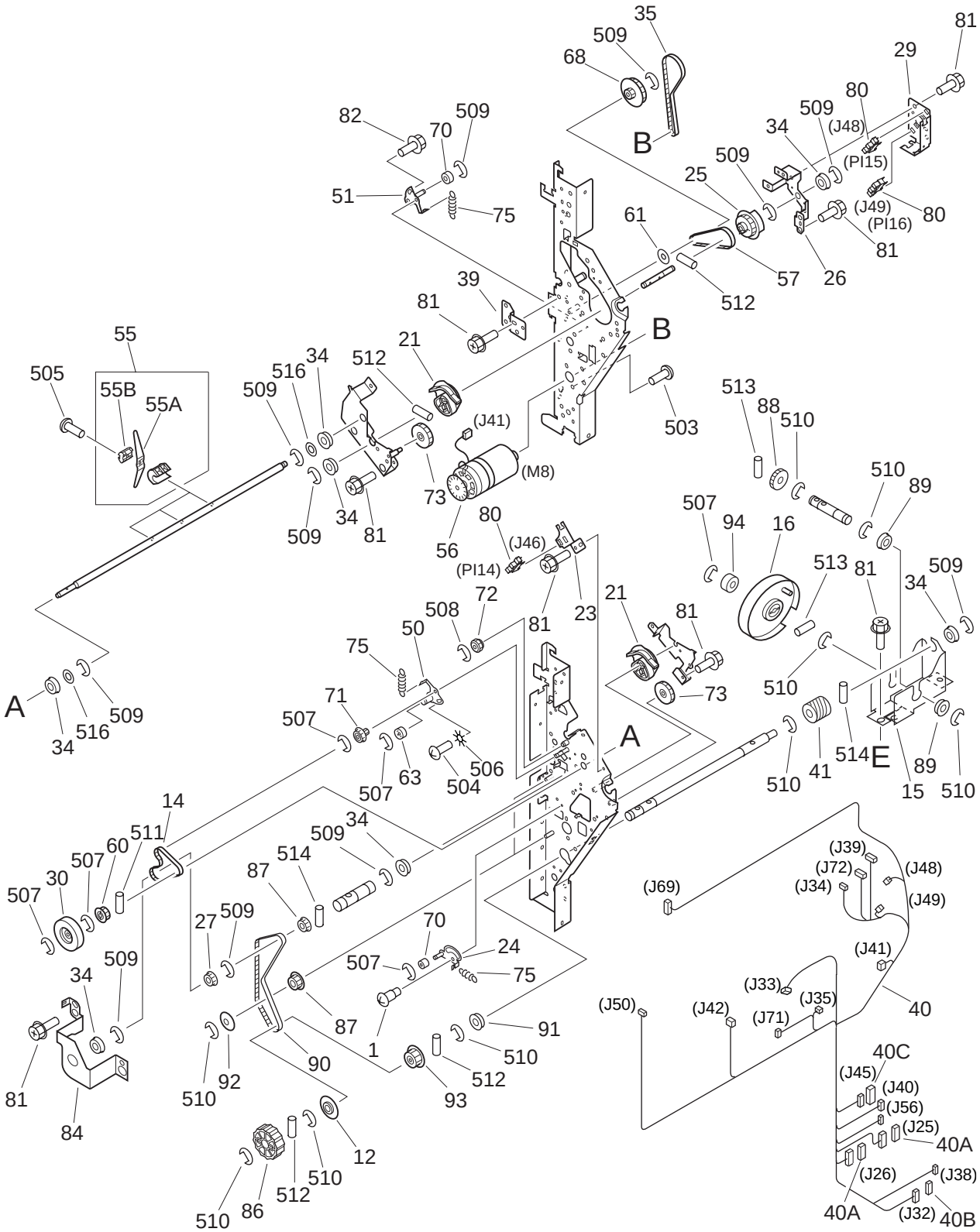

NOTE : This assembly includes the assemblies shown in Figure Q21, Q22, Q23 and Q24.

COPYRIGHT © 1999 CANON INC.

FIGURE Q20 OPERATION ASSEMBLY (2/3)

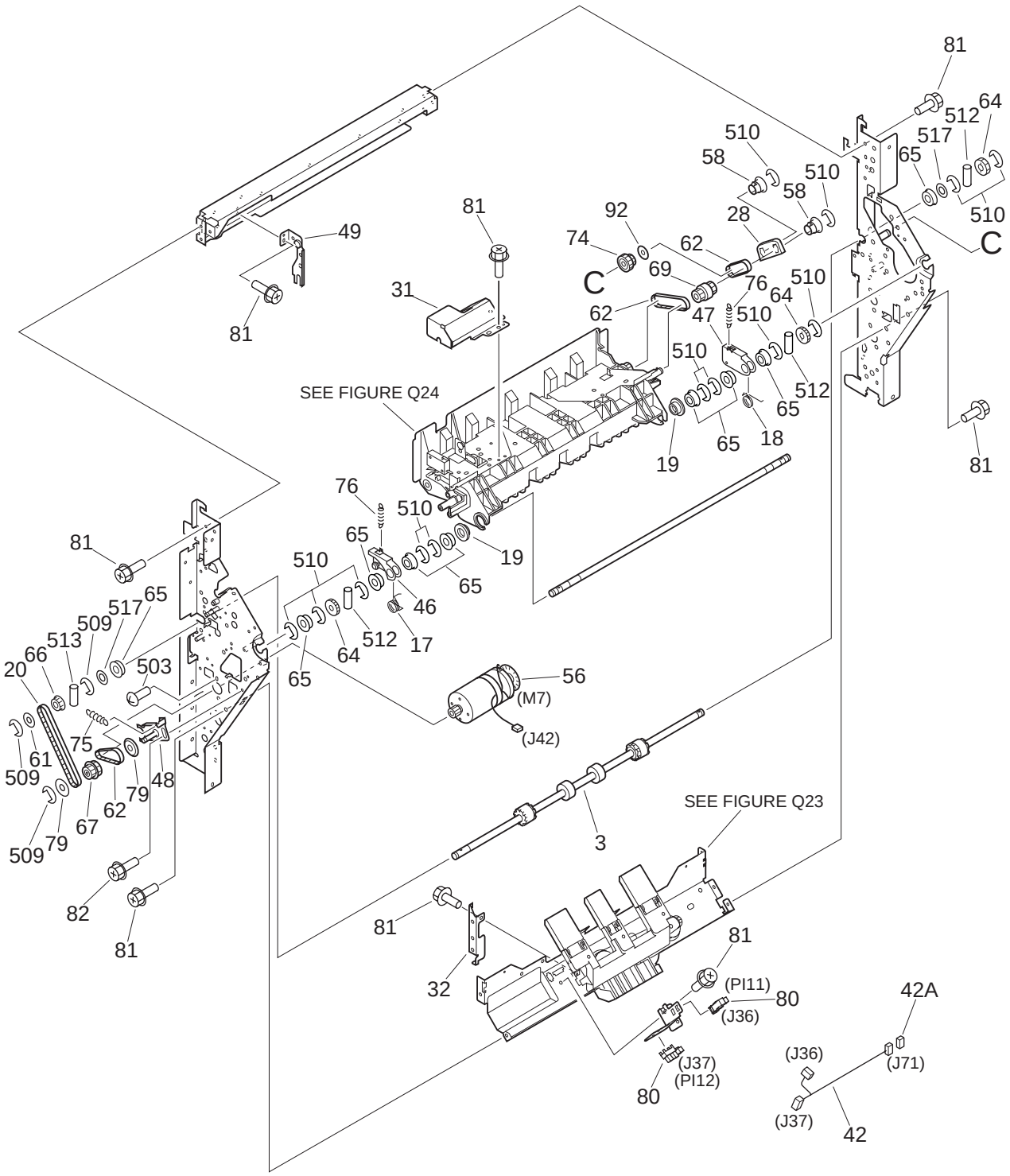

FIGURE Q20 OPERATION ASSEMBLY (3/3)

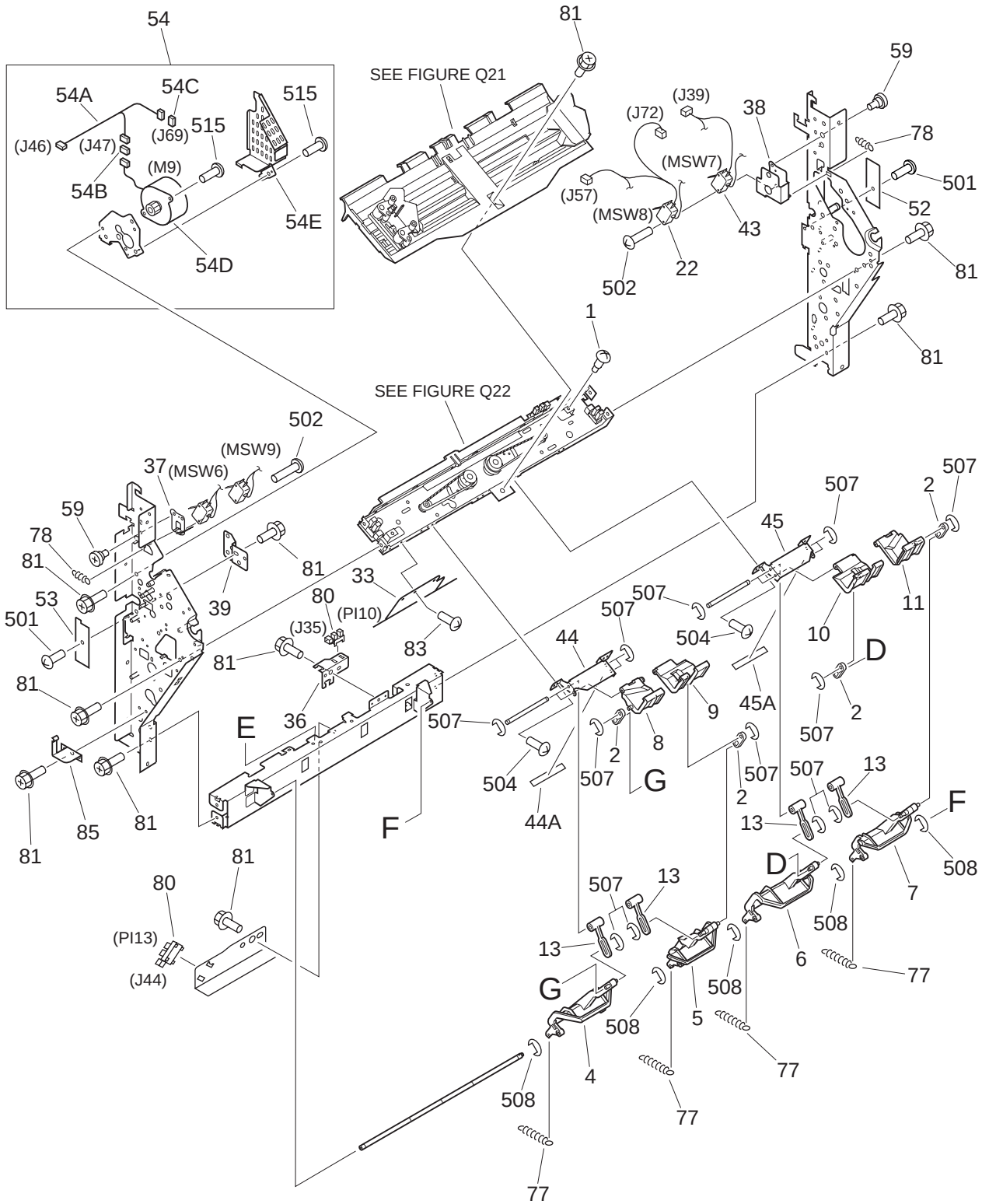

COPYRIGHT © 1999 CANON INC.

FIGURE & KEY NO.	PART NUMBER	RANK	QTY	DESCRIPTION	SERIAL NUMBER / REMARKS
Q20 -	FG6-3130-000		1	OPERATION ASSEMBLY	SEE NOTE
1	FS1-9120-000		2	SCREW,STEPPED,M3	
2	FB3-7269-000		4	LINK	
3	FB4-8364-000		1	ROLLER, DELIVERY, LOWER	
4	FB4-8378-000		1	LINK, STOP, 1	
5	FB4-8379-000		1	LINK, STOP, 2	
6	FB4-8380-000		1	LINK, STOP, 3	
7	FB4-8381-000		1	LINK, STOP, 4	
8	FB4-8382-000		1	HOLDER, STOP, 1	
9	FB4-8383-000		1	HOLDER, STOP, 2	
10	FB4-8384-000		1	HOLDER, STOP, 3	
11	FB4-8385-000		1	HOLDER, STOP, 4	
12	FA5-5377-000		1	PULLEY	
13	FB4-8389-000		4	LINK, STOP	
14	XF9-0591-000		1	BELT, TIMING	
15	FB4-8454-000		1	PLATE, SHUTTER DRIVE	
16	FB4-8453-000		1	LINK, SHUTTER	
17	FB4-8402-000		1	SPRING, TORSION	
18	FB4-8403-000		1	SPRING, TORSION	
19	FB4-8404-000		2	BUSHING, RUBBER	
20	XF9-0333-000		1	BELT, TIMING, T125	
21	FB4-8415-000		2	CAM, SWING	
22	FF3-3742-000		1	CABLE, SWING GUIDE SWITCH 2	MSW8,9 J57,72
23	FB4-8416-000		1	PLATE, SENSOR	
24	FF5-8500-000		1	PLATE, SHUTTER TENSIONER	
25	FB4-8419-000		1	PULLEY, 48T	
26	FB4-8421-000		1	PLATE, AUXILIARY, REAR	
27	4A1-0746-000		1	PULLEY	
28	FB4-8427-000		1	LINK, ROLLER, 1	
29	FB4-8428-000		1	PLATE, SWING SENSOR	

COPYRIGHT © 1999 CANON INC.

FIGURE & KEY NO.	PART NUMBER	RANK	QTY	DESCRIPTION	SERIAL NUMBER / REMARKS
Q20 - 30	FB4-8430-000		1	FLAG	
31	FB4-8431-000		1	COVER, SWITCH	
32	FB4-8432-000		1	GUIDE, CABLE	
33	FB4-8433-000		1	COVER, MOTOR	
34	XG9-0407-000		7	BALL BEARING, NMB DDLF-1060ZZH	
35	XF9-0646-000		1	BELT, TIMING	
36	FB4-8437-000		1	PLATE, SENSOR	
37	FB4-8438-000		1	MOUNT, SWITCH, FRONT	
38	FB4-8439-000		1	MOUNT, SWITCH, REAR	
39	FB4-8441-000		2	PLATE, SENSOR COVER	
40	FG3-0175-000		1	CABLE, TRAY, 2	J25,26,32-35,38-42,45 J48-50,56,69,71,72
40A	VT2-5161-020		2	HOLDER, CONNECTOR, 20P	J25,26
40B	VT2-5161-018		1	HOLDER, CONNECTOR, 18P	J32
40C	VT2-5161-016		1	HOLDER, CONNECTOR, 16P	J45
41	FS6-0064-000		1	WORM GEAR	
42	FF3-3606-000		1	CABLE, PAPER FEED	J36,37,71
42A	VS1-5057-006		1	CONNECTOR, SNAP TIGHT	J71
43	FF3-3608-000		1	CABLE, SWING GUIDE SWITCH	MSW6,7 J39
44	FF5-8484-000		1	PLATE, LINK, FRONT	
44A	FB4-8388-000		1	SHEET	
45	FF5-8485-000		1	PLATE, LINK, REAR	
45A	FB4-8388-000		1	SHEET	
46	FF5-8489-000		1	PLATE, SWING, FRONT	
47	FF5-8490-000		1	PLATE, SWING, REAR	
48	FF5-8491-000		1	PLATE, TENSIONER	
49	FF5-8494-000		1	GUIDE, CABLE	
50	FF5-8495-000		1	PLATE, TENSIONER	
51	FF5-8496-000		1	PLATE, TENSIONER 2	
52	FG3-0082-000		1	LED PCB ASSEMBLY	
53	FG3-0083-000		1	PHOTO TRANSISTOR PCB ASSEMBLY	

COPYRIGHT©1999 CANON INC. CANON Saddle Finisher-D2 REV.0 JULY 1999 PRINTED IN JAPAN [IMPRIME AU JAPON]

FIGURE & KEY NO.	PART NUMBER	RANK	QTY	DESCRIPTION	SERIAL NUMBER / REMARKS
Q20 - 54	FG6-3103-000		1	PADDLE MOTOR ASSEMBLY	
54A	FF3-3605-000		1	CABLE, PADDLE	J46,47,69
54B	VS1-5057-005		1	CONNECTOR, SNAP TIGHT	J47
54C	VS1-5057-008		1	CONNECTOR, SNAP TIGHT	J69
54D	FH6-1645-000		1	MOTOR, STEPPING, DC24V	M9 J47
54E	FB4-8413-000		1	COVER, MOTOR	
55	FG6-3108-000		3	PADDLE ASSEMBLY	
55A	FB4-8435-000		1	PADDLE	
55B	FB4-8436-000		1	HOLDER, PADDLE	
56	FH6-1644-000		2	MOTOR, DC 24V	M7,8 J42,41
57	XF9-0422-000		1	FLAT BELT, TIMING, 100T	
58	FS1-1452-030		2	BUSHING	
59	FS1-9078-000		2	SCREW,STEPPED,M4	
60	FS2-3504-000		1	PULLEY, 24T	
61	FS2-6466-000		3	FLANGE, ROLLER	
62	XF9-0358-000		4	BELT, TIMING	
63	FS2-6488-000		1	ROLLER	
64	FS5-0804-000		3	GEAR, 19T	
65	XG9-0403-000		8	BEARING, BALL	
66	FS5-3748-000		1	PULLEY, 26T	
67	FS5-3750-000		1	PULLEY, 26T/32T	
68	FS5-3751-000		1	PULLEY, 18T/60T	
69	FS5-3752-000		1	PULLEY, IDLER, 26T	
70	FS5-6237-000		2	ROLLER, IDLER	
71	FS7-0355-000		1	PULLEY, 24T/ GEAR, 15T	
72	FS7-0356-000		1	GEAR, 28T	
73	FS7-0357-000		2	GEAR, 29T	
74	FS7-0358-000		1	PULLEY, 26T/GEAR, 19T	
75	FS7-2088-000		4	SPRING, TENSION	
76	FS7-2090-000		2	SPRING, TENSION	

COPYRIGHT © 1999 CANON INC.

FIGURE & KEY NO.	PART NUMBER	RANK	QTY	DESCRIPTION	SERIAL NUMBER / REMARKS
Q20 - 77	FS7-2092-000		4	SPRING, TENSION	
78	FS7-2093-000		2	SPRING, TENSION	
79	RA1-2483-000		2	FLANGE, PULLEY	
80	WG8-5362-000		7	IC, TLP1241, PHOTO-INTERRUPTER	PI10-16 J35-37,44,46 J48,49
81	XA9-0629-000		AR	SCREW,RS,M4X8	
82	XA9-0633-000		2	SCREW,W/WASHER,M4X8	
83	XA9-0915-000		1	SCREW,P,M3X6	
84	FB4-8457-000		1	PLATE, SHUTTER GEAR	
85	FB4-8458-000		1	SPRING, LEAF	
86	FB4-8460-000		1	RATCHET, SHUTTER	
87	FS2-3470-000		3	PULLEY, 20T	
88	FS7-0359-000		1	GEAR, 26T	
89	RS1-1042-000		2	BUSHING	
90	XF2-1117-740		1	BELT, TIMING	
91	XG9-0365-000		1	BEARING, BALL	
92	FS5-6324-000		2	ROLLER	
93	FS6-3130-000		1	PULLEY, 44T	
94	FS2-6581-000		1	ROLLER	
501	XB1-2300-609		2	SCREW,MACH.,TRUSS HEAD,M3X6	
502	XB1-2302-509		4	SCREW,MACH.,TRUSS HEAD,M3X25	
503	XB1-2400-609		6	SCREW,MACH.,TRUSS HEAD,M4X6	
504	XB6-7300-609		10	SCREW,TP,M3X6	
505	XB6-7300-809		3	SCREW,TP,M3X8	
506	XD1-4200-302		1	WASHER,TOOTHED LOCK	
507	XD2-1100-322		AR	RING,E	
508	XD2-1100-402		6	RING,E	
509	XD2-1100-502		11	RING,E	
510	XD2-1100-642		AR	RING,E	
511	XD3-2200-102		1	PIN,DOWEL	
512	XD3-2200-142		5	PIN,DOWEL	

COPYRIGHT©1999 CANON INC. CANON Saddle Finisher-D2 REV.0 JULY 1999 PRINTED IN JAPAN [IMPRIME AU JAPON]

FIGURE & KEY NO.	PART NUMBER	RANK	QTY	DESCRIPTION	SERIAL NUMBER / REMARKS
Q20 - 513	XD3-2200-122		3	PIN,DOWEL	
514	XD3-2200-202		2	PIN,DOWEL	
515	XB1-2400-409		3	SCREW,MACH.,TRUSS HEAD,M4X4	
516	XD1-1106-220		2	SHIM	
517	XD1-1108-220		1	SHIM	

COPYRIGHT © 1999 CANON INC.

FIGURE Q21 TRAY ASSEMBLY

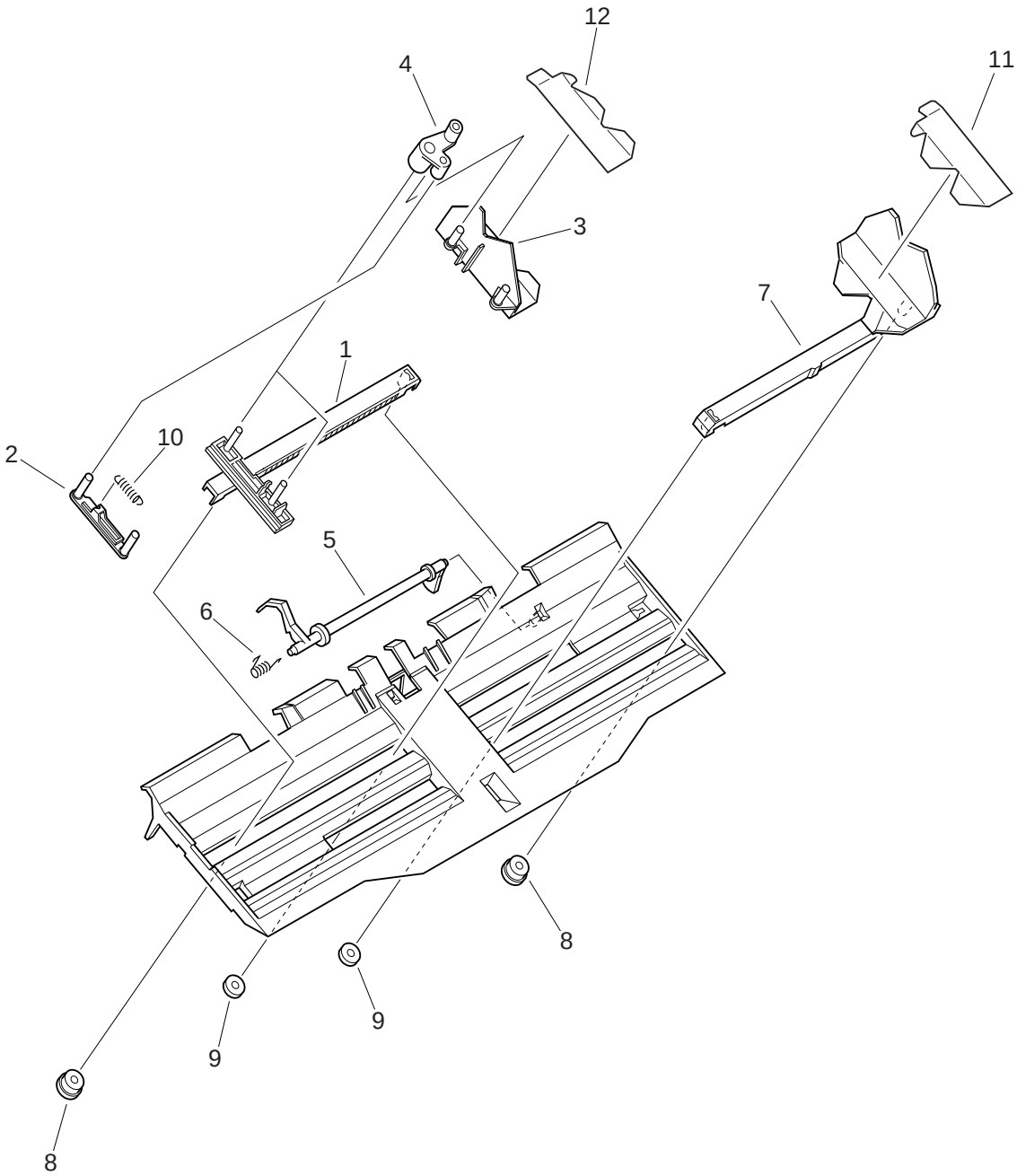

NOTE : This assembly is included in the assembly shown in Figure Q20.

COPYRIGHT © 1999 CANON INC. CANON Saddle Finisher-D2 REV.0 JULY 1999 PRINTED IN JAPAN [IMPRIME AU JAPON]

FIGURE & KEY NO.	PART NUMBER	RANK	QTY	DESCRIPTION	SERIAL NUMBER / REMARKS
Q21 -	FG6-3133-000		1	TRAY ASSEMBLY	SEE NOTE
1	FB4-8365-000		1	RACK, FRONT	
2	FB4-8366-000		1	LINK, 2	
3	FB4-8367-000		1	PLATE, SIDE, FRONT	
4	FB4-8368-000		2	LINK, 1	
5	FB4-8369-000		1	FLAG, TRAY SENSOR	
6	FB4-8370-000		1	SPRING, TORSION	
7	FB4-8371-000		1	PLATE, SIDE, REAR	
8	FS5-6662-000		2	ROLLER, 1	
9	FS5-6663-000		2	ROLLER, 2	
10	FS7-2087-000		1	SPRING, TENSION	
11	FB4-8466-000		1	SHEET, REAR	
12	FB4-8467-000		1	SHEET, FRONT	

COPYRIGHT © 1999 CANON INC.

FIGURE Q22 TRAY FRAME ASSEMBLY

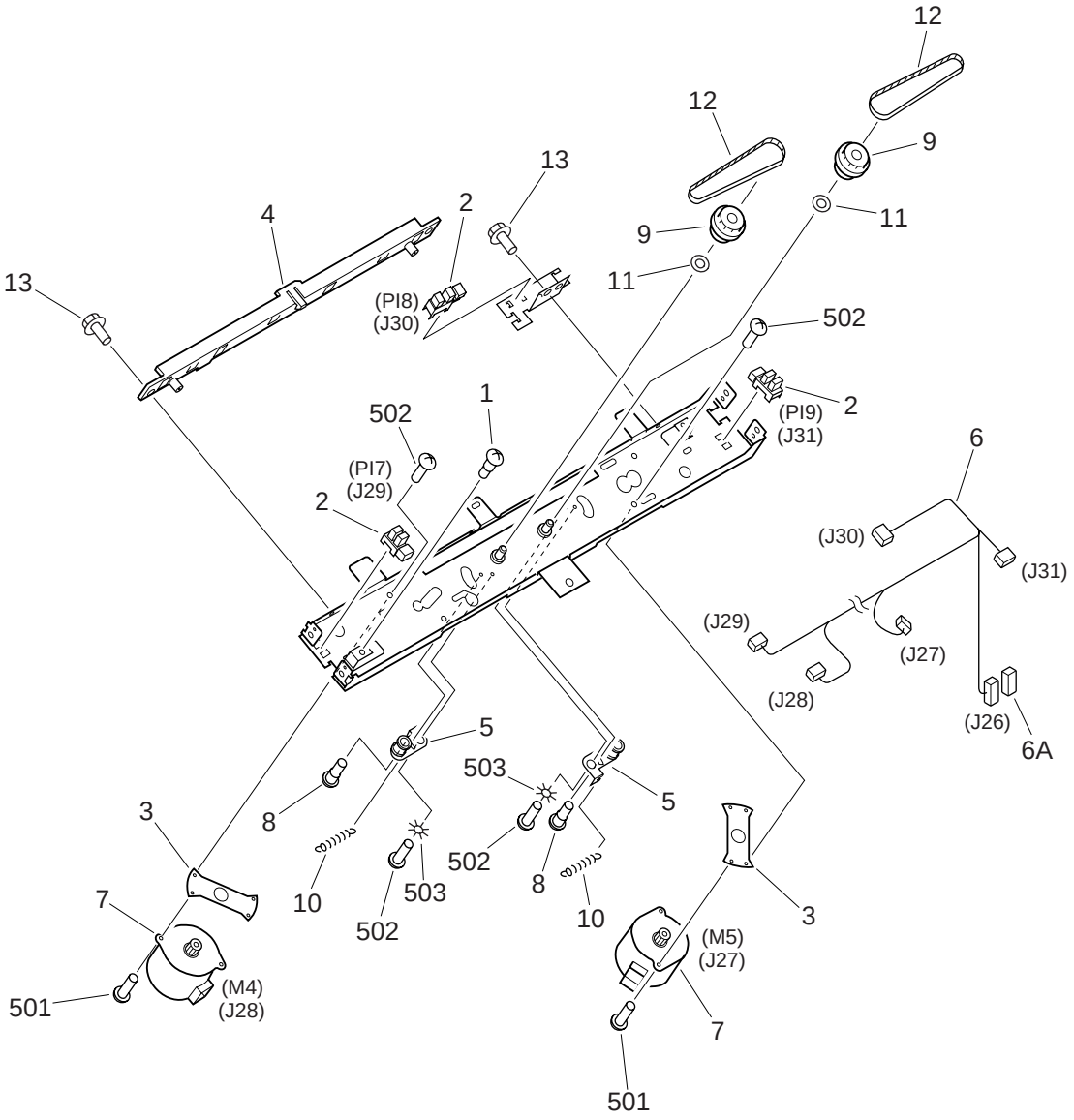

NOTE : This assembly is included in the assembly shown in Figure Q20.

COPYRIGHT©1999 CANON INC.

FIGURE & KEY NO.	PART NUMBER	RANK	QTY	DESCRIPTION	SERIAL NUMBER / REMARKS
Q22 -	FG6-3080-000		1	TRAY FRAME ASSEMBLY	SEE NOTE
1	FA2-5970-000		2	SCREW, STEPPED	
2	WG8-5362-000		3	IC, TLP1241, PHOTO-INTERRUPTER	PI7-9 J29-31
3	FB4-8376-000		2	MOUNT, MOTOR	
4	FB4-8392-000		1	GUIDE, TRAY CABLE	
5	FF5-8481-000		2	PLATE, TENSION	
6	FG3-0174-000		1	CABLE, TRAY 1	J26-31
6A	VS1-6319-020		1	CONNECTOR, SNAP TIGHT	J26
7	FH6-1642-000		2	MOTOR, STEPPING, DC24V	M4,5 J28,27
8	FS1-9120-000		2	SCREW,STEPPED,M3	
9	FS7-0354-000		2	GEAR, 16T/PULLEY, 36T	
10	FS7-2088-000		2	SPRING, TENSION	
11	RA1-2483-000		2	FLANGE, PULLEY	
12	XF9-0697-000		2	BELT, TIMING	
13	XA9-0629-000		3	SCREW,RS,M4X8	
501	XB1-2300-609		4	SCREW,MACH.,TRUSS HEAD,M3X6	
502	XB6-7300-609		6	SCREW,TP,M3X6	
503	XD1-4200-402		2	WASHER,TOOTHED LOCK	

COPYRIGHT © 1999 CANON INC.

FIGURE Q23 TRAY AUXILIARY PLATE ASSEMBLY

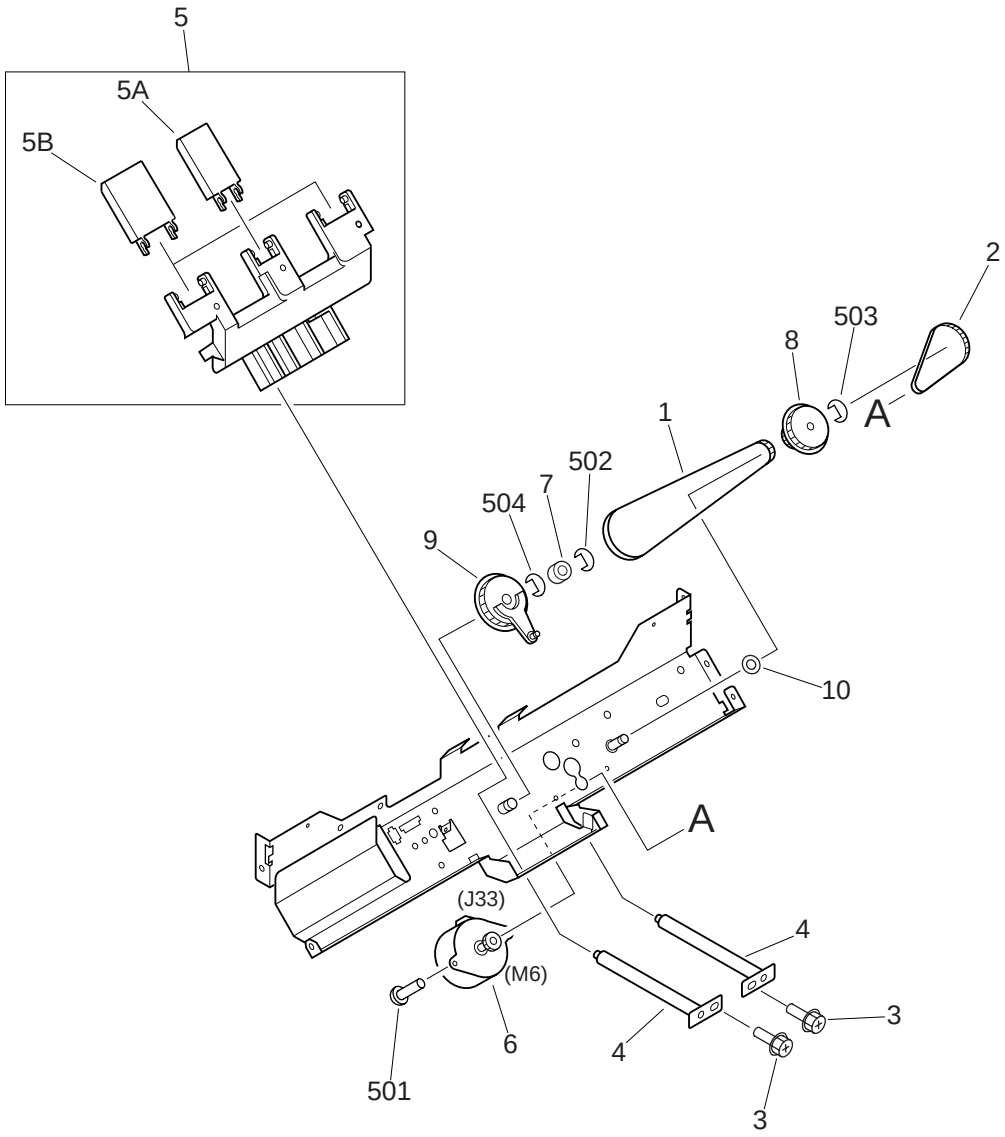

NOTE : This assembly is included in the assembly shown in Figure Q20.

COPYRIGHT © 1999 CANON INC.

FIGURE & KEY NO.	PART NUMBER	RANK	QTY	DESCRIPTION	SERIAL NUMBER / REMARKS
Q23 -	FG6-3084-000		1	TRAY AUXILIARY PLATE ASSEMBLY	SEE NOTE
1	XF9-0539-000		1	BELT, TIMING	
2	XF9-0357-000		1	BELT, TIMING	
3	XA9-0629-000		2	SCREW,RS,M4X8	
4	FF5-8483-000		2	RAIL, TRAY	
5	FG6-3086-000		1	AUXILIARY TRAY ASSEMBLY	
5A	FB4-8361-000		1	GUIDE, TRAY, 2	
5B	FB4-8360-000		2	GUIDE, TRAY, 1	
6	FH6-1643-000		1	MOTOR, STEPPING, DC24V	M6 J33
7	FS2-6581-000		1	ROLLER	
8	FS5-3746-000		1	PULLEY, IDLER, 18T/48T	
9	FS5-3747-000		1	PULLEY, 36T	
10	RA1-2483-000		1	FLANGE, PULLEY	
501	XB1-2300-609		2	SCREW,MACH.,TRUSS HEAD,M3X6	
502	XD2-1100-322		1	RING,E	
503	XD2-1100-502		1	RING,E	
504	XD2-1100-642		1	RING,E	

COPYRIGHT © 1999 CANON INC.

FIGURE Q24 SWING GUIDE ASSEMBLY

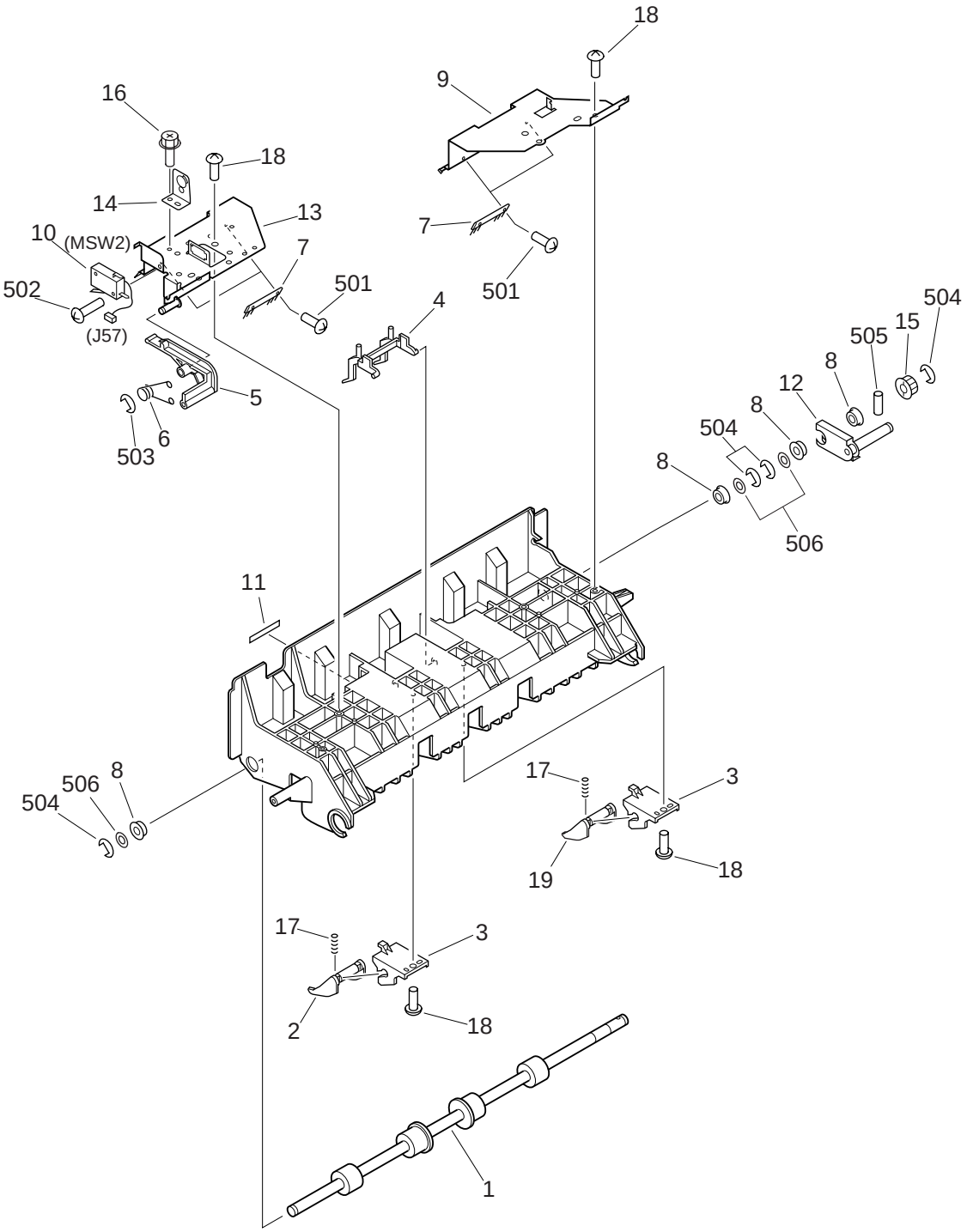

NOTE : This assembly is included in the assembly shown in Figure Q20.

COPYRIGHT © 1999 CANON INC.

FIGURE & KEY NO.	PART NUMBER	RANK	QTY	DESCRIPTION	SERIAL NUMBER / REMARKS
Q24 -	FG6-3104-000		1	SWING GUIDE ASSEMBLY	SEE NOTE
1	FB4-8363-000		1	ROLLER, DELIVERY, UPPER	
2	FB4-8394-000		1	GUIDE, RIB	
3	FB4-8395-000		2	HOLDER, GUIDE RIB	
4	FB4-8397-000		1	ARM, STOP	
5	FB4-8406-000		1	LEVER, SWITCH	
6	FB4-8407-000		1	SPRING, TORSION	
7	FB4-8408-000		4	ELIMINATOR, STATIC CHARGE	
8	XG9-0403-000		4	BEARING, BALL	
9	FB4-8410-000		1	PLATE, SPRING ANCHOR, REAR	
10	FF3-3609-000		1	CABLE, SWING GUIDE SWITCH	MSW2 J57
11	FS6-8795-000		1	SEAL, JAM	
12	FF5-8486-000		1	LINK, ROLLER, 2	
13	FF5-8487-000		1	PLATE, SPRING ANCHOR, FRONT	
14	FF5-8493-000		1	GUIDE, HARNESS	
15	FS5-3748-000		1	PULLEY, 26T	
16	XA9-0629-000		1	SCREW,RS,M4X8	
17	FS7-2089-000		2	SPRING, COMPRESSION	
18	XA9-0605-000		6	SCREW,P,M4X8	
19	FB4-8442-000		1	GUIDE, RIB, 2	
501	XB1-2300-609		4	SCREW,MACH.,TRUSS HEAD,M3X6	
502	XB1-2301-409		1	SCREW,MACH.,TRUSS HEAD,M3X14	
503	XD2-1100-502		1	RING,E	
504	XD2-1100-642		5	RING,E	
505	XD3-2200-122		1	PIN,DOWEL	
506	XD1-1108-220		3	SHIM	

COPYRIGHT © 1999 CANON INC.

FIGURE Q30 FEEDER ASSEMBLY (1/3)

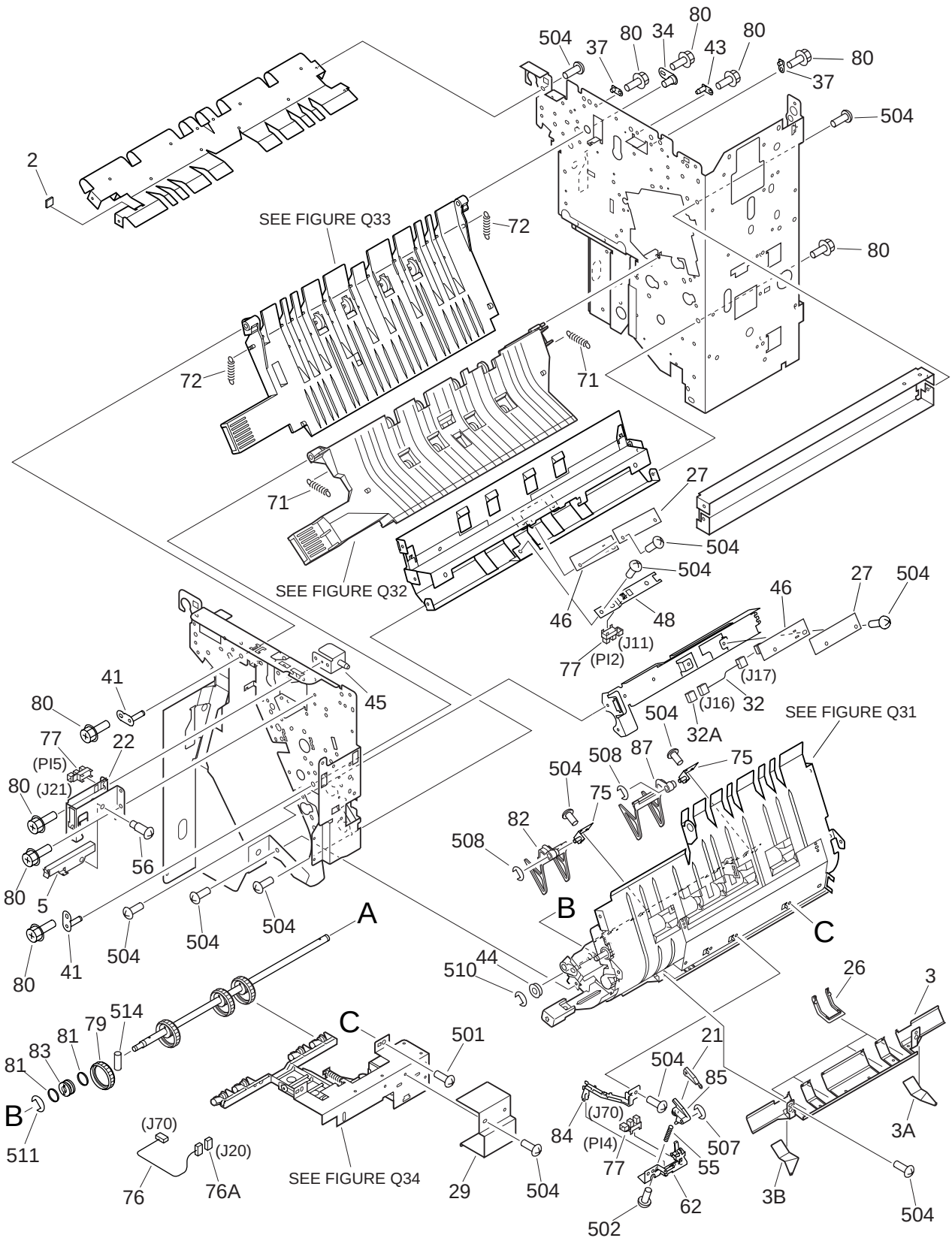

COPYRIGHT © 1999 CANON INC.
CANON Saddle Finisher-D2 REV.0 JULY 1999 PRINTED IN JAPAN [IMPRIME AU JAPON]

FIGURE Q30 FEEDER ASSEMBLY (2/3)

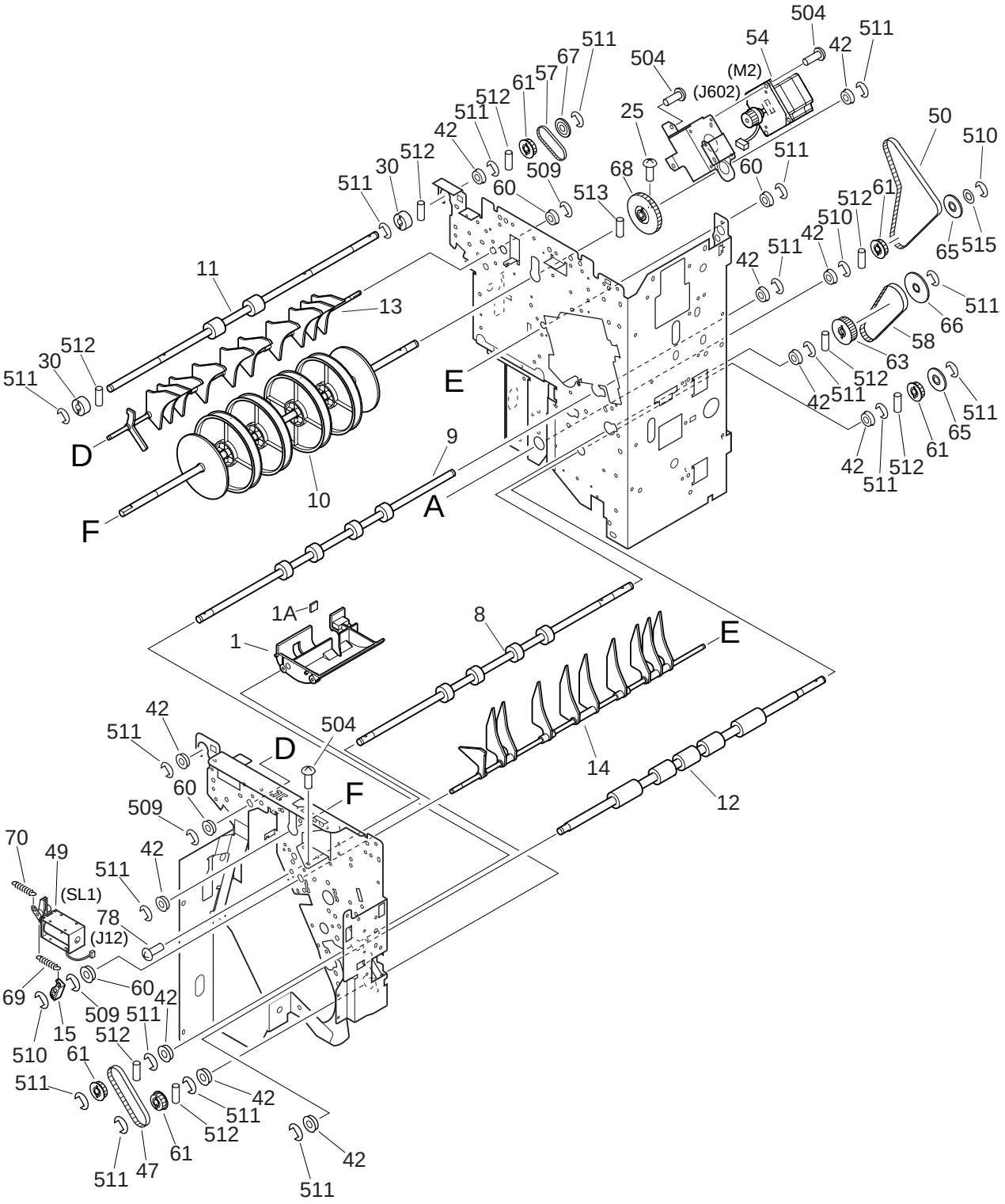

COPYRIGHT © 1999 CANON INC.

FIGURE Q30 FEEDER ASSEMBLY (3/3)

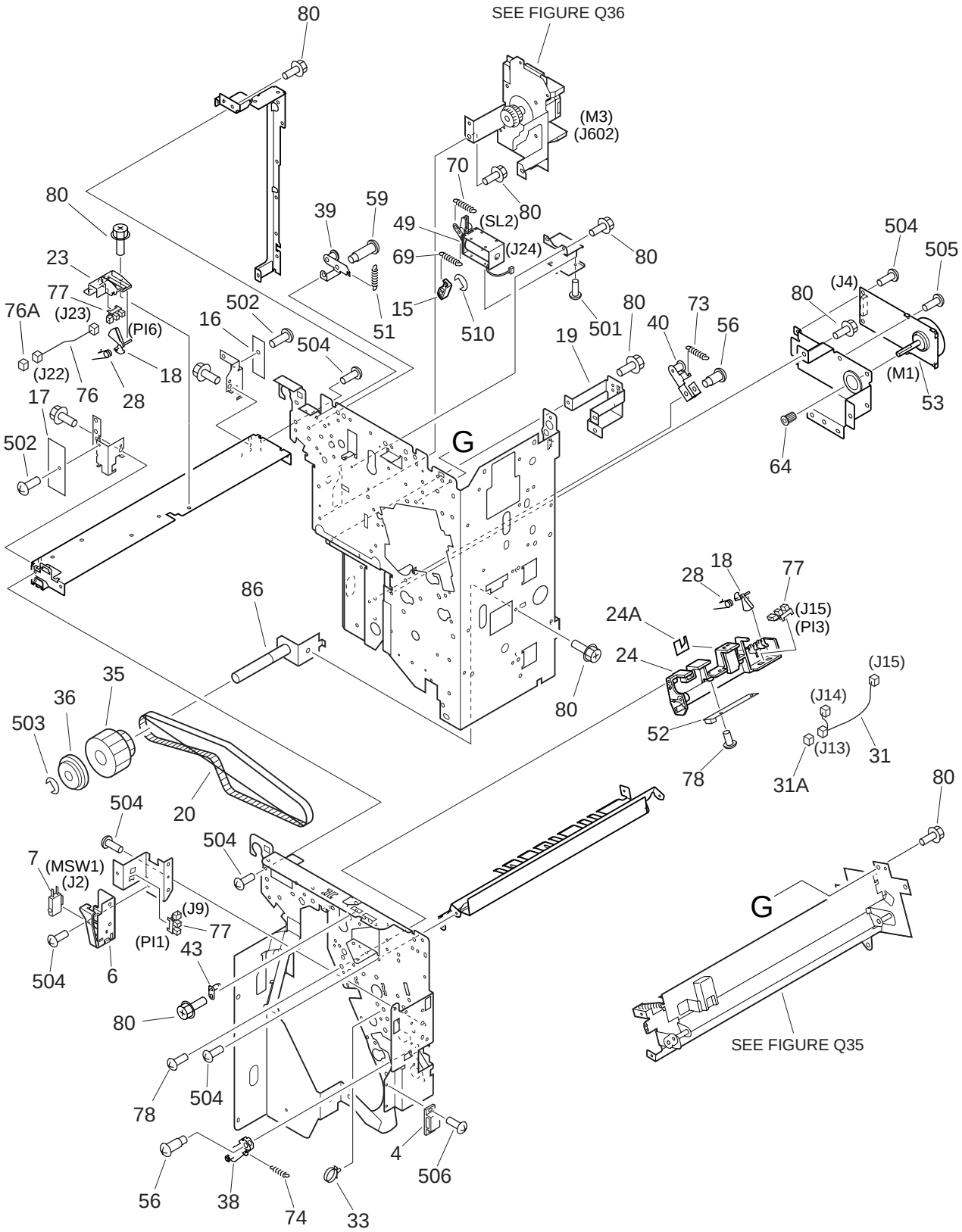

COPYRIGHT © 1999 CANON INC.

FIGURE & KEY NO.	PART NUMBER	RANK	QTY	DESCRIPTION	SERIAL NUMBER / REMARKS
Q30 -	NPN		RF	FEEDER ASSEMBLY	
1	FF5-8550-000		1	GUIDE, UPPER	
1A	FA6-0768-020		1	SHEET, STOP	
2	FA6-0768-020		1	SHEET, STOP	
3	FF5-8549-000		1	GUIDE, STAPLER	
3A	FB4-8685-000		1	SHEET, MYLAR, REAR	
3B	FB4-8686-000		1	SHEET, MYLAR, FRONT	
4	FA3-4725-000		1	CATCH, MAGNET	
5	FB1-7099-020		1	LEVER, STOP	
6	FB3-0123-030		1	HOLDER, SWITCH	
7	FF3-3746-000		1	FRONT DOOR SWITCH UNIT	MSW1 J2
8	FB4-8598-000		1	ROLLER, FRONT	
9	FB4-8616-000		1	ROLLER, 2	
10	FE6-3091-000		1	ROLLER, BUFFER	
11	FB4-8618-000		1	ROLLER, NON-SORT	
12	FB4-8619-000		1	ROLLER	
13	FB4-8622-000		1	DEFLECTOR, 1	
14	FB4-8623-000		1	DEFLECTOR, 2	
15	FB4-8624-000		2	ARM, DEFLECTOR	
16	FG3-0082-000		1	LED PCB ASSEMBLY	
17	FG3-0083-000		1	PHOTO TRANSISTOR PCB ASSEMBLY	
18	FB4-8641-000		2	FLAG, SENSOR	
19	FB5-2674-000		1	MOUNT	
20	XF2-1312-160		1	BELT, TIMING	
21	FB4-8592-000		1	COVER, RIB	
22	FB4-8660-000		1	MOUNT, STOP	
23	FB4-8661-000		1	HOLDER, SENSOR	
24	FF5-8509-000		1	HOLDER, SENSOR	
24A	FB4-8721-000		1	SHEET	
25	XA9-0687-000		1	SCREW,MACH.,TRUSS HEAD,M4X8	

COPYRIGHT © 1999 CANON INC.

FIGURE & KEY NO.	PART NUMBER	RANK	QTY	DESCRIPTION	SERIAL NUMBER / REMARKS
Q30 - 26	FB4-8708-000		4	COVER, EDGE	
27	FB4-8713-000		2	SHEET, PCB	
28	FB4-8718-000		2	SPRING, TORSION	
29	FB4-8719-000		1	COVER, CONNECTOR	
30	FC2-5102-000		2	ROLLER, DELIVERY, 1	
31	FF3-3599-000		1	CABLE, BUFFER PASS	J13-15
31A	VS1-5057-007		1	CONNECTOR, SNAP TIGHT	J13
32	FF3-3600-000		1	CABLE, LOWER PASS SENSOR	J16,17
32A	VS1-5057-004		1	CONNECTOR, SNAP TIGHT	J16
33	WT2-5178-000		1	CLIP, CABLE	
34	FF5-3800-000		1	PLATE, PIN, 1	
35	FS5-3794-000		1	GEAR, 30T/PULLEY, 24T	
36	FS2-6559-000		1	ROLLER	
37	FF5-8523-000		2	PLATE, PIN	
38	FF5-8529-000		1	MOUNT, TENSIONER	
39	FF5-8530-000		1	MOUNT, TENSIONER, 2	
40	FF5-8531-000		1	MOUNT, TENSIONER, 3	
41	FF5-8532-000		2	PLATE, PIN, 2	
42	XG9-0365-000		11	BEARING, BALL	
43	FF5-8534-000		2	PLATE, PIN	
44	XG9-0337-000		1	BEARING, BALL	
45	FF5-8538-000		1	PLATE, PIN	
46	FF5-8547-000		2	SENSOR PCB ASSEMBLY	
47	XF9-0695-000		1	BELT, TIMING	
48	FF5-8548-000		1	MOUNT, SENSOR	
49	FF5-8551-000		2	SOLENOID	SL1,2 J12,24
50	XF9-0694-000		1	BELT, TIMING	
51	FS7-2121-000		1	SPRING, TENSION	
52	FG3-0081-000		1	SENSOR PCB ASSEMBLY	
53	FH6-1639-000		1	MOTOR, DC 24V	M1 J4

COPYRIGHT©1999 CANON INC.

FIGURE & KEY NO.	PART NUMBER	RANK	QTY	DESCRIPTION	SERIAL NUMBER / REMARKS
Q30 - 54	FH6-1651-000		1	MOTOR, DC24V	M2 J602
55	FS7-2118-000		1	SPRING, COMPRESSION	
56	FS1-9005-000		3	SCREW,STEPPED,M4	
57	XF9-0693-000		1	BELT, TIMING	
58	XF9-0372-000		1	BELT, TIMING, 82T	
59	FS1-9255-000		1	SCREW,STEPPED,M4	
60	FS2-1528-000		4	BUSHING	
61	FS2-3488-000		5	PULLEY, 32T	
62	FF5-8545-000		1	MOUNT, SENSOR	
63	FS2-3527-000		1	PULLEY, 48T	
64	FS5-3749-000		1	PULLEY, 16T	
65	FS5-6243-000		2	ROLLER	
66	FS5-6381-000		1	FLANGE	
67	FS5-6661-000		1	FLANGE	
68	FE6-3092-000		1	GEAR, 48T	
69	FS7-2107-000		2	SPRING, TENSION	
70	FS7-2108-000		2	SPRING, TENSION	
71	FS7-2109-000		2	SPRING, TENSION	
72	FS7-2110-000		2	SPRING, TENSION	
73	FS7-2111-000		2	SPRING, TENSION	
74	FS7-2112-000		1	SPRING, TENSION	
75	FF5-8542-000		2	BRACKET	
76	FF3-3604-000		2	CABLE, PAPER FEED SENSOR	J20,70,22,23
76A	VS1-5057-003		1	CONNECTOR, SNAP TIGHT	J20,22
77	WG8-5362-000		6	IC, TLP1241, PHOTO-INTERRUPTER	PI1,3-6,12 J9,15,70,21,23,11
78	XA9-0605-000		6	SCREW,P,M4X8	
79	FB4-8709-000		4	BELT, PAPER FEED	
80	XA9-0732-000		AR	SCREW,RS,M4X8	
81	FA6-0910-000		8	RING, RUBBER	
82	FB4-8593-000		1	GUIDE, STOP, FRONT	

COPYRIGHT © 1999 CANON INC.

FIGURE & KEY NO.	PART NUMBER	RANK	QTY	DESCRIPTION	SERIAL NUMBER / REMARKS
Q30 - 83	FB4-8678-000		4	ROLLER	
84	FB4-8690-000		1	GUIDE, CABLE	
85	FB4-8668-000		1	GUIDE, PAPER	
86	FF5-9621-000		1	SHAFT, GEAR	
87	FB4-8591-000		1	GUIDE, STOP, REAR	
501	XB1-2300-409		8	SCREW,MACH.,TRUSS HEAD,M3X4	
502	XB1-2300-609		2	SCREW,MACH.,TRUSS HEAD,M3X6	
503	XD2-1100-642		2	RING,E	
504	XB1-2400-609		AR	SCREW,MACH.,TRUSS HEAD,M4X6	
505	XB1-2401-209		4	SCREW,MACH.,TRUSS HEAD,M4X12	
506	XB6-7300-609		2	SCREW,TP,M3X6	
507	XD2-1100-242		3	RING,E	
508	XD2-1100-322		4	RING,E	
509	XD2-1100-402		4	RING,E	
510	XD2-1100-502		3	RING,E	
511	XD2-1100-642		AR	RING,E	
512	XD3-2200-142		7	PIN,DOWEL	
513	XD3-2200-162		2	PIN,DOWEL	
514	XD3-2200-122		4	PIN,DOWEL	
515	XD1-1108-225		1	SHIM	

COPYRIGHT©1999 CANON INC.

FIGURE Q31 SORT GUIDE ASSEMBLY

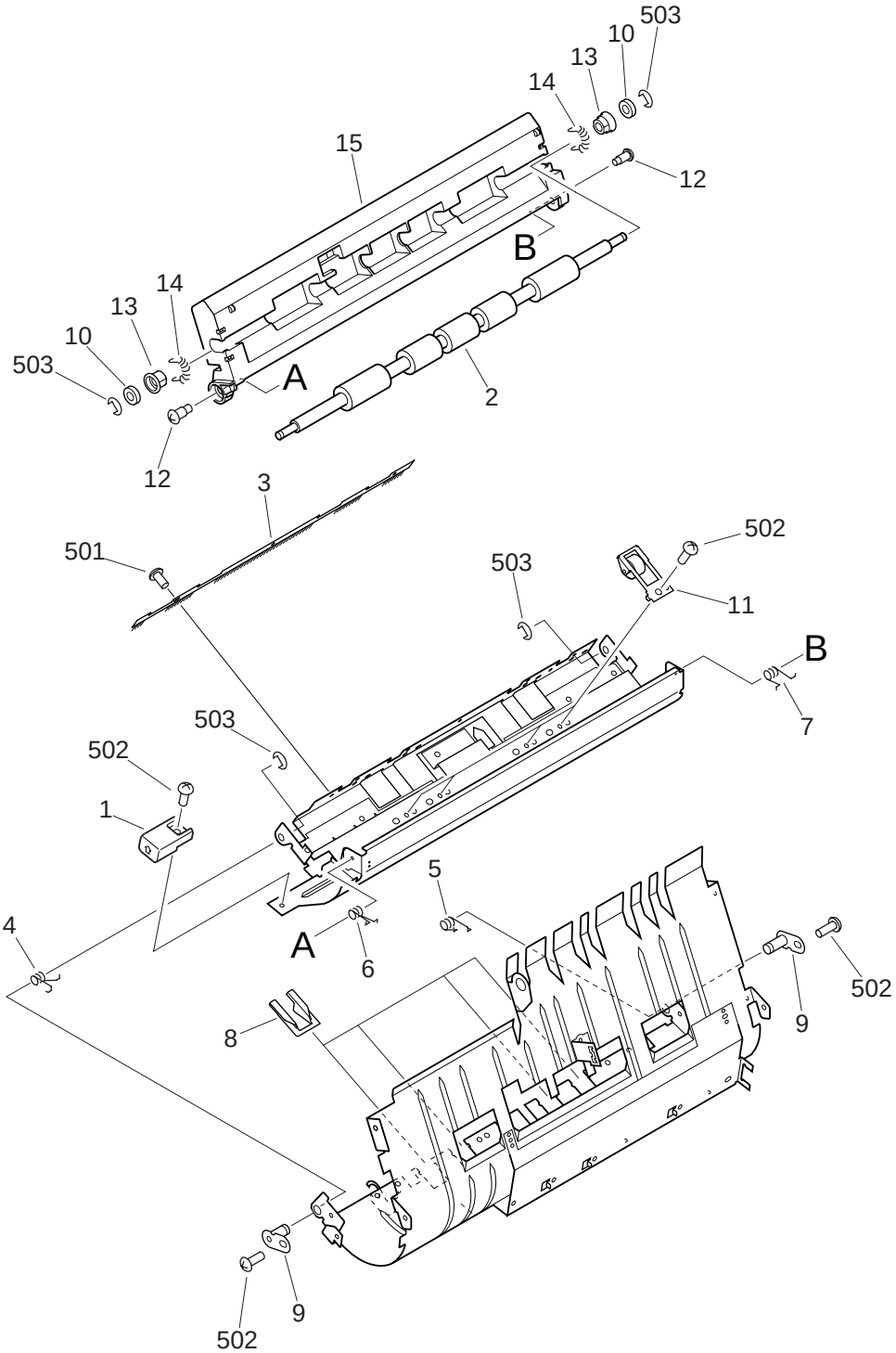

COPYRIGHT © 1999 CANON INC.
CANON Saddle Finisher-D2 REV.0 JULY 1999 PRINTED IN JAPAN [IMPRIME AU JAPON]

FIGURE & KEY NO.	PART NUMBER	RANK	QTY	DESCRIPTION	SERIAL NUMBER / REMARKS
Q31 -	FG6-3171-000		1	SORT GUIDE ASSEMBLY	
1	FB3-3834-000		1	KNOB	
2	FB4-8620-000		1	ROLLER	
3	FB4-8601-000		1	ELIMINATOR, STATIC CHARGE	
4	FB4-8701-000		1	SPRING, TORSION	
5	FB4-8702-000		1	SPRING, TORSION	
6	FB4-8703-000		1	SPRING, TORSION	
7	FB4-8704-000		1	SPRING, TORSION	
8	FB4-8707-000		4	GUIDE, BELT	
9	FF5-3804-000		2	PLATE, PIN, 1	
10	XG9-0362-000		2	BUSHING, CONDUCTIVE	
11	FF5-8546-000		4	ROLLER, DELIVERY	
12	FS1-9168-000		2	SCREW,STEPPED,M4X5	
13	FS5-6657-000		2	BUSHING	
14	FS7-2114-000		2	SPRING, TENSION	
15	FF5-8524-000		1	GUIDE, SORT	
501	XB1-2300-409		3	SCREW,MACH.,TRUSS HEAD,M3X4	
502	XB1-2400-609		7	SCREW,MACH.,TRUSS HEAD,M4X6	
503	XD2-1100-502		4	RING,E	

COPYRIGHT © 1999 CANON INC.

FIGURE Q32 PAPER FEED LOWER GUIDE ASSEMBLY

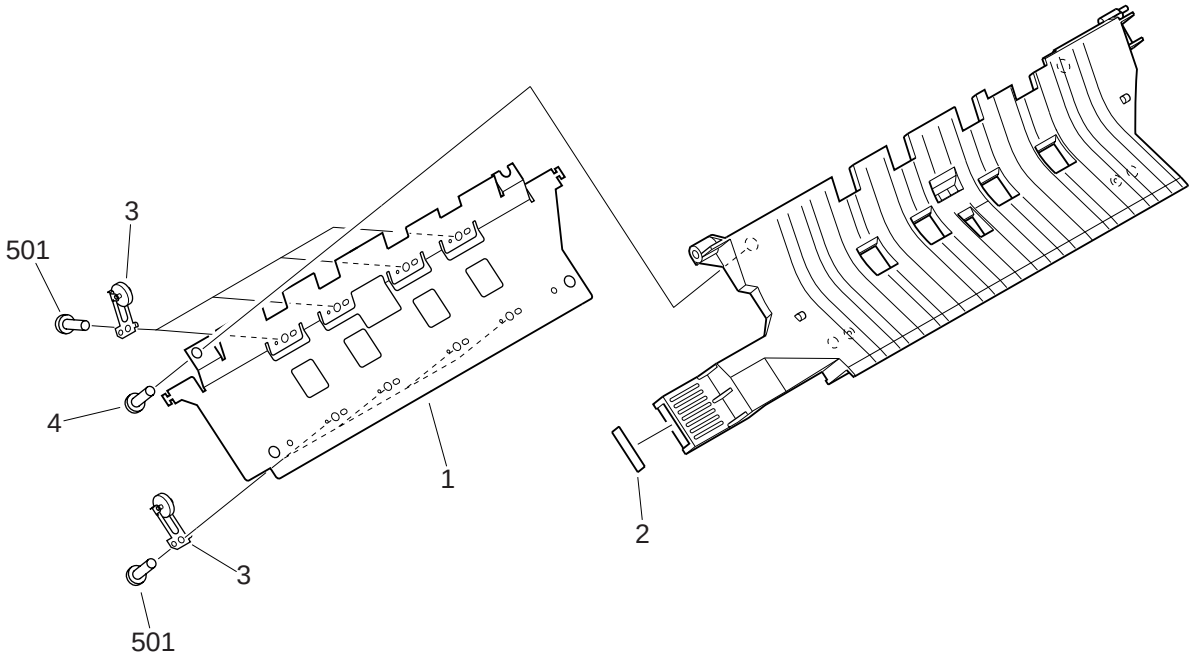

FIGURE & KEY NO.	PART NUMBER	RANK	QTY	DESCRIPTION	SERIAL NUMBER / REMARKS
Q32 -	FG6-3178-000		1	PAPER FEED LOWER GUIDE ASS'Y	
1	FB4-8657-000		1	PLATE, SUPPORT	
2	FB4-8715-000		1	LABEL, GUIDE	
3	FF5-6194-000		8	ROLLER, FEED	
4	XA9-0605-000		4	SCREW,P,M4X8	
501	XB1-2400-609		8	SCREW,MACH.,TRUSS HEAD,M4X6	

COPYRIGHT © 1999 CANON INC.

FIGURE Q33 SORT LEFT LOWER GUIDE ASSEMBLY

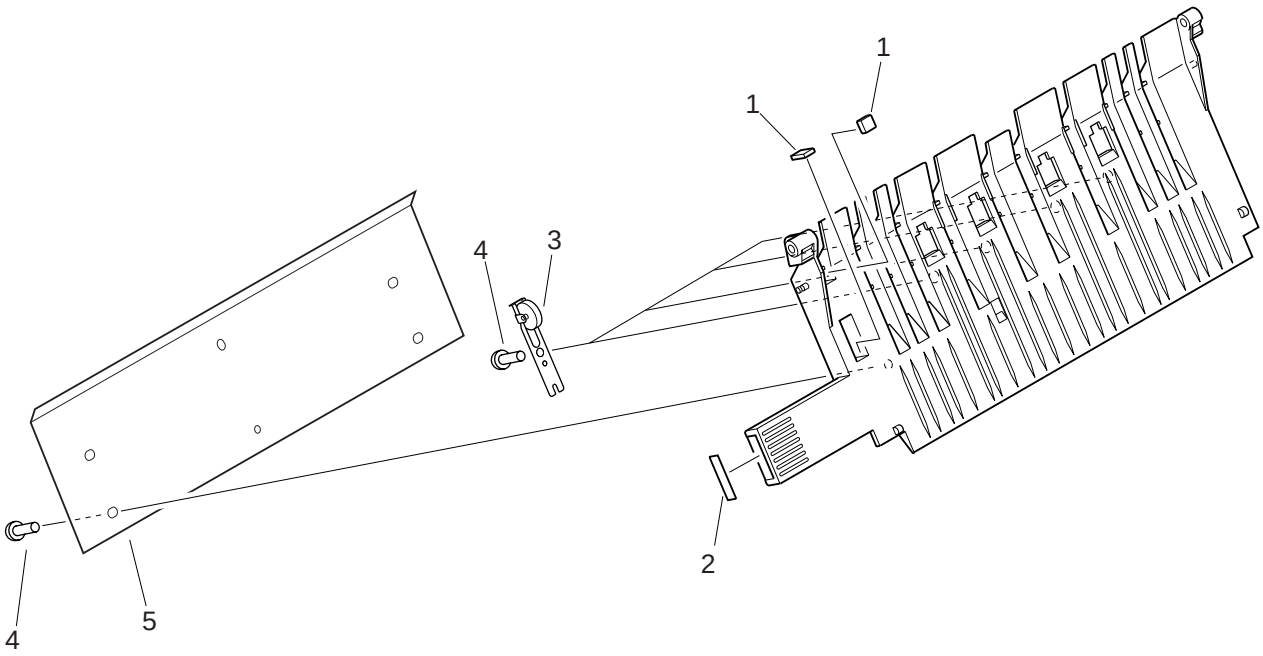

FIGURE & KEY NO.	PART NUMBER	RANK	QTY	DESCRIPTION	SERIAL NUMBER / REMARKS
Q33 -	FG6-3179-000		1	SORT LEFT LOWER GUIDE ASSEMBLY	
1	FA6-0768-020		2	SHEET, STOP	
2	FB4-8716-000		1	LABEL, GUIDE	
3	FF5-8536-000		4	ROLLER, FEED	
4	XA9-0605-000		10	SCREW,P,M4X8	
5	FB4-8600-000		1	PLATE, SUPPORT	

COPYRIGHT © 1999 CANON INC.

FIGURE Q34 ADJUSTMENT LEVER ASSEMBLY

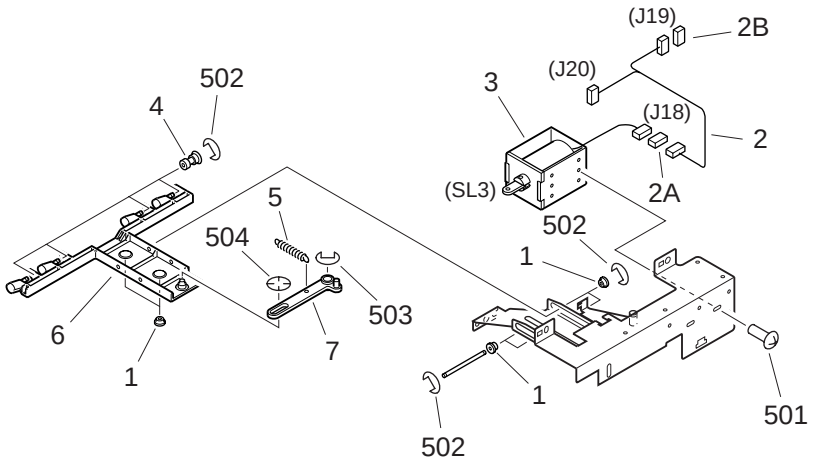

FIGURE & KEY NO.	PART NUMBER	RANK	QTY	DESCRIPTION	SERIAL NUMBER / REMARKS
Q34 -	FG6-3183-000		1	ADJUSTMENT LEVER ASSEMBLY	
1	FB4-8673-000		6	BUSHING	
2	FF3-3607-000		1	CABLE	J18-20
2A	VS1-5057-002		1	CONNECTOR, SNAP TIGHT	J18
2B	VS1-5057-005		1	CONNECTOR, SNAP TIGHT	J19
3	FF5-8535-000		1	SOLENOID	SL3 J18
4	FS5-6664-000		4	ROLLER	
5	FS7-2117-000		1	SPRING, TENSION	
6	FB4-8610-000		1	LEVER, VARIABLE	
7	FB4-8664-000		1	LEVER, SOLENOID, A	
501	XB1-2300-409		2	SCREW,MACH.,TRUSS HEAD,M3X4	
502	XD2-1100-242		8	RING,E	
503	XD2-1100-502		1	RING,E	
504	XD2-2300-402		1	RING,TOOTHED LOCK	

COPYRIGHT © 1999 CANON INC.

FIGURE Q35 RELAY GUIDE ASSEMBLY

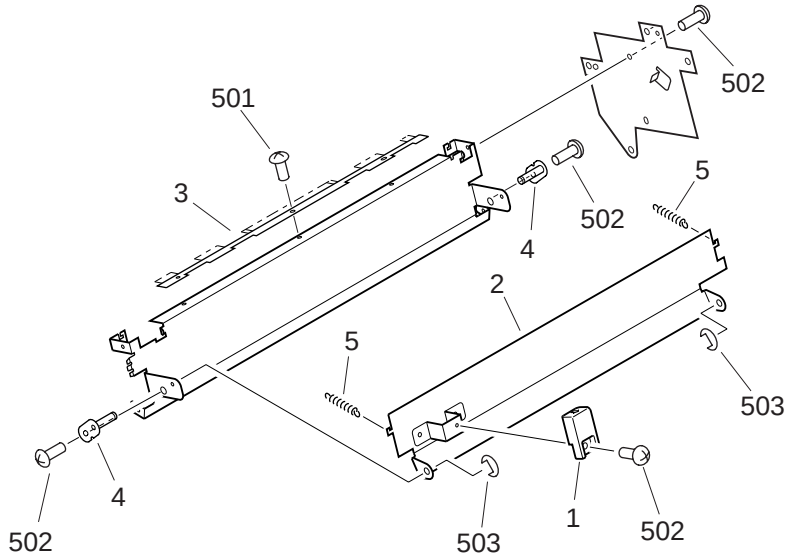

FIGURE & KEY NO.	PART NUMBER	RANK	QTY	DESCRIPTION	SERIAL NUMBER / REMARKS
Q35 -	FG6-3191-000		1	RELAY GUIDE ASSEMBLY	
1	FB3-3834-000		1	KNOB	
2	FB4-8645-000		1	GUIDE, 1	
3	FB4-8684-000		1	ELIMINATOR, STATIC CHARGE	
4	FF5-8532-000		2	PLATE, PIN, 2	
5	FS7-2115-000		2	SPRING, TENSION	
501	XB1-2300-409		3	SCREW,MACH.,TRUSS HEAD,M3X4	
502	XB1-2400-609		5	SCREW,MACH.,TRUSS HEAD,M4X6	
503	XD2-1100-502		2	RING,E	

COPYRIGHT © 1999 CANON INC.

FIGURE Q36 DELIVERY MOTOR ASSEMBLY

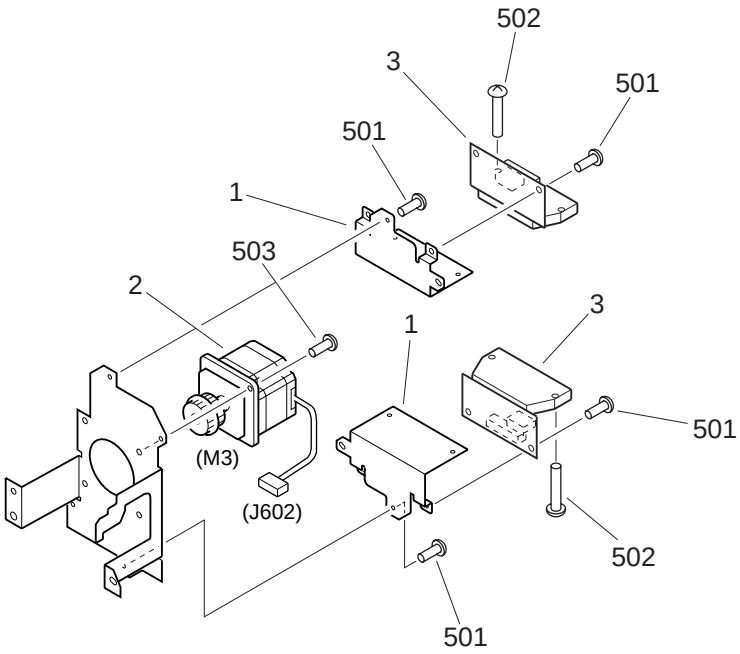

FIGURE & KEY NO.	PART NUMBER	RANK	QTY	DESCRIPTION	SERIAL NUMBER / REMARKS
Q36 -	FG6-3241-000		1	DELIVERY MOTOR ASSEMBLY	
1	FB4-8630-000		2	MOUNT, PCB	
2	FH6-1652-000		1	MOTOR, STEPPING, DC24V	M3 J602
3	FG2-9785-000		2	DRIVER PCB ASSEMBLY	
501	XB1-2300-609		8	SCREW,MACH.,TRUSS HEAD,M3X6	
502	XB1-2301-209		4	SCREW,MACH.,TRUSS HEAD,M3X12	
503	XB1-2400-609		2	SCREW,MACH.,TRUSS HEAD,M4X6	

COPYRIGHT © 1999 CANON INC.

FIGURE Q37 UPPER FEEDER ASSEMBLY

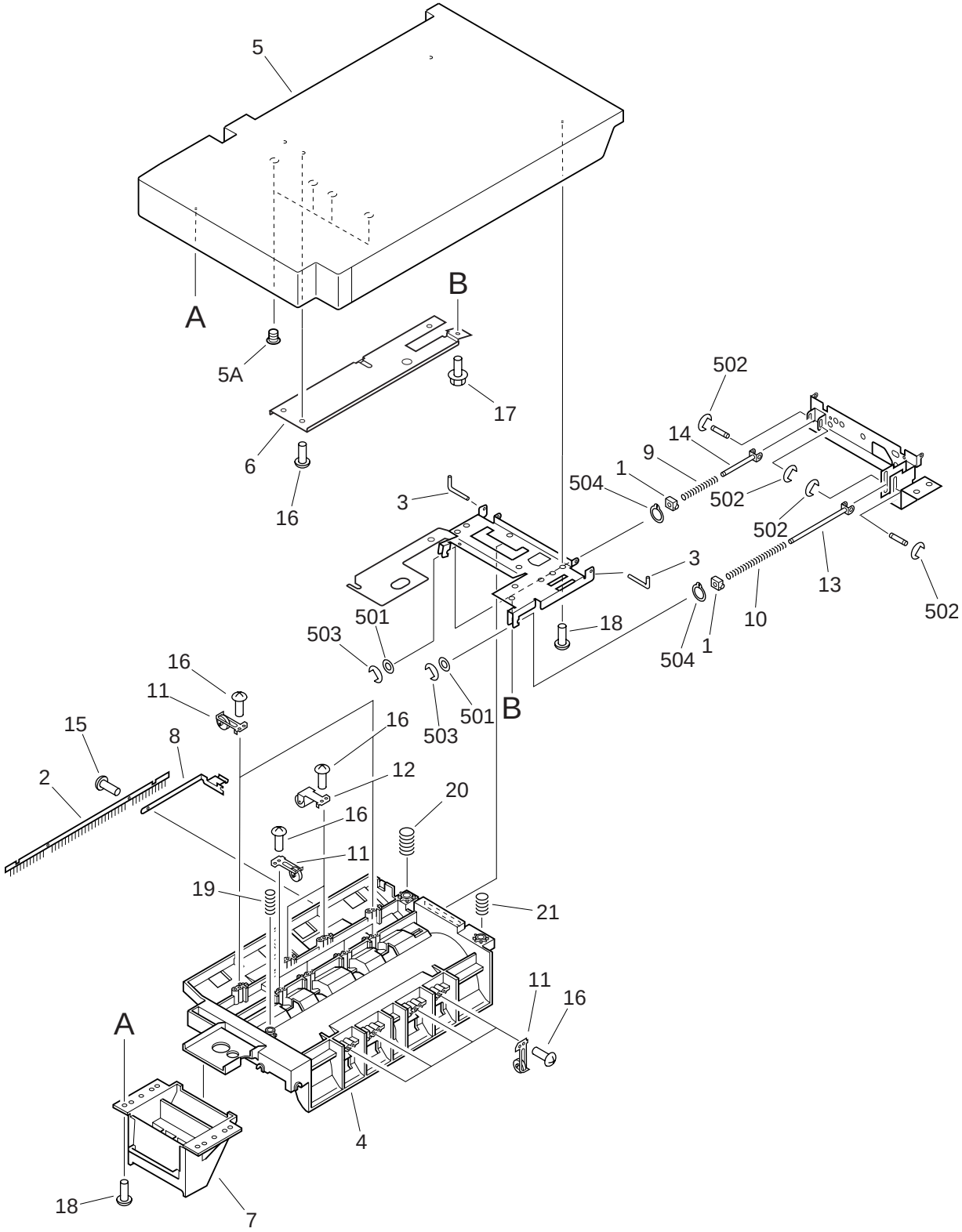

COPYRIGHT © 1999 CANON INC.
CANON Saddle Finisher-D2 REV.0 JULY 1999 PRINTED IN JAPAN [IMPRIME AU JAPON]

FIGURE & KEY NO.	PART NUMBER	RANK	QTY	DESCRIPTION	SERIAL NUMBER / REMARKS
Q37 -	FG6-3170-000		1	UPPER FEEDER ASSEMBLY	
1	FA6-2369-000		2	BLOCK, SLIDER	
2	FB4-8720-000		1	ELIMINATOR, STATIC CHARGE	
3	FB1-7173-000		2	PIN, HINGE	
4	FB4-8613-000		1	GUIDE, UPPER	
5	FF5-8525-000		1	COVER, UPPER	
5A	FC2-3140-000		4	CATCH, MAGNET	
6	FB4-8712-000		1	PLATE, SUPPORT	
7	FB4-8663-000		1	GRIP	
8	FB4-8682-000		1	SPRING, LEAF, GROUNDING	
9	FS7-2125-000		1	SPRING, COMPRESSION	
10	FS7-2120-000		1	SPRING, COMPRESSION	
11	FF5-6194-000		10	ROLLER, FEED	
12	FF5-8537-000		2	ROLLER, FEED	
13	FF5-8540-000		1	MOUNT, SPRING, 1	
14	FF5-8541-000		1	MOUNT, SPRING, 2	
15	XA9-0591-000		2	SCREW,M3X8	
16	XA9-0605-000		12	SCREW,P,M4X8	
17	XA9-0629-000		1	SCREW,RS,M4X8	
18	XA9-0870-000		AR	SCREW,P,M4X10	
19	FS7-2124-000		1	SPRING, COMPRESSION	
20	FS7-2123-000		1	SPRING, COMPRESSION	
21	FS7-2122-000		1	SPRING, COMPRESSION	
501	XD1-1107-239		2	SHIM	
502	XD2-1100-322		4	RING,E	
503	XD2-1100-402		2	RING,E	
504	XD2-2100-502		2	RING,GRIP	

COPYRIGHT © 1999 CANON INC.

FIGURE Q40 STAPLER MOUNT ASSEMBLY

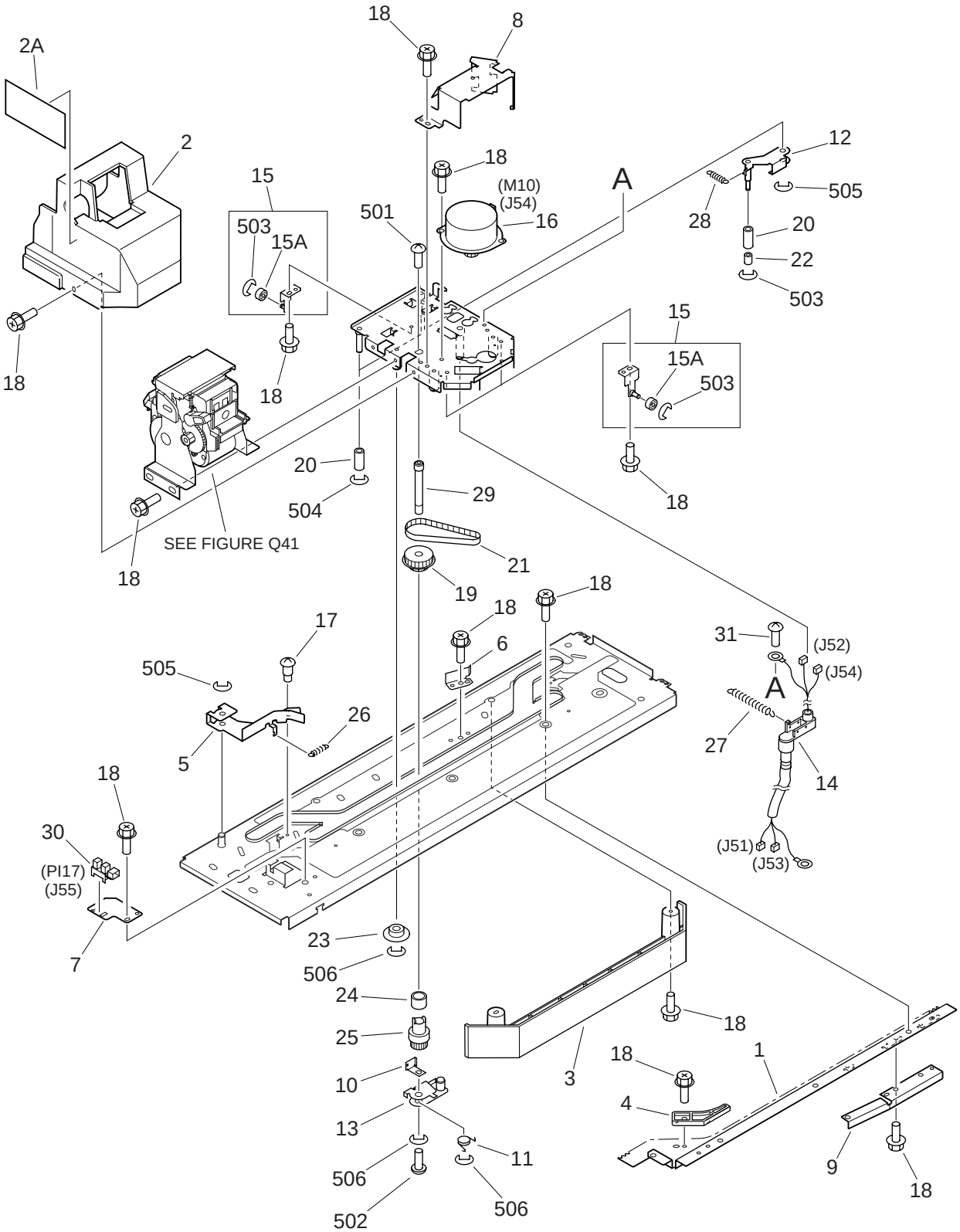

COPYRIGHT © 1999 CANON INC.

FIGURE & KEY NO.	PART NUMBER	RANK	QTY	DESCRIPTION	SERIAL NUMBER / REMARKS
Q40 -	NPN		RF	STAPLER MOUNT ASSEMBLY	
1	FB4-8520-000		1	PLATE, RACK	
2	FF5-8497-000		1	COVER, STAPLER	
2A	FB4-8549-000		1	LABEL, STAPLER COVER	
3	FB4-8525-000		1	COVER, STAPLER CABLE, 2	
4	FB4-8536-000		1	GUIDE, RACK	
5	FB4-8537-000		1	PLATE, PRESSURE GUIDE	
6	FB4-8539-000		1	PLATE, STAPLER	
7	FB4-8540-000		1	PLATE, SENSOR	
8	FB4-8543-000		1	PLATE, CABLE GUIDE	
9	FB4-8545-000		1	PLATE, STAPLER GUIDE	
10	FB4-8546-000		1	PLATE, STAPLER STOP	
11	FB4-8547-000		1	SPRING, TORSION	
12	FF5-8513-000		1	PLATE, SLIDING	
13	FF5-8514-000		1	PLATE, STAPLER SUPPORT	
14	FG3-0177-000		1	CABLE, STAPLER	J51-54
15	FG6-3152-000		3	STAPLER ROLLER PLATE ASSEMBLY	
15A	FS5-6667-000		1	ROLLER	
16	FH6-1646-000		1	MOTOR, STEPPING, DC24V	M10 J54
17	FS1-9009-000		1	SCREW,STEPPED,M3	
18	XA9-0732-000		AR	SCREW,RS,M4X8	
19	FS5-3745-000		1	PULLEY, 32T	
20	FS5-6653-000		3	ROLLER, 1	
21	XF9-0625-000		1	BELT, TIMING	
22	FS5-6654-000		1	ROLLER, 2	
23	FS5-6655-000		1	ROLLER, IDLER	
24	FS5-6656-000		1	ROLLER, RAIL	
25	FS7-0371-000		1	GEAR, 16T	
26	FS7-2101-000		1	SPRING, TENSION	
27	FS7-2102-000		1	SPRING, TENSION	

COPYRIGHT © 1999 CANON INC.

FIGURE & KEY NO.	PART NUMBER	RANK	QTY	DESCRIPTION	SERIAL NUMBER / REMARKS
Q40 - 28	FS7-2103-000		1	SPRING, TENSION	
29	FS7-5252-000		1	SHAFT, STAPLER DRIVE	
30	WG8-5362-000		1	IC, TLP1241, PHOTO-INTERRUPTER	PI17 J55
31	XA9-0633-000		1	SCREW,W/WASHER,M4X8	
501	XB2-8400-809		1	SCREW,W/WASHER,M4X8	
502	XB6-7300-609		1	SCREW,TP,M3X6	
503	XD2-1100-322		4	RING,E	
504	XD2-1100-402		2	RING,E	
505	XD2-1100-502		2	RING,E	
506	XD2-1100-642		3	RING,E	

COPYRIGHT©1999 CANON INC.

FIGURE Q41 STAPLER ASSEMBLY

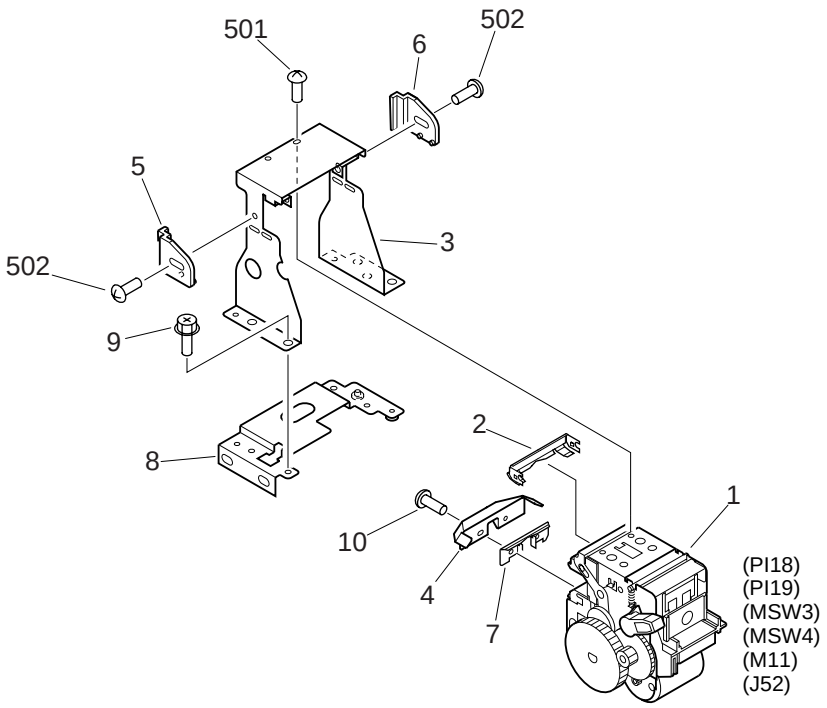

FIGURE & KEY NO.	PART NUMBER	RANK	QTY	DESCRIPTION	SERIAL NUMBER / REMARKS
Q41 -	FG6-3154-000		1	STAPLER ASSEMBLY	
1	FB4-5390-000		1	STAPLER	PI18,19 MSW3,4 M11 J52
2	FB4-6652-000		1	PLATE, UPPER	
3	FB4-8530-000		1	HOLDER, STAPLER	
4	FB4-8532-000		1	GUIDE, INLET, LOWER	
5	FB4-8533-000		1	GUIDE, STAPLER SHEET, FRONT	
6	FB4-8534-000		1	GUIDE, STAPLER SHEET, REAR	
7	FB4-8548-000		1	SPRING, LEAF	
8	FF5-8515-000		1	HOLDER, STAPLER	
9	XA9-0732-000		3	SCREW,RS,M4X8	
10	XA9-0915-000		2	SCREW,P,M3X6	
501	XB1-2400-609		4	SCREW,MACH.,TRUSS HEAD,M4X6	
502	XB6-7400-609		2	SCREW,TP,M4X6	

COPYRIGHT © 1999 CANON INC.

FIGURE Q45 PUNCH ASSEMBLY

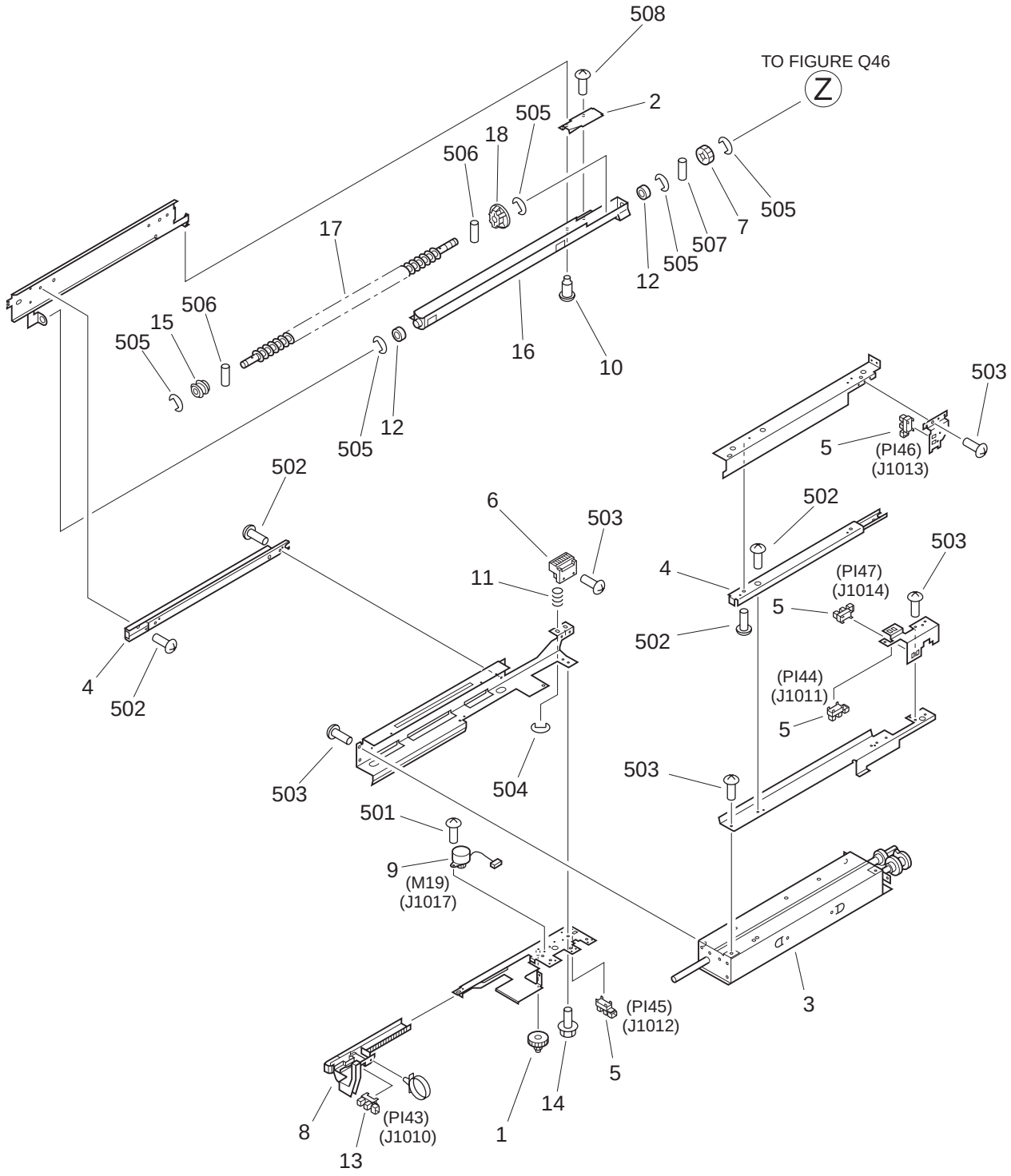

COPYRIGHT © 1999 CANON INC.

FIGURE & KEY NO.	PART NUMBER	RANK	QTY	DESCRIPTION	SERIAL NUMBER / REMARKS
Q45 -	FG6-3319-000		1	PUNCH ASSEMBLY	2 HOLE 100/220/240V
	FG6-3320-000		1	PUNCH ASSEMBLY	3 HOLE 120V
1	FS6-0557-000		1	GEAR, 12T/36T	
2	FB5-2666-000		1	COVER, SCREW UPPER	
3	FG6-3237-000		1	PUNCH UNIT, 2 HOLE	100/220/240V
	FG6-3238-000		1	PUNCH UNIT, 3 HOLE	120V
4	FB5-2639-000		2	RAIL	
5	WG8-5382-000		4	PHOTO-INTERRUPTER	PI44-47 J1011-1014
6	FB5-2632-000		1	RACK	
7	FS7-0404-000		1	GEAR, 22T	
8	FB5-2634-000		1	BLOCK, SLIDE	
9	FH6-1253-000		1	MOTOR, STEPPING, DC24V	M19 J1017
10	FS1-9009-000		1	SCREW,STEPPED,M3	
11	FS7-2161-000		2	SPRING, COMPRESSION	
12	XG9-0214-000		2	BALL BEARING, NSK MR126JZZMC3	
13	WG8-5428-000		1	PHOTO-INTERRUPTER, KI1215-AA03	PI43 J1010
14	XA9-0629-000		3	SCREW,RS,M4X8	
15	FB5-2643-000		1	SCREW, WASTE APPROACH	
16	FB5-2644-000		1	DUCT, WASTE	
17	FB5-2645-000		1	SCREW, WASTE DELIVERY	
18	FB5-2646-000		1	CAM, WASTE CRUSH	
501	XB1-2300-409		4	SCREW,MACH.,TRUSS HEAD,M3X4	
502	XB1-2400-409		7	SCREW,MACH.,TRUSS HEAD,M4X4	
503	XB1-2400-609		AR	SCREW,MACH.,TRUSS HEAD,M4X6	
504	XD2-1100-402		2	RING,E	
505	XD2-1100-642		5	RING,E	
506	XD3-2200-102		2	PIN,DOWEL	
507	XD3-2200-142		1	PIN,DOWEL	
508	XB4-7400-609		1	SCREW,TAPPING,TRUSS HEAD,M4X6	

COPYRIGHT © 1999 CANON INC.

FIGURE Q46 PUNCH WASTE FEED MOTOR ASSEMBLY

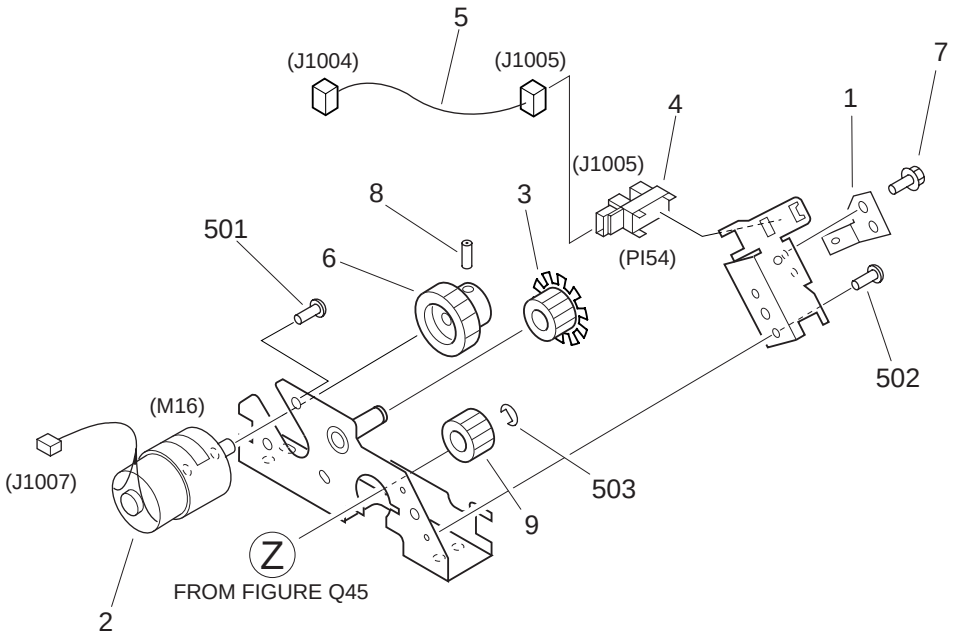

FIGURE & KEY NO.	PART NUMBER	RANK	QTY	DESCRIPTION	SERIAL NUMBER / REMARKS
Q46 -	NPN		RF	PUNCH WASTE FEED MOTOR ASS'Y	
1	FB5-2650-000		1	SPRING, GROUNDING	
2	FH6-1650-000		1	MOTOR, DC24V	M16 J1007
3	FS7-0405-000		1	GEAR, 22T/RATCHET	
4	WG8-5362-000		1	IC, TLP1241, PHOTO-INTERRUPTER	PI54 J1005
5	FF3-3875-000		1	CABLE, WASTE FEED MOTOR SENSOR	J1004,1005
6	FS7-0403-000		1	GEAR, 22T	
7	XA9-0629-000		1	SCREW,RS,M4X8	
8	XA9-0934-000		1	SETSCREW,M3X6	
9	FS6-0140-000		1	GEAR, 20T	
501	XB1-2300-409		3	SCREW,MACH.,TRUSS HEAD,M3X4	
502	XD2-1100-642		1	RING,E	
504	XB6-7300-809		2	SCREW,TP,M3X8	

COPYRIGHT © 1999 CANON INC.

FIGURE Q50 SADDLE ASSEMBLY (1/4)

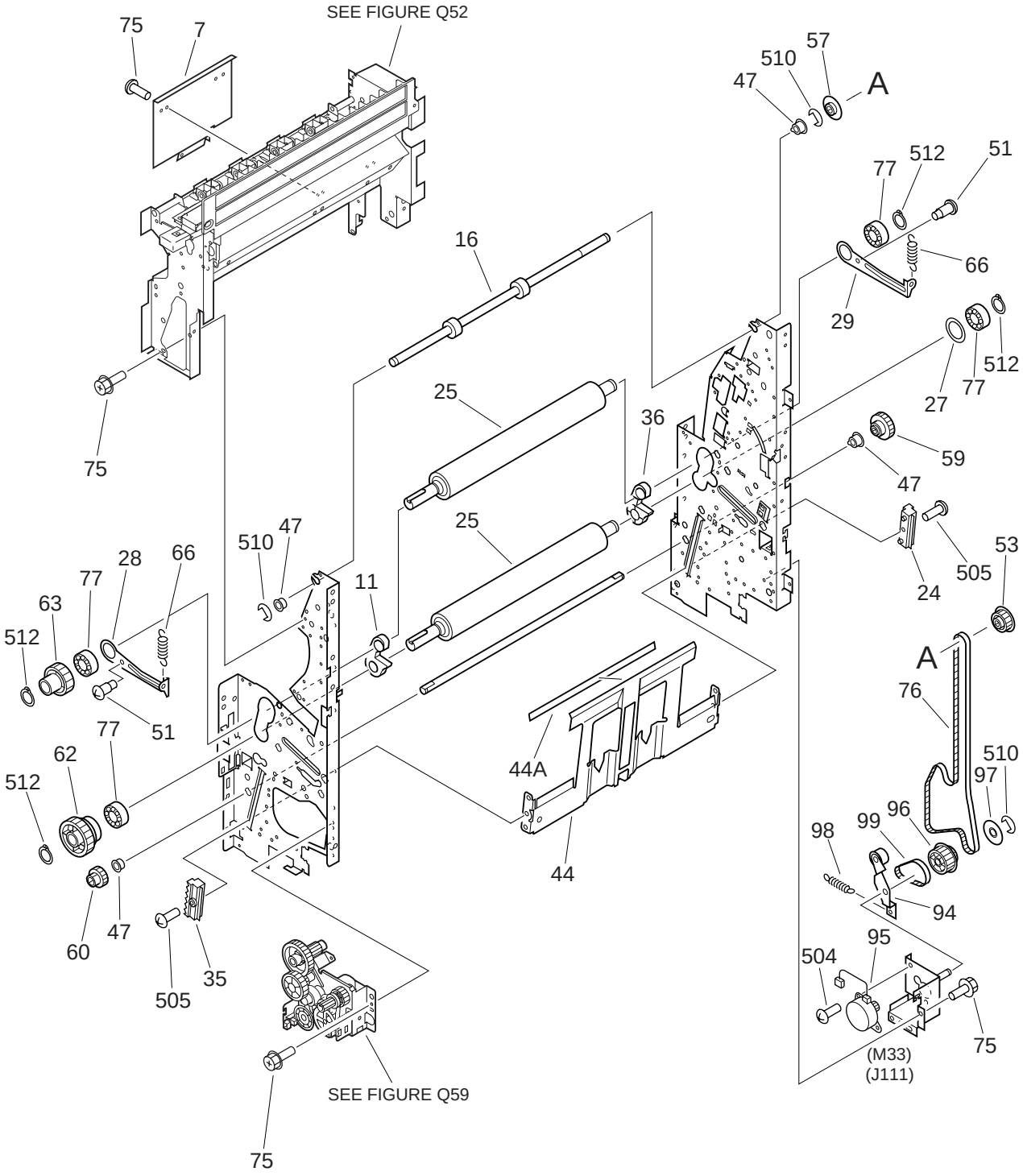

COPYRIGHT © 1999 CANON INC. CANON Saddle Finisher-D2 REV.0 JULY 1999 PRINTED IN JAPAN [IMPRIME AU JAPON]

FIGURE Q50 SADDLE ASSEMBLY (2/4)

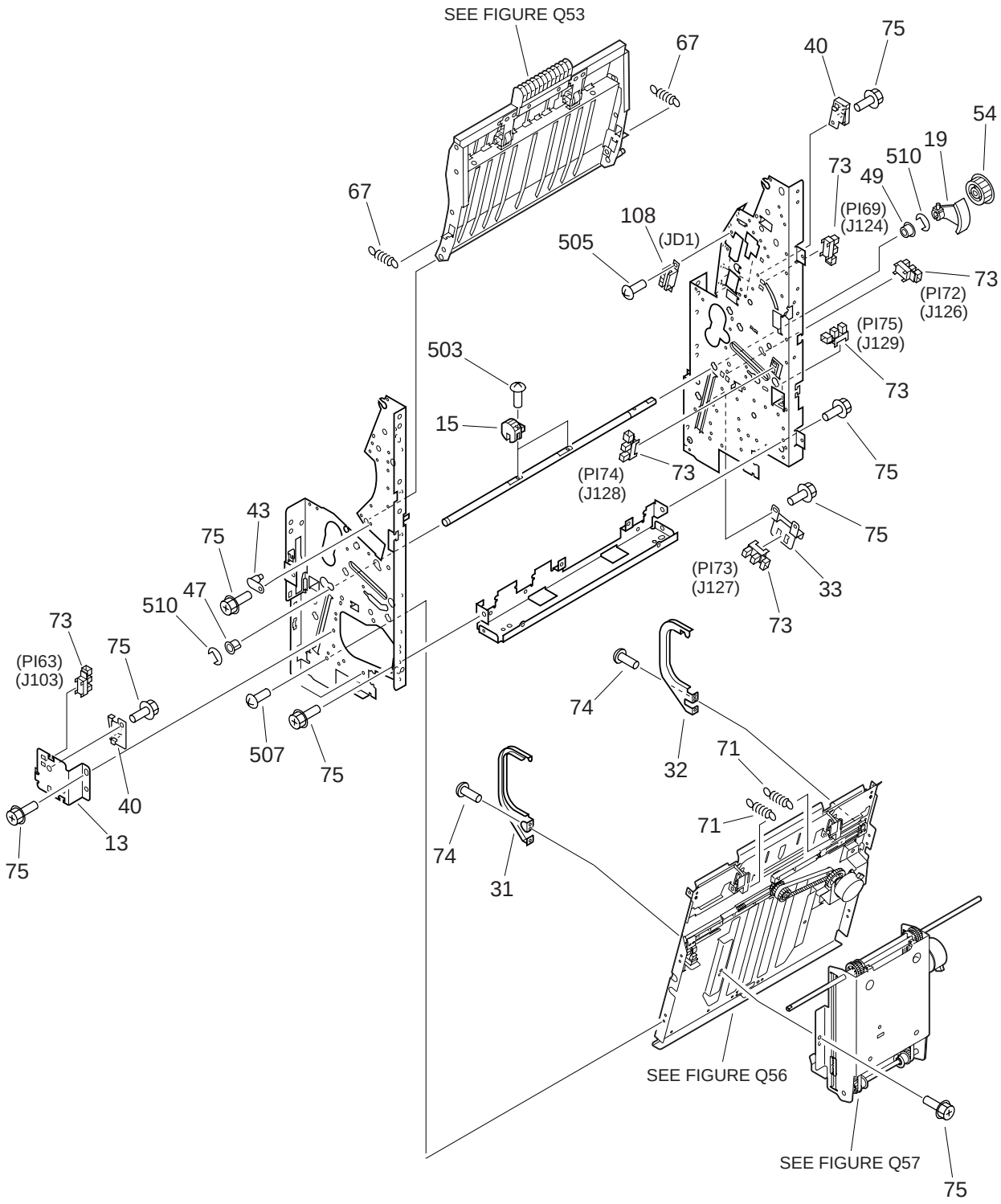

FIGURE Q50 SADDLE ASSEMBLY (3/4)

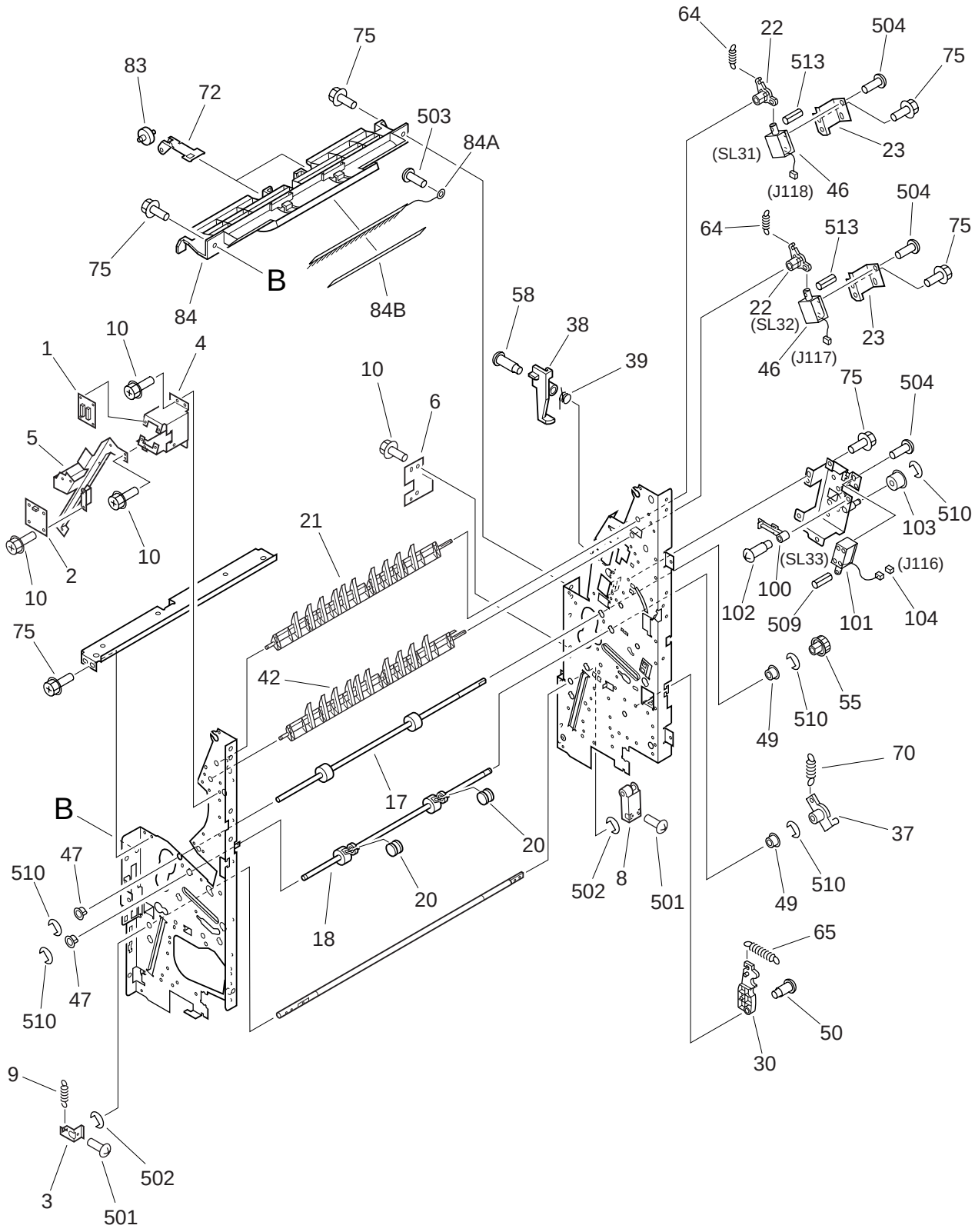

COPYRIGHT © 1999 CANON INC.

FIGURE Q50 SADDLE ASSEMBLY (4/4)

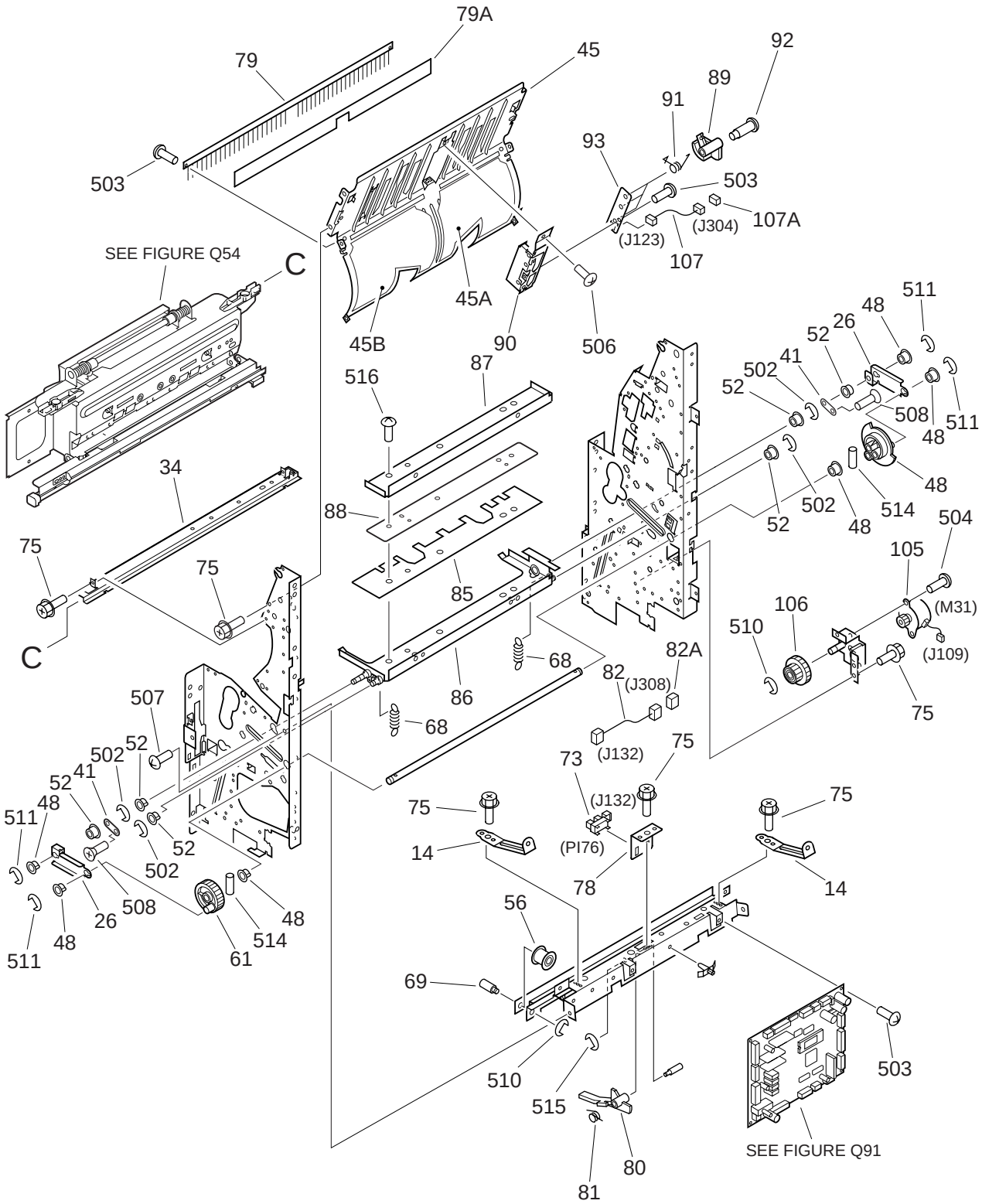

FIGURE & KEY NO.	PART NUMBER	RANK	QTY	DESCRIPTION	SERIAL NUMBER / REMARKS
Q50 -	NPN		RF	SADDLE ASSEMBLY	
1	FG3-0091-000		1	MODULE DISCONNECTION PCB ASS'Y	
2	FG3-0535-000		1	SADDLE JAM LED PCB ASSEMBLY	
3	FB4-8825-000		1	MOUNT, SPRING	
4	FB4-8829-000		1	MOUNT, SWITCH	
5	FB5-2683-000		1	MOUNT, LED	
6	FB5-2684-000		1	STOPPER, SADDLE	
7	FB5-2705-000		1	COVER, SENSOR	
8	FF5-4230-000		1	ARM, HANDLE, C	
9	FS7-2147-000		1	SPRING, TENSION	
10	XA9-0629-000		17	SCREW,RS,M4X8	
11	FB3-7856-000		1	ARM, FRONT	
12	FB3-7869-000		1	PLATE	
13	FB3-7873-000		1	MOUNT, SWITCH	
14	FB3-7883-000		2	PLATE, COVER	
15	FB3-7912-000		2	ROLLER, WOODRUFF	
16	FB3-7915-000		1	ROLLER, INLET	
17	FB3-7920-000		1	ROLLER, HOLDING	
18	FB3-7923-000		1	SHAFT, CAM	
19	FB3-7925-000		1	FLAG, ROLLER	
20	FB3-7927-000		2	ROLLER, BACK-UP	
21	FB3-7928-000		1	DEFLECTOR	
22	FB3-7930-000		2	ARM, DEFLECTOR	
23	FB3-7931-000		2	MOUNT, SOLENOID	
24	FB3-7934-000		1	RACK, REAR	
25	FB3-7936-000		2	ROLLER, FOLDING	
26	FB3-7937-000		2	PLATE	
27	FB3-7938-000		1	SPACER	
28	FB3-7939-000		1	PLATE, PRESSURE, FRONT	
29	FB3-7940-000		1	PLATE, PRESSURE, REAR	

COPYRIGHT © 1999 CANON INC.

FIGURE & KEY NO.	PART NUMBER	RANK	QTY	DESCRIPTION	SERIAL NUMBER / REMARKS
Q50 - 30	FB3-7941-000		1	LEVER, STOP	
31	FB3-7943-000		1	GUIDE, SIDE, FRONT	
32	FB3-7944-000		1	GUIDE, SIDE, REAR	
33	FB3-7948-000		1	MOUNT, SENSOR	
34	FB3-7949-000		1	PLATE, SLIDE RAIL	
35	FB3-7967-000		1	RACK, FRONT	
36	FB3-7969-000		1	ARM, REAR	
37	FB3-7973-000		1	HOLDER, ROLLER, 2	
38	FB3-7979-000		1	FLAG, SENSOR	
39	FB3-7980-000		1	SPRING, TORSION	
40	FB4-9171-000		2	HOLDER, DOOR SWITCH	
41	FB4-9172-000		2	PLATE, SUPPORT	
42	FB5-2697-000		1	FLAPPER	
43	FF5-5809-000		1	PLATE	
44	FF5-5810-000		1	GUIDE, ROLLER	
44A	FB3-7954-000		1	SHEET, ROLLER GUIDE	
45	FF5-9619-000		1	GUIDE, SADDLE, UPPER	
45A	FB5-2698-000		1	SHEET, UPPER GUIDE, 1	
45B	FB5-2699-000		1	SHEET, UPPER GUIDE, 2	
46	FH7-5766-000		2	SOLENOID	SL31,32 J118,117
47	FS1-1187-000		7	BUSHING	
48	FS1-1189-000		6	BUSHING	
49	FS1-1213-000		3	BUSHING	
50	FS1-9073-000		1	SCREW,STEPPED,M4	
51	FS1-9076-000		2	SCREW,STEPPED,M4	
52	FS5-1754-000		6	BUSHING	
53	FS5-3576-000		1	PULLEY, 30T	
54	FS5-3577-000		1	PULLEY, 39T	
55	FS5-3580-000		1	PULLEY, 24T	
56	FS5-6549-000		1	ROLLER	

COPYRIGHT © 1999 CANON INC.

FIGURE & KEY NO.	PART NUMBER	RANK	QTY	DESCRIPTION	SERIAL NUMBER / REMARKS
Q50 - 57	FS5-6550-000		1	FLANGE	
58	FS5-9212-000		1	SCREW,STEPPED,M3	
59	FS6-0822-000		1	GEAR, 16T/33T	
60	FS6-0823-000		1	GEAR, 16T	
61	FS6-0824-000		1	GEAR, 44T	
62	FS6-0829-000		1	GEAR, 16T/56T	
63	FS6-0830-000		1	GEAR, 16T	
64	FS6-2576-000		2	SPRING, TENSION	
65	FS6-2579-000		1	SPRING, TENSION	
66	FS6-2580-000		2	SPRING, TENSION	
67	FS6-2581-000		2	SPRING, TENSION	
68	FS6-2582-000		2	SPRING, TENSION	
69	FS6-4199-000		1	SHAFT, ROLLER	
70	FS7-2163-000		1	SPRING, TENSION	
71	FS7-2164-000		2	SPRING, TENSION	
72	FB5-2706-000		2	SPRING, LEAF	
73	WG8-5362-000		7	IC, TLP1241, PHOTO-INTERRUPTER	PI63,69,72-76 J103,124,126-129,116,132
74	XA9-0195-000		2	SCREW,P,M3X8	
75	XA9-0732-000		AR	SCREW,RS,M4X8	
76	XF9-0647-000		1	BELT, TIMING	
77	XG9-0131-000		4	BALL BEARING, 6902NR	
78	FB3-7885-000		1	MOUNT, SENSOR	
79	FF5-8683-000		1	STATIC CHARGE ELIMINATOR	
79A	FB4-9161-000		1	SHEET, GUIDE	
80	FB3-7984-000		1	FLAG, SENSOR	
81	FB3-7985-000		1	SPRING, TORSION	
82	FF3-3111-000		1	CABLE, SENSOR	J132,308
82A	VS1-5057-004		1	CONNECTOR, SNAP TIGHT	J308
83	FS5-6546-000		2	ROLLER, DELIVERY	
84	FF5-8685-000		1	GUIDE, DELIVERY, UPPER	

COPYRIGHT©1999 CANON INC.

FIGURE & KEY NO.	PART NUMBER	RANK	QTY	DESCRIPTION	SERIAL NUMBER / REMARKS
Q50 - 84A	FB3-7855-000		1	ELIMINATOR, STATIC CHARGE	
84B	FB4-9167-000		1	SHEET	
85	FB3-7887-000		1	PLATE	
86	FB3-7888-000		1	HOLDER, 1	
87	FB3-7889-000		1	HOLDER, 2	
88	FB4-9174-000		1	SPACER, HOLDER	
89	FB3-7846-000		3	FLAG, SENSOR	
90	FB3-7847-000		1	MOUNT, SENSOR	
91	FB3-7848-000		3	SPRING, TORSION	
92	FS1-9166-000		3	SCREW, STEPPED	
93	FG5-8408-000		1	PAPER SENSOR PCB ASSEMBLY	
94	FL6-2067-000		1	PLATE, TENSION	
95	FH6-1458-000		1	MOTOR, STEPPING	M33 J111
96	FS5-3578-000		1	PULLEY, 22T/34T	
97	FS5-6547-000		1	FLANGE	
98	FS6-2573-000		1	SPRING, TENSION	
99	XF9-0648-000		1	BELT, TIMING	
100	FB3-7972-000		1	LINK, ROLLER, 1	
101	FH7-5767-000		1	SOLENOID	SL33 J116
102	FS1-9054-000		1	SCREW,STEPPED,M4	
103	FS5-3409-000		1	PULLEY, GUIDE	
104	VS1-5057-002		1	CONNECTOR, SNAP TIGHT	J116
105	FH6-1457-000		1	MOTOR, STEPPING	M31 J109
106	FS6-0832-000		1	GEAR, 22T/48T	
107	FF3-3109-000		1	CABLE, PAPER SENSOR PCB	J123,304
107A	VS1-5057-005		1	CONNECTOR, SNAP TIGHT	J304
108	WS6-5091-000		1	CONNECTOR, 14P, MALE	JD1
501	XB1-2400-609		2	SCREW,MACH.,TRUSS HEAD,M4X6	
502	XD2-1100-802		4	RING,E	
503	XB1-2300-609		3	SCREW,MACH.,TRUSS HEAD,M3X6	

COPYRIGHT © 1999 CANON INC.

FIGURE & KEY NO.	PART NUMBER	RANK	QTY	DESCRIPTION	SERIAL NUMBER / REMARKS
Q50 - 504	XB1-2300-409		6	SCREW,MACH.,TRUSS HEAD,M3X4	
505	XB1-2300-809		8	SCREW,MACH.,TRUSS HEAD,M3X8	
506	XB1-2400-409		1	SCREW,MACH.,TRUSS HEAD,M4X4	
507	XB1-2400-809		3	SCREW,MACH.,TRUSS HEAD,M4X8	
508	XB1-3400-809		2	SCREW,MACH.,C.S. HEAD,M4X8	
509	XD3-1300-102		1	PIN,SPRING	
510	XD2-1100-502		13	RING,E	
511	XD2-1100-642		6	RING,E	
512	XD2-3100-152		4	RING,C,EXTERNAL	
513	XD3-1300-082		2	PIN,SPRING	
514	XD3-2300-202		2	PIN,DOWEL	
515	XD2-1100-322		1	RING,E	
516	XB6-7400-609		3	SCREW,TP,M4X6	

COPYRIGHT©1999 CANON INC.

FIGURE Q52 SADDLE INLET ASSEMBLY

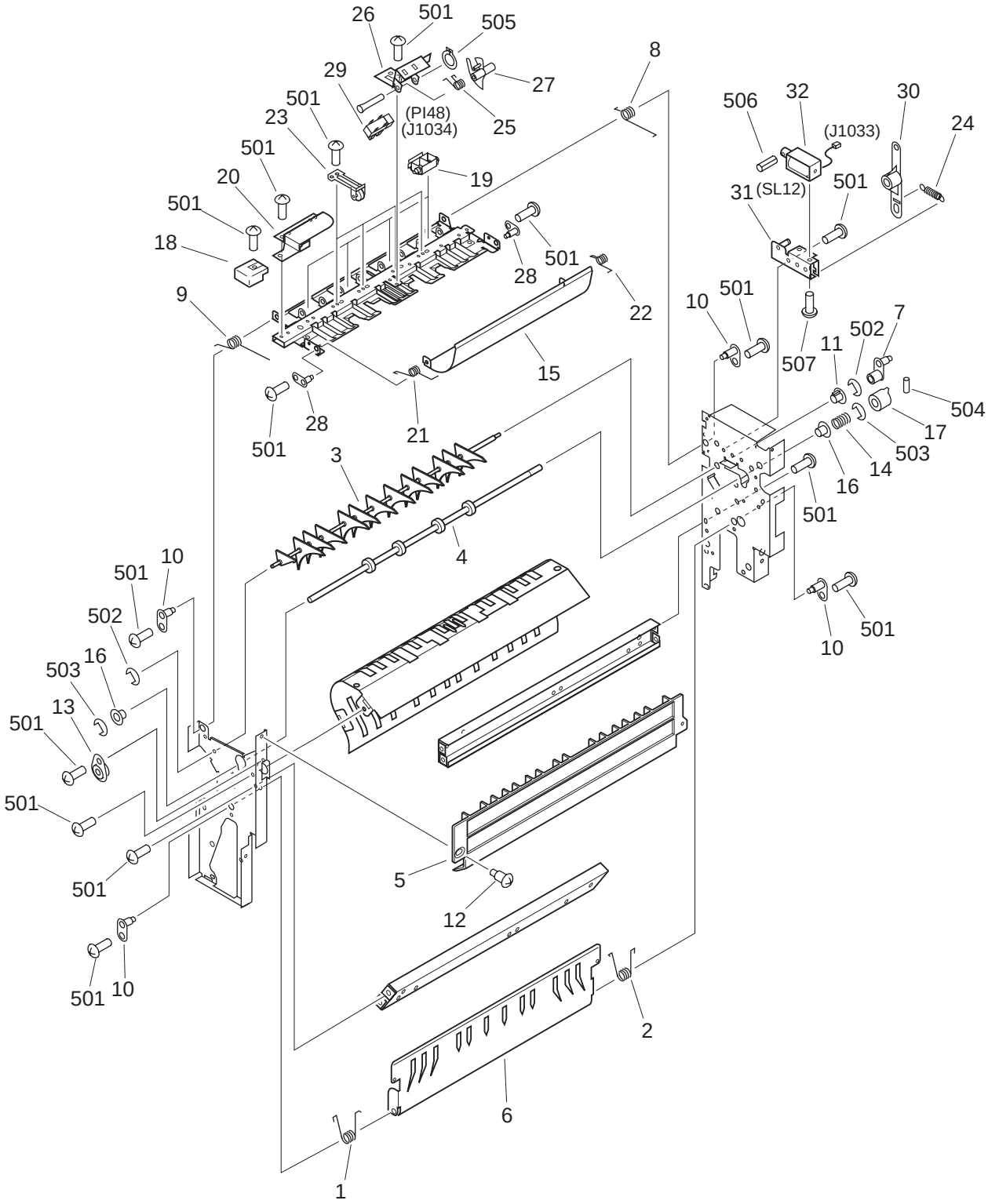

COPYRIGHT © 1999 CANON INC.

FIGURE & KEY NO.	PART NUMBER	RANK	QTY	DESCRIPTION	SERIAL NUMBER / REMARKS
Q52 -	FG6-4835-000		1	SADDLE INLET ASSEMBLY	
1	FB4-8809-000		1	SPRING, TORSION	
2	FB4-8810-000		1	SPRING, TORSION	
3	FB4-8835-000		1	FLAPPER, INLET	
4	FB4-8836-000		1	ROLLER, INLET	
5	FB4-8840-000		1	GUIDE, INLET, 3	
6	FB4-8841-000		1	GUIDE, INLET, 5	
7	FB4-8845-000		1	ARM, FLAPPER, 1	
8	FB4-8850-000		1	SPRING, TORSION	
9	FB4-8851-000		1	SPRING, TORSION	
10	FF5-8590-000		4	PIN, GUIDE, 1	
11	FS1-1376-000		1	BUSHING	
12	FS1-9078-000		1	SCREW,STEPPED,M4	
13	FS2-1542-000		1	BUSHING	
14	FS5-2545-000		1	SPRING, COMPRESSION	
15	FB4-8848-000		1	GUIDE, INLET, 4	
16	XG9-0365-000		2	BEARING, BALL	
17	FB2-1178-000		1	COUPLING	
18	FB3-3834-000		1	KNOB	
19	FB4-8837-000		4	FLAPPER, SMALL	
20	FB4-8849-000		1	MOUNT, UPPER GUIDE HANDLE	
21	FB5-2688-000		1	SPRING, TORSION	
22	FB5-2689-000		1	SPRING, TORSION	
23	FF5-6194-000		4	ROLLER, FEED	
24	FS7-2145-000		1	SPRING, TENSION	
25	FB1-7018-000		1	SPRING, TORSION	
26	FB4-8843-000		1	MOUNT, SENSOR	
27	FB4-8844-000		1	FLAG, SENSOR	
28	FF5-8591-000		2	PIN, GUIDE, 4	
29	WG8-5382-000		1	PHOTO-INTERRUPTER	PI48 J1034

COPYRIGHT © 1999 CANON INC.

FIGURE & KEY NO.	PART NUMBER	RANK	QTY	DESCRIPTION	SERIAL NUMBER / REMARKS
Q52 - 30	FB4-8846-000		1	ARM, FLAPPER, 2	
31	FF5-9614-000		1	MOUNT, SOLENOID	
32	FH6-1690-000		1	SOLENOID, DC24V	SL12 J1033
501	XB1-2400-609		AR	SCREW,MACH.,TRUSS HEAD,M4X6	
502	XD2-1100-322		2	RING,E	
503	XD2-1100-642		2	RING,E	
504	XD3-2200-142		1	PIN,DOWEL	
505	XD2-2100-302		1	RING,GRIP	
506	XD3-1300-082		1	PIN,SPRING	
507	XB1-2300-409		2	SCREW,MACH.,TRUSS HEAD,M3X4	

COPYRIGHT©1999 CANON INC.

FIGURE Q53 SADDLE GUIDE ASSEMBLY

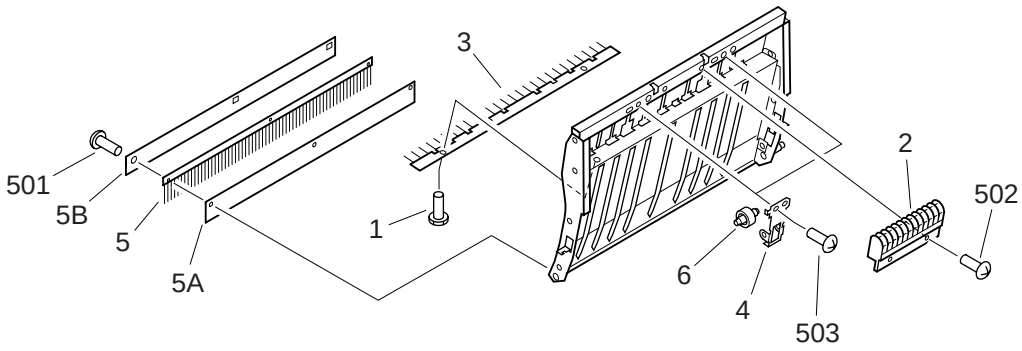

FIGURE & KEY NO.	PART NUMBER	RANK	QTY	DESCRIPTION	SERIAL NUMBER / REMARKS
Q53 -	FG6-4841-000		1	SADDLE GUIDE ASSEMBLY	
1	FA4-6702-000		2	SCREW, CAP	
2	FB3-7852-000		1	LATCH	
3	FB3-7854-000		1	ELIMINATOR, STATIC CHARGE	
4	FB5-2696-000		2	SPRING, LEAF	
5	FL5-2068-000		1	ELIMINATOR, STATIC CHARGE	
5A	FB4-9163-000		1	SHEET, 1	
5B	FB4-9164-000		1	SHEET, 2	
6	FS5-6544-000		2	ROLLER, INLET	
501	XB1-2300-409		3	SCREW,MACH.,TRUSS HEAD,M3X4	
502	XB1-2400-609		2	SCREW,MACH.,TRUSS HEAD,M4X6	
503	XB1-2400-809		2	SCREW,MACH.,TRUSS HEAD,M4X8	

COPYRIGHT © 1999 CANON INC.

FIGURE Q54 SADDLE STAPLER ASSEMBLY

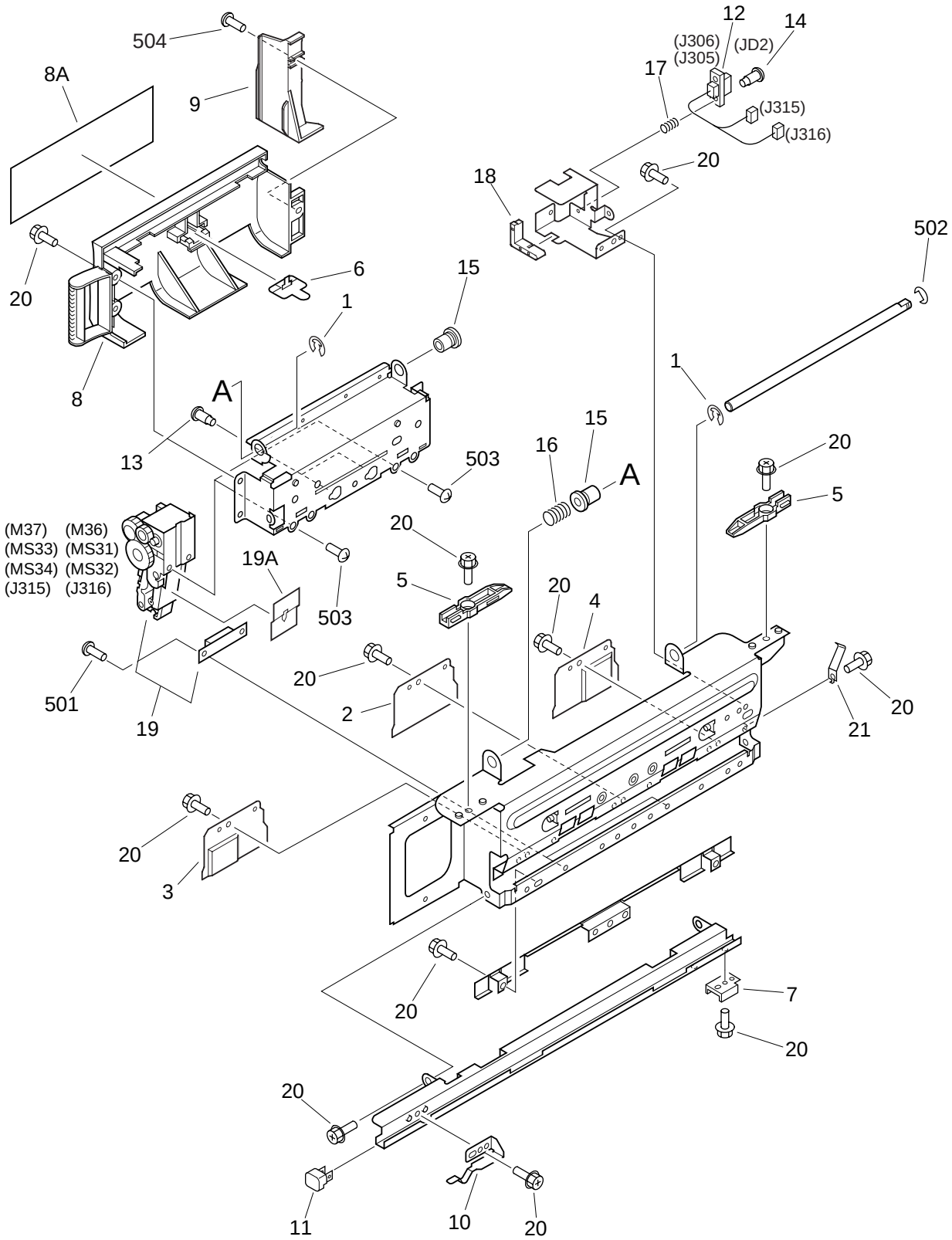

COPYRIGHT © 1999 CANON INC.
CANON Saddle Finisher-D2 REV.0 JULY 1999 PRINTED IN JAPAN [IMPRIME AU JAPON]

FIGURE & KEY NO.	PART NUMBER	RANK	QTY	DESCRIPTION	SERIAL NUMBER / REMARKS
Q54 -	FG6-4842-000		1	SADDLE STAPLER ASSEMBLY	
1	FB2-6416-000		2	WASHER, RESIN	
2	FB5-2700-000		1	GUIDE, STAPLER, 1	
3	FB5-2701-000		1	GUIDE, STAPLER, 2	
4	FB5-2702-000		1	GUIDE, STAPLER, 3	
5	FB3-7865-000		2	SLIDER, UPPER	
6	FB3-7866-000		1	TOOL, ADJUSTING	
7	FB3-7867-000		1	SLIDER, LOWER	
8	FF5-9620-000		1	COVER, STAPLER	
8A	FB5-2695-000		1	LABEL	
9	FB5-2704-000		1	PLATE	
10	FB3-7981-000		1	SPRING, LEAF	
11	FB3-7982-000		1	COVER, STAPLER	
12	FF3-3110-000		1	CABLE, STAPLER	J305,306,315,316,D2
13	FS1-9076-000		2	SCREW,STEPPED,M4	
14	FS2-9407-000		2	SCREW, STEPPED, M3X13.6	
15	FS5-1753-000		2	BUSHING	
16	FS6-2569-000		1	SPRING, COMPRESSION	
17	FS6-2572-000		2	SPRING, COMPRESSION	
18	FB5-2708-000		1	COVER	
19	FF5-8687-000		2	STAPLER UNIT	M36 MS31,32 J316 M37 MS33,34 J315
19A	FB4-9159-000		1	SHEET, STAPLER	
20	XA9-0732-000		16	SCREW,RS,M4X8	
21	FB4-9158-000		1	SPRING, LEAF	
501	XB6-7400-609		8	SCREW,TP,M4X6	
502	XD2-1100-642		1	RING,E	
503	XB6-7400-809		4	SCREW,TP,M4X8	
504	XB1-2401-006		2	SCREW,MACH.,TRUSS HEAD,M4X10	

COPYRIGHT©1999 CANON INC.

FIGURE Q55 SADDLE INLET DRIVE ASSEMBLY

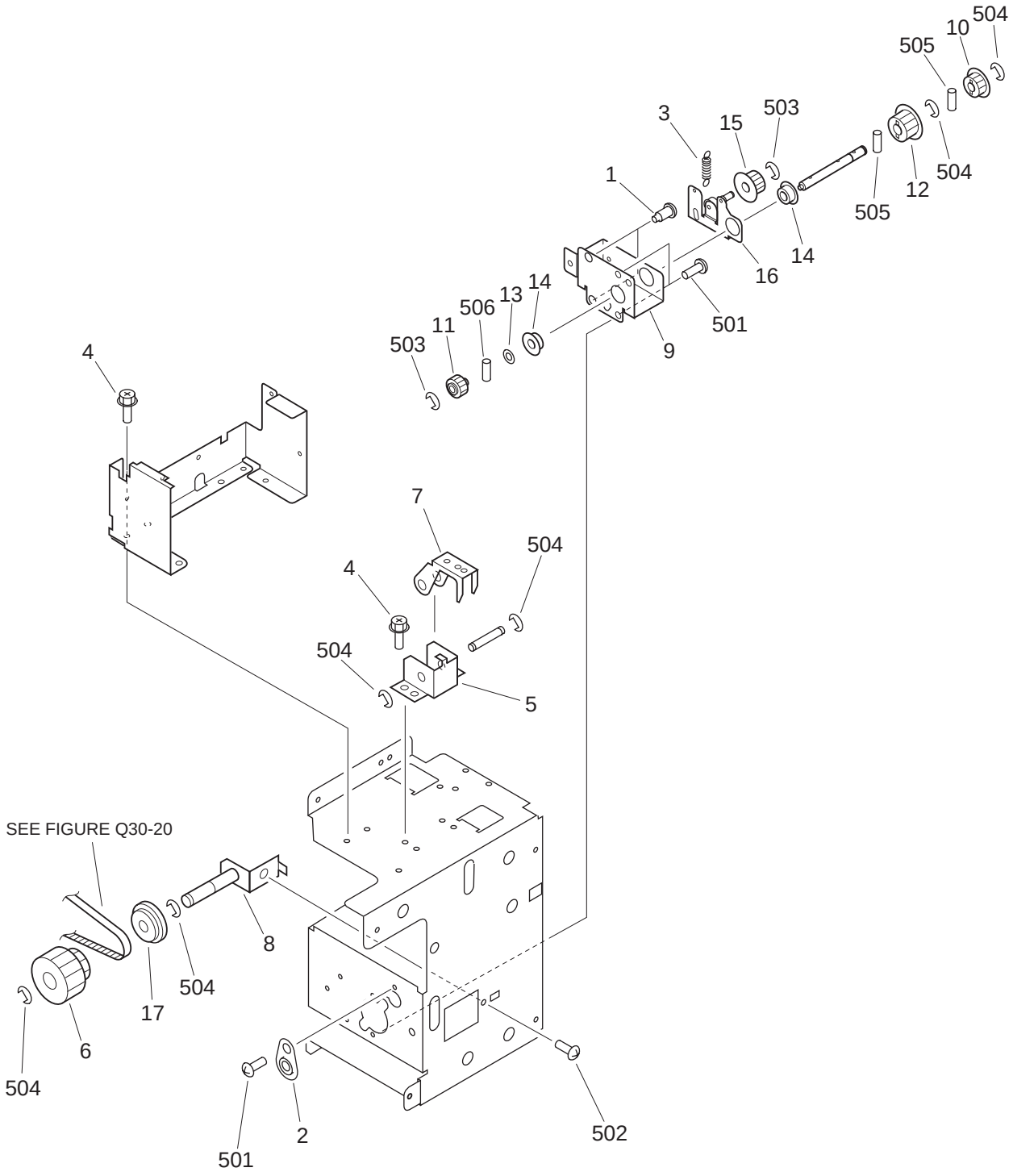

COPYRIGHT © 1999 CANON INC.

FIGURE & KEY NO.	PART NUMBER	RANK	QTY	DESCRIPTION	SERIAL NUMBER / REMARKS
Q55 -	FG6-4832-000		1	SADDLE INLET DRIVE ASSEMBLY	
1	FS1-9078-000		2	SCREW,STEPPED,M4	
2	FS2-1542-000		1	BUSHING	
3	FS7-2146-000		1	SPRING, TENSION	
4	XA9-0732-000		4	SCREW,RS,M4X8	
5	FB4-8804-000		1	SUPPORT, LATCH, RIGHT	
6	FS5-3794-000		1	GEAR, 30T/PULLEY, 24T	
7	FB4-8245-000		1	LATCH	
8	FF5-9622-000		1	SHAFT, DRIVE	
9	FB4-8853-000		1	SUPPORT, AUXILIARY	
10	FS2-3514-000		1	PULLEY, 30T	
11	FS5-0713-000		1	GEAR, 30T	
12	FS5-3255-000		1	PULLEY, 24T	
13	XD9-0151-000		1	WASHER	
14	XG9-0365-000		2	BEARING, BALL	
15	FS5-3451-000		1	PULLEY, 18T	
16	FF5-8587-000		1	PLATE, TENSION	
17	FS2-6559-000		1	ROLLER	
501	XB1-2400-609		4	SCREW,MACH.,TRUSS HEAD,M4X6	
502	XB6-7400-609		3	SCREW,TP,M4X6	
503	XD2-1100-502		2	RING,E	
504	XD2-1100-642		6	RING,E	
505	XD3-2200-122		2	PIN,DOWEL	
506	XD3-2200-162		1	PIN,DOWEL	

COPYRIGHT©1999 CANON INC.

FIGURE Q56 PASS LOWER GUIDE ASSEMBLY

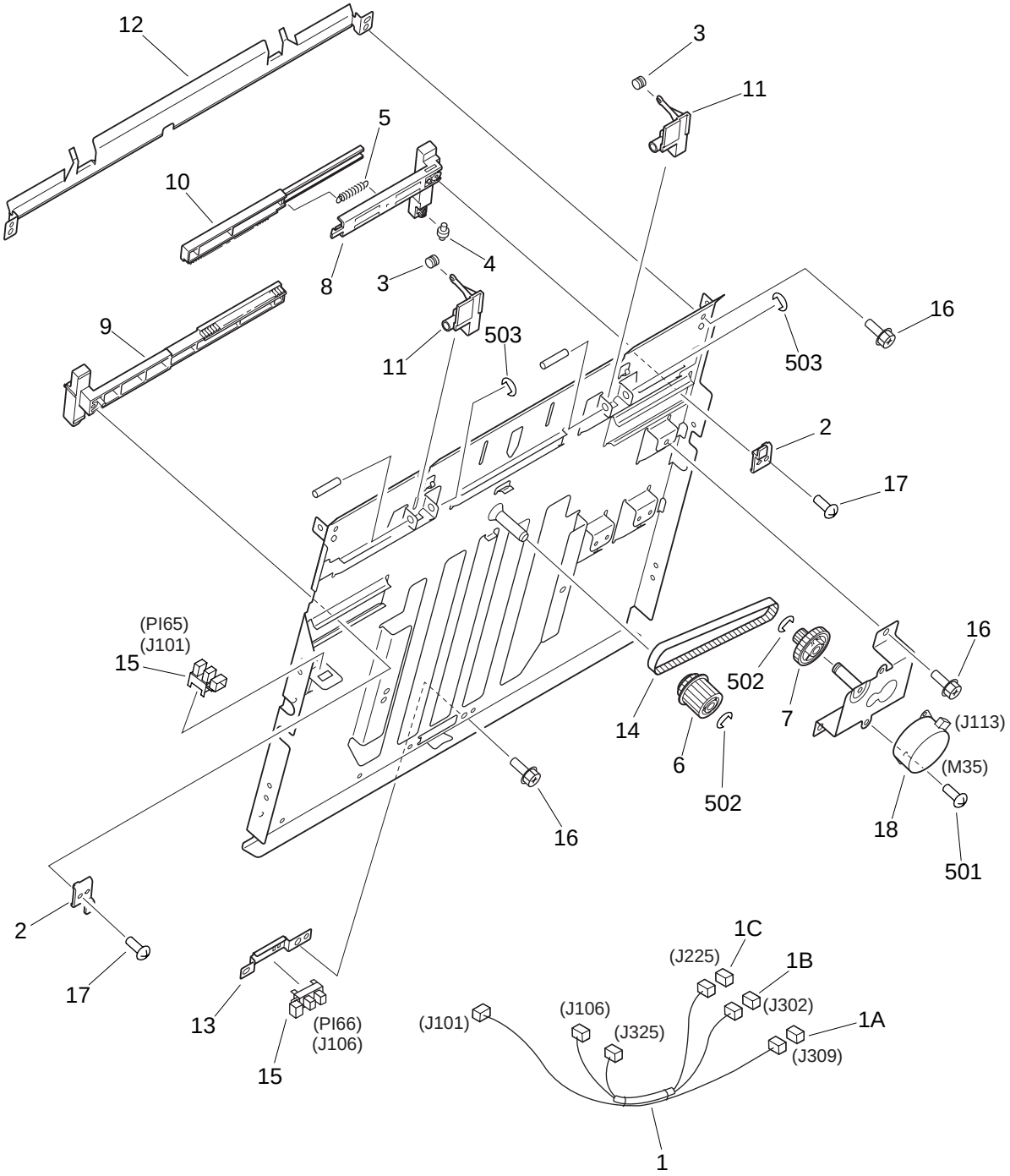

COPYRIGHT © 1999 CANON INC. CANON Saddle Finisher-D2 REV.0 JULY 1999 PRINTED IN JAPAN [IMPRIME AU JAPON]

FIGURE & KEY NO.	PART NUMBER	RANK	QTY	DESCRIPTION	SERIAL NUMBER / REMARKS
Q56 -	FG6-5215-000		1	PASS LOWER GUIDE ASSEMBLY	
1	FF3-3873-000		1	CABLE, SADDLE POSITION PLATE	J101,106,225,302,309,325
1A	VS1-5057-003		1	CONNECTOR, SNAP TIGHT	J309
1B	VS1-5057-005		1	CONNECTOR, SNAP TIGHT	J302
1C	VS1-5057-004		1	CONNECTOR, SNAP TIGHT	J225
2	FB3-7878-000		2	BLOCK	
3	FB3-7927-000		2	ROLLER, BACK-UP	
4	FB3-7945-000		1	ROLLER	
5	FS6-2570-000		1	SPRING, TENSION	
6	FS6-0814-000		1	PULLEY, 32T/GEAR, 16T	
7	FS6-0815-000		1	PULLEY, 16T/GEAR, 32T	
8	FB3-7947-000		1	PLATE, RACK, REAR	
9	FB3-7876-000		1	PLATE, RACK, FRONT	
10	FB3-7877-000		1	PLATE, RACK, REAR	
11	FB3-7926-000		2	HOLDER, ROLLER	
12	FB3-7875-000		1	GUIDE, ROLLER	
13	FB3-7946-000		1	MOUNT, SENSOR	
14	XF9-0646-000		1	BELT, TIMING	
15	WG8-5362-000		2	IC, TLP1241, PHOTO-INTERRUPTER	PI65,66 J101,106
16	XA9-0732-000		5	SCREW,RS,M4X8	
17	XA9-0195-000		2	SCREW,P,M3X8	
18	FH6-1457-000		1	MOTOR, STEPPING	M35 J113
501	XB1-2300-409		2	SCREW,MACH.,TRUSS HEAD,M3X4	
502	XD2-1100-502		2	RING,E	
503	XD2-1100-322		2	RING,E	

COPYRIGHT © 1999 CANON INC.

FIGURE Q57 INNER SIDE PLATE ASSEMBLY

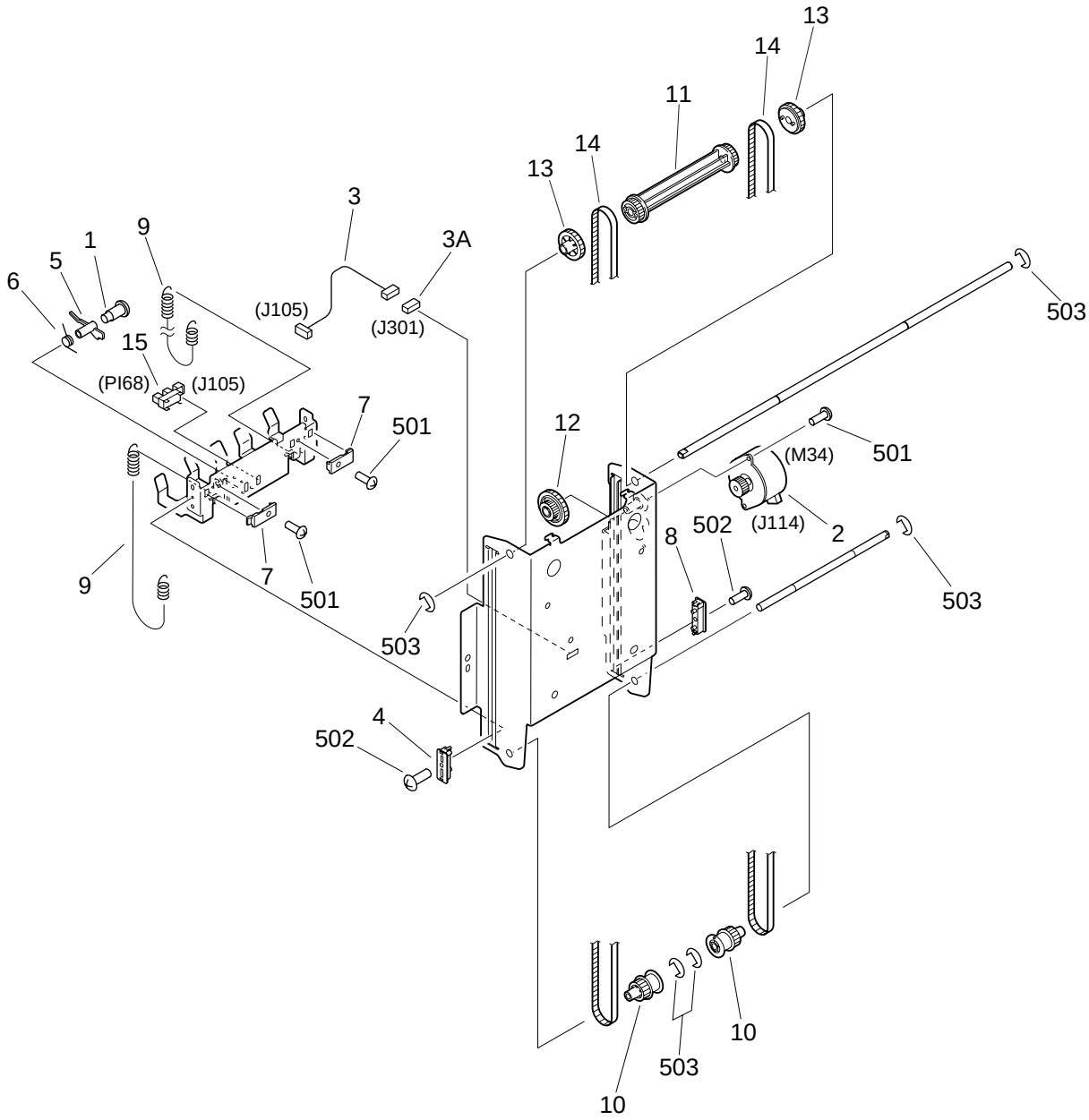

COPYRIGHT © 1999 CANON INC.
CANON Saddle Finisher-D2 REV.0 JULY 1999 PRINTED IN JAPAN [IMPRIME AU JAPON]

FIGURE & KEY NO.	PART NUMBER	RANK	QTY	DESCRIPTION	SERIAL NUMBER / REMARKS
Q57 -	FG5-8392-000		1	INNER SIDE PLATE ASSEMBLY	
1	FS5-9212-000		1	SCREW,STEPPED,M3	
2	FH6-1527-000		1	MOTOR, STEPPING	M34 J114
3	FF3-3113-000		1	CABLE, PAPER SENSOR	J105,301
3A	VS1-5057-003		1	CONNECTOR, SNAP TIGHT	J301
4	FB3-7894-000		1	GUIDE, 1	
5	FB3-7895-000		1	FLAG, SENSOR	
6	FB3-7896-000		1	SPRING, TORSION	
7	FB3-7897-000		2	HOLDER, BELT	
8	FB3-7977-000		1	GUIDE, 2	
9	FS6-2571-000		2	SPRING, TENSION	
10	FS5-3574-000		2	PULLEY, 30T	
11	FS5-3575-000		1	PULLEY, 30T	
12	FS6-0820-000		1	GEAR, 15T/30T	
13	FS6-0821-000		2	GEAR, 30T	
14	XF9-0669-000		2	BELT, TIMING	
15	WG8-5362-000		1	IC, TLP1241, PHOTO-INTERRUPTER	PI68 J105
501	XB1-2300-609		4	SCREW,MACH.,TRUSS HEAD,M3X6	
502	XB1-2301-209		2	SCREW,MACH.,TRUSS HEAD,M3X12	
503	XD2-1100-502		5	RING,E	

COPYRIGHT © 1999 CANON INC.

FIGURE Q58 SADDLE DELIVERY ASSEMBLY

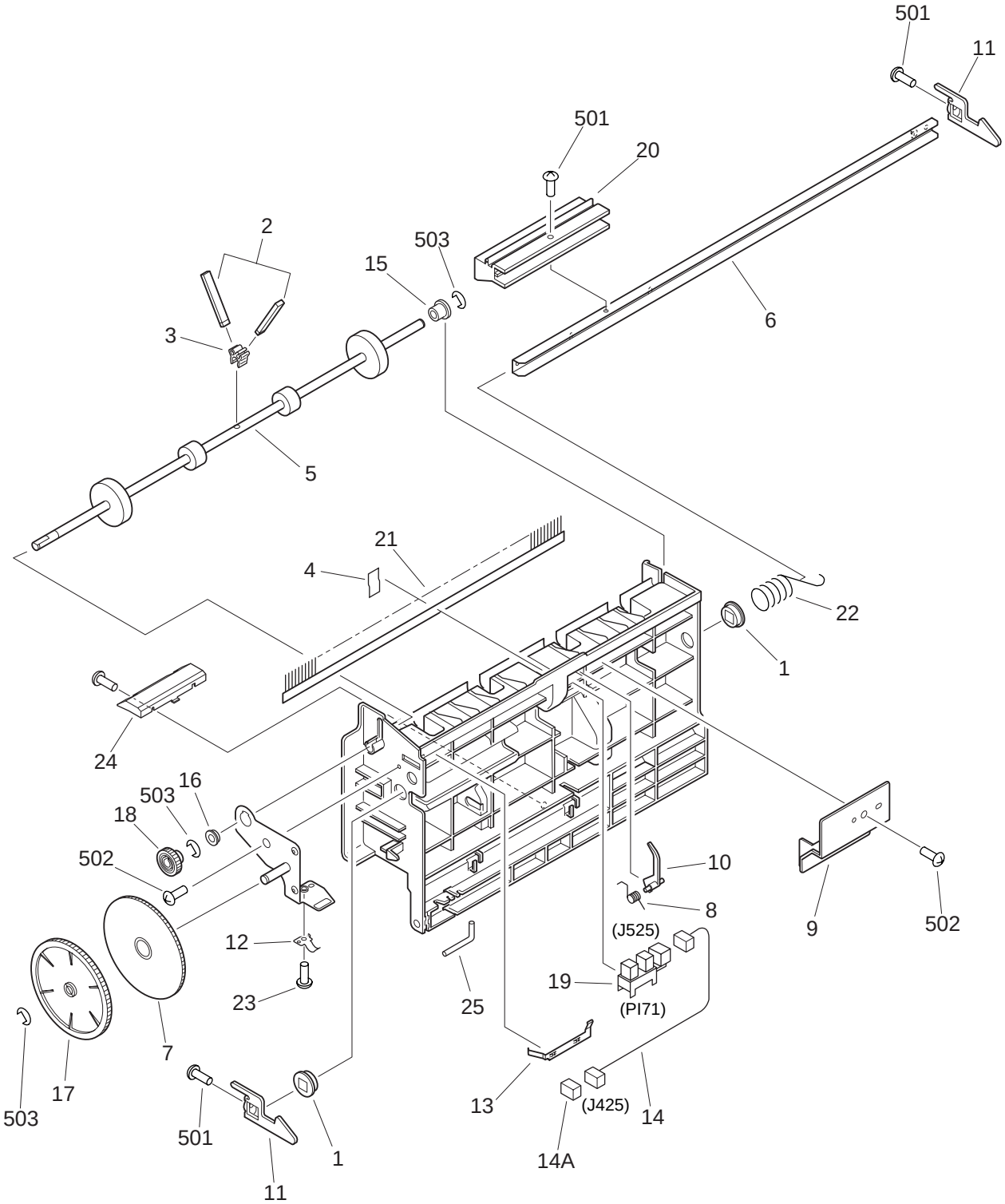

NOTE : This assembly does not include the part shown with key No. 25.

COPYRIGHT © 1999 CANON INC.
CANON Saddle Finisher-D2 REV.0 JULY 1999 PRINTED IN JAPAN [IMPRIME AU JAPON]

FIGURE & KEY NO.	PART NUMBER	RANK	QTY	DESCRIPTION	SERIAL NUMBER / REMARKS
Q58 -	FG6-4843-000		1	SADDLE DELIVERY ASSEMBLY	
1	FA2-8244-000		2	BUSHING	
2	FB4-9166-000		2	PADDLE	
3	FB5-2703-000		1	MOUNT, PADDLE	
4	FB4-9168-000		1	SHEET	
5	FB3-7901-000		1	ROLLER, DELIVERY	
6	FB3-7904-000		1	SHAFT	
7	FB3-7906-000		1	ROLLER, IDLER	
8	FB3-7907-000		1	SPRING, TORSION	
9	FB3-7909-000		1	COVER, SENSOR	
10	FB3-7910-000		1	FLAG, SENSOR	
11	FB3-7929-000		2	CLAW	
12	FB3-7932-000		1	PLATE, GROUNDING	
13	FB3-7966-000		1	PLATE	
14	FF3-3205-000		1	CABLE, SENSOR	J425,525
14A	VS1-5057-004		1	CONNECTOR, SNAP TIGHT	J425
15	FS1-1187-000		1	BUSHING	
16	FS1-1213-000		1	BUSHING	
17	FS6-0825-000		1	GEAR, 71T	
18	FS6-0826-000		1	GEAR, 17T	
19	WG8-5362-000		1	IC, TLP1241, PHOTO-INTERRUPTER	PI71 J525
20	FB3-7921-000		1	HANDLE	
21	FB3-7978-000		1	STATIC CHARGE ELIMINATOR	
22	FC1-7432-000		1	SPRING, TORSION	
23	4S1-9002-000		1	SCREW,M4X6	
24	FB5-2711-000		1	BLOCK, STOP	
25	4A1-2349-000		1	SHAFT, DOOR	SEE NOTE
501	XB1-2300-609		3	SCREW,MACH.,TRUSS HEAD,M3X6	
502	XB4-7400-806		2	SCREW,TAPPING,TRUSS HEAD,M4X8	
503	XD2-1100-502		3	RING,E	

COPYRIGHT © 1999 CANON INC.

FIGURE Q59 MOTOR MOUNT ASSEMBLY

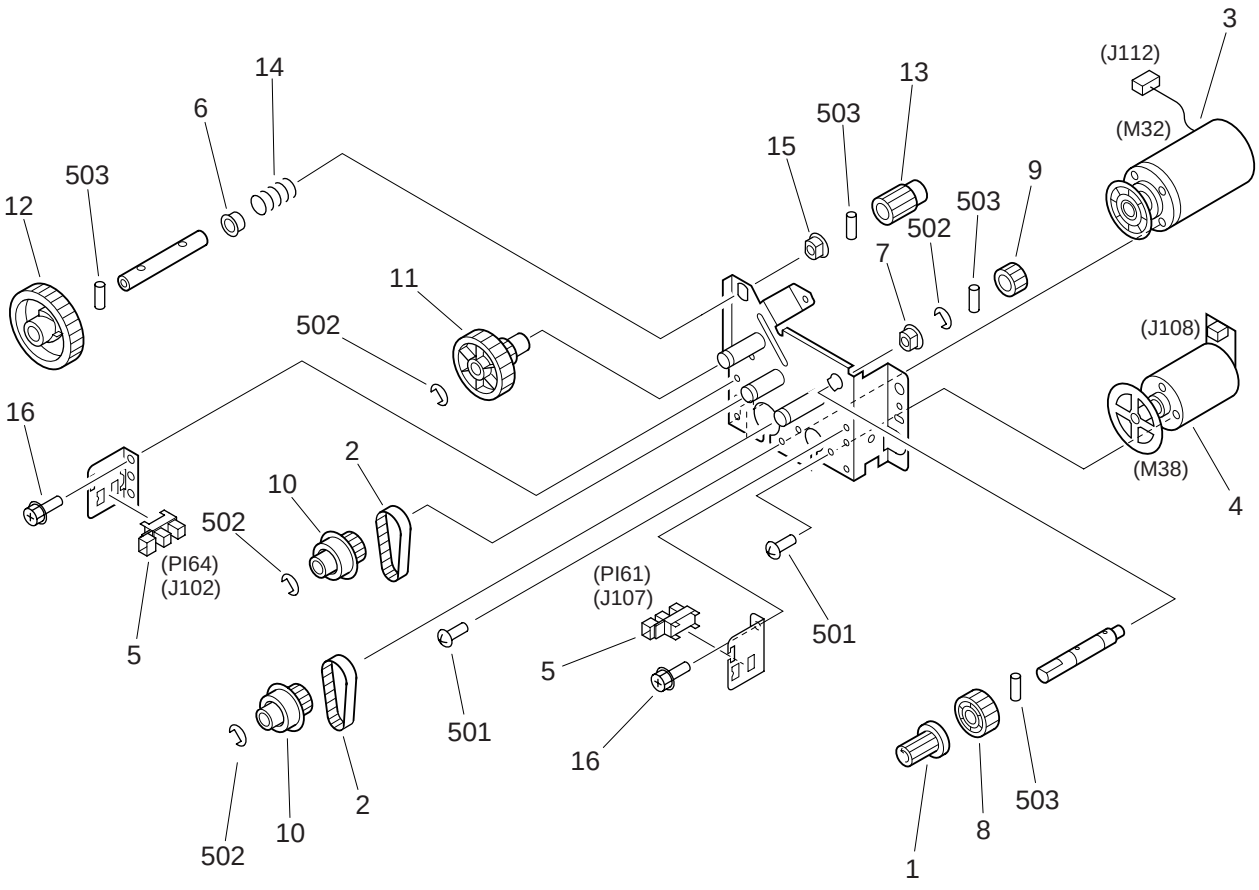

COPYRIGHT © 1999 CANON INC.

FIGURE & KEY NO.	PART NUMBER	RANK	QTY	DESCRIPTION	SERIAL NUMBER / REMARKS
Q59 -	FG5-8391-000		1	MOTOR MOUNT ASSEMBLY	
1	FB1-7214-000		1	KNOB	
2	XF9-0698-000		2	BELT, TIMING	
3	FH6-1455-000		1	MOTOR, DC24V	M32 J112
4	FH6-1456-000		1	MOTOR, DC24V	M38 J108
5	FH7-7394-000		2	PHOTO-INTERRUPTER	PI61,64 J107,102
6	FS1-1206-000		1	BUSHING	
7	FS1-1510-000		1	BUSHING	
8	FS6-0816-000		1	GEAR, 42T	
9	FS6-0817-000		1	GEAR, 16T	
10	FS6-0819-000		2	PULLEY, 44T/GEAR, 24T	
11	FS6-0828-000		1	GEAR, 16T/60T	
12	FS6-0831-000		1	GEAR, 60T	
13	FS6-0833-000		1	GEAR, 16T	
14	FS6-2578-000		1	SPRING, COMPRESSION	
15	RS1-1042-000		1	BUSHING	
16	XA9-0732-000		2	SCREW,RS,M4X8	
501	XB1-2400-609		4	SCREW,MACH.,TRUSS HEAD,M4X6	
502	XD2-1100-642		4	RING,E	
503	XD3-2200-102		4	PIN,DOWEL	

COPYRIGHT © 1999 CANON INC.

FIGURE Q90 FINISHER CONTROLLER PCB ASSEMBLY

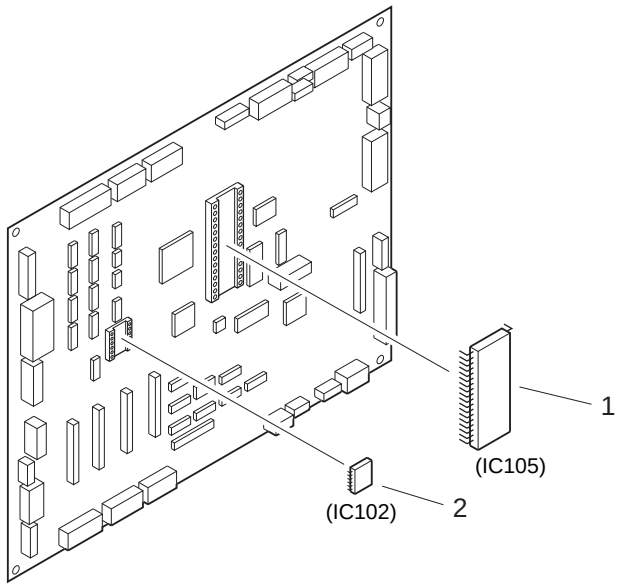

FIGURE & KEY NO.	PART NUMBER	RANK	QTY	DESCRIPTION	SERIAL NUMBER / REMARKS
Q90 -	FG3-0537-000		1	FINISHER CONTROLLER PCB ASS'Y	
1	FF3-3749-000		1	IC, M27C4002-80XF1	IC105
2	WA7-0434-000		1	IC, S-29255ADP, EEP-ROM	IC102
IC108	FH4-5560-000		1	IC, M38881M2-010GP, IPC	
IC121	FH4-1366-000		1	IC, HD64F3048F16,C-MOS	

COPYRIGHT©1999 CANON INC.

FIGURE Q91 SADDLE CONTROLLER PCB ASSEMBLY

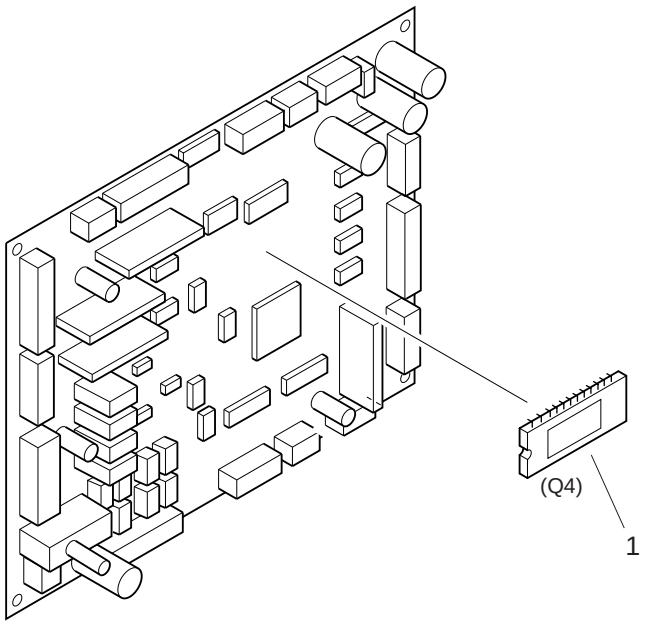

FIGURE & KEY NO.	PART NUMBER	RANK	QTY	DESCRIPTION	SERIAL NUMBER / REMARKS
Q91 -	FG3-0536-000		1	SADDLE CONTROLLER PCB ASSEMBLY	
1	FH4-5560-000		1	IC, M38881M2-010GP, IPC	Q4
Q 2	FF3-3636-000		1	IC, M27C1001-80XF1, EP-ROM	

COPYRIGHT © 1999 CANON INC.

FIGURE Q92 AC FUSE BOX PCB ASSEMBLY

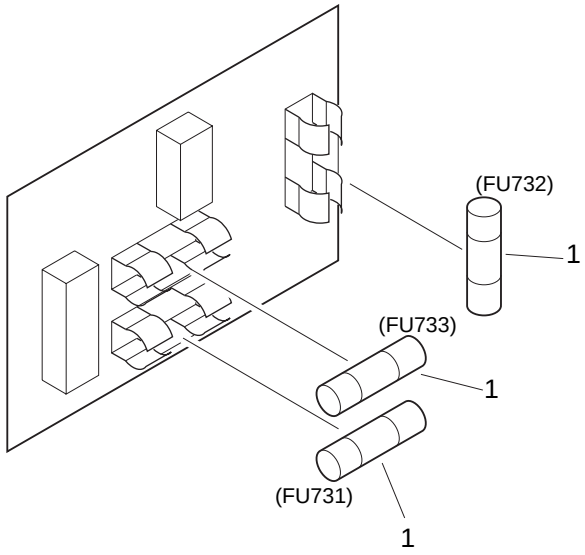

NOTE : This assembly is included in the assembly shown in Figure Q15.

FIGURE & KEY NO.	PART NUMBER	RANK	QTY	DESCRIPTION	SERIAL NUMBER / REMARKS
Q92 -	FG3-0085-000		1	AC FUSE BOX PCB ASSEMBLY	SEE NOTE
1	VD7-0646-301		3	FUSE,AC250V 6.3A	FU731-733

COPYRIGHT©1999 CANON INC.

FIGURE QB LIST OF CONNECTORS (1/7)

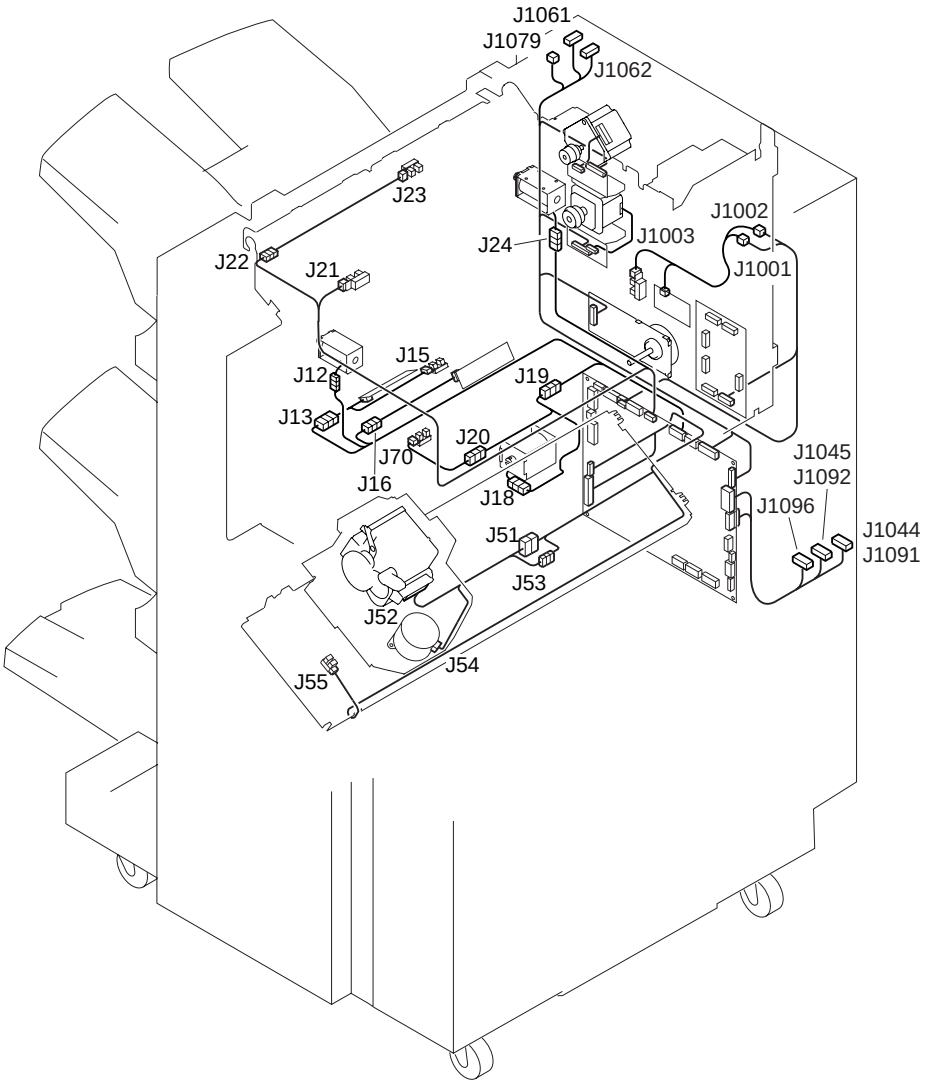

COPYRIGHT © 1999 CANON INC.
CANON Saddle Finisher-D2 REV.0 JULY 1999 PRINTED IN JAPAN [IMPRIME AU JAPON]

FIGURE QB LIST OF CONNECTORS (2/7)

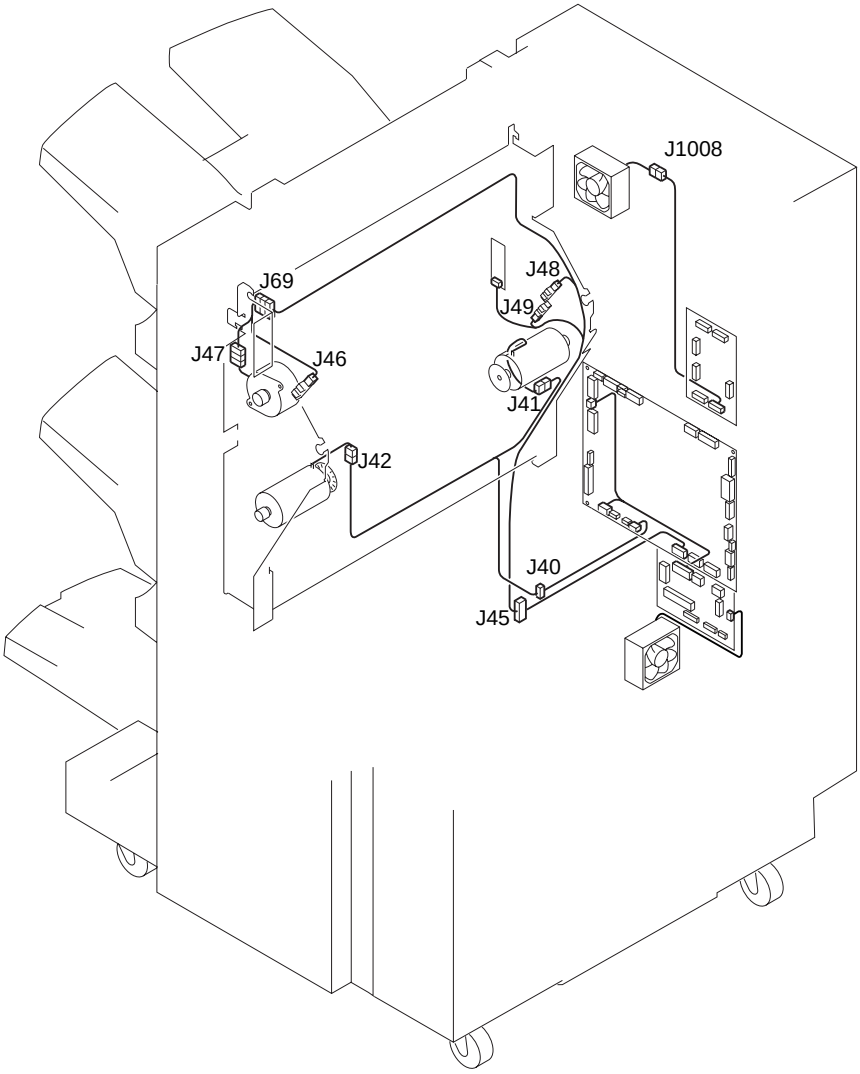

COPYRIGHT © 1999 CANON INC.

FIGURE QB LIST OF CONNECTORS (3/7)

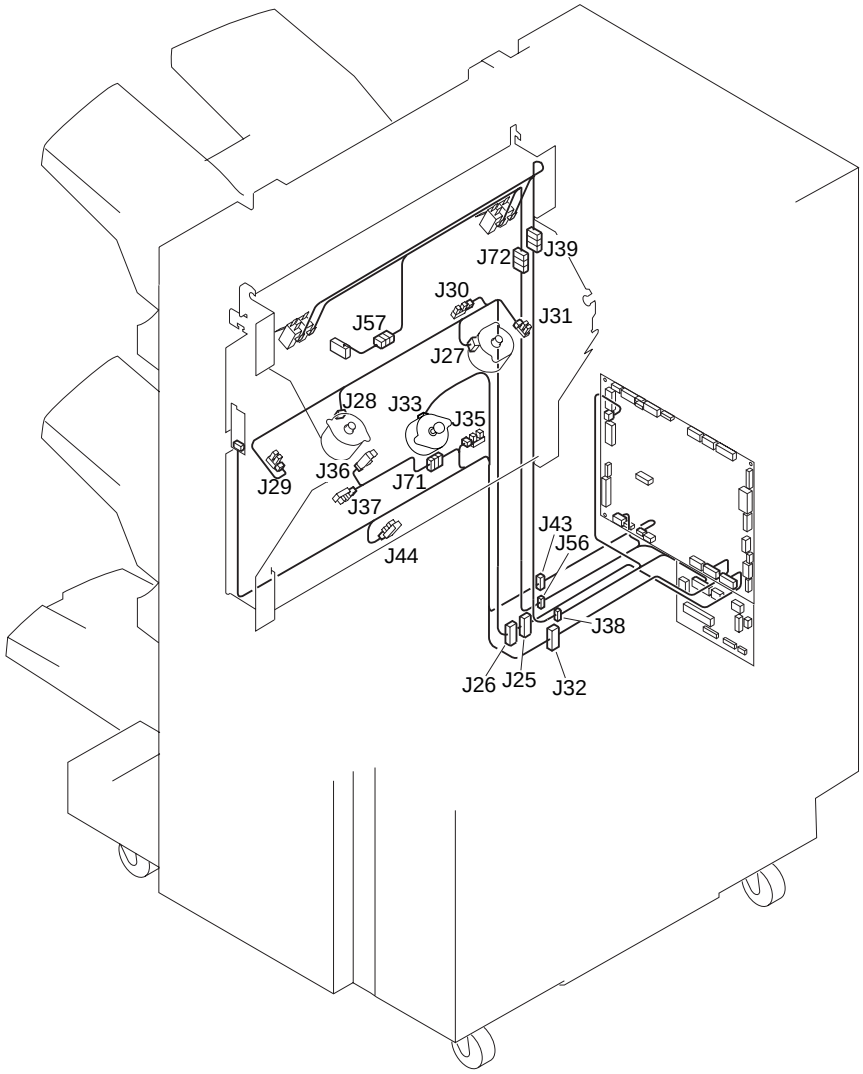

COPYRIGHT © 1999 CANON INC.

FIGURE QB LIST OF CONNECTORS (4/7)

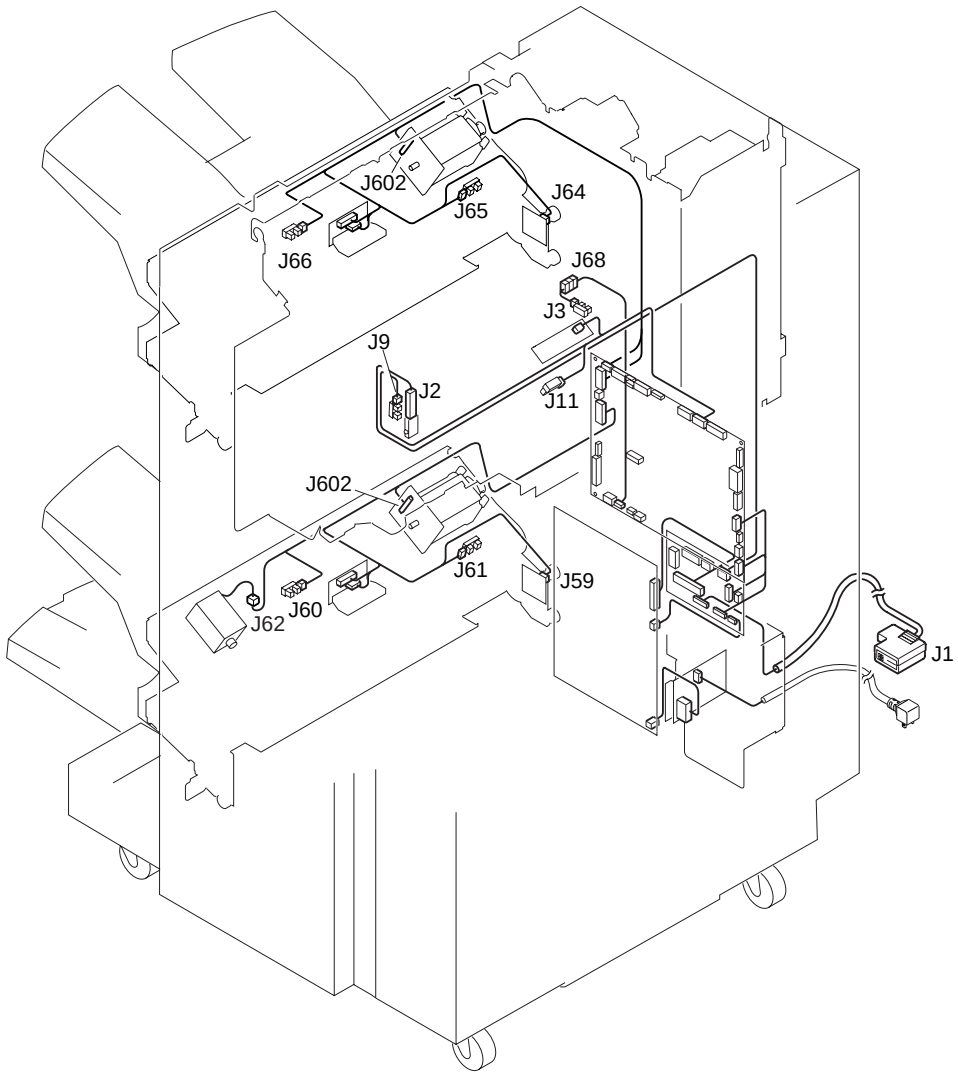

COPYRIGHT © 1999 CANON INC.

FIGURE QB LIST OF CONNECTORS (5/7)

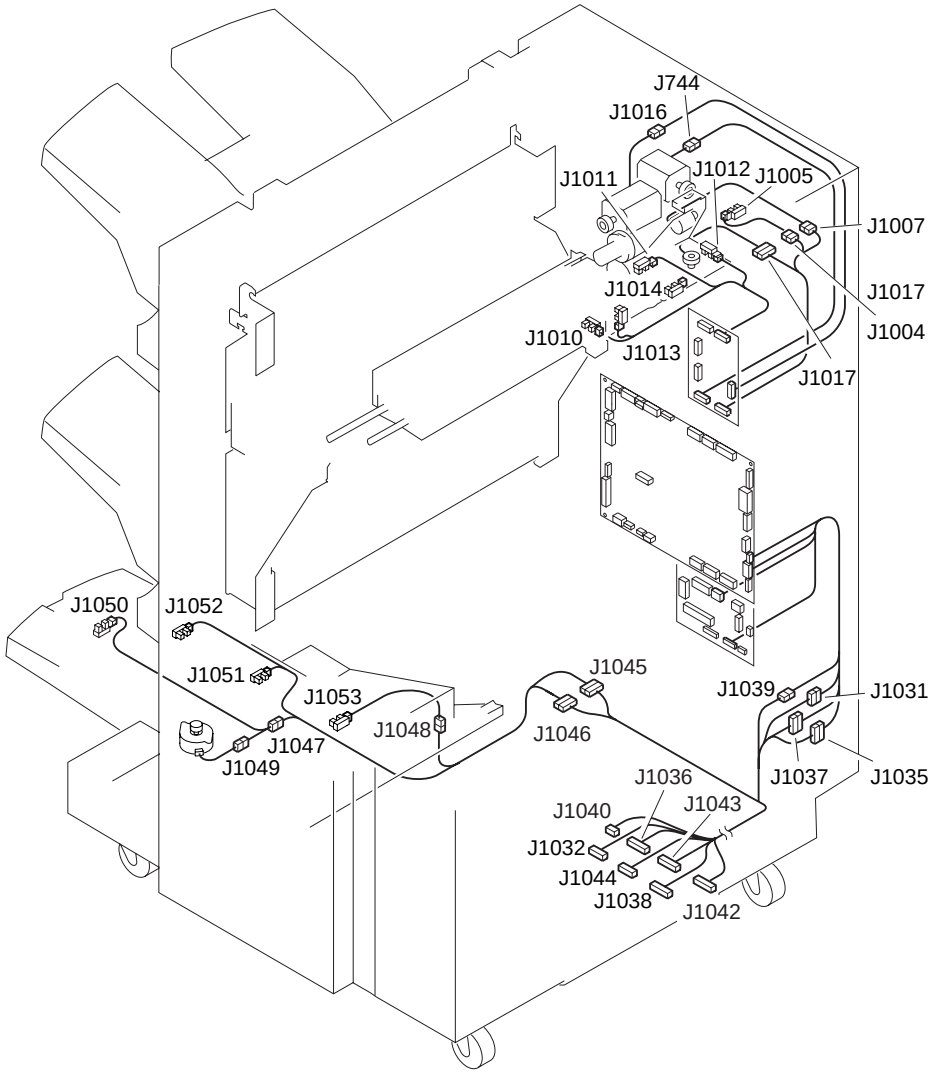

COPYRIGHT © 1999 CANON INC. CANON Saddle Finisher-D2 REV.0 JULY 1999 PRINTED IN JAPAN [IMPRIME AU JAPON]

FIGURE QB LIST OF CONNECTORS (6/7)

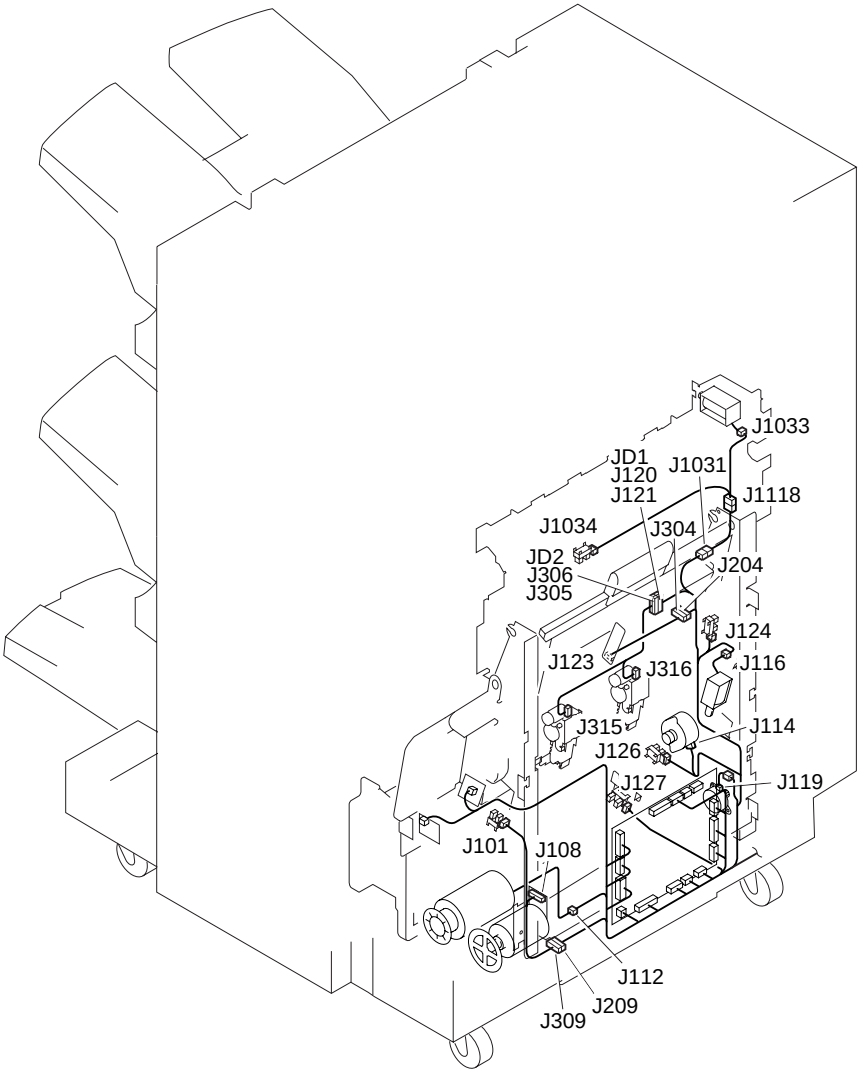

FIGURE QB LIST OF CONNECTORS (7/7)

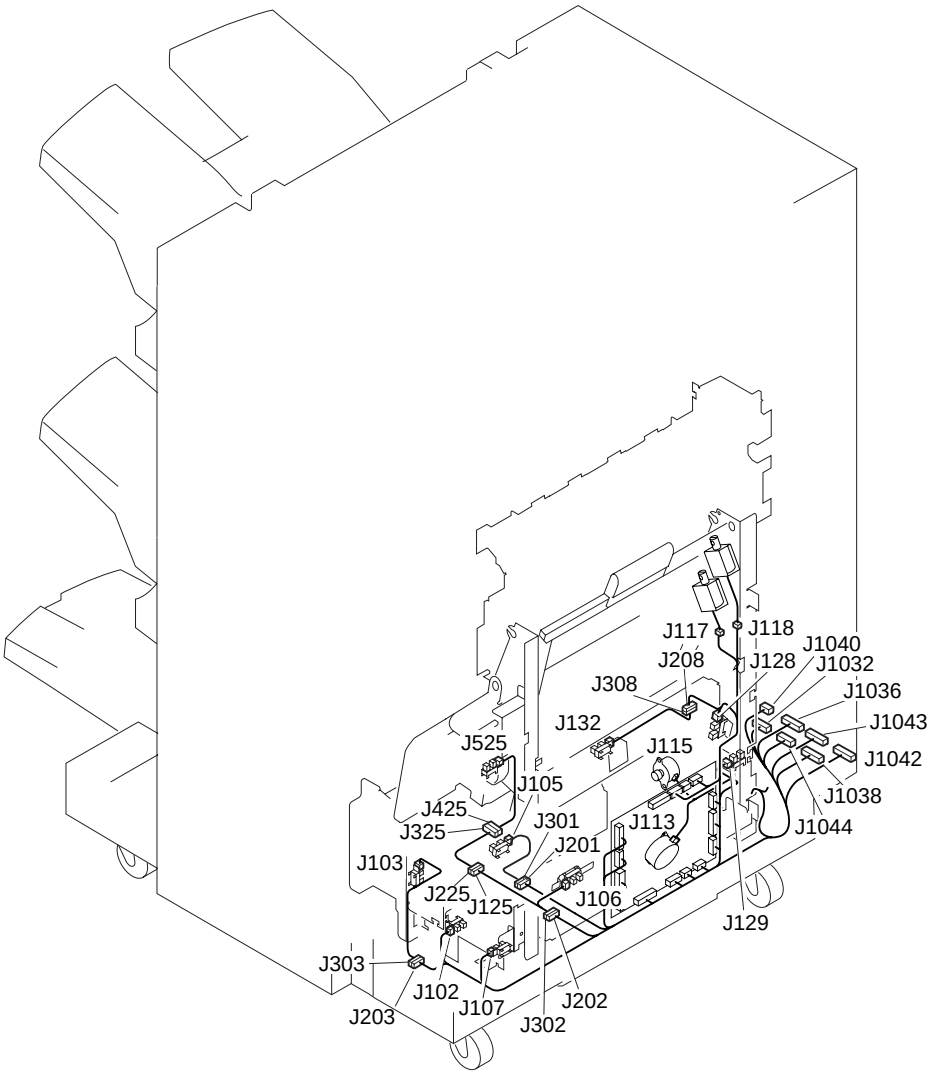

COPYRIGHT © 1999 CANON INC.

FIGURE & KEY NO.	PART NUMBER	RANK	QTY	DESCRIPTION	SERIAL NUMBER / REMARKS
Q B -	NPN		RF	LIST OF CONNECTORS	
J 1	PCB			SADDLE DC CONTROLLER	
	VS3-5083-002		1	CONNECTOR, 2P, FEMALE	
	WS3-5160-000		2	SOCKET CONTACT, 18-24AWG	
	VS1-5452-007		1	CONNECTOR, 7P, FEMALE	
	FH2-6481-000		1	HOUSING	
	WS3-5044-000		1	SOCKET, CONTACT, 18-24AWG	
J 2	PCB			SADDLE DC CONTROLLER	
	VS1-0842-006		1	CONNECTOR, 6P, FEMALE	
	NPN			FRONT DOOR OPEN/CLOSE SWITCH	MSW1
	WS3-5649-000		1	CONNECTOR, 3P, FEMALE	
J 3	NPN			TRAY LOWER LIMIT SENSOR	PI24
	VS1-0842-003		1	CONNECTOR, 3P, FEMALE	
J 4	PCB			SADDLE DC CONTROLLER	
	VS1-6383-010		1	CONNECTOR, 10P, FEMALE	
	WS3-5600-000		10	PIN CONTACT, 22-20AWG	
	NPN			INLET MOTOR	M1
	VS1-6321-013		1	CONNECTOR, 13P, FEMALE	
J 5	PCB			BUFFER MOTOR DRIVER	
	VS1-0842-004		1	CONNECTOR, 4P, FEMALE	
	PCB			SADDLE DC CONTROLLER	
	VS1-6321-013		1	CONNECTOR, 13P, FEMALE	
J 6	PCB			SADDLE DC CONTROLLER	
	VS1-0842-009		1	CONNECTOR, 9P, FEMALE	
	PCB			DELIVERY MOTOR DRIVER	
	VS1-6321-013		1	CONNECTOR, 13P, FEMALE	
J 7	PCB			SADDLE DC CONTROLLER	
	VS1-0842-010		1	CONNECTOR, 10P, FEMALE	
	PCB			PUNCH PATH SENSOR	
	VS1-6321-004		1	CONNECTOR, 4P, FEMALE	

FIGURE & KEY NO.	PART NUMBER	RANK	QTY	DESCRIPTION	SERIAL NUMBER / REMARKS
Q B - J 8	PCB			SADDLE DC CONTROLLER	
	VS1-0842-014		1	CONNECTOR, 14P, FEMALE	
	PCB			TRAY PAPER SENSOR 1	
	VS1-6321-004		1	CONNECTOR, 4P, FEMALE	
J 9	PCB			SADDLE DC CONTROLLER	
	VS1-0842-015		1	CONNECTOR, 15P, FEMALE	
	NPN			FRONT DOOR OPEN/CLOSE SENSOR	PI1
	VS1-6321-003		1	CONNECTOR, 3P, FEMALE	
J10	PCB			SADDLE DC CONTROLLER	
	VS1-0842-008		1	CONNECTOR, 8P, FEMALE	
	PCB			TRAY PAPER SENSOR 2	
	VS1-6321-002		1	CONNECTOR, 2P, FEMALE	
J11	PCB			SADDLE DC CONTROLLER	
	VS1-0842-015		1	CONNECTOR, 15P, FEMALE	
	NPN			INLET PATH PAPER SENSOR	PI2
	VS1-6321-003		1	CONNECTOR, 3P, FEMALE	
J12	PCB			SADDLE DC CONTROLLER	
	VS1-0842-005		1	CONNECTOR, 5P, FEMALE	
	NPN			BUFFER CHANGE SOLENOID	SL1
	VS1-5057-002		1	CONNECTOR, SNAP TIGHT	
	VS1-6321-002		1	CONNECTOR, 2P, FEMALE	
J13	PCB			SADDLE DC CONTROLLER	
	VS1-0842-007		2	CONNECTOR, 7P, FEMALE	
	VS1-5057-007		1	CONNECTOR, SNAP TIGHT	
	VS1-6321-007		1	CONNECTOR, 7P, FEMALE	
J14	PCB			SADDLE DC CONTROLLER	
	VS1-0842-014		1	CONNECTOR, 14P, FEMALE	
	PCB			BUFFER PATH SENSOR	
	VS1-0842-004		1	CONNECTOR, 4P, FEMALE	
J15	PCB			SADDLE DC CONTROLLER	

COPYRIGHT©1999 CANON INC.

FIGURE & KEY NO.	PART NUMBER	RANK	QTY	DESCRIPTION	SERIAL NUMBER / REMARKS
Q B - J15	VS1-0842-008		1	CONNECTOR, 8P, FEMALE	
	NPN			BUFFER PATH PAPER SENSOR	PI3
	VS1-0842-003		1	CONNECTOR, 3P, FEMALE	
J16	VS1-0842-004		1	CONNECTOR, 4P, FEMALE	
	VS1-5057-004		1	CONNECTOR, SNAP TIGHT	
	VS1-6321-004		1	CONNECTOR, 4P, FEMALE	
	PCB			SADDLE DC CONTROLLER	
	VS1-0842-003		1	CONNECTOR, 3P, FEMALE	
J17	PCB			SADDLE DC CONTROLLER	
	VS1-0842-002		1	CONNECTOR, 2P, FEMALE	
	PCB			DOWN PATH SENSOR	
	VS1-0842-004		1	CONNECTOR, 4P, FEMALE	
J18	NPN			FEEDER BELT SOLENOID	SL3
	VS1-0842-002		1	CONNECTOR, 2P, FEMALE	
	VS1-5057-002		1	CONNECTOR, SNAP TIGHT	
J19	VS1-0842-005		1	CONNECTOR, 5P, FEMALE	
	VS1-5057-005		1	CONNECTOR, SNAP TIGHT	
	VS1-6321-005		1	CONNECTOR, 5P, FEMALE	
J20	VS1-0842-003		1	CONNECTOR, 3P, FEMALE	
	VS1-5057-003		1	CONNECTOR, SNAP TIGHT	
	VS1-6321-003		1	CONNECTOR, 3P, FEMALE	
J21	NPN			UPPER COVER OPEN/CLOSE SENSOR	PI5
	VS1-6321-003		1	CONNECTOR, 3P, FEMALE	
J22	VS1-5057-003		1	CONNECTOR, SNAP TIGHT	
	VS1-6321-003		2	CONNECTOR, 3P, FEMALE	
J23	NPN			NON-SORT DELIVERY SENSOR	PI6
	VS1-6321-003		1	CONNECTOR, 3P, FEMALE	
J24	NPN			UPPER PATH CHANGE SOLENOID	SL2
	VS1-5057-002		1	CONNECTOR, SNAP TIGHT	
	VS1-6321-002		1	CONNECTOR, 2P, FEMALE	

COPYRIGHT © 1999 CANON INC.

FIGURE & KEY NO.	PART NUMBER	RANK	QTY	DESCRIPTION	SERIAL NUMBER / REMARKS
Q B - J25	VS1-6313-010		2	CONNECTOR, 10P, FEMALE	
	VS1-6314-010		2	CONNECTOR, 10P, FEMALE	
	VS1-6319-020		1	CONNECTOR, SNAP TIGHT	
	VT2-5161-020		2	HOLDER, CONNECTOR, 20P	
J26	VS1-6313-010		2	CONNECTOR, 10P, FEMALE	
	VS1-6314-010		2	CONNECTOR, 10P, FEMALE	
	VS1-6319-020		1	CONNECTOR, SNAP TIGHT	
	VT2-5161-020		2	HOLDER, CONNECTOR, 20P	
J27	NPN			REAR JOGGING PLATE MOTOR	M5
	VS1-6321-005		1	CONNECTOR, 5P, FEMALE	
J28	NPN			FRONT JOGGING PLATE MOTOR	M4
	VS1-6321-005		1	CONNECTOR, 5P, FEMALE	
J29	NPN			FRONT ADJUST PLATE H/P SENSOR	PI7
	VS1-6321-003		1	CONNECTOR, 3P, FEMALE	
J30	NPN			DELIVERY SENSOR	PI8
	VS1-6321-003		1	CONNECTOR, 3P, FEMALE	
J31	NPN			REAR ADJUST PLATE H/P SENSOR	PI9
	VS1-6321-003		1	CONNECTOR, 3P, FEMALE	
J32	VS1-6313-009		2	CONNECTOR, 9P, FEMALE	
	VS1-6314-009		2	CONNECTOR, 9P, FEMALE	
	VS1-6319-018		1	CONNECTOR, SNAP, TIGHT	
	VT2-5161-018		2	HOLDER, CONNECTOR, 18P	
J33	NPN			TRAY AUXILIARY MOTOR	M6
	VS1-6321-005		1	CONNECTOR, 5P, FEMALE	
J34	PCB			STACKER TRAY PAPER SENSOR 1	
	VS1-6321-004		1	CONNECTOR, 4P, FEMALE	
J35	NPN			SWING MOTOR SENSOR	PI10
	VS1-6321-003		1	CONNECTOR, 3P, FEMALE	
J36	NPN			TRAY AUXILIARY SENSOR	PI11
	VS1-0842-003		1	CONNECTOR, 3P, FEMALE	

COPYRIGHT©1999 CANON INC.

FIGURE & KEY NO.	PART NUMBER	RANK	QTY	DESCRIPTION	SERIAL NUMBER / REMARKS
Q B - J37	NPN			FEED MOTOR SENSOR	PI12
	VS1-0842-003		1	CONNECTOR, 3P, FEMALE	
J38	VS1-5729-002		1	CONNECTOR, 2P, MALE	
	WS3-5301-000		2	PIN CONTACT	
	VS3-5083-002		1	CONNECTOR, 2P, FEMALE	
	WS3-5160-000		2	SOCKET CONTACT, 18-24AWG	
J39	NPN			TRAY SAFETY REAR SWITCH	MSW7
	NPN			TRAY SAFETY FRONT SWITCH	MSW6
	VS1-5729-003		1	CONNECTOR, 3P, MALE	
	WS3-5301-000		2	PIN CONTACT	
J40	VS1-0279-004		1	CONNECTOR, 4P, FEMALE	
	WS3-0437-000		4	SOCKET CONTACT, 20-30AWG	
	VS3-0108-004		1	CONNECTOR, 4P, FEMALE	
	WS3-0885-000		4	PIN CONTACT, 20-30AWG	
J41	NPN			SWING MOTOR	M8
	VS3-0108-002		1	CONNECTOR, 2P, FEMALE	
	WS3-0885-000		2	PIN CONTACT, 20-30AWG	
J42	NPN			DELIVERY MOTOR	M7
	VS3-0108-002		1	CONNECTOR, 2P, FEMALE	
	WS3-0885-000		2	PIN CONTACT, 20-30AWG	
J43	VS1-0842-004		1	CONNECTOR, 4P, FEMALE	
	VS1-5057-004		1	CONNECTOR, SNAP TIGHT	
	VS1-6314-004		1	CONNECTOR, 4P, FEMALE	
	VS1-6318-004		1	CONNECTOR, SNAP, TIGHT	
J44	NPN			SHUTTER H/P SENSOR	PI13
	VS1-0842-003		1	CONNECTOR, 3P, FEMALE	
J45	VS1-6313-008		2	CONNECTOR, 8P, FEMALE	
	VS1-6314-008		2	CONNECTOR, 8P, FEMALE	
	VS1-6319-016		1	CONNECTOR, SNAP, TIGHT	
	VT2-5161-016		2	HOLDER, CONNECTOR, 16P	

FIGURE & KEY NO.	PART NUMBER	RANK	QTY	DESCRIPTION	SERIAL NUMBER / REMARKS
Q B - J46	NPN			PADDLE H/P SENSOR	PI14
	VS1-0842-003		1	CONNECTOR, 3P, FEMALE	
J47	NPN			PADDLE MOTOR	M9
	VS1-0842-005		1	CONNECTOR, 5P, FEMALE	
	VS1-5057-005		1	CONNECTOR, SNAP TIGHT	
J48	NPN			SWING GUIDE CLOSE SENSOR	PI15
	VS1-6321-003		1	CONNECTOR, 3P, FEMALE	
J49	NPN			SWING GUIDE OPEN SENSOR	PI16
	VS1-6321-003		1	CONNECTOR, 3P, FEMALE	
J50	PCB			STACKER TRAY PAPER SENSOR 2	
	VS1-6321-002		1	CONNECTOR, 2P, FEMALE	
J51	VS1-0001-012		1	PIN ASSEMBLY, 12P	
	WS4-0220-000		11	PIN CONTACT, 22-26AWG	
	VS4-0002-012		1	CONNECTOR, 12P, FEMALE	
	WS4-0218-000		11	SOCKET CONTACT, 22-26AWG	
J52	NPN			STAPLER SWITCH	MSW3
	NPN			CARTRIDGE SWITCH	MSW4
	NPN			STAPLER MOTOR	M11
	NPN			STAPLER H/P SENSOR 2	PI19
	NPN			STAPLER PRIME SENSOR	PI18
	WS3-1090-000		11	SOCKET CONTACT, 22-28AWG	
J53	VS1-5057-006		1	CONNECTOR, SNAP TIGHT	
	VS1-5824-006		1	CONNECTOR, 6P, FEMALE	
	VS1-6321-006		1	CONNECTOR, 6P, FEMALE	
	WS3-5358-000		5	SOCKET CONTACT, 22-26AWG	
J54	NPN			STAPLER MOVE MOTOR	M10
	VS1-5824-005		1	CONNECTOR, 5P, FEMALE	
	WS3-5358-000		5	SOCKET CONTACT, 22-26AWG	
J55	NPN			STAPLER H/P SENSOR 1	PI17
	VS1-6321-003		1	CONNECTOR, 3P, FEMALE	

COPYRIGHT©1999 CANON INC.

FIGURE & KEY NO.	PART NUMBER	RANK	QTY	DESCRIPTION	SERIAL NUMBER / REMARKS
Q B - J56	VS1-5729-003		1	CONNECTOR, 3P, MALE	
	WS3-5301-000		3	PIN CONTACT	
	VS3-5083-003		1	CONNECTOR, 3P, FEMALE	
	WS3-5160-000		2	SOCKET CONTACT, 18-24AWG	
J57	NPN			SWING GUIDE OPEN/CLOSE SWITCH	MSW2
	VS1-5729-003		1	CONNECTOR, 3P, MALE	
	WS3-5301-000		3	PIN CONTACT	
J58	PCB			STACKER TRAY DRIVER	
	VS1-6321-013		1	CONNECTOR, 13P, FEMALE	
J59	NPN			TRAY LOWER POSITION SENSOR 2	PI21
	NPN			TRAY UPPER POSITION SENSOR 1	PI20
	VS1-6321-004		1	CONNECTOR, 4P, FEMALE	
J60	NPN			STACKER TRAY PAPER SENSOR	PI22
	VS1-6321-003		1	CONNECTOR, 3P, FEMALE	
J61	NPN			STACKER TRAY EMPTY SENSOR	PI23
	VS1-6321-003		1	CONNECTOR, 3P, FEMALE	
J62	NPN			STACKER SUB TRAY SOLENOID	SL4
	VS1-5057-003		1	CONNECTOR, SNAP TIGHT	
	VS1-6321-003		1	CONNECTOR, 3P, FEMALE	
J63	PCB			TRAY DRIVER	
	VS1-6321-013		1	CONNECTOR, 13P, FEMALE	
J64	NPN			TRAY LOWER POSITION SENSOR 4	PI28
	NPN			TRAY UPPER POSITION SENSOR 3	PI27
	VS1-6321-004		1	CONNECTOR, 4P, FEMALE	
J65	NPN			TRAY PAPER EMPTY SENSOR	PI26
	VS1-6321-003		1	CONNECTOR, 3P, FEMALE	
J66	NPN			TRAY PAPER SENSOR	PI25
	VS1-6321-003		1	CONNECTOR, 3P, FEMALE	
J67	NPN			TRAY NEAR SWITCH	MSW5
	WS3-5666-000		1	CONNECTOR	

COPYRIGHT © 1999 CANON INC.

FIGURE & KEY NO.	PART NUMBER	RANK	QTY	DESCRIPTION	SERIAL NUMBER / REMARKS
Q B - J68	VS1-0842-003		1	CONNECTOR, 3P, FEMALE	
	VS1-5057-003		1	CONNECTOR, SNAP TIGHT	
	VS1-6321-003		1	CONNECTOR, 3P, FEMALE	
J69	VS1-0842-008		1	CONNECTOR, 8P, FEMALE	
	VS1-5057-008		1	CONNECTOR, SNAP TIGHT	
	VS1-6321-008		1	CONNECTOR, 8P, FEMALE	
J70	NPN			SORT DELIVERY SENSOR	PI4
	VS1-6321-003		1	CONNECTOR, 3P, FEMALE	
J71	VS1-0842-006		1	CONNECTOR, 6P, FEMALE	
	VS1-5057-006		1	CONNECTOR, SNAP TIGHT	
	VS1-6321-006		1	CONNECTOR, 6P, FEMALE	
J72	NPN			STAPLE SAFETY FRONT SWITCH	MSW8
	NPN			STAPLE SAFETY REAR SWITCH	MSW9
	VS1-5729-002		1	CONNECTOR, 2P, MALE	
	WS3-5301-000		2	PIN CONTACT	
J84	PCB			SWITCHING REGULATOR	
	VS3-5083-003		2	CONNECTOR, 3P, FEMALE	
	WS3-5160-000		2	SOCKET CONTACT, 18-24AWG	
J85	PCB			SWITCHING REGULATOR	
	VS3-5083-010		1	CONNECTOR, 10P, FEMALE	
	WS3-5160-000		10	SOCKET CONTACT, 18-24AWG	
J88	PCB			SWITCHING REGULATOR	
	VS1-6321-004		1	CONNECTOR, 4P, FEMALE	
J 101	PCB			FINISHER CONTROLLER	
	VS1-0279-006		1	CONNECTOR, 6P, FEMALE	
	WS3-0437-000		6	SOCKET CONTACT, 20-30AWG	
	NPN			JOGGING PLATE H/P SENSOR	PI65
	VS1-0852-003		1	CONNECTOR, 3P, FEMALE	
J 102	PCB			FINISHER CONTROLLER	
	VS1-6313-008		1	CONNECTOR, 8P, FEMALE	

COPYRIGHT©1999 CANON INC.

FIGURE & KEY NO.	PART NUMBER	RANK	QTY	DESCRIPTION	SERIAL NUMBER / REMARKS
Q B - J 102	VS1-6314-008		1	CONNECTOR, 8P, FEMALE	
	VT2-5161-016		1	HOLDER, CONNECTOR, 16P	
	NPN			FOLDER MOTOR SENSOR	PI64
	VS1-0842-003		1	CONNECTOR, 3P, FEMALE	
J 103	PCB			FINISHER CONTROLLER	
	VS1-6314-008		1	CONNECTOR, 8P, FEMALE	
	NPN			EXIT COVER OPEN/CLOSE SENSOR	PI63
	VS1-0842-003		1	CONNECTOR, 3P, FEMALE	
J 104	PCB			FINISHER CONTROLLER	
	VS1-6313-010		1	CONNECTOR, 10P, FEMALE	
	VS1-6314-010		1	CONNECTOR, 10P, FEMALE	
	VT2-5161-020		1	HOLDER, CONNECTOR, 20P	
J 105	PCB			FINISHER CONTROLLER	
	VS1-6313-009		1	CONNECTOR, 9P, FEMALE	
	VS1-6314-009		1	CONNECTOR, 9P, FEMALE	
	VT2-5161-018		1	HOLDER, CONNECTOR, 18P	
	NPN			POSITION PLATE PAPER SENSOR	PI68
	VS1-0842-003		1	CONNECTOR, 3P, FEMALE	
J 106	PCB			FINISHER CONTROLLER	
	VS1-0279-004		1	CONNECTOR, 4P, FEMALE	
	WS3-0437-000		4	SOCKET CONTACT, 20-30AWG	
	NPN			POSITION PLATE H/P SENSOR	PI66
	VS1-0842-003		1	CONNECTOR, 3P, FEMALE	
J 107	PCB			FINISHER CONTROLLER	
	VS1-6314-004		1	CONNECTOR, 4P, FEMALE	
	NPN			PAPER PRESSURE MOTOR SENSOR	PI61
	VS1-0852-003		1	CONNECTOR, 3P, FEMALE	
J 108	PCB			FINISHER CONTROLLER	
	VS1-6313-008		1	CONNECTOR, 8P, FEMALE	
	VS1-6314-008		1	CONNECTOR, 8P, FEMALE	

FIGURE & KEY NO.	PART NUMBER	RANK	QTY	DESCRIPTION	SERIAL NUMBER / REMARKS
Q B - J 108	VT2-5161-016		1	HOLDER, CONNECTOR, 16P	
	NPN			PAPER PUSH MOTOR	M38
	VS1-0279-002		1	CONNECTOR, 2P, FEMALE	
	WS3-0437-000		2	SOCKET CONTACT, 20-30AWG	
J 109	PCB			FINISHER CONTROLLER	
	VS1-6314-005		1	CONNECTOR, 5P, FEMALE	
J 110	PCB			FINISHER CONTROLLER	
	VS1-6313-014		1	CONNECTOR, 14P, FEMALE	
	VS1-6314-014		1	CONNECTOR, 14P, MALE	
	VT2-5161-028		1	HOLDER, CONNECTOR, 28P	
J 111	PCB			FINISHER CONTROLLER	
	VS3-0134-013		1	HOUSING, 13P	
	WS3-1090-000		11	SOCKET CONTACT, 22-28AWG	
	WS3-5467-000		2	CONTACT	
J 112	PCB			FINISHER CONTROLLER	
	VS1-6314-008		1	CONNECTOR, 8P, FEMALE	
	NPN			FOLDER MOTOR	M32
	VS1-0279-003		1	CONNECTOR, 3P, FEMALE	
	WS3-0437-000		3	SOCKET CONTACT, 20-30AWG	
J 113	PCB			FINISHER CONTROLLER	
	VS3-5083-003		1	CONNECTOR, 3P, FEMALE	
	WS3-5160-000		3	SOCKET CONTACT, 18-24AWG	
	NPN			JOGGING MOTOR	M35
	VS1-0842-005		1	CONNECTOR, 5P, FEMALE	
J 114	PCB			FINISHER CONTROLLER	
	VS3-5083-002		1	CONNECTOR, 2P, FEMALE	
	WS3-5160-000		2	SOCKET CONTACT, 18-24AWG	
	NPN			PAPER POSITION PLATE MOTOR	M34
	VS1-0842-005		1	CONNECTOR, 5P, FEMALE	
J 115	PCB			FINISHER CONTROLLER	

COPYRIGHT©1999 CANON INC.

FIGURE & KEY NO.	PART NUMBER	RANK	QTY	DESCRIPTION	SERIAL NUMBER / REMARKS
Q B - J 115	VS1-6313-013		1	CONNECTOR, 13P, FEMALE	
	VS1-6314-013		1	CONNECTOR, 13P, FEMALE	
	VT2-5161-026		1	CONNECTOR, 26P, FEMALE	
	NPN			FEED MOTOR	M31
	VS1-0842-004		1	CONNECTOR, 4P, FEMALE	
	VS1-5057-004		1	CONNECTOR, SNAP TIGHT	
J 116	PCB			FINISHER CONTROLLER	
	VS1-0279-004		1	CONNECTOR, 4P, FEMALE	
	NPN			FEED ROLLER SOLENOID	SL33
	VS1-0842-002		1	CONNECTOR, 2P, FEMALE	
	VS1-5057-002		1	CONNECTOR, SNAP TIGHT	
J 117	PCB			FINISHER CONTROLLER	
	VS1-6313-009		1	CONNECTOR, 9P, FEMALE	
	VS1-6314-009		1	CONNECTOR, 9P, FEMALE	
	VT2-5161-018		1	HOLDER, CONNECTOR, 18P	
	NPN			PAPER FLAP SOLENOID 2	SL32
	VS1-0852-002		1	CONNECTOR, 2P, FEMALE	
	VS1-5352-002		1	CONNECTOR, SNAP TIGHT	
J 118	PCB			FINISHER CONTROLLER	
	VS1-6313-012		1	CONNECTOR, 12P, FEMALE	
	VS1-6314-012		1	CONNECTOR, 12P, FEMALE	
	VT2-5161-024		1	CONNECTOR, 24P, FEMALE	
	NPN			PAPER FLAP SOLENOID 1	SL31
	VS1-0842-002		1	CONNECTOR, 2P, FEMALE	
	VS1-5057-002		1	CONNECTOR, SNAP TIGHT	
J 119	PCB			FINISHER CONTROLLER	
	VS1-6314-008		1	CONNECTOR, 8P, FEMALE	
	NPN			GUIDE MOTOR	M33
	VS1-0842-005		1	CONNECTOR, 5P, FEMALE	
J 120	PCB			FINISHER CONTROLLER	

FIGURE & KEY NO.	PART NUMBER	RANK	QTY	DESCRIPTION	SERIAL NUMBER / REMARKS
Q B - J 120	VS1-6313-009		1	CONNECTOR, 9P, FEMALE	
	VS1-6314-009		1	CONNECTOR, 9P, FEMALE	
	VT2-5161-018		1	HOLDER, CONNECTOR, 18P	
	VS1-0842-007		1	CONNECTOR, 7P, FEMALE	
J 121	PCB			FINISHER CONTROLLER	
	VS1-6313-008		1	CONNECTOR, 8P, FEMALE	
	VS1-6314-008		1	CONNECTOR, 8P, FEMALE	
	VT2-5161-016		1	HOLDER, CONNECTOR, 16P	
	VS1-0852-007		1	CONNECTOR, 7P, FEMALE	
J 122	PCB			FINISHER CONTROLLER	
	VS1-6313-013		1	CONNECTOR, 13P, FEMALE	
	VS1-6314-013		1	CONNECTOR, 13P, FEMALE	
	VT2-5161-026		1	CONNECTOR, 26P, FEMALE	
J 123	PCB			FINISHER CONTROLLER	
	VS1-6314-005		1	CONNECTOR, 5P, FEMALE	
	PCB			PAPER SENSOR	PI77-79
	VS1-0842-005		1	CONNECTOR, 5P, FEMALE	
J 124	PCB			FINISHER CONTROLLER	
	VS1-6314-013		1	CONNECTOR, 13P, FEMALE	
	NPN			INLET COVER OPEN/CLOSE SENSOR	PI69
	VS1-0842-003		1	CONNECTOR, 3P, FEMALE	
J 125	PCB			FINISHER CONTROLLER	
	VS1-0842-010		1	CONNECTOR, 10P, FEMALE	
	VS1-0852-010		1	CONNECTOR, 10P, FEMALE	
	VS9-5009-020		1	HOLDER, CONNECTOR, 20P	
	VS1-0842-004		1	CONNECTOR, 4P, FEMALE	
J 126	PCB			FINISHER CONTROLLER	
	VS1-0279-008		1	CONNECTOR, 8P, FEMALE	
	WS3-0437-000		8	SOCKET CONTACT, 20-30AWG	
	NPN			ROLLER SENSOR	PI72

COPYRIGHT©1999 CANON INC.

FIGURE & KEY NO.	PART NUMBER	RANK	QTY	DESCRIPTION	SERIAL NUMBER / REMARKS
Q B - J 126	VS1-0842-003		1	CONNECTOR, 3P, FEMALE	
J 127	PCB			FINISHER CONTROLLER	
	VS1-6314-004		1	CONNECTOR, 4P, FEMALE	
	NPN			GUIDE H/P SENSOR	PI73
	VS1-0842-003		1	CONNECTOR, 3P, FEMALE	
J 128	PCB			FINISHER CONTROLLER	
	VS1-6314-005		1	CONNECTOR, 5P, FEMALE	
	NPN			PAPER PRESS. PLATE H/P SENSOR	PI74
	VS1-0842-003		1	CONNECTOR, 3P, FEMALE	
J 129	NPN			PRESSURE PLATE EDGE H/P SENSOR	PI75
	VS1-0842-003		1	CONNECTOR, 3P, FEMALE	
J 131	VS1-0842-003		1	CONNECTOR, 3P, FEMALE	
J 132	NPN			VERTICAL PATH SENSOR	PI76
	VS1-0842-003		1	CONNECTOR, 3P, FEMALE	
J 201	VS1-0842-003		1	CONNECTOR, 3P, FEMALE	
J 202	VS1-0842-005		1	CONNECTOR, 5P, FEMALE	
J 203	VS1-0842-003		1	CONNECTOR, 3P, FEMALE	
J 204	VS1-0842-005		1	CONNECTOR, 5P, FEMALE	
J 208	VS1-0842-004		1	CONNECTOR, 4P, FEMALE	
J 209	VS1-0852-003		1	CONNECTOR, 3P, FEMALE	
J 225	VS1-0842-004		1	CONNECTOR, 4P, FEMALE	
	VS1-5057-004		1	CONNECTOR, SNAP TIGHT	
J 301	VS1-0842-003		1	CONNECTOR, 3P, FEMALE	
	VS1-5057-003		1	CONNECTOR, SNAP TIGHT	
J 302	VS1-0842-005		1	CONNECTOR, 5P, FEMALE	
	VS1-5057-005		1	CONNECTOR, SNAP TIGHT	
J 303	VS1-0842-003		1	CONNECTOR, 3P, FEMALE	
	VS1-5057-003		1	CONNECTOR, SNAP TIGHT	
J 304	VS1-0842-005		1	CONNECTOR, 5P, FEMALE	
	VS1-5057-005		1	CONNECTOR, SNAP TIGHT	

FIGURE & KEY NO.	PART NUMBER	RANK	QTY	DESCRIPTION	SERIAL NUMBER / REMARKS
Q B - J 305	FF3-3110-000		1	CABLE, STAPLER	
J 306	FF3-3110-000		1	CABLE, STAPLER	
J 308	VS1-0842-004		1	CONNECTOR, 4P, FEMALE	
	VS1-5057-004		1	CONNECTOR, SNAP TIGHT	
J 309	VS1-0842-003		1	CONNECTOR, 3P, FEMALE	
	VS1-5057-003		1	CONNECTOR, SNAP TIGHT	
J 315	FF3-3110-000		1	CABLE, STAPLER	
	NPN			STAPLE REAR SENSOR	MS33
	NPN			STAPLER H/P REAR SWITCH	MS34
	NPN			STAPLE REAR MOTOR	M37
J 316	FF3-3110-000		1	CABLE, STAPLER	
	NPN			STAPLE FRONT MOTOR	M36
	NPN			STAPLER H/P FRONT SWITCH	MS32
	NPN			STAPLE FRONT SENSOR	MS31
J 325	VS1-0842-004		1	CONNECTOR, 4P, FEMALE	
J 425	VS1-0842-004		1	CONNECTOR, 4P, FEMALE	
	VS1-5057-004		1	CONNECTOR, SNAP TIGHT	
J 525	NPN			PAPER DELIVERY SENSOR	PI71
	VS1-0842-003		1	CONNECTOR, 3P, FEMALE	
J 602	PCB			STACKER TRAY DRIVER	
	NPN			STACKER TRAY SHIFT MOTOR	M12
	PCB			SAMPLE TRAY DRIVER	
	NPN			SAMPLE TRAY SHIFT MOTOR	M13
	PCB			DELIVERY MOTOR DRIVER	
	NPN			DELIVERY MOTOR	M3
	PCB			BUFFER MOTOR DRIVER	
	NPN			BUFFER MOTOR	M2
J 711	PCB			FUSE	
	VS3-5083-010		1	CONNECTOR, 10P, FEMALE	
	WS3-5160-000		10	SOCKET CONTACT, 18-24AWG	

COPYRIGHT©1999 CANON INC.

FIGURE & KEY NO.	PART NUMBER	RANK	QTY	DESCRIPTION	SERIAL NUMBER / REMARKS
Q B - J 712	PCB			FUSE	
	VS3-5083-005		1	CONNECTOR, 5P, FEMALE	
	WS3-5160-000		4	SOCKET CONTACT, 18-24AWG	
J 713	PCB			FUSE	
	VS3-5083-006		1	CONNECTOR, 6P, FEMALE	
	WS3-5160-000		6	SOCKET CONTACT, 18-24AWG	
J 714	PCB			FUSE	
	VS1-0279-006		1	CONNECTOR, 6P, FEMALE	
	WS3-0437-000		6	SOCKET CONTACT, 20-30AWG	
J 715	PCB			FUSE	
	VS3-5002-003		1	CONNECTOR, PCB, 3P, FEMALE	
	WS3-1226-000		3	CONTACT, 18-22AWG	
J 716	PCB			FUSE	
	VS1-6314-008		1	CONNECTOR, 8P, FEMALE	
J 717	PCB			FUSE	
	VS1-5452-007		1	CONNECTOR, 7P, FEMALE	
J 718	PCB			FUSE	
	VS1-6314-004		1	CONNECTOR, 4P, FEMALE	
J 719	PCB			FUSE	
	VS3-5083-003		1	CONNECTOR, 3P, FEMALE	
	WS3-5160-000		2	SOCKET CONTACT, 18-24AWG	
J 720	PCB			FUSE	
	NPN			POWER SUPPLY COOLING FAN	FM1
J 731	PCB			NOISE FILTER	
	VS1-6380-003		1	CONNECTOR, 3P, MALE	
	WS3-5292-000		2	SOCKET CONTACT	
J 732	PCB			NOISE FILTER	
	VS3-5083-007		2	CONNECTOR, 7P, FEMALE	
	WS3-5160-000		2	SOCKET CONTACT, 18-24AWG	
J 741	PCB			PUNCH DRIVER	

COPYRIGHT © 1999 CANON INC.

FIGURE & KEY NO.	PART NUMBER	RANK	QTY	DESCRIPTION	SERIAL NUMBER / REMARKS
Q B - J 741	VS1-6313-012		1	CONNECTOR, 12P, FEMALE	
	VS1-6314-012		1	CONNECTOR, 12P, FEMALE	
	VT2-5161-024		1	CONNECTOR, 24P, FEMALE	
J 742	PCB			PUNCH DRIVER	
	VS1-0842-011		1	CONNECTOR, 11P, FEMALE	
J 743	PCB			PUNCH DRIVER	
	VS3-5083-005		1	CONNECTOR, 5P, FEMALE	
	WS3-5160-000		4	SOCKET CONTACT, 18-24AWG	
J 744	PCB			PUNCH DRIVER	
	NPN			REGIST MOTOR	M17
J 745	PCB			PUNCH DRIVER	
	VS1-0842-006		1	CONNECTOR, 6P, FEMALE	
J 746	PCB			PUNCH DRIVER	
	VS1-0279-006		1	CONNECTOR, 6P, FEMALE	
	WS3-0437-000		6	SOCKET CONTACT, 20-30AWG	
J 747	PCB			PUNCH DRIVER	
	VS1-6094-003		1	CONNECTOR, 3P, FEMALE	
	WS3-5358-000		15	SOCKET CONTACT, 22-26AWG	
J 941	PCB			PUNCH DUST SENSOR	
	VS1-0842-005		1	CONNECTOR, 5P, FEMALE	
J 971	PCB			OPTION SWITCH	
	VS1-6314-008		1	CONNECTOR, 8P, FEMALE	
J 981	PCB			SADDLE JAM LED	
	VS1-0842-003		1	CONNECTOR, 3P, FEMALE	
J1001	VS1-0842-005		1	CONNECTOR, 5P, FEMALE	
	VS1-5057-005		1	CONNECTOR, SNAP TIGHT	
	VS1-6321-005		1	CONNECTOR, 5P, FEMALE	
J1002	VS1-0842-004		2	CONNECTOR, 4P, FEMALE	
	VS1-5057-004		1	CONNECTOR, SNAP TIGHT	
J1003	NPN			DUST BOX SET SENSOR	PI53

COPYRIGHT©1999 CANON INC.

FIGURE & KEY NO.	PART NUMBER	RANK	QTY	DESCRIPTION	SERIAL NUMBER / REMARKS
Q B - J1003	VS1-0842-003		1	CONNECTOR, 3P, FEMALE	
J1004	VS1-0842-003		2	CONNECTOR, 3P, FEMALE	
	VS1-5057-003		1	CONNECTOR, SNAP TIGHT	
J1005	NPN			DUST FEED SENSOR	PI54
	VS1-0842-003		1	CONNECTOR, 3P, FEMALE	
J1007	NPN			DUST FEED MOTOR	M16
	VS1-0842-002		1	CONNECTOR, 2P, FEMALE	
	VS1-5057-002		1	CONNECTOR, SNAP TIGHT	
J1008	NPN			PUNCH COOLING FAN	FM2
	VS1-0842-003		1	CONNECTOR, 3P, FEMALE	
	VS1-5057-003		1	CONNECTOR, SNAP TIGHT	
J1010	NPN			PAPER EDGE SENSOR	PI43
	VS1-5824-003		1	CONNECTOR, 3P, FEMALE	
	WS3-5358-000		3	SOCKET CONTACT, 22-26AWG	
J1011	NPN			PUNCH ROTATION H/P SENSOR	PI44
	VS1-5824-003		1	CONNECTOR, 3P, FEMALE	
	WS3-5358-000		3	SOCKET CONTACT, 22-26AWG	
J1012	NPN			SIDE REGIST H/P SENSOR	PI45
	VS1-5824-003		1	CONNECTOR, 3P, FEMALE	
	WS3-5358-000		3	SOCKET CONTACT, 22-26AWG	
J1013	NPN			PUNCH H/P SENSOR	PI46
	VS1-5824-003		1	CONNECTOR, 3P, FEMALE	
	WS3-5358-000		3	SOCKET CONTACT, 22-26AWG	
J1014	NPN			PUNCH END SENSOR	PI47
	VS1-5824-015		1	CONNECTOR, 15P, FEMALE	
	WS3-5358-000		3	SOCKET CONTACT, 22-26AWG	
J1016	NPN			PUNCH ROTATION MOTOR	M18
	VS1-0280-006		1	CONNECTOR, 6P, MALE	
	WS3-0885-000		6	PIN CONTACT, 20-30AWG	
J1017	NPN			PUNCH SENSOR SHIFT MOTOR	M19

FIGURE & KEY NO.	PART NUMBER	RANK	QTY	DESCRIPTION	SERIAL NUMBER / REMARKS
Q B - J1017	VS1-0842-006		1	CONNECTOR, 6P, FEMALE	
	VS1-5057-006		1	CONNECTOR, SNAP TIGHT	
J1031	VS1-5057-005		1	CONNECTOR, SNAP TIGHT	
	VS1-5824-005		1	CONNECTOR, 5P, FEMALE	
	VS1-6321-005		1	CONNECTOR, 5P, FEMALE	
	WS3-5358-000		5	SOCKET CONTACT, 22-26AWG	
J1032	VS1-5057-005		1	CONNECTOR, SNAP TIGHT	
	VS1-5824-005		2	CONNECTOR, 5P, FEMALE	
	WS3-5358-000		10	SOCKET CONTACT, 22-26AWG	
J1033	NPN			SADDLE INLET SOLENOID	SL12
	VS1-5057-002		1	CONNECTOR, SNAP TIGHT	
	VS1-5824-002		1	CONNECTOR, 2P, FEMALE	
	WS3-5358-000		2	SOCKET CONTACT, 22-26AWG	
J1034	NPN			SADDLE INLET PAPER SENSOR	PI48
	VS1-5824-003		1	CONNECTOR, 3P, FEMALE	
	WS3-5358-000		3	SOCKET CONTACT, 22-26AWG	
J1035	VS1-5057-009		1	CONNECTOR, SNAP TIGHT	
	VS1-5824-009		1	CONNECTOR, 9P, FEMALE	
	VS1-6320-009		1	CONNECTOR, 9P, FEMALE	
	WS3-5358-000		9	SOCKET CONTACT, 22-26AWG	
J1036	VS1-0842-009		1	CONNECTOR, 9P, FEMALE	
	VS1-5057-009		1	CONNECTOR, SNAP TIGHT	
	VS1-5824-009		1	CONNECTOR, 9P, FEMALE	
	WS3-5358-000		9	SOCKET CONTACT, 22-26AWG	
J1037	VS1-5057-008		1	CONNECTOR, SNAP TIGHT	
	VS1-5824-008		1	CONNECTOR, 8P, FEMALE	
	VS1-6321-008		1	CONNECTOR, 8P, FEMALE	
	WS3-5358-000		8	SOCKET CONTACT, 22-26AWG	
J1038	VS1-5057-008		1	CONNECTOR, SNAP TIGHT	
	VS1-5824-008		1	CONNECTOR, 8P, FEMALE	

COPYRIGHT©1999 CANON INC.

FIGURE & KEY NO.	PART NUMBER	RANK	QTY	DESCRIPTION	SERIAL NUMBER / REMARKS
Q B - J1038	VS1-6321-008		1	CONNECTOR, 8P, FEMALE	
	WS3-5358-000		8	SOCKET CONTACT, 22-26AWG	
J1039	VS1-5729-002		1	CONNECTOR, 2P, MALE	
	VS3-5083-002		1	CONNECTOR, 2P, FEMALE	
	WS3-5160-000		2	SOCKET CONTACT, 18-24AWG	
	WS3-5301-000		2	PIN CONTACT	
J1040	VS1-5729-002		1	CONNECTOR, 2P, MALE	
	VS3-5083-002		1	CONNECTOR, 2P, FEMALE	
	WS3-5160-000		2	SOCKET CONTACT, 18-24AWG	
	WS3-5301-000		2	PIN CONTACT	
J1042	VS1-0842-003		1	CONNECTOR, 3P, FEMALE	
	VS1-5057-003		1	CONNECTOR, SNAP TIGHT	
	VS1-5824-003		1	CONNECTOR, 3P, FEMALE	
J1043	VS1-0842-010		1	CONNECTOR, 10P, FEMALE	
	VS1-5057-010		1	CONNECTOR, SNAP TIGHT	
	VS1-5824-010		1	CONNECTOR, 10P, FEMALE	
	WS3-5358-000		10	SOCKET CONTACT, 22-26AWG	
J1044	VS1-0842-006		1	CONNECTOR, 6P, FEMALE	
	VS1-5057-006		1	CONNECTOR, SNAP TIGHT	
	VS1-5824-006		1	CONNECTOR, 6P, FEMALE	
	WS3-5358-000		6	SOCKET CONTACT, 22-26AWG	
J1045	VS1-0842-009		1	CONNECTOR, 9P, FEMALE	
	VS1-5057-009		1	CONNECTOR, SNAP TIGHT	
	VS1-5824-009		1	CONNECTOR, 9P, FEMALE	
	WS3-5358-000		9	SOCKET CONTACT, 22-26AWG	
J1046	VS1-0842-008		1	CONNECTOR, 8P, FEMALE	
	VS1-5057-008		1	CONNECTOR, SNAP TIGHT	
	VS1-5824-008		1	CONNECTOR, 8P, FEMALE	
	WS3-5358-000		8	SOCKET CONTACT, 22-26AWG	
J1047	VS1-0842-008		2	CONNECTOR, 8P, FEMALE	

COPYRIGHT © 1999 CANON INC.

FIGURE & KEY NO.	PART NUMBER	RANK	QTY	DESCRIPTION	SERIAL NUMBER / REMARKS
Q B - J1047	VS1-5057-008		1	CONNECTOR, SNAP TIGHT	
J1048	VS1-0842-003		2	CONNECTOR, 3P, FEMALE	
	VS1-5057-003		1	CONNECTOR, SNAP TIGHT	
J1049	NPN			SADDLE TRAY MOTOR	M20S
	VS1-0842-005		1	CONNECTOR, 5P, FEMALE	
J1050	NPN			SADDLE TRAY H/P SENSOR	PI49
	VS1-0842-003		1	CONNECTOR, 3P, FEMALE	
J1051	NPN			SADDLE TRAY PAPER SENSOR 2	PI52
	VS1-0842-003		1	CONNECTOR, 3P, FEMALE	
J1052	NPN			SADDLE TRAY PAPER SENSOR 3	PI51
	VS1-0842-003		1	CONNECTOR, 3P, FEMALE	
J1053	NPN			SADDLE TRAY PAPER SENSOR 1	PI50
	VS1-0842-003		1	CONNECTOR, 3P, FEMALE	
J1061	------			INSERTER	
	VS1-5057-010		1	CONNECTOR, SNAP TIGHT	
	VS1-6321-010		1	CONNECTOR, 10P, FEMALE	
J1062	------			INSERTER	
	VS1-5057-009		1	CONNECTOR, SNAP TIGHT	
	VS1-6321-009		1	CONNECTOR, 9P, FEMALE	
J1079	------			INSERTER	
	VS1-5057-003		1	CONNECTOR, SNAP TIGHT	
	VS1-6321-003		1	CONNECTOR, 3P, FEMALE	
J1091	------			PAPER FOLDING	
	VS1-0842-010		1	CONNECTOR, 10P, FEMALE	
	VS1-5057-010		1	CONNECTOR, SNAP TIGHT	
J1092	------			PAPER FOLDING	
	VS1-0842-009		1	CONNECTOR, 9P, FEMALE	
	VS1-5057-009		1	CONNECTOR, SNAP TIGHT	
J1096	------			PAPER FOLDING	
	VS1-0279-008		1	CONNECTOR, 8P, FEMALE	

COPYRIGHT©1999 CANON INC.

FIGURE & KEY NO.	PART NUMBER	RANK	QTY	DESCRIPTION	SERIAL NUMBER / REMARKS
Q B - J1096	VS3-0108-008		1	CONNECTOR, 8P, FEMALE	
	WS3-0437-000		2	SOCKET CONTACT, 20-30AWG	
	WS3-0885-000		8	PIN CONTACT, 20-30AWG	
J1118	VS1-0842-006		1	CONNECTOR, 6P, FEMALE	
	VS1-5057-006		1	CONNECTOR, SNAP TIGHT	
	VS1-5824-006		1	CONNECTOR, 6P, FEMALE	
	WS3-5358-000		5	SOCKET CONTACT, 22-26AWG	
JD1	WS6-5091-000		1	CONNECTOR, 14P, MALE	
JD2	FF3-3110-000		1	CABLE, STAPLER	

COPYRIGHT © 1999 CANON INC.

Paper Folding Unit-B1

〔 F24 - 9503 〕

COPYRIGHT © 1999 CANON INC.

CONTENTS

QA. ASSEMBLY LOCATION DIAGRAM

Q01. ATTACHMENT PARTS 1
Q02. ATTACHMENT PARTS 2
Q03. ATTACHMENT PARTS 3

Q10. UPPER COVER ASSEMBLY
Q11. INTERNAL COMPONENTS 1
Q12. INTERNAL COMPONENTS 2
Q13. INTERNAL COMPONENTS 3

Q20. FOLDER MOTOR ASSEMBLY
Q21. COUPLING ASSEMBLY

Q31. RIGHT GUIDE ASSEMBLY
Q32. RIGHT INNER GUIDE ASSEMBLY
Q33. LEFT GUIDE ASSEMBLY
Q34. LEFT INNER GUIDE ASSEMBLY
Q35. FEED UPPER GUIDE ASSEMBLY
Q36. INNER LEFT GUIDE ASSEMBLY
Q37. LOWER LEFT GUIDE ASSEMBLY

Q90. FOLDER DRIVER PCB ASSEMBLY

QB. LIST OF CONNECTORS

D2. NUMERICAL INDEX

COPYRIGHT©1999 CANON INC.
CANON Saddle Finisher-D2 REV.0 JULY 1999 PRINTED IN JAPAN [IMPRIME AU JAPON]

FIGURE QA ASSEMBLY LOCATION DIAGRAM

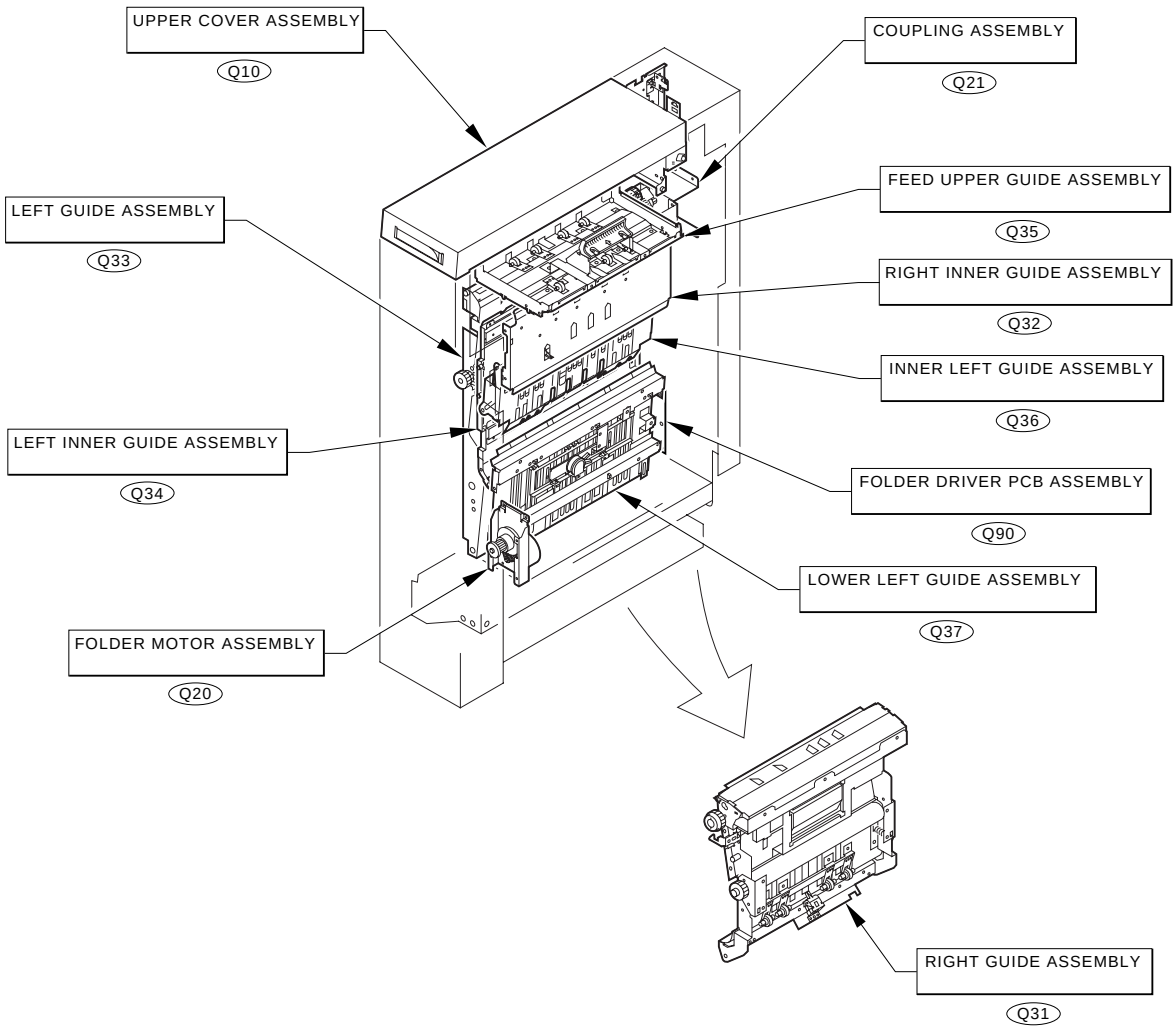

COPYRIGHT © 1999 CANON INC.

FIGURE Q01 ATTACHMENT PARTS 1

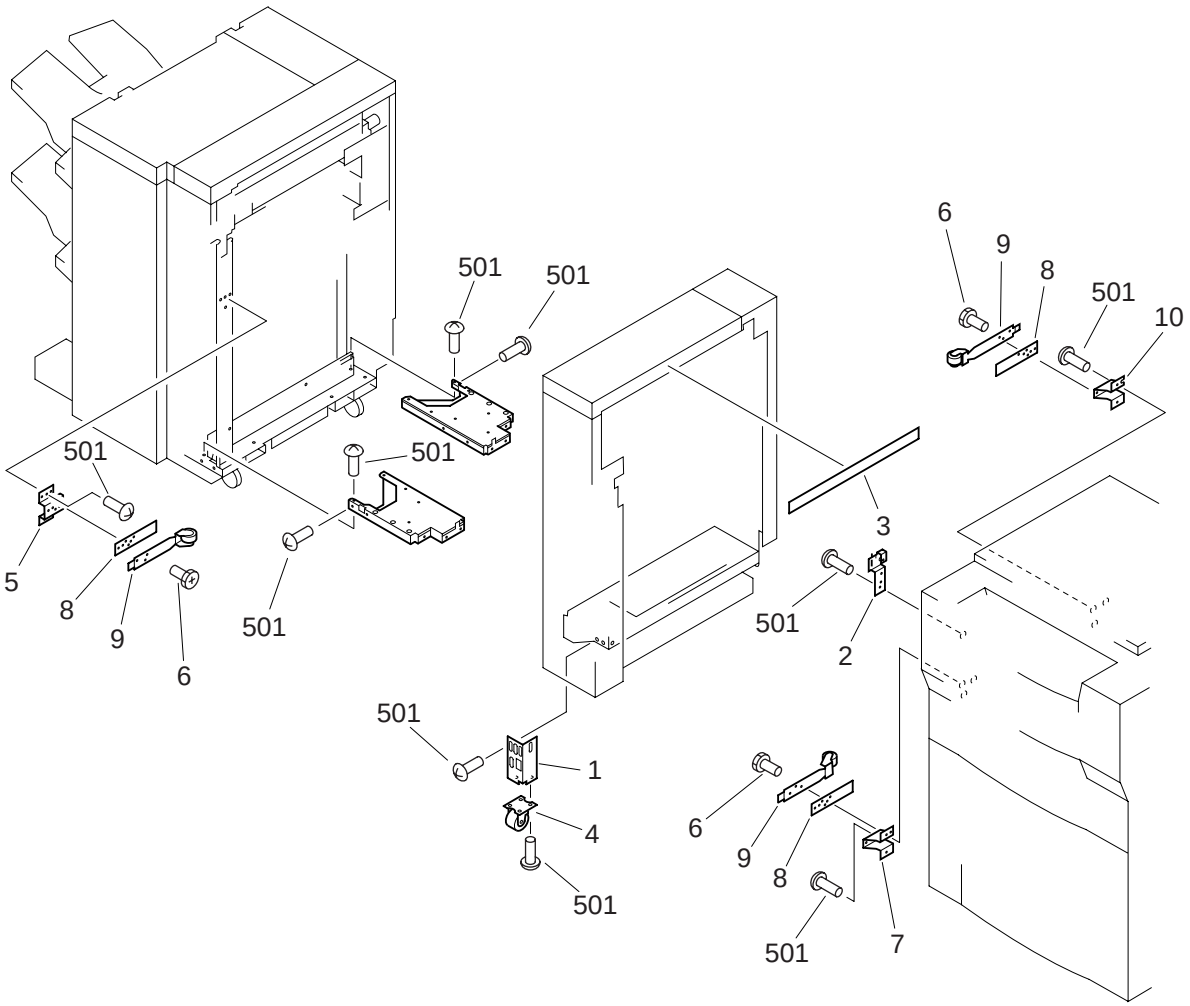

COPYRIGHT © 1999 CANON INC.

FIGURE & KEY NO.	PART NUMBER	RANK	QTY	DESCRIPTION	SERIAL NUMBER / REMARKS
Q01 -	NPN		RF	ATTACHMENT PARTS 1	
1	FB4-8755-000		1	MOUNT, CASTER	
2	FB4-8736-000		1	PLATE, LATCH	
3	FB4-8722-000		1	GAP TAPE	
4	FB4-8962-000		1	CASTER	
5	FB4-8739-000		1	PLATE, GUIDE PRESS, LEFT	
6	FA4-6702-000		6	SCREW, CAP	
7	FB4-8737-000		1	PLATE,GUIDE PRESS,RIGHT FRONT	
8	FC2-6544-000		3	PLATE, SPRING SUPPORT	
9	FF3-1637-000		3	ROLLER, PRESSURE	
10	FB4-8738-000		1	PLATE, GUIDE PRESS, RIGHT REAR	
501	XB6-7400-609		AR	SCREW,TP,M4X6	

COPYRIGHT © 1999 CANON INC.

FIGURE Q02 ATTACHMENT PARTS 2 (1/2)

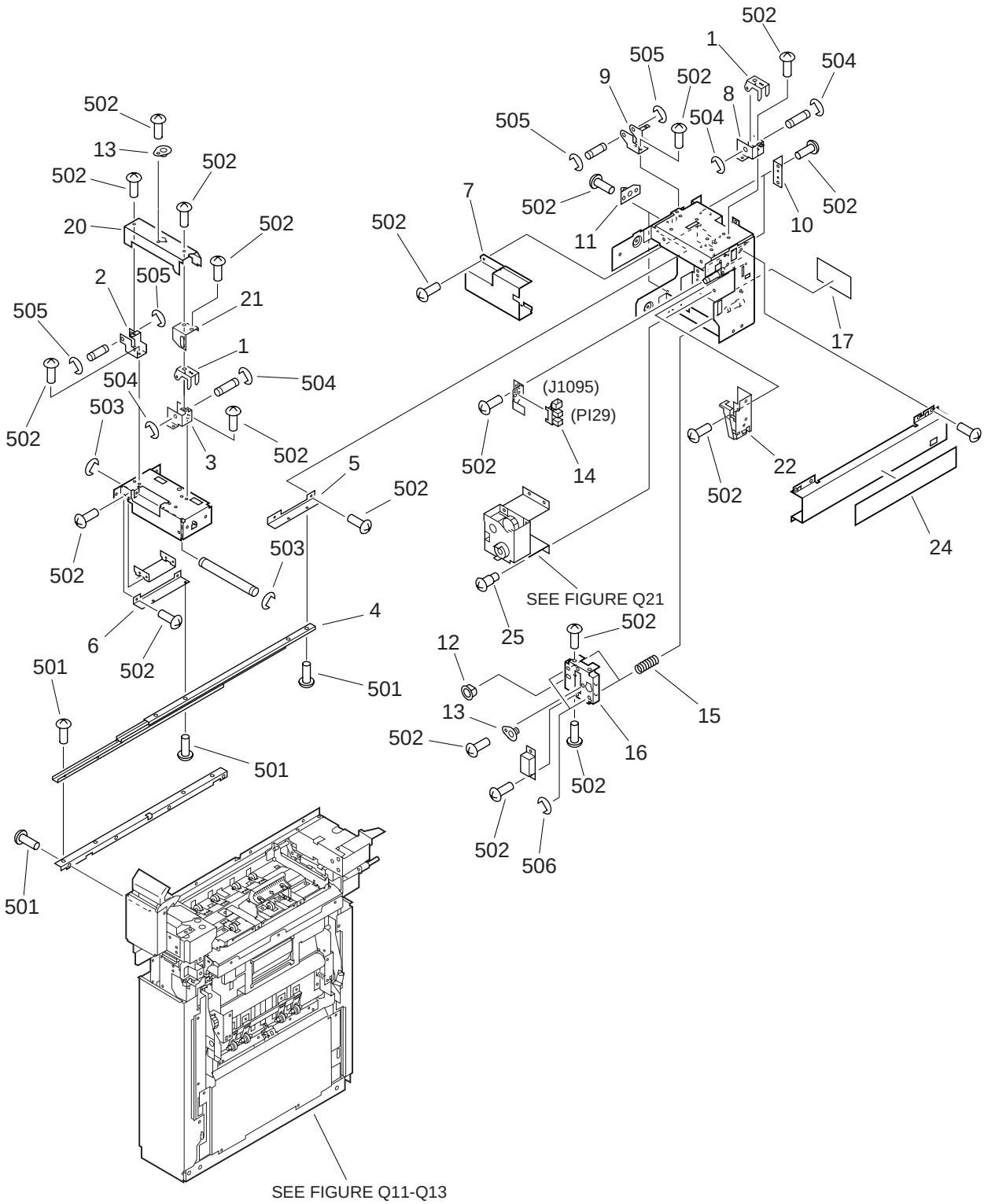

COPYRIGHT © 1999 CANON INC.
CANON Saddle Finisher-D2 REV.0 JULY 1999 PRINTED IN JAPAN [IMPRIME AU JAPON]

FIGURE Q02 ATTACHMENT PARTS 2 (2/2)

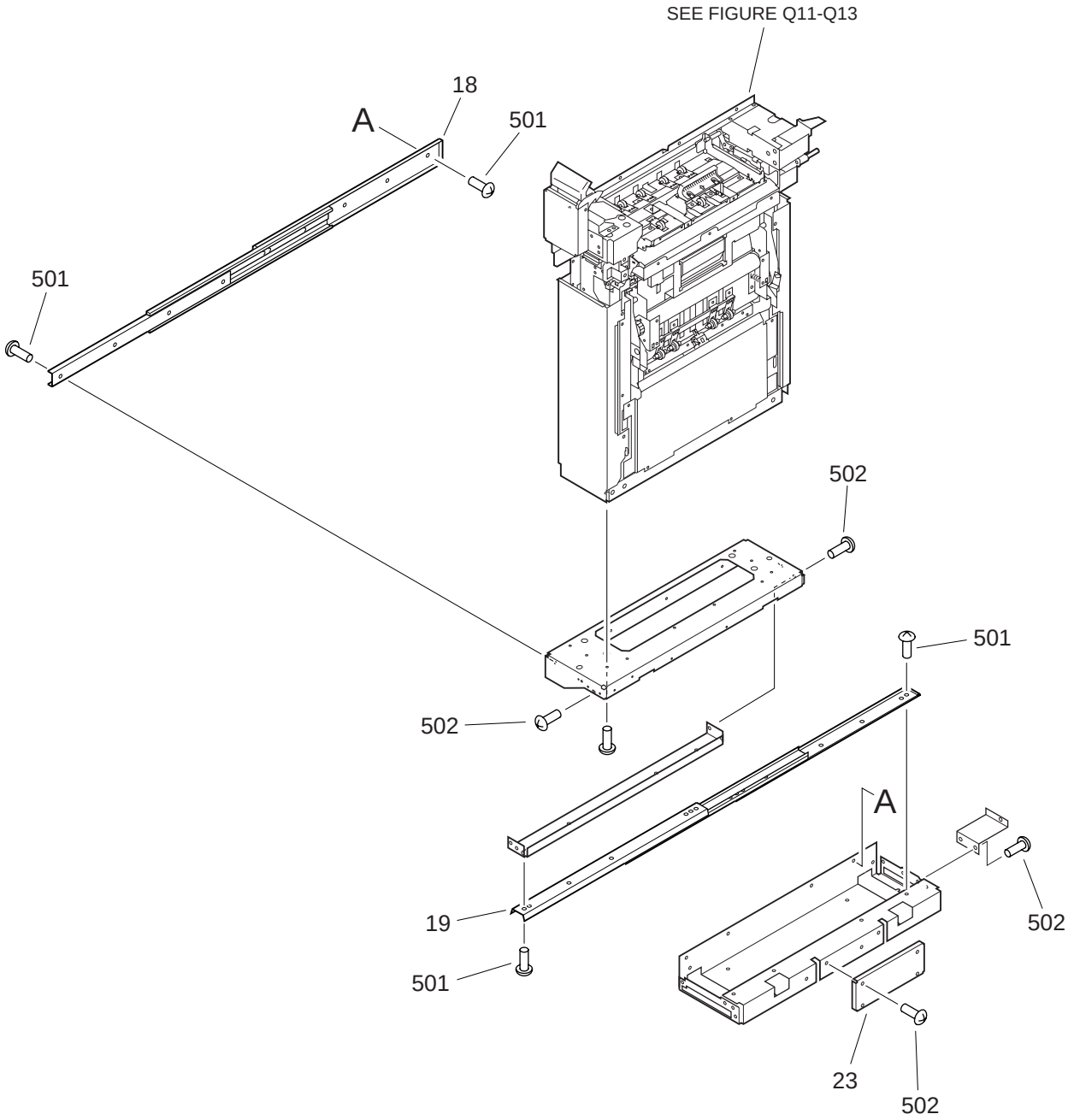

FIGURE & KEY NO.	PART NUMBER	RANK	QTY	DESCRIPTION	SERIAL NUMBER / REMARKS
Q02 -	NPN		RF	ATTACHMENT PARTS 2	
1	FB4-8245-000		2	LATCH	
2	FB4-8803-000		1	SUPPORT, LATCH, LEFT	
3	FB4-8804-000		1	SUPPORT, LATCH, RIGHT	
4	FC2-4262-000		1	RAIL, SLIDE, UPPER	
5	FC2-4278-000		1	PLATE, SLIDE, RAIL, 1	
6	FC2-4279-000		1	PLATE, SLIDE, RAIL, 2	
7	FC2-4277-000		1	COVER, CABLE	
8	FC2-4311-000		1	MOUNT, LATCH, RIGHT	
9	FC2-4312-000		1	MOUNT, LATCH, LEFT	
10	FC2-4356-000		2	PLATE, FRAME	
11	FF3-1632-000		2	PIN, POSITIONING	
12	FS1-1451-030		1	BUSHING	
13	FS2-1542-000		2	BUSHING	
14	WG8-5362-000		1	IC, TLP1241, PHOTO-INTERRUPTER	PI29 J1095
15	FS4-2464-000		2	SPRING, COMPRESSION	
16	FC2-4264-000		1	PLATE, BLOWER	
17	FS9-0064-000		1	LABEL	
18	FC2-4260-000		1	RAIL, SLIDE, LOWER	
19	FC2-4261-000		1	RAIL, SLIDE, LOWER	
20	FB4-8789-000		1	PANEL, FRONT INNER	
21	FB4-8980-000		1	PLATE, REINFORCEMENT	
22	FB3-0123-030		1	HOLDER, SWITCH	
23	FC2-4358-000		1	PLATE, SUPPORT, 2	
24	FS9-0065-000		1	LABEL	
25	FS5-9216-000		2	SCREW,STEPPED,M4X6	
501	XB1-2300-609		8	SCREW,MACH.,TRUSS HEAD,M3X6	
502	XB6-7400-609		AR	SCREW,TP,M4X6	
503	XD2-1100-502		2	RING,E	
504	XD2-1100-642		8	RING,E	

COPYRIGHT©1999 CANON INC. CANON Saddle Finisher-D2 REV.0 JULY 1999 PRINTED IN JAPAN [IMPRIME AU JAPON]

FIGURE & KEY NO.	PART NUMBER	RANK	QTY	DESCRIPTION	SERIAL NUMBER / REMARKS
Q02 - 505	XD2-1100-802		4	RING,E	
506	XD2-1200-642		2	RING,E	

COPYRIGHT©1999 CANON INC.

FIGURE Q03 ATTACHMENT PARTS 3

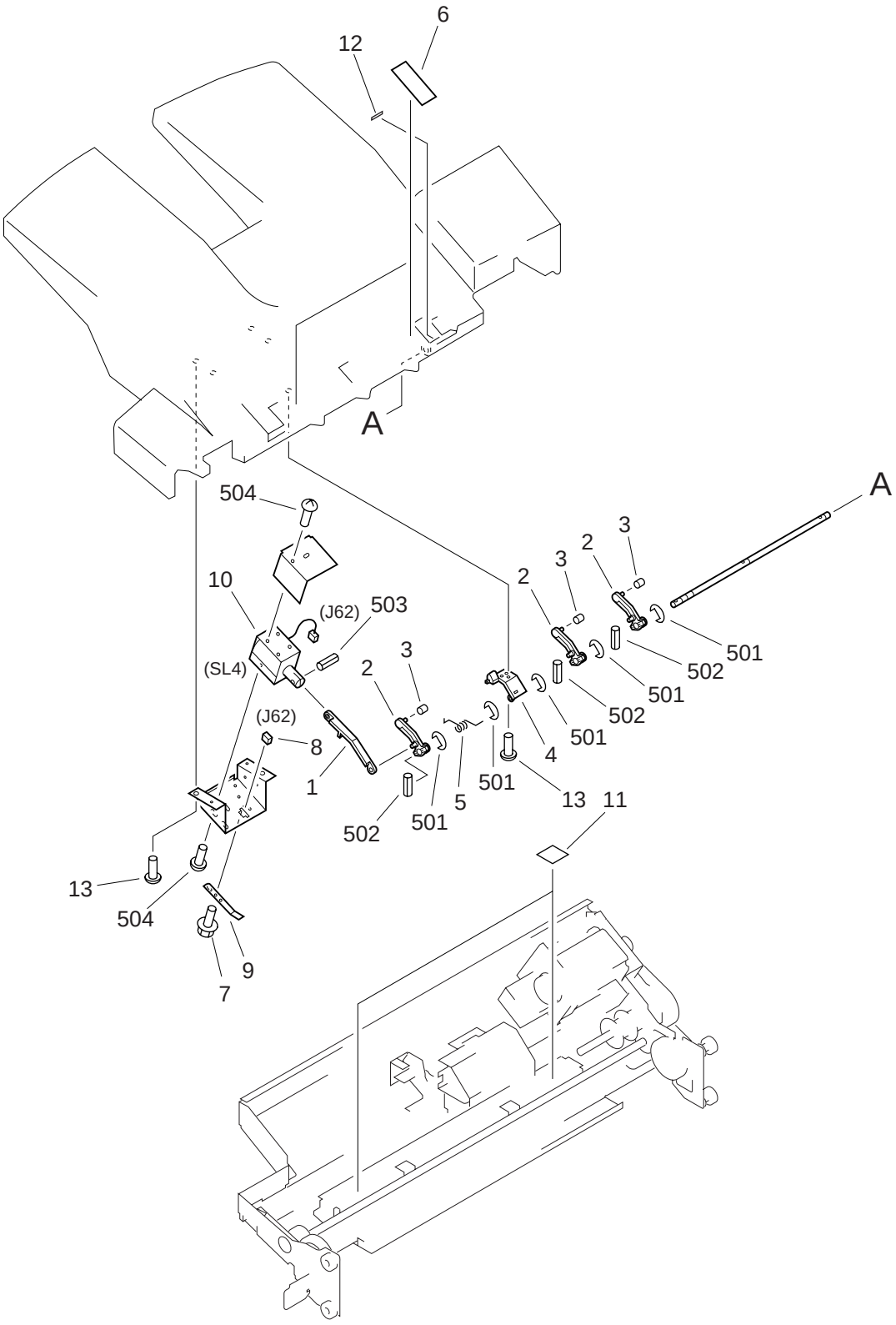

COPYRIGHT © 1999 CANON INC.

FIGURE & KEY NO.	PART NUMBER	RANK	QTY	DESCRIPTION	SERIAL NUMBER / REMARKS
Q03 -	NPN		RF	ATTACHMENT PARTS 3	
1	FB4-8300-000		1	LEVER, SOLENOID	
2	FB4-8299-000		3	LEVER	
3	FB4-8301-000		3	ROLLER	
4	FB4-8327-000		1	HOLDER	
5	FB4-8331-000		1	SPRING, TORSION	
6	FB4-8335-000		2	SPONGE, RUBBER	
7	XA9-0849-000		1	SCREW,RS,M3X6	
8	VS1-5057-003		1	CONNECTOR, SNAP TIGHT	J62
9	FB4-8330-000		1	SPRING, GROUNDING	
10	FH7-5876-000		1	SOLENOID, DC24V	SL4 J62
11	FB4-8334-000		2	SHEET, SILENCER	
12	FB4-8308-000		1	RUBBER, STOP	
13	XA9-0605-000		AR	SCREW,P,M4X8	
501	XD2-1100-322		5	RING,E	
502	XD3-1160-162		3	PIN,SPRING	
503	XD3-1300-162		1	PIN,SPRING	
504	XB1-2300-409		5	SCREW,MACH.,TRUSS HEAD,M3X4	

COPYRIGHT © 1999 CANON INC.

FIGURE Q10 UPPER COVER ASSEMBLY

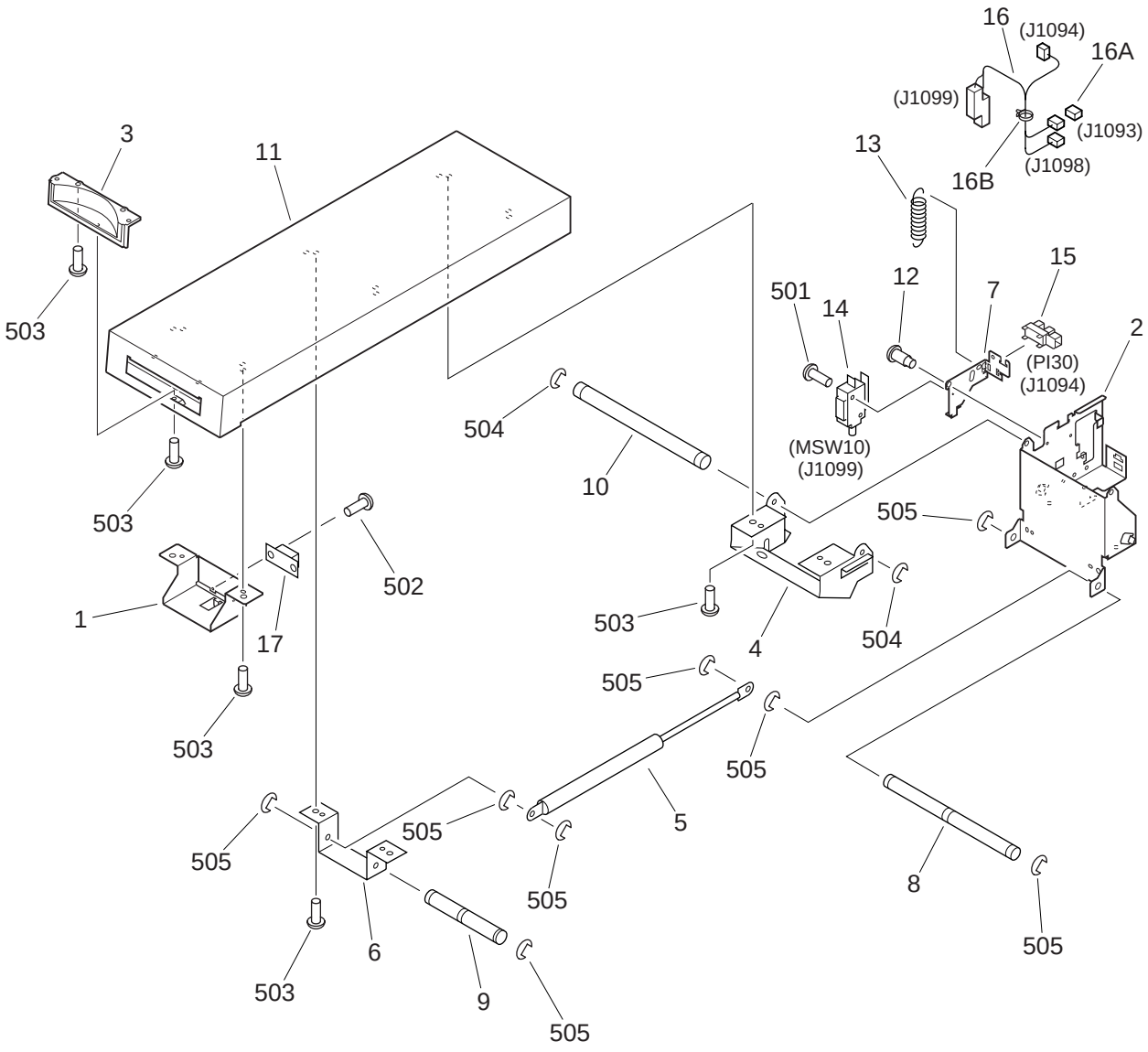

COPYRIGHT © 1999 CANON INC.

FIGURE & KEY NO.	PART NUMBER	RANK	QTY	DESCRIPTION	SERIAL NUMBER / REMARKS
Q10 -	FG6-3251-000		1	UPPER COVER ASSEMBLY	
1	FB4-8802-000		1	PLATE, UPPER PANEL POSITION	
2	FB4-8965-000		1	COVER, HINGE INNER	
3	FB4-8966-000		1	KNOB, UPPER COVER	
4	FC2-4267-000		1	PLATE, COVER	
5	FC2-4276-000		1	DAMPER UNIT	
6	FC2-4291-000		1	MOUNT, DAMPER	
7	FC2-4309-000		1	PLATE, SWITCH	
8	FC2-4343-000		1	SHAFT, DAMPER, 1	
9	FC2-4344-000		1	SHAFT, DAMPER, 2	
10	FC2-4345-000		1	SHAFT, HINGE	
11	FF5-8578-000		1	PANEL, TOP	
12	FS1-9078-000		2	SCREW,STEPPED,M4	
13	FS4-2463-000		1	SPRING, TENSION	
14	WC4-5126-000		1	MICROSWITCH	MSW10 J1099
15	WG8-5362-000		1	IC, TLP1241, PHOTO-INTERRUPTER	PI30 J1094
16	FG3-0539-000		1	CABLE, FOLDER UPPER PANEL	J1093,1094,1098,1099
16A	VS1-5057-003		1	CONNECTOR, SNAP TIGHT	J1093
16B	WT2-5041-000		2	TIE, CABLE	
17	FB4-8978-000		1	LATCH, MAGNET	
501	XB1-2301-209		1	SCREW,MACH.,TRUSS HEAD,M3X12	
502	XB6-7300-609		2	SCREW,TP,M3X6	
503	XB6-7400-609		4	SCREW,TP,M4X6	
504	XD2-1100-502		2	RING,E	
505	XD2-1100-642		8	RING,E	

COPYRIGHT © 1999 CANON INC.

FIGURE Q11 INTERNAL COMPONENTS 1

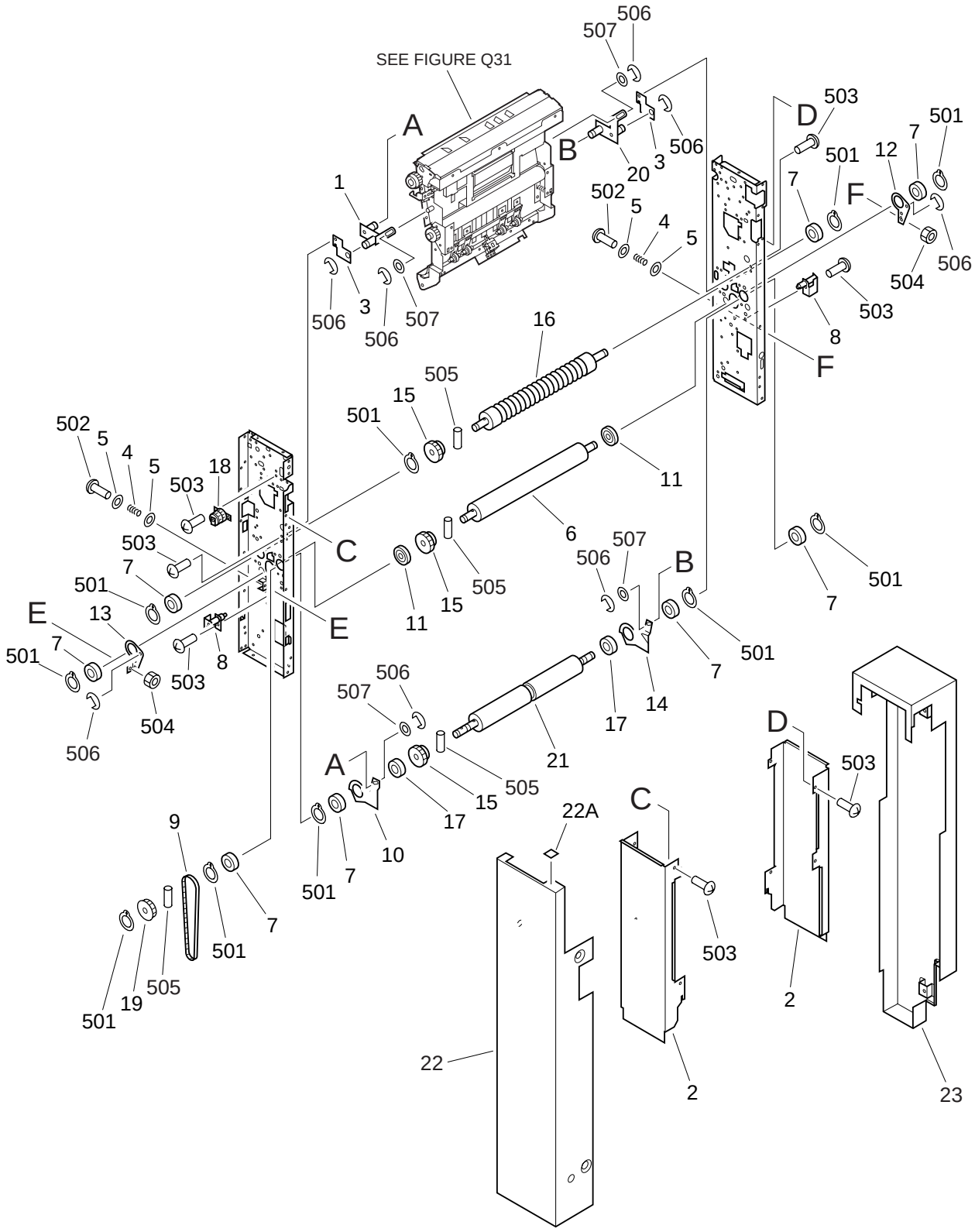

COPYRIGHT © 1999 CANON INC.

FIGURE & KEY NO.	PART NUMBER	RANK	QTY	DESCRIPTION	SERIAL NUMBER / REMARKS
Q11 -	NPN		RF	INTERNAL COMPONENTS 1	
1	FF3-2309-000		1	ARM, DOOR, REAR	
2	FB4-8785-000		2	COVER, PCB	
3	FC2-4302-000		2	PLATE, ARM	
4	FS2-2261-000		2	SPRING, COMPRESSION	
5	FA4-2364-000		4	WASHER	
6	FA4-2272-040		1	ROLLER, (B)	
7	XG9-0131-000		8	BALL BEARING, 6902NR	
8	FF3-1638-000		2	PIN, GUIDE	
9	XF9-0602-000		1	BELT, TIMING	
10	FC2-4355-000		1	ARM, PRESSURE, REAR	
11	FA4-2285-000		2	PULLEY, RELEASE	
12	FA4-2286-000		1	ARM, COMPRESSION, FRONT	
13	FA4-2287-000		1	ARM, COMPRESSION, REAR	
14	FC2-4354-000		1	ARM, PRESSURE, FRONT	
15	FS2-0384-000		3	GEAR, BEND ROLLER	
16	FE6-0780-000		1	ROLLER, PAPER FEED	
17	FA4-2313-000		2	SPACER	
18	FF5-8570-000		1	PLATE, GEAR PULLEY, 2	
19	FS1-3162-000		2	PULLEY, 24T (1)	
20	FF3-2308-000		1	ARM, DOOR, FRONT	
21	FC2-4270-000		1	ROLLER, SEPARATION	
22	FF5-8577-000		1	PANEL, FRONT	
22A	FB4-8998-000		1	LABEL, ARROW	
23	FB4-8781-000		1	PANEL, REAR	
501	XD2-3100-152		10	RING,C,EXTERNAL	
502	XB1-2403-509		2	SCREW,MACH.,TRUSS HEAD,M4X35	
503	XB6-7400-609		AR	SCREW,TP,M4X6	
504	XB7-2100-409		2	NUT,HEX,M4	
505	XD3-2200-212		4	PIN,DOWEL	

COPYRIGHT © 1999 CANON INC.

FIGURE & KEY NO.	PART NUMBER	RANK	QTY	DESCRIPTION	SERIAL NUMBER / REMARKS
Q11 - 506	XD2-1100-642		8	RING,E	
507	XD1-1108-225		4	SHIM	

COPYRIGHT©1999 CANON INC. CANON Saddle Finisher-D2 REV.0 JULY 1999 PRINTED IN JAPAN [IMPRIME AU JAPON]

FIGURE Q12 INTERNAL COMPONENTS 2

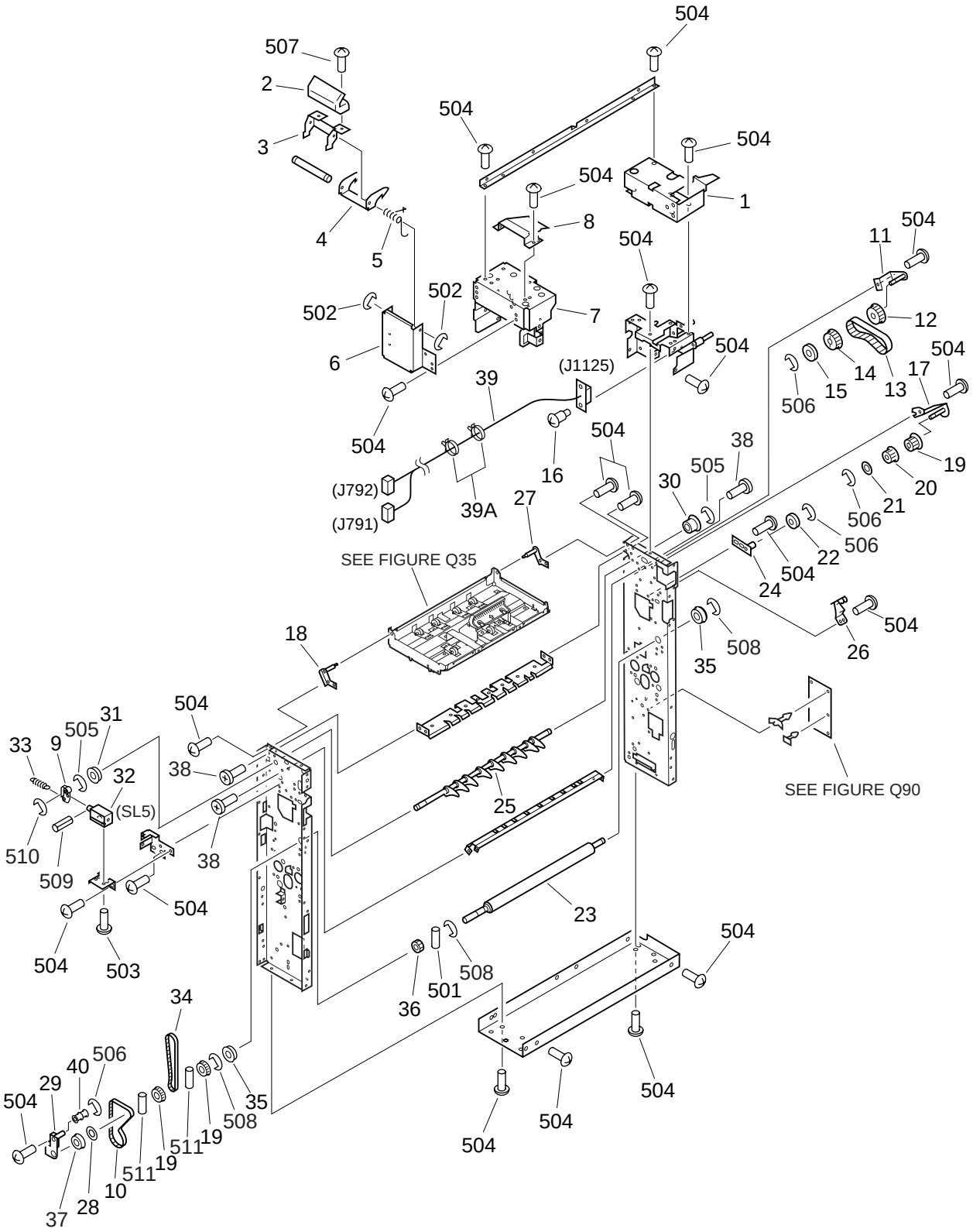

COPYRIGHT © 1999 CANON INC.

FIGURE & KEY NO.	PART NUMBER	RANK	QTY	DESCRIPTION	SERIAL NUMBER / REMARKS
Q12 -	NPN		RF	INTERNAL COMPONENTS 2	
1	FB4-8758-000		1	MOUNT, ACULIDE, REAR	
2	FC2-5100-000		1	KNOB	
3	FB4-8792-000		1	PLATE, KNOB INNER	
4	FB4-8793-000		1	PLATE, KNOB INNER, 2	
5	FB4-8790-000		1	SPRING, TORSION	
6	FB4-8775-000		1	PLATE, KNOB OUTER	
7	FB4-8756-000		1	PLATE, FRONT SUB	
8	FB4-8776-000		1	PLATE, FRONT SUB, 2	
9	FA4-2278-000		1	ARM, INLET DEFL. SOLENOID	
10	XF9-0605-000		1	BELT, TIMING	
11	FF3-1642-000		1	MOUNT, PULLEY	
12	FS1-3163-000		1	PULLEY, 24T (2)	
13	XF2-2506-164		1	BELT, TIMING	
14	FS2-0387-000		1	GEAR, 40T	
15	FS2-6560-000		1	ROLLER	
16	FS5-9213-000		2	SCREW,STEPPED,M4X7	
17	FF5-8573-000		1	MOUNT, PULLEY, A	
18	FF5-8562-000		1	PIN, PLATE, FRONT	
19	FS1-3159-000		3	PULLEY, 12T	
20	FS2-0388-000		1	GEAR, 20T	
21	FA4-2332-000		1	SPACER, GEAR	
22	FC2-6548-000		2	BUSHING	
23	FC2-4268-000		1	ROLLER, PRESSURE	
24	FF3-1640-000		1	PIN	
25	FA4-2275-000		1	CLAW, GUIDE	
26	FF3-1644-000		1	ROLLER, ADJUSTING	
27	FF5-8563-000		1	PIN, PLATE, REAR	
28	RA1-2483-000		1	FLANGE, PULLEY	
29	FF5-8571-000		1	MOUNT, 2ND FOLDING ROLLER	

COPYRIGHT © 1999 CANON INC.

FIGURE & KEY NO.	PART NUMBER	RANK	QTY	DESCRIPTION	SERIAL NUMBER / REMARKS
Q12 - 30	FS1-1376-000		1	BUSHING	
31	FS1-1433-000		1	BUSHING	
32	FH7-5062-000		1	SOLENOID, 24VDC	SL5
33	FS7-2137-000		1	SPRING, TENSION	
34	XF9-0604-000		1	BELT, TIMING	
35	XG3-8016-505		2	BALL BEARING	
36	FS4-0434-000		1	GEAR, 20T	
37	FS1-1187-000		1	BUSHING	
38	FA9-2277-000		3	SCREW, M4X6	
39	FG3-0538-000		1	CABLE, FOLDER DRAWER MAIN	J791,792,1125
39A	WT2-5041-000		2	TIE, CABLE	
40	FS2-6438-000		1	ROLLER, TENSIONER	
501	XD3-2200-122		10	PIN,DOWEL	
502	XD2-1100-402		4	RING,E	
503	XB6-7300-409		2	SCREW,TP,M3X4	
504	XB6-7400-609		AR	SCREW,TP,M4X6	
505	XD2-1100-322		3	RING,E	
506	XD2-1100-502		3	RING,E	
507	XB1-2400-606		2	SCREW,MACH.,TRUSS HEAD,M4X6	
508	XD2-1100-642		3	RING,E	
509	XD3-2100-082		1	PIN,DOWEL	
510	XD1-1100-242		1	SHIM	
511	XD3-2200-142		2	PIN,DOWEL	

COPYRIGHT©1999 CANON INC.

FIGURE Q13 INTERNAL COMPONENTS 3

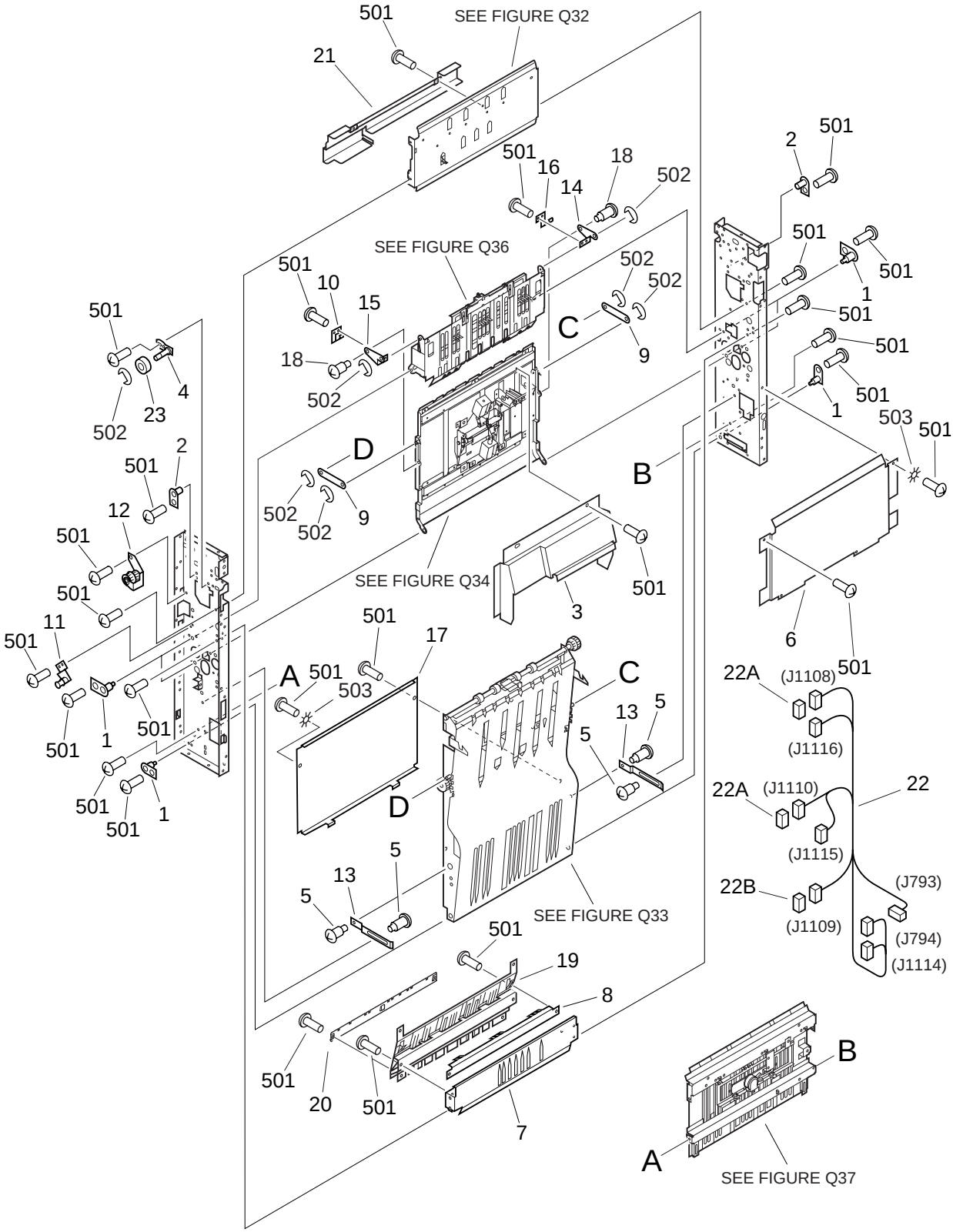

COPYRIGHT © 1999 CANON INC.

FIGURE & KEY NO.	PART NUMBER	RANK	QTY	DESCRIPTION	SERIAL NUMBER / REMARKS
Q13 -	NPN		RF	INTERNAL COMPONENTS 3	
1	FF1-6572-000		6	PLATE, PIN	
2	FF1-6573-000		2	PIVOT	
3	FB4-8801-000		1	COVER, SOLENOID	
4	FF5-8572-000		1	PLATE, LATCH LOCK	
5	FA2-5970-000		4	SCREW, STEPPED	
6	FC2-4284-000		1	COVER, MOTOR	
7	FC2-4248-000		1	GUIDE, DELIVERY, RIGHT LOWER	
8	FB4-8986-000		1	PLATE, STOPPER	
9	FA4-2341-000		2	ARM, COUPLING	
10	FA4-2281-000		1	SPRING, LEAF, REAR	
11	FF3-1644-000		1	ROLLER, ADJUSTING	
12	FF3-1647-000		1	PLATE, W/GEAR	
13	FA4-2342-000		2	STOP, GUIDE	
14	FA4-2288-000	N	1	PLATE, FRONT, COUPLING, GUIDE	
15	FA4-2289-000	N	1	PLATE, REAR, COUPLING, GUIDE	
16	FA4-2290-000		1	SPRING, LEAF, FRONT	
17	FA4-2362-000		1	COVER, SOLENOID (2)	
18	FS1-9076-000		2	SCREW,STEPPED,M4	
19	FB4-8969-000		1	GUIDE, CENTER RIGHT	
20	FB4-8979-000		1	PLATE, CENTER RIGHT GUIDE	
21	FB4-8968-000		1	COVER, SENSOR, 3	
22	FG3-0541-000		1	CABLE, DRIVER CONNECTOR	J793,794,J1108-1110 J1114-1116
22A	VS1-5057-003		2	CONNECTOR, SNAP TIGHT	J1108,1110
22B	VS1-5057-004		1	CONNECTOR, SNAP TIGHT	J1109
23	XG9-0387-000		1	BEARING, BALL	
501	XB6-7400-609		AR	SCREW,TP,M4X6	
502	XD2-1100-502		6	RING,E	
503	XD1-4200-402		2	WASHER,TOOTHED LOCK	

FIGURE Q20 FOLDER MOTOR ASSEMBLY

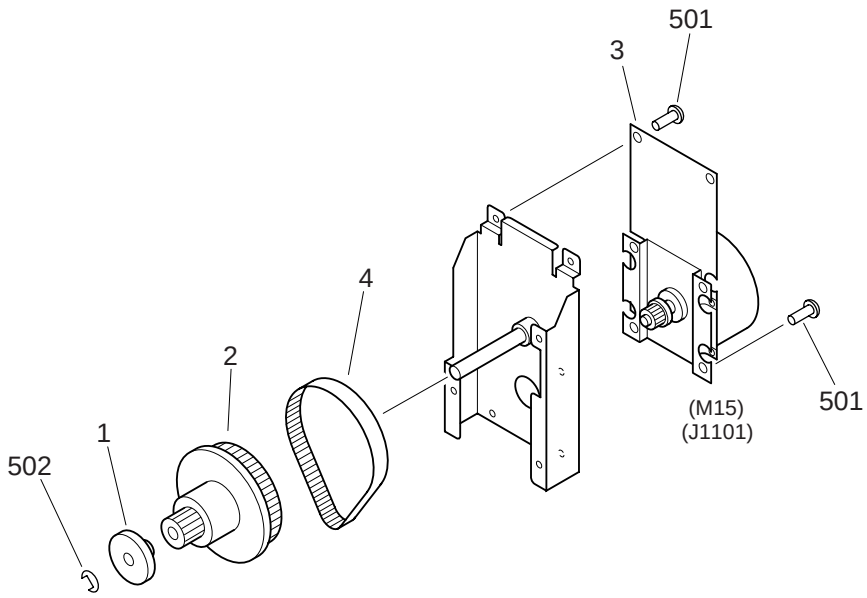

FIGURE & KEY NO.	PART NUMBER	RANK	QTY	DESCRIPTION	SERIAL NUMBER / REMARKS
Q20 -	FG6-3266-000		1	FOLDER MOTOR ASSEMBLY	
1	FA5-5377-000		1	PULLEY	
2	FS2-3819-000		1	PULLEY	
3	FF3-1645-000		1	MOTOR, DC24V	M15 J1101
4	XF9-0603-000		1	BELT, TIMING	
501	XB1-2400-609		4	SCREW,MACH.,TRUSS HEAD,M4X6	
502	XD2-1100-642		1	RING,E	

COPYRIGHT©1999 CANON INC.

FIGURE Q21 COUPLING ASSEMBLY

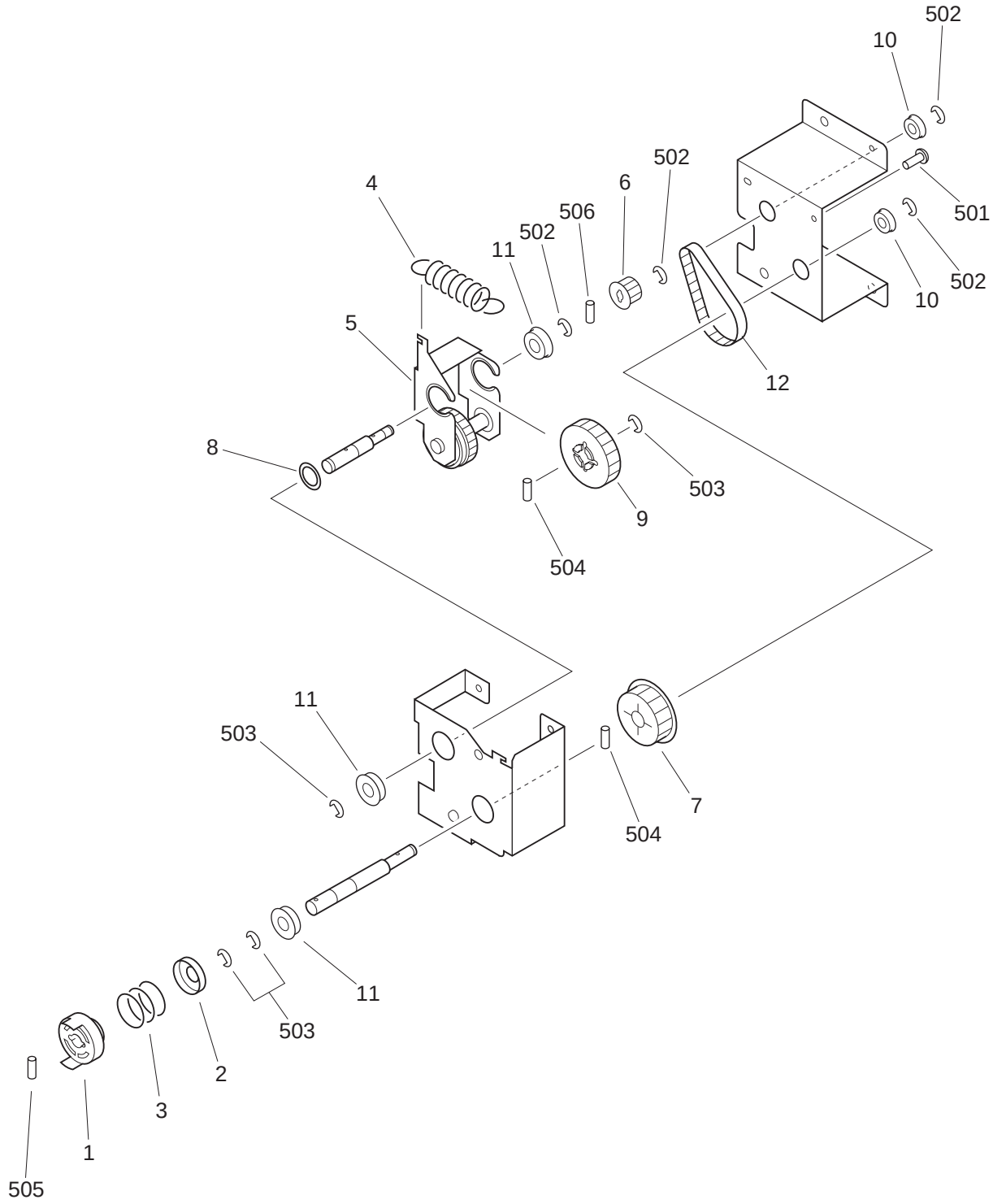

COPYRIGHT © 1999 CANON INC.

FIGURE & KEY NO.	PART NUMBER	RANK	QTY	DESCRIPTION	SERIAL NUMBER / REMARKS
Q21 -	FG6-3257-000		1	COUPLING ASSEMBLY	
1	FA6-8230-000		1	COUPLING	
2	FA6-8304-000		1	WASHER, SPRING	
3	FS4-2168-000		1	SPRING, COMPRESSION	
4	FS7-2138-000		1	SPRING, TENSION	
5	FF3-1634-000		1	PLATE, SWING	
6	FS2-3470-000		1	PULLEY, 20T	
7	FS2-3745-000		1	PULLEY, 40T	
8	FS2-6561-000		1	WASHER, PLAIN	
9	FS3-0641-000		1	GEAR, 30T	
10	XG3-6012-405		2	BALL BEARING, NSK MF126ZZ	
11	XG3-8016-505		3	BALL BEARING	
12	XF9-0430-000		1	BELT, TIMING, FLAT	
501	XB6-7400-609		3	SCREW,TP,M4X6	
502	XD2-1100-502		5	RING,E	
503	XD2-1100-642		6	RING,E	
504	XD3-2200-162		2	PIN,DOWEL	
505	XD3-2300-142		1	PIN,DOWEL	
506	XD3-2200-082		1	PIN,DOWEL	

COPYRIGHT©1999 CANON INC.

FIGURE Q31 RIGHT GUIDE ASSEMBLY

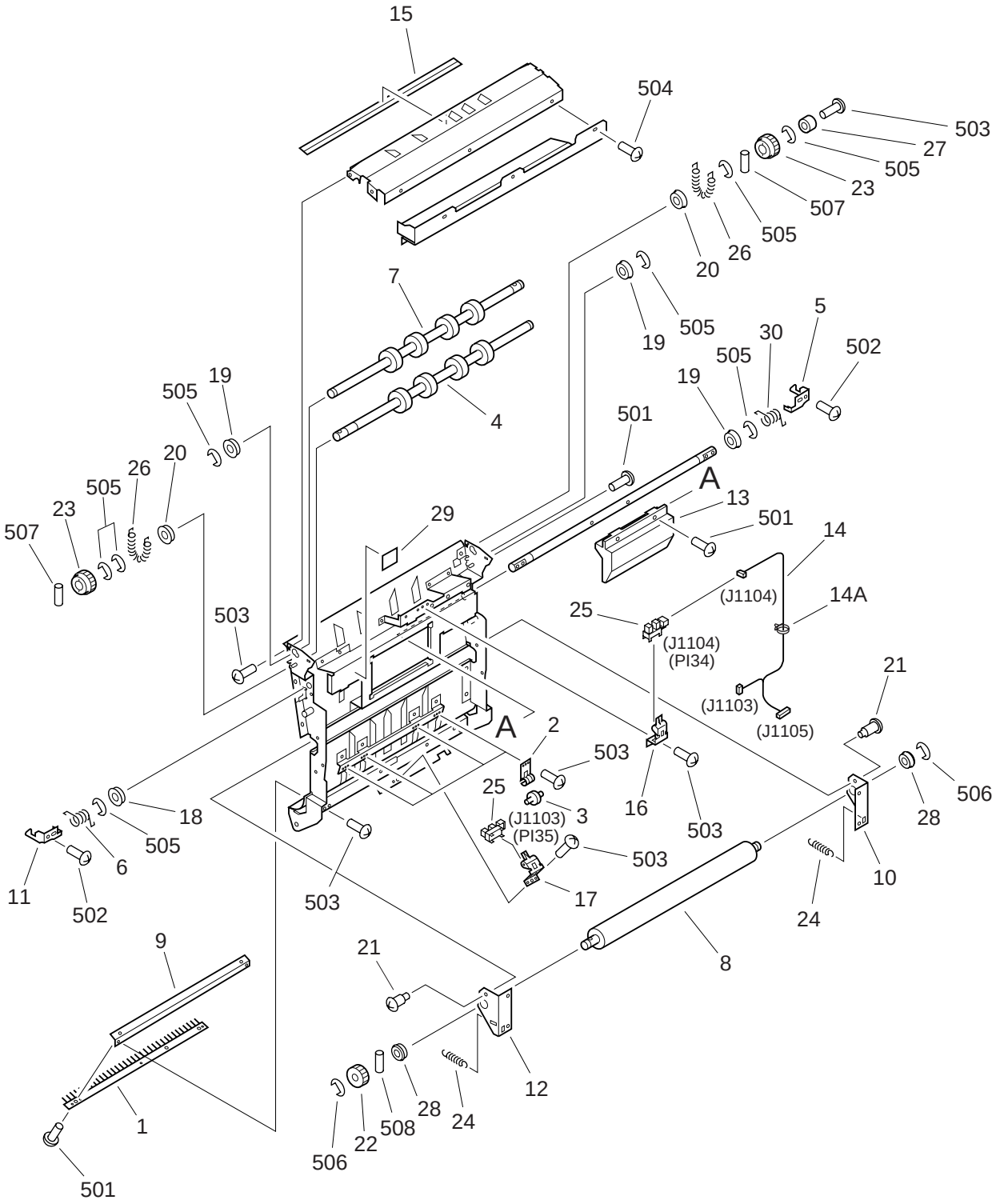

COPYRIGHT © 1999 CANON INC. CANON Saddle Finisher-D2 REV.0 JULY 1999 PRINTED IN JAPAN [IMPRIME AU JAPON]

FIGURE & KEY NO.	PART NUMBER	RANK	QTY	DESCRIPTION	SERIAL NUMBER / REMARKS
Q31 -	FG6-3260-000		1	RIGHT GUIDE ASSEMBLY	
1	FA1-4842-030		1	ELIMINATOR, STATIC CHARGE	
2	FA3-7418-000		4	SPRING, ROLLER HOLDER	
3	FA3-7419-000		4	ROLLER (OLD)	
4	FB4-8766-000		1	ROLLER, FEEDER HOLDING	
5	FC2-6543-000	N	1	LATCH, REAR, GUIDE	
6	FA4-2339-000		1	SPRING, TORSION, FRONT, LATCH	
7	FB4-8767-000		1	ROLLER, FEEDER INLET	
8	FC2-4269-000		1	ROLLER, PRESSURE	
9	FC2-4282-000		1	PLATE, ELIMINATOR	
10	FB4-8784-000		1	ARM, PRESS ROLLER	
11	FB4-8787-000		1	LATCH, RIGHT GUIDE, FRONT	
12	FC2-4295-000		1	ARM, ROLLER, RIGHT	
13	FC2-4333-000		1	HANDLE, GUIDE	
14	FF3-3750-000		1	CABLE, RIGHT GUIDE	J1103-1105
14A	WT2-5041-000		8	TIE, CABLE	
15	FB4-8772-000		1	SHEET, INLET GUIDE	
16	FF5-8567-000		1	PLATE, SENSOR	
17	FF3-1635-000		1	FLAG, SENSOR, 1	
18	FS1-1187-000		1	BUSHING	
19	FS1-1213-000		3	BUSHING	
20	FS1-1435-000		2	BUSHING	
21	FS1-9076-000		4	SCREW,STEPPED,M4	
22	FS4-0434-000		1	GEAR, 20T	
23	FS2-0386-000		2	GEAR, ROLLER, 20T	
24	FS4-2462-000		2	SPRING, TENSION	
25	WG8-5362-000		2	IC, TLP1241, PHOTO-INTERRUPTER	PI34,35 J1104,1103
26	FS4-2465-000		2	SPRING, TENSION	
27	XH9-0101-000		1	SHEET, RUBBER	
28	XG3-8016-505		2	BALL BEARING	

COPYRIGHT © 1999 CANON INC.

FIGURE & KEY NO.	PART NUMBER	RANK	QTY	DESCRIPTION	SERIAL NUMBER / REMARKS
Q31 - 29	FB4-8999-000		1	LABEL, ARROW	
30	FA4-2340-000		1	SPRING, TORSION, REAR, LATCH	
501	XB1-2300-606		2	SCREW,MACH.,TRUSS HEAD,M3X6	
502	XB6-7300-609		4	SCREW,TP,M3X6	
503	XB6-7400-609		11	SCREW,TP,M4X6	
504	XB1-2400-606		3	SCREW,MACH.,TRUSS HEAD,M4X6	
505	XD2-1100-502		5	RING,E	
506	XD2-1100-642		2	RING,E	
507	XD3-2200-122		2	PIN,DOWEL	
508	XD3-2200-142		1	PIN,DOWEL	

COPYRIGHT©1999 CANON INC.

FIGURE Q32 RIGHT INNER GUIDE ASSEMBLY

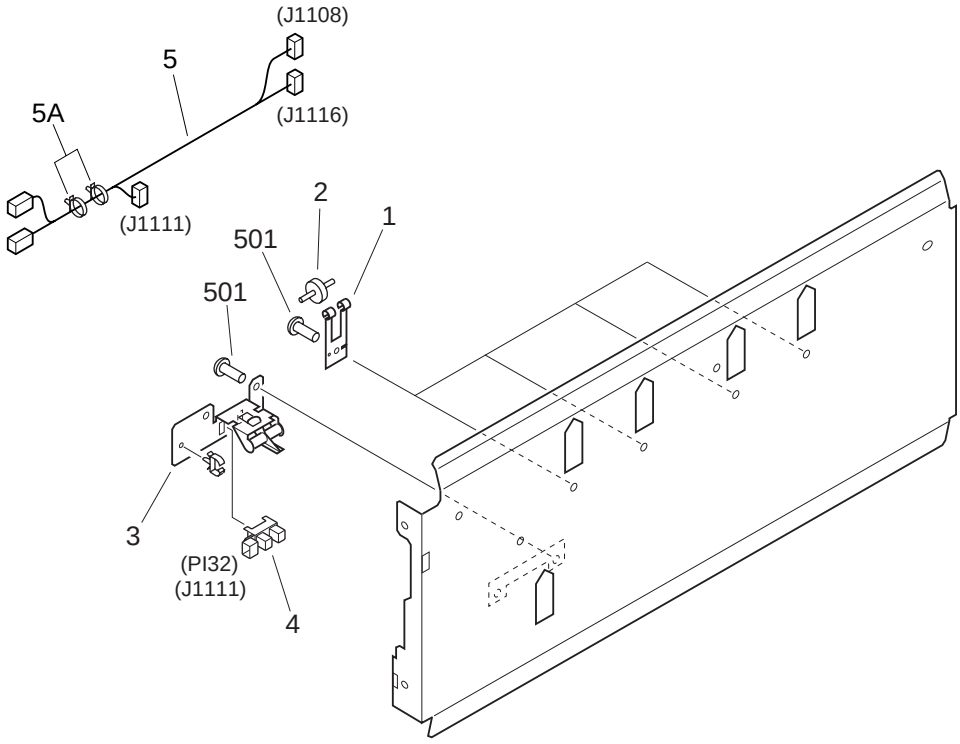

FIGURE & KEY NO.	PART NUMBER	RANK	QTY	DESCRIPTION	SERIAL NUMBER / REMARKS
Q32 -	FG6-3261-000		1	RIGHT INNER GUIDE ASSEMBLY	
1	FA3-7418-000		4	SPRING, ROLLER HOLDER	
2	FA3-7419-000		4	ROLLER (OLD)	
3	FF5-8568-000		1	PLATE, SENSOR, 2	
4	WG8-5362-000		1	IC, TLP1241, PHOTO-INTERRUPTER	PI32 J1111
5	FG3-0542-000		1	CABLE, RIGHT INNER GUIDE	J1108,1111,1116
5A	WT2-5041-000		2	TIE, CABLE	
501	XB6-7400-609		6	SCREW,TP,M4X6	

COPYRIGHT © 1999 CANON INC.

FIGURE Q33 LEFT GUIDE ASSEMBLY

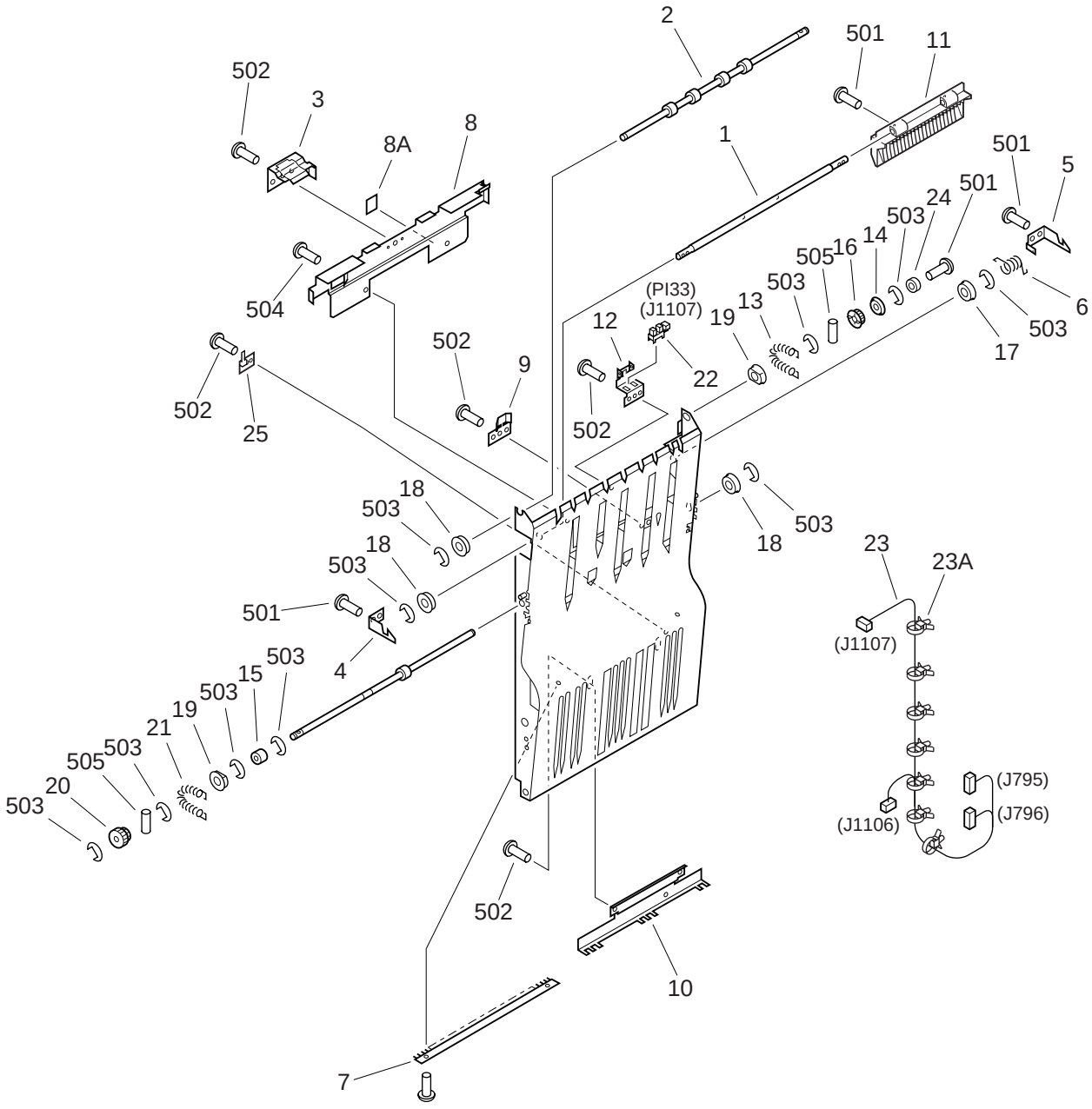

COPYRIGHT © 1999 CANON INC.

FIGURE & KEY NO.	PART NUMBER	RANK	QTY	DESCRIPTION	SERIAL NUMBER / REMARKS
Q33 -	FG6-3262-000		1	LEFT GUIDE ASSEMBLY	
1	FA4-2336-000		1	SHAFT, HANDLE	
2	FB4-8768-000		1	FEEDER OUTLET ROLLER	
3	FB4-8771-000		1	COVER, LEFT GUIDE, 2	
4	FB4-8796-000		1	LATCH, LEFT GUIDE, FRONT	
5	FB4-8797-000		1	LATCH, LEFT GUIDE, REAR	
6	FB4-8798-000		1	SPRING, TORSION	
7	FA4-2371-000		1	ELIMINATOR, STATIC CHARGE	
8	FF5-8565-000		1	COVER, LEFT GUIDE	
8A	FB4-8999-000		1	LABEL, ARROW	
9	FC2-4310-000		1	PLATE, REFLECTOR	
10	FC2-4314-000		1	PLATE, STOPPER	
11	FC2-4333-000		1	HANDLE, GUIDE	
12	FF5-8567-000		1	PLATE, SENSOR	
13	FS2-2263-000		1	SPRING, TENSION, ROLLER	
14	FA4-2332-000		1	SPACER, GEAR	
15	FE9-0089-000		2	ROLLER, SIDE SUPPORT	
16	FS7-0391-000		1	GEAR, 20T	
17	FS1-1187-000		1	BUSHING	
18	FS1-1213-000		3	BUSHING	
19	FS1-1435-000		2	BUSHING	
20	FS2-0386-000		1	GEAR, ROLLER, 20T	
21	FS4-2465-000		1	SPRING, TENSION	
22	WG8-5362-000		1	IC, TLP1241, PHOTO-INTERRUPTER	PI33 J1107
23	FG3-0965-000		1	CABLE, LEFT GUIDE	J795,796,1106,1107
23A	WT2-5041-000		7	TIE, CABLE	
24	XH9-0101-000		1	SHEET, RUBBER	
25	FG2-7911-000		1	LED PCB ASSEMBLY 2	
501	XB1-2300-609		5	SCREW,MACH.,TRUSS HEAD,M3X6	
502	XB6-7400-609		4	SCREW,TP,M4X6	

COPYRIGHT © 1999 CANON INC.

FIGURE & KEY NO.	PART NUMBER	RANK	QTY	DESCRIPTION	SERIAL NUMBER / REMARKS
Q33 - 503	XD2-1100-502		17	RING,E	
504	XB1-2300-606		2	SCREW,MACH.,TRUSS HEAD,M3X6	
505	XD3-2200-122		2	PIN,DOWEL	

COPYRIGHT©1999 CANON INC.

FIGURE Q34 LEFT INNER GUIDE ASSEMBLY

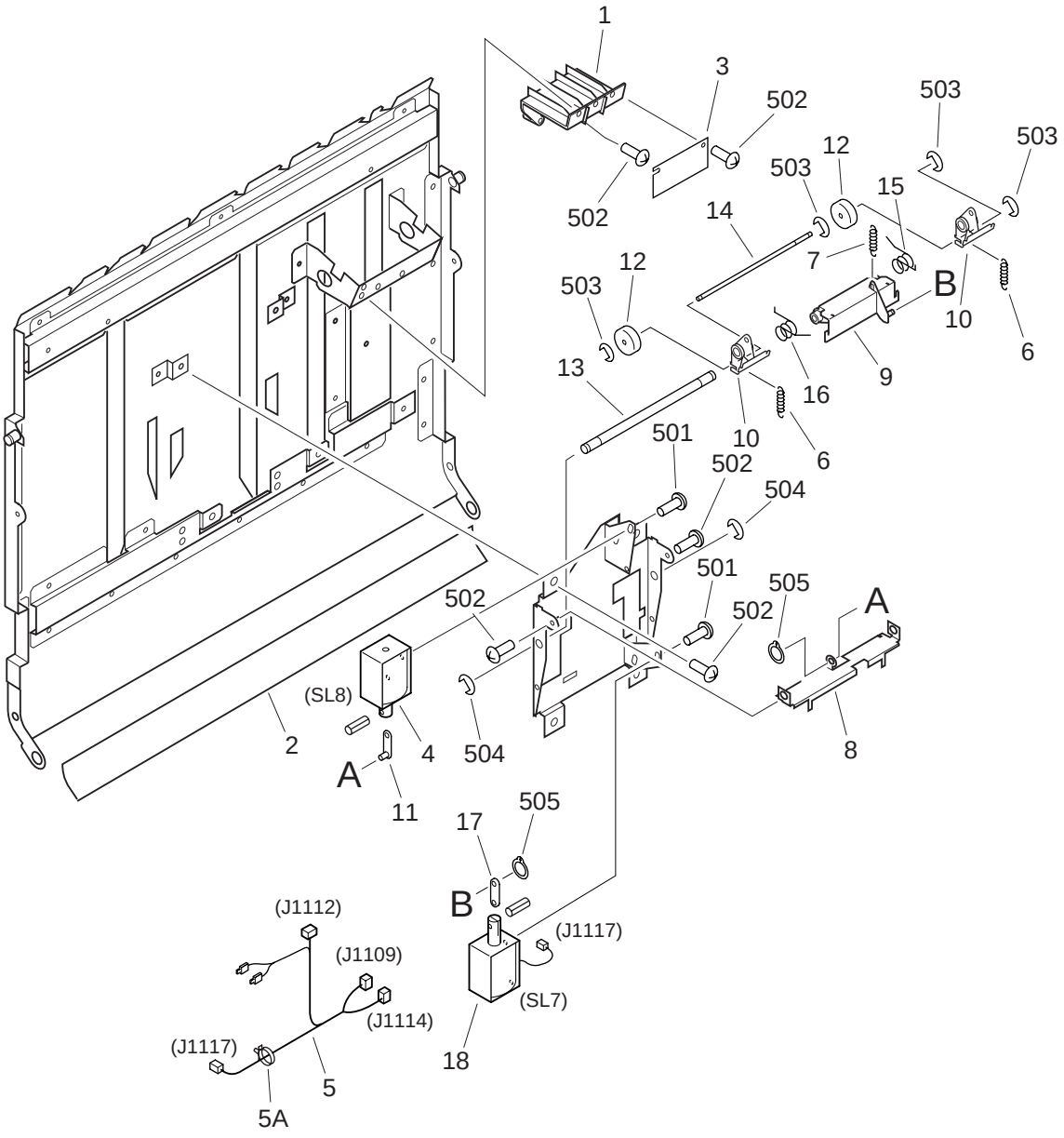

COPYRIGHT © 1999 CANON INC.
CANON Saddle Finisher-D2 REV.0 JULY 1999 PRINTED IN JAPAN [IMPRIME AU JAPON]

FIGURE & KEY NO.	PART NUMBER	RANK	QTY	DESCRIPTION	SERIAL NUMBER / REMARKS
Q34 -	FG6-3264-000		1	LEFT INNER GUIDE ASSEMBLY	
1	FC2-1250-000		1	COVER, SENSOR	
2	FA4-2317-000		1	SHEET	
3	FG2-7912-000		1	PHOTOTRANSISTOR PCB ASSEMBLY,2	
4	FH7-5062-000		1	SOLENOID, 24VDC	SL8
5	FG3-0964-000		1	CABLE, LEFT INNER GUIDE	J1109,1112,1114,1117
5A	WT2-5041-000		2	TIE, CABLE	
6	FS2-2265-000		2	SPRING, TENSION (2)	
7	FS2-2264-000		1	SPRING, TENSION (1)	
8	FA4-2348-000	N	1	PLATE, ARM	
9	FA4-2349-000	N	1	MOUNT, COMPRESSION	
10	FA4-2350-000	N	2	ARM, PINCH ROLLER	
11	FA4-2351-000	N	1	LINK	
12	FA4-2352-000		2	ROLLER, PINCH	
13	FA4-2353-000		1	AXLE, PINCH ROLLER ARM	
14	FA4-2354-000		1	AXLE, PINCH ROLLER	
15	FA4-2355-000		1	SPRING, TORSION, FRONT	
16	FA4-2356-000		1	SPRING, TORSION, REAR	
17	FA4-2363-000	N	1	LINK	
18	FF3-3877-000		1	SOLENOID, 24VDC	SL7 J1117
501	XB1-2300-409		4	SCREW,MACH.,TRUSS HEAD,M3X4	
502	XB1-2300-609		AR	SCREW,MACH.,TRUSS HEAD,M3X6	
503	XD2-1100-242		3	RING,E	
504	XD2-1100-502		4	RING,E	
505	XD2-2100-302		2	RING,GRIP	

COPYRIGHT © 1999 CANON INC.

FIGURE Q35 FEED UPPER GUIDE ASSEMBLY

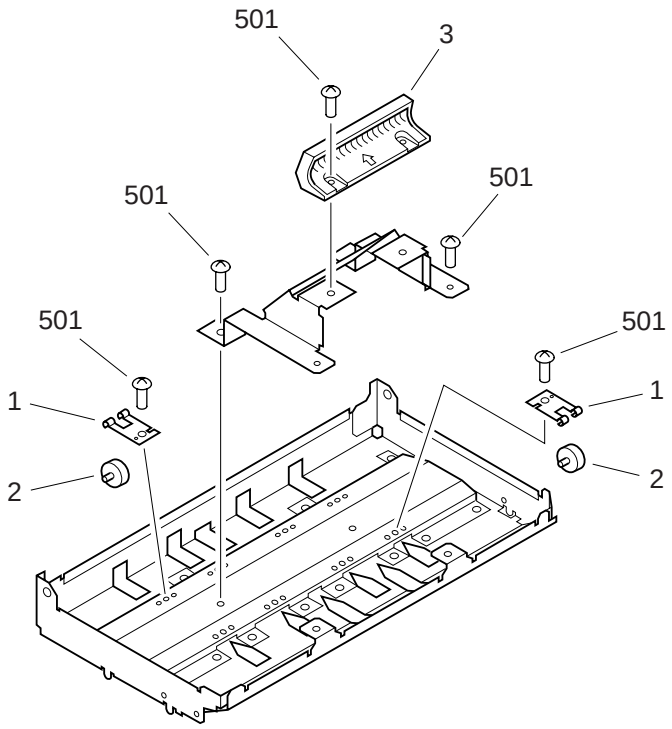

FIGURE & KEY NO.	PART NUMBER	RANK	QTY	DESCRIPTION	SERIAL NUMBER / REMARKS
Q35 -	FG6-3263-000		1	FEED UPPER GUIDE ASSEMBLY	
1	FB4-8977-000		8	SPRING, ROLLER HOLDER	
2	FA3-7419-000		8	ROLLER (OLD)	
3	FC2-5100-000		1	KNOB	
501	XB6-7400-609		AR	SCREW,TP,M4X6	

COPYRIGHT©1999 CANON INC.

FIGURE Q36 INNER LEFT GUIDE ASSEMBLY

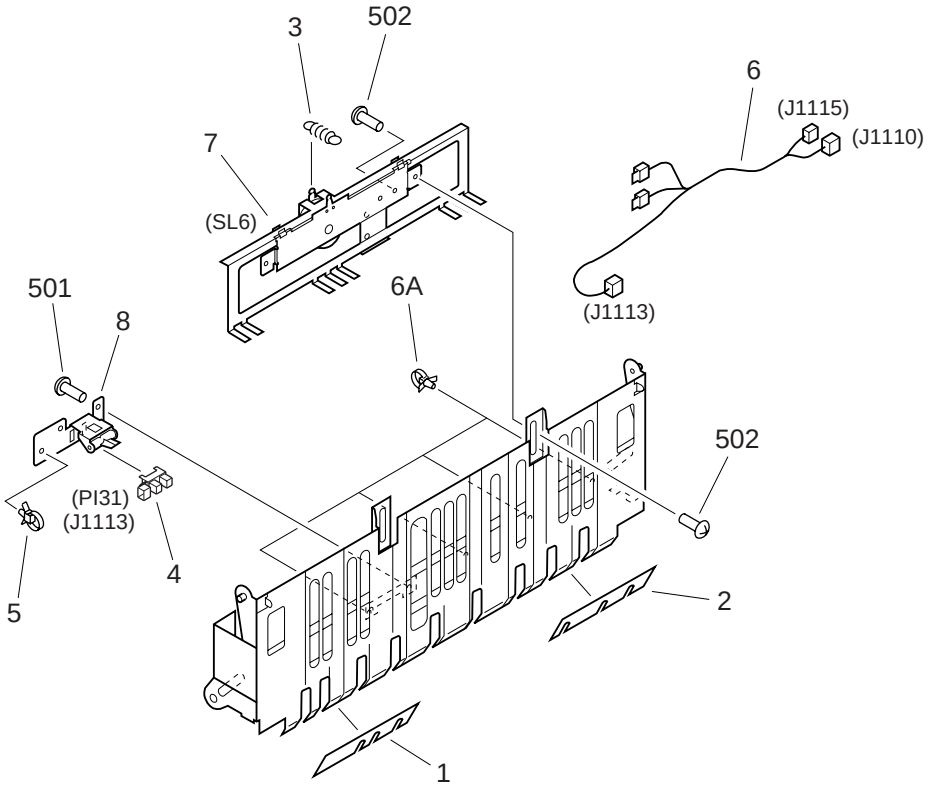

FIGURE & KEY NO.	PART NUMBER	RANK	QTY	DESCRIPTION	SERIAL NUMBER / REMARKS
Q36 -	FG6-3267-000		1	INNER LEFT GUIDE ASSEMBLY	
1	FB4-8981-000		1	SHEET, MYLAR	
2	FB4-8982-000		1	SHEET, MYLAR	
3	FS2-2265-000		1	SPRING, TENSION (2)	
4	WG8-5362-000		1	IC, TLP1241, PHOTO-INTERRUPTER	PI31 J1113
5	WT2-5041-000		2	TIE, CABLE	
6	FG3-0966-000		1	CABLE, INNER LEFT GUIDE	J1110,1113,1115
6A	WT2-5041-000		4	TIE, CABLE	
7	FH7-5750-000		1	SOLENOID, 24VDC	SL6
8	FF5-8568-000		1	PLATE, SENSOR, 2	
501	XB6-7300-409		2	SCREW,TP,M3X4	
502	XB6-7400-609		4	SCREW,TP,M4X6	

COPYRIGHT © 1999 CANON INC.

FIGURE Q37 LOWER LEFT GUIDE ASSEMBLY

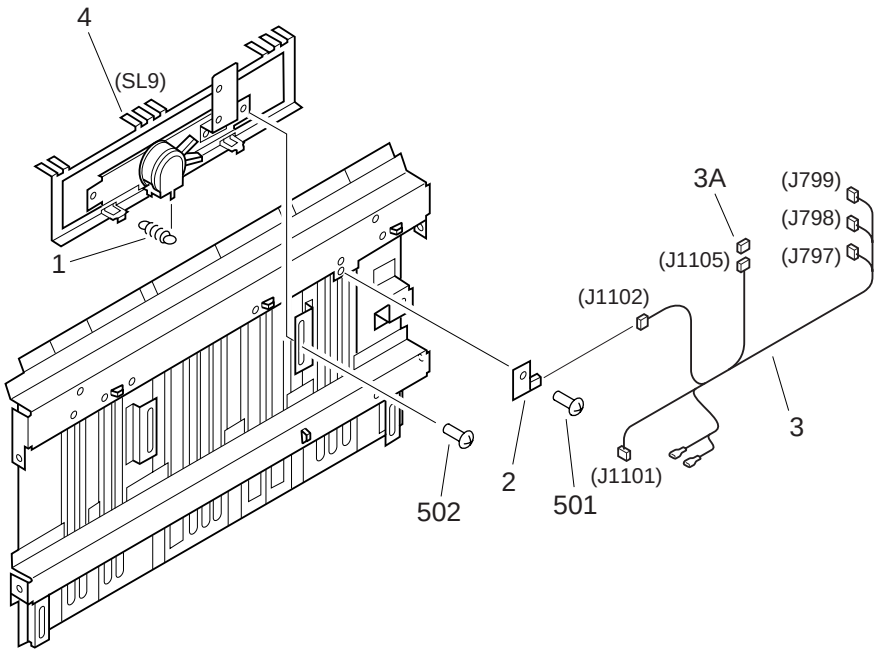

FIGURE & KEY NO.	PART NUMBER	RANK	QTY	DESCRIPTION	SERIAL NUMBER / REMARKS
Q37 -	FG6-3276-000		1	LOWER LEFT GUIDE ASSEMBLY	
1	FS2-2265-000		1	SPRING, TENSION (2)	
2	FG2-6904-000		1	SENSOR PCB ASSEMBLY	
3	FG3-0967-000		1	CABLE, LOWER LEFT GUIDE	J797-799,1101,1102,1105
3A	VS1-5057-006		1	CONNECTOR, SNAP TIGHT	J1105
4	FH7-5761-000		1	SOLENOID, 24VDC	SL9
501	XB6-7300-409		2	SCREW,TP,M3X4	
502	XB6-7400-609		4	SCREW,TP,M4X6	

COPYRIGHT © 1999 CANON INC.

FIGURE Q90 FOLDER DRIVER PCB ASSEMBLY

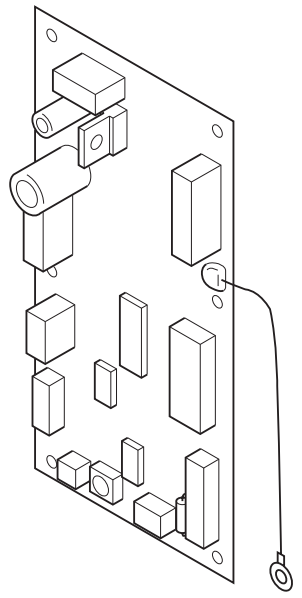

(J800)

FIGURE & KEY NO.	PART NUMBER	RANK	QTY	DESCRIPTION	SERIAL NUMBER / REMARKS
Q90 -	FG3-0087-000		1	FOLDER DRIVER PCB ASSEMBLY	
FU791	VD7-1621-001		1	FUSE, 60V, 1A	
J800	FF3-3876-000		1	CABLE, GROUNDING	
LED791	WG1-0373-000		1	LED, SEL2110RTP1	
LED792	WG1-0373-000		1	LED, SEL2110RTP1	

COPYRIGHT © 1999 CANON INC.

FIGURE QB LIST OF CONNECTORS

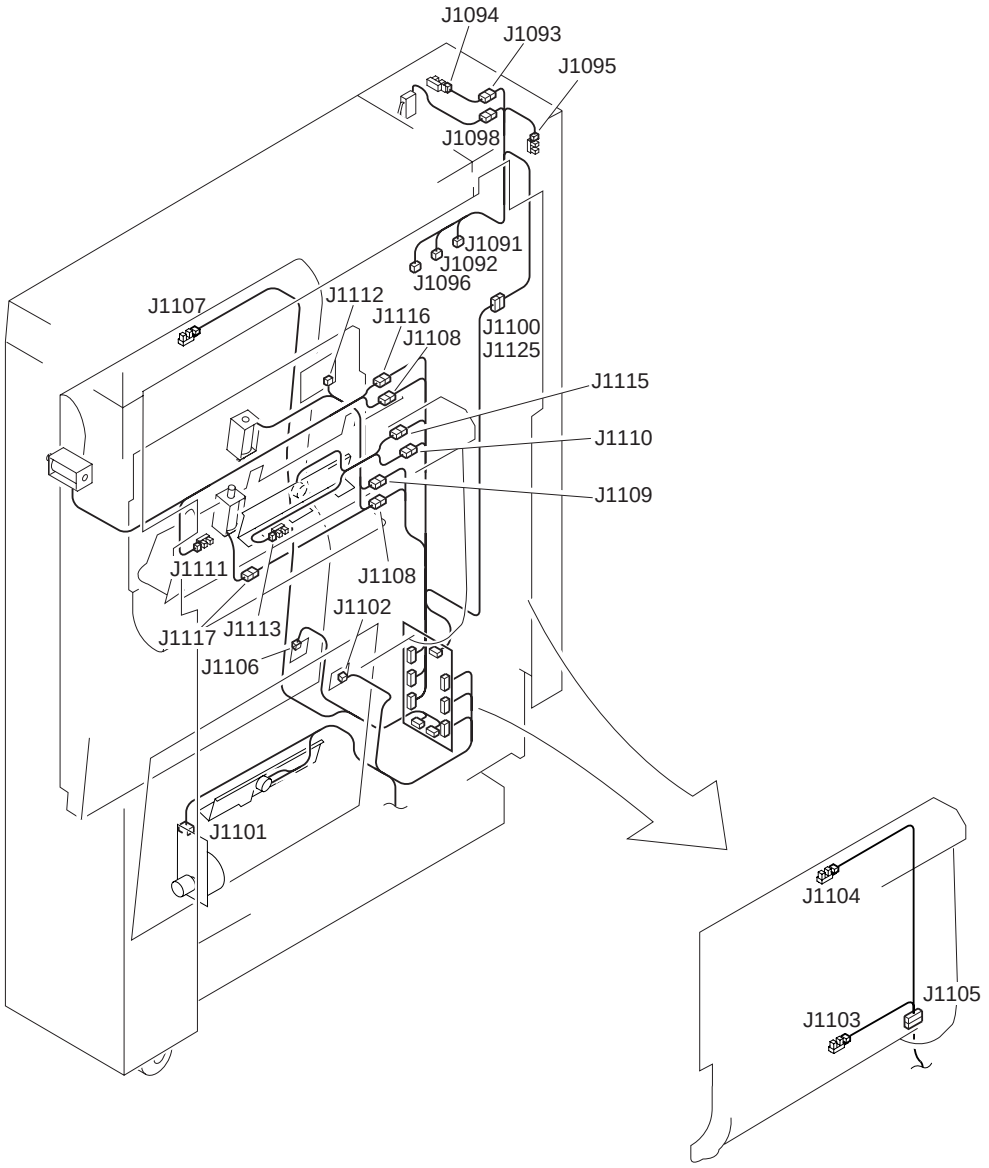

COPYRIGHT © 1999 CANON INC.
CANON Saddle Finisher-D2 REV.0 JULY 1999 PRINTED IN JAPAN [IMPRIME AU JAPON]

FIGURE & KEY NO.	PART NUMBER	RANK	QTY	DESCRIPTION	SERIAL NUMBER / REMARKS
Q B -	NPN		RF	LIST OF CONNECTORS	
J 791	FG3-0538-000		1	CABLE, FOLDER DRAWER MAIN	
	PCB			FOLDER DRIVER	
J 792	FG3-0538-000		1	CABLE, FOLDER DRAWER MAIN	
	PCB			FOLDER DRIVER	
J 793	PCB			FOLDER DRIVER	
	VS1-0279-008		1	CONNECTOR, 8P, FEMALE	
	WS3-0437-000		8	SOCKET CONTACT, 20-30AWG	
J 794	PCB			FOLDER DRIVER	
	VS1-0842-009		1	CONNECTOR, 9P, FEMALE	
J 795	PCB			FOLDER DRIVER	
	VS1-0842-003		1	CONNECTOR, 3P, FEMALE	
J 796	PCB			FOLDER DRIVER	
	VS1-0279-002		1	CONNECTOR, 2P, FEMALE	
	WS3-0437-000		2	SOCKET CONTACT, 20-30AWG	
J 797	PCB			FOLDER DRIVER	
	VS1-0842-006		1	CONNECTOR, 6P, FEMALE	
J 798	PCB			FOLDER DRIVER	
	VS1-0279-004		1	CONNECTOR, 4P, FEMALE	
	WS3-0437-000		4	SOCKET CONTACT, 20-30AWG	
J 799	PCB			FOLDER DRIVER	
	VS1-0279-006		1	CONNECTOR, 6P, FEMALE	
	WS3-0437-000		6	SOCKET CONTACT, 20-30AWG	
J1031	PCB			PAPER FEED SENSOR 2	
J1035	PCB			LED SENSOR	
J1041	PCB			PHOTO-TRANSISTOR SENSOR	
J1044	------			TO FINISHER	
J1045	------			TO FINISHER	
J1091	VS1-0842-010		1	CONNECTOR, 10P, FEMALE	
J1092	VS1-0842-009		1	CONNECTOR, 9P, FEMALE	

COPYRIGHT © 1999 CANON INC.

FIGURE & KEY NO.	PART NUMBER	RANK	QTY	DESCRIPTION	SERIAL NUMBER / REMARKS
Q B - J1093	VS1-0842-003		2	CONNECTOR, 3P, FEMALE	
	VS1-5057-003		1	CONNECTOR, SNAP TIGHT	
J1094	NPN			UPPER COVER OPEN/CLOSE SENSOR	PI30
	VS1-0842-003		1	CONNECTOR, 3P, FEMALE	
J1095	NPN			FOLDER SET SENSOR	PI29
	VS1-0842-003		1	CONNECTOR, 3P, FEMALE	
J1096	------			TO FINISHER	
	VS1-0279-008		1	CONNECTOR, 8P, FEMALE	
	WS3-0437-000		8	SOCKET CONTACT, 20-30AWG	
J1098	VS1-0279-002		1	CONNECTOR, 2P, FEMALE	
	VS3-0108-002		1	CONNECTOR, 2P, FEMALE	
	WS3-0437-000		2	SOCKET CONTACT, 20-30AWG	
	WS3-0885-000		2	PIN CONTACT, 20-30AWG	
J1100	VS1-0842-010		1	CONNECTOR, 10P, FEMALE	
	VS1-0852-010		1	CONNECTOR, 10P, FEMALE	
	VS3-5125-020		1	CONNECTOR, 20P, FEMALE	
	VS9-5009-020		1	HOLDER, CONNECTOR, 20P	
	WS3-5306-000		4	SOCKET CONTACT, 20-24AWG	
J1101	NPN			FOLDER MOTOR	M14
	VS1-0279-007		1	CONNECTOR, 7P, FEMALE	
	WS3-0437-000		7	SOCKET CONTACT, 20-30AWG	
J1102	NPN			FEEDER PASS 3 SENSOR PCB ASS'Y	F-PT1(S8)
	VS1-0279-002		1	CONNECTOR, 2P, FEMALE	
	WS3-0437-000		2	SOCKET CONTACT, 20-30AWG	
J1103	NPN			FOLDER PAPER SENSOR 2	PI35
	VS1-0842-003		1	CONNECTOR, 3P, FEMALE	
J1104	NPN			PAPER FEED SENSOR 1	PI34
	VS1-0842-003		1	CONNECTOR, 3P, FEMALE	
J1105	VS1-0842-006		2	CONNECTOR, 6P, FEMALE	
	VS1-5057-006		1	CONNECTOR, SNAP TIGHT	

COPYRIGHT©1999 CANON INC.

FIGURE & KEY NO.	PART NUMBER	RANK	QTY	DESCRIPTION	SERIAL NUMBER / REMARKS
Q B - J1106	NPN			FEEDER PASS 3 SENSOR PCB ASS'Y	F-LED1(S8)
	VS1-0279-002		1	CONNECTOR, 2P, FEMALE	
	WS3-0437-000		2	SOCKET CONTACT, 20-30AWG	
J1107	NPN			PAPER PATH SENSOR	PI33
	VS1-0842-003		1	CONNECTOR, 3P, FEMALE	
J1108	VS1-0842-003		2	CONNECTOR, 3P, FEMALE	
	VS1-5057-003		1	CONNECTOR, SNAP TIGHT	
J1109	VS1-0842-004		2	CONNECTOR, 4P, FEMALE	
	VS1-5057-004		1	CONNECTOR, SNAP TIGHT	
J1110	VS1-0842-003		2	CONNECTOR, 3P, FEMALE	
	VS1-5057-003		1	CONNECTOR, SNAP TIGHT	
J1111	NPN			FOLDER PAPER SENSOR 3	PI32
	VS1-0842-003		1	CONNECTOR, 3P, FEMALE	
J1112	NPN			FEEDER PASS 2 SENSOR PCB ASS'Y	S7
	VS1-0842-005		1	CONNECTOR, 5P, FEMALE	
J1113	NPN			FOLDER PAPER SENSOR 1	PI31
	VS1-0842-003		1	CONNECTOR, 3P, FEMALE	
J1114	VS1-0279-004		1	CONNECTOR, 4P, FEMALE	
	VS1-0280-004		1	CONNECTOR, 4P, FEMALE	
	WS3-0437-000		4	SOCKET CONTACT, 20-30AWG	
	WS3-0885-000		4	PIN CONTACT, 20-30AWG	
J1115	VS1-0279-002		1	CONNECTOR, 2P, FEMALE	
	VS1-0280-002		1	CONNECTOR, 2P, FEMALE	
	WS3-0437-000		2	SOCKET CONTACT, 20-30AWG	
	WS3-0885-000		2	PIN CONTACT, 20-30AWG	
J1116	VS1-0279-002		1	CONNECTOR, 2P, FEMALE	
	VS1-0280-002		1	CONNECTOR, 2P, FEMALE	
	WS3-0437-000		2	SOCKET CONTACT, 20-30AWG	
	WS3-1057-000		2	PIN CONTACT, 20-22AWG	
J1117	NPN			PRESSURE RELEASE SOLENOID	SL7

COPYRIGHT © 1999 CANON INC.

FIGURE & KEY NO.	PART NUMBER	RANK	QTY	DESCRIPTION	SERIAL NUMBER / REMARKS
Q B - J1117	VS1-0280-002		1	CONNECTOR, 2P, FEMALE	
	WS3-0885-000		2	PIN CONTACT, 20-30AWG	
J1125	FG3-0538-000		1	CABLE, FOLDER DRAWER MAIN	

COPYRIGHT©1999 CANON INC.

Cover Insertion Unit-A1

〔 F24 - 9502 〕

COPYRIGHT © 1999 CANON INC.

CONTENTS

PA. ASSEMBLY LOCATION DIAGRAM

P01. MOUNTING HARDWARE 1
P02. MOUNTING HARDWARE 2

P10. EXTERNAL COVERS, PANELS, ETC.
P11. INTERNAL COMPONENTS
P12. PICK-UP TRAY ASSEMBLY
P14. UPPER PANEL ASSEMBLY

P20. SEPARATION MOTOR ASSEMBLY

P30. SEPARATION ASSEMBLY

PB. LIST OF CONNECTORS

D3. NUMERICAL INDEX

COPYRIGHT©1999 CANON INC.

FIGURE PA ASSEMBLY LOCATION DIAGRAM

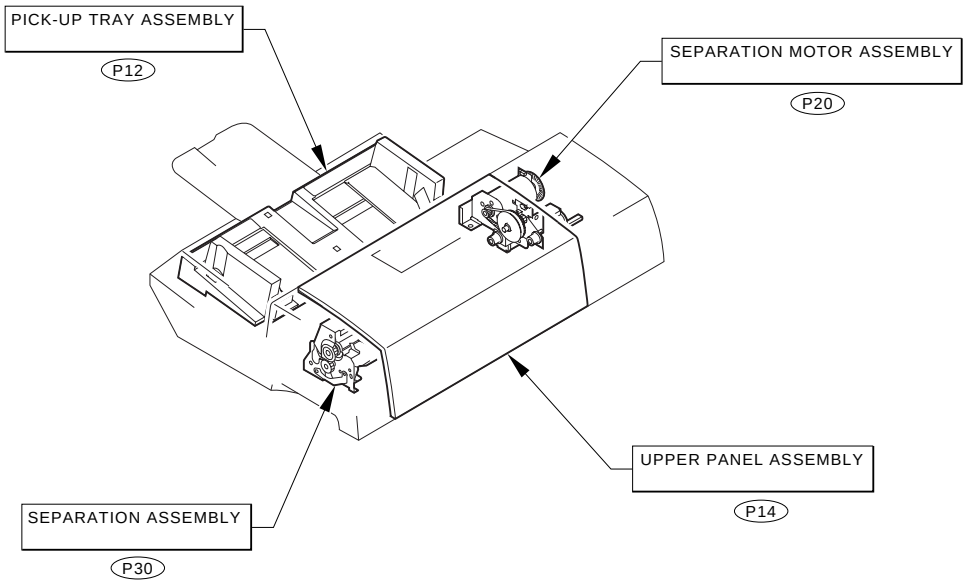

COPYRIGHT © 1999 CANON INC.

FIGURE P01 MOUNTING HARDWARE 1

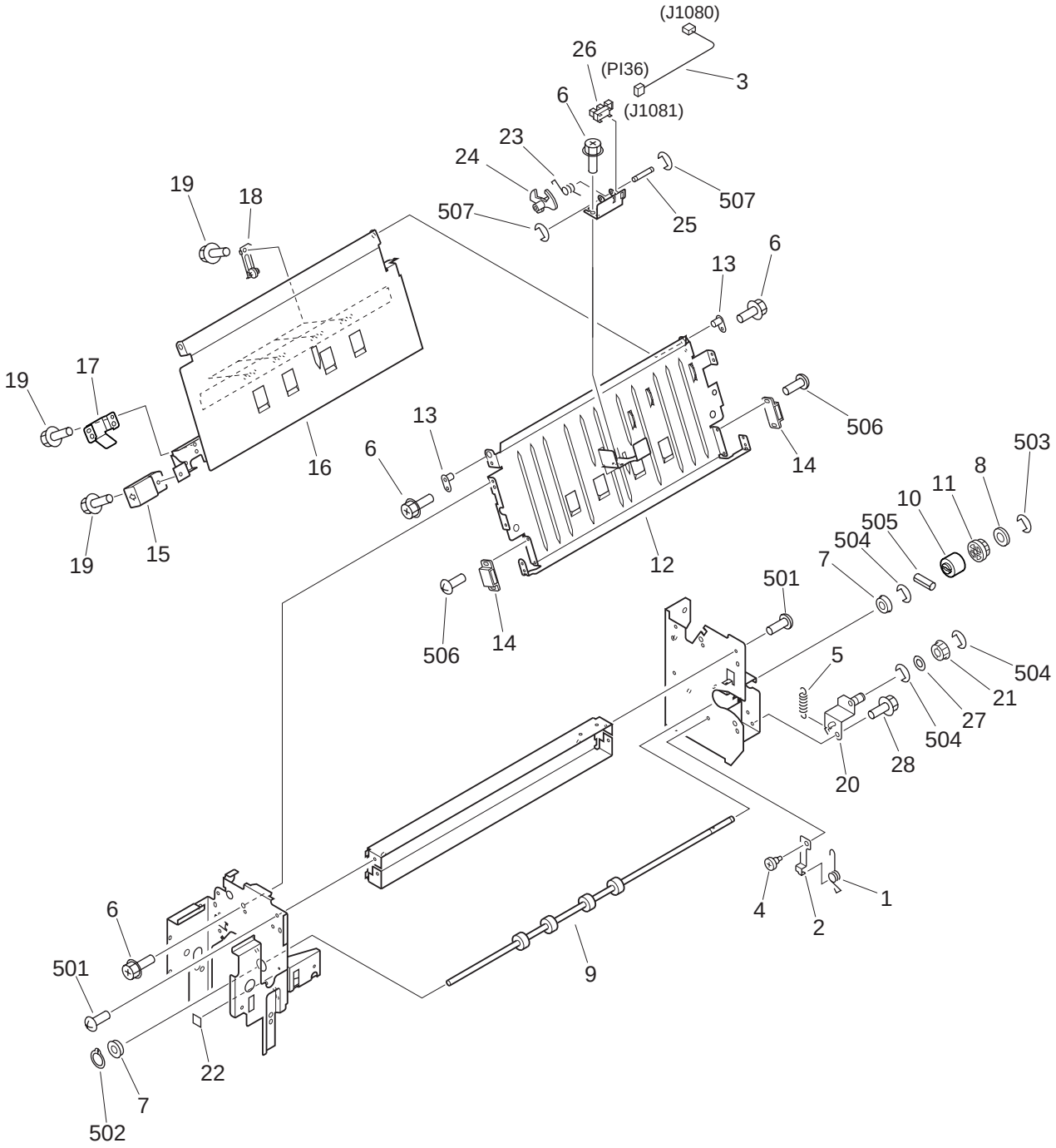

COPYRIGHT © 1999 CANON INC.

FIGURE & KEY NO.	PART NUMBER	RANK	QTY	DESCRIPTION	SERIAL NUMBER / REMARKS
P01 -	NPN		RF	MOUNTING HARDWARE 1	
1	FB4-8939-000		1	SPRING, TORSION	
2	FB4-8940-000		1	HOLDER, SPRING	
3	FF3-3868-000		1	CABLE, PASS SENSOR 3	J1080,1081
4	FS1-9194-000		1	SCREW, STEPPED, M4	
5	FS7-2152-000		1	SPRING, TENSION	
6	XA9-0629-000		7	SCREW,RS,M4X8	
7	XG9-0365-000		2	BEARING, BALL	
8	FB4-7663-000		1	RING, GEAR, A	
9	FB4-8936-000		1	ROLLER, FEED	
10	FB4-8946-000		1	TORQUE LIMITER	
11	FS5-3803-000		1	PULLEY, 30T	
12	FB4-8941-000		1	GUIDE, UPPER	
13	FF1-6572-000		2	PLATE, PIN	
14	XZ9-0289-000		2	CATCH, MAGNET	
15	FB3-3834-000		1	KNOB	
16	FB4-8942-000		1	GUIDE, LOWER	
17	FB4-8947-000		1	SUPPORT, GUIDE	
18	FF5-6194-000		4	ROLLER, FEED	
19	XA9-0685-000		5	SCREW,RS,M4X6	
20	FF5-8617-000		1	PLATE, TENSIONER	
21	FS2-3514-000		1	PULLEY, 30T	
22	FB5-3197-000		1	LABEL, NO.7	
23	FB1-7018-000		1	SPRING, TORSION	
24	FB4-8892-000		1	ARM, SENSOR	
25	FB4-8943-000		1	SHAFT, SENSOR ARM	
26	WG8-5362-000		1	IC, TLP1241, PHOTO-INTERRUPTER	PI36 J1081
27	FS5-6661-000		1	FLANGE	
28	XA9-0721-000		1	SCREW,RS,M4X10	
501	XB1-2400-609		4	SCREW,MACH.,TRUSS HEAD,M4X6	

COPYRIGHT © 1999 CANON INC.

FIGURE & KEY NO.	PART NUMBER	RANK	QTY	DESCRIPTION	SERIAL NUMBER / REMARKS
P01 - 502	XD2-2100-802		1	RING,GRIP	
503	XD2-1100-502		1	RING,E	
504	XD2-1100-642		3	RING,E	
505	XD3-1200-122		1	PIN,SPRING	
506	XB1-2300-609		4	SCREW,MACH.,TRUSS HEAD,M3X6	
507	XD2-1100-242		2	RING,E	

COPYRIGHT©1999 CANON INC.

FIGURE P02 MOUNTING HARDWARE 2

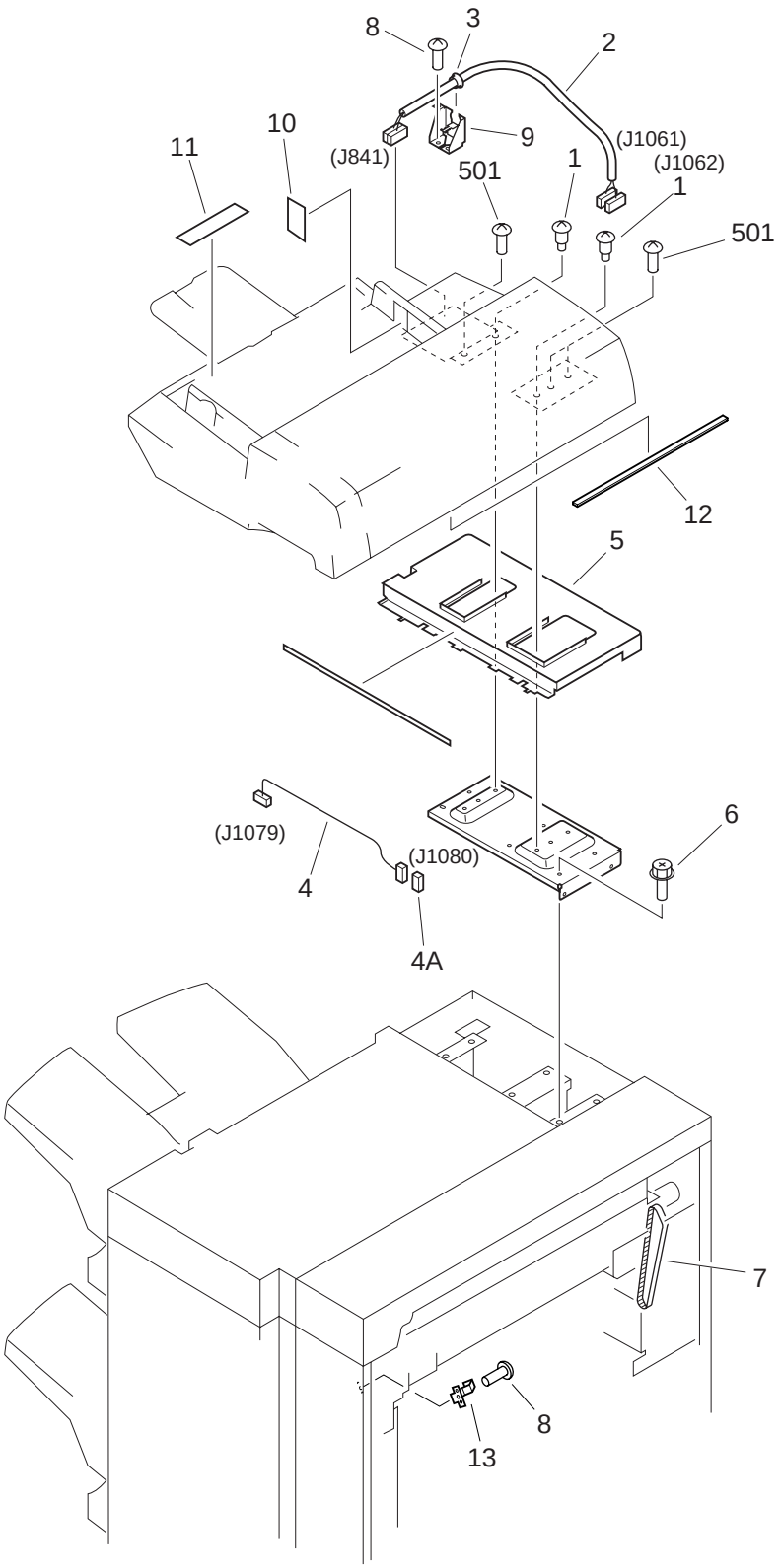

COPYRIGHT © 1999 CANON INC. CANON Saddle Finisher-D2 REV.0 JULY 1999 PRINTED IN JAPAN [IMPRIME AU JAPON]

FIGURE & KEY NO.	PART NUMBER	RANK	QTY	DESCRIPTION	SERIAL NUMBER / REMARKS
P02 -	NPN		RF	MOUNTING HARDWARE 2	
1	FA6-8685-000		2	SCREW, STEPPED M5	
2	FG3-0981-000		1	CABLE, MAIN CONNECTOR	J841,1061,1062
3	WT2-0409-000		1	BUSHING	
4	FF3-3867-000		1	CABLE, PASS SENSOR 3 CONNECTOR	J1079,1080
4A	VS1-5057-003		1	CONNECTOR, SNAP TIGHT	J1080
5	FF5-8616-000		1	PANEL, REAR UPPER, 2	
6	XA9-0629-000		8	SCREW,RS,M4X8	
7	XF2-1618-040		1	BELT, TIMING	
8	XA9-0892-000		AR	SCREW,MACH.,TRUSS HEAD,M4X6	
9	FC1-2309-000		1	RETAINER, CORD	
10	FB5-3194-000		1	LABEL, LIMIT	
11	FB5-3195-000		1	LABEL, PAPER SIZE	
12	FB5-3200-000		1	SPACER, COVER, A	
13	FB4-8935-000		1	SPRING, LEAF	
501	XB1-2500-806		3	SCREW,MACH.,TRUSS HEAD,M5X8	

COPYRIGHT © 1999 CANON INC.

FIGURE P10 EXTERNAL COVERS, PANELS, ETC.

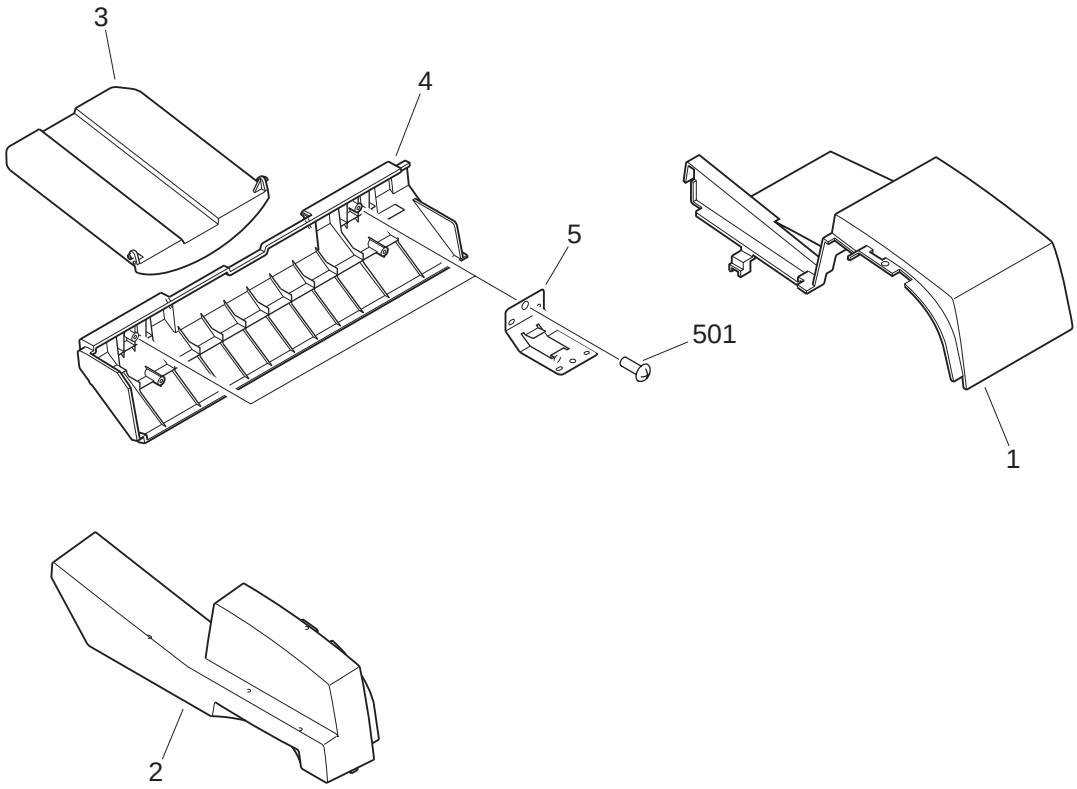

FIGURE & KEY NO.	PART NUMBER	RANK	QTY	DESCRIPTION	SERIAL NUMBER / REMARKS
P10 -	NPN		RF	EXTERNAL COVERS, PANELS, ETC.	
1	FB4-8920-000		1	PANEL, REAR	
2	FB4-8921-000		1	PANEL, FRONT	
3	FB4-8922-000		1	TRAY, AUXILIARY	
4	FB4-8888-000		1	COVER, BOTTOM	
5	FB4-8897-000		2	SUPPORT, BOTTOM PANEL	
501	XB4-7400-809		4	SCREW,TAPPING,TRUSS HEAD,M4X8	

COPYRIGHT © 1999 CANON INC.

FIGURE P11 INTERNAL COMPONENTS (1/3)

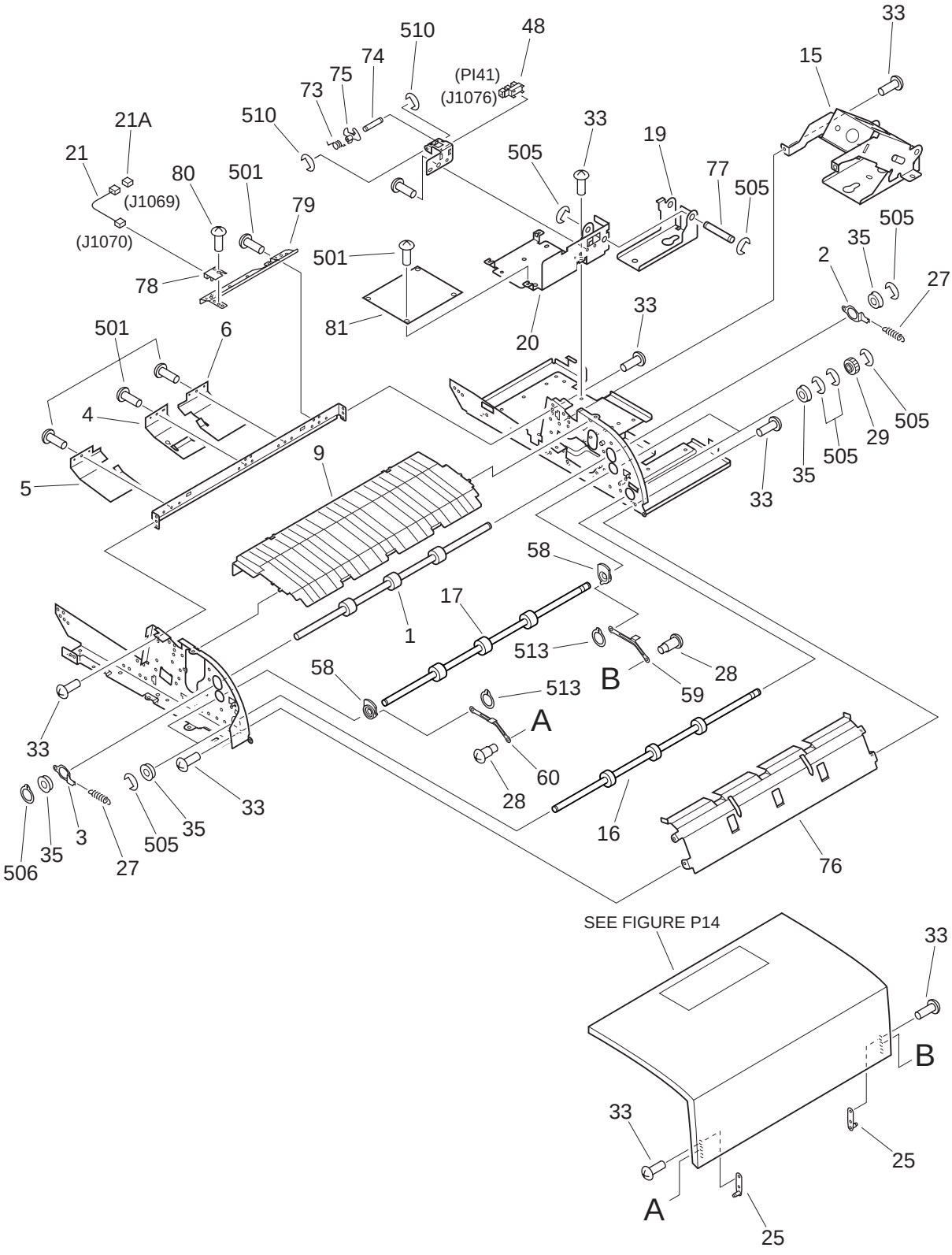

COPYRIGHT © 1999 CANON INC.
CANON Saddle Finisher-D2 REV.0 JULY 1999 PRINTED IN JAPAN [IMPRIME AU JAPON]

FIGURE P11 INTERNAL COMPONENTS (2/3)

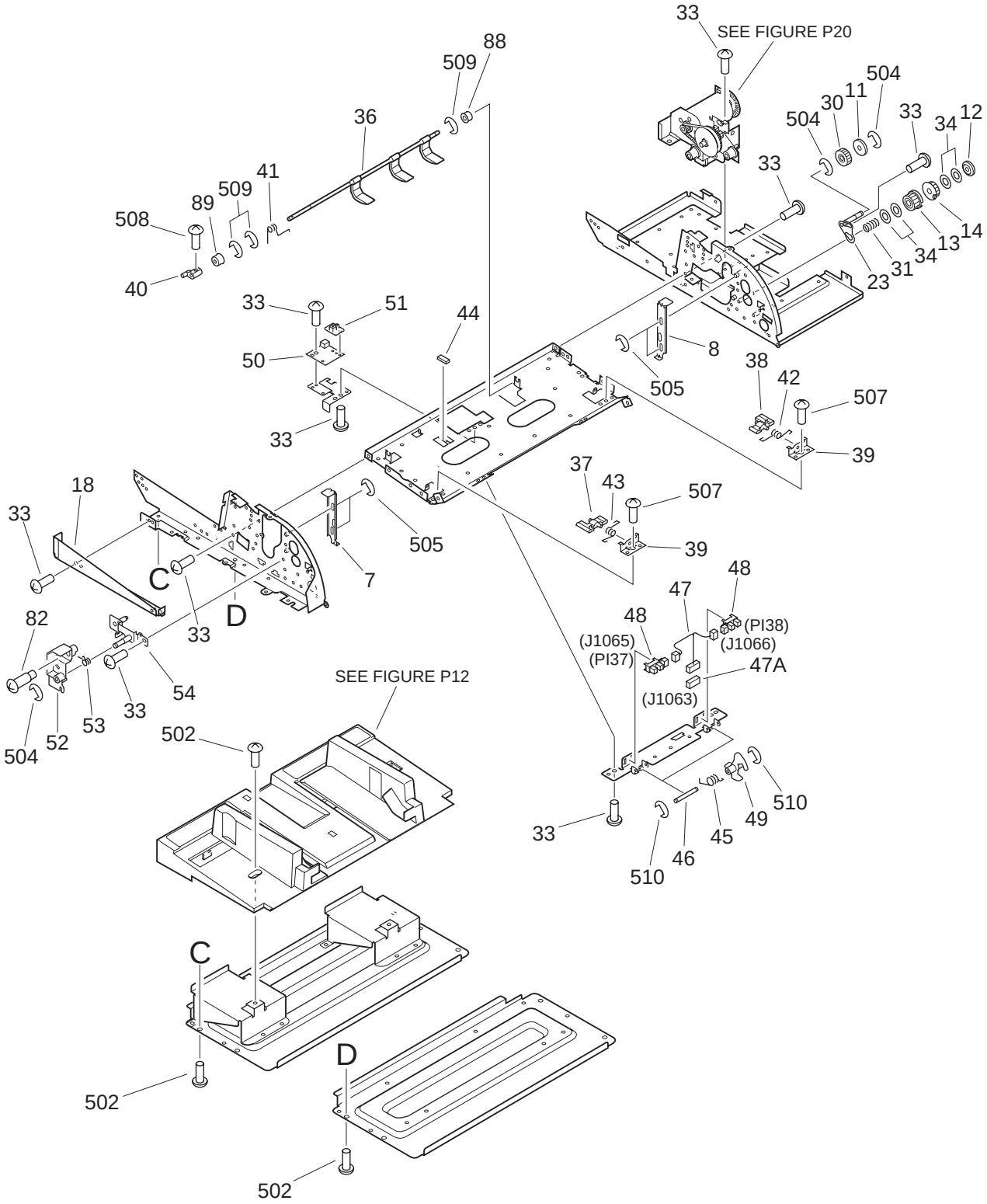

FIGURE P11 INTERNAL COMPONENTS (3/3)

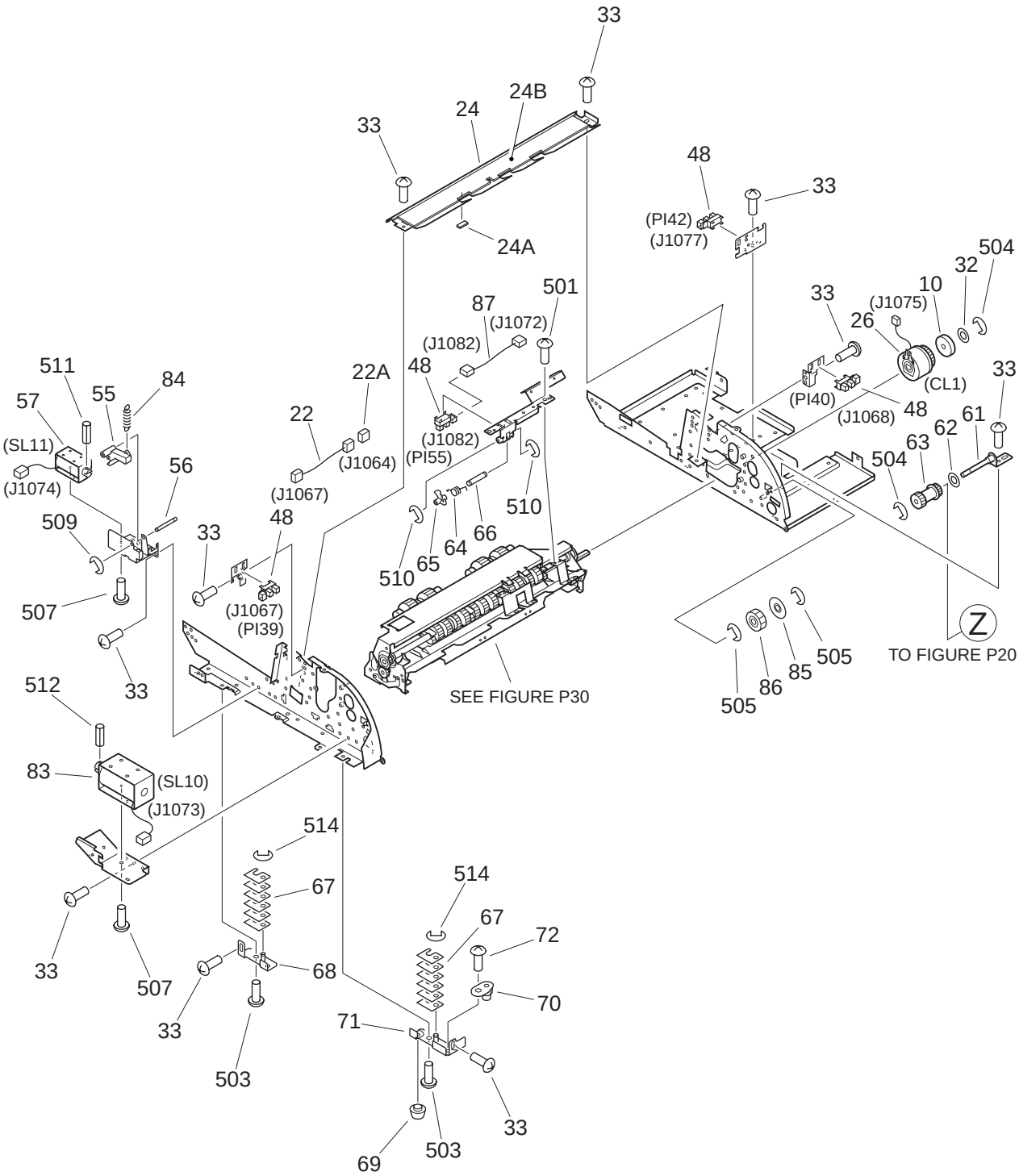

COPYRIGHT © 1999 CANON INC.

FIGURE & KEY NO.	PART NUMBER	RANK	QTY	DESCRIPTION	SERIAL NUMBER / REMARKS
P11 -	NPN		RF	INTERNAL COMPONENTS	
1	FB4-7563-000		1	ROLLER, PICK-UP PRESSURE	
2	FB4-7567-000		1	PLATE, PICK-UP TENSION, FRONT	
3	FB4-7568-000		1	PLATE, PICK-UP TENSION, REAR	
4	FB4-7570-000		1	UPPER GUIDE, PICK-UP, A	
5	FB4-7571-000		1	UPPER GUIDE, PICK-UP, B	
6	FB4-7572-000		1	UPPER GUIDE, PICK-UP, C	
7	FB4-7584-000		1	LINK, FRONT	
8	FB4-7585-000		1	LINK, REAR	
9	FB4-7599-000		1	COVER, INTERNAL	
10	FB4-7662-000		1	RING, CLUTCH	
11	FB4-7663-000		1	RING, GEAR, A	
12	FB4-7664-000		1	RING, GEAR, B	
13	FB4-7669-000		1	GEAR, 24T	
14	FB4-7670-000		1	GEAR, 24T	
15	FB4-8875-000		1	HINGE UNIT	
16	FB4-8876-000		1	ROLLER, PAPER FEED	
17	FB4-8877-000		1	ROLLER, PICK-UP	
18	FB4-8901-000		1	PLATE	
19	FB4-8905-000		1	HINGE, LEFT, LOWER	
20	FB4-8906-000		1	HINGE, LEFT, UPPER	
21	FF3-3869-000		1	CABLE, LED SENSOR CONNECTOR	J1069,1070
21A	VS1-5057-002		1	CONNECTOR, SNAP TIGHT	J1069
22	FF3-3870-000		1	CABLE, FRONT COVER SENSOR	J1064,1067
22A	VS1-5057-003		1	CONNECTOR, SNAP TIGHT	J1064
23	FF5-8205-000		1	SUPPORT PLATE, GEAR, FRONT	
24	FF5-8595-000		1	GUIDE, PICK-UP	
24A	FB3-7285-000		1	DAMPER, SHUTTER	
24B	FB4-7573-000		1	SHEET, SEPARATION	
25	FF5-8597-000		2	PLATE, PIVOT	

COPYRIGHT © 1999 CANON INC.

FIGURE & KEY NO.	PART NUMBER	RANK	QTY	DESCRIPTION	SERIAL NUMBER / REMARKS
P11 - 26	FH7-5877-000		1	CLUTCH, ELECTROMAGNETIC	CL1 J1075
27	FS7-2154-000		2	SPRING, TENSION	
28	RS5-9003-000		2	SCREW, STEPPED, M3	
29	FS6-0094-000		2	GEAR, 24T	
30	FS7-0314-000		1	GEAR, 24T	
31	FS7-2039-000		1	SPRING, COMPRESSION	
32	FS5-6158-000		1	ROLLER, LIFTER	
33	XA9-0892-000		AR	SCREW,MACH.,TRUSS HEAD,M4X6	
34	XD9-0152-000		4	WASHER, SHIM	
35	XG9-0237-000		6	BEARING, BALL	
36	FB4-7556-000		1	SHAFT, STOPPER	
37	FB4-7586-000		1	ARM, FRONT	
38	FB4-7587-000		1	ARM, REAR	
39	FB4-7588-000		2	HOLDER, ARM	
40	FB4-7768-000		1	LINK, SHUTTER, A	
41	FB4-8031-000		1	SPRING, TORSION	
42	FB4-8032-000		1	SPRING, TORSION	
43	FB4-8033-000		1	SPRING, TORSION	
44	FB4-7558-000		1	SHEET, DAMPER	
45	FB1-7018-000		2	SPRING, TORSION	
46	FB4-8943-000		2	SHAFT, SENSOR ARM	
47	FF3-3871-000		1	CABLE, SEPARATION SENSOR	J1063,1065,1066
47A	VS1-5057-006		1	CONNECTOR, SNAP TIGHT	J1063
48	WG8-5362-000		7	IC, TLP1241, PHOTO-INTERRUPTER	PI37-41,42,55 J1065-1068,1076,1077,1082
49	FB4-8892-000		2	ARM, SENSOR	
50	FG2-9361-000		1	PHOTOTRANSISTOR PCB ASSEMBLY	
51	FB4-7582-000		1	CAP, DOCUMENT SENSOR	
52	FB4-8912-000		1	ARM, SOLENOID	
53	FB4-8918-000		1	SPRING, TORSION	
54	FF5-8598-000		1	PLATE, POSITIONING	

COPYRIGHT©1999 CANON INC.

FIGURE & KEY NO.	PART NUMBER	RANK	QTY	DESCRIPTION	SERIAL NUMBER / REMARKS
P11 - 55	FB4-8914-000		1	LINK, SOLENOID	
56	FB4-8919-000		1	SHAFT, LINK	
57	FH7-5874-000		1	SOLENOID, DC24V	SL11 J1074
58	FB4-7578-000		2	CAM, PICK-UP RELEASE	
59	FB4-8894-000		1	ARM, PICK-UP RELEASE, REAR	
60	FB4-8895-000		1	ARM, PICK-UP RELEASE, FRONT	
61	FF5-8605-000		1	SUPPORT, GEAR/PULLEY	
62	FS2-6466-000		1	FLANGE, ROLLER	
63	FS7-0397-000		1	GEAR, 22T/PULLEY, 27T	
64	FB1-7018-000		1	SPRING, TORSION	
65	FB4-8892-000		1	ARM, SENSOR	
66	FB4-8943-000		1	SHAFT, SENSOR ARM	
67	FB4-8925-000		12	SPACER	
68	FF5-8607-000		1	SUPPORT, ADJUSTER, 1	
69	FA6-8623-000		1	FOOT, RUBBER	
70	FB4-2131-000		1	PIN, HINGE GUIDE	
71	FF5-8608-000		1	SUPPORT, ADJUSTER, 2	
72	XA9-1035-000		1	SCREW,M4X4	
73	FB1-7018-000		1	SPRING, TORSION	
74	FB4-8943-000		1	SHAFT, SENSOR ARM	
75	FB4-8948-000		1	ARM, PICK-UP SENSOR	
76	FB4-8880-000		1	GUIDE, INSIDE	
77	FB4-8917-000		1	SHAFT, HINGE	
78	FG2-9362-000		1	LED PCB ASSEMBLY	
79	FB4-7583-000		1	MOUNT, DOCUMENT SENSOR	
80	XA9-0894-000		1	SCREW,M3X6	
81	FG3-0088-000		1	INSERTER DRIVER PCB ASSEMBLY	
82	FS1-9167-000		1	SCREW,STEPPED,M4	
83	FH7-5945-000		1	SOLENOID	SL10 J1073
84	FS7-2151-000		1	SPRING, TENSION	

FIGURE & KEY NO.	PART NUMBER	RANK	QTY	DESCRIPTION	SERIAL NUMBER / REMARKS
P11 - 85	FS5-6243-000		1	ROLLER	
86	FS5-0748-000		1	GEAR, IDLER, 30T	
87	FF3-3874-000		1	CABLE, PICK-UP SENSOR	J1072,1082
88	FS1-1376-000		1	BUSHING	
89	FS1-1528-000		1	BUSHING	
501	XB1-2300-609		7	SCREW,MACH.,TRUSS HEAD,M3X6	
502	XB1-2400-606		18	SCREW,MACH.,TRUSS HEAD,M4X6	
503	XB4-7401-009		2	SCREW,TAPPING,TRUSS HEAD,M4X10	
504	XD2-1100-502		4	RING,E	
505	XD2-1100-642		11	RING,E	
506	XD2-2100-802		1	RING,GRIP	
507	XB1-2300-409		6	SCREW,MACH.,TRUSS HEAD,M3X4	
508	XB6-7300-609		2	SCREW,TP,M3X6	
509	XD2-1100-322		4	RING,E	
510	XD2-1100-242		8	RING,E	
511	XD3-1200-102		1	PIN,SPRING	
512	XD3-1300-162		1	PIN,SPRING	
513	XD2-2100-402		2	RING,GRIP	
514	XD2-1100-402		2	RING,E	

COPYRIGHT©1999 CANON INC.

FIGURE P12 PICK-UP TRAY ASSEMBLY

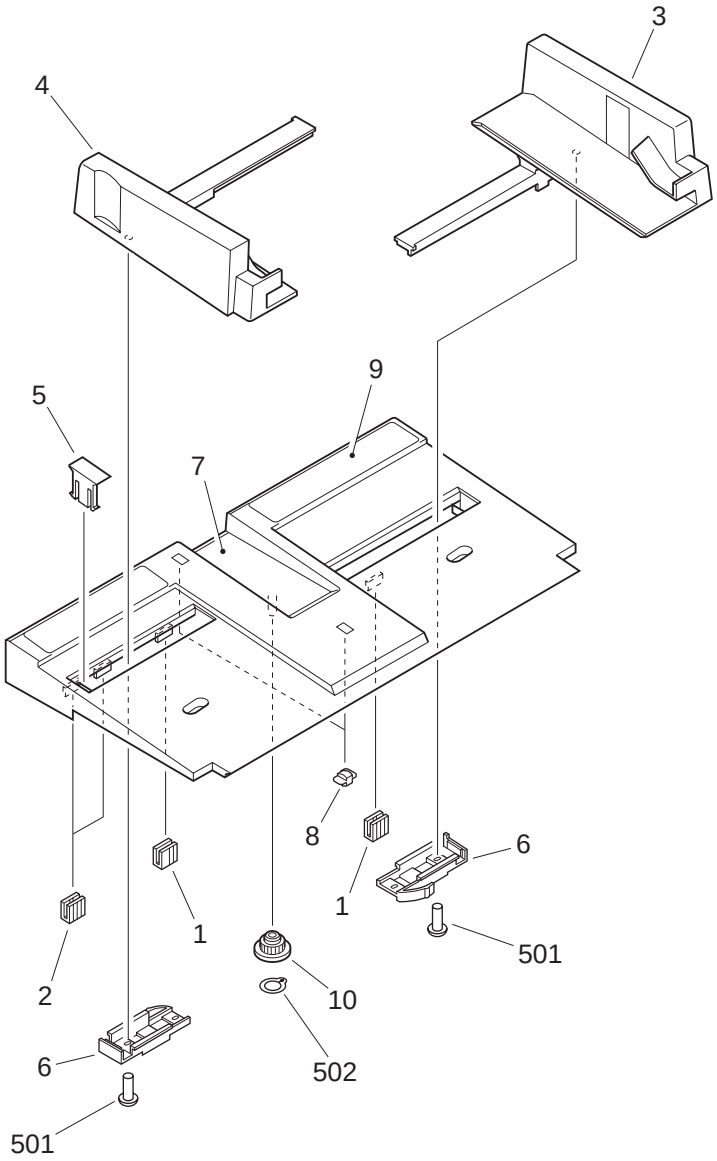

COPYRIGHT © 1999 CANON INC. CANON Saddle Finisher-D2 REV.0 JULY 1999 PRINTED IN JAPAN [IMPRIME AU JAPON]

FIGURE & KEY NO.	PART NUMBER	RANK	QTY	DESCRIPTION	SERIAL NUMBER / REMARKS
P12 -	FG6-3310-000		1	PICK-UP TRAY ASSEMBLY	
1	FB4-7710-000		2	BLOCK, TRAY RACK, A4R	
2	FB4-7711-000		2	BLOCK, TRAY RACK, LTR-R	
3	FB4-8886-000		1	GUIDE, SLIDE, REAR	
4	FB4-8887-000		1	GUIDE, SLIDE, FRONT	
5	FB4-8900-000		1	BLOCK, TRAY LIMIT	
6	FC1-6179-000		2	CLAMP, GUIDE	
7	FB5-3193-000		1	LABEL, PAPER SET	
8	FN5-0151-000		2	COVER, LED	
9	FB5-3196-000		1	LABEL, COVER	
10	FS4-0177-000		1	GEAR, 16T	
501	XB4-7300-609		2	SCREW,TAPPING,TRUSS HEAD,M3X6	
502	XD2-2100-602		1	RING,GRIP	

COPYRIGHT © 1999 CANON INC.

FIGURE P14 UPPER PANEL ASSEMBLY

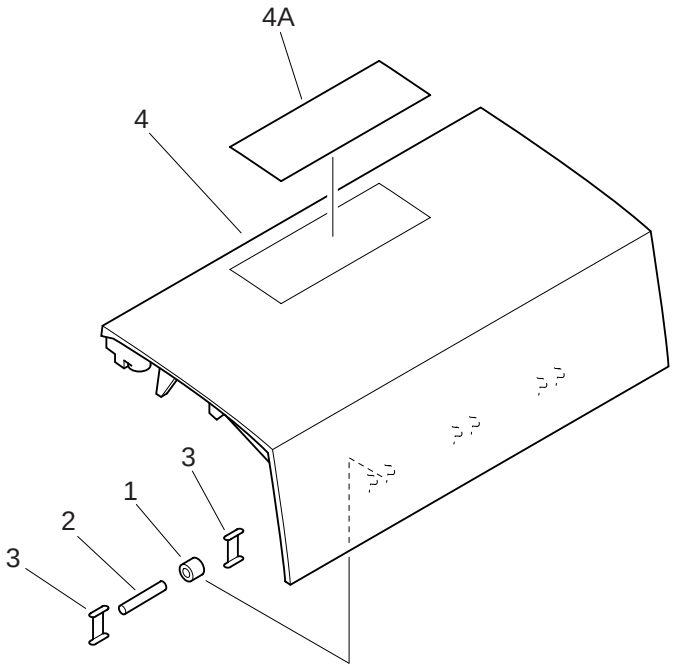

FIGURE & KEY NO.	PART NUMBER	RANK	QTY	DESCRIPTION	SERIAL NUMBER / REMARKS
P14 -	FG6-3303-000		1	UPPER PANEL ASSEMBLY	
1	FB4-8896-000		3	ROLLER	
2	FC2-1303-000		3	SHAFT, ROLLER	
3	FC2-2146-000		6	SPRING, LEAF	
4	FF5-8596-000		1	PANEL, UPPER	
4A	FB5-3192-000		1	LABEL, CAUTION	

COPYRIGHT © 1999 CANON INC.

FIGURE P20 SEPARATION MOTOR ASSEMBLY

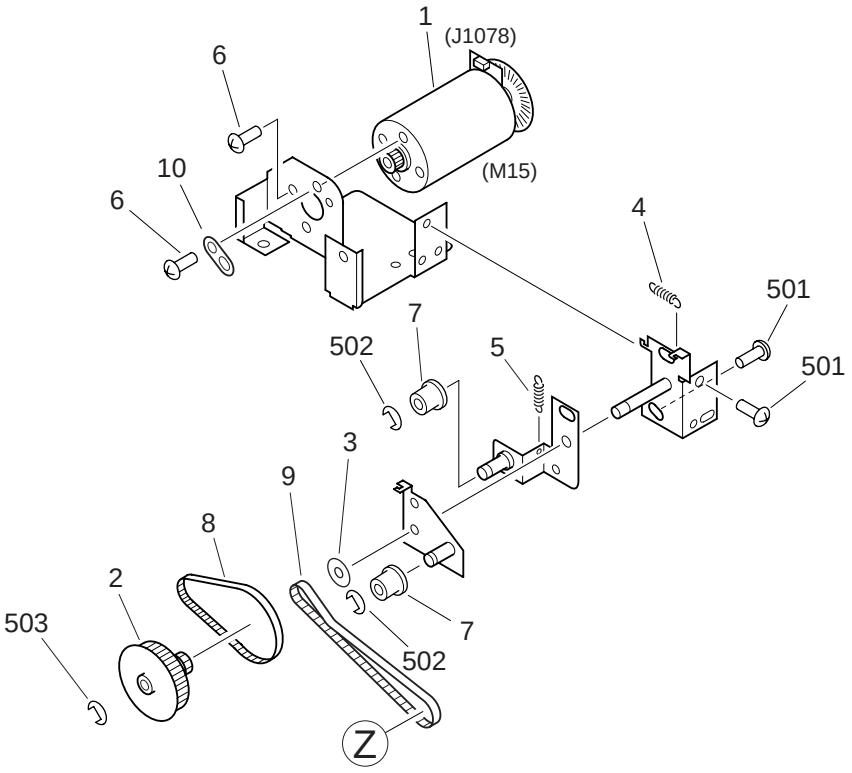

FROM FIGURE P11

FIGURE & KEY NO.	PART NUMBER	RANK	QTY	DESCRIPTION	SERIAL NUMBER / REMARKS
P20 -	FG6-3307-000		1	SEPARATION MOTOR ASSEMBLY	
1	FH6-1637-000		1	MOTOR, DC24V	M15 J1078
2	FS5-3732-000		1	PULLEY, 18T/55T	
3	FS5-6323-000		1	FLANGE	
4	FS7-2024-000		1	SPRING, TENSION	
5	FS7-2155-000		1	SPRING, TENSION	
6	XA9-0892-000		3	SCREW,MACH.,TRUSS HEAD,M4X6	
7	FC2-1291-000		2	PULLEY	
8	XF2-1607-840		1	BELT, TIMING	
9	XF2-1612-460		1	BELT, TIMING	
10	FB3-7269-000		1	LINK	
501	XB1-2400-409		2	SCREW,MACH.,TRUSS HEAD,M4X4	
502	XD2-1100-502		2	RING,E	
503	XD2-1100-402		1	RING,E	

COPYRIGHT © 1999 CANON INC.

FIGURE P30 SEPARATION ASSEMBLY

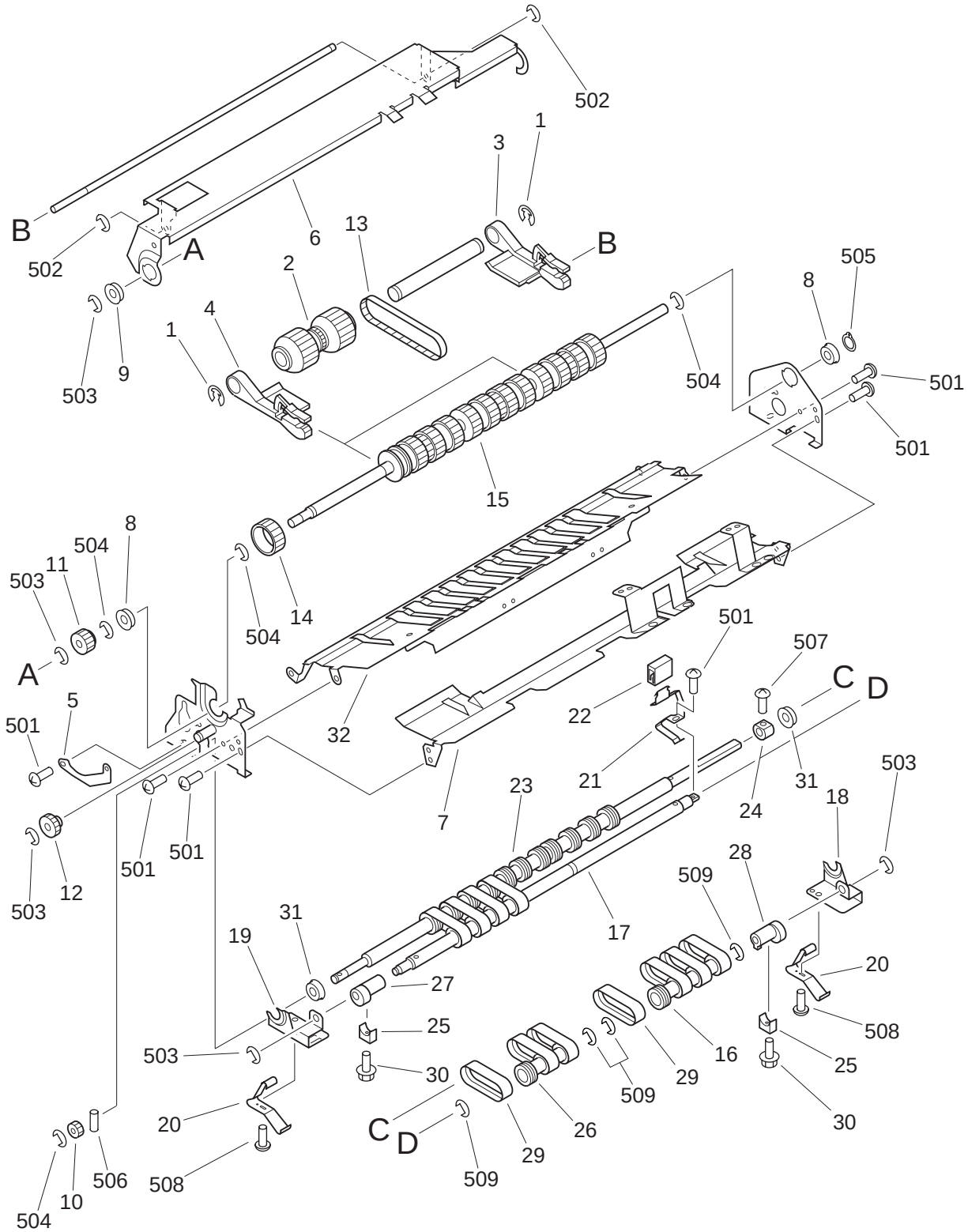

COPYRIGHT © 1999 CANON INC.

FIGURE & KEY NO.	PART NUMBER	RANK	QTY	DESCRIPTION	SERIAL NUMBER / REMARKS
P30 -	FG6-3304-000		1	SEPARATION ASSEMBLY	
1	FA4-1159-000		4	RING, RETAINING	
2	FB4-7640-000		2	ROLLER, PICK-UP	
3	FB4-7641-000		2	ARM, PICK-UP, FRONT	
4	FB4-7642-000		2	ARM, PICK-UP, REAR	
5	FB4-7645-000		1	PLATE, SUPPORT	
6	FB4-8878-000		1	ARM, ROD	
7	FB4-8884-000		1	GUIDE, SEPARATION	
8	FS1-1189-000		2	BUSHING	
9	FS1-1508-000		1	BUSHING	
10	FS3-0137-000		1	GEAR, 20T	
11	FS7-0318-000		1	GEAR, 20T	
12	FS7-0322-000		1	GEAR, 20T	
13	XF9-0684-000		2	BELT, TIMING, 92T	
14	FB4-6991-000		12	ROLLER	
15	FB4-7636-000		1	ROLLER, FEED	
16	FB4-7638-000		2	PULLEY, SEPARATION	
17	FB4-7639-000		1	SHAFT, SEPARATION	
18	FB4-7646-000		1	HOLDER, SEPARATION, FRONT	
19	FB4-7647-000		1	HOLDER, SEPARATION, REAR	
20	FB4-7648-000		2	SPRING, LEAF	
21	FB4-7650-000		1	LEVER	
22	FB4-7651-000		1	CAP	
23	FB4-8950-000		1	ROLLER, SEPARATION	
24	FC2-1227-000		1	COLLAR, SHAFT	
25	FC2-1258-000		2	CLAMP, PITCH, SEPARATION	
26	FC2-1369-000		1	PULLEY, SEPARATION	
27	FC2-1370-000		1	RING, PITCH, FRONT	
28	FC2-1371-000		1	RING, PITCH, REAR	
29	FC2-1827-000		11	BELT, SEPARATION	

COPYRIGHT © 1999 CANON INC.

FIGURE & KEY NO.	PART NUMBER	RANK	QTY	DESCRIPTION	SERIAL NUMBER / REMARKS
P30 - 30	XA9-1028-000		2	SCREW,ALLEN HEAD,M3X10	
31	XG9-0211-000		2	BALL BEARING, MF128ZZ1MC3D4M	
32	FB4-8899-000		1	CROSSMEMBER, SEP	
501	XB1-2300-409		10	SCREW,MACH.,TRUSS HEAD,M3X4	
502	XD2-1100-322		2	RING,E	
503	XD2-1100-502		5	RING,E	
504	XD2-1100-642		5	RING,E	
505	XD2-2100-802		1	RING,GRIP	
506	XD3-2200-102		1	PIN,DOWEL	
507	XB1-1300-609		1	SCREW,MACH.,PAN HEAD,M3X6	
508	XB6-7300-409		2	SCREW,TP,M3X4	
509	XD2-1100-802		6	RING,E	

COPYRIGHT©1999 CANON INC.

FIGURE PB LIST OF CONNECTORS

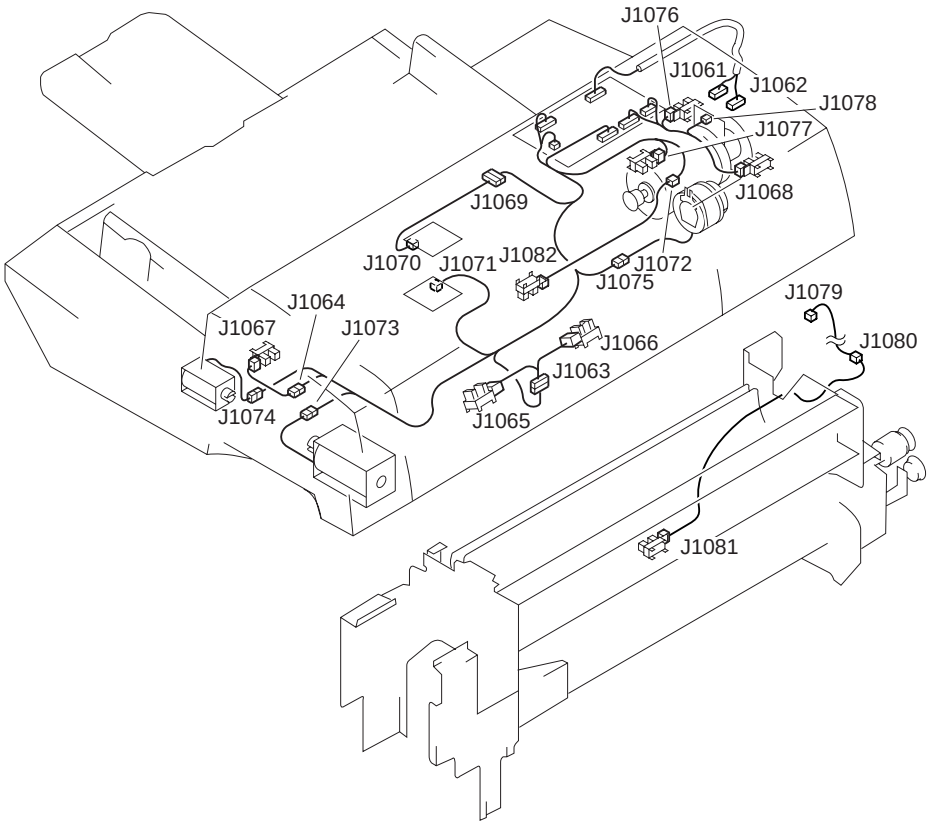

COPYRIGHT © 1999 CANON INC. CANON Saddle Finisher-D2 REV.0 JULY 1999 PRINTED IN JAPAN [IMPRIME AU JAPON]

FIGURE & KEY NO.	PART NUMBER	RANK	QTY	DESCRIPTION	SERIAL NUMBER / REMARKS
P B -	NPN		RF	LIST OF CONNECTORS	
J 841	PCB			INSERTER DRIVER	
	VS1-5824-009		1	CONNECTOR, 9P, FEMALE	
	VS1-6053-018		1	CONNECTOR, 18P, FEMALE	
	VS1-6094-009		1	CONNECTOR, 9P, FEMALE	
	WS3-5358-000		18	SOCKET CONTACT, 22-26AWG	
J 842	PCB			INSERTER DRIVER	
	VS1-0842-012		1	CONNECTOR, 12P, FEMALE	
J 844	PCB			INSERTER DRIVER	
	VS1-0842-005		1	CONNECTOR, 5P, FEMALE	
J 845	PCB			INSERTER DRIVER	
	VS1-0842-010		1	CONNECTOR, 10P, FEMALE	
J 846	PCB			INSERTER DRIVER	
	VS1-0842-006		1	CONNECTOR, 6P, FEMALE	
J 847	PCB			INSERTER DRIVER	
	VS1-0279-002		1	CONNECTOR, 2P, FEMALE	
	WS3-0437-000		2	SOCKET CONTACT, 20-30AWG	
J1061	------			TO FINISHER	
	VS1-5824-010		1	CONNECTOR, 10P, FEMALE	
	WS3-5358-000		9	SOCKET CONTACT, 22-26AWG	
J1062	------			TO FINISHER	
	VS1-5824-009		1	CONNECTOR, 9P, FEMALE	
	WS3-5358-000		9	SOCKET CONTACT, 22-26AWG	
J1063	VS1-0842-006		2	CONNECTOR, 6P, FEMALE	
	VS1-5057-006		1	CONNECTOR, SNAP TIGHT	
J1064	VS1-0842-003		2	CONNECTOR, 3P, FEMALE	
	VS1-5057-003		1	CONNECTOR, SNAP TIGHT	
J1065	NPN			PAPER FEED SENSOR 1	PI37
	VS1-0842-003		1	CONNECTOR, 3P, FEMALE	
J1066	NPN			PAPER FEED SENSOR 2	PI38

COPYRIGHT © 1999 CANON INC.

FIGURE & KEY NO.	PART NUMBER	RANK	QTY	DESCRIPTION	SERIAL NUMBER / REMARKS
P B - J1066	VS1-0842-003		1	CONNECTOR, 3P, FEMALE	
J1067	NPN			COVER OPEN/CLOSE FRONT SENSOR	PI39
	VS1-0842-003		1	CONNECTOR, 3P, FEMALE	
J1068	NPN			COVER OPEN/CLOSE REAR SENSOR	PI40
	VS1-0842-003		1	CONNECTOR, 3P, FEMALE	
J1069	VS1-0842-002		2	CONNECTOR, 2P, FEMALE	
	VS1-5057-002		1	CONNECTOR, SNAP TIGHT	
J1070	PCB			PAPER SET SENSOR	
	VS1-0842-002		1	CONNECTOR, 2P, FEMALE	
J1071	PCB			PAPER SET SENSOR	
	VS1-0842-002		1	CONNECTOR, 2P, FEMALE	
J1072	VS1-0842-004		2	CONNECTOR, 4P, FEMALE	
	VS1-5057-004		1	CONNECTOR, SNAP TIGHT	
J1073	NPN			PAPER PICK-UP SOLENOID	SL10
	VS1-0842-002		1	CONNECTOR, 2P, FEMALE	
	VS1-5057-002		1	CONNECTOR, SNAP TIGHT	
J1074	NPN			STOPPER SOLENOID	SL11
	VS1-0842-003		1	CONNECTOR, 3P, FEMALE	
	VS1-5057-003		1	CONNECTOR, SNAP TIGHT	
J1075	NPN			SEPARATION CLUTCH	CL1
	VS1-0842-002		1	CONNECTOR, 2P, FEMALE	
	VS1-5057-002		1	CONNECTOR, SNAP TIGHT	
J1076	NPN			INSERTER SET-UP SENSOR	PI41
	VS1-0842-003		1	CONNECTOR, 3P, FEMALE	
J1077	NPN			MOTOR CLOCK SENSOR	PI42
	VS1-0842-003		1	CONNECTOR, 3P, FEMALE	
J1078	NPN			INSERTER MOTOR	M15
	VS1-0279-002		1	CONNECTOR, 2P, FEMALE	
	WS3-0437-000		2	SOCKET CONTACT, 20-30AWG	
J1079	------			TO FINISHER	

COPYRIGHT © 1999 CANON INC.

FIGURE & KEY NO.	PART NUMBER	RANK	QTY	DESCRIPTION	SERIAL NUMBER / REMARKS
P B - J1079	VS1-0842-003		1	CONNECTOR, 3P, FEMALE	
J1080	VS1-0842-003		2	CONNECTOR, 3P, FEMALE	
	VS1-5057-003		1	CONNECTOR, SNAP TIGHT	
J1081	NPN			PAPER FEED SENSOR 3	PI36
	VS1-0842-003		1	CONNECTOR, 3P, FEMALE	
J1082	NPN			PAPER PICK-UP SENSOR	PI55
	VS1-0842-003		1	CONNECTOR, 3P, FEMALE	

D1 NUMERICAL INDEX (Saddle Finisher-D2)

PART NUMBER	FIGURE & KEY NO.
4A1 - 0746 - 000	Q20 - 27
4A1 - 2349 - 000	Q58 - 25
4S1 - 9002 - 000	Q58 - 23
FA2 - 5970 - 000	Q22 - 1
FA2 - 8244 - 000	Q58 - 1
FA3 - 4725 - 000	Q30 - 4
FA4 - 6702 - 000	Q53 - 1
FA5 - 5377 - 000	Q20 - 12
FA6 - 0768 - 020	Q30 - 1A
	Q30 - 2
	Q33 - 1
FA6 - 0910 - 000	Q30 - 81
FA6 - 2369 - 000	Q37 - 1
FB1 - 7018 - 000	Q52 - 25
FB1 - 7099 - 020	Q30 - 5
FB1 - 7173 - 000	Q37 - 3
FB1 - 7214 - 000	Q12 - 2
	Q59 - 1
FB2 - 0037 - 000	Q10 - 5
FB2 - 1178 - 000	Q52 - 17
FB2 - 4117 - 000	Q13 - 27
FB2 - 4120 - 000	Q13 - 28
FB2 - 6416 - 000	Q54 - 1
FB2 - 7897 - 000	Q14 - 21
FB2 - 7898 - 000	Q14 - 22
FB2 - 7899 - 000	Q14 - 23
FB2 - 7900 - 000	Q14 - 24
FB2 - 8506 - 000	Q14 - 25
FB3 - 0122 - 000	Q10 - 6
FB3 - 0123 - 030	Q30 - 6
FB3 - 3834 - 000	Q31 - 1
	Q35 - 1
	Q52 - 18
FB3 - 7269 - 000	Q20 - 2
FB3 - 7846 - 000	Q50 - 89
FB3 - 7847 - 000	Q50 - 90
FB3 - 7848 - 000	Q50 - 91
FB3 - 7852 - 000	Q53 - 2
FB3 - 7854 - 000	Q53 - 3
FB3 - 7855 - 000	Q50 - 84A
FB3 - 7856 - 000	Q50 - 11
FB3 - 7865 - 000	Q54 - 5
FB3 - 7866 - 000	Q54 - 6
FB3 - 7867 - 000	Q54 - 7
FB3 - 7869 - 000	Q50 - 12
FB3 - 7873 - 000	Q50 - 13
FB3 - 7875 - 000	Q56 - 12
FB3 - 7876 - 000	Q56 - 9
FB3 - 7877 - 000	Q56 - 10
FB3 - 7878 - 000	Q56 - 2
FB3 - 7881 - 000	Q11 - 1
FB3 - 7883 - 000	Q50 - 14
FB3 - 7885 - 000	Q50 - 78
FB3 - 7887 - 000	Q50 - 85
FB3 - 7888 - 000	Q50 - 86
FB3 - 7889 - 000	Q50 - 87
FB3 - 7894 - 000	Q57 - 4
FB3 - 7895 - 000	Q57 - 5
FB3 - 7896 - 000	Q57 - 6
FB3 - 7897 - 000	Q57 - 7
FB3 - 7901 - 000	Q58 - 5
FB3 - 7904 - 000	Q58 - 6
FB3 - 7906 - 000	Q58 - 7
FB3 - 7907 - 000	Q58 - 8
FB3 - 7909 - 000	Q58 - 9
FB3 - 7910 - 000	Q58 - 10
FB3 - 7912 - 000	Q50 - 15
FB3 - 7915 - 000	Q50 - 16
FB3 - 7920 - 000	Q50 - 17
FB3 - 7921 - 000	Q58 - 20
FB3 - 7923 - 000	Q50 - 18
FB3 - 7925 - 000	Q50 - 19
FB3 - 7926 - 000	Q56 - 11
FB3 - 7927 - 000	Q50 - 20
	Q56 - 3
FB3 - 7928 - 000	Q50 - 21
FB3 - 7929 - 000	Q58 - 11
FB3 - 7930 - 000	Q50 - 22
FB3 - 7931 - 000	Q50 - 23
FB3 - 7932 - 000	Q58 - 12
FB3 - 7934 - 000	Q50 - 24
FB3 - 7936 - 000	Q50 - 25
FB3 - 7937 - 000	Q50 - 26
FB3 - 7938 - 000	Q50 - 27
FB3 - 7939 - 000	Q50 - 28
FB3 - 7940 - 000	Q50 - 29
FB3 - 7941 - 000	Q50 - 30
FB3 - 7943 - 000	Q50 - 31
FB3 - 7944 - 000	Q50 - 32
FB3 - 7945 - 000	Q56 - 4
FB3 - 7946 - 000	Q56 - 13
FB3 - 7947 - 000	Q56 - 8
FB3 - 7948 - 000	Q50 - 33
FB3 - 7949 - 000	Q50 - 34
FB3 - 7954 - 000	Q50 - 44A
FB3 - 7966 - 000	Q58 - 13
FB3 - 7967 - 000	Q50 - 35
FB3 - 7969 - 000	Q50 - 36
FB3 - 7972 - 000	Q50 - 100
FB3 - 7973 - 000	Q50 - 37
FB3 - 7977 - 000	Q57 - 8
FB3 - 7978 - 000	Q58 - 21
FB3 - 7979 - 000	Q50 - 38
FB3 - 7980 - 000	Q50 - 39
FB3 - 7981 - 000	Q54 - 10
FB3 - 7982 - 000	Q54 - 11
FB3 - 7984 - 000	Q50 - 80
FB3 - 7985 - 000	Q50 - 81
FB3 - 9233 - 000	Q13 - 35
FB3 - 9234 - 000	Q13 - 36
FB3 - 9717 - 000	Q13 - 34
FB4 - 5390 - 000	Q41 - 1
FB4 - 6333 - 000	Q12 - 1
FB4 - 6652 - 000	Q41 - 2
FB4 - 8236 - 000	Q16 - 1
	Q18 - 2
	Q19 - 2
FB4 - 8237 - 000	Q10 - 4B
FB4 - 8238 - 000	Q13 - 13
FB4 - 8239 - 000	Q10 - 4C
FB4 - 8240 - 000	Q13 - 1
FB4 - 8245 - 000	Q55 - 7
FB4 - 8246 - 000	Q01 - 1
FB4 - 8248 - 000	Q10 - 4D
FB4 - 8250 - 000	Q11 - 2
FB4 - 8254 - 000	Q15 - 1E
FB4 - 8265 - 000	Q01 - 7
FB4 - 8266 - 000	Q01 - 8
FB4 - 8271 - 000	Q10 - 2A
FB4 - 8273 - 000	Q10 - 15
FB4 - 8274 - 000	Q10 - 13
FB4 - 8275 - 000	Q10 - 14
FB4 - 8276 - 000	Q10 - 16
FB4 - 8277 - 000	Q10 - 17
FB4 - 8278 - 000	Q10 - 18
FB4 - 8279 - 000	Q10 - 19
FB4 - 8280 - 000	Q10 - 20
FB4 - 8282 - 000	Q10 - 21
FB4 - 8283 - 000	Q10 - 22
FB4 - 8284 - 000	Q10 - 2B
FB4 - 8285 - 000	Q10 - 2C
FB4 - 8286 - 000	Q10 - 2D
FB4 - 8287 - 000	Q10 - 2E
FB4 - 8288 - 000	Q10 - 23
FB4 - 8290 - 000	Q18 - 23
	Q19 - 23
FB4 - 8291 - 000	Q18 - 4
	Q19 - 4
FB4 - 8297 - 000	Q19 - 1
FB4 - 8298 - 000	Q10 - 3A
FB4 - 8302 - 000	Q18 - 5
	Q19 - 5
FB4 - 8303 - 000	Q18 - 6
	Q19 - 6
FB4 - 8304 - 000	Q19 - 11
FB4 - 8306 - 000	Q18 - 34
	Q19 - 27
FB4 - 8307 - 000	Q18 - 7
	Q19 - 7
FB4 - 8309 - 000	Q18 - 8
	Q19 - 8
FB4 - 8310 - 000	Q18 - 9
	Q19 - 9
FB4 - 8311 - 000	Q18 - 10
	Q19 - 10
FB4 - 8314 - 000	Q18 - 11
	Q19 - 17A
FB4 - 8315 - 000	Q19 - 19
FB4 - 8316 - 000	Q18 - 12
	Q19 - 12
FB4 - 8320 - 000	Q18 - 14
	Q19 - 14
FB4 - 8321 - 000	Q18 - 15
	Q19 - 15
FB4 - 8328 - 000	Q18 - 21
	Q19 - 21
FB4 - 8329 - 000	Q19 - 20
FB4 - 8336 - 000	Q19 - 38
FB4 - 8337 - 000	Q18 - 1
FB4 - 8339 - 000	Q18 - 3C
	Q19 - 3C
FB4 - 8340 - 000	Q01 - 11
FB4 - 8344 - 000	Q10 - 24
FB4 - 8345 - 000	Q01 - 12
FB4 - 8350 - 000	Q11 - 3
FB4 - 8360 - 000	Q23 - 5B
FB4 - 8361 - 000	Q23 - 5A
FB4 - 8363 - 000	Q24 - 1
FB4 - 8364 - 000	Q20 - 3
FB4 - 8365 - 000	Q21 - 1
FB4 - 8366 - 000	Q21 - 2
FB4 - 8367 - 000	Q21 - 3
FB4 - 8368 - 000	Q21 - 4
FB4 - 8369 - 000	Q21 - 5
FB4 - 8370 - 000	Q21 - 6
FB4 - 8371 - 000	Q21 - 7
FB4 - 8376 - 000	Q22 - 3
FB4 - 8378 - 000	Q20 - 4
FB4 - 8379 - 000	Q20 - 5
FB4 - 8380 - 000	Q20 - 6
FB4 - 8381 - 000	Q20 - 7
FB4 - 8382 - 000	Q20 - 8
FB4 - 8383 - 000	Q20 - 9
FB4 - 8384 - 000	Q20 - 10
FB4 - 8385 - 000	Q20 - 11
FB4 - 8388 - 000	Q20 - 44A
	Q20 - 45A
FB4 - 8389 - 000	Q20 - 13
FB4 - 8392 - 000	Q22 - 4
FB4 - 8394 - 000	Q24 - 2
FB4 - 8395 - 000	Q24 - 3
FB4 - 8397 - 000	Q24 - 4
FB4 - 8402 - 000	Q20 - 17
FB4 - 8403 - 000	Q20 - 18
FB4 - 8404 - 000	Q20 - 19
FB4 - 8406 - 000	Q24 - 5
FB4 - 8407 - 000	Q24 - 6
FB4 - 8408 - 000	Q24 - 7
FB4 - 8410 - 000	Q24 - 9
FB4 - 8413 - 000	Q20 - 54E
FB4 - 8415 - 000	Q20 - 21
FB4 - 8416 - 000	Q20 - 23
FB4 - 8419 - 000	Q20 - 25
FB4 - 8421 - 000	Q20 - 26
FB4 - 8427 - 000	Q20 - 28
FB4 - 8428 - 000	Q20 - 29
FB4 - 8430 - 000	Q20 - 30
FB4 - 8431 - 000	Q20 - 31
FB4 - 8432 - 000	Q20 - 32
FB4 - 8433 - 000	Q20 - 33
FB4 - 8435 - 000	Q20 - 55A
FB4 - 8436 - 000	Q20 - 55B
FB4 - 8437 - 000	Q20 - 36
FB4 - 8438 - 000	Q20 - 37
FB4 - 8439 - 000	Q20 - 38
FB4 - 8441 - 000	Q20 - 39
FB4 - 8442 - 000	Q24 - 19
FB4 - 8453 - 000	Q20 - 16
FB4 - 8454 - 000	Q20 - 15
FB4 - 8457 - 000	Q20 - 84
FB4 - 8458 - 000	Q20 - 85
FB4 - 8460 - 000	Q20 - 86
FB4 - 8466 - 000	Q21 - 11
FB4 - 8467 - 000	Q21 - 12
FB4 - 8520 - 000	Q40 - 1
FB4 - 8524 - 000	Q13 - 2
FB4 - 8525 - 000	Q40 - 3
FB4 - 8528 - 000	Q13 - 3
FB4 - 8530 - 000	Q41 - 3
FB4 - 8532 - 000	Q41 - 4
FB4 - 8533 - 000	Q41 - 5
FB4 - 8534 - 000	Q41 - 6
FB4 - 8536 - 000	Q40 - 4
FB4 - 8537 - 000	Q40 - 5
FB4 - 8538 - 000	Q11 - 4

COPYRIGHT © 1999 CANON INC.

PART NUMBER	FIGURE & KEY NO.
FB4 - 8539 - 000	Q40 - 6
FB4 - 8540 - 000	Q40 - 7
FB4 - 8543 - 000	Q40 - 8
FB4 - 8545 - 000	Q40 - 9
FB4 - 8546 - 000	Q40 - 10
FB4 - 8547 - 000	Q40 - 11
FB4 - 8548 - 000	Q41 - 7
FB4 - 8549 - 000	Q40 - 2A
FB4 - 8591 - 000	Q30 - 87
FB4 - 8592 - 000	Q30 - 21
FB4 - 8593 - 000	Q30 - 82
FB4 - 8598 - 000	Q30 - 8
FB4 - 8600 - 000	Q33 - 5
FB4 - 8601 - 000	Q31 - 3
FB4 - 8602 - 000	Q01 - 10
FB4 - 8604 - 000	Q10 - 4A
FB4 - 8610 - 000	Q34 - 6
FB4 - 8613 - 000	Q37 - 4
FB4 - 8616 - 000	Q30 - 9
FB4 - 8618 - 000	Q30 - 11
FB4 - 8619 - 000	Q30 - 12
FB4 - 8620 - 000	Q31 - 2
FB4 - 8622 - 000	Q30 - 13
FB4 - 8623 - 000	Q30 - 14
FB4 - 8624 - 000	Q30 - 15
FB4 - 8630 - 000	Q36 - 1
FB4 - 8641 - 000	Q30 - 18
FB4 - 8645 - 000	Q35 - 2
FB4 - 8657 - 000	Q32 - 1
FB4 - 8660 - 000	Q30 - 22
FB4 - 8661 - 000	Q30 - 23
FB4 - 8663 - 000	Q37 - 7
FB4 - 8664 - 000	Q34 - 7
FB4 - 8668 - 000	Q30 - 85
FB4 - 8673 - 000	Q34 - 1
FB4 - 8678 - 000	Q30 - 83
FB4 - 8682 - 000	Q37 - 8
FB4 - 8684 - 000	Q35 - 3
FB4 - 8685 - 000	Q30 - 3A
FB4 - 8686 - 000	Q30 - 3B
FB4 - 8690 - 000	Q30 - 84
FB4 - 8697 - 000	Q10 - 4E
FB4 - 8698 - 000	Q10 - 4F
FB4 - 8701 - 000	Q31 - 4
FB4 - 8702 - 000	Q31 - 5
FB4 - 8703 - 000	Q31 - 6
FB4 - 8704 - 000	Q31 - 7
FB4 - 8707 - 000	Q31 - 8
FB4 - 8708 - 000	Q30 - 26
FB4 - 8709 - 000	Q30 - 79
FB4 - 8710 - 000	Q10 - 4H
FB4 - 8712 - 000	Q37 - 6
FB4 - 8713 - 000	Q30 - 27
FB4 - 8715 - 000	Q32 - 2
FB4 - 8716 - 000	Q33 - 2
FB4 - 8717 - 000	Q12 - 5A
FB4 - 8718 - 000	Q30 - 28
FB4 - 8719 - 000	Q30 - 29
FB4 - 8720 - 000	Q37 - 2
FB4 - 8721 - 000	Q30 - 24A
FB4 - 8722 - 000	Q01 - 6
	Q10 - 34A
FB4 - 8724 - 000	Q01 - 2
FB4 - 8726 - 000	Q10 - 8
FB4 - 8727 - 000	Q10 - 9
FB4 - 8728 - 000	Q10 - 10
FB4 - 8804 - 000	Q55 - 5
FB4 - 8807 - 000	Q13 - 25
FB4 - 8809 - 000	Q52 - 1
FB4 - 8810 - 000	Q52 - 2
FB4 - 8811 - 000	Q13 - 26
FB4 - 8813 - 000	Q10 - 1
FB4 - 8814 - 000	Q13 - 31
FB4 - 8815 - 000	Q13 - 32
FB4 - 8816 - 000	Q13 - 33
FB4 - 8817 - 000	Q13 - 15
FB4 - 8818 - 000	Q13 - 16
FB4 - 8819 - 000	Q13 - 17
FB4 - 8825 - 000	Q50 - 3
FB4 - 8828 - 000	Q10 - 7
FB4 - 8829 - 000	Q50 - 4
FB4 - 8835 - 000	Q52 - 3
FB4 - 8836 - 000	Q52 - 4
FB4 - 8837 - 000	Q52 - 19
FB4 - 8840 - 000	Q52 - 5

PART NUMBER	FIGURE & KEY NO.
FB4 - 8841 - 000	Q52 - 6
FB4 - 8843 - 000	Q52 - 26
FB4 - 8844 - 000	Q52 - 27
FB4 - 8845 - 000	Q52 - 7
FB4 - 8846 - 000	Q52 - 30
FB4 - 8848 - 000	Q52 - 15
FB4 - 8849 - 000	Q52 - 20
FB4 - 8850 - 000	Q52 - 8
FB4 - 8851 - 000	Q52 - 9
FB4 - 8853 - 000	Q55 - 9
FB4 - 8861 - 000	Q10 - 29
FB4 - 8863 - 000	Q14 - 1
FB4 - 8864 - 000	Q14 - 2
FB4 - 8865 - 000	Q14 - 3
FB4 - 8866 - 000	Q14 - 4
FB4 - 8868 - 000	Q14 - 5
FB4 - 8871 - 000	Q10 - 30
FB4 - 8872 - 000	Q14 - 12
FB4 - 8873 - 000	Q14 - 6A
	Q14 - 7A
FB4 - 8874 - 000	Q10 - 31
FB4 - 8929 - 000	Q12 - 3
FB4 - 8931 - 000	Q10 - 33
FB4 - 8933 - 000	Q01 - 16
	Q10 - 34B
FB4 - 8953 - 000	Q10 - 27
FB4 - 8954 - 000	Q10 - 28
FB4 - 9158 - 000	Q54 - 21
FB4 - 9159 - 000	Q54 - 19A
FB4 - 9161 - 000	Q50 - 79A
FB4 - 9163 - 000	Q53 - 5A
FB4 - 9164 - 000	Q53 - 5B
FB4 - 9166 - 000	Q58 - 2
FB4 - 9167 - 000	Q50 - 84B
FB4 - 9168 - 000	Q58 - 4
FB4 - 9171 - 000	Q50 - 40
FB4 - 9172 - 000	Q50 - 41
FB4 - 9174 - 000	Q50 - 88
FB5 - 2632 - 000	Q45 - 6
FB5 - 2634 - 000	Q45 - 8
FB5 - 2636 - 000	Q12 - 8
FB5 - 2639 - 000	Q45 - 4
FB5 - 2643 - 000	Q45 - 15
FB5 - 2644 - 000	Q45 - 16
FB5 - 2645 - 000	Q45 - 17
FB5 - 2646 - 000	Q45 - 18
FB5 - 2647 - 000	Q17 - 2
FB5 - 2650 - 000	Q46 - 1
FB5 - 2653 - 000	Q12 - 9
FB5 - 2658 - 000	Q12 - 15
FB5 - 2662 - 000	Q12 - 16
FB5 - 2666 - 000	Q45 - 2
FB5 - 2672 - 000	Q01 - 13
FB5 - 2674 - 000	Q30 - 19
FB5 - 2675 - 000	Q12 - 10
FB5 - 2677 - 000	Q12 - 7
FB5 - 2681 - 000	Q13 - 21
FB5 - 2682 - 000	Q13 - 22
FB5 - 2683 - 000	Q50 - 5
FB5 - 2684 - 000	Q50 - 6
FB5 - 2687 - 000	Q13 - 4
FB5 - 2688 - 000	Q52 - 21
FB5 - 2689 - 000	Q52 - 22
FB5 - 2690 - 000	Q11 - 8A
FB5 - 2691 - 000	Q11 - 8B
FB5 - 2692 - 000	Q11 - 11A
FB5 - 2693 - 000	Q01 - 15
FB5 - 2694 - 000	Q11 - 9A
FB5 - 2695 - 000	Q54 - 8A
FB5 - 2696 - 000	Q53 - 4
FB5 - 2697 - 000	Q50 - 42
FB5 - 2698 - 000	Q50 - 45A
FB5 - 2699 - 000	Q50 - 45B
FB5 - 2700 - 000	Q54 - 2
FB5 - 2701 - 000	Q54 - 3
FB5 - 2702 - 000	Q54 - 4
FB5 - 2703 - 000	Q58 - 3
FB5 - 2704 - 000	Q54 - 9
FB5 - 2705 - 000	Q50 - 7
FB5 - 2706 - 000	Q50 - 72
FB5 - 2708 - 000	Q54 - 18
FB5 - 2709 - 000	Q11 - 8C
FB5 - 2711 - 000	Q58 - 24
FB5 - 2726 - 000	Q11 - 15
FC1 - 7432 - 000	Q58 - 22

PART NUMBER	FIGURE & KEY NO.
FC1 - 7883 - 000	Q14 - 29
FC2 - 3140 - 000	Q37 - 5A
FC2 - 4260 - 000	Q13 - 23
FC2 - 4262 - 000	Q13 - 5
FC2 - 5102 - 000	Q30 - 30
FE6 - 3091 - 000	Q30 - 10
FE6 - 3092 - 000	Q30 - 68
FF3 - 3109 - 000	Q50 - 107
FF3 - 3110 - 000	Q B - J 305
	Q B - J 306
	Q B - J 315
	Q B - J 316
	Q B - JD 2
	Q54 - 12
FF3 - 3111 - 000	Q50 - 82
FF3 - 3113 - 000	Q57 - 3
FF3 - 3205 - 000	Q58 - 14
FF3 - 3599 - 000	Q30 - 31
FF3 - 3600 - 000	Q30 - 32
FF3 - 3602 - 000	Q13 - 11
FF3 - 3603 - 000	Q13 - 6
FF3 - 3604 - 000	Q30 - 76
FF3 - 3605 - 000	Q20 - 54A
FF3 - 3606 - 000	Q20 - 42
FF3 - 3607 - 000	Q34 - 2
FF3 - 3608 - 000	Q20 - 43
FF3 - 3609 - 000	Q24 - 10
FF3 - 3610 - 000	Q11 - 14
	Q15 - 3
FF3 - 3611 - 000	Q15 - 1
FF3 - 3612 - 000	Q15 - 1
FF3 - 3613 - 000	Q15 - 1
FF3 - 3636 - 000	Q91 - Q 2
FF3 - 3742 - 000	Q20 - 22
FF3 - 3746 - 000	Q30 - 7
FF3 - 3749 - 000	Q90 - 1
FF3 - 3865 - 000	Q10 - 32
FF3 - 3866 - 000	Q14 - 13
FF3 - 3872 - 000	Q12 - 17
FF3 - 3873 - 000	Q56 - 1
FF3 - 3875 - 000	Q46 - 5
FF5 - 3800 - 000	Q30 - 34
FF5 - 3804 - 000	Q31 - 9
FF5 - 4230 - 000	Q50 - 8
FF5 - 4231 - 000	Q13 - 29
FF5 - 5809 - 000	Q50 - 43
FF5 - 5810 - 000	Q50 - 44
FF5 - 5811 - 000	Q13 - 10
FF5 - 5812 - 000	Q13 - 7
FF5 - 6194 - 000	Q32 - 3
	Q37 - 11
	Q52 - 23
FF5 - 8452 - 000	Q18 - 3A
	Q19 - 3A
FF5 - 8453 - 000	Q18 - 24
	Q19 - 24
FF5 - 8461 - 000	Q11 - 13
FF5 - 8463 - 000	Q01 - 3
FF5 - 8464 - 000	Q01 - 4
FF5 - 8481 - 000	Q22 - 5
FF5 - 8483 - 000	Q23 - 4
FF5 - 8484 - 000	Q20 - 44
FF5 - 8485 - 000	Q20 - 45
FF5 - 8486 - 000	Q24 - 12
FF5 - 8487 - 000	Q24 - 13
FF5 - 8489 - 000	Q20 - 46
FF5 - 8490 - 000	Q20 - 47
FF5 - 8491 - 000	Q20 - 48
FF5 - 8493 - 000	Q24 - 14
FF5 - 8494 - 000	Q20 - 49
FF5 - 8495 - 000	Q20 - 50
FF5 - 8496 - 000	Q20 - 51
FF5 - 8497 - 000	Q40 - 2
FF5 - 8500 - 000	Q20 - 24
FF5 - 8509 - 000	Q30 - 24
FF5 - 8513 - 000	Q40 - 12
FF5 - 8514 - 000	Q40 - 13
FF5 - 8515 - 000	Q41 - 8
FF5 - 8520 - 000	Q12 - 5
FF5 - 8523 - 000	Q30 - 37
FF5 - 8524 - 000	Q31 - 15
FF5 - 8525 - 000	Q37 - 5
FF5 - 8527 - 000	Q10 - 11
FF5 - 8529 - 000	Q30 - 38
FF5 - 8530 - 000	Q30 - 39

COPYRIGHT © 1999 CANON INC.

PART NUMBER	FIGURE & KEY NO.
FF5 - 8531 - 000	Q30 - 40
FF5 - 8532 - 000	Q30 - 41
	Q35 - 4
FF5 - 8534 - 000	Q30 - 43
FF5 - 8535 - 000	Q34 - 3
FF5 - 8536 - 000	Q33 - 3
FF5 - 8537 - 000	Q37 - 12
FF5 - 8538 - 000	Q30 - 45
FF5 - 8540 - 000	Q37 - 13
FF5 - 8541 - 000	Q37 - 14
FF5 - 8542 - 000	Q30 - 75
FF5 - 8545 - 000	Q30 - 62
FF5 - 8546 - 000	Q31 - 11
FF5 - 8547 - 000	Q30 - 46
FF5 - 8548 - 000	Q30 - 48
FF5 - 8549 - 000	Q30 - 3
FF5 - 8550 - 000	Q30 - 1
FF5 - 8551 - 000	Q30 - 49
FF5 - 8583 - 000	Q14 - 14
FF5 - 8584 - 000	Q14 - 6
FF5 - 8585 - 000	Q14 - 7
FF5 - 8586 - 000	Q14 - 27
FF5 - 8587 - 000	Q55 - 16
FF5 - 8590 - 000	Q52 - 10
FF5 - 8591 - 000	Q52 - 28
FF5 - 8621 - 000	Q10 - 34
FF5 - 8623 - 000	Q12 - 11
FF5 - 8626 - 000	Q17 - 1
FF5 - 8683 - 000	Q50 - 79
FF5 - 8685 - 000	Q50 - 84
FF5 - 8687 - 000	Q54 - 19
FF5 - 9614 - 000	Q52 - 31
FF5 - 9615 - 000	Q13 - 24
FF5 - 9616 - 000	Q11 - 8
FF5 - 9617 - 000	Q11 - 11
FF5 - 9618 - 000	Q11 - 9
FF5 - 9619 - 000	Q50 - 45
FF5 - 9620 - 000	Q54 - 8
FF5 - 9621 - 000	Q30 - 86
FF5 - 9622 - 000	Q55 - 8
FG2 - 9785 - 000	Q18 - 25
	Q19 - 25
	Q36 - 3
FG3 - 0081 - 000	Q30 - 52
FG3 - 0082 - 000	Q20 - 52
	Q30 - 16
FG3 - 0083 - 000	Q20 - 53
	Q30 - 17
FG3 - 0085 - 000	Q92 -
FG3 - 0086 - 000	Q12 - 6
FG3 - 0089 - 000	Q12 - 4
FG3 - 0091 - 000	Q50 - 1
FG3 - 0174 - 000	Q22 - 6
FG3 - 0175 - 000	Q20 - 40
FG3 - 0176 - 000	Q13 - 37
FG3 - 0177 - 000	Q40 - 14
FG3 - 0178 - 000	Q18 - 22
FG3 - 0179 - 000	Q19 - 22
FG3 - 0181 - 000	Q13 - 38
FG3 - 0535 - 000	Q50 - 2
FG3 - 0536 - 000	Q91 -
FG3 - 0537 - 000	Q90 -
FG3 - 0973 - 000	Q14 - 11
FG3 - 0976 - 000	Q16 -
FG3 - 0983 - 000	Q13 - 9
FG5 - 8391 - 000	Q59 -
FG5 - 8392 - 000	Q57 -
FG5 - 8408 - 000	Q50 - 93
FG6 - 3051 - 000	Q10 - 2
FG6 - 3055 - 000	Q18 -
FG6 - 3063 - 000	Q18 - 3
	Q19 - 3
FG6 - 3067 - 000	Q19 - 17
FG6 - 3076 - 000	Q10 - 3
FG6 - 3080 - 000	Q22 -
FG6 - 3084 - 000	Q23 -
FG6 - 3086 - 000	Q23 - 5
FG6 - 3103 - 000	Q20 - 54
FG6 - 3104 - 000	Q24 -
FG6 - 3108 - 000	Q20 - 55
FG6 - 3130 - 000	Q20 -
FG6 - 3133 - 000	Q21 -
FG6 - 3152 - 000	Q40 - 15
FG6 - 3154 - 000	Q41 -
FG6 - 3170 - 000	Q37 -

PART NUMBER	FIGURE & KEY NO.
FG6 - 3171 - 000	Q31 -
FG6 - 3178 - 000	Q32 -
FG6 - 3179 - 000	Q33 -
FG6 - 3183 - 000	Q34 -
FG6 - 3191 - 000	Q35 -
FG6 - 3222 - 000	Q15 -
FG6 - 3223 - 000	Q15 -
FG6 - 3224 - 000	Q15 -
FG6 - 3232 - 000	Q19 -
FG6 - 3237 - 000	Q45 - 3
FG6 - 3238 - 000	Q45 - 3
FG6 - 3241 - 000	Q36 -
FG6 - 3248 - 000	Q10 - 4
FG6 - 3297 - 000	Q14 -
FG6 - 3319 - 000	Q45 -
FG6 - 3320 - 000	Q45 -
FG6 - 3326 - 000	Q17 -
FG6 - 4832 - 000	Q55 -
FG6 - 4835 - 000	Q52 -
FG6 - 4841 - 000	Q53 -
FG6 - 4842 - 000	Q54 -
FG6 - 4843 - 000	Q58 -
FG6 - 5215 - 000	Q56 -
FH2 - 5006 - 000	Q01 - 14
FH2 - 6481 - 000	Q B - J 1
	Q16 - 2
FH2 - 6482 - 000	Q16 - 3
FH2 - 6483 - 000	Q16 - 4
FH2 - 6487 - 000	Q16 - 5
FH3 - 2553 - 000	Q11 - 5
FH3 - 2554 - 000	Q11 - 5
FH4 - 1366 - 000	Q90 - IC121
FH4 - 5560 - 000	Q90 - IC108
	Q91 - 1
FH6 - 1253 - 000	Q45 - 9
FH6 - 1455 - 000	Q59 - 3
FH6 - 1456 - 000	Q59 - 4
FH6 - 1457 - 000	Q50 - 105
	Q56 - 18
FH6 - 1458 - 000	Q50 - 95
FH6 - 1511 - 000	Q12 - 12
FH6 - 1527 - 000	Q57 - 2
FH6 - 1639 - 000	Q30 - 53
FH6 - 1642 - 000	Q22 - 7
FH6 - 1643 - 000	Q23 - 6
FH6 - 1644 - 000	Q20 - 56
FH6 - 1645 - 000	Q20 - 54D
FH6 - 1646 - 000	Q40 - 16
FH6 - 1647 - 000	Q18 - 3F
	Q19 - 3F
FH6 - 1648 - 000	Q12 - 14
FH6 - 1649 - 000	Q14 - 30
FH6 - 1650 - 000	Q46 - 2
FH6 - 1651 - 000	Q30 - 54
FH6 - 1652 - 000	Q36 - 2
FH6 - 1690 - 000	Q52 - 32
FH7 - 5766 - 000	Q50 - 46
FH7 - 5767 - 000	Q50 - 101
FH7 - 7394 - 000	Q59 - 5
FH7 - 7497 - 000	Q18 - 27
FL5 - 2068 - 000	Q53 - 5
FL6 - 2067 - 000	Q50 - 94
FS1 - 1187 - 000	Q50 - 47
	Q58 - 15
FS1 - 1189 - 000	Q50 - 48
FS1 - 1206 - 000	Q59 - 6
FS1 - 1213 - 000	Q50 - 49
	Q58 - 16
FS1 - 1376 - 000	Q52 - 11
FS1 - 1452 - 030	Q20 - 58
FS1 - 1510 - 000	Q59 - 7
FS1 - 9005 - 000	Q30 - 56
FS1 - 9009 - 000	Q40 - 17
	Q45 - 10
FS1 - 9054 - 000	Q50 - 102
FS1 - 9073 - 000	Q50 - 50
FS1 - 9076 - 000	Q50 - 51
	Q54 - 13
FS1 - 9078 - 000	Q20 - 59
	Q52 - 12
	Q55 - 1
FS1 - 9120 - 000	Q20 - 1
	Q22 - 8
FS1 - 9166 - 000	Q50 - 92
FS1 - 9168 - 000	Q31 - 12

PART NUMBER	FIGURE & KEY NO.
FS1 - 9255 - 000	Q30 - 59
FS2 - 1528 - 000	Q30 - 60
FS2 - 1542 - 000	Q52 - 13
	Q55 - 2
FS2 - 1617 - 000	Q18 - 28
	Q19 - 28
FS2 - 3470 - 000	Q20 - 87
FS2 - 3488 - 000	Q30 - 61
FS2 - 3504 - 000	Q20 - 60
FS2 - 3514 - 000	Q55 - 10
FS2 - 3527 - 000	Q30 - 63
FS2 - 6466 - 000	Q20 - 61
FS2 - 6488 - 000	Q20 - 63
FS2 - 6559 - 000	Q30 - 36
	Q55 - 17
FS2 - 6581 - 000	Q20 - 94
	Q23 - 7
FS2 - 9407 - 000	Q54 - 14
FS5 - 0713 - 000	Q55 - 11
FS5 - 0804 - 000	Q20 - 64
FS5 - 1753 - 000	Q54 - 15
FS5 - 1754 - 000	Q50 - 52
FS5 - 2545 - 000	Q52 - 14
FS5 - 3255 - 000	Q55 - 12
FS5 - 3409 - 000	Q50 - 103
FS5 - 3451 - 000	Q55 - 15
FS5 - 3574 - 000	Q57 - 10
FS5 - 3575 - 000	Q57 - 11
FS5 - 3576 - 000	Q50 - 53
FS5 - 3577 - 000	Q50 - 54
FS5 - 3578 - 000	Q50 - 96
FS5 - 3580 - 000	Q50 - 55
FS5 - 3744 - 000	Q18 - 29
	Q19 - 29
FS5 - 3745 - 000	Q40 - 19
FS5 - 3746 - 000	Q23 - 8
FS5 - 3747 - 000	Q23 - 9
FS5 - 3748 - 000	Q20 - 66
	Q24 - 15
FS5 - 3749 - 000	Q30 - 64
FS5 - 3750 - 000	Q20 - 67
FS5 - 3751 - 000	Q20 - 68
FS5 - 3752 - 000	Q20 - 69
FS5 - 3794 - 000	Q30 - 35
	Q55 - 6
FS5 - 3795 - 000	Q14 - 15
FS5 - 3796 - 000	Q14 - 16
FS5 - 6237 - 000	Q20 - 70
FS5 - 6243 - 000	Q30 - 65
FS5 - 6307 - 000	Q18 - 30
	Q19 - 30
FS5 - 6324 - 000	Q20 - 92
FS5 - 6381 - 000	Q14 - 17
	Q30 - 66
FS5 - 6544 - 000	Q53 - 6
FS5 - 6545 - 000	Q13 - 18
FS5 - 6546 - 000	Q50 - 83
FS5 - 6547 - 000	Q14 - 18
	Q50 - 97
FS5 - 6549 - 000	Q50 - 56
FS5 - 6550 - 000	Q50 - 57
FS5 - 6653 - 000	Q40 - 20
FS5 - 6654 - 000	Q40 - 22
FS5 - 6655 - 000	Q40 - 23
FS5 - 6656 - 000	Q40 - 24
FS5 - 6657 - 000	Q31 - 13
FS5 - 6661 - 000	Q30 - 67
FS5 - 6662 - 000	Q21 - 8
FS5 - 6663 - 000	Q21 - 9
FS5 - 6664 - 000	Q34 - 4
FS5 - 6667 - 000	Q40 - 15A
FS5 - 9212 - 000	Q50 - 58
	Q57 - 1
FS5 - 9579 - 000	Q11 - 7
FS6 - 0064 - 000	Q20 - 41
FS6 - 0066 - 000	Q14 - 28
FS6 - 0140 - 000	Q46 - 9
FS6 - 0557 - 000	Q45 - 1
FS6 - 0814 - 000	Q56 - 6
FS6 - 0815 - 000	Q56 - 7
FS6 - 0816 - 000	Q59 - 8
FS6 - 0817 - 000	Q59 - 9
FS6 - 0819 - 000	Q59 - 10
FS6 - 0820 - 000	Q57 - 12
FS6 - 0821 - 000	Q57 - 13

COPYRIGHT © 1999 CANON INC.

PART NUMBER	FIGURE & KEY NO.
FS6 - 0822 - 000	Q50 - 59
FS6 - 0823 - 000	Q50 - 60
FS6 - 0824 - 000	Q50 - 61
FS6 - 0825 - 000	Q58 - 17
FS6 - 0826 - 000	Q58 - 18
FS6 - 0828 - 000	Q59 - 11
FS6 - 0829 - 000	Q50 - 62
FS6 - 0830 - 000	Q50 - 63
FS6 - 0831 - 000	Q59 - 12
FS6 - 0832 - 000	Q50 - 106
FS6 - 0833 - 000	Q59 - 13
FS6 - 2368 - 000	Q13 - 30
FS6 - 2569 - 000	Q54 - 16
FS6 - 2570 - 000	Q56 - 5
FS6 - 2571 - 000	Q57 - 9
FS6 - 2572 - 000	Q54 - 17
FS6 - 2573 - 000	Q50 - 98
FS6 - 2576 - 000	Q50 - 64
FS6 - 2578 - 000	Q59 - 14
FS6 - 2579 - 000	Q50 - 65
FS6 - 2580 - 000	Q50 - 66
FS6 - 2581 - 000	Q50 - 67
FS6 - 2582 - 000	Q50 - 68
FS6 - 3130 - 000	Q20 - 93
FS6 - 4199 - 000	Q50 - 69
FS6 - 8795 - 000	Q24 - 11
FS7 - 0346 - 000	Q18 - 31
	Q19 - 31
FS7 - 0347 - 000	Q18 - 32
	Q19 - 32
FS7 - 0349 - 000	Q18 - 33
	Q19 - 33
FS7 - 0350 - 000	Q18 - 3B
	Q19 - 3B
FS7 - 0351 - 000	Q18 - 3E
	Q19 - 3E
FS7 - 0354 - 000	Q22 - 9
FS7 - 0355 - 000	Q20 - 71
FS7 - 0356 - 000	Q20 - 72
FS7 - 0357 - 000	Q20 - 73
FS7 - 0358 - 000	Q20 - 74
FS7 - 0359 - 000	Q20 - 88
FS7 - 0371 - 000	Q40 - 25
FS7 - 0402 - 000	Q12 - 13
FS7 - 0403 - 000	Q46 - 6
FS7 - 0404 - 000	Q45 - 7
FS7 - 0405 - 000	Q46 - 3
FS7 - 2081 - 000	Q18 - 20
	Q19 - 34
FS7 - 2082 - 000	Q10 - 25
FS7 - 2087 - 000	Q21 - 10
FS7 - 2088 - 000	Q20 - 75
	Q22 - 10
FS7 - 2089 - 000	Q24 - 17
FS7 - 2090 - 000	Q20 - 76
FS7 - 2092 - 000	Q20 - 77
FS7 - 2093 - 000	Q20 - 78
FS7 - 2101 - 000	Q40 - 26
FS7 - 2102 - 000	Q40 - 27
FS7 - 2103 - 000	Q40 - 28
FS7 - 2107 - 000	Q30 - 69
FS7 - 2108 - 000	Q30 - 70
FS7 - 2109 - 000	Q30 - 71
FS7 - 2110 - 000	Q30 - 72
FS7 - 2111 - 000	Q30 - 73
FS7 - 2112 - 000	Q30 - 74
FS7 - 2114 - 000	Q31 - 14
FS7 - 2115 - 000	Q35 - 5
FS7 - 2117 - 000	Q34 - 5
FS7 - 2118 - 000	Q30 - 55
FS7 - 2120 - 000	Q37 - 10
FS7 - 2121 - 000	Q30 - 51
FS7 - 2122 - 000	Q37 - 21
FS7 - 2123 - 000	Q37 - 20
FS7 - 2124 - 000	Q37 - 19
FS7 - 2125 - 000	Q37 - 9
FS7 - 2142 - 000	Q14 - 8
FS7 - 2143 - 000	Q13 - 19
FS7 - 2145 - 000	Q52 - 24
FS7 - 2146 - 000	Q55 - 3
FS7 - 2147 - 000	Q50 - 9
FS7 - 2148 - 000	Q13 - 20
FS7 - 2149 - 000	Q14 - 19
FS7 - 2161 - 000	Q45 - 11
FS7 - 2163 - 000	Q50 - 70
FS7 - 2164 - 000	Q50 - 71
FS7 - 2171 - 000	Q11 - 12
FS7 - 5252 - 000	Q40 - 29
FY9 - 2034 - 000	Q02 - 1
PCB	Q B - J 1
	Q B - J 2
	Q B - J 4
	Q B - J 5
	Q B - J 6
	Q B - J 7
	Q B - J 8
	Q B - J 9
	Q B - J 10
	Q B - J 11
	Q B - J 12
	Q B - J 13
	Q B - J 14
	Q B - J 15
	Q B - J 16
	Q B - J 17
	Q B - J 34
	Q B - J 50
	Q B - J 58
	Q B - J 63
	Q B - J 84
	Q B - J 85
	Q B - J 88
	Q B - J 101
	Q B - J 102
	Q B - J 103
	Q B - J 104
	Q B - J 105
	Q B - J 106
	Q B - J 107
	Q B - J 108
	Q B - J 109
	Q B - J 110
	Q B - J 111
	Q B - J 112
	Q B - J 113
	Q B - J 114
	Q B - J 115
	Q B - J 116
	Q B - J 117
	Q B - J 118
	Q B - J 119
	Q B - J 120
	Q B - J 121
	Q B - J 122
	Q B - J 123
	Q B - J 124
	Q B - J 125
	Q B - J 126
	Q B - J 127
	Q B - J 128
	Q B - J 602
	Q B - J 711
	Q B - J 712
	Q B - J 713
	Q B - J 714
	Q B - J 715
	Q B - J 716
	Q B - J 717
	Q B - J 718
	Q B - J 719
	Q B - J 720
	Q B - J 731
	Q B - J 732
	Q B - J 741
	Q B - J 742
	Q B - J 743
	Q B - J 744
	Q B - J 745
	Q B - J 746
	Q B - J 747
	Q B - J 941
	Q B - J 971
	Q B - J 981
RA1 - 2483 - 000	Q20 - 79
	Q22 - 11
	Q23 - 10
RH7 - 1289 - 000	Q11 - 10
	Q15 - 2
RS1 - 1042 - 000	Q20 - 89
	Q59 - 15
VD7 - 0646 - 301	Q92 - 1
VS1 - 0001 - 012	Q B - J 51
VS1 - 0279 - 002	Q B - J 108
VS1 - 0279 - 003	Q B - J 112
VS1 - 0279 - 004	Q B - J 40
	Q B - J 106
	Q B - J 116
VS1 - 0279 - 006	Q B - J 101
	Q B - J 714
	Q B - J 746
VS1 - 0279 - 008	Q B - J 126
	Q B - J1096
VS1 - 0280 - 006	Q B - J1016
VS1 - 0842 - 002	Q B - J 17
	Q B - J 18
	Q B - J 116
	Q B - J 118
	Q B - J1007
VS1 - 0842 - 003	Q B - J 3
	Q B - J 15
	Q B - J 16
	Q B - J 20
	Q B - J 36
	Q B - J 37
	Q B - J 44
	Q B - J 46
	Q B - J 68
	Q B - J 102
	Q B - J 103
	Q B - J 105
	Q B - J 106
	Q B - J 124
	Q B - J 126
	Q B - J 127
	Q B - J 128
	Q B - J 129
	Q B - J 131
	Q B - J 132
	Q B - J 201
	Q B - J 203
	Q B - J 301
	Q B - J 303
	Q B - J 309
	Q B - J 525
	Q B - J 981
	Q B - J1003
	Q B - J1004
	Q B - J1005
	Q B - J1008
	Q B - J1042
	Q B - J1048
	Q B - J1050
	Q B - J1051
	Q B - J1052
	Q B - J1053
VS1 - 0842 - 004	Q B - J 5
	Q B - J 14
	Q B - J 16
	Q B - J 17
	Q B - J 43
	Q B - J 115
	Q B - J 125
	Q B - J 208
	Q B - J 225
	Q B - J 308
	Q B - J 325
	Q B - J 425
	Q B - J1002
VS1 - 0842 - 005	Q B - J 12
	Q B - J 19
	Q B - J 47
	Q B - J 113
	Q B - J 114
	Q B - J 119
	Q B - J 123
	Q B - J 202
	Q B - J 204
	Q B - J 302
	Q B - J 304
	Q B - J 941
	Q B - J1001
	Q B - J1049
VS1 - 0842 - 006	Q B - J 2
	Q B - J 71
	Q B - J 745

COPYRIGHT © 1999 CANON INC.

PART NUMBER	FIGURE & KEY NO.
VS1 - 0842 - 006	Q B - J1017
	Q B - J1044
	Q B - J1118
VS1 - 0842 - 007	Q B - J 13
	Q B - J 120
VS1 - 0842 - 008	Q B - J 10
	Q B - J 15
	Q B - J 69
	Q B - J1046
	Q B - J1047
VS1 - 0842 - 009	Q B - J 6
	Q B - J1036
	Q B - J1045
	Q B - J1092
VS1 - 0842 - 010	Q B - J 7
	Q B - J 125
	Q B - J1043
	Q B - J1091
VS1 - 0842 - 011	Q B - J 742
VS1 - 0842 - 014	Q B - J 8
	Q B - J 14
VS1 - 0842 - 015	Q B - J 9
	Q B - J 11
VS1 - 0852 - 002	Q B - J 117
VS1 - 0852 - 003	Q B - J 101
	Q B - J 107
	Q B - J 209
VS1 - 0852 - 007	Q B - J 121
VS1 - 0852 - 010	Q B - J 125
VS1 - 5057 - 002	Q B - J 12
	Q B - J 18
	Q B - J 24
	Q B - J 116
	Q B - J 118
	Q B - J1007
	Q B - J1033
	Q34 - 2A
	Q50 - 104
VS1 - 5057 - 003	Q B - J 20
	Q B - J 22
	Q B - J 62
	Q B - J 68
	Q B - J 301
	Q B - J 303
	Q B - J 309
	Q B - J1004
	Q B - J1008
	Q B - J1042
	Q B - J1048
	Q B - J1079
	Q13 - 11A
	Q14 - 11A
	Q30 - 76A
	Q56 - 1A
	Q57 - 3A
VS1 - 5057 - 004	Q B - J 16
	Q B - J 43
	Q B - J 115
	Q B - J 225
	Q B - J 308
	Q B - J 425
	Q B - J1002
	Q12 - 17A
	Q30 - 32A
	Q50 - 82A
	Q56 - 1C
	Q58 - 14A
VS1 - 5057 - 005	Q B - J 19
	Q B - J 47
	Q B - J 302
	Q B - J 304
	Q B - J1001
	Q B - J1031
	Q B - J1032
	Q12 - 17B
	Q20 - 54B
	Q34 - 2B
	Q50 - 107A
	Q56 - 1B
VS1 - 5057 - 006	Q B - J 53
	Q B - J 71
	Q B - J1017
	Q B - J1044
	Q B - J1118
	Q20 - 42A
VS1 - 5057 - 007	Q B - J 13
	Q30 - 31A
VS1 - 5057 - 008	Q B - J 69
	Q B - J1037
	Q B - J1038
	Q B - J1046
	Q B - J1047
	Q14 - 11B
	Q20 - 54C
VS1 - 5057 - 009	Q B - J1035
	Q B - J1036
	Q B - J1045
	Q B - J1062
	Q B - J1092
VS1 - 5057 - 010	Q B - J1043
	Q B - J1061
	Q B - J1091
VS1 - 5352 - 002	Q B - J 117
VS1 - 5452 - 007	Q B - J 1
	Q B - J 717
	Q16 - 6
VS1 - 5729 - 002	Q B - J 38
	Q B - J 72
	Q B - J1039
	Q B - J1040
VS1 - 5729 - 003	Q B - J 39
	Q B - J 56
	Q B - J 57
VS1 - 5824 - 002	Q B - J1033
VS1 - 5824 - 003	Q B - J1010
	Q B - J1011
	Q B - J1012
	Q B - J1013
	Q B - J1034
	Q B - J1042
VS1 - 5824 - 005	Q B - J 54
	Q B - J1031
	Q B - J1032
VS1 - 5824 - 006	Q B - J 53
	Q B - J1044
	Q B - J1118
VS1 - 5824 - 008	Q B - J1037
	Q B - J1038
	Q B - J1046
VS1 - 5824 - 009	Q B - J1035
	Q B - J1036
	Q B - J1045
	Q B - J1043
VS1 - 5824 - 010	Q B - J1014
VS1 - 5824 - 015	Q B - J 747
VS1 - 6094 - 003	Q B - J 45
VS1 - 6313 - 008	Q B - J 102
	Q B - J 108
	Q B - J 121
VS1 - 6313 - 009	Q B - J 32
	Q B - J 105
	Q B - J 117
	Q B - J 120
VS1 - 6313 - 010	Q B - J 25
	Q B - J 26
	Q B - J 104
VS1 - 6313 - 012	Q B - J 118
	Q B - J 741
VS1 - 6313 - 013	Q B - J 115
	Q B - J 122
VS1 - 6313 - 014	Q B - J 110
VS1 - 6314 - 004	Q B - J 43
	Q B - J 107
	Q B - J 127
	Q B - J 718
VS1 - 6314 - 005	Q B - J 109
	Q B - J 123
	Q B - J 128
VS1 - 6314 - 008	Q B - J 45
	Q B - J 102
	Q B - J 103
	Q B - J 108
	Q B - J 112
	Q B - J 119
	Q B - J 121
	Q B - J 716
	Q B - J 971
VS1 - 6314 - 009	Q B - J 32
	Q B - J 105
	Q B - J 117
VS1 - 6314 - 009	Q B - J 120
VS1 - 6314 - 010	Q B - J 25
	Q B - J 26
	Q B - J 104
VS1 - 6314 - 012	Q B - J 118
	Q B - J 741
VS1 - 6314 - 013	Q B - J 115
	Q B - J 122
	Q B - J 124
VS1 - 6314 - 014	Q B - J 110
VS1 - 6318 - 004	Q B - J 43
VS1 - 6319 - 016	Q B - J 45
VS1 - 6319 - 018	Q B - J 32
VS1 - 6319 - 020	Q B - J 25
	Q B - J 26
	Q22 - 6A
VS1 - 6320 - 009	Q B - J1035
VS1 - 6321 - 002	Q B - J 10
	Q B - J 12
	Q B - J 24
	Q B - J 50
VS1 - 6321 - 003	Q B - J 9
	Q B - J 11
	Q B - J 20
	Q B - J 21
	Q B - J 22
	Q B - J 23
	Q B - J 29
	Q B - J 30
	Q B - J 31
	Q B - J 35
	Q B - J 48
	Q B - J 49
	Q B - J 55
	Q B - J 60
	Q B - J 61
	Q B - J 62
	Q B - J 65
	Q B - J 66
	Q B - J 68
	Q B - J 70
	Q B - J1079
VS1 - 6321 - 004	Q B - J 7
	Q B - J 8
	Q B - J 16
	Q B - J 34
	Q B - J 59
	Q B - J 64
	Q B - J 88
VS1 - 6321 - 005	Q B - J 19
	Q B - J 27
	Q B - J 28
	Q B - J 33
	Q B - J1001
	Q B - J1031
VS1 - 6321 - 006	Q B - J 53
	Q B - J 71
VS1 - 6321 - 007	Q B - J 13
VS1 - 6321 - 008	Q B - J 69
	Q B - J1037
	Q B - J1038
VS1 - 6321 - 009	Q B - J1062
VS1 - 6321 - 010	Q B - J1061
VS1 - 6321 - 013	Q B - J 4
	Q B - J 5
	Q B - J 6
	Q B - J 58
	Q B - J 63
VS1 - 6380 - 003	Q B - J 731
	Q15 - 1A
VS1 - 6383 - 010	Q B - J 4
VS3 - 0108 - 002	Q B - J 41
	Q B - J 42
VS3 - 0108 - 004	Q B - J 40
VS3 - 0108 - 008	Q B - J1096
VS3 - 0134 - 013	Q B - J 111
VS3 - 5002 - 003	Q B - J 715
VS3 - 5083 - 002	Q B - J 1
	Q B - J 38
	Q B - J 114
	Q B - J1039
	Q B - J1040
VS3 - 5083 - 003	Q B - J 56
	Q B - J 84
	Q B - J 113

COPYRIGHT © 1999 CANON INC.

PART NUMBER	FIGURE & KEY NO.
VS3 - 5083 - 003	Q B - J 719
VS3 - 5083 - 005	Q B - J 712
	Q B - J 743
VS3 - 5083 - 006	Q B - J 713
VS3 - 5083 - 007	Q B - J 732
VS3 - 5083 - 010	Q B - J 85
	Q B - J 711
VS4 - 0002 - 012	Q B - J 51
VS9 - 5009 - 020	Q B - J 125
VT2 - 5161 - 016	Q B - J 45
	Q B - J 102
	Q B - J 108
	Q B - J 121
	Q20 - 40C
VT2 - 5161 - 018	Q B - J 32
	Q B - J 105
	Q B - J 117
	Q B - J 120
	Q20 - 40B
VT2 - 5161 - 020	Q B - J 25
	Q B - J 26
	Q B - J 104
	Q20 - 40A
VT2 - 5161 - 024	Q B - J 118
	Q B - J 741
VT2 - 5161 - 026	Q B - J 115
	Q B - J 122
VT2 - 5161 - 028	Q B - J 110
WA7 - 0434 - 000	Q90 - 2
WC4 - 5159 - 000	Q19 - 16
WG8 - 5362 - 000	Q10 - 35
	Q12 - 18
	Q14 - 31
	Q18 - 19
	Q19 - 35
	Q20 - 80
	Q22 - 2
	Q30 - 77
	Q40 - 30
	Q46 - 4
	Q50 - 73
	Q56 - 15
	Q57 - 15
	Q58 - 19
WG8 - 5382 - 000	Q45 - 5
	Q52 - 29
WG8 - 5428 - 000	Q13 - 12
	Q45 - 13
WS3 - 0437 - 000	Q B - J 40
	Q B - J 101
	Q B - J 106
	Q B - J 108
	Q B - J 112
	Q B - J 126
	Q B - J 714
	Q B - J 746
	Q B - J1096
WS3 - 0885 - 000	Q B - J 40
	Q B - J 41
	Q B - J 42
	Q B - J1016
	Q B - J1096
WS3 - 1090 - 000	Q B - J 52
	Q B - J 111
WS3 - 1226 - 000	Q B - J 715
WS3 - 5044 - 000	Q B - J 1
	Q16 - 7
WS3 - 5160 - 000	Q B - J 1
	Q B - J 38
	Q B - J 56
	Q B - J 84
	Q B - J 85
	Q B - J 113
	Q B - J 114
	Q B - J 711
	Q B - J 712
	Q B - J 713
	Q B - J 719
	Q B - J 732
	Q B - J 743
	Q B - J1039
	Q B - J1040
WS3 - 5292 - 000	Q B - J 731
	Q15 - 1B
WS3 - 5301 - 000	Q B - J 38

PART NUMBER	FIGURE & KEY NO.
WS3 - 5301 - 000	Q B - J 39
	Q B - J 56
	Q B - J 57
	Q B - J 72
	Q B - J1039
	Q B - J1040
WS3 - 5358 - 000	Q B - J 53
	Q B - J 54
	Q B - J 747
	Q B - J1010
	Q B - J1011
	Q B - J1012
	Q B - J1013
	Q B - J1014
	Q B - J1031
	Q B - J1032
	Q B - J1033
	Q B - J1034
	Q B - J1035
	Q B - J1036
	Q B - J1037
	Q B - J1038
	Q B - J1043
	Q B - J1044
	Q B - J1045
	Q B - J1046
	Q B - J1118
WS3 - 5467 - 000	Q B - J 111
WS3 - 5600 - 000	Q B - J 4
WS3 - 5649 - 000	Q B - J 2
WS3 - 5666 - 000	Q B - J 67
WS4 - 0218 - 000	Q B - J 51
WS4 - 0220 - 000	Q B - J 51
WS6 - 5091 - 000	Q B - JD 1
	Q50 - 108
WT1 - 0237 - 000	Q16 - 8
WT1 - 5156 - 000	Q15 - 1C
WT2 - 5178 - 000	Q30 - 33
X62 - 9681 - 000	Q15 - 1D
XA9 - 0195 - 000	Q50 - 74
	Q56 - 17
XA9 - 0591 - 000	Q37 - 15
XA9 - 0605 - 000	Q10 - 4G
	Q10 - 26
	Q14 - 9
	Q19 - 39
	Q24 - 18
	Q30 - 78
	Q32 - 4
	Q33 - 4
	Q37 - 16
XA9 - 0628 - 000	Q14 - 26
XA9 - 0629 - 000	Q10 - 12
	Q10 - 36
	Q11 - 16
	Q12 - 19
	Q13 - 8
	Q18 - 3D
	Q18 - 18
	Q19 - 3D
	Q19 - 36
	Q20 - 81
	Q22 - 13
	Q23 - 3
	Q24 - 16
	Q37 - 17
	Q45 - 14
	Q46 - 7
	Q50 - 10
XA9 - 0633 - 000	Q01 - 9
	Q18 - 16
	Q19 - 37
	Q20 - 82
	Q40 - 31
XA9 - 0687 - 000	Q30 - 25
XA9 - 0732 - 000	Q30 - 80
	Q40 - 18
	Q41 - 9
	Q50 - 75
	Q54 - 20
	Q55 - 4
	Q56 - 16
	Q59 - 16
XA9 - 0870 - 000	Q37 - 18
XA9 - 0915 - 000	Q20 - 83

PART NUMBER	FIGURE & KEY NO.
XA9 - 0915 - 000	Q41 - 10
XA9 - 0934 - 000	Q46 - 8
XA9 - 0949 - 000	Q01 - 5
XA9 - 0983 - 000	Q11 - 6
XB1 - 2300 - 409	Q18 - 501
	Q19 - 501
	Q30 - 501
	Q31 - 501
	Q34 - 501
	Q35 - 501
	Q45 - 501
	Q46 - 501
	Q50 - 504
	Q52 - 507
	Q53 - 501
	Q56 - 501
XB1 - 2300 - 609	Q12 - 503
	Q14 - 501
	Q20 - 501
	Q22 - 501
	Q23 - 501
	Q24 - 501
	Q30 - 502
	Q36 - 501
	Q50 - 503
	Q57 - 501
	Q58 - 501
XB1 - 2300 - 809	Q50 - 505
XB1 - 2301 - 209	Q18 - 502
	Q19 - 502
	Q36 - 502
	Q57 - 502
XB1 - 2301 - 409	Q24 - 502
XB1 - 2302 - 509	Q20 - 502
XB1 - 2400 - 409	Q20 - 515
	Q45 - 502
	Q50 - 506
XB1 - 2400 - 606	Q15 - 501
XB1 - 2400 - 609	Q12 - 501
	Q13 - 504
	Q14 - 502
	Q20 - 503
	Q30 - 504
	Q31 - 502
	Q32 - 501
	Q35 - 502
	Q36 - 503
	Q41 - 501
	Q45 - 503
	Q50 - 501
	Q52 - 501
	Q53 - 502
	Q55 - 501
	Q59 - 501
XB1 - 2400 - 809	Q50 - 507
	Q53 - 503
XB1 - 2401 - 006	Q54 - 504
XB1 - 2401 - 206	Q12 - 502
XB1 - 2401 - 209	Q13 - 501
	Q30 - 505
XB1 - 2403 - 009	Q11 - 501
	Q15 - 502
XB1 - 2500 - 609	Q13 - 503
XB1 - 3400 - 809	Q50 - 508
XB2 - 6300 - 607	Q18 - 510
	Q19 - 509
XB2 - 7400 - 607	Q15 - 504
XB2 - 8400 - 809	Q40 - 501
XB4 - 7300 - 609	Q17 - 501
XB4 - 7400 - 609	Q45 - 508
XB4 - 7400 - 806	Q58 - 502
XB4 - 7400 - 809	Q12 - 504
XB4 - 7401 - 009	Q10 - 502
	Q17 - 502
XB4 - 7401 - 207	Q10 - 501
XB6 - 7300 - 609	Q20 - 504
	Q22 - 502
	Q30 - 506
	Q40 - 502
XB6 - 7300 - 809	Q20 - 505
	Q46 - 504
XB6 - 7400 - 609	Q13 - 505
	Q18 - 504
	Q19 - 504
	Q41 - 502

COPYRIGHT©1999 CANON INC.

PART NUMBER	FIGURE & KEY NO.
XB6 - 7400 - 609	Q50 - 516
	Q54 - 501
	Q55 - 502
XB6 - 7400 - 809	Q54 - 503
XB7 - 2201 - 209	Q13 - 502
XD1 - 1106 - 220	Q20 - 516
XD1 - 1107 - 239	Q37 - 501
XD1 - 1108 - 220	Q20 - 517
	Q24 - 506
XD1 - 1108 - 225	Q30 - 515
XD1 - 4200 - 302	Q20 - 506
XD1 - 4200 - 402	Q15 - 503
	Q22 - 503
XD2 - 1100 - 242	Q30 - 507
	Q34 - 502
XD2 - 1100 - 322	Q18 - 505
	Q19 - 505
	Q20 - 507
	Q23 - 502
	Q30 - 508
	Q37 - 502
	Q40 - 503
	Q50 - 515
	Q52 - 502
	Q56 - 503
XD2 - 1100 - 402	Q18 - 508
	Q19 - 508
	Q20 - 508
	Q30 - 509
	Q37 - 503
	Q40 - 504
	Q45 - 504
XD2 - 1100 - 502	Q13 - 506
	Q14 - 503
	Q18 - 509
	Q19 - 510
	Q20 - 509
	Q23 - 503
	Q24 - 503
	Q30 - 510
	Q31 - 503
	Q34 - 503
	Q35 - 503
	Q40 - 505
	Q50 - 510
	Q55 - 503
	Q56 - 502
	Q57 - 503
	Q58 - 503
XD2 - 1100 - 642	Q13 - 507
	Q14 - 504
	Q18 - 506
	Q19 - 506
	Q20 - 510
	Q23 - 504
	Q24 - 504
	Q30 - 503
	Q30 - 511
	Q40 - 506
	Q45 - 505
	Q46 - 502
	Q50 - 511
	Q52 - 503
	Q54 - 502
	Q55 - 504
	Q59 - 502
XD2 - 1100 - 802	Q50 - 502
XD2 - 2100 - 302	Q52 - 505
XD2 - 2100 - 502	Q37 - 504
XD2 - 2300 - 402	Q34 - 504
XD2 - 3100 - 152	Q50 - 512
XD3 - 1300 - 082	Q50 - 513
	Q52 - 506
XD3 - 1300 - 102	Q50 - 509
XD3 - 2200 - 102	Q20 - 511
	Q45 - 506
	Q59 - 503
XD3 - 2200 - 122	Q20 - 513
	Q24 - 505
	Q30 - 514
	Q55 - 505
XD3 - 2200 - 142	Q18 - 507
	Q19 - 507
	Q20 - 512
	Q30 - 512
XD3 - 2200 - 142	Q45 - 507
	Q52 - 504
XD3 - 2200 - 162	Q30 - 513
	Q55 - 506
XD3 - 2200 - 202	Q20 - 514
XD3 - 2300 - 162	Q18 - 503
	Q19 - 503
XD3 - 2300 - 202	Q50 - 514
XD9 - 0151 - 000	Q18 - 13
	Q19 - 18
	Q55 - 13
XF2 - 1117 - 740	Q20 - 90
XF2 - 1121 - 340	Q14 - 20
XF2 - 1312 - 160	Q30 - 20
XF2 - 1330 - 360	Q14 - 10
XF9 - 0333 - 000	Q20 - 20
XF9 - 0357 - 000	Q23 - 2
XF9 - 0358 - 000	Q20 - 62
XF9 - 0372 - 000	Q30 - 58
XF9 - 0422 - 000	Q20 - 57
XF9 - 0539 - 000	Q23 - 1
XF9 - 0591 - 000	Q20 - 14
XF9 - 0625 - 000	Q40 - 21
XF9 - 0646 - 000	Q20 - 35
	Q56 - 14
XF9 - 0647 - 000	Q50 - 76
XF9 - 0648 - 000	Q50 - 99
XF9 - 0669 - 000	Q57 - 14
XF9 - 0693 - 000	Q30 - 57
XF9 - 0694 - 000	Q30 - 50
XF9 - 0695 - 000	Q30 - 47
XF9 - 0696 - 000	Q18 - 26
	Q19 - 26
XF9 - 0697 - 000	Q22 - 12
XF9 - 0698 - 000	Q59 - 2
XG9 - 0131 - 000	Q50 - 77
XG9 - 0214 - 000	Q45 - 12
XG9 - 0337 - 000	Q30 - 44
XG9 - 0362 - 000	Q31 - 10
XG9 - 0365 - 000	Q18 - 17
	Q19 - 13
	Q20 - 91
	Q30 - 42
	Q52 - 16
	Q55 - 14
XG9 - 0403 - 000	Q20 - 65
	Q24 - 8
XG9 - 0407 - 000	Q20 - 34
XZ9 - 0465 - 000	Q13 - 14

D2 NUMERICAL INDEX (Paper Folding Unit-B1)

PART NUMBER	FIGURE & KEY NO.
FA1 - 4842 - 030	Q31 - 1
FA2 - 5970 - 000	Q13 - 5
FA3 - 7418 - 000	Q31 - 2
	Q32 - 1
FA3 - 7419 - 000	Q31 - 3
	Q32 - 2
	Q35 - 2
FA4 - 2272 - 040	Q11 - 6
FA4 - 2275 - 000	Q12 - 25
FA4 - 2278 - 000	Q12 - 9
FA4 - 2281 - 000	Q13 - 10
FA4 - 2285 - 000	Q11 - 11
FA4 - 2286 - 000	Q11 - 12
FA4 - 2287 - 000	Q11 - 13
FA4 - 2288 - 000	Q13 - 14
FA4 - 2289 - 000	Q13 - 15
FA4 - 2290 - 000	Q13 - 16
FA4 - 2313 - 000	Q11 - 17
FA4 - 2317 - 000	Q34 - 2
FA4 - 2332 - 000	Q12 - 21
	Q33 - 14
FA4 - 2336 - 000	Q33 - 1
FA4 - 2339 - 000	Q31 - 6
FA4 - 2340 - 000	Q31 - 30
FA4 - 2341 - 000	Q13 - 9
FA4 - 2342 - 000	Q13 - 13
FA4 - 2348 - 000	Q34 - 8
FA4 - 2349 - 000	Q34 - 9
FA4 - 2350 - 000	Q34 - 10
FA4 - 2351 - 000	Q34 - 11
FA4 - 2352 - 000	Q34 - 12
FA4 - 2353 - 000	Q34 - 13
FA4 - 2354 - 000	Q34 - 14
FA4 - 2355 - 000	Q34 - 15
FA4 - 2356 - 000	Q34 - 16
FA4 - 2362 - 000	Q13 - 17
FA4 - 2363 - 000	Q34 - 17
FA4 - 2364 - 000	Q11 - 5
FA4 - 2371 - 000	Q33 - 7
FA4 - 6702 - 000	Q01 - 6
FA5 - 5377 - 000	Q20 - 1
FA6 - 8230 - 000	Q21 - 1
FA6 - 8304 - 000	Q21 - 2
FA9 - 2277 - 000	Q12 - 38
FB3 - 0123 - 030	Q02 - 22
FB4 - 8245 - 000	Q02 - 1
FB4 - 8299 - 000	Q03 - 2
FB4 - 8300 - 000	Q03 - 1
FB4 - 8301 - 000	Q03 - 3
FB4 - 8308 - 000	Q03 - 12
FB4 - 8327 - 000	Q03 - 4
FB4 - 8330 - 000	Q03 - 9
FB4 - 8331 - 000	Q03 - 5
FB4 - 8334 - 000	Q03 - 11
FB4 - 8335 - 000	Q03 - 6
FB4 - 8722 - 000	Q01 - 3
FB4 - 8736 - 000	Q01 - 2
FB4 - 8737 - 000	Q01 - 7
FB4 - 8738 - 000	Q01 - 10
FB4 - 8739 - 000	Q01 - 5
FB4 - 8755 - 000	Q01 - 1
FB4 - 8756 - 000	Q12 - 7
FB4 - 8758 - 000	Q12 - 1
FB4 - 8766 - 000	Q31 - 4
FB4 - 8767 - 000	Q31 - 7
FB4 - 8768 - 000	Q33 - 2
FB4 - 8771 - 000	Q33 - 3
FB4 - 8772 - 000	Q31 - 15
FB4 - 8775 - 000	Q12 - 6
FB4 - 8776 - 000	Q12 - 8
FB4 - 8781 - 000	Q11 - 23
FB4 - 8784 - 000	Q31 - 10
FB4 - 8785 - 000	Q11 - 2
FB4 - 8787 - 000	Q31 - 11
FB4 - 8789 - 000	Q02 - 20
FB4 - 8790 - 000	Q12 - 5
FB4 - 8792 - 000	Q12 - 3
FB4 - 8793 - 000	Q12 - 4
FB4 - 8796 - 000	Q33 - 4
FB4 - 8797 - 000	Q33 - 5
FB4 - 8798 - 000	Q33 - 6
FB4 - 8801 - 000	Q13 - 3
FB4 - 8802 - 000	Q10 - 1
FB4 - 8803 - 000	Q02 - 2
FB4 - 8804 - 000	Q02 - 3
FB4 - 8962 - 000	Q01 - 4
FB4 - 8965 - 000	Q10 - 2
FB4 - 8966 - 000	Q10 - 3
FB4 - 8968 - 000	Q13 - 21
FB4 - 8969 - 000	Q13 - 19
FB4 - 8977 - 000	Q35 - 1
FB4 - 8978 - 000	Q10 - 17
FB4 - 8979 - 000	Q13 - 20
FB4 - 8980 - 000	Q02 - 21
FB4 - 8981 - 000	Q36 - 1
FB4 - 8982 - 000	Q36 - 2
FB4 - 8986 - 000	Q13 - 8
FB4 - 8998 - 000	Q11 - 22A
FB4 - 8999 - 000	Q31 - 29
	Q33 - 8A
FC2 - 1250 - 000	Q34 - 1
FC2 - 4248 - 000	Q13 - 7
FC2 - 4260 - 000	Q02 - 18
FC2 - 4261 - 000	Q02 - 19
FC2 - 4262 - 000	Q02 - 4
FC2 - 4264 - 000	Q02 - 16
FC2 - 4267 - 000	Q10 - 4
FC2 - 4268 - 000	Q12 - 23
FC2 - 4269 - 000	Q31 - 8
FC2 - 4270 - 000	Q11 - 21
FC2 - 4276 - 000	Q10 - 5
FC2 - 4277 - 000	Q02 - 7
FC2 - 4278 - 000	Q02 - 5
FC2 - 4279 - 000	Q02 - 6
FC2 - 4282 - 000	Q31 - 9
FC2 - 4284 - 000	Q13 - 6
FC2 - 4291 - 000	Q10 - 6
FC2 - 4295 - 000	Q31 - 12
FC2 - 4302 - 000	Q11 - 3
FC2 - 4309 - 000	Q10 - 7
FC2 - 4310 - 000	Q33 - 9
FC2 - 4311 - 000	Q02 - 8
FC2 - 4312 - 000	Q02 - 9
FC2 - 4314 - 000	Q33 - 10
FC2 - 4333 - 000	Q31 - 13
	Q33 - 11
FC2 - 4343 - 000	Q10 - 8
FC2 - 4344 - 000	Q10 - 9
FC2 - 4345 - 000	Q10 - 10
FC2 - 4354 - 000	Q11 - 14
FC2 - 4355 - 000	Q11 - 10
FC2 - 4356 - 000	Q02 - 10
FC2 - 4358 - 000	Q02 - 23
FC2 - 5100 - 000	Q12 - 2
	Q35 - 3
FC2 - 6543 - 000	Q31 - 5
FC2 - 6544 - 000	Q01 - 8
FC2 - 6548 - 000	Q12 - 22
FE6 - 0780 - 000	Q11 - 16
FE9 - 0089 - 000	Q33 - 15
FF1 - 6572 - 000	Q13 - 1
FF1 - 6573 - 000	Q13 - 2
FF3 - 1632 - 000	Q02 - 11
FF3 - 1634 - 000	Q21 - 5
FF3 - 1635 - 000	Q31 - 17
FF3 - 1637 - 000	Q01 - 9
FF3 - 1638 - 000	Q11 - 8
FF3 - 1640 - 000	Q12 - 24
FF3 - 1642 - 000	Q12 - 11
FF3 - 1644 - 000	Q12 - 26
	Q13 - 11
FF3 - 1645 - 000	Q20 - 3
FF3 - 1647 - 000	Q13 - 12
FF3 - 2308 - 000	Q11 - 20
FF3 - 2309 - 000	Q11 - 1
FF3 - 3750 - 000	Q31 - 14
FF3 - 3876 - 000	Q90 - J800
FF3 - 3877 - 000	Q34 - 18
FF5 - 8562 - 000	Q12 - 18
FF5 - 8563 - 000	Q12 - 27
FF5 - 8565 - 000	Q33 - 8
FF5 - 8567 - 000	Q31 - 16
	Q33 - 12
FF5 - 8568 - 000	Q32 - 3
	Q36 - 8
FF5 - 8570 - 000	Q11 - 18
FF5 - 8571 - 000	Q12 - 29
FF5 - 8572 - 000	Q13 - 4
FF5 - 8573 - 000	Q12 - 17
FF5 - 8577 - 000	Q11 - 22
FF5 - 8578 - 000	Q10 - 11
FG2 - 6904 - 000	Q37 - 2
FG2 - 7911 - 000	Q33 - 25
FG2 - 7912 - 000	Q34 - 3
FG3 - 0087 - 000	Q90 -
FG3 - 0538 - 000	Q B - J 791
	Q B - J 792
	Q B - J1125
	Q12 - 39
FG3 - 0539 - 000	Q10 - 16
FG3 - 0541 - 000	Q13 - 22
FG3 - 0542 - 000	Q32 - 5
FG3 - 0964 - 000	Q34 - 5
FG3 - 0965 - 000	Q33 - 23
FG3 - 0966 - 000	Q36 - 6
FG3 - 0967 - 000	Q37 - 3
FG6 - 3251 - 000	Q10 -
FG6 - 3257 - 000	Q21 -
FG6 - 3260 - 000	Q31 -
FG6 - 3261 - 000	Q32 -
FG6 - 3262 - 000	Q33 -
FG6 - 3263 - 000	Q35 -
FG6 - 3264 - 000	Q34 -
FG6 - 3266 - 000	Q20 -
FG6 - 3267 - 000	Q36 -
FG6 - 3276 - 000	Q37 -
FH7 - 5062 - 000	Q12 - 32
	Q34 - 4
FH7 - 5750 - 000	Q36 - 7
FH7 - 5761 - 000	Q37 - 4
FH7 - 5876 - 000	Q03 - 10
FS1 - 1187 - 000	Q12 - 37
	Q31 - 18
	Q33 - 17
FS1 - 1213 - 000	Q31 - 19
	Q33 - 18
FS1 - 1376 - 000	Q12 - 30
FS1 - 1433 - 000	Q12 - 31
FS1 - 1435 - 000	Q31 - 20
	Q33 - 19
FS1 - 1451 - 030	Q02 - 12
FS1 - 3159 - 000	Q12 - 19
FS1 - 3162 - 000	Q11 - 19
FS1 - 3163 - 000	Q12 - 12
FS1 - 9076 - 000	Q13 - 18
	Q31 - 21
FS1 - 9078 - 000	Q10 - 12
FS2 - 0384 - 000	Q11 - 15
FS2 - 0386 - 000	Q31 - 23
	Q33 - 20
FS2 - 0387 - 000	Q12 - 14
FS2 - 0388 - 000	Q12 - 20
FS2 - 1542 - 000	Q02 - 13
FS2 - 2261 - 000	Q11 - 4
FS2 - 2263 - 000	Q33 - 13
FS2 - 2264 - 000	Q34 - 7
FS2 - 2265 - 000	Q34 - 6
	Q36 - 3
	Q37 - 1
FS2 - 3470 - 000	Q21 - 6
FS2 - 3745 - 000	Q21 - 7
FS2 - 3819 - 000	Q20 - 2
FS2 - 6438 - 000	Q12 - 40
FS2 - 6560 - 000	Q12 - 15
FS2 - 6561 - 000	Q21 - 8
FS3 - 0641 - 000	Q21 - 9
FS4 - 0434 - 000	Q12 - 36
	Q31 - 22
FS4 - 2168 - 000	Q21 - 3
FS4 - 2462 - 000	Q31 - 24
FS4 - 2463 - 000	Q10 - 13
FS4 - 2464 - 000	Q02 - 15
FS4 - 2465 - 000	Q31 - 26
	Q33 - 21
FS5 - 9213 - 000	Q12 - 16
FS5 - 9216 - 000	Q02 - 25
FS7 - 0391 - 000	Q33 - 16
FS7 - 2137 - 000	Q12 - 33
FS7 - 2138 - 000	Q21 - 4
FS9 - 0064 - 000	Q02 - 17
FS9 - 0065 - 000	Q02 - 24
PCB	Q B - J 791
	Q B - J 792
	Q B - J 793
	Q B - J 794

COPYRIGHT © 1999 CANON INC.

PART NUMBER	FIGURE & KEY NO.
PCB	Q B - J 795
	Q B - J 796
	Q B - J 797
	Q B - J 798
	Q B - J 799
	Q B - J1031
	Q B - J1035
	Q B - J1041
RA1 - 2483 - 000	Q12 - 28
VD7 - 1621 - 001	Q90 - FU791
VS1 - 0279 - 002	Q B - J 796
	Q B - J1098
	Q B - J1102
	Q B - J1106
	Q B - J1115
	Q B - J1116
VS1 - 0279 - 004	Q B - J 798
	Q B - J1114
VS1 - 0279 - 006	Q B - J 799
VS1 - 0279 - 007	Q B - J1101
VS1 - 0279 - 008	Q B - J 793
	Q B - J1096
VS1 - 0280 - 002	Q B - J1115
	Q B - J1116
	Q B - J1117
VS1 - 0280 - 004	Q B - J1114
VS1 - 0842 - 003	Q B - J 795
	Q B - J1093
	Q B - J1094
	Q B - J1095
	Q B - J1103
	Q B - J1104
	Q B - J1107
	Q B - J1108
	Q B - J1110
	Q B - J1111
	Q B - J1113
VS1 - 0842 - 004	Q B - J1109
VS1 - 0842 - 005	Q B - J1112
VS1 - 0842 - 006	Q B - J 797
	Q B - J1105
VS1 - 0842 - 009	Q B - J 794
	Q B - J1092
VS1 - 0842 - 010	Q B - J1091
	Q B - J1100
VS1 - 0852 - 010	Q B - J1100
VS1 - 5057 - 003	Q B - J1093
	Q B - J1108
	Q B - J1110
	Q03 - 8
	Q10 - 16A
	Q13 - 22A
VS1 - 5057 - 004	Q B - J1109
	Q13 - 22B
VS1 - 5057 - 006	Q B - J1105
	Q37 - 3A
VS3 - 0108 - 002	Q B - J1098
VS3 - 5125 - 020	Q B - J1100
VS9 - 5009 - 020	Q B - J1100
WC4 - 5126 - 000	Q10 - 14
WG1 - 0373 - 000	Q90 - LED791
	Q90 - LED792
WG8 - 5362 - 000	Q02 - 14
	Q10 - 15
	Q31 - 25
	Q32 - 4
	Q33 - 22
	Q36 - 4
WS3 - 0437 - 000	Q B - J 793
	Q B - J 796
	Q B - J 798
	Q B - J 799
	Q B - J1096
	Q B - J1098
	Q B - J1101
	Q B - J1102
	Q B - J1106
	Q B - J1114
	Q B - J1115
	Q B - J1116
WS3 - 0885 - 000	Q B - J1098
	Q B - J1114
	Q B - J1115
	Q B - J1117
WS3 - 1057 - 000	Q B - J1116
WS3 - 5306 - 000	Q B - J1100
WT2 - 5041 - 000	Q10 - 16B
	Q12 - 39A
	Q31 - 14A
	Q32 - 5A
	Q33 - 23A
	Q34 - 5A
	Q36 - 5
	Q36 - 6A
XA9 - 0605 - 000	Q03 - 13
XA9 - 0849 - 000	Q03 - 7
XB1 - 2300 - 409	Q03 - 504
	Q34 - 501
XB1 - 2300 - 606	Q31 - 501
	Q33 - 504
XB1 - 2300 - 609	Q02 - 501
	Q33 - 501
	Q34 - 502
XB1 - 2301 - 209	Q10 - 501
XB1 - 2400 - 606	Q12 - 507
	Q31 - 504
XB1 - 2400 - 609	Q20 - 501
XB1 - 2403 - 509	Q11 - 502
XB6 - 7300 - 409	Q12 - 503
	Q36 - 501
	Q37 - 501
XB6 - 7300 - 609	Q10 - 502
	Q31 - 502
XB6 - 7400 - 609	Q01 - 501
	Q02 - 502
	Q10 - 503
	Q11 - 503
	Q12 - 504
	Q13 - 501
	Q21 - 501
	Q31 - 503
	Q32 - 501
	Q33 - 502
	Q35 - 501
	Q36 - 502
	Q37 - 502
XB7 - 2100 - 409	Q11 - 504
XD1 - 1100 - 242	Q12 - 510
XD1 - 1108 - 225	Q11 - 507
XD1 - 4200 - 402	Q13 - 503
XD2 - 1100 - 242	Q34 - 503
XD2 - 1100 - 322	Q03 - 501
	Q12 - 505
XD2 - 1100 - 402	Q12 - 502
XD2 - 1100 - 502	Q02 - 503
	Q10 - 504
	Q12 - 506
	Q13 - 502
	Q21 - 502
	Q31 - 505
	Q33 - 503
	Q34 - 504
XD2 - 1100 - 642	Q02 - 504
	Q10 - 505
	Q11 - 506
	Q12 - 508
	Q20 - 502
	Q21 - 503
	Q31 - 506
XD2 - 1100 - 802	Q02 - 505
XD2 - 1200 - 642	Q02 - 506
XD2 - 2100 - 302	Q34 - 505
XD2 - 3100 - 152	Q11 - 501
XD3 - 1160 - 162	Q03 - 502
XD3 - 1300 - 162	Q03 - 503
XD3 - 2100 - 082	Q12 - 509
XD3 - 2200 - 082	Q21 - 506
XD3 - 2200 - 122	Q12 - 501
	Q31 - 507
	Q33 - 505
XD3 - 2200 - 142	Q12 - 511
	Q31 - 508
XD3 - 2200 - 162	Q21 - 504
XD3 - 2200 - 212	Q11 - 505
XD3 - 2300 - 142	Q21 - 505
XF2 - 2506 - 164	Q12 - 13
XF9 - 0430 - 000	Q21 - 12
XF9 - 0602 - 000	Q11 - 9
XF9 - 0603 - 000	Q20 - 4
XF9 - 0604 - 000	Q12 - 34
XF9 - 0605 - 000	Q12 - 10
XG3 - 6012 - 405	Q21 - 10
XG3 - 8016 - 505	Q12 - 35
	Q21 - 11
	Q31 - 28
XG9 - 0131 - 000	Q11 - 7
XG9 - 0387 - 000	Q13 - 23
XH9 - 0101 - 000	Q31 - 27
	Q33 - 24

COPYRIGHT © 1999 CANON INC.

D3 NUMERICAL INDEX (Cover Insertion Unit-A1)

PART NUMBER	FIGURE & KEY NO.
FA4 - 1159 - 000	P30 - 1
FA6 - 8623 - 000	P11 - 69
FA6 - 8685 - 000	P02 - 1
FB1 - 7018 - 000	P01 - 23
	P11 - 45
	P11 - 64
	P11 - 73
FB3 - 3834 - 000	P01 - 15
FB3 - 7269 - 000	P20 - 10
FB3 - 7285 - 000	P11 - 24A
FB4 - 2131 - 000	P11 - 70
FB4 - 6991 - 000	P30 - 14
FB4 - 7556 - 000	P11 - 36
FB4 - 7558 - 000	P11 - 44
FB4 - 7563 - 000	P11 - 1
FB4 - 7567 - 000	P11 - 2
FB4 - 7568 - 000	P11 - 3
FB4 - 7570 - 000	P11 - 4
FB4 - 7571 - 000	P11 - 5
FB4 - 7572 - 000	P11 - 6
FB4 - 7573 - 000	P11 - 24B
FB4 - 7578 - 000	P11 - 58
FB4 - 7582 - 000	P11 - 51
FB4 - 7583 - 000	P11 - 79
FB4 - 7584 - 000	P11 - 7
FB4 - 7585 - 000	P11 - 8
FB4 - 7586 - 000	P11 - 37
FB4 - 7587 - 000	P11 - 38
FB4 - 7588 - 000	P11 - 39
FB4 - 7599 - 000	P11 - 9
FB4 - 7636 - 000	P30 - 15
FB4 - 7638 - 000	P30 - 16
FB4 - 7639 - 000	P30 - 17
FB4 - 7640 - 000	P30 - 2
FB4 - 7641 - 000	P30 - 3
FB4 - 7642 - 000	P30 - 4
FB4 - 7645 - 000	P30 - 5
FB4 - 7646 - 000	P30 - 18
FB4 - 7647 - 000	P30 - 19
FB4 - 7648 - 000	P30 - 20
FB4 - 7650 - 000	P30 - 21
FB4 - 7651 - 000	P30 - 22
FB4 - 7662 - 000	P11 - 10
FB4 - 7663 - 000	P01 - 8
	P11 - 11
FB4 - 7664 - 000	P11 - 12
FB4 - 7669 - 000	P11 - 13
FB4 - 7670 - 000	P11 - 14
FB4 - 7710 - 000	P12 - 1
FB4 - 7711 - 000	P12 - 2
FB4 - 7768 - 000	P11 - 40
FB4 - 8031 - 000	P11 - 41
FB4 - 8032 - 000	P11 - 42
FB4 - 8033 - 000	P11 - 43
FB4 - 8875 - 000	P11 - 15
FB4 - 8876 - 000	P11 - 16
FB4 - 8877 - 000	P11 - 17
FB4 - 8878 - 000	P30 - 6
FB4 - 8880 - 000	P11 - 76
FB4 - 8884 - 000	P30 - 7
FB4 - 8886 - 000	P12 - 3
FB4 - 8887 - 000	P12 - 4
FB4 - 8888 - 000	P10 - 4
FB4 - 8892 - 000	P01 - 24
	P11 - 49
	P11 - 65
FB4 - 8894 - 000	P11 - 59
FB4 - 8895 - 000	P11 - 60
FB4 - 8896 - 000	P14 - 1
FB4 - 8897 - 000	P10 - 5
FB4 - 8899 - 000	P30 - 32
FB4 - 8900 - 000	P12 - 5
FB4 - 8901 - 000	P11 - 18
FB4 - 8905 - 000	P11 - 19
FB4 - 8906 - 000	P11 - 20
FB4 - 8912 - 000	P11 - 52
FB4 - 8914 - 000	P11 - 55
FB4 - 8917 - 000	P11 - 77
FB4 - 8918 - 000	P11 - 53
FB4 - 8919 - 000	P11 - 56
FB4 - 8920 - 000	P10 - 1
FB4 - 8921 - 000	P10 - 2
FB4 - 8922 - 000	P10 - 3
FB4 - 8925 - 000	P11 - 67
FB4 - 8935 - 000	P02 - 13
FB4 - 8936 - 000	P01 - 9
FB4 - 8939 - 000	P01 - 1
FB4 - 8940 - 000	P01 - 2
FB4 - 8941 - 000	P01 - 12
FB4 - 8942 - 000	P01 - 16
FB4 - 8943 - 000	P01 - 25
	P11 - 46
	P11 - 66
	P11 - 74
FB4 - 8946 - 000	P01 - 10
FB4 - 8947 - 000	P01 - 17
FB4 - 8948 - 000	P11 - 75
FB4 - 8950 - 000	P30 - 23
FB5 - 3192 - 000	P14 - 4A
FB5 - 3193 - 000	P12 - 7
FB5 - 3194 - 000	P02 - 10
FB5 - 3195 - 000	P02 - 11
FB5 - 3196 - 000	P12 - 9
FB5 - 3197 - 000	P01 - 22
FB5 - 3200 - 000	P02 - 12
FC1 - 2309 - 000	P02 - 9
FC1 - 6179 - 000	P12 - 6
FC2 - 1227 - 000	P30 - 24
FC2 - 1258 - 000	P30 - 25
FC2 - 1291 - 000	P20 - 7
FC2 - 1303 - 000	P14 - 2
FC2 - 1369 - 000	P30 - 26
FC2 - 1370 - 000	P30 - 27
FC2 - 1371 - 000	P30 - 28
FC2 - 1827 - 000	P30 - 29
FC2 - 2146 - 000	P14 - 3
FF1 - 6572 - 000	P01 - 13
FF3 - 3867 - 000	P02 - 4
FF3 - 3868 - 000	P01 - 3
FF3 - 3869 - 000	P11 - 21
FF3 - 3870 - 000	P11 - 22
FF3 - 3871 - 000	P11 - 47
FF3 - 3874 - 000	P11 - 87
FF5 - 6194 - 000	P01 - 18
FF5 - 8205 - 000	P11 - 23
FF5 - 8595 - 000	P11 - 24
FF5 - 8596 - 000	P14 - 4
FF5 - 8597 - 000	P11 - 25
FF5 - 8598 - 000	P11 - 54
FF5 - 8605 - 000	P11 - 61
FF5 - 8607 - 000	P11 - 68
FF5 - 8608 - 000	P11 - 71
FF5 - 8616 - 000	P02 - 5
FF5 - 8617 - 000	P01 - 20
FG2 - 9361 - 000	P11 - 50
FG2 - 9362 - 000	P11 - 78
FG3 - 0088 - 000	P11 - 81
FG3 - 0981 - 000	P02 - 2
FG6 - 3303 - 000	P14 -
FG6 - 3304 - 000	P30 -
FG6 - 3307 - 000	P20 -
FG6 - 3310 - 000	P12 -
FH6 - 1637 - 000	P20 - 1
FH7 - 5874 - 000	P11 - 57
FH7 - 5877 - 000	P11 - 26
FH7 - 5945 - 000	P11 - 83
FN5 - 0151 - 000	P12 - 8
FS1 - 1189 - 000	P30 - 8
FS1 - 1376 - 000	P11 - 88
FS1 - 1508 - 000	P30 - 9
FS1 - 1528 - 000	P11 - 89
FS1 - 9167 - 000	P11 - 82
FS1 - 9194 - 000	P01 - 4
FS2 - 3514 - 000	P01 - 21
FS2 - 6466 - 000	P11 - 62
FS3 - 0137 - 000	P30 - 10
FS4 - 0177 - 000	P12 - 10
FS5 - 0748 - 000	P11 - 86
FS5 - 3732 - 000	P20 - 2
FS5 - 3803 - 000	P01 - 11
FS5 - 6158 - 000	P11 - 32
FS5 - 6243 - 000	P11 - 85
FS5 - 6323 - 000	P20 - 3
FS5 - 6661 - 000	P01 - 27
FS6 - 0094 - 000	P11 - 29
FS7 - 0314 - 000	P11 - 30
FS7 - 0318 - 000	P30 - 11
FS7 - 0322 - 000	P30 - 12
FS7 - 0397 - 000	P11 - 63
FS7 - 2024 - 000	P20 - 4
FS7 - 2039 - 000	P11 - 31
FS7 - 2151 - 000	P11 - 84
FS7 - 2152 - 000	P01 - 5
FS7 - 2154 - 000	P11 - 27
FS7 - 2155 - 000	P20 - 5
PCB	P B - J 841
	P B - J 842
	P B - J 844
	P B - J 845
	P B - J 846
	P B - J 847
	P B - J1070
	P B - J1071
RS5 - 9003 - 000	P11 - 28
VS1 - 0279 - 002	P B - J 847
	P B - J1078
VS1 - 0842 - 002	P B - J1069
	P B - J1070
	P B - J1071
	P B - J1073
	P B - J1075
VS1 - 0842 - 003	P B - J1064
	P B - J1065
	P B - J1066
	P B - J1067
	P B - J1068
	P B - J1074
	P B - J1076
	P B - J1077
	P B - J1079
	P B - J1080
	P B - J1081
	P B - J1082
VS1 - 0842 - 004	P B - J1072
VS1 - 0842 - 005	P B - J 844
VS1 - 0842 - 006	P B - J 846
	P B - J1063
VS1 - 0842 - 010	P B - J 845
VS1 - 0842 - 012	P B - J 842
VS1 - 5057 - 002	P B - J1069
	P B - J1073
	P B - J1075
	P11 - 21A
VS1 - 5057 - 003	P B - J1064
	P B - J1074
	P B - J1080
	P02 - 4A
	P11 - 22A
VS1 - 5057 - 004	P B - J1072
VS1 - 5057 - 006	P B - J1063
	P11 - 47A
VS1 - 5824 - 009	P B - J 841
	P B - J1062
VS1 - 5824 - 010	P B - J1061
VS1 - 6053 - 018	P B - J 841
VS1 - 6094 - 009	P B - J 841
WG8 - 5362 - 000	P01 - 26
	P11 - 48
WS3 - 0437 - 000	P B - J 847
	P B - J1078
WS3 - 5358 - 000	P B - J 841
	P B - J1061
	P B - J1062
WT2 - 0409 - 000	P02 - 3
XA9 - 0629 - 000	P01 - 6
	P02 - 6
XA9 - 0685 - 000	P01 - 19
XA9 - 0721 - 000	P01 - 28
XA9 - 0892 - 000	P02 - 8
	P11 - 33
	P20 - 6
XA9 - 0894 - 000	P11 - 80
XA9 - 1028 - 000	P30 - 30
XA9 - 1035 - 000	P11 - 72
XB1 - 1300 - 609	P30 - 507
XB1 - 2300 - 409	P11 - 507
	P30 - 501
XB1 - 2300 - 609	P01 - 506
	P11 - 501
XB1 - 2400 - 409	P20 - 501
XB1 - 2400 - 606	P11 - 502
XB1 - 2400 - 609	P01 - 501
XB1 - 2500 - 806	P02 - 501
XB4 - 7300 - 609	P12 - 501
XB4 - 7400 - 809	P10 - 501

COPYRIGHT © 1999 CANON INC.

PART NUMBER	FIGURE & KEY NO.	PART NUMBER	FIGURE & KEY NO.	PART NUMBER	FIGURE & KEY NO.
XB4 - 7401 - 009	P11 - 503				
XB6 - 7300 - 409	P30 - 508				
XB6 - 7300 - 609	P11 - 508				
XD2 - 1100 - 242	P01 - 507				
	P11 - 510				
XD2 - 1100 - 322	P11 - 509				
	P30 - 502				
XD2 - 1100 - 402	P11 - 514				
	P20 - 503				
XD2 - 1100 - 502	P01 - 503				
	P11 - 504				
	P20 - 502				
	P30 - 503				
XD2 - 1100 - 642	P01 - 504				
	P11 - 505				
	P30 - 504				
XD2 - 1100 - 802	P30 - 509				
XD2 - 2100 - 402	P11 - 513				
XD2 - 2100 - 602	P12 - 502				
XD2 - 2100 - 802	P01 - 502				
	P11 - 506				
	P30 - 505				
XD3 - 1200 - 102	P11 - 511				
XD3 - 1200 - 122	P01 - 505				
XD3 - 1300 - 162	P11 - 512				
XD3 - 2200 - 102	P30 - 506				
XD9 - 0152 - 000	P11 - 34				
XF2 - 1607 - 840	P20 - 8				
XF2 - 1612 - 460	P20 - 9				
XF2 - 1618 - 040	P02 - 7				
XF9 - 0684 - 000	P30 - 13				
XG9 - 0211 - 000	P30 - 31				
XG9 - 0237 - 000	P11 - 35				
XG9 - 0365 - 000	P01 - 7				
XZ9 - 0289 - 000	P01 - 14				

COPYRIGHT © 1999 CANON INC.

Prepared by
OFFICE IMAGING PRODUCTS TECHNICAL SUPPORT DIV.
CANON INC.
Printed in Japan

REVISION 0 [JULY 1999]

5-1, Hakusan 7-chome, Toride-city, Ibaraki 302-8501, Japan

Canon

PRINTED IN JAPAN [IMPRIME AU JAPON]

CANON INC.