SADDLE FINISHER - D2

SERVICE MANUAL

REVISION 0

Canon

AUG. 1999

FY8-13G9-000

COPYRIGHT © 1999 CANON INC. CANON SADDLE FINISHER - D2 REV.0 AUG. 1999 PRINTED IN JAPAN (IMPRIME AU JAPON)

IMPORTANT

THE INFORMATION CONTAINED HEREIN IS PUBLISHED BY CANON, INC., JAPAN. SPECIFICATIONS AND OTHER INFORMATION CONTAINED HEREIN MAY DIFFER SLIGHTLY FROM ACTUAL MACHINE VALUES OR THOSE FOUND IN ADVERTISING AND OTHER PRINTED MATTER.

ANY QUESTIONS REGARDING INFORMATION CONTAINED HEREIN SHOULD BE DIRECTED TO THE COPIER SERVICE DEPARTMENT OF THE SALES COMPANY.

COPYRIGHT © 1999 CANON INC.

Printed in Japan
Imprimé au Japon

Use of this manual should be strictly supervised to avoid disclosure of confidential information.

Prepared by

OFFICE IMAGING PRODUCTS TECHNICAL SUPPORT DIVISION

CANON INC.

5-1, Hakusan 7-chome, Toride-City, Ibaraki, 302-8501 Japan

INTRODUCTION

This Service Manual contains basic data and figures on the Saddle Finisher-D2 needed to service the machine in the field.

CHAPTER 1 General Description introduces the finisher's features and specifications, and shows how to operate the finisher.

CHAPTER 2 Basic Operation provides outlines of the finisher's various mechanical workings, and explains the principles used for the finisher's various control mechanisms in view of the functions of electrical and mechanical units and in relation to their timing of operation.

CHAPTER 3 Mechanical System shows how the finisher's various mechanical workings are constructed, and how the finisher may be disassembled/assembled and adjusted.

CHAPTER 4 Maintenance and Servicing provides tables of periodically replaced parts and consumables/durables and scheduled servicing charts.

CHAPTER 5 Troubleshooting provides tables of maintenance/inspection, standards/adjustments, and problem identification (image fault/malfunction).

APPENDIX contains a general timing chart and general circuit diagrams.

The descriptions in this Service Manual are subject to change without notice for product improvement or other purposes, and major changes will be communicated in the form of Service Information bulletins.

All service persons are expected to have a good understanding of the contents of this Service Manual and all relevant Service Information bulletins and be able to identify and isolate faults in the machine.

COPYRIGHT © 1999 CANON INC. CANON SADDLE FINISHER - D2 REV.0 AUG. 1999 PRINTED IN JAPAN (IMPRIME AU JAPON)

CONTENTS

CHAPTER 1 GENERAL DESCRIPTION

I. FEATURES 1-1
II. SPECIFICATIONS 1-2
A. Specifications 1-2
B. Cross Section 1-10
III. OPERATING THE FINISHER ... 1-14
A. Removing Jams from the Finisher 1-14
B. Removing Jams from the Saddle Stitcher Unit 1-19
C. Removing Jams from the Paper Folding Unit 1-23
D. Removing Jams from the Cover Inserter 1-26
E. Replacing the Staple Case in the Stapler Unit 1-28
F. Removing Jammed Staples from the Stapler Unit 1-30
G. Replacing the Saddle Stitcher Unit Staple Cartridges 1-32
H. Removing Jammed Staples from the Saddle Stitcher Unit 1-34
I. Removing Punch waste 1-37
J. Module Separation Switch ... 1-38
K. Operating the Module Separation Switch 1-39
IV. MAINTENANCE BY THE USER 1-41

CHAPTER 2 OPERATIONS

I. BASIC OPERATIONS 2-1
A. Specifications 2-1
B. Outline of Electrical Circuitry . 2-2
C. Inputs to and Outputs from the Finisher Controller PCB 2-3
II. FEEDING / DRIVE SYSTEM 2-27
A. Outline 2-27
B. Feeding / Delivery 2-32
C. Job Offset 2-37
D. Releasing the Knurled Belt . 2-44
E. Buffer Path 2-49
III. CONTROLLING THE PADDLE 2-54
IV. CONTROLLING THE TRAY AUXILIARY PLATE 2-55
V. STAPLING 2-57
VI. TRAY MOVEMENT 2-65
VII. PUNCH UNIT 2-72
VIII. FANS 2-84
IX. POWER SUPPLY 2-86
X. DETECTING JAMS (FINISHER) 2-92
XI. CUTTING OFF THE MODULES 2-94
XII. SADDLE STITCHER 2-95
A. Basic Opration 2-95
B. Feed and Drive System 2-97
C. Paper Collection System ... 2-103
D. Stitcher System 2-117
E. Folding and Delivery System 2-120
F. Jam Detection 2-128
G. Power Supply 2-134
XIII. PAPER FOLDING UNIT B1 2-135
A. Outline 2-135
B. Block Diagram of Electrical Circuit 2-136
C. Basic Operation 2-137
D. Feed Drive System 2-139
E. Jam Detection 2-149
F. Power Supply 2-153
XIV. INSERTER (COVER INSERTION UNIT - A1) 2-154
A. Outline 2-154
B. Outline of Power Circuit 2-155
C. Basic Operation 2-156
D. Feed Drive System 2-159
E. Inserter Pick - up 2-161

COPYRIGHT © 1999 CANON INC. CANON SADDLE FINISHER - D2 REV.0 AUG. 1999 PRINTED IN JAPAN (IMPRIME AU JAPON)

F. Saddle Stitcher Mode Feeding 2-163
G. Jam Detection 2-165
H. Power Supply 2-167

CHAPTER 3 MECHANICAL SYSTEM

I. FINISHER UNIT 3-1
A. Externals and Controls 3-1
B. Processing Tray Unit 3-13
C. Tray A Unit / Tray B Unit 3-19
D. Knurled Belt Releasing Unit 3-27
E. Knurled Belt 3-29
F. Buffer Roller Unit 3-30
G. Stapler Unit 3-34
H. Punch Unit 3-40
I. Printed Circuit Boards (PCB) 3-48
II. SADDLE STITCHER 3-49
A. Saddle Unit 3-49
III. PAPER FOLDING UNIT A1 (FOLDER) 3-67
A. External Covers 3-67
B. Paper Folding Unit 3-67
C. Transport Mechanism 3-71
D. Drives 3-79
E. Removing the Folder Driver PCB 3-84
IV. INSERTER 3-85
A. External Controls 3-85
B. Pick - Up Unit 3-91

CHAPTER 4 MAINTENANCE AND SERVICING

I. PERIODICALLY REPLACED PARTS 4-1
II. GENERAL SERVICE LIVES OF CONSUMABLE PARTS 4-1
III. PERIODIC MAINTENANCE 4-3

CHAPTER 5 TROUBLESHOOTING

I. ADJUSTMENT 5-1
A. Electrical System 5-1
B. Mechanical 5-20
II. ARRANGEMENT OF ELECTRICAL PARTS 5-24
A. Finisher 5-24
B. Saddle Stitcher 5-36
C. Paper Folding Unit B1 (folder) 5-46
D. Cover Insertion Unit - A1 5-48
E. LEDs and Check Pins by PCB 5-50
F. Downloader PCB 5-62
III. TROUBLESHOOTING 5-71
A. Finisher 5-71
B. Saddle Stitcher 5-84
C. Folder 5-90
D. Inserter 5-91
IV. SELF DIAGNOSIS 5-92
A. Self - diagnostics 5-92
B. Alarms 5-98

COPYRIGHT © 1999 CANON INC. CANON SADDLE FINISHER - D2 REV.0 AUG. 1999 PRINTED IN JAPAN (IMPRIME AU JAPON)

APPENDIX

A. GENERAL TIMING CHART A-1
B. LIST OF SIGNALS / ABBREVIATIONS A-3
C. FINISHER UNIT GENERAL CIRCUIT DIAGRAM A-7
D. SADDLE STITCHER UNIT GENERAL CIRCUIT DIAGRAM A-9
E. PAPER FOLDING UNIT GENERAL CIRCUIT DIAGRAM A-11
F. COVER INSERTION UNIT - A1 GENERAL CIRCUIT DIAGRAM A-12
G. SOLVENTS AND OILS LIST A-13
H. SPECIAL TOOLS A-14

COPYRIGHT © 1999 CANON INC.

CHAPTER 1

GENERAL DESCRIPTION

I. FEATURES 1-1
II. SPECIFICATIONS 1-2
A. Specifications 1-2
B. Cross Section 1-10
III. OPERATING THE FINISHER ... 1-14
A. Removing Jams from the Finisher 1-14
B. Removing Jams from the Saddle Stitcher Unit 1-19
C. Removing Jams from the Paper Folding Unit 1-23
D. Removing Jams from the Cover Inserter 1-26
E. Replacing the Staple Case in the Stapler Unit 1-28
F. Removing Jammed Staples from the Stapler Unit 1-30
G. Replacing the Saddle Stitcher Unit Staple Cartridges 1-32
H. Removing Jammed Staples from the Saddle Stitcher Unit 1-34
I. Removing Punch waste 1-37
J. Module Separation Switch ... 1-38
K. Operating the Module Separation Switch 1-39
IV. MAINTENANCE BY THE USER 1-41

COPYRIGHT © 1999 CANON INC. CANON SADDLE FINISHER-D2 REV.0 AUG. 1999 PRINTED IN JAPAN (IMPRIME AU JAPON)

I . FEATURES

1. Two Types of Stacking Trays

- There are two types of stacking trays, tray A and tray B, which are used for different purposes.

2. Large Capacity

- Tray B is capable of holding a stack of sheets 285 mm in height (small size)/145 mm in height (large size), while tray A is capable of holding a stack of sheets 145 mm in height.

3. Wide-Ranging Paper Types

- The sheets may be of 64 to 200 g/m^2 paper.

4. Stack Job Offset Function

- The stack job offset function is offered for sorting non-staple stacks.

5. Three Types of Auto Stapling

- As many as three different types (position) are offered (front slant, rear slant, 2-point).

6. High Productivity by a Buffer Roller

- The use of a buffer roller has enabled continuous feeding of sheets from the copier while stapling or offset operation is taking place.

7. Punching Function

- The use of a punch unit enables holes for filing the paper in a binder to be punched in the paper prior to delivery. (This function can be used with 64-200 g/m^2 paper, but not with intermediate paper or OHP paper.)

8. Saddle Stitcher Function

- Up to 15 sheets can be delivered stapled in the middle and folded in half.

9. Inserter Function

- The cover can be picked up from the inserter which is separate from the cassette.

10. Folding Function

- This function enables Z-folding to be carried out of paper of A3, B4 or 279.4 x 431.8mm (11 x 17) size. Paper of 64-80 g/m^2 can be folded.

COPYRIGHT © 1999 CANON INC.

II . SPECIFICATIONS

A. Specifications

1. Saddle Finisher D2

1-a. Finisher

Item		Specifications		Remarks
Lifting system		Tray A	Up/down	
		Tray B	Up/down	
Stacking		Tray A	Same as the copier delivery method.	
		Tray B	Face-down	
Stack size		Tray A	Postcard to A3/ 279.4mm × 431.8mm	Postcards are for R feeding only.
		Tray B	A5/STMT to A3/ 279.4mm × 431.8mm	A5/STMT is for R feeding only. B5/A4/LTR is for horizontal feeding only.
Paper weight		64 to 200 g/m^2		
Modes		Staple stacking, non-staple stacking		Mixed stacking is possible under certain conditions
Stack thickness	Non-staple sort	Tray A	1000-sheet equivalent (small/large size) 145mm	Paper equivalent to 80 g/m^2
		Tray B	2,000-sheet equivalent (small-size) 285mm 1,000-sheet equivalent (large-size) 145mm	
	Staple sort	Tray A	1,000-sheet equivalent or 100 sets (small/large size)	
		Tray B	2,000-sheet equivalent or 100 sets (small-size) 1,000-sheet equivalent or 100 sets (large-size)	
Staple/non-staple mix		Tray B	Stops when either of the conditions below is met 2,000-sheet equivalent or 100 sets (small-size) 1,000-sheet equivalent or 100 sets or 30 folded sheets (large-size)	Stacking ability is not guaranteed. Treated as large size when 1 large-size sheet is included.

Table 1-201

The specifications are subject to change for product improvement.

COPYRIGHT © 1999 CANON INC.
CANON SADDLE FINISHER-D2 REV.0 AUG. 1999 PRINTED IN JAPAN (IMPRIME AU JAPON)

Item	Specifications		Remarks
Folded paper mix stack thickness	Tray A	Max. 20 sheets of folded paper	Paper equivalent to 80 g/m^2
	Tray B	Max. 10 sheets of folded paper per stack / Max. 30 sheets of folded paper per 1 job (1 folded sheet is regarded as 5 sheets of normal paper)	
Stacking condition	Tray A	Front/rear stack offset Staple: 20 mm Non-staple: 30 mm (LGL: 36mm)	No offset stacking on tray A for non-sort delivery
	Tray B		
Paper detection	Tray A	Yes	
	Tray B		
Control panel	No		
Display	No		
Installation	Latching with mount (height adjusted by caster)		
Dimensions	802 mm (W) × 738 mm (D) × 995 mm (H) / 31 - $^5/_8$" (W) × 29 - $^1/_8$" (D) × 39 - $^3/_8$" (H)		Note 2

Note 1: The term “small-size” refers to A4, A5, B5, postcard, LTR, and STMT, while the term “large-size” refers to A3, B4, 279.4 mm × 431.8 mm, and LGL.
Note 2: Width when folder is connected: 986mm / 38 - $^{13}/_{16}$"
Height when inserter is connected:1,138mm / 44 - $^{13}/_{16}$" (auxiliary tray open)

Table 1-201-2

The specifications are subject to change for product improvement.

COPYRIGHT © 1999 CANON INC.

Item		Specifications		Remarks
Weight		Approx. 106 kg (233ℓb) Approx. 170 kg (373.7ℓb) (including inserter and folder)		
Power supply		100 to 120V/50; 60Hz, 230V/50Hz		
Maximum power consumption (230V)		During wait : 160W / during stand-by : 60W / during operation : 200W (staple sort)		
Stapling		Punching by a rotating cam. (face-down stapling)		
Stapling position		See figure below.		
Stapling thickness		48 sheets (80 g/m^2) + 2 sheets (200 g/m^2), or thick paper of 5.5 mm or less		
Staple compartment		Special cartridge (5,000 staples)		
Staples		Special staples		
Staple detection		Yes		
automatic staple reposition		Within 10 times		
Stapling size	1-point stapling	Front/rear	A3, A4, B4, B5, 279.4mm × 431.8 mm, LGL, LTR	
	2-point stapling	A3, A4, B4, B5, 279.4mm × 431.8 mm, LTR		
Manual stapling		None		

Table 1-202

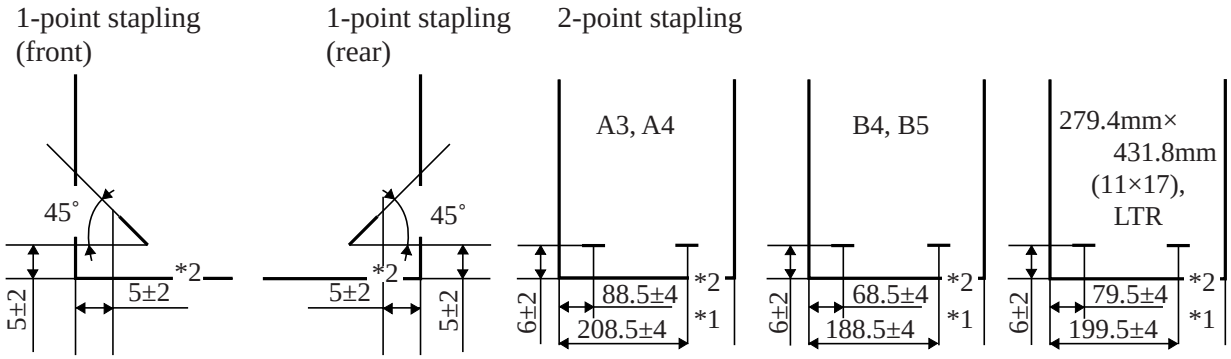

Unit: mm

*1 The stapling interval may be adjusted in user mode.

*2 The stapling position may be adjusted using a DIP switch.

Figure 1-201

The specifications are subject to change for product improvement.

COPYRIGHT © 1999 CANON INC.

Item		Specifications
Punch unit-related items	Punching method	Rotary punch (one after another as paper passes)
	Paper type	64 to 200 g/m^2 (Not possible with OHP paper)
	Paper size	100 V / 230 V : A3, B4, A4, B5 115 V : 279.4 mm × 431.8 mm, LTR
	Punch (No. and diameter of holes)	100/230V : 2 holes, 6.5mm 115V : 3 holes, 8mm
	Punch waste capacity	100/230V : Approx. 20,000 sheets or more (when using 80 g/m^2 paper) 115V : Approx. 10,000 sheets or more (when using 80 g/m^2 paper)
	Punch waste "full" indicator	Displayed on main control panel
	Punch mode designation method	Designated on main control panel
	Punch position	100/230V 115V 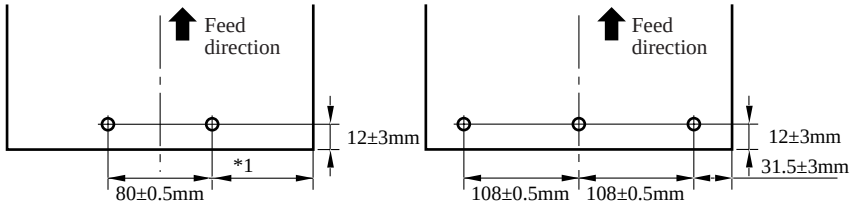 *1 : A4/A3=108.5±3mm : B4/B5=88.5±3mm
	Maximum power consumption (230V)	200W (punch staple sort)

Table 1-203

The specifications are subject to change for product improvement.

COPYRIGHT © 1999 CANON INC.

1-b. Saddle Stitcher

Item	Specifications	
Stapling method	Staple in middle, then fold in half	
Stapling position	See Figure 1-202.	
Paper size	A3, B4, A4R, 279 mm × 432 mm (11 × 17), LTRR	
No. of sheets	15 sheets (including cover) (Note 1)	
Paper weight	64 g/m^2 to 80 g/m^2 (1 cover up to 200 g/m^2) (Not possible with special paper or OHP paper)	
No. of sets for stacking	30 sets (special tray, front stop shift)	
Stapling specifications	Stapling position	2 points (equidistant from center, fixed interval)
	Staple capacity	2000 staples
	Staple loading method	Special cartridge
	Staples	Special staples (Staple Cartridge D2)
	Staple detection	Yes
Folding specifications	Folding method	Folding by roller pressure
	Folding mode	Folding in two (1 sheet is not stapled)
	Folding position	Center of paper
	Folding position adjustment function	Yes
Power supply	Supplied from finisher 24V, 2-systems	
Trimmer (Note 2)	No	
Power consumption (230 V)	190W (book mode)	

Note 1: When using thick paper over 90 g/m^2 in cover mode, depending on the type of paper, feeding may not go smoothly with stacks of 14 sheets or over. If this happens, change the setting to 13 sheets or less.

Note 2: The term “trimmer” refers to the function for trimming the edges of the stacks.

Table 1-204

The specifications are subject to change for product improvement.

COPYRIGHT © 1999 CANON INC.
CANON SADDLE FINISHER-D2 REV.0 AUG. 1999 PRINTED IN JAPAN (IMPRIME AU JAPON)

Stapling and folding position (saddle stitcher)

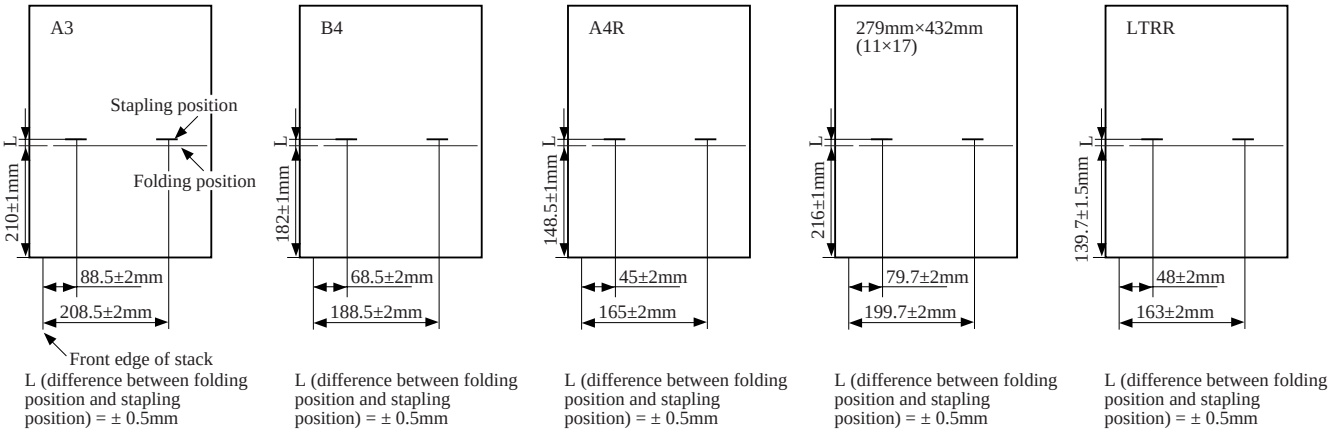

L (difference between folding position and stapling position) = ± 0.5mm

L (difference between folding position and stapling position) = ± 0.5mm

L (difference between folding position and stapling position) = ± 0.5mm

L (difference between folding position and stapling position) = ± 0.5mm

L (difference between folding position and stapling position) = ± 0.5mm

Figure 1-202

The specifications are subject to change for product improvement.

COPYRIGHT © 1999 CANON INC.

2. Folder (Paper Folding Unit B1)

Item	Specifications	Remarks
Folding method	Roller pressure (folded one after another as paper passes)	
Paper weight	64 to 80 g/m^2	
Paper size	A3, B4, 297 mm × 432 mm (11 × 17)	
Folding mode	Z-folding	
Dimensions	184 mm (W) × 675 mm (D) × 995 mm (H) / 7 - 1/4" (W) × 26 - 5/8" (D) × 39 - 1/4" (H)	Including casters
Power consumption (230V)	240 W (Z-fold, punch staple mode)	
Weight	Approx. 45 kg / 99.2ℓb	
Power supply	Supplied from finisher	

Table 1-205

Folding Position

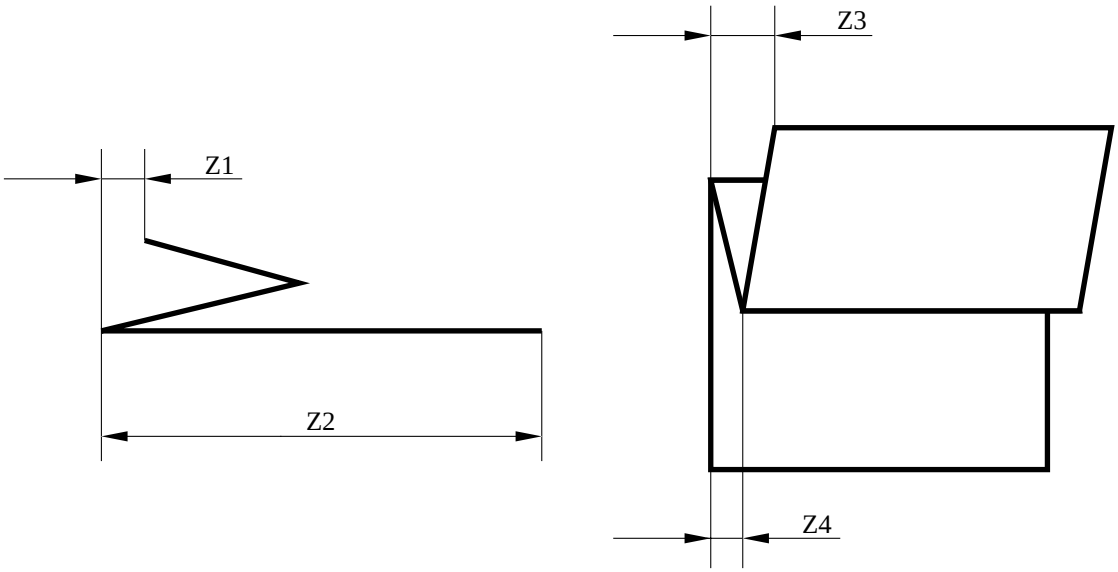

Z1: Within $2\ ^{+2}_{-1}$ mm

Z2: Within $\frac{\text{paper length}}{2} \pm 2$ mm

Z3, Z4: Within ± 1.5 mm
In case of high temperature/high humidity or low temperature
Z3, Z4: Within ± 2.0 mm

Figure 1-203

The specifications are subject to change for product improvement.

COPYRIGHT © 1999 CANON INC.

3. Inserter (Cover Insertion Unit-A1)

Item	Specifications	Remarks
Stacking capacity	100 sheets (small-size) / 50 sheets (large-size)	Face-up, 80 g/m^2 paper
Paper weight	64 to 200 g/m^2 (including colored copy paper)	Not possible with OHP paper
Paper size	B5 to A3/ 279mm × 432mm (11 × 17)	B5 is for standard feeding only
Mixed stacking	No	
Separation method	Upper separation by belt	
Position standard	Center standard	
Weight	Approx. 20kg / 44ℓb	
Power consumption (230V)	240 W (Z-fold, cover mode, pumch, staple-sort)	
Dimensions	Auxiliary tray open: 561mm (W) × 584mm (D) × 144mm (H) / 22 - 1/8" (W) × 23" (D) × 5 - 5/8" (H) Auxiliary tray closed: 402mm (W) × 584mm (D) × 132mm (H) / 15 - 7/8" (W) × 23" (D) × 5 - 1/4" (H)	
Power supply	Supplied from finisher	

Table 1-206

The specifications are subject to change for product improvement.

COPYRIGHT © 1999 CANON INC.

B. Cross Section

1. Finisher

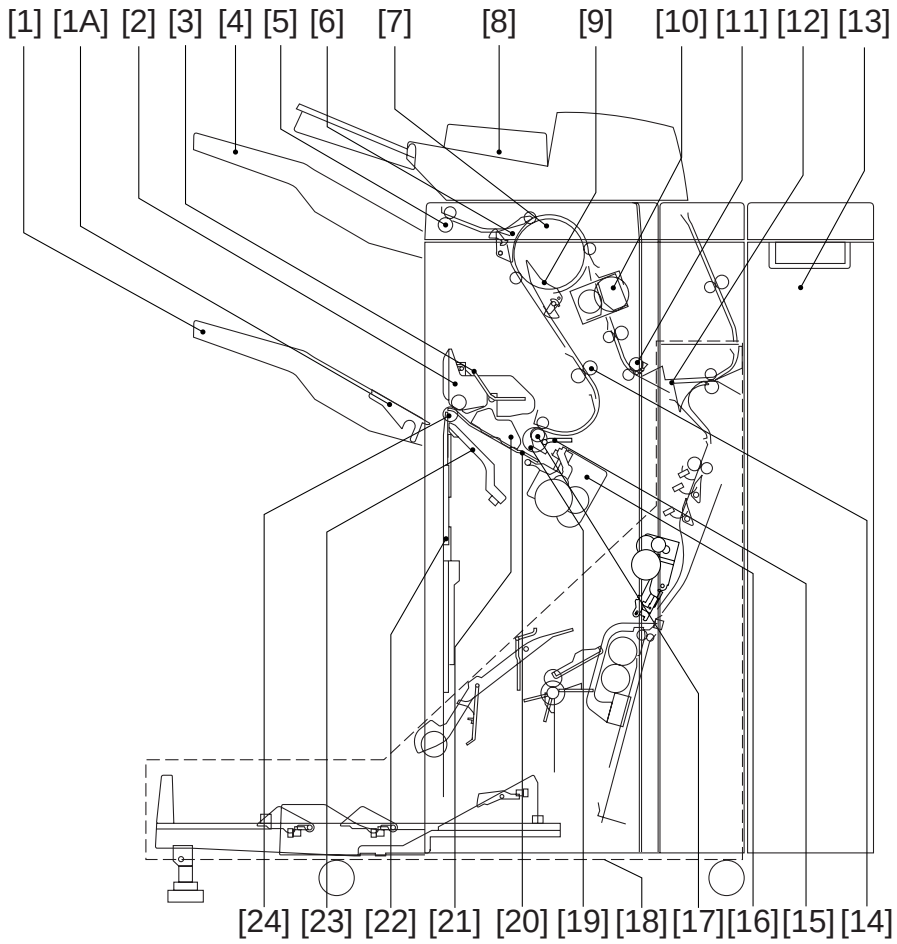

[1] Tray B
[1A] Sub tray (attached when folder attached)
[2] Swing guide
[3] Paddle
[4] Tray A
[5] Non-sort delivery roller
[6] Upper path switching flapper
[7] Buffer roller
[8] Inserter (Cover Insertion Unit-A1)
[9] Buffer switching flapper
[10] Punch unit
[11] Inlet roller
[12] Saddle inlet paper deflector
[13] Folder (Paper Folding Unit-B1)
[14] Pre-delivery roller
[15] Mobile roller
[16] Stapler
[17] Delivery roller
[18] Saddle stitcher
[19] Knurled belt
[20] Processing tray
[21] Jogging plate (front, rear)
[22] Shutter
[23] Tray auxiliary plate
[24] Stack delivery roller

Figure 1-204

COPYRIGHT © 1999 CANON INC.

2. Saddle Stitcher Unit

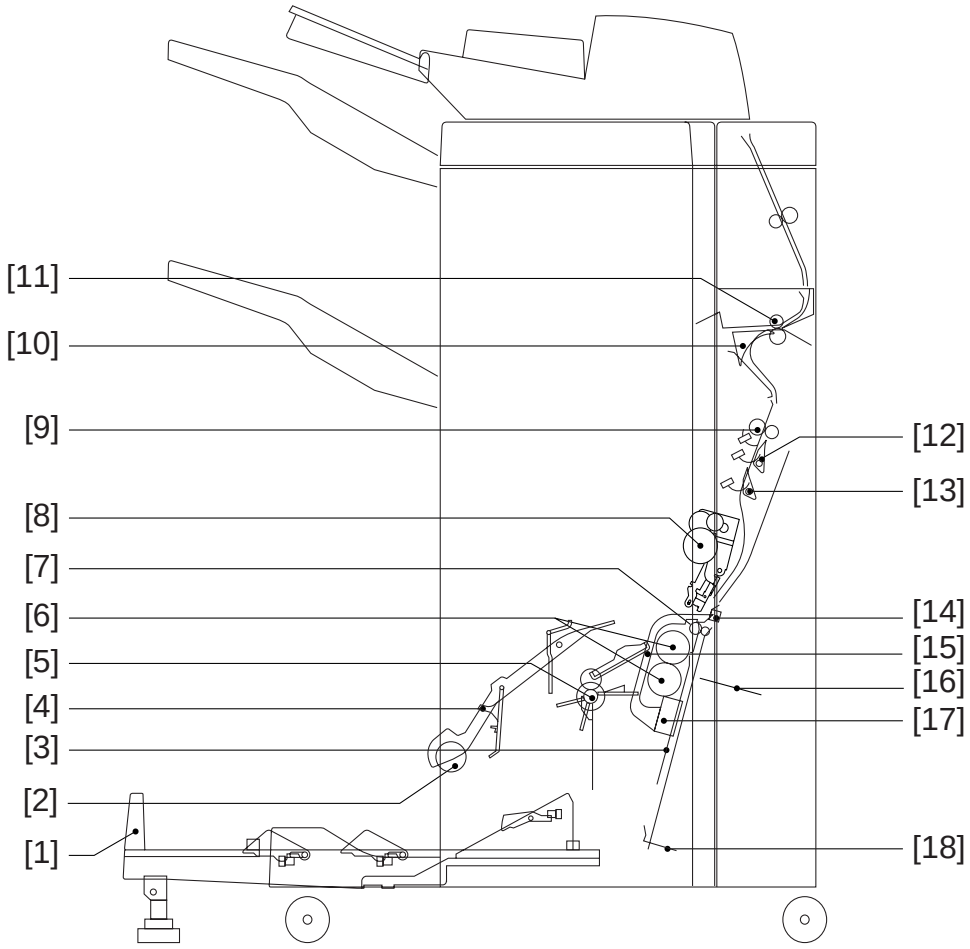

[1] Saddle delivery tray
[2] Delivery guide roller
[3] Guide plate
[4] Delivery guide
[5] Delivery roller
[6] Folding roller (top, bottom)
[7] Intermediate roller 2
[8] Stitcher (front, rear)
[9] Intermediate roller 1
[10] Saddle inlet paper deflector
[11] Saddle inlet roller
[12] Paper deflector 1
[13] Paper deflector 2
[14] Stitch support
[15] Jogging plate (front, rear)
[16] Pressure plate
[17] Crescent roller
[18] Positioning plate

Figure 1-205

COPYRIGHT © 1999 CANON INC.

3. Folder

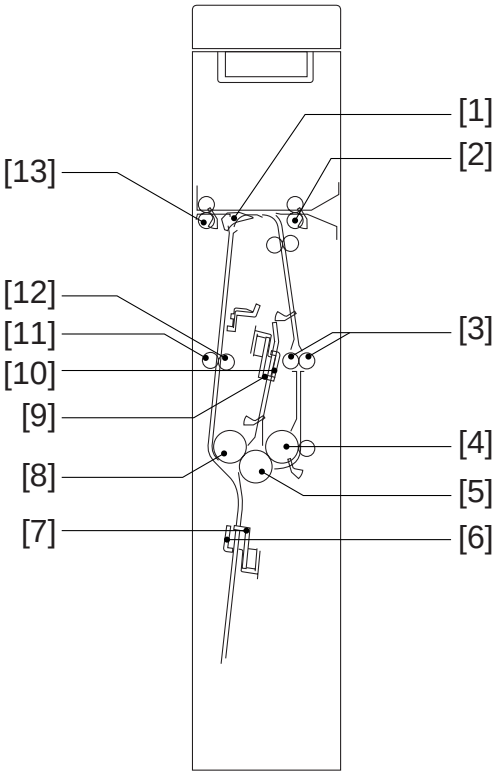

[1] Folder inlet flapper
[2] Feed roller 1
[3] Folding roller 2
[4] Folding roller C
[5] Folding roller A
[6] 1st stopper
(A3/279.4mm × 431.8mm (11 × 17))
[7] 1st stopper (B4)
[8] Folding roller B
[9] 2nd stopper (B4)
[10] 2nd stopper
(A3/279.4mm × 431.8mm (11 × 17))
[11] Skew correction roller
[12] Pressure roller
[13] Feed roller 2

Figure 1-206

COPYRIGHT © 1999 CANON INC.

4. Inserter

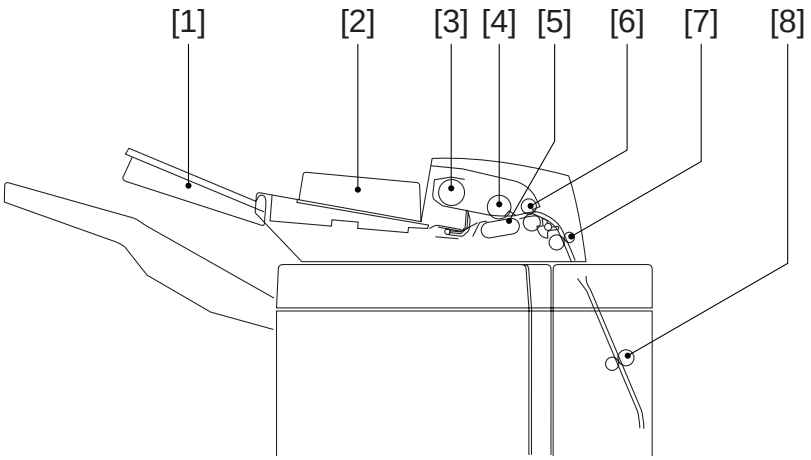

[1] Auxiliary tray
[2] Side guide (front, rear)
[3] Pick-up roller
[4] Feed roller
[5] Separation belt
[6] Extraction roller
[7] Intermediate feed roller
[8] Inserter lower feed roller

Figure 1-207

III . OPERATING THE FINISHER

A. Removing Jams from the Finisher

1. Paper Jam in the Top Cover

A paper jam has occurred in the area which appears in the display. Follow the procedure described below to remove the jammed paper.

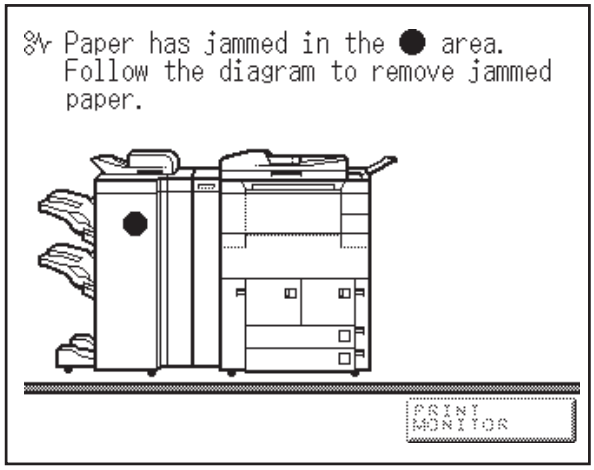

Figure 1-301

1) Remove any paper protruding from the output tray.

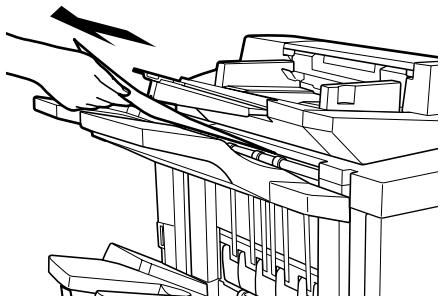

Figure 1-302

2) Open the cover inserter.

• This procedure is not necessary if the cover inserter is not attached to the finisher.

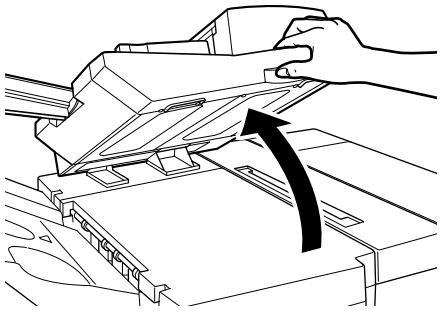

Figure 1-303

3) Open the front cover.

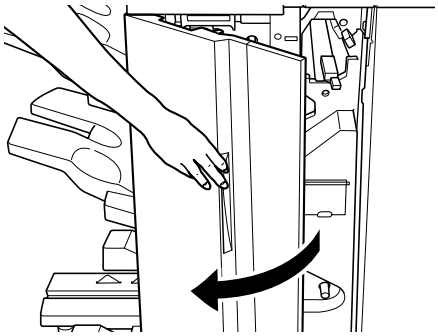

Figure 1-304

COPYRIGHT © 1999 CANON INC.
CANON SADDLE FINISHER-D2 REV.0 AUG. 1999 PRINTED IN JAPAN (IMPRIME AU JAPON)

4) Push the knob to the back and align the ▲ of the knob to the range of ▬ .

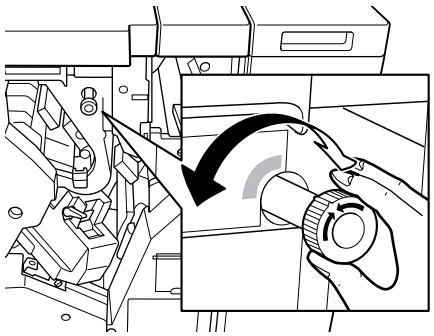

Figure 1-305

5) Open the top cover and check the inside of the finisher.

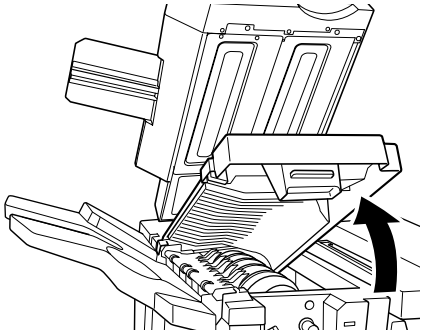

Figure 1-306

6) Turn the green knob and remove any jammed paper.

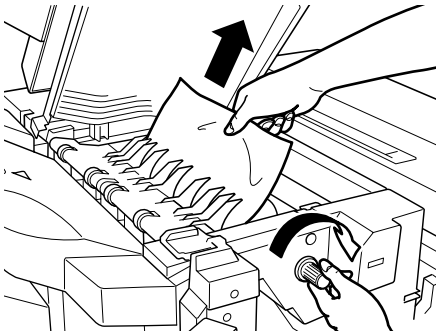

Figure 1-307

7) Close the top cover.

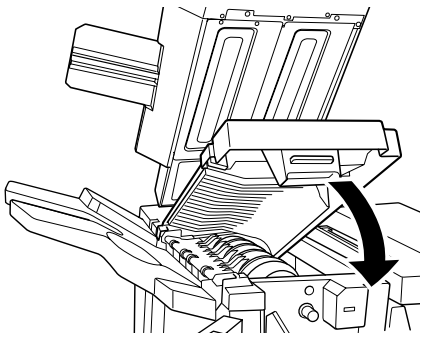

Figure 1-308

COPYRIGHT © 1999 CANON INC.

8) Close the front cover.



Figure 1-309

9) Close the cover inserter.
- This procedure is not necessary if the cover inserter is not attached to the finisher.

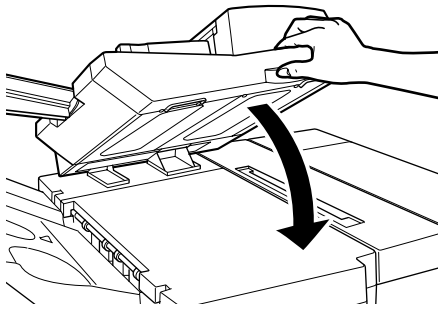

Figure 1-310

10) Follow the instructions in the display.

COPYRIGHT © 1999 CANON INC.

2. Paper Jam in the Front Cover

A paper jam has occurred in the area which appears in the display. Follow the procedure described below to remove the jammed paper.

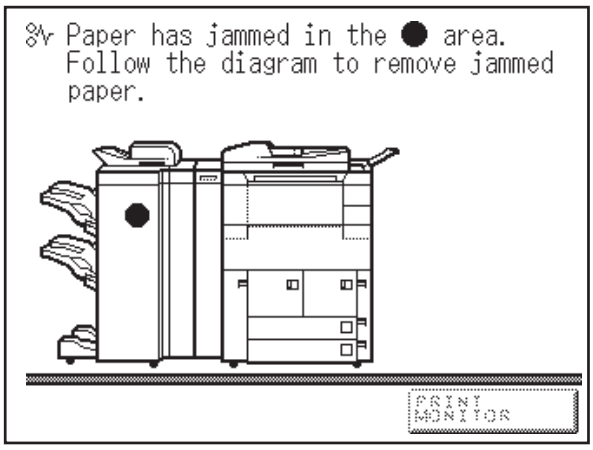

Figure 1-311

1) Open the front cover.

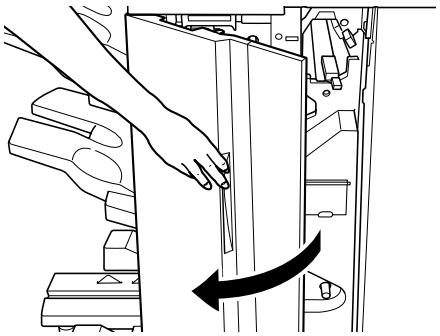

Figure 1-312

2) Push the knob to the back and align the ▲ of the knob to the range of ▬ .

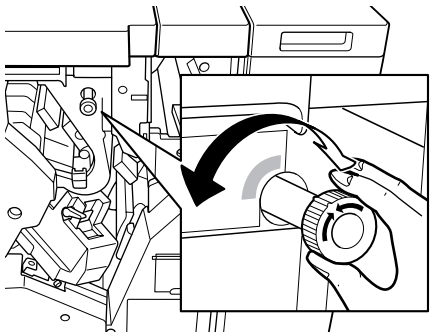

Figure 1-313

3) Open the paper delivery guide and remove any jammed paper.

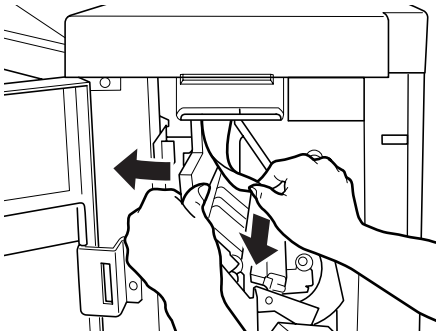

Figure 1-314

4) Lift the lever and remove any jammed paper.

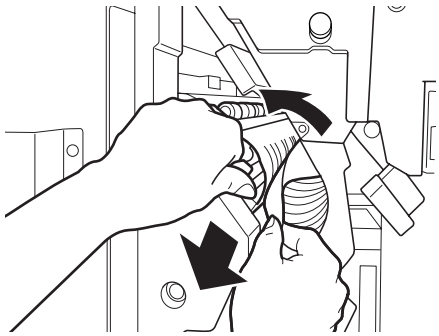

Figure 1-315

5) Pull open the guide, and remove any jammed paper.

• This procedure is not necessary if the sheet is not fed from the cover inserter.

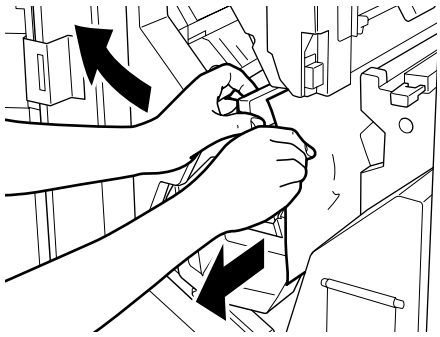

Figure 1-316

6) Open the open/close guide, and remove any jammed paper from inside of the finisher.

• Do not remove any paper from the tray while a copy job is being performed.

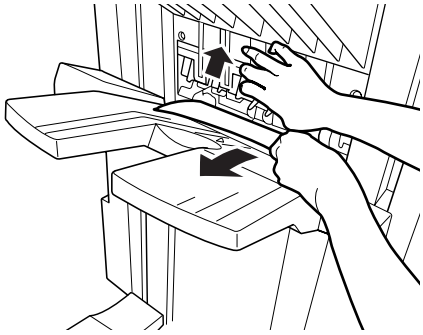

Figure 1-317

7) Close the cover inserter.

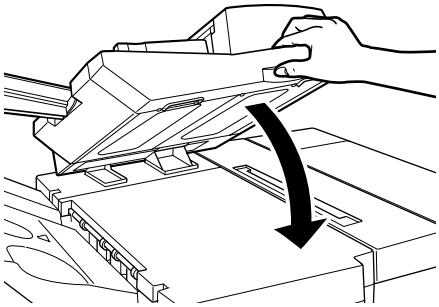

Figure 1-318

8) Follow the instructions in the display.

COPYRIGHT © 1999 CANON INC.

B. Removing Jams from the Saddle Stitcher Unit

1. Paper Jam in the Saddle Stitcher Unit

A paper jam has occurred in the area which appears in the display. Follow the procedure described below to remove the jammed paper.

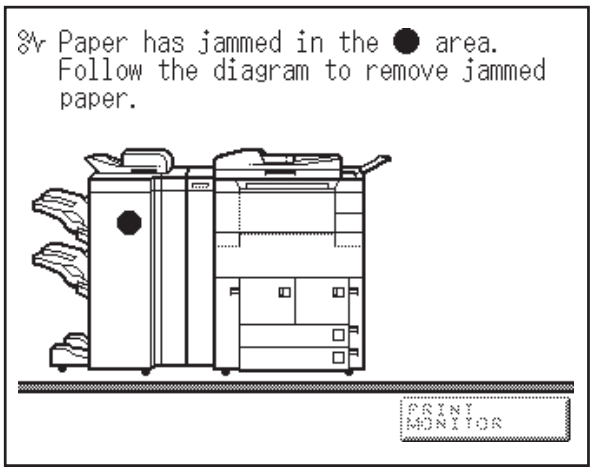

Figure 1-319

1) Open the front cover.

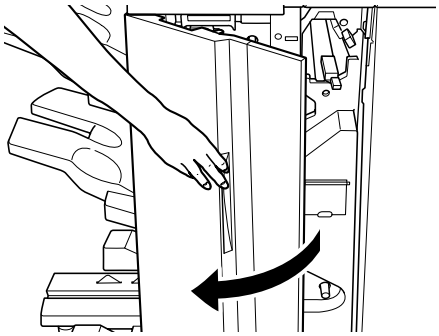

Figure 1-320

2) Open the guide, and remove any jammed paper.

• This procedure is not necessary if the sheet is not fed from the cover inserter.

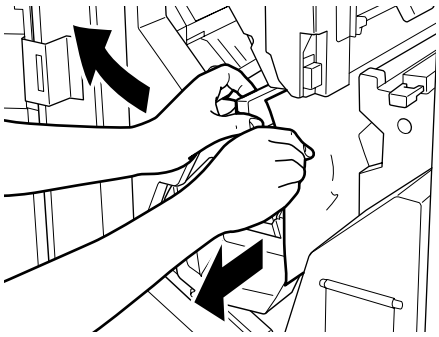

Figure 1-321

3) Pull the upper guide of the saddle stitcher unit to the left, and remove any jammed paper.

• This procedure is not necessary if the sheet is not fed from the cover inserter.



Figure 1-322

COPYRIGHT © 1999 CANON INC.

4) Return the upper guide to its original position.



Figure 1-323

5) Pull up the lower guide of the saddle stitcher unit, and remove any jammed paper.

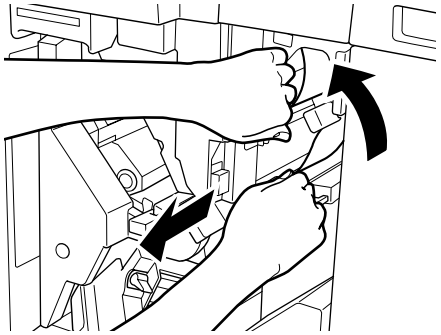

Figure 1-324

6) Turn the right knob to the left until it stops.

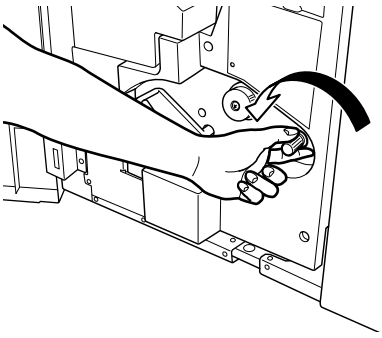

Figure 1-325

7) Push in and turn the left knob to the right until the lamp turns off.

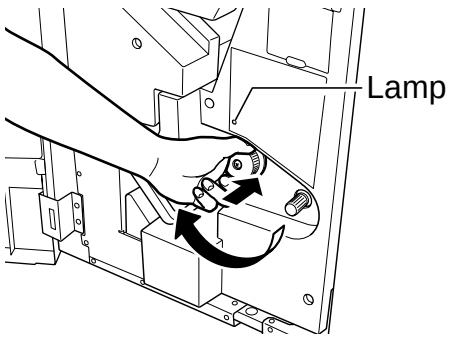

Figure 1-326

COPYRIGHT © 1999 CANON INC.

8) Remove any paper which has come out to the booklet tray.

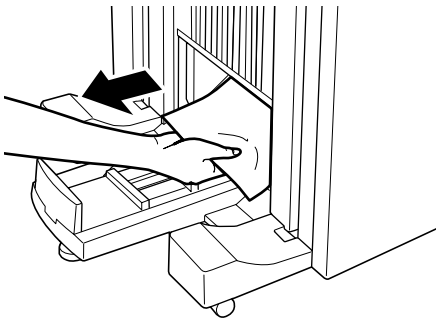

Figure 1-327

9) Turn the lever to the right and then pull out the saddle stitcher unit.

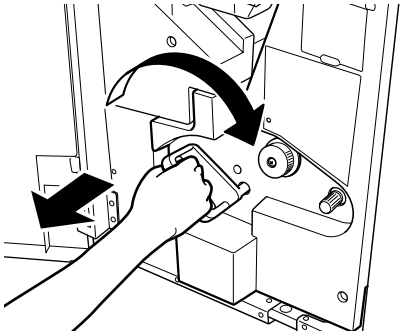

Figure 1-328

10) Open the right cover of the saddle stitcher unit, and remove all papers in the saddle stitcher unit.

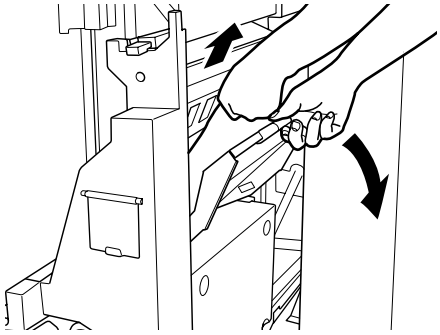

Figure 1-329

11) Open the left cover of the saddle stitcher unit.

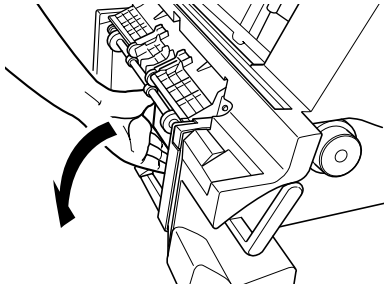

Figure 1-330

COPYRIGHT © 1999 CANON INC.

12) Push in and turn the left knob to the right, and remove the jammed paper.

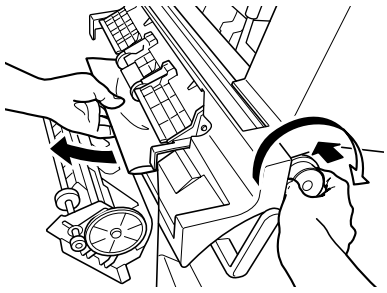

Figure 1-331

13) Close the left cover.
14) Push the saddle stitcher unit back in as far as it will go, and then return the lever to its original position.

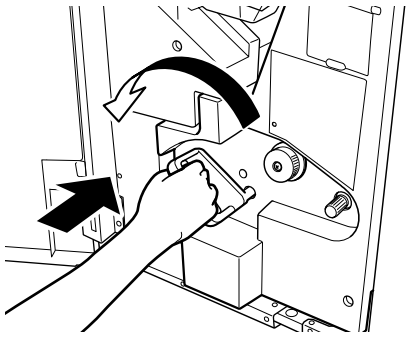

Figure 1-332

15) Close the front cover.

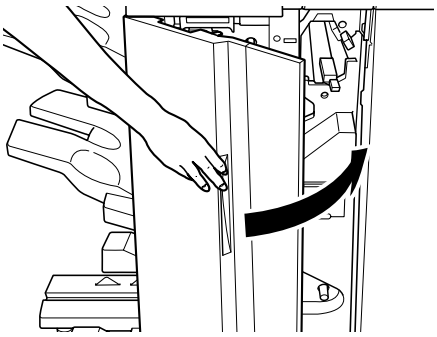

Figure 1-333

16) Follow the instructions in the display.

COPYRIGHT © 1999 CANON INC.

C. Removing Jams from the Paper Folding Unit

1. Paper Jam in the Top Cover

A paper jam has occurred in the area which appears in the display. Follow the procedure described below to remove the jammed paper.

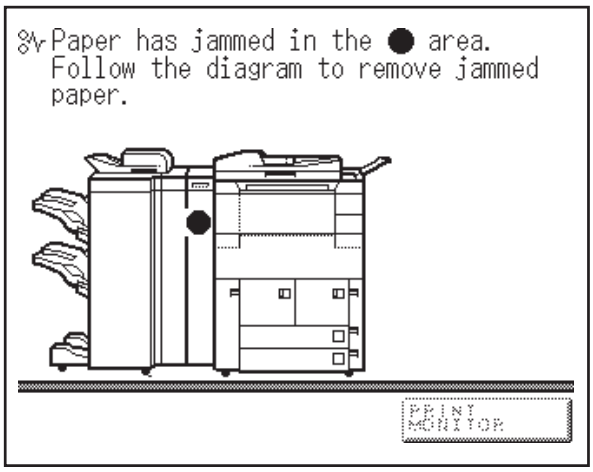

Figure 1-334

1) Open the top cover of the paper folding unit.

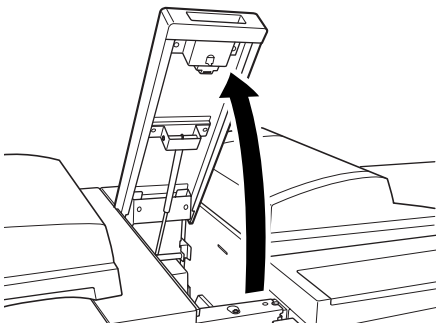

Figure 1-335

2) Open the top guide, and remove any jammed paper.

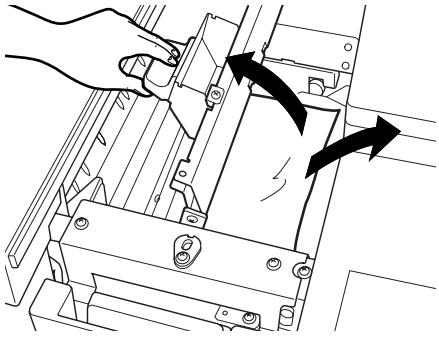

Figure 1-336

3) Pull out the paper folding unit.

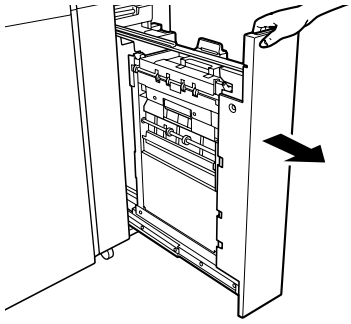

Figure 1-337

COPYRIGHT © 1999 CANON INC.

4) Open the top guide, then open the right guide.

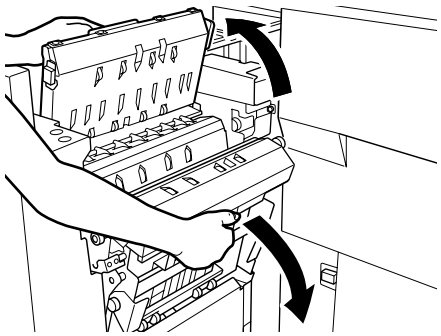

Figure 1-338

5) Remove any jammed paper.

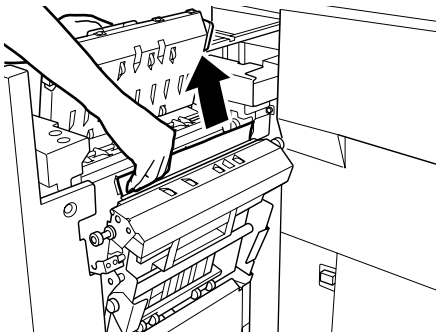

Figure 1-339

6) Close the right guide, then close the top guide.

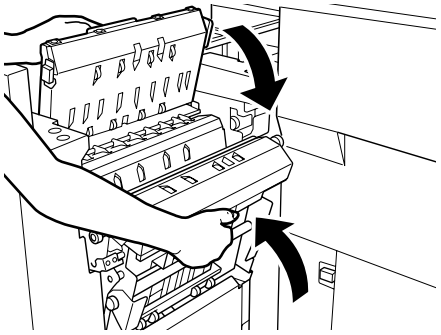

Figure 1-340

7) Open the left guide.

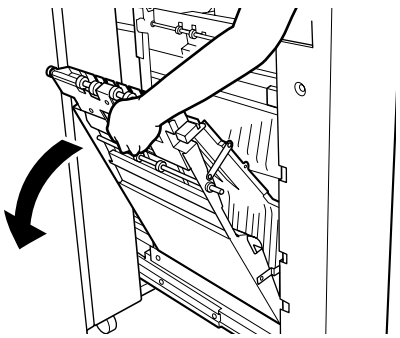

Figure 1-341

COPYRIGHT © 1999 CANON INC.
CANON SADDLE FINISHER-D2 REV.0 AUG. 1999 PRINTED IN JAPAN (IMPRIME AU JAPON)

8) Remove any jammed paper.

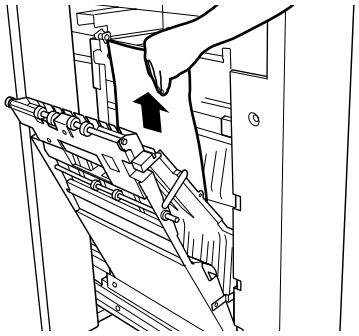

Figure 1-342

9) Close the left guide.

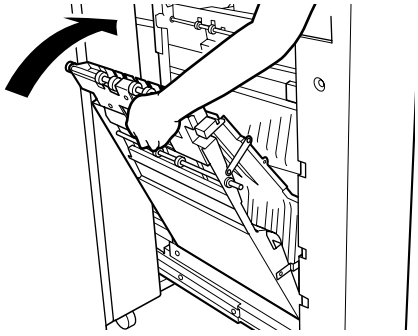

Figure 1-343

10) Return the paper folding unit to its original position.

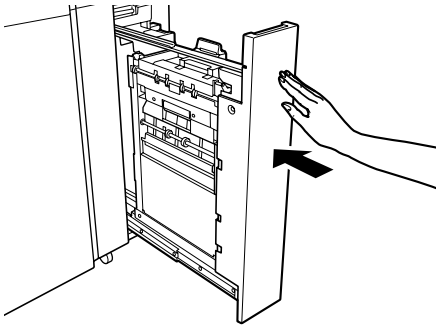

Figure 1-344

11) Close the top cover of the paper folding unit.

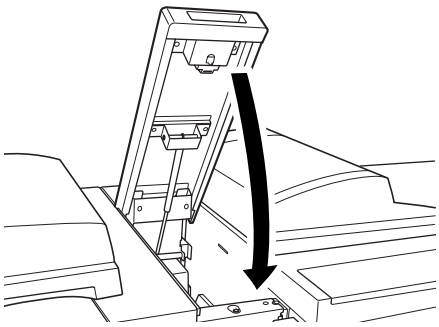

Figure 1-345

12) Follow the instructions in the display.

D. Removing Jams from the Cover Inserter

1. Paper Jam in the Cover Inserter

A paper jam has occurred in the area which appears in the display. Follow the procedure described below to remove the jammed paper.

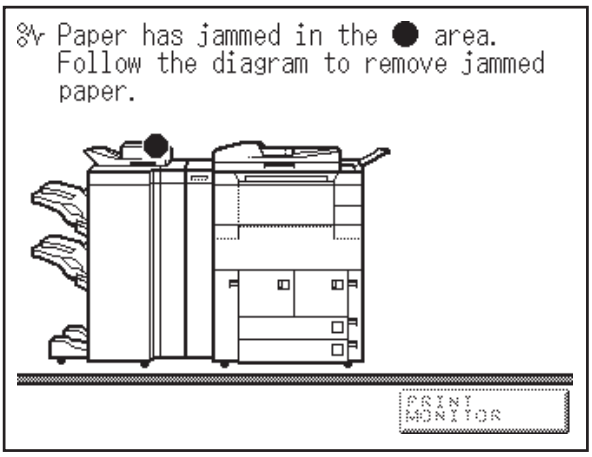

Figure 1-346

1) Open the top cover of the cover inserter.

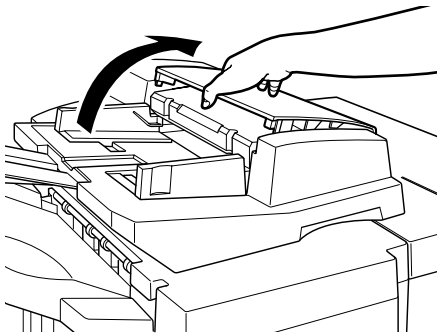

Figure 1-347

2) Remove any jammed paper.

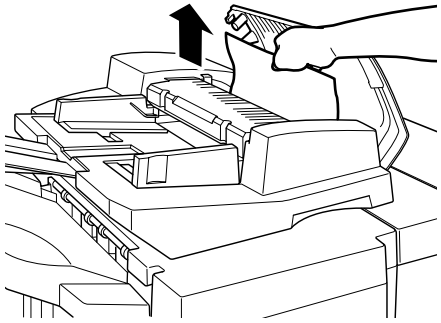

Figure 1-348

3) Close the top cover of the cover inserter.

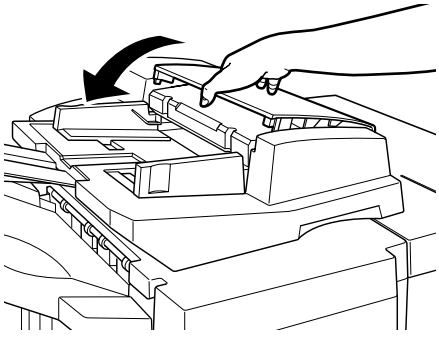

Figure 1-349

COPYRIGHT © 1999 CANON INC.

4) Pull up the cover inserter.

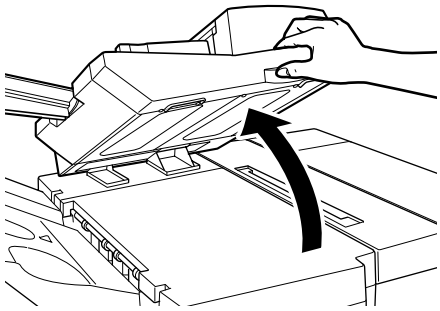

Figure 1-350

5) Remove any jammed paper.

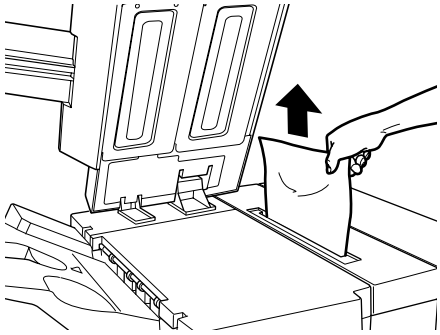

Figure 1-351

6) Push down the cover inserter.

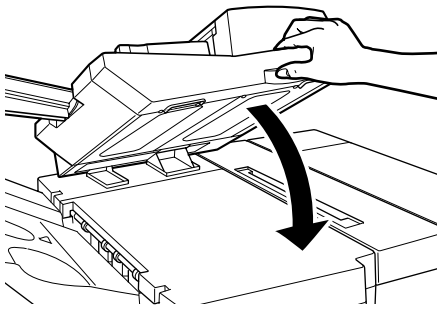

Figure 1-352

7) Place again the sheet to be used as a cover in the cover inserter.

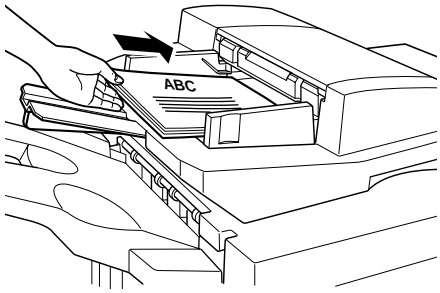

Figure 1-353

8) Follow the instructions in the display.

E. Replacing the Staple Case in the Stapler Unit

When the saddle finisher runs out of staples, the message on the right will appear in the display. Follow the procedure described below to replace the staple case.

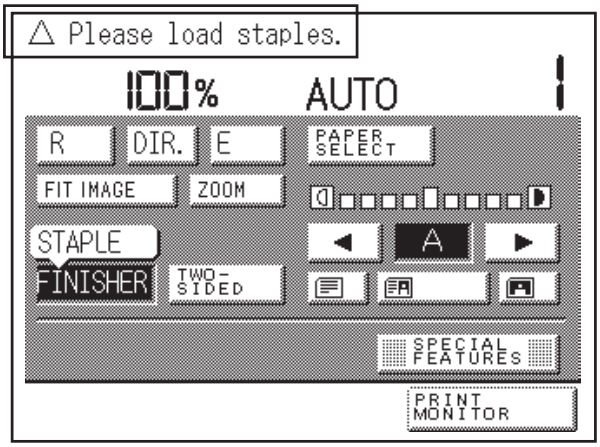

Figure 1-354

1) Open the front cover.
2) Push down the green lever.

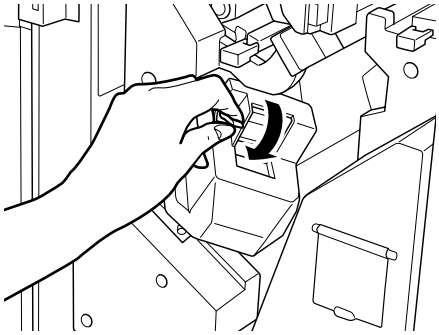

Figure 1-355

3) Pull out the slightly protruding staple cartridge holding it by its left and right sides.

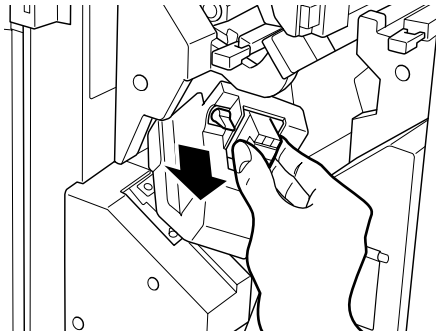

Figure 1-356

COPYRIGHT © 1999 CANON INC.

4) Pull out the empty staple case holding it by its left and right sides.

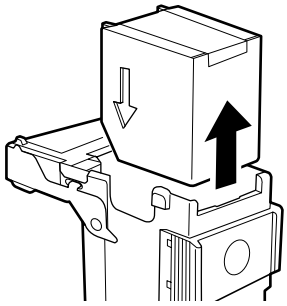

Figure 1-357

5) Insert the new staple case.
- Only one staple case can be inserted at a time.
- Use only the special staple case for use on this machine.

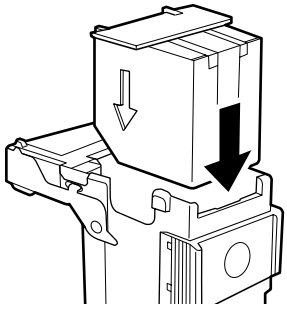

Figure 1-358

6) Remove the seal fixing the staples by pulling it straight out.

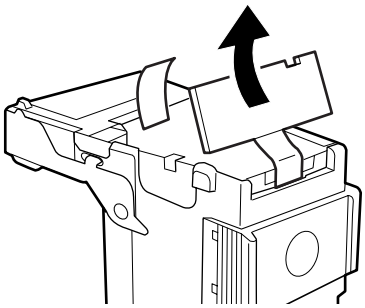

Figure 1-359

7) Gently push the staple cartridge back into the finisher until the green lever returns to its original position.

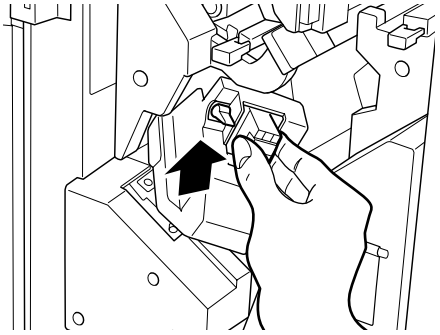

Figure 1-360

8) Close the front cover.
- When you close the cover, the staple unit automatically performs a 'dry' stapling operation several times to reposition the staple.

COPYRIGHT © 1999 CANON INC.

F. Removing Jammed Staples from the Stapler Unit

When a staple jam occurs, the message on the right will appear in the display. Follow the procedure described below to remove the jammed staples.

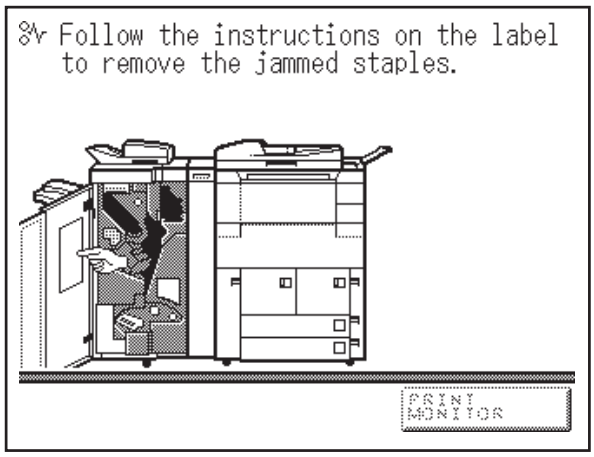

Figure 1-361

1) Remove the paper waiting to be stapled from the delivery tray.

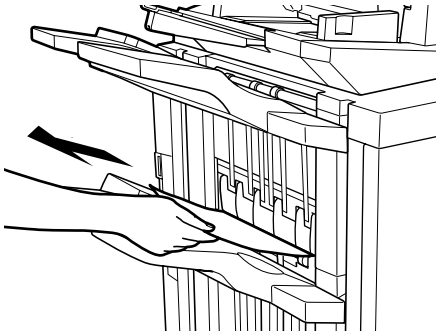

Figure 1-362

2) Open the front cover.

3) Push down the green lever.

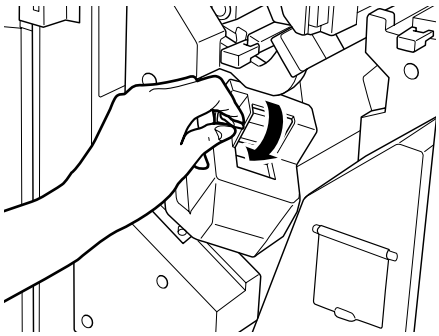

Figure 1-363

4) Pull out the slightly protruding staple cartridge holding it by its left and right sides.

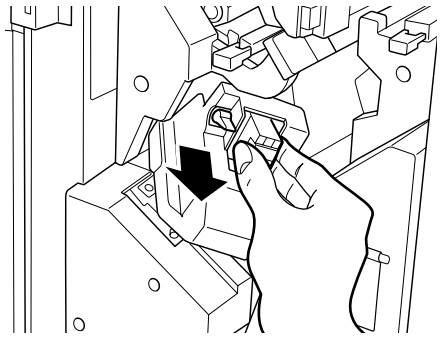

Figure 1-364

COPYRIGHT © 1999 CANON INC.

5) Lower the knob of the staple cartridge.

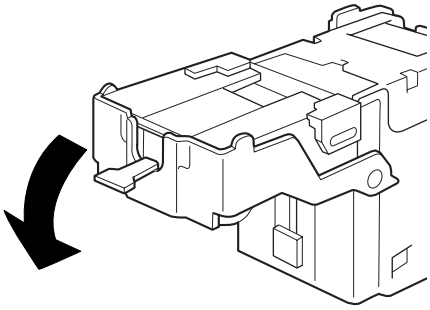

Figure 1-365

6) Remove all of the staples that slide from the staple case.

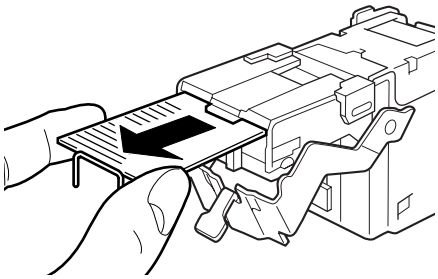

Figure 1-366

7) Return the knob of the staple cartridge to its original position.

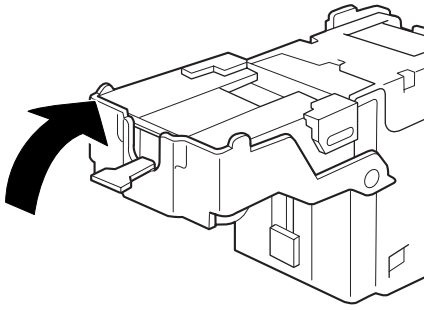

Figure 1-367

8) Gently push the staple cartridge back into the finisher until the green lever returns to its original position.

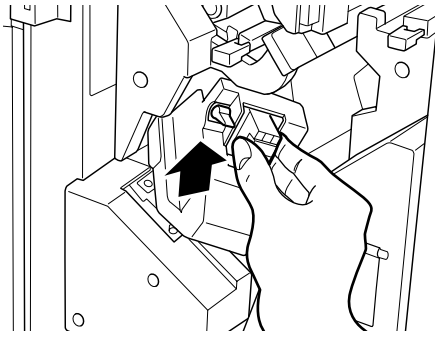

Figure 1-368

9) Close the front cover.

• When you close the front cover, the staple unit automatically performs a 'dry' stapling operation several times to reposition the staples.

G. Replacing the Saddle Stitcher Unit Staple Cartridges

When the saddle stitcher unit runs out of staples, the message on the right will appear in the display. Follow the procedure described below to replace the staple cartridges.

- Before replacing the staple cartridges, remove all output sheets from the booklet tray.

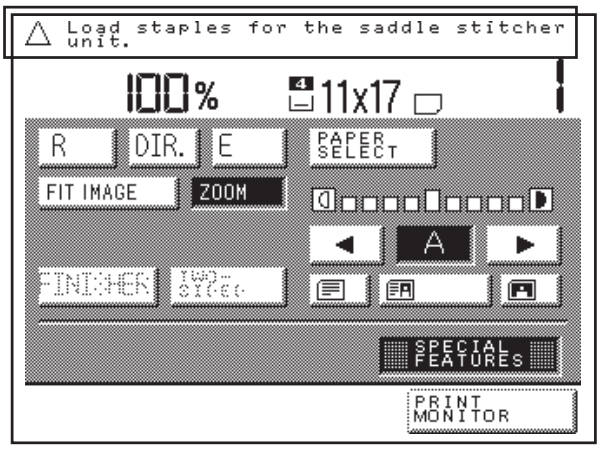

Figure 1-369

1) Open the front cover.

2) Turn the lever to the right, then pull out the saddle stitcher unit.

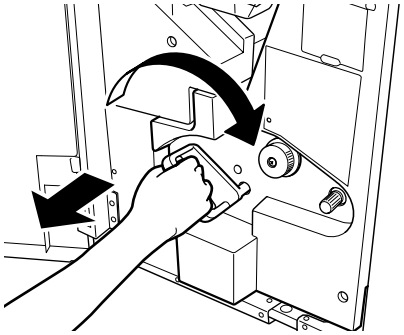

Figure 1-370

3) Pull forward the stapler unit of the saddle stitcher unit, and then push it up.

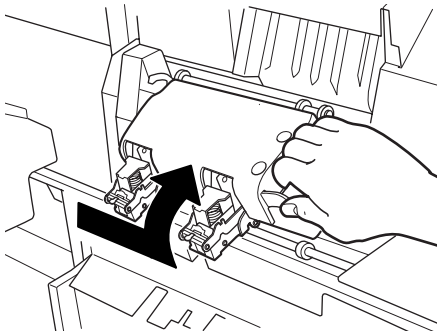

Figure 1-371

COPYRIGHT © 1999 CANON INC.

4) Pull out the empty staple cartridge holding it by its left and right sides.

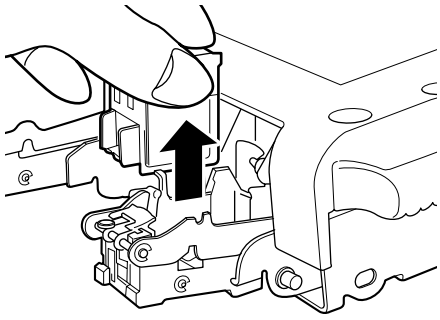

Figure 1-372

5) Insert the new staple cartridge.

• When replacing the staple cartridge, replace both the inner and outer staple cartridges.

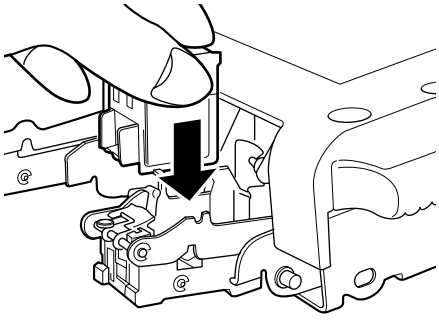

Figure 1-373

6) Pull forward the stapler unit of the saddle stitcher unit, and then return it to its original position.

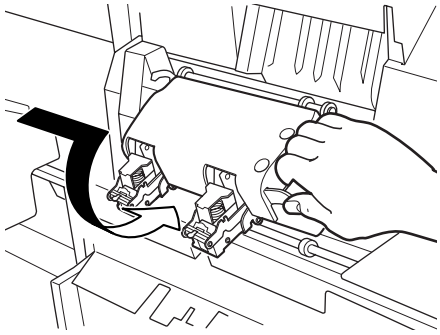

Figure 1-374

7) Push the saddle stitcher unit back in as far as it will go, then return the lever to its original position.

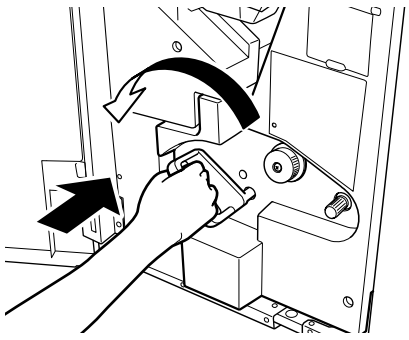

Figure 1-375

8) Close the front cover.

• Once you have finished replacing the staple cartridges, be sure to reposition staples for the saddle stitcher unit.

COPYRIGHT © 1999 CANON INC.

H. Removing Jammed Staples from the Saddle Stitcher Unit

When a staple jam occurs in the saddle stitcher unit, the message on the right will appear in the display. Follow the procedure described below to remove the jammed staples.

- Before replacing the staple cartridges, remove all output sheets from the booklet tray.
- If a paper jam occurs at the same time as a staple jam, remove the jammed paper before removing jammed staples.

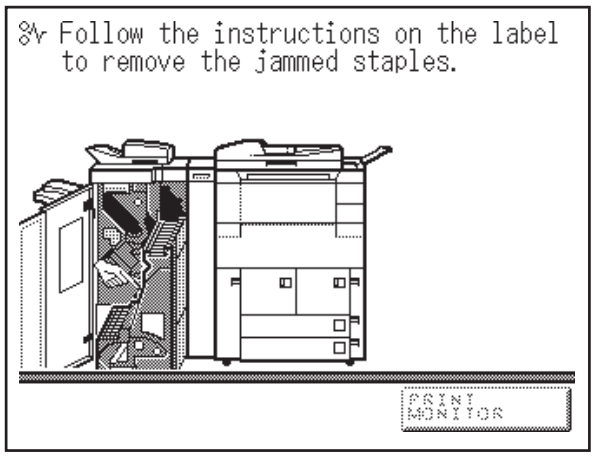

Figure 1-376

1) Open the front cover.

2) Turn the lever to the right, then pull out the saddle stitcher unit.

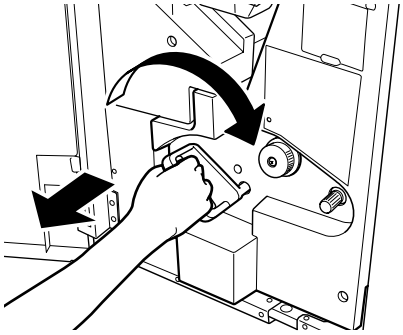

Figure 1-377

3) Pull forward the stapler unit of the saddle stitcher unit, and then push it up.

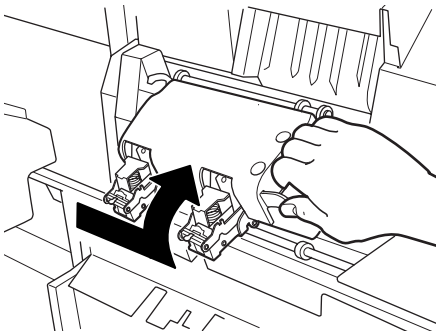

Figure 1-378

COPYRIGHT © 1999 CANON INC.

4) Pull out the staple cartridge holding it by its left and right sides.

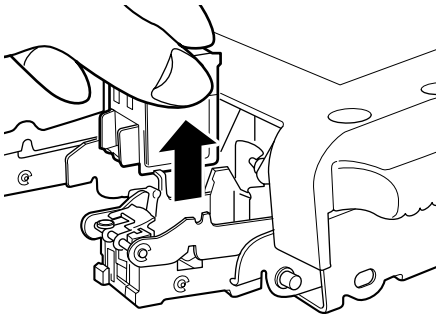

Figure 1-379

5) Push down part A, then pull up knob B.

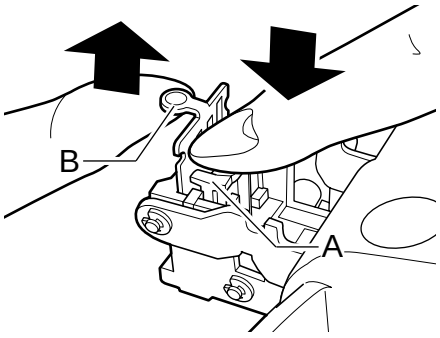

Figure 1-380

6) Remove the jammed staples, then return knob B to its original position.

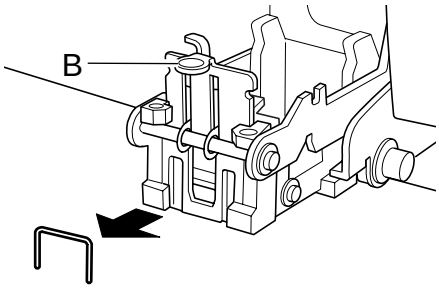

Figure 1-381

7) Return the staple cartridge to its original position.

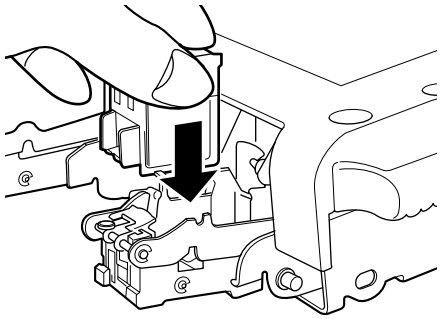

Figure 1-382

COPYRIGHT © 1999 CANON INC.

8) Pull forward the stapler unit of the saddle stitcher unit, and then return it to its original position.

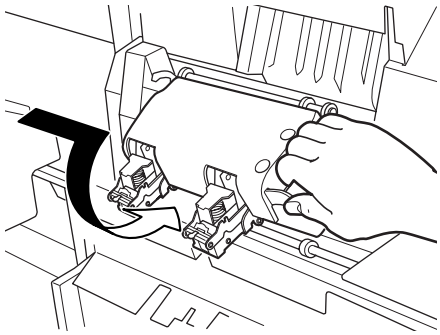

Figure 1-383

9) Push the saddle stitcher unit back in as far as it will go, and then return the lever to its original position.

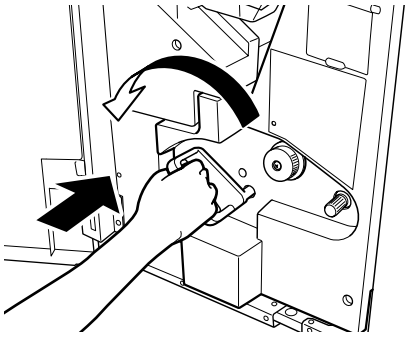

Figure 1-384

10) Close the front cover.

- Once you have removed the jammed staples, be sure to reposition staples for the saddle stitcher unit.

COPYRIGHT © 1999 CANON INC.

I. Removing Punch Waste

When the punch waste tray becomes full with debris, the message on the right will appear in the display. Follow the procedure described below to remove the punch waste.

- When the punch waste tray is full, you cannot make copies/prints with Punch mode selected.

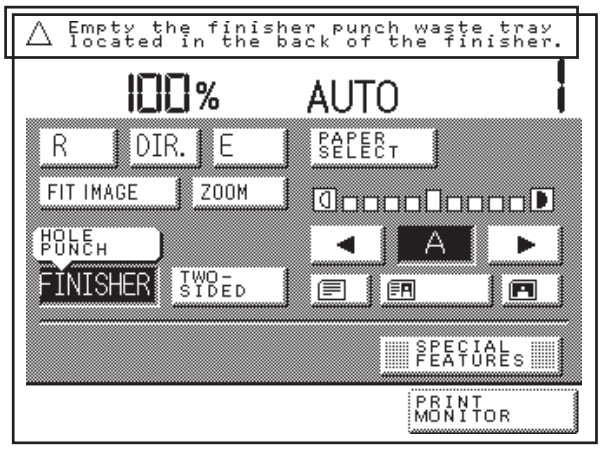

Figure 1-385

1) Pull out the punch waste tray in the back of the saddle finisher.

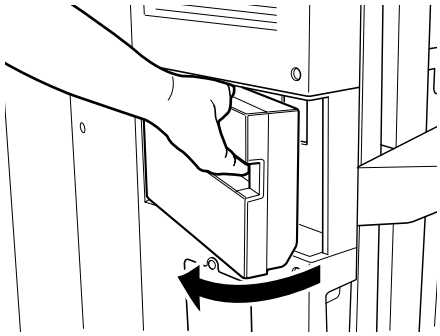

Figure 1-386

2) Discard the punch waste.

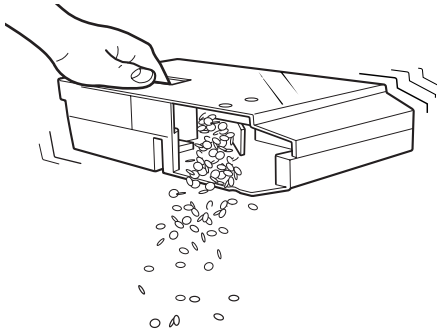

Figure 1-387

3) Return the punch waste tray to its original position.

- If the tray is not returned securely in place, you cannot make copies/prints with Punch mode selected.

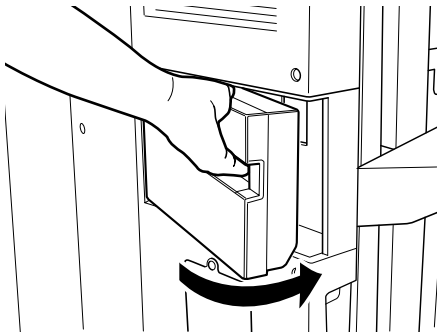

Figure 1-388

COPYRIGHT © 1999 CANON INC.

J. Module Separation Switch

If a specific message (the service call message) appears in the display, copying/printing using functions other than the corresponding function may be performed, by operating the module separation switch of the saddle finisher.

Message/Cause	Remedy
E590/E593/E594/E595 The Punch unit is out of order.	You can make copies/prints using functions other than the punch function by operating the module separation switch.
E540 The Tray A is out of order.	You can make copies/prints by operating the module separation switch and fixing the tray position.
E515 The Cover Insertion unit is out of order.	You can make copies/prints using functions other than the cover insert function by operating the module separation switch.
E518 The Paper Folding unit is out of order.	You can make copies/prints using functions other than the paper folding function by operating the module separation switch.
E503/E5f0/E5f1/E5f2/E5f3/E5f4/E5f5/E5f6/E5f7/E5f8 The Saddle Stitcher unit is out of order.	You can make copies/prints using functions other than the booklet function by operating the module separation switch.

Table 1-301

COPYRIGHT © 1999 CANON INC.
CANON SADDLE FINISHER-D2 REV.0 AUG. 1999 PRINTED IN JAPAN (IMPRIME AU JAPON)

K. Operating the Module Separation Switch

If a specific message (the service call message) appears in the display, operate the module separation switch. When you turn off the module separation switch and make the corresponding function stop its operation, the other functions may be able to perform normally.

- After operating the module separation switch, the message on the right is displayed in the Basic Features Screen.

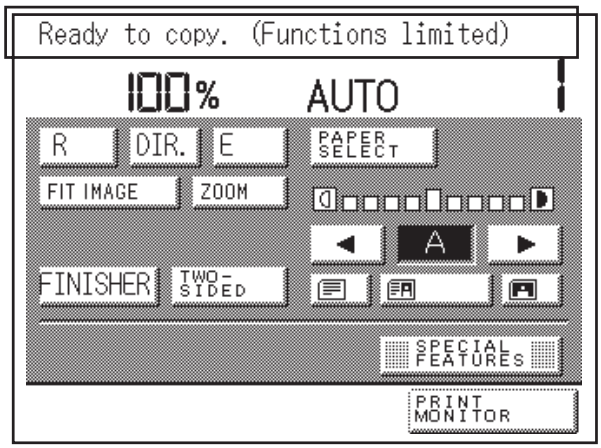

Figure 1-389

1) Open the front cover.

2) Open the cover of the module separation switch, and turn off the switch for the function which is out of order.

Caution:

If the Punch unit or the Tray A are out of order, follow the procedure described below after operating the module separation switch.

- If the saddle stitcher unit, the paper folding unit or the cover inserter is out of order, there is no procedure to be performed after operating the module separation switch. Proceed to step 3.

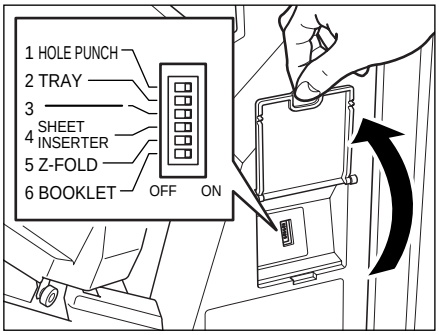

Figure 1-390

a. When the punch unit is out of order.

Push the knob to the back and align the ▲ of the knob to the range of ▬ .

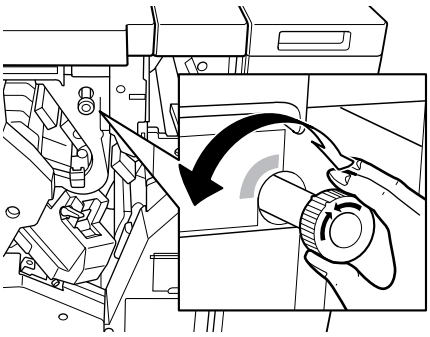

Figure 1-391

COPYRIGHT © 1999 CANON INC.

Open the cover inserter, and open the top cover.

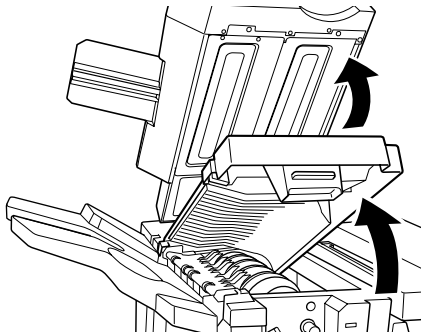

Figure 1-392

Push the lever to the back.

• This procedure is not necessary if the lever is already in the back.

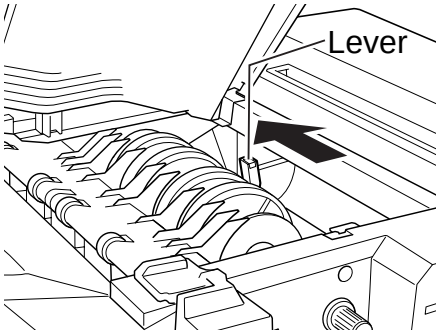

Figure 1-393

Close the top cover, then close the cover inserter.

b. When the Tray A is out of order.

Move the Tray A to the position indicated by the arrows, holding the sides of the tray with both hands.

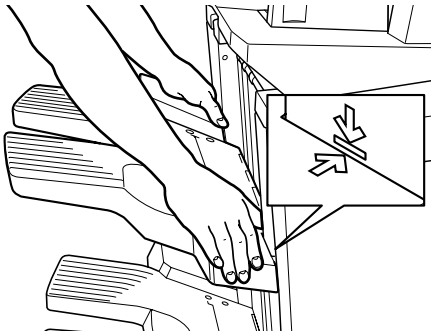

Figure 1-394

3) Close the front cover.

COPYRIGHT © 1999 CANON INC.

IV . MAINTENANCE BY THE USER

As of June 1999

No.	Item	Timing
1	Staple cartridge replacement (finisher)	When the message lights up (on the copier's control panel)
2	Staple cartridge replacement (saddle unit)	When the message lights up (on the copier's control panel)
3	Punch waste disposal	When the message lights up (on the copier's control panel)

Table 1-401

COPYRIGHT © 1999 CANON INC.

CHAPTER 2

OPERATIONS

1. In this chapter explained are the purpose, role of each of the functions and their relation to the electrical and mechanical system. Furthermore, outlined is the working timing of each part with regard to its function.
   In outline diagrams, ▮▮▮▮ represents mechanical drive paths, and ⟶ indicates electrical signal paths.

2. Signals in digital circuits are identified as “1” for High and “0” for Low. The voltage of signals, however, depends on the circuit.
   Nearly all operations of the machine are controlled by microprocessors; the internal workings of these processors are not relevant to the service person’s work and, therefore, are left out of the discussions. By the same token, no repairs are prescribed for the PCBs at the user’s premises; for this reason, PCBs are discussed by means of block diagrams rather than circuit diagrams. Therefore, the explanation is put in a form of blocks with regard to each function, and is divided into two types as follows: from the sensors to the input of the main PCB, and from the output of the main PCB to the load.

I. BASIC OPERATIONS 2-1
A. Specifications 2-1
B. Outline of Electrical Circuitry . 2-2
C. Inputs to and Outputs from the Finisher Controller PCB 2-3
II. FEEDING / DRIVE SYSTEM 2-27
A. Outline 2-27
B. Feeding / Delivery 2-32
C. Job Offset 2-37
D. Releasing the Knurled Belt . 2-44
E. Buffer Path 2-49
III. CONTROLLING THE PADDLE 2-54
IV. CONTROLLING THE TRAY AUXILIARY PLATE 2-55
V. STAPLING 2-57
VI. TRAY MOVEMENT 2-65
VII. PUNCH UNIT 2-72
VIII. FANS 2-84
IX. POWER SUPPLY 2-86
X. DETECTING JAMS (FINISHER) 2-92
XI. CUTTING OFF THE MODULES 2-94
XII. SADDLE STITCHER 2-95
XIII. PAPER FOLDING UNIT B1 2-135
XIV. INSERTER (COVER INSERTION UNIT - A1) 2-154

COPYRIGHT © 1999 CANON INC. CANON SADDLE FINISHER-D2 REV.0 AUG. 1999 PRINTED IN JAPAN (IMPRIME AU JAPON)

I . BASIC OPERATIONS

A. Specifications

The finisher is designed to receive sheets from the host copier and deliver them after performing specific jobs on them, such as non-sort stacking, job offset (Note), stapling, and punching.

These operations are controlled by the finisher controlling PCB along various commands sent from the host copier.

The saddle stitcher inside the finisher first stitches (in two points) the paper sheets received from the finisher, folds them, and then discharges. The saddle stitcher is controlled by commands received from the host copier via the finisher.

The inserter sends a sheet from the inserter tray to the finisher. The sheet sent to the finisher is discharged as a cover sheet along with the stack of the other sheets processed in the finisher section.

The folder Z-shape-folds the sheets received from the copier, then delivers them to the finisher. The inserter and folder are controlled by the finisher controller PCB.

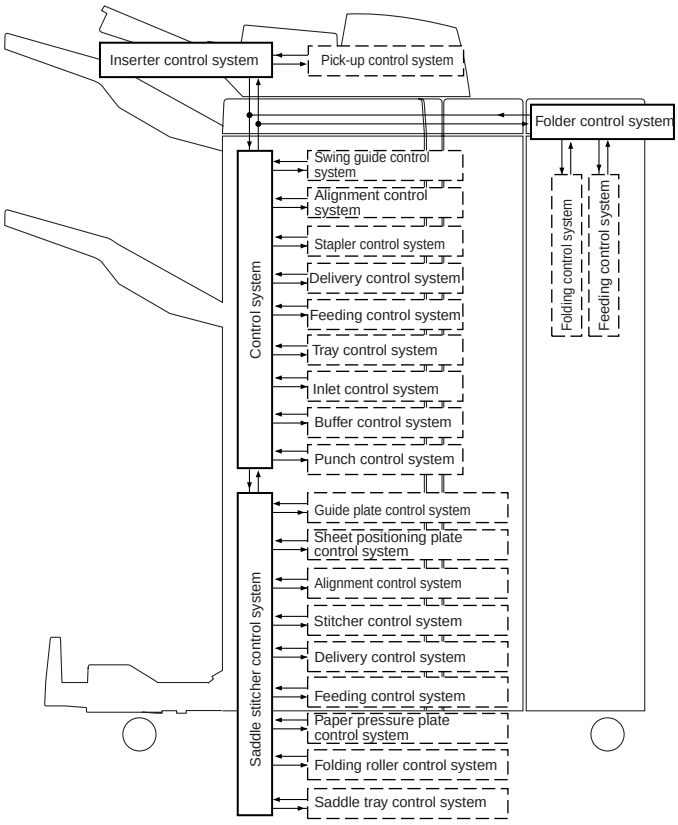

Figure 2-101

Caution:

The term "job offset" refers to a sheet delivery method where the arriving paper stacks are being shifted towards the front/rear in order to ease their sorting.

COPYRIGHT © 1999 CANON INC.

B. Outline of Electrical Circuitry

1. Finisher

The series of operations of the finisher are controlled by the finisher controller PCB, which is an 16-bit microprocessor (CPU). The finisher controller PCB serves to control sequences of operations and to communicate in serial with the host copier.

The finisher controller PCB drives the solenoids and motors in response to various commands from the host copier through a serial communication line. It also communicates data on various sensors and switches to the host copier using the serial communication line.

The functions of the major ICs mounted on the finisher controller PCB are as follows:

- IC101 (master CPU)
  Controls sequences of operations.
- IC102 (master EEPROM)
  Backs up adjustment values.
- IC105 (master EPROM)
  Contains sequence programs.
- IC106 (master RAM)
  Backs up initial data.
- IC108 (communications IC)
  Communication between the host copier and the saddle stitcher.
- IC121 (slave CPU)
  Controls sequences of operations.
- IC122 (slave RAM)
  Backs up initial data.
- IC123 (DPRAM)
  Controls communication between master CPU and slave CPU.

Figure 2-102 shows the flow of signals between the finisher and the copier unit.

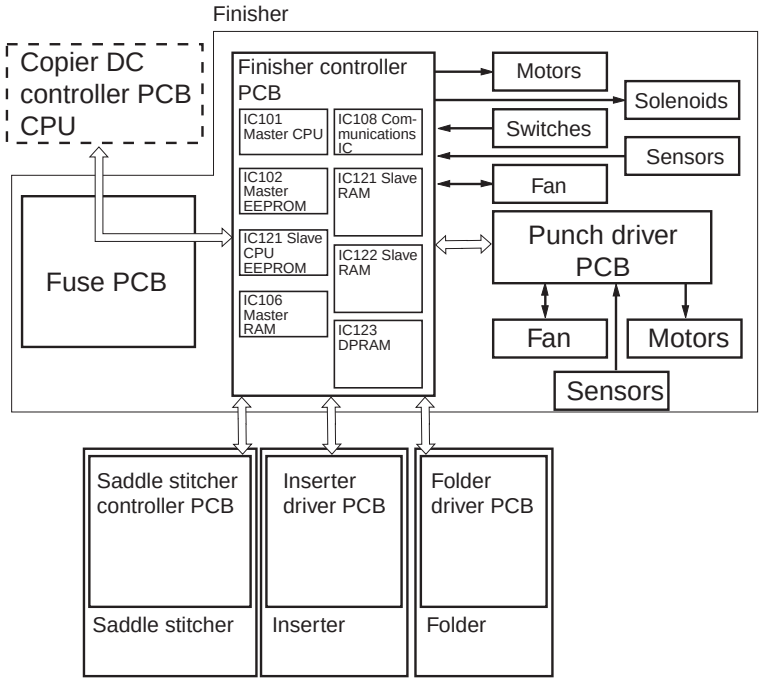

Figure 2-102

 COPYRIGHT © 1999 CANON INC. CANON SADDLE FINISHER-D2 REV.0 AUG. 1999 PRINTED IN JAPAN (IMPRIME AU JAPON)

C. Inputs to and Outputs from the Finisher Controller PCB

1. Inputs to the Finisher Controller PCB

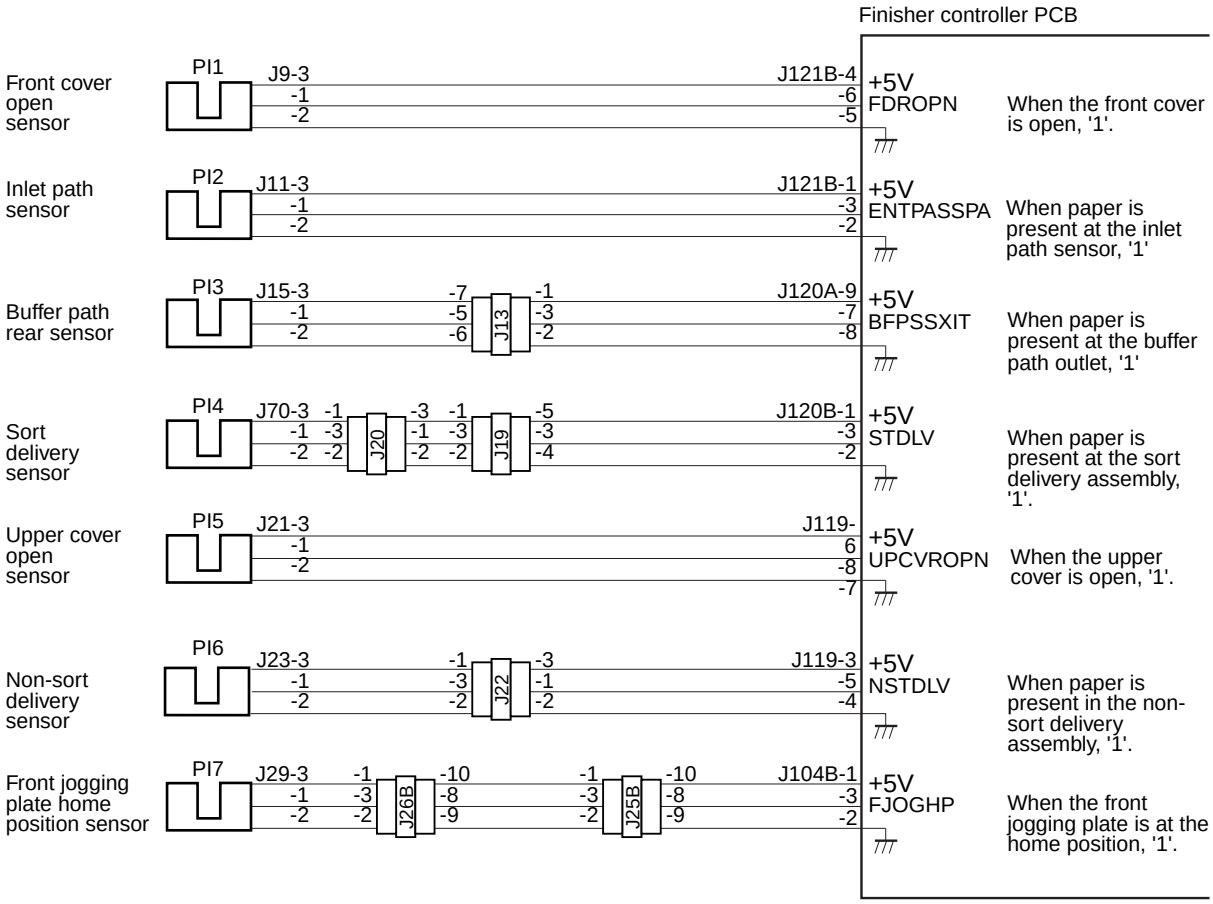

Figure 2-103

2. Inputs to the Finisher Controller PCB

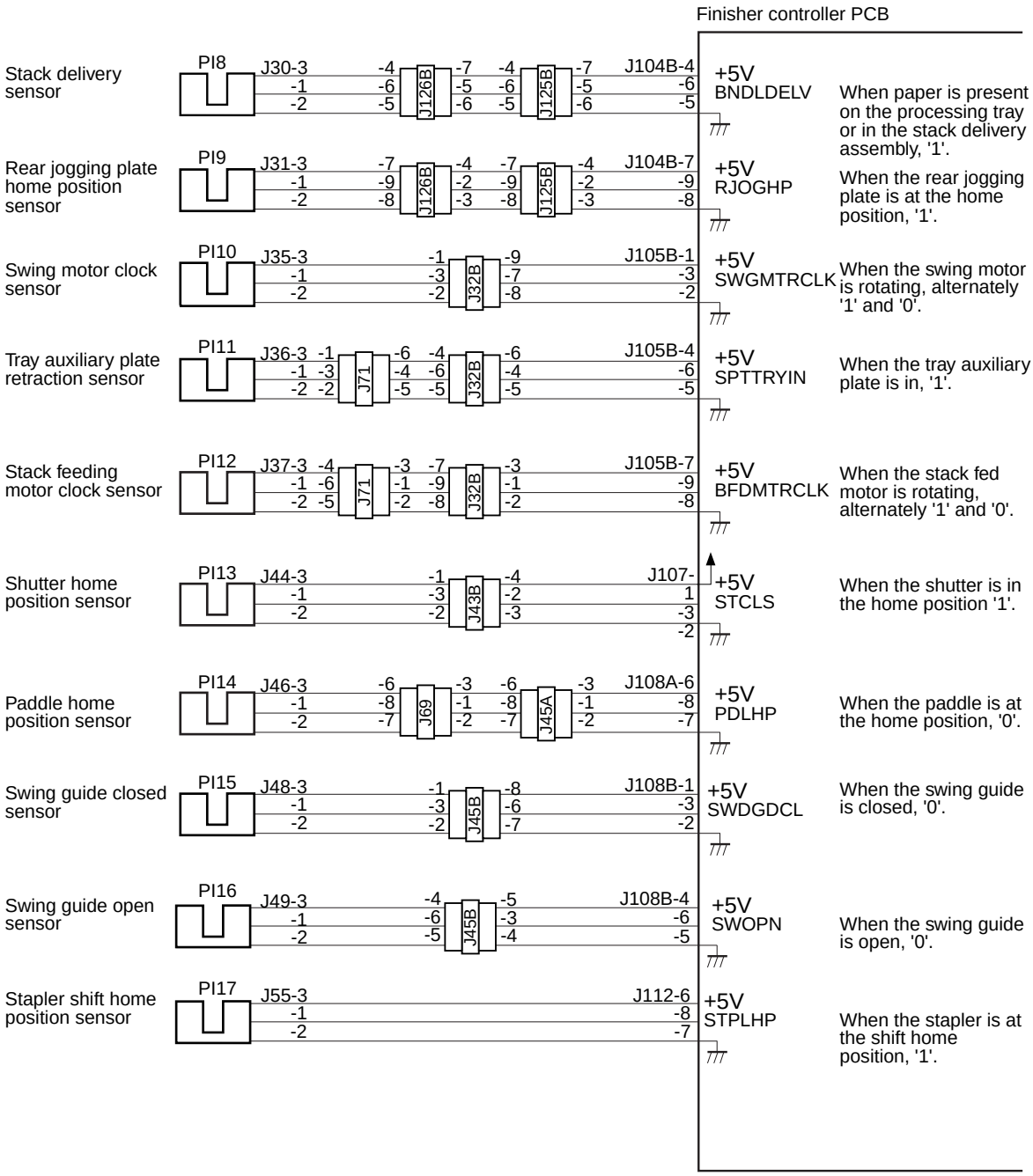

Figure 2-104

 COPYRIGHT © 1999 CANON INC.

3. Finisher Controller PCB

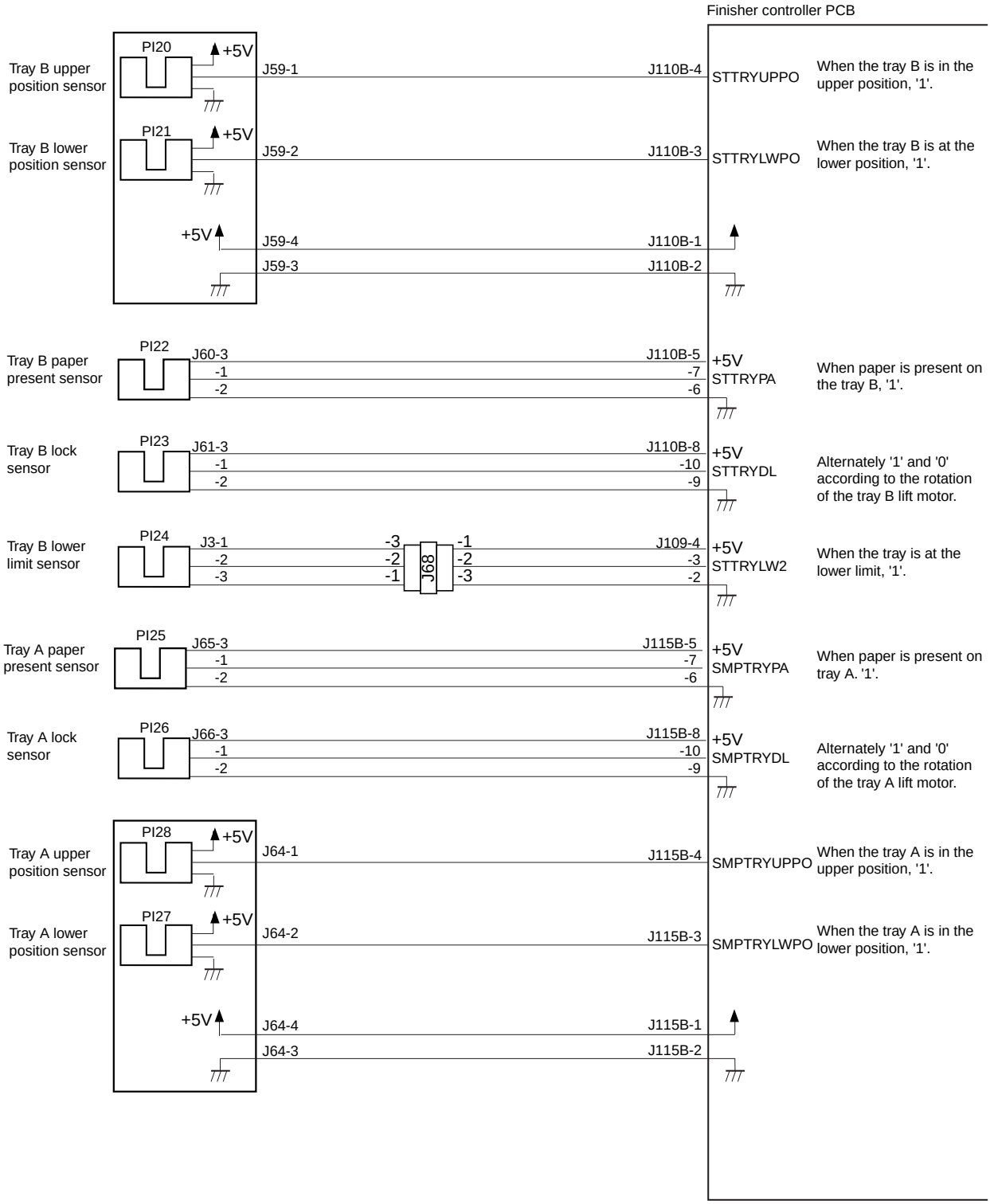

Figure 2-105

4. Inputs to Finisher Controller PCB (with Relation to the Punch)

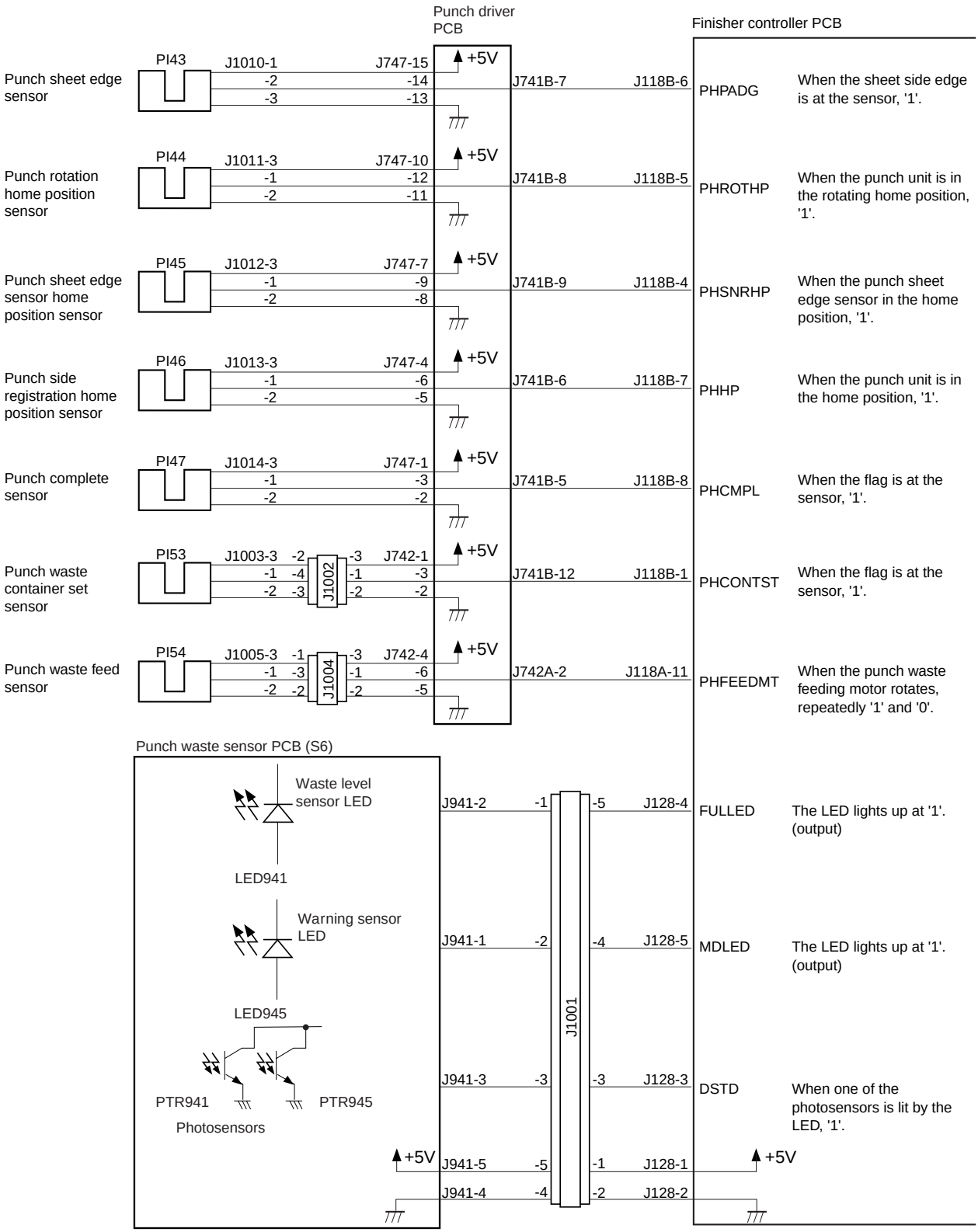

Figure 2-106

 COPYRIGHT © 1999 CANON INC.

5. Inputs to the Finisher Controller PCB (with Relation to the Inserter)

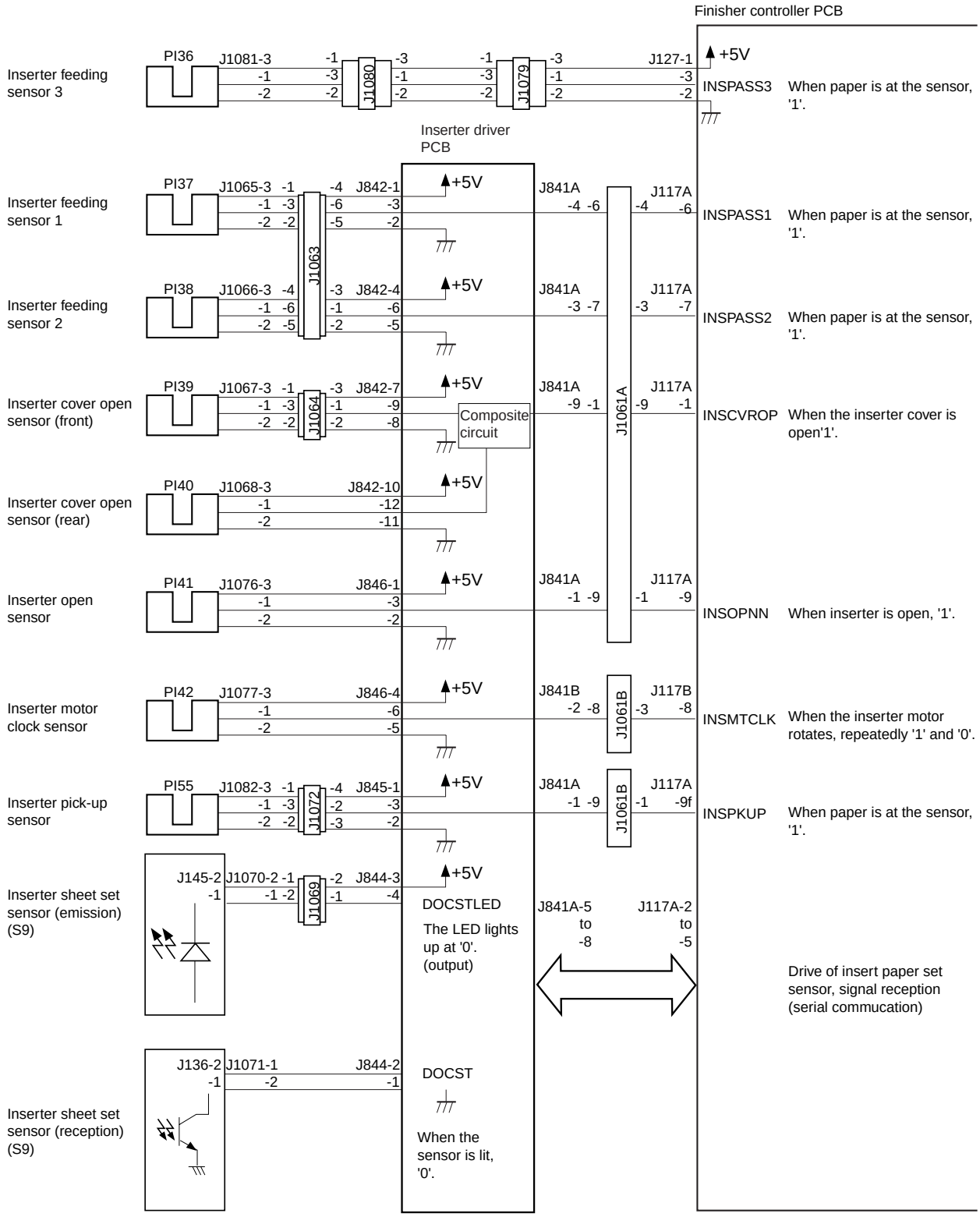

Figure 2-107

6. Inputs to the Finisher Controller PCB (with Relation to the Folder)

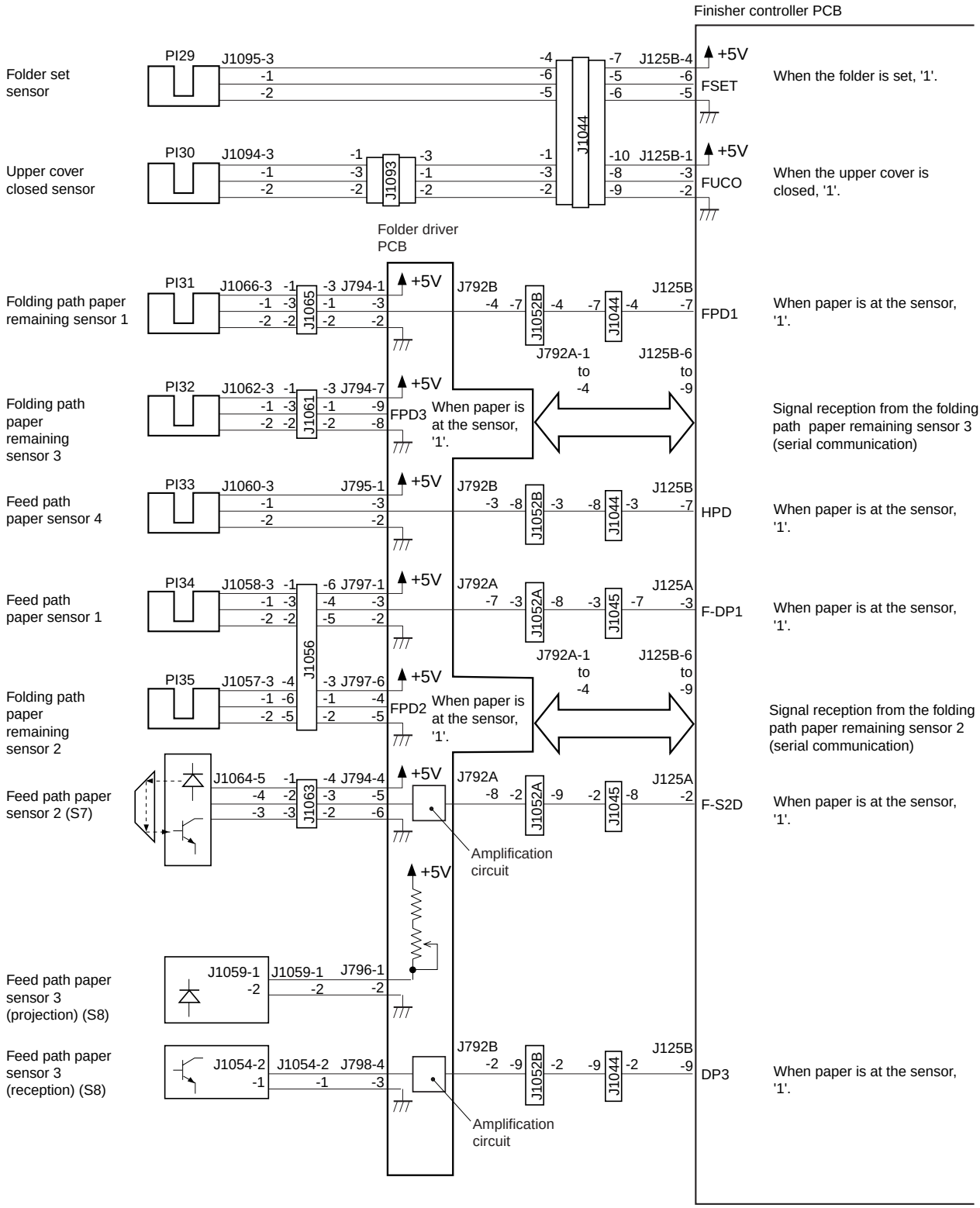

Figure 2-108

 COPYRIGHT © 1999 CANON INC.

7. Outputs from the Finisher Controller PCB

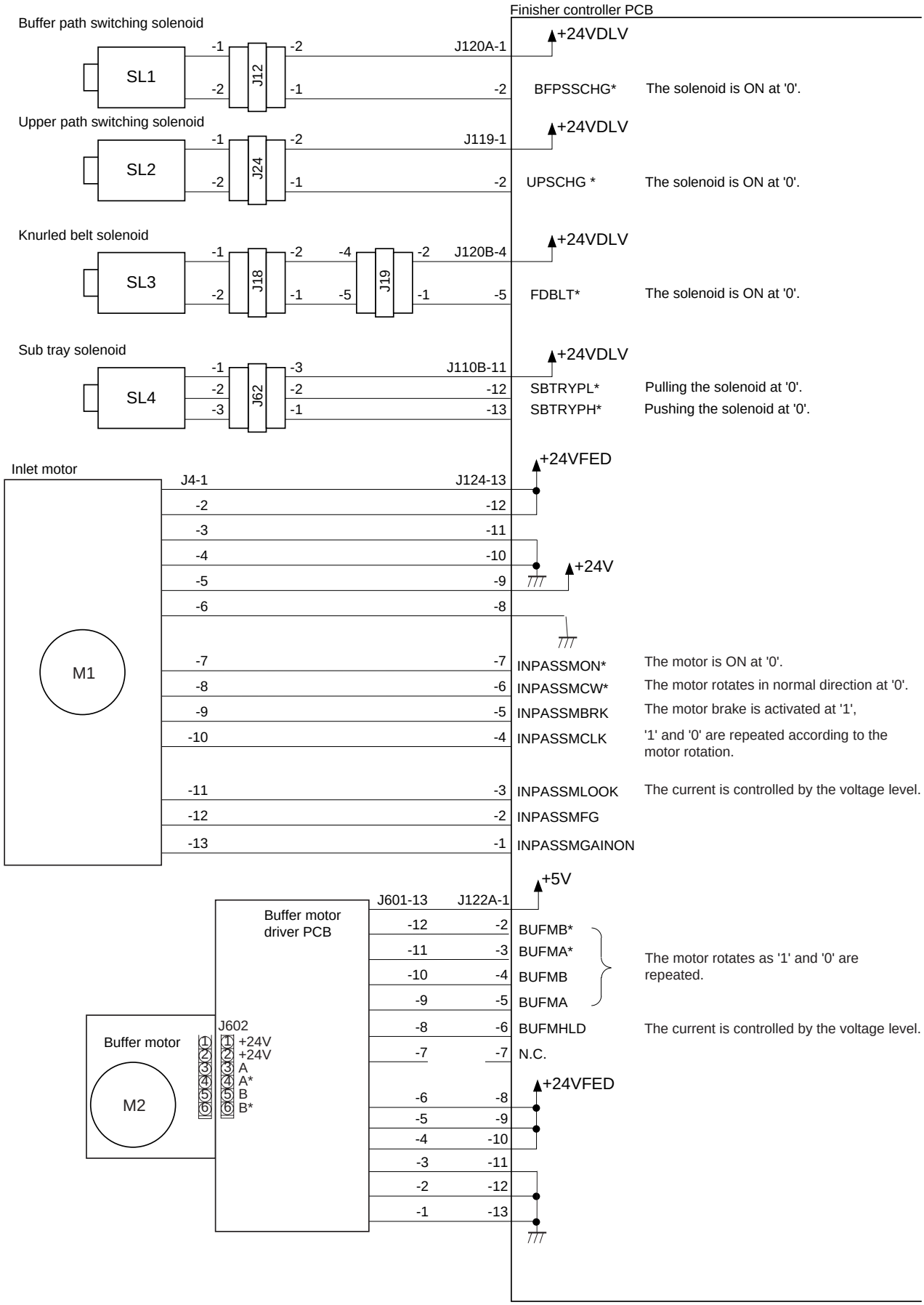

Figure 2-109

8. Outputs from the Finisher Controller PCB

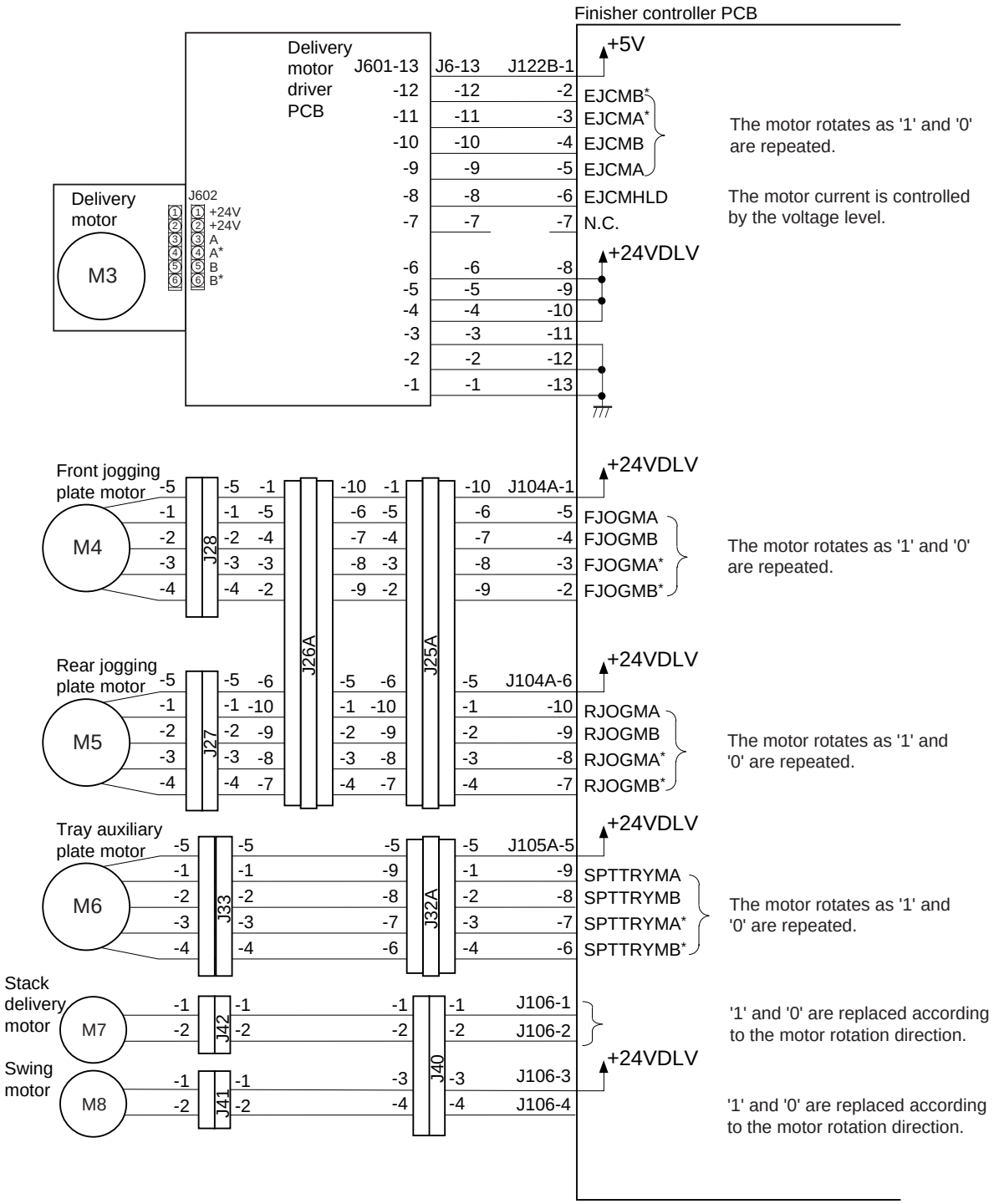

Figure 2-110

 COPYRIGHT © 1999 CANON INC.

9. Outputs from the Finisher Controller PCB

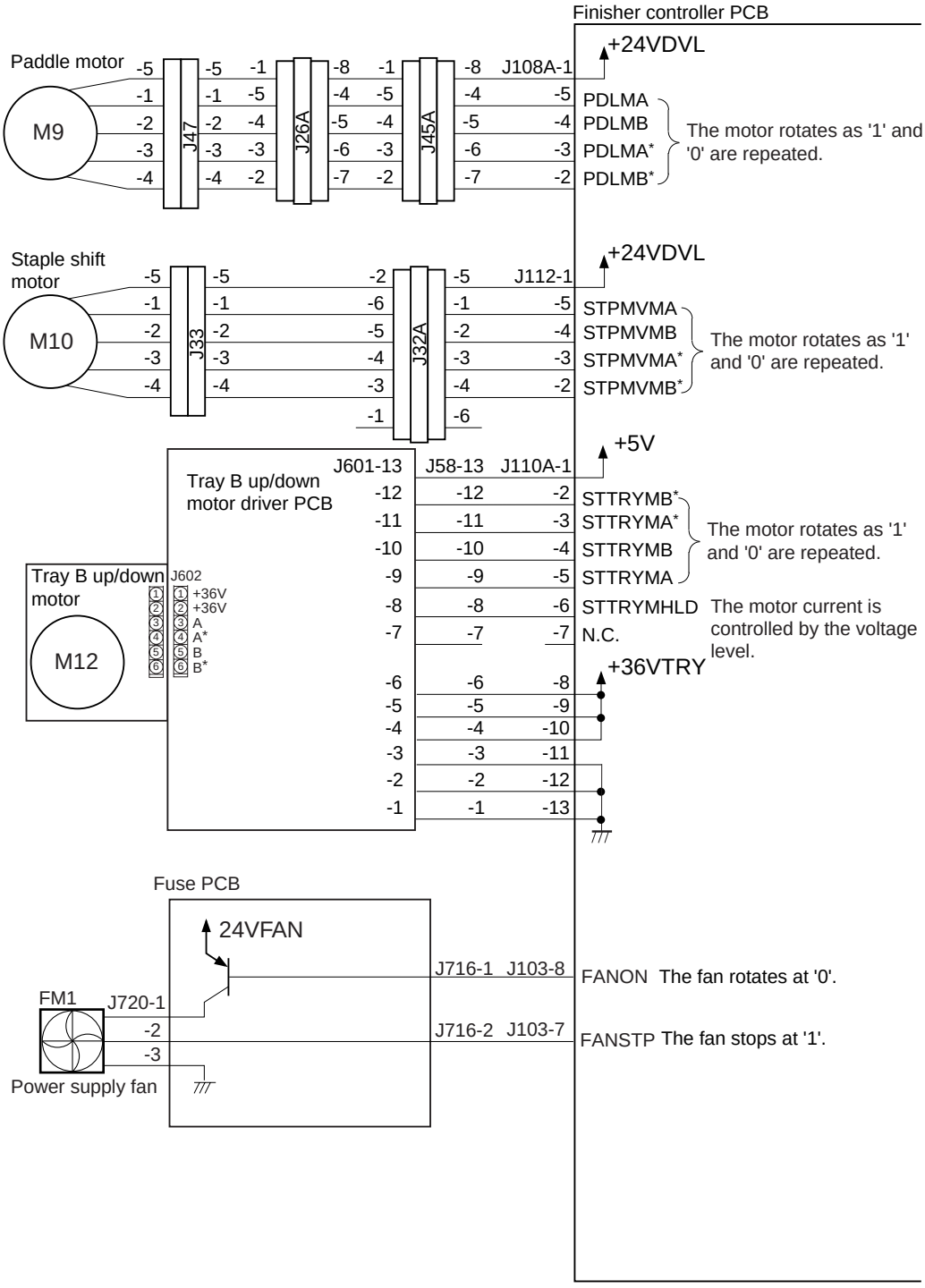

Figure 2-111

10. Outputs from the Finisher Controller PCB

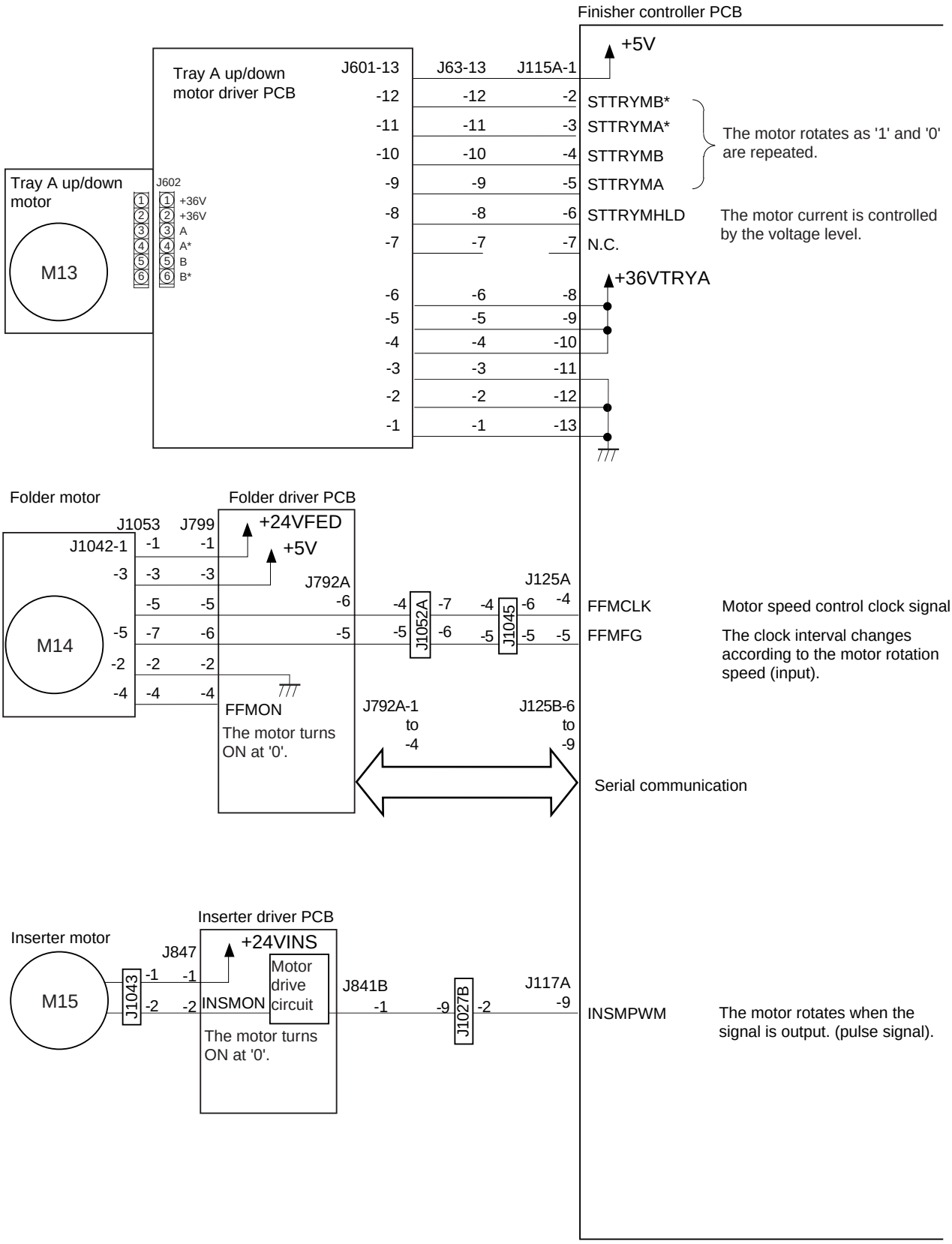

Figure 2-112

 COPYRIGHT © 1999 CANON INC.

11. Outputs from the Finisher Controller PCB (with Relation to the Punch)

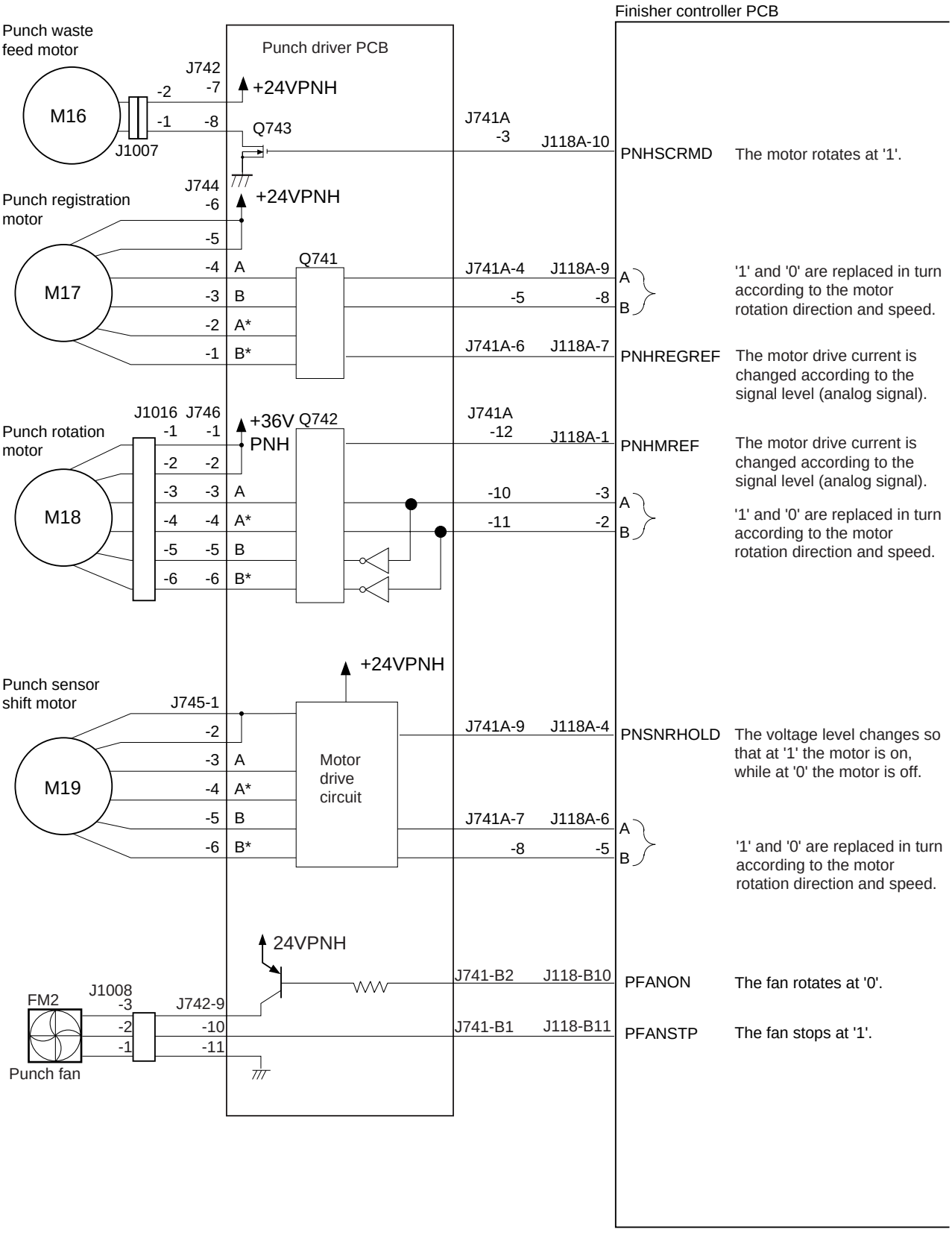

Figure 2-113

12. Outputs from the Finisher Controller PCB (with Relation to the Folder, Inserter)

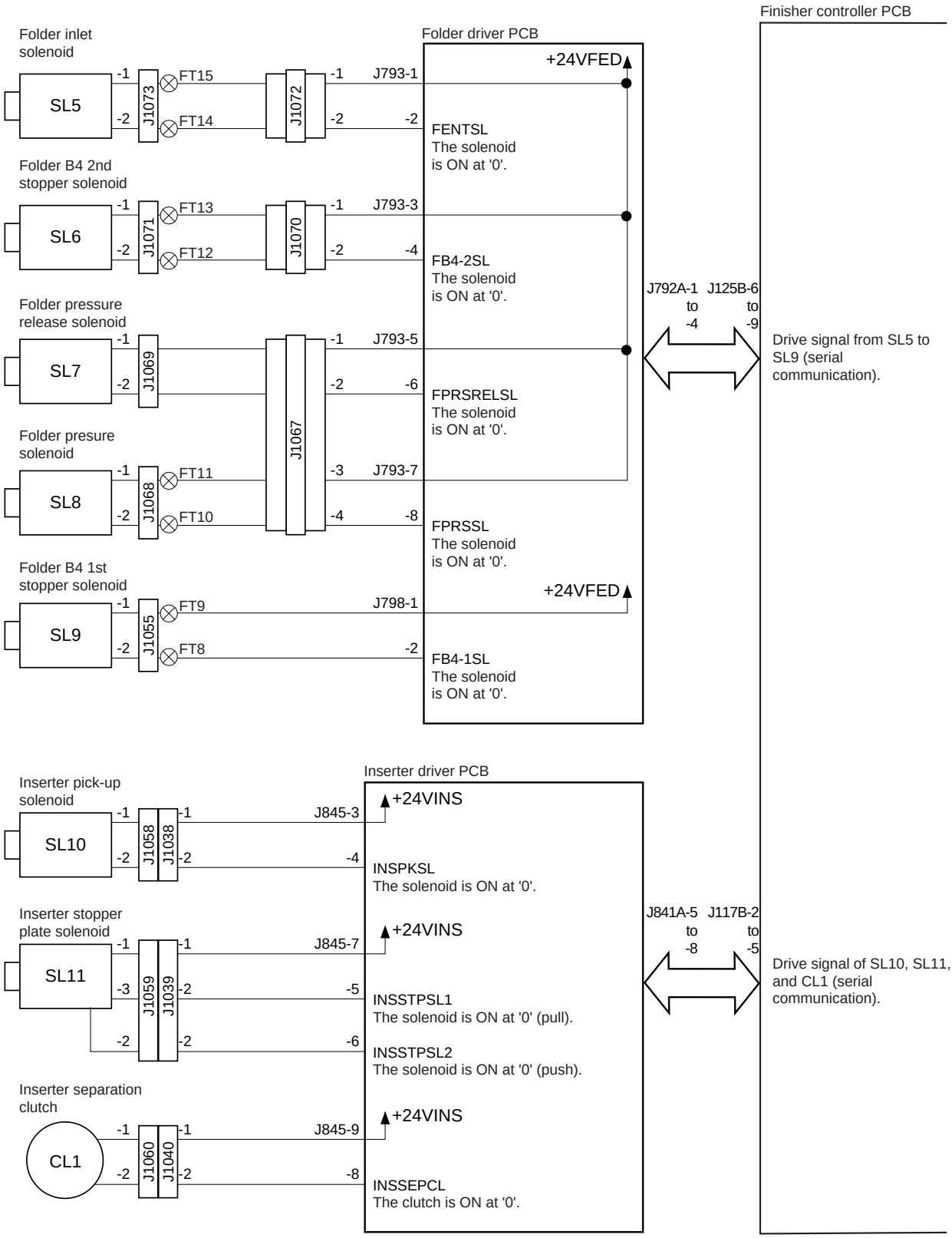

Figure 2-114

 COPYRIGHT © 1999 CANON INC.

13. Inputs to and Outputs from the Finisher Controller PCB

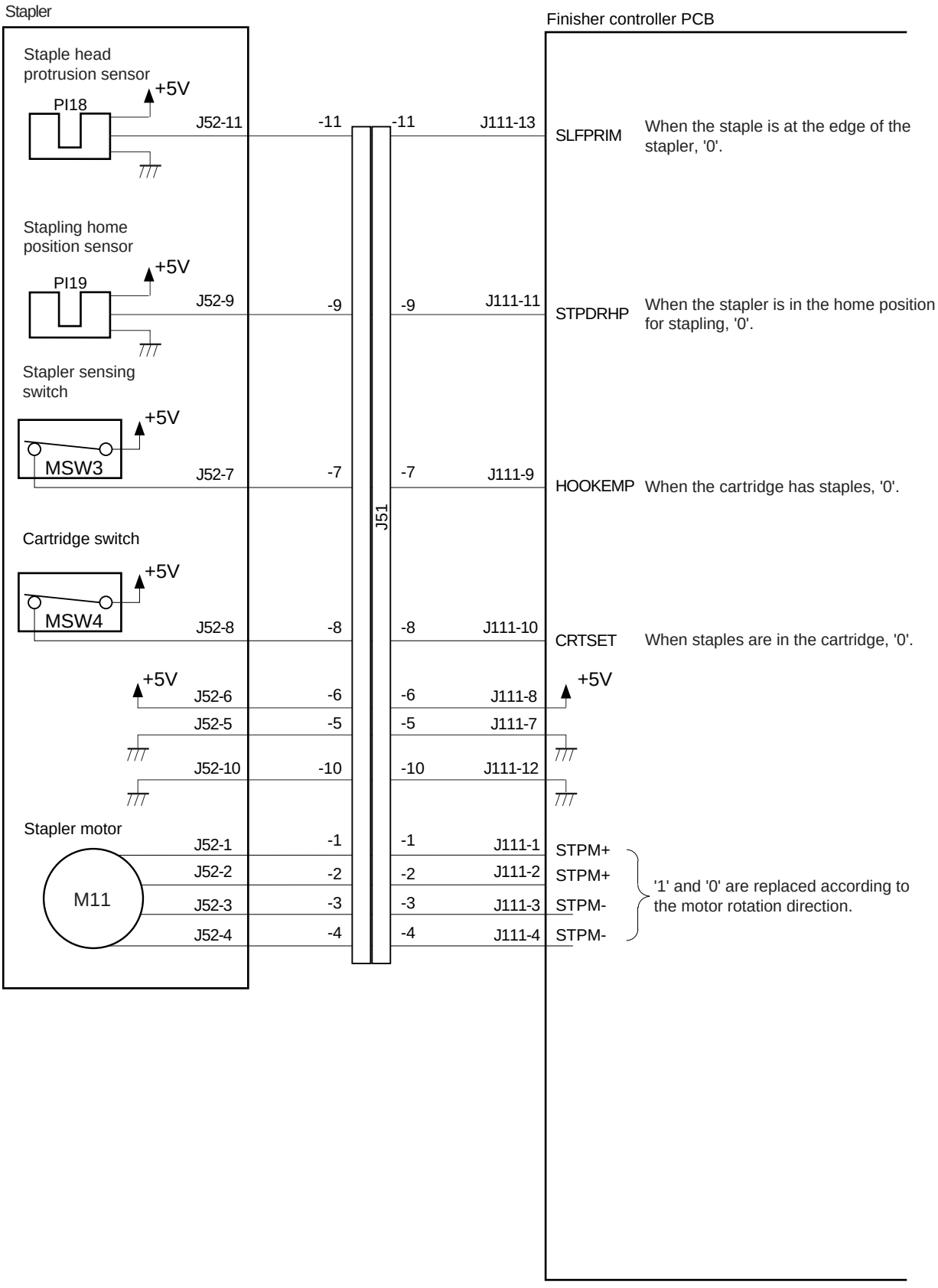

Figure 2-115

14. Inputs to and Outputs from the Finisher Controller PCB

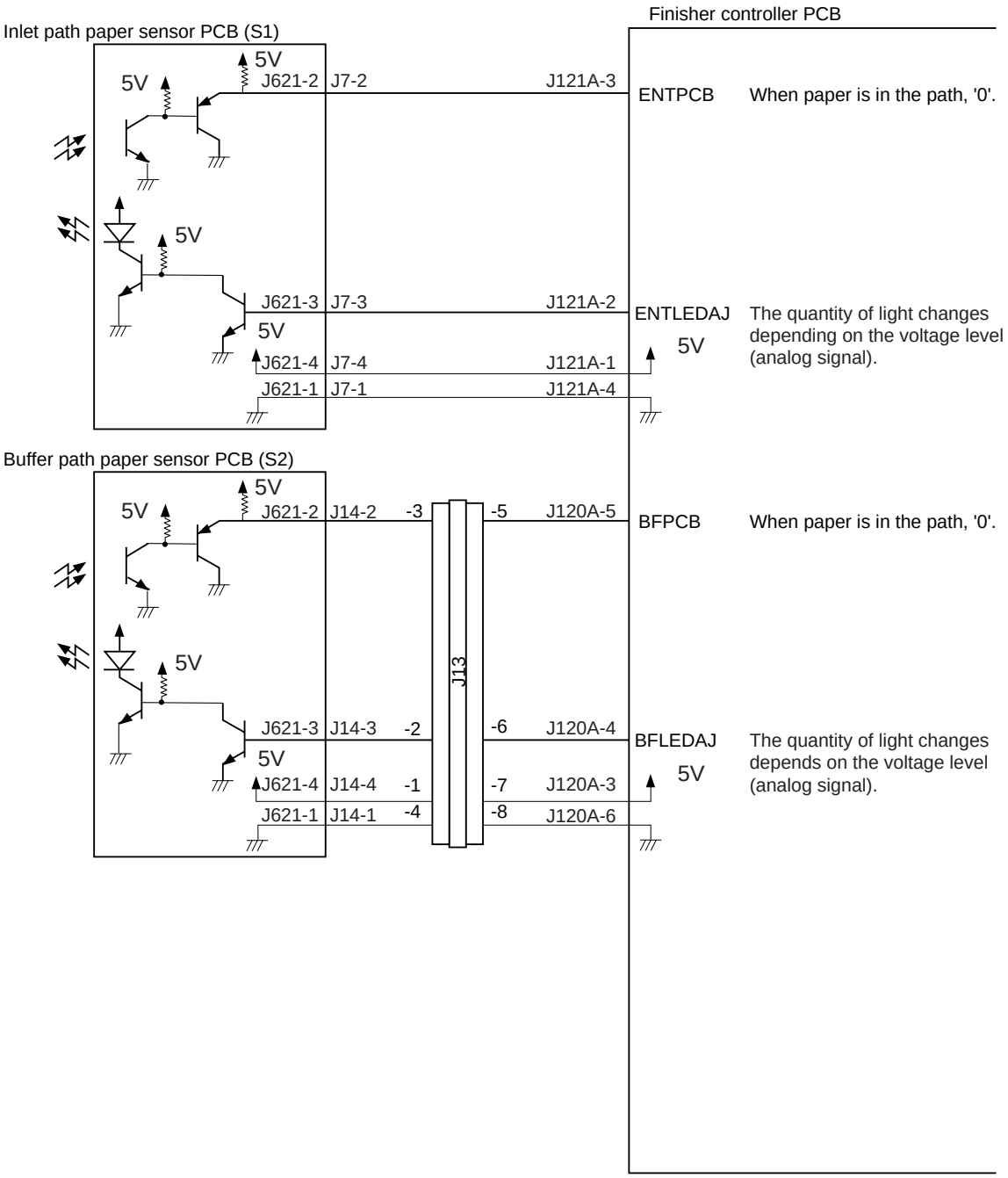

Figure 2-116

 COPYRIGHT © 1999 CANON INC.

15. Inputs to and Outputs from the Finisher Controller PCB

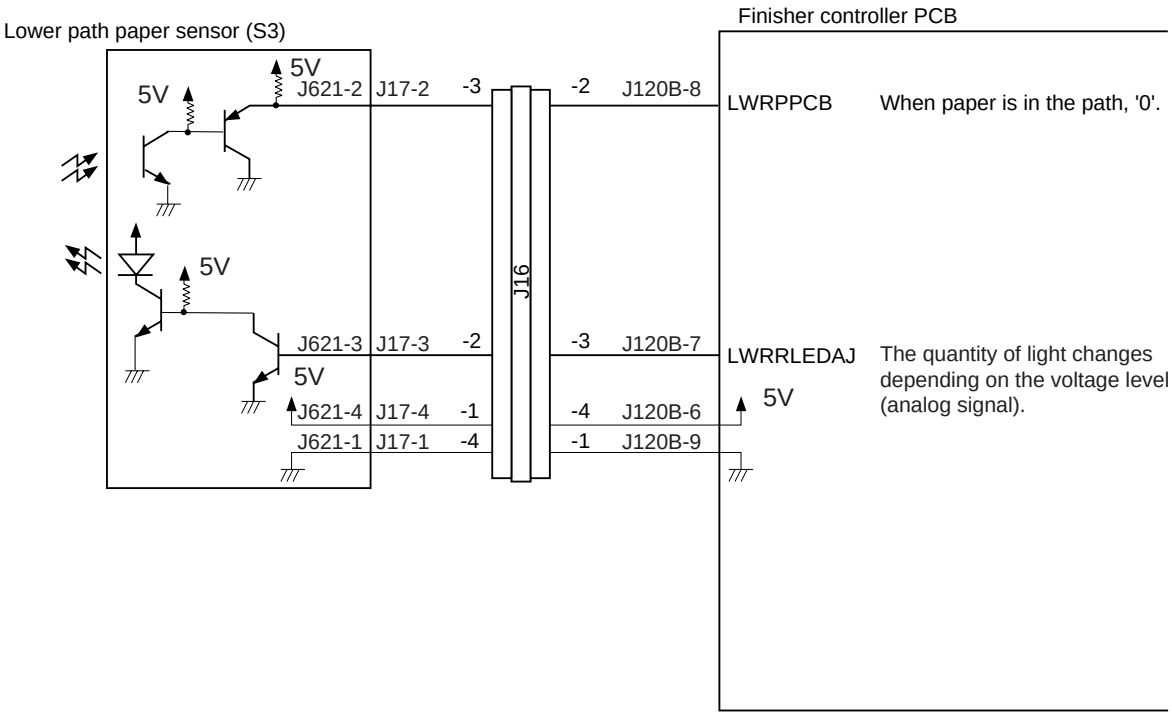

Figure 2-117

16. Inputs to and Outputs from the Finisher Controller PCB

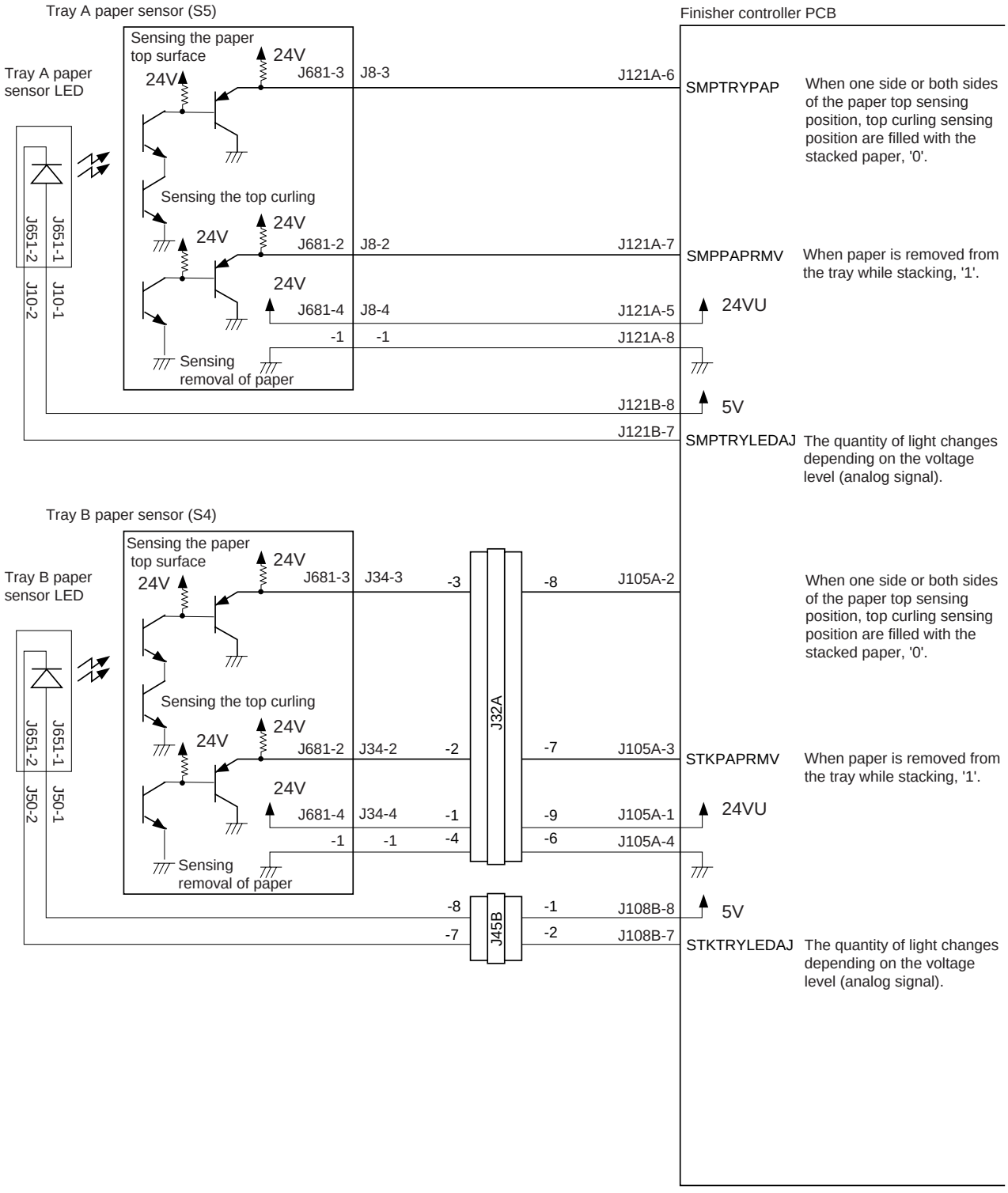

Figure 2-118

 COPYRIGHT © 1999 CANON INC. CANON SADDLE FINISHER-D2 REV.0 AUG. 1999 PRINTED IN JAPAN (IMPRIME AU JAPON)

17. Inputs to the Saddle Stitcher Controller PCB

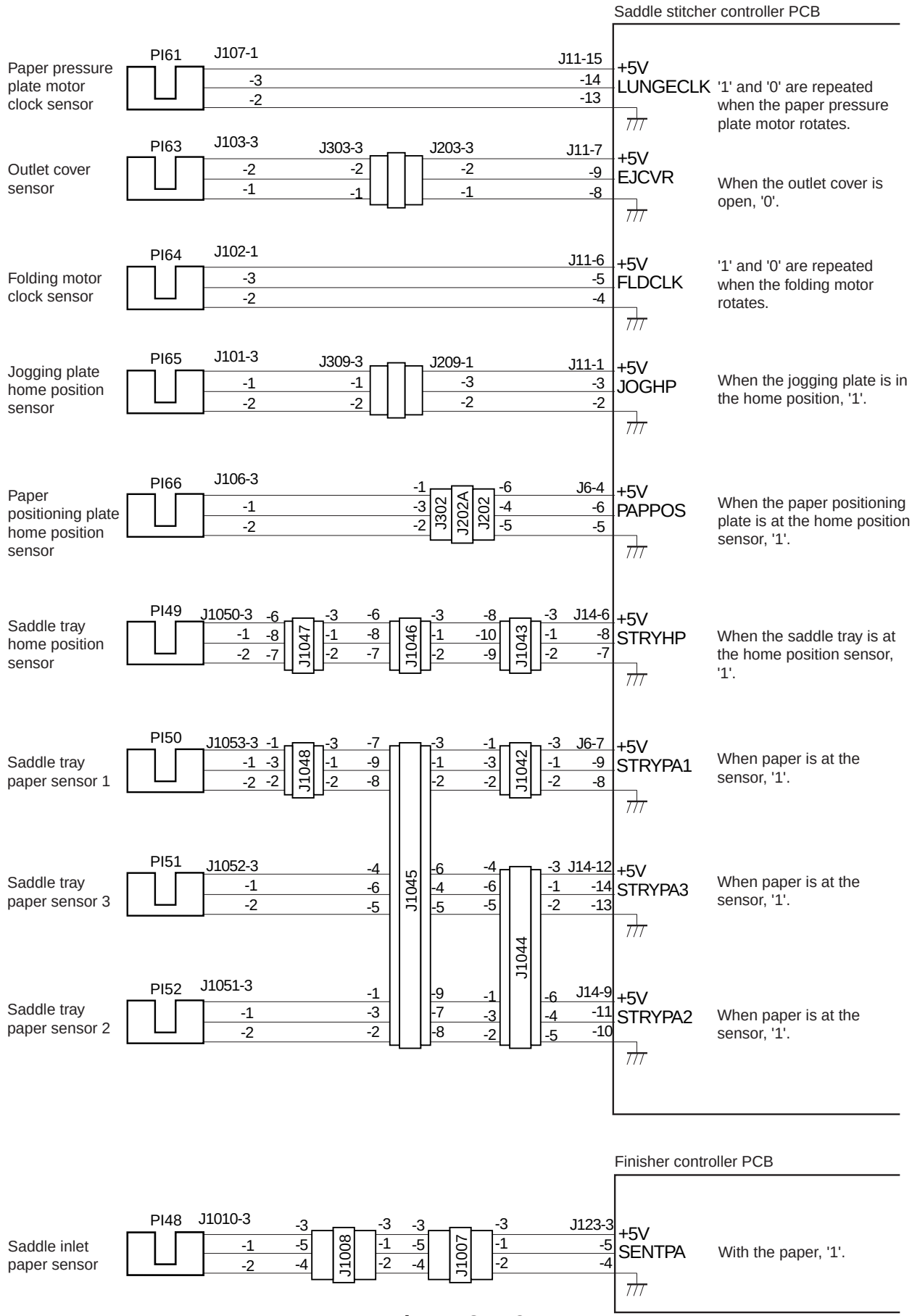

Figure 2-119

COPYRIGHT © 1999 CANON INC.

18. Inputs to the Saddle Stitcher Controller PCB

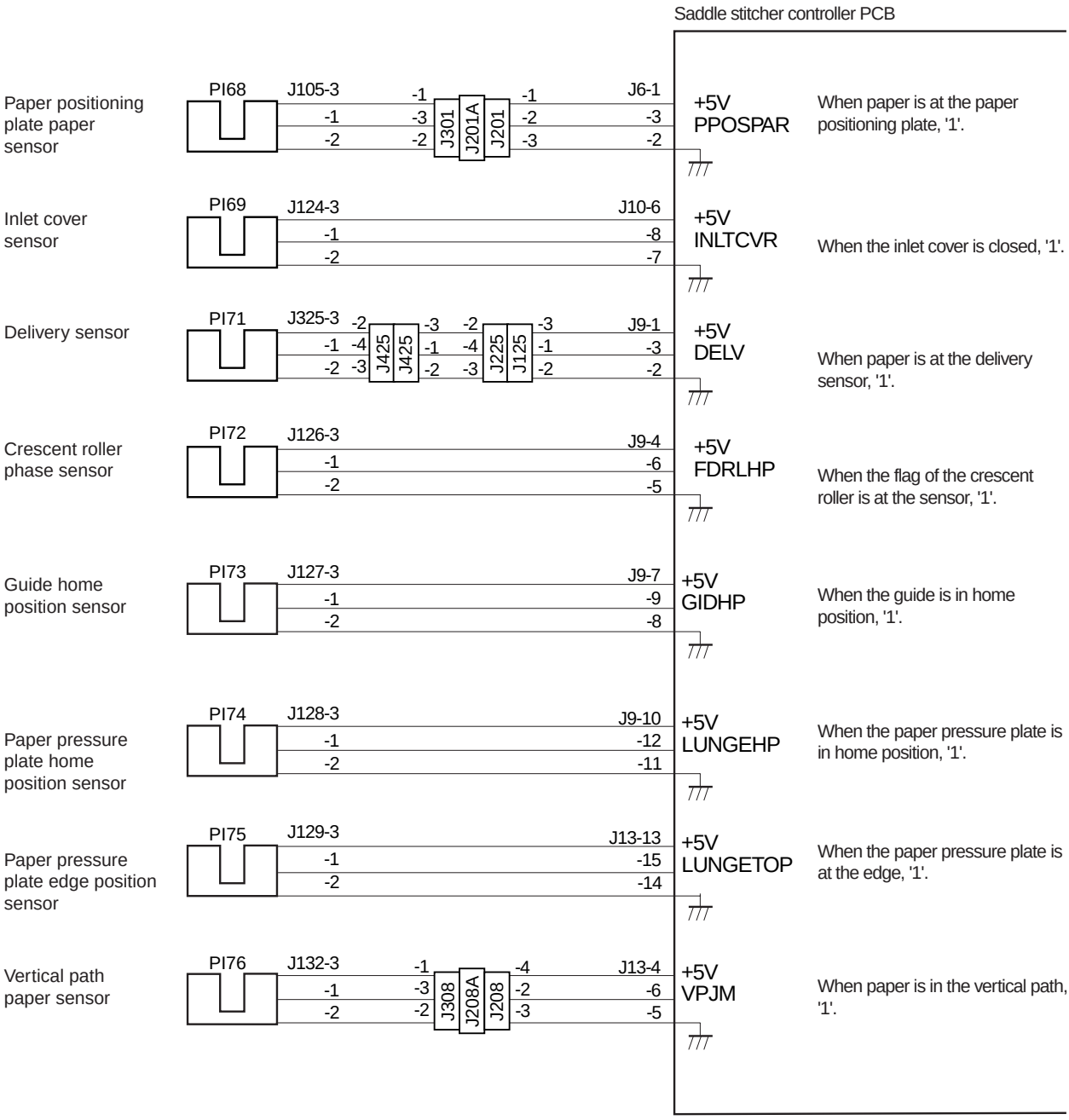

Figure 2-120

 COPYRIGHT © 1999 CANON INC.

19. Inputs to the Saddle Stitcher Controller PCB

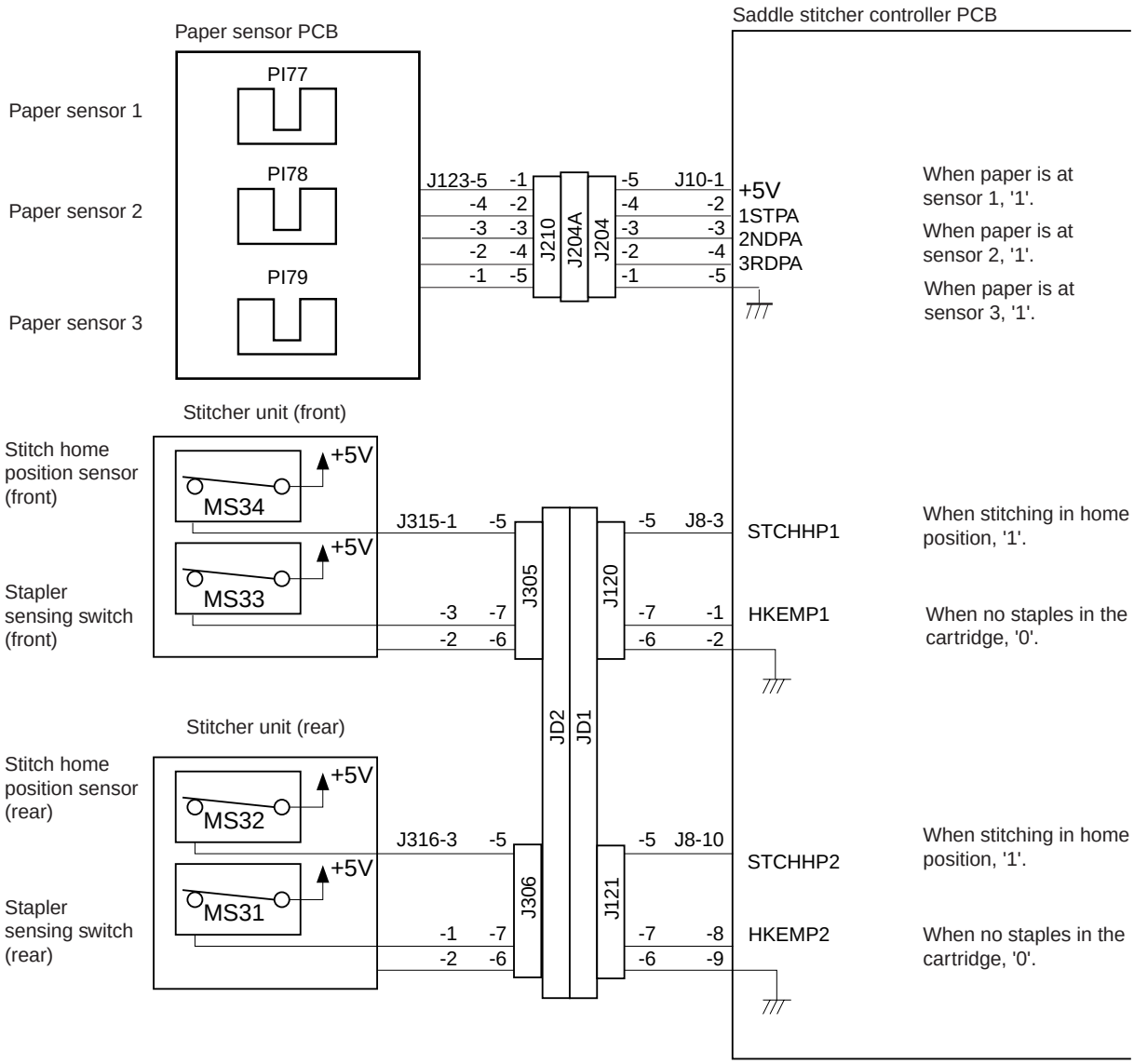

Figure 2-121

20. Inputs to the Saddle Stitcher Controller PCB

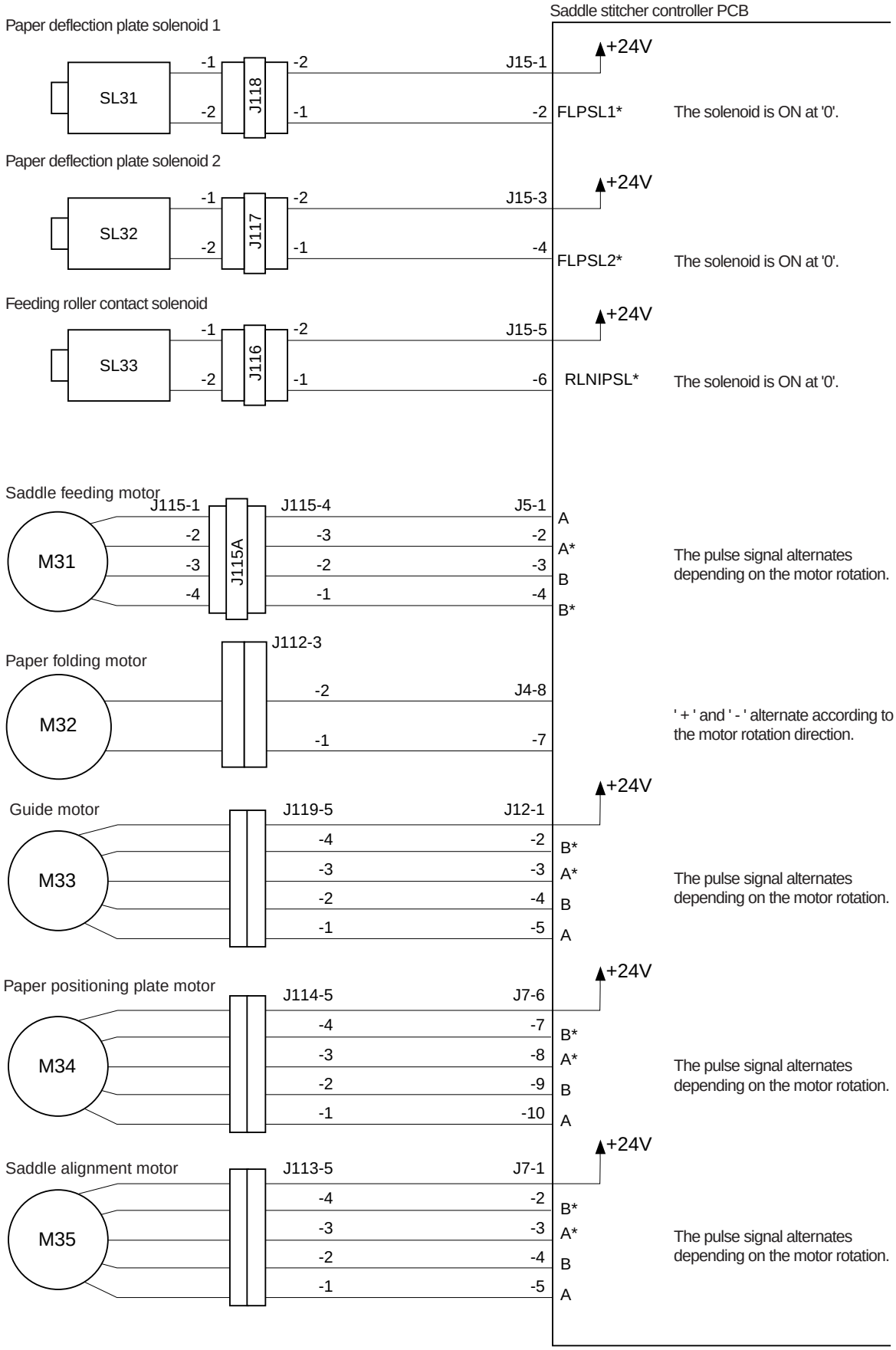

Figure 2-122

 COPYRIGHT © 1999 CANON INC.

21. Outputs from the Saddle Stitcher Controller PCB

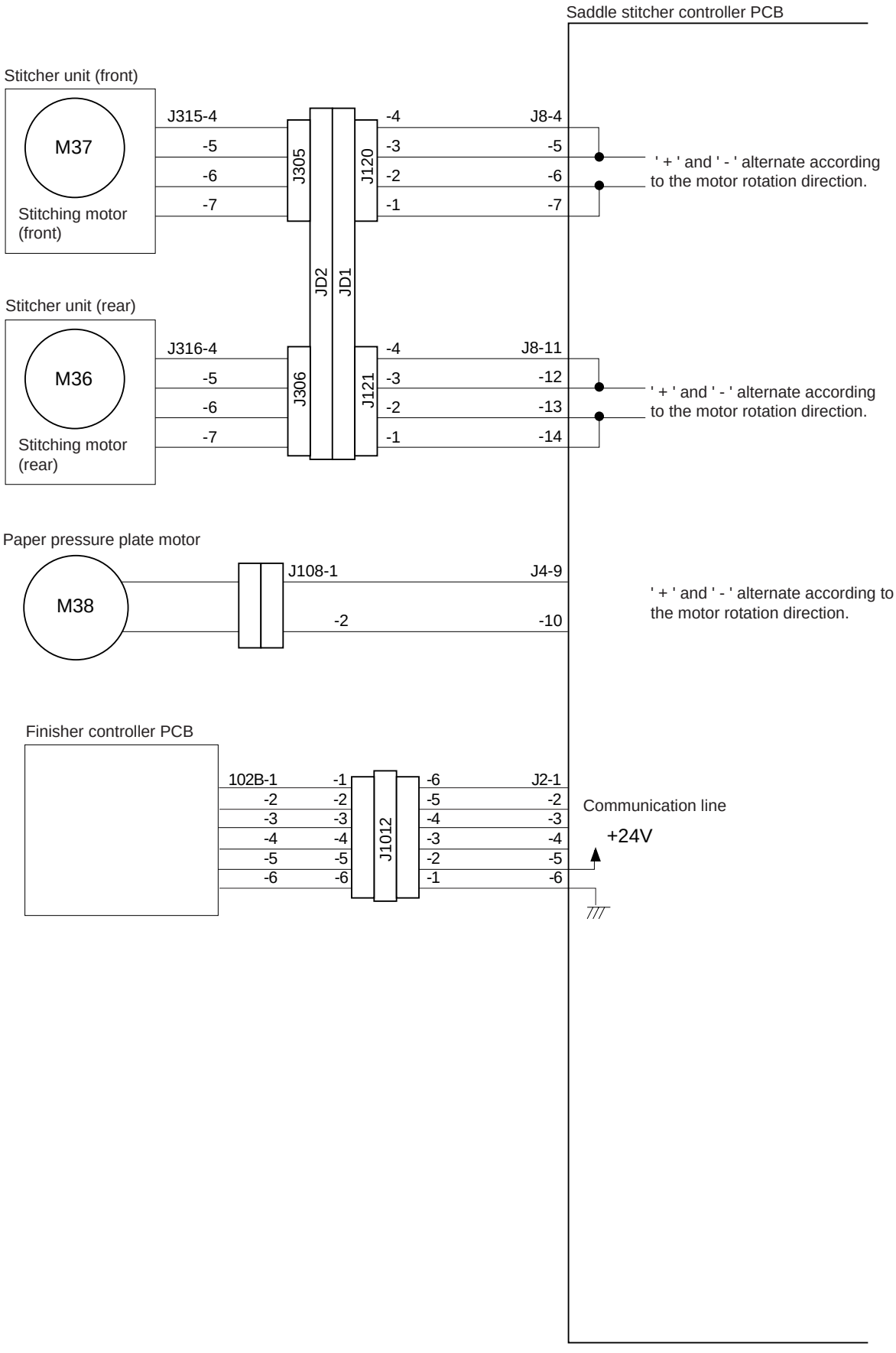

Figure 2-123

COPYRIGHT © 1999 CANON INC.

22. Outputs from the Saddle Stitcher Controller PCB / Finisher Controller PCB (with Relation to the Saddle Unit)

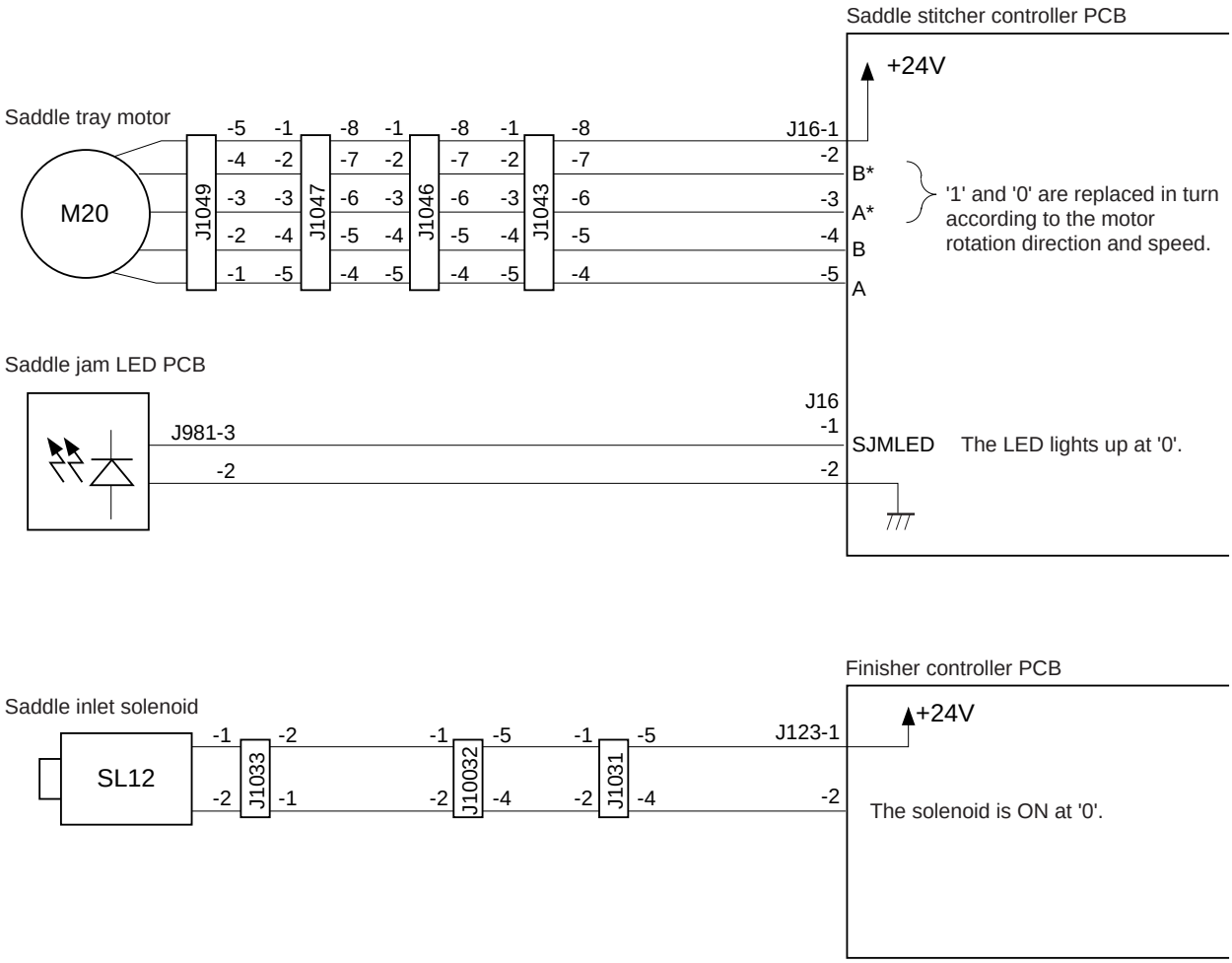

Figure 2-124

 COPYRIGHT © 1999 CANON INC.

23. Inputs to and Outputs from the Finisher Controller PCB

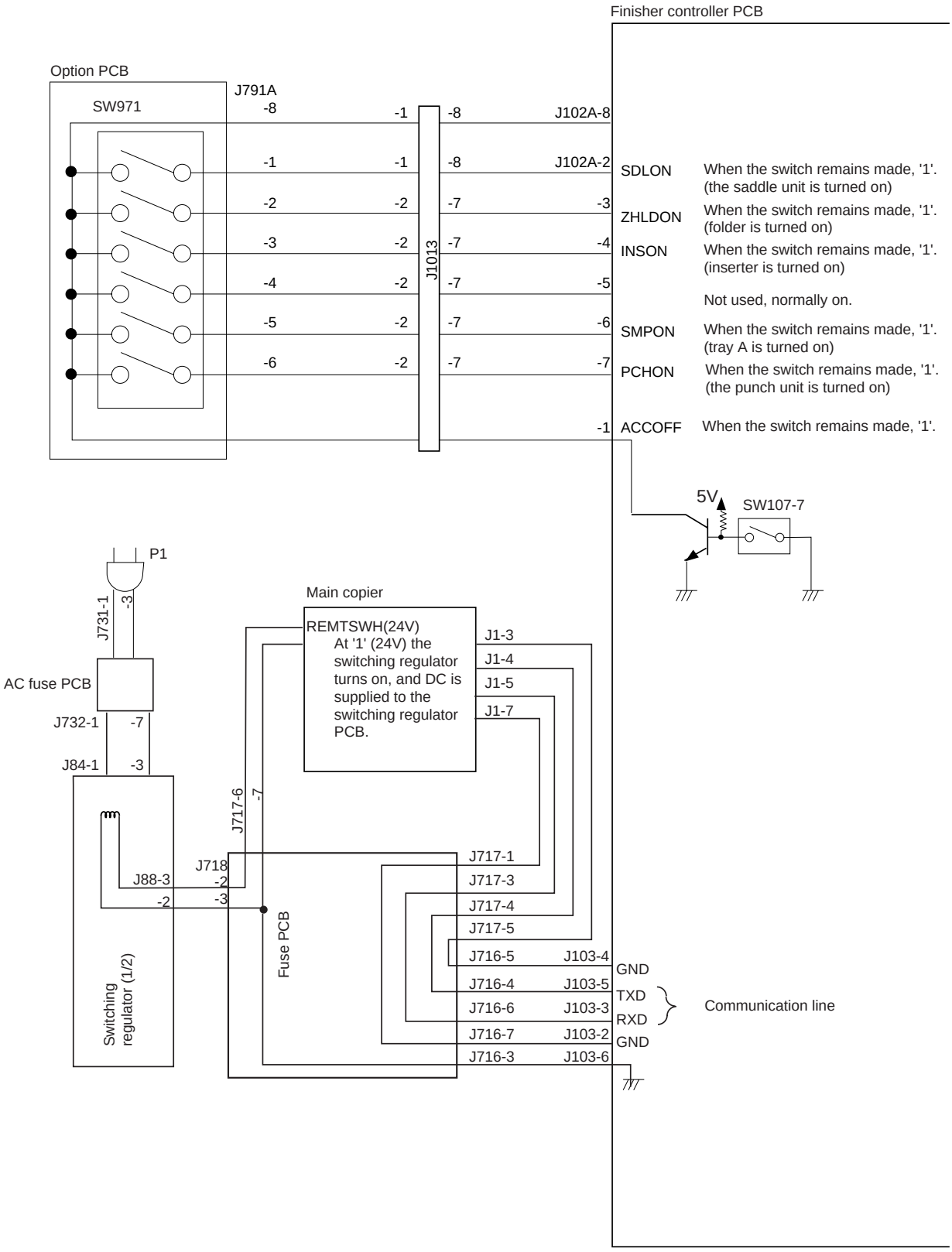

Figure 2-125

24. Inputs to and Outputs Finisher Controller PCB

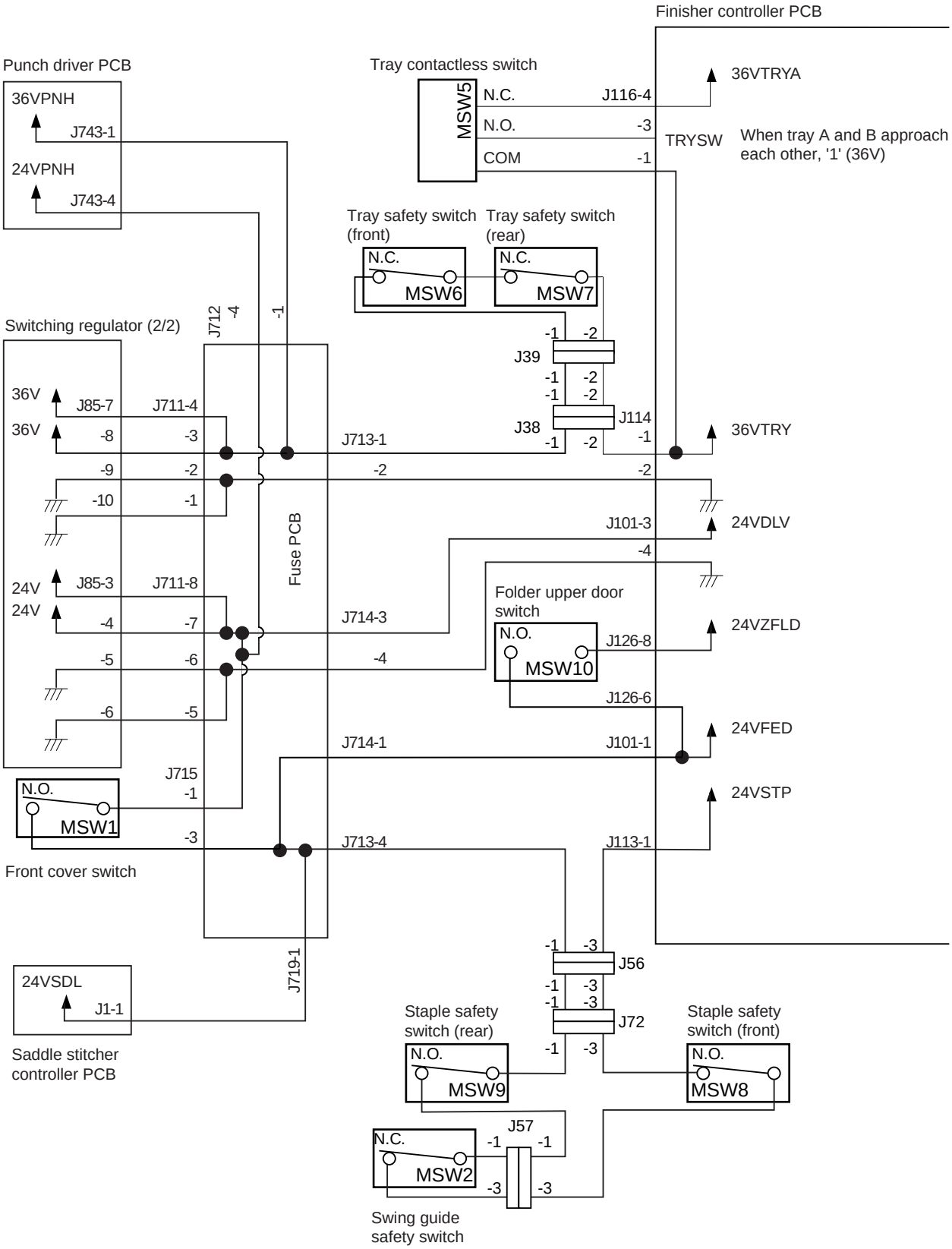

Figure 2-126

 COPYRIGHT © 1999 CANON INC.

II . FEEDING/DRIVE SYSTEM

A. Outline

The machine operates in response to commands from its host copier for simple stacking, job offset, or stapling and delivers the sheets to the delivery tray.

When the folder is mounted, it is possible to carry out Z-shape folding. When the inserter is mounted, it is possible to deliver stacks received from the copier with covers added to them.

There are two copy receiving trays in the finisher section. The upper one is called “Tray A”; it mainly stacks the paper sheets. The lower one is called “Tray B”; its role as a sorting tray (or tray B) is to receive sheets which are stapled, job-offset processed, and/or folded.

When tray B becomes filled up, tray A descends to the position of tray B and performs the task of tray B. At that time tray B moves further to a lower position.

The function of the saddle stitcher is to saddle-stitch (center stapling), double-fold, and then deliver the sheets coming from the copier.

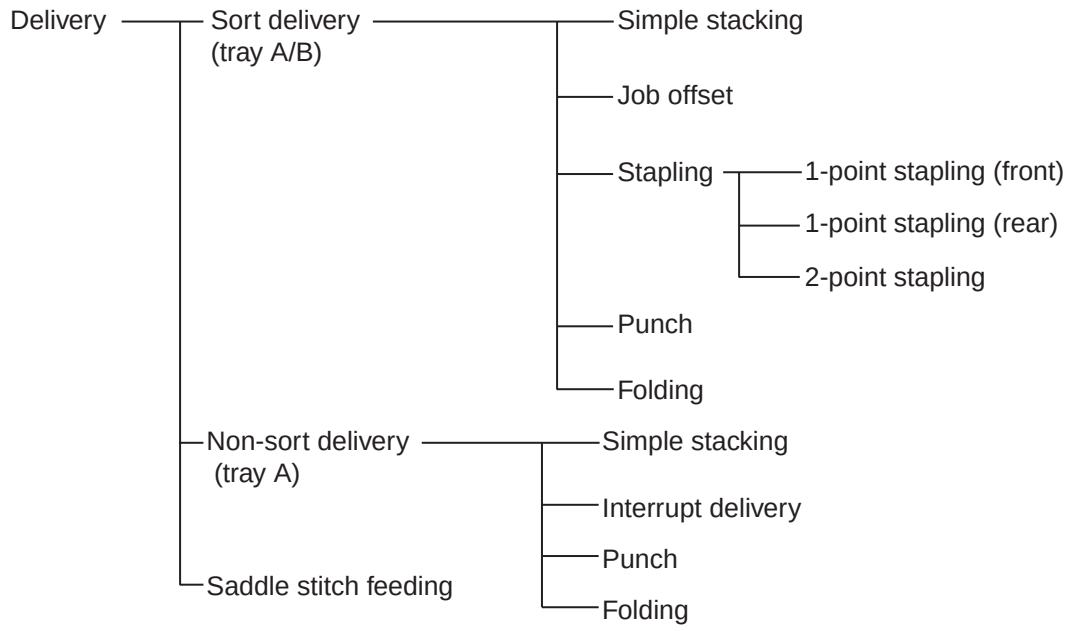

Figure 2-201

COPYRIGHT © 1999 CANON INC.

1. Normal Delivery

a. Simple Stacking

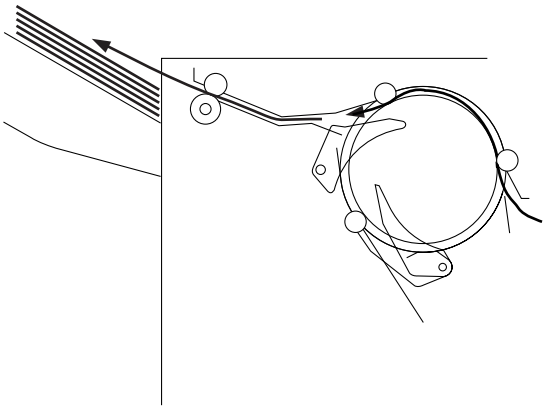

Directs sheets directly to the tray A.

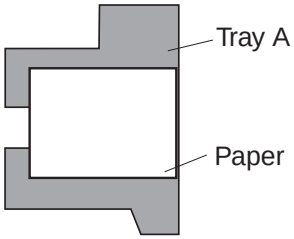

Figure 2-202

 COPYRIGHT © 1999 CANON INC.

b. Job Offset

Before being delivered to tray B, a sheet is first drawn into the processing tray once. The sheet is then moved to the front or rear by the jogging plate. The stack of sheets on the processing tray is delivered when it has collected a specific number of sheets.

Drawing in a Sheet

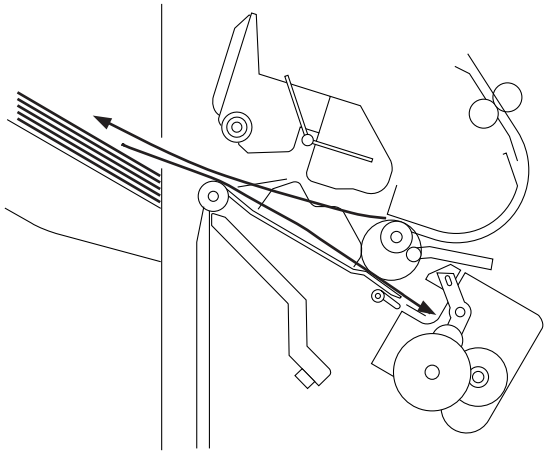

Figure 2-203

Delivering a Stack

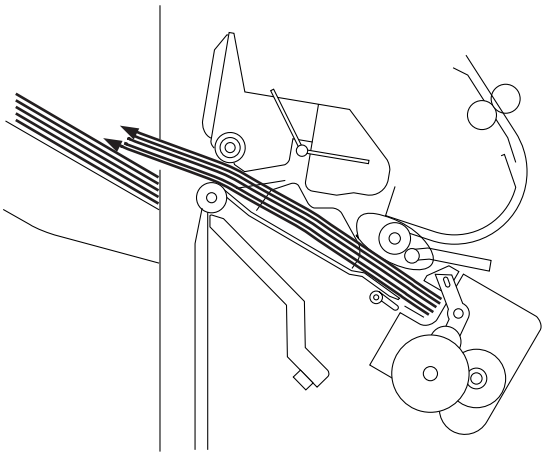

Figure 2-204

Results of delivery when handling 4 sets in jog offset mode

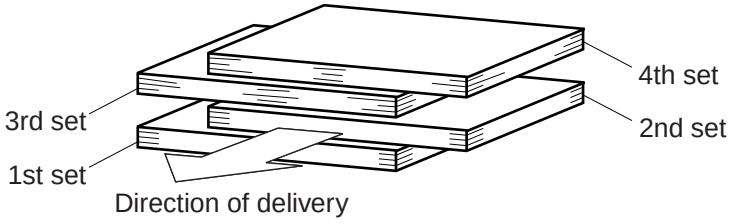

Figure 2-205

c. Stapling

A sheet from the copier is deposited on the processing tray. When the stack has accumulated a specific number of sheets, the machine staples the stack and delivers it to tray B.

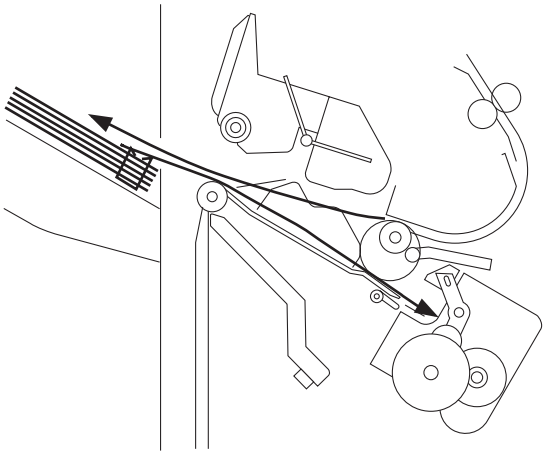

Figure 2-206

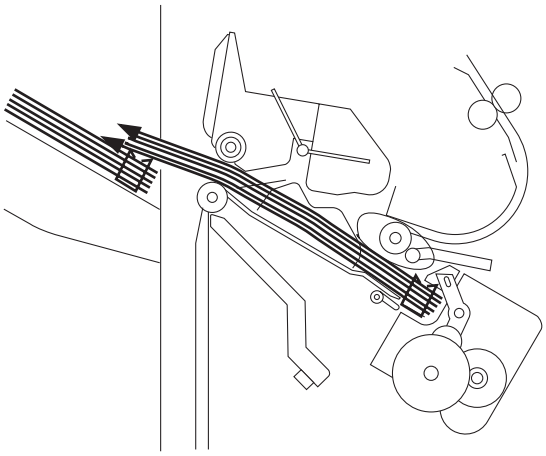

Figure 2-207

 COPYRIGHT © 1999 CANON INC.

d. Buffer Path

The machine is designed to accept sheets from the copier while it is handling sheets on the processing tray, calling for a device to enable simultaneous operation.

The machine's buffer roller allows wrapping of a maximum of three sheets of paper, during which job offset and stapling are executed on the processing tray.

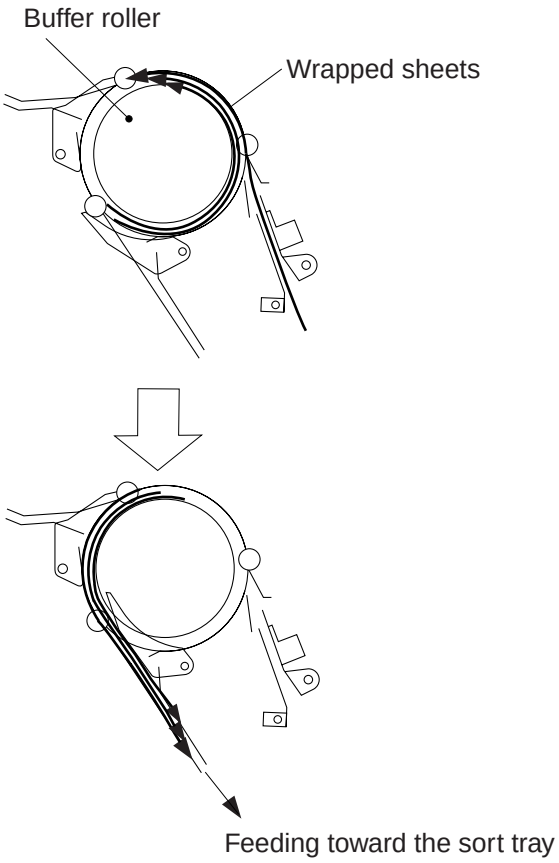

Figure 2-208

B. Feeding/Delivery

1. Outline

The machine sends sheets from the copier to its tray A or tray B according to the selected mode of delivery, and performs job offset, stapling or punching in response to commands from the copier.

Table 2-201 shows the motors used to feed or align sheets. These motors are controlled to rotate clockwise or counterclockwise as instructed by the finisher controller PCB.

The paper path is equipped by various sensors shown in Table 2-202, monitoring the arrival or passage of paper.

If paper fails to reach or move past a specific sensor within a specific period of time, the finisher controller PCB will identify the condition as a jam, stopping operation and informing the copier of the condition.

 COPYRIGHT © 1999 CANON INC. CANON SADDLE FINISHER-D2 REV.0 AUG. 1999 PRINTED IN JAPAN (IMPRIME AU JAPON)

Notation	Name	Description	Connector on finisher controller PCB
M1	Inlet motor	DC brushless motor	J124
M2	Buffer motor	4-phase stepping motor	J122A
M3	Delivery motor	4-phase stepping motor	J122B
M4	Front jog motor	4-phase stepping motor	J104A
M5	Rear jog motor	4-phase stepping motor	J104A
M6	Tray auxiliary plate motor	4-phase stepping motor	J105A
M7	Stack paper motor	DC motor	J106
M8	Swing motor	DC motor	J106
M9	Paddle motor	4-phase stepping motor	J108A
M12	Tray B up/down motor	4-phase stepping motor	J110A
M13	Tray A up/down motor	4-phase stepping motor	J115A

Table 2-201

COPYRIGHT © 1999 CANON INC.

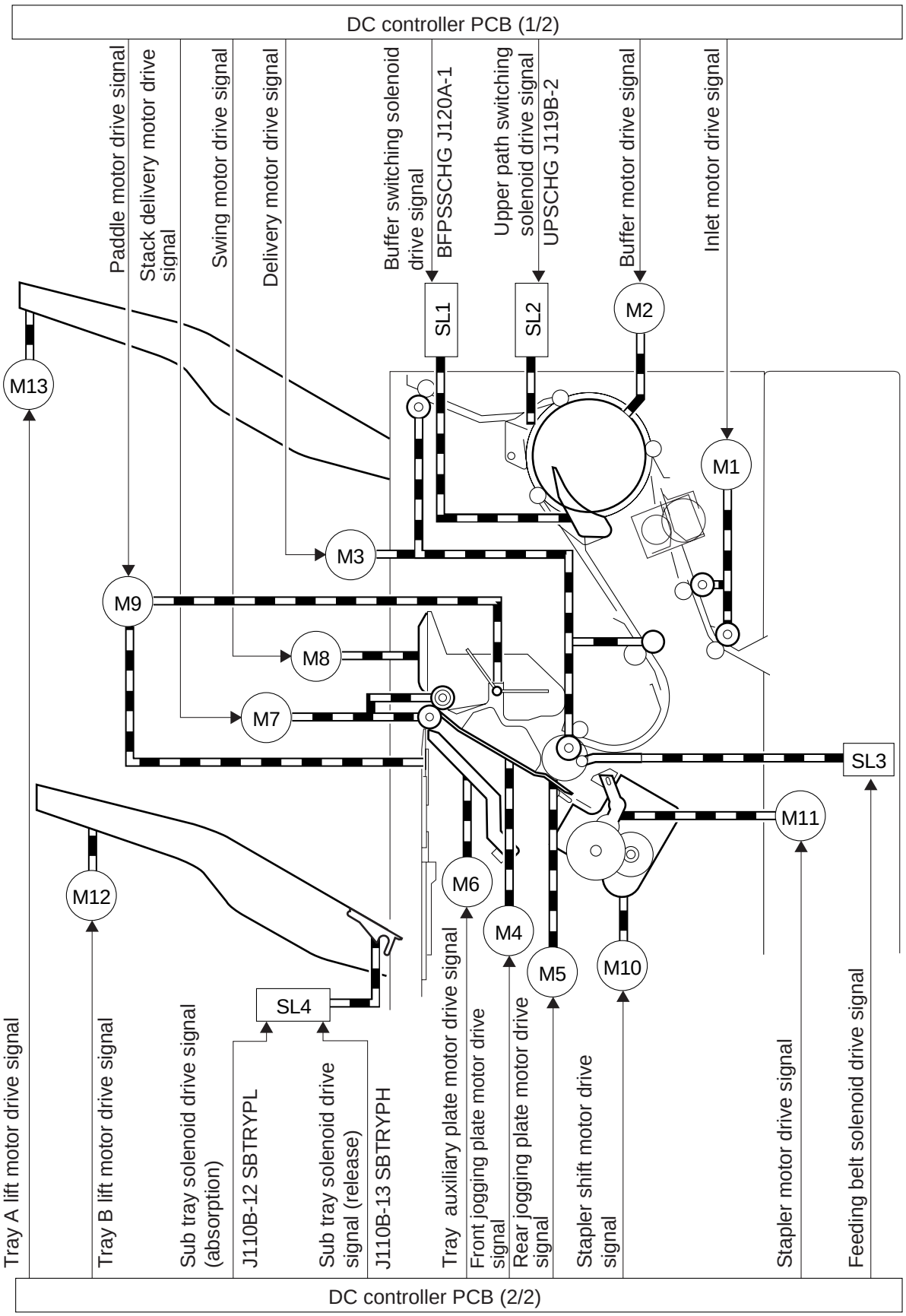

Figure 2-209

 COPYRIGHT © 1999 CANON INC.

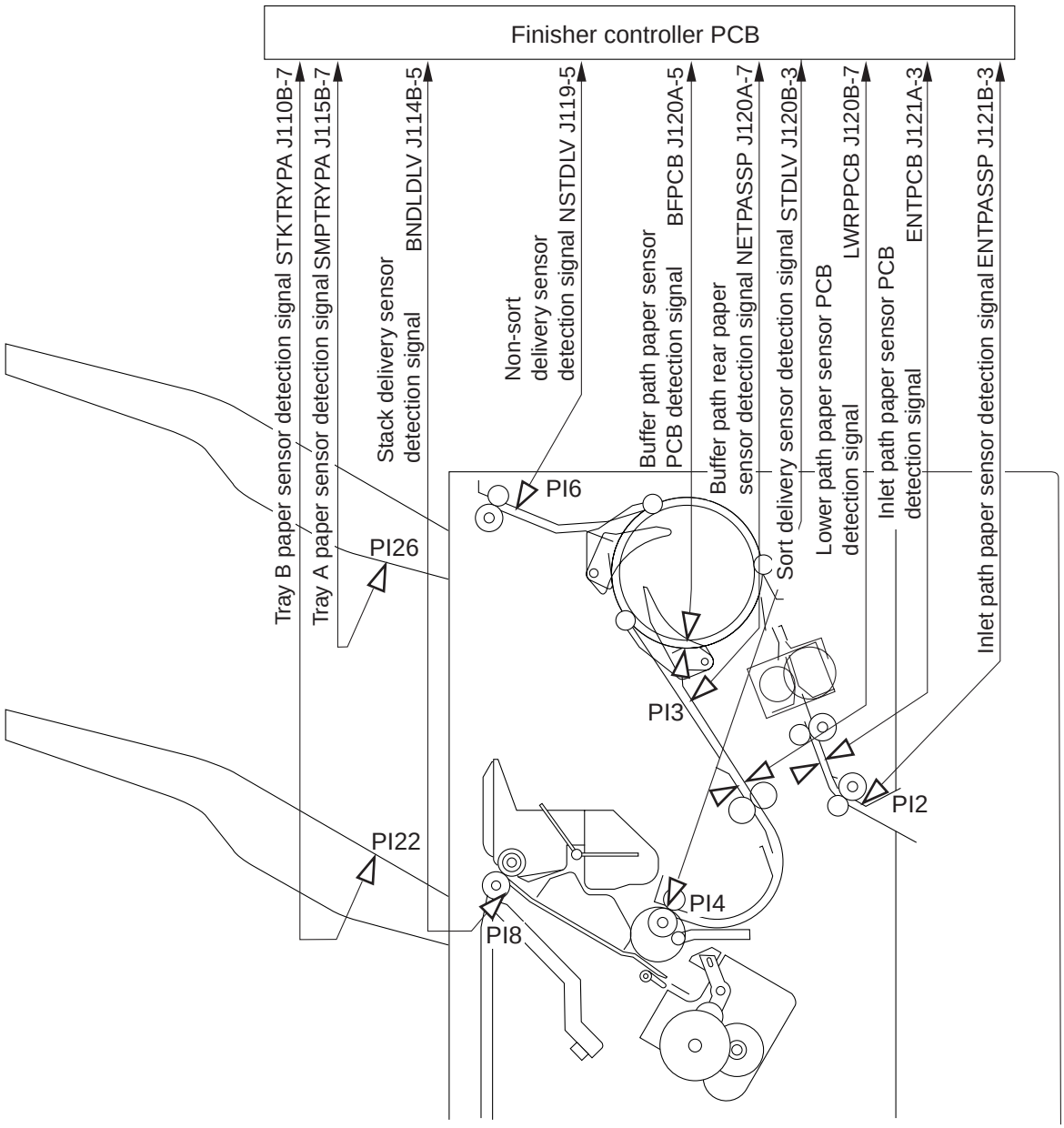
Finisher controller PCB
Tray B paper sensor detection signal STKTRYPA J110B-7
Tray A paper sensor detection signal SMPTRYPA J115B-7
Stack delivery sensor detection signal BNDLDLV J114B-5
Non-sort delivery sensor detection signal NSTDLV J119-5
Buffer path paper sensor PCB detection signal BFPCB J120A-5
Buffer path rear paper sensor detection signal NETPASSP J120A-7
Sort delivery sensor detection signal STDLV J120B-3
Lower path paper sensor PCB detection signal LWRPPCB J120B-7
Inlet path paper sensor PCB detection signal ENTPCB J121A-3
Inlet path paper sensor detection signal ENTPASSP J121B-3
PI6
PI26
PI3
PI2
PI22
PI4
PI8

Figure 2-210

Notation	Name	Description	Connector on finisher controller PCB
PI2	Inlet path sensor	Photointerrupter	J121B
PI3	Buffer path rear sensor	Photointerrupter	J120A
PI4	Sort delivery sensor	Photointerrupter	J120B
PI6	Non-sort delivery sensor	Photointerrupter	J119A
PI8	Stack delivery sensor	Photointerrupter	J104B
PI22	Tray B paper present senor	Photointerrupter	J110B
PI26	Tray A paper present sensor	Photointerrupter	J115B
S1	Inlet path paper sensor	Reflecting type sensor	J121B
S2	Buffer path paper sensor	Reflecting type sensor	J120B
S3	Lower path paper sensor	Reflecting type sensor	J120A
S4	Tray B paper sensor	Transmission type sensor	J105A
S5	Tray A paper sensor	Transmission type senser	J121A

Table 2-202

 COPYRIGHT © 1999 CANON INC. CANON SADDLE FINISHER-D2 REV.0 AUG. 1999 PRINTED IN JAPAN (IMPRIME AU JAPON)

C. Job Offset

1. Outline

In job offset mode, stacks of sheets are moved to the front or rear for sorting purposes.

The stacks are moved to the front or rear by the front jogging plate and rear jogging plate. Sheets moving past the stack delivery roller are moved by the paddle in the direction of the stopper. The swing guide is in up position while pulling in a sheet or while the stacking plate is in operation; it is in down position while the stack is being delivered.

When the power is turned on, the finisher controller PCB drives the front jogging plate motor (M4) and the rear jogging plate motor (M5) to return the two jogging plates to the home position.

Sensor	Notation	Connector
Front jogging plate home position sensor	PI7	J104B-3
Rear jogging plate home position sensor	PI9	J104B-9
Swing guide closed sensor	PI15	J108B-3
Swing guide open sensor	PI16	J108B-6
Paddle home position sensor	PI14	J108A-8

Table 2-203

Function	Motor	Notation
Drives the front jogging plate	Front jogging plate motor	M4
Drives the rear jogging plate	Rear jogging plate motor	M5
Swing guide drive	Swing motor	M8
Drives the paddle (feeds paper)	Paddle motor	M9

Table 2-204

COPYRIGHT © 1999 CANON INC.

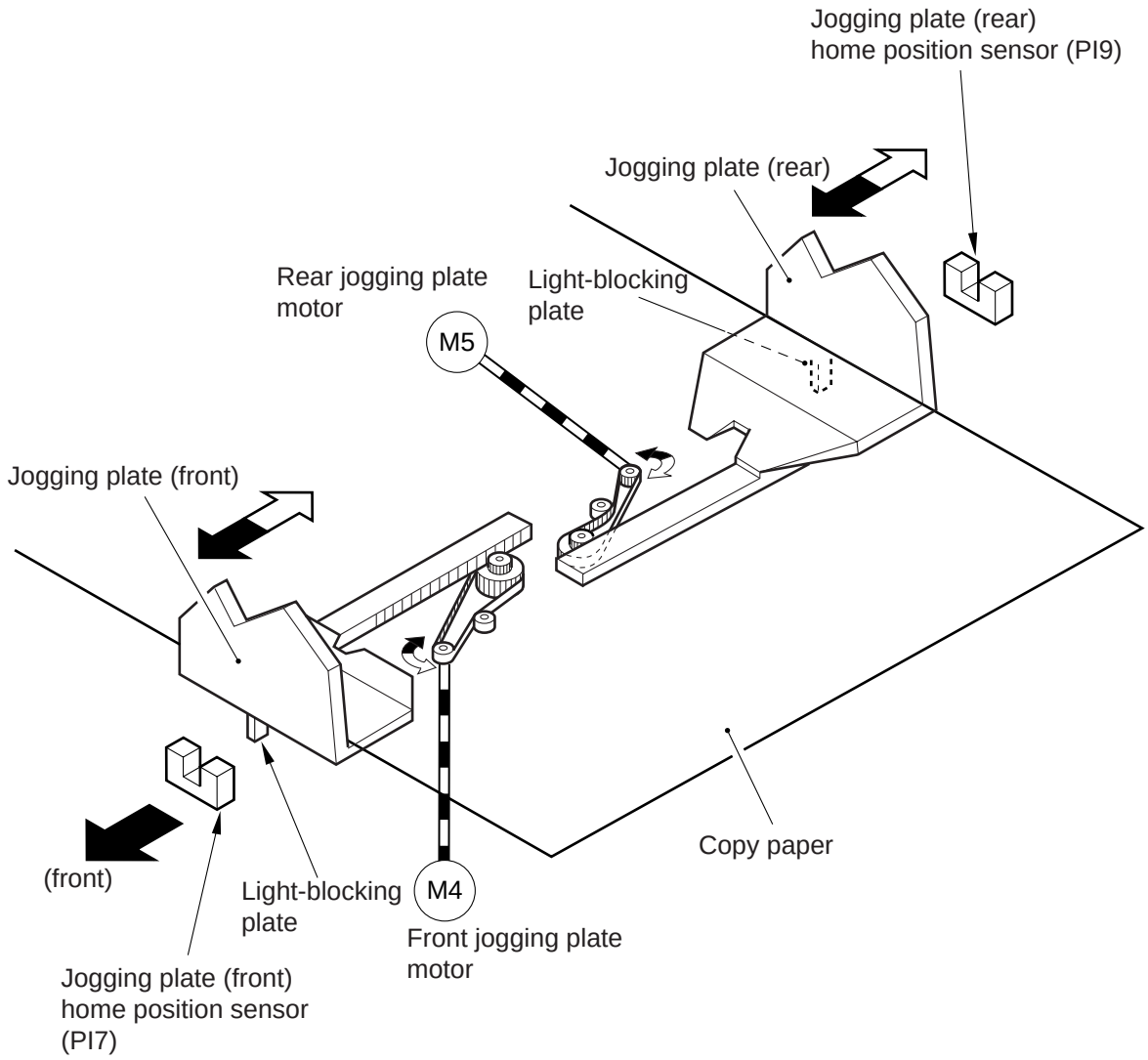

Figure 2-211

 COPYRIGHT © 1999 CANON INC.

2. Stacking Sheets for the Processing Tray

a. Handling the First Sheet (A4/B5/LTR)

The tray auxiliary plate is outside the machine before the first sheet moves past the delivery roller. (It, however, may be inside the machine under certain conditions.)

The swing guide moves up when the trailing edge of the sheet moves past the sort delivery sensor (P14), releasing the sheet from the stack delivery roller.

Then, the paddle taps on the top surface of the sheet, and butts the trailing edge of the sheet against the processing tray stopper. The paddle rotates in numbers determined by paper size, the number of sheets contained in the stack and the presence of the staples. (Usually, it rotates two to three times.)

The stack delivery roller starts to rotate in reverse to assist butting the sheet against the stopper.

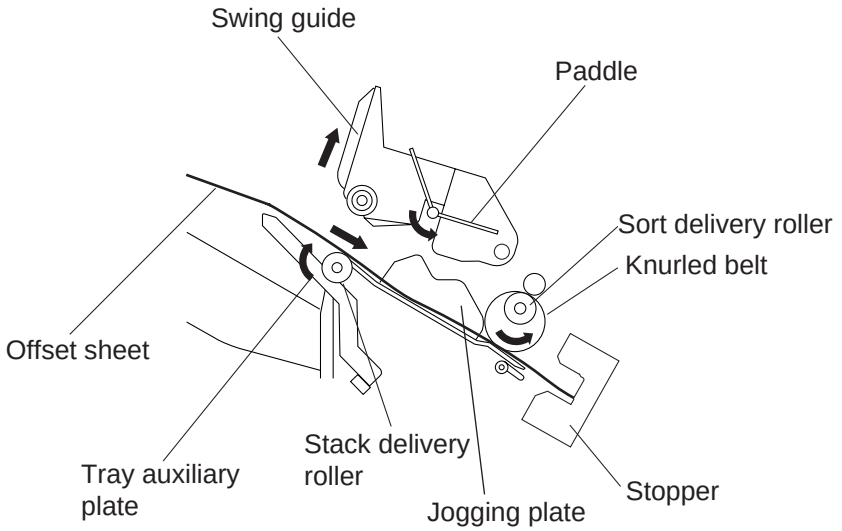

Figure 2-212

b. Handling the Second and Subsequent Sheets

When the trailing edge of the second and subsequent sheets moves past the delivery sensor, the paddle starts to tap the top surface of the sheet, butts its trailing edge against the processing tray stopper, and deposits it on top of the existing stack. The tray auxiliary plate remains outside the machine.

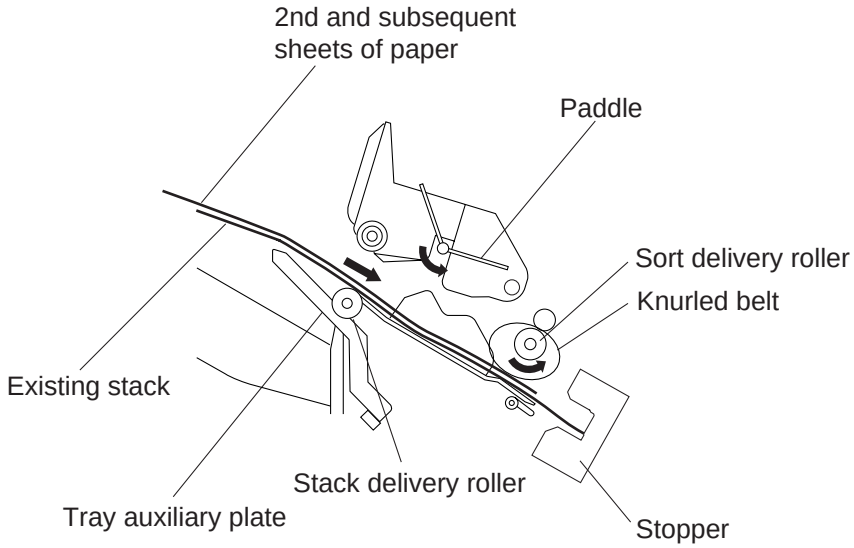

Figure 2-213

COPYRIGHT © 1999 CANON INC.

c. Offset Operation

The front or the rear jogging plate shifts each sheet that arrives toward the front or rear. The direction will be

i. If a sheet exists on tray A/B, in the direction opposite it.

ii. If no sheet exists on tray A/B, depends on the selected paper size and mode.

When shifting to the front, the machine uses the front jogging plate as the reference for butting, causing the rear jogging plate to move the sheet toward the front.

When shifting to the rear, the machine uses the rear jogging plate as the reference for butting, causing the front jogging plate to move the sheet to the front.

The machine executes offset operation each time a sheet is pulled onto the processing tray.

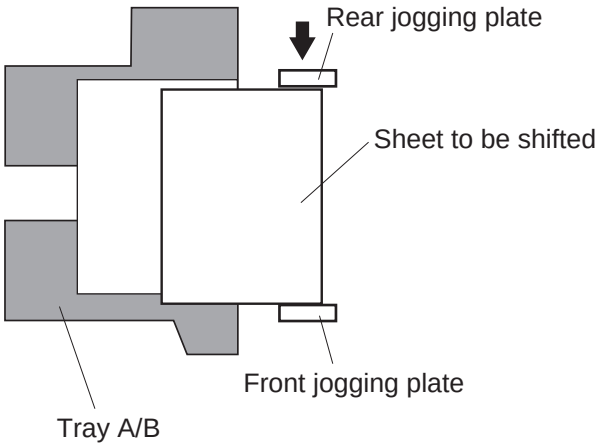

Shifting to the Front

Figure 2-214

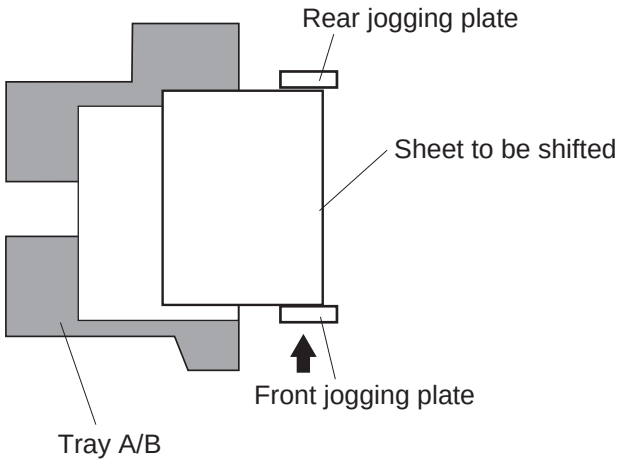

Shifting to the Rear

Figure 2-215

 COPYRIGHT © 1999 CANON INC.

d. Stack Delivery

A stack is delivered when as many as five (three in the case of large-size sheets) have been deposited on the processing tray.

The swing guide motor rotates to move down the swing guide. The upper and lower stack delivery rollers then hold the stack in between. When the stack delivery motor starts to rotate, the stack held between the delivery rollers is discharged; at the same time, the tray auxiliary plate is retracted inside the machine.

The following sheet coming from the copier to the finisher while the stack is being discharged is wrapped around the buffer roller. (The size of the following sheets is A4/B5/LTR.)

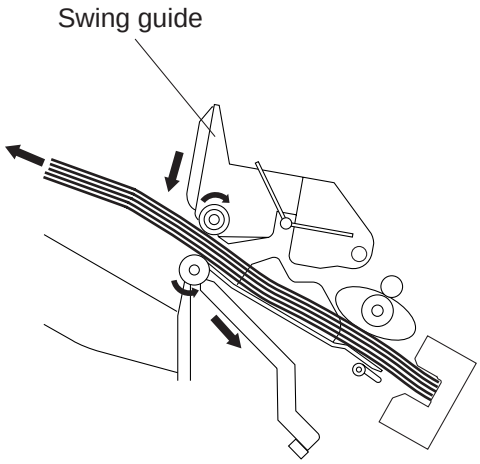

Figure 2-216

3. Number of Sheets for an Offset Job

A stack is discharged when it has collected five sheets (small-size) or three sheets (large-size). If the number of sheets for a specific offset job cannot be divided by 5, the last stack will be discharged falling short of the full count.

If, for example, 5n + 1, the last stack will contain one sheet. In such a case, the second stack from the last will be discharged containing four sheets to avoid discharging a single sheet. In the example, the last stack will consist of two sheets.

EX.

1. For eight small-size sheets, the combination will be a 5-sheet stack and a 3-sheet stack.
2. For ten small-size sheets, the combination will be a 5-sheet stack and a 5-sheet stack.
3. For 16 small-size sheets, the combination will be a 5-sheet stack, 5-sheet stack, 4-sheet stack, and a 2-sheet stack.

Reference:

Why Avoid a Single-Sheet Stack?

A single sheet of paper tends to deviate from the paper path from the stack discharge slot to the stacks, disrupting the alignment of the stacks.

In the case of large-size sheets, each delivered stack will consist of three sheets. If the last stack consists of 1 sheet, it will be combined with the previous stack thus forming a 4-sheet stack.

 COPYRIGHT © 1999 CANON INC. CANON SADDLE FINISHER-D2 REV.0 AUG. 1999 PRINTED IN JAPAN (IMPRIME AU JAPON)

Job offset sequences
Two 2-Sheet Stacks

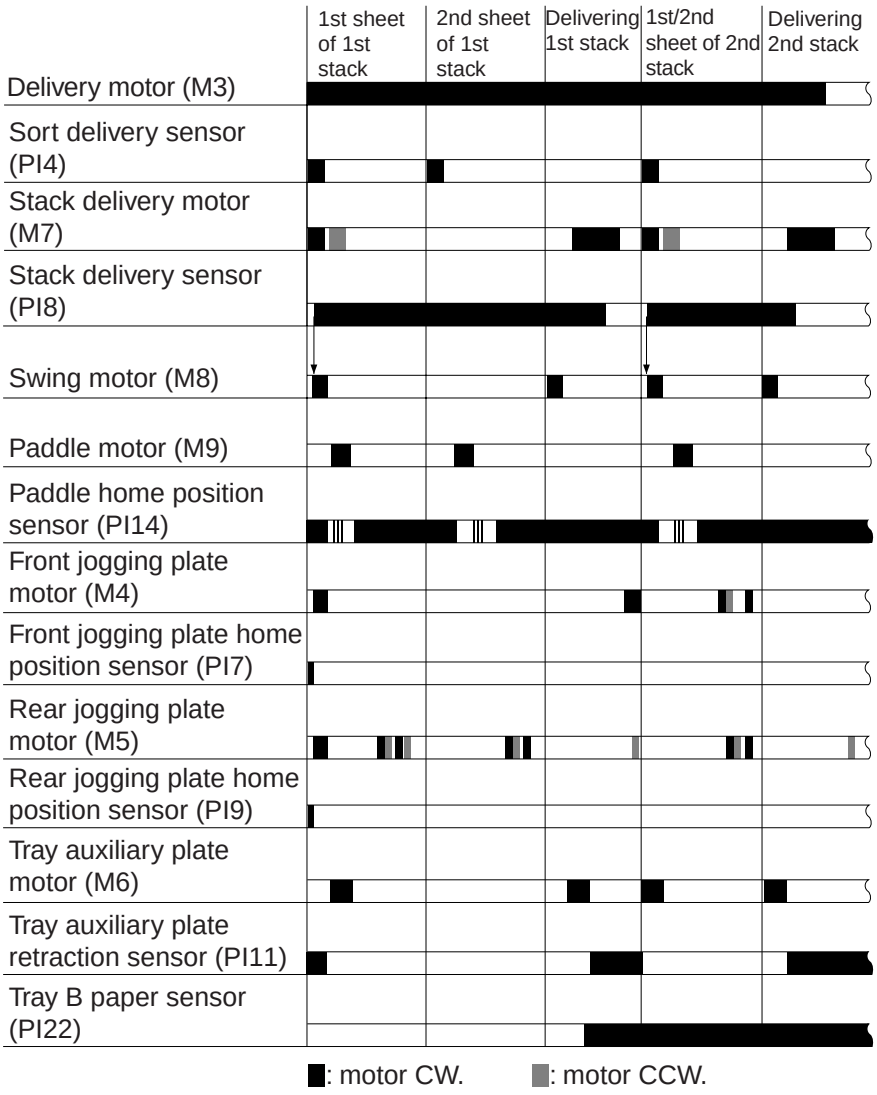

Figure 2-217

D. Releasing the Knurled Belt

1. Outline

The sheet which has moved past the sort delivery roller is sent to the processing tray by the paddle, the stack delivery roller and the knurled belt. However, the knurled belt is released for the following to avoid the effects on the movement to the processing tray occurring if the sheet was kept in contact with the knurled belt.

a. If three sheets arrive at the same time from the buffer roller (3-sheet delivery).
b. If a stack of a larger number of sheets (over 40) already sits on the processing tray, and new sheets are being added.

The knurled belt is released by the knurled belt solenoid (SL3).

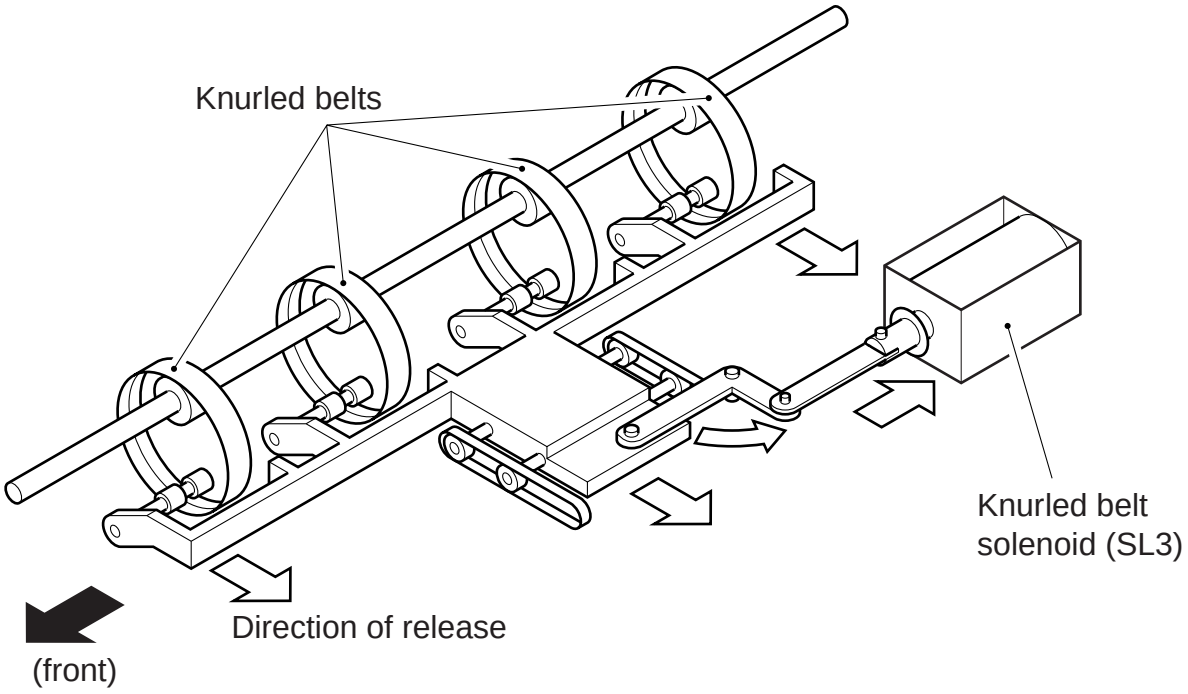

Figure 2-218

 COPYRIGHT © 1999 CANON INC. CANON SADDLE FINISHER-D2 REV.0 AUG. 1999 PRINTED IN JAPAN (IMPRIME AU JAPON)

2. Discharging Three Sheets

If three sheets have moved past the sort delivery roller from the buffer roller, the stack delivery roller will rotate in reverse to send the stack of three sheets in the direction of the processing tray.

If the knurled belt moved the stack of three sheets, the force of feeding would be too strong that the stack would bend against the stopper. To avoid such a problem, the knurled belt is released and the stack delivery roller and the paddle operate to move the 3-sheet stacks to the processing tray.

1. The stack moves past the sort delivery roller. At the same time, the knurled belt solenoid turns on to release the knurled belt.

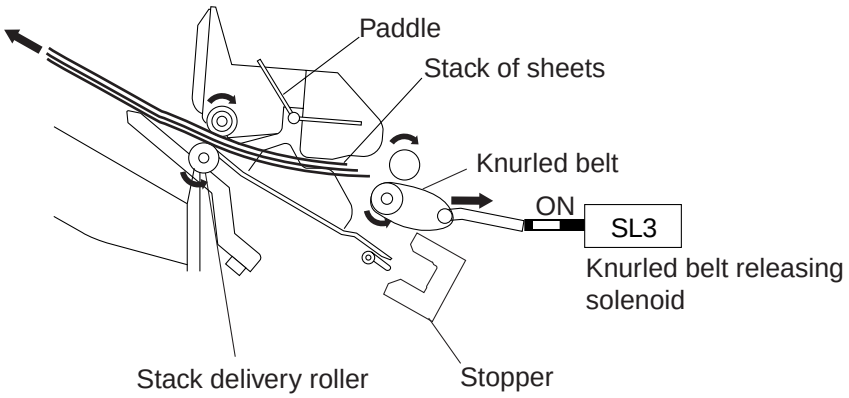

Figure 2-219

2. The stack delivery roller starts to rotate in reverse and, at the same time, the paddle rotates to move the stack in the direction of the processing tray.

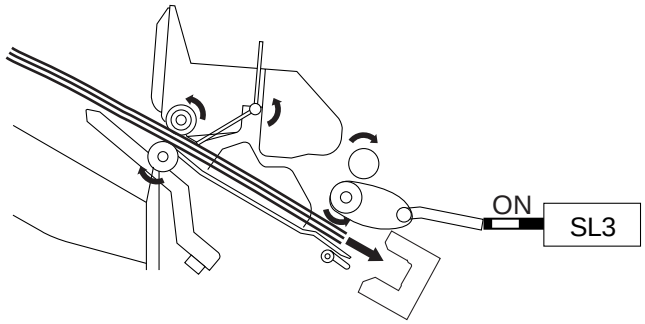

Figure 2-220

3. The belt is locked once again as soon as the stack butts against the stopper.

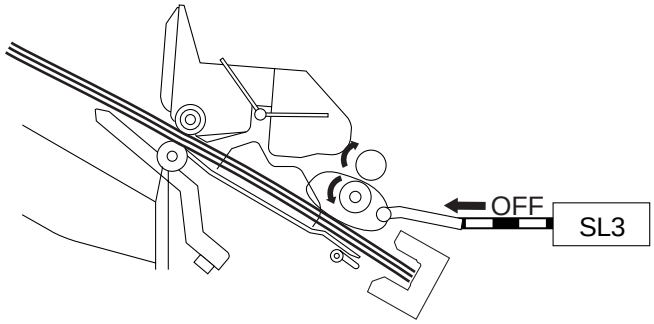

Figure 2-221

 COPYRIGHT © 1999 CANON INC.

3. Multiple Sheets on the Processing Tray

When multiple sheets are stacked on the tray, the knurled belt could put the stack back to its initial position after alignment. (Excess sheets could also interfere with the rotation of the knurled belt.)

To avoid such a problem, the knurled belt is released if 40 or more sheets exist on the processing tray.

1. The trailing edge of the sheet moves past the delivery roller, and the sheet is butted against the stopper by the paddle and the knurled belt.

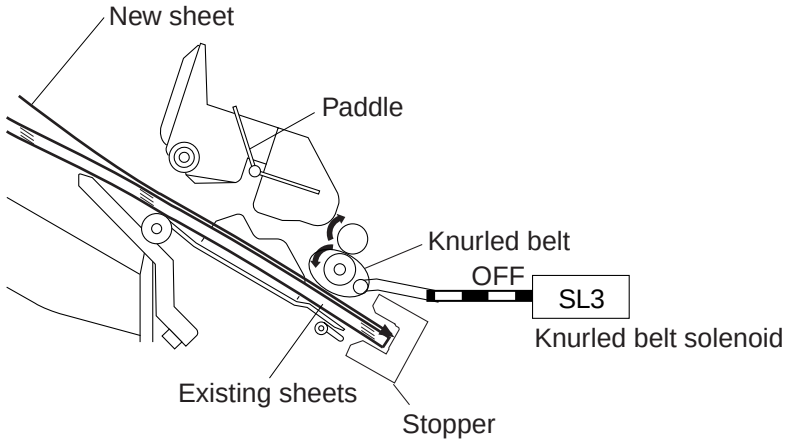

Figure 2-222

2. The solenoid turns on in keeping with the alignment of the sheet to release the knurled belt.

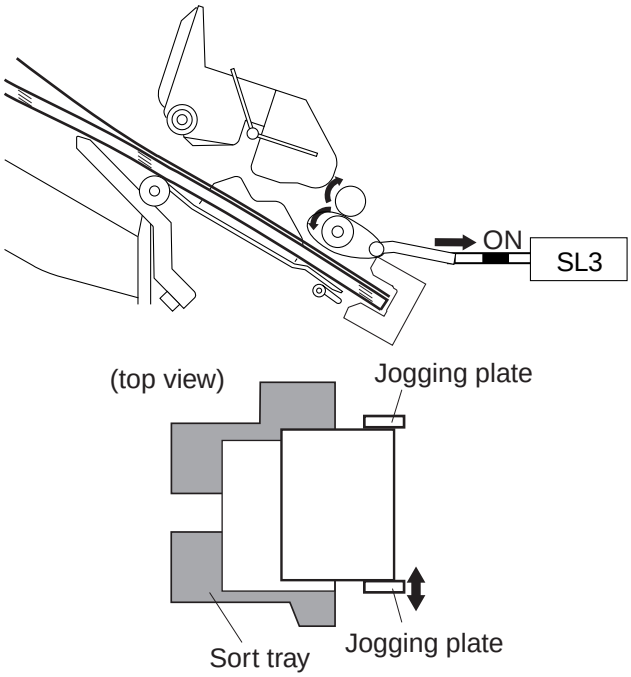

Figure 2-223

3. After having finished aligning the sheets, the solenoid turns off, and the knurled belt moves the sheet in the direction of the stopper.

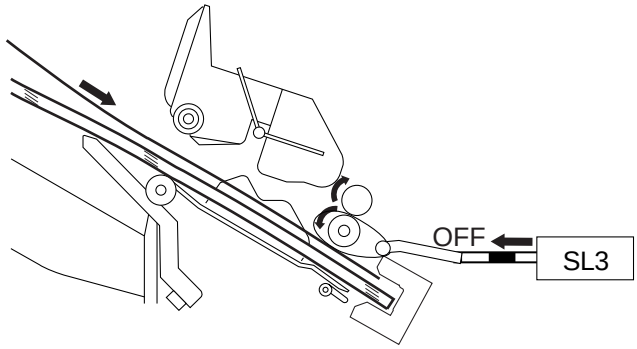

Figure 2-224

4. The solenoid turns on when discharge starts, moving the stack away from the knurled belt. The solenoid remains on if the next discharge is for a three-sheet stack.

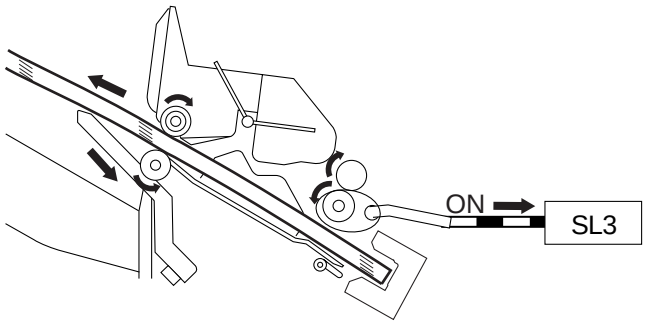

Figure 2-225

 COPYRIGHT © 1999 CANON INC. CANON SADDLE FINISHER-D2 REV.0 AUG. 1999 PRINTED IN JAPAN (IMPRIME AU JAPON)

E. Buffer Path

To accept sheets from the copier continuously while the machine handles sheets on the processing tray, the machine is equipped with a buffer roller, which operates as follows:

1. The first sheet is moved in the direction of the buffer roller.

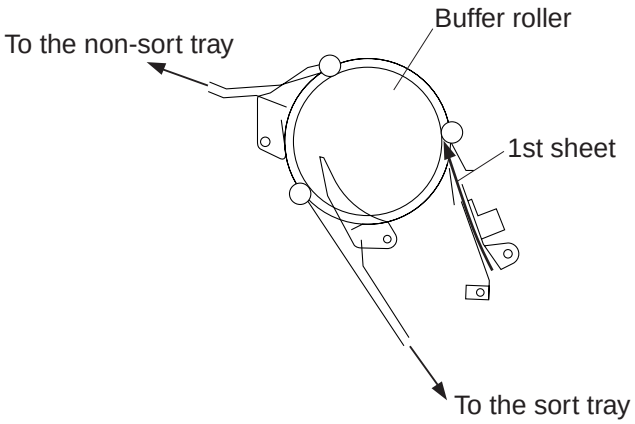

Figure 2-226

2. Since the upper path switching flapper remains off, the leading edge of the sheet moves in the direction of the buffer path switching flapper.

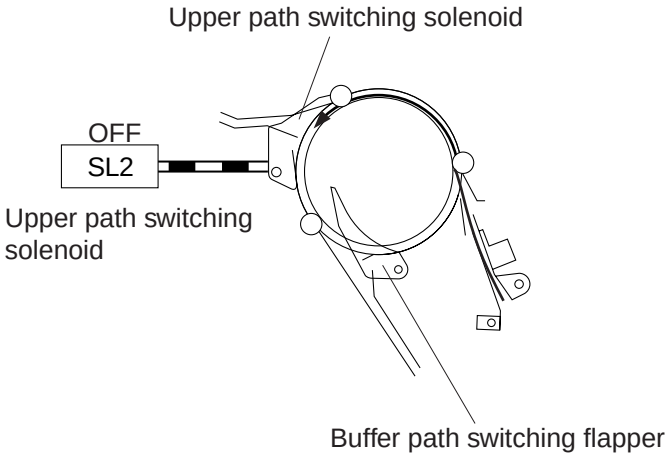

Figure 2-227

3. The buffer path switching flapper operates, causing the leading edge of the sheet to wrap around the buffer roller.

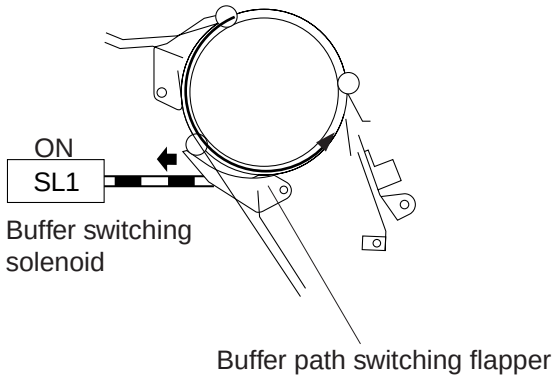

Figure 2-228

4. The second sheet arrives from the copier.

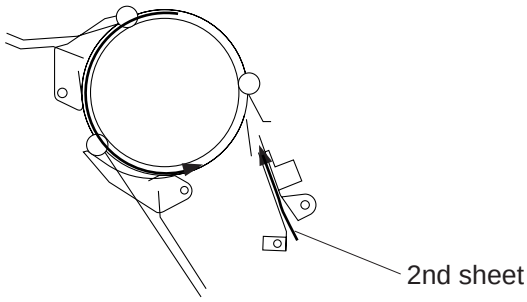

Figure 2-229

 COPYRIGHT © 1999 CANON INC.

5. The leading edge of the second sheet moves ahead of the leading edge of the 1st sheet.

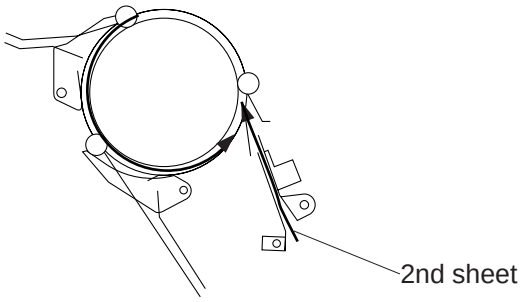

Figure 2-230

6. The buffer roller continues to rotate, causing the second sheet to slide over the first sheet.

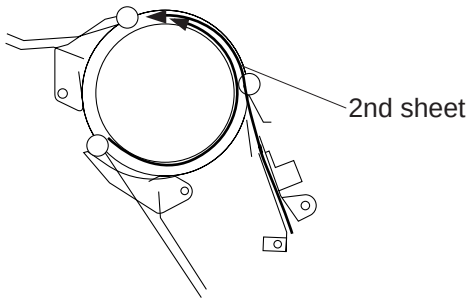

Figure 2-231

COPYRIGHT © 1999 CANON INC.

7. The third sheet arrives from the copier.

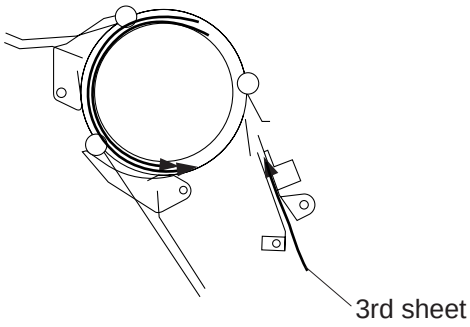

Figure 2-232

8. The leading edge of the third sheet moves ahead of the leading edge of the second sheet.

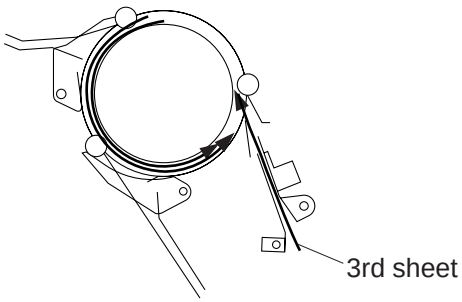

Figure 2-233

 COPYRIGHT © 1999 CANON INC.

9. The buffer roller continues to rotate, causing the third sheet to slide over the first and second sheets.

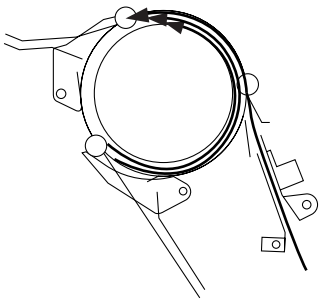

Figure 2-234

10. The buffer path switching flapper turns off, causing the three sheets to move in the direction of the delivery roller together.

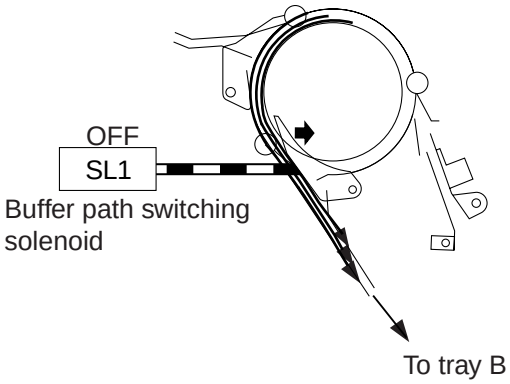

Figure 2-235

III . CONTROLLING THE PADDLE

1. Outline

The paddle serves to move the sheets delivered to the processing tray in the direction of the stopper.

Sensor	Notation	Connector
Paddle home position sensor	PI14	J108A-8

Table 2-301

Function	Motor	Notation
Drives the paddle	Paddle motor	M9

Table 2-302

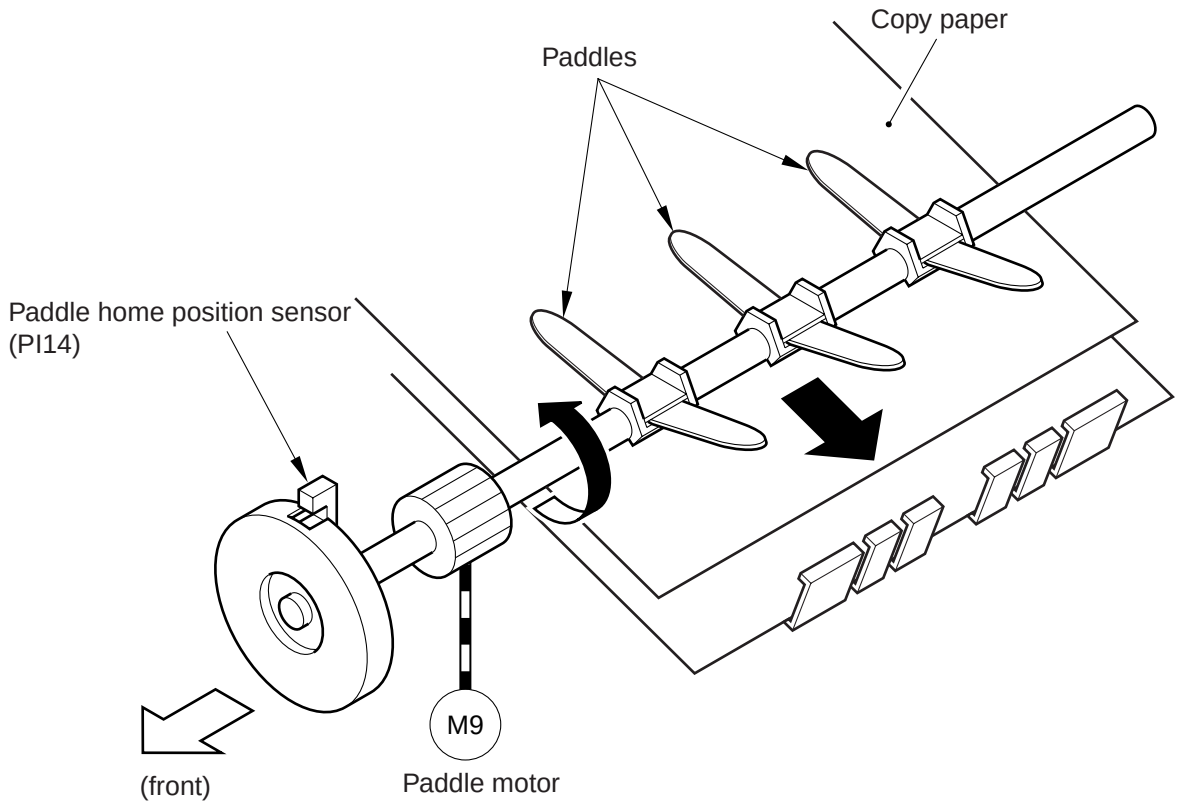

Figure 2-301

 COPYRIGHT © 1999 CANON INC. CANON SADDLE FINISHER-D2 REV.0 AUG. 1999 PRINTED IN JAPAN (IMPRIME AU JAPON)

IV . CONTROLLING THE TRAY AUXILIARY PLATE

1. Outline

The front half of sheets are pushed off tray B when the machine performs stapling or offset operation, and the tray auxiliary plate is used to ensure the best placement of the leading edges of the sheets.

Sensor	Notation	Connector
Tray auxiliary plate retraction sensor	PI11	J105B-6

Table 2-401

Function	Motor	Notation
Drives the tray auxiliary plate	Tray auxiliary plate motor	M6

Table 2-402

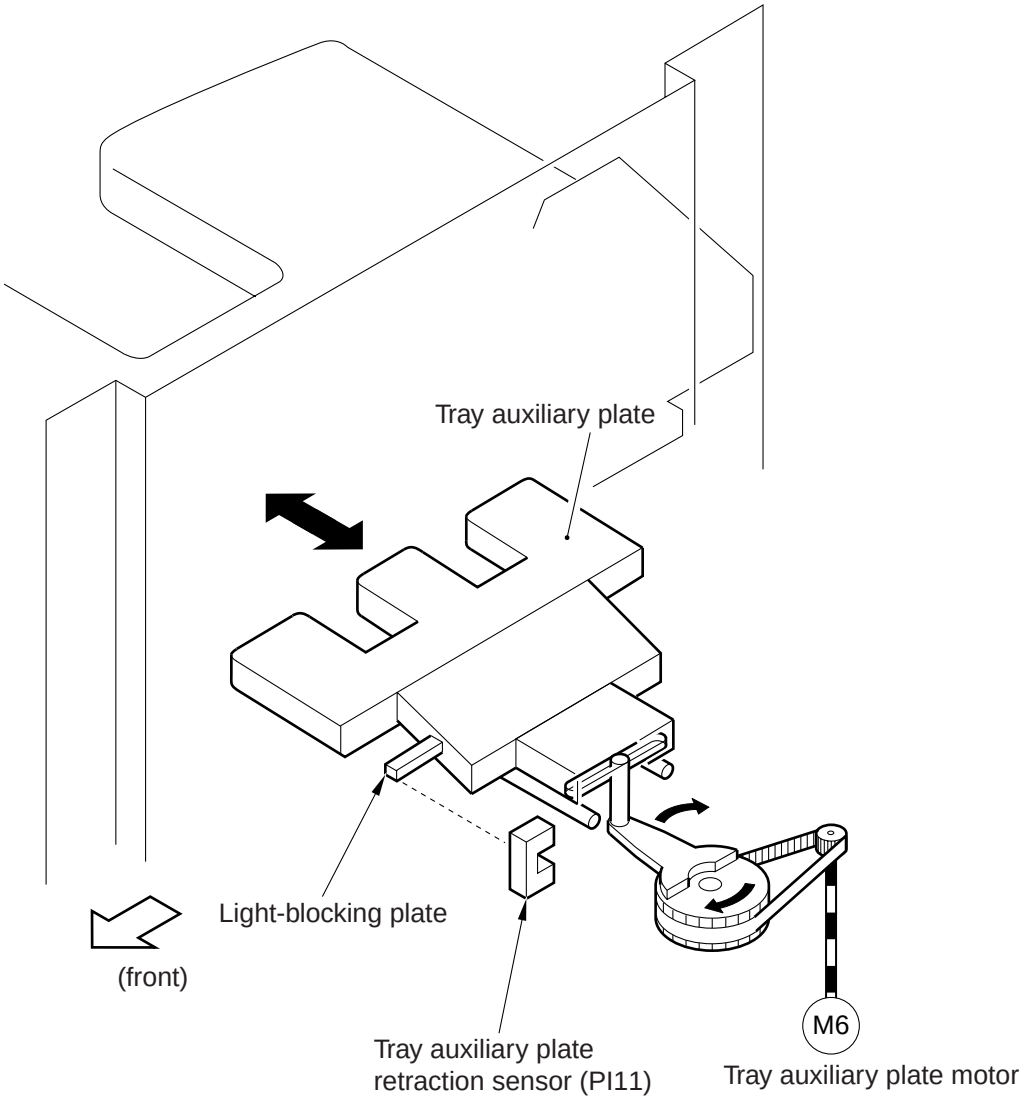

Figure 2-401

COPYRIGHT © 1999 CANON INC.

2. Operation

When multiple sheets are stacked on tray B, the leading edge of the stack tends to bend down, and would flap down if the stack was moved halfway off the processing tray, preventing the sheets to move against the stopper despite tapping by the paddles and, ultimately, causing the following:

a. Poor alignment of sheets in feeding direction at time of stapling

b. Poor alignment of sheets in feeding direction at time of an offset job (on tray B)

To prevent the above, the DC controller PCB slides the tray auxiliary plate outside the machine while sheets are being placed on the processing tray. With the tray auxiliary plate supporting the sheets from below, the stack will lie straight maintaining correct alignment.

Since the tray auxiliary plate is retracted when discharging stacks, it will not affect delivery. The plate is slid out again when the next sheet is placed on the processing tray (after detecting the paper surface to prevent interference with detection).

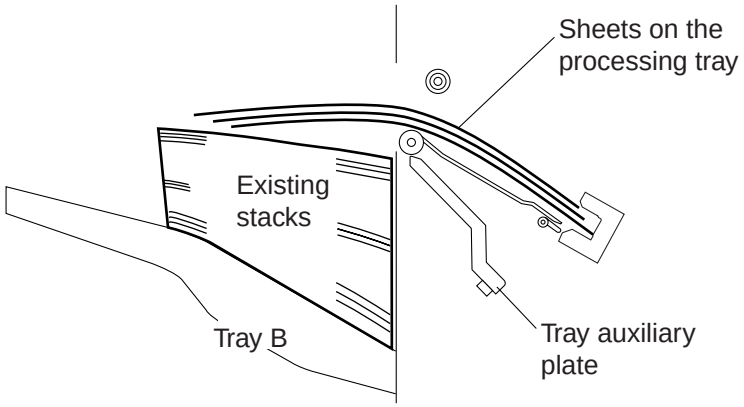

Figure 2-402 Tray Auxiliary Plate Retracted

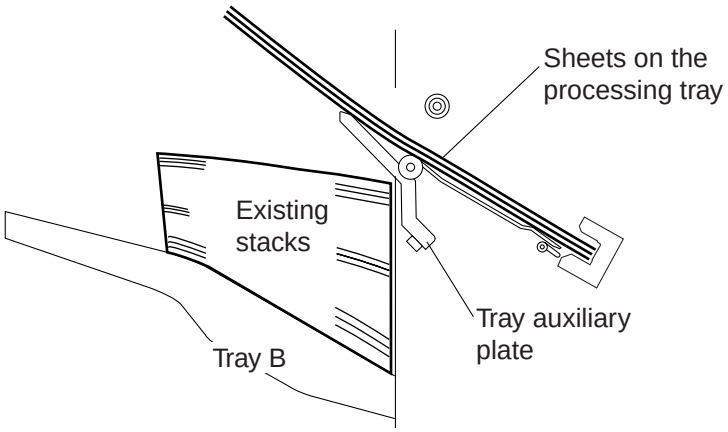

Figure 2-403 Tray Auxiliary Plate Out

 COPYRIGHT © 1999 CANON INC.

V . STAPLING

1. Outline

A specific number of sheets are stacked on the processing tray, and are stapled and delivered.

The stapling position varies according to stapling mode and paper size. When the power is turned on, the finisher controller PCB drives the stapler shift motor to return the stapler to the home position. If the stapler is already in the home position, it is made to wait as it is.

Sensor	Notation	Connector	Functions	Remarks
Stapler shift home position sensor	PI17	J112-8	Checks the stapler home position in the front and rear directions.	-
Staple edging sensor	PI18	J111-13	Checks the staple edging operation.	Inside the stapler
Stapling home position sensor	PI19	J111-11	Checks the stapling home position.	
Staple detecting switch	MSW3	J111-9	Checks the presence/absence of staples inside the cartridge.	
Cartridge switch	MSW4	J111-10	Checks the presence/absence of a cartridge.	

Table 2-501

Function	Motor	Notation	Reference
Stapler shift drive	Stapler shift motor	M10	-
Stapling drive	Stapler motor	M11	Inside the stapler

Table 2-502

COPYRIGHT © 1999 CANON INC.

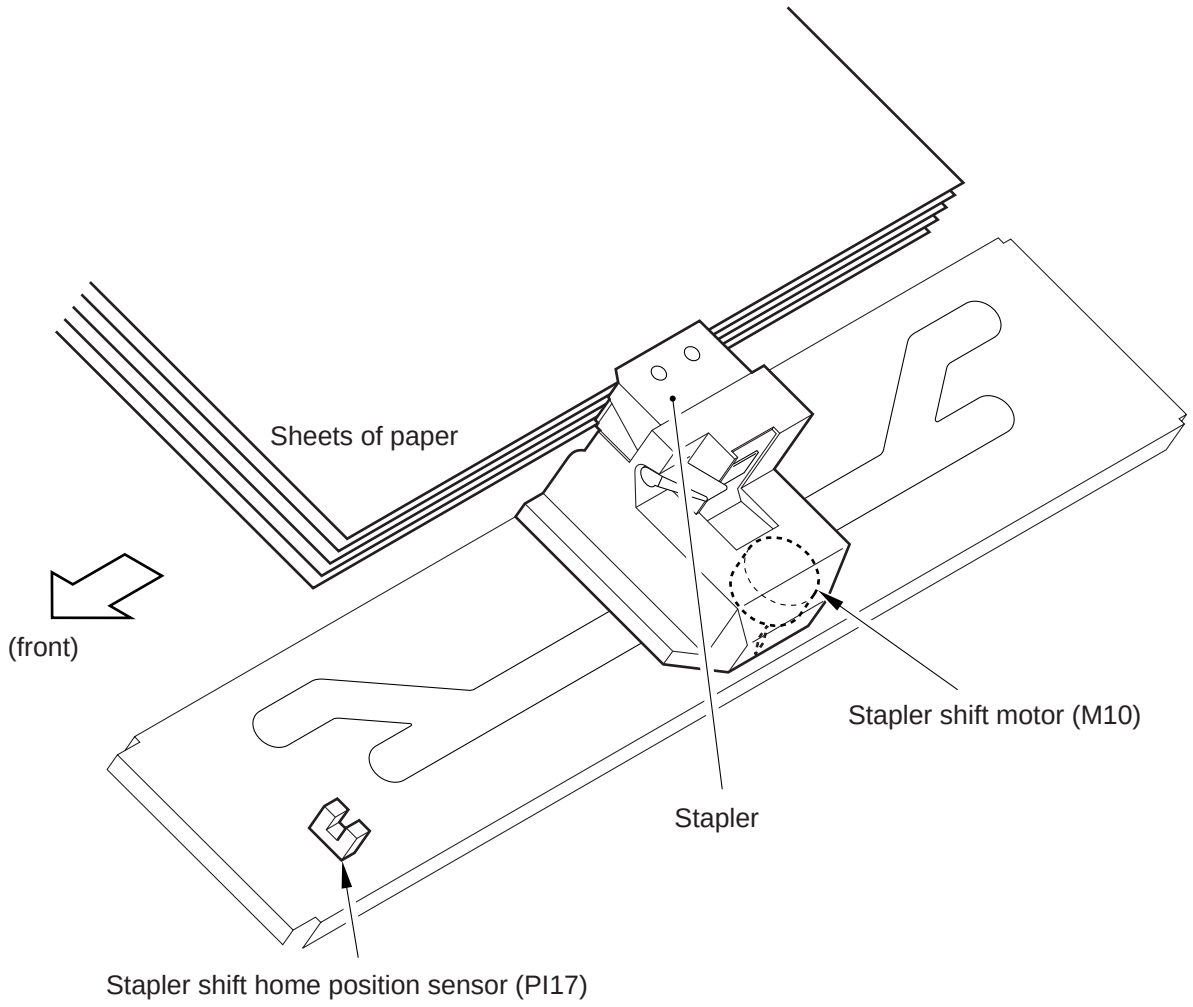

Figure 2-501

 COPYRIGHT © 1999 CANON INC.

2. First Sheet for Stapling

When the trailing edge of the first sheet moves past the sort delivery roller after it has been moved for a specific length, the stack delivery roller rotates in reverse to move the sheet farther. Then, the swing guide moves up, and the stack delivery roller stops. The upward movement of the swing guide is monitored by the swing guide open sensor (PI16).

The knurled belt, working in conjunction with the swing guide and the sort delivery roller, sends the sheet to the processing tray. The swing guide remains up until the last sheet has been deposited. The sheets on the processing tray are detected by the stack delivery sensor (PI8).

The finisher controller PCB drives the aligning plate in keeping with the sheets butting against the stopper to keep the edges of the sheets flush. The front or rear jogging plate is used depending on the side on which the most recent existing stack is found.

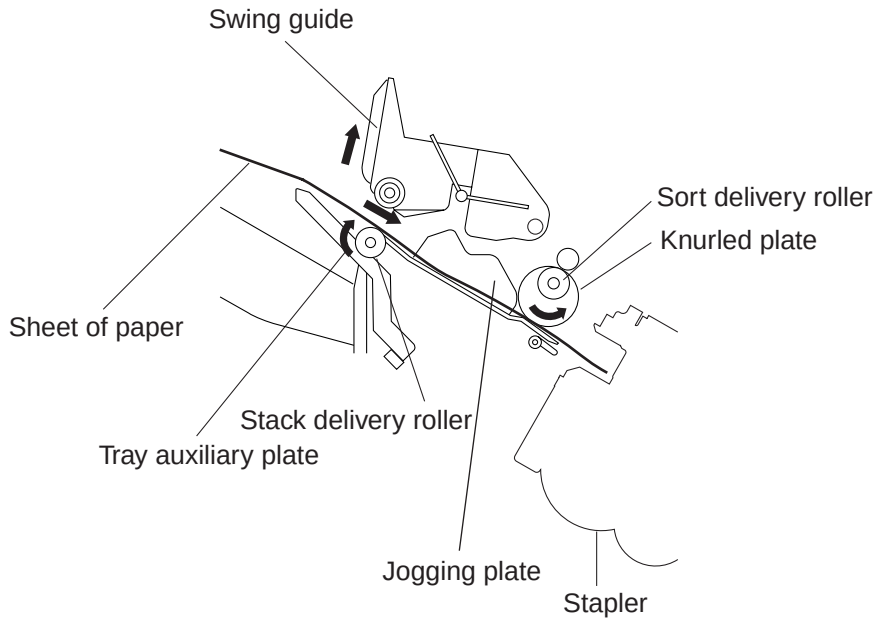

Figure 2-502

3. Second and Subsequent Sheets for Stapling

As soon as the second or subsequent sheet moves past the sort delivery roller, the paddle motor turns on to rotate the paddle. The sheet is pushed by the paddle to the processing tray. The number of paddling operations varies according to the paper size (usually two to three times).

When the sheet reaches the processing tray, the jogging plate operates to put it in order. The direction of jogging is controlled in the same way as jogging the first sheet for stapling.

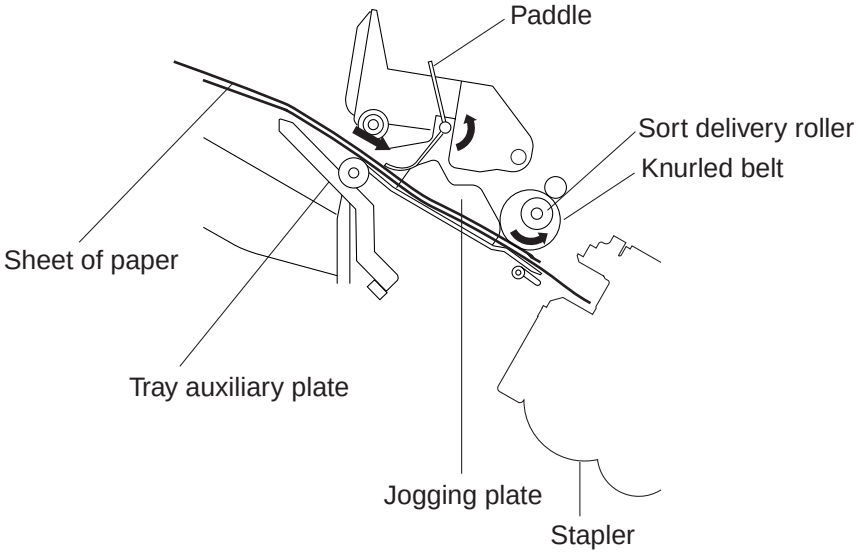

Figure 2-503

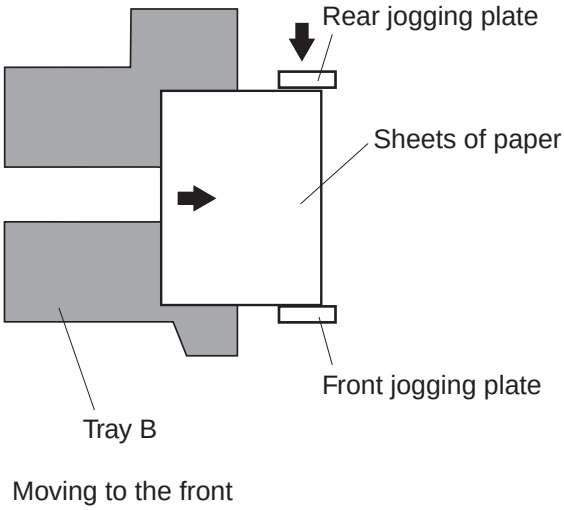

Figure 2-504

 COPYRIGHT © 1999 CANON INC.

4. Last Sheet for Stapling

When jogging operation ends for the last sheet, the front and rear jogging plates operate to hold the sheets; thereafter, the swing motor starts to rotate to move down the swing guide. Then, the finisher controller PCB moves the stapler to suit the selected stapling position for stapling operation.

When stapling ends, the finisher controller drives the jogging motor to move the jogging plate 10 mm away from the sheet. Thereafter, the stack delivery motor (M7) rotates forward to discharge the stack to tray B.

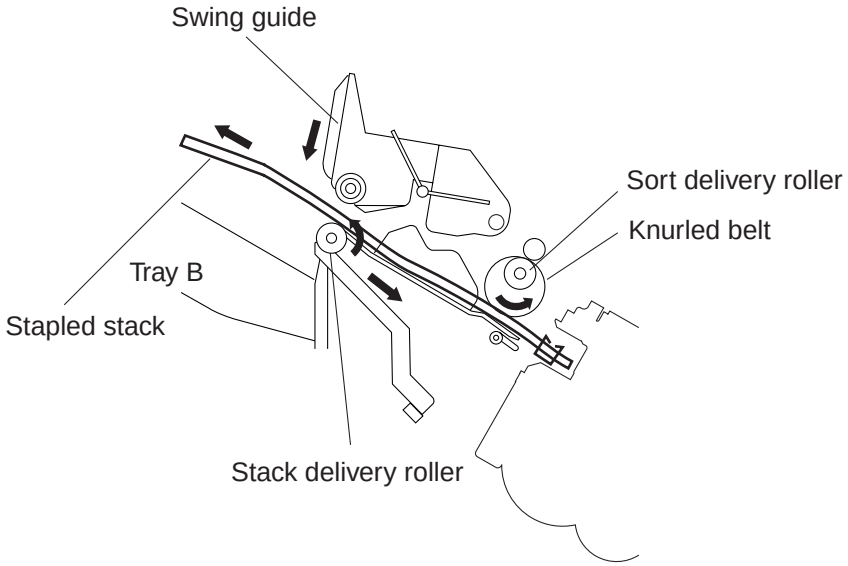

Figure 2-505

Sequence of Operations
(3 sheets, 2-point stapling)

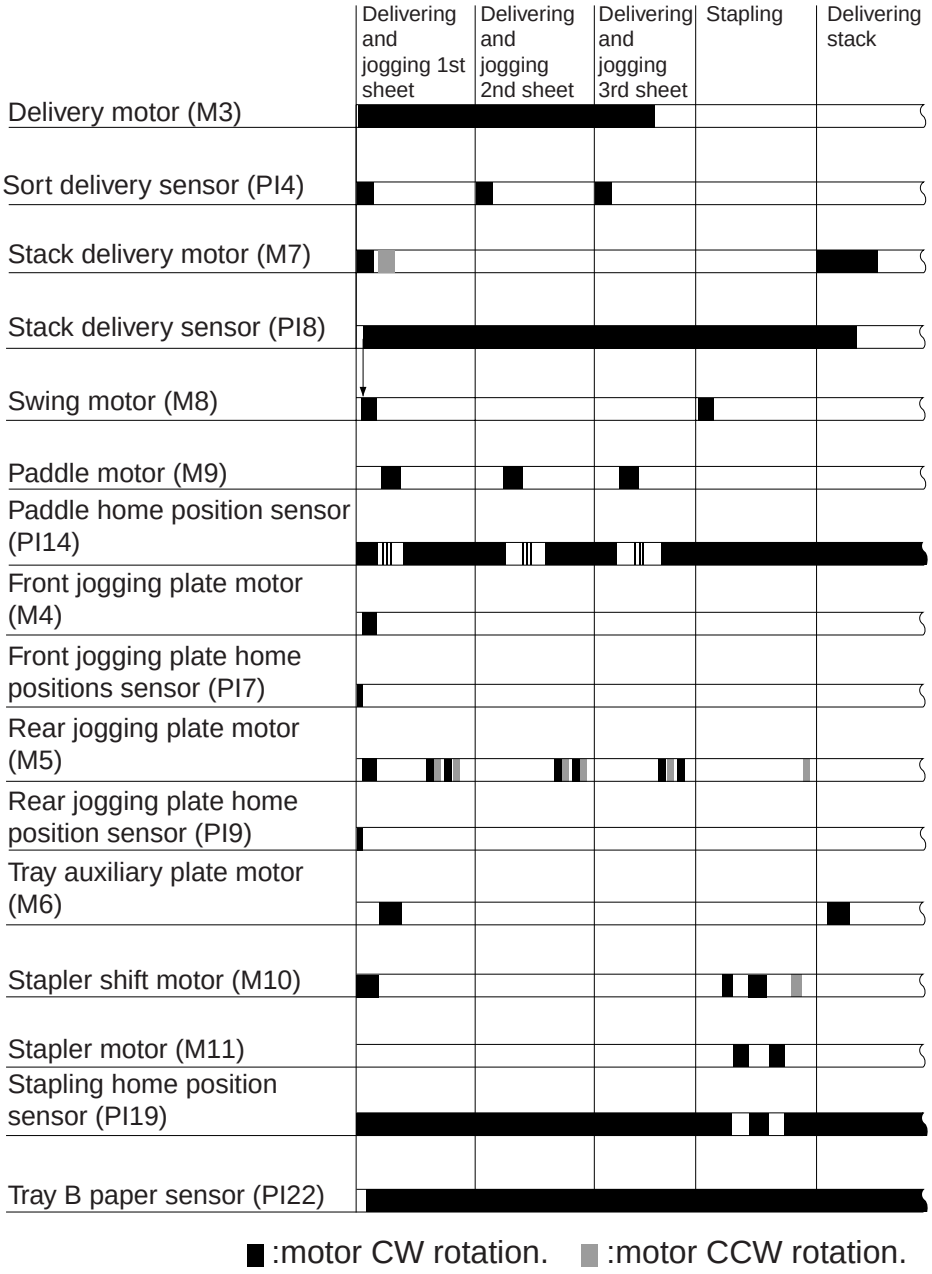

Figure 2-506

 COPYRIGHT © 1999 CANON INC.

5. Stapler

Stapling is performed by the staple motor (M11). For each rotation of the cam, the cam home position is checked by the stapling home positions sensor (PI19). The microprocessor (IC121) of the finisher controller PCB controls the stapler motor, rotating it clockwise or counterclockwise.

When the stapler home position sensor is off, the finisher controller PCB rotates the stapler motor counterclockwise until the sensor turns on to return the stapling cam to its initial state.

The presence of a staple cartridge is checked by the staple cartridge switch (MSW4), while the presence of staples inside the cartridge is checked by the staple switch (MSW3). The staple edging sensor (PI18) is used to find out whether the staples inside the staple cartridge have been edged to the tip of the stapler.

The power line to the stapler motor (M11) is connected and disconnected by the microswitches shown in Table 2-503, serving as a safety measure to prevent injuries.

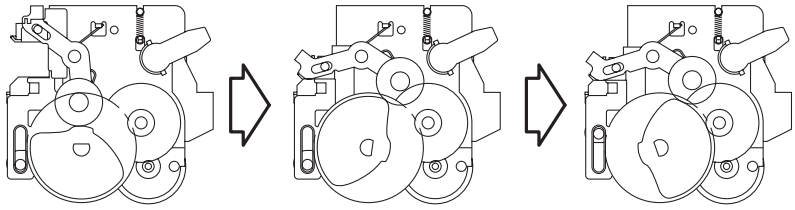

Figure 2-507

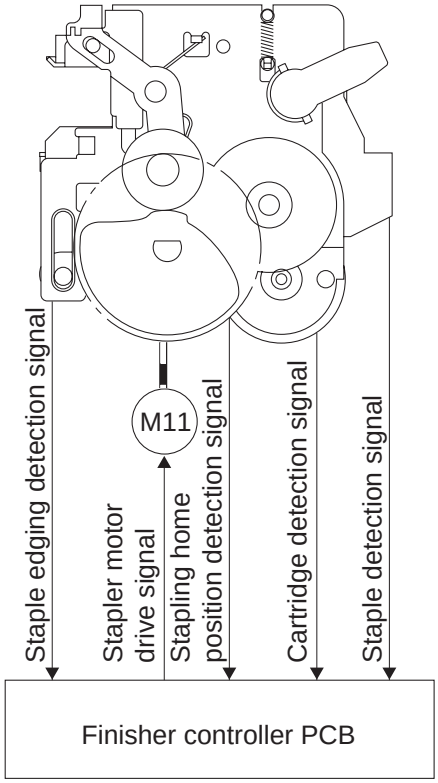

Figure 2-508

Microswitch	Notation	State	Description
Front cover switch	MSW1	N.O.	Connects when the front cover is closed.
Swing guide safety switch	MSW2	N.C.	Connects when the swing guide is closed.
Stapler safety switch (front)	MSW8	N.O.	Connects when the stacking wall (upper) is mounted correctly and the stacking wall actuator is down.
Stapler safety switch (rear)	MSW9	N.O.	

Table 2-503

 COPYRIGHT © 1999 CANON INC. CANON SADDLE FINISHER-D2 REV.0 AUG. 1999 PRINTED IN JAPAN (IMPRIME AU JAPON)

VI . TRAY MOVEMENT

1. Outline

The finisher is equipped with two delivery trays. The upper tray is tray A and the lower tray is tray B. Both trays are designed to move up and down. A shutter is provided to prevent the paper stacked on the tray from entering the delivery area as tray A passes through the swing unit. Tray B is equipped with a sub tray to assist stacking of the folded paper.

2. Trays

The sensors involved in driving trays A and B are shown below.

Tray A

Sensor	Notation	Connector
Tray A lower limit sensor	PI24	J109-3
Tray A locked sensor	PI25	J115B-10
Tray A paper sensor	PI26	J115B-7
Tray A up position sensor	PI28	J115B-4
Tray A down position sensor	PI27	J115A-3

Table 2-601

Function	Motor	Notation
Moves up tray A.	Tray A lifter motor	M13
Cuts the power to the tray A lifter motor.	Tray proximity switch	MSW5

Table 2-602

Tray B

Sensor	Notation	Connector
Tray B lower limit sensor	PI24	J109-3
Tray B locked sensor	PI23	J110B-10
Tray B paper sensor	PI22	J110B-7
Tray B up position sensor	PI20	J110B-4
Tray B down position sensor	PI21	J110A-3

Table 2-603

Function	Motor	Notation
Moves up tray B.	Tray B lifter motor	M12
Raises and lowers sub tray.	Sub tray solenoid	SL4

Table 2-604

COPYRIGHT © 1999 CANON INC.

The tray drive gear assemblies are equipped with a tray A locked sensor (PI25) and tray B locked sensor (PI23). If the sensor state does not change due to a fault in the motor despite the sending of drive signals to tray A lifter motor (M13) or tray B lifter motor (M12), the finisher controller PCB will identify the condition as a tray error and will display an error code on the copier's control panel.

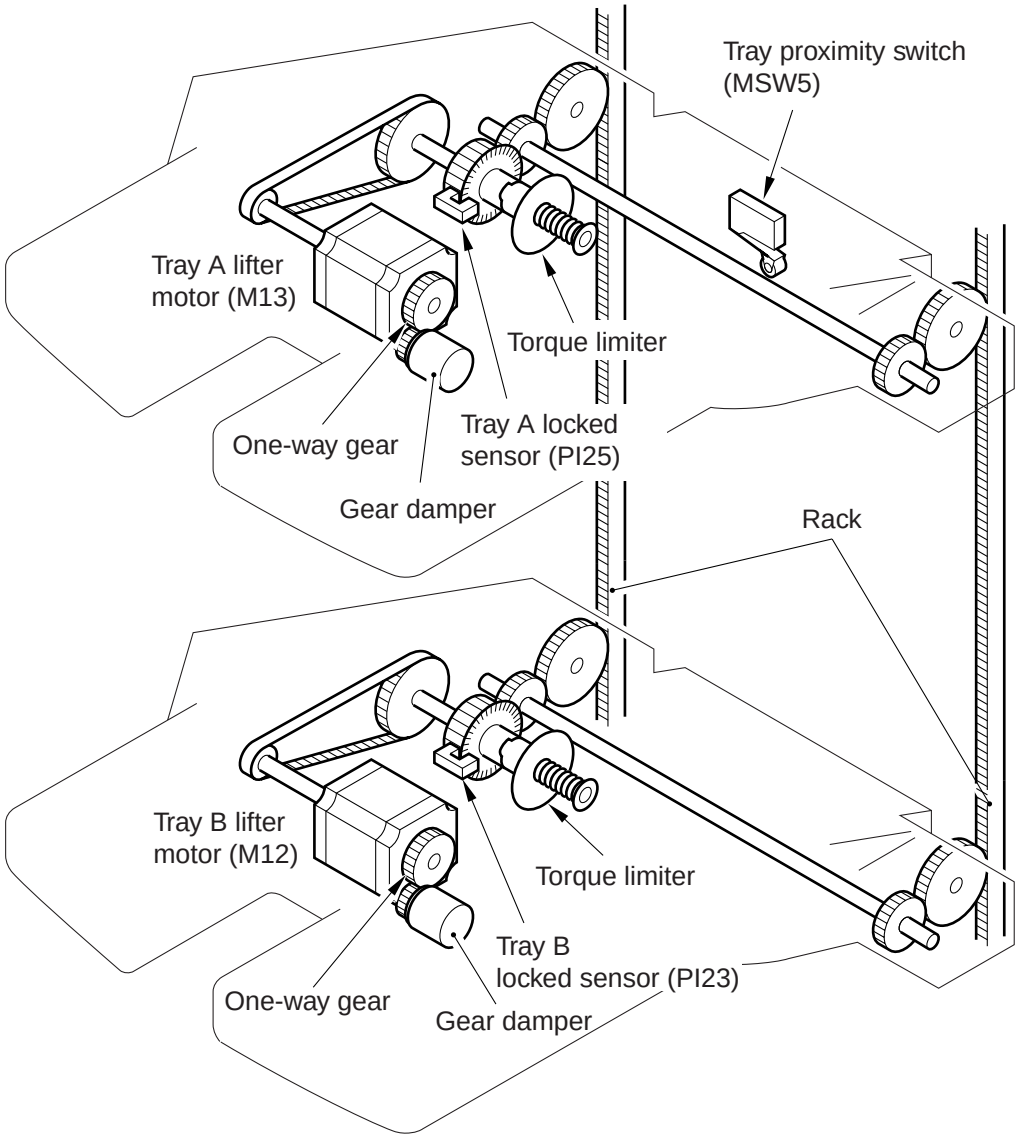

Figure 2-601

 COPYRIGHT © 1999 CANON INC.

3. Sub Tray Control

Folded paper is sometimes delivered to tray B. The thickness of the folded paper differs between the leading edge and the trailing edge. As the folded paper piles up on the tray, the paper fed in next collides with the already stacked paper. To remedy this, the sub tray moves up and raises the trailing edge where the paper is thinner.

The sub tray is raised and lowered by the sub tray solenoid (SL4). The sub tray solenoid is a latch solenoid.

The sub tray is raised when folding is designated on the control panel and the Start key is pressed. It is lowered when copying is finished and the paper is removed from the tray. However, if stapling is designated and the stapled stack contains A3/LDR folded paper, the sub tray is lowered after delivery of the first set.

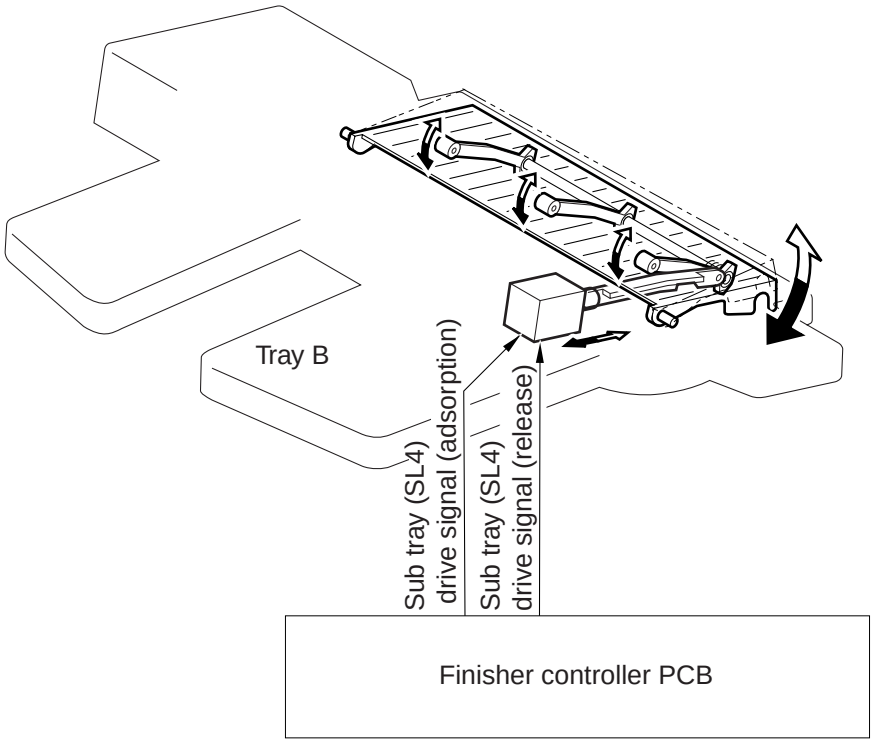

Figure 2-602

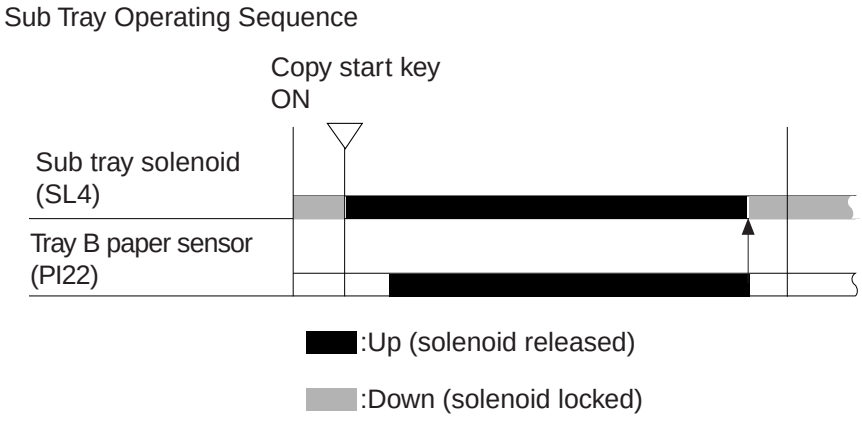

Figure 2-603

4. Shutter Control

When paper is stacked on tray A and the tray passes the delivery area, there is the possibility of the paper entering the delivery area. The delivery area is equipped with a shutter to prevent this happening. When tray A passes the delivery area, the shutter closes. The shutter closes even if there is no paper on the tray.

The shutter is driven by the paddle motor (M9). In forward operation the paddle motor drives the paddle and in reverse it drives the shutter. Opening and closing of the shutter is detected by the shutter home position sensor (PI13).

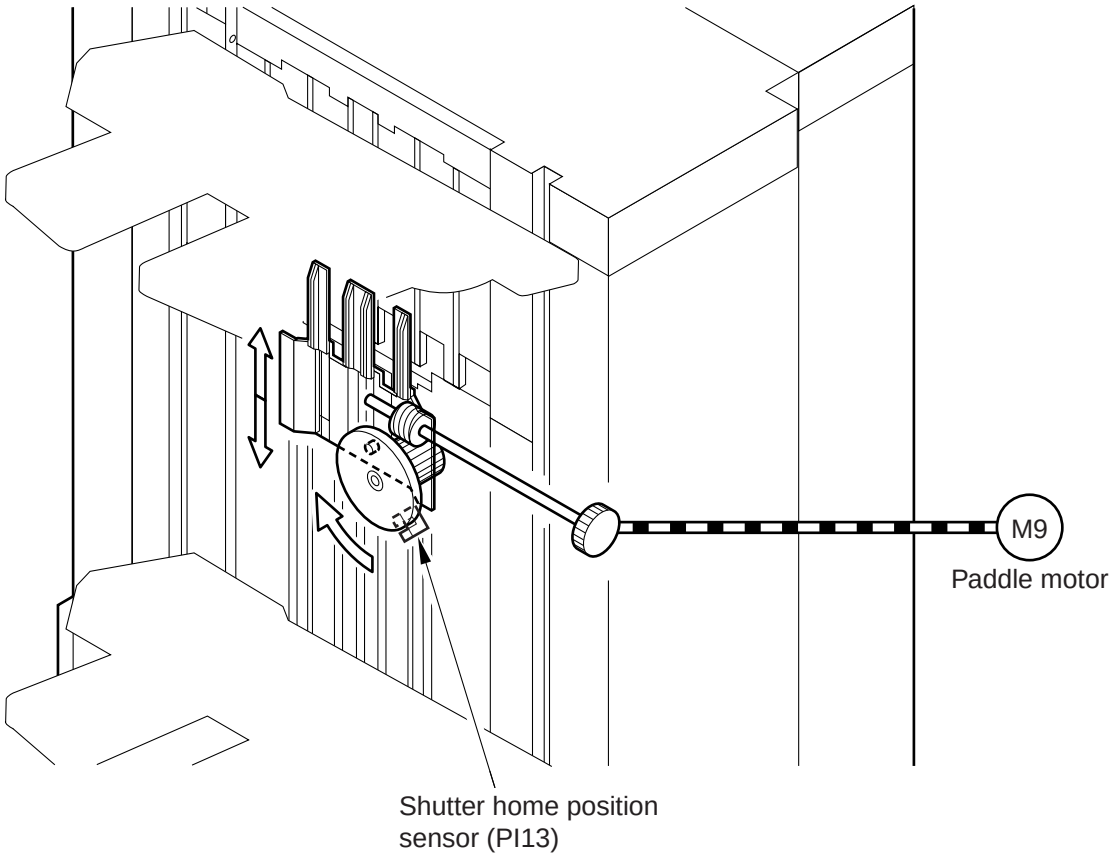

Figure 2-604

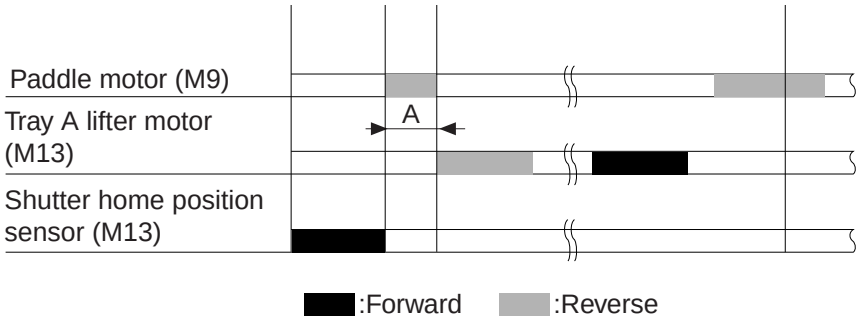

Section A: Fixed pulse shift

Figure 2-605

 COPYRIGHT © 1999 CANON INC.

5. Detecting the Surface of the Paper on the Tray

Both tray A and tray B are equipped with a sensor to detect the surface of the paper on the tray. Tray paper sensor A and tray paper sensor B are light-emitting units, while tray A paper sensor and tray B paper sensor are light-receiving units.

The light-receiving side possesses three cells:

The lower light-receiving cell is used for positioning when no paper is stacked on the tray. The output of the upper two cells changes if either is blocked by paper on the tray. By referring to either of the two light-receiving cells, the machine can identify the presence of paper even if the trailing edge curls upward.

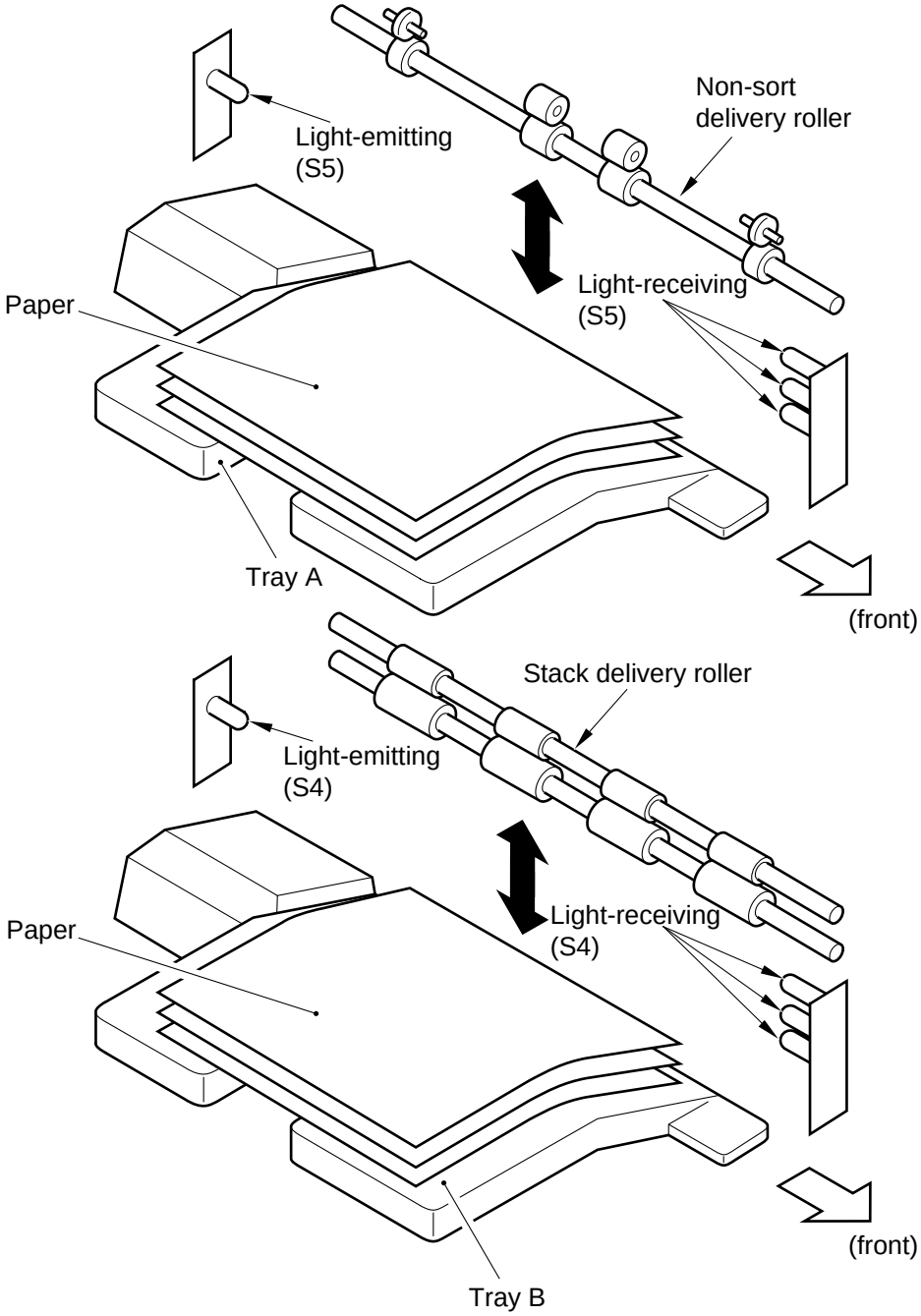

Figure 2-606

6. Controlling Tray A/B Lifter Motor

Figure 2-608 is a block diagram showing how the tray A/B lifter motor (M12/M13) is driven. The tray A/B lifter motor is a 4-phase stepping motor. The motor is turned on and off and the direction of rotation is changed by switching between pulse signals A, B, A* and B* and by changing the output timing of the four pulse signals. To hold the motor, the level of STTRYMHLD is switched to a hold level.

The finisher controller PCB monitors the state of tray A/B locked sensor (PI25, PI23) when pulse signals are generated. The finisher controller PCB assumes that motor rotation is normal if the sensor repeatedly turns on and off at specific intervals while pulses are being generated. Otherwise, it will identify an error in the motor or the drive mechanism, and will display an error code on the copier's control panel.

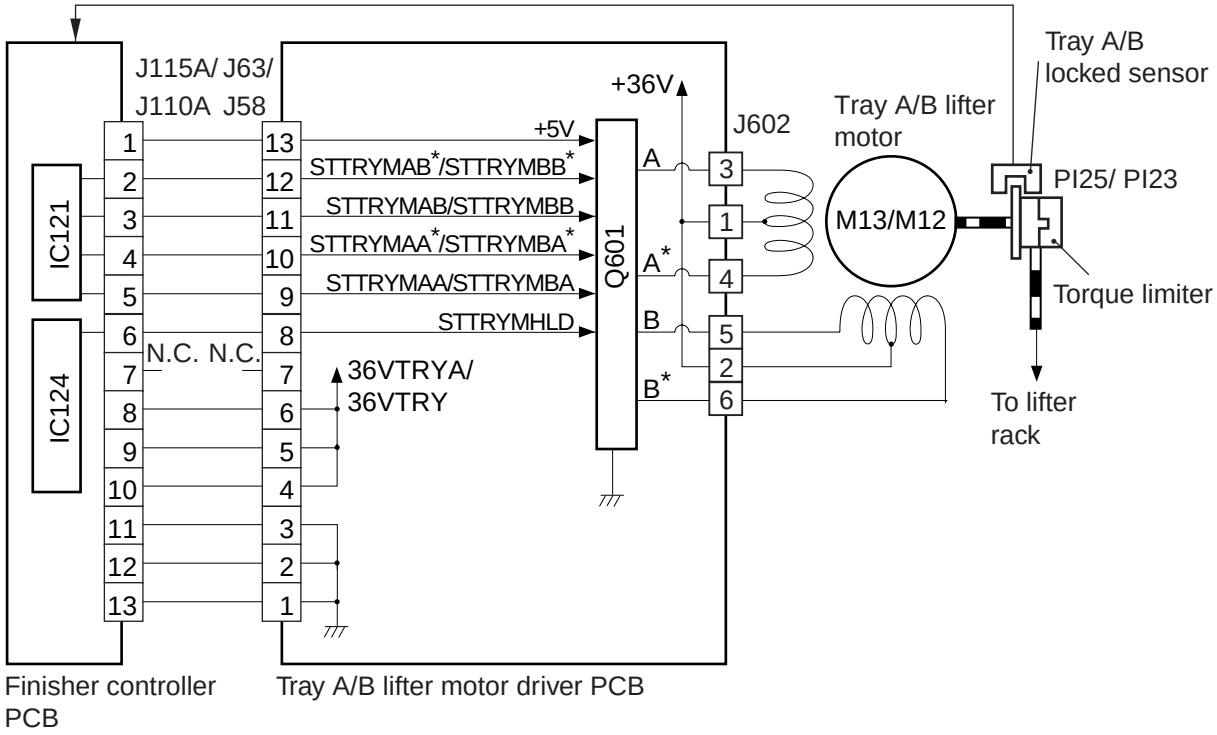

Figure 2-607

 COPYRIGHT © 1999 CANON INC.

7. Power Supply for Tray Motor

The route of the power supply for the tray motor is shown below.

Power is supplied to tray A lifter motor driver PCB. 36VTRYA is switched on and off by detecting the connection of SW971-2 and tray A paper sensor (PI26). If input from either of these is interrupted, the CPU detects that tray A is a fixed tray. Input is also interrupted by the tray proximity switch (MSW5).

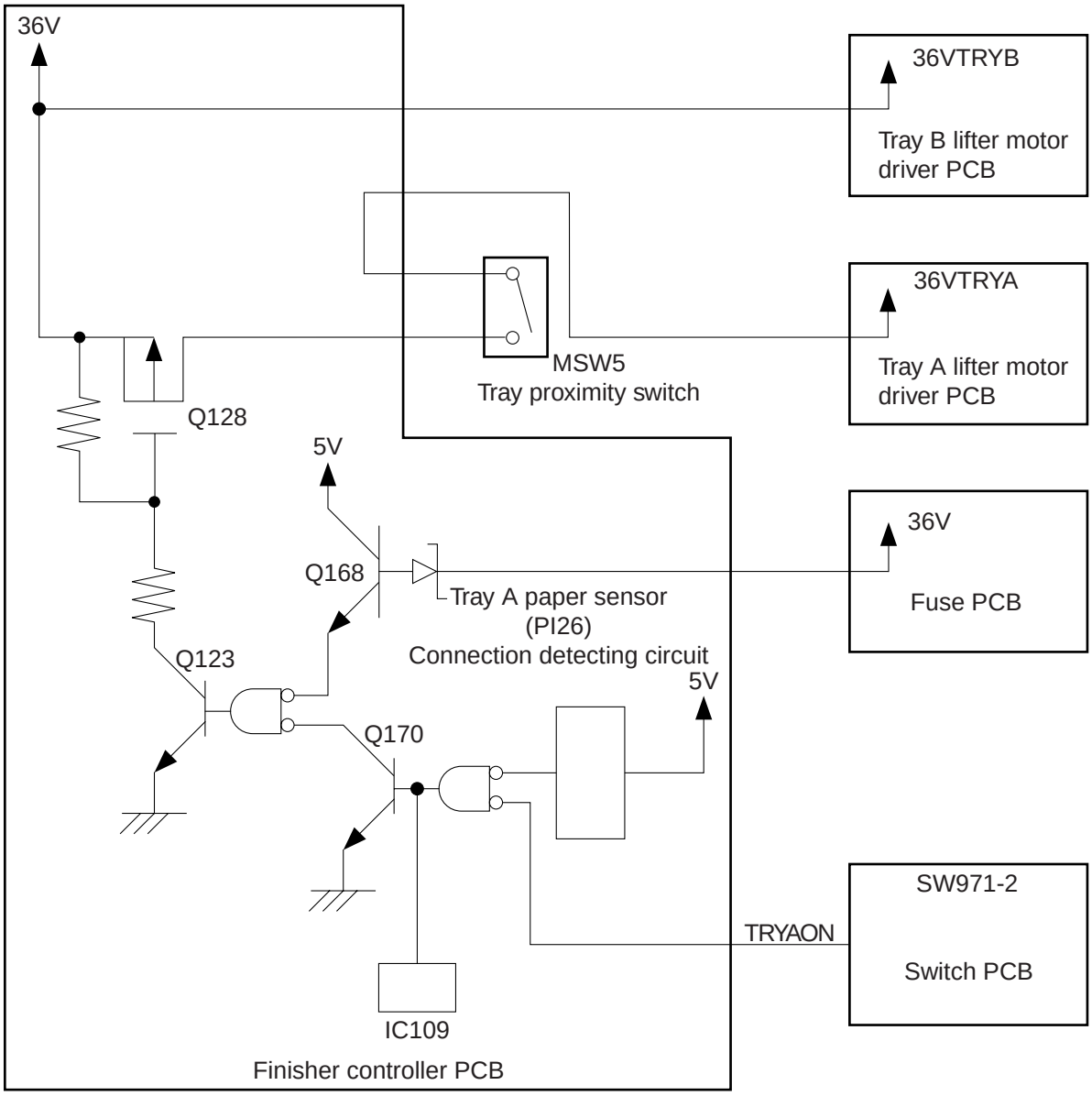

Figure 2-608

VII . PUNCH UNIT

1. Outline

The punch unit is located in the feed path and it punches successive holes as the paper passes through. When the trailing edge of the paper reaches the punch unit, the punch rollers rotate once and punch a hole in the trailing edge of the paper. The punch rollers consist of a die and punch and they are not involved in feeding of the paper. Feeding is carried out by the rollers located at the front and rear of the punch unit. Side registration for hole punching is performed by the punch unit which moves sideways for each sheet of paper. Waste generated by hole punching is carried to the waste container by the punch waste feedscrew and collected there.

2. Punching Operation

The punch rollers are rotated by the punch rotating motor (M18). The punch rotation home position sensor (PI44) and punching completed sensor (PI47) detect the position of the punch rollers. In order to detect the timing for rotating the punch rollers, the trailing edge of the paper must be detected. The trailing edge of the paper is detected by the inlet path sensor (S1). The punch rotating motor is a 4-phase stepping motor. The punch rotation home position sensor and punching completed sensor are photointerrupters and the inlet path sensor is a reflector-type sensor. The punching completed sensor comes on before the punch and die of the punch rollers coincide on the feed path, and goes off when the hole has been punched and the punch and die separate. The finisher controller ensures that side registration is not carried out by the punch unit while the sensor is on.

 COPYRIGHT © 1999 CANON INC. CANON SADDLE FINISHER-D2 REV.0 AUG. 1999 PRINTED IN JAPAN (IMPRIME AU JAPON)

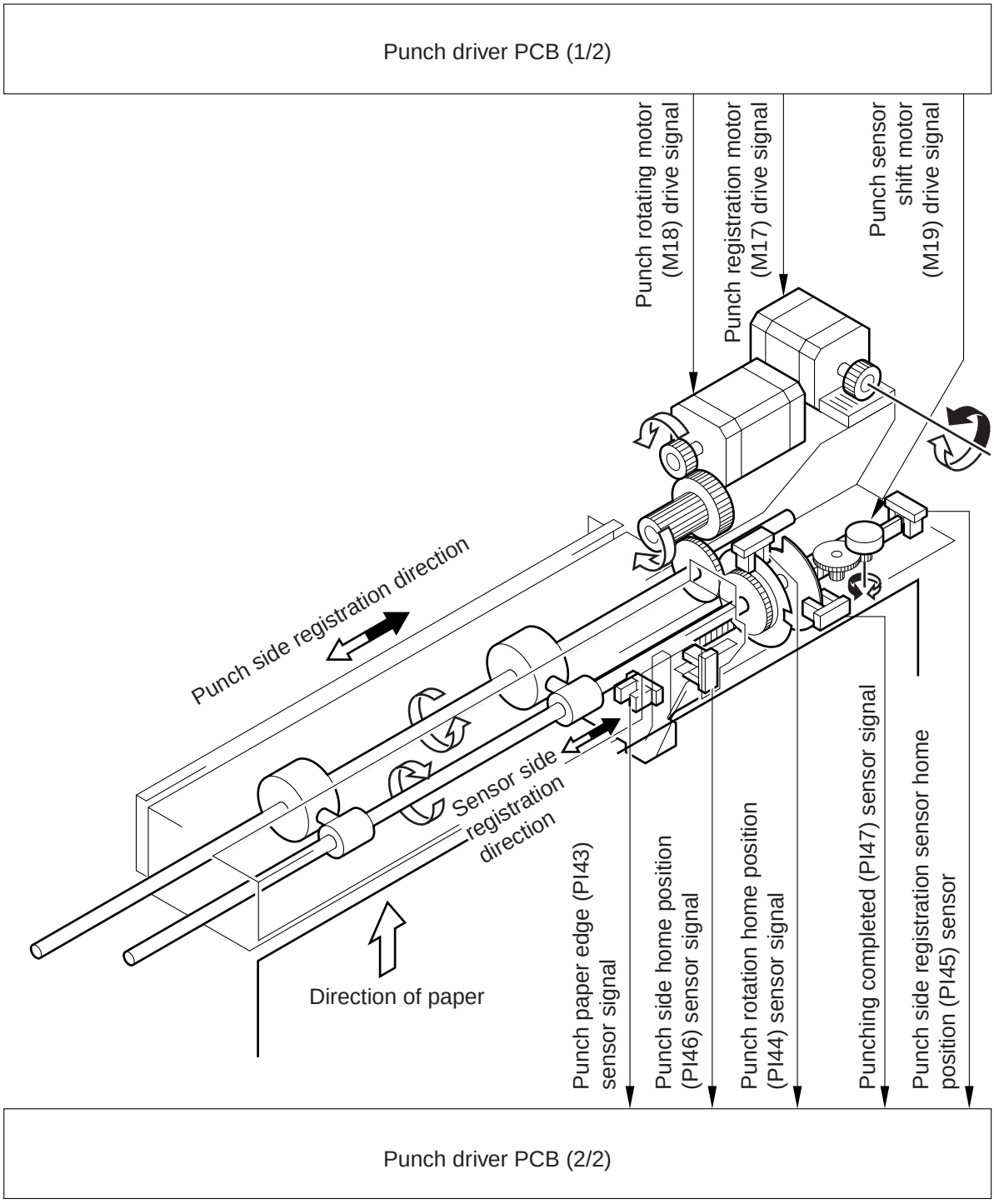

Figure 2-701a (230V)

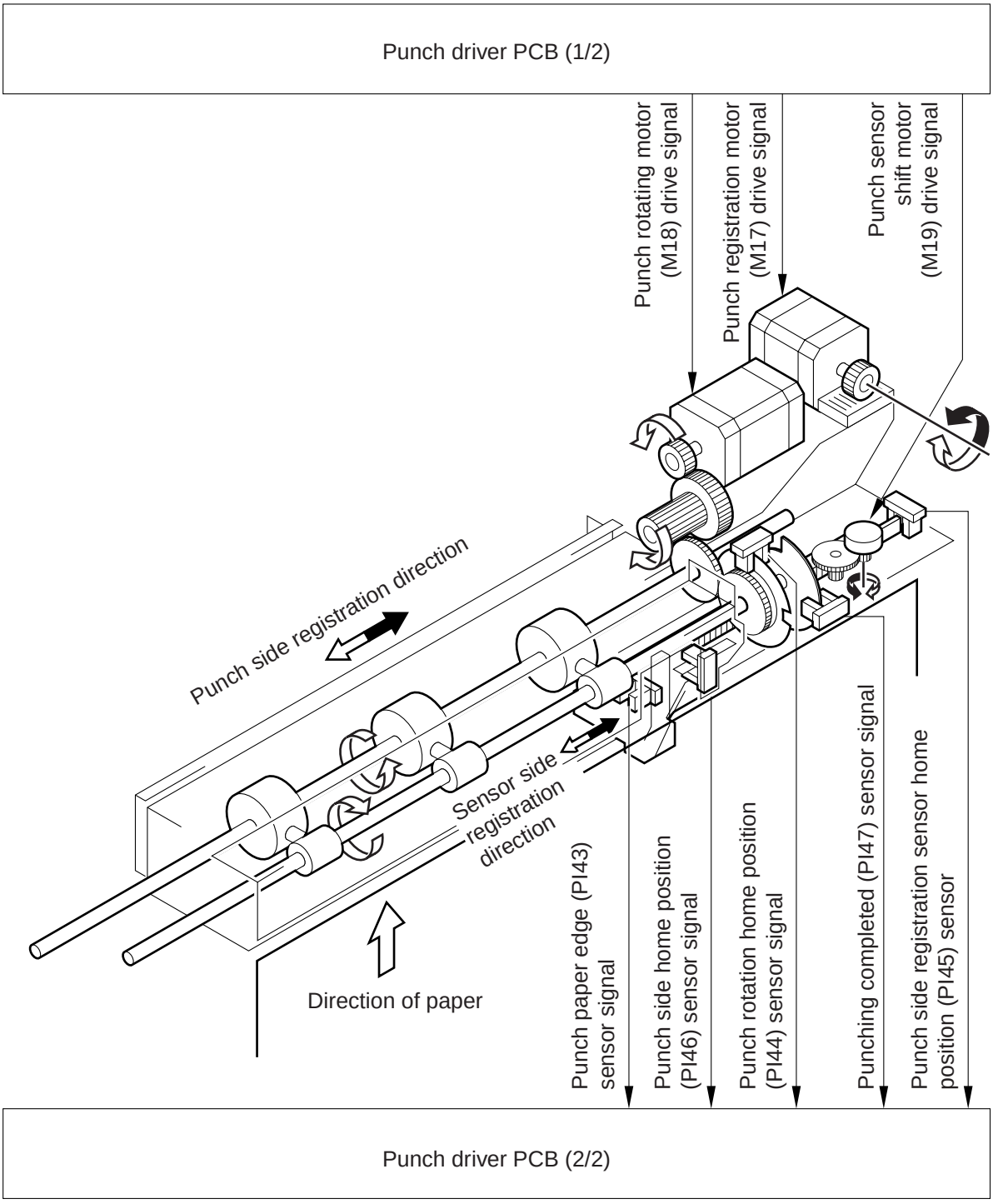

Figure 2-701b (115V)

 COPYRIGHT © 1999 CANON INC.

3. Outline of Punching Operation

The sequence of punching operation is shown below.

1. The paper is fed in by the copier or inserter. At this time the punch rollers are on standby in the home position.

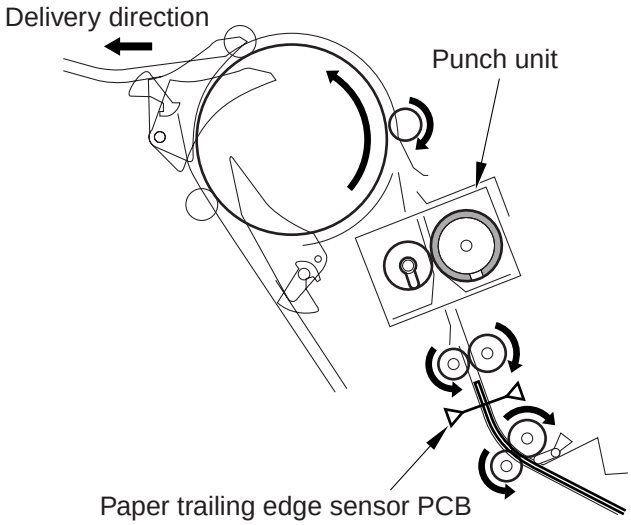

Figure 2-702

2. The leading edge of the paper enters between the punch rollers. The punch rollers are still stationary. The paper is fed in by the rollers at the front and rear of the punch unit.

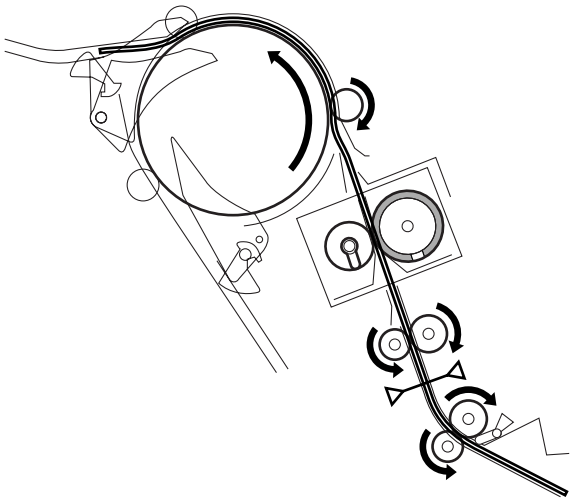

Figure 2-703

3. When a fixed time has elapsed after the trailing edge of the paper has passed S1, the punch rollers start to rotate. The feed rollers feed the paper in successively at a fixed speed.

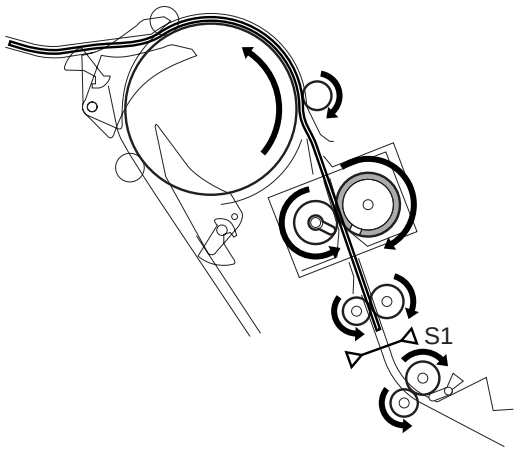

Figure 2-704

4. The punches and dies on the punch rollers coincide at the designated position on the trailing edge of the paper. This results in holes being punched in the paper.

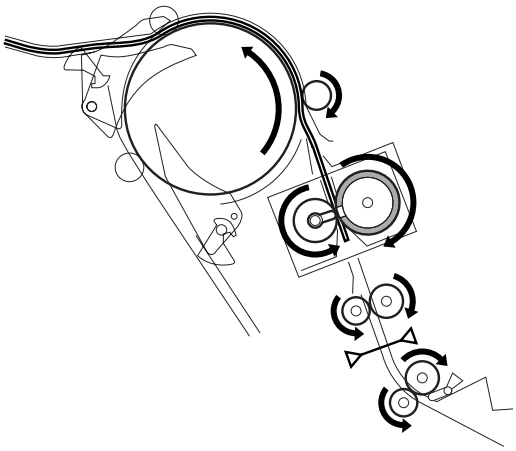

Figure 2-705

5. After the punch rollers have rotated, they stop at the home position, ready for the next punching. After the hole has been punched, the paper is fed on successively by the buffer rollers.

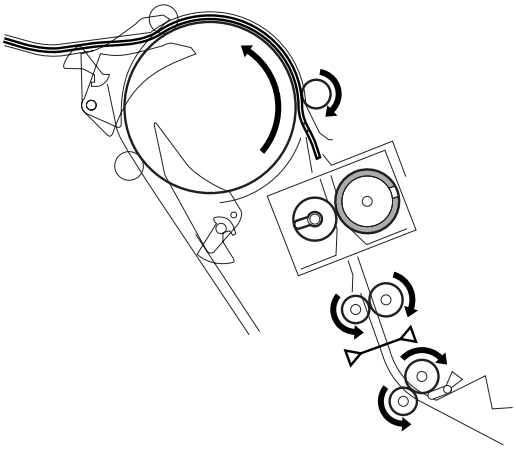

Figure 2-706

 COPYRIGHT © 1999 CANON INC.

4. Side Registration Operation

Side registration of the punch unit is driven by the punch registration motor (M17). The side registration home position of the punch unit is detected by the punch home position sensor (PI46). The punch unit shifts into position according to the edge of the paper that has been detected by the punch paper edge sensor (PI43) and punch paper edge sensor home position sensor (PI45).

1. A signal concerning paper size is sent from the copier. The punch paper edge sensor moves into position according to the size of the paper.

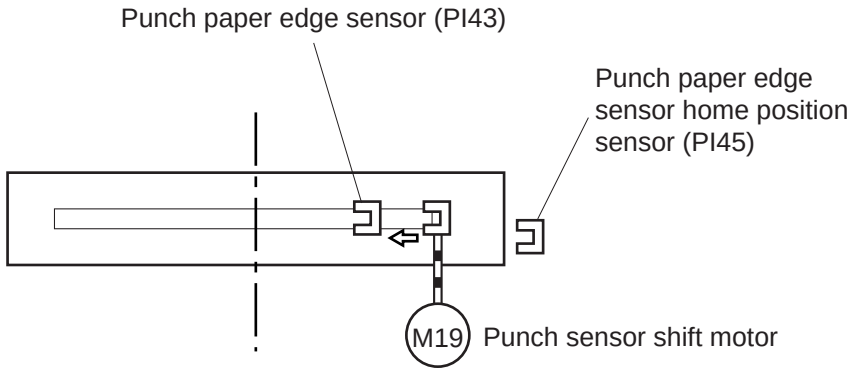

Figure 2-707

2. The paper is fed into the punch unit. When the remaining length of paper from the punch unit is equivalent to size B5 (182mm), the punch registration motor starts to rotate forward.

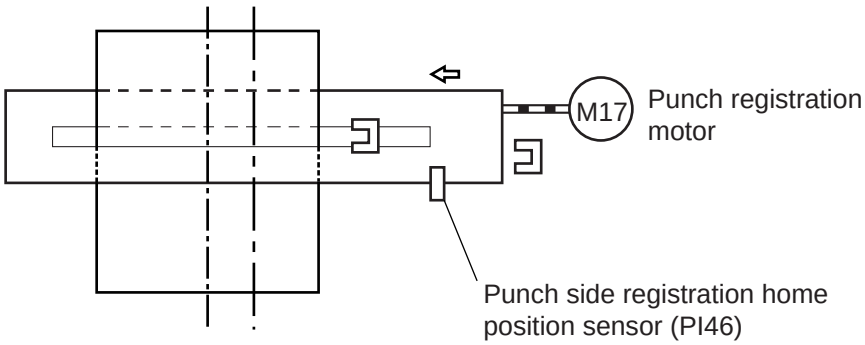

Figure 2-708

3. When the punch paper edge sensor comes on, the punch registration motor stops. As a result, the center of the punch unit coincides with the center of the paper (side registration direction).

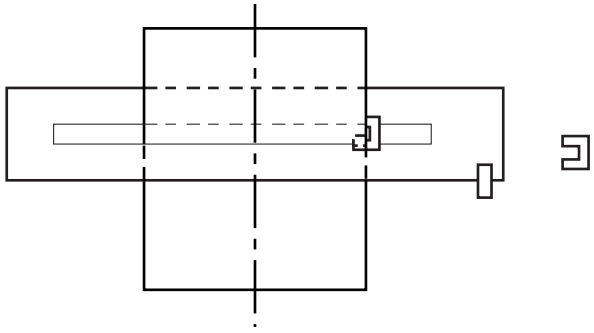

Figure 2-709

COPYRIGHT © 1999 CANON INC.

4. Holes are punched in the paper by the punch rotating motor (M18).

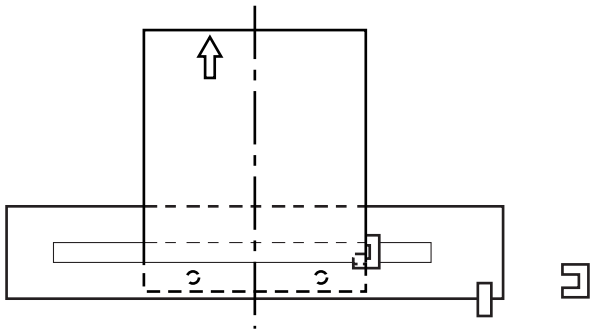

Figure 2-710

5. When the punching completed sensor goes off, the punch registration motor goes into reverse and the punch unit returns to its home position.

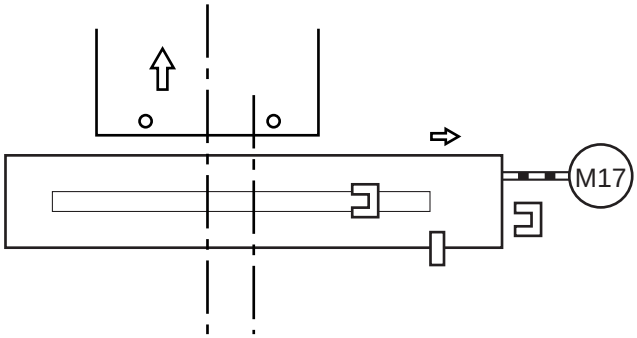

Figure 2-711

6. If paper is fed in continuously for punching, steps 2 to 5 are repeated. Even when the last sheet for punching is reached, the punch paper edge sensor stops at the standby position.

5. Paper Trailing Edge Detection Control

The trailing edge of the paper is detected by the inlet path sensor (S1). The sensor consists of a light-emitting cell and a light-receiving cell. The light from the light-emitting cell is refracted by the prism and returns to the light-receiving cell. While the paper passes the sensor, as the light from the light-emitting cell does not reach the light-receiving cell, the finisher controller PCB assumes that paper is present.

With paper that has a high transmission rate such as OHP paper, light from the light-emitting cell reaches the light-receiving cell even while the paper is passing the sensor and the sensor cannot judge that paper is present. Therefore, even if punching mode has been designated on the control panel, no punching takes place when the paper has a high transmission rate.

The voltage level of the light-receiving cell may be reduced by paper powder becoming attached to the cell. However, even at reduced level, light emission is sufficient.

 COPYRIGHT © 1999 CANON INC.

6. Punch Waste Feed Control

Punch waste is conveyed by rotation of the punch screw by the punch waste feed motor (M16). The punch waste feed sensor (PI54) monitors the rotation of the punch screw. Feed timing is from when the registration signal for the first punched sheet is sent from the copier, until delivery of the punched last sheet. The encoder for the punch waste feed sensor (PI54) rotates while the punch waste feed motor (M16) is running. If there is no change in the state of the sensor for longer than a fixed time while the motor is rotating, the finisher controller PCB assumes faulty punch waste feeding and displays an error code on the copier's control panel.

7. Punch Waste "Full" Sensor

The punch waste "full" detection mechanism consists of a punch waste sensor located on the side of the punch waste container and prisms located inside the punch waste container. The punch waste container set sensor (PI53) detects when the punch waste container has been set in the finisher.

The punch waste sensor PCB (S6) consists of two light-emitting cells for warning level detection and full level detection, and two light-receiving cells.

When the punch waste set sensor checks the container, the LED for warning level detection emits light. If the punch waste has not reached the warning level, the light-receiving cell comes on and the finisher controller PCB assumes that the warning level has not been reached. If waste has accumulated in the container and it reaches the warning level, the light from the LED for warning level detection is interrupted and the finisher controller PCB assumes that the warning level has been reached.

When the warning level has been reached, the LED for full level detection comes on instead. If light emitted from the LED for full level detection reaches the light-receiving cell, the finisher controller PCB assumes that the full level has not been reached. If waste has accumulated in the container and it reaches the full level, the light from the LED for full level detection is interrupted and the finisher controller PCB assumed that the full level has been reached.

Warning level : The punch continues operation until a full level is detected. New punching operation cannot be commenced.

Full level : The punch suspends activity mid-operation. Punching can be restarted when the punch waste has been disposed of and the waste container has been set in place.

COPYRIGHT © 1999 CANON INC.

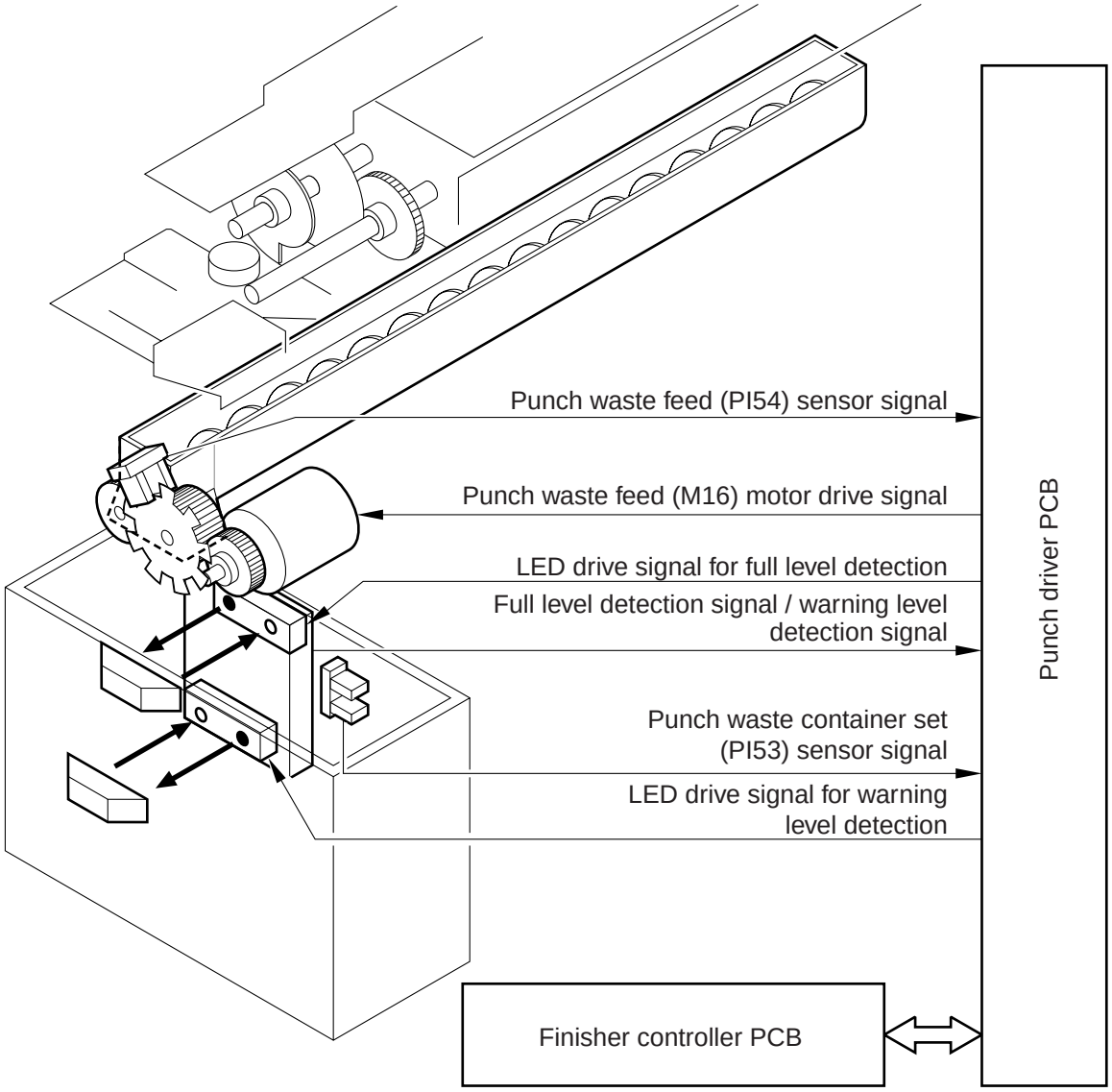

Figure 2-712

 COPYRIGHT © 1999 CANON INC. CANON SADDLE FINISHER-D2 REV.0 AUG. 1999 PRINTED IN JAPAN (IMPRIME AU JAPON)

Operation sequence for punch notation / side registration (2 sheets)

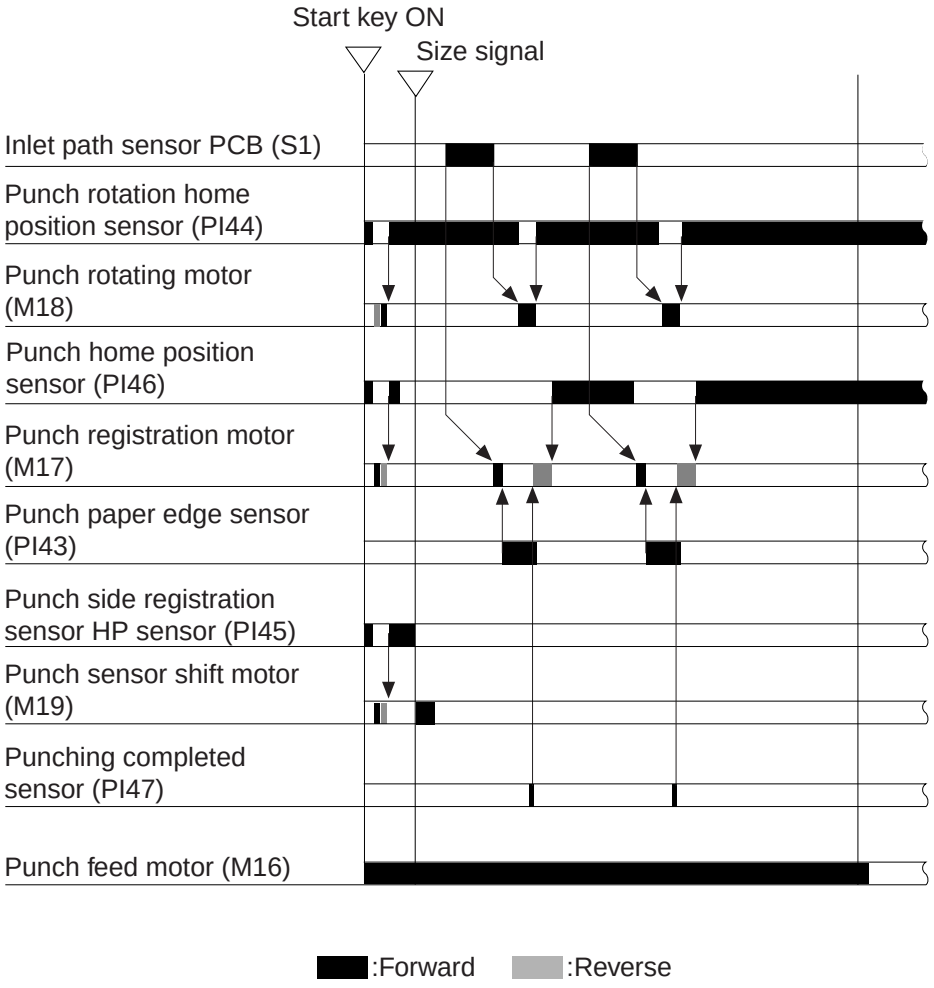

Figure 2-713

8. Punch Registration Motor (M17) / Punch Rotating Motor (M18) Drive Control

An outline of the punch registration motor (M17) and punch rotating motor (M18) drive circuit is shown in Figure 2-714. Both motors are 4-phase stepping motors. Drive pulses A and B are sent by IC121 on the finisher controller PCB.

As for the current changeover signal to change the current level during motor drive and hold, PNHREGREF is output for the punch registration motor and PNHMRF for the punch rotating motor.

The respective motors have two stages of current level for drive and one for hold.

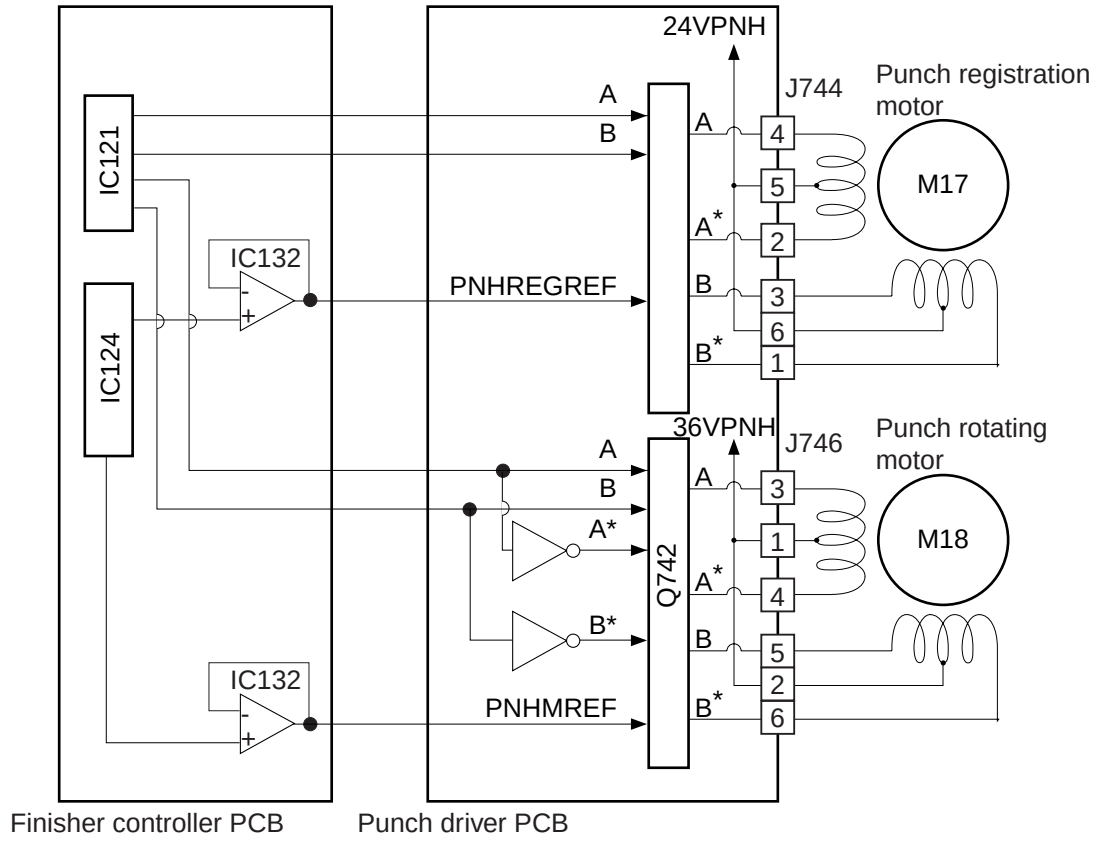

Figure 2-714

 COPYRIGHT © 1999 CANON INC.

9. Power Supply for Punching

The power supply route for the punch is shown below. 36VPNH and 24VPNH supplied to the punch driver PCB are turned on and off by the PNHON signal and PFANON signal from the finisher controller PCB. The PNHON signal is turned on and off by the user by operation of SW971-1 on the switch PCB. PFANON comes on when the fan is running and it starts up 36VPNH and 24VPNH.

The 5V power supply for sensor drive is turned on and off by the PNHON signal.

36VPNH, 24VPNH and 5V are supplied from the punch driver PCB to each load.

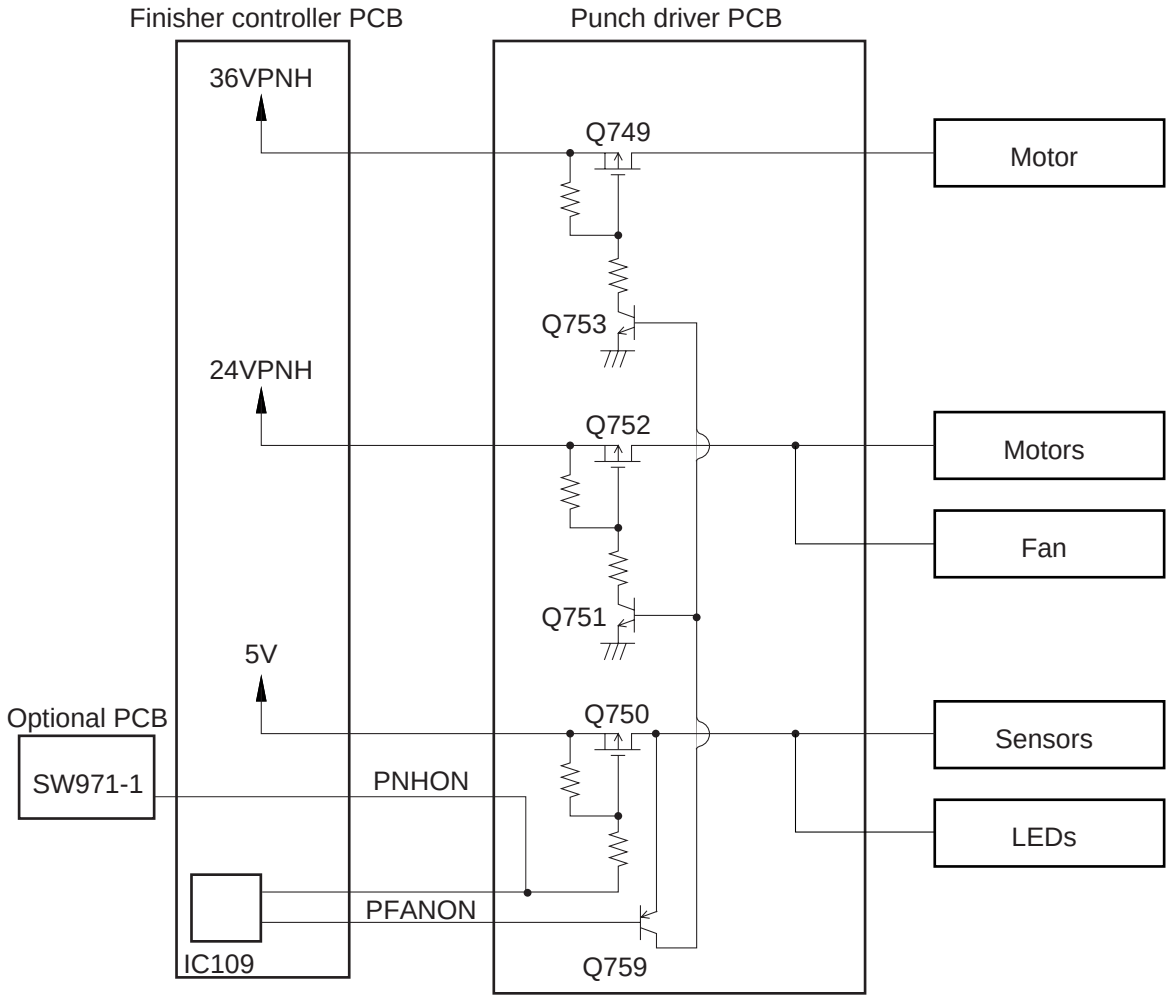

Figure 2-715

VIII . FANS

1. Outline

The finisher is equipped with the two fans shown in Table 2-801.

The power supply fan rotates when the drive signal (FANON) from the finisher controller PCB becomes “0”. While in rotation, the fan sends the FANSTP signal to the finisher controller PCB. If the fan is not rotating, the signal becomes “1”, causing the finisher controller PCB to assume that the fan has stopped and to display an error code on the copier’s control panel.

The punch fan rotates when the drive signal (PFANON) from the finisher controller PCB becomes “0”. While in rotation, the fan sends the PFANSTP signal to the finisher controller PCB. If the fan is not rotating, the signal becomes “1”, causing the finisher controller PCB to assume that the fan has stopped and to display an error code on the copier’s control panel.

Figure 2-802 shows the location of the fans and the flow of air. Figure 2-801 shows the timing at which the fans turn on.

No.	Name	Air	Filter	Purpose
FM1	Power supply fan	Blowing	None	Cools the switching regulator
FM2	Punch fan	Blowing	None	Cools the punch unit

Table 2-801

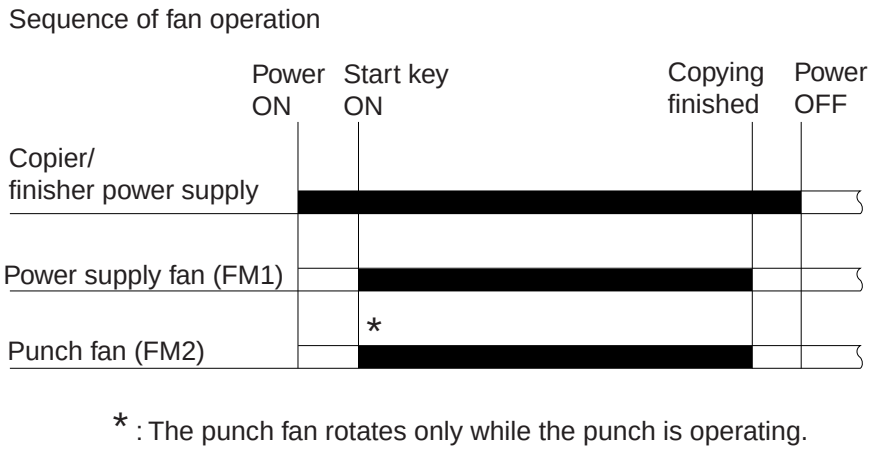

Figure 2-801

 COPYRIGHT © 1999 CANON INC. CANON SADDLE FINISHER-D2 REV.0 AUG. 1999 PRINTED IN JAPAN (IMPRIME AU JAPON)

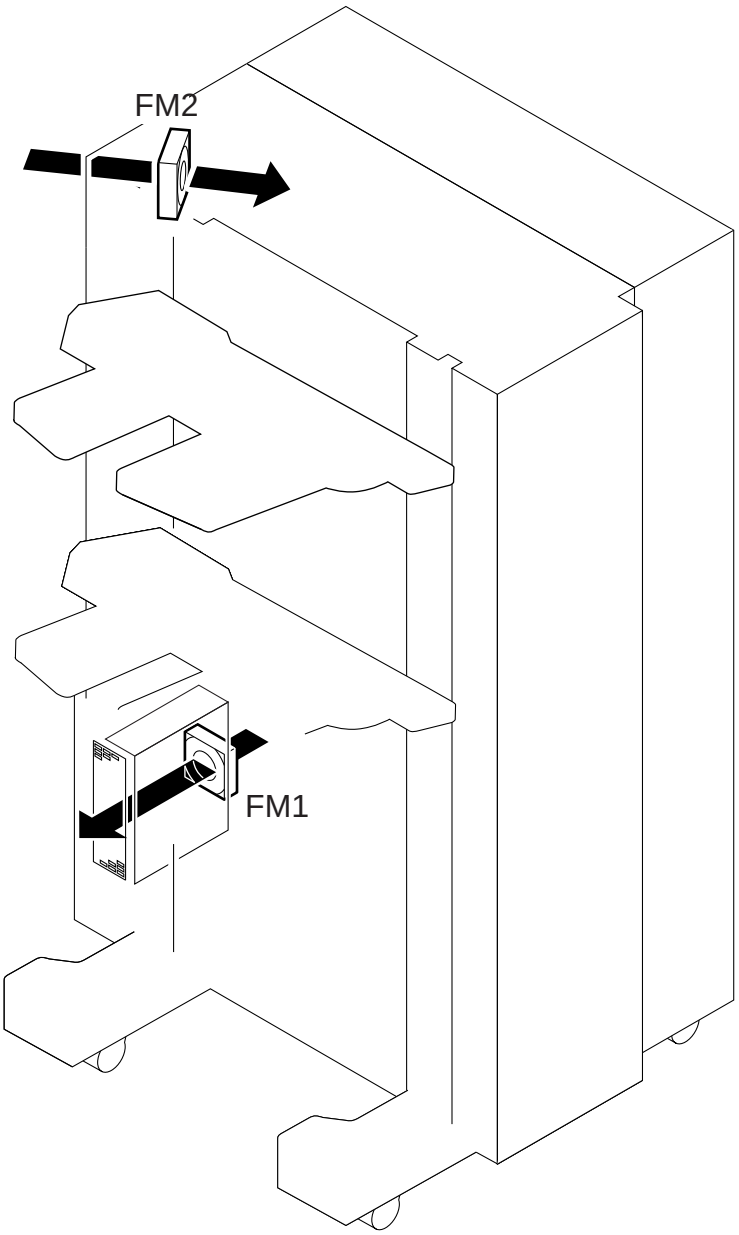

Figure 2-802

IX . POWER SUPPLY

1. AC Power Supply

AC power comes from an external power supply through the machine's AC fuse PCB to reach the switching regulator (SWR1). The switching regulator is turned on and off by the drive signal (REMTSWH) from the copier. When on, the switching regulator supplies the fuse PCB with 36V, 24V and 5V DC power.

2. DC Power Supply

The 36V, 24V and 5V power supplies are sent from the switching regulator to the finisher controller PCB, saddle stitcher controller PCB and punch driver PCB by way of the fuse PCB (PCB6).

a. 36V Power Supply

i. Finisher Controller PCB

The 36V power supply is sent from the switching regulator to the finisher controller PCB through the following two microswitches.

Notation	Switch
MSW6	Tray safety switch (front)
MSW7	Tray safety switch (rear)

Table 2-901

Power is sent to tray A lifter motor (M13) by way of the tray proximity switch (MSW5).

ii. Punch Driver PCB

The 36V power supply for the punch rotating motor (M18) is sent from the switching regulator to the punch driver PCB by way of the fuse PCB.

b. 24V Power Supply

i. Finisher Controller PCB

The power supply for the stapler motor (M11) and stapler shift motor (M10) is sent to the finisher controller PCB by the switching regulator through the following four microswitches.

If the folder is attached, power is supplied to the inlet motor (M1) and buffer motor (M2) through the door switch (MSW10) on the folder.

 COPYRIGHT © 1999 CANON INC.

Notation	Switch
MSW1	Front cover switch
MSW8	Stapling safety switch (rear)
MSW2	Swing guide safety switch
MSW9	Stapling safety switch (front)

Table 2-902

c. 5V Power Supply

Power is sent directly by the switching regulator.

Reference:

The output accuracy of each DC power supply is as follows:
36V: +11%, -5.5%
24V: ± 5%
5V: 5.2V ± 5%
However, this applies when the AC input is 85 to 132V (100/115V area) or 187 to 264V (230V area).

3. Protective Functions

a. AC Fuse PCB

The AC fuse PCB is equipped with two fuses (FU731, FU733) which cut off the circuit in response to an overcurrent.

The PCB is also provided with a spare fuse (FU732).

b. Switching Regulator

The switching regulator is equipped with a fuse (F001) which blows in response to an overcurrent.

COPYRIGHT © 1999 CANON INC.

c. Fuse PCB

The fuse PCB and DC controller PCB are equipped with the fuses shown in Table 2-903 which blow in response to an overcurrent in each power supply system. These fuses must not be replaced with fuses purchased on the market.

Power supply system	Fuse PCB	Finisher controller PCB
24VDLV	FU711	-
24VINS	FU711	FU103
24VZFLD	FU714, FU717	FU101
24VSTP	FU714	-
24VF	FU718	-
24VPNH	FU713	-
36VPNH	FU712	-
36VTRYA	-	FU105
36VTRYB	-	FU104
5V	FU716	-

Table 2-903

 COPYRIGHT © 1999 CANON INC.

4. Low Power Switch

The finisher controller PCB is equipped with a power-saving switch (Q185) which cuts off the 24VDLV and 24VU power supplies at a specified timing, namely when the power-saving key on the copier is pressed and when in low power mode.

5. Fan Interlocking Switch

The fuse PCB and punch driver PCB are equipped with a fan interlocking switch linked to the fan drive signal, which cuts off the power supply in the absence of the fan ON signal

COPYRIGHT © 1999 CANON INC.

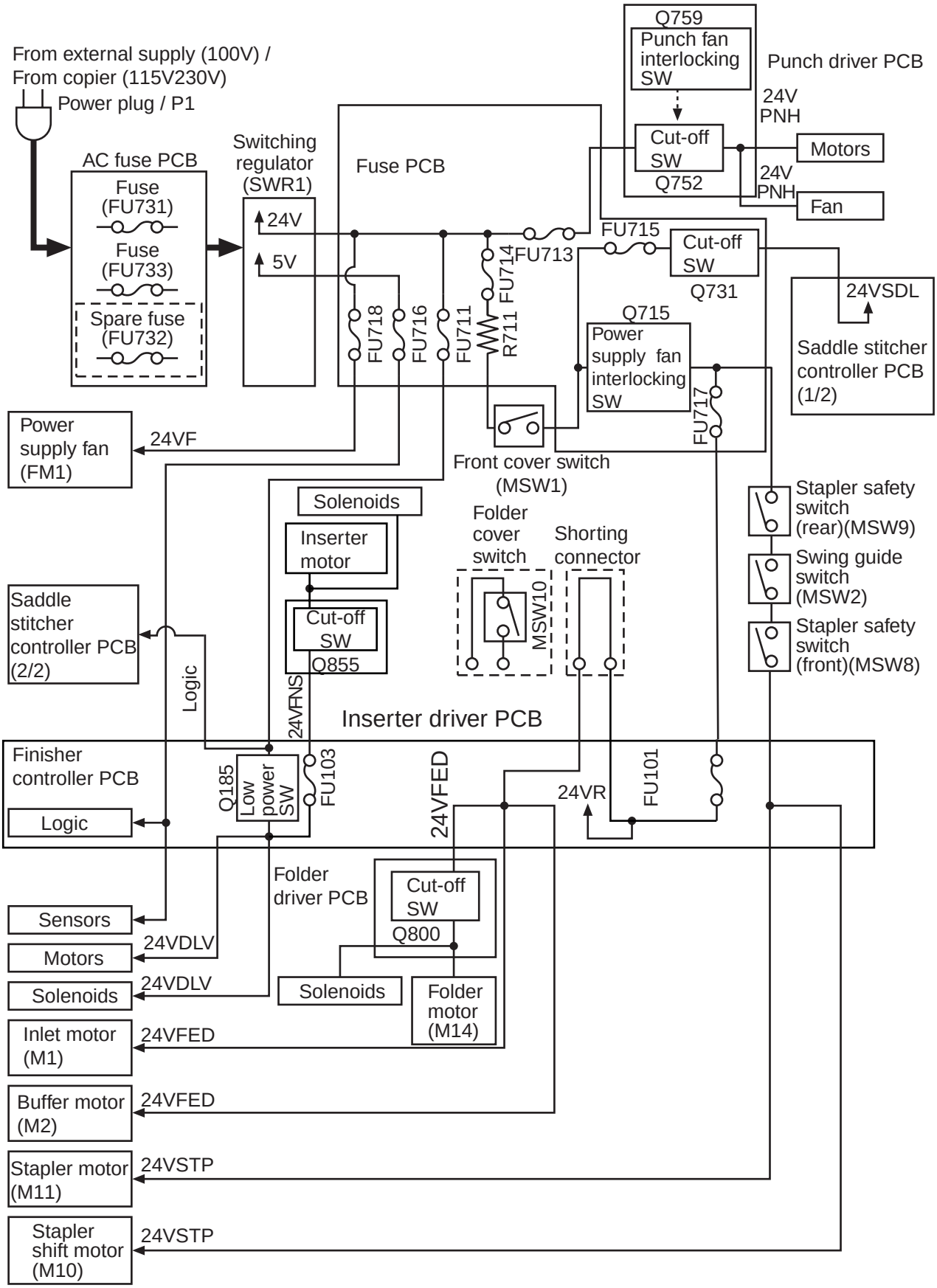

Figure 2-901

 COPYRIGHT © 1999 CANON INC.

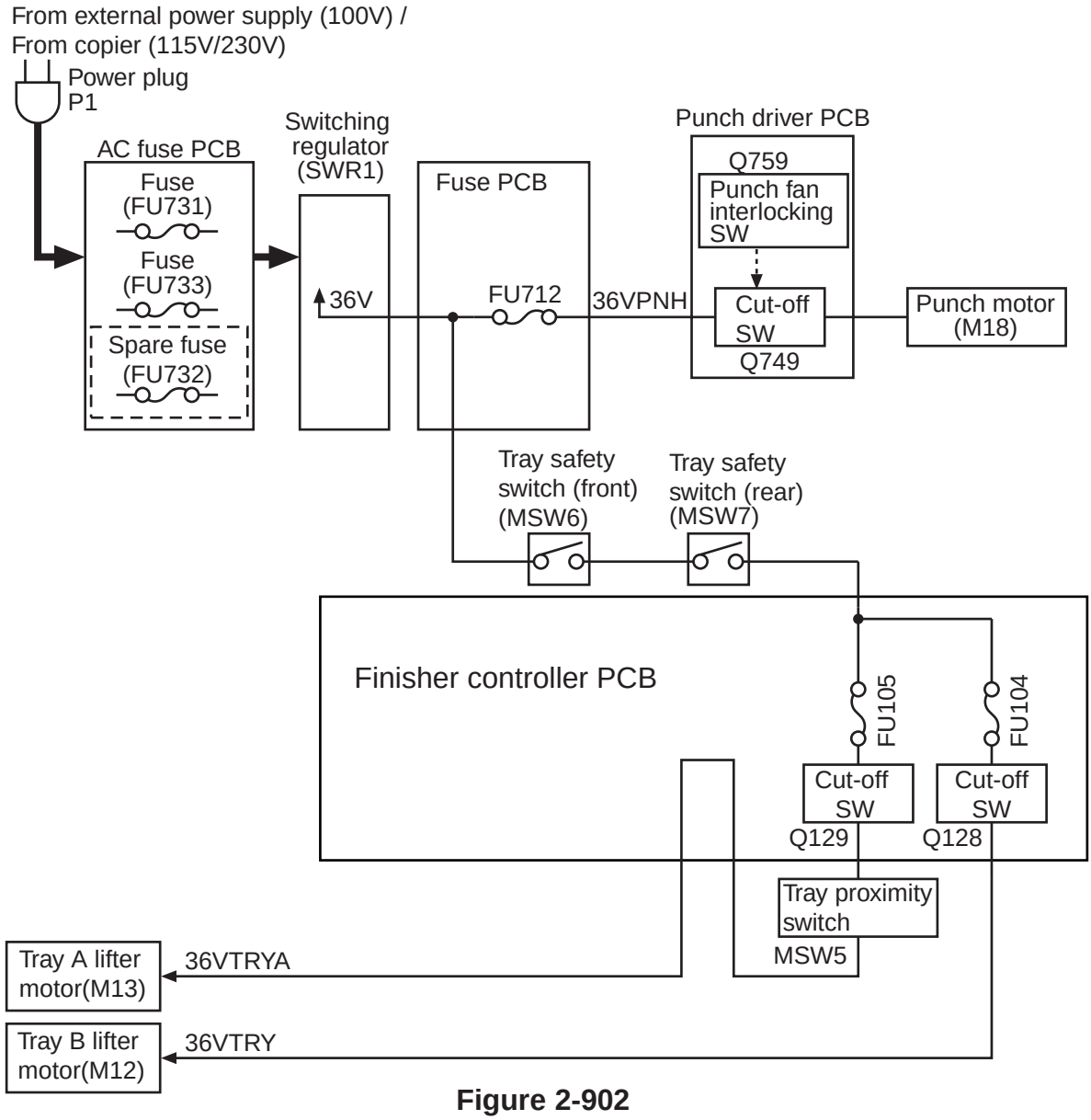
From external power supply (100V) /
From copier (115V/230V)
Power plug
P1
AC fuse PCB
Fuse
(FU731)
Fuse
(FU733)
Spare fuse
(FU732)
Switching
regulator
(SWR1)
36V
Fuse PCB
FU712
36VPNH
Punch driver PCB
Q759
Punch fan
interlocking
SW
Cut-off
SW
Q749
Punch motor
(M18)
Tray safety
switch (front)
(MSW6)
Tray safety
switch (rear)
(MSW7)
Finisher controller PCB
FU105
FU104
Cut-off
SW
Q129
Cut-off
SW
Q128
Tray proximity
switch
MSW5
Tray A lifter
motor(M13)
36VTRYA
Tray B lifter
motor(M12)
36VTRY

Figure 2-902

X . DETECTING JAMS (FINISHER)

1. Outline

The finisher checks for jams at such times as programmed in the ROM of the finisher controller PCB and detects a jam in relation to the presence/absence of paper at a specific sensor. When a jam is detected, the finisher controller PCB communicates the nature of the jam to the copier in the form of a code. The code can be checked in the copier's service mode, or by reference to LED101 on the finisher controller PCB.

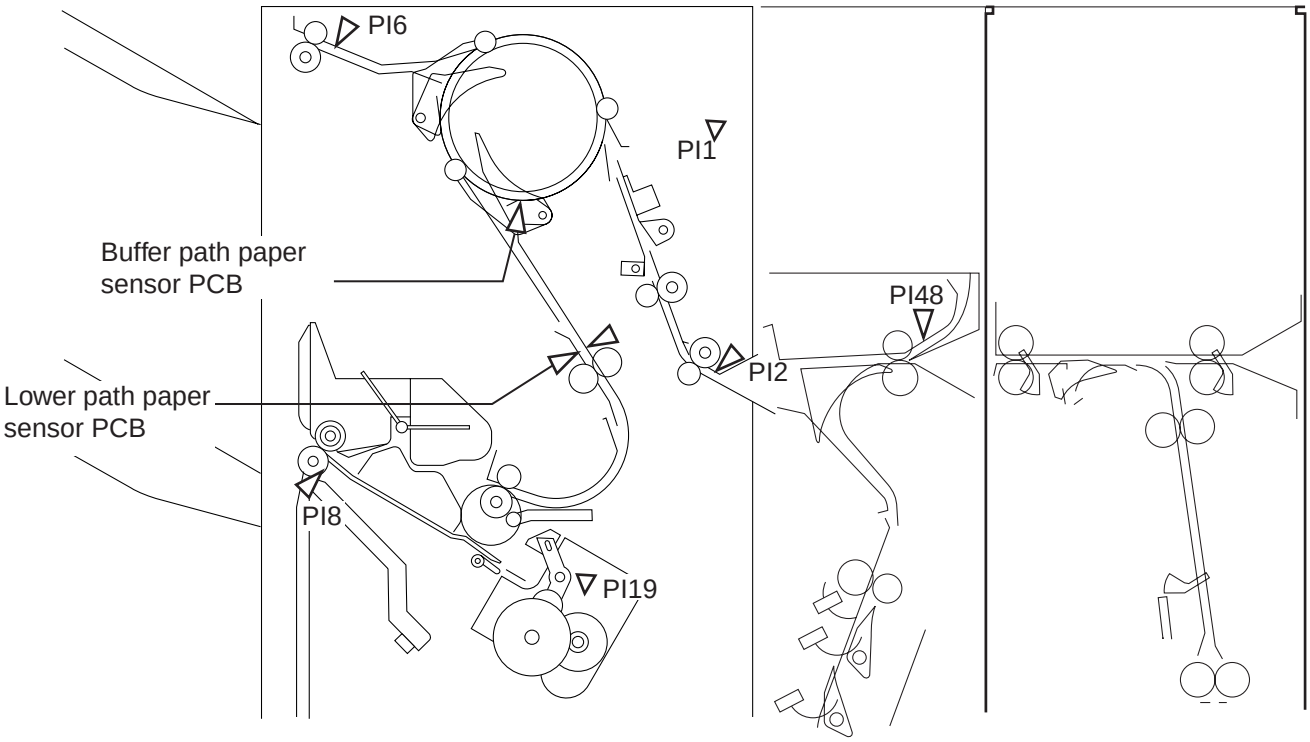

PI1 : Front door open sensor
PI2 : Inlet path sensor
PI6 : Non-sort delivery sensor
(S2) : Buffer path paper sensor PCB
(S3) : Lower path paper sensor PCB
PI8 : Stack delivery sensor
PI19 : Stapling home position sensor
PI48 : Saddle inlet paper sensor

Figure 2-1001

 COPYRIGHT © 1999 CANON INC. CANON SADDLE FINISHER-D2 REV.0 AUG. 1999 PRINTED IN JAPAN (IMPRIME AU JAPON)

Jam	Sensor	Description	Code
Inlet delay	PI2	The inlet path sensor did not turn on a specific time after the copier delivery signal or the horizontal path residual paper sensor (PI33) had come on.	0016
Inlet stationary	PI2	The paper did not move past the sensor when it was fed a specific length (paper length + 60mm) after the sensor had detected it.	0026
Buffer path delay	Buffer path paper sensor (S2)	The buffer path paper sensor did not detect the paper when it was fed a specific length (438 + 150mm) after the inlet path sensor had come on.	0017
Buffer path stationary	Buffer path paper sensor (S2)	The paper did not move past the sensor when it was fed a specific length (paper length + 60mm) after the sensor had detected it.	0027
Non-sort delay	PI6	The non-sort delivery sensor did not detect the paper when it was fed a specific length (348 + 150mm) after the inlet path sensor had come on.	0018
Non-sort stationary	PI6	The paper did not move past the sensor when it was fed a specific length (paper length + 60mm) after the sensor had detected it.	0028
Lower path delay	Lower path paper sensor (S3)	The lower path paper sensor did not detect the paper when it was fed a specific length (540 + 150mm) after the inlet path sensor had come on.	0019
Lower path stationary	Lower path paper sensor (S3)	The paper did not move past the sensor when it was fed a specific length (paper length + 60mm) after the sensor had detected it.	0029
Door open	PI1	The front door was opened during feeding operation.	0008
Power on	PI2, PI6, buffer path paper sensor (S2), lower path paper sensor (S3)	One of the sensors indicated on the left detected paper when the power was turned on.	0007
Staple	PI19	When the stapler motor was rotated clockwise, the sensor did not turn on 0.5 sec after it had turned off. Also, the sensor turned on within 0.5 sec when the staple motor was rotated counterclockwise. (If the sensor remains off 0.5 sec after the motor is rotated counterclockwise, an error will be assumed.)	0006
Saddle inlet delay	PI48	Refer to the saddle stitcher unit.	0015
Saddle inlet stationary	PI48	Refer to the saddle stitcher unit.	0016

Table 2-1001

COPYRIGHT © 1999 CANON INC.

XI . CUTTING OFF THE MODULES

1. Outline

If an error occurs in one of the modules, the finisher system enables the module concerned to be cut off and another to be operated. If an error related to a certain module occurs, the module concerned can be cut off by turning off the corresponding DIP switch bit on the switch PCB provided in the saddle stitcher. The table below shows the units where module cut-off applies and the condition when the module is cut off.

Units where module cut-off applies

SW971 No.	Unit	Condition when cut off
SW 971-1	Punch unit	Power flow is stopped. Connection is detected, but operation is prohibited. Position of punch and die and that of paper edge sensor must be initialized by user.
-2	Tray A	Power flow is stopped. Position of tray A must be adjusted by user. Tray A is used as a fixed tray.
-4	Inserter	Power flow is stopped. Connection is detected, but operation is prohibited.
-5	Folder	Power flow is stopped. Connection is detected, but operation is prohibited.
-6	Saddle stitcher unit	Power flow is stopped. Connection is detected, but operation is prohibited.

Table 2-1101

Table 2-1102 shows the errors in the event of which the module can be cut off in each unit.

Unit	Error
Punch unit	E590, E593, E594
Tray A	E540
Inserter	E515
Folder	E518
Saddle stitcher	E5F0, E5F1, E5F2, E5F3, E5F4, E5F5, E5F6, E5F7, E5F8

Table 2-1102

 COPYRIGHT © 1999 CANON INC.

XII . SADDLE STITCHER

A. Basic Operation

1. Outline

After the stack sent from the finisher has been stitched (2-point stapling), it is folded in two and delivered. This operation is controlled by the saddle stitcher controller PCB.

Control accords with commands sent from the copier by way of the finisher.

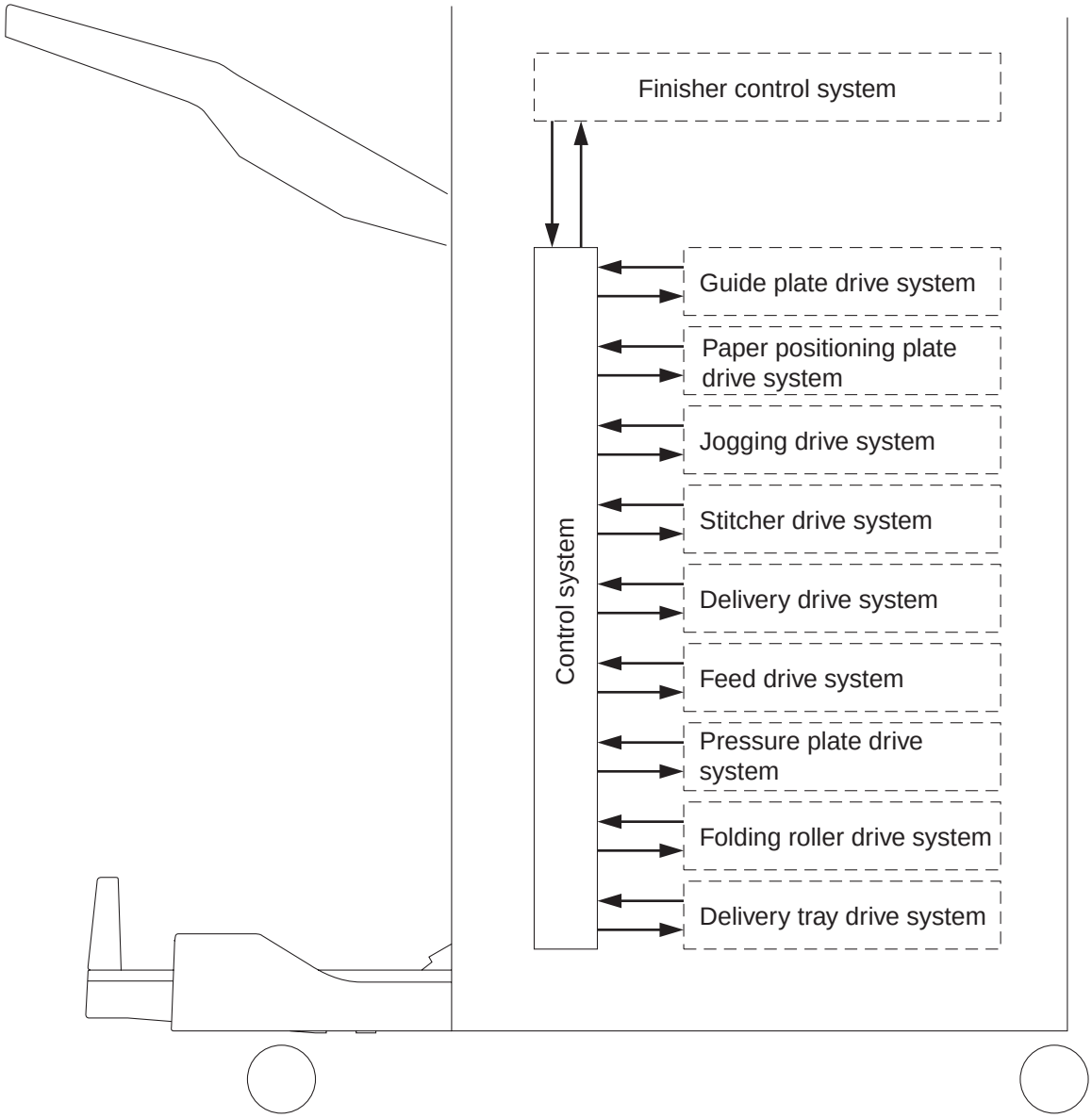

Figure 2-1201

2. Outline of Electrical Circuit

The saddle stitcher sequence is controlled by the saddle stitcher controller PCB. A microcomputer is used for the saddle stitcher controller PCB, and serial communication takes place between the programmable controller and the finisher controller PCB.

The saddle stitcher controller PCB drives the solenoid and motor according to commands sent from the finisher controller PCB.

The saddle stitcher controller PCB communicates information concerning the sensors and switches to the finisher controller PCB by serial communication.

The roles of the main ICs mounted on the saddle stitcher controller are as follows.

- Q1
  Control by programmable controller
- Q2
  Incorporated in programmable controller program
- Q3
  Control by programmable controller
- Q4
  IPC communication

Electrical circuit block diagram

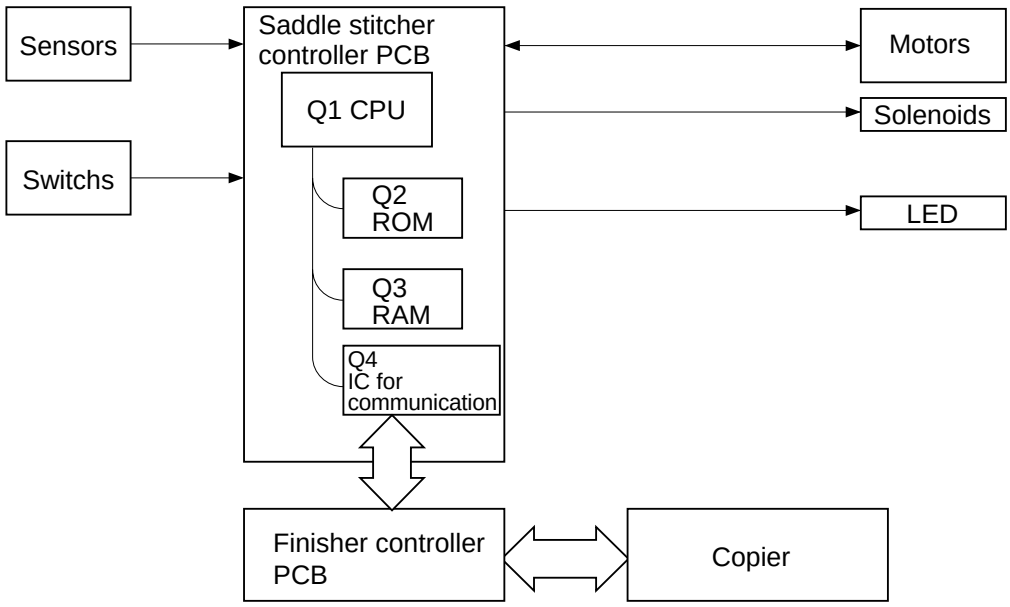

Figure 2-1202

 COPYRIGHT © 1999 CANON INC. CANON SADDLE FINISHER-D2 REV.0 AUG. 1999 PRINTED IN JAPAN (IMPRIME AU JAPON)

B. Feed and Drive System

1. Outline

After jogging and stitching of the paper sent from the finisher have been carried out in accordance with commands sent through the finisher controller PCB, the stack is folded and delivered to the saddle stitcher delivery tray.

The main operations are as follows:

a) collecting of paper
b) jogging
c) stitching
d) feeding of stack
e) folding/delivery

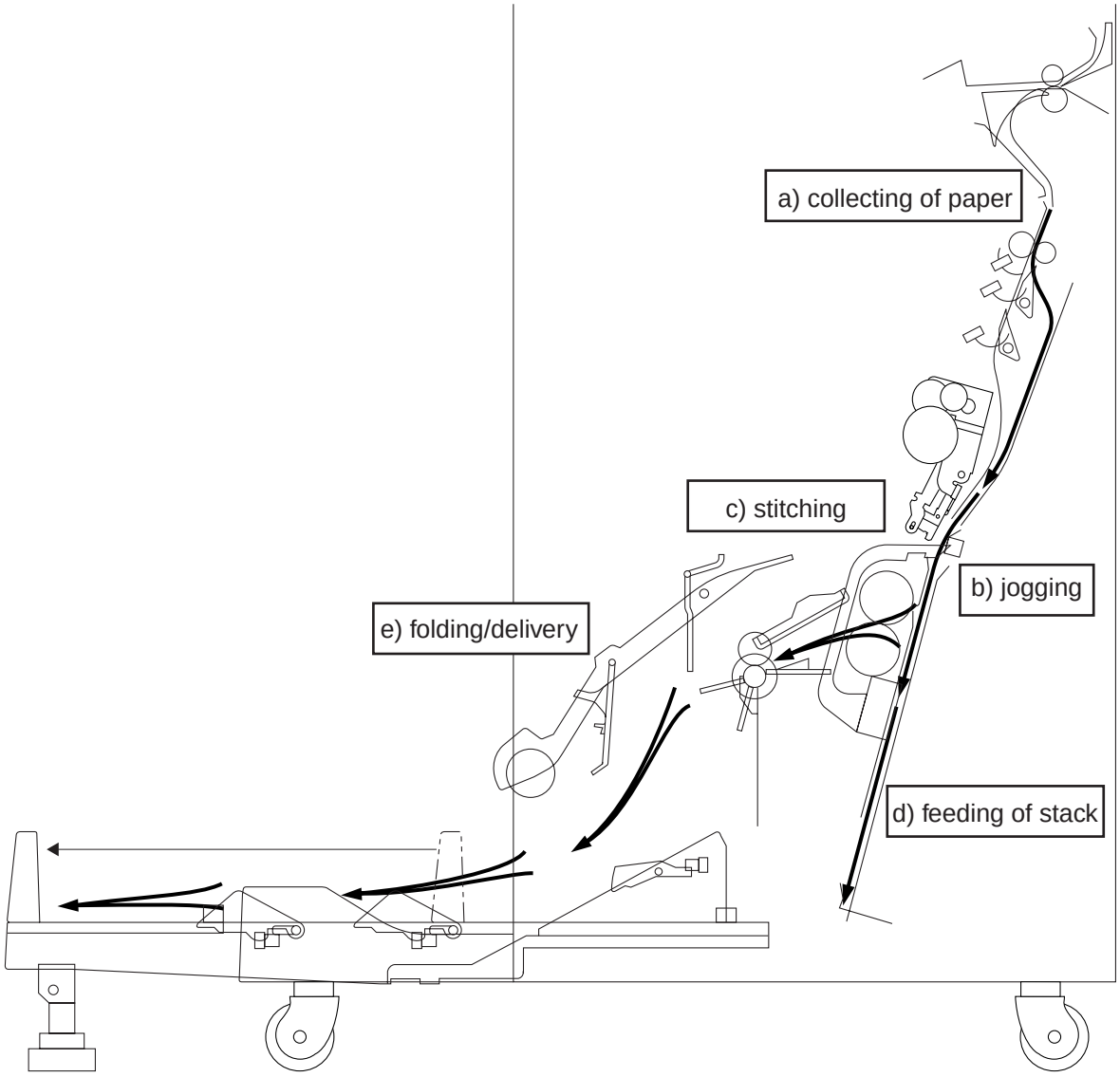

Figure 2-1203

a. Collecting of Paper

Successive sheets of paper from the finisher are collected almost vertically in the paper path.

The paper path for collecting the paper is decided according to the size of the paper by the movement of the two paper deflectors.

The position of the paper is determined by the paper positioning plate, so that the center of the paper is in the correct positions for stapling and folding.

The sheets are collected with each successive sheet coming on the delivery side of the previous sheet. The number of sheets that can be collected is shown below.

Up to 15 sheets (max: 14 sheets of 80 g/m^2 paper + 1 sheet of 200 g/m^2 paper)

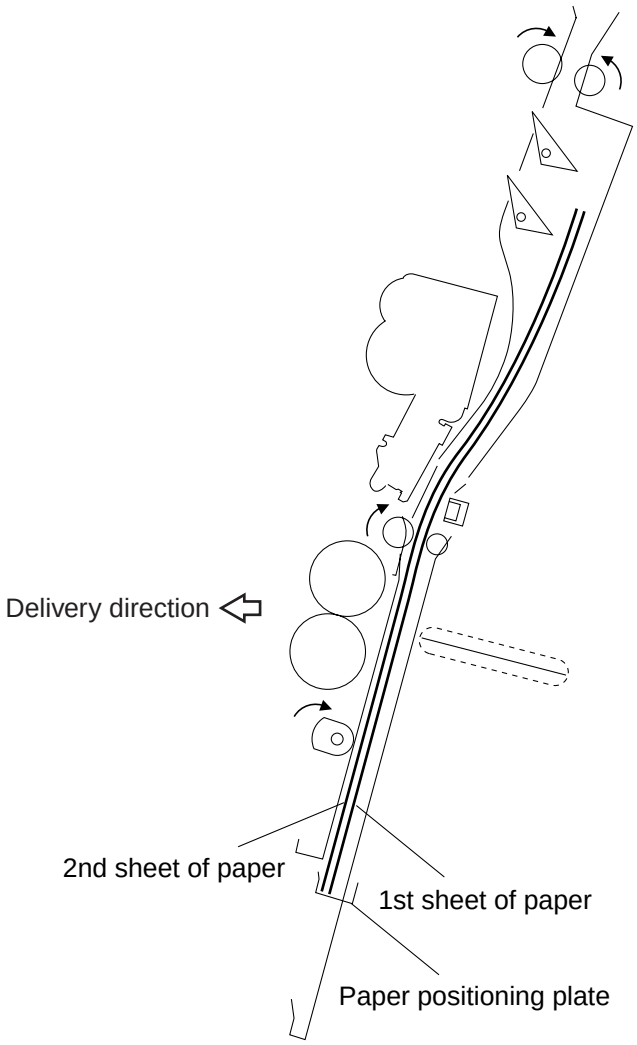

Figure 2-1204

 COPYRIGHT © 1999 CANON INC.

b. Jogging

Each time a sheet of paper is collected in the vertical path, it is aligned by the jogging plate provided at the end of the vertical path.

After stapling is finished, jogging is performed again before folding and delivery.

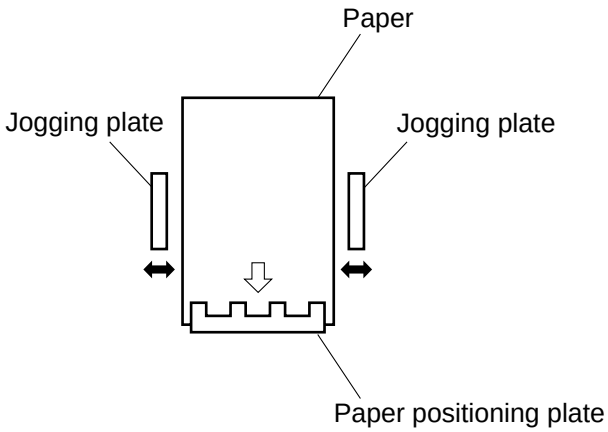

Figure 2-1205

COPYRIGHT © 1999 CANON INC.

c. Stitching

When all the paper has been collected, it is stitched by the two stitchers, one after the other, positioned in the center of the paper.

The two stitchers do not operate simultaneously to avoid creasing the paper between the staples and to reduce the load on the power supply.

If only one sheet of paper is sent from the copier, no stitching is performed and the stack feeding operation in the next step takes place.

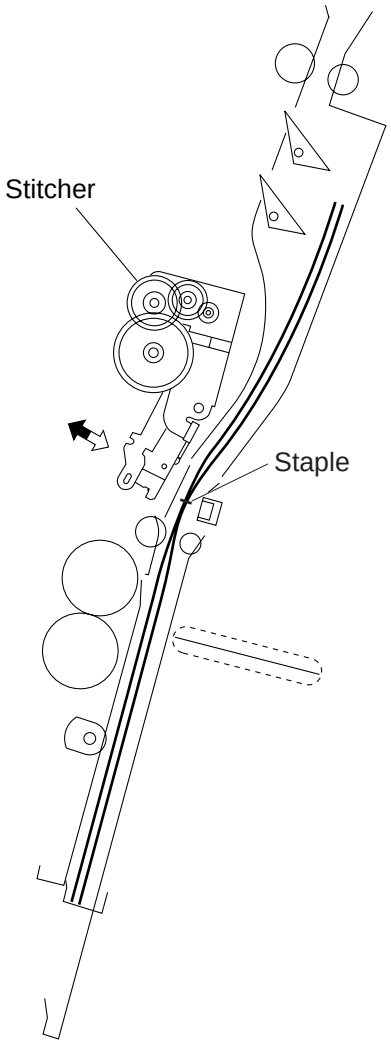

Figure 2-1206

 COPYRIGHT © 1999 CANON INC.

d. Feeding of Stack

After the paper has been stitched, it is moved to the folding and delivery position. This is the position at which the center of the paper (stitching position) matches the height of the pressure plate and folding roller nip.

The paper is moved by the paper positioning plate. At the same time, the guide plate covering the folding rollers descends so that the folding rollers and paper are facing each other.

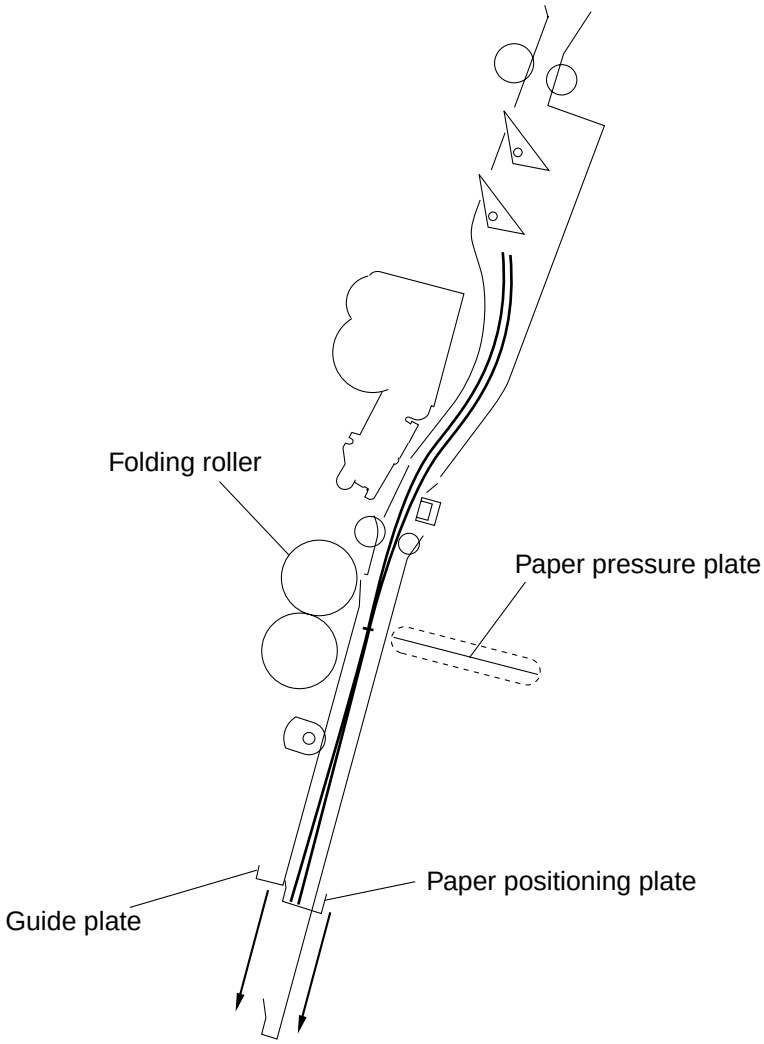

Figure 2-1207

COPYRIGHT © 1999 CANON INC.

e. Folding/Delivery

The pressure plate presses the center of the paper in the direction of the folding rollers. The paper is drawn in between the folding rollers which fold it in two. It is then delivered to the delivery tray by the folding rollers and delivery roller.

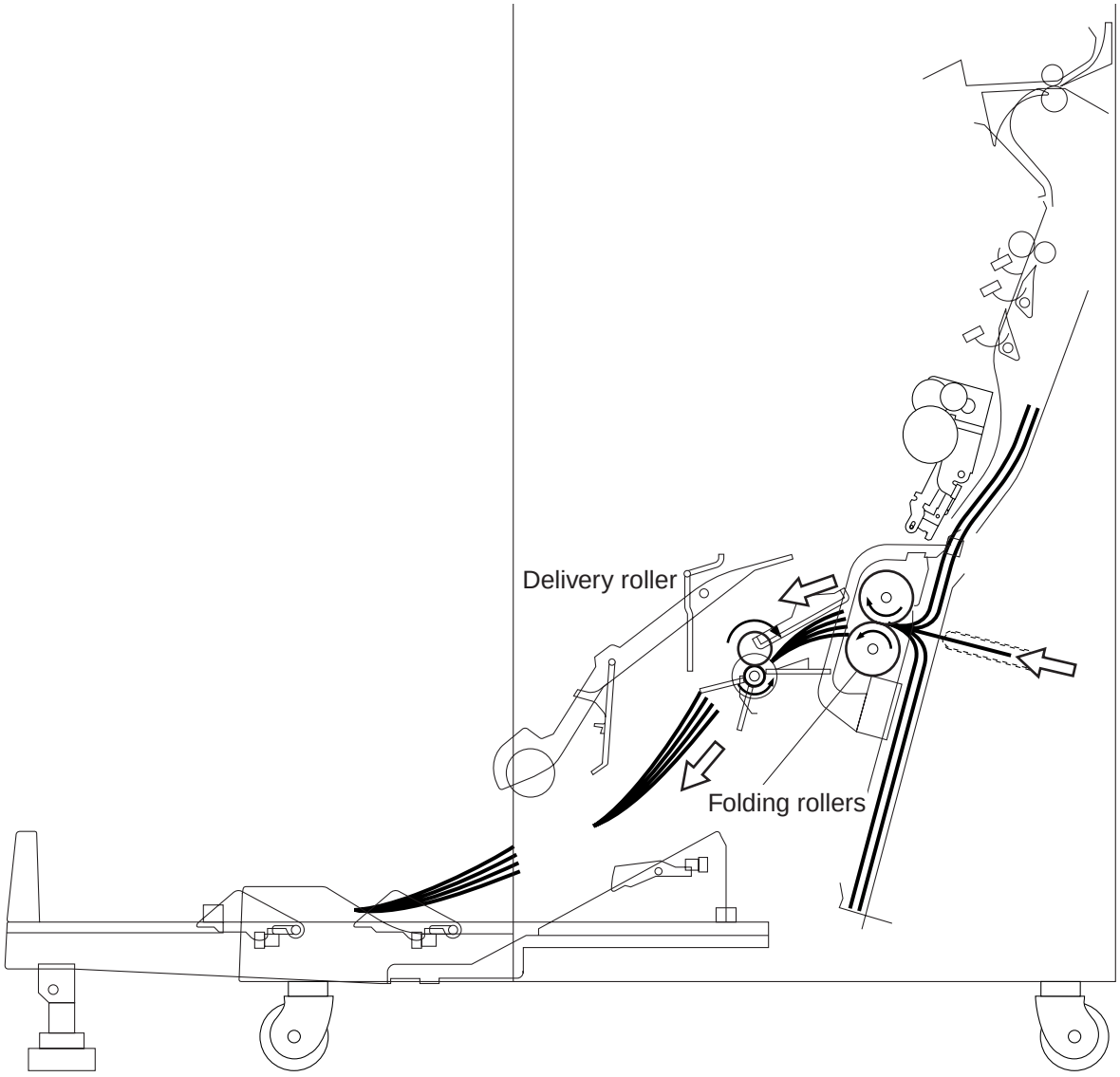

Figure 2-1208

 COPYRIGHT © 1999 CANON INC.

C. Paper Collection System

1. Outline

The paper collection system collects the paper from the finisher in the paper path, ready for stapling and folding in the next process.

Paper inlet flappers 1 and 2 switch the route in which the paper is sent according to size. The paper positioning plate waits at a position determined in advance according to the size of the paper. The paper positioning plate is driven by the paper positioning plate motor (M34) and its position is detected by the number of motor pulses from the paper positioning plate home position sensor (PI66). The paper sent by the inlet rollers is collected in the specified position by the feed rollers and crescent roller. The feed rollers contact and release according to the state of collection and feeding.

Each time a sheet of paper is collected, it is aligned by the jogging plate. The jogging plate is driven by the jogging motor (M35), and the position of the plate is detected by the number of motor pulses from the jogging plate home position sensor (PI65).

The guide plate covers the folding rollers, preventing interference with the paper during collection. The guide plate is lowered and does not cover the rollers during folding.

The paper is detected according to size by the paper sensors 1, 2 and 3 (PI77, PI78, PI79) in the inlet area, and the paper positioning plate paper sensor (PI68) in the paper positioning plate area.

COPYRIGHT © 1999 CANON INC.

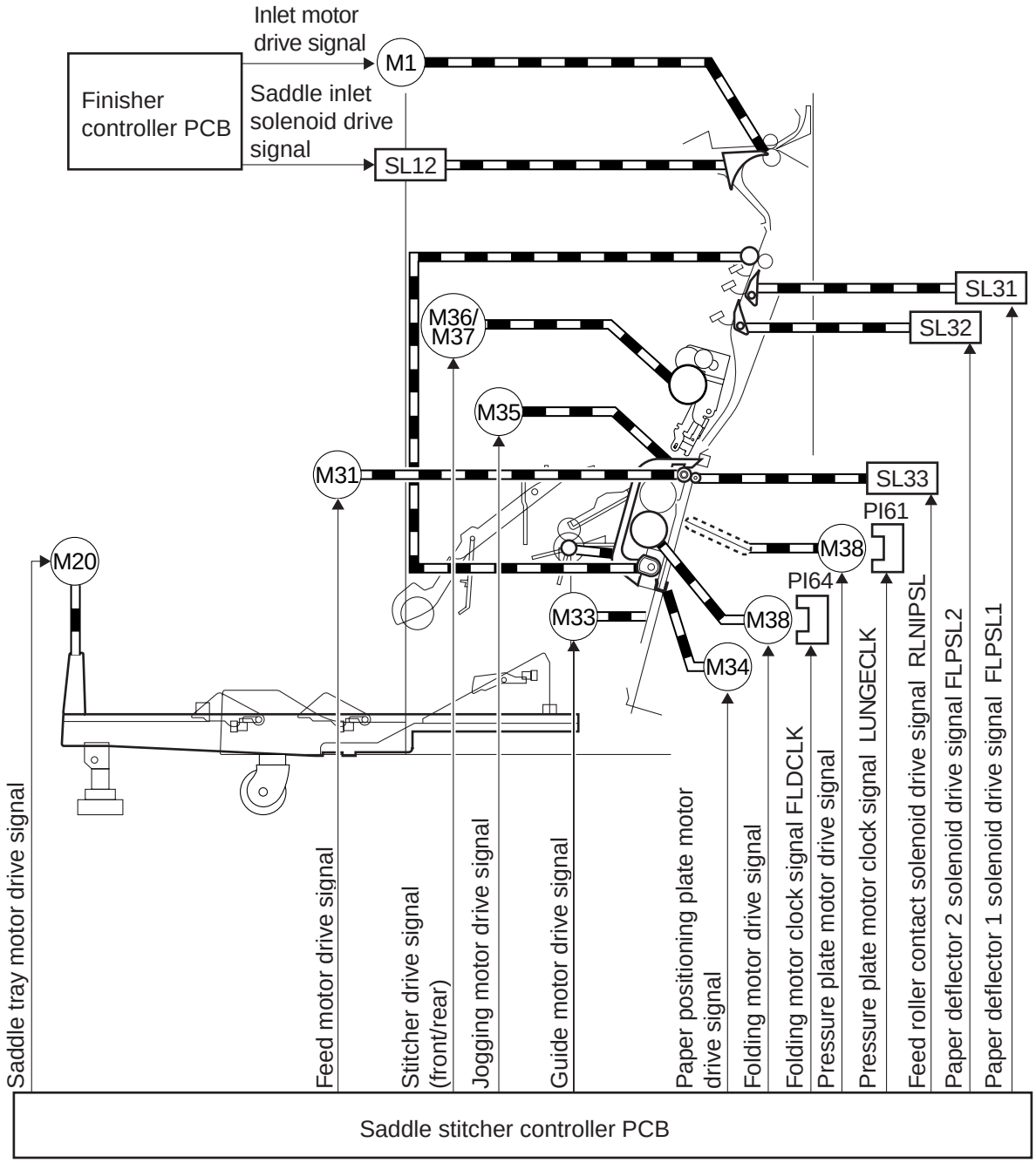

Figure 2-1209

 COPYRIGHT © 1999 CANON INC.

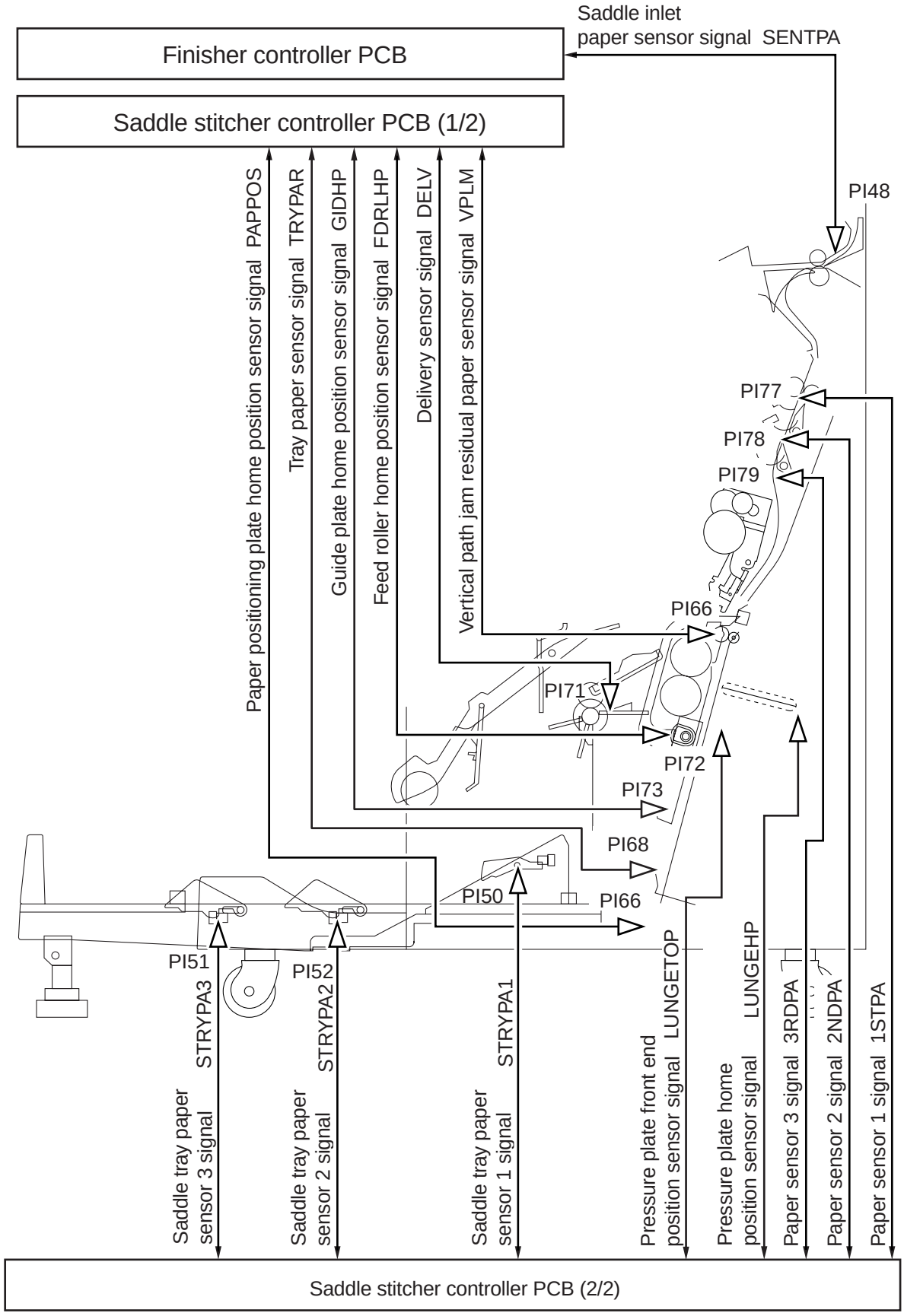

Figure 2-1210

COPYRIGHT © 1999 CANON INC.

2. Inlet Flapper Control

a. Outline

The feed route is switched according to the size of the paper by movement of the two flappers at the paper inlet. This has the following two purposes:

1. Detection by the sensor of the passing of the trailing edge of the paper according to size.
2. Prevention of the next sheet of paper from hitting the top of the existing stack.

The table below shows which sensors are used for which size paper.

Sensor	A3/279mm×432mm(11×17)	B4	A4R/LTRR
Paper sensor 1 (PI77)	Used	Used	Used
Paper sensor 2 (PI78)	Not used	Used	Used
Paper sensor 3 (PI79)	Not used	Not used	Used

Table 2-1201

The flappers are driven by their respective solenoids according to paper size as shown below.

Solenoid	A3/279mm×432mm(11×17)	B4	A4R/LTRR
Paper deflector 1 solenoid (SL31)	OFF	ON	ON
Paper deflector 2 solenoid (SL32)	OFF	OFF	ON

Table 2-1202

 COPYRIGHT © 1999 CANON INC.

b. Feed route of size A3/279mm x 432mm (11 x 17) paper
In the case of 3 sheets

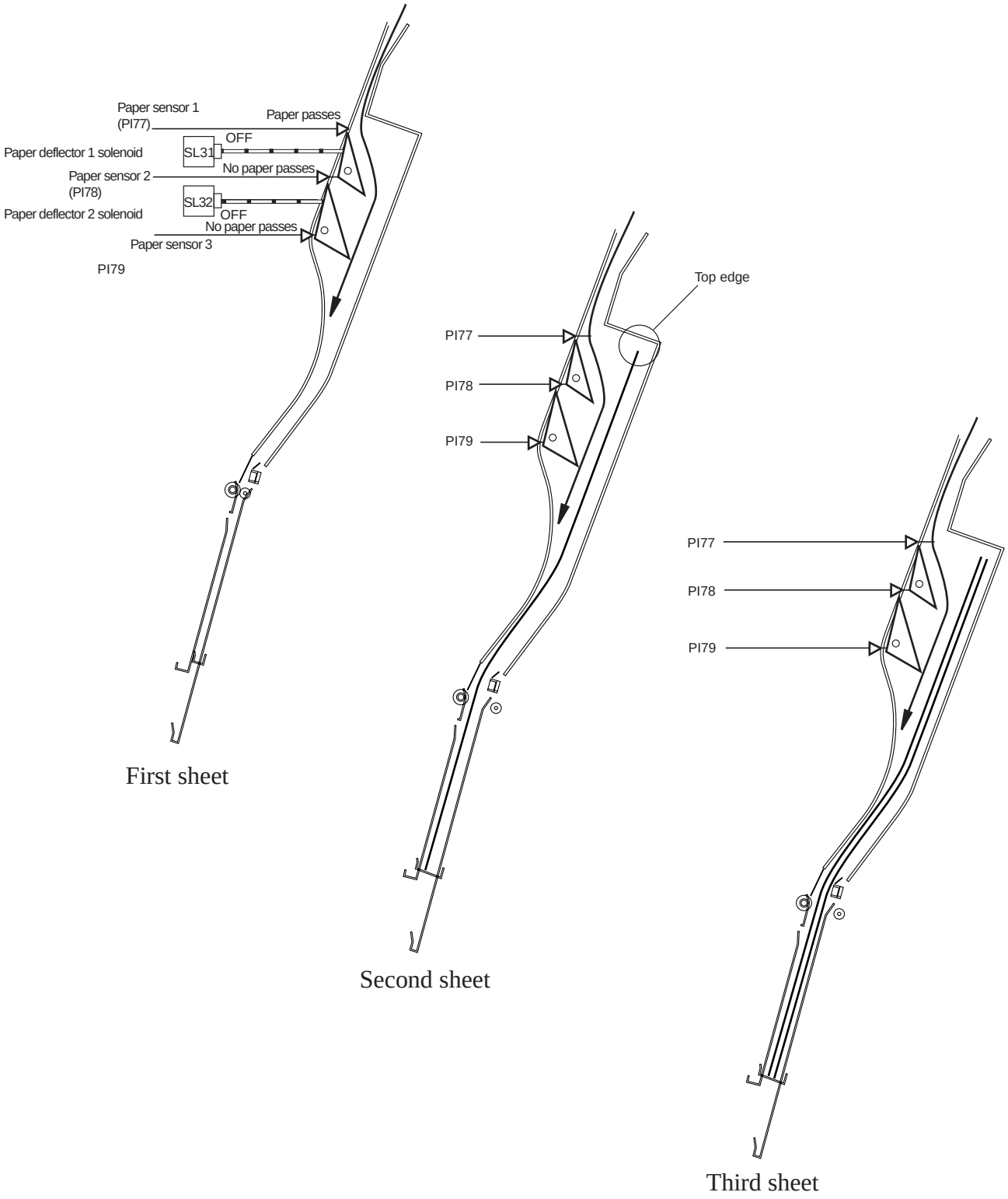

Figure 2-1211

c. Feed route for B4 size
In the case of 3 sheets

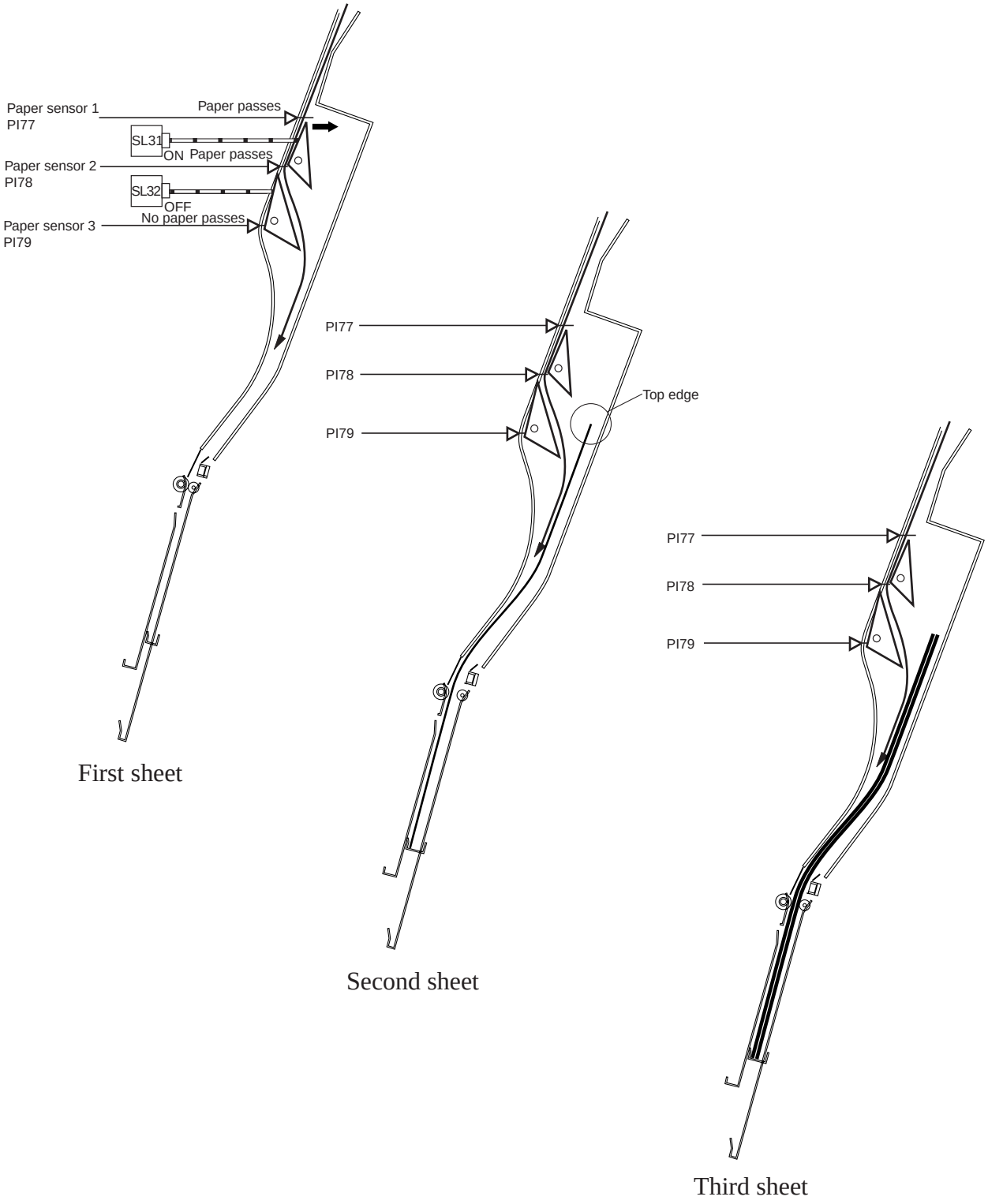

Figure 2-1212

 COPYRIGHT © 1999 CANON INC.

d. Feed route for A4R/LTRR size
In the case of 3 sheets

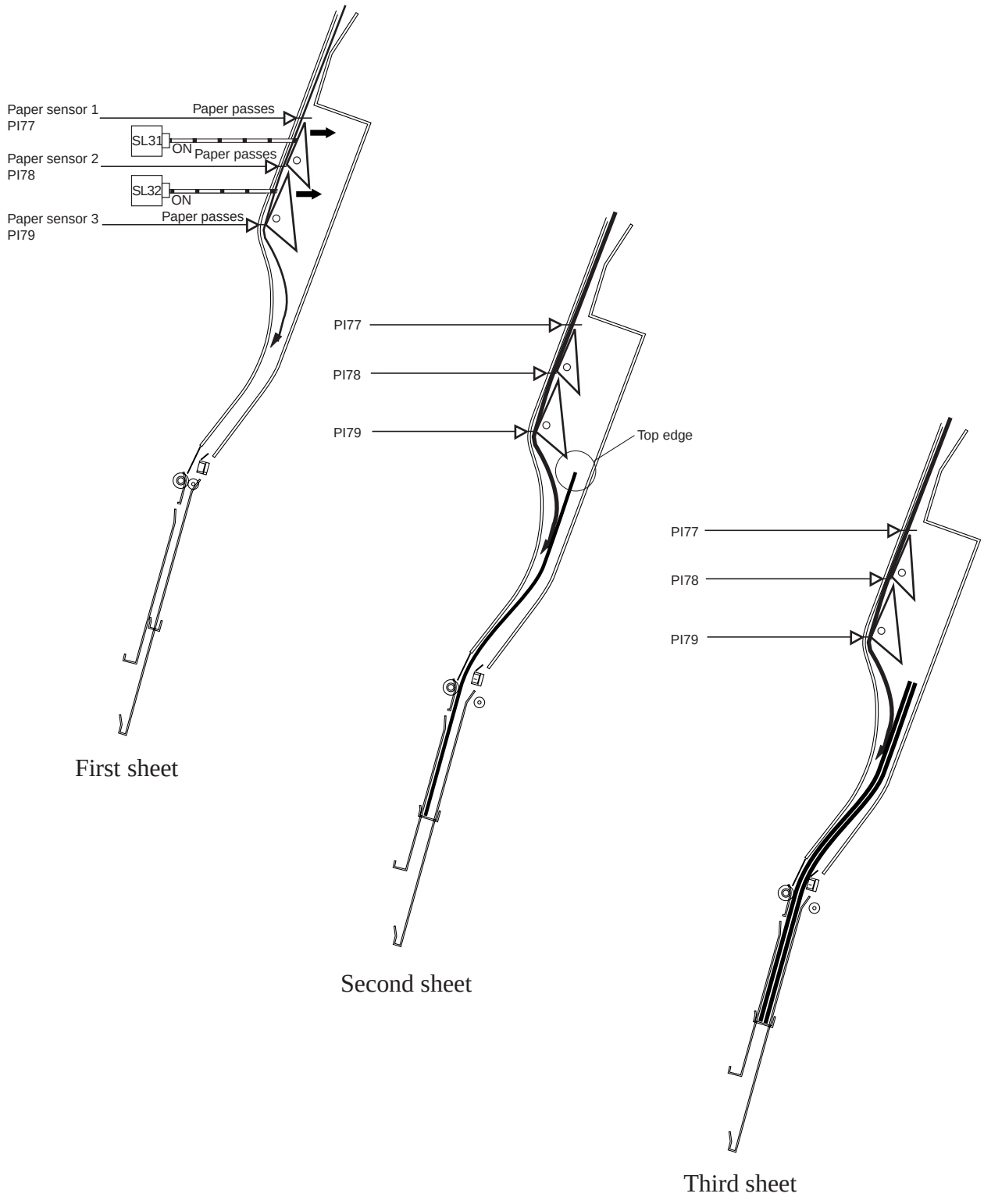

Figure 2-1213

3. Paper Feed Control

After the leading edge of the paper passes the inlet flapper, it is conveyed by the intermediate feed rollers and crescent roller.

The intermediate feed rollers are normally out of contact. When the leading edge of the paper reaches the intermediate feed roller contact area, the rollers are closed by the feed roller contact solenoid (SL133) to feed the paper. The rollers open when the leading edge of the paper strikes the paper positioning plate. This is repeated for each sheet of paper.

When the leading edge of the first sheet of paper reaches the paper positioning plate, the paper positioning plate paper sensor (PI68) detects the paper. However, as the first sheet continues to be detected by the sensor, the arrival of the second sheet is not detected.

The crescent roller continues to rotate while the paper is being collected. This results in the leading edge of each sheet striking the paper positioning plate, ensuring that the leading edges of the stack are aligned.

The paper deflector motor (M35) drives the deflector plate each time paper is collected, aligning the left and right edges of the paper.

1) The solenoid is on while the paper is being fed, and the rollers are in contact.

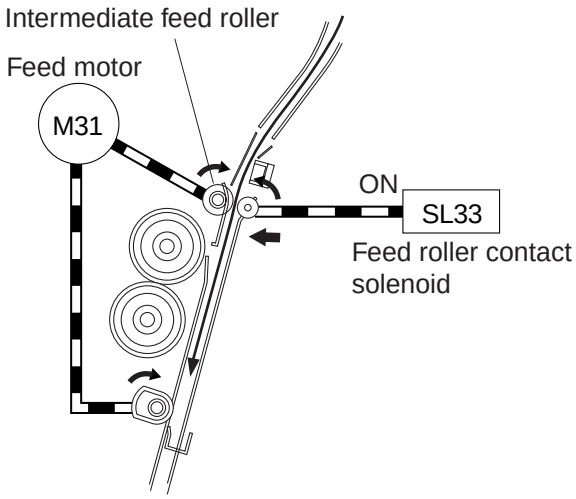

Figure 2-1214

 COPYRIGHT © 1999 CANON INC. CANON SADDLE FINISHER-D2 REV.0 AUG. 1999 PRINTED IN JAPAN (IMPRIME AU JAPON)

2) When the paper strikes the paper positioning plate, the solenoid is turned off. The feed motor continues rotating.

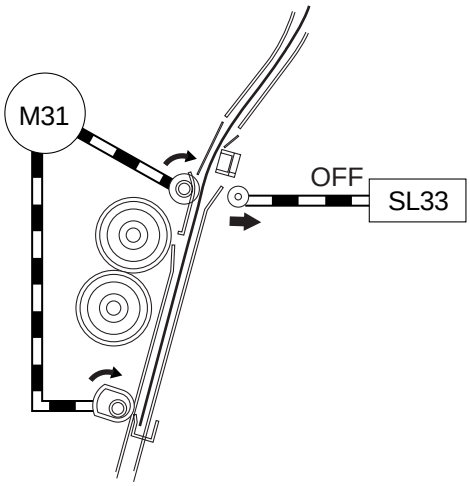

Figure 2-1215

3) When the next sheet of paper comes, the solenoid is turned on and the rollers come in contact.

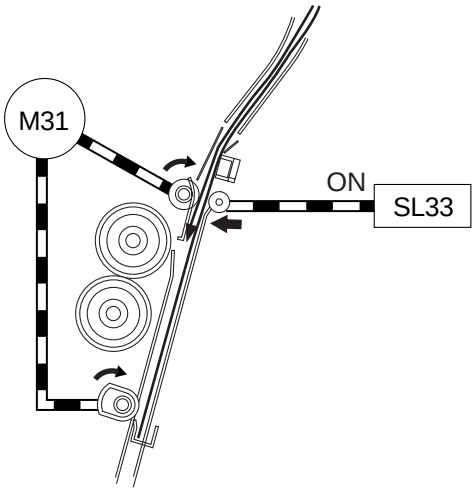

Figure 2-1216

COPYRIGHT © 1999 CANON INC.

4. Jogging Control

Each time paper is collected, the jogging plate motor (M35) drives the jogging plates which align the left and right edges of the paper. The jogging plate motor is a 4-phase stepping motor. The position of the jogging plates is detected by the number of motor pulses from the jogging plate home position sensor (PI65).

An example of operation of the saddle stitcher in the case of two sheets of paper is shown below.

1) When the first sheet of paper is collected, the jogging plates strike the left and right edges of the paper. (First jogging) The jogging plates leave the home position in advance and wait at a position 10mm from the edge of the paper.

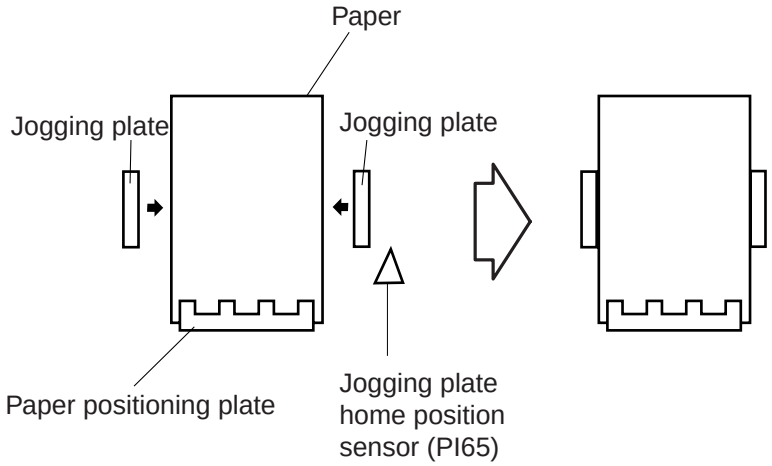

Figure 2-1217

2) The jogging plates move slightly away from the edge of the paper, then strike the edge again. (Second jogging)

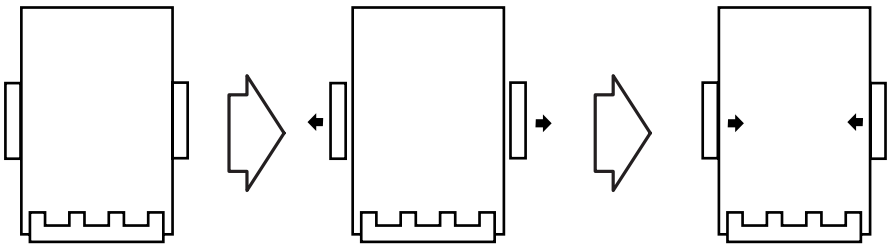

Figure 2-1218

 COPYRIGHT © 1999 CANON INC. CANON SADDLE FINISHER-D2 REV.0 AUG. 1999 PRINTED IN JAPAN (IMPRIME AU JAPON)

3) The jogging plates wait at a position 10mm from the edge of the paper.

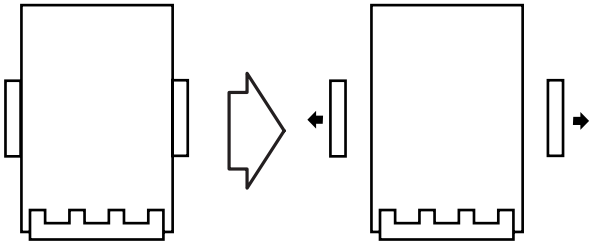

Figure 2-1219

4) When the next sheet of paper comes, steps 1) through 3) described above are repeated.

5) The paper is held for stitching. (Stitching is performed during this time.)

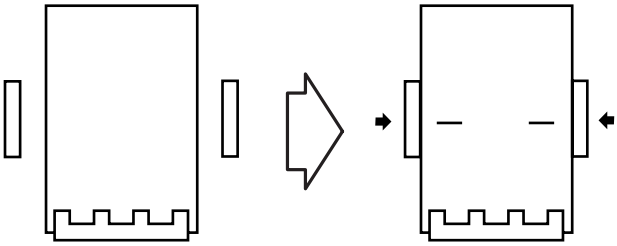

Figure 2-1220

6) The jogging plates wait at a position 10mm from the edge of the paper. (The stack is then folded and delivered.)

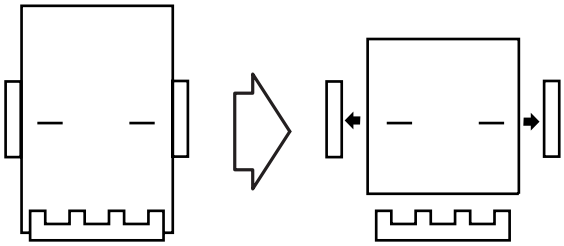

Figure 2-1221

7) When the first sheet of paper of the next stack reaches the paper sensor 1, the plates move to a position 10mm from the edge of the paper ready for the next jogging operation.

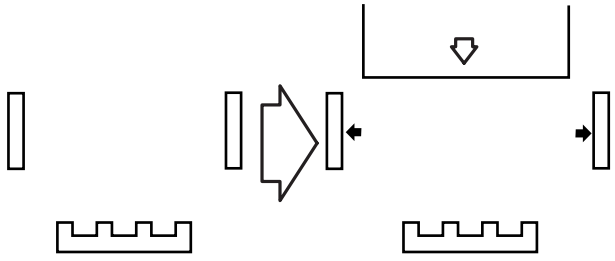

Figure 2-1222

COPYRIGHT © 1999 CANON INC.

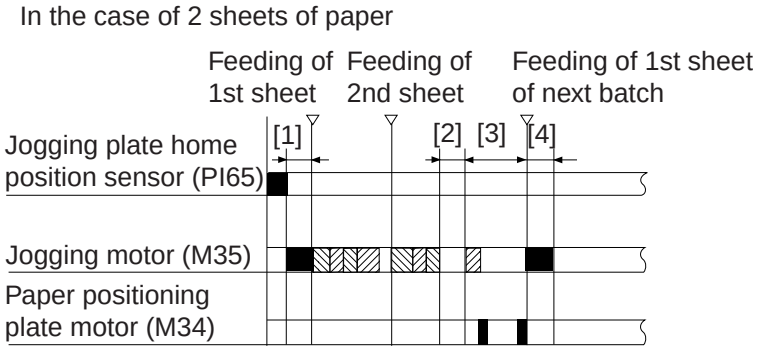

Figure 2-1223

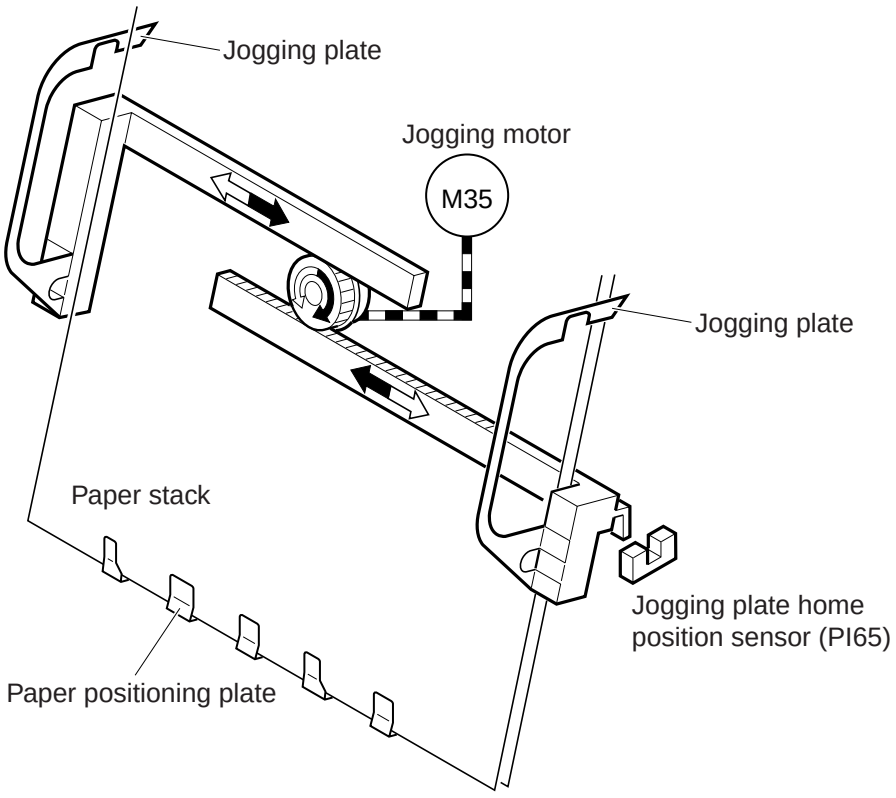

Figure 2-1224

 COPYRIGHT © 1999 CANON INC. CANON SADDLE FINISHER-D2 REV.0 AUG. 1999 PRINTED IN JAPAN (IMPRIME AU JAPON)

5. Crescent Roller Phase Control

a. Outline

If jogging is performed while the crescent roller is in contact with the paper, movement of the paper stack may be obstructed by friction of the roller and jogging will not be performed properly (Figure 3-317). To prevent this happening, jogging timing is decided by detecting the roller phase.

The crescent roller phase is detected by the crescent roller phase sensor (PI72). The flag for the crescent roller phase sensor is attached to the crescent roller shaft. The sensor flag is removed from the sensor while the roller shaft is rotating, and when the sensor goes from on to off, the crescent roller is in the opposite direction to the paper stack (Figure 2-1226). The jogging plates start jogging operation when the sensor changes.

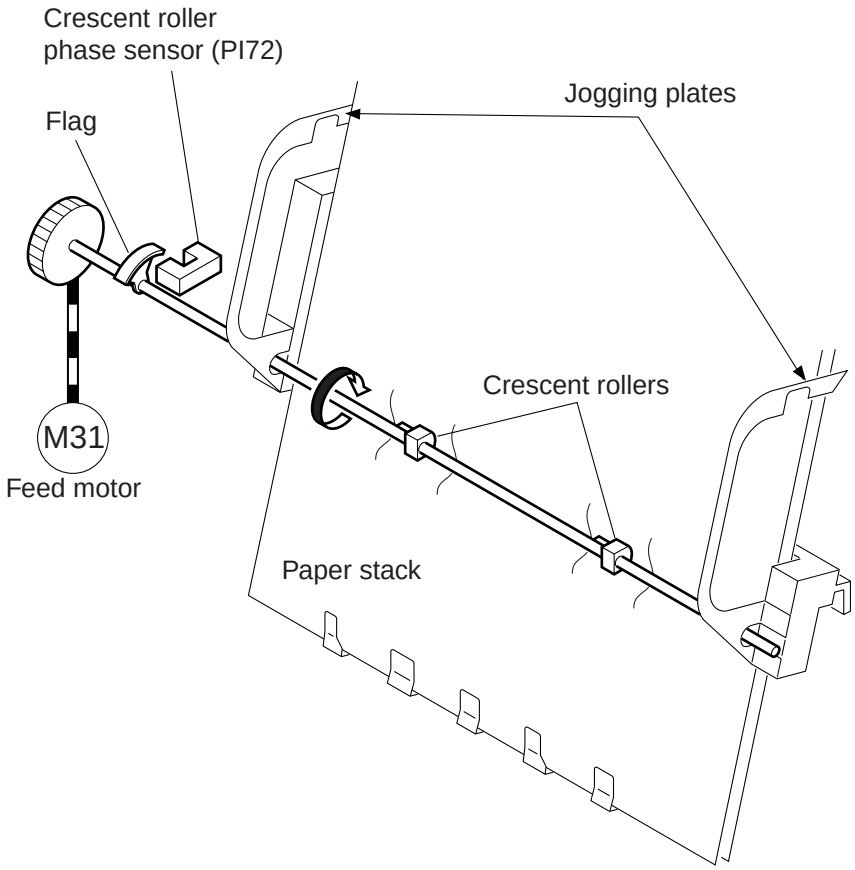

Figure 2-1225

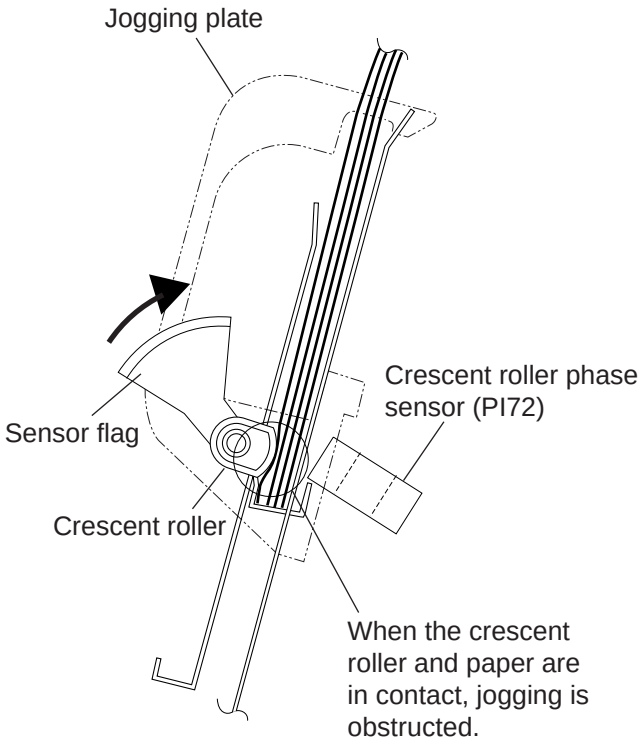

Figure 2-1226

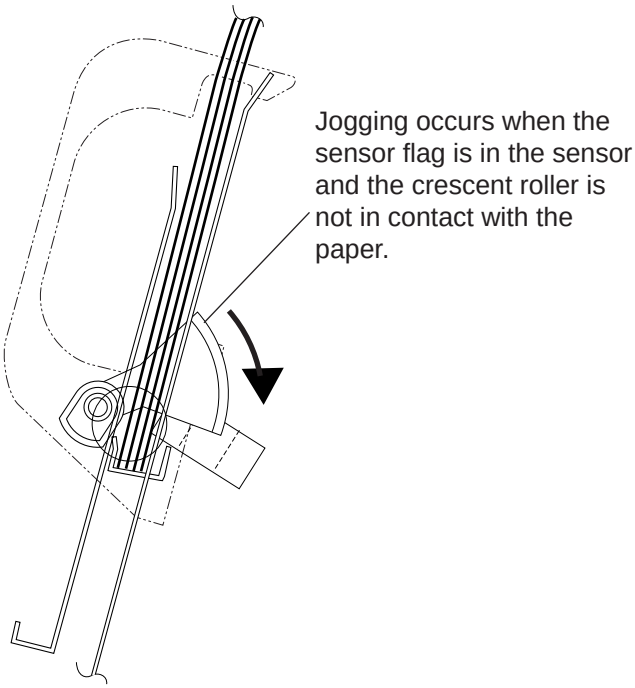

Figure 2-1227

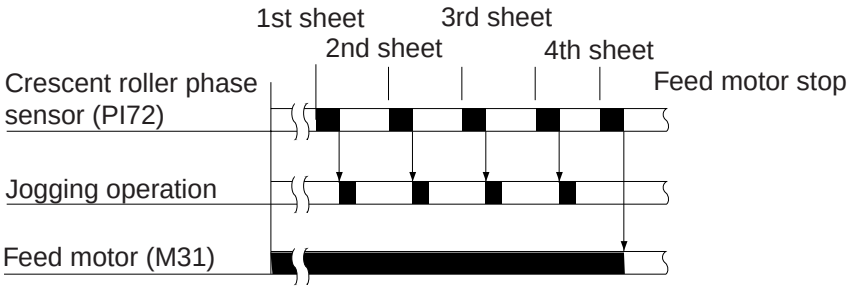

Figure 2-1228

 COPYRIGHT © 1999 CANON INC.

D. Stitcher System

a. Outline

The stitcher staples the middle of the paper that has been collected.

As the paper is stitched in two places, the copier is equipped with two stitcher units, one at the front and one at the rear. Each stitcher unit is driven by a stitcher motor (M37, M36). Both stitcher units are equipped with a stitcher home position sensor (MS34, MS32) for detecting the position of the stitcher, and a staple sensor (MS33, MS31) for detecting the presence/absence of staples.

To ensure that the user's hands are not caught in the stitcher, there are no safety switches in the vicinity of the stitcher unit (front, rear).

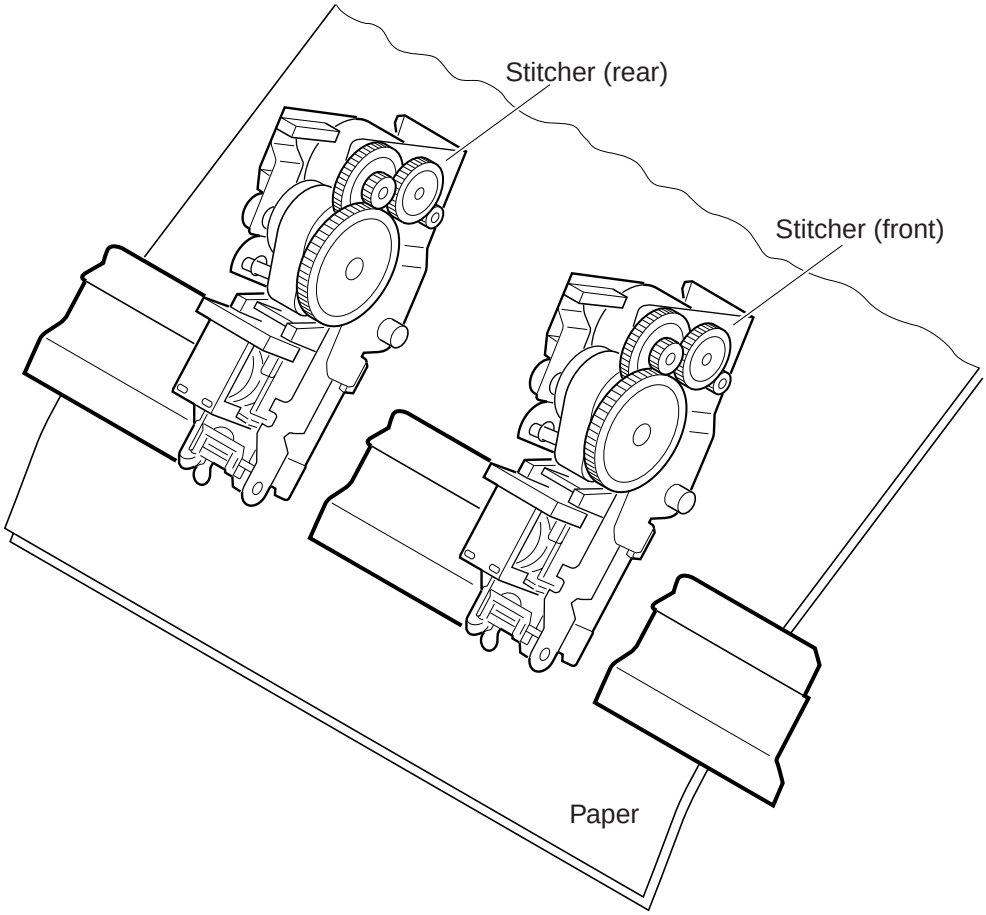

Figure 2-1229

2. Stitcher Unit Operation

The stitcher holder unit consists of two stitchers and stitcher holders on unit holders. The position of the stitcher is fixed and there is no sliding and no shifing movement.

Stitching is controlled by the rotary cam which is driven by the stitcher motor (M37, M36). There is a time lag between operation of the front and rear stitcher units. This is to prevent creasing of the paper between the staples and reduce the power load by staggering generation of the current for starting the stitcher motor.

The stitcher home position sensor (MS34, MS32) monitors the movement of the rotary cam and detects whether the first stitching operation has occurred once. The staple sensor (MS33, MS31) detects whether there are any staples in the staple cartridge loaded on the stitcher.

The jogging plates hold the edges of the paper during stitching.

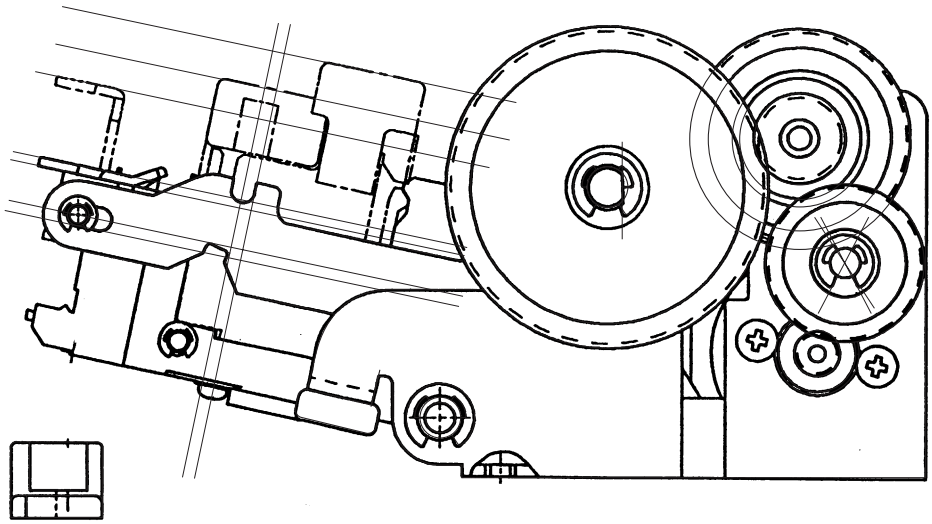

Figure 2-1230

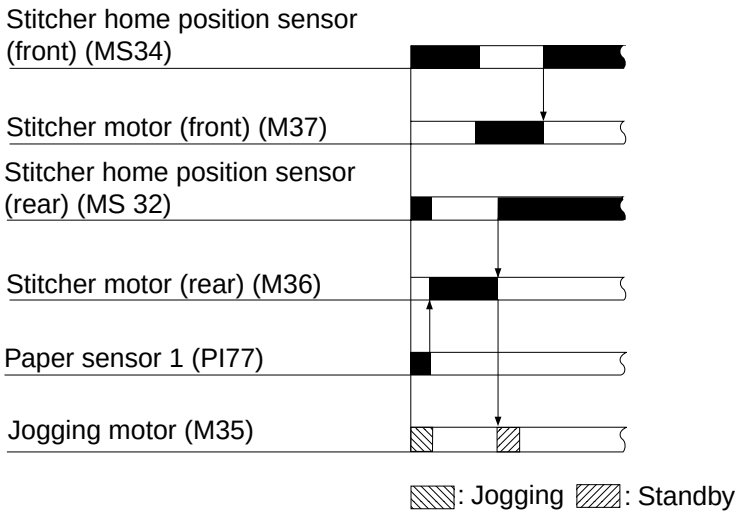

Figure 2-1231

 COPYRIGHT © 1999 CANON INC. CANON SADDLE FINISHER-D2 REV.0 AUG. 1999 PRINTED IN JAPAN (IMPRIME AU JAPON)

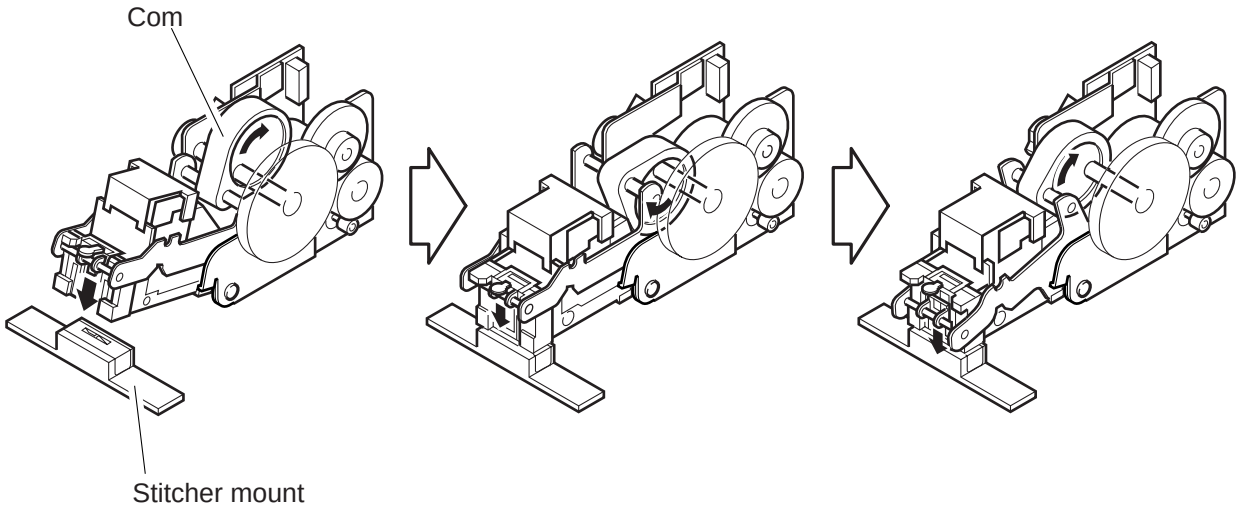

Figure 2-1232

E. Folding and Delivery System

1. Outline

The folding mechanism is composed of a guide plate, folding rollers, pressure plate and paper positioning plate.

The guide plate covers the folding rollers while the paper is being collected and prevents the paper from coming in contact with the rollers. The guide plate is lowered for folding operation.

The folding rollers are driven by the folding motor (M32). The folding motor locked sensor (PI64) monitors the running of the motor.

The pressure plate is driven by the pressure plate motor (M38) which is monitored by the pressure plate motor clock sensor (PI61). The pressure plate home position sensor (PI74) and pressure plate front edge position sensor (PI75) are provided to detect the position of the pressure plate.

After being folded in two by the folding rollers, the paper is stack delivered by the delivery rollers. The delivery rollers are driven by the folding motor. A delivery sensor (PI71) is provided in the delivery area to detect delivery. The vertical path jamming remedied sensor (PI76) detects any paper that remains after a jam has been removed.

 COPYRIGHT © 1999 CANON INC. CANON SADDLE FINISHER-D2 REV.0 AUG. 1999 PRINTED IN JAPAN (IMPRIME AU JAPON)

2. Stack Feed Control

Feeding is performed by the leading edge positioning plate. When 2-point stitching is finished, the paper positioning plate is lowered so that the center of the paper (stapling position) is in the folding roller contact position and pressure plate position. The position of the paper positioning plate is controlled by the number of motor pulses from the paper positioning plate home position sensor (PI66).

The guide plate is lowered at the same time as movement of the paper positioning plate, enabling folding to take place.

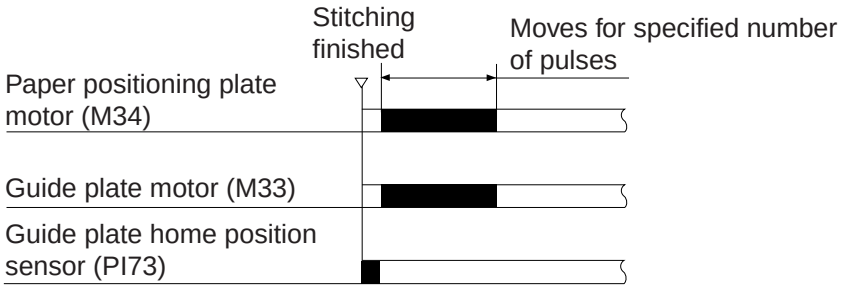

Figure 2-1233

3. Folding

The paper is folded by the folding rollers and pressure plate.

The pressure plate pushes the center of the paper between the folding rollers. At this time the pressure plate leaves the home position and waits at the front edge position until the paper stack has been drawn 10mm between the folding rollers. The pressure plate motor then rotates counterclockwise and the pressure plate returns to the home position. The folded paper is delivered to the tray by the folding rollers and delivery rollers.

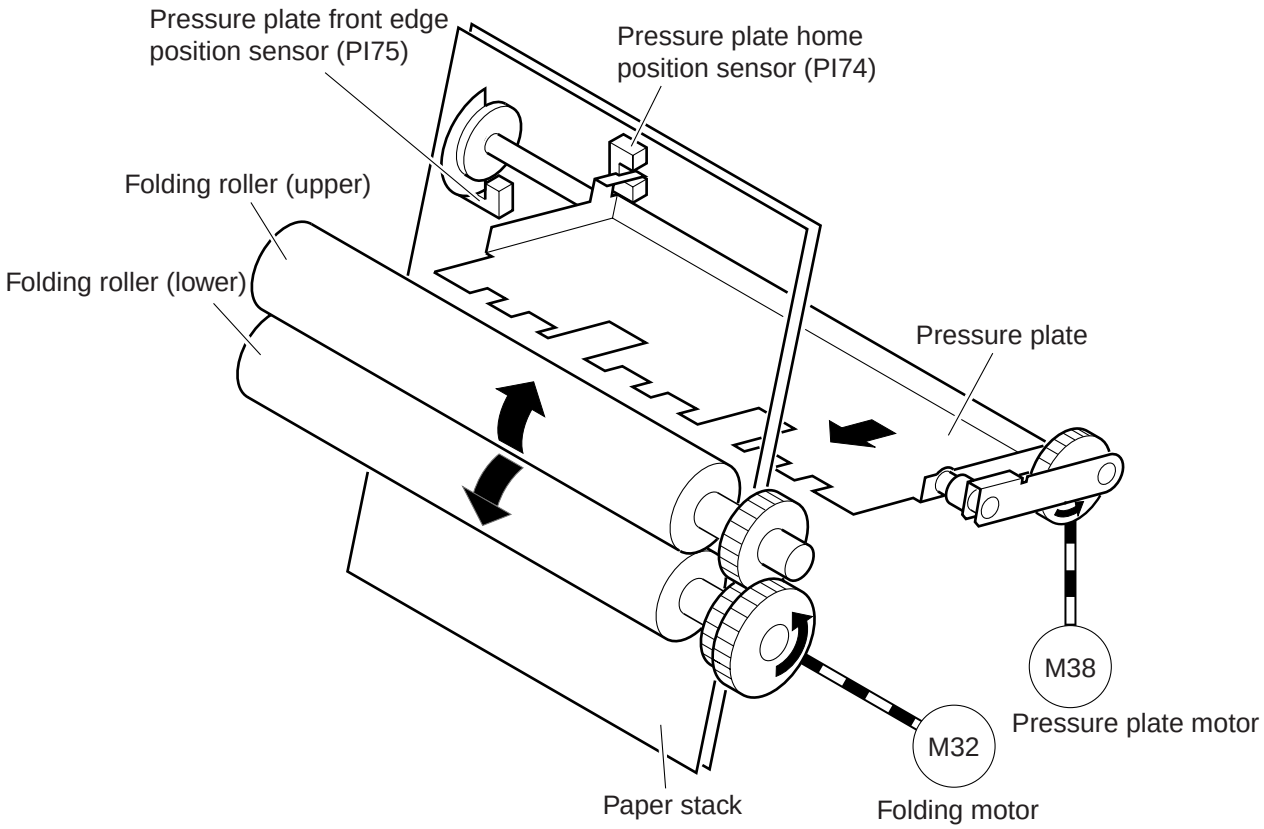

Figure 2-1234

 COPYRIGHT © 1999 CANON INC. CANON SADDLE FINISHER-D2 REV.0 AUG. 1999 PRINTED IN JAPAN (IMPRIME AU JAPON)

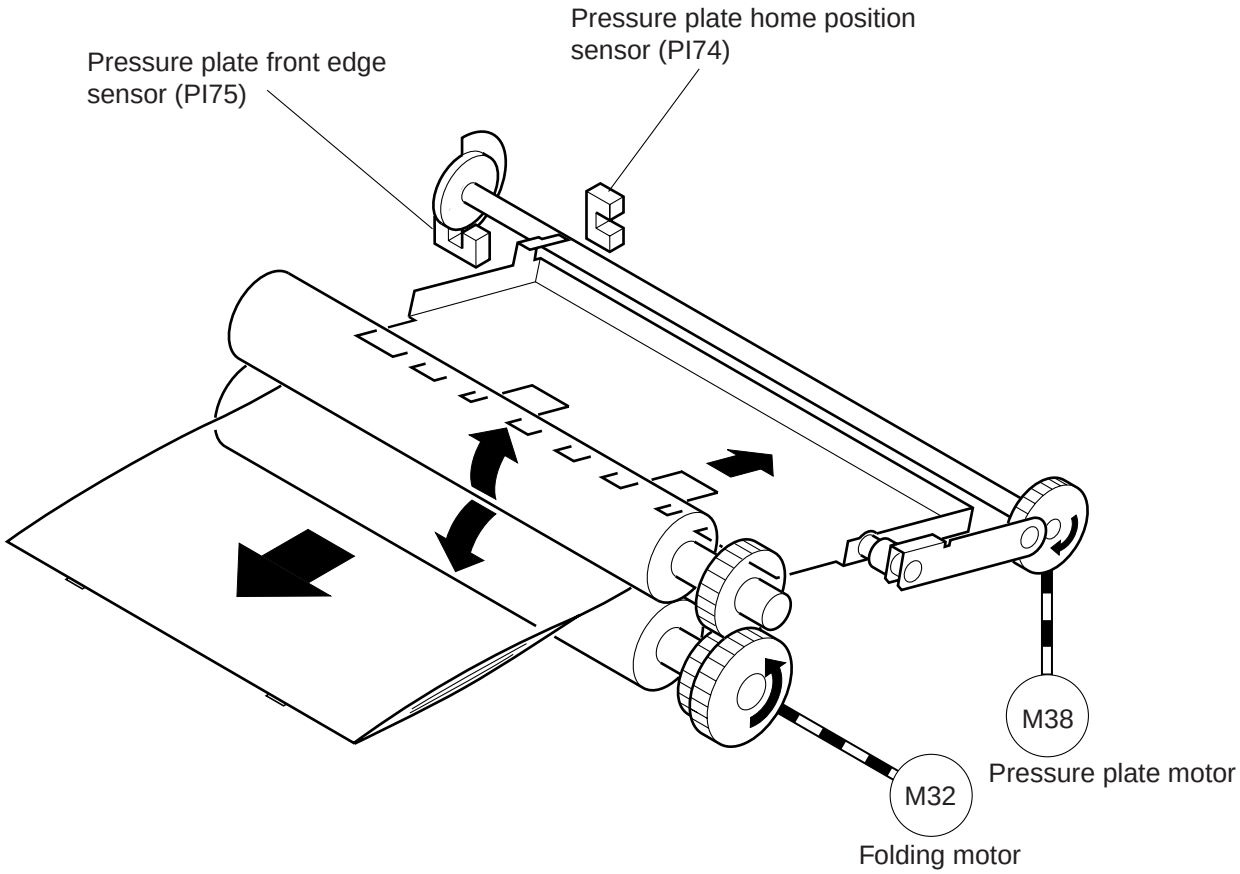

Figure 2-1235

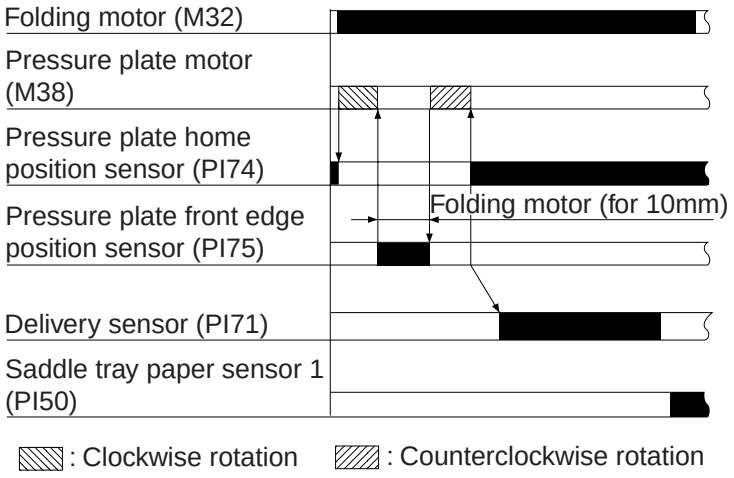

Figure 2-1236

COPYRIGHT © 1999 CANON INC.

4. Double Folding Operation

When 10 or more sheets of A4R or LTR-R size paper are folded, the paper is folded by double folding.

After the paper stack has been drawn in about 20mm, the folding rollers rotate counterclockwise for 20mm. This enables greater nipping force to be applied to the fold by the folding rollers. The folding rollers then rotate clockwise to deliver the paper stack and the pressure plate returns to the home position.

This operation ensures that several sheets of paper stack of a size that requires a strong folding force are folded properly.

1) The pressure plate pushes the paper in the direction of the folding rollers.

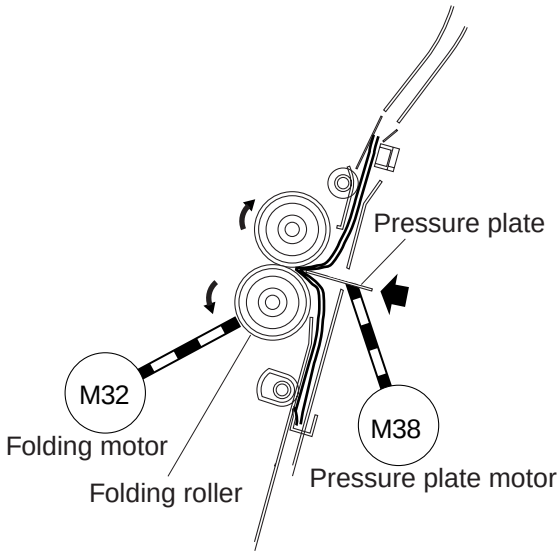

Figure 2-1237

2) The folding rollers draw the stack in about 20mm.

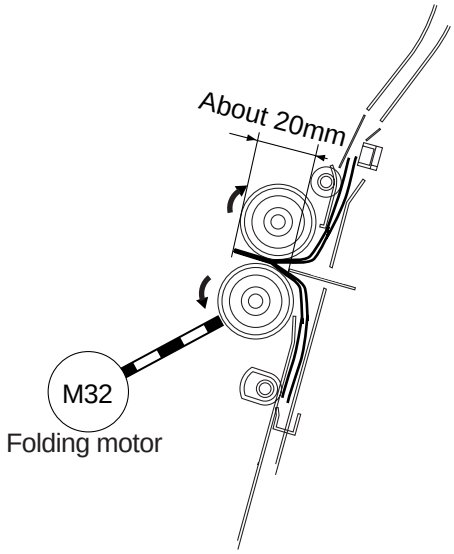

Figure 2-1238

 COPYRIGHT © 1999 CANON INC.

3) The folding rollers rotate counterclockwise, pushing the paper stack back about 20mm. (Reverse feeding)

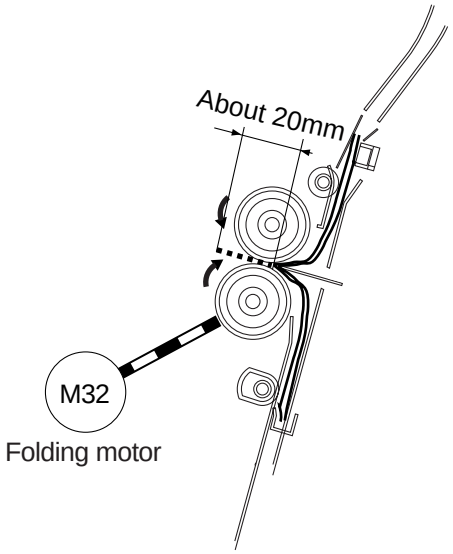

Figure 2-1239

4) The folding rollers rotate clockwise once more to deliver the paper stack. The pressure plate returns to its home position.

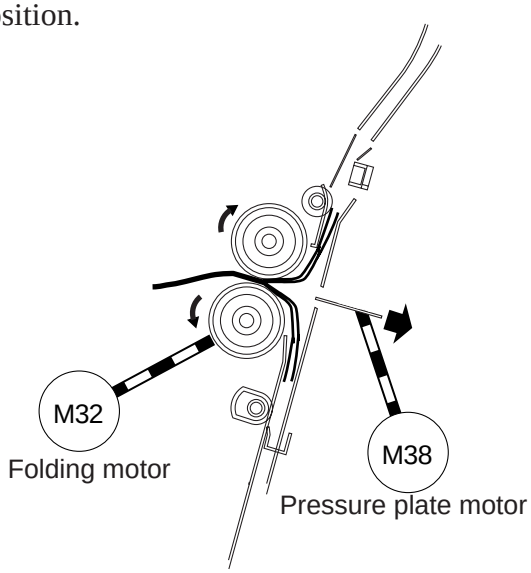

Figure 2-1240

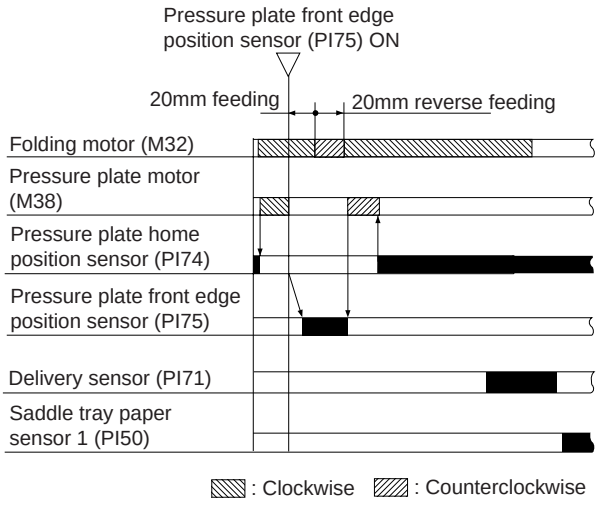

Figure 2-1241

COPYRIGHT © 1999 CANON INC.

5. Delivery Tray Control

a. Outline

After the paper stack has been folded in two by the folding rollers, it is delivered to the saddle delivery tray. The delivery tray is equipped with a movable wall to assist stacking. The movable wall is driven by the saddle tray motor (M20). A saddle tray home position sensor (PI49) is provided to detect the home position of the movable wall. The saddle tray is equipped with three paper sensors.

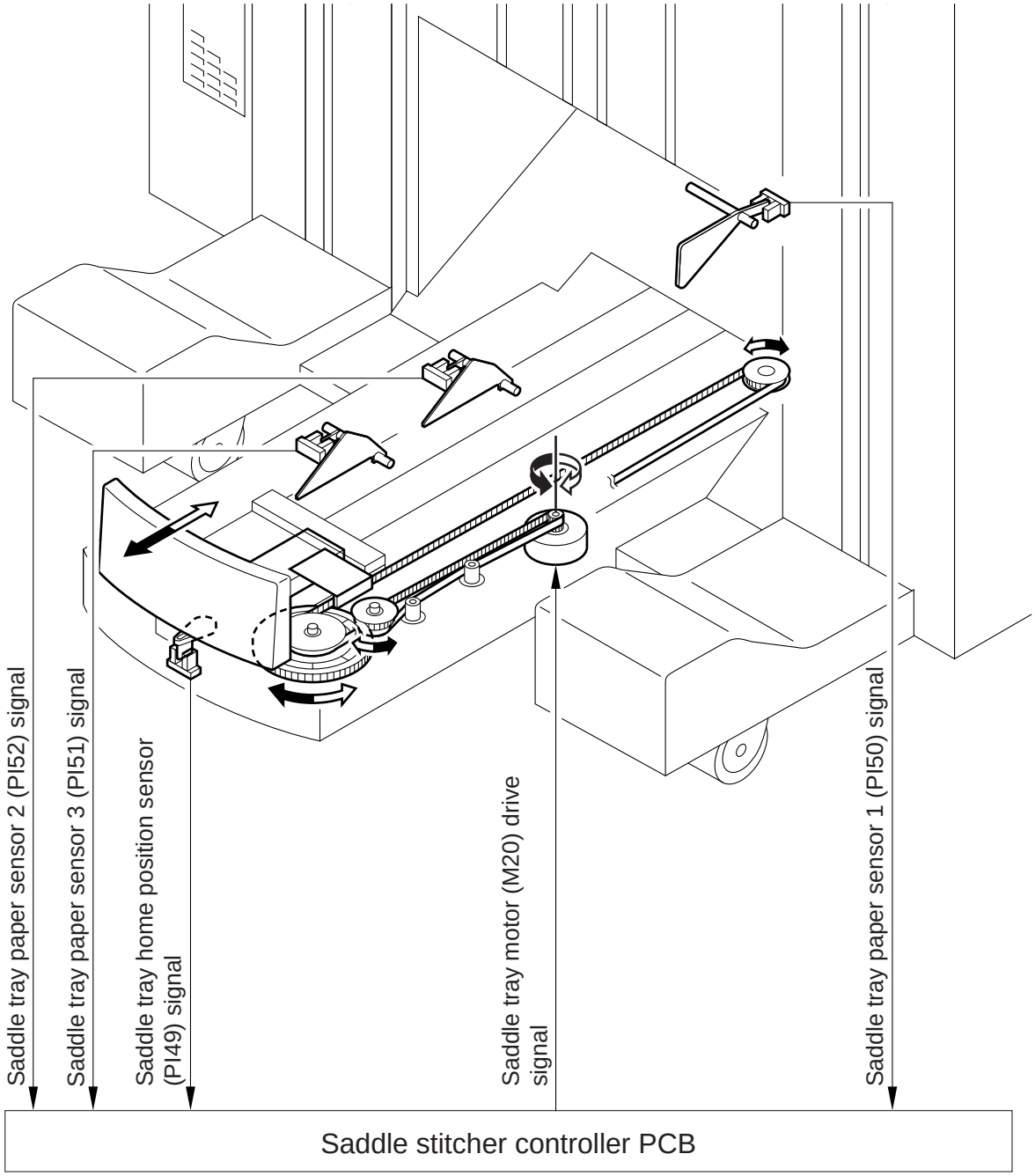

Figure 2-1242

 COPYRIGHT © 1999 CANON INC.

b. Movable Wall Control

The movable wall moves from the home position to a position suited to the size of the paper and number of sheets before saddle stitching starts. When delivery starts, it moves in the direction of the home position in accordance with the number of sets in the stack. Control of the movable wall does not depend on detection by the three paper sensors on the delivery tray. Figure 2-1243 shows the position of the movable wall according to the size of the paper, number of sheets and number of sets in the stack.

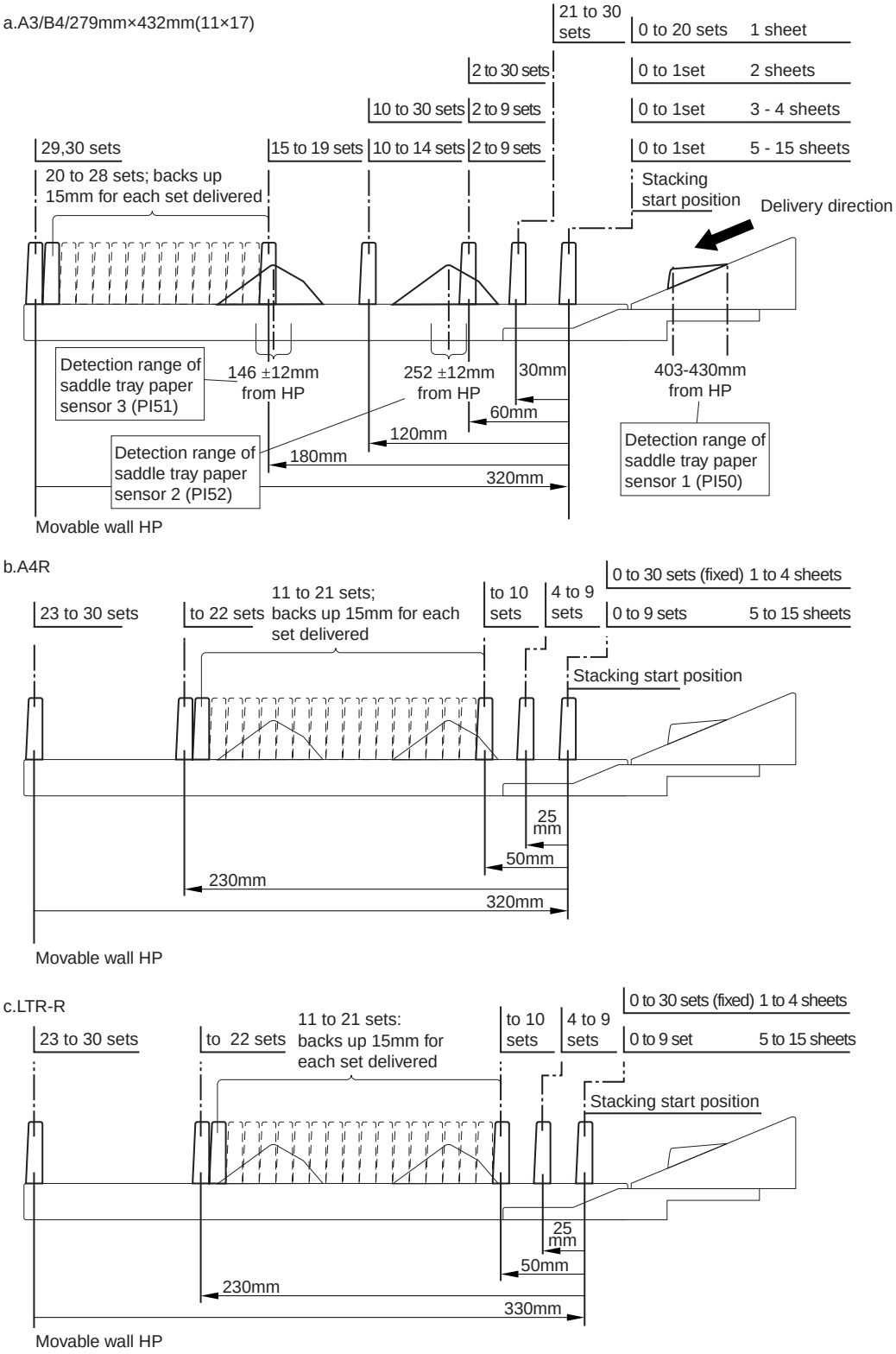

Figure 2-1243

F. Jam Detection

1. Outline

If any of the conditions below arises, the saddle stitcher assumes that jamming has occurred and sends a jam signal to the copier. As a result, the copier may stop copying and a jam message will be displayed on the copier's control panel.

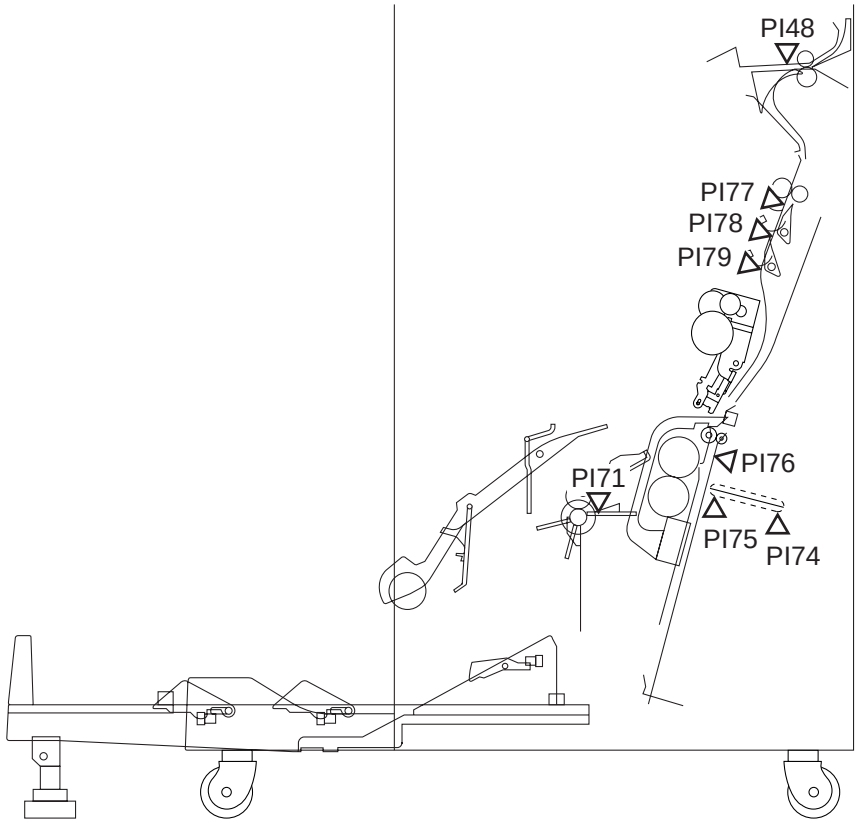

Figure 2-1244

No.	Sensor
PI48	Saddle inlet sensor
PI71	Delivery sensor
PI74	Pressure plate home position sensor
PI75	Pressure plate front edge position sensor
PI76	Vertical path paper sensor
PI77	Paper sensor 1
PI78	Paper sensor 2
PI79	Paper sensor 3

Table 2-1203

 COPYRIGHT © 1999 CANON INC.

2. Inlet Delay Jam (0011)

This occurs when the paper sensor 1 (PI77) on the paper sensor PCB fails to turn on after the time specified by the pick-up signal from the finisher has elapsed.

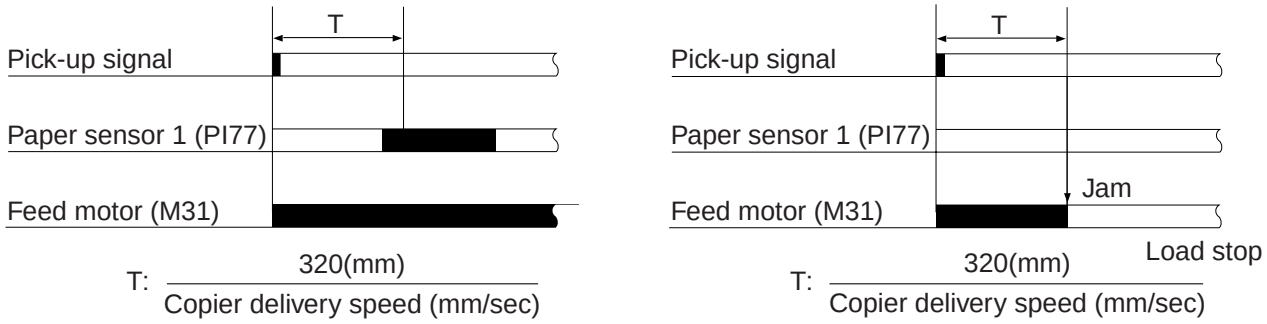

Figure 2-1245

3. Inlet Stationary Jam (00A1)

If the sensors on the paper sensor PCB (paper sensor 1 (PI77), paper sensor 2 (PI78) and paper sensor 3 (PI79)) do not turn off after feeding has taken place for a specific time after the sensors turned on, different sensors are used for the size of the paper.

a. In the case of A3/279mm x 432mm (11 x 17) size

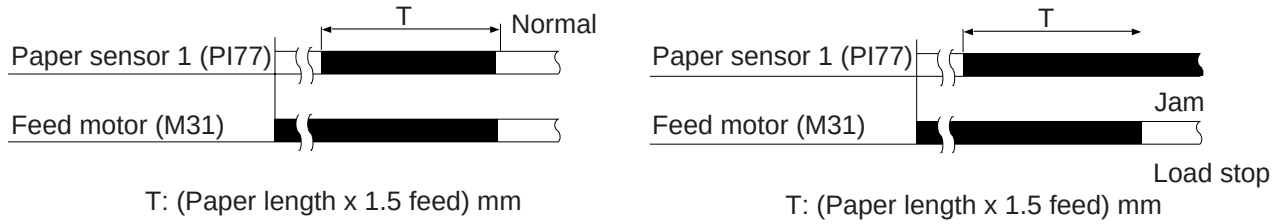

Figure 2-1246

b. In the case of B4 size

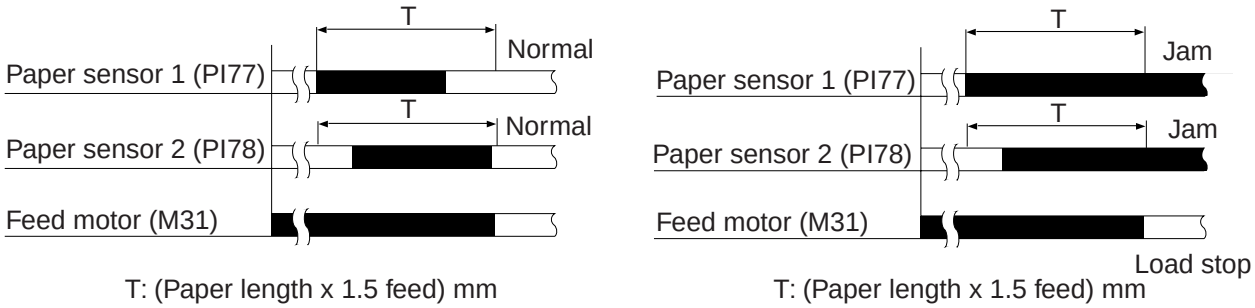

T: (Paper length x 1.5 feed) mm

T: (Paper length x 1.5 feed) mm

Note: In the figure jamming has been detected by two sensors, but one jam is detected by one sensor.

Figure 2-1247

c. In the case of A4R/LTRR size

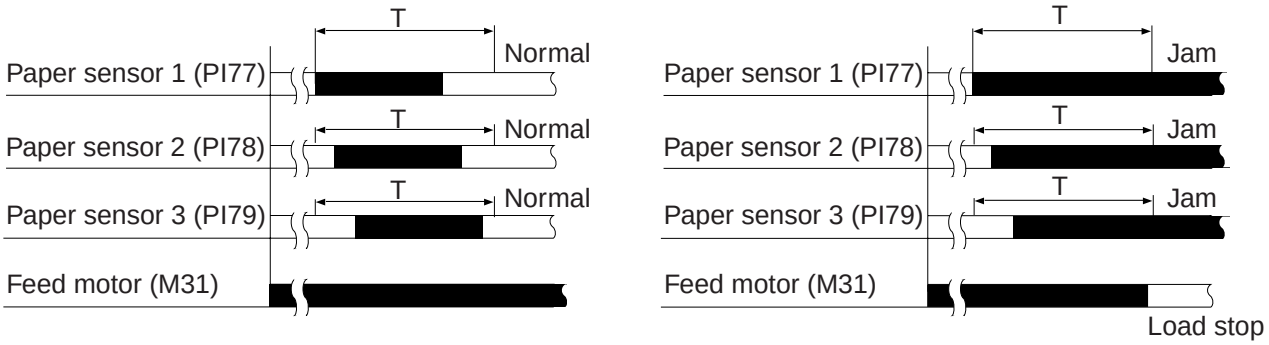

T: (Paper length x 1.5 feed) mm

T: (Paper length x 1.5 feed) mm

Note: In the figure jamming has been detected by three sensors, but one jam is detected by one sensor.

Figure 2-1248

 COPYRIGHT © 1999 CANON INC.

4. Delivery Delay Jam (0092)

a. Detection by delivery sensor

This occurs when the delivery sensor (PI71) fails to turn on within the specified time after the pressure plate front edge position sensor (PI75) has come on.

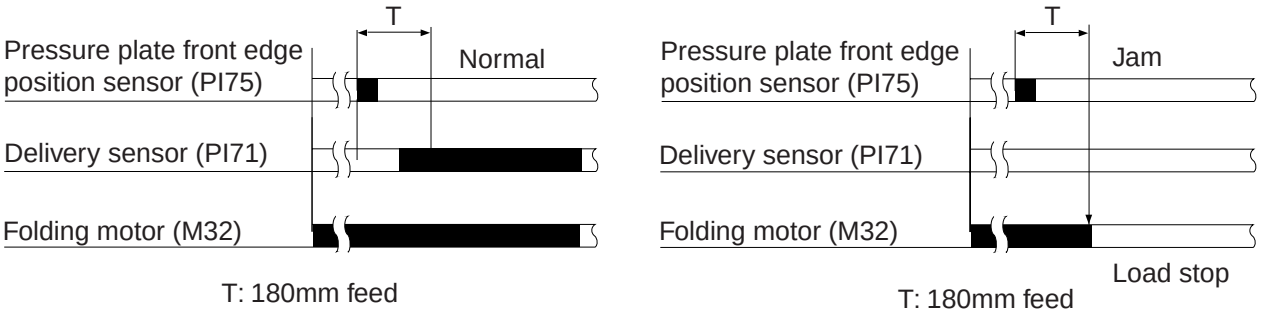

Figure 2-1249

b. Detection by vertical path paper sensor

This occurs when the vertical path paper sensor (PI76) fails to turn off despite feeding for the specified time after the delivery sensor (PI71) came on. (When the trailing edge of the paper stack does not move past the vertical path paper sensor)

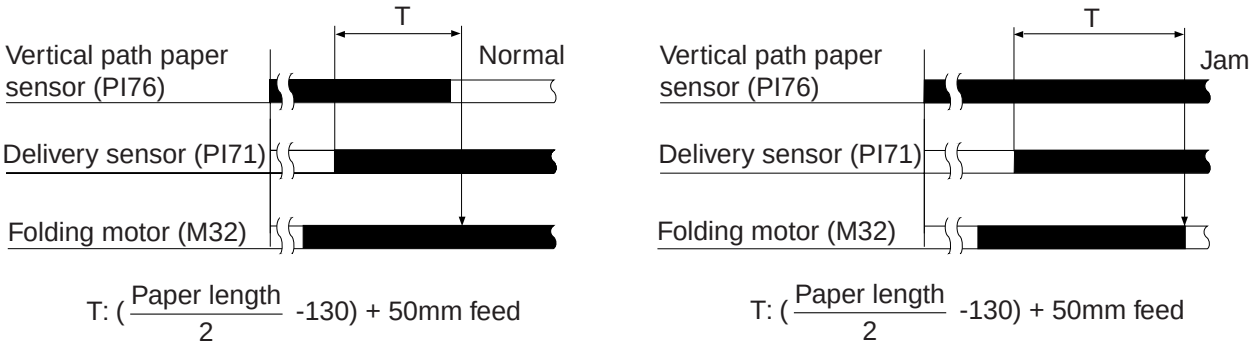

Note: 130mm is the length of the feed route from the vertical path paper sensor to the delivery sensor, and 50mm is the margin.

Figure 2-1250

COPYRIGHT © 1999 CANON INC.

5. Delivery Stationary Jam (00A2)

This occurs when the delivery sensor (PI71) fails to turn off despite feeding for the specified time after the sensor came on.

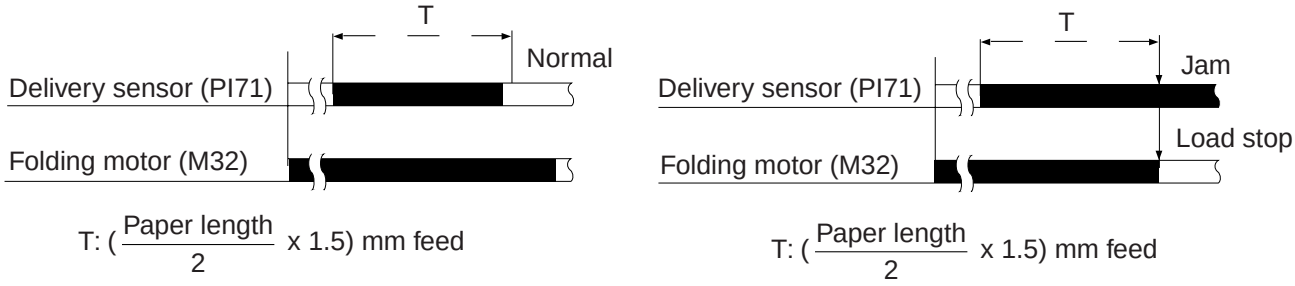

Figure 2-1251

6. Saddle Inlet Paper Sensor Delay Jam (0015)

This occurs when the saddle inlet paper sensor (PI48) fails to turn on within 1.5 sec of the sensor signal on the pick-up side of the saddle inlet paper sensor coming on.

The jam is detected by the finisher controller PCB.

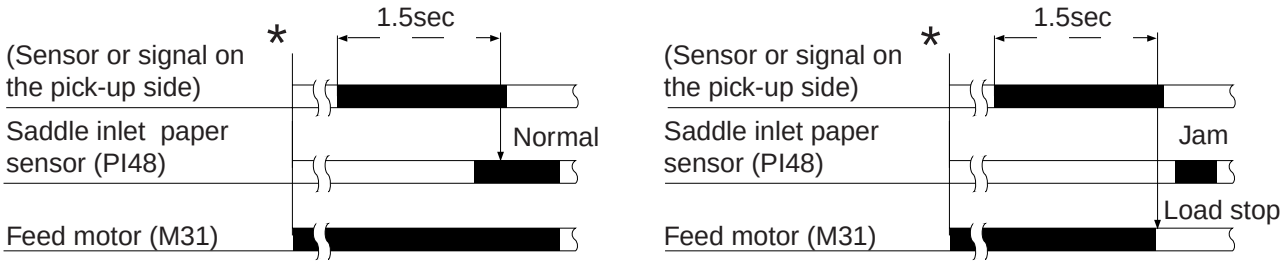

* The sensor or signal on the pick-up side differs depending on the optional accessories used and pick-up position.

Case 1: Inserter pick-up
Inserter feed sensor 3 (PI36)

Case 2: When the folder is attached
Horizontal path residual paper sensor (PI33)

Case 3: When the folder is not attached or the folder module has been cut off
Copier delivery signal

Figure 2-1252

 COPYRIGHT © 1999 CANON INC.

7. Saddle Inlet Paper Sensor Stationary Jam (0016)

This occurs when the saddle inlet paper sensor (PI48) fails to turn off despite feeding for the specific time (equivalent to paper length + 100mm) after the sensor came on:

The jam is detected by the finisher controller PCB.

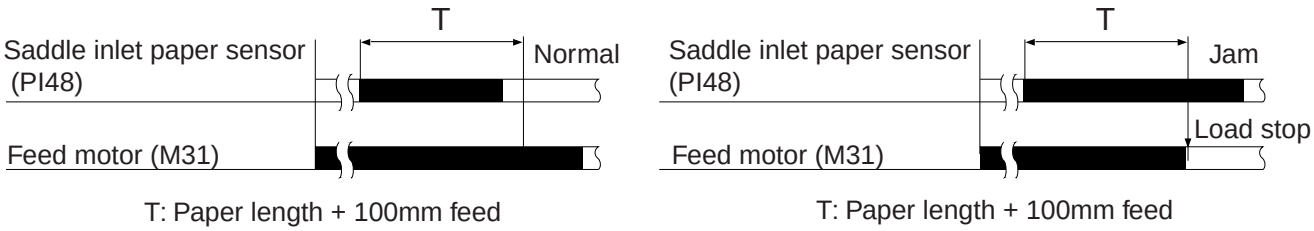

Figure 2-1253

8. Power-on Jam (0087)

This occurs when the three sensors on the paper sensor PCB, the delivery sensor (PI71) or the vertical path paper sensor (PI77) detects paper when the power is turned on.

9. Door Open Jam (0088, 0089)

This occurs when the outlet cover sensor (PI63) or the inlet cover sensor (PI69) detects that the cover is open during operation.

10. Stitcher Staple Jam

This occurs when the stitcher home position sensor (MS34/MS32) fails to come on again within 0.5 sec of going off when the stitcher motor (M37, M36) is rotating in a clockwise direction, and the sensor comes on within 0.5 sec when the motor is rotating counterclockwise.

Reference:

When all the doors are closed after the jam has been removed by the user, the saddle stitcher checks whether the sensors in Table 2-1204 have detected any paper. If the sensors detect any paper, removal of the jam is judged to be incomplete and a jam message is again sent to the copier.

No.	Sensor
PI77	Paper sensor 1
PI78	Paper sensor 2
PI79	Paper sensor 3
PI61	Delivery sensor
PI77	Vertical path paper sensor
PI48	Saddle inlet sensor

Table 2-1204

COPYRIGHT © 1999 CANON INC.

G. Power Supply

1. Outline

When the power supply to the copier is turned on, 24VSDL is sent from the fuse PCB of the finisher and 24VR is sent from the finisher controller PCB to the saddle stitcher controller PCB. 24VSDL is used to drive the motor and solenoid. 24VR is regenerated as 5V by the saddle stitcher controller PCB regulator IC (Q6) and used for the sensors, logic and LEDs.

24VSDL and 24VR which are supplied to the saddle stitcher controller PCB are turned on and off by SW971-6 on the switch PCB. Supply of 24VSDL is interrupted if the front cover of the finisher is open.

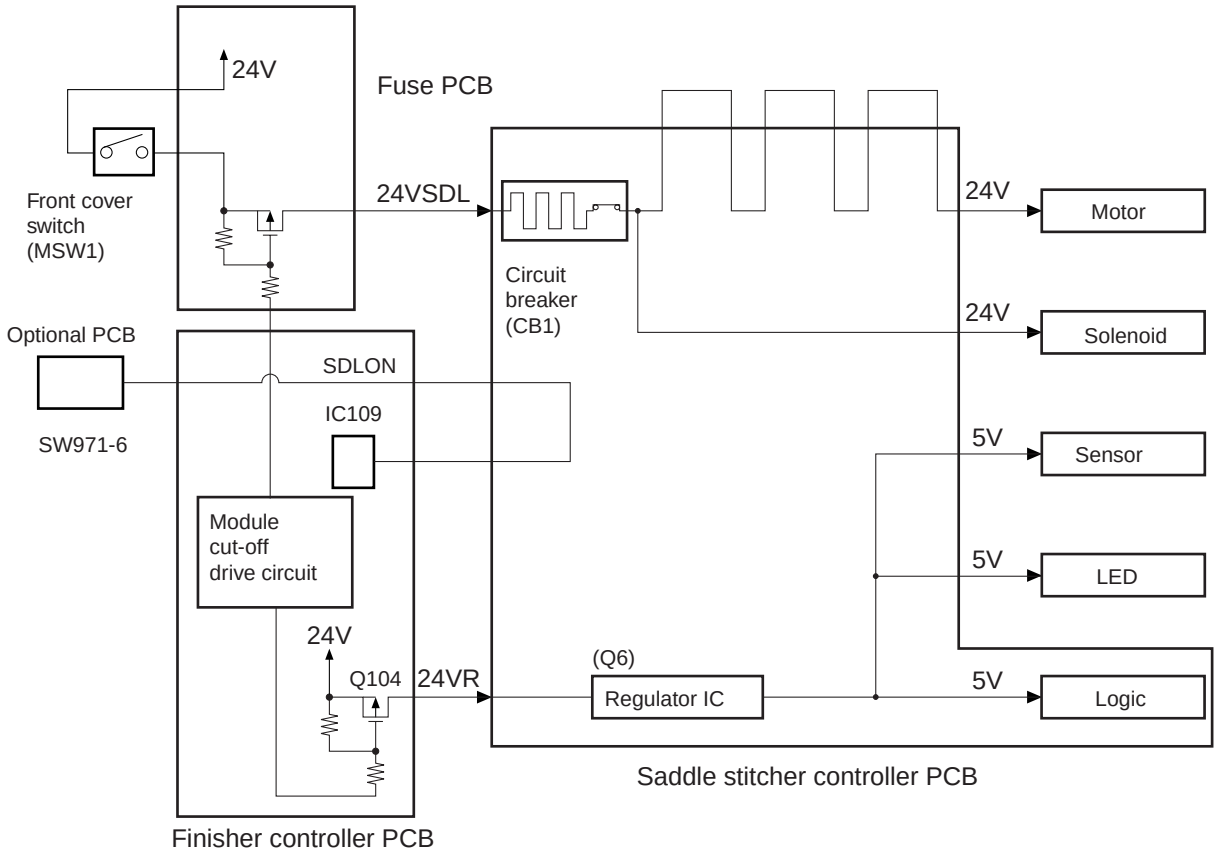

Figure 2-1254

2. Protection Function

24VSDL for driving the motor and solenoid incorporates a circuit breaker (CB1) as protection against overcurrent. 24V for driving the feed motor (M31), jogging motor (M33), paper positioning plate motor (M34) and saddle tray motor (M20) incorporates a fuse which blows in the event of overcurrent.

 COPYRIGHT © 1999 CANON INC.

XIII . PAPER FOLDING UNIT B1

A. Outline

Use of the folder enables paper sized A3, B4 or 279.4 x 431.8mm (11" x 17") to be folded in Z-shape, according to the mode set on the copier, and fed to the finisher.

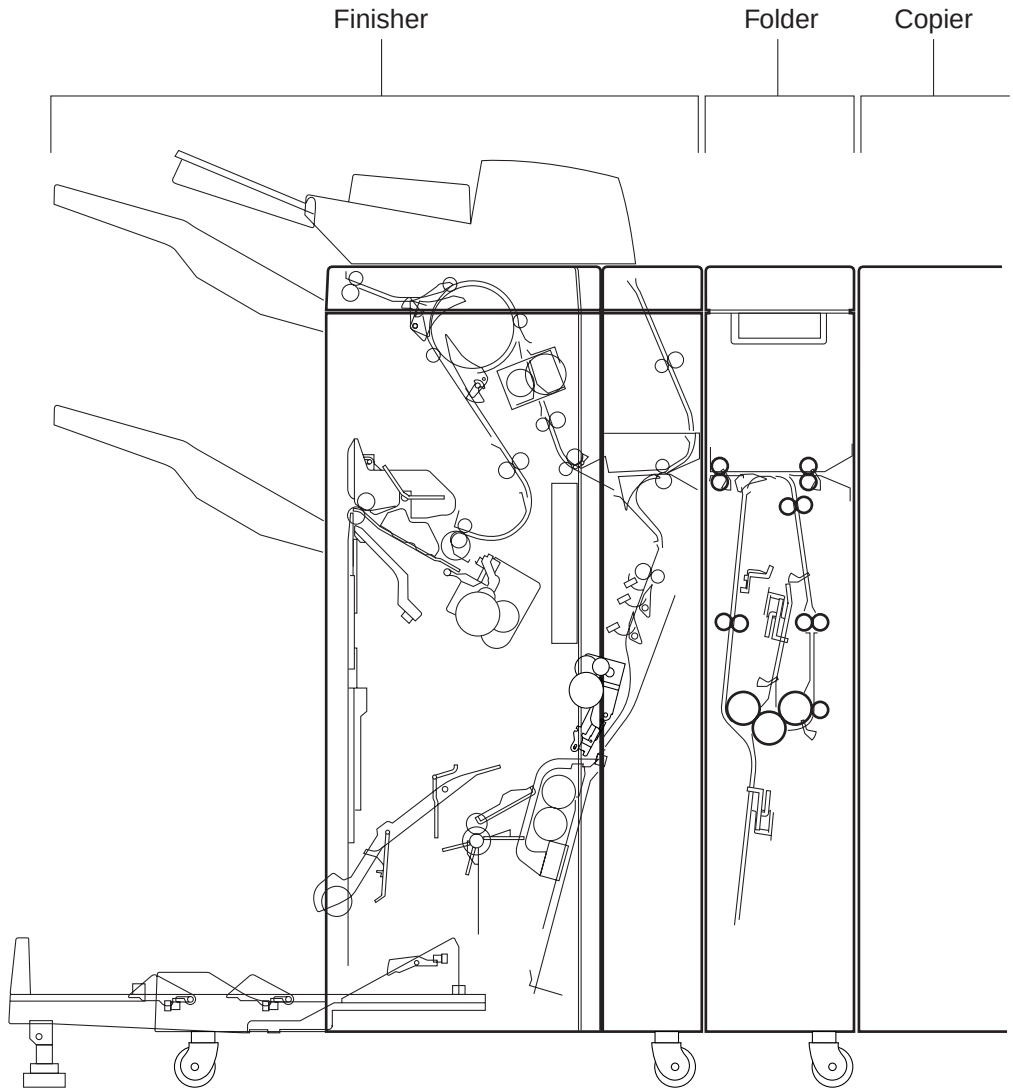

Figure 2-1301

COPYRIGHT © 1999 CANON INC.

B. Block Diagram of Electrical Circuit

The folder is controlled by the finisher controller PCB, so there is no controller PCB in the folder. The folder driver PCB receives the signal that is sent from the finisher and drives the motor and solenoid. Power is supplied to each folder load by the module ON signal from the finisher controller PCB.

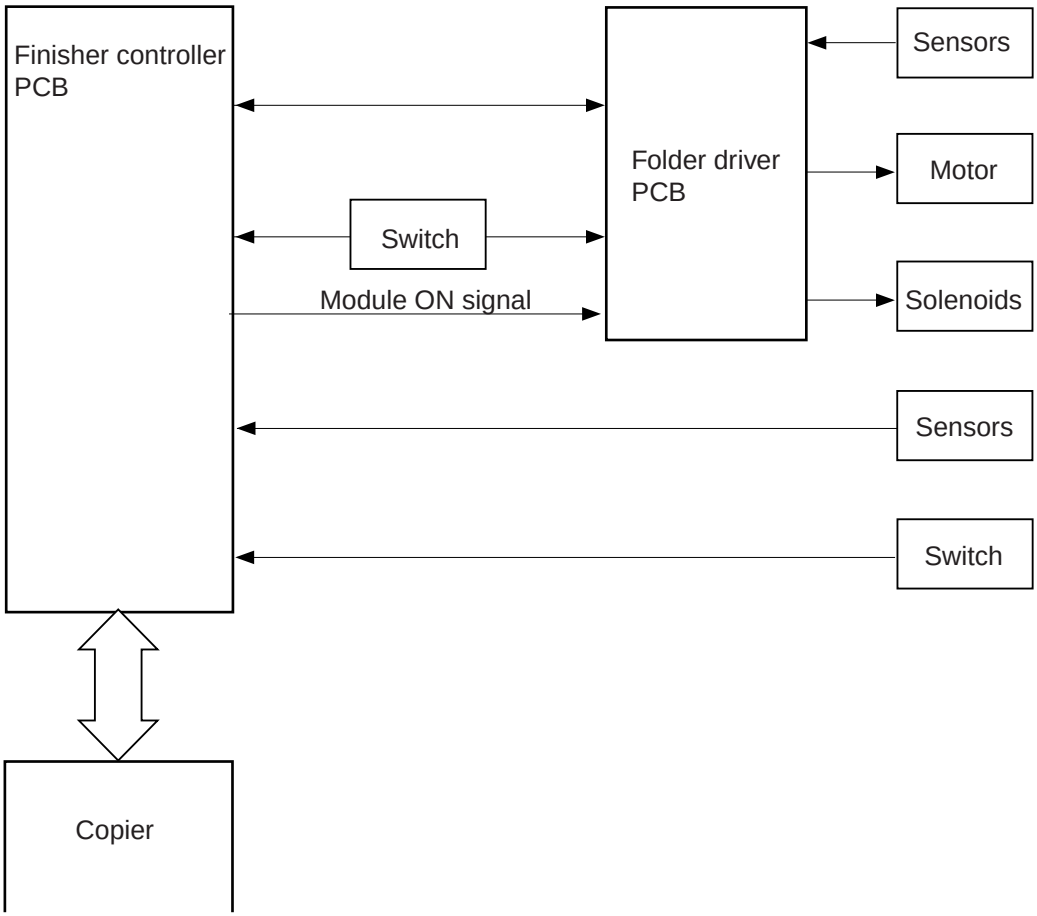

Figure 2-1302

 COPYRIGHT © 1999 CANON INC. CANON SADDLE FINISHER-D2 REV.0 AUG. 1999 PRINTED IN JAPAN (IMPRIME AU JAPON)

C. Basic Operation

The finisher folds the paper in Z-shape according to the mode set on the copier.

1. Non-folding Mode

1. Press the Copy Start key on the copier.

2. The paper is sent along the horizontal path to the finisher.

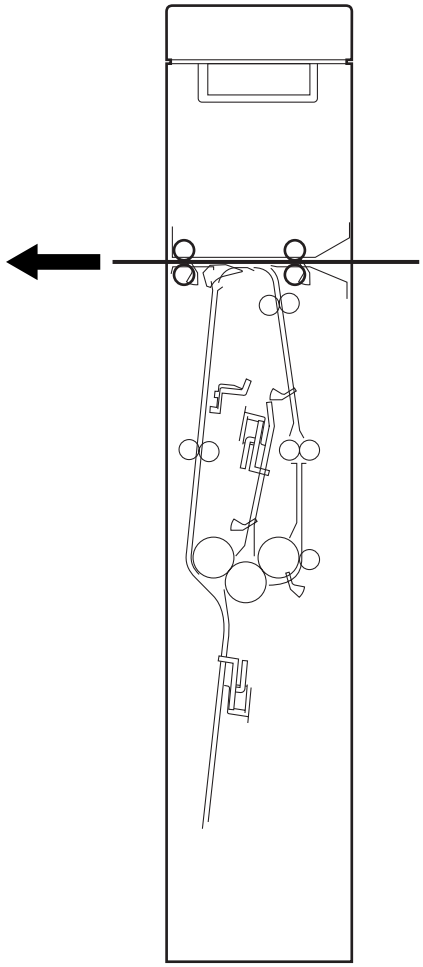

Figure 2-1303

COPYRIGHT © 1999 CANON INC.

2. Z-folding Mode

1. Press the Copy Start key on the copier.

2. Paper of a size capable of being folded is fed into the paper folding unit as shown in Figure 2-1304 below and folded into Z-shape. (For details, see page 2-140.)

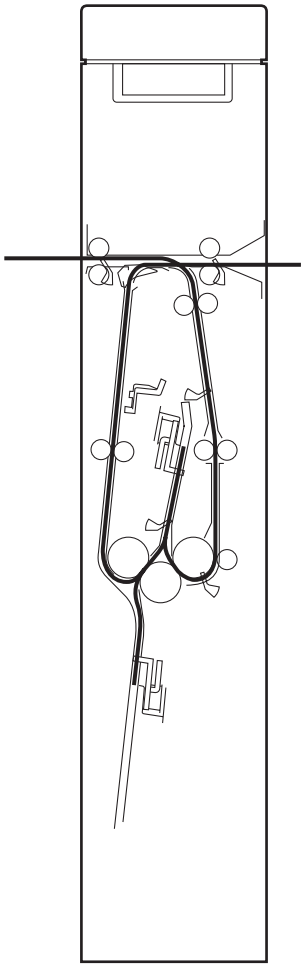

Figure 2-1304

3. After Z-folding, the paper is sent to the finisher.

 COPYRIGHT © 1999 CANON INC.

D. Feed Drive System

1. Outline

Paper from the copier is sent to the finisher by the feed rollers.

Feed rollers 1 and 2 are driven by the finisher inlet motor (M1).

The skew correction rollers, folding rollers A, B and C, and folding rollers 2 are driven by the folder motor (M14).

The feed route of the paper is changed by the inlet solenoid (SL5) being turned on and off according to the mode set on the copier.

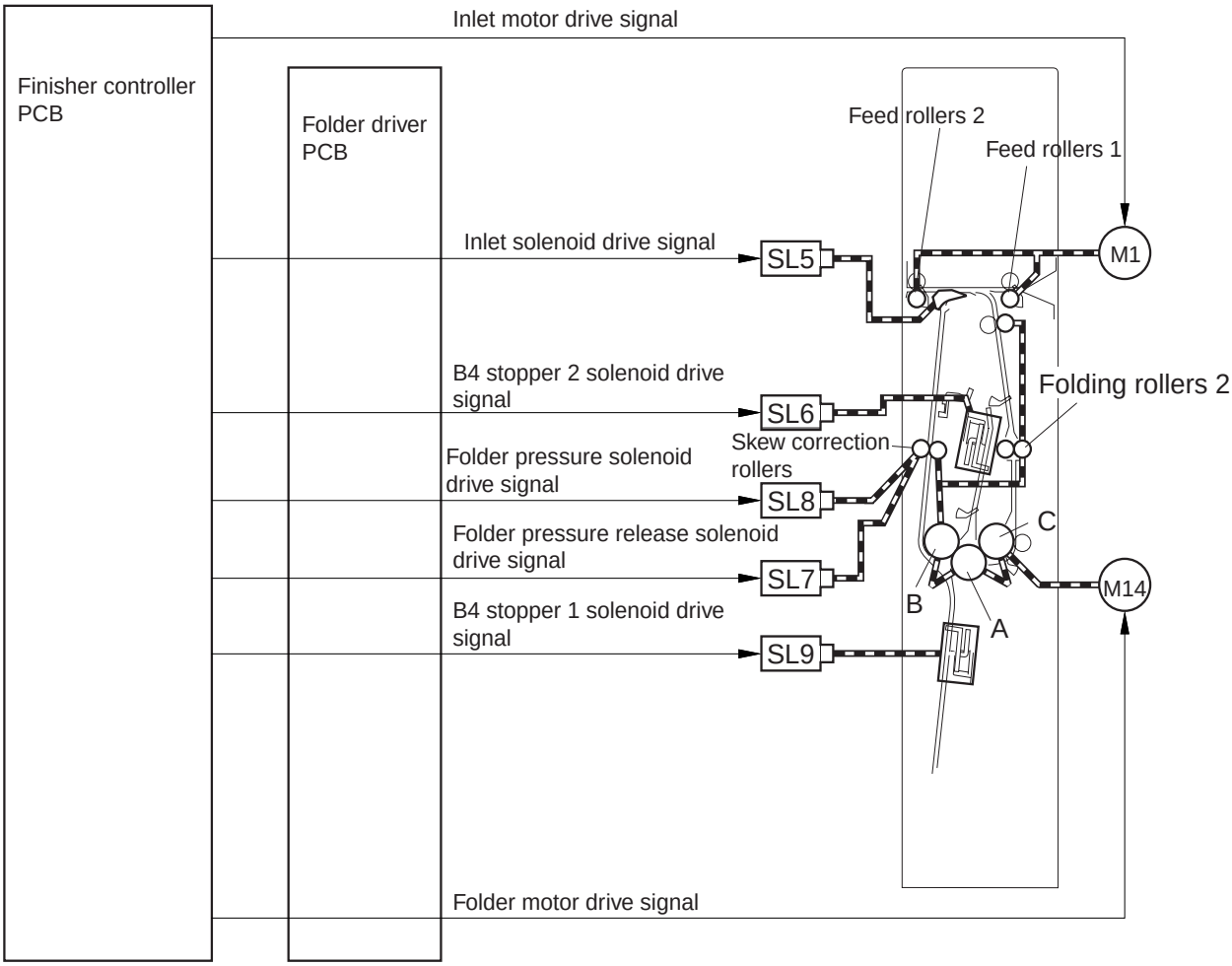

Figure 2-1305

2. Feed Route

The feed route for each mode is shown below.

a. Non-folding mode

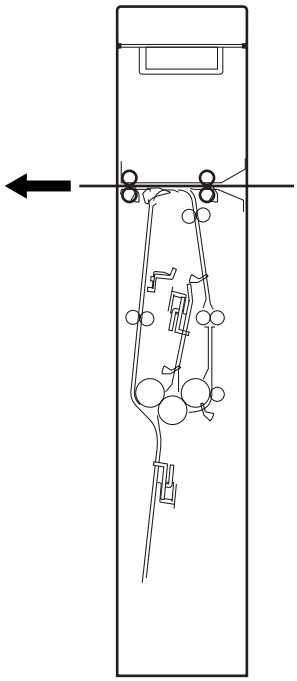

Figure 2-1306

b. Z-folding mode

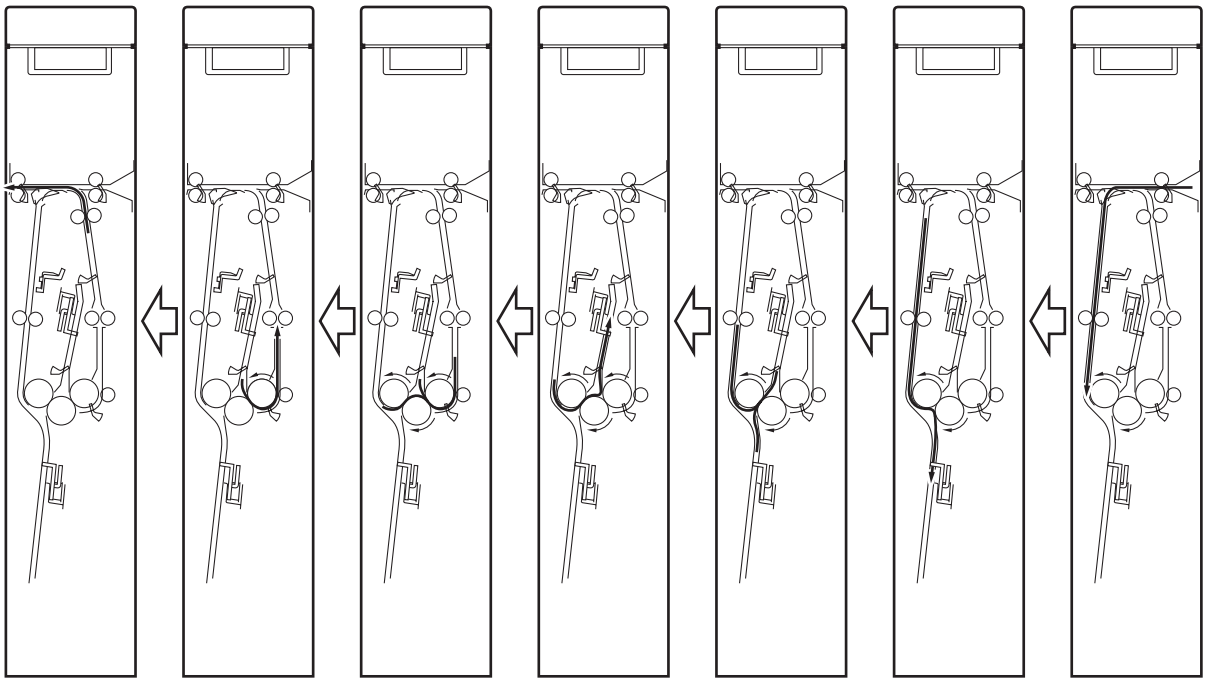

Figure 2-1307

 COPYRIGHT © 1999 CANON INC.

3. Feed Speed Control

The feed speed in folding mode is controlled by the folder motor (M14) and finisher inlet motor (M1).

The feed speed is only the processing speed, and paper is fed at the same speed as the processing speed of the copier (speed control range: 314 to 607 mm/sec).

The feed speed in non-folding mode is controlled by the finisher inlet motor (M1).

4. Folder Motor Control

A DC brushless motor is used for the folder motor (M14). The CPU (IC101) on the finisher controller PCB sends a standard pulse (FFMFG) to the folder motor controller PCB. The motor drive signal (FFMON) is sent to the folder driver PCB by serial communication.

When the folder motor (M14) rotates, the clock pulse (FM1CLK) is sent to the speed control circuit by the encoder. The speed control circuit compares the standard pulse (FM1SRP) and the clock pulse from the encoder and controls the drive circuit so that they match. The clock pulse signal (FM1CLK) is also sent to the finisher controller PCB and is synchronized with the finisher inlet motor (M1). The CPU (IC101) monitors the clock pulse signal, and if the number of pulses per second does not reach the specified value, the folder motor is judged to be faulty. The motor is stopped and at the same time an error code E518 is displayed on the control panel of the copier.

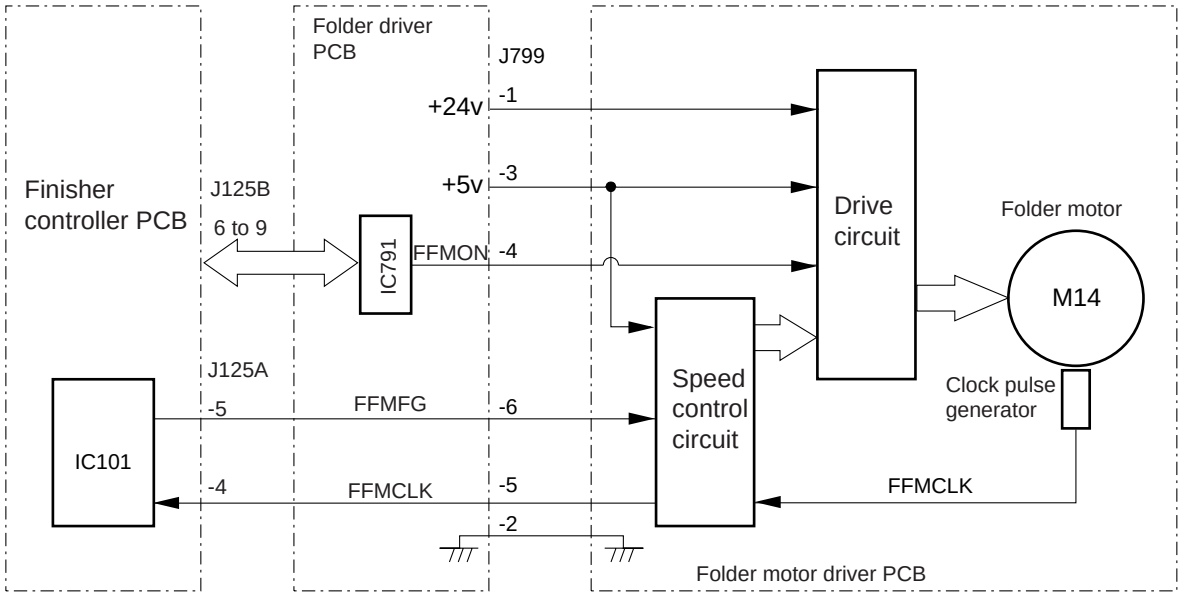

Figure 2-1308

5. Folding Stopper Drive

Each stopper operates according to the size of the paper to stop feeding of the paper. The stoppers move as shown in Figure 2-1309 below when the solenoids are on.

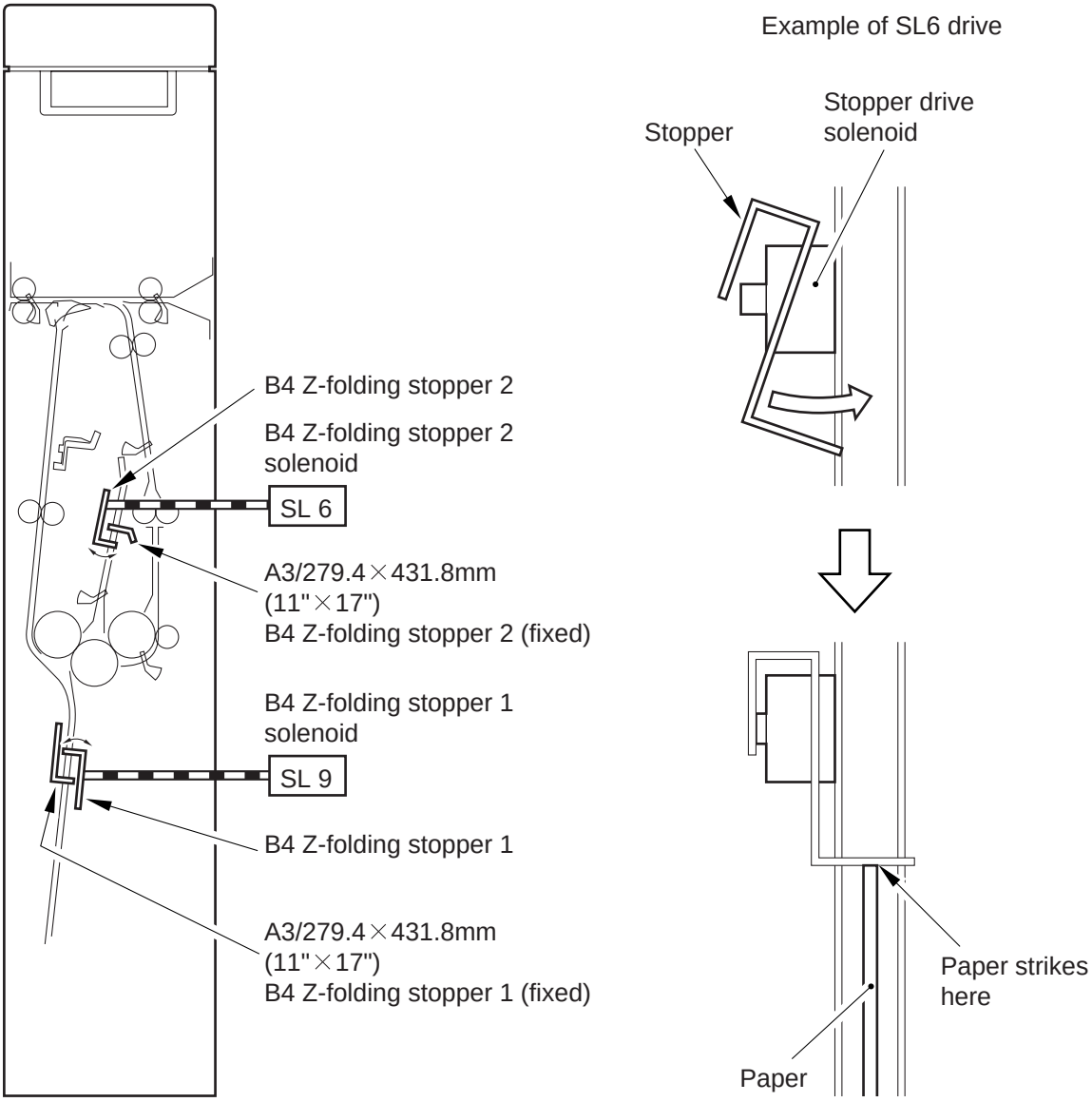

Figure 2-1309

 COPYRIGHT © 1999 CANON INC. CANON SADDLE FINISHER-D2 REV.0 AUG. 1999 PRINTED IN JAPAN (IMPRIME AU JAPON)

6. Folding Position

Positions A and B where the paper is folded by the stoppers are shown below.

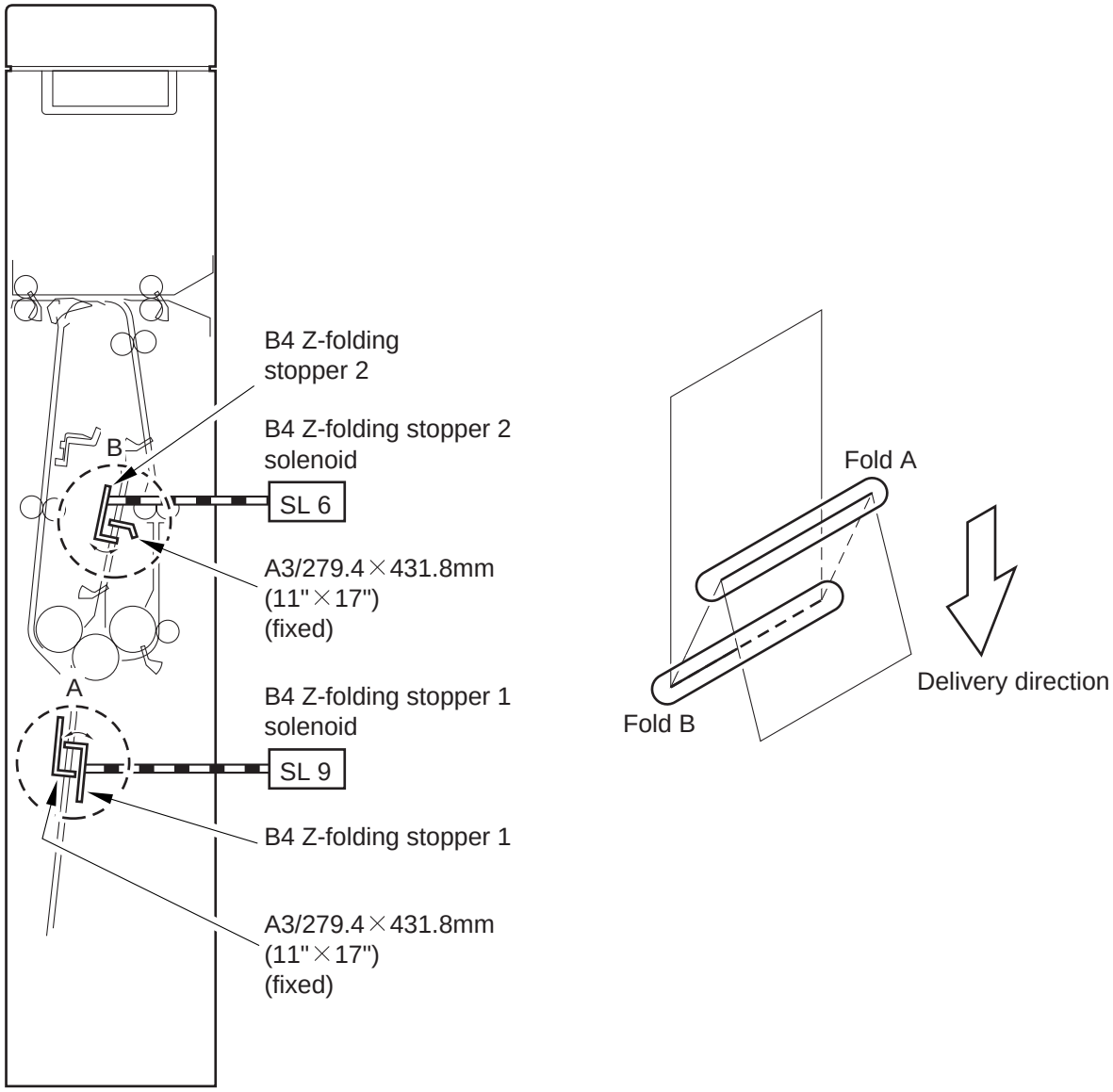

Figure 2-1310

7. Skew Correction

Skews in the paper are corrected by the skew correction roller and pressure roller before the paper is folded.

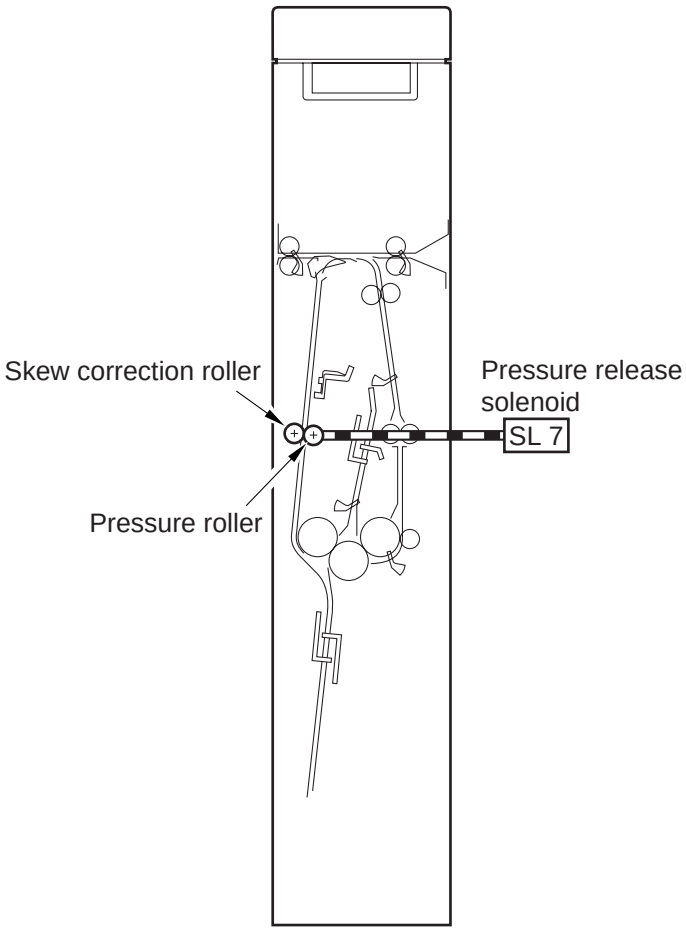

Figure 2-1311

1) The paper strikes stopper 1.
2) The paper continues to be fed by the skew correction roller and strikes stopper 1 to form an arch.

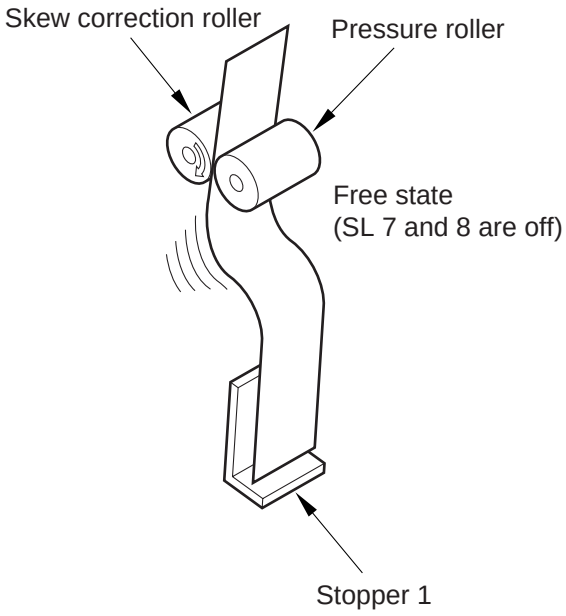

Figure 2-1312

 COPYRIGHT © 1999 CANON INC.

3) The pressure release solenoid (SL7) comes on, the pressure roller moves away from the paper and the skew is corrected.

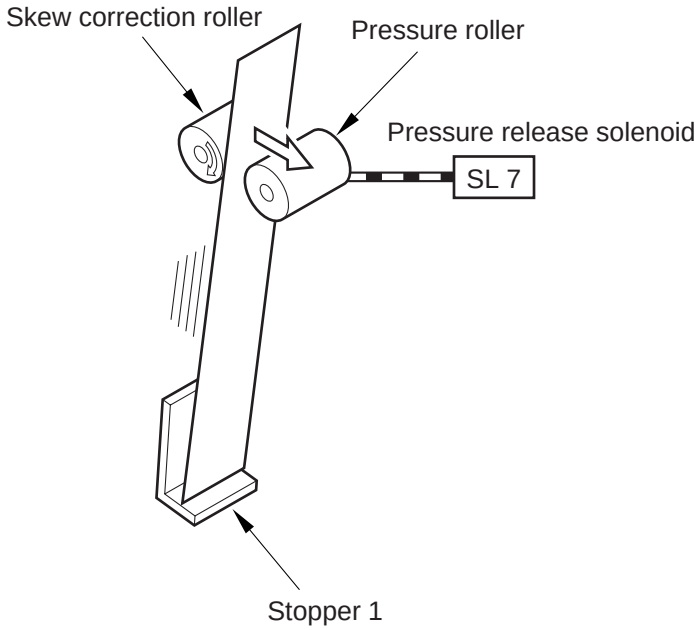

Figure 2-1313

8. Folding Operation

When the skew has been corrected, the paper is folded in Z-shape by the folding rollers A, B and C.

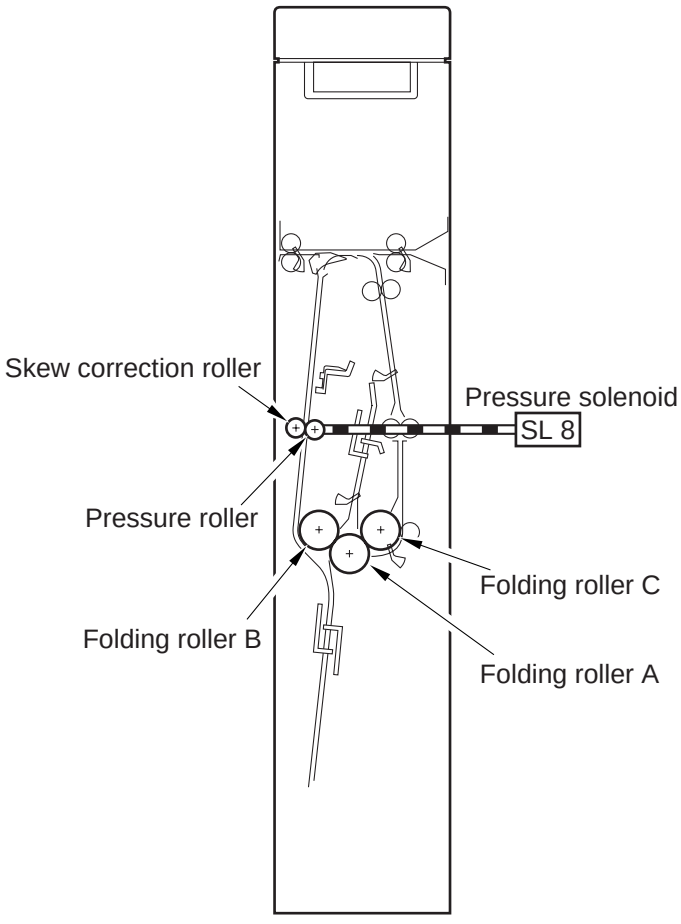

Figure 2-1314

COPYRIGHT © 1999 CANON INC.

1) When the skew has been corrected, the pressure solenoid (SL8) comes on. As a result, the pressure roller is pressed against the skew correction roller and the paper is fed again to form an arch.

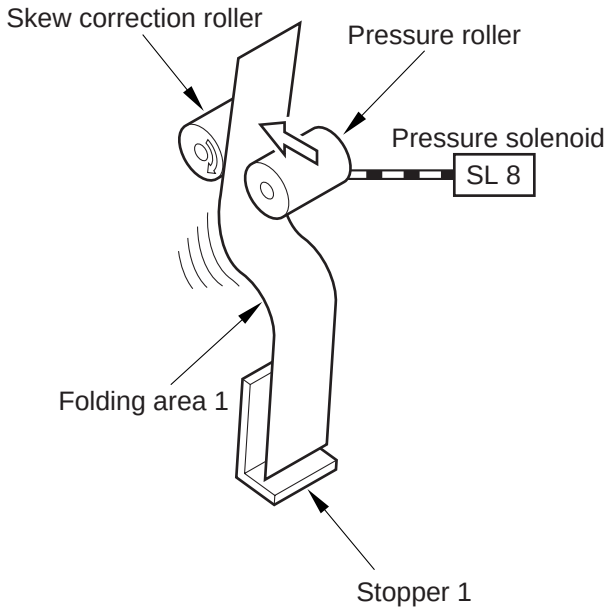

Figure 2-1315

2) As the arch in the paper gets bigger, it is drawn between the folding rollers A and B and folded.

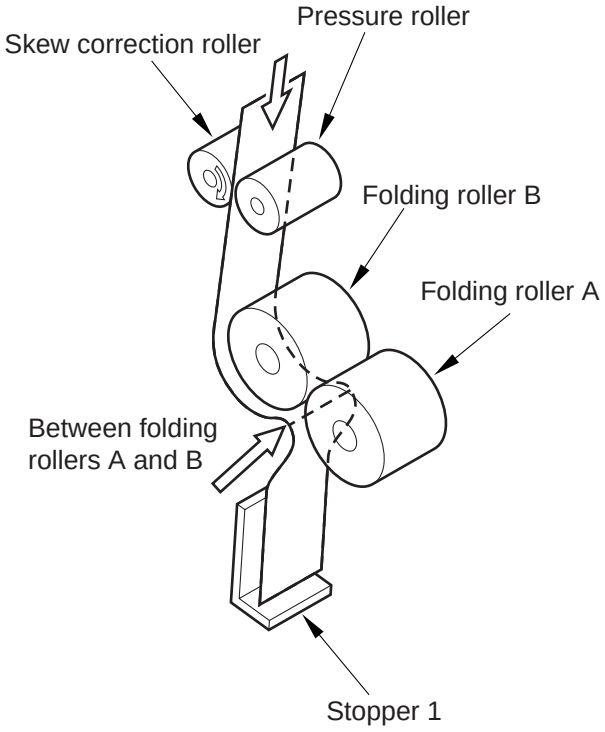

Figure 2-1316

 COPYRIGHT © 1999 CANON INC.

3) The paper is fed by the folding rollers A and B and it strikes stopper 2.

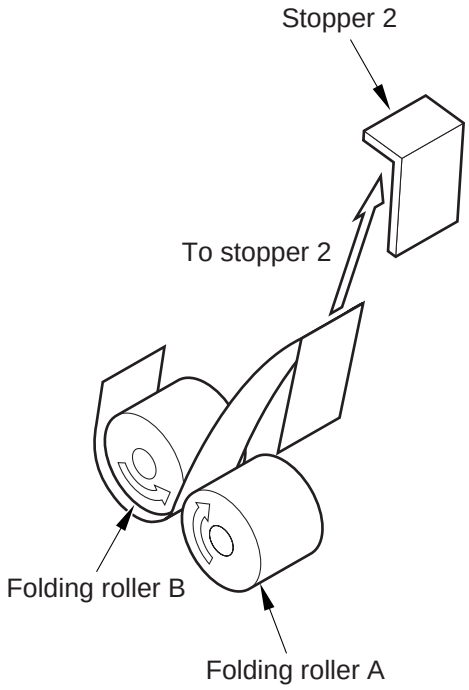

Figure 2-1317

4) The paper continues to be fed by the folding rollers A and B and it forms an arch.
5) As the arch in the paper gets bigger, it is drawn between the folding rollers A and C and folded.

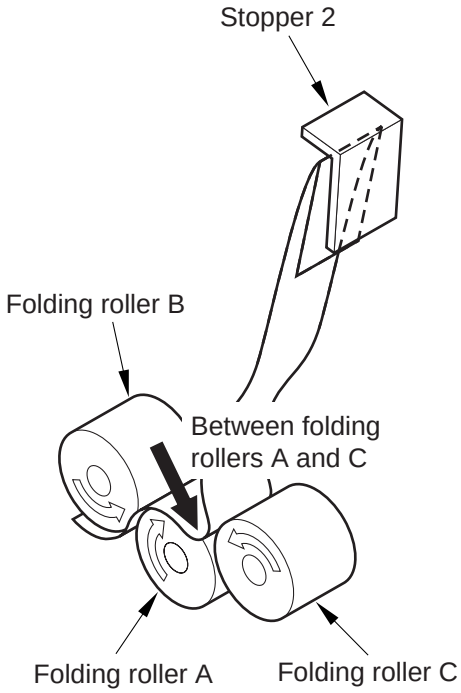

Figure 2-1318

9. Drive Sequence

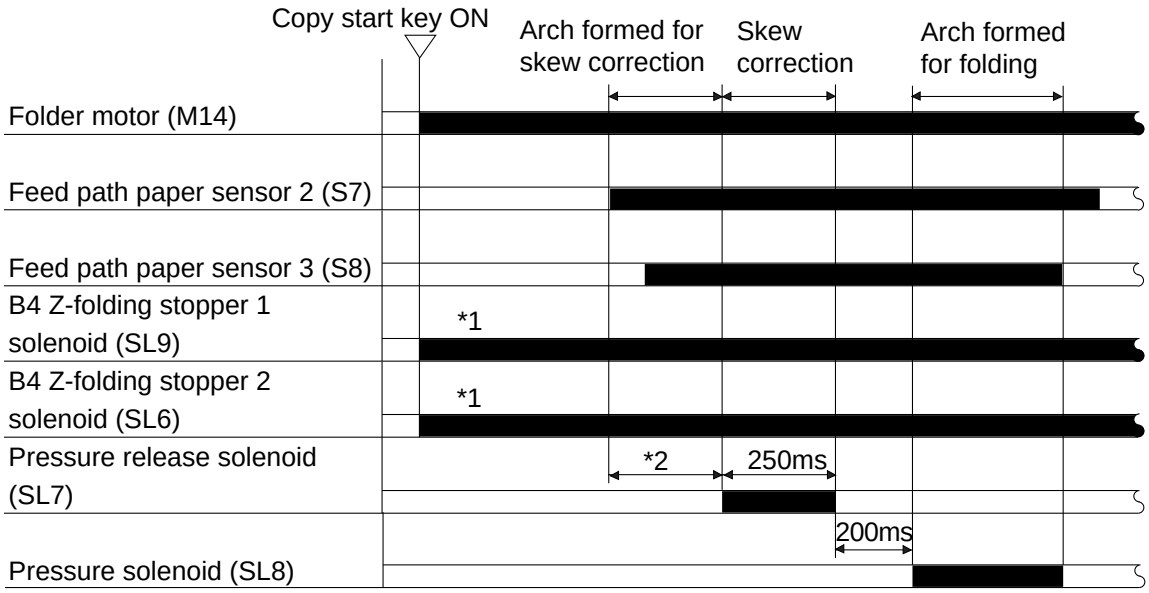

*1: ON only in the case of B4 size
*2: Differs depending on size of paper

Figure 2-1319

 COPYRIGHT © 1999 CANON INC.

E. Jam Detection

1. Outline

The folder is equipped with nine sensors as shown in Figure 2-922 to detect whether the paper is being fed properly. Jamming is judged by checking the signals from the sensors at times programmed in advance in the CPU of the finisher controller PCB. If the CPU judges that jamming has occurred, the finisher controller PCB sends a jam signal to the copier. As a result, the copier stops copying and an error message is displayed on the copier's control panel.

The CPU judges that jamming has occurred in the following cases:

a. when paper is detected by a sensor when the power supply is turned on, when warming up is finished or during standby (power-on jam)
b. when the paper does not reach the sensor within the specified time (delay jam)
c. when the paper does not move past a sensor within the specified time (stationary jam)
d. when the top cover is opened while the folder is in operation (door open jam).

If any of the jams described above occurs, the cause of the jam should be removed first, then the remaining number of copies can be copied automatically by pressing the Copy Start key again.

COPYRIGHT © 1999 CANON INC.

Notation	Sensor	Function	Code
PI34 S7 S8 S8 PI33	Feed path paper sensor 1 Feed path paper sensor 2 Feed path paper sensor 3 (light-emitting) Feed path paper sensor 3 (light-receiving) Feed path paper sensor 4	Delay/Stationary Jam detection Power-on Jam detection	0011/0021 0012/0022 0013/0023 0014/0024
PI31 PI35 PI32	Folding path residual paper sensor 1 Folding path residual paper sensor 2 Folding path residual paper sensor 3	Power-on Jam detection	0007
PI29 PI30	Folder set sensor Top cover open sensor	Door open jam	0008

Table 2-1301

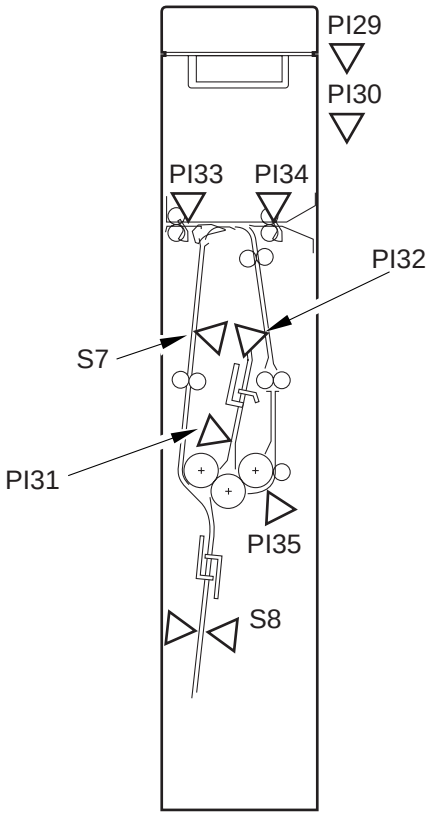

Figure 2-1320

 COPYRIGHT © 1999 CANON INC.

2. Jam Detection Timing

a. Feed path paper sensor 1 delay jam (0011)

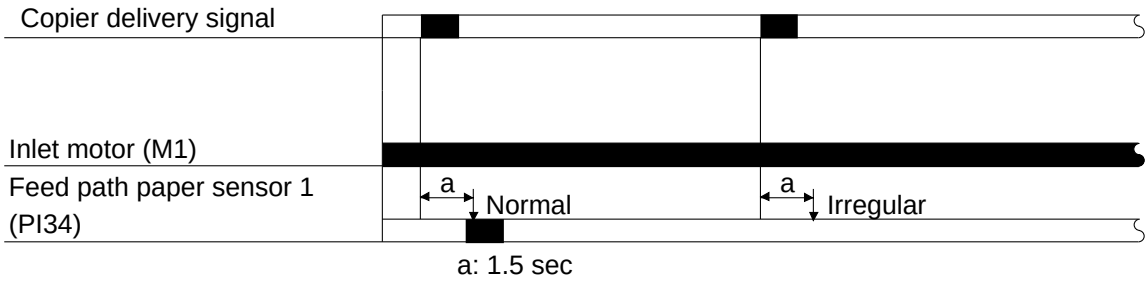

Figure 2-1321

b. Feed path paper sensor 1 stationary jam (0021)

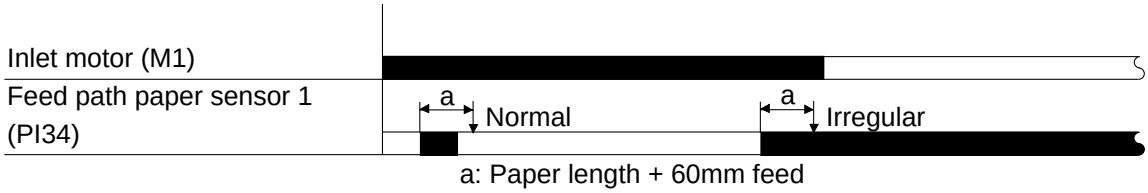

Figure 2-1322

c. Feed path paper sensor 2 delay jam (0012)

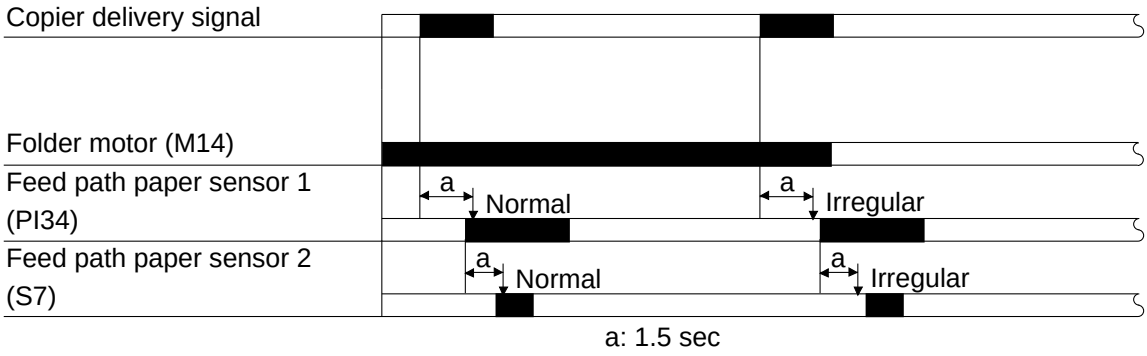

Figure 2-1323

d. Feed path paper sensor 2 stationary jam (0022)

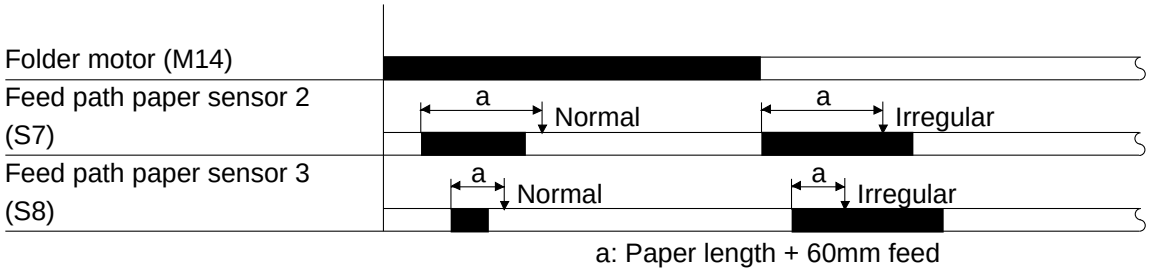

Figure 2-1324

COPYRIGHT © 1999 CANON INC.

e. Feed path paper sensor 3 delay jam (0013)

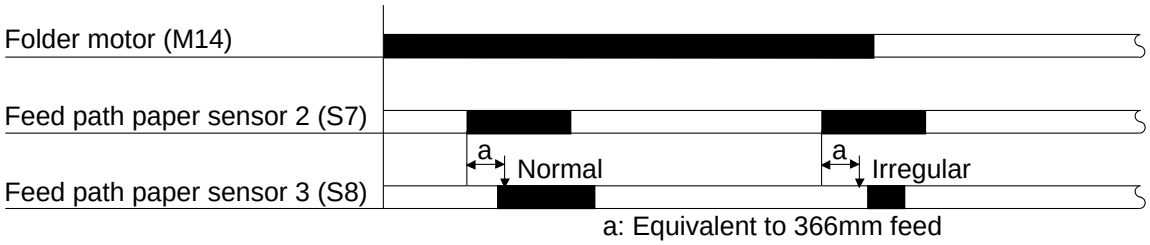

Figure 2-1325

f. Feed path paper sensor 3 stationary jam (0023)

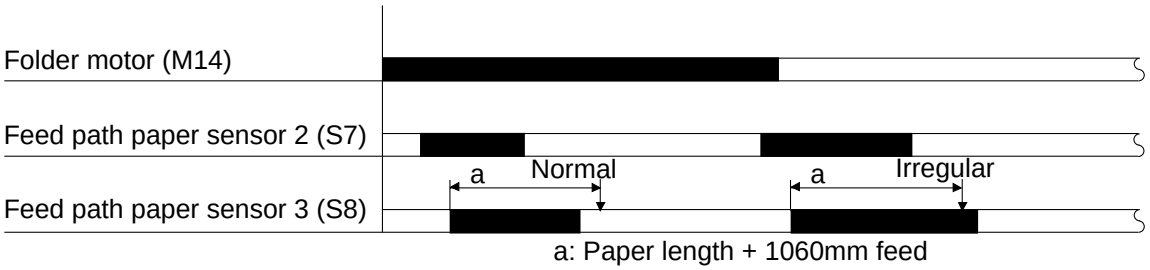

Figure 2-1326

g. Feed path paper sensor 4 delay jam (0014)

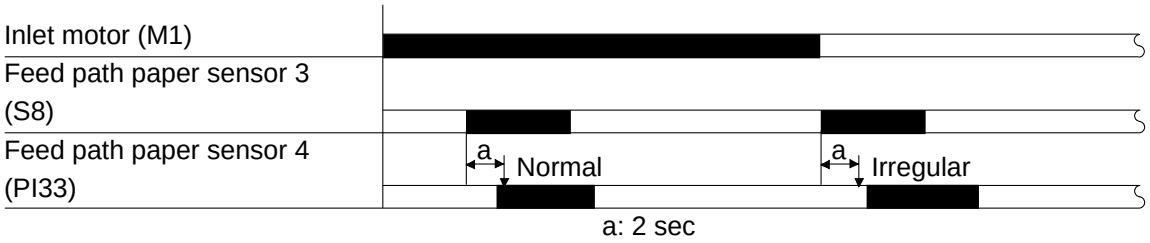

Figure 2-1327

h. Feed path paper sensor 4 stationary jam (0024)

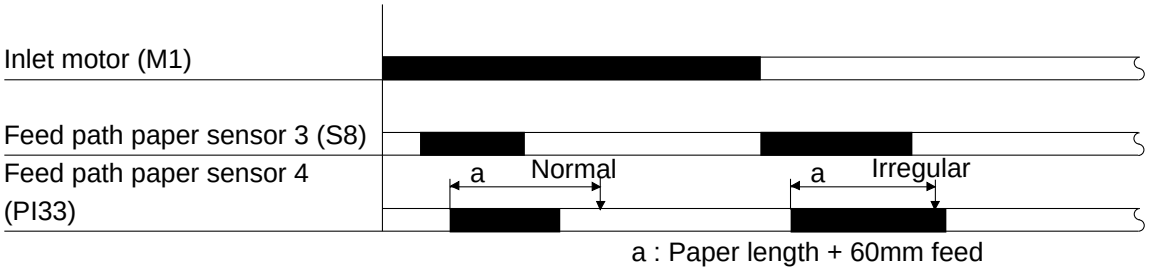

Figure 2-1328

 COPYRIGHT © 1999 CANON INC.

F. Power Supply

Figure 2-1329 shows the route of the power supply to the folder. Refer to the finisher power supply for information regarding the power supply from the finisher controller PCB to the folder driver PCB.

24VZFLD and 5V supplied to the folder driver PCB are turned on and off by the ZFLDON signal from the finisher controller PCB. The ZFLDON signal is turned on and off by operation of SW971-5 on the switch PCB by the user. 24VFLD and 5V are supplied to each load from the folder driver PCB.

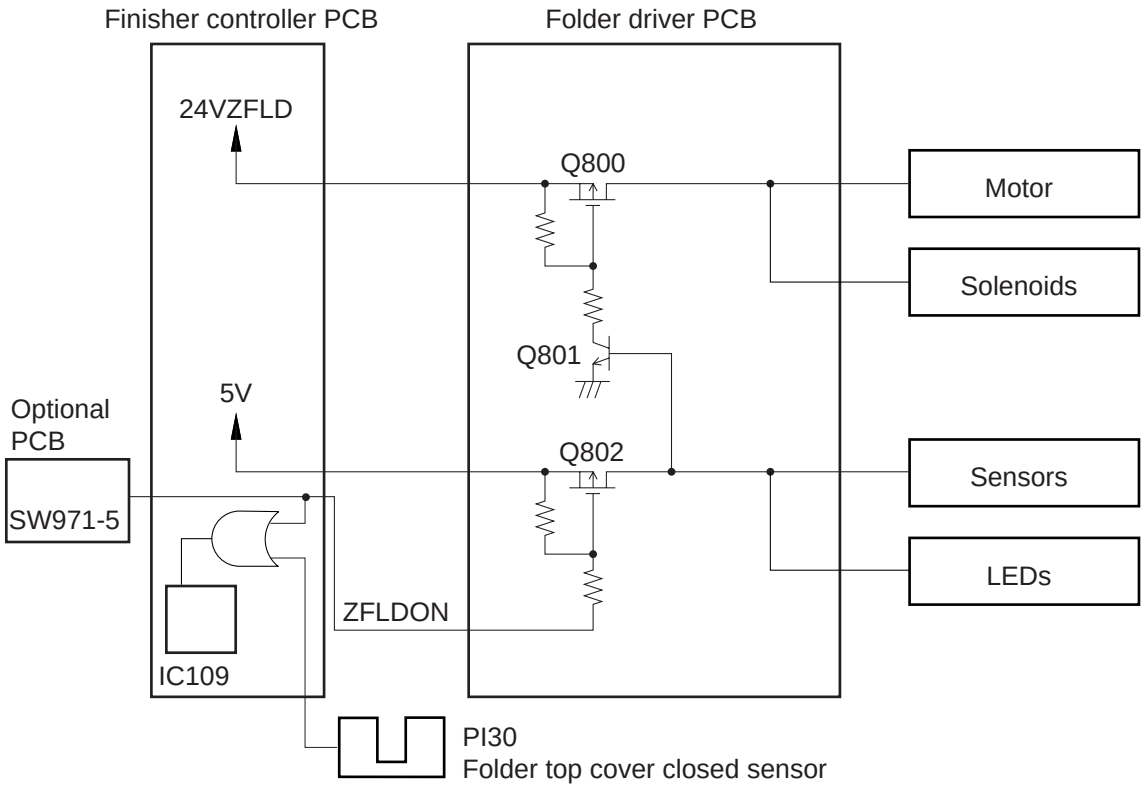

Figure 2-1329

XIV . INSERTER (COVER INSERTION UNIT-A1)

A. Outline

Use of the inserter (Cover Insertion Unit-A1) enables a cover to be added to the sheets sent from the copier. The cover is set in advance in the inserter pick-up assembly.

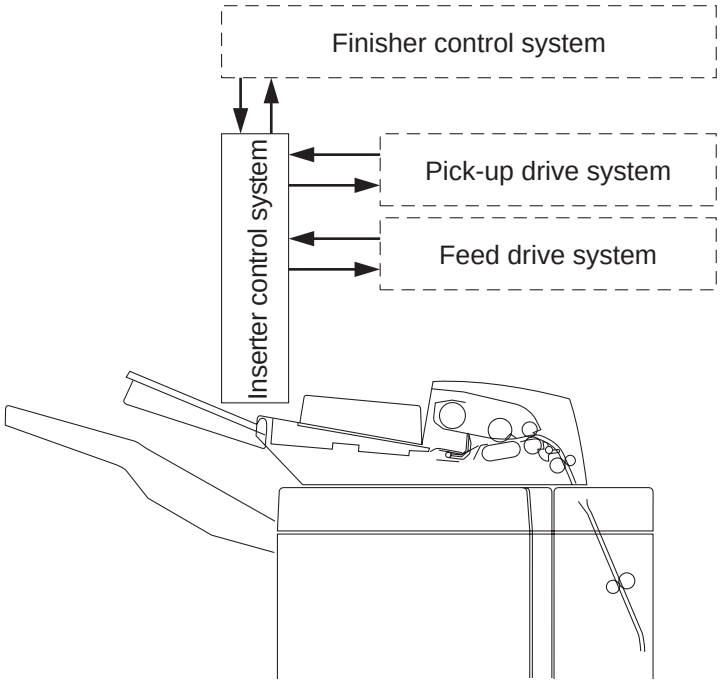

Figure 2-1401

 COPYRIGHT © 1999 CANON INC.

B. Outline of Power Circuit

The inserter is controlled by the finisher controller PCB, so there is no controller PCB inside the inserter. The control signal sent from the finisher controller PCB is received by the inserter driver PCB and drives the motors, clutchs and solenoids. When the module ON signal from the finisher controller PCB comes on, power is supplied to the inserter loads.

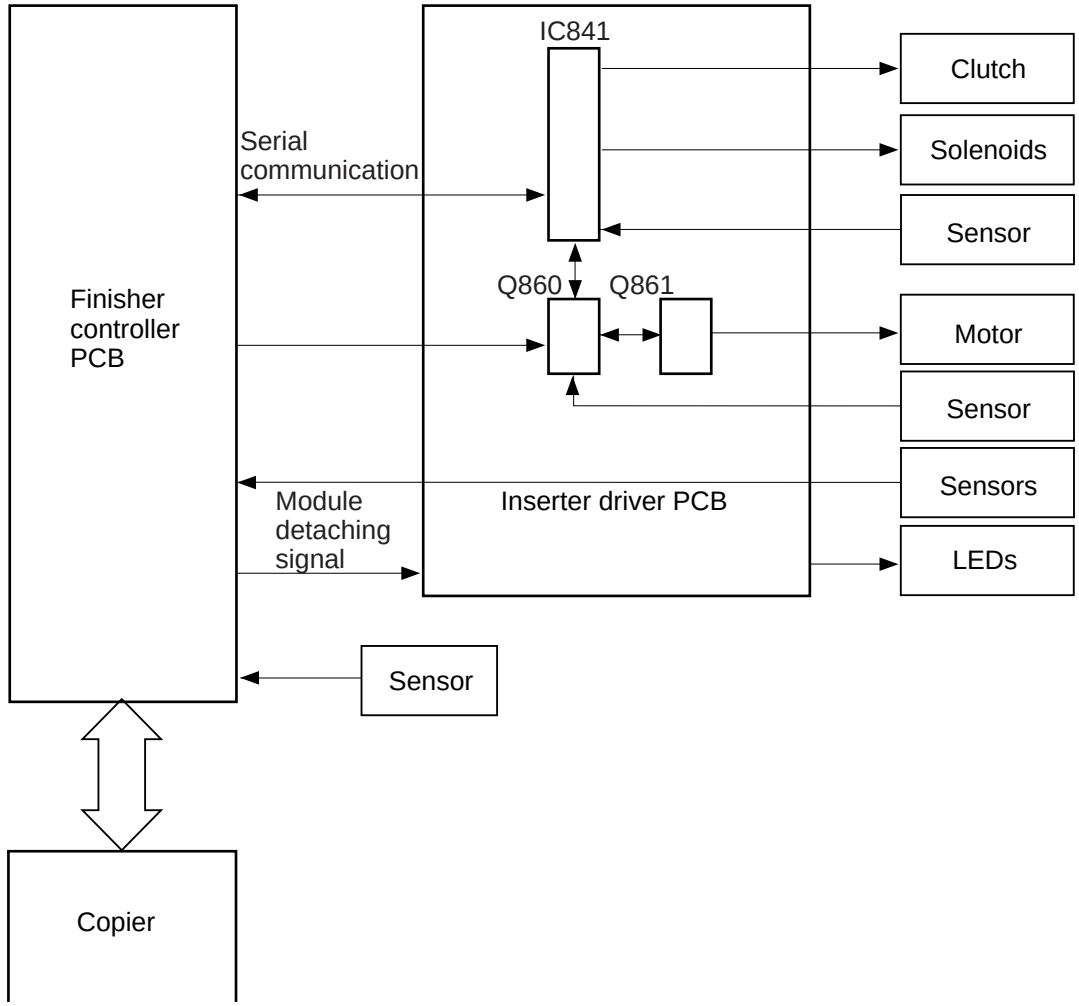

Figure 2-1402

C. Basic Operation

The inserter adds the cover or interleaf to the paper stack sent from the copier, according to the mode set on the copier.

1. Finisher mode

1) The delivery signal from the copier is detected.

2) The sheet is picked up from the inserter tray.

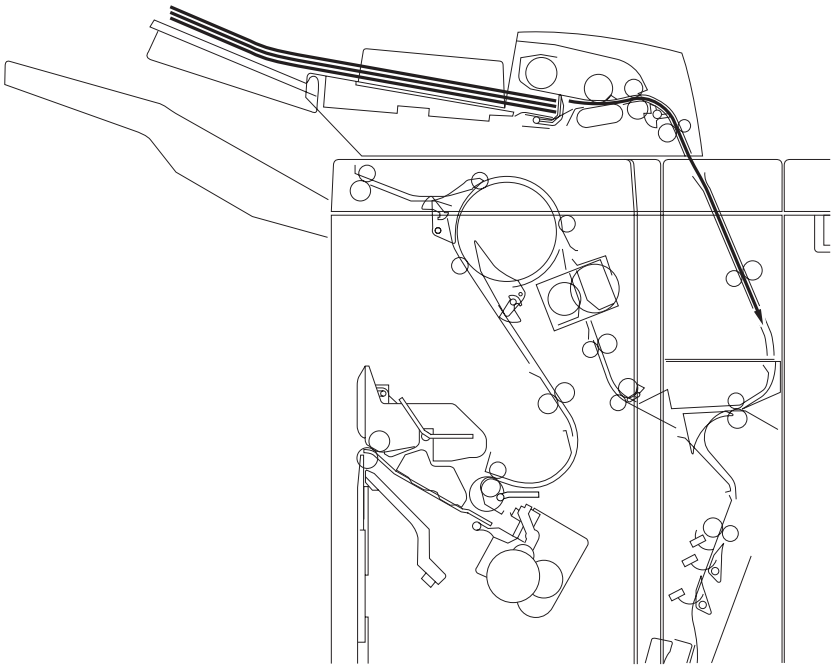

Figure 2-1403

3) The sheet is fed in the direction of the finisher buffer roller.

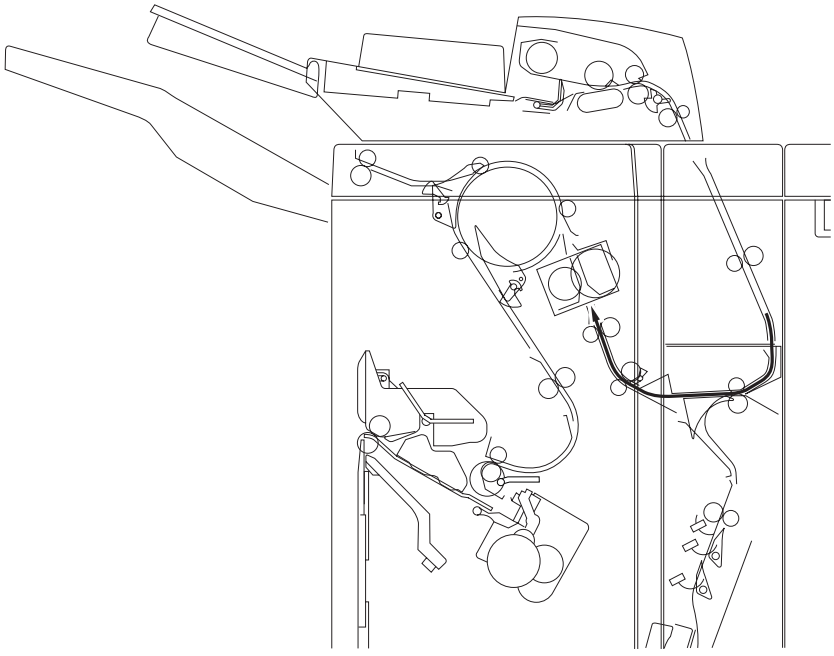

Figure 2-1404

 COPYRIGHT © 1999 CANON INC.

2. Saddle Stitcher Mode

1) The delivery signal from the copier is detected.

2) The sheet is picked up from the inserter tray.

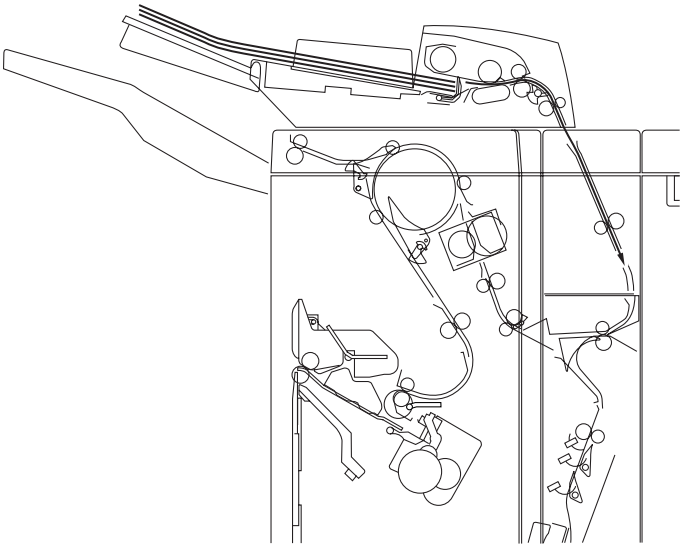

Figure 2-1405

3) The sheet is fed in the direction of the finisher buffer roller.

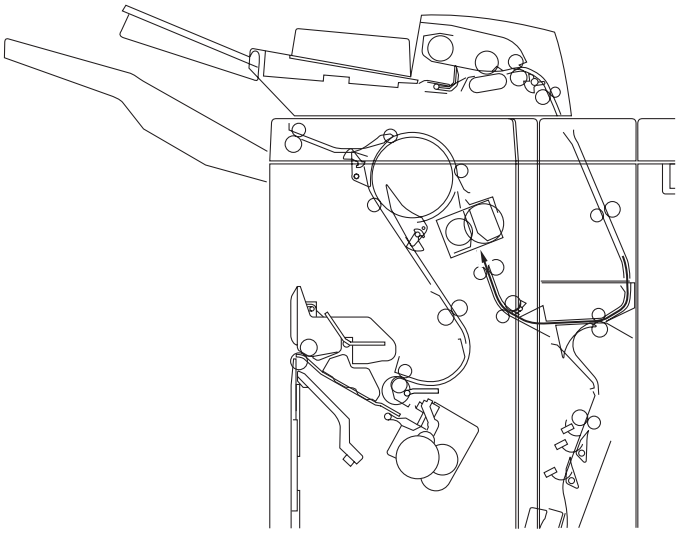

Figure 2-1406

COPYRIGHT © 1999 CANON INC.

4) The trailing edge of the sheet stops temporarily before leaving the finisher inlet rollers.

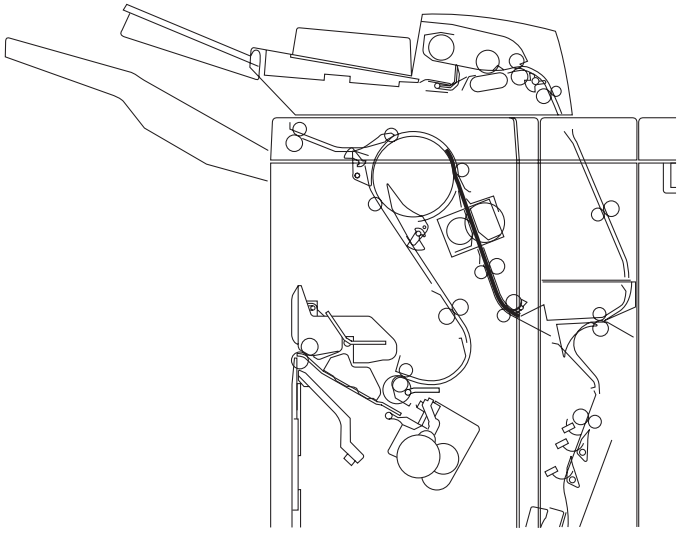

Figure 2-1407

5) The rollers rotate counterclockwise and the sheet is fed in the direction of the saddle stitcher.

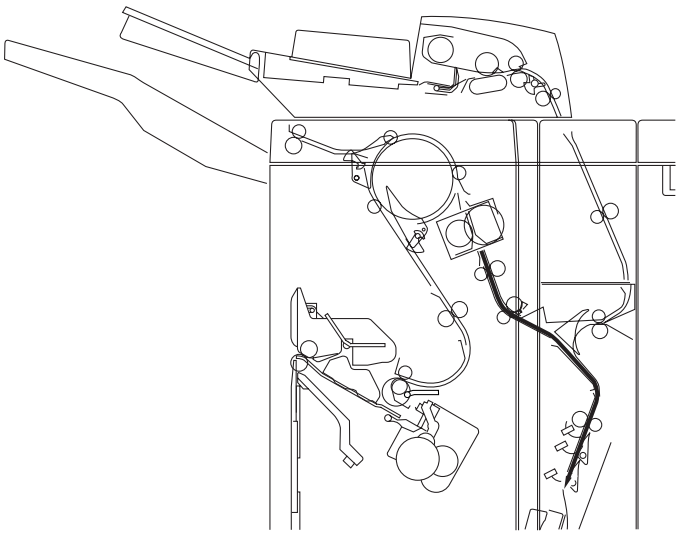

Figure 2-1408

 COPYRIGHT © 1999 CANON INC.

D. Feed Drive System

Use of the inserter (Cover Insertion Unit-A1) enables a cover to be added to the sheets sent from the copier. The cover is set in advance in the inserter pick-up assembly.

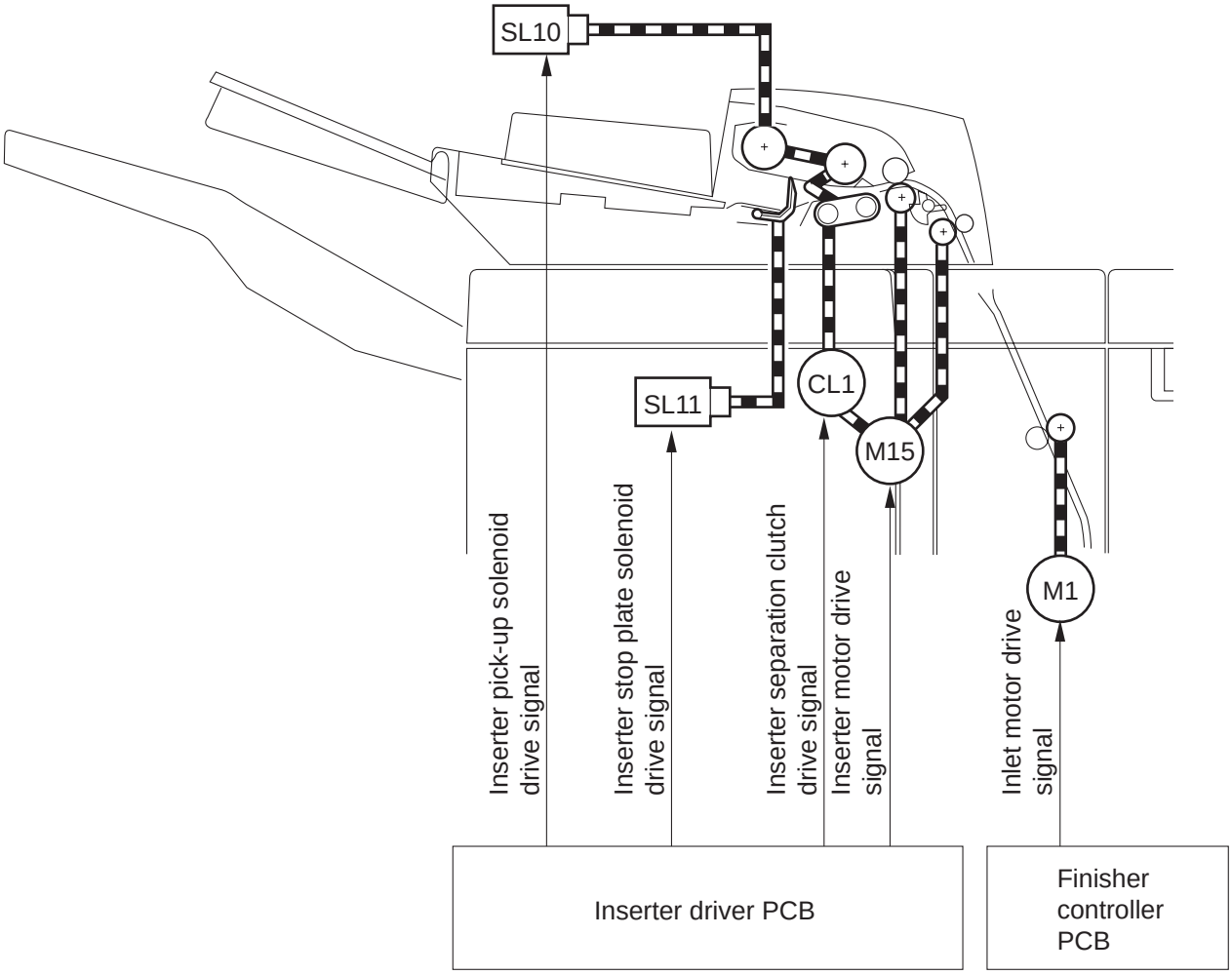

Figure 2-1409

COPYRIGHT © 1999 CANON INC.

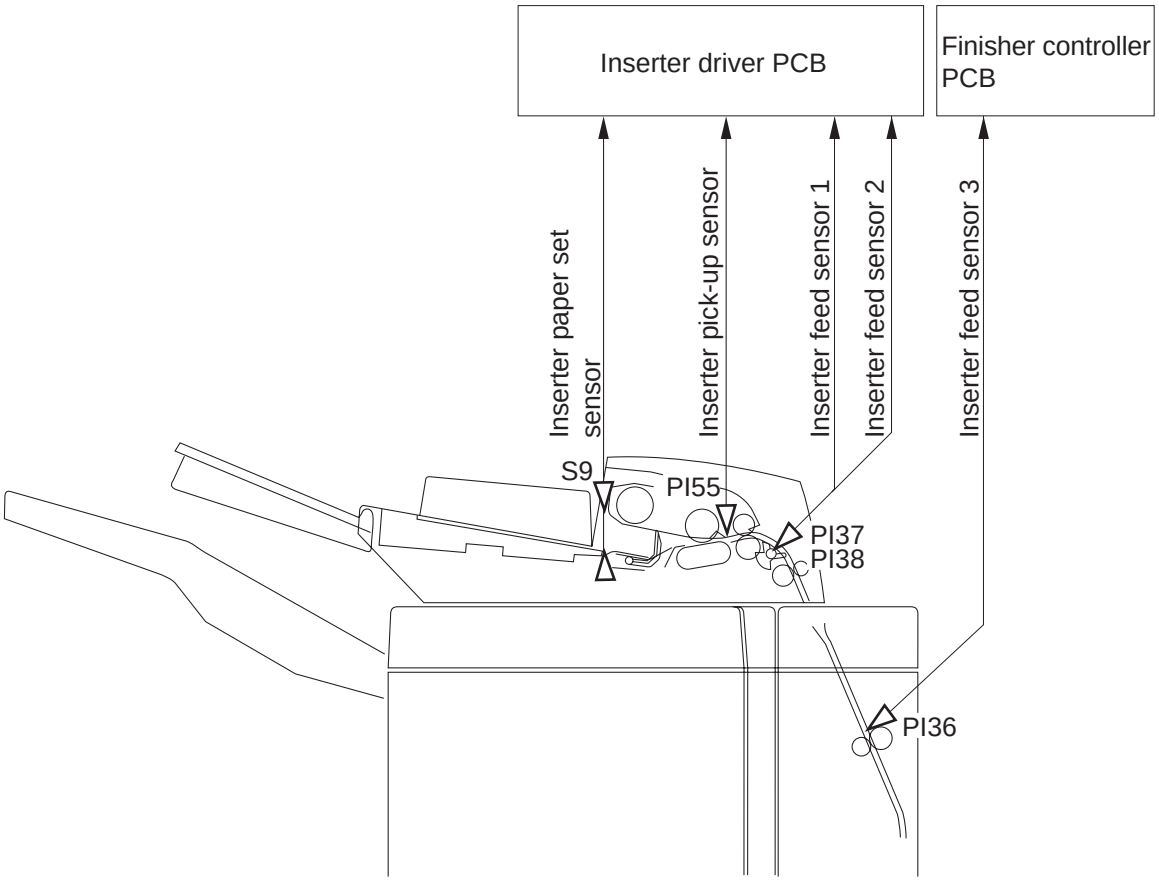

Figure 2-1410

 COPYRIGHT © 1999 CANON INC.

E. Inserter Pick-up

1. Outline

The pick-up rollers are placed on the surface of the paper and are rotated. The pick-up rollers are raised and lowered by the inserter pick-up solenoid (SL10). The pick-up rollers are driven by the inserter motor (M15) and inserter separation clutch (CL1). Separation is carried out by the separation roller, separation belt and separation clutch (CL1).

The stopper plate is lowered by the inserter stopper plate solenoid (SL11).

The inserter pick-up sensor (PI55), inserter feed sensor 1 (PI37) and inserter feed sensor 2 (PI38) are located in the separation area to monitor feeding of the paper.

2. Operation

1) When the inserter pick-up signal is received, the inserter stopper plate is lowered and the pick-up roller unit descends to the surface of the paper.

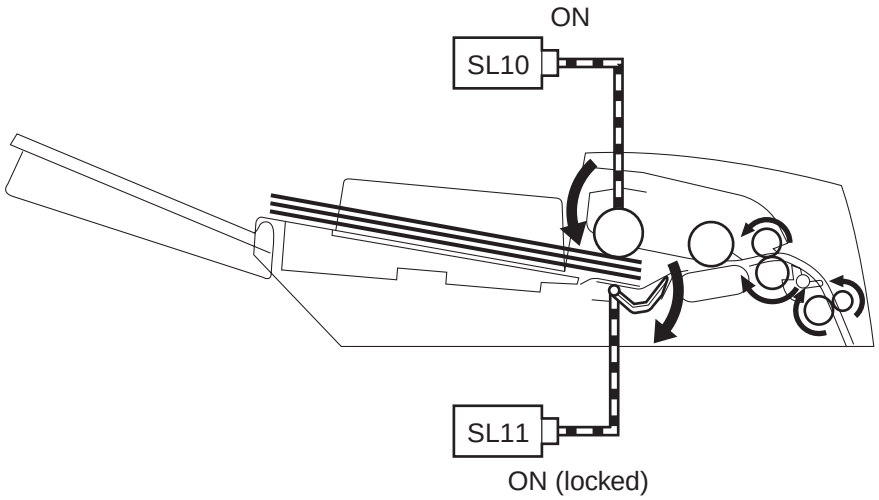

Figure 2-1411

2) When the separation clutch is turned on, the pick-up rollers rotate and begin to draw in the top sheet of paper.

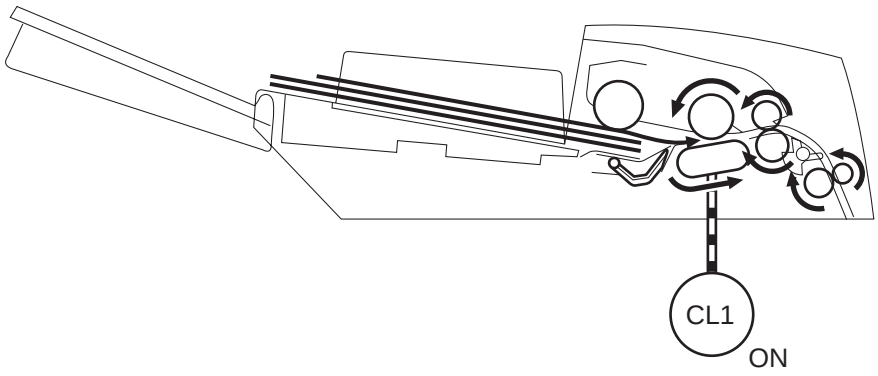

Figure 2-1412

3) When the leading edge of the paper reaches the inserter feed sensors 1 and 2, the separation clutch is turned off and the pick-up roller unit ascends. The stopper plate waits in the down position until the inserter paper set sensor is turned off.

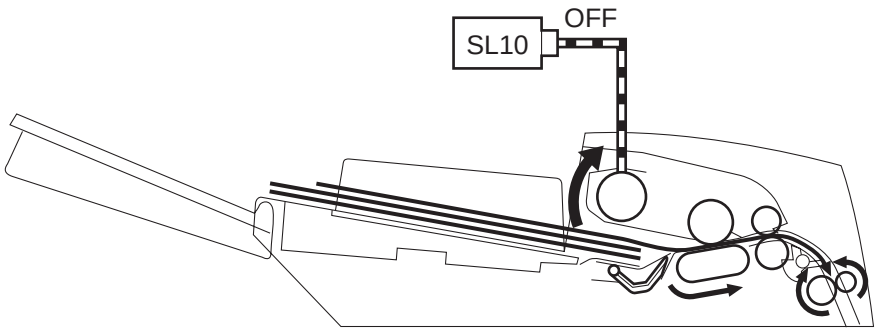

Figure 2-1413

Inserter pick-up sequence

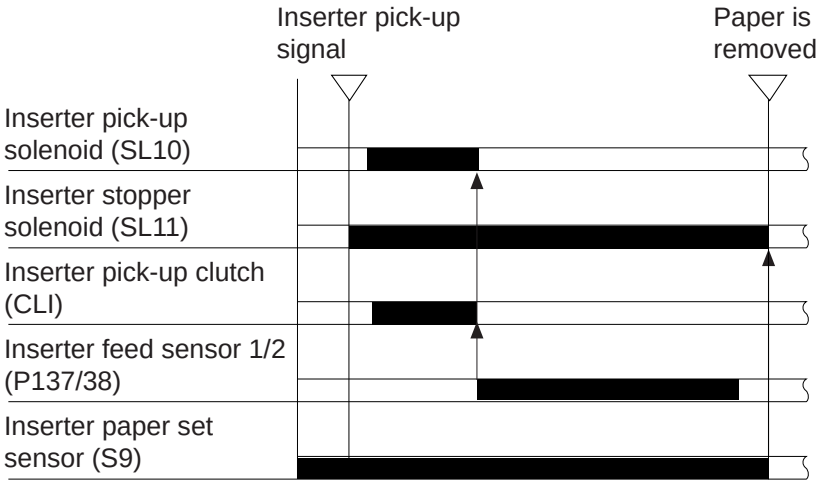

Figure 2-1414

 COPYRIGHT © 1999 CANON INC.

F. Saddle Stitcher Mode Feeding

1) The trailing edge of the paper moves past the inserter feed sensor 3 (PI36).

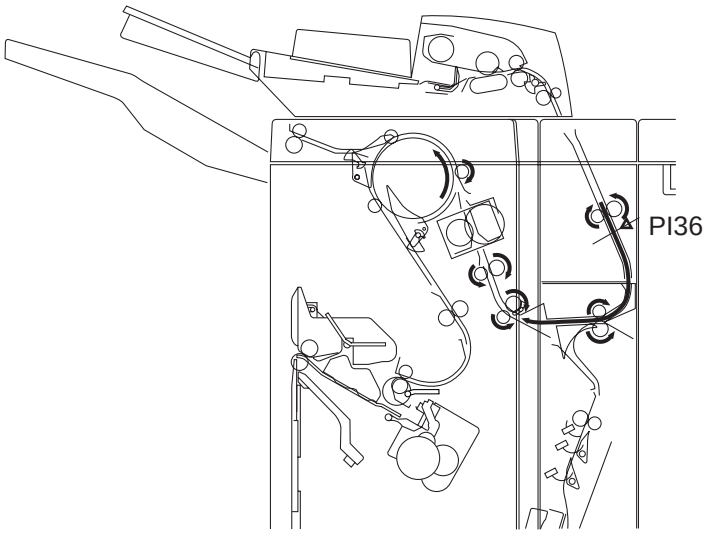

Figure 2-1415

2) The inlet motor (M1) stops immediately before the trailing edge of the paper moves past the inlet path sensor (PI2).

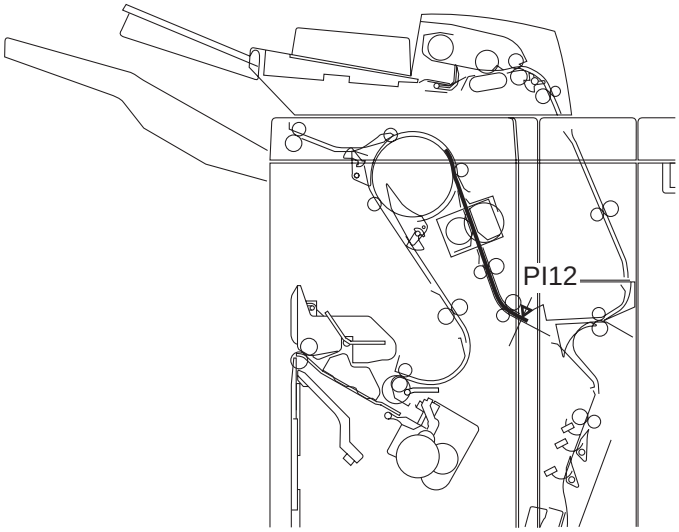

Figure 2-1416

COPYRIGHT © 1999 CANON INC.

3) The inlet motor and buffer motor (M2) rotate counterclockwise and the inserter paper is fed in the direction of the saddle stitcher.

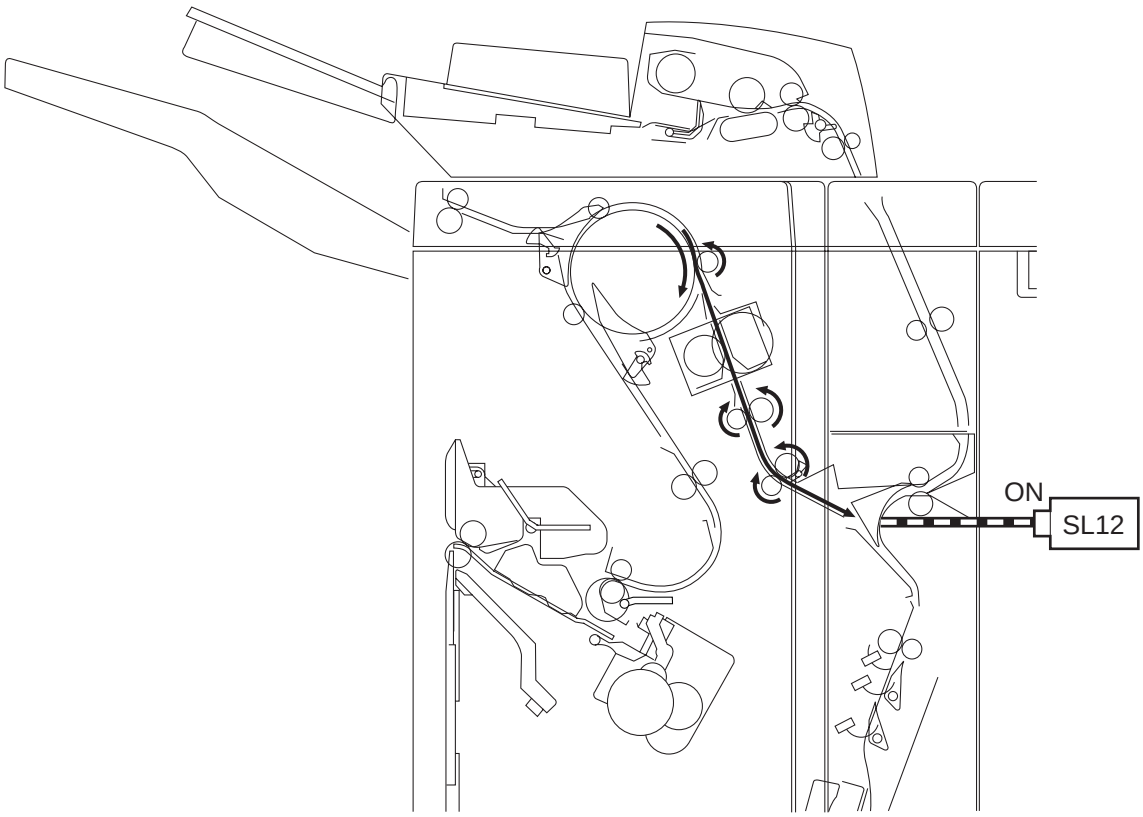

Figure 2-1417

 COPYRIGHT © 1999 CANON INC. CANON SADDLE FINISHER-D2 REV.0 AUG. 1999 PRINTED IN JAPAN (IMPRIME AU JAPON)

G. Jam Detection

Jams are checked for at such times as programmed in the ROM of the finisher controller PCB, and a jam is detected in relation to the presence/absence of paper at a specific sensor. When a jam is detected, the finisher controller PCB communicates the nature of the jam to the copier in the form of a code. The code can be checked in the copier's service mode, or by reference to LED101 on the finisher controller PCB.

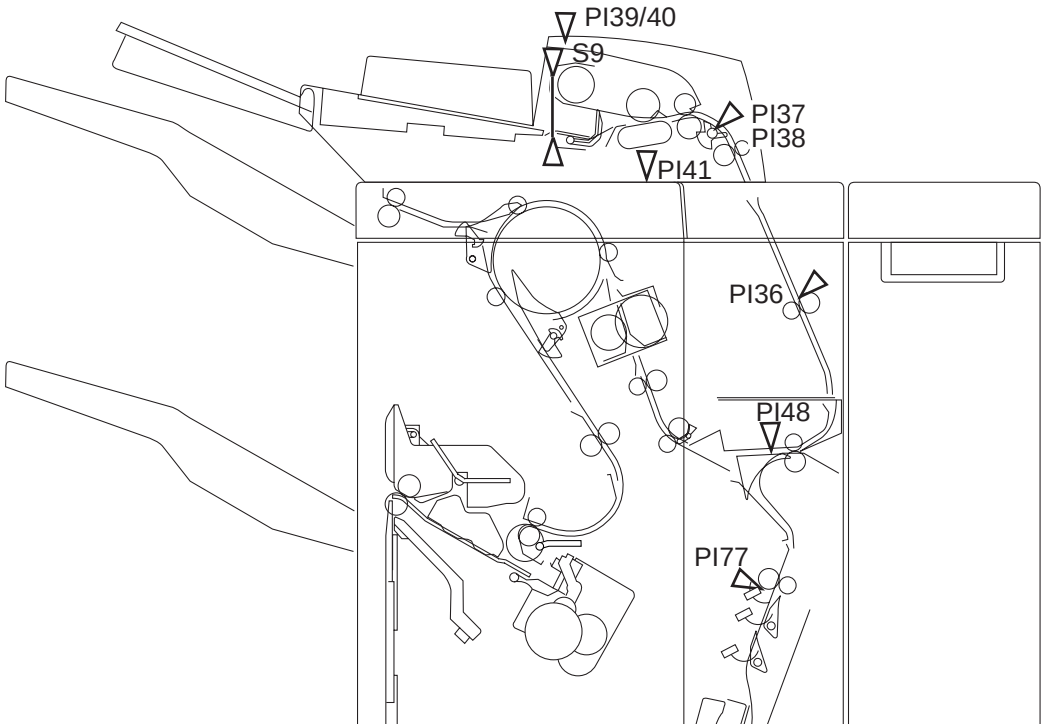

S9 : Inserter paper set sensor
PI37: Inserter feed sensor 1
PI38: Inserter feed sensor 2
PI36: Inserter feed sensor 3
PI48: Saddle inlet paper sensor
PI77: Saddle paper sensor 1
PI39: Inserter cover open sensor (front)
PI40: Inserter cover open sensor (rear)
PI41: Inserter open sensor

Figure 2-1418

COPYRIGHT © 1999 CANON INC.

Jam	Sensor	Description	Code
No pick-up paper	S9	The inserter paper set sensor did not detect any paper during inserter pick-up.	0031
Feed skew	PI37/38	There was a difference of more than 9mm in the timing at which the inserter feed sensors 1 and 2 (PI37/38) were turned on.	0033
Feed delay A	PI37/38	The inserter feed sensors 1 and 2 were not turned on within 263mm after the inserter pick-up motor was turned on.	001A
Feed stationary A		The inserter feed sensor 1/2 was not turned off 492mm after the sensor was turned on.	002A
Feed delay B	PI36	The inserter feed sensor 3 was not turned on within 323mm after the inserter feed sensor 1/2 was turned on.	001B
Feed stationary B		The inserter feed sensor 3 was not turned off 492mm after the sensor was turned on.	002B
Inserter cover open	PI39/40	The inserter cover open sensor (front/rear) was turned off while the inserter was operating. (Not regarded as a jam when the inserter is not in use.)	0008
Inserter open	PI41	The inserter open sensor was turned off while the inserter was operating. (Not regarded as a jam when the inserter is not in use.)	0008

Table 2-1401

 COPYRIGHT © 1999 CANON INC. CANON SADDLE FINISHER-D2 REV.0 AUG. 1999 PRINTED IN JAPAN (IMPRIME AU JAPON)

H. Power Supply

Figure 2-1419 shows the power supply route of the inserter.

24VINS and 5V supplied to the inserter driver PCB are turned on and off by the INSON signal from the finisher controller PCB. The INSON signal is turned on and off by operation of SW971-4 on the switch PCB by the user. 24VINS and 5V are supplied to each load from the inserter driver PCB.

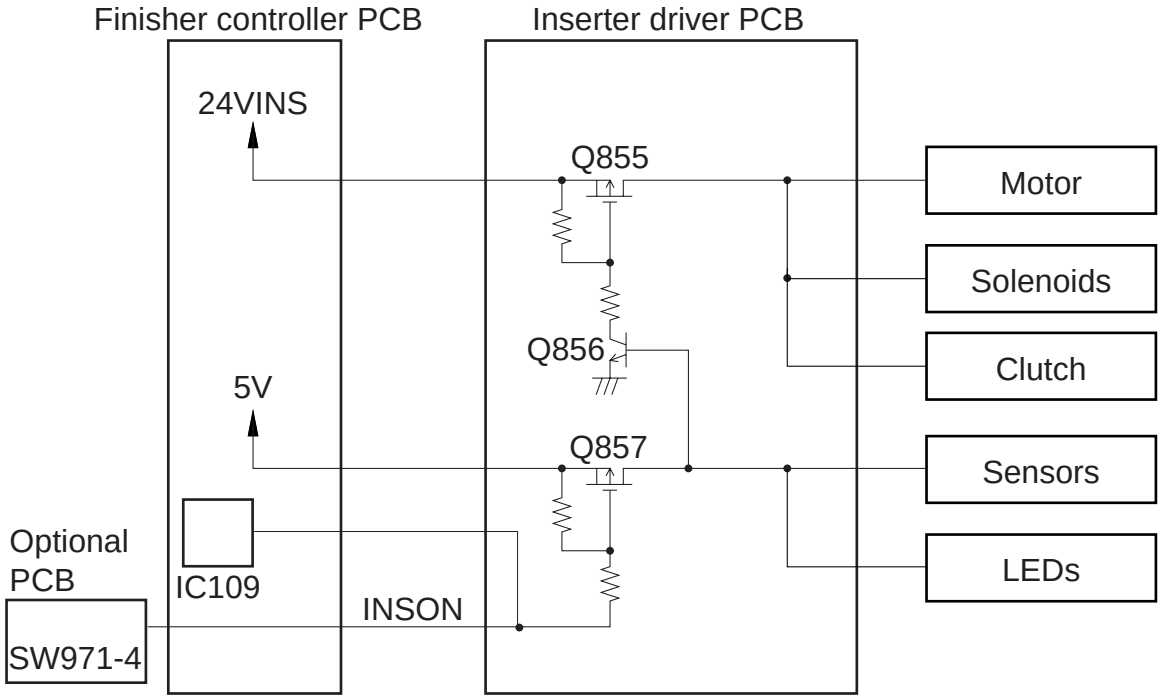

Figure 2-1420

CHAPTER 3

MECHANICAL SYSTEM

The mechanical characteristics of the finisher are discussed in the following pages; go through the instructions given when disassembling/assembling the finisher's parts while keeping the following in mind:

1. Disconnect the power plug before disassembly/assembly work.

2. Assemble the parts by reversing the steps used to disassemble them, unless otherwise noted.

3. Identify the screws by type (length, diameter) and location.

4. Do not operate the machine with any of its parts removed, unless otherwise mentioned.

I. FINISHER UNIT 3-1
II. SADDLE STITCHER 3-49
III. PAPER FOLDING UNIT A1 (FOLDER) 3-67
IV. INSERTER 3-85

COPYRIGHT © 1999 CANON INC. CANON SADDLE FINISHER-D2 REV.0 AUG. 1999 PRINTED IN JAPAN (IMPRIME AU JAPON)

I . FINISHER UNIT

A. Externals and Controls

1. External Covers

Remove the covers as necessary when cleaning, inspecting, or repairing the inside of the machine.

Those covers that may be detached by merely removing the mounting screws are omitted from the discussions.

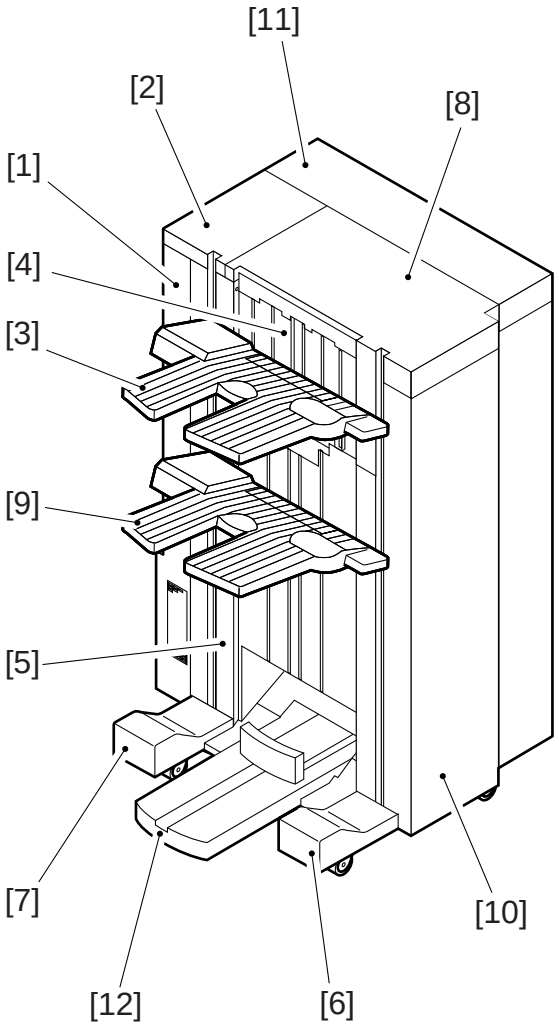

Figure 3-101

[1] Rear cover (8)
[2] Upper rear cover (2)
[3] Tray A (4)
[4] Stacking wall (upper; 4)
[5] Stacking wall (lower; 4)
[6] Foot cover (front; 2)
[7] Foot cover (rear; 2)
[8] Upper cover unit
[9] Tray B (4*)
[10] Front door (0)
[11] Right upper cover (1)
[12] Saddle delivery tray

*and one connector if the folder is attached.

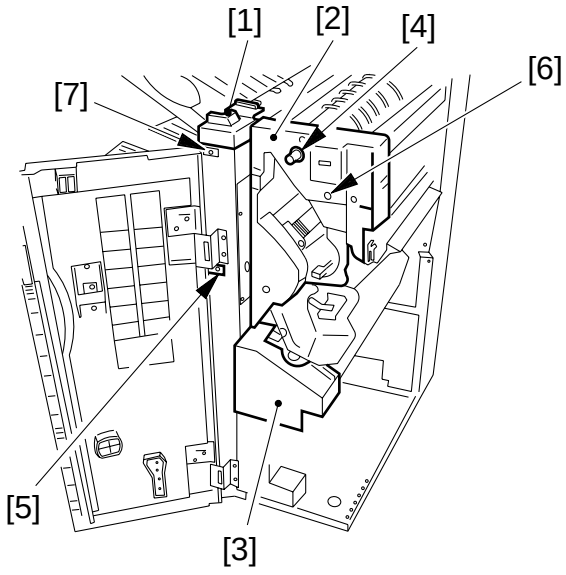

Figure 3-102

[1] Support cover (1)
[2] Inside cover (4)
[3] Inside lower cover (2)
[4] Buffer roller knob (0)
[5] Stopper (lower) (1)
[6] Punch knob (0)
[7] Stopper (upper) (1)

COPYRIGHT © 1999 CANON INC.

[1] PCB cover (1)

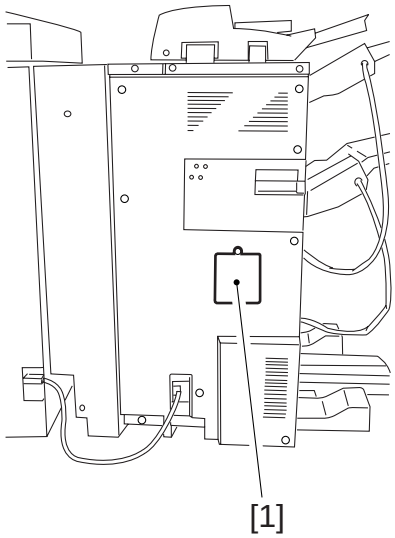

Figure 3-103

2. Removing the Upper Cover Unit

1) Remove the rear upper cover.
2) Remove the two screws [1] from the side plate.

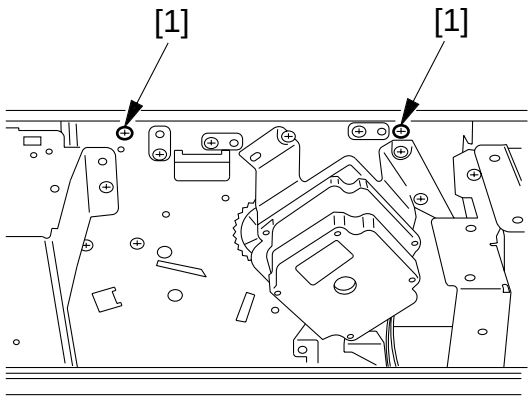

Figure 3-104

3) Remove the screw [2], and detach the upper cover unit [3].

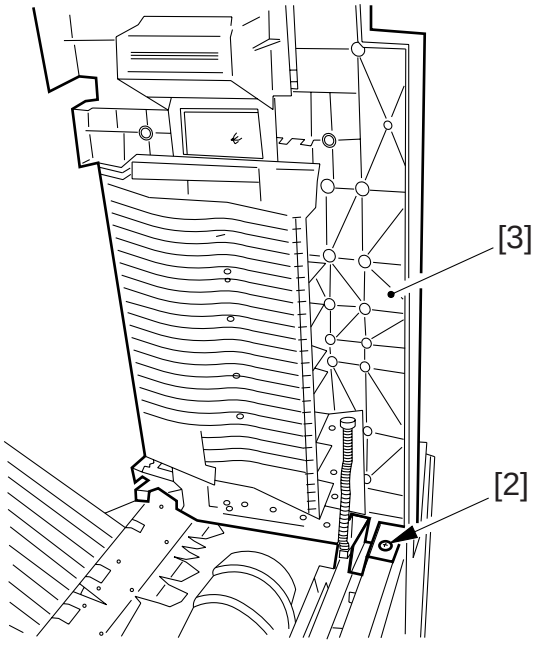

Figure 3-105

COPYRIGHT © 1999 CANON INC.

3. Releasing from the Copier

1) Remove the upper cover.
2) Remove the two screws [1], and detach the latch fixing plate (front) [2].

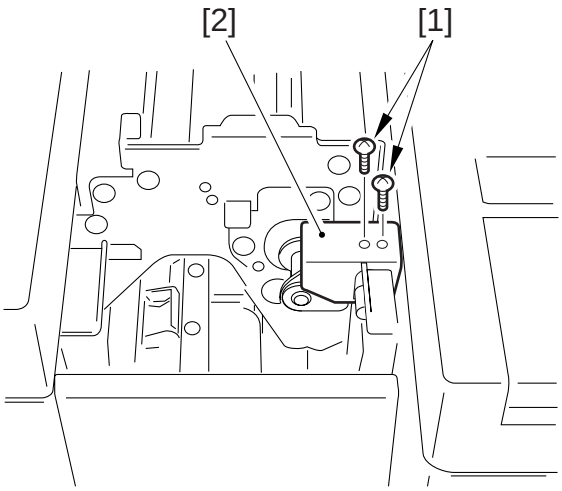

Figure 3-106

3) Shift up the latch claw (front) [3].

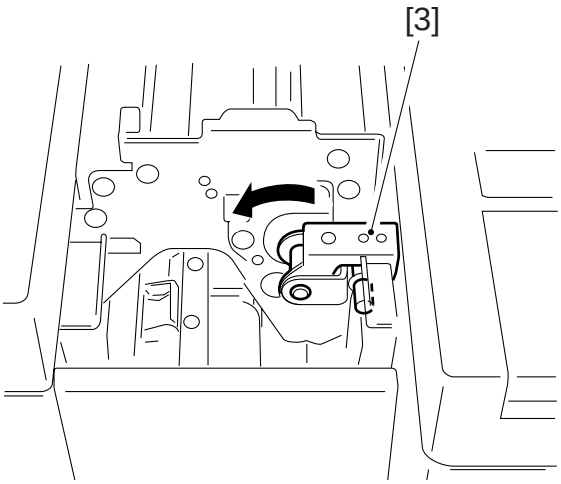

Figure 3-107

4) Remove the two screws [4], and detach the latch fixing plate (rear) [5].

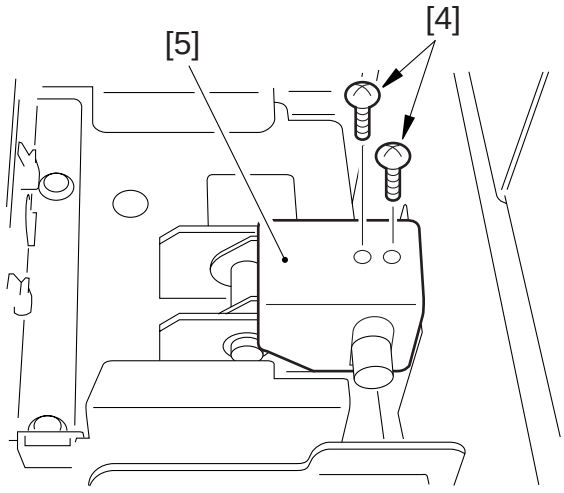

Figure 3-108

COPYRIGHT © 1999 CANON INC.

5) Shift up the latch claw (rear) [6].

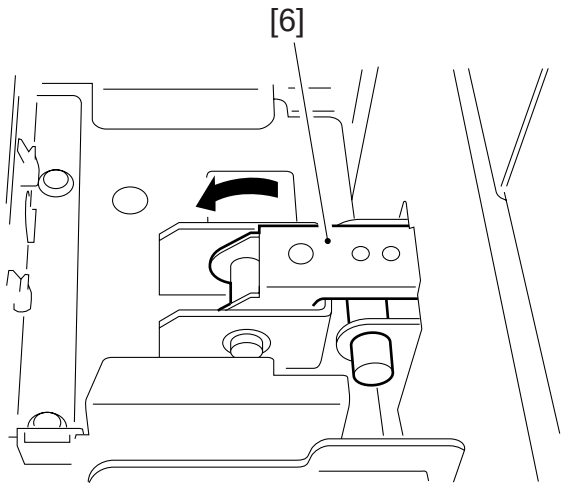

Figure 3-109

6) Release the finisher from the copier.

4. Adjust the Height

You may have to adjust the height of the machine to ensure that it will remain aligned with its host copier. As necessary, perform the following:

4-1. Checking the Height

1) Compare the top of the upper cover or the holder upper cover of the machine and the top of the left cover of the copier. If the difference in height is not as indicated in Figures 3-111 and -112, make adjustments. (Also, if jams occur frequently at the inlet to the finisher, make a check to see if the height is the cause.)
   The height of the machine may be changed by adjusting the height of the casters shown in Figure 3-110.

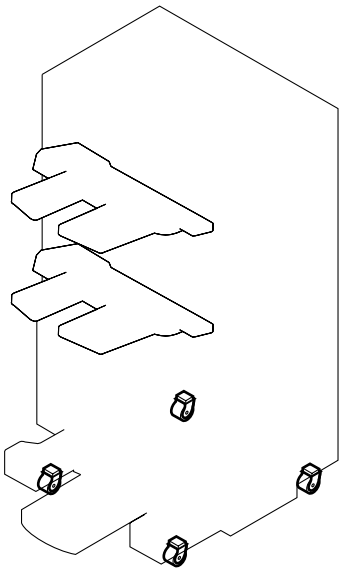

Figure 3-110

COPYRIGHT © 1999 CANON INC.
CANON SADDLE FINISHER-D2 REV.0 AUG. 1999 PRINTED IN JAPAN (IMPRIME AU JAPON)

a. If the top of the copier's left cover is higher,
→ within 3 mm
Otherwise, perform the steps in 3-2.

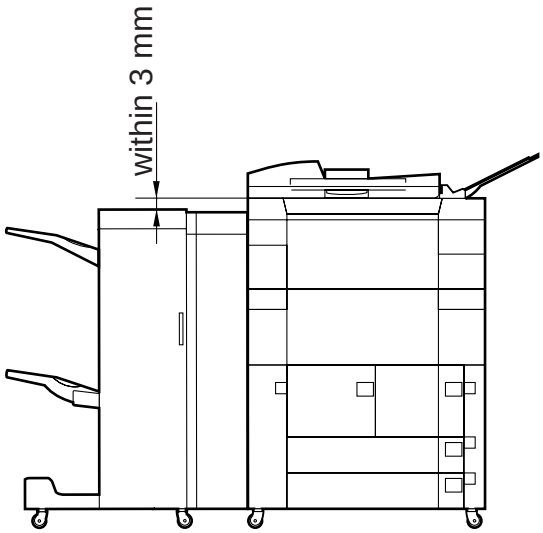

Figure 3-111a

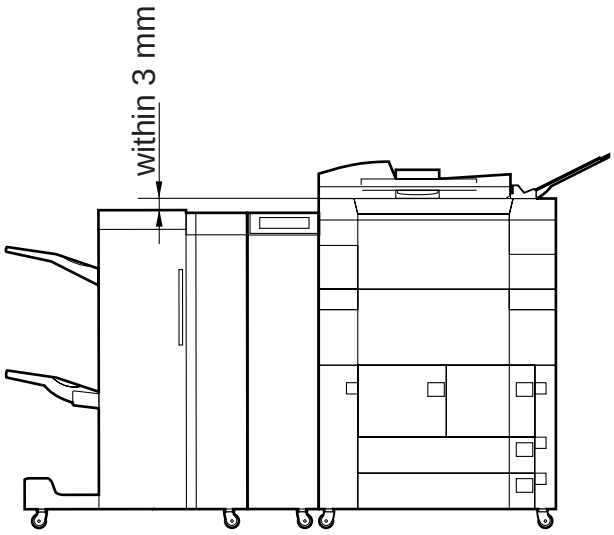

Figure 3-111b

b. If the top of the upper cover of the finisher or the folder is higher,
→ within 2 mm
Otherwise, perform 3-3.

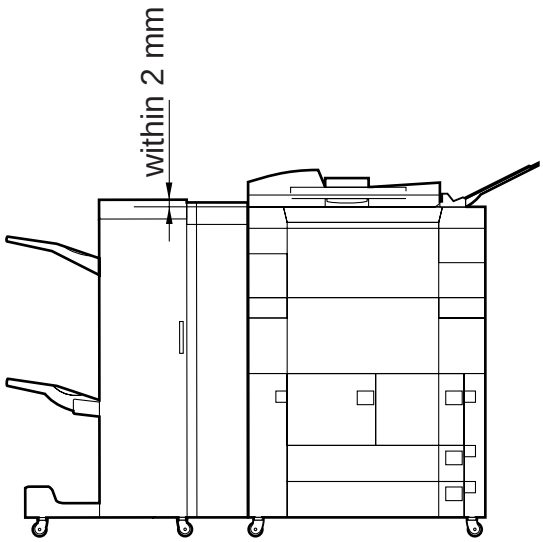

Figure 3-112a

COPYRIGHT © 1999 CANON INC.

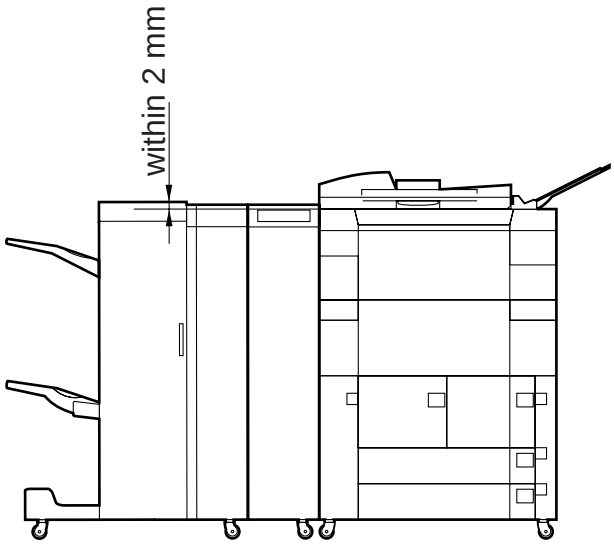

Figure 3-112b

2) Open the front cover. Remove the screw [1] , and detach the spanner [2] from behind the front cover.

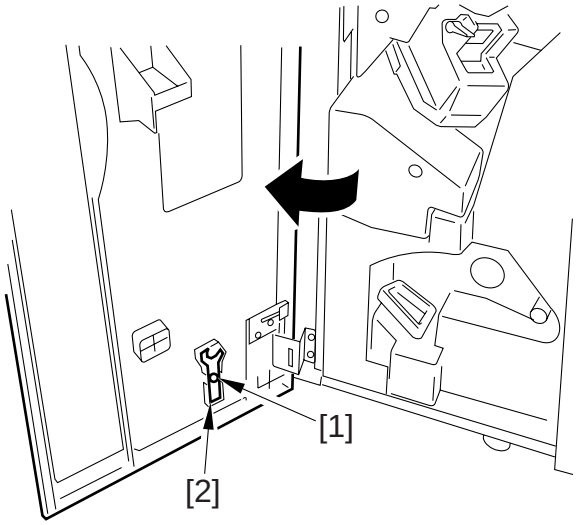

Figure 3-113

COPYRIGHT © 1999 CANON INC.
CANON SADDLE FINISHER-D2 REV.0 AUG. 1999 PRINTED IN JAPAN (IMPRIME AU JAPON)

3) Remove the four screws [3] , and detach the foot cover (front) [4] and the foot cover (rear) [5].

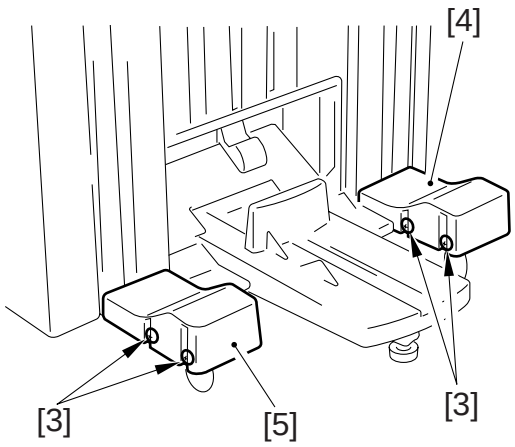

Figure 3-114

4) Release the machine from the copier. (See I-2/III-B-1.)

4-2. If the copier is higher,

1) Loosen the fixing nut by turning it in the direction of arrow C. Turn the caster adjusting foot in the direction of arrow D. A full turn of the foot will change the height by about 1.75 mm. Turn the foot as many times as necessary. Perform this for the four feet.

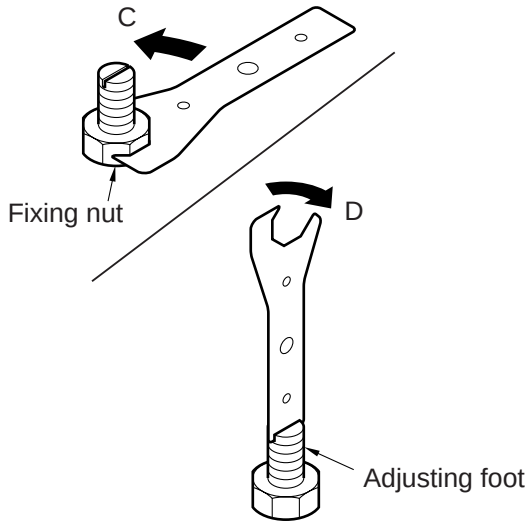

Figure 3-115

4-3. If the finisher or the holder is higher,

1) Loosen the fixing nut by turning it in the direction of arrow C. Turn the caster adjusting foot in the direction of E. A full turn of the adjusting foot will change the height by about 1.75 mm. Turn the foot as many times as necessary. Perform this for the four feet.

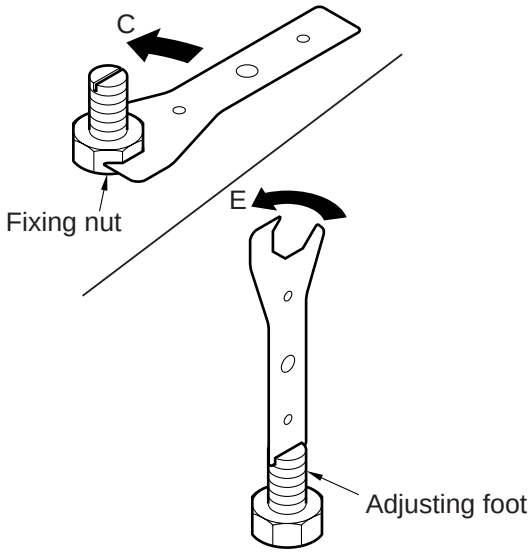

Figure 3-116

COPYRIGHT © 1999 CANON INC.

4-4. Checking the Height

1) Connect the machine to the copier, and if the height is not appropriate, make adjustments once again.
   If appropriate, tighten all fixing nuts, and attach the foot covers (front, rear).

5. Adjusting the Slope

You may have to remove the tilt caused by floor conditions by performing the following; be sure to adjust the height before performing these steps:

5-1. Checking the Tilt

1) Check to find out in which direction the machine tilts.

• The gap between the machine and the copier must be $5 \pm {}^{0}_{3}$mm. If the gap is wider, identify the condition as tilt A, and perform the steps under E-2; if the gap is narrower, on the other hand, identify the condition as tilt B, and perform the steps under 4-3.

Reference:

To correct the tilt, turn two casters shown if Figure 3-118.

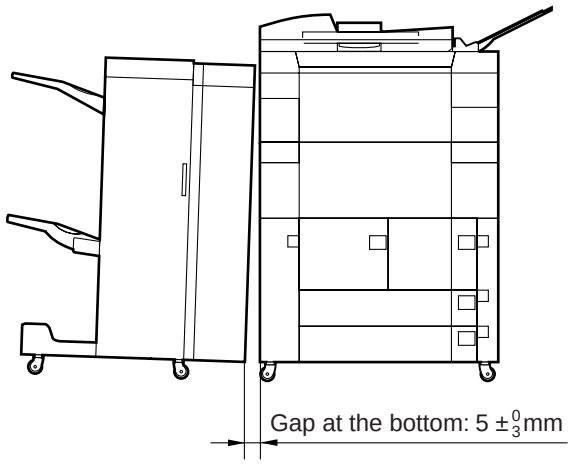

Figure 3-117a

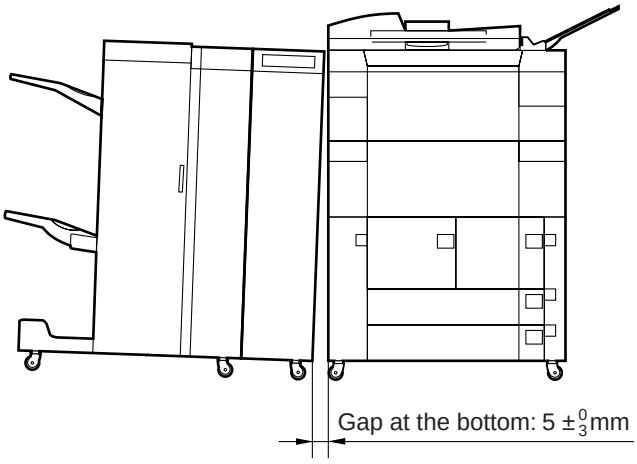

Figure 3-117b

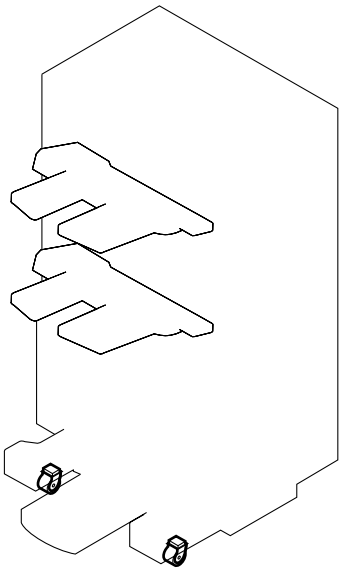

Figure 3-118

COPYRIGHT © 1999 CANON INC.
CANON SADDLE FINISHER-D2 REV.0 AUG. 1999 PRINTED IN JAPAN (IMPRIME AU JAPON)

2) Open the front cover. Remove the screw [1] and detach the spanner [2] from behind the front cover.

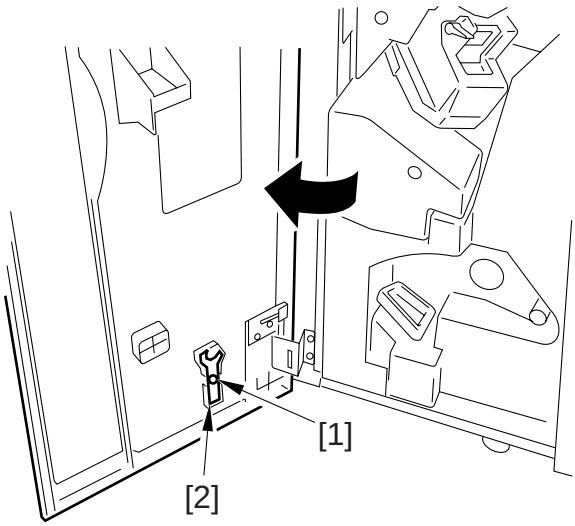

Figure 3-119

3) Remove the four screws [3], and detach the foot cover (front) [4] and the foot cover (rear) [5].

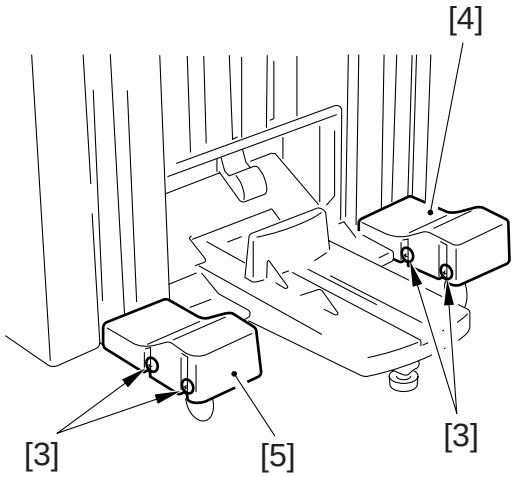

Figure 3-120

5-2. Correcting Tilt A

1) Loosen the fixing nut by turning it in the direction of arrow C. Turn the adjusting foot of the caster in the direction of arrow D several times. Perform this for both front and rear feet.

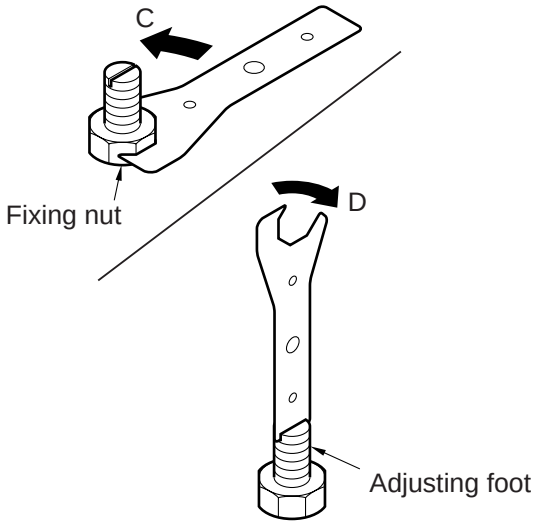

Figure 3-121

COPYRIGHT © 1999 CANON INC.

2) Check the gap between the machine and the copier. If the gap is still large, turn the adjusting foot further. If done in excess, on the other hand, turn the adjusting foot back. Perform this for both front and rear feet.
3) When the gap is appropriate, tighten the fixing nuts (front, rear)
4) Attach the foot covers (front, rear).
5) Attach the spanner.

5-3. Correcting Tilt B

1) Loosen the fixing nut by turning it in the direction of arrow C. Turn the adjusting foot of the caster in the direction of arrow E. Perform this on both front and rear feet.

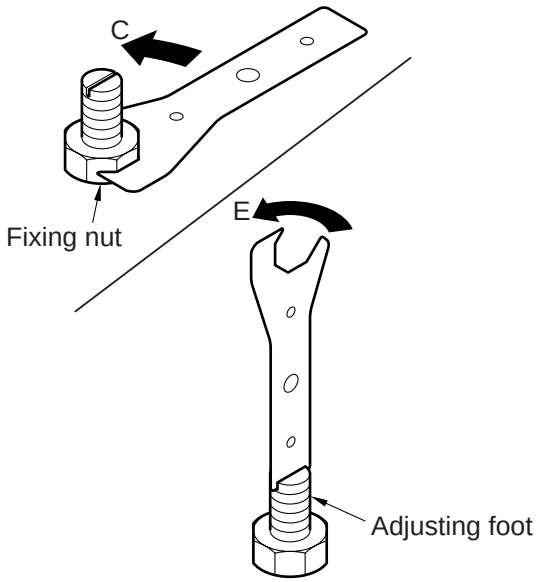

Figure 3-122

2) Check the gap between the machine and the copier. If the gap is still narrow, turn the adjusting foot further. If done in excess, on the other hand, turn the adjusting foot back. Perform this on both front and rear feet.
3) When the gap is appropriate, tighten the fixing nuts (front, rear).
4) Mount the foot covers (front, rear).
5) Attach the spanner.

COPYRIGHT © 1999 CANON INC.

6. Removing the Stack Partition Wall (upper)

1) Lower tray A below the stack partition wall (upper).
2) Remove the four screws [1], and detach the stack partition wall (upper) [2].

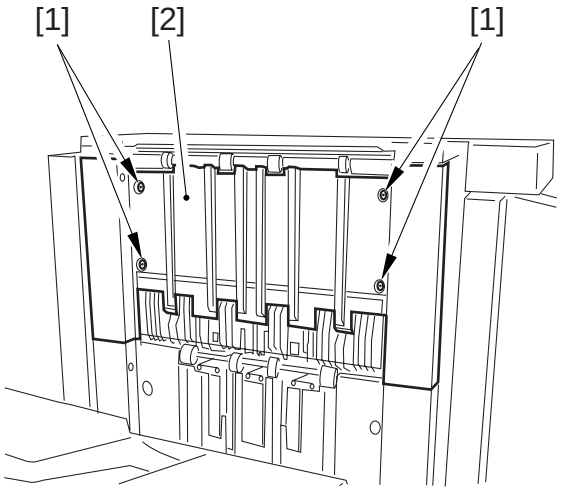

Figure 3-123

7. Removing the Stack Partition Wall (lower)

1) Remove the stack partition wall (upper).
2) Open the front door and detach the stopper (lower).
3) Lift trays A and B above the stack partition wall (lower).
4) Remove the four screws [1], and detach the stack partition wall (lower) [2].

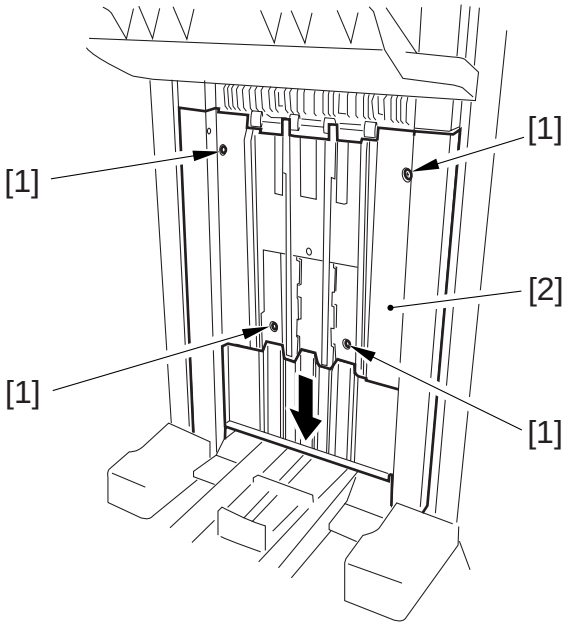

Figure 3-124

8. Mounting the Stack Partition Wall (lower)

1) Turn the shutter drive shaft [2] so that the shutter drive roller [1] moves lower.

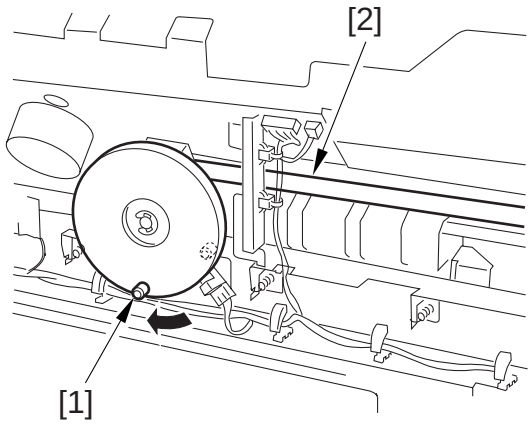

Figure 3-125

2) Mount the stack partition wall (lower) so that the roller [1] is visible through the hole of the stack partition wall (lower).

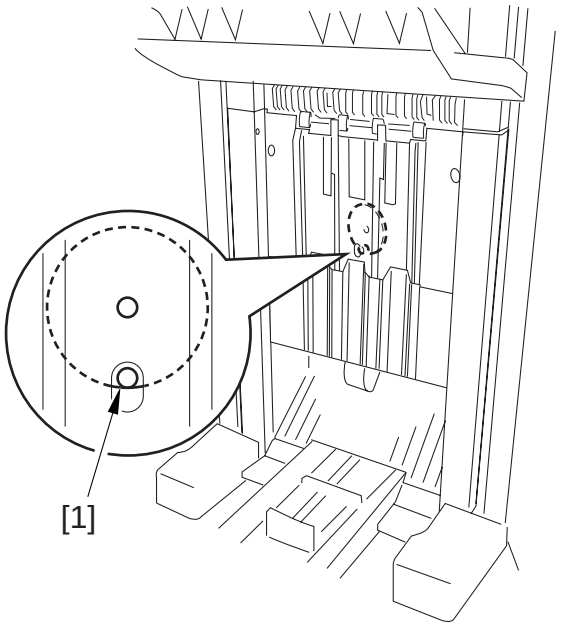

Figure 3-126

COPYRIGHT © 1999 CANON INC.

B. Processing Tray Unit

1. Removing the Processing Tray Unit

1) Remove the stack partition wall (upper).
2) Remove the stack partition wall (lower).
3) Release the two claws [1], discommect the connector [2], then detach the delivery tray slope [3].

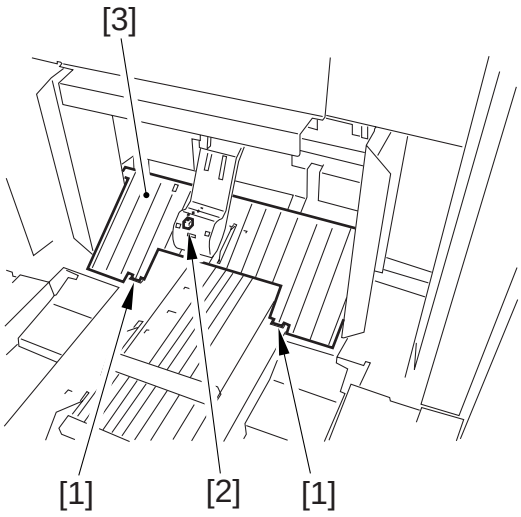

Figure 3-201

4) While pressing the two claws [4], pull out the side guide (rear) [5] toward the front.

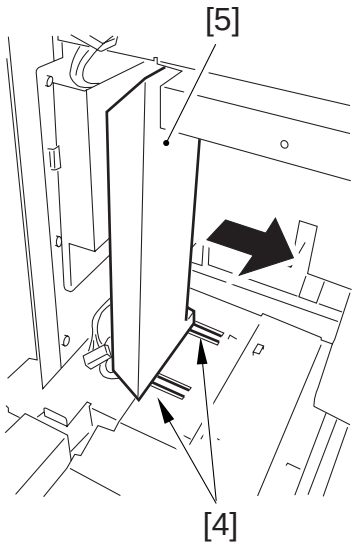

Figure 3-202

5) Withdraw the saddle unit.
6) Remove the screw [6], and detach the connector cover [7].

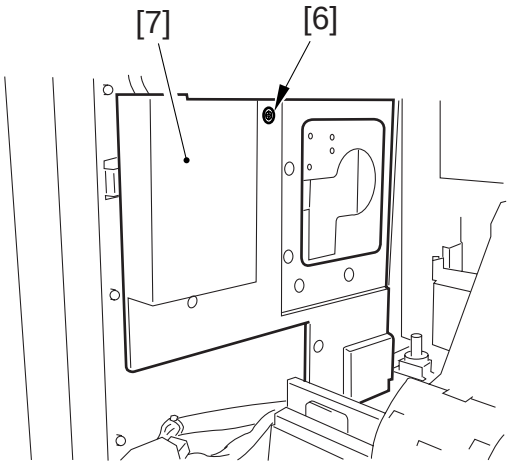

Figure 3-203

COPYRIGHT © 1999 CANON INC.

7) Disconnect the seven connectors [8], and free the harness [9] from the cord clamps.

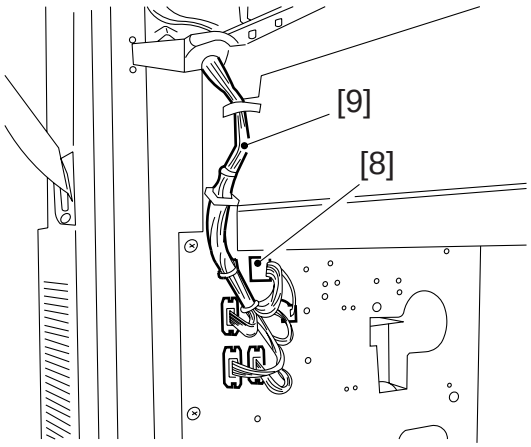

Figure 3-204

8) Set tray A to the highest level, and tray B to the lowest.
9) Remove the four screws [10], and detach the processing tray unit [11].

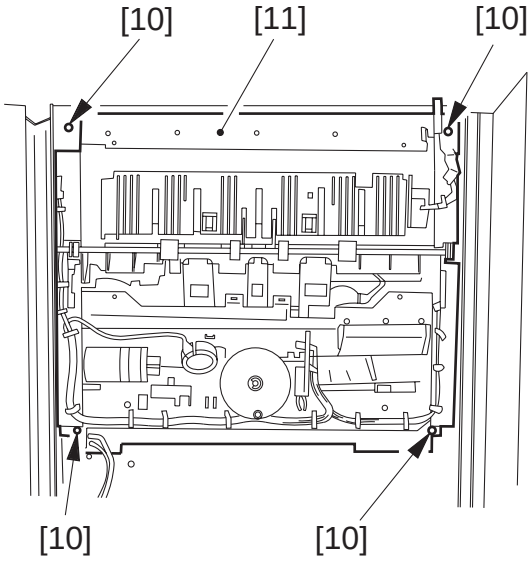

Figure 3-205

2. Removing the Paddle Unit

1) While lifting the swing guide, remove the screw [1]; then, detach the paddle unit [2].

Reference:

After removing the processing tray, you can detach the paddle unit from the rear side of the processing tray unit.

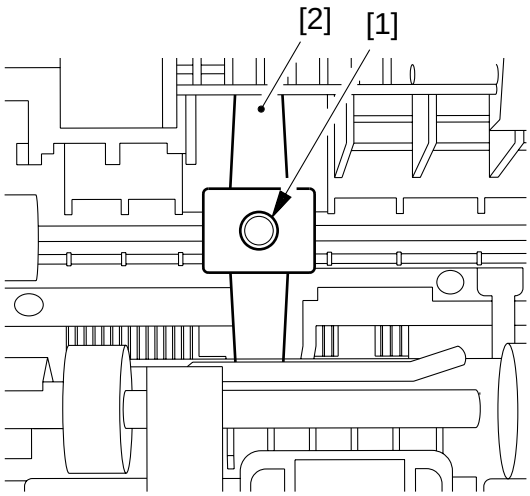

Figure 3-206

COPYRIGHT © 1999 CANON INC.

3. Removing the Paddle

1) Remove the paddle unit. (See B-2 "Removing the Paddle Unit.")
2) Remove the retaining roll [1], and detach the paddle [2].

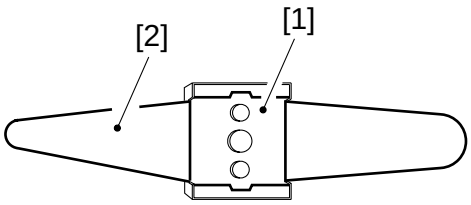

Figure 3-207

4. Removing the Processing Tray

1) Remove the processing tray unit. (See B-1.)
2) Remove the screw [1] from under the stack delivery roller.

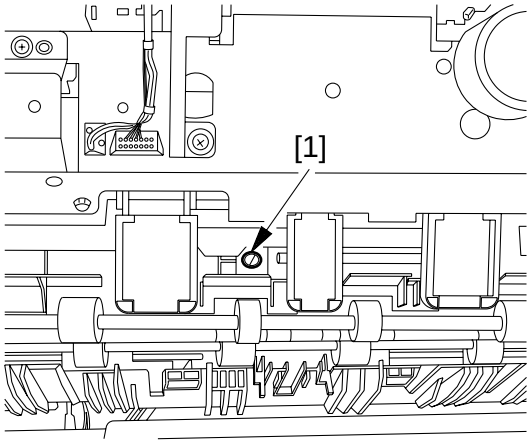

Figure 3-208

3) Remove the screw [2] from the processing tray.

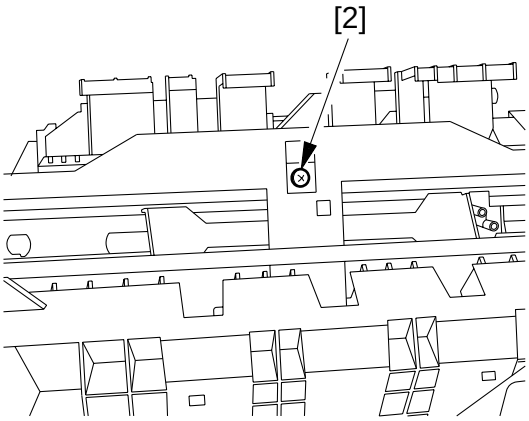

Figure 3-209

4) Slide the processing tray [3] in the direction of arrow A, and detach it into the direction of arrow B.

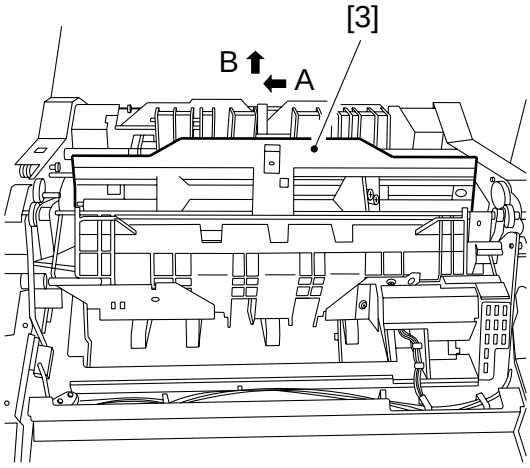

Figure 3-210

5. Removing the Jogging Motor

Reference:

The figures show the removal of the front jogging motor. The rear jogging motor can be removed in the same way.

1) Remove the processing tray unit (B-1); and remove the processing tray (B-4).
2) Turn the tray auxiliary plate motor [1] by hand, and move the tray auxiliary plate from the home position.

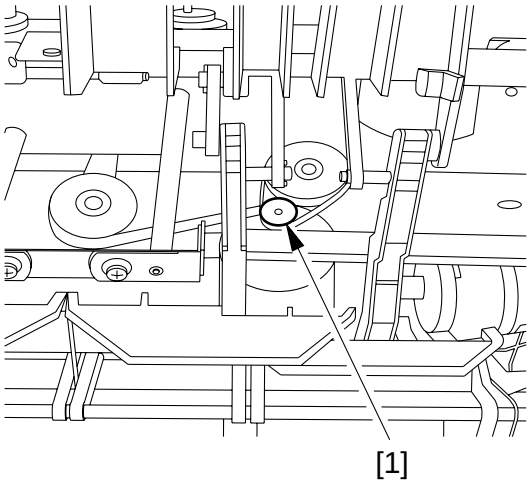

Figure 3-211

3) Remove the screw [2], and detach the motor cover [3].

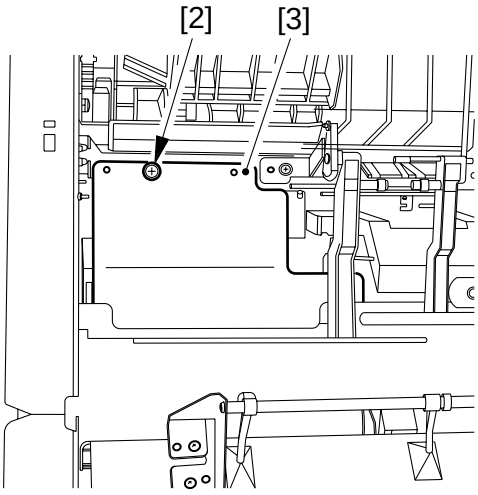

Figure 3-212

COPYRIGHT © 1999 CANON INC.

4) Loosen the screw [4], and loosen the belt tensioner.

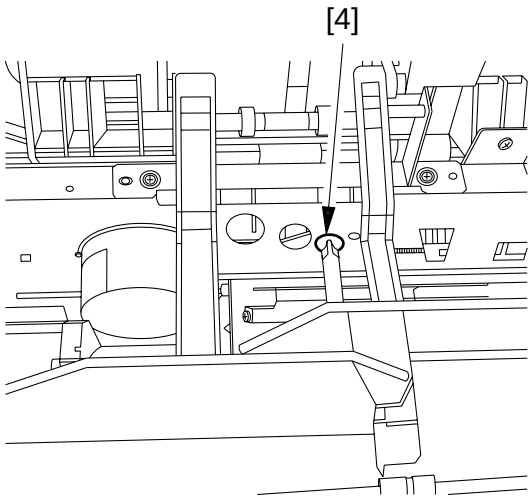

Figure 3-213

5) Disconnect the connector [5].

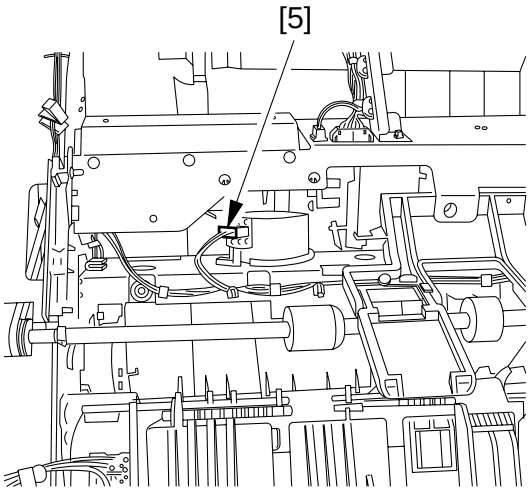

Figure 3-214

6) Remove the two screws [6], and detach the jogging motor [7].

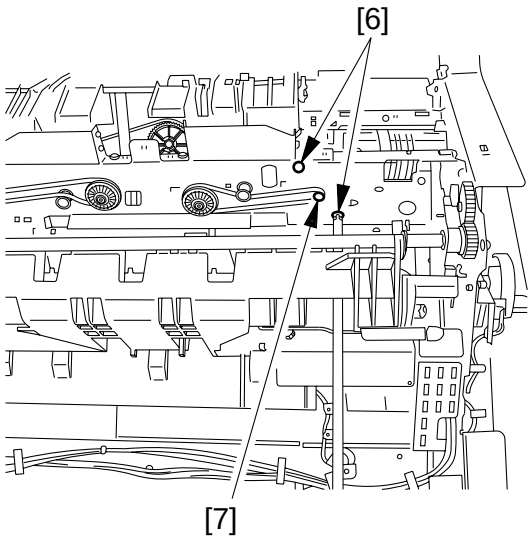

Figure 3-215

Caution:
When mounting the motor cover [3], be sure that the lower edge of the cartridge will not be above the stay. Otherwise, the cover and the stapler will interfere.

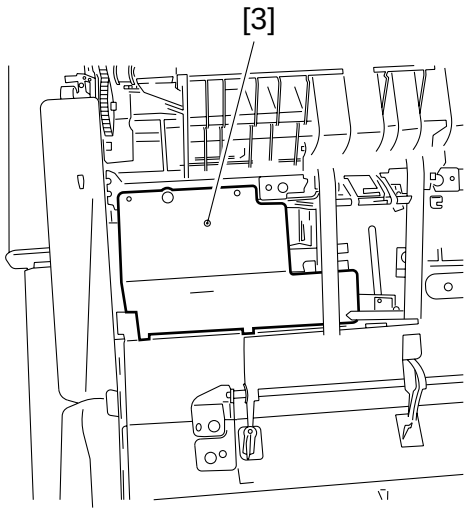

Figure 3-216

COPYRIGHT © 1999 CANON INC.
CANON SADDLE FINISHER-D2 REV.0 AUG. 1999 PRINTED IN JAPAN (IMPRIME AU JAPON)

C. Tray A Unit / Tray B Unit

1. Lowering the Tray A/B Unit

1) While pushing the tray frame [1] from underneath, insert a screwdriver or a similar tool to the hole [2].
2) While releasing the clutch with a screw driver or a similar tool, lower tray the A/B unit.

Reference:

It is also possible to release the clutch [3] after detaching tray A/B.

Caution:

When the power is turned on while the clutch does not mesh, the clock of the tray lock sensor may not change generating E540/542.

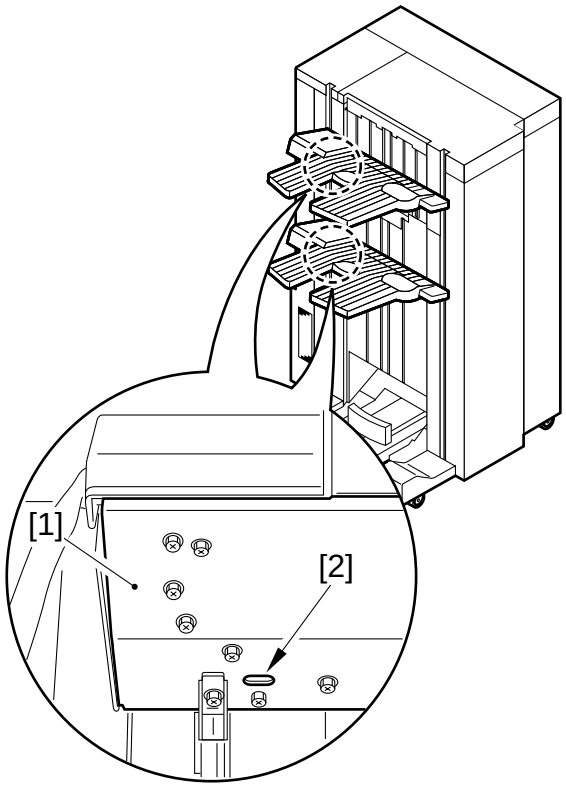

Figure 3-301

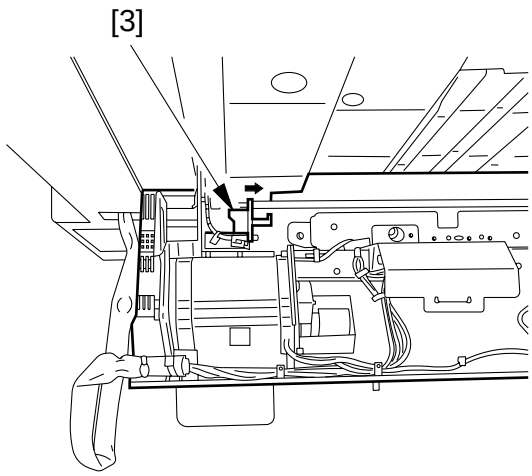

Figure 3-302

2. Removing the Tray A Unit

1) Open the upper cover, then remove the support cover.
2) Detach the rear cover and the rear upper cover.
3) Remove the stopper (upper).
4) Disconnect the two connectors [1], the screw [2], and the grounding wire [3].
5) After having disconnected the cords [5] from the cord clamp [4], remove the two screws [6], then detach the cord holder [7].

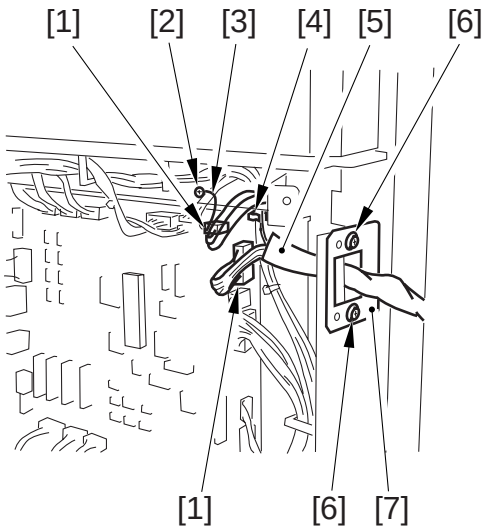

Figure 3-303

6) Pull upwards the tray A unit [8].

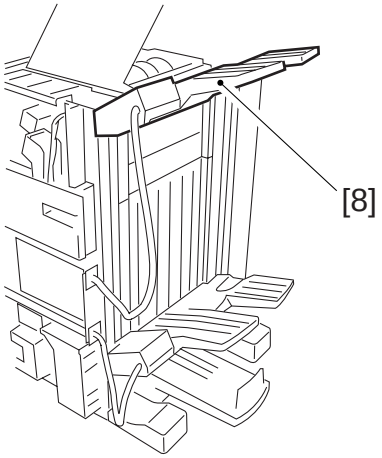

Figure 3-304

3. Removing the Tray B Unit

1) Remove the tray A unit.
2) Remove the stopper (lower).
3) Open the upper cover.
4) Disconnect the connector [1], remove the screw [2], then after having disconnected the grounding wire [3], free the cords [5] from the cord clamp [4].

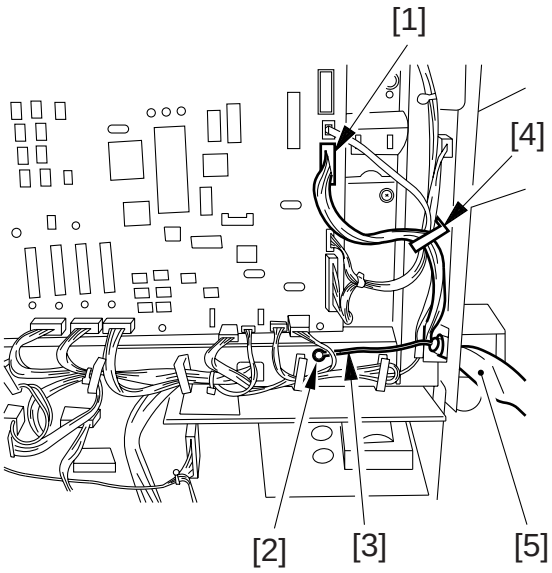

Figure 3-305

COPYRIGHT © 1999 CANON INC.

5) Remove the two screws [6], and detach the cord holder [7].

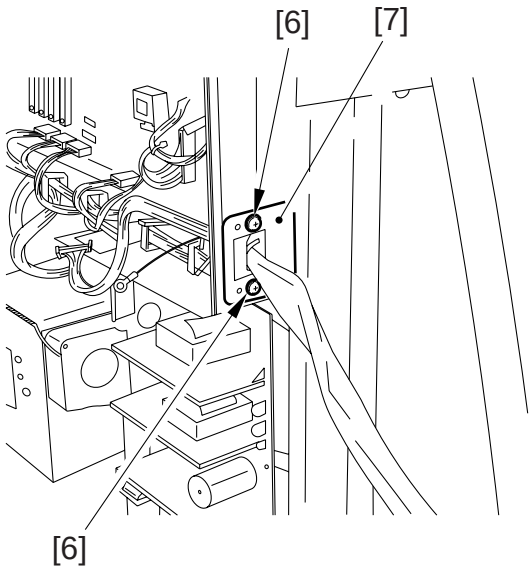

Figure 3-306

6) Pull upwards the tray B unit [8].

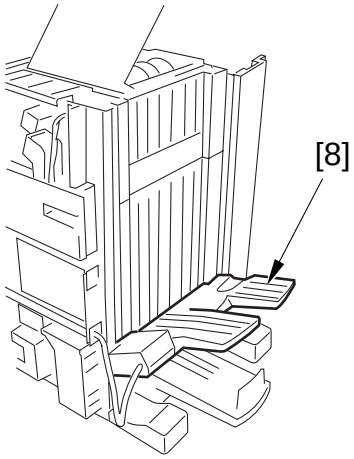

Figure 3-307

4. Removing Tray A/B Up/Down Motor (M12/M13)

1) Remove tray A/B.
2) Set the tray A/B unit to the lowest level (See C-1). The tray, when not lowered, may fall down when removing the motor.
3) Remove the screw [1], and remove the motor driver mount cover [2].

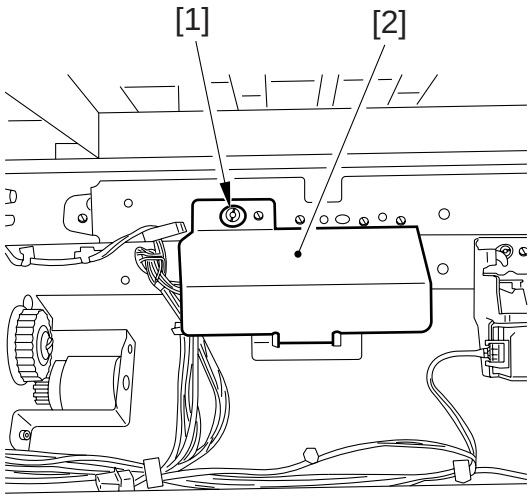

Figure 3-308

COPYRIGHT © 1999 CANON INC.

4) Disconnect the connector (J602) [3] and free the wire herness from the cord clamp [4].

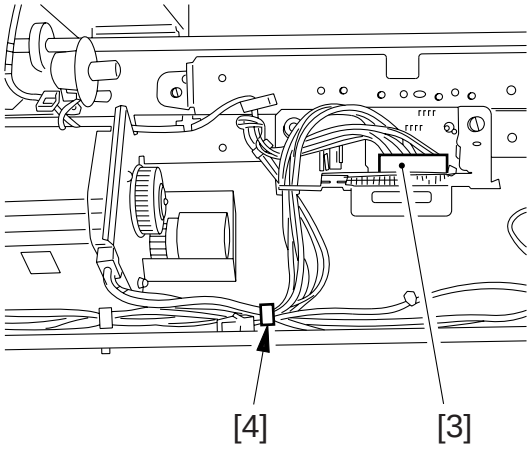

Figure 3-309

5) Remove the four screws [5], and remove the motor [6].

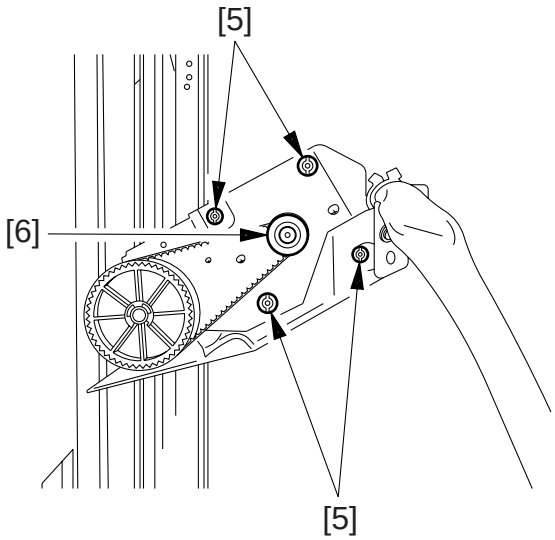

Figure 3-310

5. Mounting Tray A/B Up/down Motor (M12/M13)

1) Mount the motor so that the circle drawn connecting the bosses [1] on the motor will fit the large, round hole [2] on the mounting face.

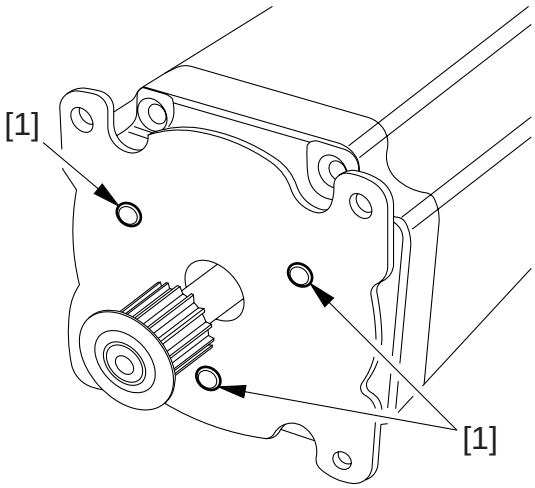

Figure 3-311

COPYRIGHT © 1999 CANON INC.

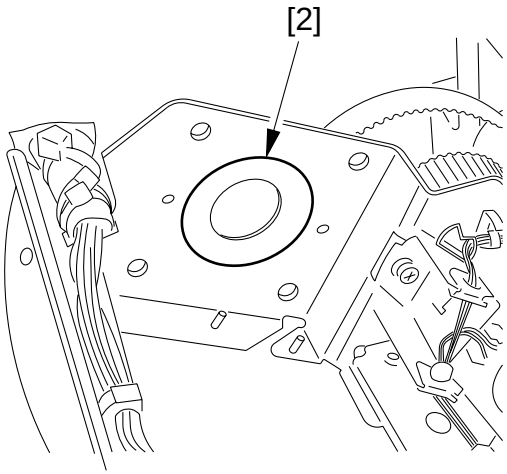

Figure 3-312

Reference:

You can check to see if the bosses are fitted in the large, round hole in reference to the small holes [3] on the side of the drive belt.

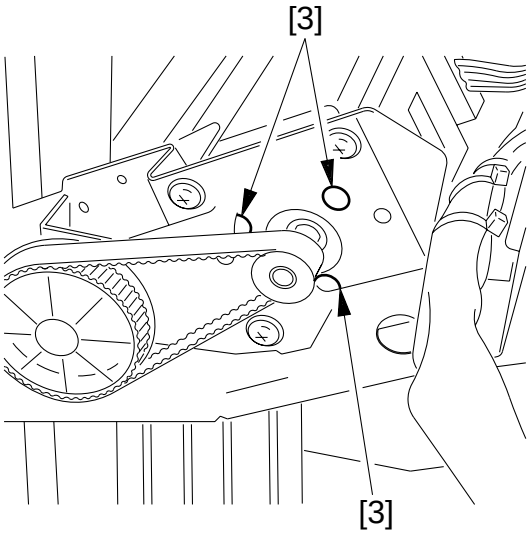

Figure 3-313

6. Adjusting Position of the Sub Tray Solenoid (SL4) (with the paper folding unit attached)

1) Remove tray B.
2) Disconnect the connector [1] of the sub tray solenoid cable.

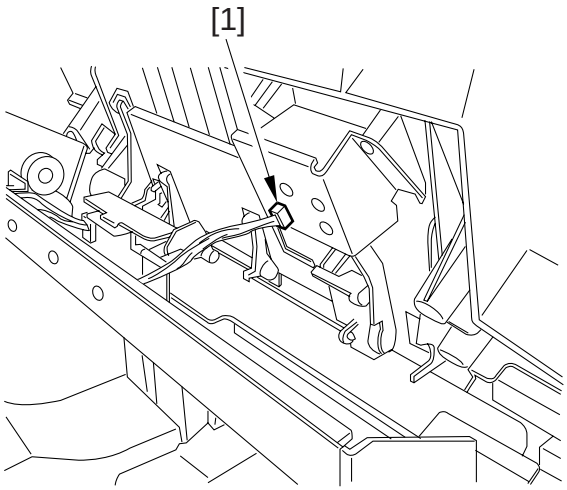

Figure 3-314

COPYRIGHT © 1999 CANON INC.

3) Make sure that the roller [2] of the lever unit does not protrude from the tray surface [3]. Should the roller protrude from the tray surface, adjust its height based on the following procedure.

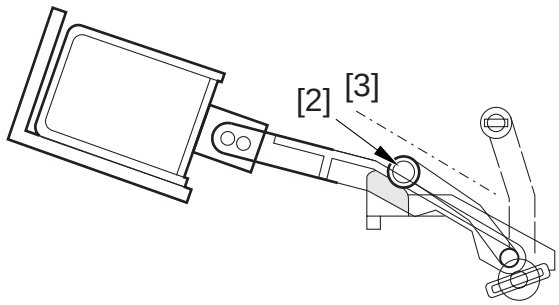

Figure 3-315

4) Loosen the three screws [4] of the solenoid unit.

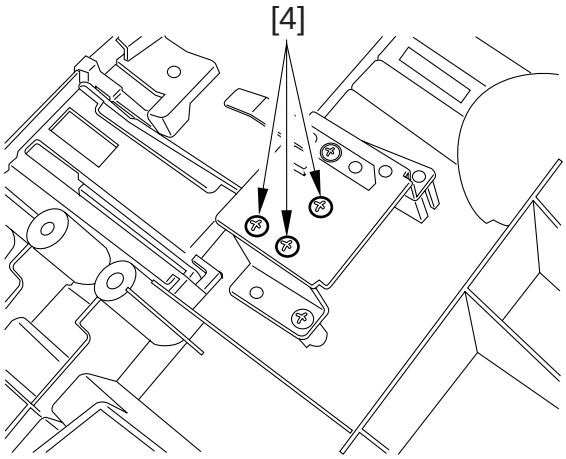

Figure 3-316

5) Set the solenoid in. (Figure 3-317-A)
6) While the solenoid is pulled in, cover the solenoid shaft [5] with your finger, and pull out the solenoid. (Figure 3-317-B)
7) When the roller of the lever unit is pulled in so that it touches the stopper, tighten the screws [4] in this position.

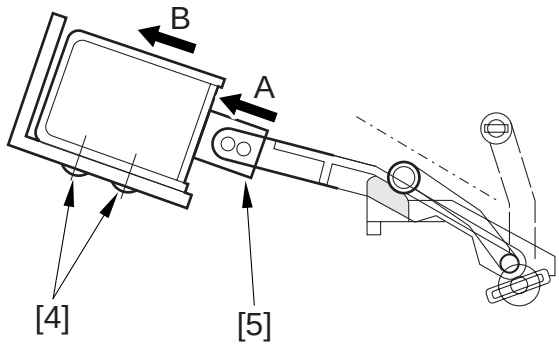

Figure 3-317

COPYRIGHT © 1999 CANON INC.

7. Position of Tray B When Turning On the Power

Make sure that tray B [1] is not above the tray B paper sensor [2] when turning the power on. If it is above the sensor, an error will occur when the unit detects the position of tray B.

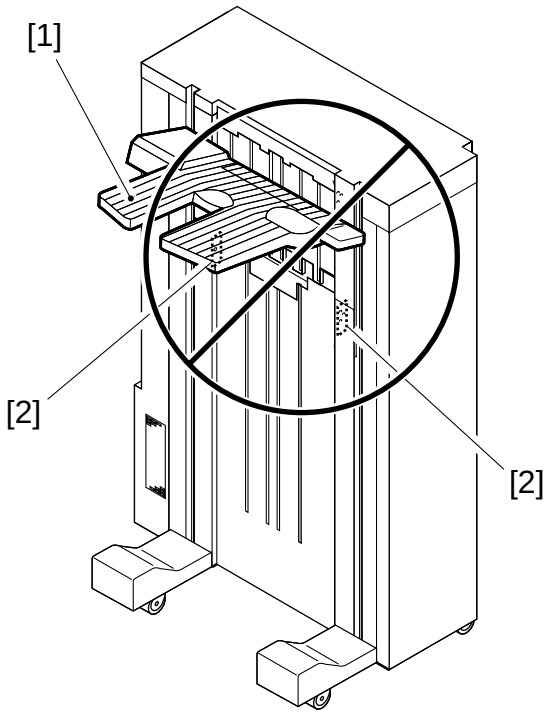

Figure 3-318

8. Cords of Tray A/B

After having mounted tray A/B, make sure that their cords do not become tangled.

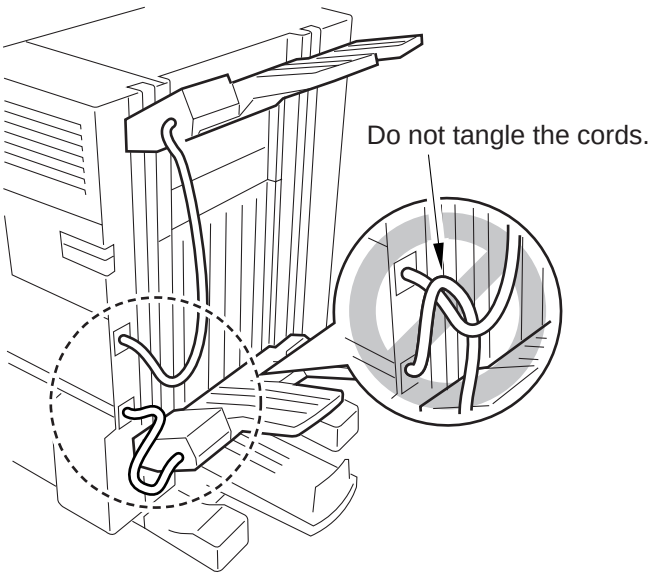

Figure 3-319

9. Caution on Handling the Stack Partition Wall Rails

Avoid hitting, scratching or otherwise damaging the rails [1] of the stack partition walls. Functionality of the rails may deteriorate if it is damaged in any way.

Should the rails become dirty, remove the dirt with alcohol.

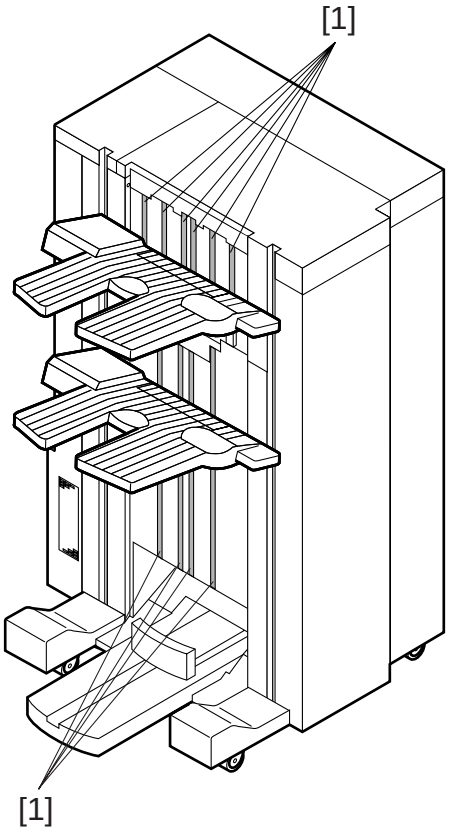

Figure 3-320

COPYRIGHT © 1999 CANON INC.
CANON SADDLE FINISHER-D2 REV.0 AUG. 1999 PRINTED IN JAPAN (IMPRIME AU JAPON)

D. Knurled Belt Releasing Unit

1. Removing the Knurled Belt Releasing Unit

1) Release the machine from the copier.
2) Disconnect J19 [1] and J18 [2].

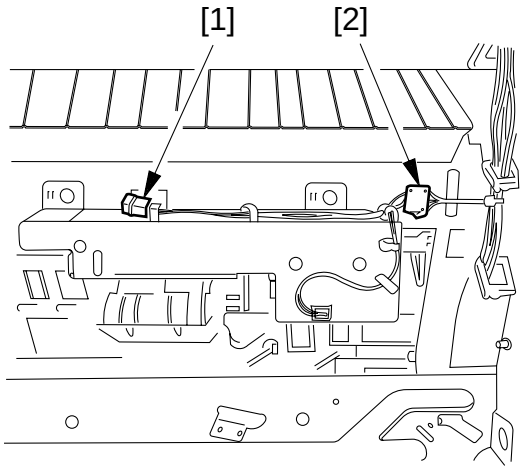

Figure 3-401

3) Remove the three screws [3].

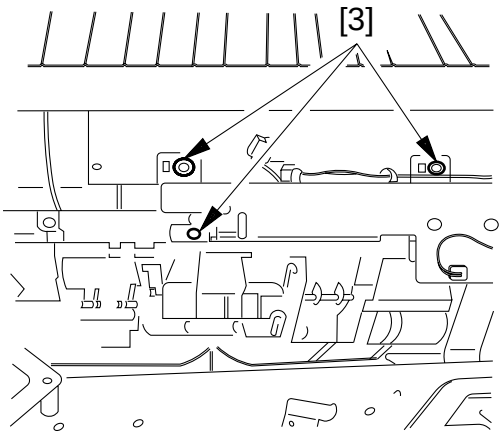

Figure 3-402

4) While detaching the knurled belt [4] from the pulley, detach the knurled belt releasing unit [4].

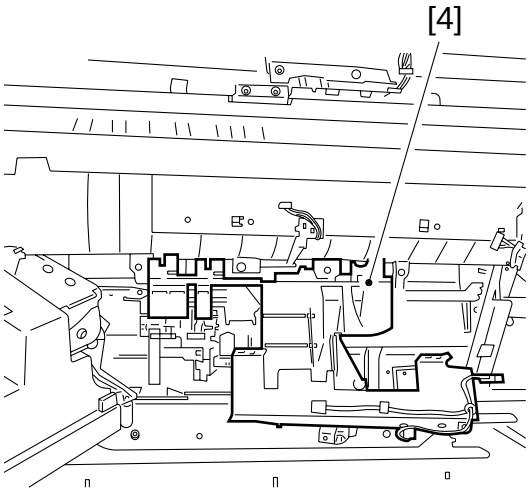

Figure 3-403

2. Adjusting the Position of the Knurled Belt Releasing Solenoid (SL3)

1) Loosen the screws [1].
2) Slide the solenoid [2] so that the distance A of the solenoid is 2.5±0.2 mm; then, tighten the screws.

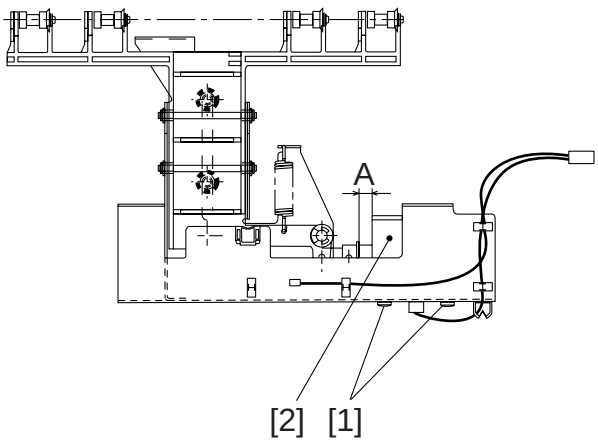

Figure 3-404

COPYRIGHT © 1999 CANON INC.

E. Knurled Belt

1. Removing the Knurled Belt

1) Remove the processing tray unit. (See I-B.)
2) Release the machine from the copier. (See I-2.)
3) Remove the rear cover.
4) Remove the two screws, and detach the sort delivery guide [1].

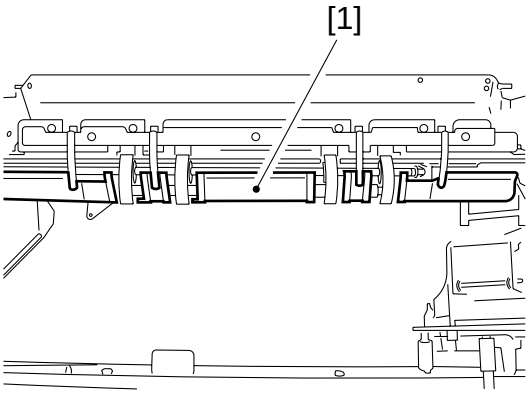

Figure 3-501

5) Remove the E-ring [2] and the bearing [3] from the front of sort delivery roller.
6) Detach the knurled belt [4] from the sort delivery roller shaft.

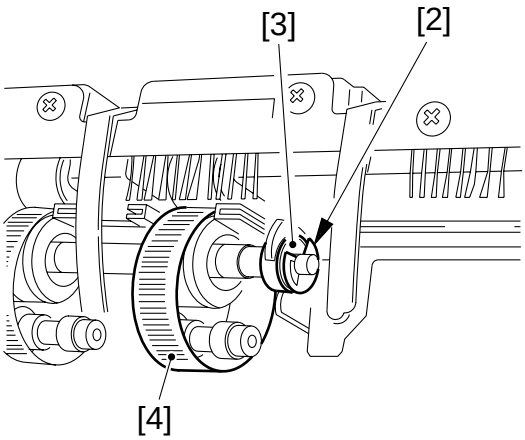

Figure 3-502

Caution:
When mounting the sort delivery guide [1], take care not to trap the paper feeding guide [2].

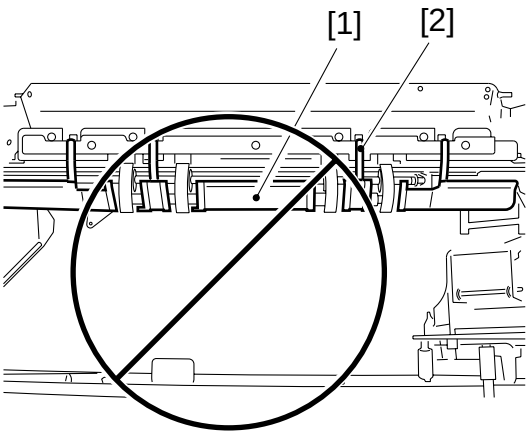

Figure 3-503

COPYRIGHT © 1999 CANON INC.

F. Buffer Roller Unit

1. Removing the Buffer Roller Unit

1) Open the front cover and the upper cover.
2) Remove the buffer roller knob, the punch knob and the inside cover .
3) Disconnect the connector [1], and remove the screw [2]; then, detach the upper cover sensor mount [3].

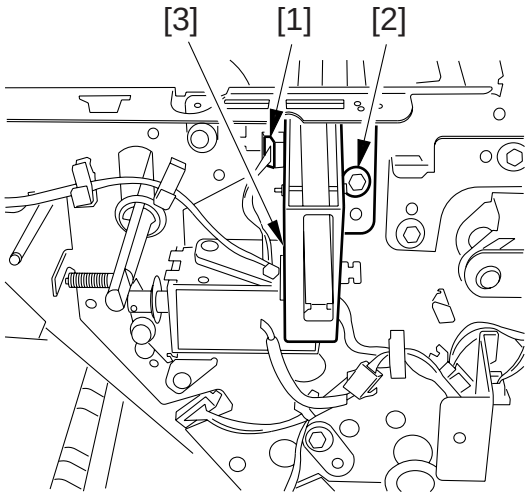

Figure 3-601

4) Disconnect the connector [4], and remove the two screws [5]; then detach the buffer path switching solenoid (SL1) [6].

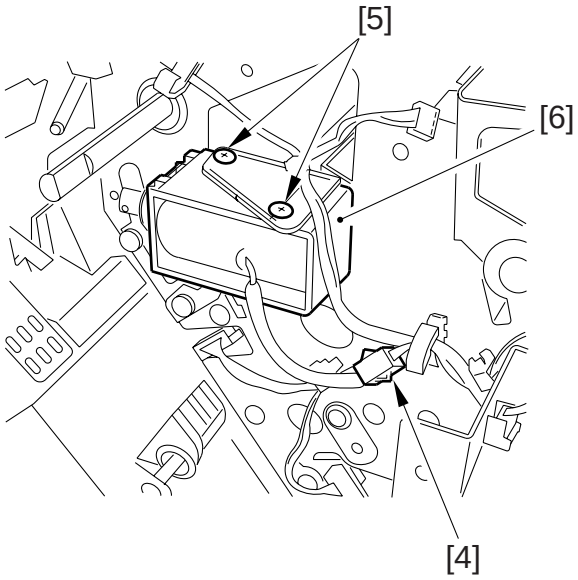

Figure 3-602

COPYRIGHT © 1999 CANON INC.
CANON SADDLE FINISHER-D2 REV.0 AUG. 1999 PRINTED IN JAPAN (IMPRIME AU JAPON)

5) Remove the three screws [7], and detach the prism support plate [8].

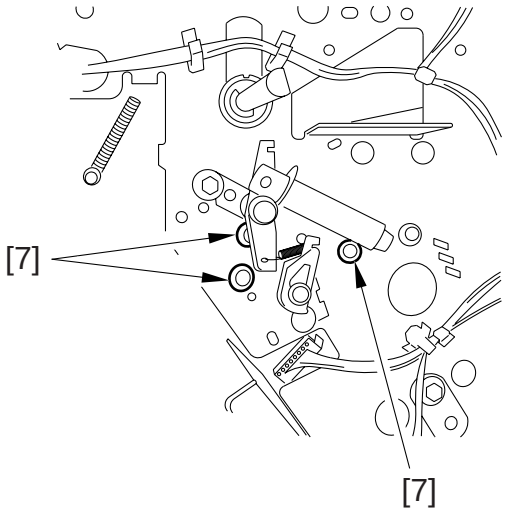

Figure 3-603

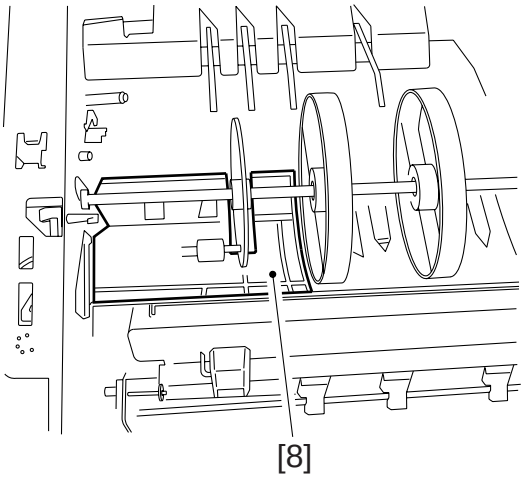

Figure 3-604

6) Remove the E-ring [9] from the front end of the buffer roller shaft, and detach the bearing [10].

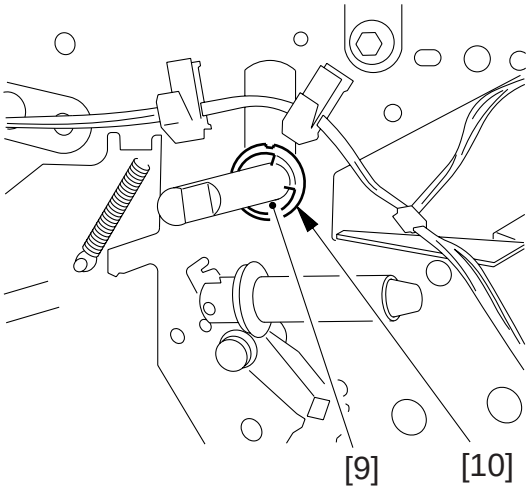

Figure 3-605

COPYRIGHT © 1999 CANON INC.

7) Remove the upper rear cover and the rear cover.
8) Remove the punch fan [11].

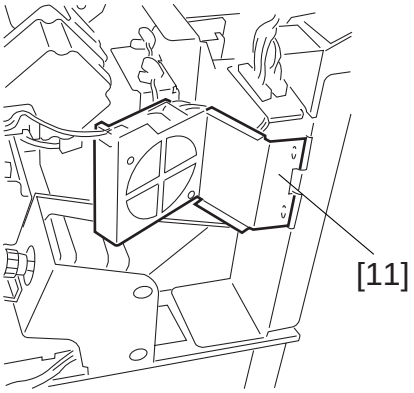

Figure 3-606

9) Remove the punch waste container holder.
10) Remove the E-ring [12] of the buffer roller shaft rear end, and remove the gear [13].

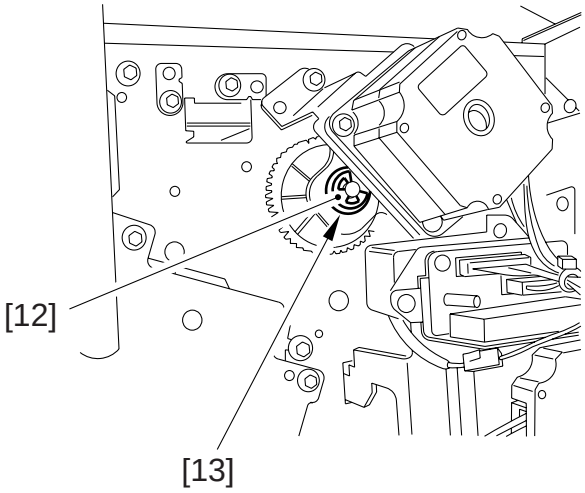

Figure 3-607

11) Disconnect the connector [14], remove the three screws [15], then remove the buffer motor [16].

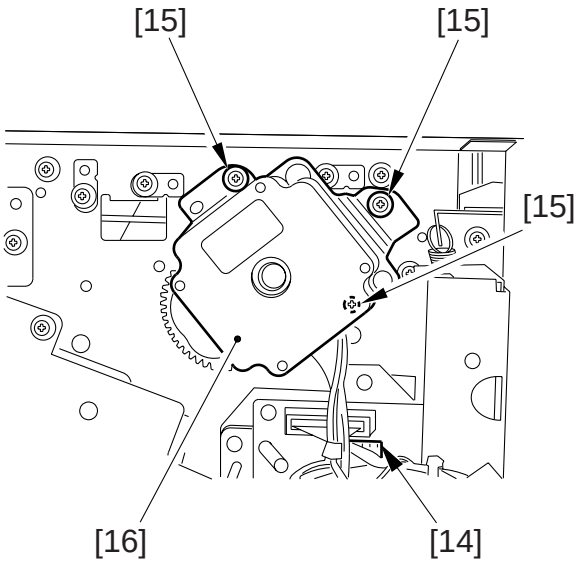

Figure 3-608

COPYRIGHT © 1999 CANON INC.

12) Remove the stopper [17] and gear [18] of the buffer roller shaft.

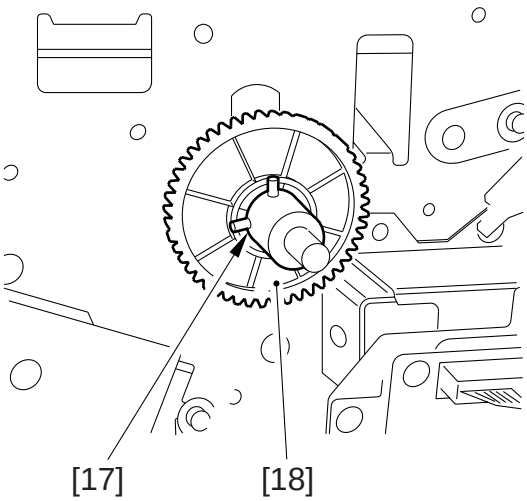

Figure 3-609

13) Remove the buffer roller unit [19].

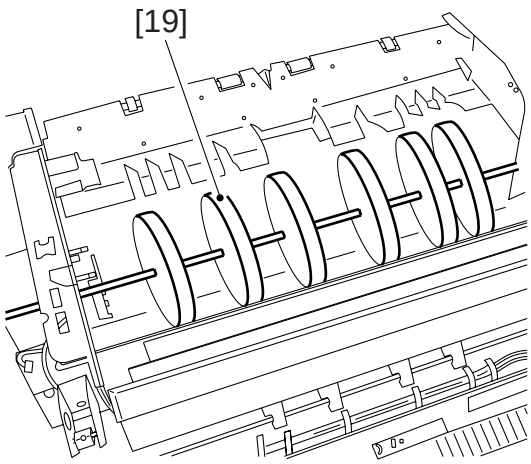

Figure 3-610

G. Stapler Unit

1. Removing the Stapler Unit

1) Open the front cover.
2) Remove the screw [1], and detach the stapler cover [2].

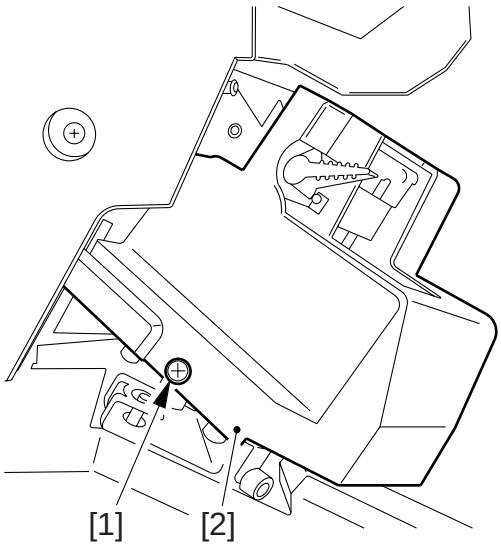

Figure 3-701

3) Remove the two screws [3], and detach the stapler holder [4] from the mount. Before detaching it, be sure to take note of the stapler position index (Figure 3-703).

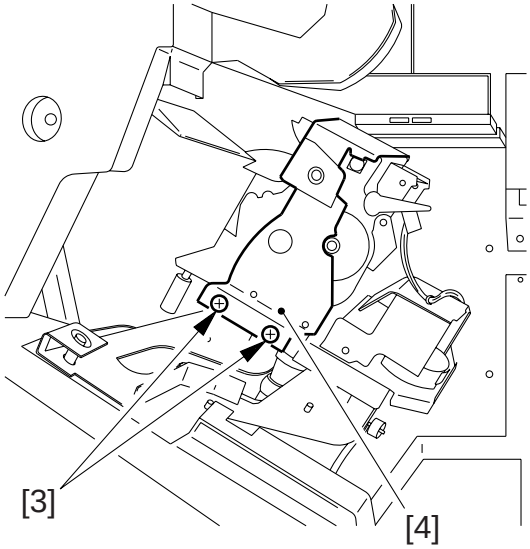

Figure 3-702

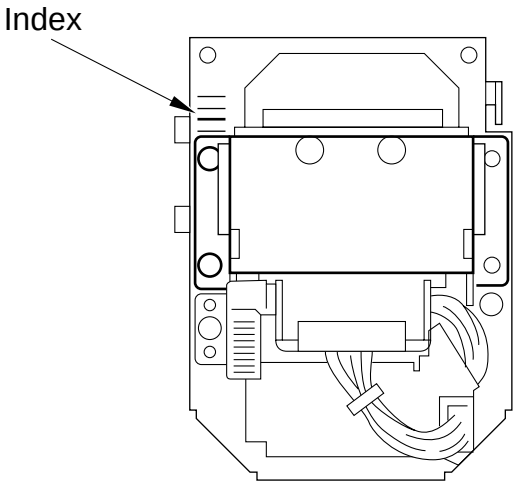

Figure 3-703

COPYRIGHT © 1999 CANON INC.

4) Disconnect the connector (J49) [5].

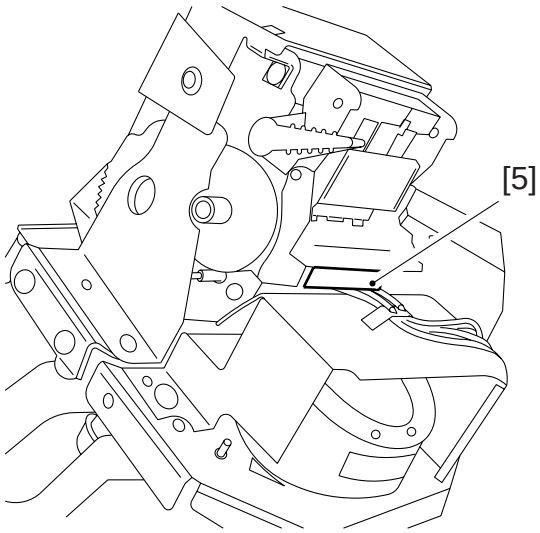

Figure 3-704

5) Remove the two screws [6], and detach the stapler [7] from the stapler holder.

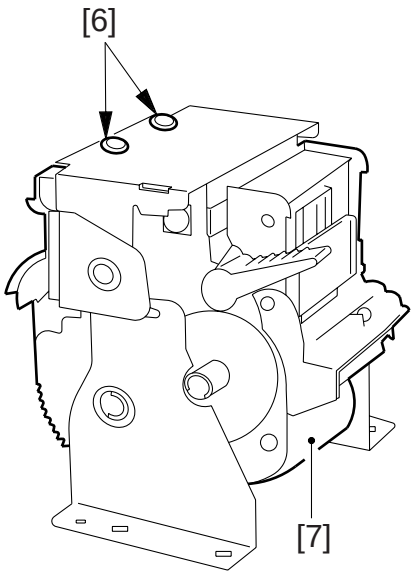

Figure 3-705

2. Positioning the Stapler Paper Stopper

1) Release the machine from the copier.
2) Move the stapler unit [1] to the center of the rail.
3) Loosen the screw [3] on the stapler paper stopper (left, right) [2].

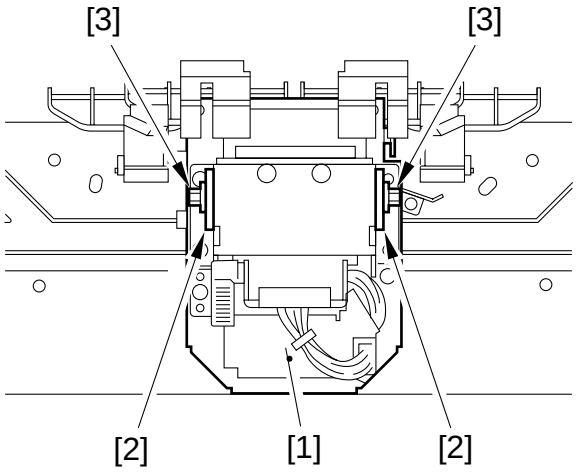

Figure 3-706

COPYRIGHT © 1999 CANON INC.

4) Holding the swing guide, insert a stack of several sheets [4], and butt it against the rear end stopper [5].

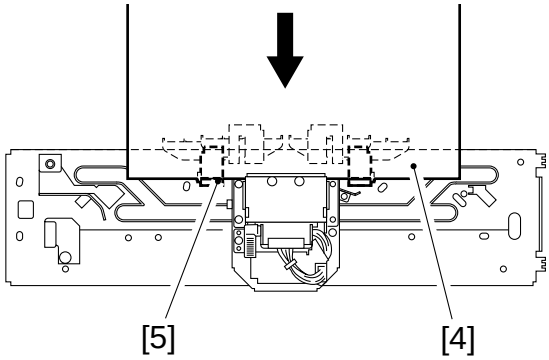

Figure 3-707

5) While butting the stack of sheets [4] against the stapler paper stopper (left, right) [2], tighten the screw [3].

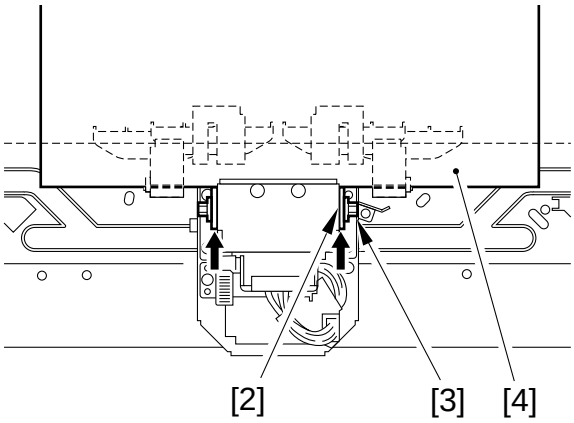

Figure 3-708

3. Positioning the Stapler

1. Using the Index

Mount the stapler holder with reference to the index noted before detaching it. (Normally, match it at the center of the index.)

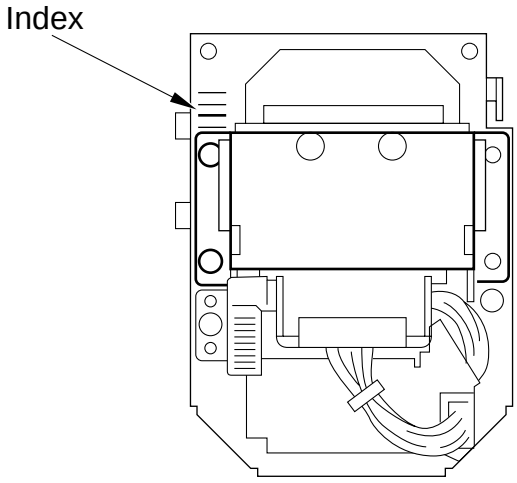

Figure 3-709

COPYRIGHT © 1999 CANON INC.

2. Using the Stopper

If you are not sure about the index, perform the following; this is also effective when the stapler paper stopper has to be moved:

1) Move the stapler unit [1] to the center of the rail.
2) Loosen the two stapler holder fixing screws [2].

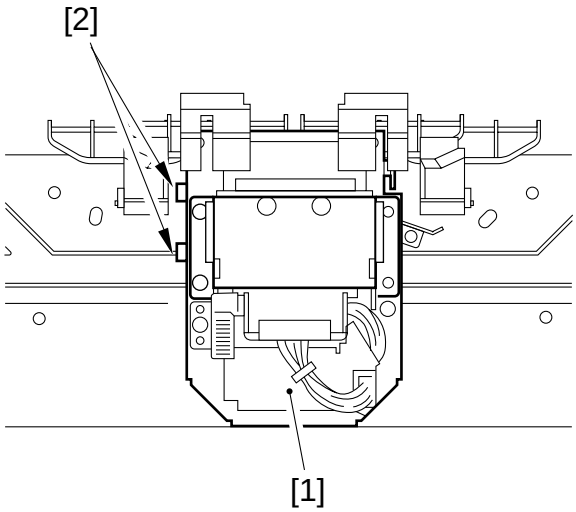

Figure 3-710

3) While holding the swing guide, insert a stack of sheets [3], and butt it against the rear edge stopper [4].

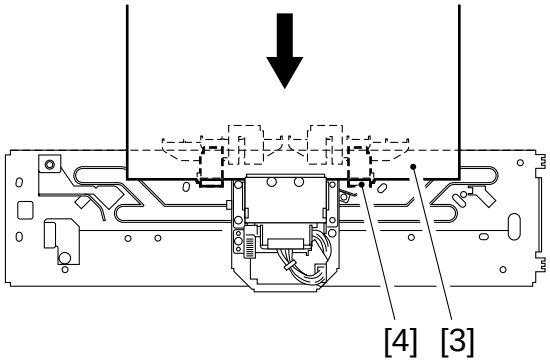

Figure 3-711

4) Slide the stapler holder [6] until the stapler paper stopper [5] comes into contact with the stack of sheets; then, loosen the screws.

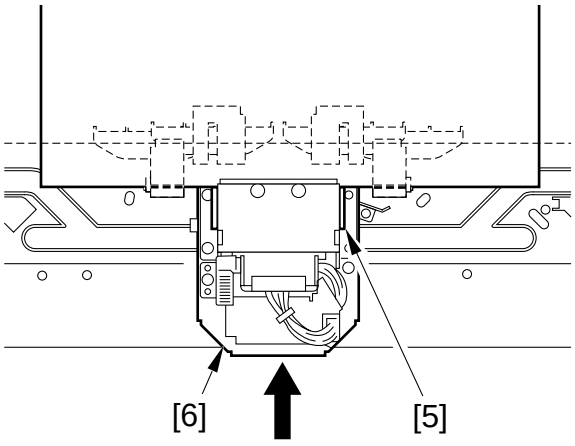

Figure 3-712

3. Positioning by Stapling

If you are not sure about the index because of, for instance, the replacement of the stapler holder and, in addition, the stapler paper stopper has moved, perform the following:

1) Release the machine from the copier.
2) Fix the stapler holder to the mount temporarily. (At this time, try to fit the screw somewhat on the rear side.)
3) Move the stapler [1] to the center of the rail.
4) Loosen the screw of the stapler paper stopper (left, right).
5) While holding the swing guide, insert a stack of sheets [2], and butt it against the rear end stopper [3].

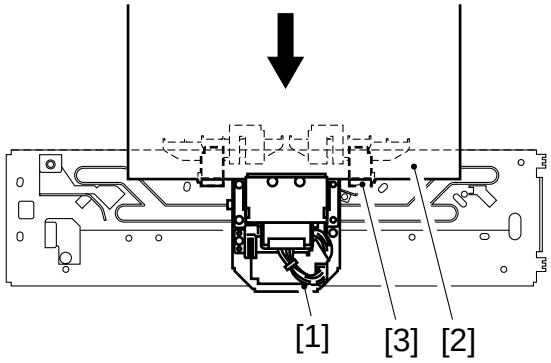

Figure 3-713

6) Perform manual stapling. (See Chapter 5.)
7) Check the stapling position against the standards.

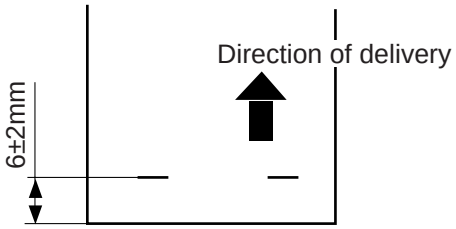

Figure 3-714

8) Move the stapler holder [4] in reference to the index and according to the result of comparison. (Use the two screws [5].)

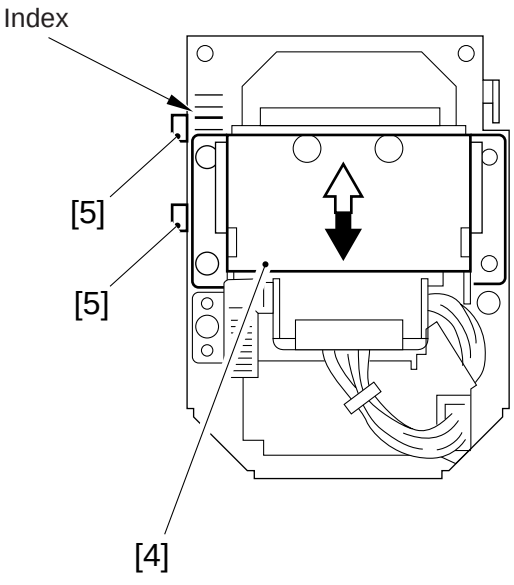

Figure 3-715

COPYRIGHT © 1999 CANON INC.

9) While lifting the swing guide, insert a stack of sheets [6], and butt it against the rear end stopper.[7].

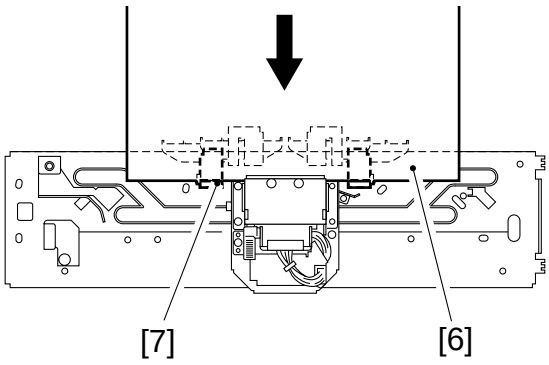

Figure 3-716

10) Slide the stapler holder [9] until the stapler paper stopper [8] comes into contact with the stack of sheets; then, tighten the screw.

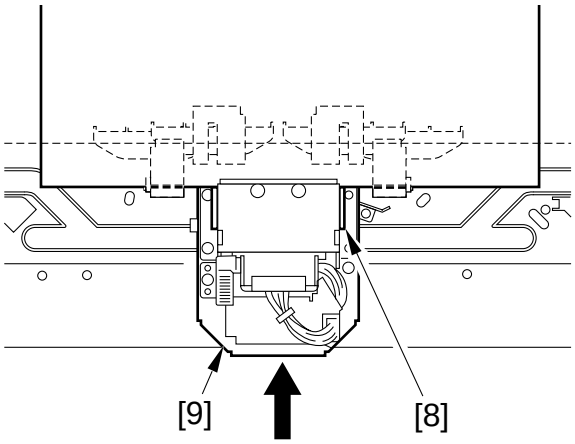

Figure 3-717

4. After Positioning the Stapler

After adjusting the position of the stapler, make sure of the following:

- The knurled belt roll and the stapler edge will not interfere when the knurled belt releasing solenoid is fully pulled while the stapler is in 2-point stapling position.

If Interference Occurs

1. Check the position of the knurled belt releasing solenoid.
2. Move the stapler in the direction of arrow A until interference stops.

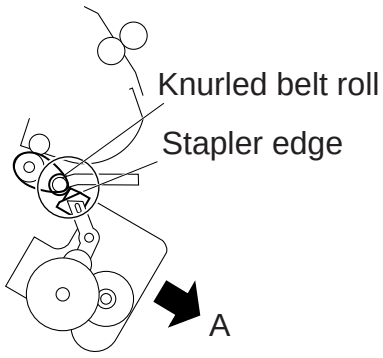

Figure 3-718

H. Punch Unit

Caution

Before removing the punch unit, perform the procedure explained below to transfer punch waste to the container.

1) Turn on DIP SW103-1, 6, 7, and 8 of the finisher controller PCB.
2) Press SW104 of the finisher controller PCB to turn on the punch waste transfer roller.
3) Turn on the motor for 5 minutes.
4) Press SW104 to stop the motor.

1. Detaching the Punch Slide Unit

1) Detach the punch knob [1].

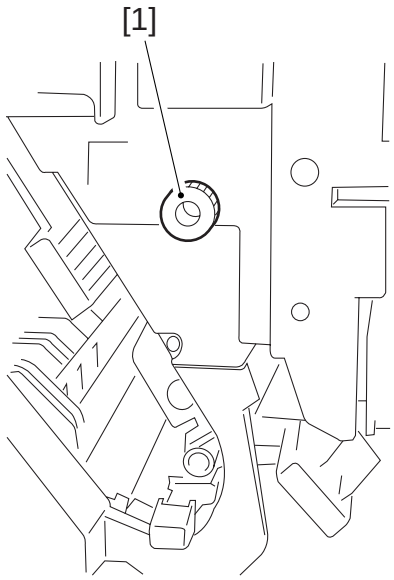

Figure 3-801

2) Detach the punch waste container [2] and the rear cover [3].

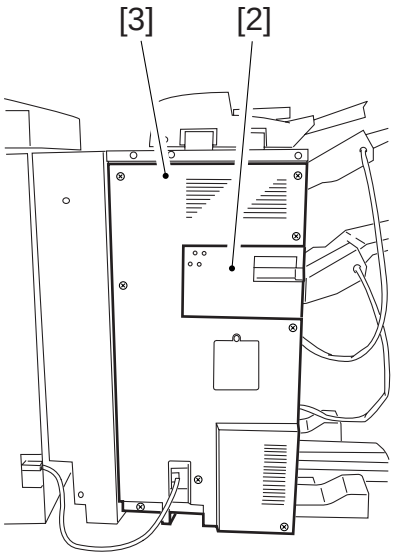

Figure 3-802

COPYRIGHT © 1999 CANON INC.

3) Remove the five screws [4] to detach the punch registration motor reinforcement plate [5].

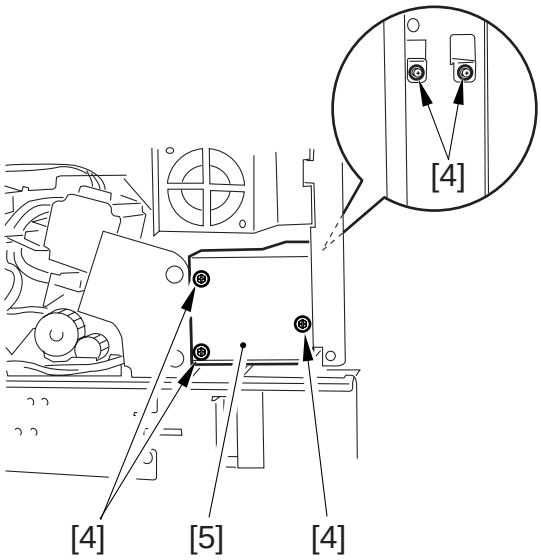

Figure 3-803

4) Remove the screw [6] and connector [7] to detach the punch waste feed sensor base [8].

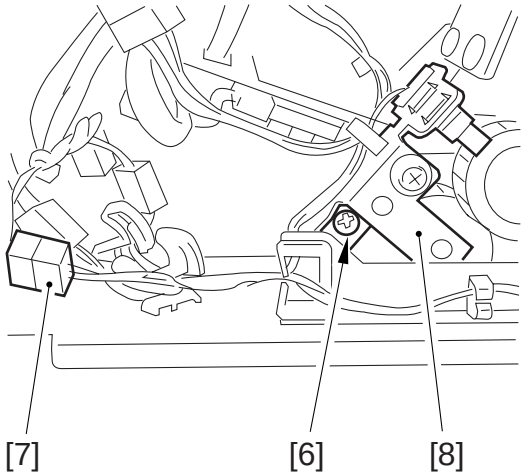

Figure 3-804

5) Remove the two screws [9] to detach the harness bracket [10].

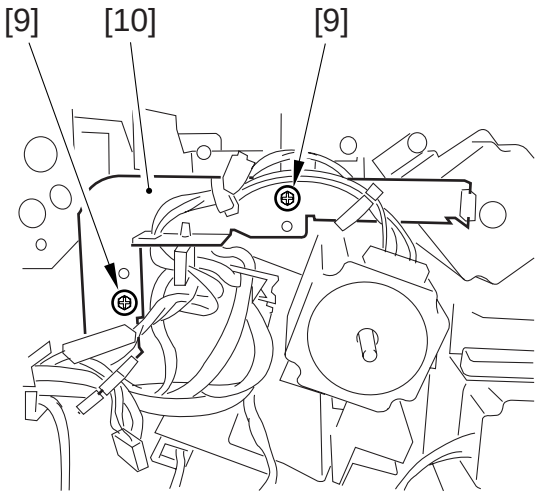

Figure 3-805

COPYRIGHT © 1999 CANON INC.

6) Detach the harness [11] from the harness holder [12].

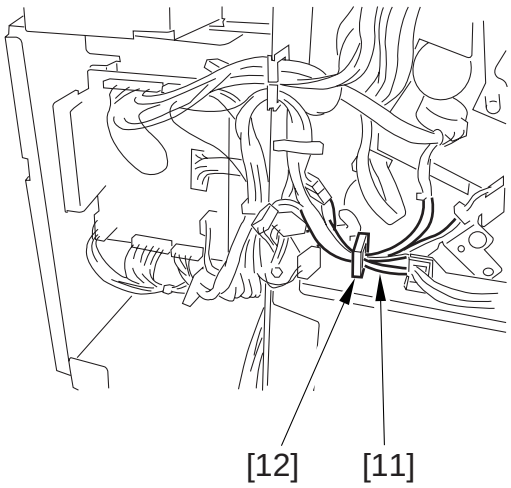

Figure 3-806

7) Disconnect the relay connectors [13].

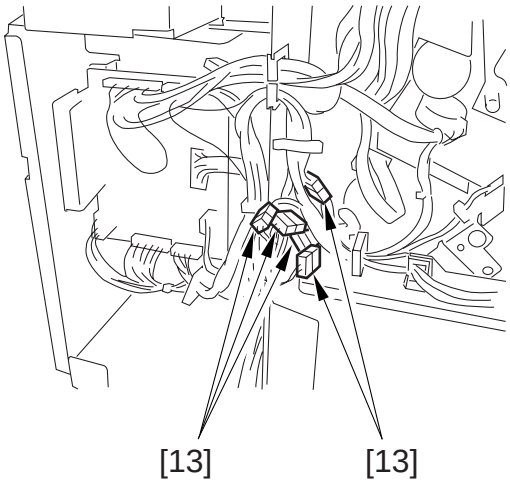

Figure 3-807

8) Disconnect the registration motor connector [14] from the punch driver PCB [15].

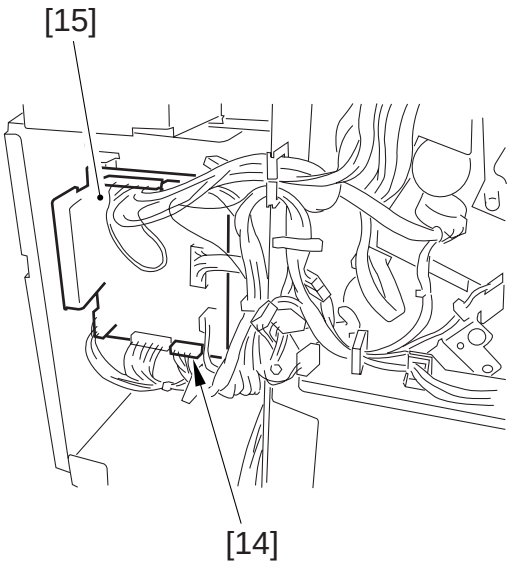

Figure 3-808

COPYRIGHT © 1999 CANON INC.

9) Remove the five screws [16] to detach the punch waste container holder [17] together with the registration motor and the waste feed motor mount.

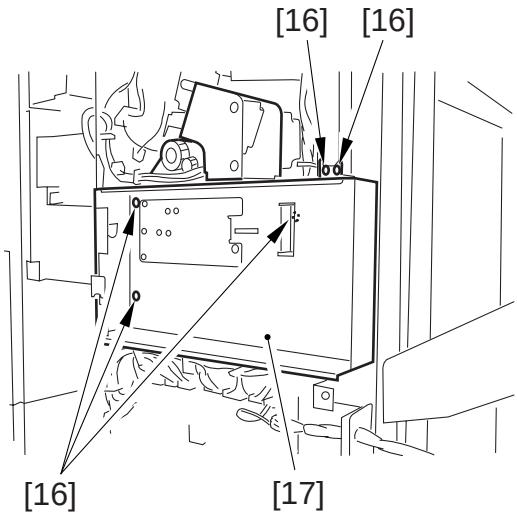

Figure 3-809

10) Remove the three screws [18] and the connector [19] to detach the punch motor mount [20].

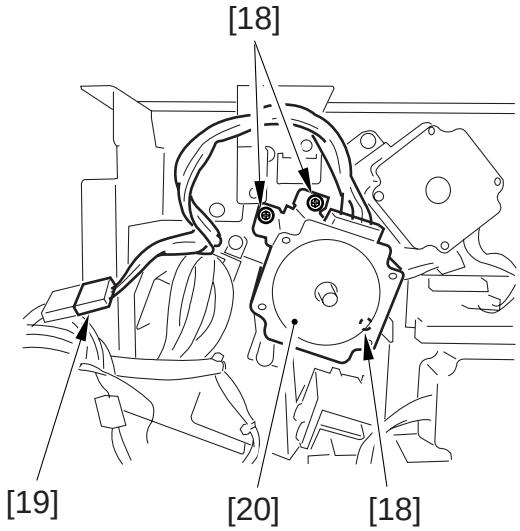

Figure 3-810

11) Disconnect the two connectors [21] from the punch driver PCB [15].

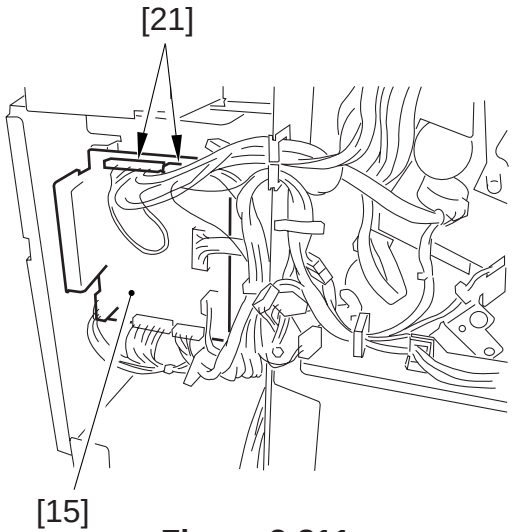

Figure 3-811

COPYRIGHT © 1999 CANON INC.

12) Remove the two screws [22] to pull out the punch slide unit [23] in the rear direction of the machine.

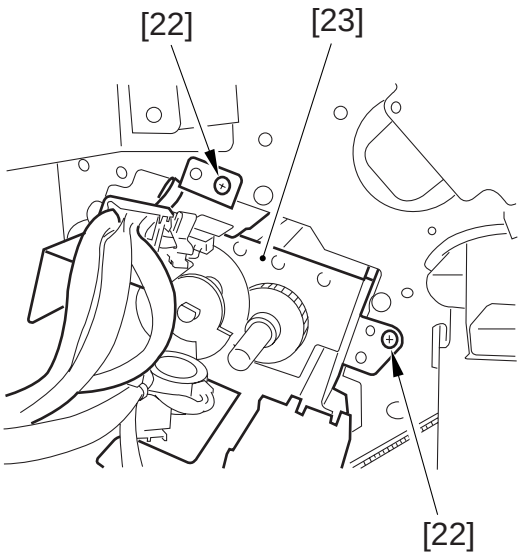

Figure 3-812

Caution

After the punch slide unit is assembled into the finisher, make sure that the punch registration operation is smooth.

2. Detaching the Punch Unit

1) Detach the punch slide unit.
2) Remove the two screws [1] to detach the punch waste feed screw unit [2].

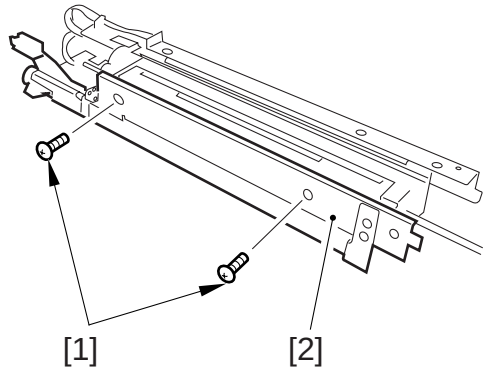

Figure 3-813

COPYRIGHT © 1999 CANON INC.
CANON SADDLE FINISHER-D2 REV.0 AUG. 1999 PRINTED IN JAPAN (IMPRIME AU JAPON)

3) Remove the stepped screw [3] and the three screws [4] to detach the sensor slide unit [5].

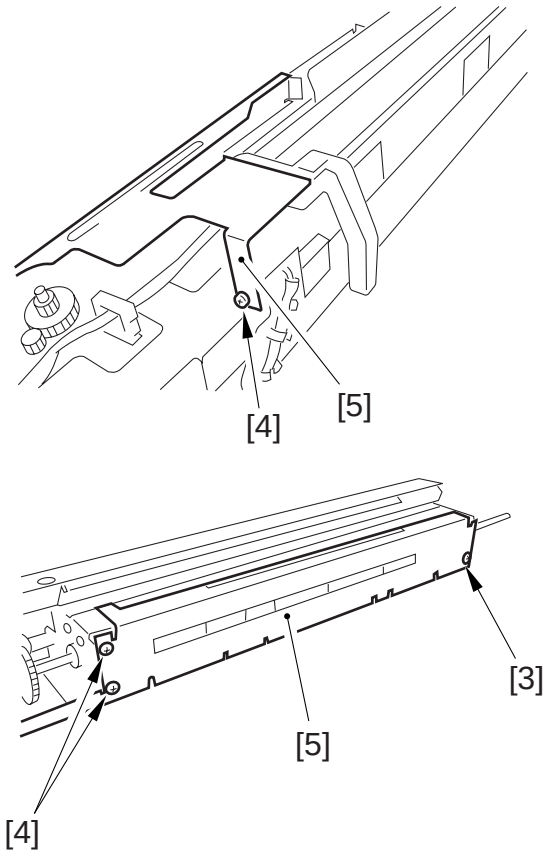

Figure 3-814

4) Remove two screws [6] to detach the registration sensor unit [7].

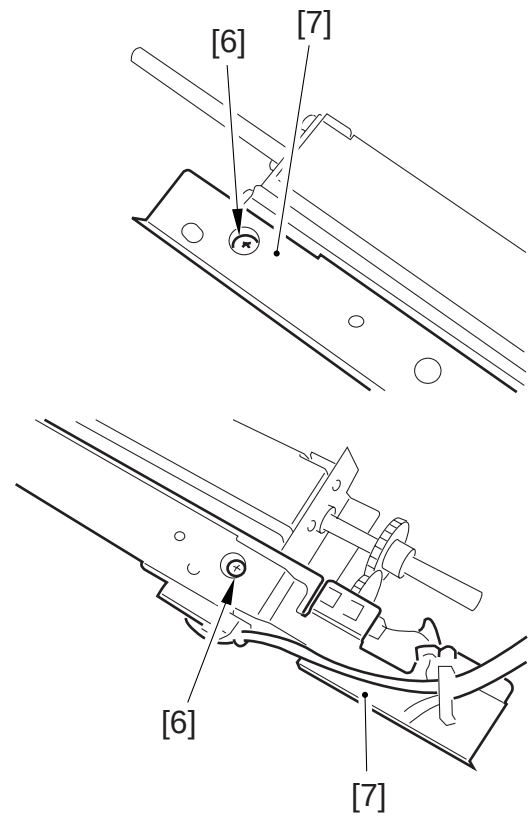

Figure 3-815

3. Attaching the Punch Waste Container Holder

1) Attach the waste container holder [1] to the finisher frame, the side marked by arrow A first, the side marked by arrow B next. When setting the holder in the direction of arrow B, make sure that the projection [2] on the punch waste container holder gets into the hole in the finisher frame.

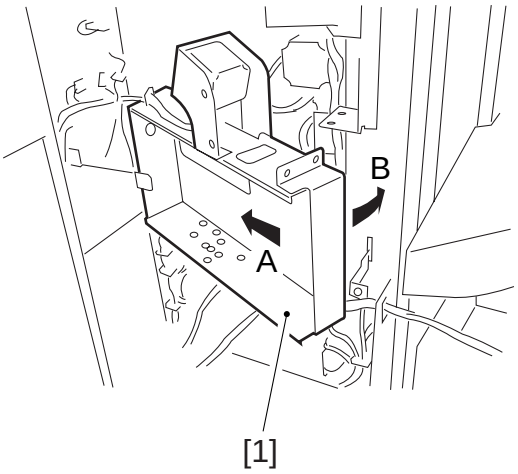

Figure 3-816

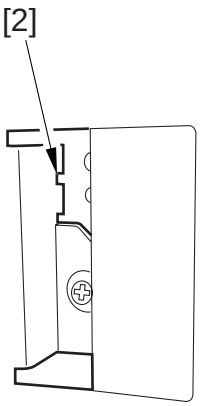

Figure 3-817

2) Tighten the five screws [3] to secure the waste container holder [4].

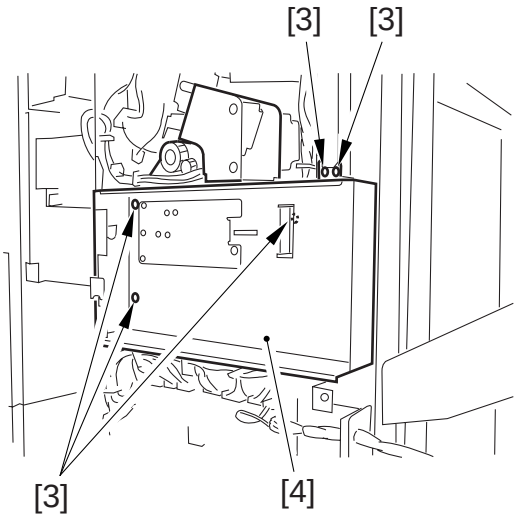

Figure 3-818

COPYRIGHT © 1999 CANON INC.

4. Securing the Punch Horizontal Registration Rack in Place

1) Loosen the screws [1] on the horizontal registration rack in advance.

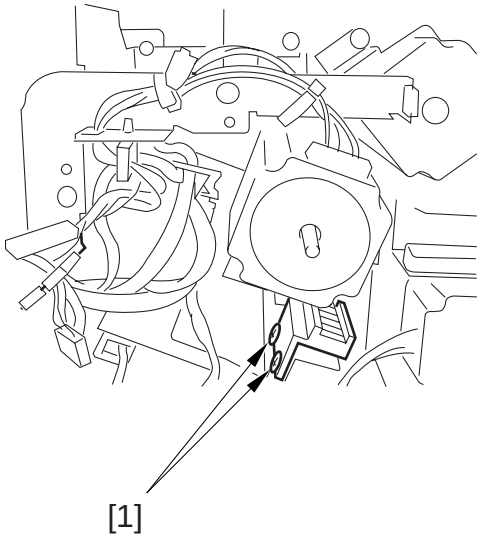

Figure 3-819

2) Mount the horizontal registration motor.
3) Adjust so that center of the horizontal registration rack matches the center of the motor gear [2]; then, tighten the screws on the rack.

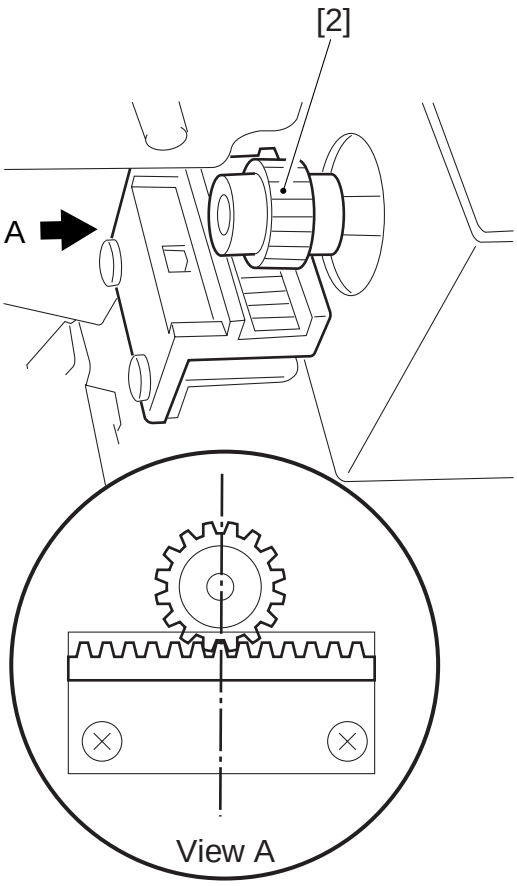

Figure 3-820

COPYRIGHT © 1999 CANON INC.

I . Printed Circuit Boards (PCB)

1. Removing the Finisher Controller PCB

1) Detach the rear cover.
2) After disconnecting the 26 connectors, remove the six screws [1] to remove the finisher controller roller PCB [2].

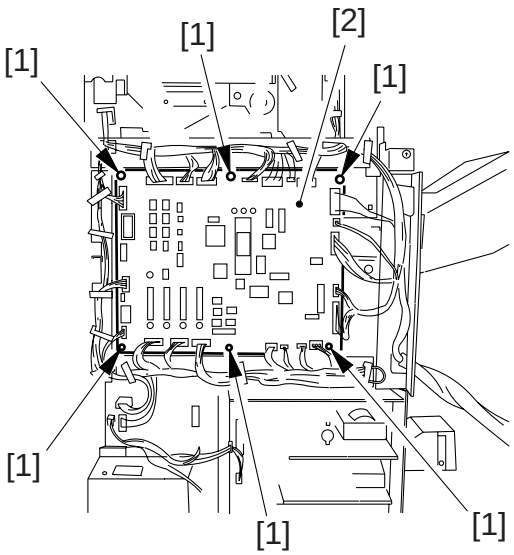

Figure 3-901a

COPYRIGHT © 1999 CANON INC.

II . SADDLE STITCHER

A. Saddle Unit

1. Detaching the Saddle Unit

1) Remove the eight screws [1] and detach the rear cover [2].

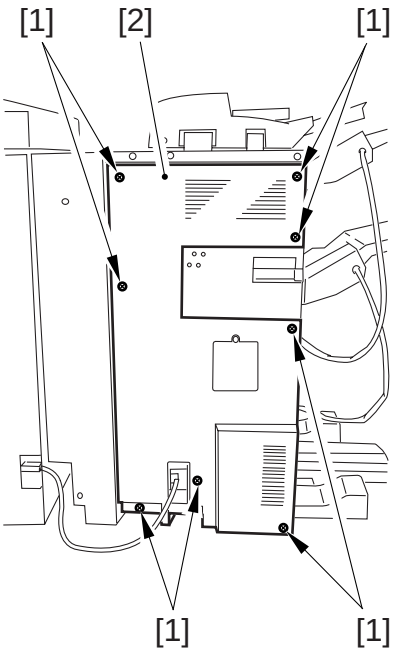

Figure 3-901

2) Remove the screw [3] and the six connectors [4], and detach the harness guide [5].

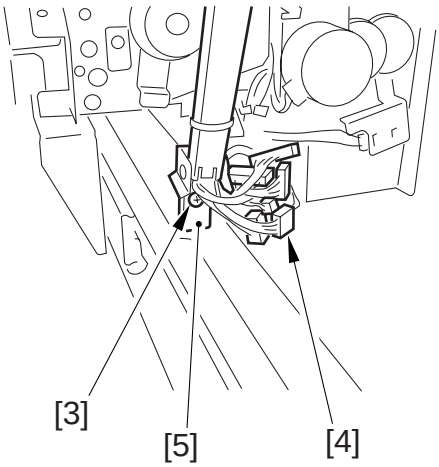

Figure 3-902

3) After pulling out the saddle unit, remove the screw [6] to detach the folding roller knob [7].

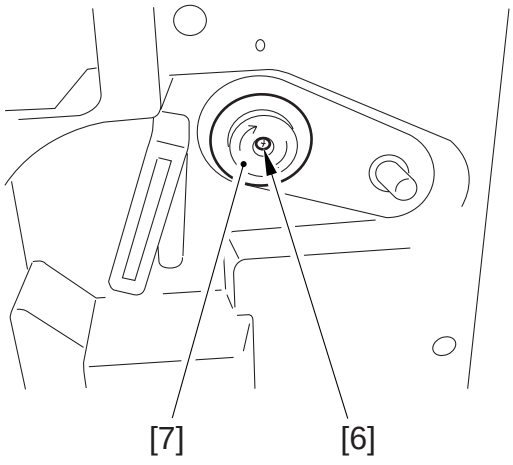

Figure 3-903

COPYRIGHT © 1999 CANON INC.

4) Remove the two screws [9] from the left-side notch in inside cover [8] and detach the handle [10].

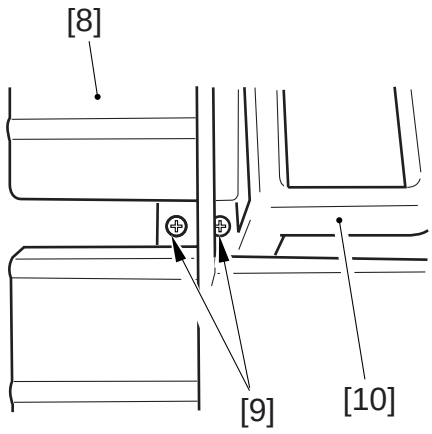

Figure 3-904

5) Remove the four screws [11] to detach the inside cover [8].

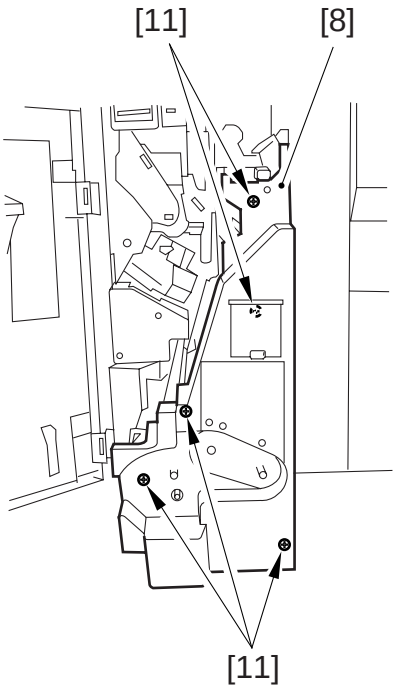

Figure 3-905

6) Remove the three screws [13] from the middle left rail [12].

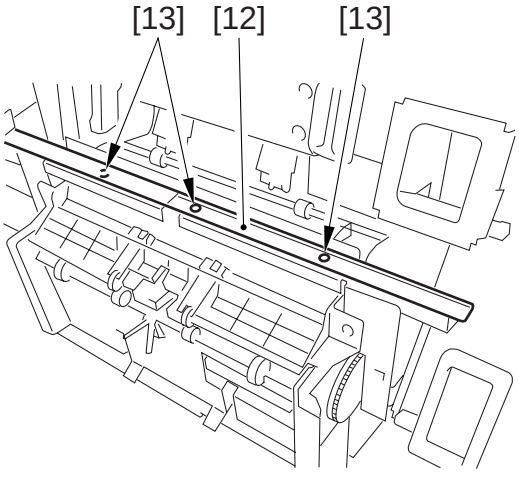

Figure 3-906

COPYRIGHT © 1999 CANON INC.

7) Remove the two screws [15] from the lower left rail [14].

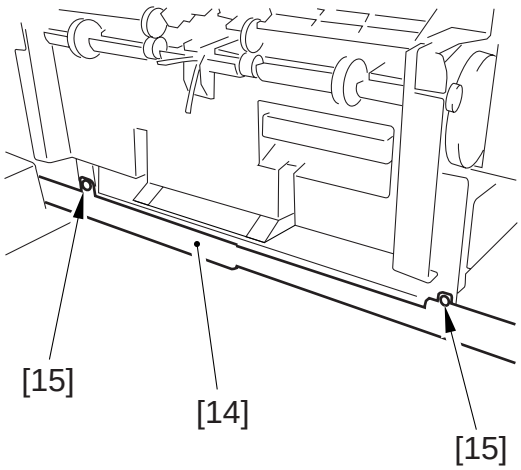

Figure 3-907

8) Remove the two screws [17] attached to the lower right rail [16] to detach the saddle unit.

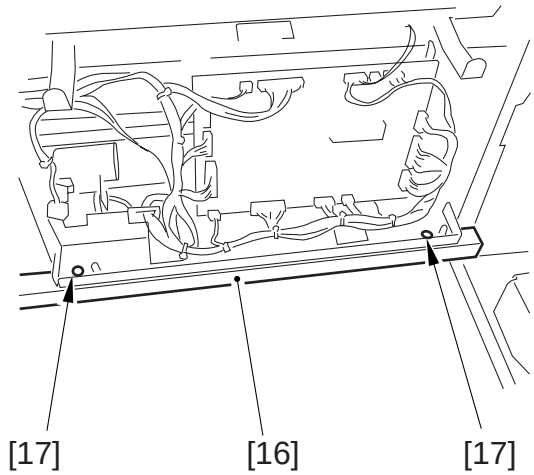

Figure 3-908

2. Detaching the Folding Roller

1) Remove the saddle stitcher.
2) Disconnect the two connectors [1].

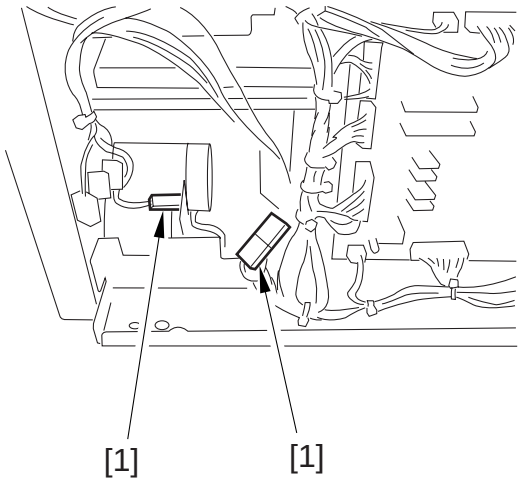

Figure 3-909

3) Disconnect the two connectors [2] and three screws [3] to detach the folding/paper pressure plate motor mount [4].

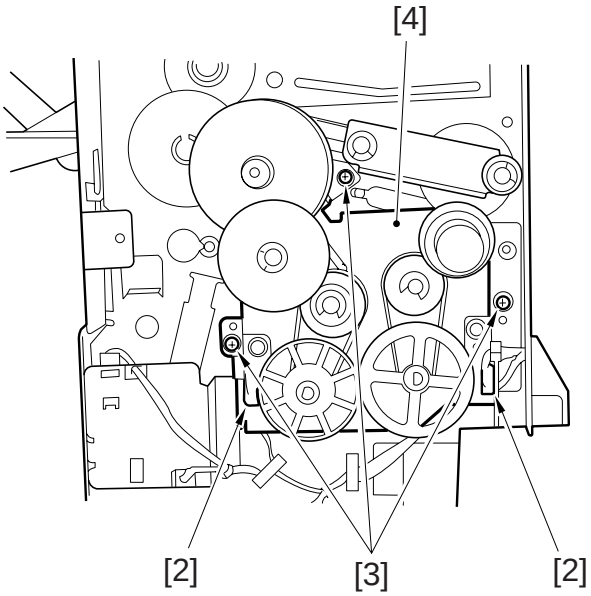

Figure 3-910

4) Detach the tension springs, front [5] and rear [6].

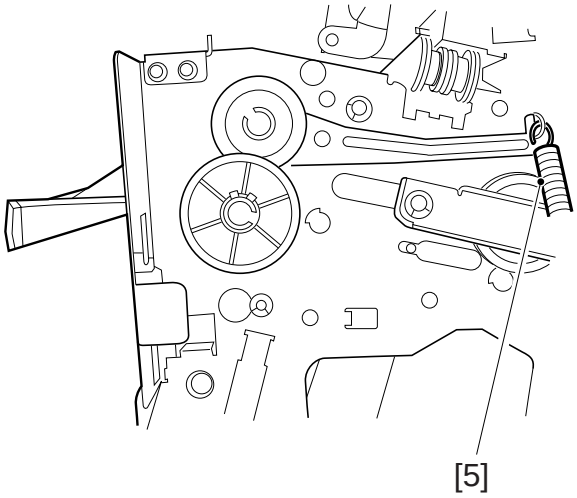

Figure 3-911

COPYRIGHT © 1999 CANON INC.

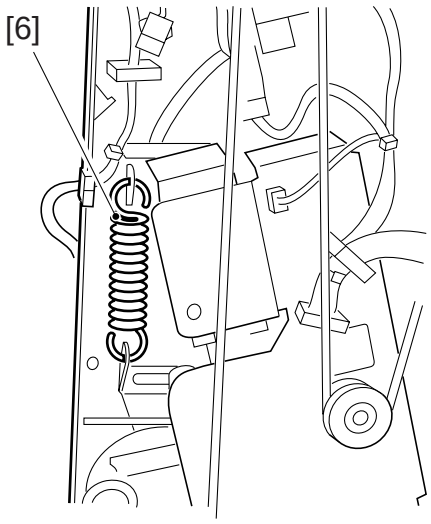

Figure 3-912

5) Remove the two C-rings [7] to detach the two gears [8].

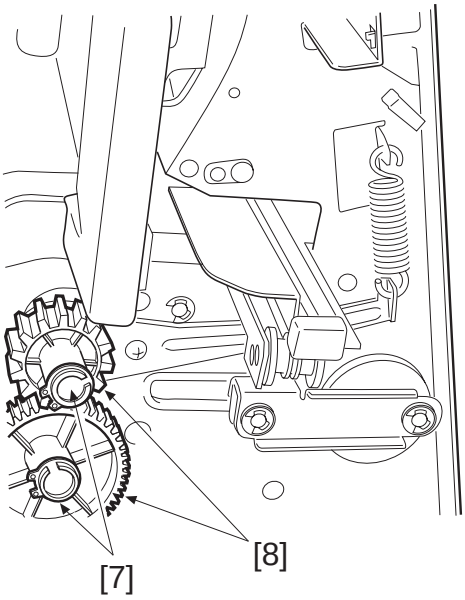

Figure 3-913

6) Remove the two bearings [9].

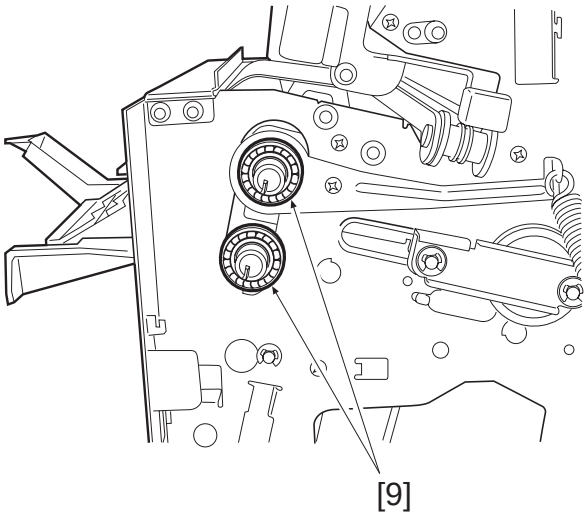

Figure 3-914

7) Likewise, remove the two rear C-rings [9] and two bearings [10].

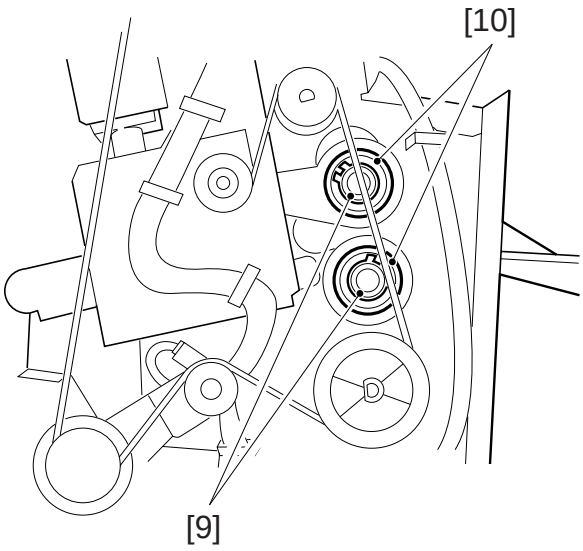

Figure 3-915

8) Remove the three screws [11] to detach the delivery guide [12].

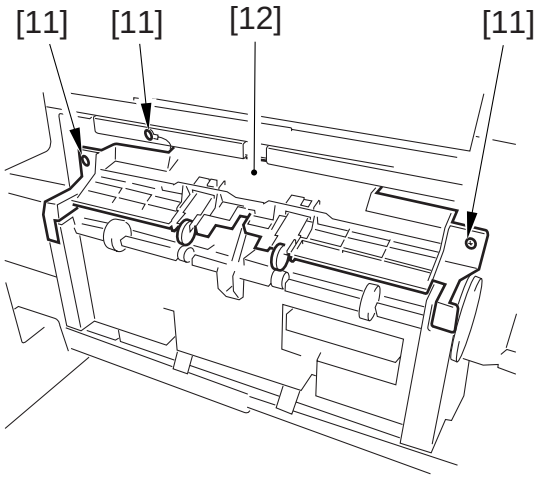

Figure 3-916

9) Remove the stepped screw [13] to detach the front and rear tensioners [14].

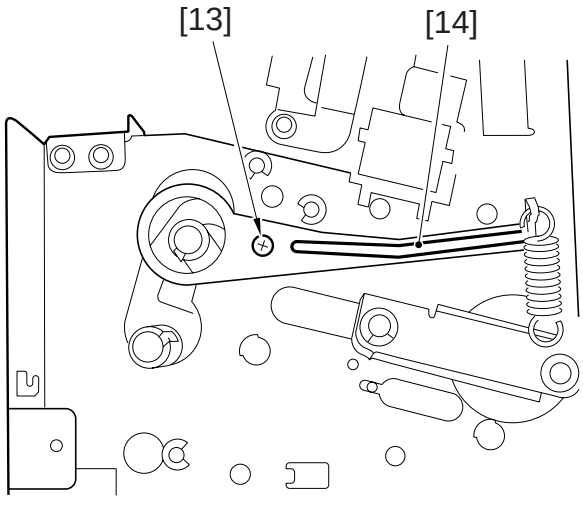

Figure 3-917

COPYRIGHT © 1999 CANON INC.

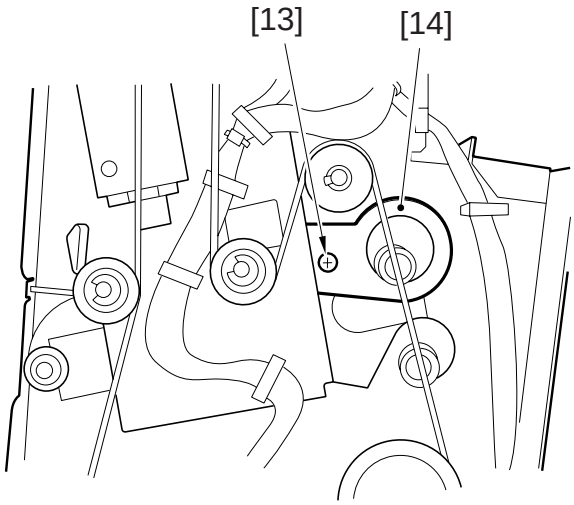

Figure 3-918

10) Detach the two jogging plates [15] (by removing two screws for each plate).

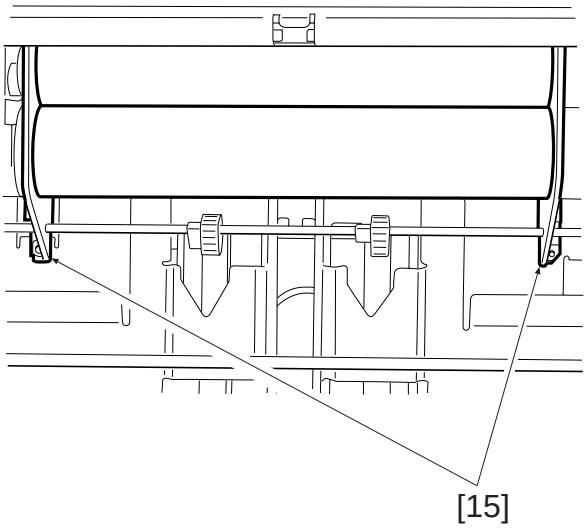

Figure 3-919

11) After sliding the roller [16] to front, pull it out in the delivery direction.

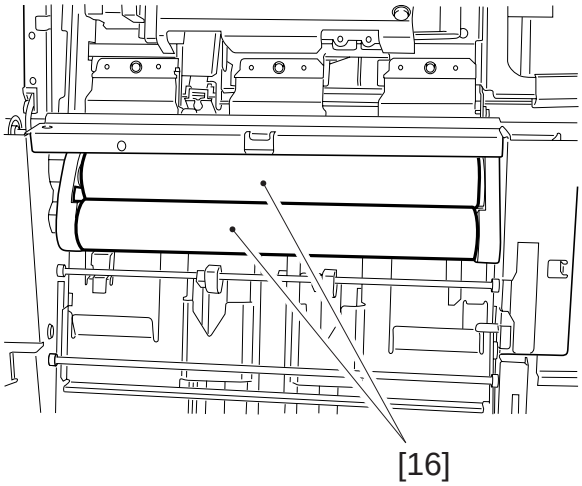

Figure 3-920

COPYRIGHT © 1999 CANON INC.

3. Adjusting the stitcher position

Caution:
Make sure the adjustments are made properly; otherwise, stitching faults may occur.

1) Pull out the stitcher base unit to the front.
2) Remove the three screws [1] to detach the stitcher base unit cover [2].

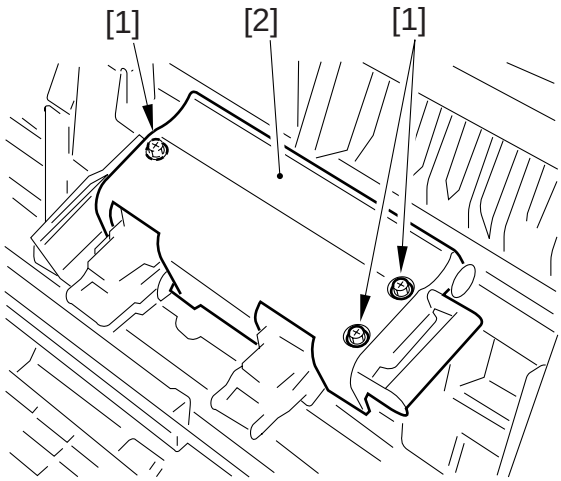

Figure 3-921

3) Remove the positioning tool [3] from the back of the cover.

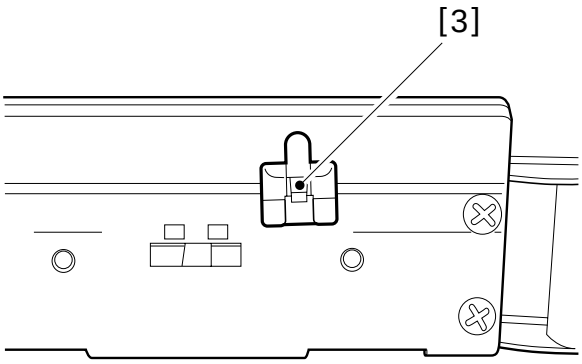

Figure 3-922

4) Detach the middle guide plate [4], and the front guide plate [5] if adjusting the front stitcher, or the rear guide plate [6] if adjusting the rear stitcher (by removing one screw for each plate).

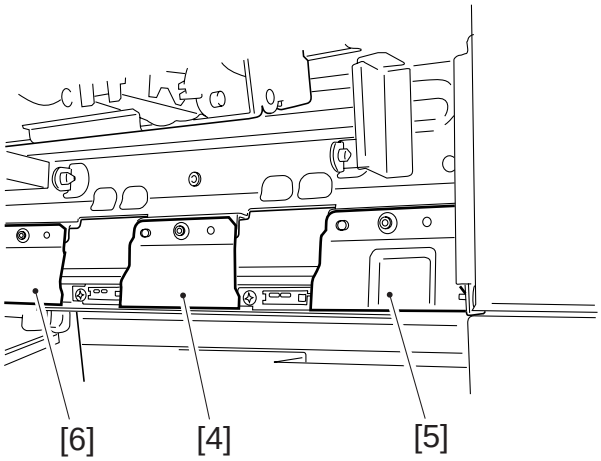

Figure 3-923

COPYRIGHT © 1999 CANON INC.

5) Loosen the two screws [8] in the stitcher pedestal [7].

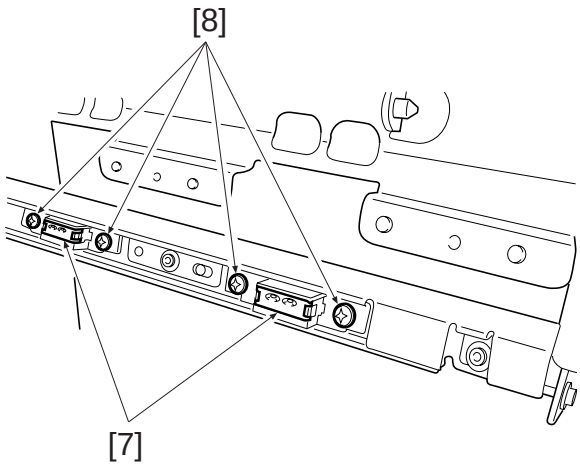

Figure 3-924

6) Drive the tool [10] into the needle port in stitcher [9].

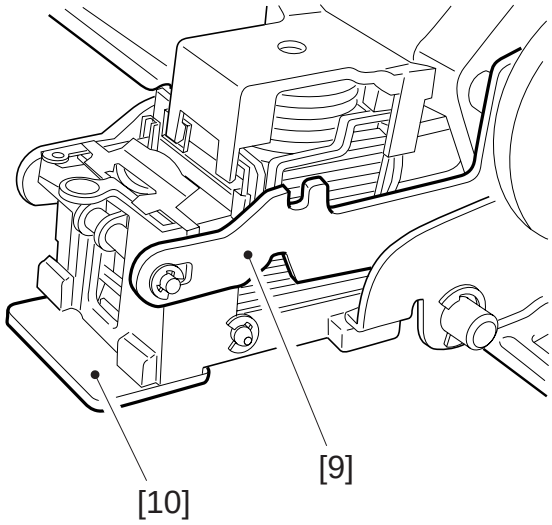

Figure 3-925

7) Set the stitcher base and turn the stitcher gear to let the projection [11] on the tool into the dent in the pedestal; then tighten the screws in the pedestal [12] to secure it.

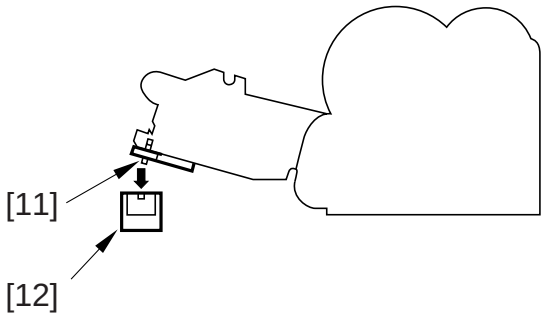

Figure 3-926

COPYRIGHT © 1999 CANON INC.

4. Detaching the Positioning Plate Unit

1) Detach the PCB cover.
2) Detach the saddle stitcher controller PCB (by removing the four screws [1] and disconnecting the 13 connectors [2]).

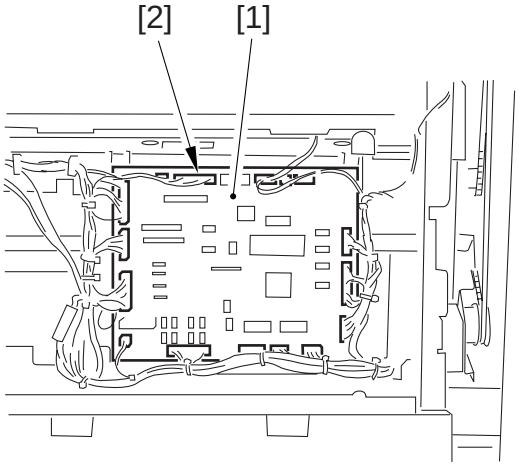

Figure 3-927

3) Disconnect the two connectors [3] (for the motor and paper sensors) and remove the two screws [4].
4) Detach the unit [5] by moving it to left and right.

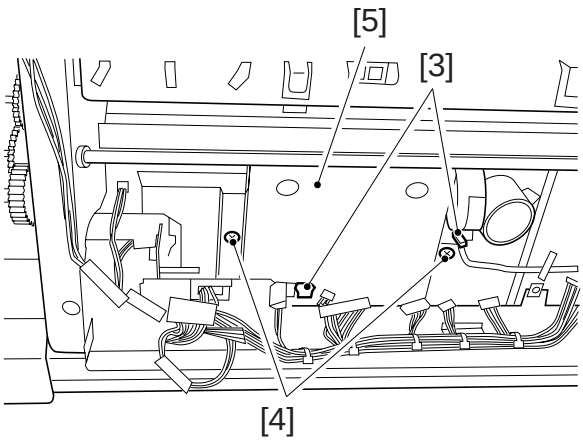

Figure 3-928

5. Detaching the First and Second Deflection Plates

1) Detach the two tension springs [1] to reset the inlet guide plate [2].

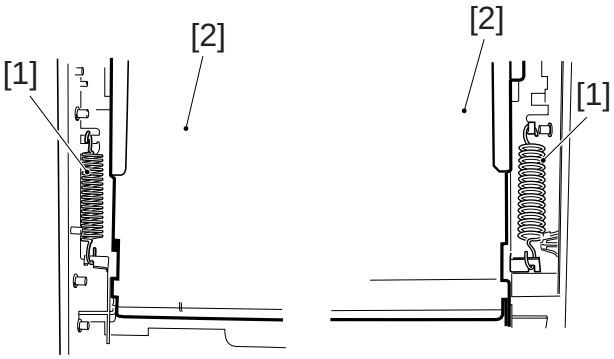

Figure 3-929

COPYRIGHT © 1999 CANON INC.

2) Release the deflection plate shaft bushing claw [3] and pull the deflection plate shaft [4] towards the rear of the machine.

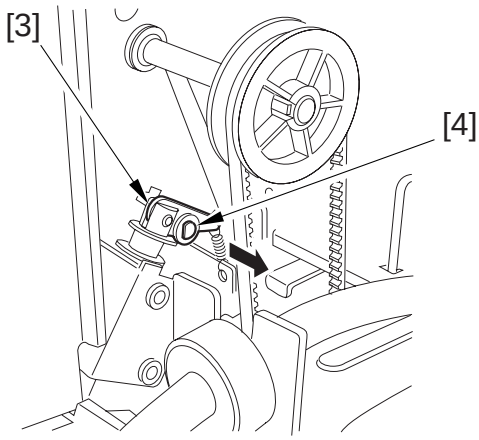

Figure 3-930

3) After removing the front shaft of the paper deflection plate from the front side plate, detach the paper deflection plate [5] in the direction illustrated.

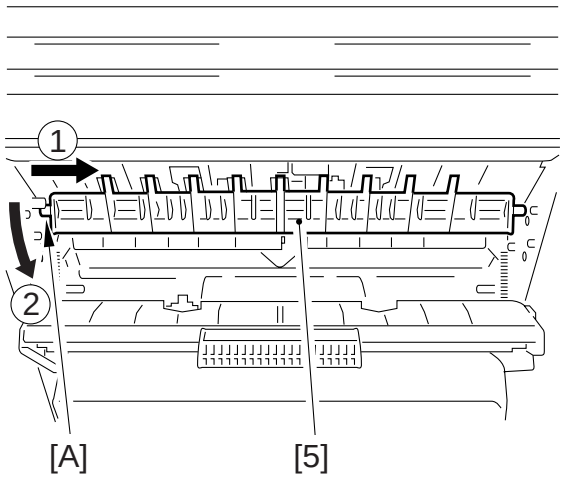

Figure 3-931

COPYRIGHT © 1999 CANON INC.

6. Mounting the Saddle Stitcher

1) Mount the saddle stitcher unit on the lower left rail [1] and lower right rail [2] and fix it with the screw [3].

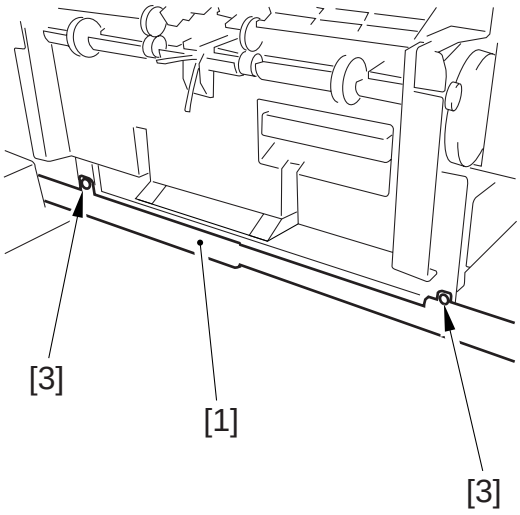

Figure 3-932

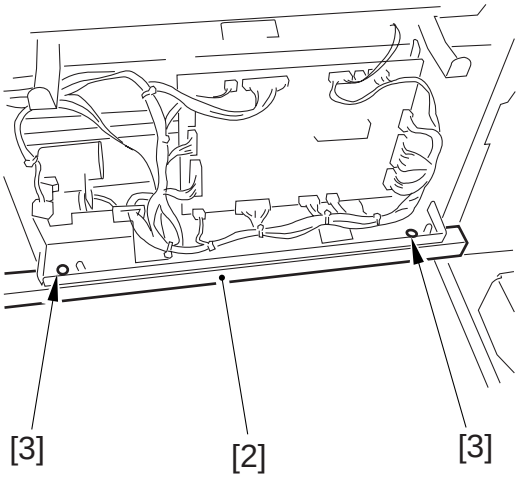

Figure 3-933

COPYRIGHT © 1999 CANON INC.

2) Fix the saddle stitcher unit to the middle left rail [5] with the three screws [4].

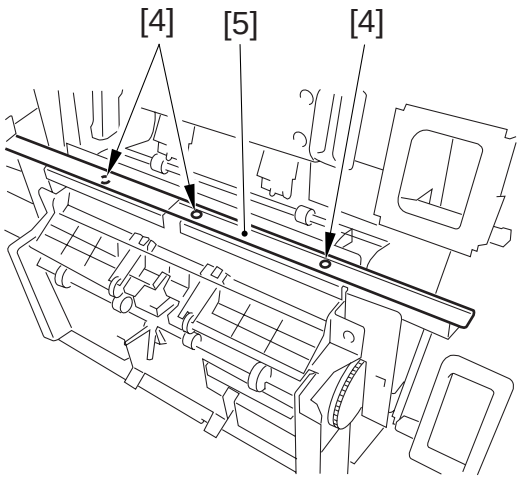

Figure 3-934

3) House the saddle stitcher unit, ensuring that it is in position without being caught elsewhere.
Attach the saddle unit cover [7] using the four screws [6].

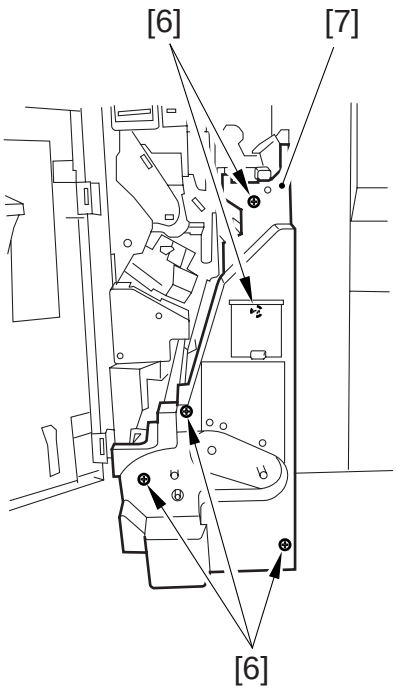

Figure 3-935

4) If the saddle stitcher unit is caught elsewhere while housing it, pull it out and loosen the two screws in the upper left stay.
5) House the unit.
6) Tighten the two screws in the upper left stay.
7) Attach the saddle unit cover.

COPYRIGHT © 1999 CANON INC.

7. Removing the Paper Retaining Plate

1) Remove the four screws, and detach the PCB cover.
2) Remove the six screws, and detach the folding roller knob and the lower front cover.
3) Disconnect the 13 connectors [2], and four screws [3]; then, detach the saddle stitcher controller PCB [1].
4) Free the harness [5] from the cord clamps [4].

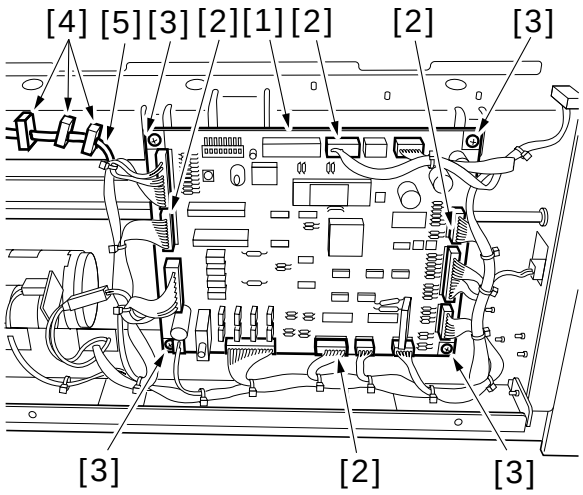

Figure 3-936

5) Force the screws into the two screw holes in the paper retaining plate until they stop. These screws will later serve as a reference when determining the distance L for mounting the paper retaining plate. (Use the screws used to hold the PCB cover.)

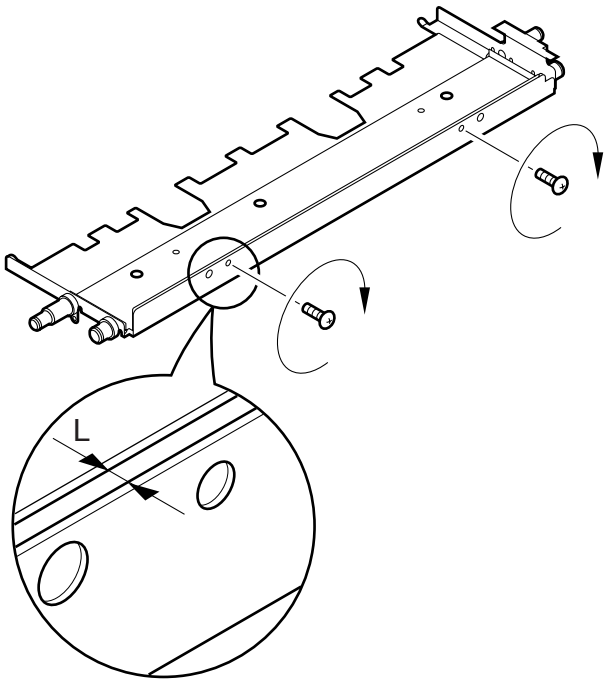

Figure 3-937

COPYRIGHT © 1999 CANON INC.

6) Insert a screwdriver [6] into the three holes [7] in the rail, and remove the three screws; then, detach the paper retaining plate [8] and its fixing plate [9].

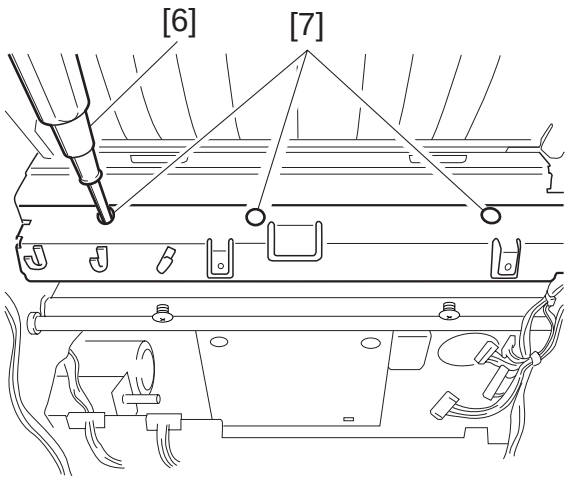

Figure 3-938

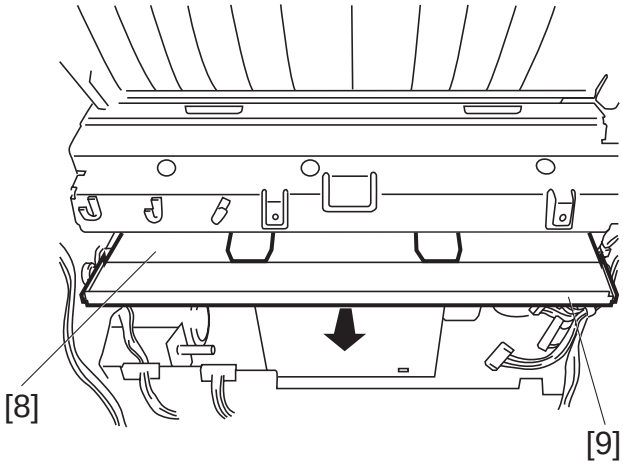

Figure 3-939

8. Adjusting the Position of the Paper Retaining Plate

1) Match the hole [1] in the paper retaining plate [1] with the boss [2] on the paper retaining plate fixing plate. (Pay attention. The paper retaining plate has a face and a back.)

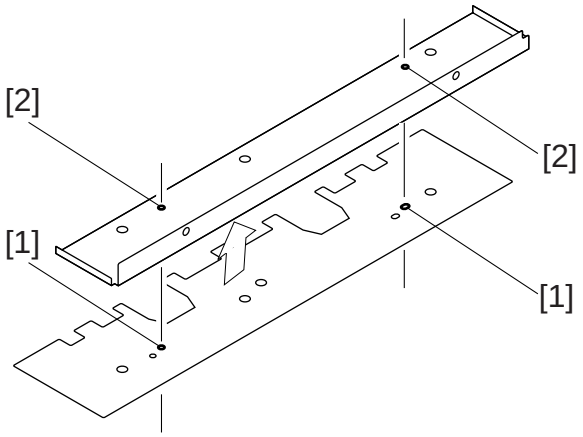

Figure 3-940

2) Insert the paper retaining plate [3] and the paper retaining fixing plate [4] through a gap into the copier, and place them temporarily on the base. (Check to make sure that the boss on the paper retaining plate fixing plate and the hole in the paper retaining plate match.)

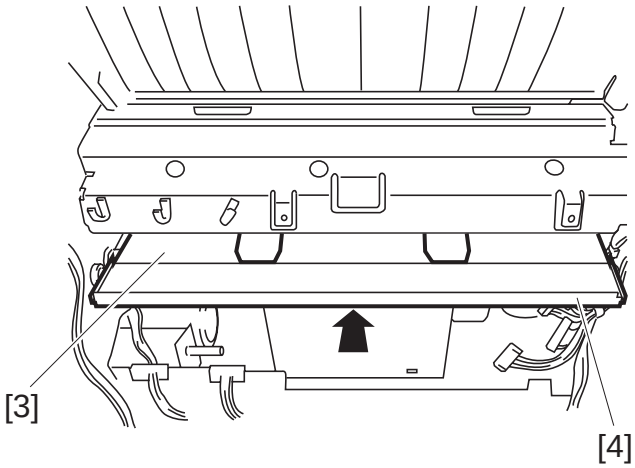

Figure 3-941

3) Butt the paper retaining plate [5] against the two screws fitted previously.

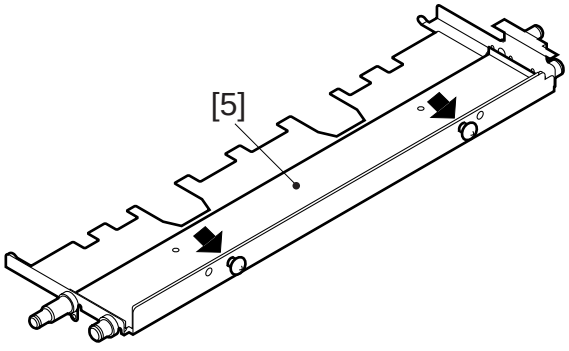

Figure 3-942

COPYRIGHT © 1999 CANON INC.

4) Secure the paper retaining plate in place on the paper retaining plate fixing plate with three screws.
5) Remove the two screws used to serve as a reference.
6) Mount the parts removed for mounting the paper retaining plate.

8.1 Reference

At times, the paper retaining plate and its fixing plate can become separated when they are led through the gap. Study the following to facilitate the work.

8.1.1 Using Double-Sided Adhesive Tape

Keep the paper retaining plate and its fixing plate together by means of double-sided adhesive tape [1]. Then, perform the work starting with step 2) under 8. “Adjusting the Position of the Paper Retaining Plate.”

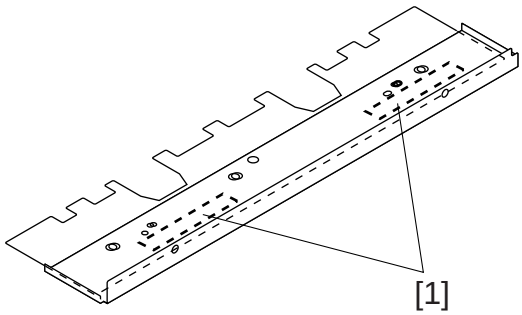

Figure 3-943

8.1.2 Using Adhesive

1) Attach adhesive tape to the border between the paper retaining plate and its fixing plate; then, fold it at a right angle. (Be sure the edge of the folded tape A sticks out the bend of the paper retaining plate as in Figure 3-944.)

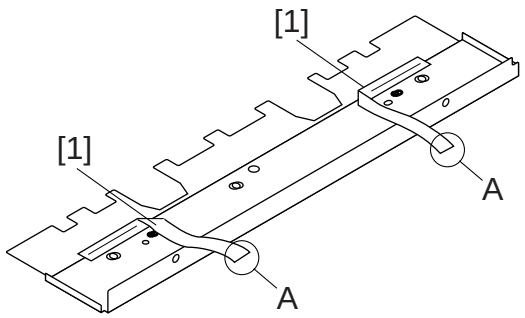

Figure 3-944

2) Perform the work form step 2) to step 5) under 8. “Adjusting the Position of the Paper Retaining Plate.” (At this time, keep the end of the tape A outside the copier.)
3) Pull the end of the tape A out of the copier. Be sure not to leave the tape inside the copier.
4) Mount the external covers.

8.1.3 Using Adhesive

Glue the paper retaining plate and its fixing plate together. Then, perform the work staritng with step 2) under 8. “Adjusting the Position of the Paper Retaining Plate.”

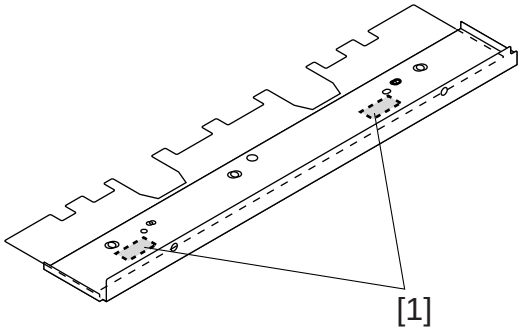

Figure 3-945

COPYRIGHT © 1999 CANON INC.

III . PAPER FOLDING UNIT A1 (FOLDER)

A. External Covers

When cleaning, inspecting or servicing the interior of the machine, detach the appropriate covers by following the procedures described below.

Procedures for detaching covers that can be easily and independently detached by removing the relevant mounting screws are omitted.

[1] Lower right cover (2)
[2] Front cover (3)
[3] Rear cover (2)
[4] Lower left cover (2)

The values in parentheses indicate the number of mounting screws involved.

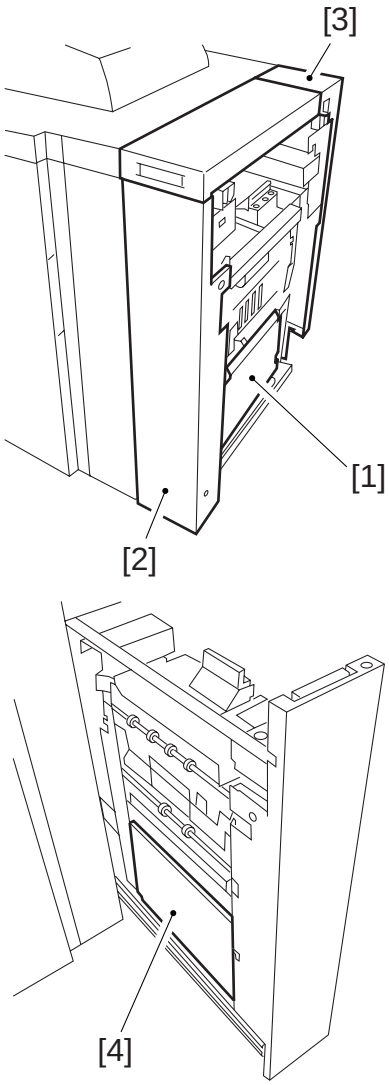

Figure 3-1001

B. Paper folding unit

1. Releasing the Folder from the Copier

1) Detach the rear cover.
2) Pull out the folder.
3) Remove the screw [1] to release the hook (rear) [2].

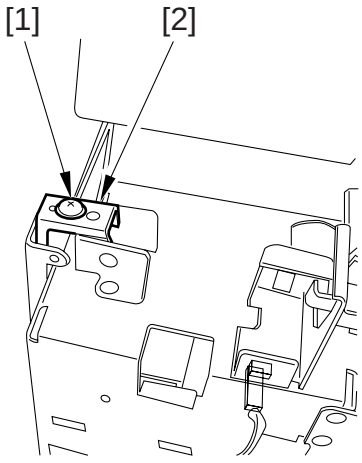

Figure 3-1002

4) Remove the two screws [3] to detach the magnet catch plate [4] and then detach the latch clamping plate [6] by removing the screw [5].

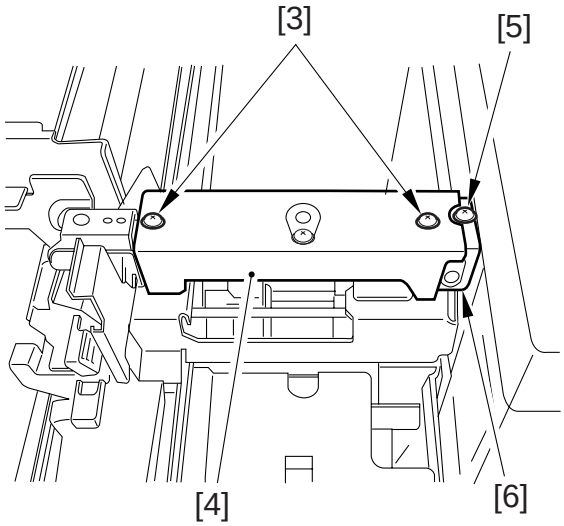

Figure 3-1003

5) Release the hook (front) [7].
6) Release the folder from the copier.

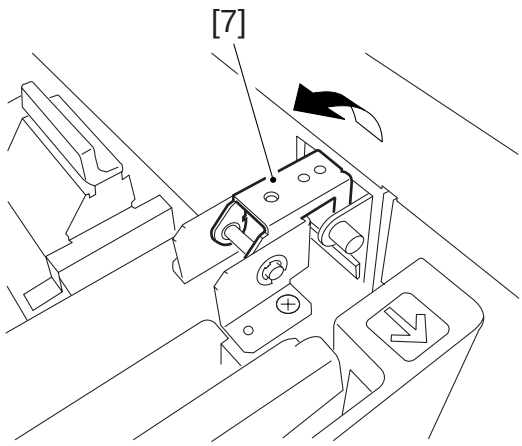

Figure 3-1004

2. Detaching the Paper Folding Unit (upper)

1) Release the folder from the copier.
2) Disconnect the three connectors [1] linked to the finisher unit and release the harness from the holders [2].

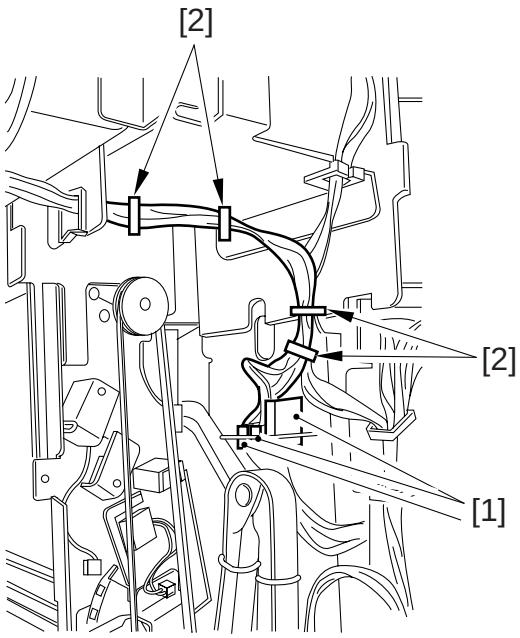

Figure 3-1005

COPYRIGHT © 1999 CANON INC.

4) Remove the four screws [4] which secure the aculide rail [3] in position.

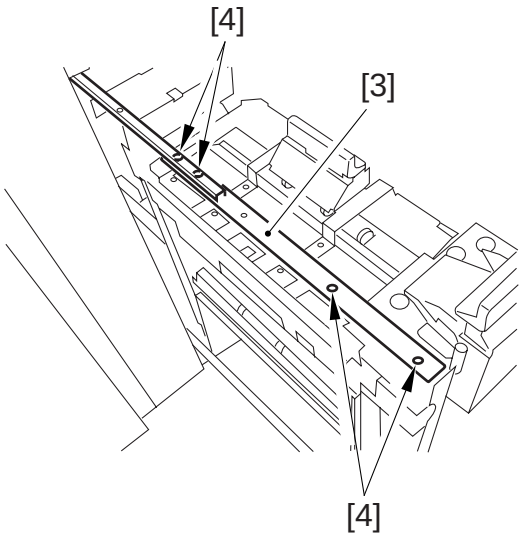

Figure 3-1006

5) Remove the six screws [5].

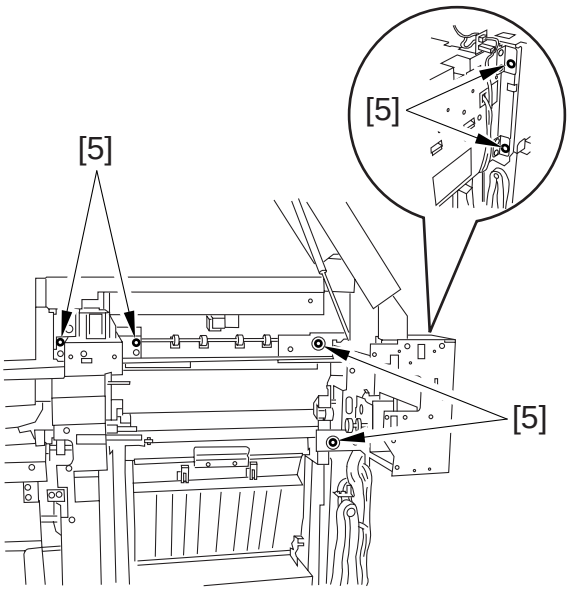

Figure 3-1007

6) Release the hook (front) [6] and hook (rear) [7] by removing one screw [8] for each hook.

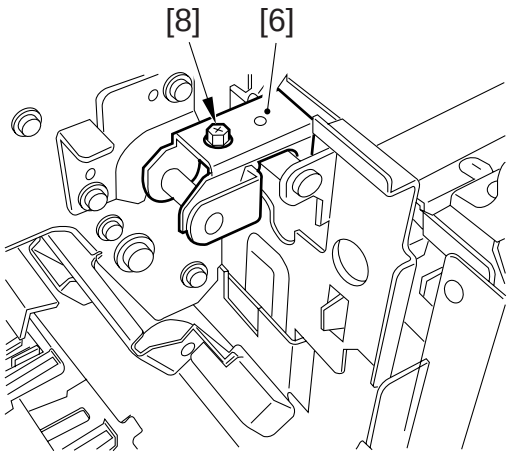

Figure 3-1008

COPYRIGHT © 1999 CANON INC.

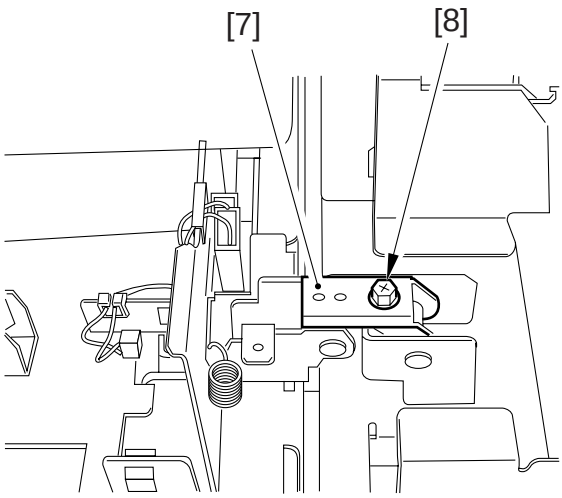

Figure 3-1009

7) Detach the paper folding unit (upper) [9].

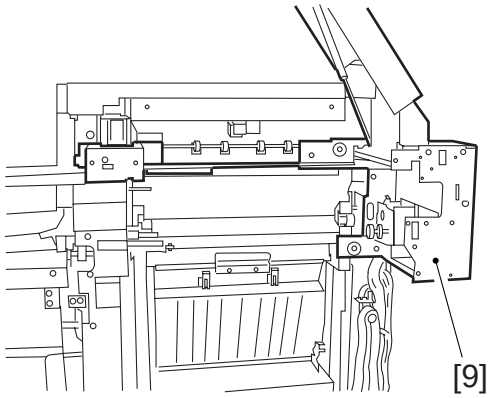

Figure 3-1010

Caution

In performing steps 5) and 6), hold the paper folding unit (upper) firmly in position. When mounting the paper folding unit (upper), make sure to insert the positioning pin [1] in the mating hole.

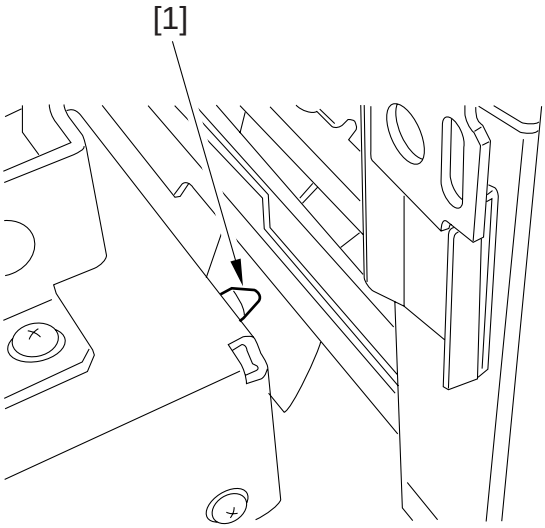

Figure 3-1011

COPYRIGHT © 1999 CANON INC.

C. Transport Mechanism

1. Adjusting the Folding Stopper positions

If the folding position is found not to meet specifications after a paper passage check, adjust the corresponding folding stopper positions.

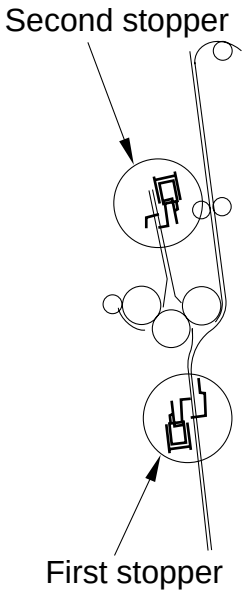

Figure 3-1012

a. Stopper 1

1) Pull out the folder unit and detach the front cover.
2) Remove the two screws [1] to detach the lower right cover [2]. (B size)

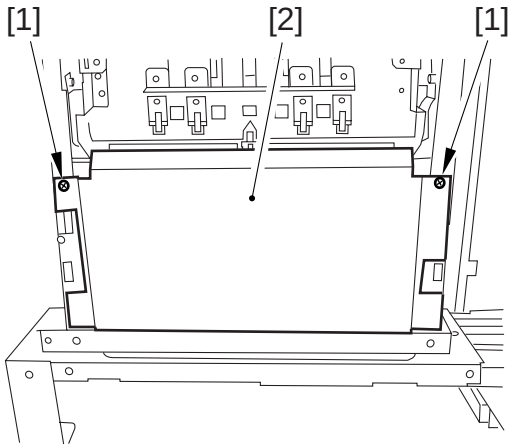

Figure 3-1013

3) Remove the two screws [3] to detach the lower left cover [4]. (A/INCH size)

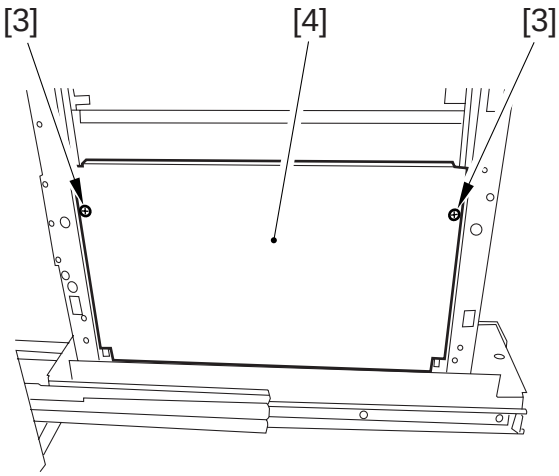

Figure 3-1014

COPYRIGHT © 1999 CANON INC.

4) Adjust the mounting position of the stopper [5] by loosening the two adjusting bolts [6].

For A3/279 mm × 432 mm (11 × 17) size

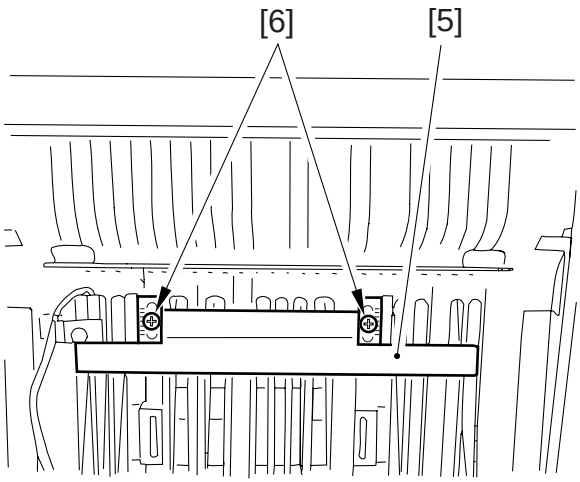

For B4 size

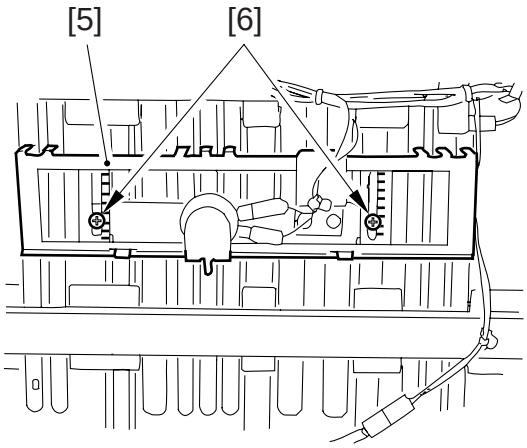

Figure 3-1015

COPYRIGHT © 1999 CANON INC.

b. Stopper 2

1) Pull out the folder unit and open the left guide.
2) Adjust the mounting position of the stopper [6] by loosening the two adjusting bolts [7].

A3/279 mm × 432 mm (11 × 17) size use

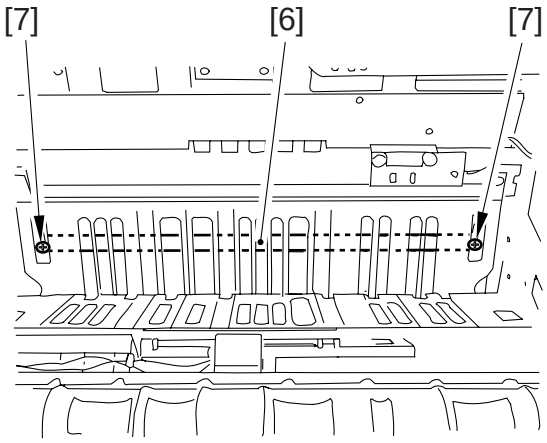

B4 size use

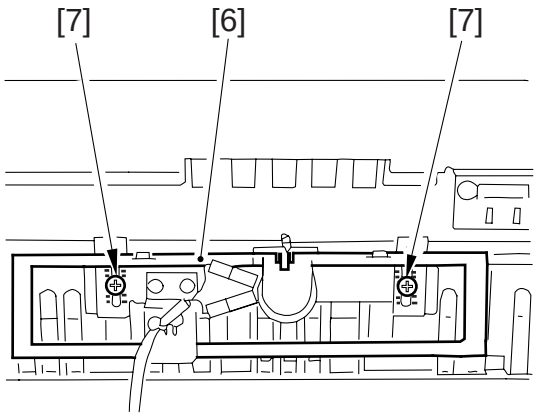

Figure 3-1016

2. Adjusting the Inlet Guide

1) Detach the front cover.
2) Loosen and adjust the adjusting screw [1] to keep the top of the lower guide plate (not the rib apex) of the inlet guide at a height of 4 ± 1 mm above.
3) Loosen and adjust the adjusting screw [3] to keep the inlet guide at a height of 4 ± 1 mm above the upper guide plate when the inlet solenoid (SL5) [2] is turned on.

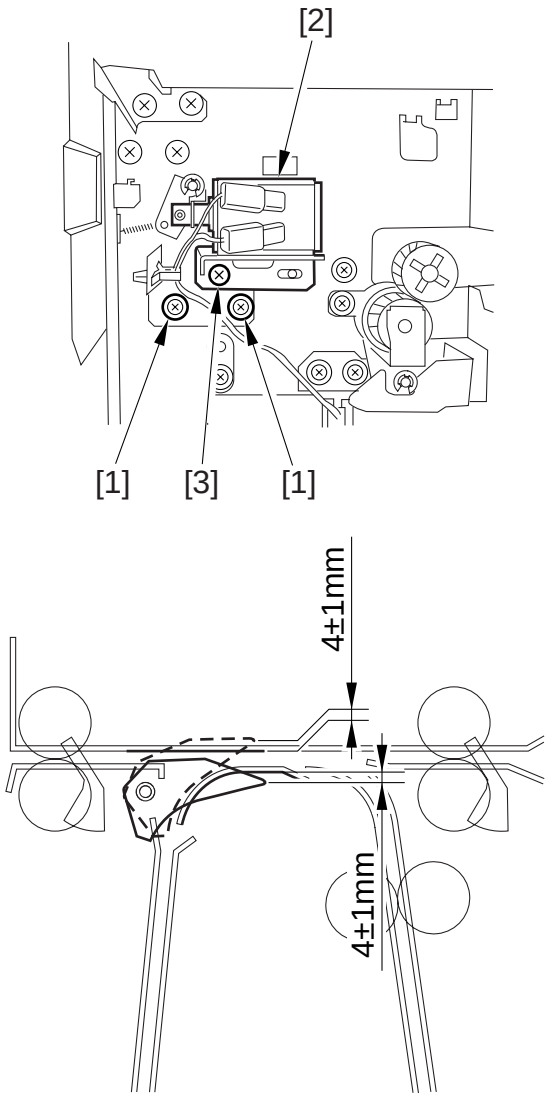

Figure 3-1017

COPYRIGHT © 1999 CANON INC.

3. Adjusting the Folding Roller Pressure

1) Detach the front and rear covers.
2) Remove the four screws [1] and then detach the inside cover (front) [2].

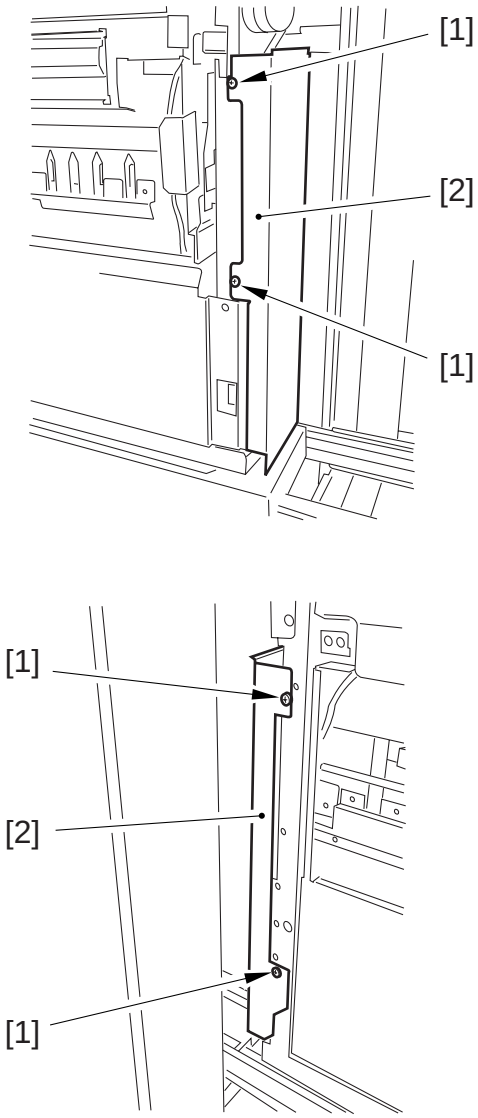

Figure 3-1018

3) Remove the four screws [3] and then detach the inside cover (rear) [4].

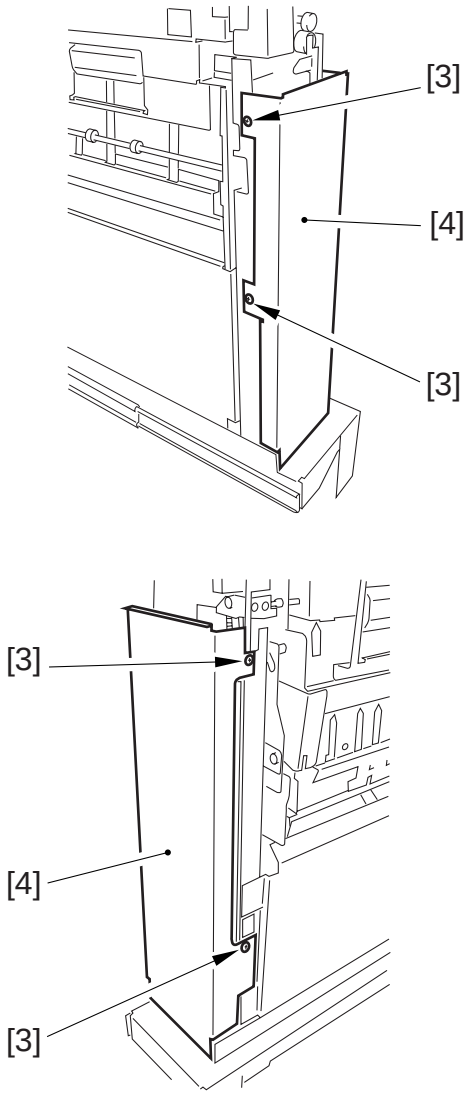

Figure 3-1019

COPYRIGHT © 1999 CANON INC.

4) Loosen the clamping nut [5] and adjust the adjusting screw [7] so that the pressure spring becomes [6] 17.5 ± 0.3 mm (100V) or 16.5 ± 0.3 mm (150/230V) long [A].

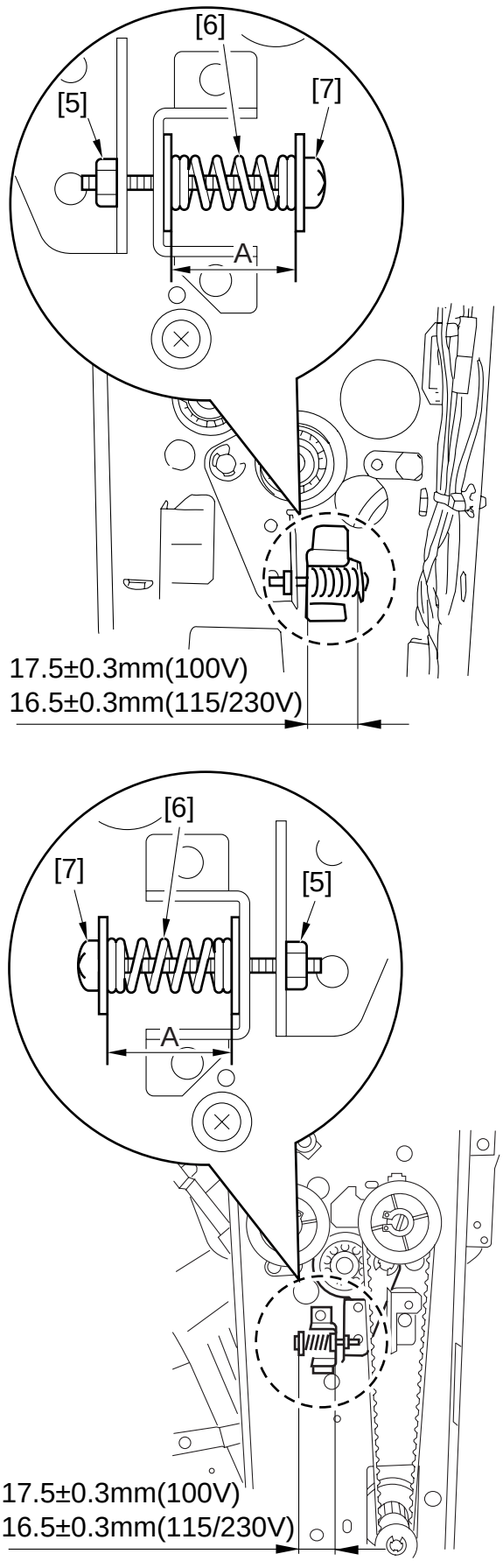

Figure 3-1020

COPYRIGHT © 1999 CANON INC.

4. Adjusting the First Folding Path Guide

1) Detach the front and rear covers.
2) Detach the belt covers (front) and (rear) by removing four screws for each of them.
3) Remove the folder driver PCB.
4) Clamp the two front and two rear adjusting screws [1] finger-tight.

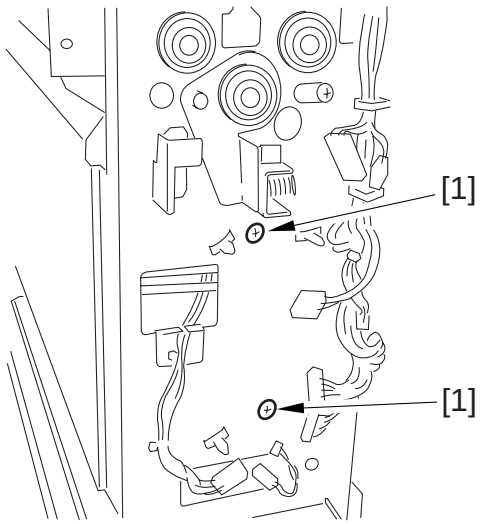

Figure 3-1021

5) Adjust the four adjusting screws for a clearance of 1.6 ± 0.3 mm between the top of the lower left guide [2] and folding roller A [3] and between the bottom of the lower left guide and left guide [4].

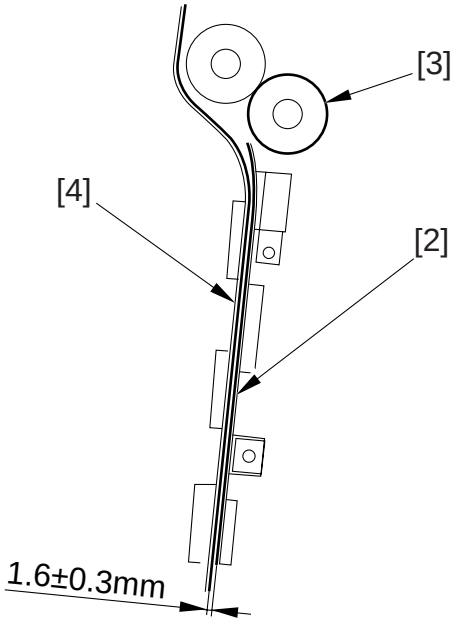

Figure 3-1022

5. Adjusting the Mounting Position of the Left Guide Discharge Needle

1) Open the top cover and pull out the folder unit.
2) Detach the lower right cover and open the left guide.
3) Loosen and adjust the two adjusting screws for a protrusion of 1 ± 0.3 mm of the discharge needle [1] from the guide surface (not the rib apex) of the left guide.

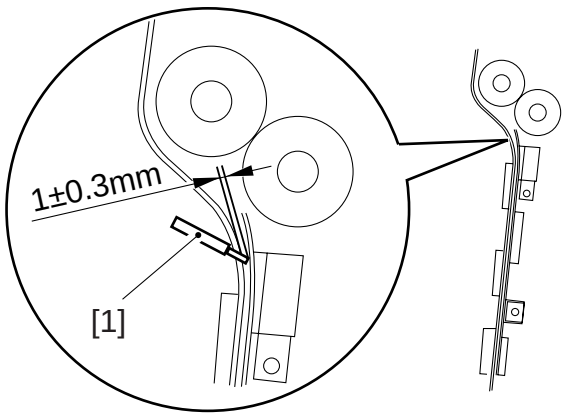

Figure 3-1023

COPYRIGHT © 1999 CANON INC.

D. Drives

1. Detaching the Folder Motor (M14)

1) Open the top cover and detach the rear cover.
2) Detach the lower right cover.
3) Remove the four screws and detach the inside cover (front).
4) Remove the three screws [1] and detach the drive belt [2] from the gear [3].

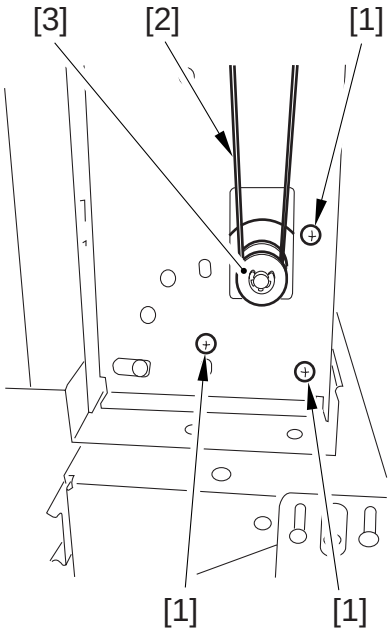

Figure 3-1024

5) Disconnect the connector [4] and detach the folder motor [5].

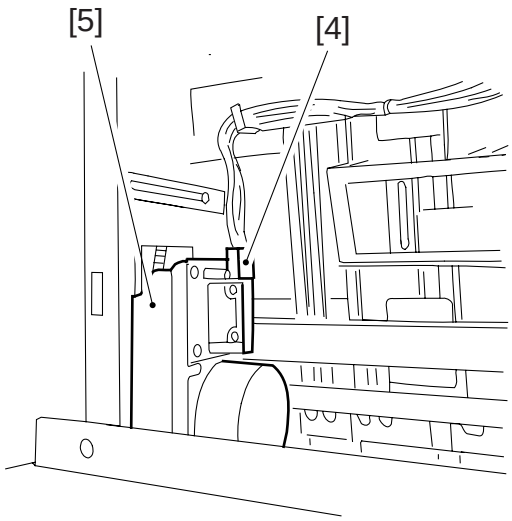

Figure 3-1025

COPYRIGHT © 1999 CANON INC.

2. Positioning the Horizontal Path Drive Coupling

1) Release the folder from the copier.
2) Loosen the two screws [1].
3) Insert and remove the folder unit [2] two to three times to set the horizontal path drive coupling [3] in position.

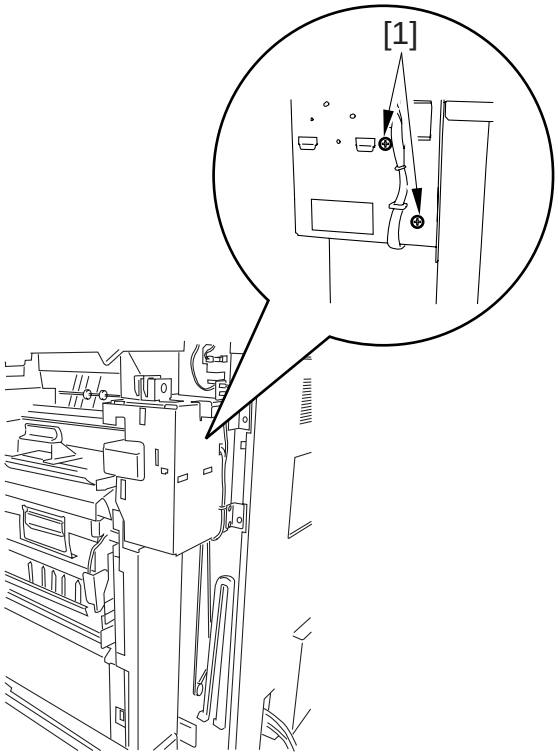

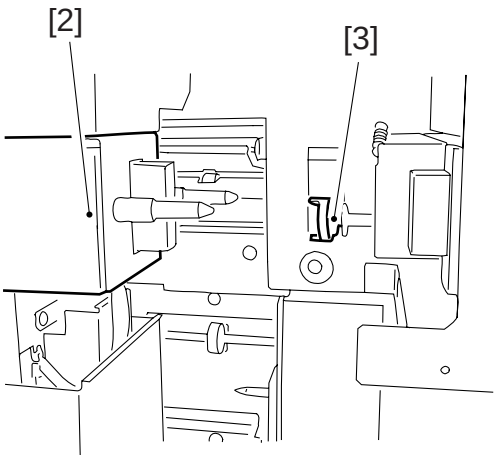

Figure 3-1026

4) Push the folder unit into position and tighten the two screws loosened in step 2).

COPYRIGHT © 1999 CANON INC.

3. Adjusting the Transfer Belt Tension

a. Transfer Belt A

Fix the screw [1] for a flange-to-flange distance of 5 ± 1 mm.

b. Transfer Belt B

Fix the screw [3] for a deflection of 10 mm in transfer belt B [2] when it is pressed under 500 ± 100 g with a tension gauge.

c. Transfer Belt C

Fix the screw [5] for a deflection of 10 mm of the transfer belt C [4] when it is pressed under 500 ± 100 g with a tension gauge.

d. Transfer Belt D

Fix the screw [7] for a deflection of 10 mm of the transfer belt D [6] when it is pressed under 500 ± 100 g with a tension gauge.

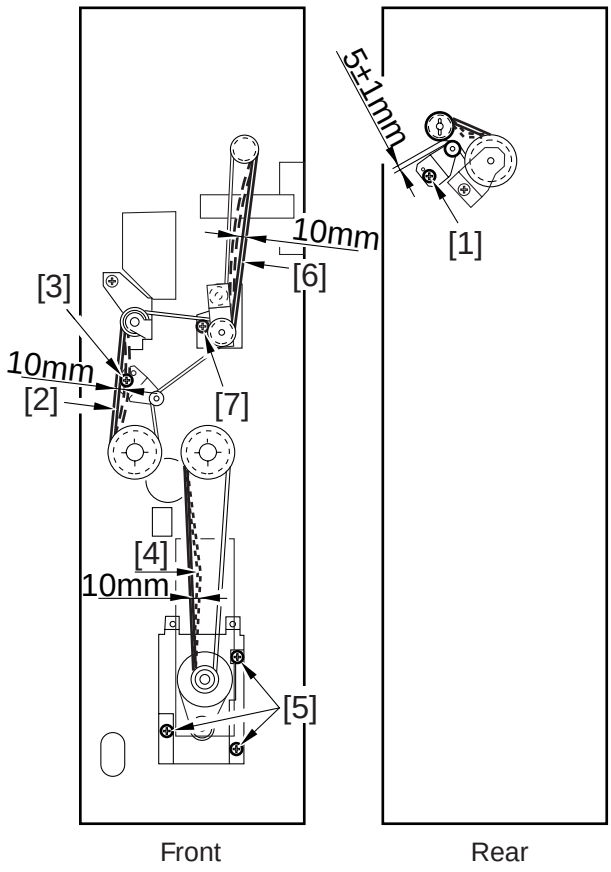

Figure 3-1027

4. Adjusting the Position of the Releasing Solenoid (SL7)

1) Pull out the folder unit and open the left guide.
2) Detach the cover [1] (two screws).

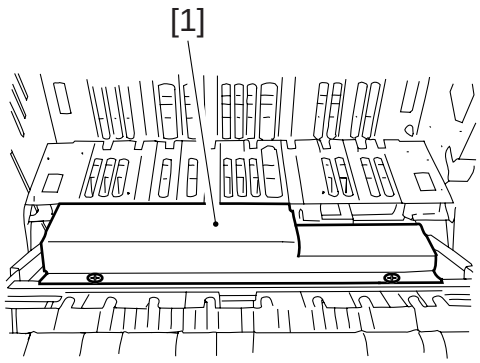

Figure 3-1028

3) Release the arms (front and rear) [2] from the left guide (one stepped screw each).

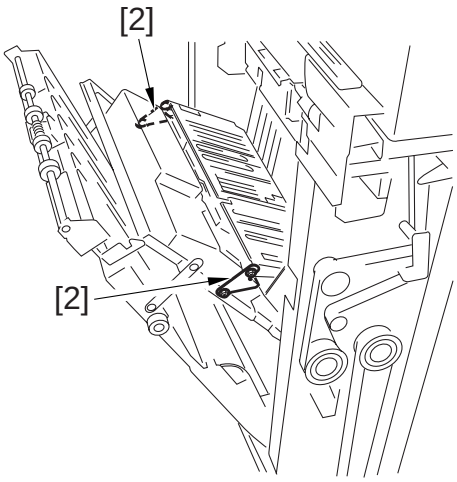

Figure 3-1029

4) Loosen the two adjusting screws [4] and adjust the position of the releasing solenoid (SL4) [3] for an A-value of 2 ± 0.3 mm when the solenoid is turned on.

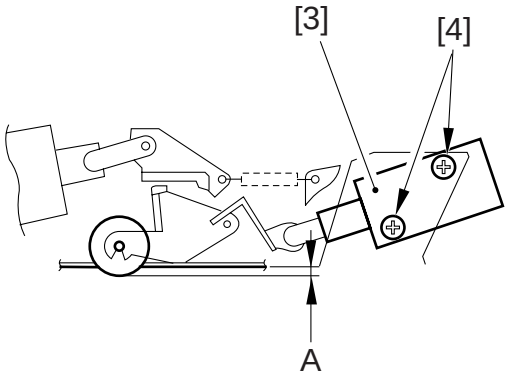

Figure 3-1030

COPYRIGHT © 1999 CANON INC.

5. Adjusting the Position of the Pressure Solenoid (SL8)

1) Pull out the folder unit and open the left guide.
2) Detach the cover [1] (two screws).

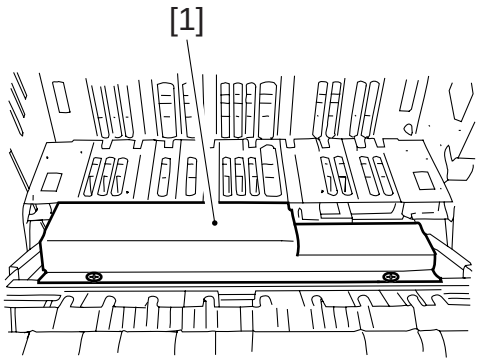

Figure 3-1031

3) Release the arms (front and rear) [2] from the left guide (one stepped screw each).

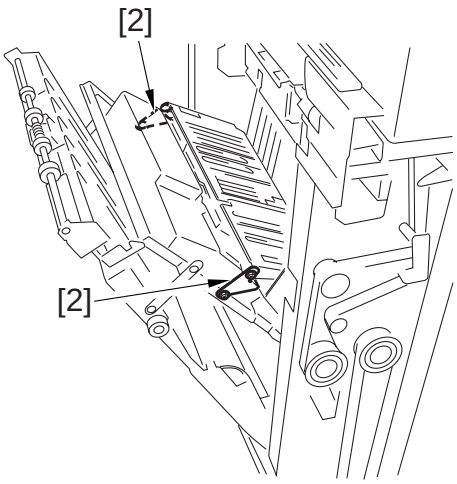

Figure 3-1032

4) Loosen the two adjusting screws [6] and adjust the position of the pressure solenoid (SL8) [5] so the pressure roller arm [3] and pressure spring [4] will come into contact with each other when the solenoid is turned on.

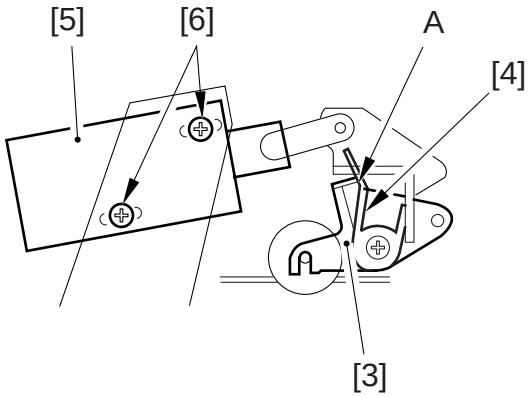

Figure 3-1033

COPYRIGHT © 1999 CANON INC.

E. Removing the Folder Driver PCB

1) Detach the rear cover.
2) Pull out the folder unit.
3) Remove four screws and detach the belt cover (rear).
4) Remove the screw [1] and disconnect the grounding wire [2].
5) After disconnecting all the connectors from the board, release the folder driver PCB [4] from the six locking supports [3].

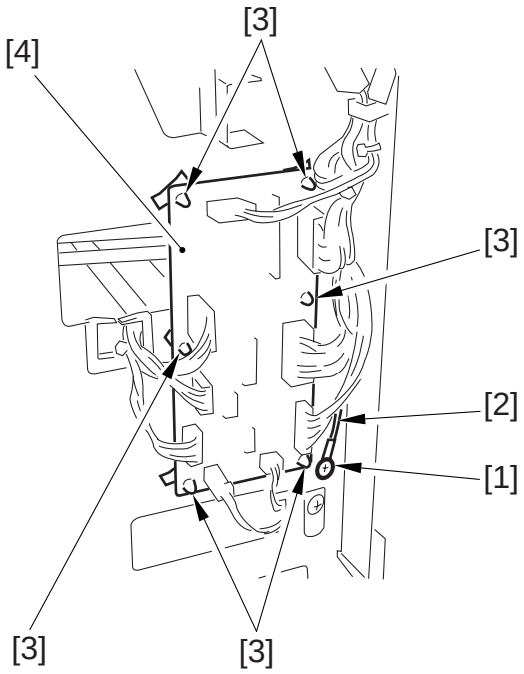

Figure 3-1034

COPYRIGHT © 1999 CANON INC.

IV . INSERTER

A. External Controls

1. External covers

When cleaning, inspecting or servicing the interior of the machine, detach the appropriate covers by following the procedures described below.

Procedures for detaching covers that can be easily and independently detached by removing the relevant mounting screws are omitted.

[1] Front cover (4)
[2] Rear cover (3)
[3] Paper feed tray (2)
[4] Upper cover (2)

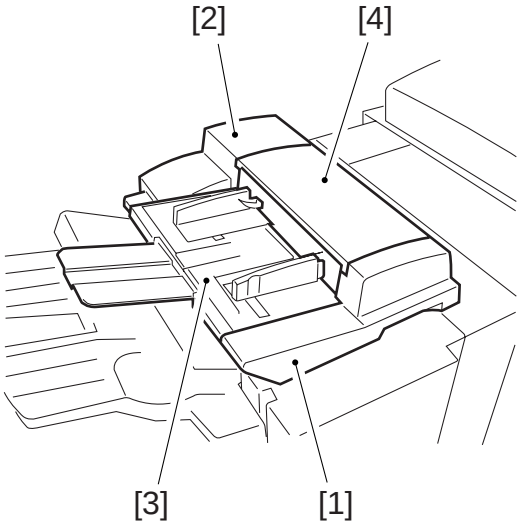

Figure 3-1101

2. Detaching the Inserter

1) Close the inserter and detach the rear cover.
2) Loosen the inserter hinge screw [1].

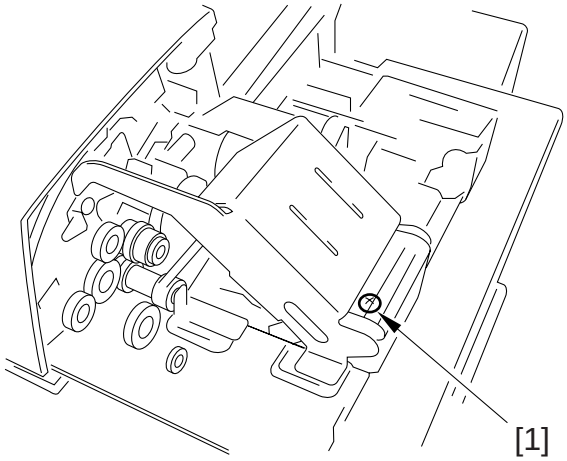

Figure 3-1102

3) Disconnect the interface cable connector [2] from the inserter driver PCB.
4) Remove the cable fixing mount screw [3].

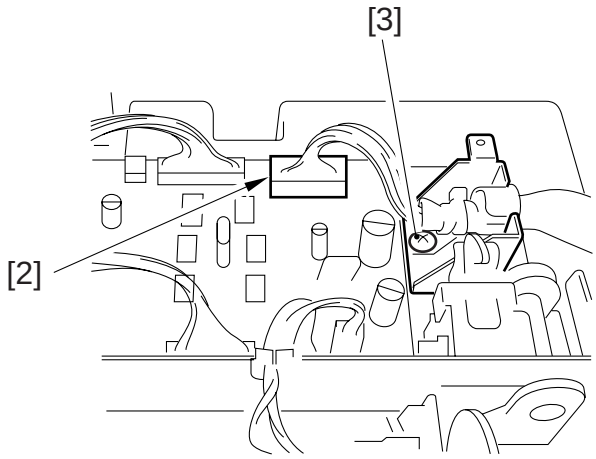

Figure 3-1103

COPYRIGHT © 1999 CANON INC.

5) Open the inserter and remove the two inserter hinge screws [4].

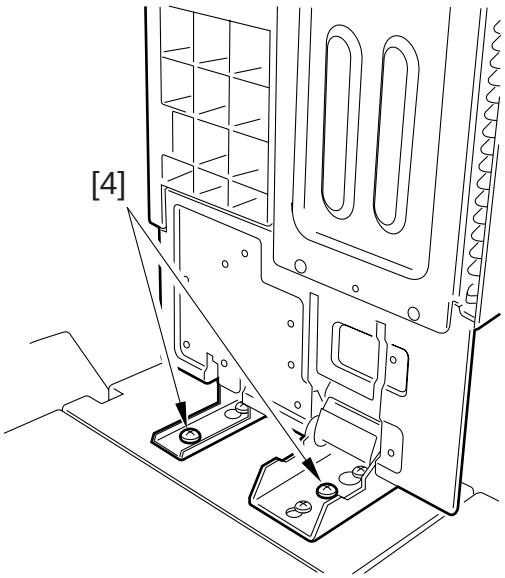

Figure 3-1104

6) Detach the inserter unit [5] by sliding it rearward.

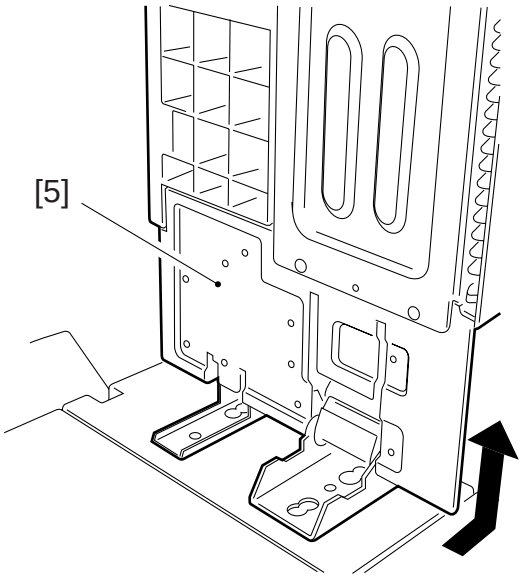

Figure 3-1105

COPYRIGHT © 1999 CANON INC.

3. Mounting the insertion unit

1) Fit the screw [1] (M5 x 8, silver-colored) into the insertion unit mount screw hole. Once it is fully screwed in, loosen it two and a half turns. This is to allow the insertion unit hinge to be fitted in the next step.

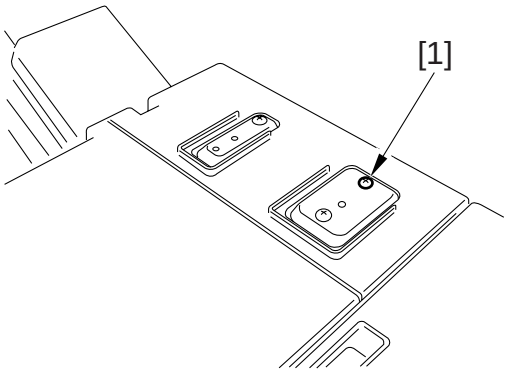

Figure 3-1106

2) Mount the insertion unit [1] onto the insertion unit mount. Put the three screws from the insertion unit mount into the keyhole shaped hole in the insertion unit hinge.

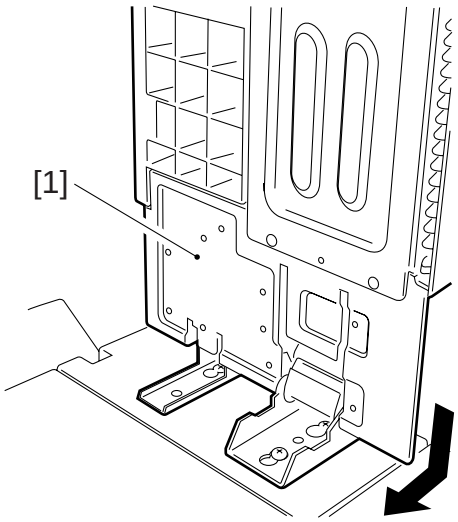

Figure 3-1107

3) Screw the two screws [1] (M5 x 8, silver-colored) into the insertion unit hinge. At this point, provisionally tighten the screws.

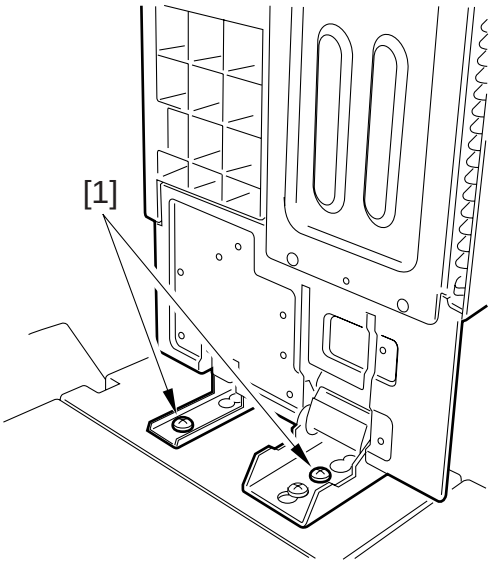

Figure 3-1108

COPYRIGHT © 1999 CANON INC.

4) Close the insertion unit. Line up the pin [1] at the front of the insertion unit base with the hole in the finisher right upper cover [2].

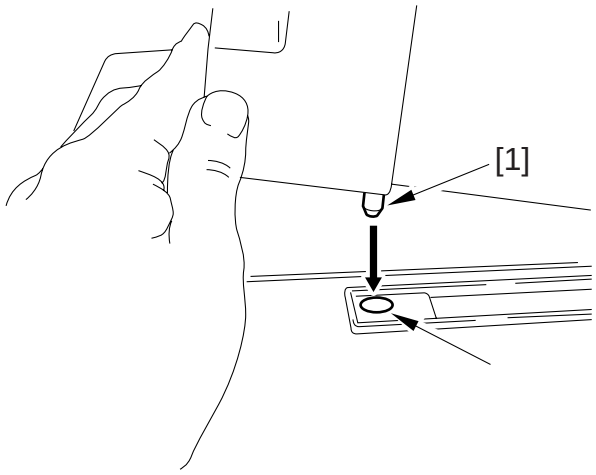

Figure 3-1109

5) Tighten the insertion unit right hinge rear screw [1]. The front part of the insertion unit should be held down while doing this.

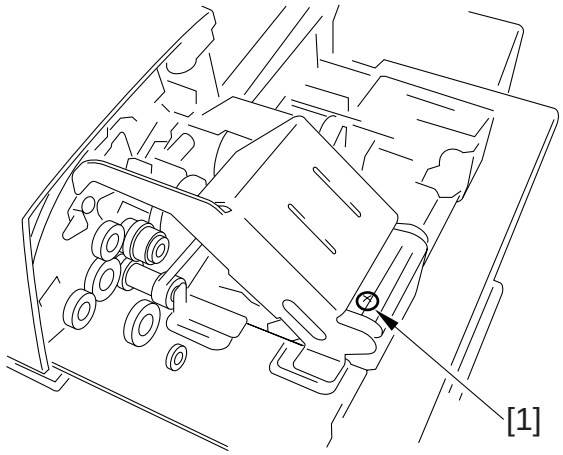

Figure 3-1110

6) Open the insertion unit and tighten the two insertion unit hinge screws [1].

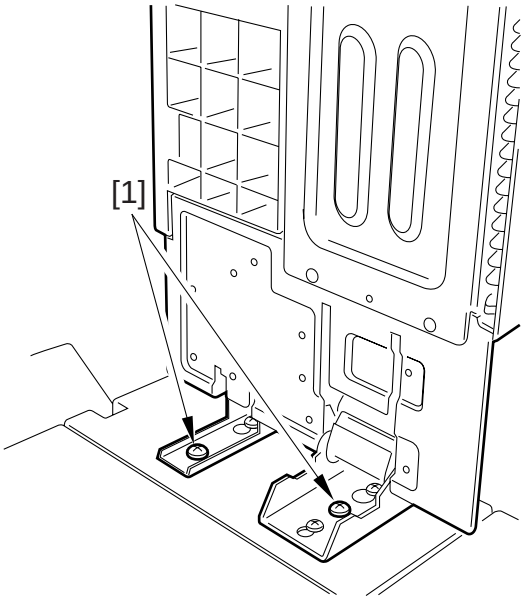

Figure 3-1111

COPYRIGHT © 1999 CANON INC.

7) Insert the I/F cable connector [1] into the insertion unit driver PCB.
8) Fix the cable mount [2] to the insertion unit base plate (one screw M4 x 6, black).

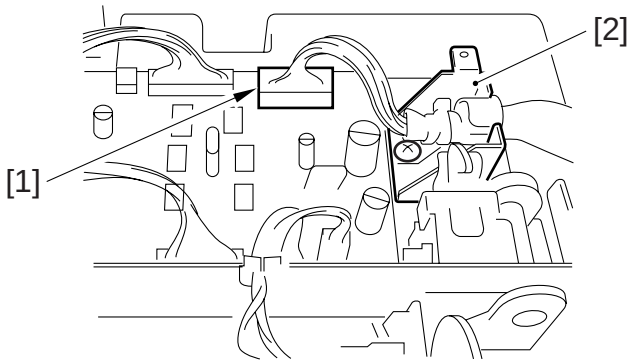

Figure 3-1112

9) Attach the insertion unit rear cover (three screws).

4. Adjusting the screw

1) Make one punched sheet fed from an inserter available.
2) Fold the sheet in half so that the punched holes are aligned with each other.
3) Check for misalignment between the two halves. Adjust so that the misalignment is no more than 2.5 to 3 mm.

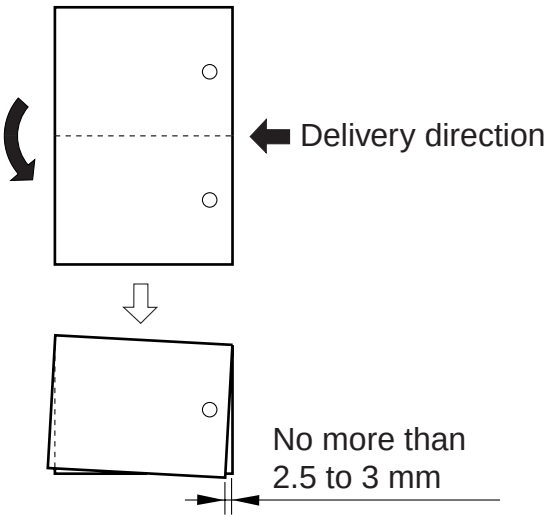

Figure 3-1113

4) Detach the inserter front cover. (four screws)
5) Detach the adjuster units (right) [1] and (left) [2] by removing the two screws [3] for each unit.

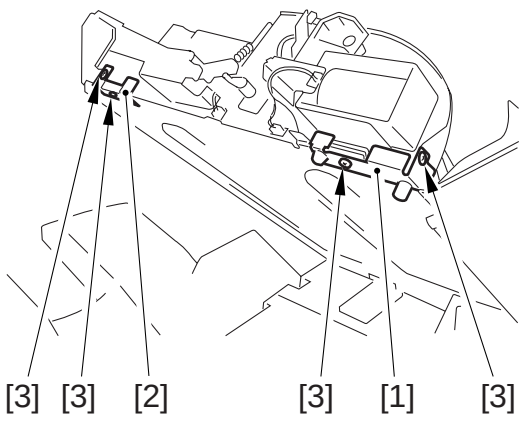

Figure 3-1114

COPYRIGHT © 1999 CANON INC.

6) Adjust the number of spacers placed between the bottom plate of the adjuster unit (right) and the inserter front side plate as shown on the right.

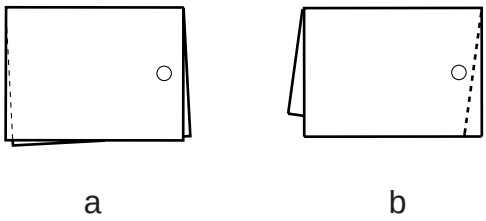

a. Insert fewer spacers.
b. Insert more spacers.

Figure 3-1115

7) Verify the hole positions by repeating steps 1) to 3). If NG, perform step 6). If OK, proceed to the next steps.
8) Attach the adjuster unit (left) on the inserter front side. Insert two less spacers than the spacers placed in the adjuster unit (right).
9) Attach the inserter front cover.

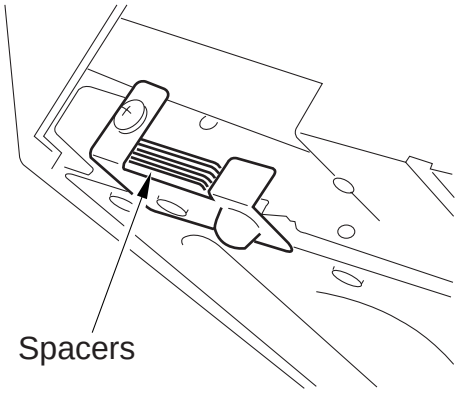

Figure 3-1116

COPYRIGHT © 1999 CANON INC.

B. Pick-Up Unit

1. Detaching the Pick-Up Unit

1) Detach the rear cover.
2) Remove the screw [1] and detach the paper feed motor clock sensor support plate [2].

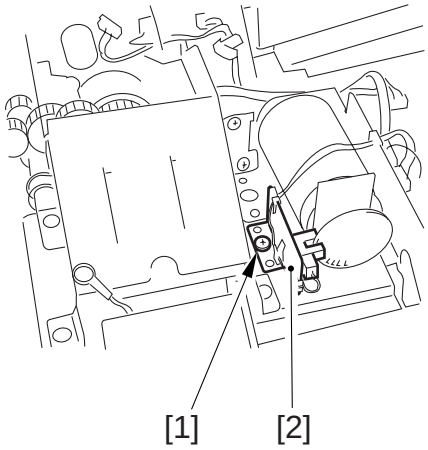

Figure 3-1117

3) Remove the two screws [3] and the connector [4] and detach the pick-up motor unit [5].

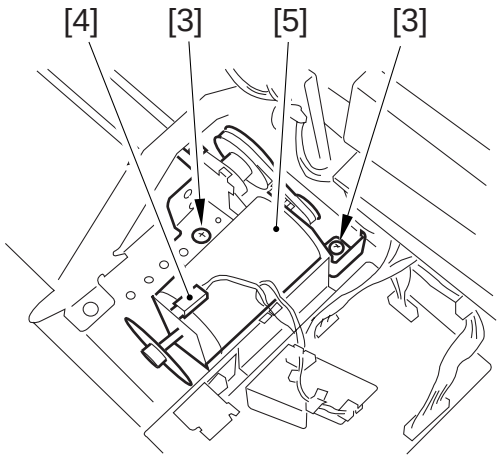

Figure 3-1118

4) Remove the screw [6] to detach the belt pulley unit [7].

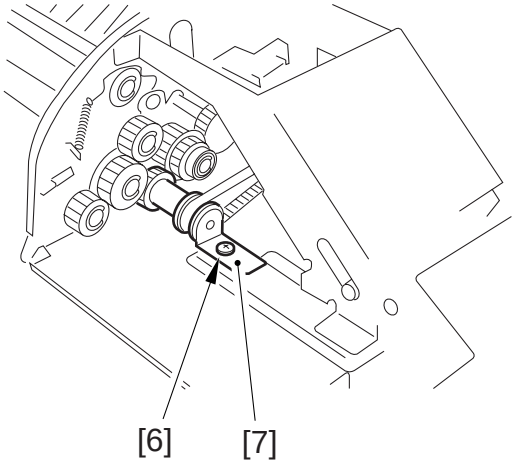

Figure 3-1119

COPYRIGHT © 1999 CANON INC.

5) Loosen the screw [8] and slide the gear support plate [9] to the left, and then remove the E-ring [10], the spacer (small) [11], and the spacer (large) [12], and detach the separation clutch [14].

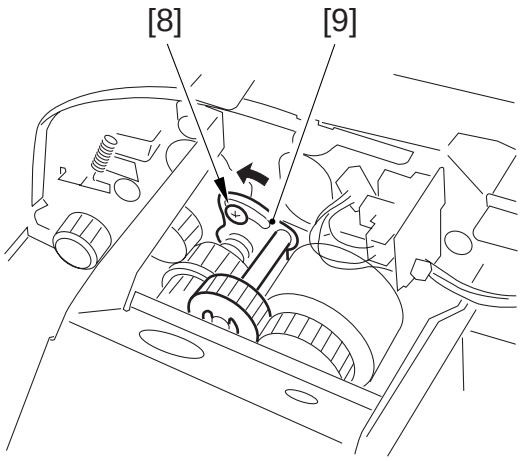

Figure 3-1120

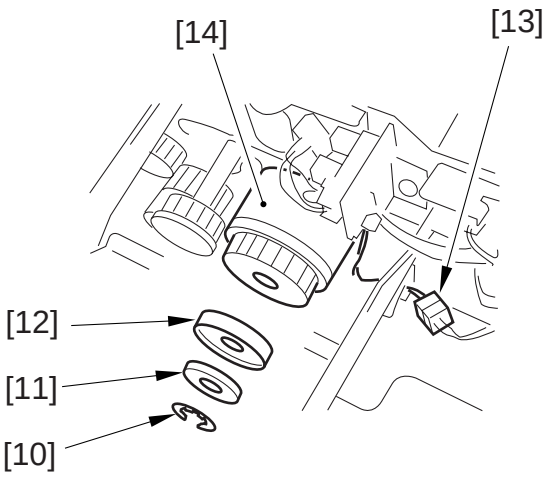

Figure 3-1121

6) Detach the paper feed unit cover [15].

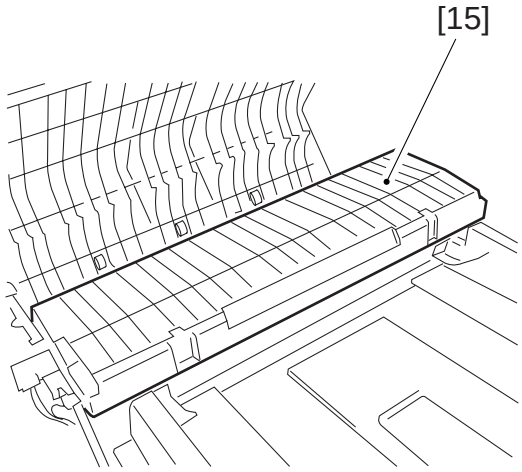

Figure 3-1122

COPYRIGHT © 1999 CANON INC.

7) Remove two screws [16] and disconnect the connector [17] to detach the sensor stay [18].

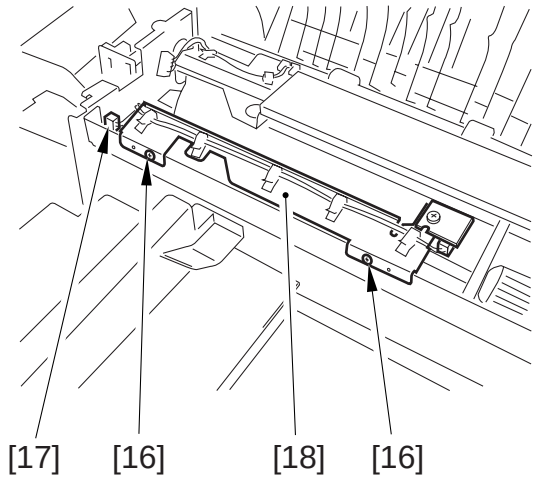

Figure 3-1123

8) Remove the three screws [19] and detach the three guide plates [21] from the stay [20].

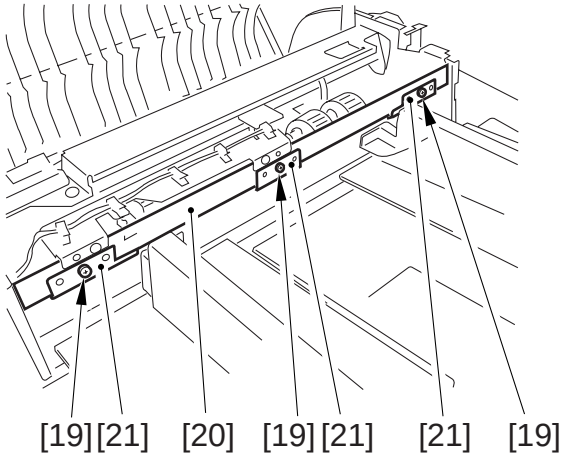

Figure 3-1124

COPYRIGHT © 1999 CANON INC.

9) Remove the two screws [22] to detach the lower guide [23].

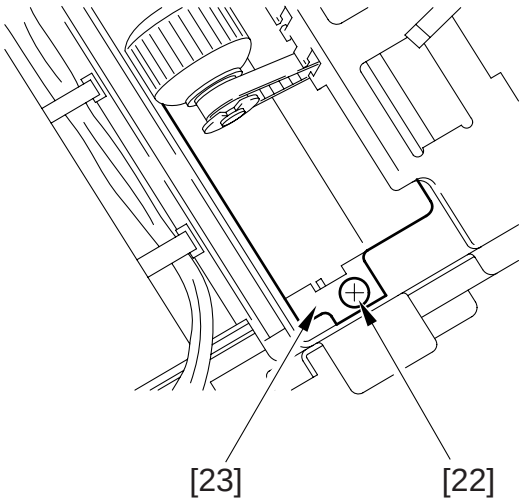

Figure 3-1125

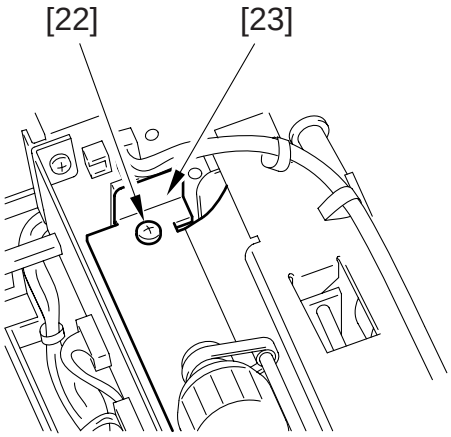

Figure 3-1126

10) Remove the two screws [24] and disconnect the connector [25] to detach the sensor stay [26].

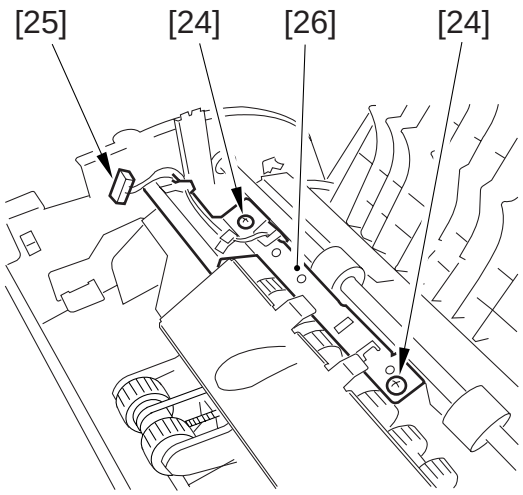

Figure 3-1127

COPYRIGHT © 1999 CANON INC.
CANON SADDLE FINISHER-D2 REV.0 AUG. 1999 PRINTED IN JAPAN (IMPRIME AU JAPON)

11) Remove the front cover.
12) Remove the adjuster unit (right) [27] (two screws).

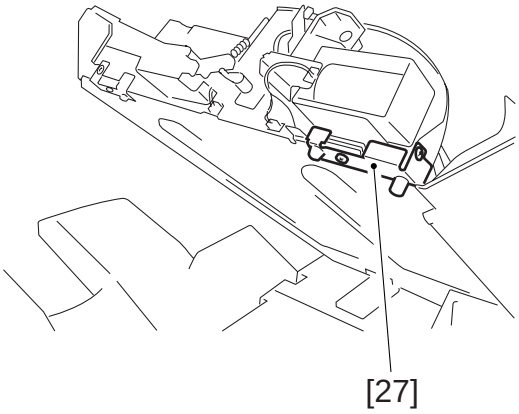

Figure 3-1128

13) Remove the stepped screw [29] from the solenoid arm [28].

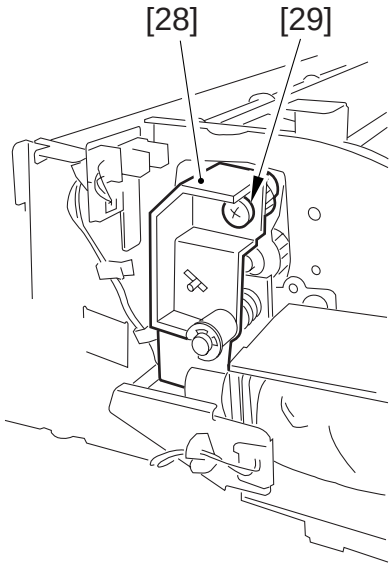

Figure 3-1129

14) Remove the pick-up solenoid assembly [30]. (one connector and two screws)

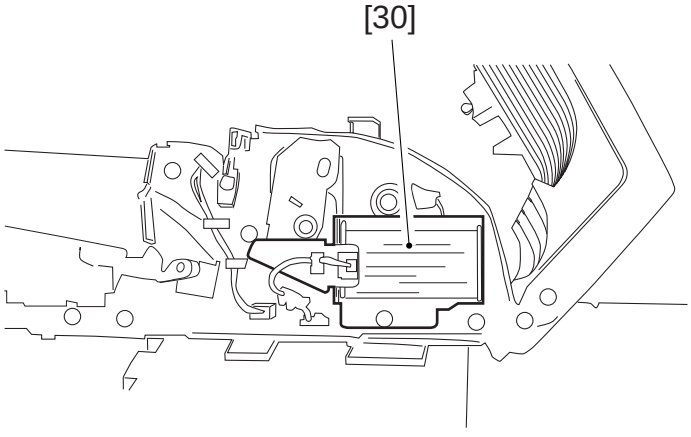

Figure 3-1130

COPYRIGHT © 1999 CANON INC.

15) Remove the pick-up unit positioning plate [31]. (two screws)

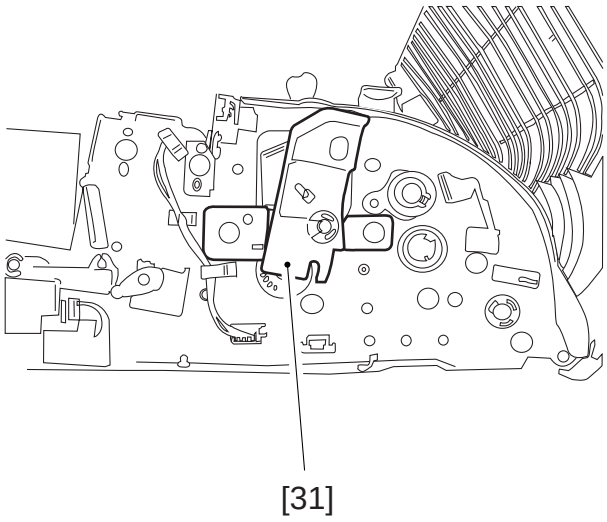

Figure 3-1131

16) Remove the two screws [32] to remove the pick-up unit [33].

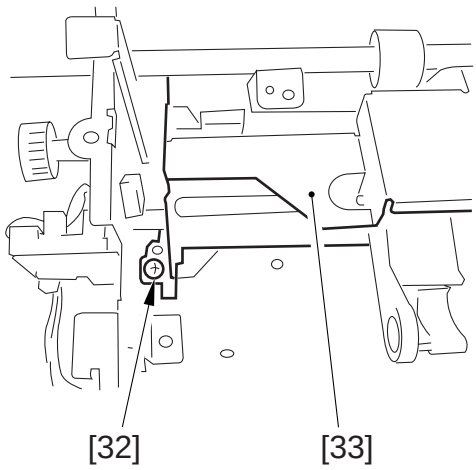

Figure 3-1132

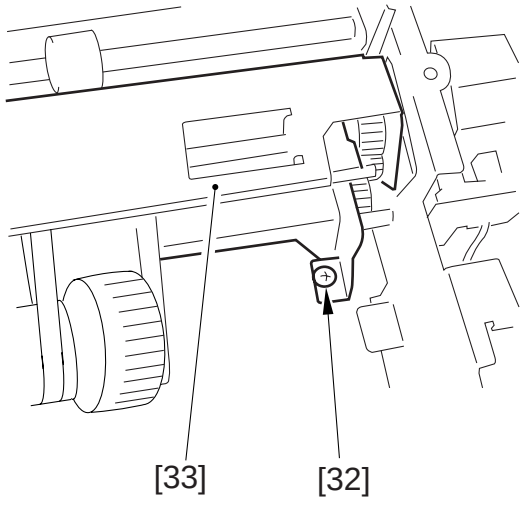

Figure 3-1133

COPYRIGHT © 1999 CANON INC.

2. Detaching the Pick-Up Roller

1) Detach the paper feed unit cover.
2) Remove E-ring [1] and then detach roller arm [2] and pick-up roller [3].

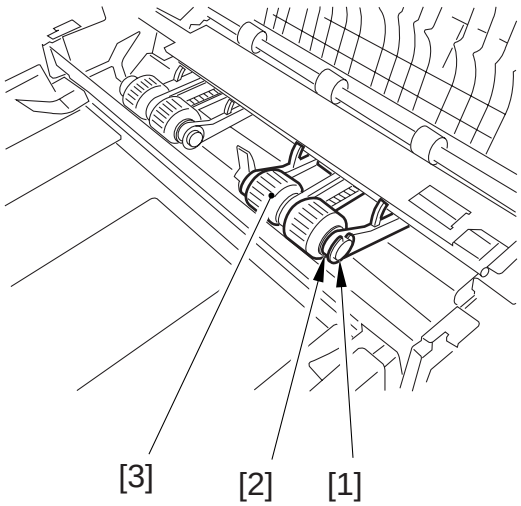

Figure 3-1134

3. Adjusting the Side Guide Stopper Position

The side guide rail is grooved to allow the machine to stop at a predetermined paper size position. Depending on the paper size, however, the machine may stop at the wrong position as the side guide stops at the adjacent position.

This machine has two different side guide positioning rolls to allow the side guide stop position to be adjusted. The side guide stop position can be set by changing the way the guide side guide positioning bosses are installed, as described below.

Side guide	Side guide stop position	
Side guide positioning roll color	One-grooved surface	Two-grooved surface
Gray (A/B configuration)	A4R	A4R LTR-R
Black (Inch configuration)	LTR-R	LTR-R A4R

Table 3-1101

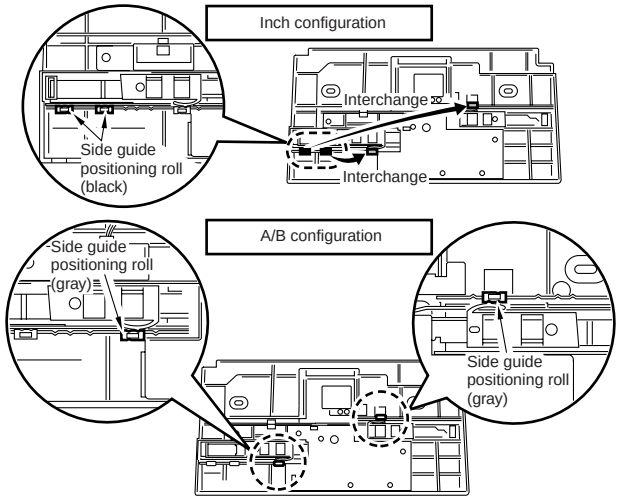

Figure 3-1135

COPYRIGHT © 1999 CANON INC.

CHAPTER 4

MAINTENANCE AND SERVICING

I. PERIODICALLY REPLACED PARTS 4-1
II. GENERAL SERVICE LIVES OF CONSUMABLE PARTS 4-1
III. PERIODIC MAINTENANCE 4-3

COPYRIGHT © 1999 CANON INC. CANON SADDLE FINISHER-D2 REV.0 AUG. 1999 PRINTED IN JAPAN (IMPRIME AU JAPON)

I . PERIODICALLY REPLACED PARTS

A. Finisher

The finisher does not have parts that require periodic replacement.

B. Saddle Stitcher

The saddle stitcher does not have parts that require periodic replacement.

C. Folder

The folder does not have parts that require periodic replacement.

D. Inserter

The inserter does not have parts that require periodic replacement.

II . GENERAL SERVICE LIVES OF CONSUMABLE PARTS

Some parts of the machine may require replacement once or more over the period of warranty. Replace them when necessary.

A. Finisher

As of June 1999

No.	Parts name	Parts No.	Q'ty	Life	Remarks
1	Stapler	FB4-5390-000	1	500,000 times	A single cartridge is good for about 5,000 stapling operations.
2	Paddle	FB4-8435-000 (FG6-3108-000)	3	1,000,000 sheets of paper delivered in tray B	
3	Knurled belt	FB4-8709-000	4		
4	Upper stack delivery roller	FB4-8363-000	4		
5	Punch unit	FF5-3237-000 (AB)/ FF5-3238-000 (INCH)	3	1,000,000 punches	100,000 punches in 200 g/m^2 paper used at a 5% utilization rate

COPYRIGHT © 1999 CANON INC.

B. Saddle Stitcher

No.	Parts name	Parts No.	Q'ty	Life	Remarks
1	Stapler	FB3-7860-000	2	100,000 staples	Approx. 2,000 staples per cartridge

C. Folder

No.	Parts name	Parts No.	Q'ty	Life	Remarks
1	Discharge needle (right)	FA1-4842-030	1	1,000,000 folds	
2	Discharge needle (left)	FA4-2371-000	1		

D. Inserter

No.	Parts name	Parts No.	Q'ty	Life	Remarks
1	Pick-up roller	FB4-7640-000	2	250,000 sheets of paper fed from the inserter	
2	Feed roller	FG6-3304-000 (Separation unit)	1		Replacement by the separation unit is recommended. Replacement by the feed roller or the separation belt is also acceptable.
		FB4-6991-000 (Feed roller)	12		
3	Separation belt	FG6-3304-000 (Separation unit)	1		
		FC2-1827-000 (Separation belt)	11		

COPYRIGHT © 1999 CANON INC.
CANON SADDLE FINISHER-D2 REV.0 AUG. 1999 PRINTED IN JAPAN (IMPRIME AU JAPON)

III . PERIODIC MAINTENANCE

As of June 1999

A. Finisher

Item	Intervals	Description	Remarks
Paper sensor	For every 250,000 sheets delivered by the copier	Cleaning	Blower brush
Inlet path paper sensor			
Buffer path paper sensor			
Lower path paper sensor			
Punch waste sensor prism			Dry wiping
Phototosensors in and around the punch unit (*1)	During punch unit replacement		Blower brush

*1 Punch sheet edge sensor (PI43)/punch rotation home position sensor (PI44)/punch sheet edge sensor home position sensor (PI45)/punch side registration home position sensor (PI46)/punch completion sensor (PI47)

B. Folder

Item	Intervals	Description	Remarks
Folding rollers A, B and C	Every 250,000 folds	Cleaning	
Folding roller 2			

C. Inserter

Item	Intervals	Description	Remarks
Pick-up roller	Every 100,000 sheets of paper fed from the inserter	Cleaning	By service mode
Feed roller			
Separation belt			
Extraction roller			
Intermediate feeding roller			
Paper set sensor			Blower brush

COPYRIGHT © 1999 CANON INC.

D. Maintenance

1. Cleaning the Folding Rollers

a. Cleaning folding rollers A and B

1) Open the top cover and pull out the folder unit.
2) Detach the front cover.

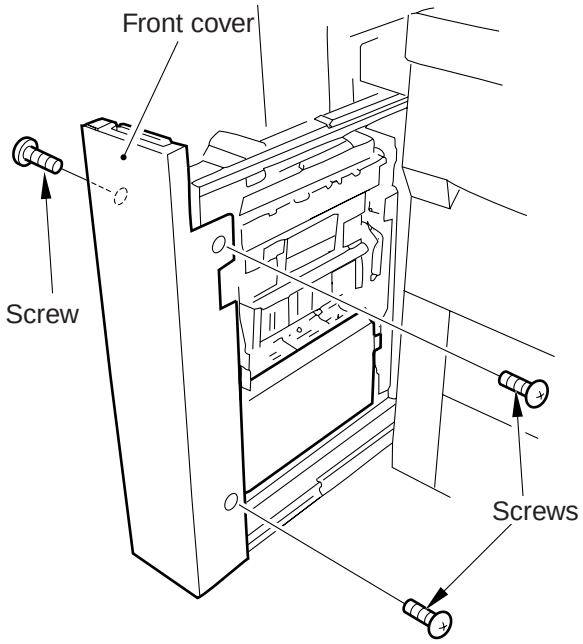

Figure 4-301

3) Detach the lower left cover.

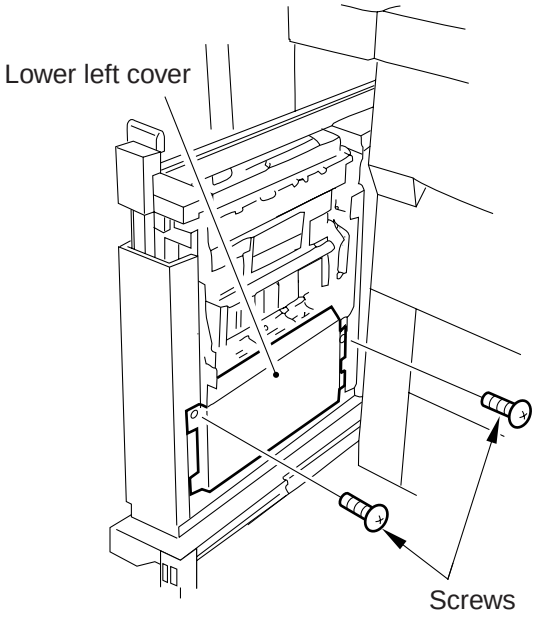

Figure 4-302

COPYRIGHT © 1999 CANON INC.
CANON SADDLE FINISHER-D2 REV.0 AUG. 1999 PRINTED IN JAPAN (IMPRIME AU JAPON)

4) Open the left guide.
5) Clean folding rollers A and B while turning the folder motor counterclockwise.

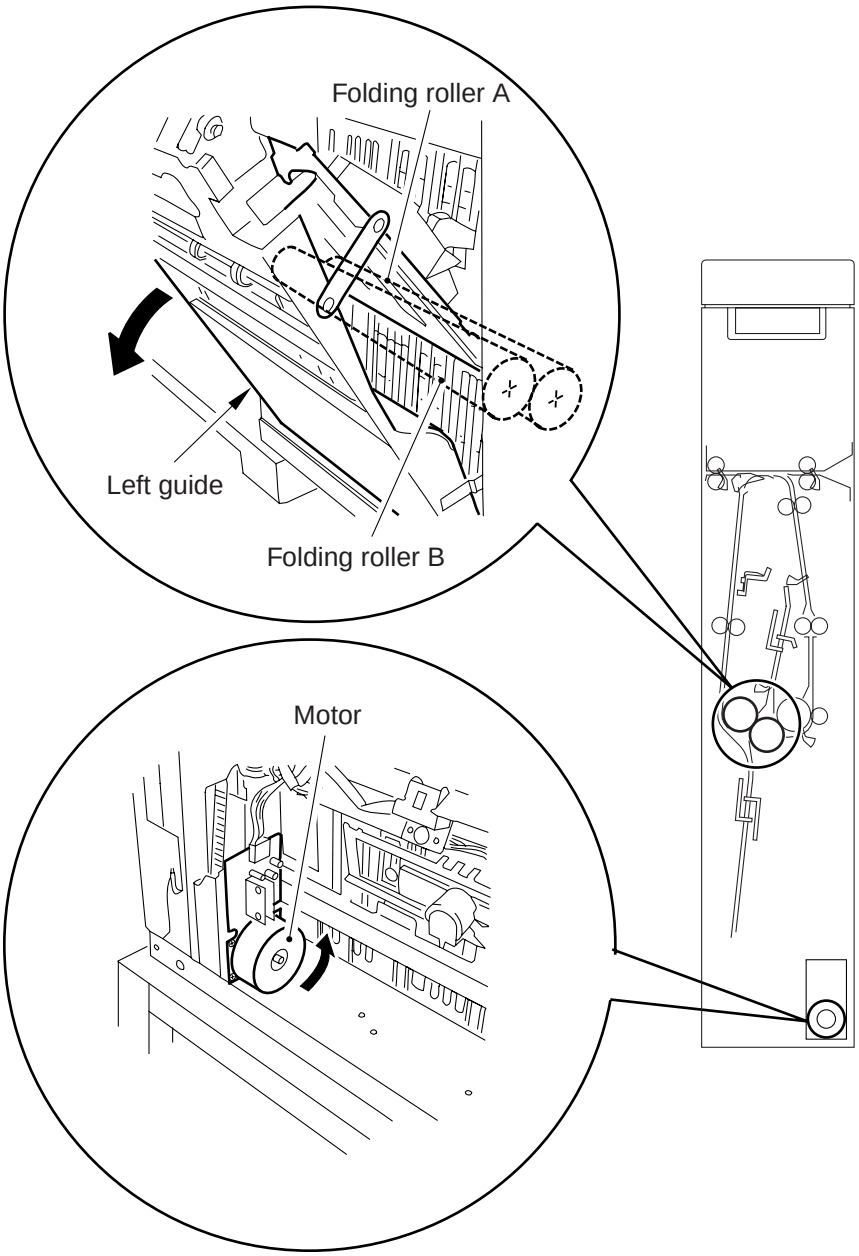

Figure 4-303

Caution:
If the folder motor is turned clockwise, the sheet under folding roller B could be caught by roller B, causing it to be deformed.

b. Cleaning folding roller C and folding rollers 2.

1) Open the top cover in the paper folding unit and pull out the folder unit.
2) Detach the front cover.

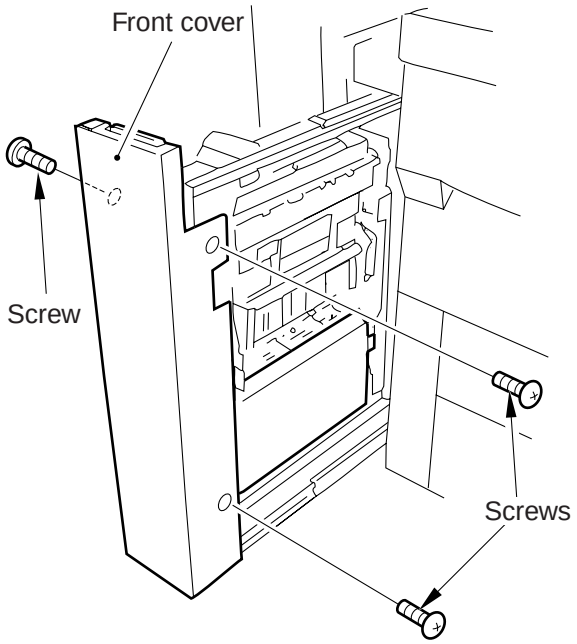

Figure 4-304

3) Detach the lower left cover.

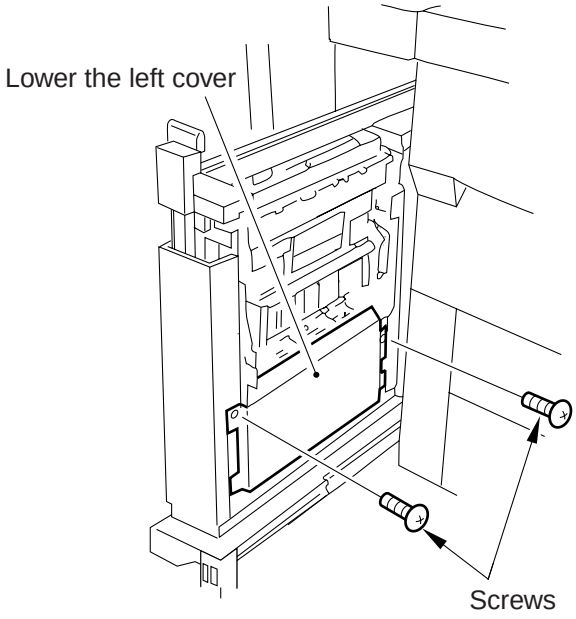

Figure 4-305

COPYRIGHT © 1999 CANON INC.
CANON SADDLE FINISHER-D2 REV.0 AUG. 1999 PRINTED IN JAPAN (IMPRIME AU JAPON)

4) Open the right guide.
5) Clean folding roller C and folding rollers 2 while turning the folder motor counterclockwise.

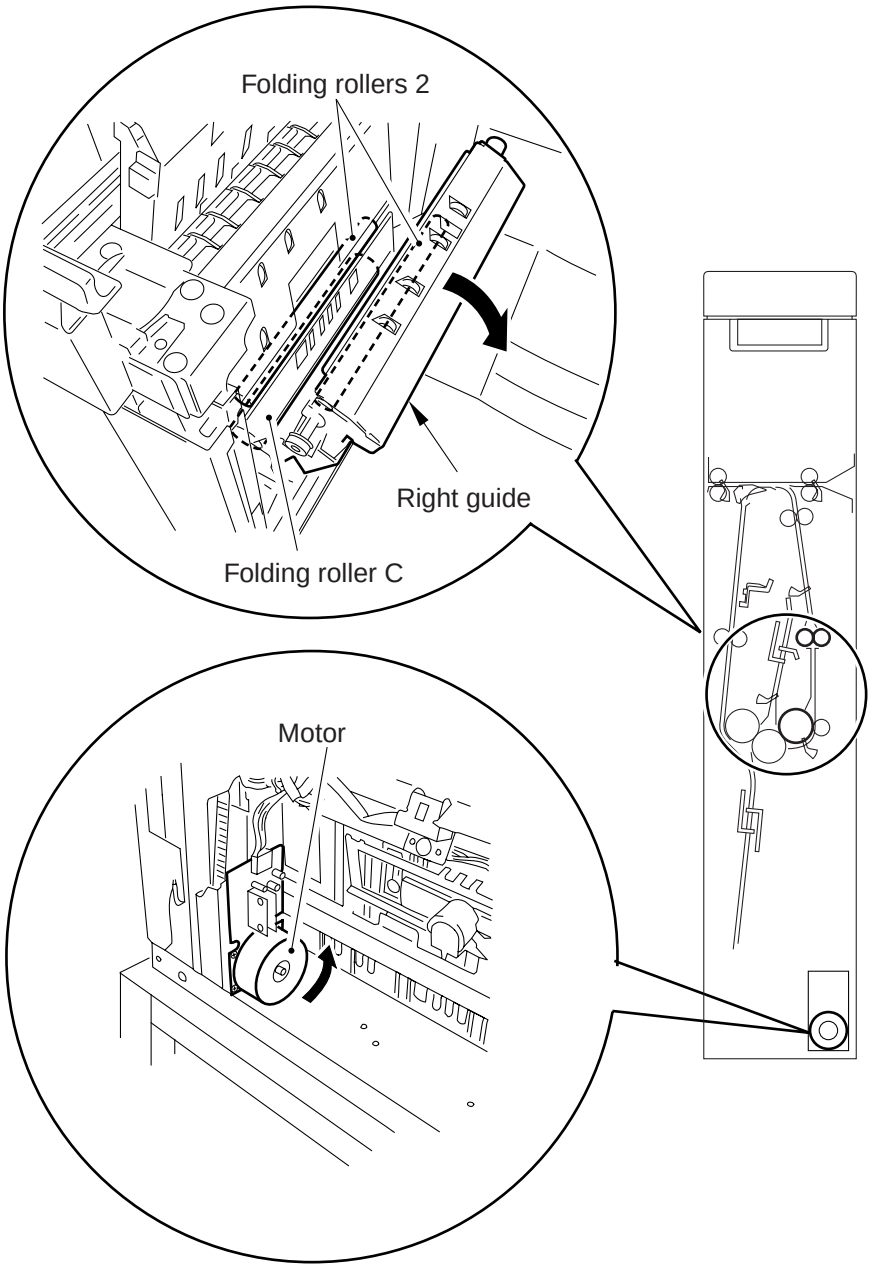

Figure 4-306

Caution:
If the folder motor is turned clockwise, the sheet under folding roller B could be caught by roller B, causing it to be deformed.

2. Cleaning the Inserter Inner Rollers and Belt

a. Separation belt/feed roller

1) Make one sheet of A4 or letter size paper available.
2) Detach the finisher PCB cover.
3) Set SW103 on the finisher controller PCB as shown in Figure 4-307.
4) Moisten the copy paper made available in step 1 with alcohol.
5) Press SW104 on the finisher controller PCB.
   - The separation unit will activate.
6) Set the copy paper against the paper slot to clean the rollers.

Caution

Since the extraction rollers are also moving, hold the copy paper firmly at the position shown in Figure 4-308 if it is A4 size, or at the position shown in Figure 4-309 if it is letter size, to keep it from being pulled in by the extraction rollers.



Figure 4-307

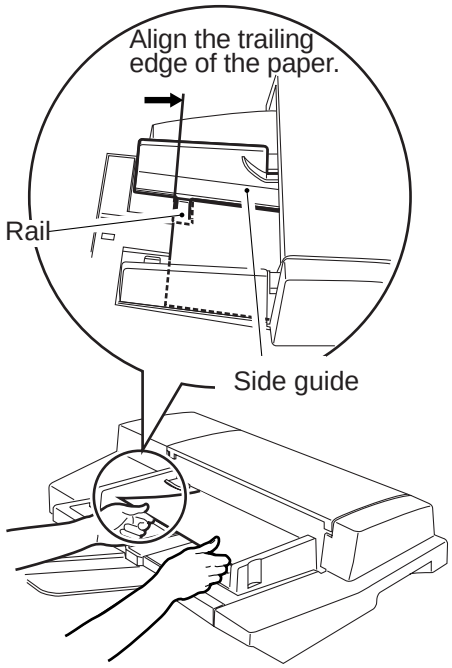

Figure 4-308

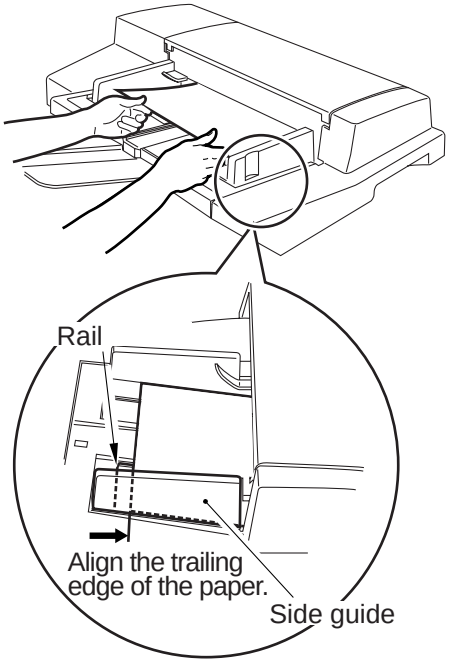

Figure 4-309

7) When cleaning is completed, press SW104 once again.
   - The separation unit will stop.

COPYRIGHT © 1999 CANON INC.
CANON PC620D REV.0 AUG. 1999 PRINTED IN JAPAN (IMPRIME AU JAPON)

b. Extraction rollers/intermediate feed roller

1) Open the inserter top cover.
2) Detach the finisher PCB cover.
3) Set SW103 on the finisher controller PCB as shown in Figure 4-310.
4) Press SW104 on the finisher controller PCB.
   • The separation unit will activate.
5) Clean the rollers with alcohol-moistened paper.
6) When the cleaning is completed, press SW104 once again.
   • The separation unit will stop.

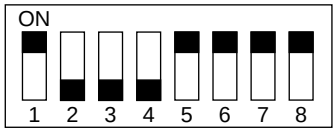

Figure 4-310

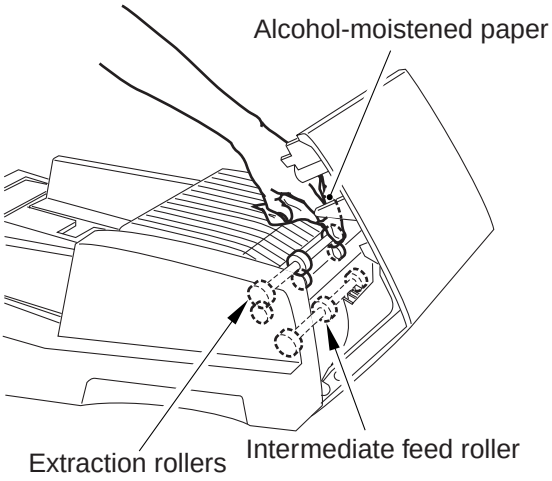

Figure 4-311

COPYRIGHT © 1999 CANON INC.

CHAPTER 5

TROUBLESHOOTING

I. ADJUSTMENT 5-1
A. Electrical System 5-1
B. Mechanical 5-20
II. ARRANGEMENT OF ELECTRICAL PARTS 5-24
A. Finisher 5-24
B. Saddle Stitcher 5-36
C. Paper Folding Unit B1 (folder) 5-46
D. Cover Insertion Unit - A1 5-48
E. LEDs and Check Pins by PCB 5-50
F. Downloader PCB 5-62
III. TROUBLESHOOTING 5-71
A. Finisher 5-71
B. Saddle Stitcher 5-84
C. Folder 5-90
D. Inserter 5-91
IV. SELF DIAGNOSIS 5-92
A. Self - diagnostics 5-92
B. Alarms 5-98

COPYRIGHT © 1999 CANON INC. CANON SADDLE FINISHER-D2 REV.0 AUG. 1999 PRINTED IN JAPAN (IMPRIME AU JAPON)

I . ADJUSTMENT

A. Electrical System

1. Adjusting the Alignment Width

Perform the following if you have replaced the EEPROM (IC102) of the finisher controller PCB, front jogging plate motor (M4), or rear jogging plate motor (M5):

1) Set SW103 on the finisher controller PCB as follows:

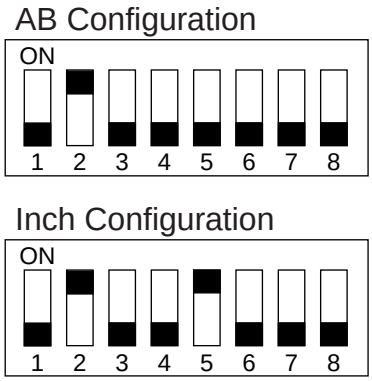

Figure 5-101

2) Press SW104 on the finisher controller PCB.

• The swing guide of the machine will open and, at the same time, the front jogging plate and the rear jogging plate move to the home position. Thereafter, the rear jogging plate moves to the rear alignment position, while the front jogging plate moves to a point which is 'A4 width or LTR width + a'. LED 101 on the finisher controller PCB will indicate the initial offset value '-4'.

3) Hold a stack of A4 or LTR sheet, and insert it into the processing tray (until the top edge of the stack butts against the stopper plates).

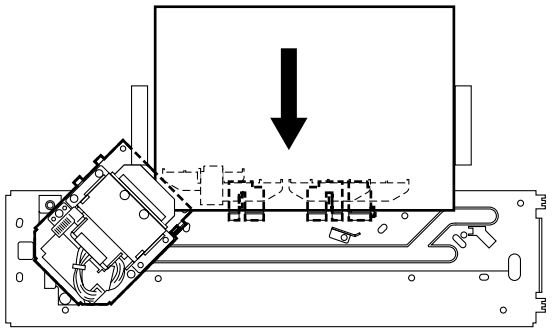

Figure 5-102

4) Butt the rear edge of the stack against the rear jogging plate.

5) Press SW105. A single press moves the front jogging plate toward the rear by about 0.35 mm. A single press, further, increments the indication of the offset value by LED101 on the finisher controller PCB up to '+4'.
Press the switch as many times as necessary until there is no gap between the front edge of the stack and the front jogging plate.

• You cannot enter a value higher than '+4'.

6) Press SW104 on the finisher controller PCB.

• This will store the new value, and the front jogging plate and the rear jogging plate will return to the home position.

• If you have pressed SW105 too many times and the front jogging plate has moved in excess, press SW106 on the finisher controller PCB. In response, the front jogging plate will move to the home position once, and then move back to the adjustment start position. Go back to step 5), and repeat the steps.

7) Turn off the power.

8) Shift all bits of SW103 on the finisher controller PCB to OFF.

9) Turn on the power.

• The swing guide will move down.

2. Adjusting the Stapling Position (front 1-point stapling)

If you have replaced the EEPROM (IC 102) on the finisher controller PCB or the stapler, perform the following:

1) Set SW103 on the finisher controller PCB as follows:

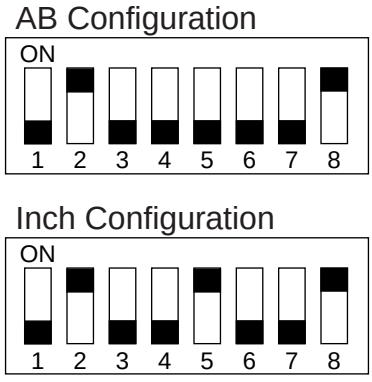

Figure 5-103

2) Press SW104 on the finisher controller PCB.

• The swing guide of the machine will open and, at the same time, the front jogging plate and the rear jogging plate will move to the home position. Thereafter, the front jogging plate and the rear jogging plate will move to the front 1-point stapling position.
At the same time, the stapler moves to the front 1-point stapling position. Further, LED 101 on the finisher controller PCB will indicate the present value, which is between '-12' and '14'.

3) Insert a stack of A4 or LTR sheets into the processing tray. At this time, butt the rear edge of the stack against the rear jogging plate.

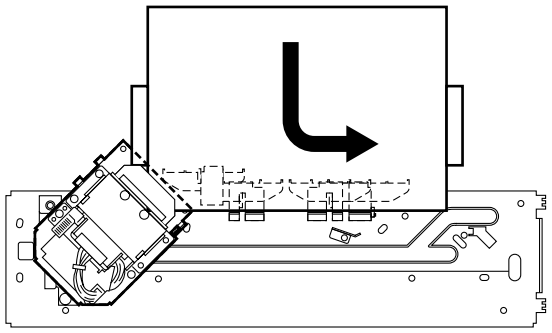

Figure 5-104

• If the gap between the front jogging plate and the front edge of the stack is 1 mm or more, turn off the power; then, shift all bits of SW103 to OFF, and stop the adjustment work. Adjust the alignment width one again, and start the adjustment of the stapling position.

4) Press SW104 on the finisher controller PCB.

• The stapler will staple the stack, and LED 101 will indicate '0'.

5) Remove the stack, and check the position of the staple against the standard. If the position is correct, end the adjustment work, i.e., turn off the power, shift all bits of SW 103 to OFF, and then turn on the power once again.
If you need to adjust the stapling position, go to the next step.

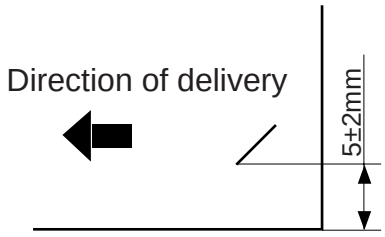

Figure 5-105

6) Press SW104 once so that you may enter a new adjustment value.

• The stapler will return to the home position once, and then will return to the stapling position. LED101 will indicate the present value.

7) Based on the result of a check, press SW 105 or SW106 on the finisher controller PCB.

• A single press on SW105 moves the stapling position to the front by about 0.35 mm. LED 101 indication, on the other hand, will increment by '1' in the positive (+) direction.

• A single press SW106 moves the stapling direction to the rear by about 0.35 mm. LED 101, on the other hand, will increment by '1' in the negative (-) direction.

8) Insert a stack of several A4 or LTR sheets into the processing tray as in step 3).

9) Press SW104 so that the new adjustment value is stored.

• Stapling occurs automatically so that you can check the stapling position. LED101 will indicate '0'.

10) Turn off the power.

11) Shift all bits of SW 103 to OFF.

12) Turn on the power, and move down the swing guide.

 COPYRIGHT © 1999 CANON INC.

3. Adjusting the Stapling Position (2-point stapling)

If you have replaced the EEPROM (IC 102) on the finisher controller PCB or the stapler, perform the following:

1) Set SW 103 on the finisher controller PCB as follows:

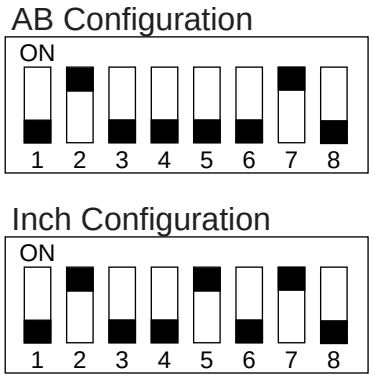

Figure 5-106

2) Press SW 104 on the finisher controller PCB

• The swing guide of the finisher will open and, at the same time, the front jogging plate and the rear jogging plate will move to the home position. Thereafter, the front jogging plate and the rear jogging plate will move to the 2-point stapling position. LED 101 on the finisher controller PCB will indicate the present value, which is between '-12' and '14'.

3) Insert a stack of several A4 or LTR sheets into the processing tray. At this time, be sure to butt the rear edge of the stack against the rear jogging plate.

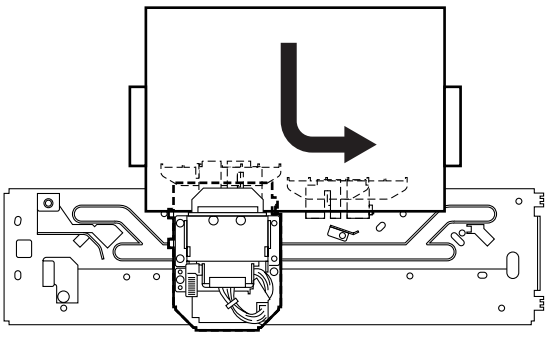

Figure 5-107

• If the gap between the front jogging plate and the front edge of the stack is 1 mm or more, turn off the power, shift all bits of SW 103 to OFF, and stop the adjustment work. Thereafter, adjust the alignment width, and then start the stapling position adjustment work.

4) Press SW104 on the finisher controller PCB.

• Stapling will occur, and LED 101 will indicate '0'.

5) Remove the stack, and check the position of the staple against the standard. If the position is correct, end the adjustment work, i.e., turn off the power, shift all bits of SW 103 to OFF, and turn on the power once again.
If the stapling position must be adjusted, go to the next step.

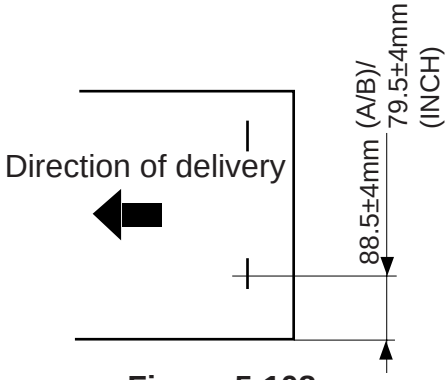

Figure 5-108

6) Press SW104 once so that you may enter a new adjustment value.

• The stapler will move to the home position once, and then will move to the stapling position once again. LED101, on the other hand, will indicate the present value.

7) Press SW105 or SW106 on the finisher controller PCB as necessary.

• A single press on SW105 will move the stapling position to the front by about 0.35 mm. LED 101, on the other hand, will increment by '1' in the positive (+) direction.

• A single press on SW 106 will move the stapling position to the rear by about 0.35 mm. LED101, on the other hand, will increment by '1' in the negative (-) direction.

8) Insert a stack of several A4 or LTR sheets into the processing tray as in step 3).

COPYRIGHT © 1999 CANON INC.

9) Press SW104 once to store the new adjustment value.
• Stapling will occur automatically so that you can check the stapling position. LED101 will indicate '0'.
10) Turn off the power.
11) Shift all bits of SW103 to OFF.
12) Turn on the power, and move down the swing guide.

4. Adjusting the Stapling Position (rear 1-point stapling)

If you have replaced the EEPROM (IC 102) on the finisher controller PCB or the stapler, perform the following:

1) Set SW103 on the finisher controller PCB as follows:

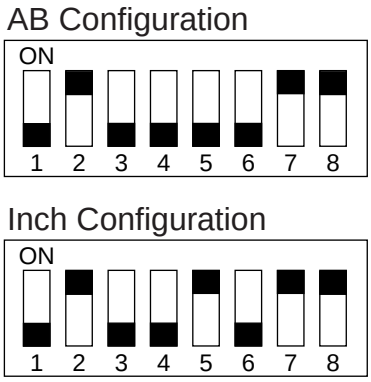

Figure 5-109

2) Press SW104 on the finisher controller PCB.
• The swing guide of the machine will open and, at the same time, the front jogging plate and the rear jogging plate will move to the home position. Thereafter, the front jogging plate and the rear jogging plate will move to the rear 1-point stapling position. The stapler will also move to the rear 1-position stapling position. LED 101 on the finisher controller PCB will indicate the preset value, which is between '-12' and '14'.
3) Insert a stack of several A4 or LTR sheets into the processing tray. At this time, be sure to butt the rear edge of the stack against the rear jogging plate.

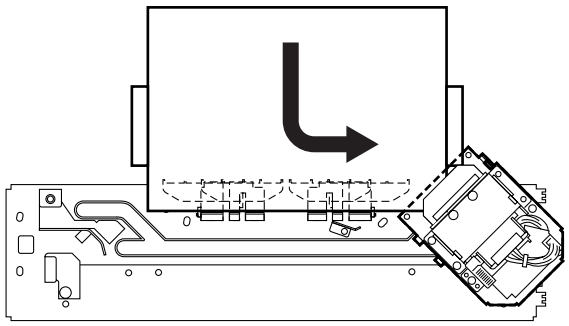

Figure 5-110

• If the gap between the front jogging plate and the front edge of the stack is 1 mm or more, turn off the power, shift all bits of SW 103 to OFF, and stop the adjustment work. Perform the alignment width adjustment, and then perform the stapling position adjustment once again.
4) Press SW104 on the finisher controller PCB.
• Stapling will take place, and LED101 will indicate '0'.
5) Take out the stack of sheets, and check the position of the staple against the standard. If the position is correct, end the adjustment work, i.e., turn off the power, shift all bits of SW103 to OFF, and then turn on the power. If the stapling position must be adjusted, go to the next step.

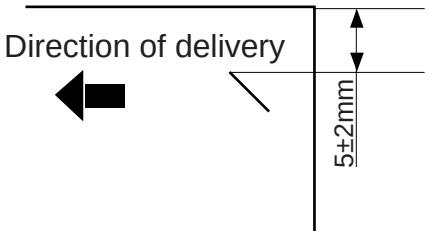

Figure 5-111

6) Press SW 104 once so that you can enter a new value.
• The stapler will return to the home position, and then will return to the stapling position once again. LED 101, on the other hand, will indicate the present value.

 COPYRIGHT © 1999 CANON INC.

7) Based on the result of the check, press SW 105 or SW106 on the finisher controller PCB.
- A single press on SW105 will move the stapling position to the front by about 0.35 mm. The indication of LED101, on the other hand, will increment by '1' in the positive (+) direction.
- A single press on SW106 will move the stapling position to the rear by about 0.35 mm. The indication of LED101, on the other hand, will increment by '1' in the negative '0' direction.

8) Insert a stack of several A4 or LTR sheets into the processing tray as in step 3).
9) Press SW104 once so that you can enter a new adjustment value.
- Stapling will occur automatically so that you can check the stapling position. LED101 will indicate '0'.

10) Turn off the power.
11) Shift all bits of SW103 to OFF.
12) Turn on the power, and move down the swing guide.

5. Adjusting the Wrapping on the Buffer Roller

Perform the adjustments for the following:

a. If you have replaced the EEPROM (IC 102) on the finisher controller PCB.
b. If the degree of wrapping has changed for some reason.
The "degree of wrapping" refers to the discrepancy between the first and the second sheets wrapping around the buffer roller.

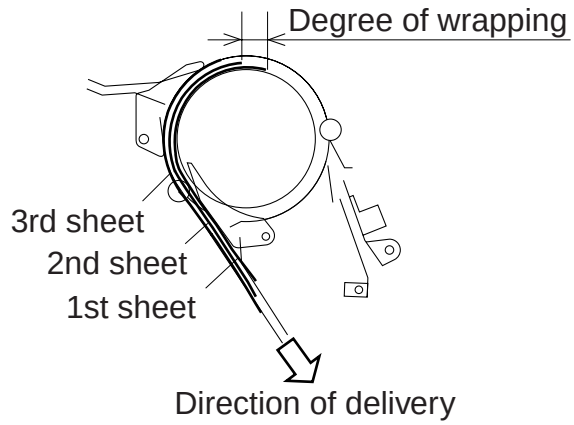

Figure 5-112

1) Set SW103 on the finisher controller PCB as follows:



Figure 5-113

2) Set the copier's mode as follows: copy count at 2, originals at 3, and sort mode selected.
3) Press the Copy Start key.
- Copying will start and stop as soon as paper has wrapped around the buffer roller.

4) Open the front cover and the upper cover, and measure the discrepancy between the sheets.
- After measurement, remove the stack.

5) Check the degree of wrapping (discrepancy) against the standard.

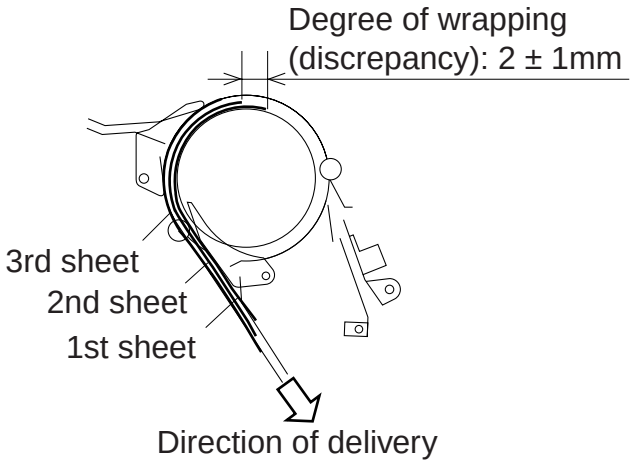

Figure 5-114

6) Turn off the power, and set SW 103 on the finisher controller PCB as follows:

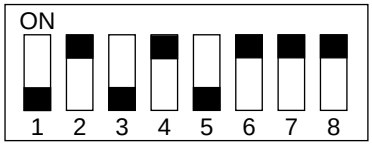

Figure 5-115

Caution:
The machine may not operate properly if the upper cover or the front cover is not closed firmly.

7) Turn on the power, and press SW 104 on the finisher controller PCB.
• LED 101 will indicate the present value.
8) Press SW105 or SW106 on the finisher controller PCB as necessary.
• Each press on SW105 increases the degree of wrapping by about 1.74 mm.
• Each press on SW106 decreases the degree of wrapping by about 1.74 mm.

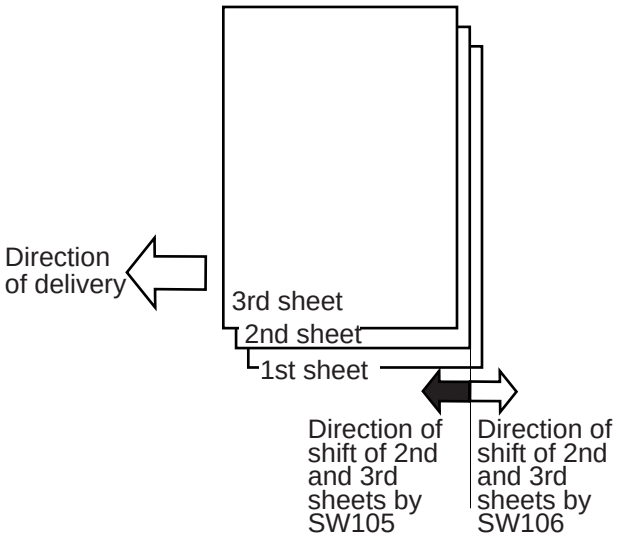

Figure 5-116

9) Press SW104 on the finisher controller PCB.
• The new value will be stored, and LED101 will indicate '0'.
10) Turn off the power, and shift all bits of SW103 to OFF.

6. Sensor Initial Adjustment

Perform the adjustment if you have replaced any of the following sensors or the EEPROM (IC102) on the finisher controller PCB:
• Inlet path paper sensor (S1)
• Buffer path paper sensor (S2)
• Lower path paper sensor (S3)
• Tray B paper sensor (S4)
• Tray A paper sensor (S5)
• Punch waste sensor (S6)

1) Check to make sure that there is no paper in the paper path or on the sort tray. Then, close the upper cover and the front cover.
2) Mount the punch waste container in the finisher after dumping punch waste from it.
3) Set SW103 on the finisher controller PCB as follows:

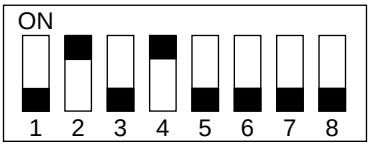

Figure 5-117

4) Press SW104 on the finisher controller PCB.
• This will start adjustment mode, and tray A/B will move to the 1000-sheet stacking position. (This is to prevent blocking the tray A/B paper sensor (S4/S5).)
5) You can refer to LED101 on the finisher controller PCB to find out which sensor is being adjusted. (Table 5-101)

No.	Sensor
1	Inlet path paper sensor (S1)
2	Buffer path paper sensor (S2)
3	Lower path paper sensor (S3)
4	Tray B paper sensor (S4)
5	Tray A paper sensor (S5)
6	Punch waste sensor, warning (S6)
7	Punch waste sensor, full (S6)

Table 5-101

6) When adjustment has ended, find out the result by referring to LED 101.
• If LED 101 indicates '0', all sensors are normal.
• If LED 101 indicates 'F', the output level of specific sensors is not adequate.
7) Press SW105 or SW106 on the finisher controller PCB to indicate details of the result.
• See Tables 5-102 and -103 for the No. of each sensor and how details of the result are indicated.

 COPYRIGHT © 1999 CANON INC.

• A press on SW105 for a second time moves to the next sensor, while a press on SW106 moves to the previous sensor.

No.	Sensor
1	Inlet path paper sensor (S1)
2	Buffer path paper sensor (S2)
3	Lower path paper sensor (S3)
4	Tray B paper sensor (S4)
5	Tray A paper sensor (S5)
6	Punch waste sensor, warning (S6)
7	Punch waste sensor, full (S6)

Table 5-102

Level 3	Level 2	Level 1	Level 0
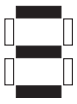	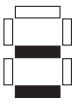	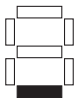	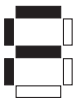
Indicates that the sensor output level is adequate.	Indicates that the sensor output level is starting to lower.	Indicates that the sensor output level is near the limit for use.	Indicates that the sensor output level is below the limit for use.

Table 5-103

• If the result is level 2, level 1, or level 0, clean the sensor or check its mounting condition.
• If the result is still level 1 after cleaning the sensor and checking its mounting condition, be ready for the replacement of the sensor.
• If the result is level 0 after cleaning the sensor, checking its mounting condition, and adjusting it once again, replace the sensor.

8) Press SW104 on the finisher controller PCB.
• The press will complete the adjustment.
• Tray A/B will move up to its initial position.

9) Turn off the power, and shift all bits of SW103 to OFF.

7. Adjusting the Swing Guide Speed

Perform the adjustment if you have replaced the EEPROM (IC102) on the finisher controller PCB or the swing motor (M8) or parts associated with it.

1) Set SW103 on the finisher controller PCB as follows:



Figure 5-118

2) Press SW104 on the finisher controller PCB.
• This will start automatic adjustment, and the swing guide will make several swinging operations
• The output voltage to the swing motor drive circuit will automatically be adjusted so that the time (T1) between when the swing motor drive starts and the swing guide closed sensor (PI15) turns off will be as indicated.

3) When the automatic adjustment has ended, check LED101 on the finisher controller PCB to find out the result:
• If the output voltage has been adjusted so that T1 is the optimum value, data representing the output voltage will be indicated. (in 3 digits, 000 through 255)
• If the output voltage has been adjusted so that T1 will be shorter than the optimum value, 'F' and '1' will be indicated in sequence.
• If the output voltage has been adjusted so that T1 will be longer than the optimum value, 'F' and '2' will be indicated in sequence.

4) Press SW104 on the finisher controller PCB.
• This will complete the adjustment.
• If T1 is longer or shorter, the default output voltage will be selected.

5) Turn off the power.
6) Shift all bits of SW103 to OFF.

COPYRIGHT © 1999 CANON INC.

Reference:

If the swing guide has been used for a long time and, as a result, the sound of the guide moving up increases, perform this adjustment so that the motor drive speed will be optimum, reducing the sound.

8. Indicating the Swing Guide Speed

Use this mode to find out the time taken by the swing guide to move up or move down; if jams occur frequently near the swing guide, check the time taken for these movements.

1) Set SW103 on the finisher controller PCB as follows:

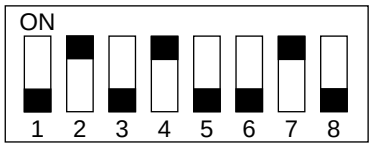

Figure 5-119

2) Press SW104 on the finisher controller PCB.

- The swing guide swings several times, and the time taken for upward and downward movements will be measured automatically.

3) When the swing guide stops, check LED 101 for the result:

- If LED101 indicates '0', the time is within the standard range.
- If LED101 indicates 'F', the time is outside the standard range.

4) Press SW105 or SW106 on the finisher controller PCB.

- LED101 indicates the times taken for upward and downward movements.
- A press on SW105 indicates the time for upward movement, a press on SW106 indicates the time for downward movement.
- In the case of upward movement, 'a', 'b', and 'c' will be indicated in sequence.
- In the case of downward movement, 'a', 'b', and 'c' will be indicated in sequence. Where,
  'a' indicates the 100's;
  b', 10's'
  'c', 1's in msec.

Reference:

The standard time for upward movement is 250 ±15 msec. The standard time for downward movement is 320 ±20 msec.

5) Turn off the power.
6) Shift all bits of SW103 to OFF.

Reference:

If the time is longer, check the swing mechanism for a mechanical fault.

9. Adjusting Punch Hole Position (paper feeding direction)

1) Make a copy in punch mode to verify punch hole position.

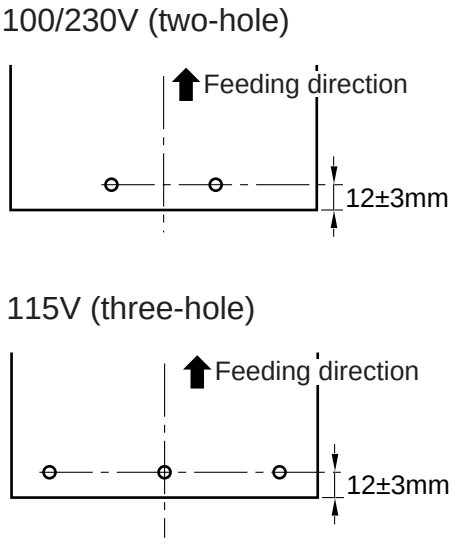

Figure 5-120

2) Set SW103 on the finisher controller PCB as shown below.

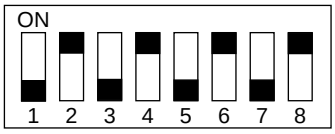

Figure 5-121

3) Press SW104 on the finisher controller PCB.

- LED101 on the finisher controller PCB will then show the current setting.

 COPYRIGHT © 1999 CANON INC. CANON SADDLE FINISHER-D2 REV.0 AUG. 1999 PRINTED IN JAPAN (IMPRIME AU JAPON)

4) On the basis of the punch hole positions observed in step 1, press SW105 or SW106 on the finisher controller PCB as many times as needed. Punch hole position will move by 0.6 mm each time these switches are pressed. The setting displayed by LED101 on the finisher controller PCB will be updated accordingly.

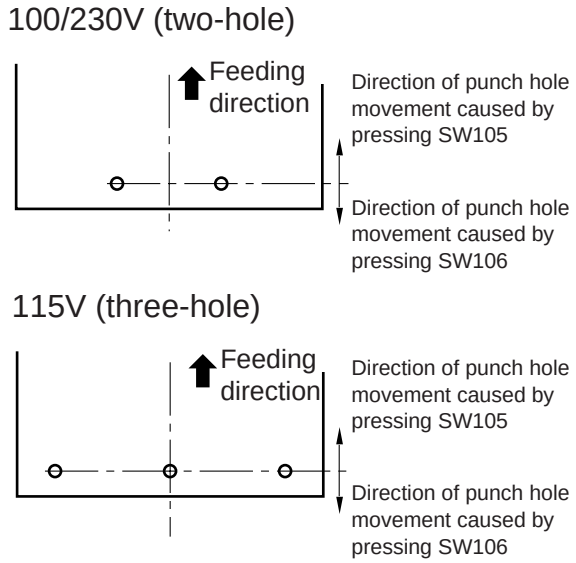

Figure 5-122

5) Press SW104 on the finisher controller PCB.

• The new adjustment value will be established.

6) Turn off the power.

7) Turn off all SW103 bits.

Reference:

The setting can also be varied by choosing SORTER>PNCH-HLE in copier service mode.

10. Adjusting Punch Hole Position (horizontal registration direction)

1) Make a copy in punch mode to verify punch hole position.

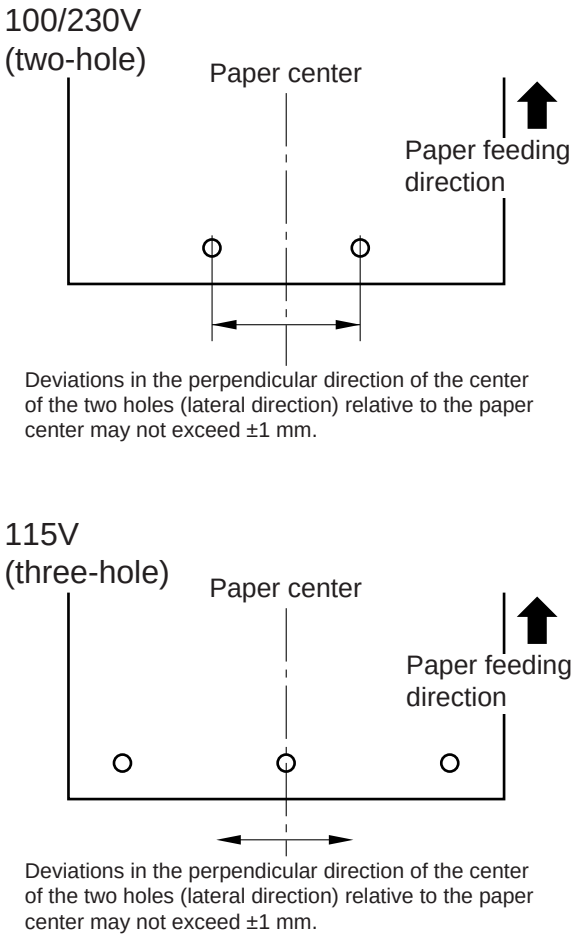

Figure 5-123

Note:

Whether the paper is delivered on its face or back, check the paper on the side opposite to the side on which it is delivered to the tray.

2) Set SW103 on the finisher controller PCB as shown below.

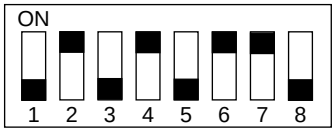

Figure 5-124

3) Press SW104 on the finisher controller PCB.

• LED101 on the finisher controller PCB will then show the current setting.

4) On the basis of the punch hole position observed in step 1, press SW105 or SW106 on the finisher controller PCB as many times as needed. Punch hole position will move by 0.33 mm each time these switches are pressed. The setting displayed by LED101 on the finisher controller PCB will be updated accordingly.

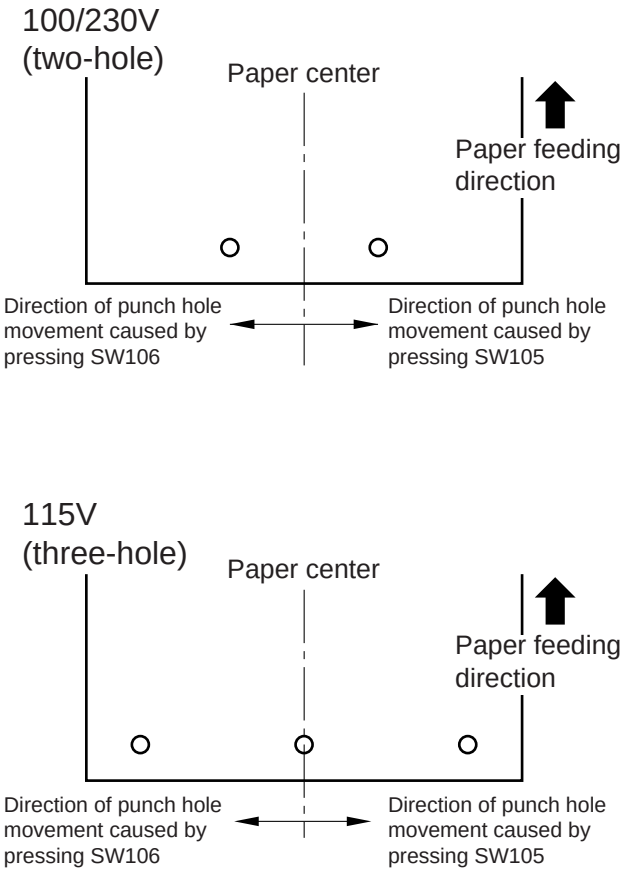

Figure 5-125

5) Press SW104 on the finisher controller PCB to establish the new adjustment value.
6) Turn off the power.
7) Turn off all SW103 bits.

11. After Replacing the EEPROM (IC102)

1) Turn off the copier.
2) Set SW103 on the finisher controller PCB as follows:

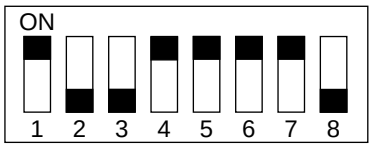

Figure 5-126

3) Turn off the power.
4) Press SW 104 and SW105 on the finisher controller PCB at the same time.

• This will initialize the EEPROM.

5) Make the adjustments shown in Table 5-104.

• Alignment width • Stapling position (front, 1-point stapling) • Stapling position (2-point stapling) • Stapling position (rear, 1-point stapling) • Buffer roller wrapping degree • Sensor (initial) • Swing guide speed • Adjusting punch hole position (paper feeding direction) • Adjusting punch hole position (horizontal registration direction)

Table 5-104

 COPYRIGHT © 1999 CANON INC.

12. Replacing the Finisher Controller PCB (for E505)

1) Turn off the copier.
2) Remove the EEPROM (IC102) from the new PCB. (Do not throw away the ROM yet.)
3) Remove the EEPROM (IC102) from the old PCB, and fit it into the socket (ICS 102) on the new PCB.
4) Remove the old PCB from the finisher, and mount the new PCB to the machine.
5) Turn on the copier. If the copier does not indicate 'E505', end the work (the contents of the memory on the old PCB have been backed up on the new PCB). If the copier indicates 'E505', go to the next step.

→ If 'E505' recurs, the EEPROM is faulty. You can cannot back up the memory by using the old EEPROM.

6) Turn off the copier, and replace the old EEPROM mounted to the new PCB with the new EEPROM.
7) Perform the steps under 11. "After Replacing the EEPROM".

13. Initializing the RAM

1) Set SW103 on the finisher controller PCB as follows:

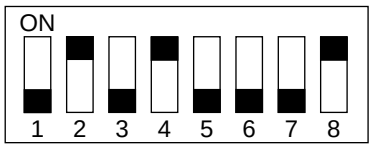

Figure 5-127

2) Press SW104 and SW105 on the finisher controller PCB at the same time.

• This will initialize the RAM.

3) Turn off the power, and shift all bits of SW103 to OFF.

14. Selecting Upward Curling Paper Mode

a. Outline

At times, the condition of paper causes it to curl upward when stacked on tray B, hindering the stacking of subsequent stacks. (See the figures below.)

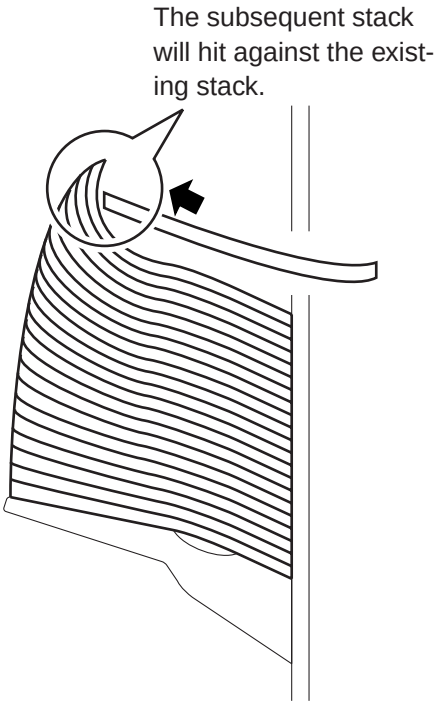

Figure 5-128

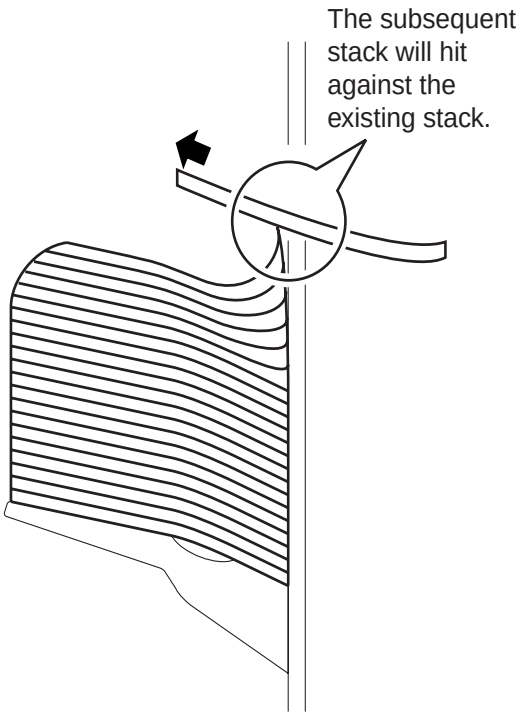

Figure 5-129

If such a problem occurs,

1) Turn over the paper inside the pickup cassette.
   If the upward curling is larger than the previous placement, turn over the paper inside the pickup cassette once again.
   If the upward curling continues to increase and subsequent stacks do not fall correctly on the existing stack, select upward curling paper mode.

b. Selecting Upward Curling Paper Mode

1) Turn off the power.
2) Set SW107 on the finisher controller PCB as follows:

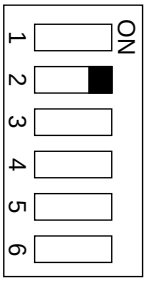

Figure 5-130

3) Turn off the power.

- In this mode, the speed at which the stack is delivered is increased so that the stack may fall without getting hooked on its trailing edge even when it hits against the existing stack. The rate of increase depends on the number of sheets the stack contains.
- When paper free of curling or paper with downward curling is used after selecting this mode, the high speed of delivery can cause the stacks to fall away from the stacking wall (Figure 5-130). As such, be fully sure when selecting this mode by thoroughly studying the type of paper used by the user.

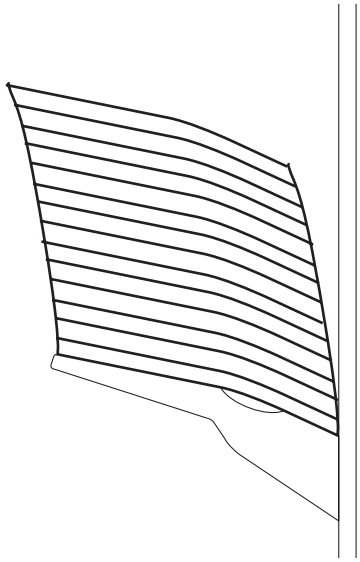

Figure 5-131

 COPYRIGHT © 1999 CANON INC.

15. Selecting Downward Curl Paper Mode

a. Outline

Depending on the condition, some types of paper tend to curl appreciably downward while being deposited on the processing tray. When a stack is delivered, the bottom sheet can get caught on the existing stack, causing it to roll up between the stacks as shown in Figure 5-132a for small size paper, or in the case of Z-folded paper, the trailing edge of the paper may roll up against the stack wall as shown in Figure 5-132b.

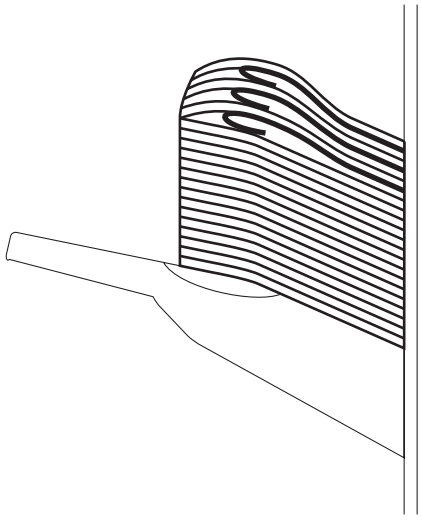

Figure 5-132a

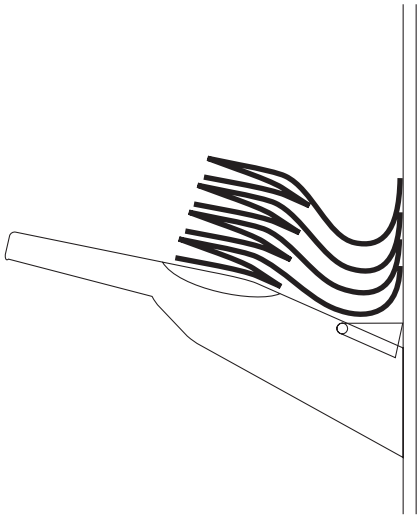

Figure 5-132b

b. Cause in the case of small size paper

1) With downward curling paper, the bottom sheets tend to hang down when they are deposited on the processing tray. (The front and rear hang down where the sheets are not supported by the tray auxiliary plate.)

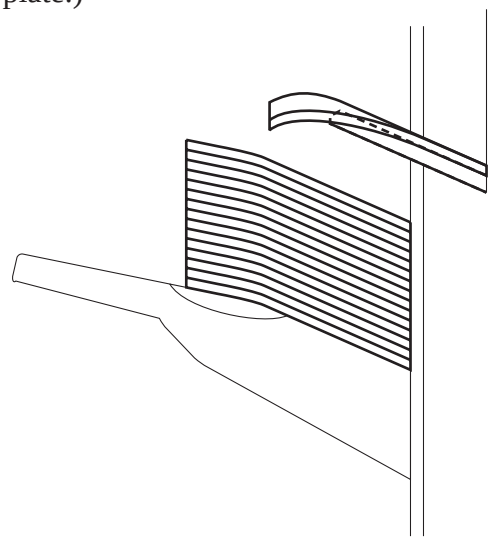

Figure 5-133

2) When the tray auxiliary plate is retracted for the stack to be delivered, the weight of the leading edges of the paper makes them hang down still farther, causing them to come into contact with the existing sheets on the tray.

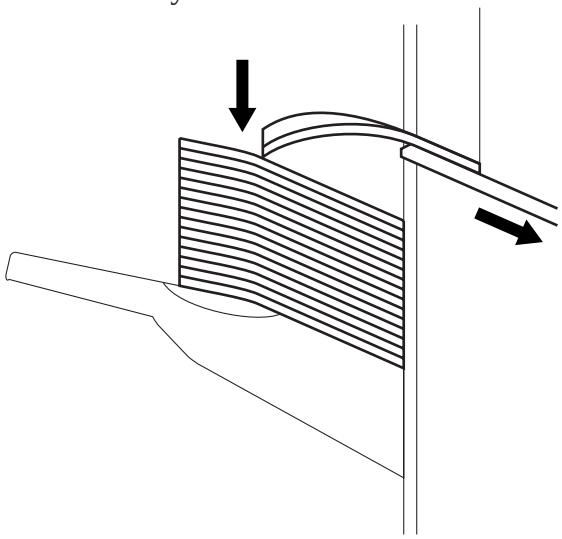

Figure 5-134

COPYRIGHT © 1999 CANON INC.

3) When the stack is delivered while the edges of the sheets are in contact with the existing sheets, the bottom sheet is likely to be rolled back between the stacks.

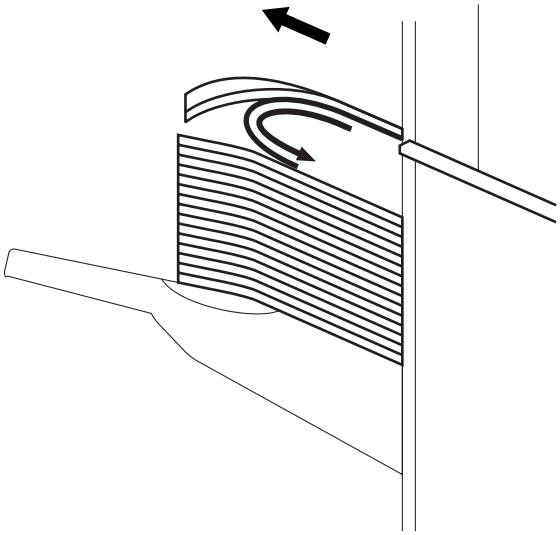

Figure 5-135

c. Cause in the case of Z-folded paper

1) With relatively soft Z-folded paper that curls downward, the bottom sheets tend to hang down when they are deposited on the processing tray. (The front and rear hang down where the sheets are not supported by the tray auxiliary plate.)

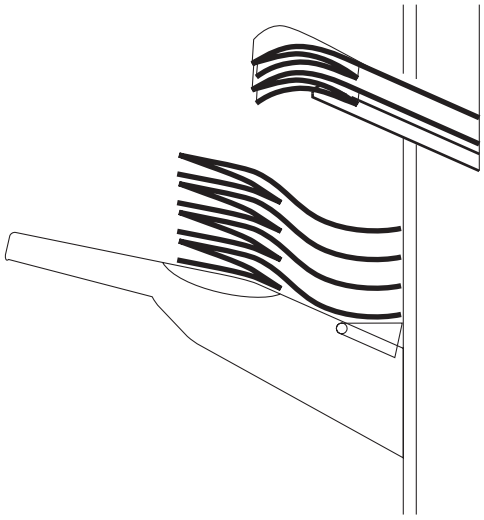

Figure 5-136

2) When the tray auxiliary plate is retracted for the stack to be delivered, the weight of the leading edges of the paper makes them hang down still farther, causing them to come into contact with the existing sheets on the tray. If delivery is continued, due to the softness of the paper, the leading edges will stop in that position.

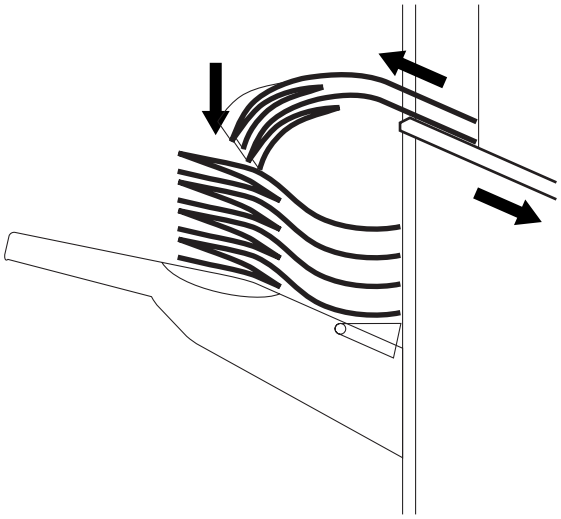

Figure 5-137

3) When delivery is finished, the trailing edges of the stack will be rolled up against the stack wall.

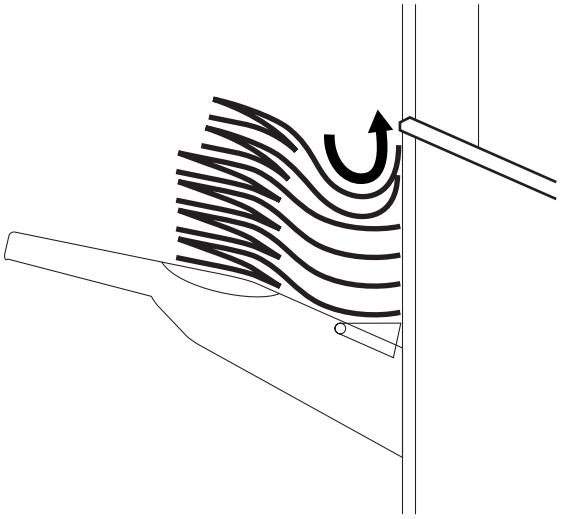

Figure 5-138

 COPYRIGHT © 1999 CANON INC.

d. Points to Note for Servicing

If the condition described in b. is noted, turn the paper in the cassette over, reset the cassette and try making copies.

- If the sheets are deposited normally, no further measures are required.
- If curling has increased after turning the paper in the cassette over, turn it back and select downward curl mode.
- If curling has decreased but the stacks are not deposited properly as shown in Figure 5-132, select downward curl mode.

e. Selecting Downward Curl Mode

1) Turn off the copier.
2) Remove the screw and remove the PCB cover. Shift bit 3 of SW107 on the finisher controller PCB to the ON position as shown in Figure 5-139.

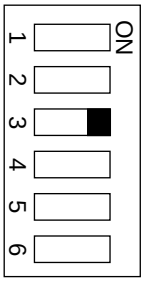

For bits other than bit 3, use the settings specific to the model and the mode.

Figure 5-139

3) Replace the PCB cover and screw, and turn on the copier.

f. Operation in Downward Curl Mode

[1] Retraction of the Tray Auxiliary Plate
In normal mode, stacking begins after the tray auxiliary plate has been retracted. In downward curl mode, on the other hand, stacking is performed while the tray auxiliary plate is being retracted.

[2] Detecting the Height of Tray B
Height correction operation will not be performed even if the user adds paper to tray B while the processing tray is in operation.

[3] Operation of Sub Tray
The sub tray does not ascend.

g. Operating Conditions

Operation when a stack of two or more sheets is deposited on the processing tray is as shown in the table below.

	Small size paper	Large size paper	Z-folding
Operation [1]	Applicable	Not applicable	Not applicable
Operation [2]	Applicable	Applicable	Applicable
Operation [3]	–	–	Applicable

Table 5-105

16. Adjusting the Folding Position (saddle stitcher)

Change the settings of bits 6 to 8 of DIPSW1 on the saddle stitcher controller PCB to adjust the folding position to the stitch position (adjust the travel of the paper position positioning plate).

If the saddle stitcher controller PCB has been replaced, transfer the settings of DIPSW1 from the old PCB to the new PCB. Make this adjustment when a folding position change is required for some reason.

1) Detach the finisher rear cover and tape the saddle stitcher inlet cover open sensor (actuator).
2) Insert the door switch tool into the front door switch in the finisher.
3) Pull out the saddle stitcher.

COPYRIGHT © 1999 CANON INC.

4) Detach the PCB cover and set bits 1 to 4 of DIPSW1 on the saddle stitcher controller PCB as shown below.

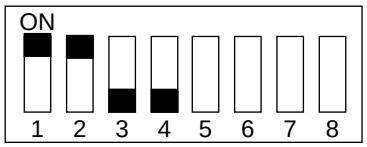

Leave the settings of bits 5 to 8 unchanged.

Figure 5-140

5) Press SW2 on the saddle stitcher controller PCB. The transfer motor (M31) will start running.
6) Mark the upper part of paper before feeding. Use two sheets of A3 or LDR paper.

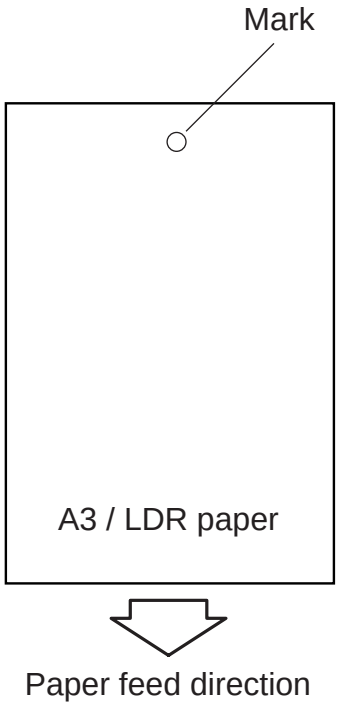

Figure 5-141

7) Open the inlet cover and feed the two sheets of paper. Hand-feed them until their leading edge hits the paper positioning plate.

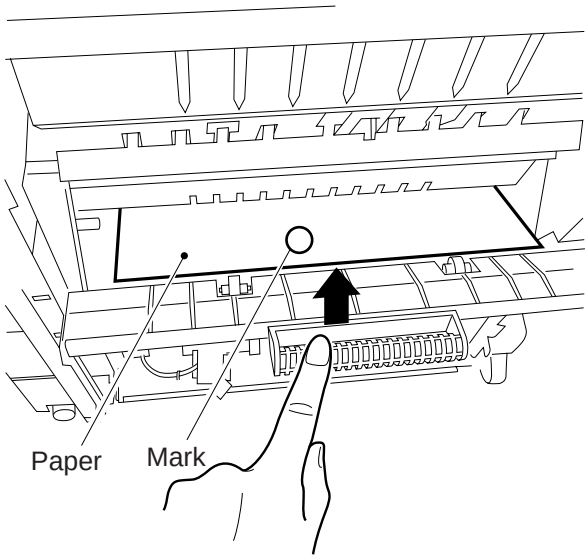

Figure 5-142

8) Close the entry door.
9) Press SW2 on the saddle stitcher controller PCB.

• The saddle stitcher stitches and folds the paper and delivers it automatically.

10) Measure the spacing (L) between the stitch position and the folding position. Use a positive or negative adjustment width depending on the vertical relationship between the stitch position and the folding position.

• Positive adjustment width, if the stitch position is lower than the folding position.
• Negative adjustment width, if the stitch position is higher than the folding position.

 COPYRIGHT © 1999 CANON INC.

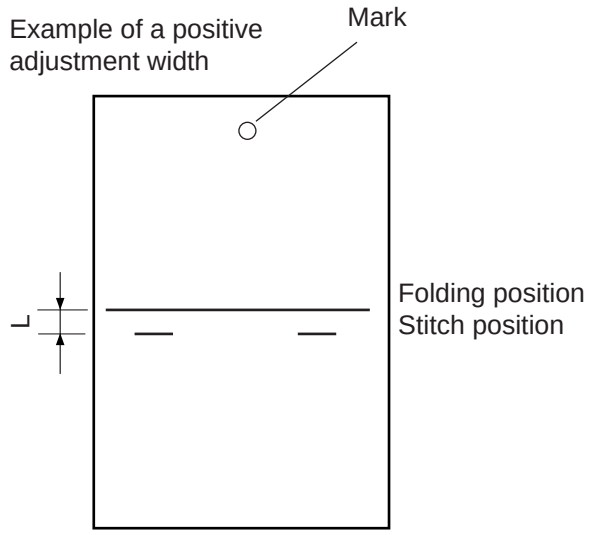

Figure 5-143

11) Change the settings of bits 6 to 8 of DIPSW1 according to the spacing with reference to the table below.

- Adjustment width of 0
  Leave the setting unchanged because the stitch position and the folding position match.
- Positive adjustment width
  Set DIPSW1 to the value in Table 5-105 less the spacing.

Example: If the current setting of DIPSW1 is +2 and the spacing is +2 mm, set DIPSW1 to -2.

- Negative adjustment width
  Set DIPSW1 to the value in Table 5-105 plus the spacing.

Example: If the current setting of DIPSW1 is -1 and the spacing is -1.5 mm, set DIPSW1 to +2.

DIPSW1 setting			Setting (in steps of 0.50 mm)
Bit 6	Bit 7	Bit 8	
OFF	ON	ON	+3
OFF	ON	OFF	+2
OFF	OFF	ON	+1
OFF	OFF	OFF	0
ON	OFF	ON	-1
ON	ON	OFF	-2
ON	ON	ON	-3

Do not change the setting below.

Bit 6	Bit 7	Bit 8
ON	OFF	OFF

Table 5-106

12) Turn off bits 1 to 4 of DIPSW1.

COPYRIGHT © 1999 CANON INC.

17. Stitch Position (saddle stitching adjustment)

Make this adjustment by choosing copier user mode.

1) Press USER MODE on the copier unit to enter user mode.
2) Press ADJUST/CLEAN in the LCD panel.
3) Press DOWN to open the 2/2 page.
4) Press SADDLE STITCHING ADJUSTMENT.
5) Press the required size key among A3, 11 x 17, B4, and A4R, LTRR.
6) Press DOWN or UP and enter an adjustment value in steps of 0.25 mm. Press CANCEL to cancel the adjustment.

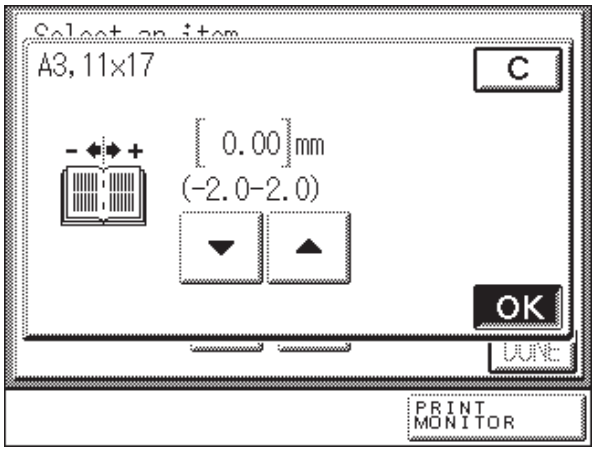

Figure 5-144

7) Press OK to enter a new adjustment value.

18. Adjusting Folder Transfer Path Paper Sensor 3 (S8)

Make this adjustment after the folder driver PCB or the transfer path sensor 3 has been replaced and also when jams occur frequently at the transfer path sensor 3.

1) Detach the folder rear and rear inner covers.
2) Detach the finisher PCB cover.
3) Make sure that there is no paper around transfer path sensor 3. If there is paper around, remove it.
4) Turn on the copier.
5) Set SW103 on the finisher controller PCB as shown below and then press SW104.

• The inlet motor starts running, turning on the power fan (FM1), which in turn supplies power to the folder driver PCB.

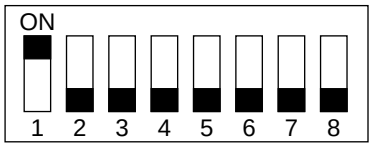

Figure 5-145

6) Turn VR791 so LED791 on the folder driver PCB will flicker.

• The sensitivity of the sensor photodetector is thus adjusted.
• If LED791 lights constantly when VR791 is turned, the sensor is faulty. Replace either the sensor or the driver PCB.

7) Turn off the copier.
8) Turn off all bits of SW103 on the finisher controller PCB.
9) Reattach the finisher PCB cover.
10) Reattach the folder rear and rear inner covers.

 COPYRIGHT © 1999 CANON INC.

19. Adjusting Inserter Paper Set Sensor (S9)

Make this adjustment after the inserter driver PCB or the paper set sensor has been replaced and also when jams occur frequently at the paper set sensor or the sensor wrongly detects paper setting.

1) Detach the inserter rear cover.
2) Make sure that there is no paper in the inserter tray. If there is paper in the inserter tray, remove it.
3) Turn on the copier.
4) Turn VR841 so LED843 on the inserter driver PCB will flicker.

- The sensitivity of the sensor photodetector is thus adjusted.
- If LED791 lights constantly when VR843 is turned, the sensor is faulty. Replace either the sensor or the driver PCB.

5) Turn off the copier.
6) Reattach the inserter rear cover.

COPYRIGHT © 1999 CANON INC.

B. Mechanical

1. Adjusting the Inserter Pickup Tray Horizontal Registration

If the pickup tray of the inserter is displaced appreciably to the front or the rear, the saddle stitcher assembly can fail to keep insert sheets in order, causing the stack to consist of poorly aligned, stitched, folded and delivered sheets. The following are cases in which misalignment tends to occur most often:

- the insert sheets are made of thick paper
- the insert sheets are not copies (i.e., do not have copy images)
- the stack consists of 15 sheets or therearound

a. Symptoms

a-1 If the inserter pickup tray is displaced to the front (misalignment 1),

1) The insert sheet is moved into the saddle unit closer to the front in relation to the existing stack.
2) Of the two aligning plates of the saddle sticker, the one at the front comes into contact with the insert sheet first; as a result, the insert sheet is held down by the feeding path, turned around, and then positioned.
3) The stack is stitched and folded while its insert sheet and other sheets are displaced from each other.
   The above is referred to as "misalignment 1."

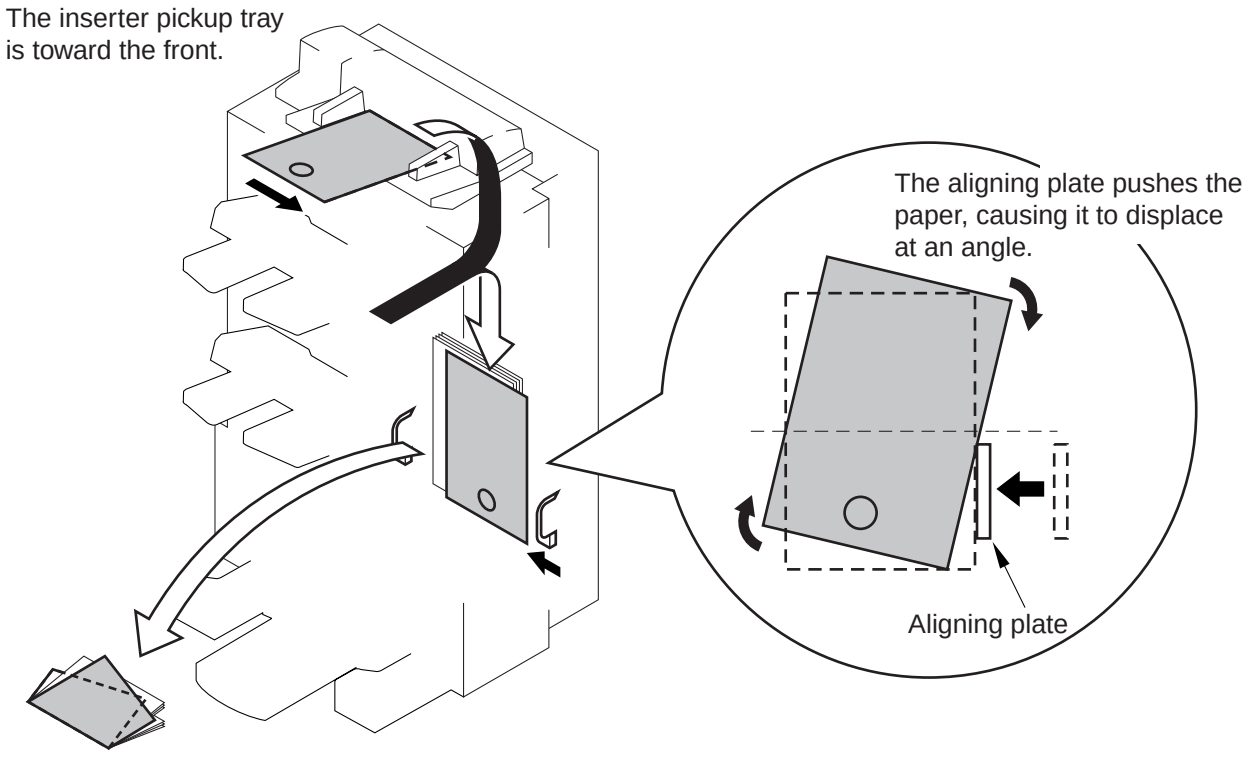

Figure 5-146

a-2 If the inserter pickup tray is displaced to the rear (misalignment 2),

1) The insert sheet is moved into the saddle unit closer to the front in relation to the exiting stack.
2) Of the two aligning plates of the saddle stitcher, the one at the rear comes into contact with the sheet first, causing the insert sheet to be held down by the feeding path, rotated, and then positioned.
3) The stack is stitched and folded while its insert sheet and other sheets are displaced from each other.
   The above is referred to as "misalignment 2."

 COPYRIGHT © 1999 CANON INC.

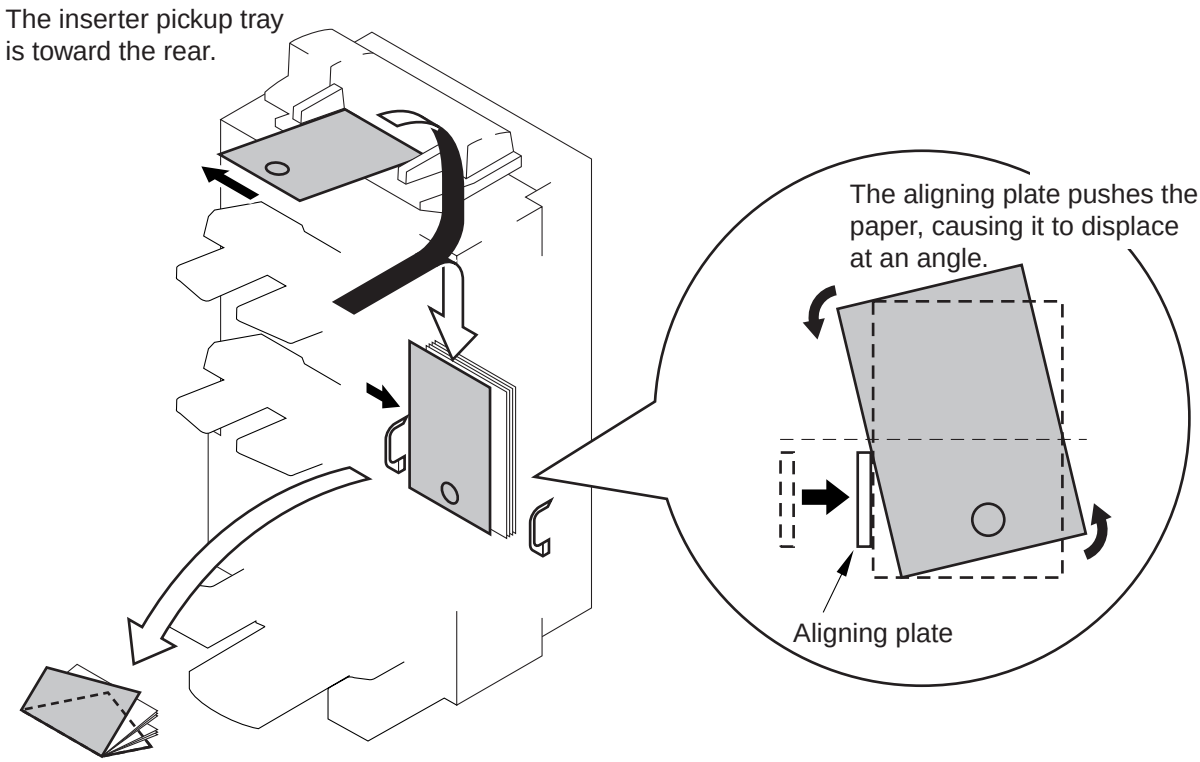
The inserter pickup tray is toward the rear.
The aligning plate pushes the paper, causing it to displace at an angle.
Aligning plate

Figure 5-147

Reference:

1. So that you may have a better view of the condition of misalignment, put a marking [1] on the insert sheet and feed it so that the marking is the trailing edge in feeding direction.

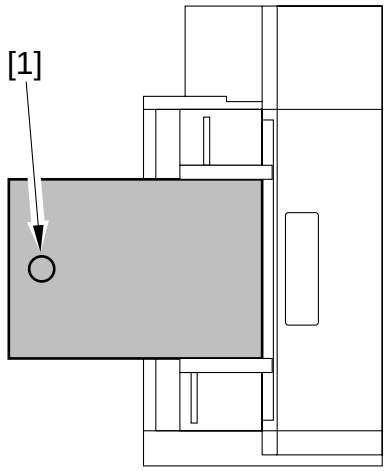

Figure 5-148

2. Take measurements in relation to the side with the marking. If you use the side without the marking, the measurements may be affected by the possible difference in length between the insert sheet and the stack.

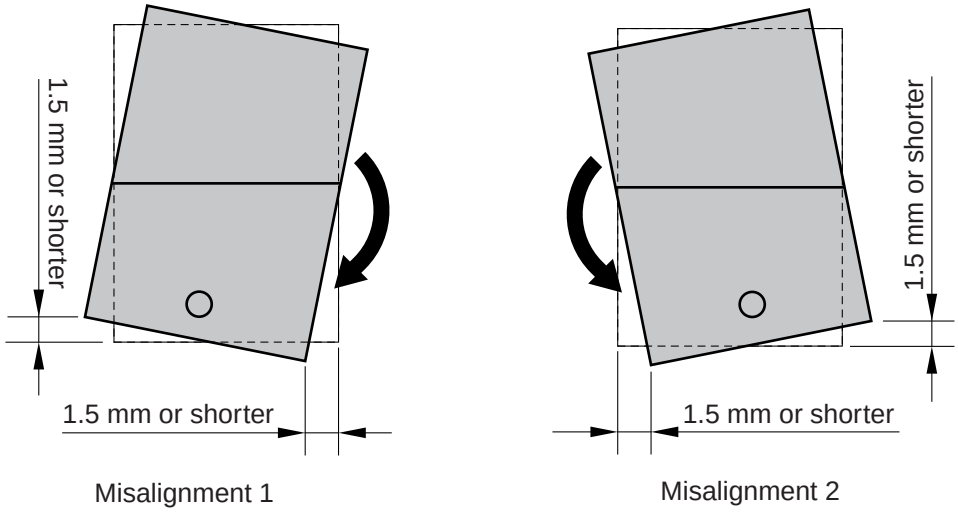

Figure 5-149

 COPYRIGHT © 1999 CANON INC. CANON SADDLE FINISHER-D2 REV.0 AUG. 1999 PRINTED IN JAPAN (IMPRIME AU JAPON)

b. Adjusting the Horizontal Registration

b-1 In the case of misalignment 1,

1) Loosen the two fixing screws [1] of the inserter pickup tray .
2) Shift the inserter pickup tray [2] toward the rear.

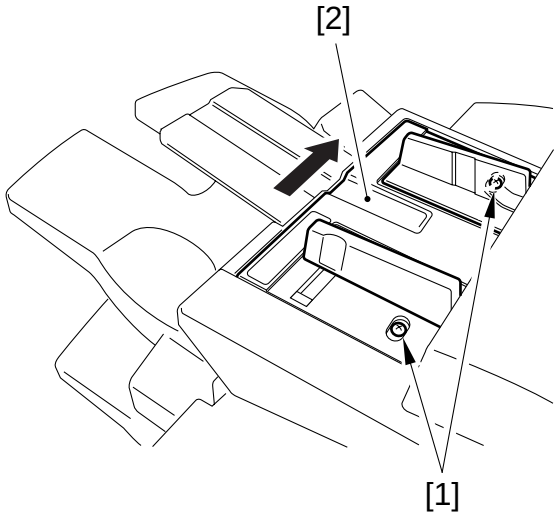

Figure 5-150

3) Loosen the two fixing screws.
4) Check for misalignment. If the alignment is correct, end the work. Otherwise, go to step 2) under B.1, and repeat the work as necessary. If misalignment 2 occurs as a result of excess correction, make adjustments as indicated under b.2.

b-2 In the case of misalignment 2,

1) Loosen the two fixing screws [1] of the inserter pickup tray.
2) Shift the inserter pickup tray [2] toward the front.

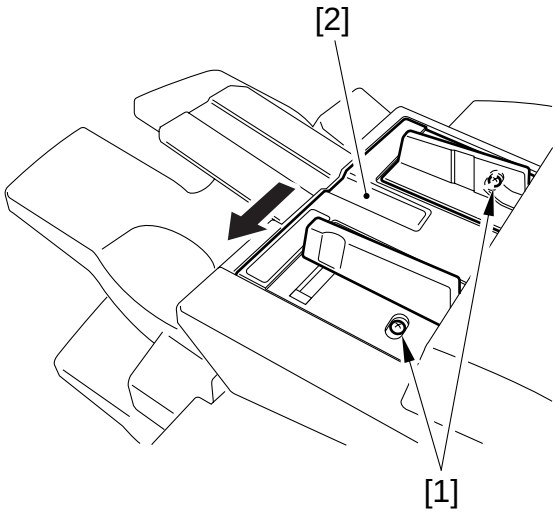

Figure 5-151

3) Loosen the two fixing screws.
4) Check for misalignment. If the alignment is correct, end the work. Otherwise, go to step 2) of b.2, and repeat the work as necessary. If misalignment 1 occurs as a result of excess correction, make adjustments as indicated under b.1.

II . ARRANGEMENT OF ELECTRICAL PARTS

A. Finisher

1. Sensors

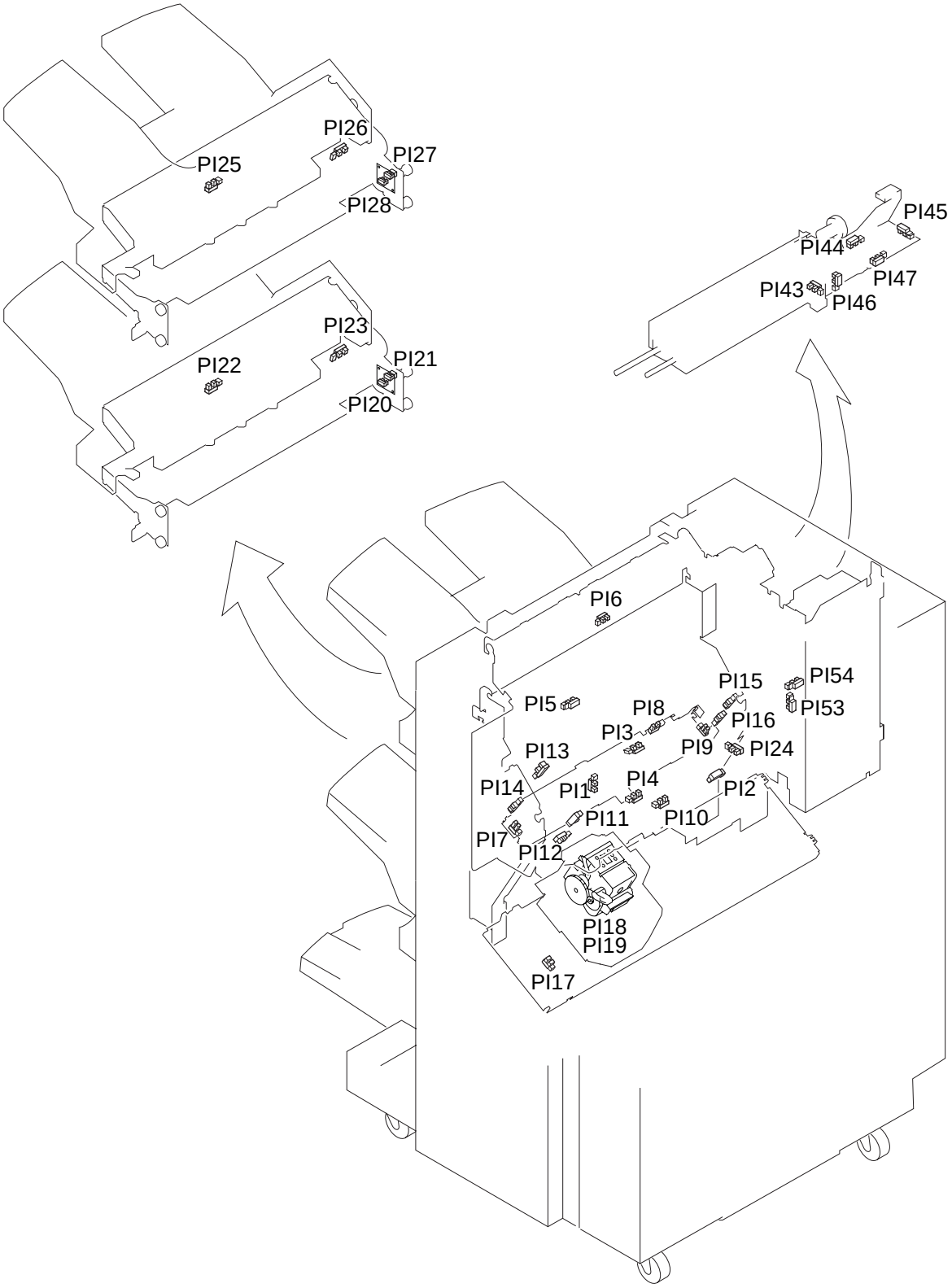

Figure 5-201

COPYRIGHT © 1999 CANON INC.

Name	Notation	Function
Photointerrupt-ers	PI1	Front door detection
	PI2	Inlet path paper detection
	PI3	Buffer path rear paper detection
	PI4	Sort delivery detection
	PI5	Upper cover open detection
	PI6	Non-sort delivery paper detection
	PI7	Front jogging plate home position detection
	PI8	Stack delivery detection
	PI9	Rear jogging plate home position detection
	PI10	Swing motor clock detection
	PI11	Tray auxiliary plate retraction detection
	PI12	Stack feeder motor clock detection
	PI13	Shutter home position detection
	PI14	Paddle home position detection
	PI15	Swing guide closed detection
	PI16	Swing guide open detection
	PI17	Stapler shift home position detection
	PI18	Staple edging detection (inside the stapler)
	PI19	Stapling home position detection (inside the staple)
	PI20	Tray B upper position detection
	PI21	Tray B lower position detection
	PI22	Tray B paper detection
	PI23	Tray B idle rotation detection
	PI24	Tray B lower limit detection
	PI25	Tray A paper sensor
	PI26	Tray A idle rotation detection
	PI27	Tray A up position sensor
	PI28	Tray A lower position sensor

Table 5-201

1a. Sensors (punching)

Name	Notation	Function
Photointerrupt-ers (punching)	PI43	Punch paper edge sensor
	PI44	Punch rotation home position sensor
	PI45	Punch home position sensor
	PI46	Punch paper edge sensor home position sensor
	PI47	Punch completion sensor
	PI53	Punch waste container set sensor
	PI54	Punch waste feed sensor

Table 5-201a

COPYRIGHT © 1999 CANON INC.

2. Microswitches

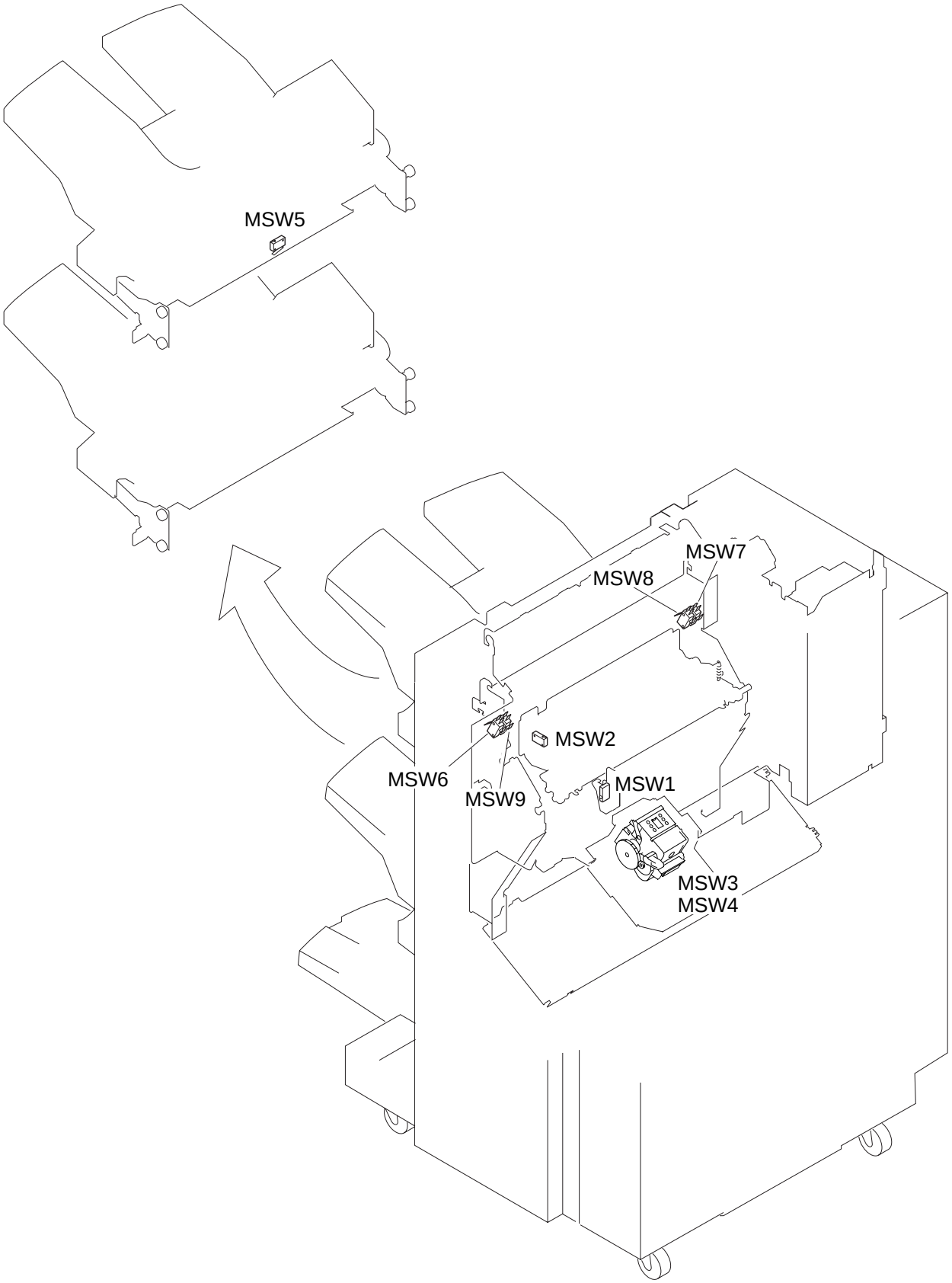

Figure 5-202

COPYRIGHT © 1999 CANON INC.

Name	Notation	Function
Microswitches	MSW1	Front door open detection
	MSW2	Swing guide open detection
	MSW3	Staple detection (inside the stapler)
	MSW4	Cartridge detection (inside the stapler)
	MSW5	Tray proximity switch
	MSW6	Tray safety detection (front)
	MSW7	Tray safety detection (rear)
	MSW8	Staple safety detection (rear)
	MSW9	Staple safety detection (front)

Table 5-202

COPYRIGHT © 1999 CANON INC.

3. Motors

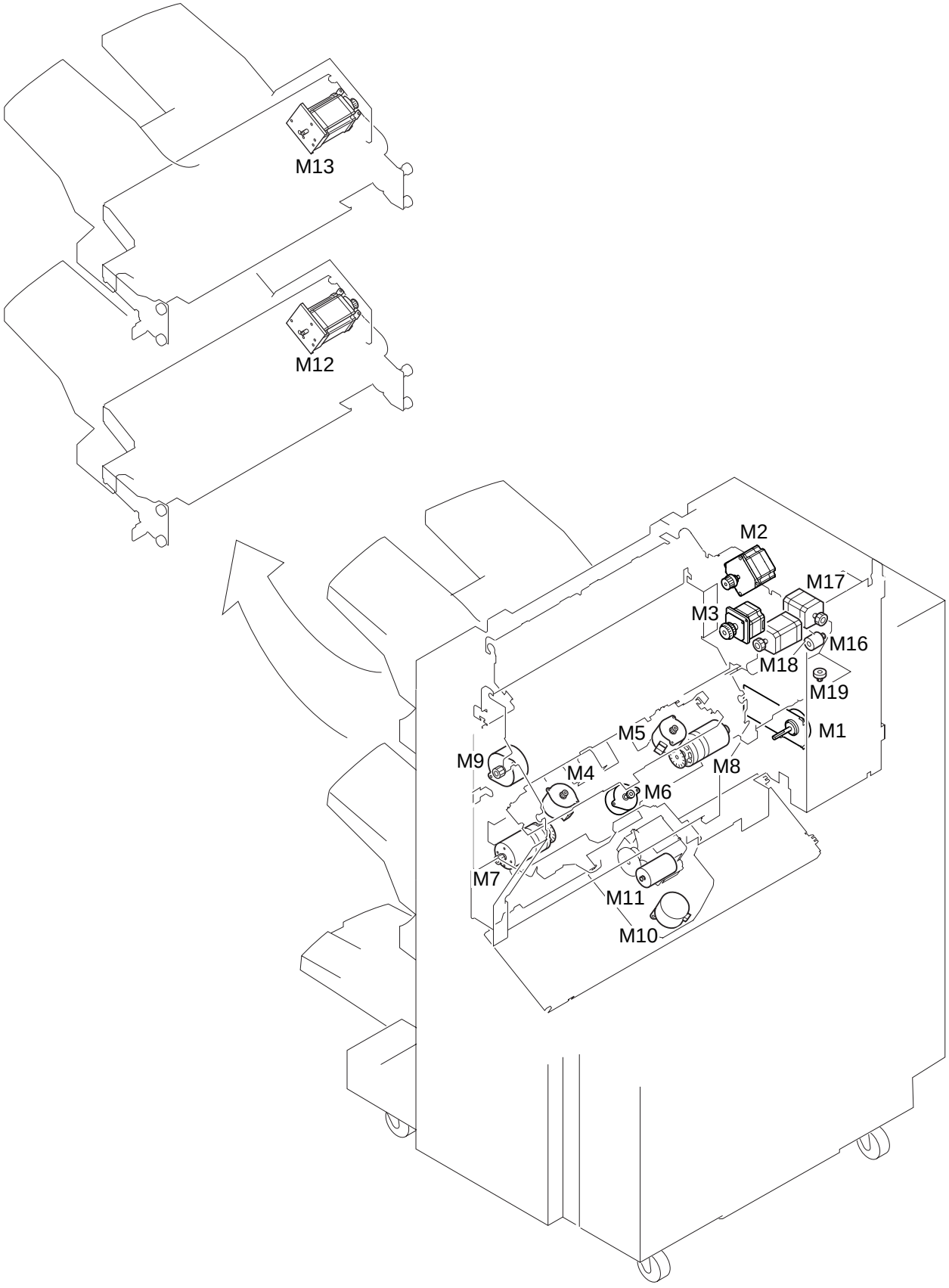

Figure 5-203

COPYRIGHT © 1999 CANON INC.

Name	Notation	Function
Motor	M1	Inlet motor
	M2	Buffer motor
	M3	Delivery motor
	M4	Front jogging plate motor
	M5	Rear jogging plate motor
	M6	Tray auxiliary plate motor
	M7	Stack delivery motor
	M8	Swing motor
	M9	Paddle motor
	M10	Stapler shift motor
	M11	Stapler motor (inside the stapler)
	M12	Tray B lift motor
	M13	Tray A lift motor
	M16	Punch chad delivery motor
	M17	Punch registration motor
	M18	Punch turning motor
	M19	Punch sensor shift motor

Table 5-203

COPYRIGHT © 1999 CANON INC.

4. Solenoids

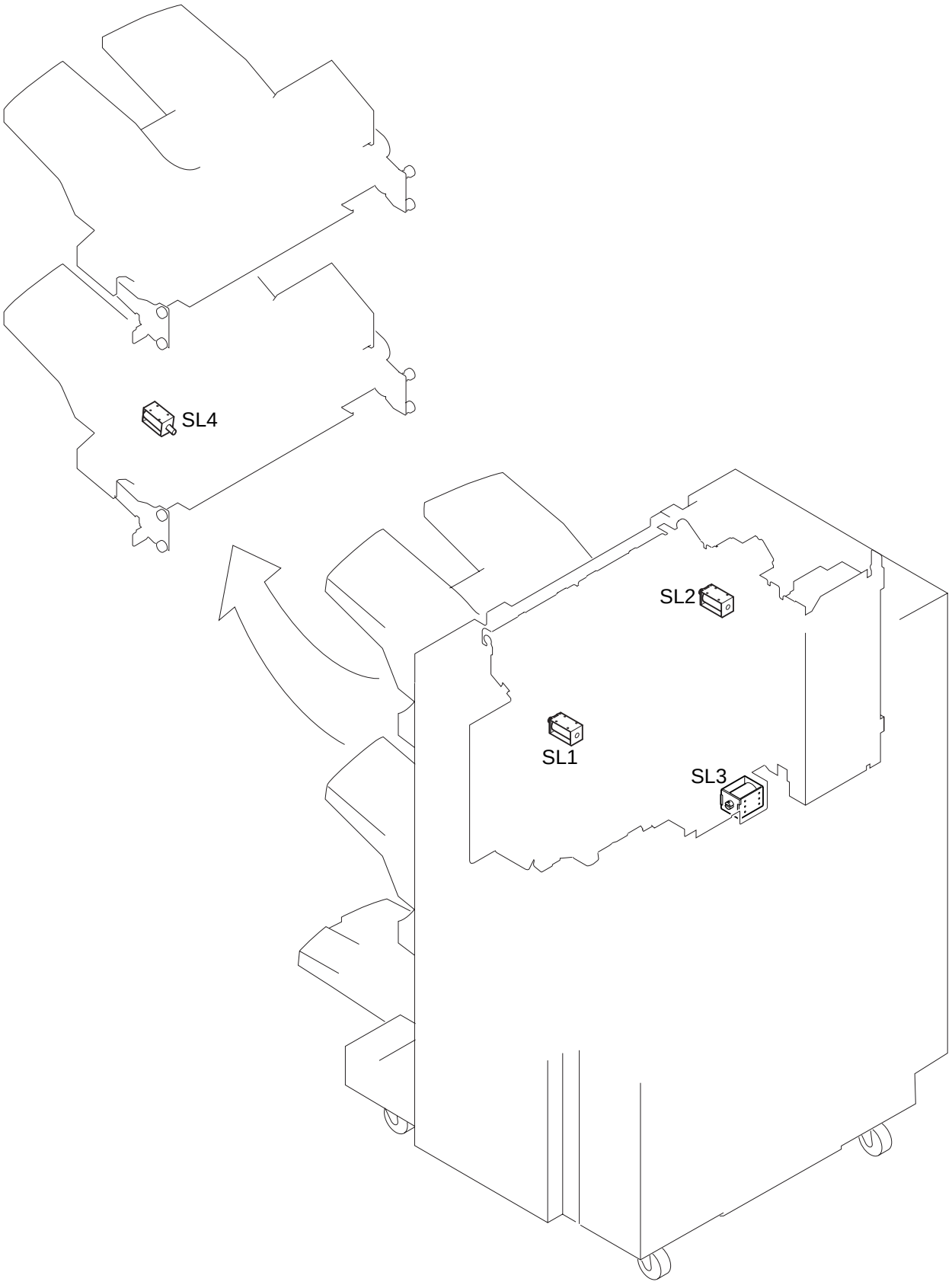

Figure 5-204

COPYRIGHT © 1999 CANON INC.

Name	Notation	Function
Solenoid	SL1	Buffer switching solenoid
	SL2	Upper path switching solenoid
	SL3	Knurled belt solenoid
	SL4	Sub tray solenoid (when equipped with the folder)

Table 5-204

COPYRIGHT © 1999 CANON INC.

5. PCBs

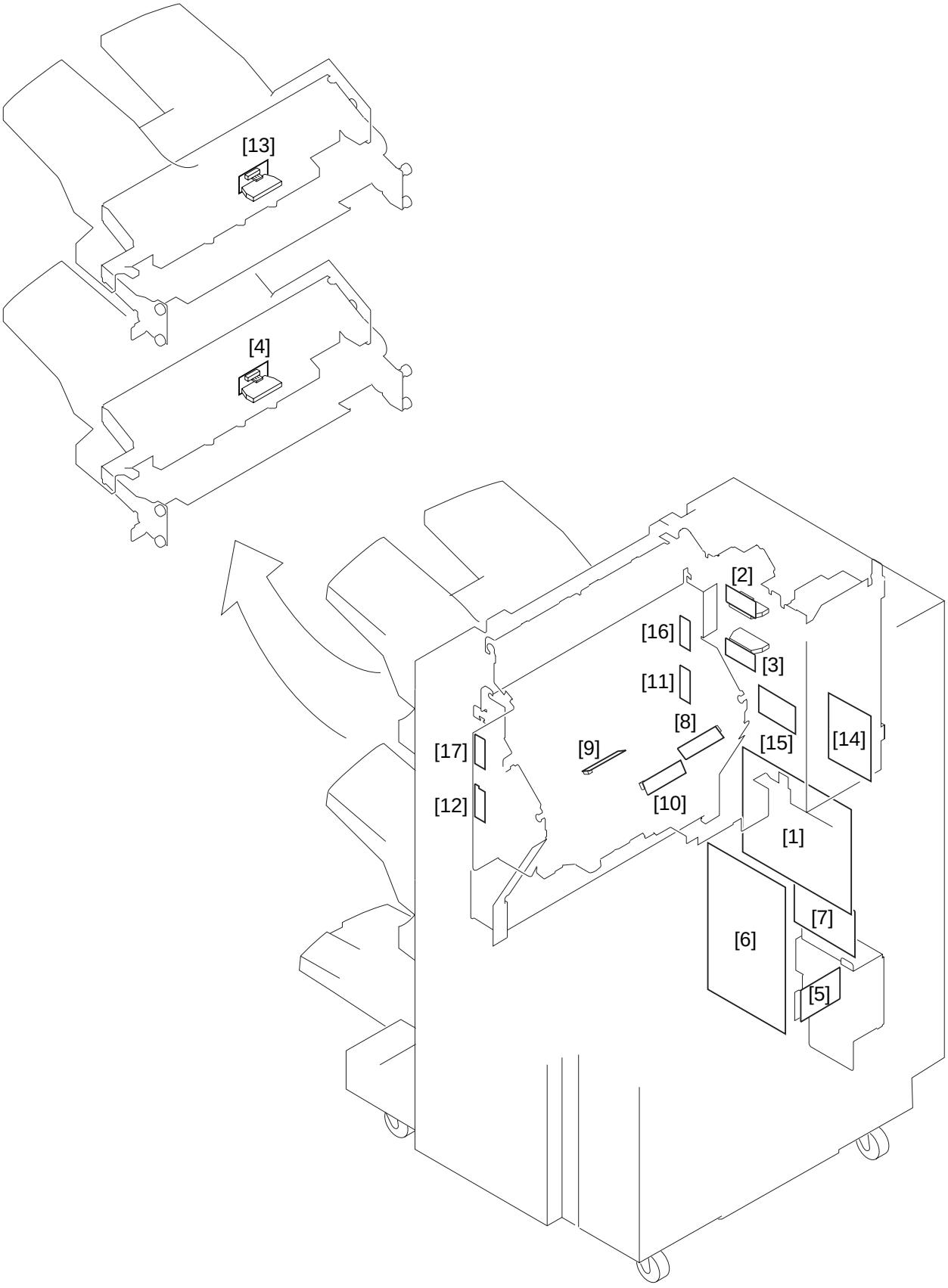

Figure 5-205

COPYRIGHT © 1999 CANON INC.

Ref.	Name
[1]	Finisher controller PCB
[2]	Buffer motor driver PCB
[3]	Delivery motor driver PCB
[4]	Tray B lifter motor driver PCB
[5]	AC fuse PCB
[6]	Switching regulator
[7]	Fuse PCB
[8]	Inlet path paper detection (S1)
[9]	Buffer path paper detection (S2)
[10]	Lower path paper detection (S3)
[11]	Tray B paper sensor LED
[12]	Tray B paper sensor PCB (S4)
[13]	Tray A lift motor driver PCB
[14]	Punch driver PCB
[15]	Punch waste sensor PCB
[16]	Tray A paper sensor LED
[17]	Tray A paper sensor PCB (S5)

Table 5-205

COPYRIGHT © 1999 CANON INC.

6. Fans

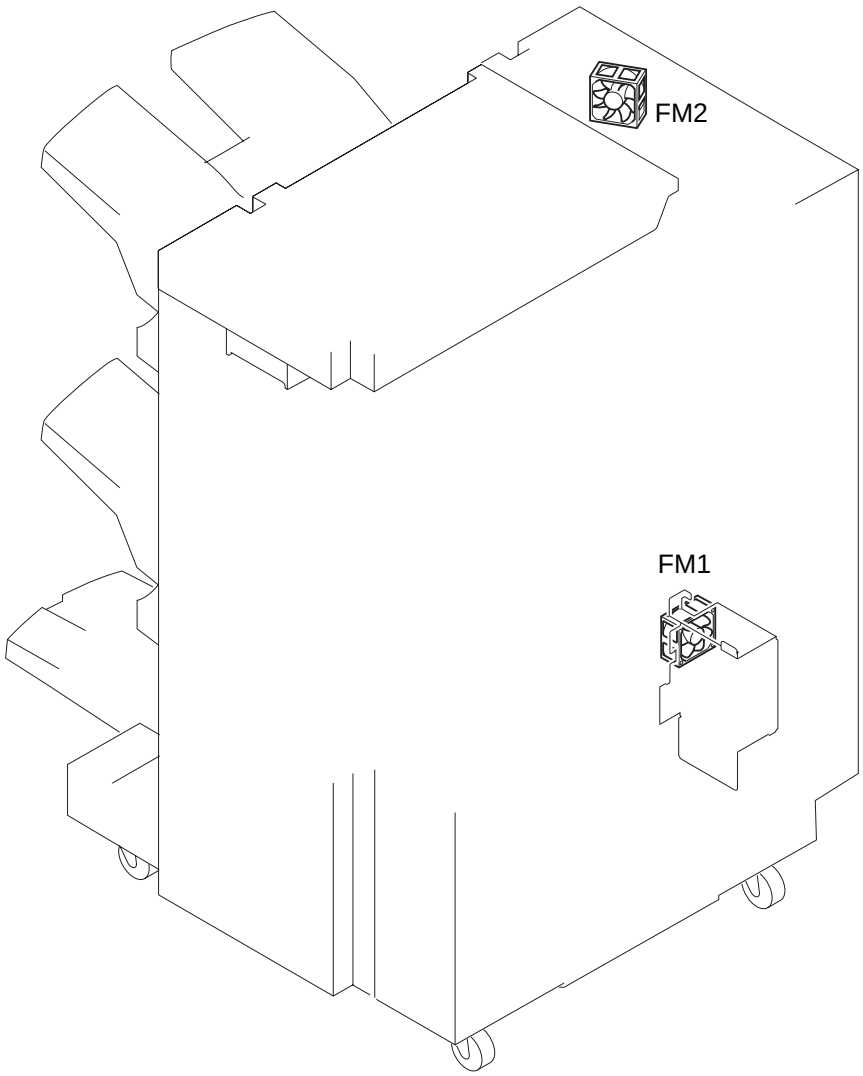

Figure 5-206

FM1	Power supply fan
FM2	Punch fan

Table 5-206

COPYRIGHT © 1999 CANON INC.
CANON SADDLE FINISHER-D2 REV.0 AUG. 1999 PRINTED IN JAPAN (IMPRIME AU JAPON)

Blank page

COPYRIGHT © 1999 CANON INC.

B. Saddle Stitcher

1. Photointerrupters

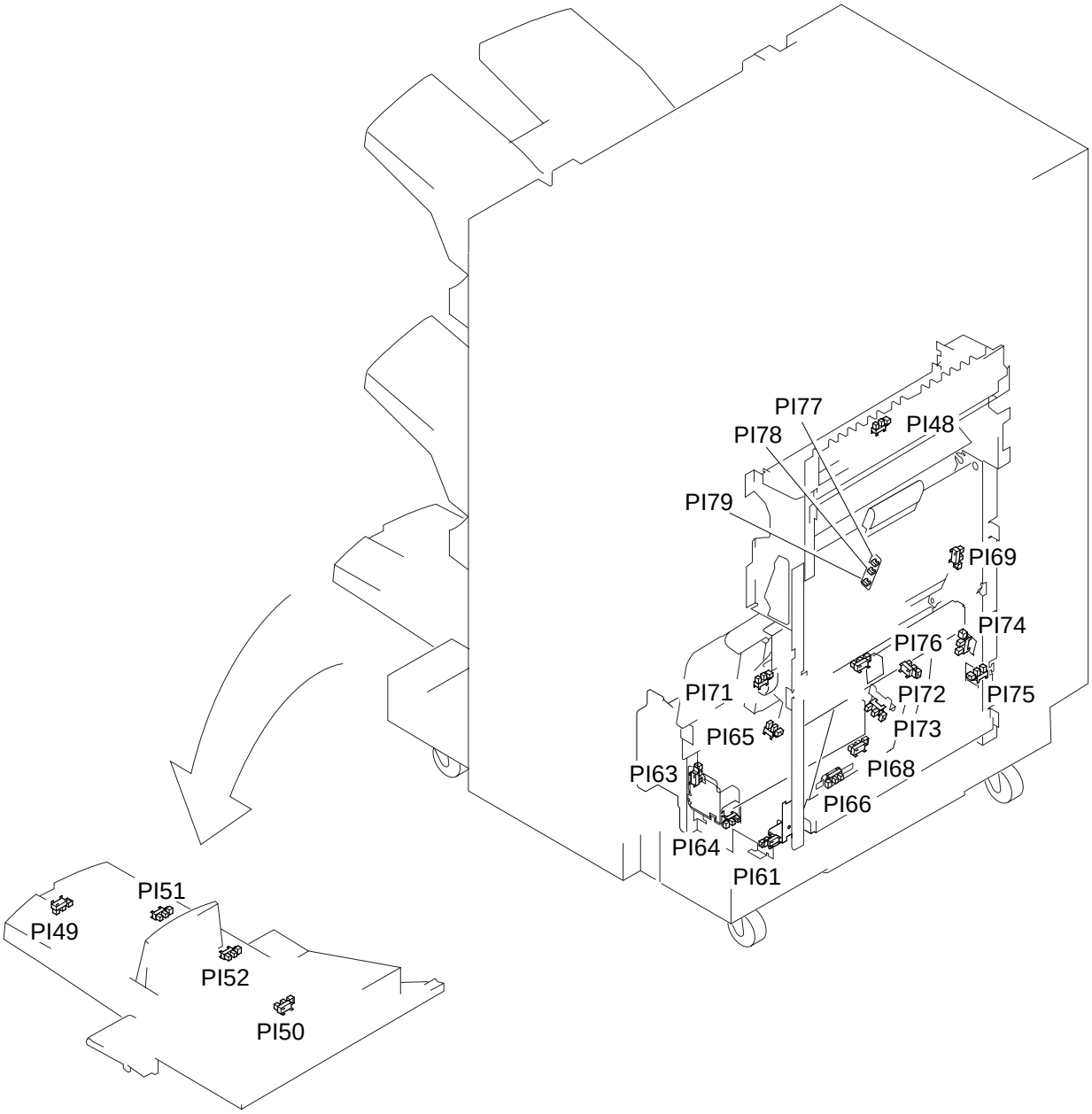

Figure 5-207

COPYRIGHT © 1999 CANON INC.
CANON SADDLE FINISHER-D2 REV.0 AUG. 1999 PRINTED IN JAPAN (IMPRIME AU JAPON)

Name	Notation	Function
Photointerrupt-ers	PI48	Saddle inlet paper sensor
	PI49	Saddle tray home position sensor
	PI50	Saddle tray paper sensor 1
	PI51	Saddle tray paper sensor 3
	PI52	Saddle tray paper sensor 2
	PI61	Paper pressuer plate motor clock sensor
	PI63	Exit cover open sensor
	PI64	Folding motor clock sensor
	PI65	Jogging plate positioning home position sensor
	PI66	Paper positioning plate home position sensor
	PI68	Paper positioning plate paper sensor
	PI69	Inlet cover open sensor
	PI71	Paper delivery sensor
	PI72	Crescent roller phase sensor
	PI73	Guide home position sensor
	PI74	Paper pressure plate home position sensor
	PI75	Paper pressure plate top position sensor
	PI76	Vertical path paper sensor
	PI77	Paper sensor 1 (on paper sensor PCB)
	PI78	Paper sensor 2 (on paper sensor PCB)
	PI79	Paper sensor 3 (on paper sensor PCB)

Table 5-207

COPYRIGHT © 1999 CANON INC.

2. Switches

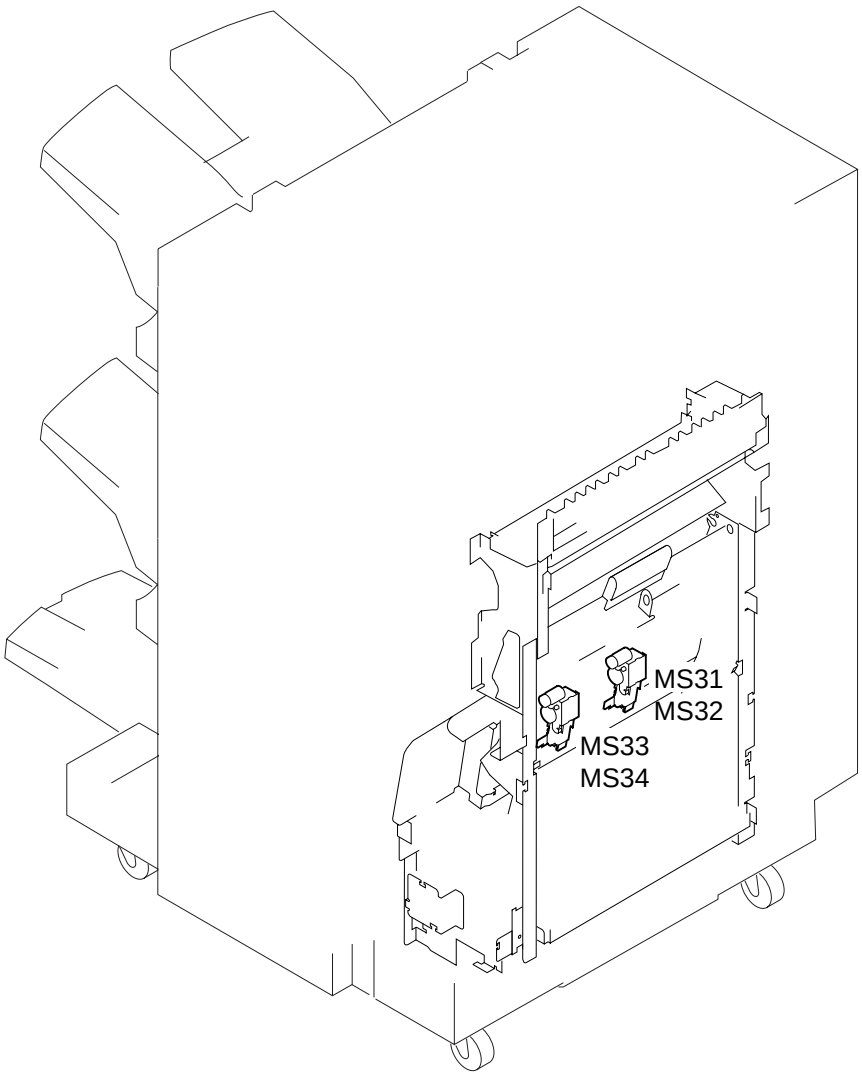

Figure 5-208

COPYRIGHT © 1999 CANON INC.
CANON SADDLE FINISHER-D2 REV.0 AUG. 1999 PRINTED IN JAPAN (IMPRIME AU JAPON)

Name	Notation	Function
Microswitches	MS31	Staple sensor (rear)
	MS32	Stitching home position sensor (rear)
	MS33	Staple sensor (front)
	MS34	Stitching home position sensor (front)

Table 5-208

COPYRIGHT © 1999 CANON INC.

3. Motors

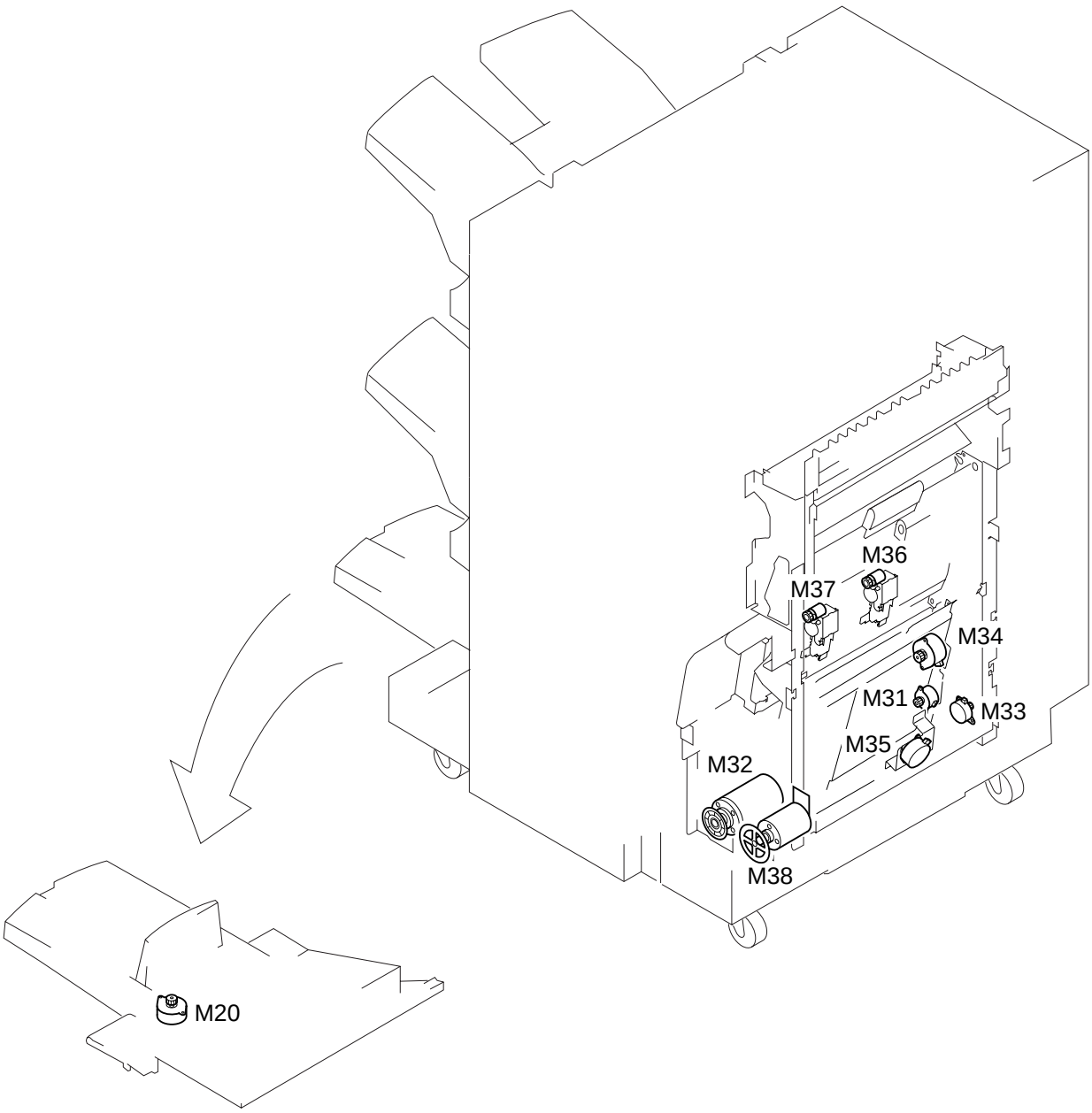

Figure 5-209

COPYRIGHT © 1999 CANON INC.

Name	Notation	Function
Motors	M20	Saddle tray motor
	M31	Feed motor
	M32	Paper folding motor
	M33	Guide motor
	M34	Paper positioning plate motor
	M35	Jogging motor
	M36	Stitching motor (rear)
	M37	Stitching motor (front)
	M38	Paper pressure plate motor

Table 5-209

COPYRIGHT © 1999 CANON INC.

4. Solenoids

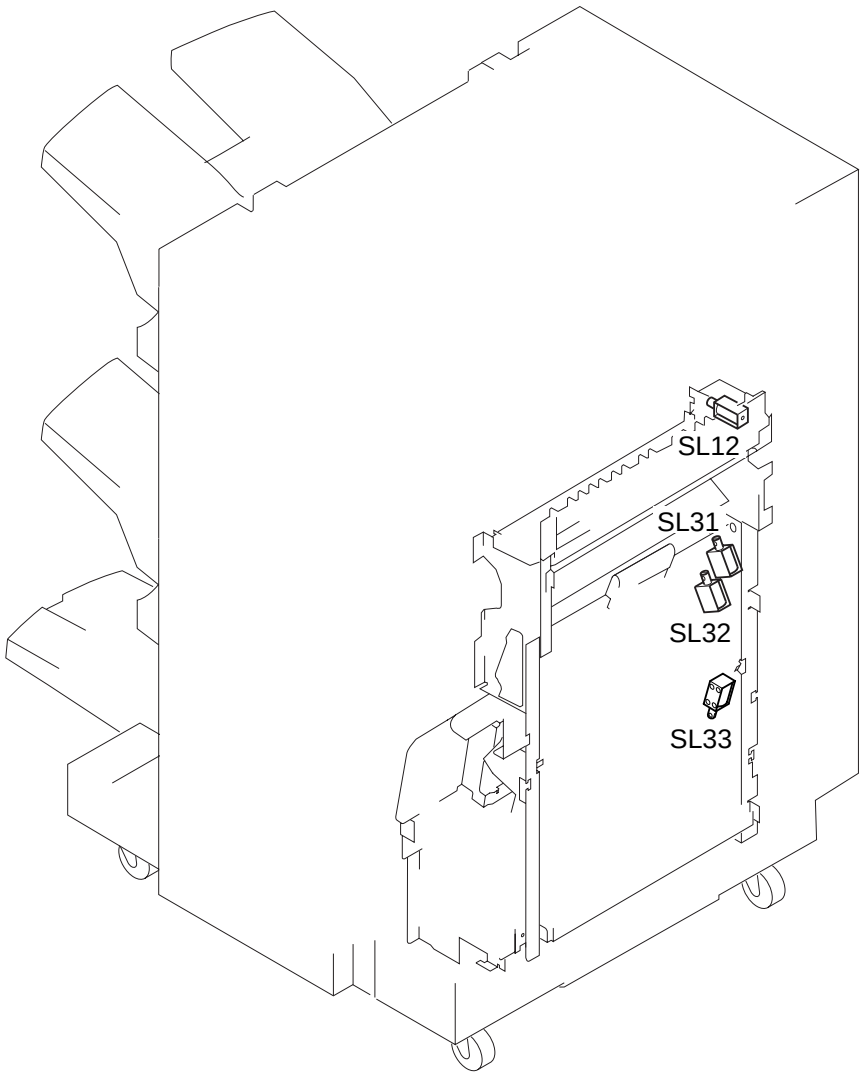

Figure 5-210

COPYRIGHT © 1999 CANON INC.

Name	Notation	Function
Solenoids	SL12	Saddle inlet solenoid
	SL31	Paper deflector 1 solenoid
	SL32	Paper deflector 2 solenoid
	SL33	Feed roller contact solenoid

Table 5-210

COPYRIGHT © 1999 CANON INC.

5. PCBs

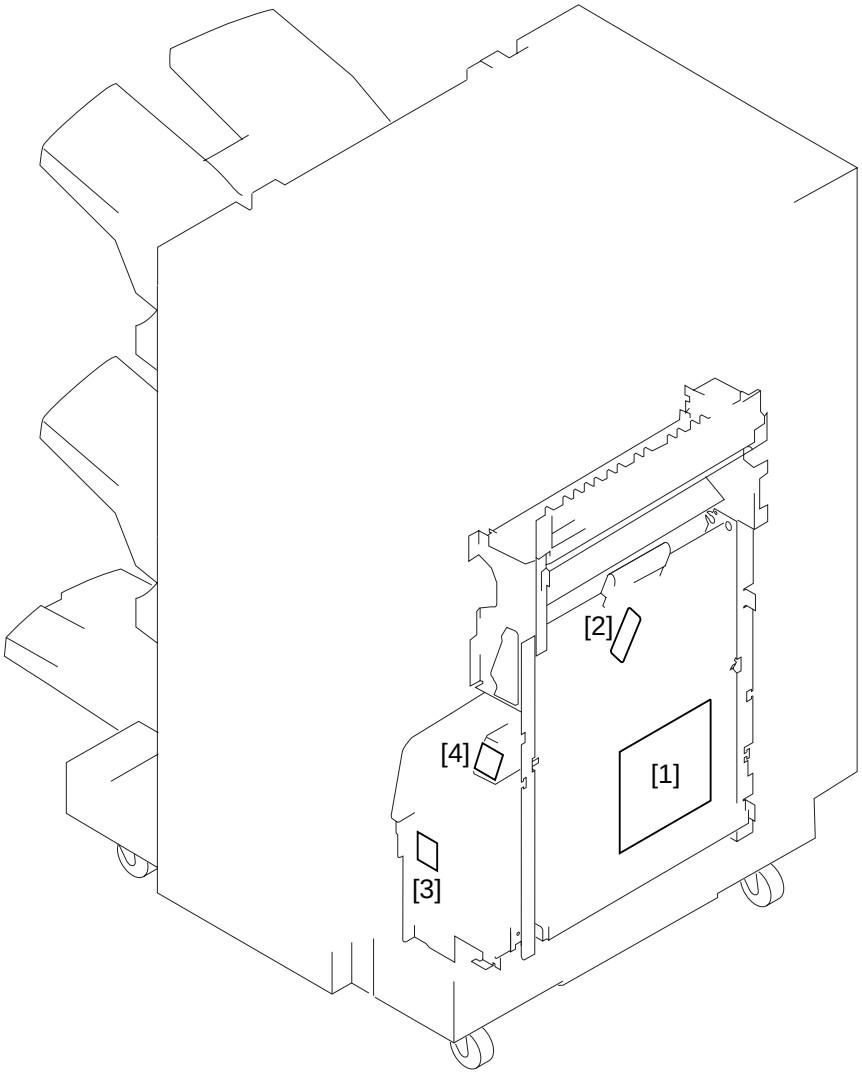

Figure 5-211

COPYRIGHT © 1999 CANON INC.

Symbol	Name
[1]	Saddle stitcher controller PCB
[2]	Paper sensor PCB
[3]	Saddle jam LED PCB
[4]	Option PCB

Table 5-211

COPYRIGHT © 1999 CANON INC.

C. Paper Folding Unit B1 (folder)

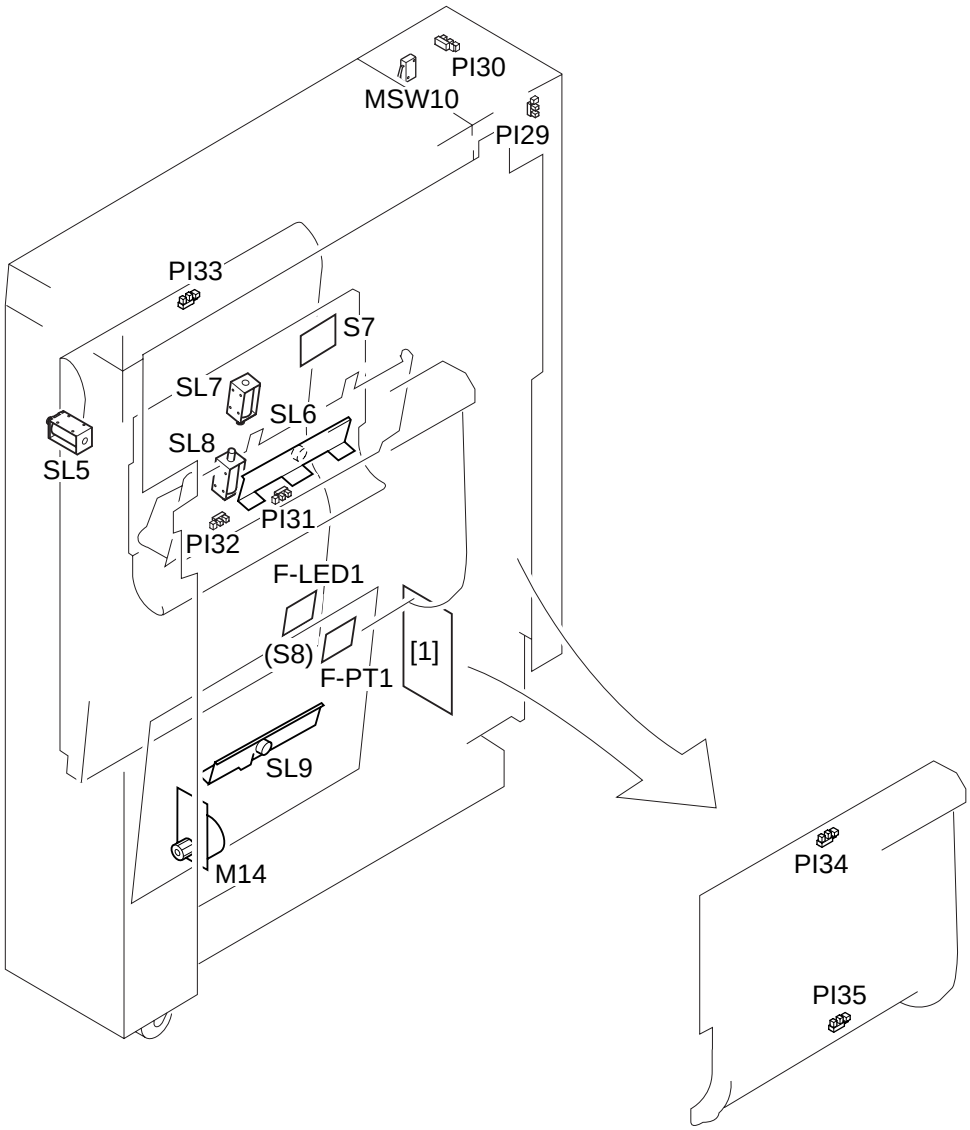

Figure 5-212

COPYRIGHT © 1999 CANON INC.

Name	Notation	Function
Motor	M14	Folder motor
Solenoids	SL5	Folder inlet solenoid
	SL6	B4 Z-folding stopper 2 solenoid
	SL7	Depressurization solenoid
	SL8	Pressurization solenoid
	SL9	B4 Z-folding stopper 1 solenoid
Photointerrupters	PI29	Folder set sensor
	PI30	Top cover open/close sensor
	PI31	Folding path residual paper sensor 1
	PI32	Folding path residual paper sensor 3
	PI33	Feed path paper sensor 4
	PI34	Feed path paper sensor 1
	PI35	Folding path residual paper sensor 2
Sensors	S7	Feed path sensor 2
	F-LED1 (S8)	Feed path sensor 3
	F-PT1 (S8)	Feed path sensor 3
Switch	MSW10	Folder upper door switch
Board	[1]	Folder driver PCB

Table 5-212

COPYRIGHT © 1999 CANON INC.

D. Cover Insertion Unit - A1

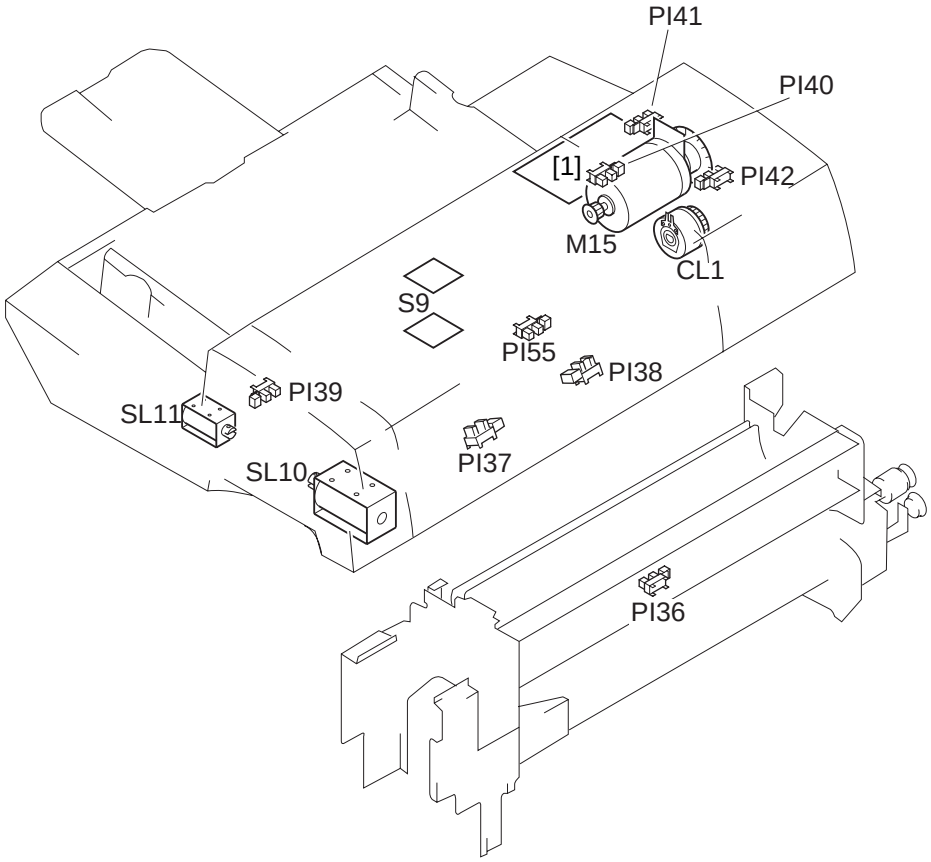

Figure 5-213

COPYRIGHT © 1999 CANON INC.

Name	Notation	Function
Photointerrupters	PI36	Inserter feed sensor 3
	PI37	Inserter feed sensor 1
	PI38	Inserter feed sensor 2
	PI39	Inserter cover open sensor (front)
	PI40	Inserter cover open sensor (rear)
	PI41	Inserter open sensor
	PI42	Inserter motor clock sensor
	PI55	Inserter paper feed sensor
Sensors	S9	Inserter paper set sensor (photoemitter)
		Inserter paper set sensor (photodetector)
Motor	M15	Inserter motor
Solenoids	SL10	Inserter paper supply solenoid
	SL11	Inserter stopper plate solenoid
Clutch	CL1	Inserter separation clutch
Board	[1]	Inserter driver PCB

Table 5-213

COPYRIGHT © 1999 CANON INC.

E. LEDs and Check Pins by PCB

Of the LEDs and check pins used in the machine, those needed in the field are discussed.

Caution:
the variable resistors (VR) and check pins not found in the tables are for factory use only, and require special tools and high accuracy. Do not touch them in the field.

1. Finisher Controller PCB

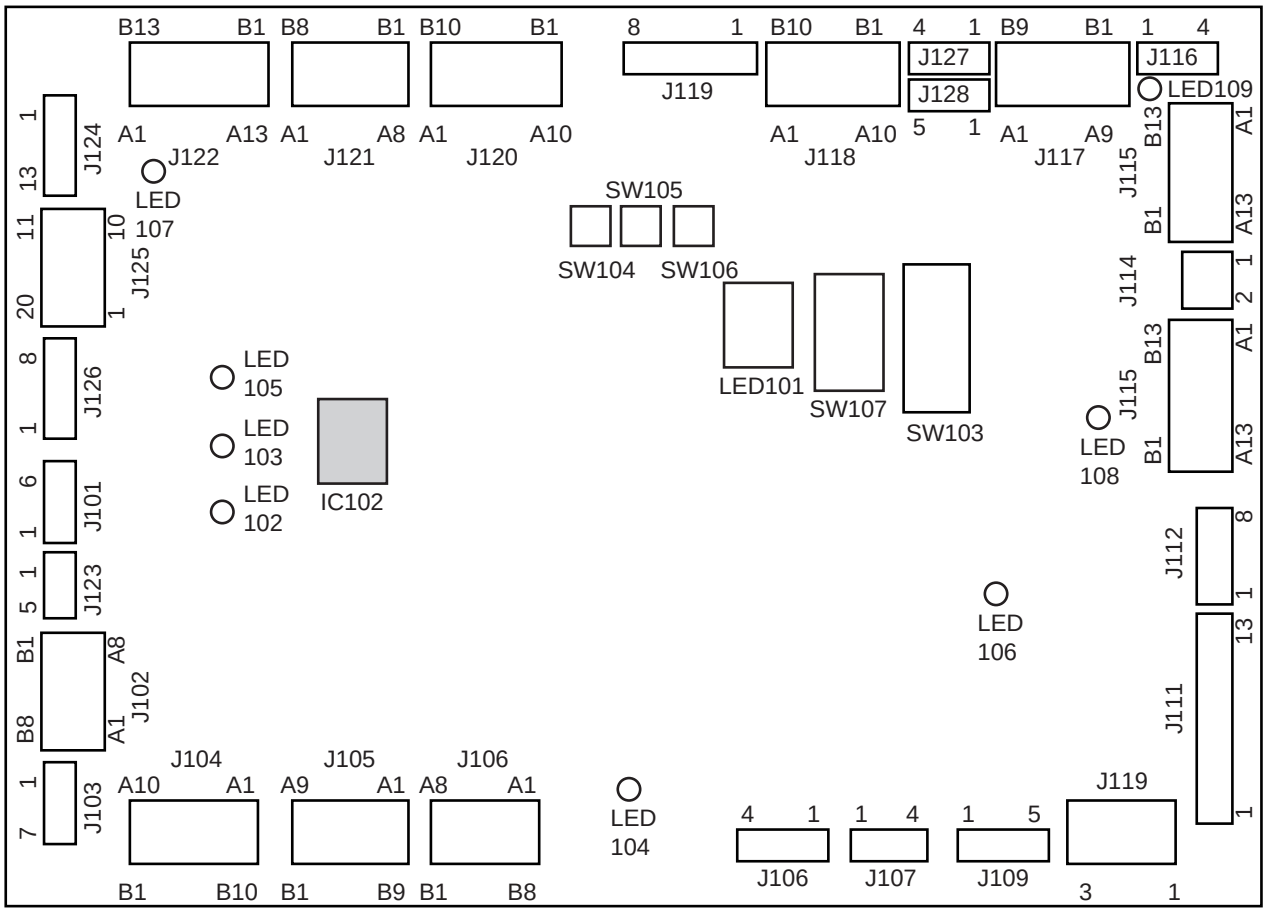

Figure 5-214

 COPYRIGHT © 1999 CANON INC.

LED	Description
LED101	Indicates various states: • error • jam • settings
LED102	Turns on when 5V (J101-5) is supplied.
LED103	Turns on when 24VR (J101-1) is supplied.
LED104	Turns on when the stack delivery motor (M7) is rotating normally (in response to clock pulses from the stack delivery motor clock sensor (PI12).
LED105	Turns on when 24VU (J101-3) is supplied. Turns off when the copier's power saving key is pressed.
LED106	Flashes when the slave RAM (IC121) is in operation.
LED107	Turns on when the inlet motor (M1) is rotating normally (in response to clock pulses form the inlet motor).
LED108	Turns on when 36VTRY (J114-1) is supplied.
LED109	Turns on when 36VTRYA (J116-4) is supplied. Turns off when separated by the module separation switch. Turns off when the tray proximity switch (MSW5) is pressed.

Table 5-214

Switch	Description
SW103	Use it to set various adjustment modes.
SW104	Use it to start and store adjustment inputs.
SW105	Use it to enter adjustment values in + direction.
SW106	Use it to enter adjustment values in - direction.
SW107	Use it to set various modes.

Table 5-215

State	LED101 indication
Error	In response to an error, 'E5XXxx' will be indicated. • E5XX→error code • xx→detail code
Jam	In response to a jam, 'Jxx' will be indicated in sequence. • Jxx→jam code
Settings	For indication, see the items under various adjustments.

Table 5-216

COPYRIGHT © 1999 CANON INC.

2. Saddle Stitcher Controller PCB

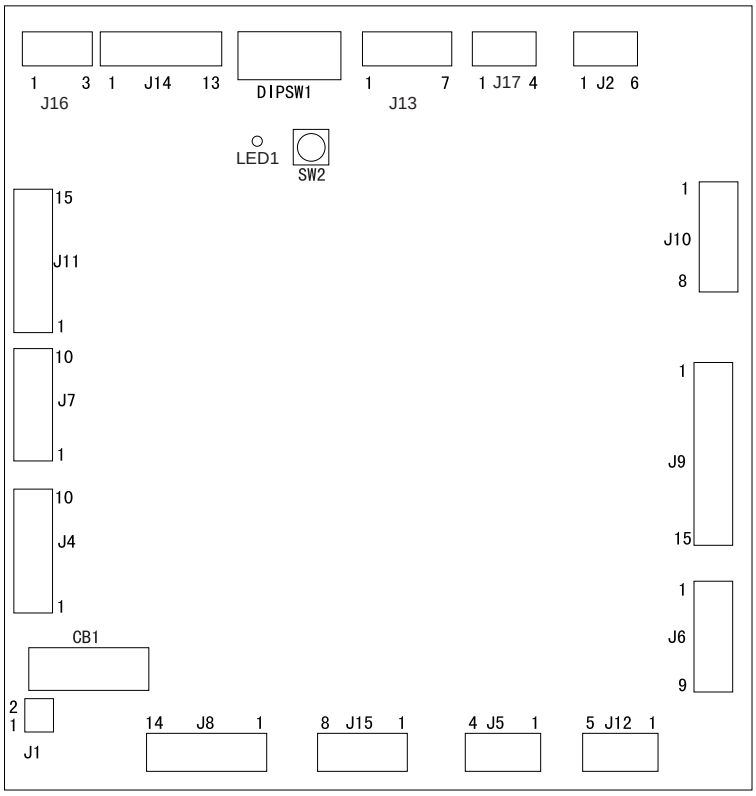

Figure 5-215

Switch	Function
DIPSW1 bits 1 to 2	Start correcting the gap between the stitch position and the folding position.
DIPSW1 bits 6 to 8	Enter the value to correct the gap between the stitch position and the folding position.
SW2	Start correcting the gap between the stitch position and the folding position.
LED1	Indicates the status of the saddle stitcher.

Table 5-217

 COPYRIGHT © 1999 CANON INC.

No.	State	LED1 indication method
1	Normal	Cyclically turns on for 1 second and off for 1 second. 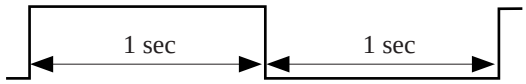
2	Error	Cyclically turns on for 0.1 second and off for 0.1 second. 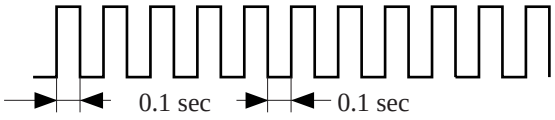
3	Jam	Cyclically turns on for 0.25 second and off for 0.25 second. 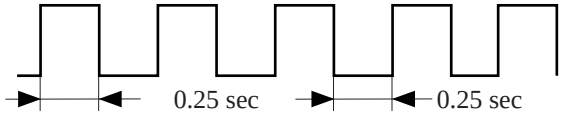
4	Tray alarm	Cyclically turns on for 0.5 second and off for 0.1 second. 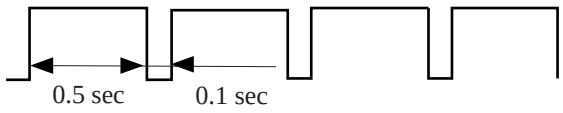
5	Staple alarm	Cyclically turns on for 1 second and off for 0.1 second. 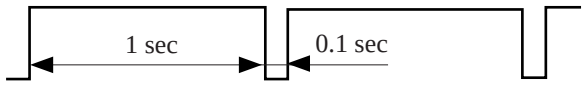

LED1 indicates the status of the saddle stitcher as it is on or off. More detailed status information is available from finer controller PCB LED101 or the copier unit.
Note 1: Saddle stitcher controller PCB DIPSW1 bits 1 to 4 must be off.
Note 2: In states 2 to 5 above, pressing saddle stitcher controller PCB SW2 switches back a factory indication. Pressing again returns the status indication.

Table 5-218

COPYRIGHT © 1999 CANON INC.

3. Punch Driver PCB

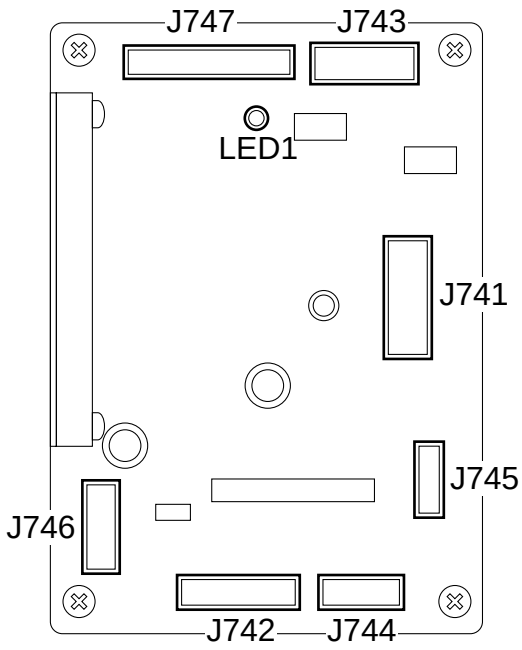

Figure 5-216

LED	Function
LED1	Lights when 24VPHN and 5V are supplied with the PFANON signal on. Goes off when disconnected with the module separation switch.

Table 5-219

 COPYRIGHT © 1999 CANON INC.

4. Folder Driver PCB

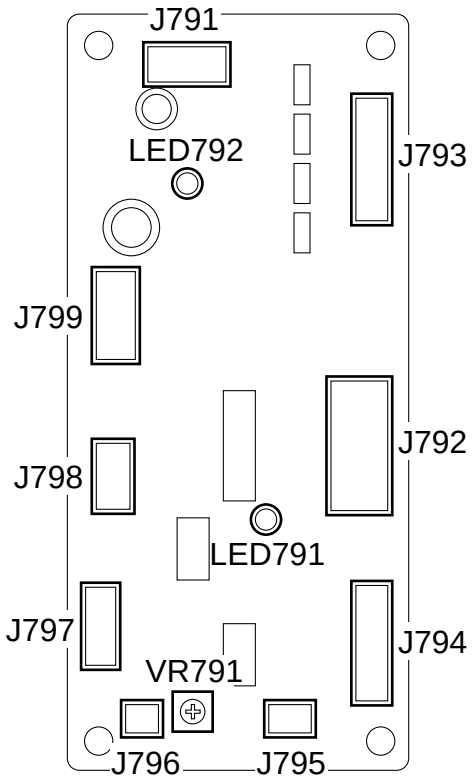

Figure 5-217

LED	Function
LED792	Lights when 24VFLD and 5V are supplied with the FANON signal on. Goes off when disconnected with the module separation switch.
LED791	Indicates the result of adjustment of transfer path paper sensor 3 (S8) and the status of paper detection. On: Paper detected Flickering: Paper not detected, and adjustment complete Off: Sensor adjustment recommended

Table 5-220

Volume	Function
VR791	Used to adjust transfer path paper sensor 3 (S8).

Table 5-221

5. Inserter Driver PCB

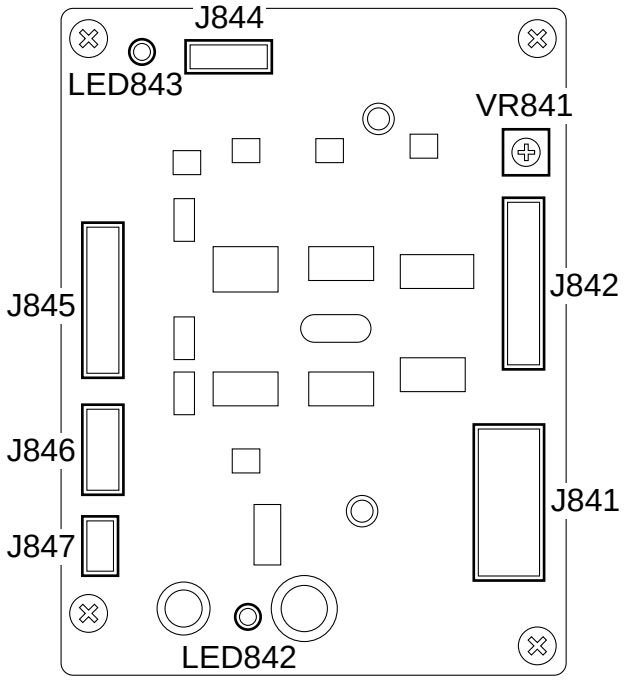

Figure 5-218

LED	Function
LED842	Lights when 24VINS and 5V are supplied with the FANON signal on. Goes off when disconnected with the module separation switch and also when the copier power saver switch is pressed or when the copier enters low power mode.
LED843	Indicates the result of adjustment of the paper set sensor (S9) and the status of paper detection. On: Paper detected Flickering: Paper not detected, and adjustment complete Off: Sensor adjustment recommended

Table 5-222

Volume	Function
VR841	Used to adjust the paper set sensor (S9).

Table 5-223

 COPYRIGHT © 1999 CANON INC.

6. DIP Switch Settings and Functions

The settings and functions are for SW103 on the finisher controller PCB.

Settings	Item	Description
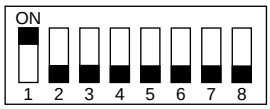	Inlet motor operation	A press on SW104 causes the motor to rotate. Another press stops it.
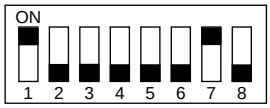	Buffer motor operation	
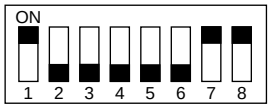	Delivery motor operation	
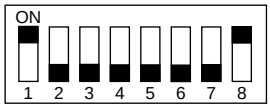	Folder motor operation	
	Inserter motor operation	
	Stack delivery motor operation	
	Swing operation	A press on SW104 opens the swing guide. Another press closes it.
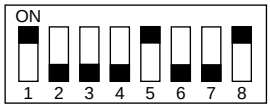	Auxiliary tray operation	A press on SW104 moves the auxiliary tray to move outside the machine. Another press moves it inside the machine.
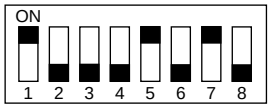	Paddle operation	A press on SW104 rotates the paddle for a specific period of time. To operate it for a second time, turn off and then on the power, and then press SW104.
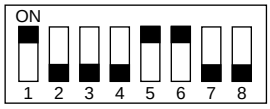	Solenoid, clutch operation	Each time SW104 is pressed, the buffer path selector, upper path selector, knurled belt, sub tray, saddle inlet, inserter pick-up, inserter stop, and inserter separation solenoids and clutch turn on in sequence but not when an option is not installed.
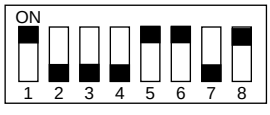	Folder solenoid operation	Each time SW104 is pressed, the folder inlet, B4 stopper 2, B4 stopper 1, depressurization, and pressurization solenoids turn on in sequence.

Table 5-224

COPYRIGHT © 1999 CANON INC.

Settings	Item	Description
	Stapling operation	Each press on SW104 starts stapling operation.
	Stapler shifting operation	Each press on SW104 moves the stapler from the home position or to the home position.

Table 5-224a

 COPYRIGHT © 1999 CANON INC.

Settings	Item	Size	Description
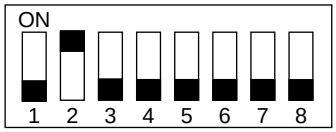	Jogging width adjustment	A4	See the descriptions under each item.
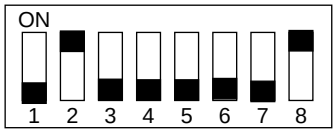	Stapling position adjustment (front, 1-point)		
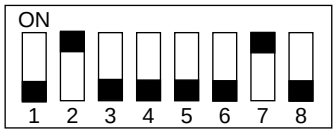	Stapling position adjustment (2-point)		
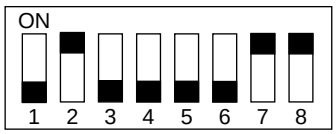	Stapling position adjustment (rear, 1-point)		
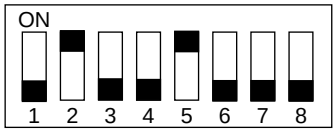	Jogging width adjustment	LTR	
	Stapling position adjustment (front, 1-point)		
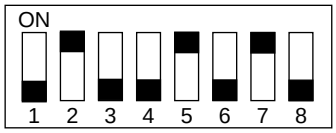	Stapling position adjustment (2-point)		
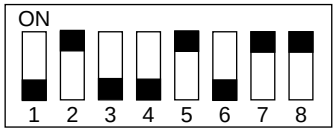	Stapling position adjustment (rear, 1-point)		
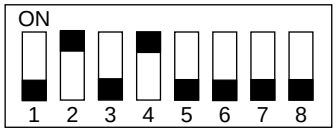	Sensor initial adjustment	See the descriptions under each item.	
	Swing guide speed adjustment		
	Swing guide speed indication	Pressing SW104 indicates the swing guide speed.	

Table 5-225

Settings	Item	Description
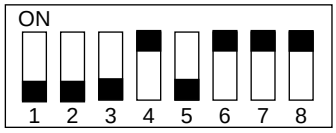	Buffer roller wrapping degree adjustment (feeding operation)	See the descriptions under each item.
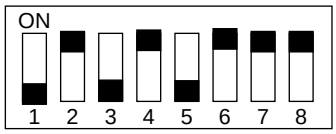	Buffer roller wrapping degree adjust-ment(adjust-ment value input)	
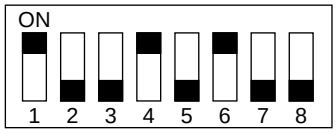	Punch rotation motor rotation	Press SW104 to start the punch.
	Punch registration motor rotation	The punch unit moves away from or to the home position each time SW104 is pressed.
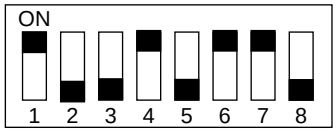	Punch sensor shift motor rotation	The punched paper end sensor moves away from or to the home position each time SW104 is pressed.
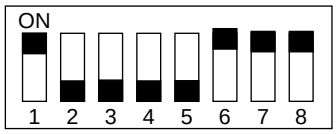	Punch waste feed motor rotation	Press SW104 to start the punch waste feed motor. Press again to stop it. Before pressing SW104, make sure that a punch waste container is in position.
	Shutter operation	The shutter opens or closes each time SW104 is pressed.
	Inserter roller cleaning operation	Press SW104 to turn on the inserter motor and the separation clutch. Press again to turn them off.
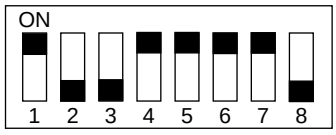	RAM initialization	Press SW104 and SW105 at the same time to reset RAM.
		Press SW104 and SW105 at the same time to reset all counter items.
	E505 resetting	Resets E505 about 10 seconds after the power turns on.

Table 5-226

 COPYRIGHT © 1999 CANON INC.

Settings	Item	Description
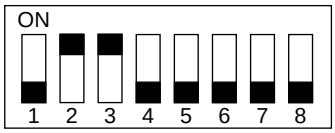	Tray A delivery counter	Press SW104 to display a count in decimal, beginning with the highest digit. Press SW105 and SW106 at the same time for 3 seconds or more to reset the counters individually. Each counter is incremented every 10 actions and held in memory. Counters are not incremented if the power turns off before a set of 10 actions completes.
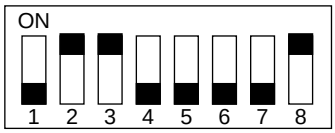	Tray B delivery counter	
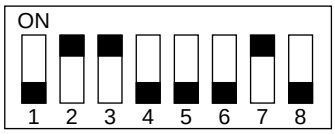	Inserter paper pick-up counter	
	Folder fold counter	
	Saddle stitcher paper pass counter	
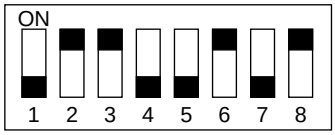	Saddle stitcher stitch counter	
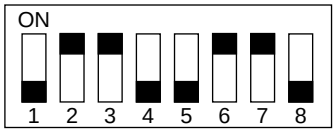	Punch counter	
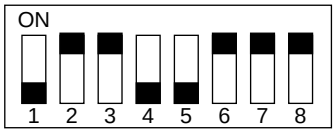	Finisher staple counter	

Table 5-227

F. Downloader PCB

1. Purpose

Used for upgrading the slave CPU (IC121) mounted on the finisher controller PCB.

2. Downloader PCB Components

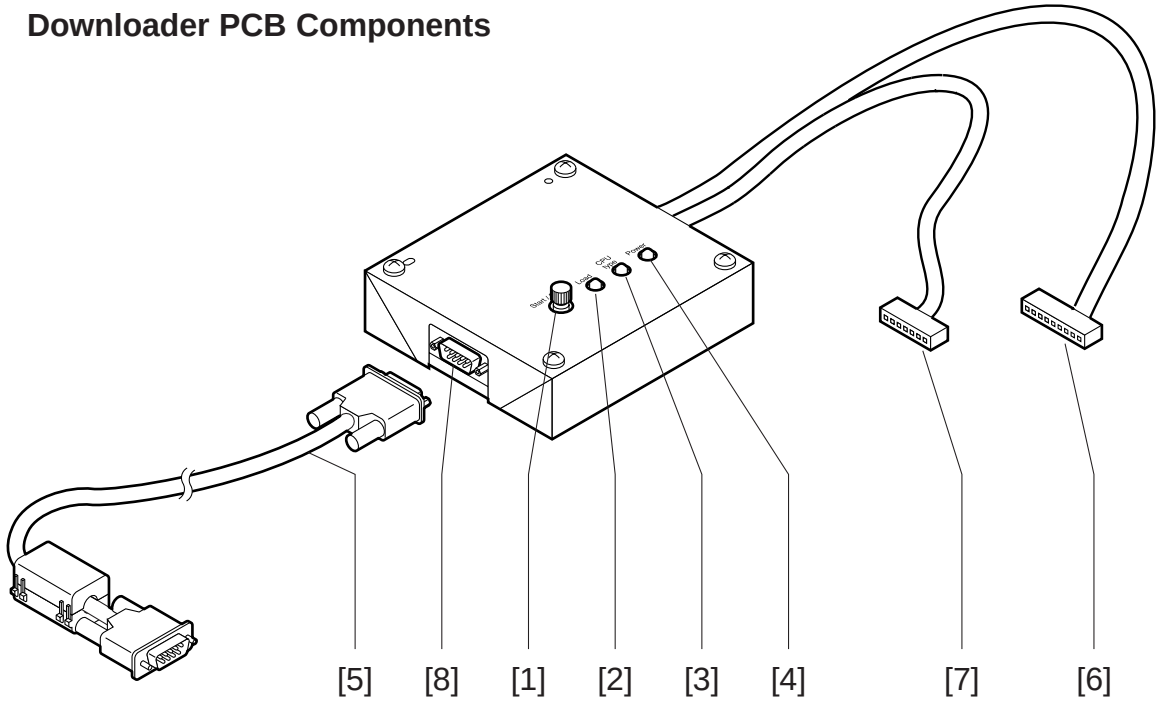

Figure 5-219

Component names and functions

Ref.	Name	Function
[1]	START/STOP key	Press to start or stop downloading.
[2]	LOAD LED	Lights when downloading is enabled.
[3]	Model indicating LED	Lights when the finisher D1/D2 is connected.
[4]	Power indicating LED	Lights when power is supplied to the downloader PCB from the finisher.
[5]	RS-232C cable (totally wired straight, 9-pin)	Connects the downloader PCB and the PC to each other. Connect the cable so the ferrite core of the cable is positioned on the PC side.
[6]	Cable A (9-pin) (about 70 cm long)	Connects the downloader PCB and the finisher D1/D2 to each other.
[7]	Cable B (7-pin) (about 50 cm long)	Connects the downloader PCB and the finisher E1 to each other.
[8]	RS-232C connector	Connects the RS-232c cable to the downloader PCB.

Table 5-228

 COPYRIGHT © 1999 CANON INC. CANON SADDLE FINISHER-D2 REV.0 AUG. 1999 PRINTED IN JAPAN (IMPRIME AU JAPON)

3. Tools used

Prerequisite to downloading

• Personal computer (PC)

Assumption: The download tool has been downloaded.

4. Download Procedure

a. Adding ROM Data

1) Place the ROM data to download in C:\ServTool\NewROM.
2) Start the service support tool.
   C:\ProgramFiles\service_support_tool\bpchost.exe
3) Choose "Controlling Data."

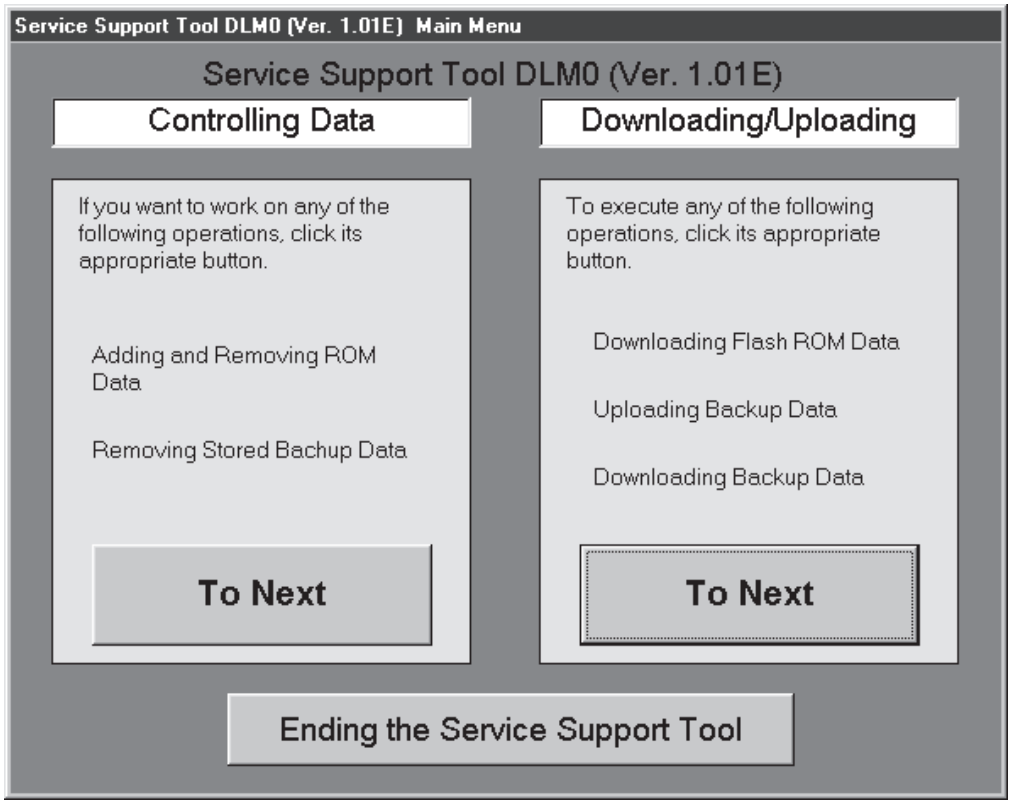

Figure 5-220

4) Choose "Adding ROM Data."

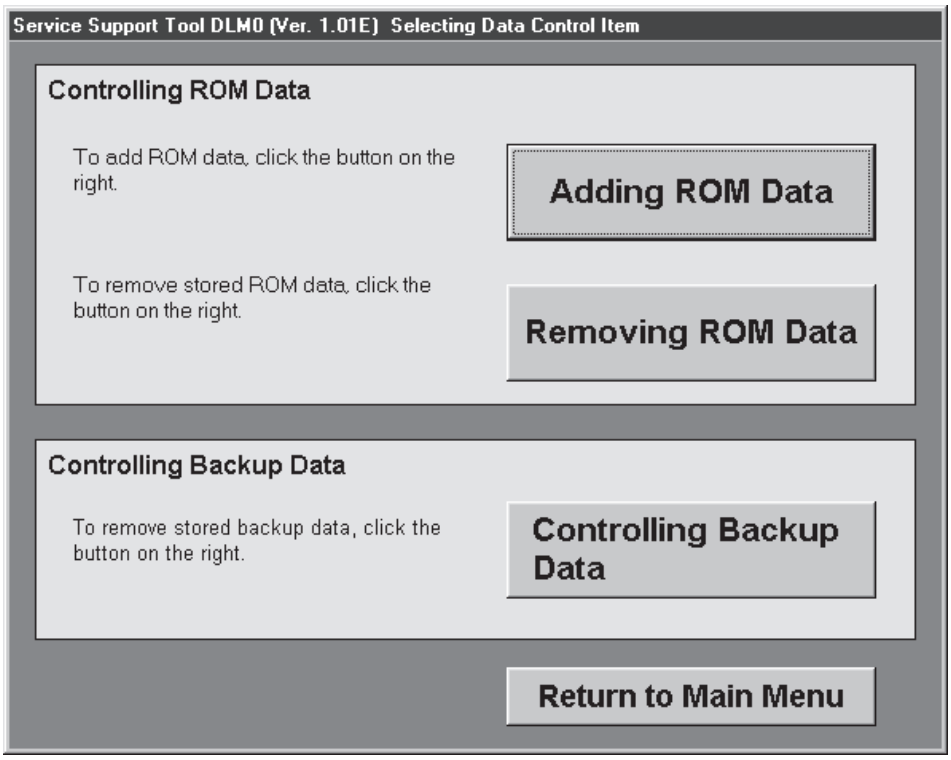

Figure 5-221

5) Choose "Register."
Data is registered. Data in "NewROM" is deleted.

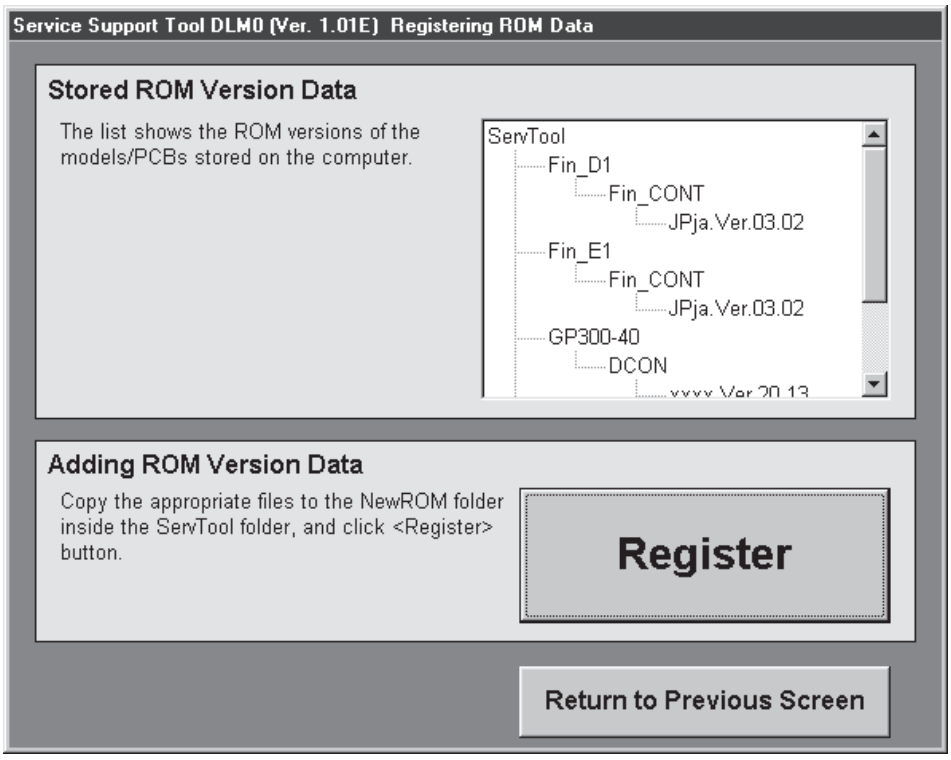

Figure 5-222

 COPYRIGHT © 1999 CANON INC.

b. Connecting to the Finisher

1) Turn off the copier.
2) Detach the finisher PCB cover.
3) Insert cable A into finisher controller PCB J130.

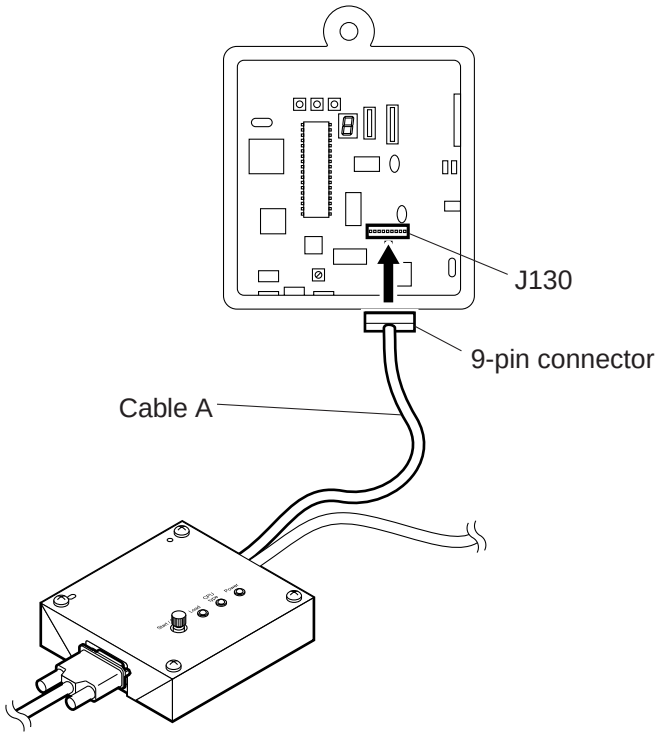

Figure 5-223

4) Connect the RS-232C cable to the PCB and the RS-232C connector of the PC. The ferrite core of the cable is positioned on the PC side.
5) Turn on the copier.
The power indicating LED and the model indicating LED on the PCB light.

c. Downloading

Note:
E501 or E503 may occur while downloading is in progress, but the downloading and downloding result will not be affected.

1) Start the service support tool.
   C:\ProgramFiles\service_support_tool\bpchost.exe
2) Choose "Downloading/Uploading."

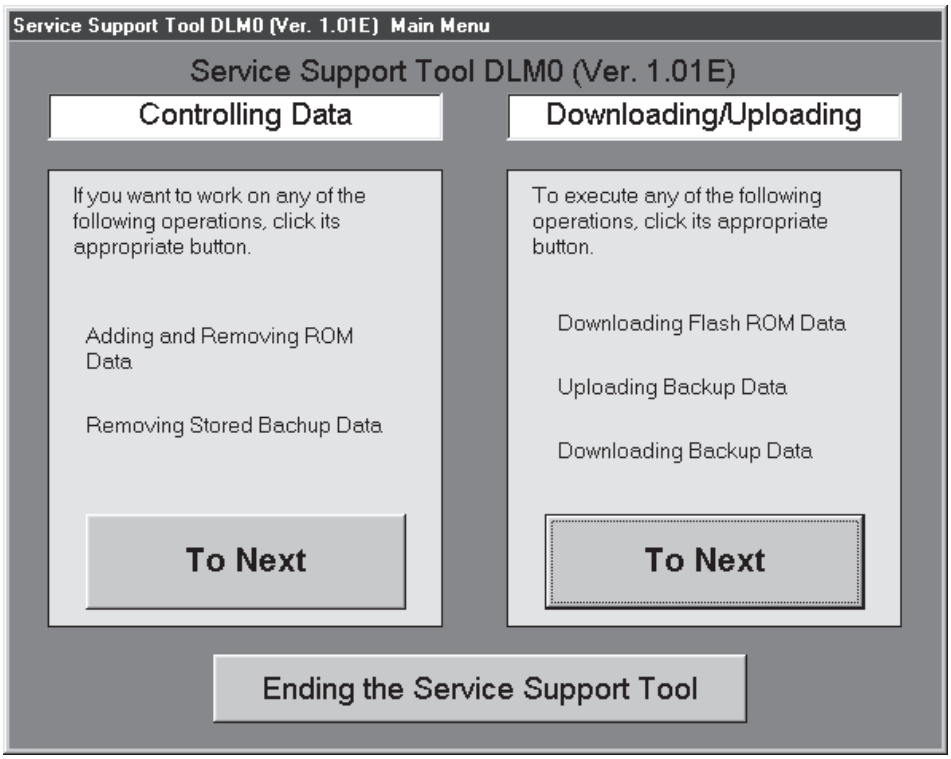

Figure 5-224

 COPYRIGHT © 1999 CANON INC.

3) Press the START/STOP key.
The LOAD LED lights.

4) Choose saddle finisher D2.
Highlight the model name and click Connect.

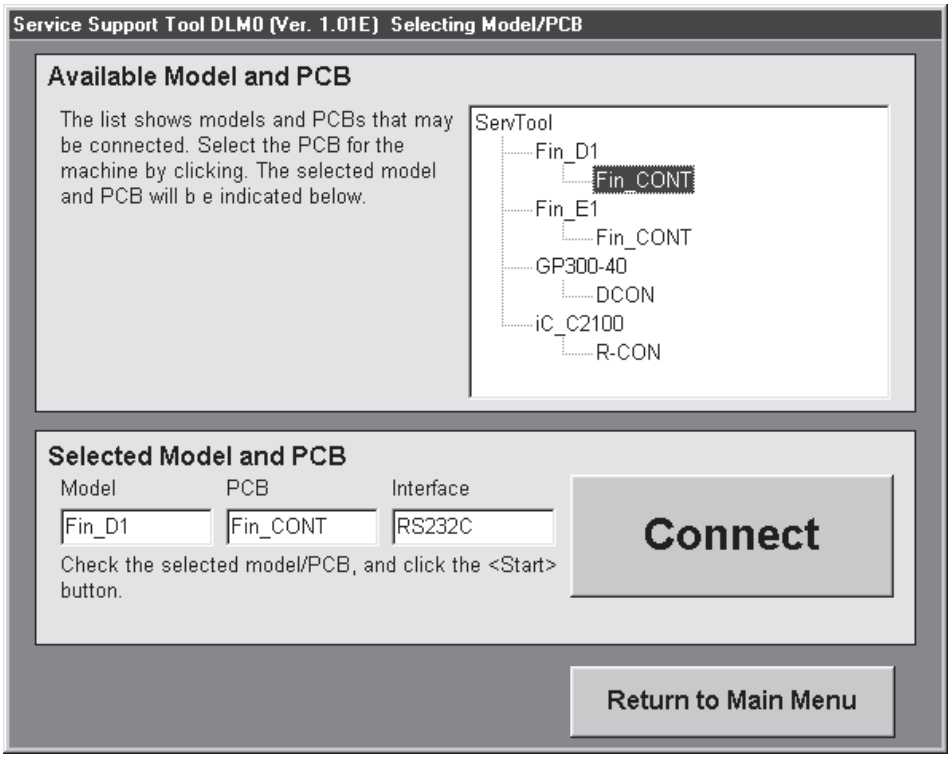

Figure 5-225

5) Get ready for downloading as instructed on the screen.
Click OK to proceed further.

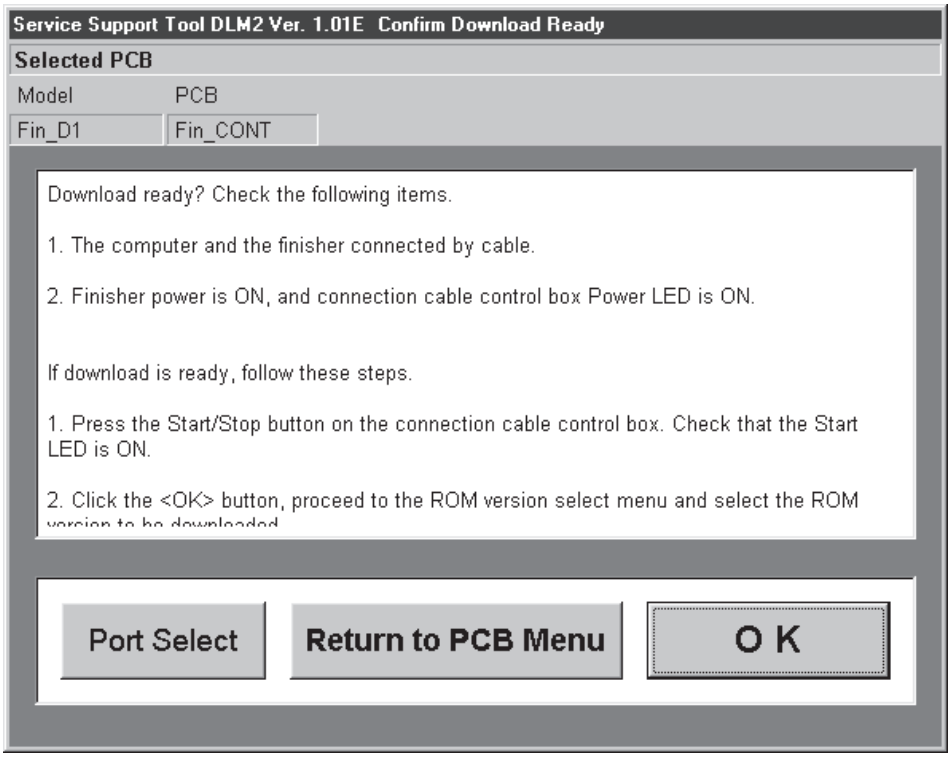

Figure 5-226

6) Choose the ROM version to download.

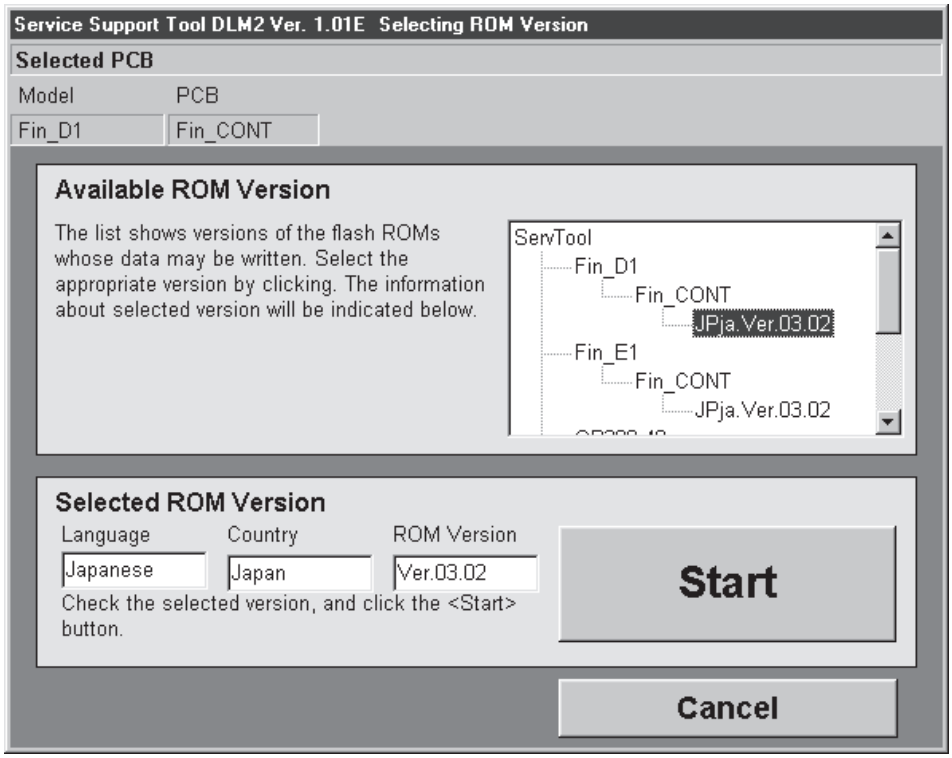

Figure 5-227

 COPYRIGHT © 1999 CANON INC.

7) Click START to let the PC and the downloader PCB to start downloading the program.

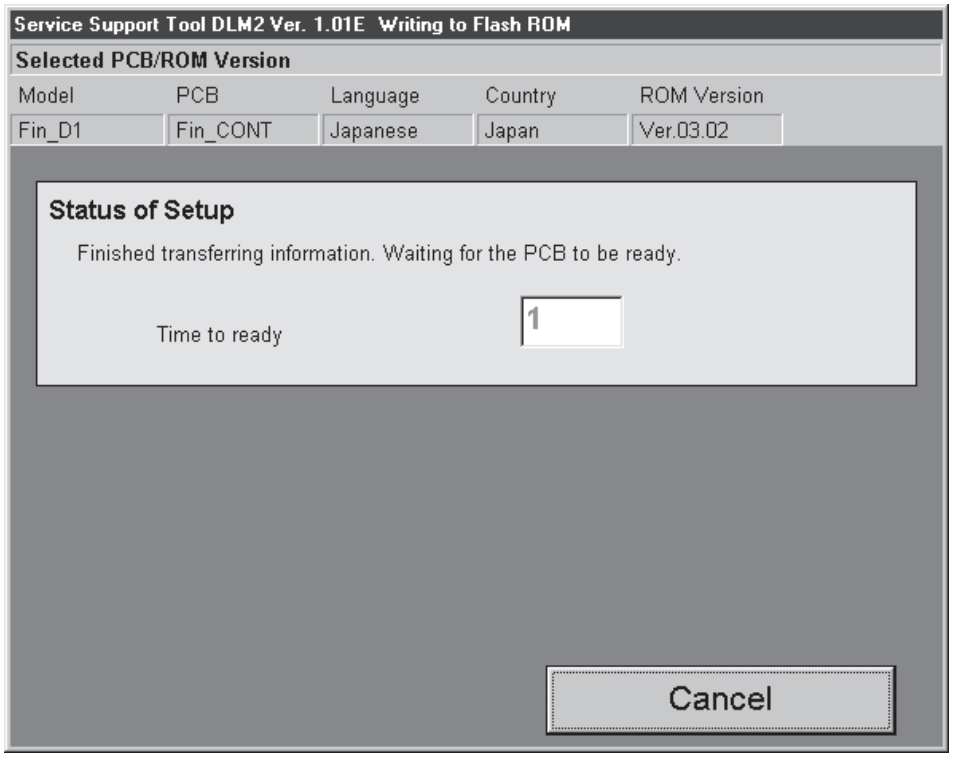

Figure 5-228

8) Click OK when the download completes.

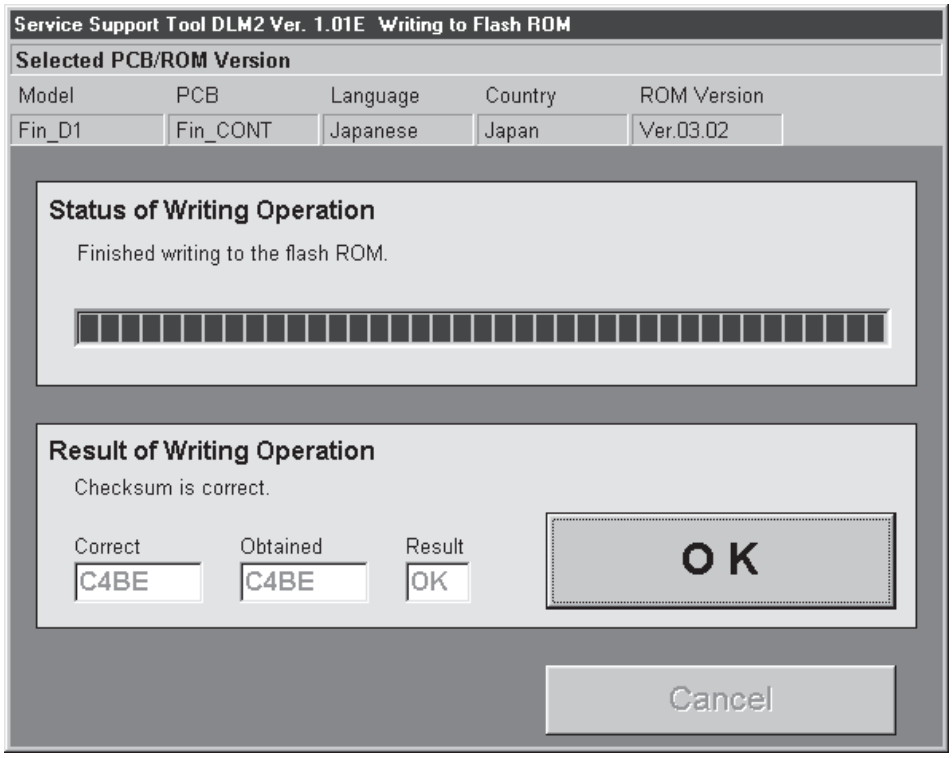

Figure 5-229

9) Exit as instructed on the screen.

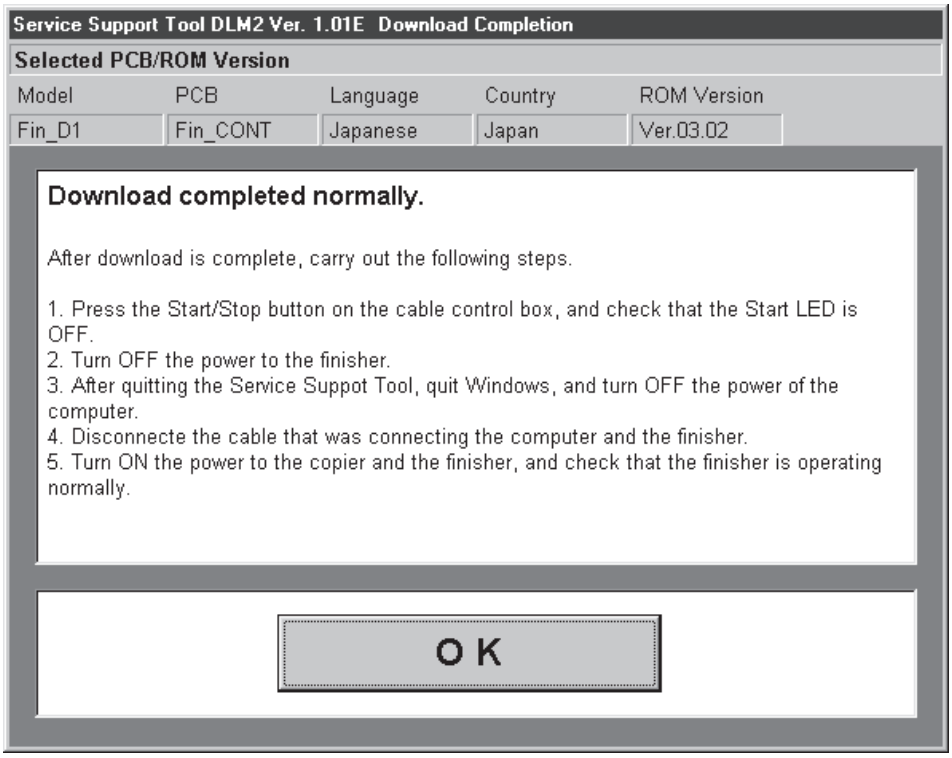

Figure 5-230

5. Disconnecting

1) Press the START/STOP key.
   The LOAD LED goes off.
2) Turn off the copier.
3) Disconnect cable A from the finisher.
4) Reattach the PCB cover to the finisher.
5) Turn on the copier

 COPYRIGHT © 1999 CANON INC.

III . TROUBLESHOOTING

A. Finisher

1. E500 lit, copier communications failure

Cause	Step	Checks	Yes/No	Action
Finisher controller PCB, Copier DC controller PCB	1	Turn off and on the copier's power switch. Is the problem corrected?	Yes	End.
Fuse PCB	2	Are the communication line and the grounding line on the fuse PCB normal? J716-7 and J717-1 J716-6 and J717-3 J716-4 and J717-4 J716-5 and J717-5	No	Replace the fuse PCB.
Switching regulator	3	Is the voltage between J85-1 (+) and J85-2 (-) on the switching regulator 5 V?	No	Replace the switching regulator.
Wiring	4	Is the wiring between the finisher controller PCB and the switching regulator normal?	No	Correct the wiring.
	5	Is the wiring between the copier's DC controller PCB and the fuse PCB normal?		
Finisher controller PCB, Copier DC controller PCB	6	Replace the finisher controller PCB. Is the problem corrected?	Yes	End.
			No	Replace the copier's DC controller PCB.

COPYRIGHT © 1999 CANON INC.

2. E503 lit

Cause	Step	Checks	Yes/No	Action
Finisher controller PCB/saddle stitcher controller PCB	1	Is the problem cleared by turning the copier power switch off, then on?	Yes	End.
Wiring	2	Is the wiring between the finisher controller PCB and the saddle stitcher controller PCB normal?	No	Correct the wiring.
Power supply	3	Is DC24V available between J3-1 (+) and -2 (-) of the saddle stitcher controller PCB?	No	Check the wiring between the fuse PCB and the finisher controller.
Saddle stitcher controller PCB			Yes	Replace the saddle stitcher controller PCB.

3. E505 lit, checksum error

Cause	Step	Checks	Yes/No	Action
Finisher controller PCB	1	Turn off and then on the copier's power switch. Is the problem corrected?	Yes	End.
	2	Turn off the power, and shift bits 1, 2, 3 and 4 of SW103 on the finisher controller PCB to ON. Turn on the power and wait 10 sec. Turn off the power, and shift all bits of SW103 to OFF. Turn on the power. Is the problem corrected?	Yes	End.
			No	Replace the finisher controller PCB.

 COPYRIGHT © 1999 CANON INC. CANON SADDLE FINISHER-D2 REV.0 AUG. 1999 PRINTED IN JAPAN (IMPRIME AU JAPON)

4. E510 lit, inlet motor (M1) failure

Cause	Step	Checks	Yes/No	Action
-	1	Is LED103 on the finisher controller PCB on at time of turning on the power?	No	Go to step 2.
			Yes	Go to step 7.
Switching regulator	2	Is the voltage between J85-3, -4 (+) and J85-5, -6 (-) on the switching regulator 24 V?	No	Replace the switching regulator.
Wiring	3	Is the voltage between J711-7, -8 (+) and J711-5, -6 (-) on the switching regulator 24 V?	No	Correct the wiring between J85 and J711.
Front cover switch (MSW1)	4	Disconnect J715 of the fuse PCB. Check the electrical continuity between J715-1 and J715-3 on the harness side. Is there electrical continuity when the front cover is closed and no electrical continuity when the cover is closed?	No	Check to make sure that the actuator of the front cover is pushing the switch. If so, replace the switch, or correct the wiring between the PCB and the switch.
Fuse PCB	5	Is the voltage of J714-1 (+) on the fuse PCB 24 V?	No	Replace the fuse PCB.
Wiring	6	Is the voltage of J101-1 (+) on the finisher controller PCB 24 V?	No	Correct the wiring between J714 on the fuse PCB and J101 on the finisher controller PCB.
Shorting controller	7	Is the jumper wire connected between 109-6 and 8 of the folder connection normal?	No	Connect the jumper wire correctly (not required when a folder is installed).
Folder upper door switch (MSW10)	8	Is the folder upper door switch normal?	No	Correct the switch.
Finisher controller PCB	9	Is the voltage between J124-12, -13 (+) and J-124-10, -11 (-) on the finisher controller PCB 24 V?	No	Replace the finisher controller PCB.
	10	Is the voltage between J124-9 (+) and -8 (-) on the finisher controller PCB 5 V?		
Wiring	11	Is the wiring between J124 on the finisher controller PCB and J4 of the inlet motor normal?	No	Correct the wiring.
Inlet motor (M1)			Yes	Replace the inlet motor.

COPYRIGHT © 1999 CANON INC.

5. E514 lit, stack delivery motor (M7) failure

Cause	Step	Checks	Yes/No	Action
-	1	Does the stack delivery motor rotate in keeping with stack delivery?	Yes	Go to step 2.
			No	Go to step 4.
Wiring	2	Is the wiring between the finisher controller PCB and the sensor normal?	No	Correct the wiring.
Sensor power supply	3	Measure the voltage between J105B-7 (+) and J105B-8 (-) on the finisher controller PCB. Is it 5V?	No	Replace the finisher controller PCB.
Stack delivery motor clock sensor (PI12)			Yes	Replace the sensor
Power supply	4	Is the voltage of J101-3 (+) on the finisher control PCB 24 V?	No	Check the switching regulator and the fuse PCB.
Finisher controller PCB			No	Replace the finisher controller PCB.

6. E530 lit, rear jogging plate motor (M5) failure

Cause	Step	Checks	Yes/No	Action
-	1	Does the rear jogging plate operate in keeping with jogging operation?	No	Go to step 2.
			Yes	Go to step 4.
Finisher controller PCB, Wiring	2	Is the voltage of J10A-6 (+) on the finisher controller PCB 24 V?	No	Check the 24 VU supplied to the finisher controller PCB; if normal, replace the finisher controller PCB. Otherwise, correct the power supply system.
Wiring	3	Are the wiring from J104A-6 to -10 on the finisher controller PCB and the wiring to the rear jogging plate motor normal?	No	Correct the wiring.
			Yes	Replace the rear jogging plate motor.
Rear jogging plate home position sensor (PI9)	4	Is the voltage between J104B-7 (+) and J104B-8 (-) on the finisher controller PCB 5V?	Yes	Replace the sensor.
Finisher controller PCB			No	Replace the finisher controller PCB.

 COPYRIGHT © 1999 CANON INC. CANON SADDLE FINISHER-D2 REV.0 AUG. 1999 PRINTED IN JAPAN (IMPRIME AU JAPON)

7. E531 lit, staple motor (M11) failure

Cause	Step	Checks	Yes/No	Action
-	1	Does the stapler operate in keeping with stapling operation?	Yes	Go to step 2.
			No	Go to step 3.
Stapling home position sensor (PI19), Finisher controller PCB	2	Move the stapler by hand. Does the state of J111-11 (+) on the finisher controller PCB change?	No	Check the power supplied to the sensor; if normal, replace the stapler. Otherwise, replace the finisher controller PCB.
Finisher controller PCB	3	Is 24 VSTP supplied to J113-1 (+) on the finisher controller PCB?	Yes	Replace the finisher controller PCB.
Staple safety switch (front) (MSW8), staple safety switch (rear) MSW9), and oscillation guide switch (MSW2)	4	Are the three switches located on the path of power supply to the stapler normal?	No	Correct or replace the switches.
Wiring	5	Is 24 VSTP supplied from J713-4 (+) on the fuse PCB?	Yes	Correct the wiring.
Switching regulator	6	Is 24 VSTP supplied from J713-4 (+) on the switching regulator?	No	Replace the switching regulator.
Wiring			Yes	Correct the wiring from the switching regulator to the fuse PCB; if normal, replace the stapler.

COPYRIGHT © 1999 CANON INC.

8. E532 lit, stapler movement motor (M10) failure

Cause	Step	Checks	Yes/No	Action
-	1	Does the stapler move at the correct timing?	Yes	Go to step 2.
			No	Go to step 3.
Stapler shift home position sensor (PI17), Finisher controller PCB	2	Move the stapler by hand. Does the state of J112-8 (+) on the finisher controller PCB change?	No	Check the power to the sensor; if normal, replace the sensor. Otherwise, replace the finisher controller PCB.
Finisher controller PCB	3	Is 24 VSTP supplied to J113-1 (+) on the finisher controller PCB?	Yes	Replace the finisher controller PCB.
Wiring	4	Is 24 VSTP supplied from J713-4 (+) on the fuse PCB?	Yes	Correct the wiring.
Staple safety switch (front) (MSW8), staple safety switch (rear) (MSW9), and swing guide switch (MSW2)	5	Are the three switches located on the path of power supply to the stapler normal?	No	Correct or replace the switches.
Switching regulator	6	Is 24 VSTP from J713-4 (+) on the switching regulator supplied?	No	Replace the switching regulator.
Wiring			Yes	Correct the wiring from the switching regulator to the fuse PCB; if normal, replace the motor.

 COPYRIGHT © 1999 CANON INC.

9. E535 lit, swing motor (M8) failure (detail 02)

Cause	Step	Checks	Yes/No	Action
-	1	Does the swing guide operate at the correct timing?	Yes	Go to step 2.
			No	Go to step 3.
Swing guide open sensor (PI16), Finisher controller PCB	2	Move the swing guide by hand. Does the state of J108B-6 (+) on the finisher controller PCB change?	No	Check the power to the sensor; if normal, replace the sensor. Otherwise, replace the finisher controller PCB.
Finisher controller PCB	3	Is 24 VU supplied to J101-3 (+) on the finisher controller PCB?	Yes	Replace the finisher controller PCB.
Wiring	4	Is 24 VU from J714-3 (+) on the fuse PCB supplied?	Yes	Correct the wiring.
Switching regulator	5	Is 24 VU supplied from J85-3 (+) on the switching regulator?	No	Replace the switching regulator.
Wiring			Yes	Correct the wiring from the switching regulator to the fuse PCB; if the wiring is correct, replace the motor.

10. E535 lit, swing motor (M8) failure (detail 01)

Cause	Step	Checks	Yes/No	Action
-	1	Does the swing guide operate at the correct timing?	Yes	Go to step 2.
			No	Go to step 3.
Swing guide closed sensor (PI15), Finisher controller PCB	2	Move the swing guide by hand. Does the state of J108B-3 (+) on the finisher controller PCB change?	No	Check the power to the sensor; if normal, replace the finisher controller PCB.
Finisher controller PCB	3	Is 24 VU supplied to J101-3 (+) on the finisher controller PCB?	Yes	Replace the finisher controller PCB.
Wiring	4	Is 24 VU supplied from J714-3 (+) on the fuse PCB?	Yes	Correct the wiring.
Switching regulator	5	Is 24 VU supplied from J85-3 (+) on the switching regulator?	No	Replace the switching regulator.
Wiring			Yes	Check the wiring from the switching regulator to the fuse PCB; if normal, replace the motor.

COPYRIGHT © 1999 CANON INC.

11. E537 lit, front jogging plate motor (M4) failure

Cause	Step	Checks	Yes/No	Action
-	1	Does the front jogging plate operate in keeping with jogging operation?	No	Go to step 2.
			Yes	Go to step 4.
Finisher controller PCB Power supply	2	Is the voltage of J104A-1 (+) on the finisher controller PCB 24 V?	No	Check the 24 VU supplied to the finisher controller PCB; if normal, replace the finisher controller PCB. Otherwise, correct the power supply system.
Wiring	3	Are the wiring from J104A-1 to -5 on the finisher controller PCB and the wiring to the rear jogging plate normal?	No	Correct the wiring.
			Yes	Replace the front jogging plate motor.
Front jogging plate home position sensor (PI7)	4	Is the voltage between J104B-1 (+) and J104B-2 (-) on the finisher controller PCB 5?	Yes	Replace the sensor.
Finisher controller PCB			No	Replace the finisher controller PCB.

 COPYRIGHT © 1999 CANON INC. CANON SADDLE FINISHER-D2 REV.0 AUG. 1999 PRINTED IN JAPAN (IMPRIME AU JAPON)

12. E540 lit, tray A lifting motor (M13) failure

Cause	Step	Checks	Yes/No	Action
36 VDC power supply	1	Is 36 VDC supplied to J114-1 on the finisher controller PCB?	No	Check the supply path of the 36 VDC; if faulty, correct it. Check the tray safety switches (front and rear) (MSW6/7) and the tray proximity switch (MSW5).
Tray lifter mechanism	2	Is there a fault or an obstacle in the tray lifter mechanism?	Yes	Remove the fault or the obstacle.
Tray A lifter motor (M13)	3	Does the tray lifter motor rotate at the correct timing?	No	Replace the motor and tray lifter motor driver PCB.
Tray A lock sensor (PI26)	4	Is the tray A lock sensor normal?	No	Replace the sensor.
Tray A upper position sensor (PI28), Tray A lower position sensor (PI27)	5	Is the tray A upper position sensor and the lower position sensor normal?	Yes	Replace the appropriate sensor.
			No	Replace the finisher controller PCB.

13. E542 lit, tray B upper position sensor (PI20) failure (occurring at power-on time)

Cause	Step	Checks	Yes/No	Action
Tray position	1	Is tray B above the tray B paper sensor PCB (S4)?	Yes	Lower the tray under the sensor.
Tray B upper position sensor (PI20)	2	Is the tray B upper position sensor (PI20) normal?	No	Check the wiring from the finisher controller PCB to the sensor; if normal, replace the sensor.
			Yes	Replace the finisher controller PCB.

COPYRIGHT © 1999 CANON INC.

14. E542 lit, tray B lifting motor (M12) failure (occurring during operation)

Cause	Step	Checks	Yes/No	Action
36 VDC power supply	1	Is 36 VDC supplied to J114-1 on the finisher controller PCB?	No	Check the supply path of the 36 VDC; if faulty, correct it. Check the tray safety switches (front, rear) (MSW6/7).
Tray lifter mechanism	2	Is there a fault or an obstacle in the tray lifter mechanism?	Yes	Remove the fault or the obstacle.
Tray B lifter motor (M12)	3	Does the tray lifter motor rotate at the correct timing?	No	Replace the motor and tray B lifter motor driver PCB.
Tray B lock sensor (PI23)	4	Is the tray B lock sensor normal?	No	Replace the sensor.
Tray B upper position sensor (PI20), Tray B lower position sensor (PI21)	5	Are the tray B upper position sensor and the lower position sensor normal?	Yes	Replace the appropriate sensor.
			No	Replace the finisher controller PCB.

15. E551 lit, power fan (FM1) failure (detail 01)

Cause	Step	Checks	Yes/No	Action
Finisher controller PCB	1	Is the level of J103-8 on the finisher controller PCB 0?	No	Replace the finisher controller PCB.
Fuse PCB	2	Is the voltage of J720-1 on the fuse PCB 24 DC?	No	Replace the fuse PCB.
Power supply fan (FM1)	3	Is the power supply fan rotating?	No	Replace the power supply fan.
Finisher controller PCB	4	Is the level of J103-7 on the finisher controller 1?	No	
			Yes	Replace the finisher controller PCB.

 COPYRIGHT © 1999 CANON INC.

16. E551 lit, punch fan (FM2) failure (detail 02)

Cause	Step	Checks	Yes/No	Action
Finisher controller PCB	1	Is J118B-11 on the finisher controller PCB at level 0?	Yes	Replace the finisher controller PCB.
Punch driver PCB	2	Is J742-9 on the punch driver PCB at 24VDC?	No	Replace the punch driver PCB.
Punch fan (FM2)	3	Is the punch fan running (while punch unit is in operation)?	No	Replace the punch fan.
Finisher controller PCB	4	Is J118B-12 on the finisher controller PCB at level 1?	No	
			Yes	Replace the finisher controller PCB.

17. E557 lit, paddle motor (M9) failure

Cause	Step	Checks	Yes/No	Action
Paddle home position sensor (PI14)	1	Is the paddle home position sensor normal?	No	Replace the sensor.
Paddle motor (M9), Finisher controller PCB	2	Does the paddle rotate at the correct timing?	No	Replace the motor and the finisher controller PCB.

18. E583 lit, tray auxiliary motor (M6) failure

Cause	Step	Checks	Yes/No	Action
Tray auxiliary plate home position sensor (PI11)	1	Is the tray auxiliary plate home position sensor normal?	No	Replace the sensor.
Tray auxiliary plate motor (M6), Finisher controller PCB	2	Does the tray auxiliary plate motor rotate at the correct timing?	No	Replace the motor and the finisher controller PCB.

19. E584 lit, shutter failure

Cause	Step	Checks	Yes/No	Action
Shutter drive mechanism	1	Is the drive mechanism from the paddle motor to the shutter normal?	No	Correct the shutter drive mechanism.
Paddle motor (M9)	2	Is the paddle motor running?	No	Replace the paddle motor.
Shutter home position sensor (PI13)	3	Is the shutter home position sensor normal?	No	Replace the sensor.
			Yes	Replace the finisher controller PCB.

COPYRIGHT © 1999 CANON INC.

20. E590 lit, punch rotation failure

Cause	Step	Checks	Yes/No	Action
Punch rotation home position sensor (PI44)	1	Is the punch rotation home position sensor normal?	No	Replace the sensor.
Wiring	2	Is the wiring between the punch rotation home position sensor and the finisher controller PCB normal?	No	Correct the wiring.
Punch rotation motor (M18)	3	Rotate the punch rotation motor (using DIP switches). Does the motor rotate normally?	No	Replace the punch motor.
Punch unit	4	Detach the punch unit and rotate it by hand. Does the unit run smoothly?	No	Replace the punch unit.
Punch driver PCB	5	Is the problem cleared by replacing the punch driver PCB?	No	Replace the finisher controller PCB.
			Yes	End.

21. E593 lit, punch registration failure

Cause	Step	Checks	Yes/No	Action
Punch side registration home position sensor (PI46)	1	Is the punch side registration home position sensor normal?	No	Replace the sensor.
Horizontal registration mechanism	2	Slide the punch unit by hand. Is resistance felt in doing so?	Yes	Correct the mechanism to ensure that the punch unit moves smoothly.
Punch side registration motor (M17)	3	Is the punch side registration motor normal?	No	Replace the motor.
Finisher controller PCB	4	Is the problem cleared by replacing the punch driver PCB?	No	Replace the finisher controller PCB.
Punch driver PCB			Yes	End.

 COPYRIGHT © 1999 CANON INC.

22. E594 lit, punched paper end sensor registration failure

Cause	Step	Checks	Yes/No	Action
Punched paper edge sensor home position sensor (PI46)	1	Is the punched paper edge sensor home position sensor normal?	No	Replace the sensor.
Wiring	2	Is the wiring between the punched paper edge sensor home position sensor and the finisher controller PCB normal?	No	Correct the wiring.
Punch sensor shift motor (M19)	3	Rotate the punch sensor shift motor (using DIP switches). Does the motor rotate normally?	No	Replace the punch sensor shift motor.
Punch slide unit	4	Slide the punch slide unit by hand. Is resistance felt in doing so?	No	Correct the mechanism to ensure that the punch unit moves smoothly.
Punch driver PCB	5	Is the problem cleared by replacing the punch driver PCB?	No	Replace the finisher controller PCB.
			Yes	End.

23. E595 lit, punch waste feed failure

Cause	Step	Checks	Yes/No	Action
Punch waste feed sensor (PI54)	1	Is the punch waste feed sensor normal?	No	Replace the sensor.
Wiring	2	Is the wiring between the punch waste feed sensor and the finisher controller PCB normal?	No	Correct the wiring.
Punch waste feed motor (M16)	3	Rotate the punch waste feed motor (using DIP switches). Does the motor rotate normally?	No	Replace the punch waste feed motor.
Punch driver PCB	4	Is the problem cleared by replacing the punch driver PCB?	No	Replace the finisher controller PCB.
			Yes	End.

COPYRIGHT © 1999 CANON INC.

B. Saddle Stitcher

1. E5F0 lit, paper positioning plate failure (details 01/02)

Cause	Step	Checks	Yes/No	Action
Paper positioning plate home position sensor (PI66)	1	Check the paper positioning plate home position sensor. Is the sensor normal?	No	Replace the sensor.
Saddle stitcher controller PCB	2	Is the paper positioning plate functioning at the right timing?	Yes	Replace the saddle stitcher controller PCB.
Paper positioning plate motor (M34)			No	Check the paper positioning plate drive mechanism. If abnormal, correct it; if normal, go to step 3.
	3	Is the problem cleared by replacing the paper positioning plate motor?	Yes	End.
Saddle stitcher controller PCB			No	Replace the saddle stitcher controller PCB.

2. E5F1 lit, folding motor failure

Cause	Step	Checks	Yes/No	Action
Folding motor clock sensor (PI64)	1	Check the folding motor clock sensor. Is the sensor normal?	No	Replace the sensor.
Saddle stitcher controller PCB	2	Is the folding motor functioning at the right timing?	Yes	Replace the saddle stitcher controller PCB.
Folding motor (M32)			No	Check the folding roller drive mechanism. If abnormal, correct it; if normal, go to step 3.
	3	Is the problem cleared by replacing the folding motor?	Yes	End.
Saddle stitcher controller PCB			No	Replace the saddle stitcher controller PCB.

 COPYRIGHT © 1999 CANON INC. CANON SADDLE FINISHER-D2 REV.0 AUG. 1999 PRINTED IN JAPAN (IMPRIME AU JAPON)

3. E5F2 lit, guide motor failure (details 01/02)

Cause	Step	Checks	Yes/No	Action
Guide home position sensor (PI73)	1	Check the guide home position sensor. Is the sensor normal?	No	Replace the sensor.
Saddle stitcher controller PCB	2	Is the guide motor functioning at the right timing?	Yes	Replace the saddle stitcher controller PCB.
Guide motor (M33)			No	Check the guide plate drive mechanism. If abnormal, correct it; if normal, go to step 3.
	3	Is the problem cleared by replacing the guide motor?	Yes	End.
Saddle stitcher controller PCB			No	Replace the saddle stitcher controller PCB.

4. E5F3 lit, jogging motor failure (details 01/02)

Cause	Step	Checks	Yes/No	Action
Jogging plate home position sensor (PI65)	1	Check the jogging plate home position sensor. Is the sensor normal?	No	Replace the sensor.
Saddle stitcher controller PCB	2	Is the jogging motor functioning at the right timing?	Yes	Replace the saddle stitcher controller PCB.
Jogging motor (M35)			No	Check the jogging plate drive mechanism. If abnormal, correct it; if normal, go to step 3.
	3	Is the problem cleared by replacing the jogging motor?	Yes	End.
Saddle stitcher controller PCB			No	Replace the saddle stitcher controller PCB.

COPYRIGHT © 1999 CANON INC.

5. E5F4/E5F5 lit, stitcher failure (details 01/02)

Cause	Step	Checks	Yes/No	Action
Stitcher mounting	1	Are the rear and front stitcher and the base installed properly?	No	Install them properly.
Stitching home position switch (MS34/32)	2	Are the front and rear stitcher stitching home position switch normal?	No	Replace the front or rear stitcher.
Saddle stitcher controller PCB	3	Are the front and rear stitcher functioning at the right timing?	Yes	Check the wiring between the stitcher and the saddle stitcher controller PCB. If normal, replace the controller PCB.
Stitcher motor (M37/36)			No	Replace the front or rear stitcher.

6. E5F6 lit, paper pressure plate motor failure (details 01/02)

Cause	Step	Checks	Yes/No	Action
Paper pressure plate home position sensor (PI64)	1	Check the paper pressure plate home position sensor. Is the sensor normal?	No	Replace the sensor.
Saddle stitcher controller PCB	2	Is the guide motor functioning at the right timing?	Yes	Replace the saddle stitcher controller PCB.
Guide motor (M38)			No	Check the guide plate drive mechanism. If abnormal, correct it; if normal, go to step 3.
	3	Is the problem cleared by replacing the guide motor?	Yes	End.
Saddle stitcher controller PCB			No	Replace the saddle stitcher controller PCB.

 COPYRIGHT © 1999 CANON INC. CANON SADDLE FINISHER-D2 REV.0 AUG. 1999 PRINTED IN JAPAN (IMPRIME AU JAPON)

7. E5F6 lit, paper pressure motor failure (detail 03)

Cause	Step	Checks	Yes/No	Action
Paper pressure plate top position sensor (PI65)	1	Check the paper pressure plate top position sensor. Is the sensor normal?	No	Replace the sensor.
Saddle stitcher controller PCB	2	Is the paper pressure plate motor functioning at the right timing?	Yes	Replace the saddle stitcher controller PCB.
Paper pressure plate motor (M38)			No	Check the paper pressure plate drive mechanism. If abnormal, correct it; if normal, go to step 3.
	3	Is the problem cleared by replacing the paper pressure plate motor?	Yes	End.
Saddle stitcher controller PCB			No	Replace the saddle stitcher controller PCB.

8. E5F6 lit, paper pressure motor failure (detail 04)

Cause	Step	Checks	Yes/No	Action
Paper pressure plate motor clock sensor (PI61)	1	Check the paper pressure plate clock sensor. Is the sensor normal?	No	Replace the sensor.
Saddle stitcher controller PCB	2	Is the paper pressure plate motor functioning at the right timing?	Yes	Replace the saddle stitcher controller PCB.
Paper pressure plate motor (M38)			No	Check the pressure plate drive mechanism. If abnormal, correct it; if normal, go to step 3.
	3	Is the problem cleared by replacing the paper pressure plate motor?	Yes	End.
Saddle stitcher controller PCB			No	Replace the saddle stitcher controller PCB.

COPYRIGHT © 1999 CANON INC.

9. E5F7 lit, saddle tray motor failure

Cause	Step	Checks	Yes/No	Action
Saddle tray home position sensor (PI49)	1	Check the saddle tray home position sensor. Is the sensor normal?	No	Replace the sensor.
Saddle stitcher controller PCB	2	Is the loading wall functioning at the right timing?	Yes	Replace the saddle stitcher controller PCB.
Saddle tray motor (M20)			No	Check the loading wall drive mechanism. If abnormal, correct it; if normal, go to step 3.
	3	Is the problem cleared by replacing the saddle tray motor?	Yes	End.
Saddle stitcher controller PCB			No	Replace the saddle stitcher controller PCB.

10. E5F8 indicator lit, sensor connector out of position (detail 01)

Cause	Step	Checks	Yes/No	Action
Guide home position sensor (PI73) connector disconnection	1	Are guide home position sensor and saddle stitcher controller PCB connectors properly connected?	No	Connect the connectors.
Wiring	2	Is the wiring between the sensor and saddle stitcher disconnected?	Yes	Correct the wiring.
Power supply	3	Is DC5V supplied from J9-7 on the saddle stitcher controller PCB?	No	Replace the saddle stitcher controller PCB.
Ground	4	Is J9-8 on the saddle stitcher controller PCB properly grounded?	No	

 COPYRIGHT © 1999 CANON INC. CANON SADDLE FINISHER-D2 REV.0 AUG. 1999 PRINTED IN JAPAN (IMPRIME AU JAPON)

11. E5F8 indicator lit, sensor connector out of position (detail 02)

Cause	Step	Checks	Yes/No	Action
Paper pressure plate home position sensor (PI74) connector disconnection	1	Are the paper pressure plate home position sensor and saddle stitcher controller PCB connectors properly connected?	No	Connect the connectors.
Wiring	2	Is the wiring between the sensor and saddle stitcher disconnected?	Yes	Correct the wiring.
Power supply	3	Is DC5V supplied from J9-10 on the saddle stitcher controller PCB?	No	Replace the saddle stitcher controller PCB.
Ground	4	Is J9-11 on the saddle stitcher controller PCB properly grounded?	No	

12. E5F8 indicator lit, sensor connector out of position (detail 03)

Cause	Step	Checks	Yes/No	Action
Paper pressure plate home position sensor (PI75) connector disconnection	1	Are the paper pressure plate home position sensor and saddle stitcher controller PCB connectors properly connected?	No	Connect the connectors.
Wiring	2	Is the wiring between the sensor and saddle stitcher disconnected?	Yes	Correct the wiring.
Power supply	3	Is DC5V supplied from J9-13 on the saddle stitcher controller PCB?	No	Replace the saddle stitcher controller PCB.
Ground	4	Is J9-14 on the saddle stitcher controller PCB properly grounded?	No	

COPYRIGHT © 1999 CANON INC.

C. Folder

1. E518, folder motor failure

Cause	Step	Checks	Yes/No	Action
Wiring	1	Is the wiring between the folder motor and the folder driver normal?	No	Correct the wiring.
	2	Is the wiring between the finisher controller PCB and the folder driver normal?	No	Correct the wiring.
Finisher controller PCB	3	Is the folder motor functioning at the right timing?	Yes	Replace the finisher controller PCB.
Folder motor (M14)			No	Check the motor drive mechanism. If abnormal, correct it; if normal, go to step 4.
	4	Is the problem cleared by replacing the folder motor?	Yes	End.
Folder driver PCB			No	Replace the folder driver PCB.

 COPYRIGHT © 1999 CANON INC. CANON SADDLE FINISHER-D2 REV.0 AUG. 1999 PRINTED IN JAPAN (IMPRIME AU JAPON)

D. Inserter

1. E515, inserter motor failure

Cause	Step	Checks	Yes/No	Action
Inserter motor clock sensor (PI42)	1	Check the inserter motor clock sensor. Is the sensor normal?	No	Replace the sensor.
Finisher controller PCB	2	Is the inserter motor functioning at the right timing?	Yes	Replace the finisher controller PCB.
Inserter motor (M15)			No	Check the motor drive mechanism. If abnormal, correct it; if normal, go to step 3.
	3	Is the problem cleared by replacing the inserter motor?	Yes	End.
Inserter driver PCB			No	Replace the inserter driver PCB.

COPYRIGHT © 1999 CANON INC.

IV . SELF DIAGNOSIS

The CPU (IC101) on the finisher controller PCB is equipped with a self diagnostic mechanism which checks the state of the machine as needed; upon detection of an error, it communicates the fact to the copier in the form of "code" and "detail code."

The saddle stitcher has a self-diagnostics facility built in the saddle stitcher controller PCB CPU (Q1), which transmits relevant error information to the finisher controller PCB on detecting errors.

The copier displays codes on the control unit. Detail codes can also be checked by setting the copier into service mode and by viewing LED101 on the finisher.

A. Self-diagnostics

1. Finisher

Code	Item	Description
E500	• Data communication error (with the copier)	• The communication between the copier and the finisher stops, and does not return to normal after a retry for 5 sec. • In addition to the above condition, a retry has been made three times in 5 sec.
E501	• Data communication error (with the slave CPU)	• The communication between the master CPU (IC101) and slave CPU (IC121) stops.
E503	• Data communication error (with the saddle stitcher)	• Communications with the saddle stitcher has been disrupted.
E505	• Back-up RAM (EEP-ROM)	• The check sum has a fault at power-on.
E510	• Inlet motor (M1)	• While the motor is in operation, the clock pulses from the inlet motor are under an equivalent of 50 mm/sec for 1 sec or more.
E514	• Stack delivery motor (M7) • Stack delivery motor clock sensor (PI12)	• While the motor is in operation, the clock pulses from the stack delivery motor clock sensor is under an equivalent of 50 mm/sec for 1 sec or more.
E537	• Front jogging plate motor (M4) • Front jogging plate home position sensor (PI7)	• The front jogging plate does not leave the front jogging plate home position sensor when the front jogging plate motor has been driven for 4 sec. • The front jogging plate does not return to the front jogging plate home position sensor when the front jogging plate motor has been driven for 4 sec.

 COPYRIGHT © 1999 CANON INC. CANON SADDLE FINISHER-D2 REV.0 AUG. 1999 PRINTED IN JAPAN (IMPRIME AU JAPON)

Code	Item	Description
E530	• Rear jogging plate motor (M5) • Rear jogging plate home position sensor (PI9)	• The rear jogging plate does not leave the rear jogging plate home position sensor when the rear jogging plate motor has been driven for 4 sec. • The rear jogging plate does not return to the rear jogging plate home position sensor when the rear jogging plate motor has been driven for 4 sec.
E531	• Stapler motor (M6) • Staple home position detecting switch (MS7)	• The stapler does not leave the stapling home position when the stapler motor has been driven for 0.5 sec or more. • The stapler does not return to the stapling home position when the stapler motor has been driven for 0.5 sec.
E532	• Staple shift motor (M10) • Stapler shift home position sensor (PI7)	• The stapler shift home position sensor does not turn off when the stapler shift motor has been driven for 4 sec. • The stapler shift home position cannot be detected when the stapler shift motor has been driven for 4 sec.
E535	• Swing motor (M8) • Swing guide open sensor (PI16)	• The swing guide closed sensor does not detect the swing guide when the swing motor has been rotated for 2 sec. (detail code FF)
	• Swing motor (M8) • Swing guide closed sensor (PI15)	• The swing guide closed sensor does not detect the swing guide when the swing motor has been rotated for 2 sec. (detail code 01)
E540	• Tray A lifting motor (M13) • Tray A lock sensor (PI25) • Tray A upper position sensor (PI28) • Tray A lower position sensor (PI27)	• When the tray lifting motor is run, lifting is not completed within 25 seconds. • Clock input from the tray idling sensor has been interrupted for 250 ms during motor rotation. • Tray A is positioned below the tray B area.
E542	• Tray B lift motor (M12) • Tray B locked sensor (PI23) • Tray B lower limit sensor (PI24) • Tray B upper position sensor (PI20) • Tray lower position sensor (PI21)	• The upward movement does not end within 25 sec when the tray lift motor has been driven. • The clock pulses from the tray idle rotation sensor while the motor is rotating stop for 250 msec. • The input from the tray B position sensor (PI20) is 0 at power-on. (Tray B is above the tray paper sensor PCB.)
E551	• Power supply fan (FM1) • Punch fan (FM2)	• An outage of the power fan for 2 seconds or longer has been detected (detail code 01). • An outage of the punch fan for 2 seconds or longer has been detected (detail code 02).

COPYRIGHT © 1999 CANON INC.

Code	Item	Description
E577	• Paddle motor (M9) • Paddle home position sensor (PI14)	• The paddle home position sensor does not detect the paddle when the paddle motor has been driven for 5 seconds.
E583	• Tray auxiliary plate motor (M6) • Tray auxiliary plate housing sensor (PI11)	• The tray auxiliary plate housing sensor does not turn on when the tray auxiliary plate motor has been driven for 2 seconds.
E585	• Paddle motor (M9) • Shutter home position sensor (PI13)	• The shutter home position sensor does not turn on when the paddle motor has been driven for 5 seconds (for returning to the home position).
E590	• Punch rotation motor (M18) • Punch rotation home position sensor (PI44)	• The punch rotation home position sensor does not detect the punch rotation home position when the punch rotation motor has been driven for 0.4 seconds or longer. • The punch rotation home position sensor does not turn off when the punch rotation motor has been driven for 1 second or longer while the punch rotation home position is detected.
E593	• Punch registration motor (M17) • Punch side registration home position sensor (PI46)	• The punch side registration home position sensor does not detect the home position when the punch registration motor has been driven for 5 seconds or longer. • The punch side registration home position sensor does not turn off when the punch registration motor has been driven for 5 seconds or longer while the punch side registration home position is detected.
E594	• Punch paper edge sensor home position sensor (PI45) • Punch sensor shift motor (M19)	• The punch paper edge sensor home position sensor does not detect the home position when the punch sensor shift motor has been driven for 5 seconds or longer. • The punch paper edge sensor home position sensor does not turn off when the punch sensor shift motor has been driven for 5 seconds or longer while the punch paper edge sensor home position is detected.
E595	• Punch waste feed motor (M16) • Punch waste feed sensor (PI54)	• The punch waste feed sensor remains unchanged in its output when the punch waste feed motor has been driven for 2 seconds or longer.

 COPYRIGHT © 1999 CANON INC.

2. Saddle Stitcher

Code	Detail code	Item	Detection
E5F0	01	• Paper positioning plate motor (M34) • Paper positioning plate home position sensor (PI66)	• The paper positioning plate home position sensor does not turn on when the paper positioning plate motor has been driven for 1.25 seconds or longer.
	02		• The paper positioning plate home position sensor does not turn off when the paper positioning plate motor has been driven for 1 second or longer.
E5F1	01	• Folding motor (M32) • Folding motor clock sensor (PI64)	• The count of pulses detected by the folding motor clock sensor has fallen to a predetermined level or lower.
E5F2	01	• Guide motor (M33) • Guide home position sensor (PI73)	• The guide home position sensor does not turn on when the guide motor has been driven for 0.4 second or longer.
	02		• The guide home position sensor does not turn off when the guide motor has been driven for 1 second or longer.
E5F3	01	• Jogging motor (M35) • Jogging plate home position sensor (PI65)	• The jogging home position sensor does not turn on when the jogging motor has been driven for 0.5 second or longer.
	02		• The jogging home position sensor does not turn off when the jogging motor has been driven for 1 second or longer.
E5F4	01	• Stitch motor (rear, M36) • Stitch home position switch (rear, MS32)	• The stitching home position switch does not turn off when the stitch motor (rear) has been driven forward for 0.5 second or longer.
	02		• The stitching home position sensor does not turn on when the stitching motor (rear) has been driven reverse for 0.5 second or longer upon jam recovery.
E5F5	01	• Stitch motor (front, M37) • Stitch home position switch (front, MS34)	• The stitch home position switch does not turn off when the stitch motor (front) has been driven forward for 0.5 second or longer.
	02		• The stitch home position sensor does not turn on when the stitch motor (front) has been driven in reverse for 0.5 second or longer upon jam recovery.
E5F6	01	• Paper pressure plate motor (M38) • Paper pressure plate home position sensor (PI74)	• The paper pressure plate home position sensor does not turn on when the paper pressure plate motor has been driven for 0.3 second or longer during movement to the paper pressure plate home position.
	02		• The paper pressure plate home position sensor does not turn off when the paper pressure plate motor has been driven for 0.3 second or longer during movement to the paper pressure plate top position.

COPYRIGHT © 1999 CANON INC.

Code	Detail code	Item	Description
E5F6	03	• Paper pressure plate motor (M38) • Paper pressure plate top position sensor (PI75)	• The paper pressure top position sensor does not turn off when the paper pressure plate motor has been driven for 0.3 second or longer during movement from the paper pressure plate top position to the home position.
	04	• Paper pressure plate motor (M38) • Paper pressure plate motor clock sensor (PI61)	• The count of pulses detected by the paper pressure plate motor clock sensor has fallen to a predetermined level or lower.
	05	• Paper pressure plate motor (M38) • Paper pressure plate top position sensor (PI75)	• The paper pressure top position sensor does not turn on when the paper pressure plate motor has been driven for 0.3 second or longer after the paper pressure plate home position sensor turned off.
E5F7	01	• Saddle tray motor (M20) • Saddle tray home position sensor (PI49)	• The saddle tray home position sensor does not turn on when the saddle tray motor has been driven for 8 seconds or longer.
	02		• The saddle tray home position sensor does not turn off when the saddle tray motor has been driven for 1 second or longer.
E5F8	01	• Guide home position sensor (PI73) connector	• The state of guide home position sensor connector disconnection is detected.
	02	• Paper pressure plate home position sensor (PI74) connector	• The state of paper pressure plate home position sensor connector disconnection is detected.
	03	• Paper pressure plate top position sensor (PI75) connector	• The state of paper pressure plate top position sensor connector disconnection is detected.

3. Folder

Code	Item	Detection
E518	• Folder motor (M14)	• Clock input from the folding motor has fallen to a predetermined level or lower during folder motor rotation.

 COPYRIGHT © 1999 CANON INC.

4. Inserter

Code	Item	Detection
E515	• Inserter motor clock sensor (PI42) • Inserter motor (M15)	• Clock input from the inserter motor clock sensor has fallen to a predetermined level or lower during inserter motor rotation.

COPYRIGHT © 1999 CANON INC.

B. Alarms

1. Finisher

Error	Conditions	Detection	Machine operation	Resetting
No stapler	• The stapler is not attached.	• Constant monitoring	• The stapler motor (M6) and the stapler shift motor (M4) are disabled from driving.	• Attach a stapler.
No staple	• Staple cartridge empty	• Constant monitoring	• Carries on the normal operation as directed from the copier unit.	• Replace the staple cartridge or mount it properly.
Tray A stacking capacity over	• Stack capacity or number of sets more than loadable in the tray is detected.	• Constant monitoring	• Carries on the normal operation.	• No paper in the tray is detected at rest.
Tray B stack capacity over	• Stack capacity or number of sets more than loadable in the tray is detected.	• Constant monitoring	• Carries on the normal operation	• No paper in the tray is detected at rest.

2. Saddle Stitcher Alarms

a. Stack over alarms

Error	Conditions	Detection	Machine operation	Resetting
Stack over	• The stack in the delivery tray has exceeded the limit capacity.	• Delivery of the excess stack ends.	• Carries on the normal operation.	• Remove the stack from the tray.
Stack capacity over	• More than 15 papers are loaded in the container.	• Too many papers are loaded.	• Disables stitching.	• Remove the papers from the container.

 COPYRIGHT © 1999 CANON INC. CANON SADDLE FINISHER-D2 REV.0 AUG. 1999 PRINTED IN JAPAN (IMPRIME AU JAPON)

b. Stitch alarms

Error	Conditions	Detection	Machine operation	Resetting
Stitching failure	· Stitching is not completed within 1 second.	· The home position was not redetected within 0.5 second after stitching started. The home position was detected within 0.5 second after the stitch motor was reversed subsequently. (An error would be assumed if the home position cannot be detected within 0.5 second after the motor is reversed.)	· Stops stitching.	· Remove the jammed staple.
Mixed papers	· Papers of different sizes are loaded in the container.	· Different-size papers are loaded.	· Disables stitching. · Disables jogging.	· Remove the papers from the container.
Not enough stitch staples	· Staples have been removed from the stitcher. · Enough staples are not available.	· A shortage of staples is detected while stitching is not in progress.	· Disables stitching. · Notifies the shortage of staples to the copier.	· Set the staple carridge.

COPYRIGHT © 1999 CANON INC.

APPENDIX

A. GENERAL TIMING CHART A-1
B. LIST OF SIGNALS / ABBREVIATIONS A-3
C. FINISHER UNIT GENERAL CIRCUIT DIAGRAM A-7
D. SADDLE STITCHER UNIT GENERAL CIRCUIT DIAGRAM A-9
E. PAPER FOLDING UNIT GENERAL CIRCUIT DIAGRAM A-11
F. COVER INSERTION UNIT - A1 GENERAL CIRCUIT DIAGRAM A-12
G. SOLVENTS AND OILS LIST A-13
H. SPECIAL TOOLS A-14

COPYRIGHT © 1999 CANON INC. CANON SADDLE FINISHER - D2 REV.0 AUG. 1999 PRINTED IN JAPAN (IMPRIME AU JAPON)

1. Finisher Unit

A4, 3 Copies, 3 sets, 1-point, Front Stapling

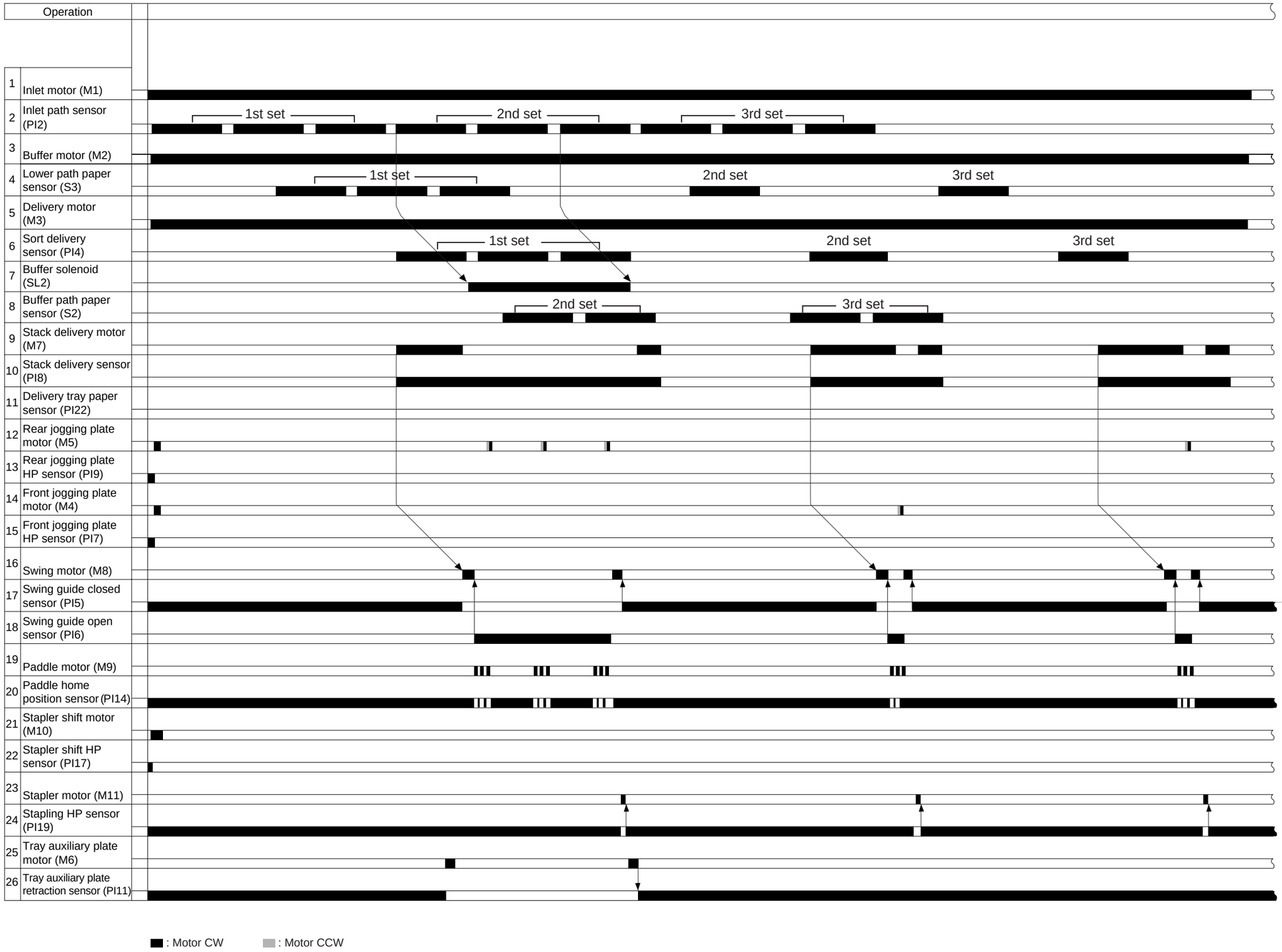

COPYRIGHT © 1999 CANON INC.

2. Saddle Stitcher Unit

A4R / LTRR, 3 Sheets

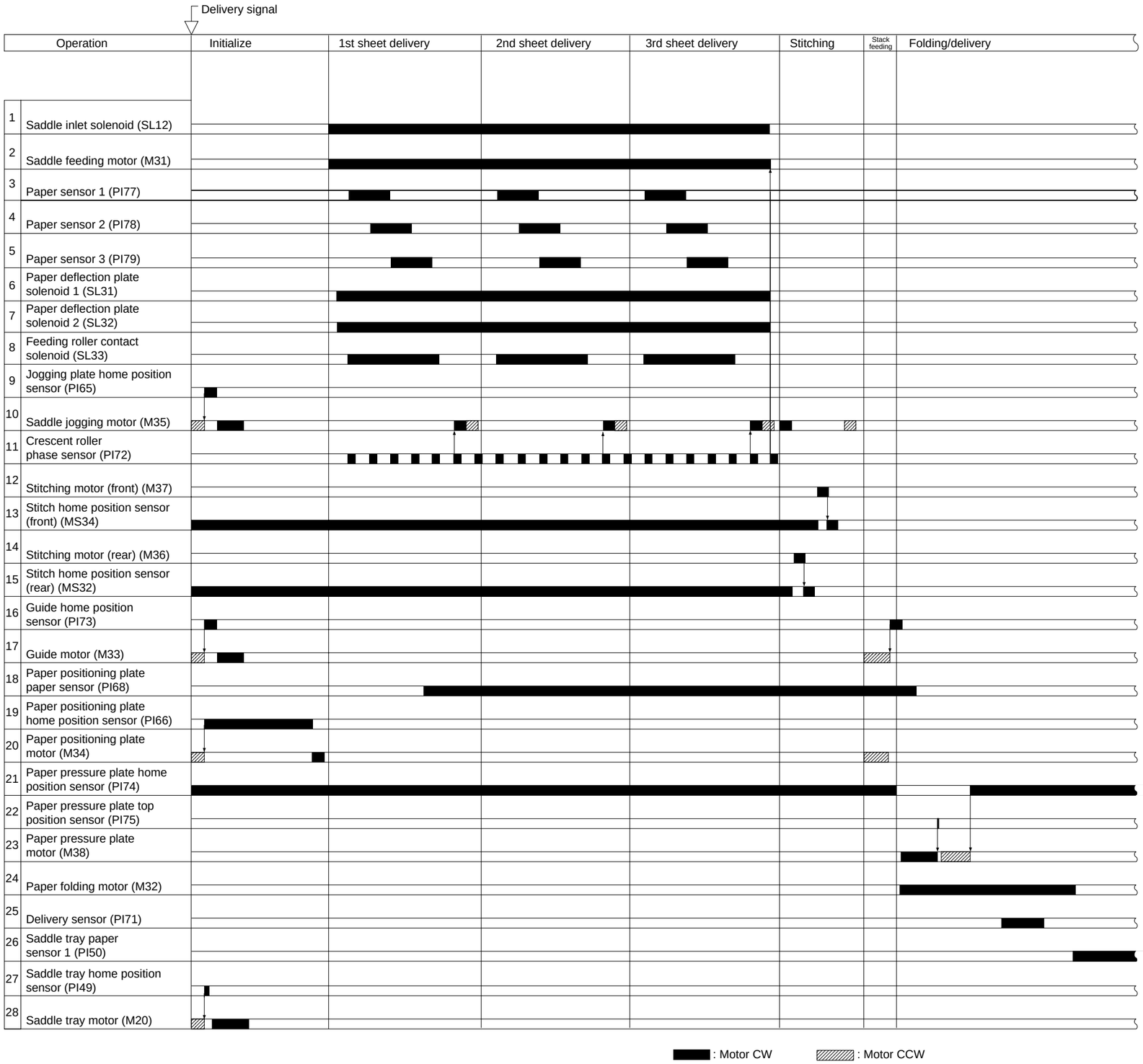

COPYRIGHT © 1999 CANON INC. CANON SADDLE FINISHER - D2 REV.0 AUG. 1999 PRINTED IN JAPAN (IMPRIME AU JAPON)

B . LIST OF SIGNALS/ABBREVIATIONS

The following is a list of signals and abbreviations used in this document and the circuit diagrams:

Note:
The abbreviations in parentheses are electrical signals but are analog, which cannot be expressed in terms of '1' and '0'. Others are digital signals, which can be expressed as being either '1' or '0'.

1. Finisher

BFDMTRCLK	BUFFER MOTOR CLOCK DETECTION Signal
[BFLEDAJ]	BUFFER PASS LED ADJUST Command
BFPCB	BUFFER PAPER PCB PAPER DETECTION Signal
BFPSSCHG	BUFFER PASS CHANGE SOLENOID DRIVE Command
BFPSSXIT	BUFFER PASS EXIT PAPER DETECTION Signal
BNDLDELV	BUNDLE DELIVERY PAPER DETECTION Signal
CRTSET	STAPLE CARTRIDGE SET Signal
DSTD	DUST DETECTION Signal
[ENTLEDAJ]	ENTRANCE PASS LED ADJUST Command
ENTPASSPA	ENTRANCE PASS PAPER DETECTION Signal
ENTPCB	ENTRANCE PASS PCB PAPER DETECTION Signal
FANON	FAN ON Command
FANSTP	FAN STOP Signal
FDBLT	FEED BELT SOLENOID DRIVE Command
FDROPN	FRONT COVER OPEN Signal
FJOGHP	FRONT JOG PLATE HOME POSITION DETECTION Signal
FULLED	FULL DETECTIION LED DRIVE Command
HOOKEMP	HOOK EMPTY Signal
[LWRPLEDADJ]	LOWER PASS LED ADJUST Command
LWRPPCB	LOWER PASS PCB PAPER DETECTION Signal
MDLED	PRE-NOTICE LED DRIVE Command
NSTDLV	NON-SORT DELIVERY PAPER DETECTION Signal
PDLHP	PADDLE HOME POSITION Signal
PFANON	PUNCH FAN DRIVE Command
PFANSTP	PUNCH FAN STOP DETECTION Signal
PHCMPL	PUNCH COMPLETE DETECTION Signal
PHCONTST	PUNCH CONTAINER SET DETECTION Signal

COPYRIGHT © 1999 CANON INC.

PHFEEDMT	PUNCH DUST FEED DETECTION Signal
PHHP	PUNCH UNIT HOME POSITION DETECTION Signal
PHPADG	PUNCH PAPER EDGE DETECTION Signal
PHROTHP	PUNCH ROTATION HOME POSITION DETECTION Signal
PHSNRHP	PUNCH EDGE SENSOR HOME POSITION DETECTION Signal
PNHMREF	PUNCH ROTATION MOTOR REFERENCE Signal
PNHREGREF	PUNCH REGIST REGISTRATION MOTOR REFERENCE Signal
PNHSCRMD	PUNCH DUST FEED MOTOR DRIVE Command
PNSNRHOLD	PUNCH SENSOR SLIDE MOTOER HOLD Command
SBTRYPH	SUB-TRAY SOLENOID PUSH DRIVE Command
SBTRYPL	SUB-TRAY SOLENOID RELEASE DRIVE Command
SLFPRIM	SELF PRIMING Signal
SMPPAPRMV	NON-SORT TRAY PAPER REMOVAL DETECTION Signal
SMPTRYDL	SAMPLE TRAY LOCK DETECTION Signal
SMPTRYLEDAJ	NON-SORT TRAY PAPER SENSOR LED ADJUST Command
SMPTRYLWPO	SAMPLE TRAY LOWER POSITION DETECTION Signal
SMPTRYPA	SAMPLE TRAY PAPER DETECTION Signal
SMPTRYPAP	NON-SORT TRAY PAPER SENSOR PAPER DETECTI0N Signal
SMPTRYUPPO	SAMPLE TRAY UP POSITION DETECTION Signal
SOPAPRMV	SORT TRAY PAPER REMOVAL DETECTION Signal
SOTRYLEDAJ	SORT TRAY PAPER SENSOR LED ADJUST Command
SOTRYPAP	SORT TRAY PAPER SENSOR PAPER DETECTI0N Signal
SPTTRYIN	SUPPORT TRAY IN DETECTION Signal
STCLS	SHUTTER CLOSED DETECTION Signal
STDLV	SORT DELIVERY PAPER DETECTION Signal
STPDRHP	STAPLER DRIVE HOME POSITION Signal
STPLHP	STAPLER UNIT HOME POSITION Signal
STTRYDL	SORT TRAY LOCK DETECTION Signal
STTRYLW	SORT TRAY LOWER LIMIT DETECTION Signal
STTRYLWPO	SORT TRAY LOWER POSITION DETECTION Signal
STTRYPA	SORT TRAY PAPER DETECTION Signal
STTRYUPPO	SORT TRAY UP POSITION DETECTION Signal
SWDGDCL	SWING GUIDE CLOSED Signal
SWGMTRCLK	SWING MOTOR CLOCK DETECTION Signal
SWGOPN	SWING GUIDE OPEN Signal
UPCVROPN	UPPER COVER OPEN DETECTION Signal

 COPYRIGHT © 1999 CANON INC.

UPSCHG	UPPER PASS CHANGE SOLENOID DRIVE Command

2. Saddle Stitcher

2NDPA	No.2 PAPER SENSOR DETECT Signal
3RDPA	No.3 PAPER SENSOR DETECT Signal
ACCOFF	ACC OFF DETECTION Signal
DELVMS	DELIVER YDOOR OPEN DETECT SWITCH Signal
EJCVR	DELIVERY DOOR OPEN DETECT Signal
FDRLHP	CRESCENT ROLLER PHASE DETECT Signal
FLPSL1	FLAPPER DRIVE Signal 1
FSPSL2	FLAPPER DRIVE Signal 2
HKEMP1	STAPLE ABSENT DETECT Signal 1
HKEMP1	STICHER (FRONT) STAPLE PRESENT DETECT
HKEMP2	STAPLE ABSENT DETECT Signal 2
HKEMP2	STICHER (REAR) STAPLE PRESENT DETECT
INSON	INSORTER ON DETECTION Signal
JOGHP	ALIGNMENT GIDE HP DETECT Signal
LUNGEH	PAPER PUSHING PLATE HP DETECT Signal
LUNGET	PAPER PUSHING PLATE TOP POSITION DETECT Signal
PAPPOS	PAPER POSITION PLATE HP DETECT Signal
PDEL	DELIVERY DETECT Signal
PPOSPA	PAPER POSITIONING PLATE PAPER DETECT Signal
PNHON	PUNCH UNIT ON DETECTION Signal
RLNIPSL	CRESCENT ROLLER CONTACT SOLENOID DRIVE Signal
SDLON	SADDLE STITCHER ON DETECTION Signal
SENTPA	SADDLE STITCHER ENTERANCE PAPER DETECTION Signal
SENTSL	SADDLE STITCHER ENTERANCE SOLENOID DRIVE Command
SJMLED	SADDLE STITCHER JAM LED DRIVE Command
SMPON	SAMPLE TRAY ON DETECTION Signal
STCHHP1	STITCHING HP DETECT Signal 1
STCHHP2	STITCHING HP DETECT Signal 2
STRYHP	SADDLE TRAY HOME POSITION DETECTION Signal
STRYPA1	SADDLE TRAY PAPER DETECTION Signal 1
STRYPA2	SADDLE TRAY PAPER DETECTION Signal 2
STRYPA3	SADDLE TRAY PAPER DETECTION Signal 3

COPYRIGHT © 1999 CANON INC.

TRYPAR	TRAY PAPER DETECT Signal
VPJM	VERTICAL PATH PAPER DETECT Signal
ZHLDON	Z-HOLDER ON DETECTION Signal

3. Folder

DP3	FOLDER FEED PATH PAPER DETECTION Signal 3
FB4-2SL	FOLDER B4 STOPPER SOLENOID DRIVE Command 2
F-DP1	FOLDER FEED PATH PAPER DETECTION Signal 1
F-S2D	FOLDER FEED PATH PAPER DETECTION Signal 2
FENTSL	FOLDER ENTERANCE SOLENOID DRIVE Command
FPD1	FOLEDED PAPER DETECTION Signal 1
FSET	FOLDER SET DETECTION Signal
FUCO	FOLDER UPPER COVER CLOSED DETECTION Signal
HPD	HORIZONTAL PATH PAPER DETECTION Signal

4. Inserter

DOCST	INSORTER DOCUMENT SET DETECTION Signal
DOCSTLED	INSORTER DOCUMENT LED DRIVE Command
FB4-1SL	FOLDER B4 STOPPER SOLENOID DRIVE Command 1
FPRSRELSL	FOLDER PRESSURE RELEASE SOLENOID DRIVE Command
FPRSSL	FOLDER PRESSURE SOLENOID DRIVE Command
INSCVROP	INSORTER COVER OPEN DETECTION Signal
INSMTCLK	INSORTER MOTOR CLOCK DETECTION Signal
INSOPNN	INSORTER OPEN DETECTION Signal
INSPASS1	INSORTER PATH PAPER DETECTION Signal 1
INSPASS2	INSORTER PATH PAPER DETECTION Signal 2
INSPASS3	INSORTER PATH PAPER DETECTION Signal 3
INSPKSL	INSORTER PICK-UP SOLENOID DRIVE Command
INSPKUP	INSORTER PICK-UP DETECTION Signal
INSSEPCL	INSORTER SEPARATION CLUTCH DRIVE Command
INSSTPSL1	INSORTER STOPPER SOLENOID DRIVE Command 1 (PULL)
INSSTPSL2	INSORTER STOPPER SOLENOID DRIVE Command 2 (RELEASE)

 COPYRIGHT © 1999 CANON INC.

C . FINISHER UNIT GENERAL CIRCUIT DIAGRAM

Finisher unit general circuit diagram (1/2)

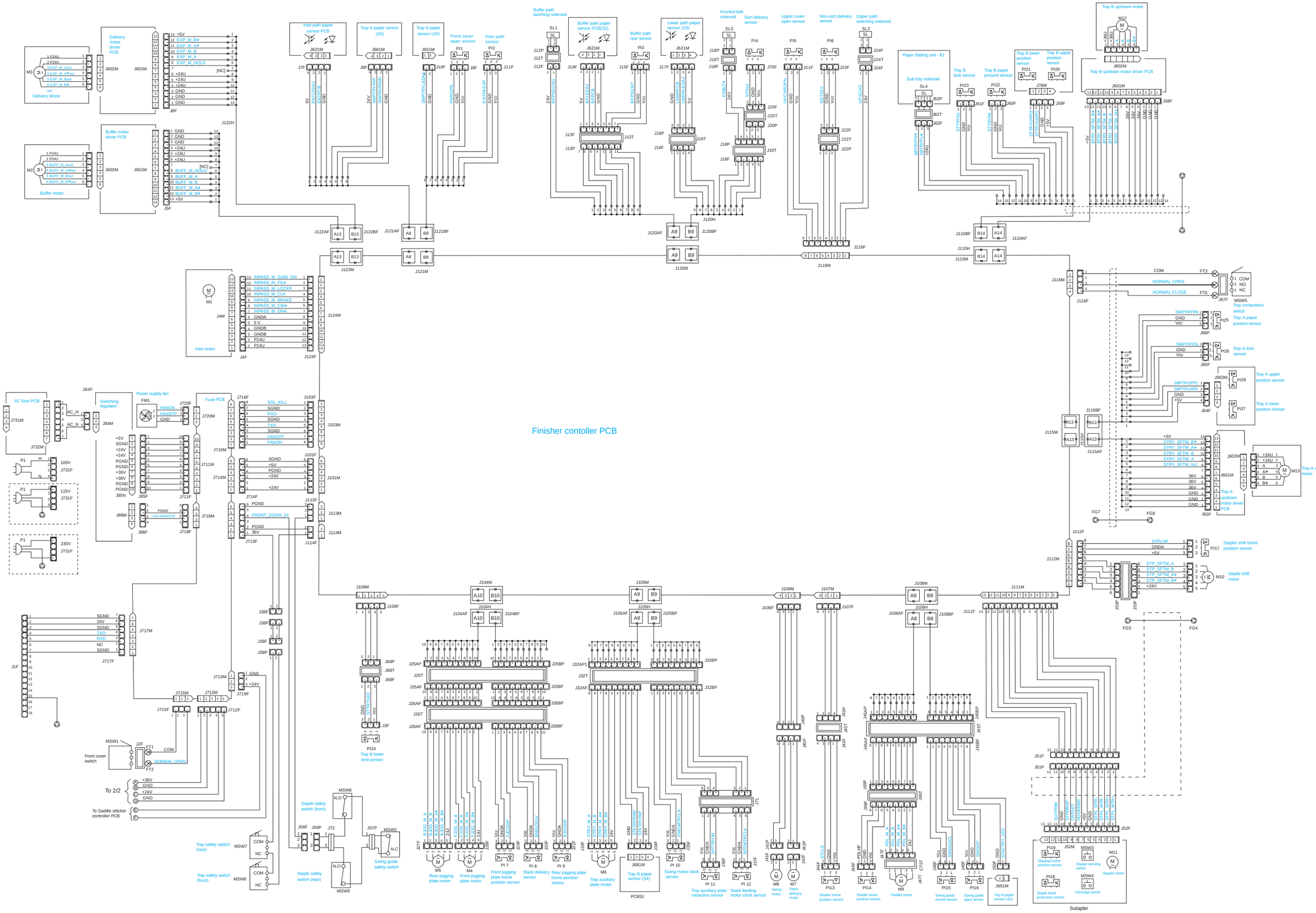

Finisher unit general circuit diagram (2/2)

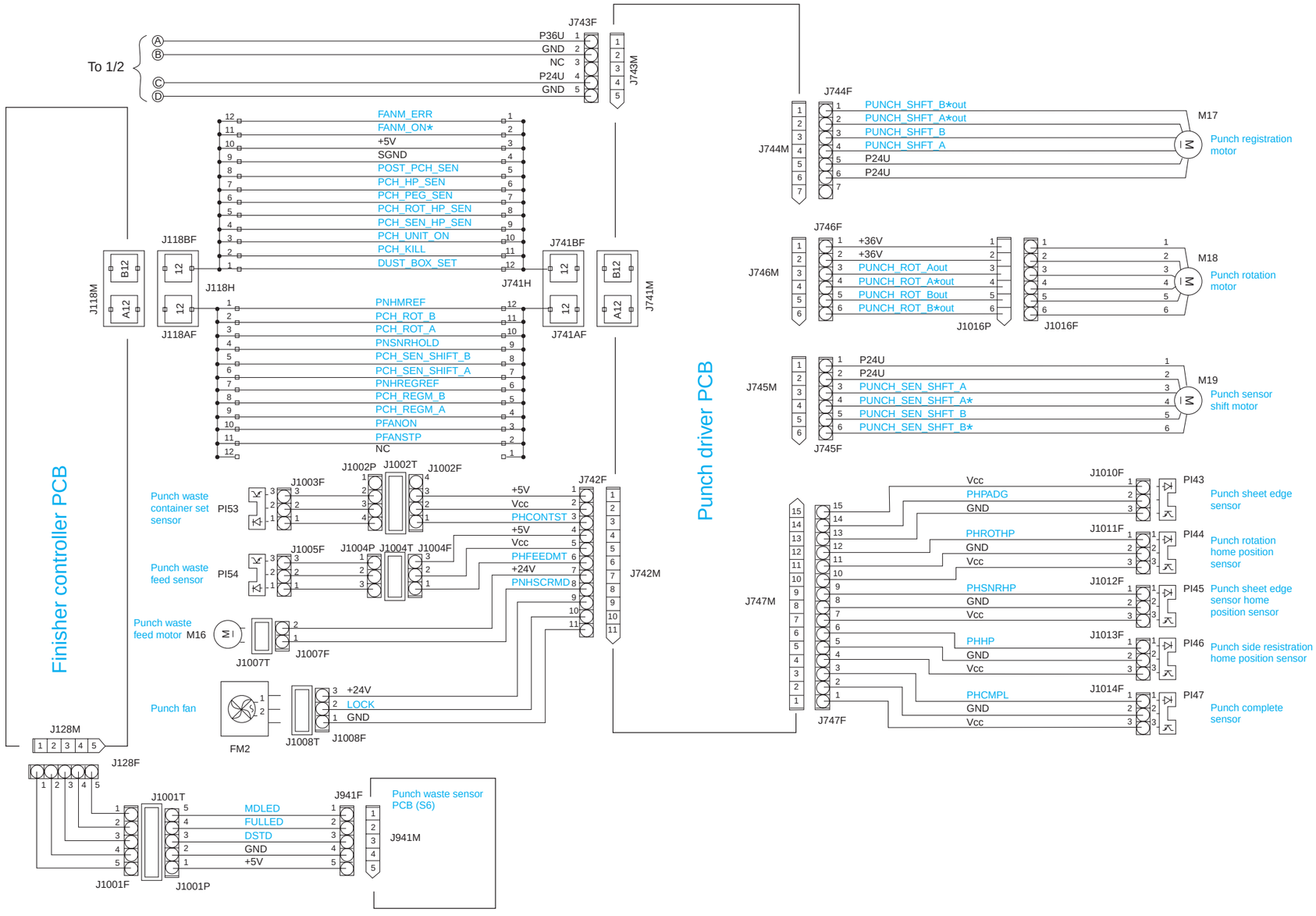

COPYRIGHT © 1999 CANON INC.

CANON SADDLE FINISHER - D2 REV.0 AUG. 1999 PRINTED IN JAPAN (IMPRIME AU JAPON)

D . SADDLE STITCHER UNIT GENERAL CIRCUIT DIAGRAM

Saddle stitcher unit general circuit diagram (1/2)

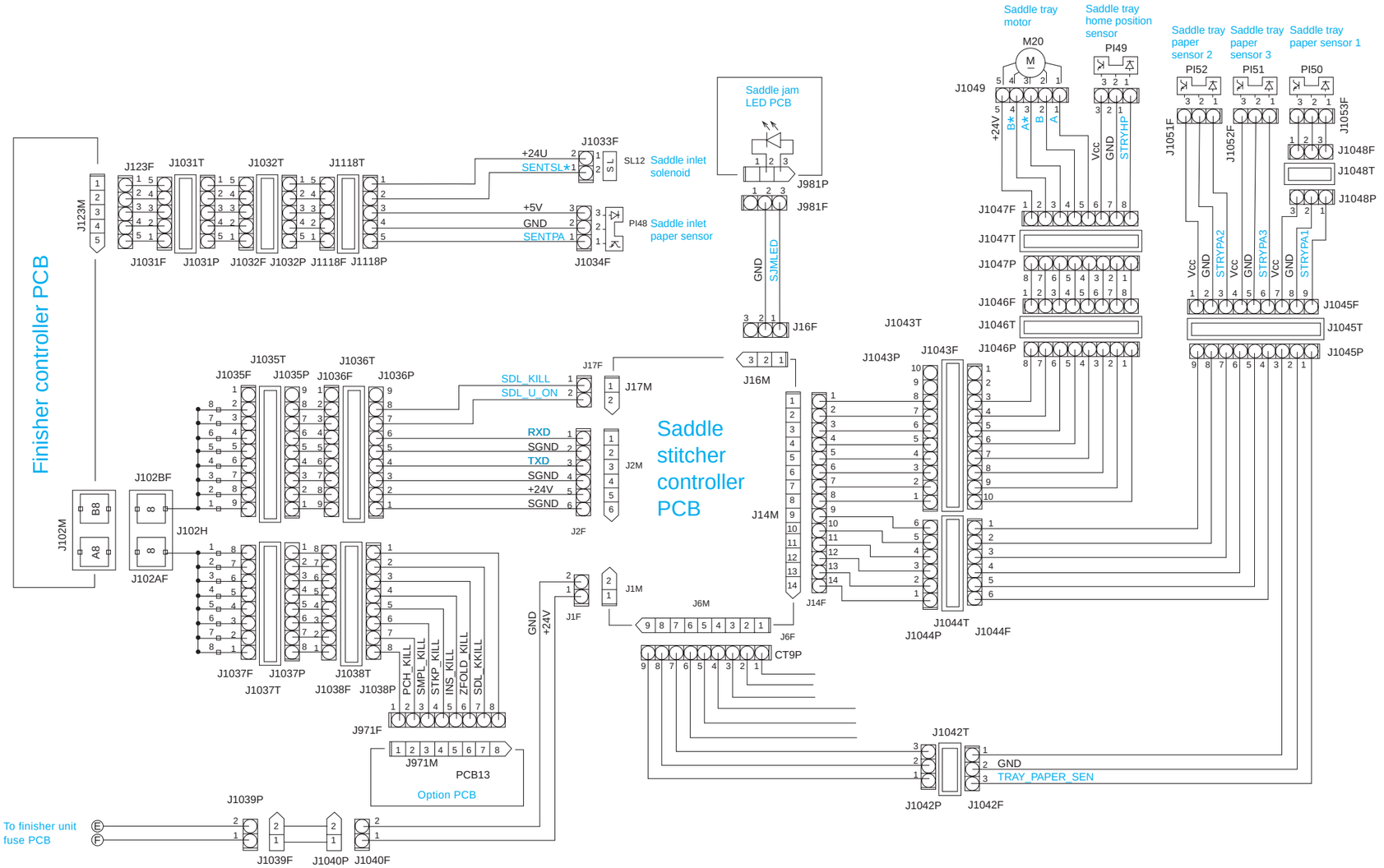

COPYRIGHT © 1999 CANON INC.

Saddle stitcher unit general circuit diagram (2/2)

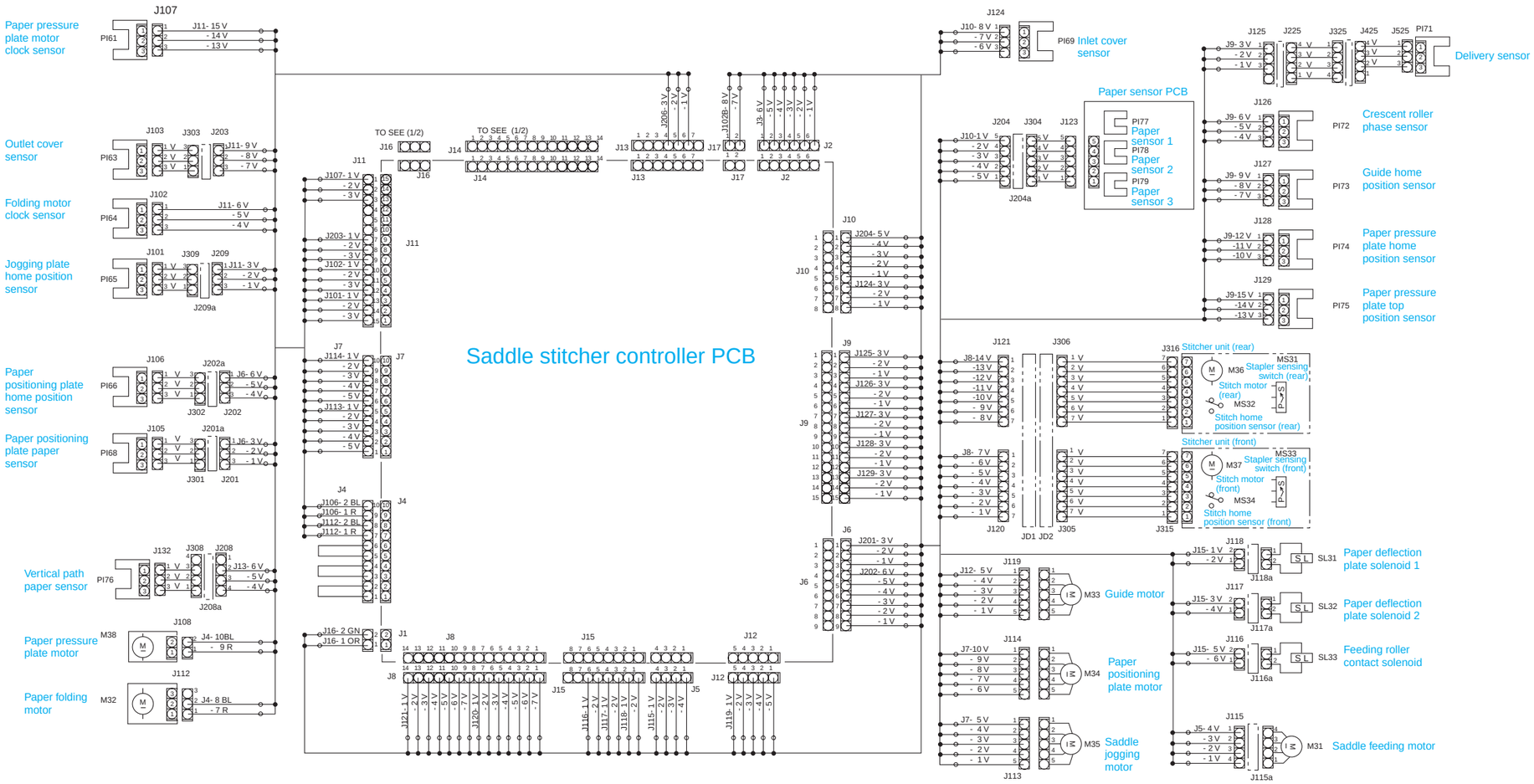

COPYRIGHT © 1999 CANON INC.

E . PAPER FOLDING UNIT GENERAL CIRCUIT DIAGRAM

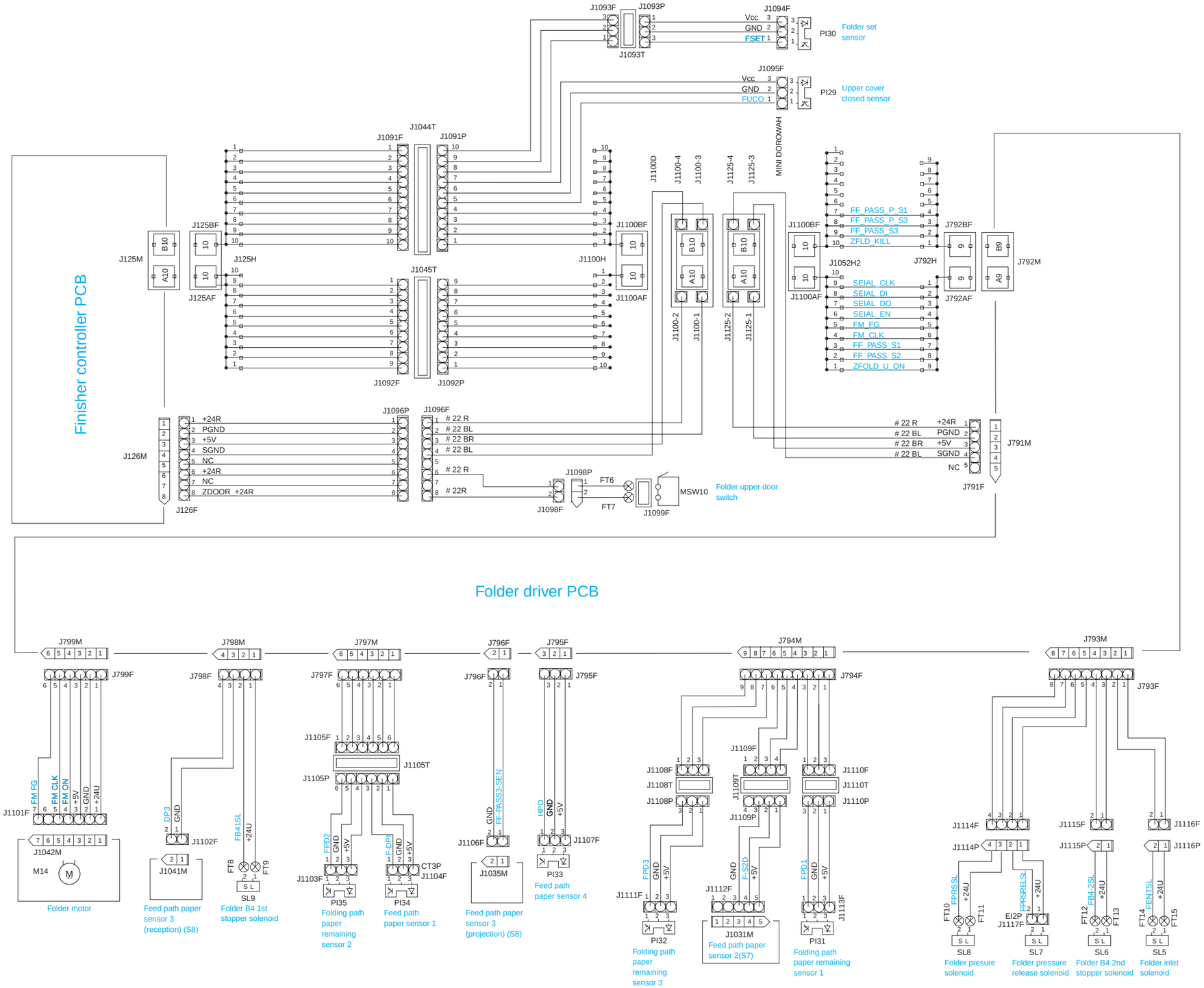

COPYRIGHT © 1999 CANON INC.

F . COVER INSERTION UNIT-A1 GENERAL CIRCUIT DIAGRAM

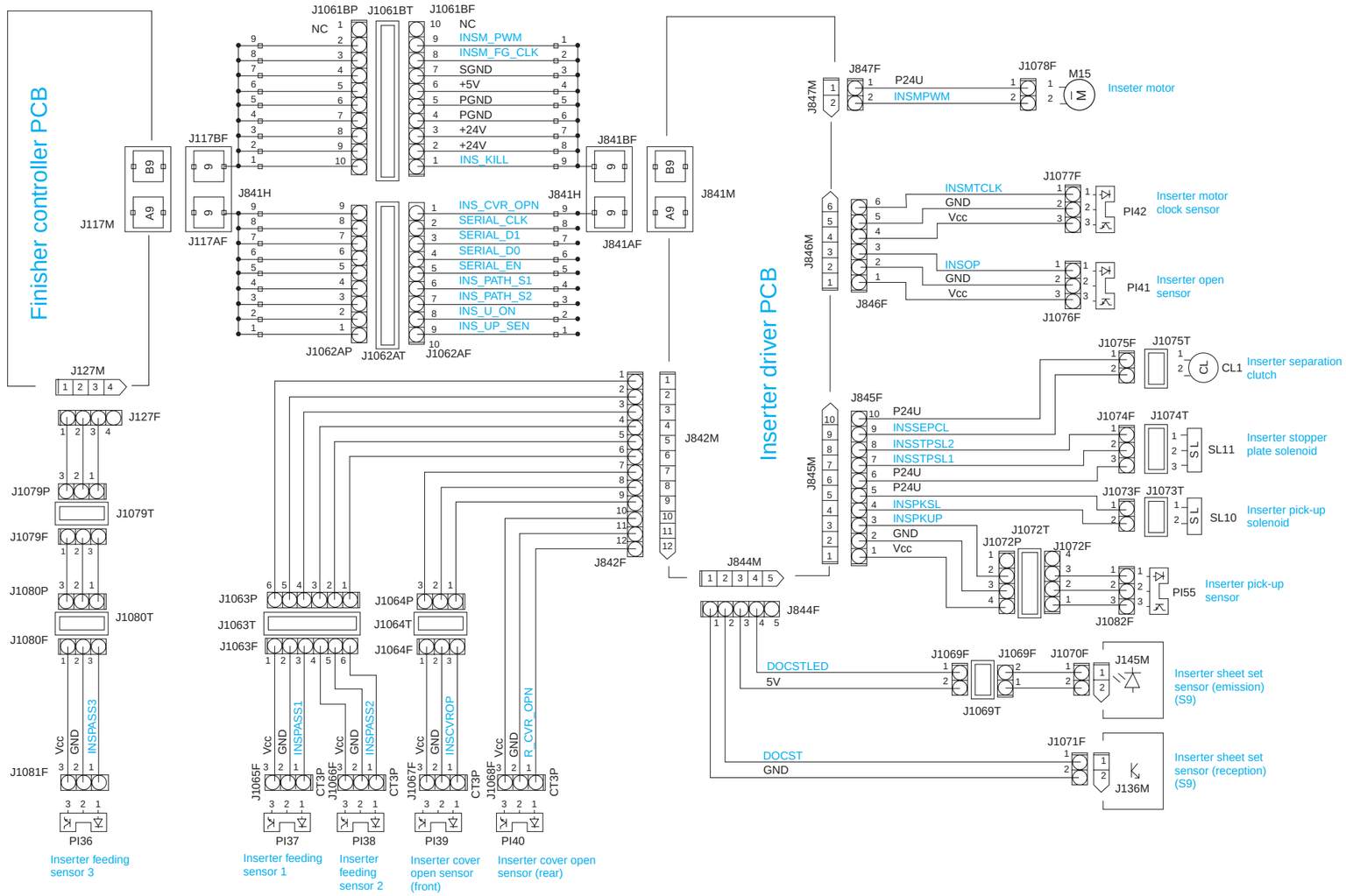

COPYRIGHT © 1999 CANON INC.

G . SOLVENTS AND OILS LIST

No.	Name	Uses	Composition	Remarks
1	Alcohol	Cleaning; e.g., glass, plastic, rubber (external covers).	Fluorine-family hydrogen carbon, alcohol, surface activating agent	• Do not bring near fire. • IPA (isopropyl alcohol)
2	Lubricant	Driving parts, friction parts (lead cam)	Silicone oil	• FY9-6008 (10g)

COPYRIGHT © 1999 CANON INC.

H . SPECIAL TOOLS

You will need the following special tools when servicing the machine in addition to the standard tools set.

No.	Tool name	Tool No.	View	Rank	Remarks
1	Door Swich Actuator	TKN-0093	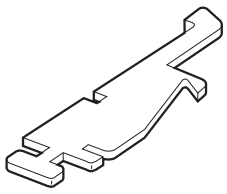	A	
2	Tester Extension pin	FY9-3038-000	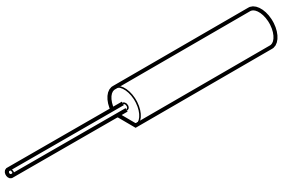	A	For making electrical checks; i.e., serving as an attachment to a meter.
3	Tester Extension pin (L-shaped tip)	FY9-3039-000	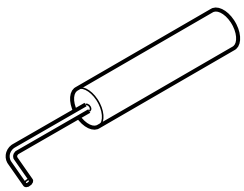	A	For making electrical checks; i.e., serving as an attachment to a meter.
4	Downloader PCB	FY9-2034-000	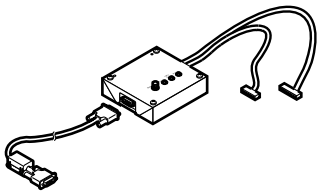	C	For downloading IC121

Rank:
- A: Each service person is expected to carry one.
- B: Each group of or so sevice persons is expected to carry one.
- C: Each workshop is expected to keep one.

 COPYRIGHT © 1999 CANON INC.

Prepared by
Office Imaging Products Technical Support Division
CANON INC
Printed in Japan

REVISION 0 (AUG. 1999) (18756)

5-1, Hakusan 7-chome, Toride-City, Ibaraki, 302-8501 Japan

Canon

This publication is printed on
70% reprocessed paper.

PRINTED IN JAPAN (IMPRIME AU JAPON) 0899M1.31-1