NP4080

SERVICE HANDBOOK
(for 220/240V)

REVISION 1 JAN. 1993

Canon
FY8-2383-010

COPYRIGHT 1993 CANON INC.
CANON NP4080 REV.1 JAN. 1993 PRINTED IN JAPAN

1

CHAPTER 1 MAINTENANCE AND SERVICING

I. PERIODICAL SERVICING CHART

Note:
Do not use solvents and oils other than those specified.

△: Clean ●: Replace ×: Oil □: Adjust ◎: Inspect

Unit	Parts	Maintenance intervals					Remarks
		every 30,000	every 60,000	every 120,000	every 210,000	every 510,000	
Externals	Copyboard glass	△					
	Ozone filter				●		or 1 yr.
	Scanner fan filter				●		
Scanner drive assembly	Scanner rail			△×			Clean it using alcohol solution; then, apply oil (CK-0451).
Transfer/ Separation assembly Feeder assembly	Transfer guide plate (upper, lower)	△					Use a moist cloth.
	Transfer/Separation corona assembly rail	△					
	Feeder belt, Feeder Guide plate	△					
Scanner	No.1 through No.6 mirrors	△					Use a blower brush; if necessary, use alcohol solution.
	Dust-proof glass	△					
	Lens	△					Use a blower brush.
	Reflector for scanning lamp	△					
	Side reflector for scanning lamp	△					
Corona assembly	Primary corona assembly	△					Do NOT clean the primary corona wire.
	Pre-transfer corona assembly	△		●			Dry wipe it using lint-free paper; then, use alcohol solution. Do NOT use water
	Primary corona assembly grid wire	△					
	Shield plate, Block (primary, pre-transfer, transfer, separation)	△					
	Corona wire (primary, pre-transfer, transfer, separation)		●				Do NOT clean the corona wires.
CD unit	Spacer roller	△			●		Use a alcohol solution.
	Side seal				●		
Fixing assembly	Upper/Lower roller	△					Use cleaning oil (TKN-0464)
	Separation claw	△					Use solvent
	Paper guide	△					

II. PERIODICALLY REPLACED PARTS

Some parts of the machine must be replaced on a periodical basis to maintain the its original performance; replace them as shown even if they do not show signs of wear or damage. Arrange the replacement so that it coincides with a scheduled visit.

as of JAN. 1993

No.	Parts name	Parts No.	Q'ty	Estimated life (copies)	Remarks
1	Corona wire (primary, pre-transfer, transfer, separation)	FY3-0030-000	—	60,000	100V
		FY3-0040-000	—	60,000	115/230V
2	Pre-transfer corona assembly	FG1-8040-040	1	120,000	to prevent leakage to block.
3	Ozone filter (heat exhaust fan)	FB1-5681-000	1	210,000	or 1 yr.
4	Ozone filter (feeder fan)	FB1-6044-000	1	210,000	or 1 yr.
5	Filter (scanner cooling fan)	FA5-3010-000	1	210,000	or 1 yr.
6	Side seal (CD unit)	FA5-2720-000	2	210,000	*1
7	Speacer roller (CD unit)	FS2-6004-000	2	210,000	*1

The values above are estimates only and subject to change based on field data.
*1 when CD unit is used.

III. DURABLES

Some parts of the machine may become worn or damaged over its warranty period; replace them as necessary.

A. Copier

as of JAN. 1993

No.	Parts name	Parts No.	Q'ty	Estimated life (copies)	Remarks
1	Scanning lamp	FH7-3246-000	1	120,000	100/115V
		FH7-3247-000	1	120,000	230V
2	Pick-up roller (pick-up assembly)	FA5-2854-020	4	120,000	
3	Feeder roller (pick-up assembly)	FA5-2933-000	2	120,000	
4	Separation roller (pick-up assembly)	FA5-2867-000	2	120,000	
5	Drum separation claw	FA3-8577-030	4	120,000	
6	Transfer/Separation corona wire cleaner	FF5-0940-000	1	120,000	
7	Lower roller cleaner (fixing assembly)	FF2-0175-000	1	120,000	
8	Pre-exposure lamp	FH7-3232-000	1	210,000	
9	Lower roller (fixing assembly)	FB1-5921-000	1	210,000	
10	Upper separation claw (fixing assembly)	FA9-0451-000	4	210,000	
11	Lower separation claw (fixing assembly)	FA2-9037-000	4	210,000	
12	Insulating bush (fixing assembly)	FB1-5928-000	2	210,000	
13	Cleaning belt (fixing assembly)	FA3-8908-000	1	300,000	depends on length of copy paper.
14	Registration roller (lower)	FA5-3120-000	1	300,000	
15	Developing cylinder (black developing assembly)	FA5-2594-000	1	300,000	
16	Developing drive gear (black developing assembly)	FS3-0041-000	1	300,000	
17	Upper roller (fixing assembly)	FB1-5948-000	1	510,000	

No.	Parts name	Parts No.	Q'ty	Estimated life (copies)	Remarks
18	Oil pad (front; registration roller)	FA5-3215-000	1	510,000	impregnate it with oil (CK-0451); make sure the oil will not drip.
19	Oil pad (rear; registration roller)	FA5-3216-000	1	510,000	
20	Lower feed roller (Lower)	FB1-5975-030	1	510,000	
21	Halogen heater (fixing assembly)	FH7-4255-000	1	510,000	100V
		FH7-4256-000	1	510,000	115V
		FH7-4297-000	1	510,000	230V
22	Scanner drive cable	FB1-6086-000	1	510,000	
23	Ball bearing (upper fixing roller)	XG9-0181-000	2	510,000	
24	Ball bearing (lower fixing roller)	XG9-0208-000	2	510,000	
25	ATR window (CD unit)	FA5-2672-000	1	60,000	*1
26	Starter (red; CD unit)	F41-6012-000	1	60,000	*1
	Starter (green; CD unit)	F41-6022-000	1	60,000	*1
27	Starter (blue; CD unit)	F41-6032-000	1	60,000	*1
	Starter (brown; CD unit)	F41-6042-000	1	60,000	*1
	Developing cylinder (CD unit)	FA5-2690-000	1	210,000	*1

The values above are estimates only and subject to change based on field data.
*1 when CD unit is used.

B. Cassette Feeding Unit

as of JAN. 1993

No.	Parts name	Parts No.	Q'ty	Estimated life (copies)	Remarks
1	Pick-up roller	FA5-2854-020	4	120,000	
2	Feeder roller	FA5-2933-000	2	120,000	
3	Separation roller	FA5-2867-000	2	120,000	

The values above are estimates only and subject to change based on field data.

C. Paper Deck Pedestal

as of JAN. 1993

No.	Parts name	Parts No.	Q'ty	Estimated life (copies)	Remarks
1	Pick-up roller	FA5-2854-020	4	120,000	
2	Feeder roller	FL9-0015-000	2	120,000	
3	Separation roller	FL9-0010-000	2	120,000	

The values above are estimates only and subject to change based on field data.

A. Image Adjustment Basic Procedure

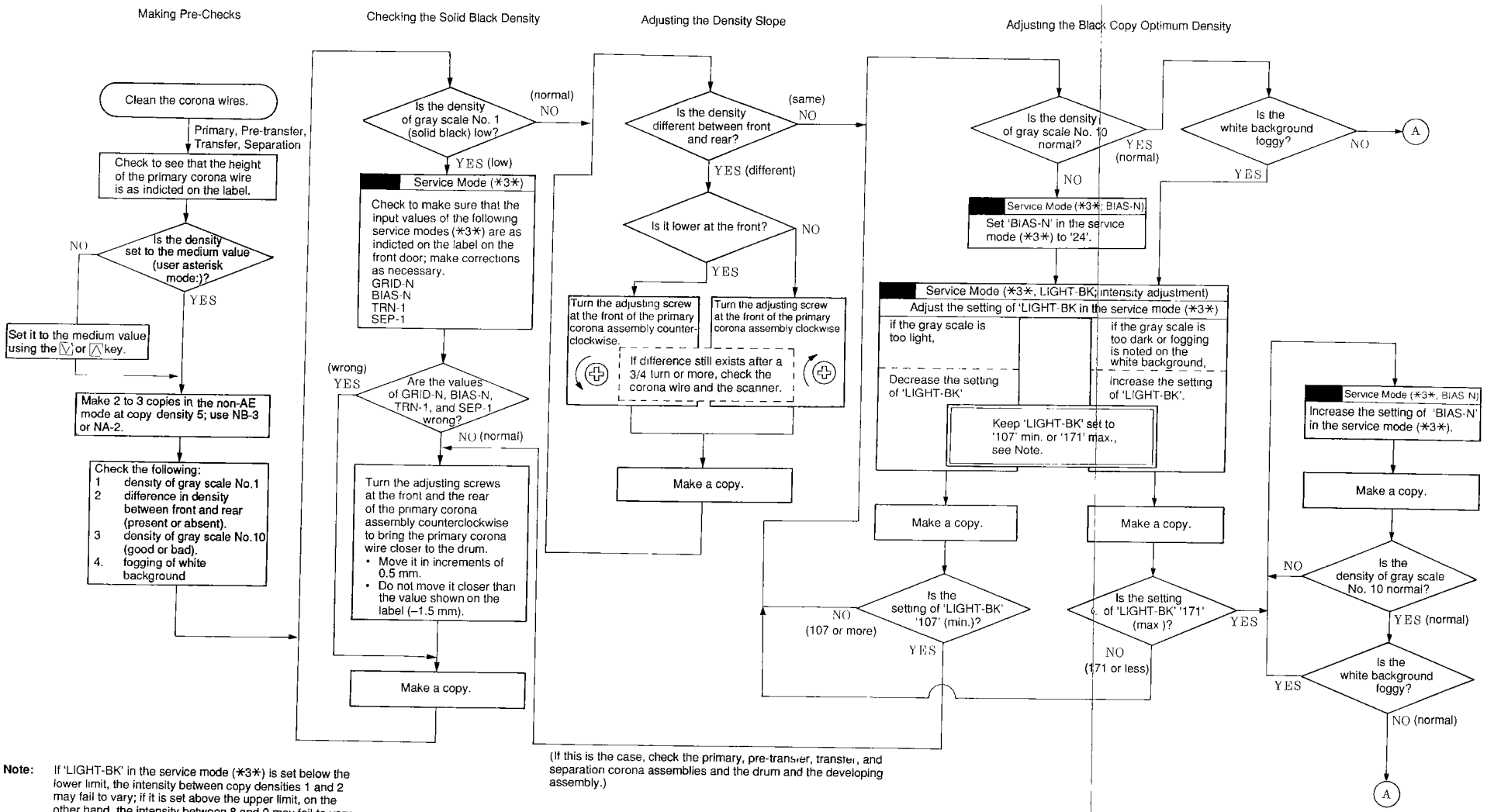

Note: If 'LIGHT-BK' in the service mode (*3*) is set below the lower limit, the intensity between copy densities 1 and 2 may fail to vary; if it is set above the upper limit, on the other hand, the intensity between 8 and 9 may fail to vary.

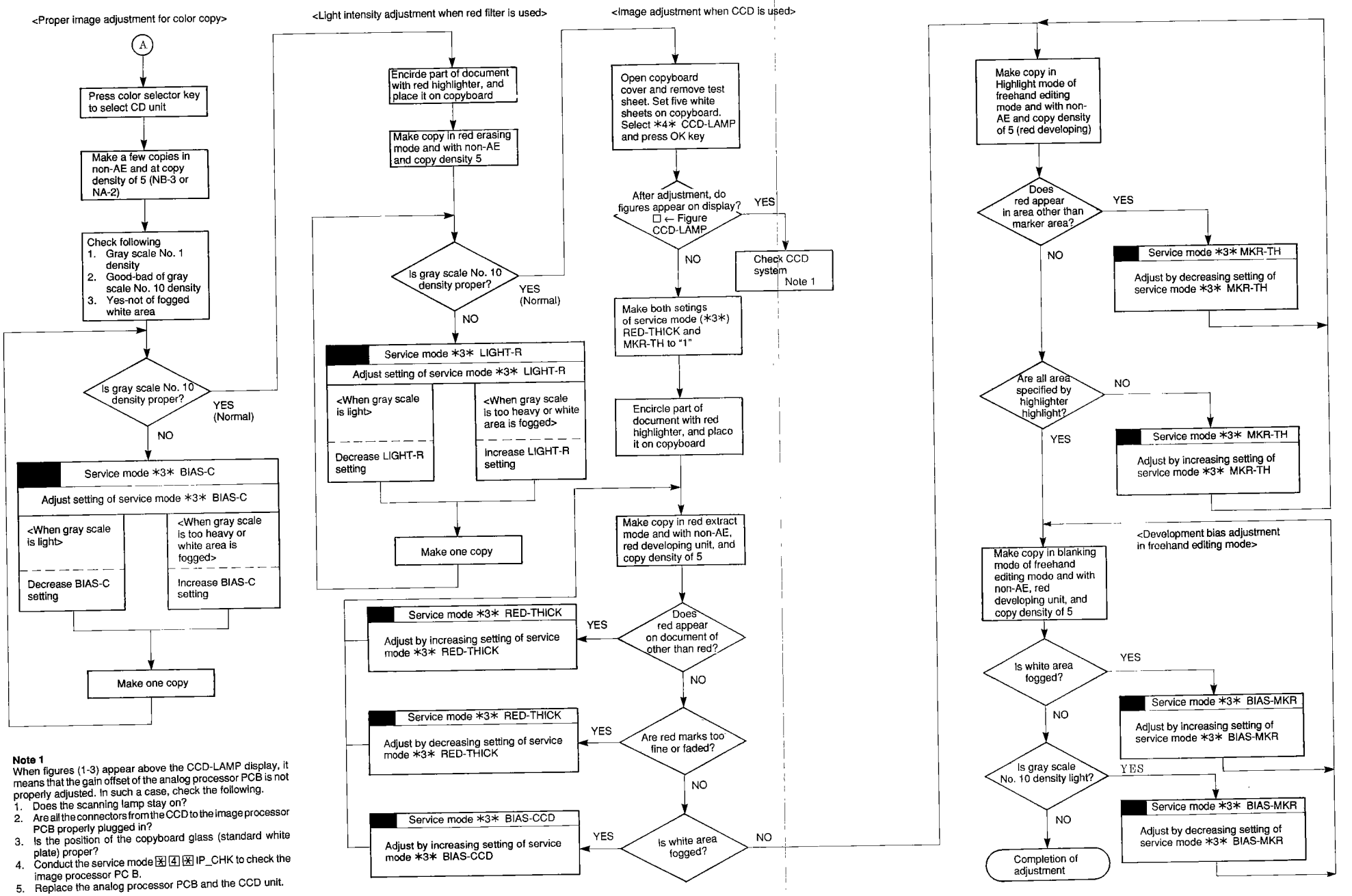

Note 1
When figures (1-3) appear above the CCD-LAMP display, it means that the gain offset of the analog processor PCB is not properly adjusted. In such a case, check the following.

1. Does the scanning lamp stay on?
2. Are all the connectors from the CCD to the image processor PCB properly plugged in?
3. Is the position of the copyboard glass (standard white plate) proper?
4. Conduct the service mode ⊠4⊠ IP_CHK to check the image processor PC B.
5. Replace the analog processor PCB and the CCD unit.

Optical path

Parts	Tools/Solutions	Remarks
Copyboard glass	Alcohol	Clean it.
Pre-exposure lamp	Blower brush	Clean it.
Lens	Blower brush	Clean it.
Document sensor	Blower brush	Clean it.
Scanning lamp	Lint-free paper	Dry wipe it.
Reflector plate	Blower brush	Clean it.
No. 1 through No. 6 mirror	Blower brush; or alcohol and lint-free paper	Clean it using a blower brush; if the dirt cannot be removed, use alcohol.
Dust-proof glass		

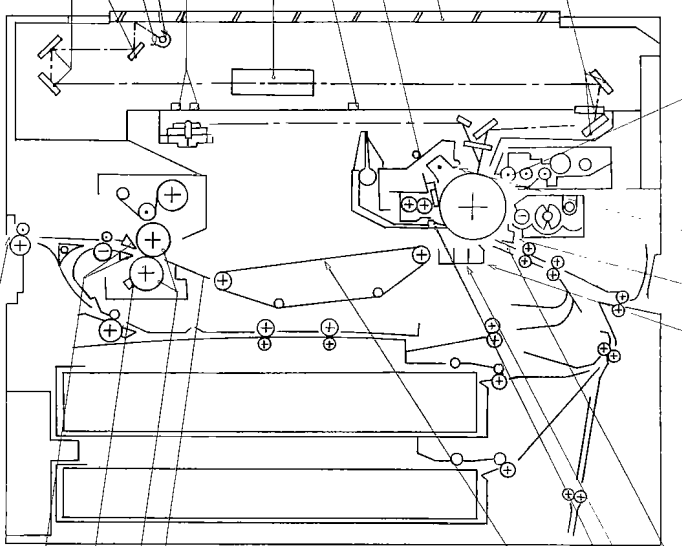

CD unit

Parts	Tools/Solutions	Remarks
Roller	Alcohol	Clean it

Corona assembly

Parts	Tools/Solutions	Remarks
Primary corona assembly	Alcohol, lint-free paper*	Dry wipe it; then, clean it using lint-free paper moistened with alcohol.
Separation/Transfer corona assembly		
Transfer/Separation corona assembly		

*Do not use water for the corona wire, block, or shield plate

Note:
Do not switch the copier ON until all alcohol residues have evaporated.

Fixing and Delivery assembly

Parts	Tools/Solutions	Remarks
Static elimng brush	Alcohol	Clean it.
Separation claw	Solvent	Clean it.
Lower roller felt	—	Remove the toner.
Upper roller/Lower roller	Cleaning oil (TKN-0464)	Clean it.
Inlet guide	Solvent	Clean it.

Separation, Transfer, and Feeder assemblies

Parts	Tools/Solutions	Remarks
Transfer guide	Moist cloth*	Clean it
Transfer/Separation corona rail		
Separation claw	Lint-free paper	Dry wipe it.
Feeder belt/Feeder mount	Moist cloth*	Clean it.

* Do not switch the copier ON until all droplets of water have evaporated.

CHAPTER 2 STANDARDS AND ADJUSTMENTS

I. MECHANICAL

1. Image Leading Edge Non-Image Width (LE_BLANK)

Make the following adjustments only when the laser scanner unit has been replaced. To adjust the leading edge margin, see the respective section that follows.

Select 'LE-BLANK' in the service mode (✱ 3 ✱), and make a copy of the Test Chart in the DIRECT mode; make adjustments so that the image leading edge non-image width is 2.0 ±1.0* mm. The copier adjusts the width by varying when to turn the laser OFF.

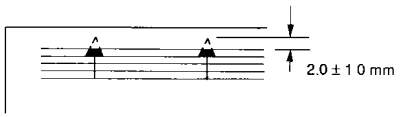

Figure 2-1

*6 mm or less in ENLARGE or REDUCE.

2. Image Leading Edge Margin (REGIST; registration roller ON timing)

Select 'ADJUST' in the service mode (✱ 3 ✱), and make adjustments so that the margin is 2.5 ± 1.5 mm in DIRECT.



Figure 2-2

3. Left/Right Registration (front)

If the pick-up is from the cassette or the paper deck, turn the adjusting screw shown in Figure 2-3 so that the distance between the edge of the copy image and that of the copy paper is 0 ±1.0 mm in DIRECT.

Note:
A full clockwise turn of the adjusting screw moves the horizontal registration paper edge sensor (Q6) to the front by 0.7 mm, increasing the margin by 0.7 mm.

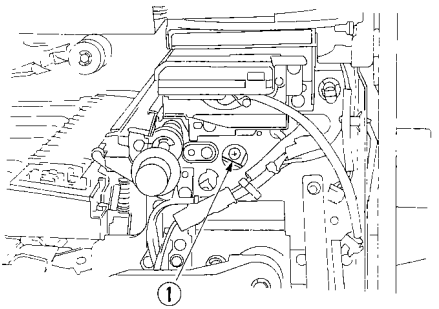

① Adjusting screw

Figure 2-3

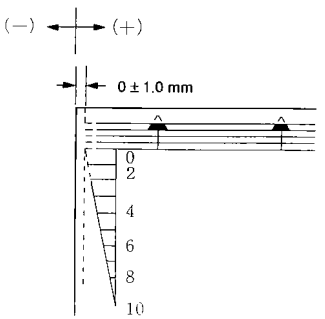

Figure 2-4

If the pick-up is from the manual feed tray, move the manual feed guide so that the distance between the edge of the copy image and that of the copy paper is 0 ±2.0 mm in DIRECT.

4. Left/Right Non-image Width (SI_BLANK; side non-image width)

Select 'SI_BLANK' in the service mode (✱3✱), and make adjustments so that the non-image widths on left and right (front/rear) are identical.

Make adjustments so that the non-image width on the left (front) is 2.0±1.0 mm when the Test Chart is copied in DIRECT.

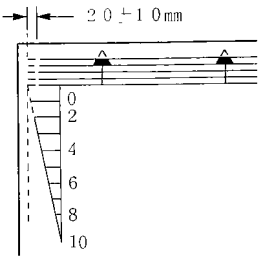

Figure 2-5

5. Routing the Lens Drive Cable

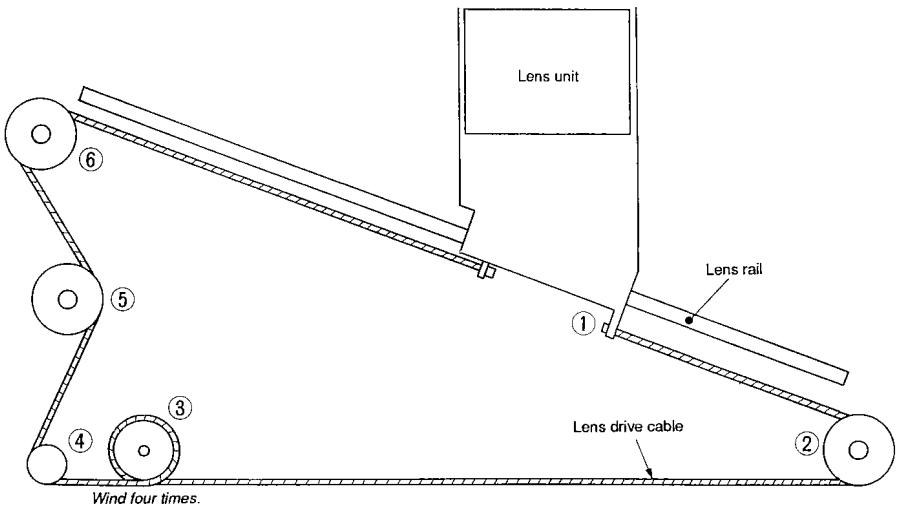

Figure 2-6

6. Routing the Scanner Cable

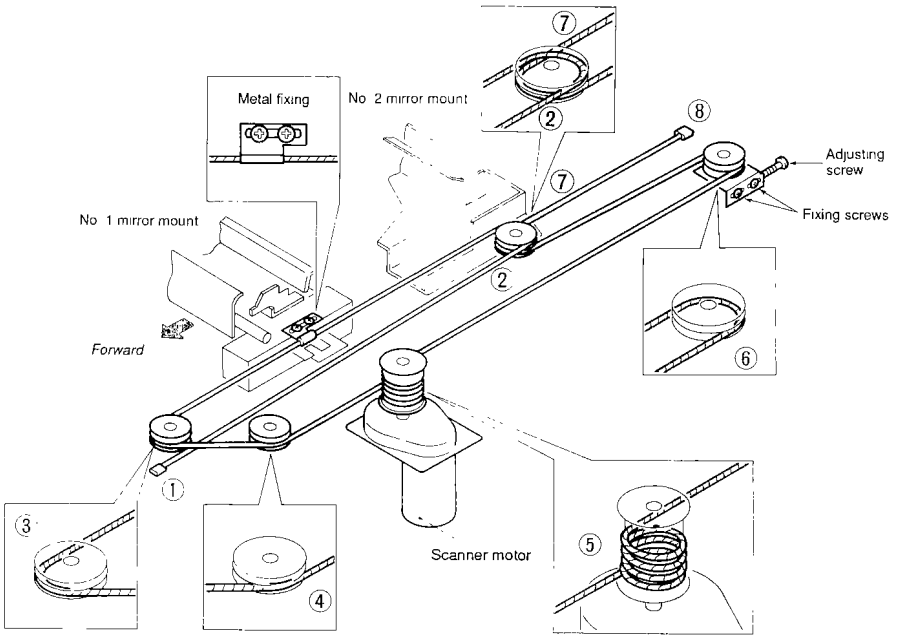

Figure 2-7

7. Adjusting the Tension of the Scanner Cable

To adjust the tension of the scanner cable, loosen the fixing screw, and turn the adjusting screw to change the position of the pulley ⑥.

Move the No. 1 mirror mount toward the home position, and hook a spring gauge between ① and ② of the mirror drive cable (Figure 2-7); pull the gauge toward the front, and make adjustments so that the reading is 300 to 400 g when the cable is pulled 10 mm to the front.

8. Adjusting the Position of the Mirror (optical length of No. 1 and No. 2 mirrors)

Adjust the position of the mirror when the scanner cable has been re-routed.

To make adjustments, change the position of the metal fixing of the No. 1 mirror mount.

Note:
The cable tends to become slack as copies are made, necessitating adjustments.

1) Draw lines 1 cm from both sides of a sheet of copy paper (A4/LTR or A3 11" x 17").

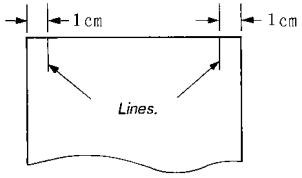

Figure 2-8

2) Place the sheet on the copyboard, and make a copy; call the copy *sheet* A.
3) Place a blank sheet of paper on the copyboard, and feed the original sheet in the manual mode; call the sheet (original sheet) *sheet* B.
   - When the original sheet has gone through the machine, it is contracted by heat.
4) Put sheet A and sheet B together, and reposition the No. 1 mirror mount so that distances x and y (Figure 2-9) will be the same.

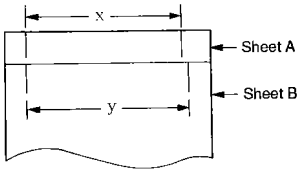

Figure 2-9

x=y: correct
x>y: move the No. 1 mirror mount in the direction of a.
x<y: move the No. 1 mirror mount in the direction of b.

If the distance between the No. 1 mirror and the No. 2 mirror is short, the copy image will be enlarged; if long, reduced.

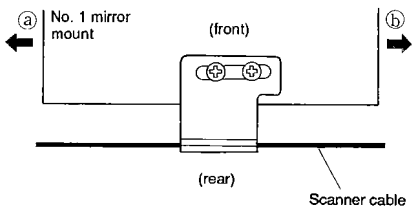

Figure 2-10

9. Attaching the Separation Roller (pick-up assembly)

The separation roller has its own orientation. Attach the separation roller shaft to the pick-up assembly so that the arrow (Figure 2-11) is toward the rear of the copier.

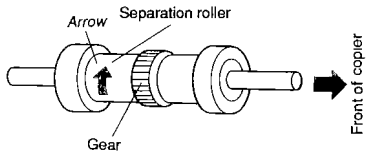

Figure 2-11

10. Attaching the Manual Shutter Assembly

i. Make sure that the front edge of the manual feed shutter sticks out of the ribbed face of the manual feed guide by 3 mm.

ii. Make sure that the front edge of the manual feed shutter is below the reference face of the manual guide by 1 mm when the manual feed shutter solenoid is OFF.

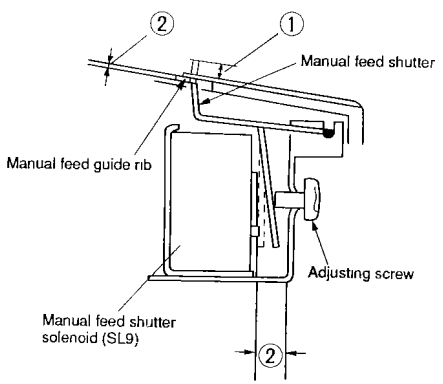

Figure 2-12

11. Attaching the Pick-Up Drive Switch Solenoid (SL6/SL805)

Make sure that the stroke (a) of the pick-up drive switch solenoid (SL6/SL805) is 0.2 mm or less when the stop plate and the circumference of the bushing are in contact with each other with section A lifted; see Figure 2-13.

12. Attaching the Pick-Up Roller Release Solenoid (SL7/SL804)

Make sure that the stroke (b) of the pick-up roller release solenoid (SL7/SL804) is 0.2 mm or less when the pick-up roller is released; see Figure 2-13.

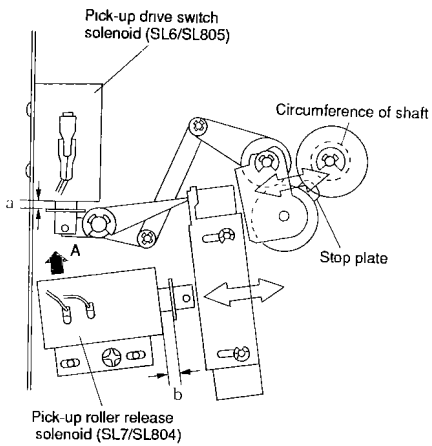

Figure 2-13

13. Positioning the BD Unit Assembly

Replacement or detachment/attachment of the laser scanner assembly or the BD unit can lead to a BD error (E100) or missing images (main scanning direction).

If such a problem is noted, adjust the position of the BD unit as follows:

1) Turn the power switch OFF.
2) Open the front door.
3) Detach the inside left cover and the inside center cover.
4) Mark the position of the BD adjusting plate using a scriber.
5) Detach the old BD unit, and attach the new BD unit over the scribed position.
6) Insert the door switch actuator into the door switch.
7) Turn the power switch ON.
8) Wait until the WAIT indicator goes OFF, and select 'LSR_MRR' in the service mode (*4*).
9) Press the OK key to turn the laser beam ON.
10) Move the BD adjusting plate up and down so that the setting under 'LSR_MRR' on the control panel is '0'.

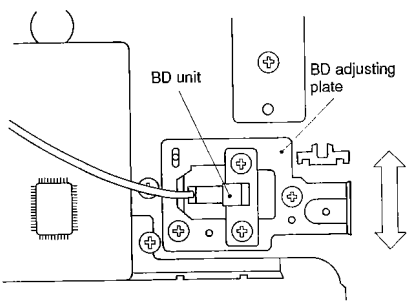

Figure 2-14

11) Move the BD adjusting plate up, and mark the position at which the setting on the display changes from '0' to '1'.
12) Move the BD adjusting plate down, and mark the position at which the setting on the display changes from '0' to '1'.
13) Fix the BD adjusting plate in place between the positions scribed in steps 11) and 12).
14) Check to see that the setting on the display is '0'.
15) Press the OK key once again to turn the laser beam OFF.
16) Attach the parts.

Note:
The value above 'LSR_MRR' indicates the BD error; normal if '0', and error if '1'.

* 4 *	FUNCTION
	1 ← Indicates BD error
LSR_MRR	: 0 〔OK : ON〕

Figure 2-15

14. Positioning the Side Reflector Plate

When the reflector plate of the No. 1 mirror mount is moved in the direction of the arrow (Figure 2-16), the intensity along both edges will increase, thereby causing the density along both edges of copies to lower.

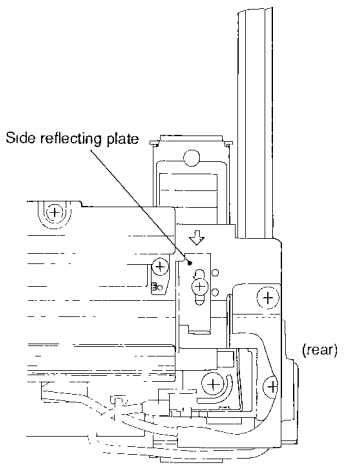

Figure 2-16

15. After Replacing the Drum Unit

Record the date of replacement and the counter reading on the label (Figure 2-17) after each replacement of the drum unit; attach the label on the front cover of the new drum unit, and go through the steps given in the Image Adjustment Basic Procedure.

日付 date date Datum	カウンター counter compteur Zahler	備考 notes note Notiz

Figure 2-17

16. Routing the Corona Wire

<Primary Corona Assembly>

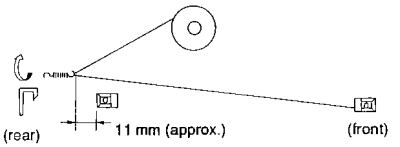

<Transfer/Separation Corona Assembly>

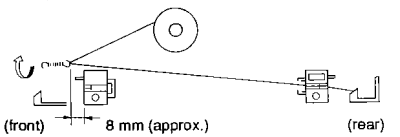

<Pre-Transfer Corona Assembly>

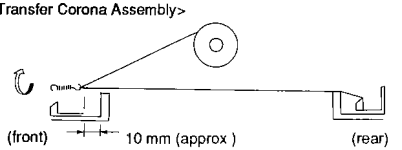

Figure 2-18

- Make sure that the corona wire is free of breaks and twists and its gold-plating has not peeled.
- Make sure that the corona wire is free of slack.
- Make sure that the height adjusting roll of the transfer/separation corona assembly is coated with silicone grease (CK-0439); make sure that the coating is thick enough to cover the corona wire.
- Make sure that the gut wire of the transfer/separation corona assembly is in the groove.

<Transfer/Separation Corona Assembly>

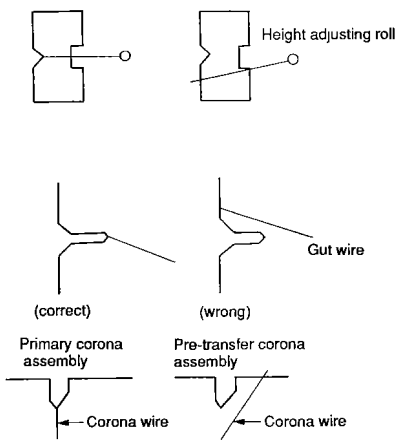

Figure 2-19

Note:
Make sure that the gut wire is not too taut; after routing the wire, measure the opening of the corona assembly to make sure that the center is not narrower than both edges by 0.5 mm or more.

17. Routing the Grid for the Primary Corona Assembly

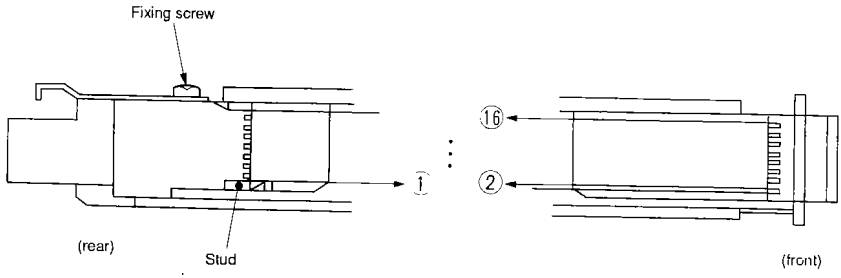

Figure 2-20

- Make sure that the grid wire is free of breaks or twists and its plating has not peeled.
- Make sure that the runs are at uniform intervals, i.e., the grid wire is in the groove of the block.

18. Adjusting the Height of the Corona Wire

Corona assembly	Standard	Tolerance
Primary	Value on label 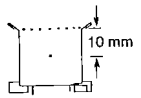 (10 mm from the center grid wire)	±3 mm
Pre-transfer	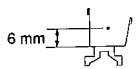 (no height adjusting mechanism)	—
Transfer	Value on label 	
Separation	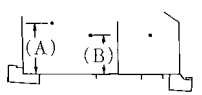 A: 14 mm B: 12 mm (no height adjusting mechanism)	

Figure 2-21

- The height (position) of primary and transfer corona wire can be adjusted by turning the screw found behind the respective corona assembly; a full turn of the screw changes the height of the corona wire by about 0.7 mm.
- The values shown in Figure 2-21 are standard values; each machine is adjusted at the factory, and individual values are recorded on the label attached behind the front door and the drum unit. Use the values shown on the label for the foregoing adjustments.

19. Attaching the Pole Orientation Plate (black developing assembly)

1) Attach the blade (support plate).
2) Push the pole orientation plate lightly into the direction of A, and release it; do not force it in.
3) Push the pole orientation plate into the direction of A until line D is against notch C.

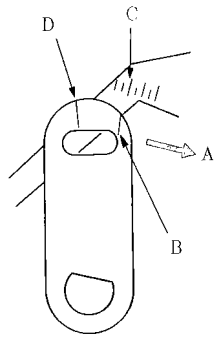

Figure 2-22

20. Positioning the Color Toner Supply Solenoid (SL3)

Move the slide plate into the direction of A until it stops; then, move the solenoid into the direction of A until it stops, and fix it in place.

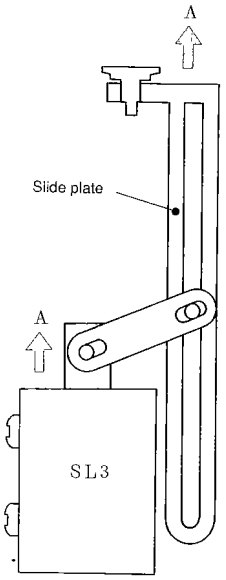

Figure 7-23

21. Measuring and Adjusting the Nip Width

a. Adjustment (adjusting the pressure adjusting bolt)

Make sure that the nip width is as shown in Table 2-1; otherwise, make adjustments using the adjusting screw.

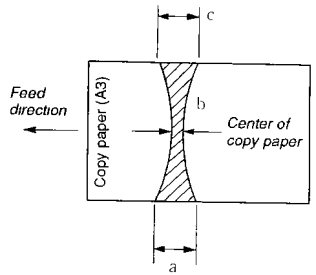

Note:
a and c represent points 10 mm from both sides of the copy paper.

Figure 2-24

Dimension	Measurements*
b	5.3 ±0.3 mm
| a—c |	0.5 mm or less

Table 2-1

* Taken when borh upper and lower rollers are sufficiently heated.

b. Measurement

If the rollers are cold, wait 15 min after the wait-up period is over; then, make 20 copies, and take measurements.

1) Lift the copyboard cover, and make a solid black copy (A3/11" x 17").
2) Switch the machine OFF as soon as the leading edge of the copy paper comes out to the copy tray, and open the front door and the delivery assembly.
3) Turn the fixing assembly knob clockwise slightly; hold it for 15 sec, and then turn it further to remove the copy paper.
4) Measure the section of the copy paper where the toner is shiny; see Figure 2-24.

22. Positioning the Paper Guide

Do not detach the paper guide mount; the mount determines the position of the paper guide.

If the position of the paper guide must be adjusted, detach the upper and lower fixing rollers, and move the paper guide mount so that the distance from the lower stay is about 40.8 mm as shown in Figure 2-25.

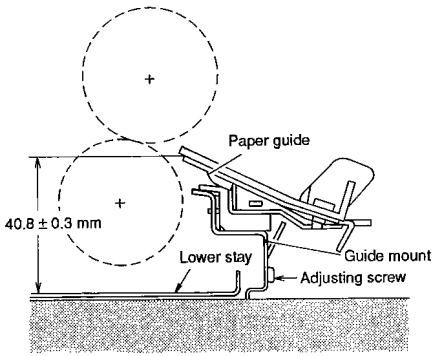

Figure 2-25

23. Positioning the Cleaning Belt Drive Solenoid (SL2)

Attach the solenoid so that the section shown in Figure 2-24 is 0.3 ±0.1 mm when the lever is moved in the direction of A.

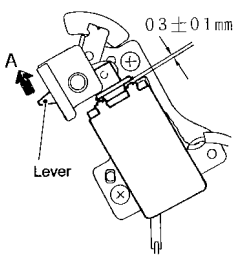

Figure 2-26

24. Positioning the CD Unit Vertical Drive Home Position Sensor (Q963; CD unit changer)

With the CD unit out of the compartment, press the CD UNIT SELECT key to select the top holder; then, press the CD UNIT OUT key.

Position Q963 so that the guide of the compartment is 1.0 ±0.15 mm above that of the CD unit changer.

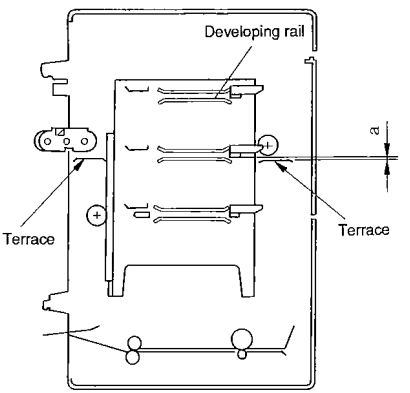

Figure 7-27

25. Positioning the Solenoid for the CD Unit Changer

Attach the solenoid so that the stroke is as shown below when the plunger of each solenoid is pressed by a finger.

a. **CD Unit Claw Release Solenoid (SL902)**
stroke: 4.5 mm

Note:
Select the top holder, and cause the solenoid to go ON; make sure that the claw is 0.5 to 1.0 mm above the top face of the CD unit.

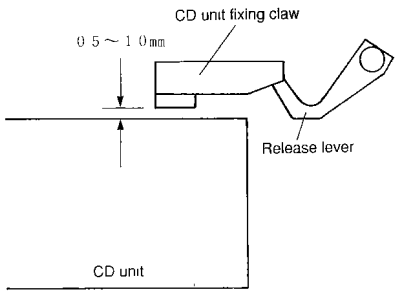

Figure 2-28

b. **Manual Feed Switch Solenoid (SL903)**
stroke: 5.0 to 6.0 mm
c. **Manual Feed Skew Roller Solenoid (SL904)**
stroke: 3.5 to 4.0 mm
d. **Manual Feed Shutter Solenoid (SL905)**
stroke: 4.0 mm
e. **CD Unit Feeder Solenoid (SL906)**
stroke: 4.7 mm

Note:
Press the feeder gear lightly while holding down the plunger of the solenoid; make sure that the feeder gear protrudes 18.5 ±0.5 from the end plate.

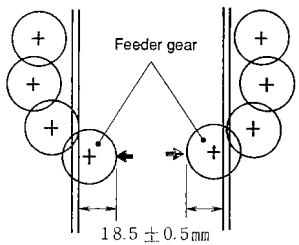

Figure 2-29

f. CD Unit Feeder Release Solenoid (SL907)
stroke: 5.0 mm

Note:
Make sure that the feeder gear returns smoothly when the solenoid goes ON.

26. Developing Blade Mount/Adjustment Procedure

Note:

i. If possible, avoid removing the developing blade as a single part. Instead, remove or mount together with the support plate. (When mounting the blade together with the support plate, perform operations from step 6) of the adjustment procedure.)

ii. Mounting of the developing blade must be performed after cleaning the developing cylinder.

iii. Since the developing cylinder is easily damaged, pay extre attention when inserting or withdrawing the gap gauge.

iv. If the gap gauge is damaged or broken, replace it with a new one.

v. If the reference face of the gap gauge becomes stained with oils from your hand, the developing blade may also become stained during adjustment; therefore, do not touch the gauge with your fingers.

1) Temporarily secure the developing blade to the support plate using the screws. At this time, the boss of the support plate must be in the hole of the developing blade.

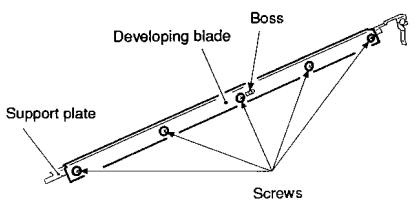

Figure 2-30a

2) As shown in Figure 2-30b, pinch the OK side of the gap gauges between the developing blade and developing cylinder (3 locations), and use the two screws to secure the developing blade to the developing assembly together with the support plate. (At this time, be careful not to strike the developing blade against the developing cylinder.)

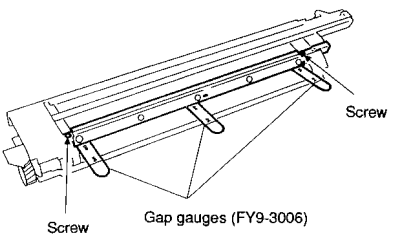

Figure 2-30b

3) While lightly pressing on the developing blade, fix it with the two screws as shown in Figure 2-30c. (Note that if the developing blade is pressed heavily, the developing cylinder may become damaged when the gap gauges are pulled out.)

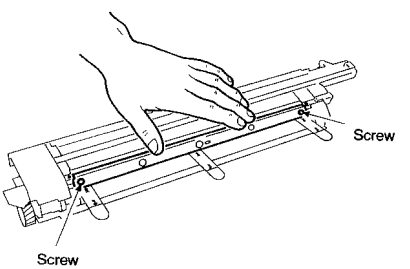

Figure 2-30c

4) Turn the eccentric boss shown in Figure 2-30d until the developing blade slightly touches the gap gauge, and secure it with the center screw.
5) Secure the remaining two screws and gently pull the gap gauges out. At this time, repeat from step 3) if the gauge is extracted with difficulty.

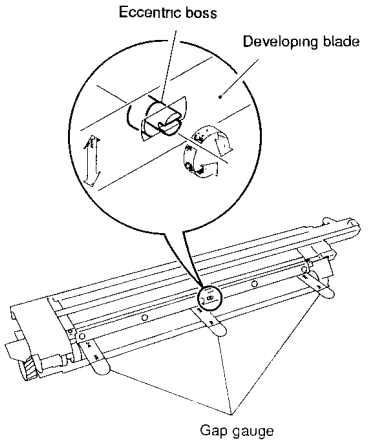

Figure 2-30d

6) Check that the OK side of the gap gauge can be inserted smoothly and also that the NG side can not be inserted at the three locations where the gap gauges were pinched.
7) If the OK side of the gap gauge gets caught or the NG side allows free passage, loosen the screw at that location to readjust.
8) Repeat step 6) and 7) until the gap between the developing blade and the developing cylinder is optimum.

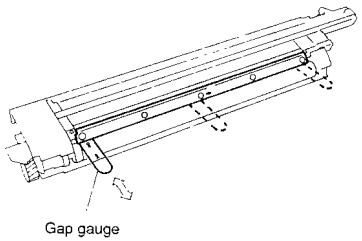

Figure 2-30e

II. ELECTRICAL

1. Light Intensity/AE Adjustment

Table 2-2 shows those items that can be adjusted using the scanning lamp intensity control circuit.

Item	Adjustment	Description	Remarks
✳3✳ LIGHT_BK	Optimum exposure; copy density 5	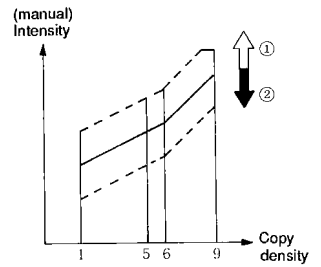	① If the setting is increased in the service mode, the scanning lamp intensity during copying operation will increase, thereby decreasing the copy density. ② If the setting is decreased in the service mode, the intensity during copying operation will decrease, thereby increasing the copy density.
✳3✳ LIGHT_R	*Increases/ Decreases intensity in relation to setting under LIGHT_BK.*	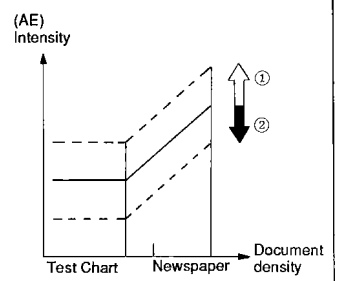	
✳3✳ AE_SLOP	AE slope	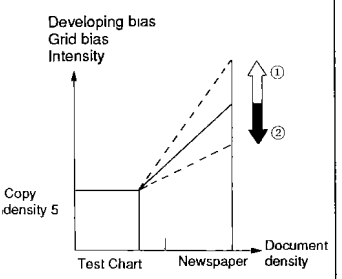	① If the setting is increased in the adjustment mode, copies of a newspaper will be lighter. ② If the setting is decreased in the adjustment mode, copies of a newspaper will be darker.

Table 2-2

2. Adjusting the Development Bias

Table 2-3 shows those items that can be adjusted using the development bias control circuit; make sure that the setting in the user asterisk mode ([✳] [10] [OK] ; copy density) is at the medium setting before making this adjustment.

<table>
<tr><th>Item</th><th>Adjustment</th><th>Description</th><th>Remarks</th></tr>
<tr><td>[✳][3][✳]
BIAS_N</td><td>Development bias (DC component; black copy)</td><td rowspan="2">Development bias DC component
 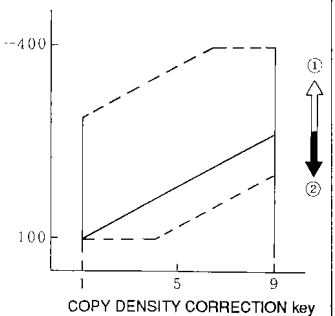

COPY DENSITY CORRECTION key</td><td rowspan="2">① If the setting is increased in the service mode, the DC component of the black development bias during black copying operation will increase, thereby decreasing the copy density.
② If the setting is decreased in the service mode, the DC component of the development bias will decrease, thereby increasing the copy density.</td></tr>
<tr><td>BIAS_CCD
BIAS_MKR</td><td>Increases/ Decreases DC component in relation to development bias adjusted under BIAS_N.</td></tr>
<tr><td>[✳][3][✳]
BIAS_C</td><td>Developing bias (DC component; color copy)</td><td rowspan="3">Development bias DC component
 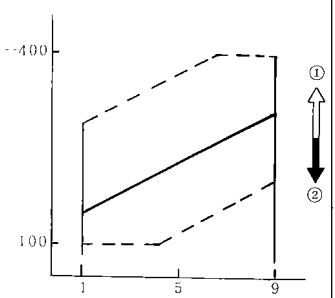

COPY DENSITY CORRECTION key</td><td rowspan="3">① If the setting is increased in the service mode, the DC component of the developing bias during color copying will increase and the color copies will be lighter.
② If the setting is decreased in the service mode, the DC component of the developing bias during color copying will decrease and the color copies will be darker.</td></tr>
<tr><td>BIAS_BL
BIAS_GR
BIAS_BR</td><td>Increases/ Decreases DC component in relation to development bias adjusted under BIAS_C.</td></tr>
<tr><td>BIAS_CCD
BIAS_MKR</td><td>Increases/ Decreases DC component in relation to devel apment bias adjusted under BIAS_C, _BL, GR_, and _BR.</td></tr>
</table>

Table 2-3

3. Adjusting the Vertical Reproduction Ratio Correction Mechanism for the 2nd Copy (overlay)

When an overlay copy is made, the vertical reproduction ratio between the 1st side and the 2nd side of the copy may fail to match.

In particular, the paper may contract when it has gone through the fixing assembly for the 1st side. If such a problem is noted, perform the following to adjust the vertical reproduction ratio.

1) Set the Test Sheet on the copyboard.
2) Select the size to suit the copy paper in question.
   small size: A4/LTR
   large size: B4/11"×17"
3) Select the following in the overlay mode, and make copies:
   1st: black
   2nd: color
4) Select 'OL2_XM_S' (small size) or 'OL2_XM_L' (large size) in the service mode ([*] [3] [*]).
5) Check the copy images; if the vertical reproduction ratio for the color copy is low, increase the setting in the service mode.
6) Press the COPY START key, and check the copies.
7) Press the RESET key to leave the service mode.

Note:
The above adjustment changes the reproduction ratio for the 2nd sides as well.

4. Adjusting the Laser Erase Correction Mechanism

The copier uses a laser mechanism to execute blank exposure; for this reason, the erasing position would suffer a discrepancy if the optical image formed by the scanning lamp was displaced. In particular, moving the lens tends to bring about minute displacement of the optical images directed to the photosensitive drum, thus displacing the positions for framing and blanking effects. If such a problem is noted, perform the following:

1) Set the Test Sheet on the copyboard; if possible, use the NB-3 Test Sheet (FY9-9025-000).
2) Select 'LSR_X_D' in the service mode.
3) Press the COPY START key.
4) Check the copy image to find out the direction of the discrepancy; use a black dot for reference.

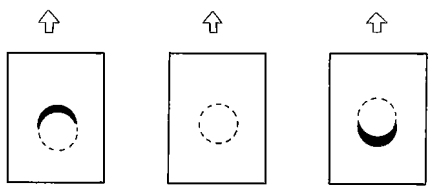

Figure 2-31

5) Adjust the setting in the service mode:
   if A, decrease the setting.
   if B, increase the setting.
6) Press the COYP START key, and check the image; repeat the procedure to make adjustments.
7) Select 'LSR_Y_D' in the service mode ([*] [3] [*]).
8) Press the COYP START key.

9) Check the copy image to find out the direction of the discrepancy; use a black dot for reference.

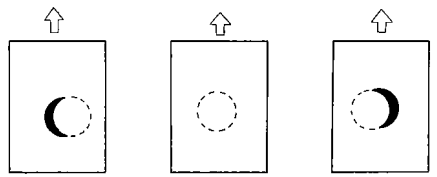

Figure 2-32

10) Adjust the setting in the service mode:
if A, decrease the setting.
if B, increase the setting.
11) Press the COPY START key, and check the image; repeat the procedure to make adjustments.
12) Select 'LSR_YM_D' in the service mode ([*] [3] [*]).
13) Press the COPY START key.
14) Check the copy image, and check the reproduction ratio in the Y direction (laser); use the black dots on both ends.

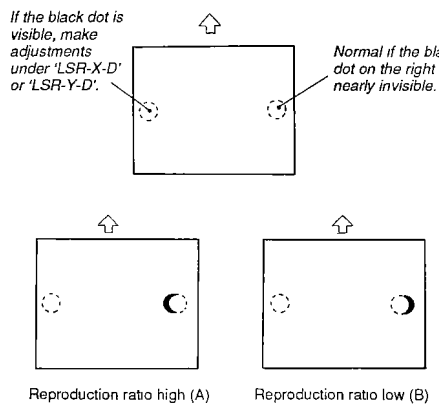

Figure 2-33

15) Press the COPY START key, and check the image; repeat the procedure to make adjustments.
16) Repeat steps 2) through 15) to adjust the following:
LSR_X_R
LSR_Y_R
LSR_YM_R
LSR_X_E
LSR_Y_E
LSR_YM_E
17) Press the RESET key to leave the service mode.

Note:
The laser erase correction mode enables adjustment of the following to suit the reproduction ratios:

DIRECT	LSR_X_D
	LSR_Y_D
	LSR_YM_D
REDUCE	LSR_X_R
	LSR_Y_R
	LSR_YM_R
ENLARGE	LSR_X_E
	LSR_Y_E
	LSR_YM_E

5. After Replacing the DC Controller PCB

Perform the following if the DC controller PCB has been replaced.

1) Attach the new DC controller PCB.
2) Enter the settings (sevice mode; ✳3✳) shown on the label attached behind the front door. Remember to enter the version number of the image processor PCB in IP_PCB.
3) Select 'LASER' (service mode; ✳4✳), and press the OK key to adjust the laser warm-up time.
4) Remove the Test Sheet from the copyboard, and set five sheets of A4 paper as if to cover the CCD.
5) Select 'CCD_LAMP' (service mode; ✳4✳), and press the OK key; see the Image Adjustment Basic Procedure.
6) Press the RESET key.
7) Place the Test Sheet on the copyboard.
8) Make a test copy, and check the image.
9) Go through the Image Adjustment Basic Procedure if the image is not satisfactory.

6. Checking the CCD Unit, Analog Processor PCB, and Image Processor PCB

1) Select 'IP_CHK' (service mode; ✳4✳).
2) Press the OK key; the condition of the image processor PCB is displayed.
3) If '1' is displayed, replace the image processor PCB.
   If '2' is displayed, check the harness between the image processor PCB and the DC controller PCB.
4) If no indication is made, check the harness between the CCD unit and the analog processor PCB and between the analog processor PCB and the image processor.

■ If the harness is normal,

5) Replace the analog processor PCB and the CCD unit in the order given.

7. When Replacing the Laser Unit

1) Attach the new laser unit.
2) Select 'LASER' (service mode; ✳4✳), and press the OK key to adjust the laser warm-up time automatically.
3) Place the Test Sheet on the copyboard.
4) Select 'L_TEST3' (service mode; ✳4✳), and press the OK key to execute the black latent image laser erase mechanism.
5) Chekc the image sample; if the erase mechanism is not normal, adjust laser erase correction.

8. After Replacing the Analog Processor PCB, CCD Unit, or Image Processor PCB

Perform the following if the analog processor PCB, CCD Unit, or image processor PCB has been replaced:

1) Select the service mode ✳3✳ IP_PCB, and enter the version number of the image processor PCB.
2) Set five sheets of A4 paper as if to cover the CCD.
3) Select 'CCD-LAMP' in the service mode (✳ 4 ✳), and press the OK see the Image Adjustment Basic procedure.
4) Press the RESET key.
5) Select the automatic color reproduction mode, specifying the black developing assembly.
6) Select 'BIAS-CCD' in the service mode (✳ 3 ✳).
7) Place the test sheet on the copyboard.
8) Make a test copy; if fogging is noted, make adjustments.
9) Press the RESET key.
10) Select the framing mode (freehand mode).
11) Select 'BIAS-MKR' in the service mode (✳ 3 ✳).
12) Make a test copy; if fogging is noted, make adjustments.
13) Select 'RED THICK' (service mode; ✳3✳), and press the START key to generate a test copy.
14) Check the image of the test copy; if it is not blank, increase the setting.
15) Repeat the above steps until the image on the test copy is blank; note, however, that too high a setting for 'RED THICK' will make colored characters used to form latent images by the laser thin out.
16) Press the RESET key twice.

9. Adjusting the RDF Document Stop Position

Go through the following steps to adjust the document stop position for the RDF.

1) Enter the copier's service mode; DOC_STOP (✳3✳).
2) Place an A4/LTR document in the document tray.
3) Enter a setting using the numeric keypad or ENLARGE/REDUCE key so that the document stop position is optimum.

Note:
A higher setting moves the document to the right (pick-up direction) between –7 and +7 in 0.33-mm increments.

4) Press the OK key on the control panel; the document will be picked up and sent to the copyboard glass.
5) Open the RDF, check the position of the document, and close the RDF.
6) Press the OK key; the document will be discharged to the document tray.
7) Repeat steps 3) through 6) until the document stop position is correct.
8) Press the RESET key to exit the service mode.

10. Checking the Photointerrupters

The machine enables checks on its photointerrupters using its service mode in addition to conventional meter.

① Using a Meter

1) Set the meter to the 12VDC range.
2) Connect the — probe of the meter to J106-4 (GND) on the DC controller.
3) Make checks as indicated: 1: 5 V; 0: 0 V.

② Using the Service Mode

1) Open the front door, and insert the door switch actuator into the door switch.
2) Press the service switch.
3) Press the [*], [2], and then [*] keys.
4) Press the [△] key or the [▽] key to enter the addresses shown, and check the respective photointerrupters.

a. Copying machine

Notation	Q2	Q3	Q4
Name	Delivery sensor ($\overline{PDP3}$)	Lower feeder inlet paper sensor ($\overline{PDP4}$)	Manual feed sensor ($\overline{MFPD}$)
+ probe	J110-A4	J111-B2	J109-A7
Service mode	PA0-5	PA0-6	PA0-0
Checks (normal if as described)	Open the delivery assembly while in standby. • when detection lever is blocking Q2, '1'. • otherwise, '0'.	Open the delivery assembly while in standby, and put copy paper in the lower feeder assembly. • when copy paper is present, '0'. • otherwise, '1'.	Move the detection lever up and down with a finger while in standby. • when lever is down, '0'. • when lever is up, '1'.
Notation	Q5	Q6	Q7
Name	No. 1 pre-registration paper sensor (PDP1)	Horizontal paper edge sensor (PDP2)	Lens home position sensor (LHP)
+ probe	J104-B5	J104-B2	J114-B13
Service mode	PA0-4	SPC-7	SPC-6
Checks (normal if as described)	• when Q5 detects copy paper (i.e., detection lever is at Q5), '1'. • otherwise, '0'.	Move the manual feed upper guide up, and put copy paper over Q6. • when copy paper is present, '1'. • otherwise, '0'.	Put copy paper over Q7. • when copy paper is present, '1'. • otherwise, '0'.

Table 2-4A

Notation	Q8	Q9	Q10
Name	Scanner home position sensor (SCHP)	Scanner document leading edge sensor (SCDP)	Cassette 1 paper sensor (C1PD)
+ probe	J114-B5	J114-B2	J109-A1
Service mode	PA1-4	—	PA2-0
Checks (normal if as described)	Move the scanner by hand while in standby. • when scanner is at home position, '1'. • otherwise, '0'.	Move the scanner by hand while in standby. • when scanner is at document leading edge, '0' (5V). • otherwise, '1' (0V).	Move the detection lever up and down with a finger while in standby. • when lever is up, '1'. • when lever is down, '0'.
Notation	Q11	Q12	Q13
Name	Cassette 2 paper sensor (C2PD)	Cassette 1 lifter position sensor (C1LTP)	Cassette 2 lifter position sensor (C2LTP)
+ probe	J109-A2	J109-A3	J109-A4
Service mode	PA2-1	PA1-0	PA1-1
Checks (normal if as described)	Move the detection lever up and down with a finger while in standby. • when lever is up, '1'. • when lever is down, '0'.	Move the pick-up roller up and down with a finger while in standby. • when roller is up, '1'. • when roller is down, '0'.	Move the pick-up roller up and down with a finger while in standby. • when roller is up, '1'. • when roller is down, '0'.
Notation	Q14	Q15	Q16
Name	Lower feeder outlet paper sensor (PDP5)	No. 2 pre-registration paper sensor (PDP6)	No. 3 pre-registration paper sensor (PDP7)
+ probe	J109-A5	J109-A6	J109-A9
Service mode	PA0-7	PA0-3	PA0-1
Checks (normal if as described)	Move the detection lever up and down with a finger while in standby. • when lever is down, '0' • when lever is up, '1'.	Open the upper right door while in standby, and move the detection lever up and down with a finger. • when lever is up, '0'. • when lever is down, '1'.	Open the upper right door while in standby, and move the detection lever up and down with a finger. • when lever is up, '1'. • when lever is down, '0'.

Table 2-4B

Notation	Q20
Name	filter home position sensor (FILHP)
+ probe	J115-2
Service mode	SPF-7
Checks (normal if as described)	Open the lens cover during standby. • when detection lever is blocking Q20, '1'. • otherwise, '0'.

Table 2-4C

b. Cassette Feeding Unit

Notation	Q850	Q851	Q852
Name	Cassette 3 paper sensor (C3PD)	Cassette 3 lifter position sensor (C3LTP)	Cassette 4 paper sensor (C4PD)
+ probe	J108-B6	J108-B7	J108-A9
Service mode	PA2-2	PA1-2	PA2-3
Checks (normal if as described)	Move the detection lever up and down with a finger while in standby. • when lever is up, '1'. • when lever is down, '0'.	Move the pick-up roller up and down with a finger while in standby. • when roller is up, '1'. • when roller is down, '0'.	Move the detection lever up and down while in standby. • when lever is up, '1'. • when lever is down, '0'.
Notation	Q853	Q854	
Name	Cassette 4 lifter position sensor (C4LTP)	No. 4 pre-registration paper sensor (PDP8)	
+ probe	J108-A10	J108-A7	
Service mode	PA1-3	PA0-2	
Checks (normal if as described)	Move the pick-up roller up and down with a finger while in standby. • when roller is up, '1'. • when roller is down, '0'.	Open the lower right door while in standby, and move the detection lever up and down with a finger. • when lever is up, '0'. • when lever is down, '1'.	

Table 2-5

c. Paper Deck Pedestal

Notation	Q751	Q752	Q753
Name	Right deck paper sensor (RPADE)	Left deck paper sensor (LPADE)	Left feeder assembly paper sensor (LPPDE)
+ probe	J704-6	J708-4	J705-2
Service mode	PA2-2	PA2-3	PA0-2
Checks (normal if as described)	Move the detection lever up and down with a finger while in standby. • when lever is up, '1' • when lever is down, '0'.	Move the detection lever up and down while in standby. • when lever is up, '1'. • when lever is down, '0'.	Open the left feeder assembly while in standby, and put copy paper. • when copy paper is present, '0'. • otherwise, '1'.
Notation	Q754	Q755	
Name	Right lifter sensor (RLPDE)	Left lifter sensor (LLPDE)	
+ probe	J704-3	J708-7	
Service mode	—	—	
Checks (normal if as described)	Move the pick-up roller up and down with a finger while in standby. • when roller is up, '1'. • when roller is down, '0'.	Move the pick-up roller up and down while in standby. • when roller is up, '1'. • when roller is down, '0'.	

Table 2-6

d. CD unit changer

Notation	Q950	Q951	Q952
Name	Color toner sensor 1 (CT1)	Color toner sensor 2 (CT2)	Color toner sensor 3 (CT3)
+ probe	J908-3	J908-4	J908-5
Service mode	AC3-4	AC3-5	AC3-6
Checks (normal if as described)	• when the reflecting-plate is at sensor, '0'. • otherwise, '1'.		
Notation	Q960	Q961	Q962
Name	CD unit changer manual feed paper sensor (MFPD)	CD unit changer horizontal drive home position sensor (HHP)	CD unit changer horizontal drive sensor right (HRP)
+ probe	J904-A10	J904-B10	J904-A13
Service mode	PA2-4	AC3-1	AC3-2
Checks (normal if as described)	Put copy paper over manual feed assembly while in standby. • When paper is present, '1'. • Otherwise, '0'.	Move the detection lover up and down with a finger while in standby. • when lever is up, '0'. • when released, '1'.	Push the detection guide plate with a finger while in standby. • when pushed, '0'. • when released, '1'.

Figure 2-7A

Notation	Q963	Q964	Q965
Name	CD unit vertical drive home position sensor (VHP)	CD unit horizontal drive sensor left (HLP)	CD unit drive release sensor (FRD)
+ probe	J904-B13	J904-A16	J905-6
Service mode	AC3-0	AC3-3	AC0-6
Checks (normal if as described)	Put copy paper over Q963 while in standby. • when paper is present, '1'. • otherwise, '0'.	Push the detection guide plate with a finger while in standby • when pushed, '0'. • when released, '1'.	Put copy paper over Q965 while in standby. • when paper is present, '1'. • otherwise, '0'.
Notation	Q966	Q967	Q968
Name	CD unit claw release sensor front (CRRD)	CD unit claw release sensor (CRRD)	CD unit release sensor (CRD)
+ probe	J905-9	J905-9	J905-11
Service mode	AC0-7	AC0-7	AC2-7
Checks (normal if as described)	Put copy paper over Q966 while in standby. • Whenpaper is present, '1'. • Otherwise, '0'.	Put copy paper over Q967 while in standby. • when paper is present, '1'. • otherwise, '0'.	Move the detection lever up and down withe a finger while in standby. • when lever is up, '0'. • when lever is down, '1'.

Figure 2-7B

CHAPTER 3 IMAGE TOUBLESHOOTING

I. INITIAL CHECKS

1. Installation Environment

i. The line voltage should be that indicated on the rating plate. (Do not unplug the copier at night.)
ii. Avoid sources of high temperature and humidity, i.e., water faucets, humidifiers, water boilers, and open fire. Avoid locations which are too cold or dusty.
iii. Avoid locations subject to ammonium fumes.
iv. Avoid direct rays of the sun; otherwise, provide curtains.
v. Choose a well-ventilated location.
vi. Make sure that the copier can be kept level.
vii. Make sure that the copier can be connected to the power source all day and night.

2. Document

Determine whether the problem is due to documents or copier.

i. Check if the copy density lever is set to '5 ±1'.
ii. Check if the document has a background color which tends to result in poor contrast (red).
iii. Document Density

Documents of diazo copies or with transparency tend to produce copies with a foggy impression; the condition is not, however, what is termed *fogging*. Documents prepared in pencil, on the other hand, tend to produce copies with light images; the condition is sometimes mistaken for *light* copies.

3. Copyboard Cover, Copyboard Glass, and Standard White Plate

If dirt is noted on the copyboard cover, copyboard glass, or standard white plate, clean the part with a mild detergent or alcohol solution. If a scratch is found, replace the part.

4. Corona Assemblies

i. Check the corona assemblies for dirt or faulty corona wire (scratches).
ii. Clean the corona wire, shield plate, and blocks (front, rear) of each corona assembly. If the dirt cannot be removed, replace the parts.
iii. Check the height of each corona wire.
iv. Check that each corona assembly is properly mounted.
v. Check the corona wire springs for rust.

5. Developing Aeembiy

i. Check that the rollers at both ends of the developing assembly are in contact with the drum.
ii. Check that toner is found uniformly over the surface of the developing cylinder.

6. Copy Paper

i. Check if the paper used is of a type recommended by Canon.
ii. Check if the paper is dry; make a copy, using paper fresh out of package.

7. Parts Scheduled for Periodical Replacement

Replace the parts that have been used over the lives shown in the periodical servicing chart.

8. Others

When a machine is moved from a cold to warm place, as from a warehouse to the room of installation, condensation can occur inside the machine. If left as it is, it can lead to the following problems.

i. Condensation on the scanner (glass, mirror, lens) produces copies with light images.
ii Condensation on a corona assembly can cause electrical leakage.
iii. Condensation on the pick-up or feeder guide can cause faulty paper feeding.

Note:
If condensation is noted, dry wipe the parts, or leave the machine alone for 60 minutes with power ON.
If the copies have uneven density (between front and rear), light images, or foggy images, make adjustments according to theIMAGE ADJUSTMENT BASIC PROCEDURE first.
Some parts of the copier need to be replaced on a periodical basis; those listed below must be replaced regardless of damage or wear, since they affect the very operation of the machine when they fail. Replace each part during the scheduled visit closest to the life indicated.

III. TROUBLESHOOTING BY IMAGE FAULT

1. The image is too light (halftone only).

Cause	Step	Checks	YES/NO	Correction
Lens, Dust-proof glass, Mirror	1	Clean the lens, dust-proof glass, and mirror. Is the problem corrected?	YES	End.
	2	Is the image too light only when the CD unit is used?	YES	Go to step 5.
	3	Make adjustments according to the Image Adjustment Basic Procedure. Is the problem corrected?	YES	End.
Intensity sensor	4	Is the image reproduced in the AE mode lighter than that reproduced in the manual mode? (Use a Test Chart.)	YES	Check the light intensity sensor assembly.
Photosensitive drum			NO	Replace the photosensitive drum.
✳5✳ (C-DENS)	5	Make five solid copies in color. Is the problem corrected?	YES	Set 'C-DENS' in the service mode (✳5✳) to '0'.
✳3✳ 'BIAS-C'	6	Decrease the setting of 'BIAS-C' (✳3✳; DC component of the developing bias for color copying). Is the problem corrected?	YES	End.
Starter			NO	Replace the starter, and make adjustments according to the instructions given in the CD UNIT INSTALLATION PROCEDURE.

2. The image is too light (solid black also).

Cause		Step	Checks	YES/NO	Correction
		1	Carry out the Image Adjustment Basic Procedure. Is the problem corrected?	YES	End.
		2	Switch the machine OFF in the middle of copying operation, and open the front door. Is the toner image on the photosensitive drum before transfer more or less normal?	NO	Go to step 6.
Transfer	Transfer/ Separation corona assembly	3	Is the corona wire of the transfer corona assembly hooked correctly and is its height correct? Is the transfer/separation corona assembly set correctly?	NO	1. Re-hook the corona wire. 2. Adjust the height of the corona wire. 3. Execute the corona wire automatic cleaning operation. 4. Re-set the corona assembly.
	Copy paper	4	Use fresh copy paper. Is the problem corrected?	NO	1. The paper may be moist; advise the user on the correct method of storage. 2. Advise the user that the use of non-recommended paper may not bring about expected results.

Cause		Step	Checks	YES/NO	Correction
Transfer	Lower transfer guide, Varistor	5	Set the feeder assembly, and measure the resistance between the lower transfer guide and the mount (metal section) of the transfer corona rail. Is it 0 Ω?	YES	1. Check to make sure that the lower transfer guide is not in contact with the side plate of the feeder assembly. 2. Replace the varistor.
	High-voltage cord, High-voltage transformer, DC controller PCB			NO	1. Check the electrical continuity of the high-voltage cord. 2. Check the high-voltage transformer and the DC controller.
Development	Developing assembly	6	Is the developing assembly set correctly, i.e., is the roll of the developing assembly forced against the photosensitive drum?	NO	See "The developing assembly fails to engage/ disengage."
	Toner level sensor	7	Is toner present in the developing assembly?	NO	1. Check the black hopper. 2. See "The 'ADD BLACK TONER' message fails to go ON" or "The 'ADD COLOR TONER' message fails to go ON."
Pre-transfer corona assembly		8	Is the pre-transfer corona wire hooked correctly and is its height correct? Is the corona assembly set correctly?	NO	1. Re-hook the corona wire. 2. Set the corona assembly.
Photosensitive drum				YES	Replace the photosensitive drum.

3. The image is too light (excessively, all over).

Cause		Step	Checks	YES/NO	Correction
		1	Switch the machine OFF in the middle of copying operation, and open the front door. Is the toner image on the photosensitive drum more or less normal?	NO	Go to step 5.
Transfer	Transfer/ Separation corona assembly	2	Is the transfer/separation corona assembly set correctly? Is the corona wire normal?	NO	1. Re-set the corona assembly. 2. Re-route the corona wire.
	DC controller, High-voltage transformer	3	Is LED1 of the high-voltage transformer ON during copying operation?	NO	Check the high-voltage transformer and the DC controller PCB.
	High-voltage cord, Transfer/ Separation corona assembly			YES	1. Check between the high-voltage transformer and the high-voltage cord. 2. Check the electrical continuity of the high-voltage cord. 3. Check the transfer/ separation corona assembly.
	Lower transfer guide	4	Set the feeder assembly, and measure the resistance between the lower guide and the mount (metal section) of the transfer corona assembly rail. Is it 0 Ω?	YES	1. Check to make sure that the lower transfer guide is not in contact with the side plate of the feeder assembly. 2. Replace the varistor.
	Copy paper			NO	Try fresh copy paper or different type of paper.
		5	Is the developing assembly forced against the drum?	NO	See "The developing assembly fails to engage/ disengage."
Development				YES	1. Check the developing assembly. 2. Check the developing bias.

4. The density is not even (front is darker).
5. The density is not even (front is lighter).

Cause	Step	Check	YES/NO	Correction
Scanner (dirt)	1	Clean the scanning lamp, reflecting plate, side reflecting plate, mirror, lens, and dust-proof glass Is the problem corrected?	YES	End.
Primary corona wire (height)	2	Carry out the Image Adjustment Basic Procedure. Is the problem corrected?	YES	End.
Pre-exposure lamp	3	Is the pre-exposure lamp ON during copying operation?	NO	1. Replace the pre-exposure lamp. 2. Check the DC controller PCB.
Developing assembly	4	Is the coating of toner on the developing cylinder even?	NO	1. Check the edge of the developing assembly blade. 2 Check the gap between the developing blade and the cylinder. 3. Dry wipe the surface of the developing cylinder. If the CD unit, is used, do not dry wipe the developing cylinder.
Corona assembly, Copy paper			YES	1. Execute automatic cleaning operation for all corona wires once again, and check the position of the wires once again. 2 Try different copy paper.

6. The image is foggy (all over).

Cause	Step	Check	YES/NO	Correction
Scanner (dirt)	1	Clean the scanning lamp, reflector plate, side reflector plate, mirror, lens, and dust-proof glass. Is the problem corrected?	YES	End.
	2	Carry out the Image Adjustment Basic Procedure. Is the problem corrected?	YES	End.
Pre-exposure lamp	3	Is the pre-exposure lamp ON during copying operation?	NO	1. Replace the pre-exposure lamp. 2. Replace the DC controller PCB.
Developing assembly	4	Is the developing cylinder insulated from the GND of the machine? Switch the machine OFF, and disconnect J3 of the high-voltage transformer. Check J3-2 between the developing assembly and the GND of the machine.	NO	Check the parts associated with the developing cylinder and the developing assembly connector.
Intensity sensor	5	Are copies made in the AE mode lighter than copies made in the manual mode? (Use the Test Chart.)	YES	1. Check the intensity sensor.
Developing bias control circuit	6	Is the voltage between J651-5 (J1-5;+) and J651-1 (J1-1;–) of the high-voltage transformer 16 V or less (HVBDC) during copy operation and about 16 V otherwise?	NO	Replace the DC controller PCB.
High-voltage transformer			YES	Replace the high-voltage transformer.

7. The image is foggy (in paper-feed direction).
8. The image has dark lines (in paper-feed direction, relatively broad and faint).

Cause	Step	Check	YES/NO	Correction
Primary corona assembly	1	Execute automatic cleaning operation on the primary corona wire in the user mode (*, 11, OK). Is the problem corrected?	YES	End.
Scanner	2	Clean the scanning lamp, reflector plate, side reflector plate, lens, mirror, and dust-proof glass. Is the problem corrected?	YES	End.
Pre-exposure lamp	3	Is the pre-exposure lamp ON during copying operation?	NO	1. Replace the pre-exposure lamp. 2. Check the DC controller PCB.
Developing assembly	4	Is the coating of toner on the developing cylinder even?	NO	1. Check the edge of the developing assembly blade. 2. Dry wipe the surface of the developing cylinder. If the CD unit, do not dry wipe the developing cylinder.
Fixing assembly, Drum unit			YES	Check the fixing assembly and the drum unit.

9. The image has dark lines (in paper-feed direction, narrow lines).

Cause	Step	Check	YES/NO	Correction
	1	Make a copy, and switch the machine OFF while the copy paper is in the feeder assembly. Does the copy image before fixing have black lines?	NO	Go to step 3.
Photosensitive drum	2	Are there scratches or black lines around the surface of the photosensitive drum? If there are black lines, try wiping them off using a flannel cloth coated with toner; check if the lines disappear from copies.	YES	Replace the drum unit; if there are scratches, investigate the cause.
Developing system, Exposure system			NO	Check the developing system and the exposure system.
Fixing assembly	3	Are there scratches or black lines around the surface of the upper roller of the fixing assembly?	YES	1. Replace the upper roller. 2. Check if the cleaning belt is taken up correctly.
			NO	Check the fixing assembly inlet for dirt.

10. The image has white stripes (in paper-feed direction).
11. The image has white lines (in paper-feed direction).

Cause	Step	Check	YES/NO	Correction
Fixing assembly	1	Make a copy with the copyboard cover open, and switch the machine OFF while the copy paper is moving through the feeder assembly. Does the copy image before fixing have white spots or white lines?	NO	1. Clean the paper guide assembly (upper, lower) of the fixing assembly. 2. Check the fixing assembly upper roller. 3. Check if the cleaning belt is taken up correctly and it is functioning correctly. 4. Clean the separation claw.

Cause	Step	Check	YES/NO	Correction
Primary corona wire	2	Execute automatic cleaning operation on the primary corona wire in the user mode (*, 11, OK). Is the problem corrected?	YES	If the dirt cannot be removed, replace the corona wire.
Developing assembly	3	Is the coating of toner on the developing cylinder even?	NO	Check the edge of the developing assembly blade; if there is no toner inside the developing assembly, see "The 'ADD TONER' message fails to go ON."
Copy paper	4	Try fresh copy paper. Is the problem corrected?	YES	The copy paper may be moist, advise the user on the correct method of storage.
Drum unit	5	Are there scratches around the photosensitive drum?	YES	Replace the drum unit; be sure to find out the cause of the scratches.
Corona wire automatic cleaning mechanism	6	Is the cleaner of each corona wire at the respective home position?	NO	Check the corona wire automatic cleaning mechanism.
Transfer/ Separation corona assembly, Pre-transfer corona assembly	7	Is the copy paper in contact with the drum separation claw while the copy paper is moving?	YES	1. Clean the transfer/ separation corona wire using the automatic cleaning mechanism; if the dirt cannot be removed, replace the corona wire. 2. Check the height of the transfer/separation corona wire and the pre-transfer corona wire. 3. Try using different copy paper.
Stray light from outside			NO	Check to make sure that stray light from outside is not noted on the photosensitive drum.

12. The image has white spots (in cross-feed direction).

Cause	Step	Check	YES/NO	Correction
Developing assembly	1	Does the problem occur at intervals of about 42 mm when the black developing assembly is used or about 50mm when the CD unit is used?	YES	1. Clean the developing roll. 2. Dry wipe the surface of the developing cylinder. If the CD unit is used, do not dry wipe the developing cylinder. 3. If there are scratches on the surface of the developing cylinder, replace the developing cylinder.
Drum unit	2	Does the problem occur at intervals of about 25.1 cm?	YES	1. Clean the drum. 2. If there are scratches on the drum, replace the drum unit.
Copy paper	3	Try fresh copy paper. Is the problem corrected?	YES	The copy paper may be moist; advise the user on the correct method of storage.
Scanner rail, Scanner cable	4	Does the problem occur at the same position on all copies?	YES	1. Check the scanner rail for foreign matter. 2. Adjust the tension of the scanner cable.
Corona wire (dirt), Drum unit	5	Are there scratches on the surface of the photosensitive drum?	NO	Clean each corona assembly using the automatic cleaning mechanism.
			YES	Replace the drum unit.

13. The back of the copy is soiled.

Cause	Step	Check	YES/NO	Correction
	1	Switch the machine OFF while the copy paper is moving through the feeder assembly. Is the back of the paper soiled at the time?	NO	Go to step 3.
Developing assembly	2	Does the problem occur at intervals of about 50 mm?	YES	1. Clean the registration roller. 2. Clean the transfer guides. 3. Check the developing assembly for leakage of toner.
Cleaning assembly (photosensitive drum)			NO	1. Clean the feeder assembly. 2. Check the cleaner assembly (drum) for leakage of toner.
Fixing assembly	3	Is the cleaning belt of the fixing assembly taken up correctly and is it functioning correctly?	NO	1. Check the take-up mechanism of the cleaning belt. 2. Clean the upper and lower rollers. 3. Clean the fixing assembly inlet guide. 4. Check the condition of the fixing lower roller cleaner felt.
Delivery assembly			YES	Clean the delivery roller and the separation claw.

14. The fixing is poor.

Cause		Step	Check	YES/NO	Correction
Fixing assembly	Upper roller, Lower roller	1	Does the problem occur vertically?	YES	Check the upper roller and the lower roller for scratches.
	Heater (H1)	2	Does the heater (H1) go ON 3 sec after power-on?	NO	See "The fixing heater fails to go ON."
	Lower roller (pressure)	3	Is the lower roller pressure (nip width) within the standards?	NO	Adjust the lower roller pressure.
Copy paper		4	Is the paper of a type recommended by Canon?	NO	Try recommended paper; if the result is good, advise the user to use recommended paper.
DC controller PCB			Check the temperature of the fixing assembly in the service mode (✳ 1 ✳; FTMP). Is it controlled to around 190°C?	NO	Check the DC controller PCB.
Thermistor				YES	Check the thermistor.

15. The leading edge is displaced.
16. The leading edge is displaced.
17. The leading edge is displaced.

Cause	Step	Check	YES/NO	Correction
Document	1	Is the document placed correctly?	NO	Place it correctly.
Copy paper	2	Is the copy paper of a type recommended by Canon?	NO	Try recommended paper; if the result is good, advise the user to use recommended paper.
Pick-up assembly, Cassette	3	Make copies using different cassette holders. Is the displacement the same?	YES	Go to step 5.
			NO	Check the pick-up assembly and the cassette of the respective cassette holder.
Pick-up roller	4	Has the pick-up roller reached its estimated life?	YES	Replace the pick-up roller if wear is noted.
	5	Does each registration roller rotate normally?	NO	See "The registration roller fails to rotate."
✳3✳ REGIST	6	Make adjustments using 'REGIST' (✳ 3 ✳) in the service mode. Is the problem corrected?	YES	End.
Registration roller, Pick-up guide, Feeder guide	7	Does the displacement occur only on the 2nd page of a two-sided/overlay copy?	YES	See "The pick-up mechanism fails in the lower feeder assembly."
			NO	Check and, if necessary, clean each registration roller, pick-up guide, and feeder guide.

18. The image is blurred.

Cause	Step	Check	YES/NO	Correction
Scanner drive cable	1	Does the cable overlap on the wire pulley while the scanner is moving? Or, is the cable too slack or too taut?	YES	1. Re-route the cable. 2. Replace the cable if it is twisted or frayed.
Scanner rail	2	Move the No. 1 mirror mount slowly by hand. Does it move smoothly?	NO	Clean the scanner rail using alcohol; then, apply a small amount of lubricant.
Photosensitive drum	3	Does the problem occur at intervals of about 25.1 cm?	YES	1. Check the drum gear. 2. Check the end of the drum which is in contact with the developing roll for scratches or protrusions.
Drum drive gear	4	Does the problem occur at intervals of about 10 cm?	YES	Check the drum drive gear.
Developing gear	5	Does the problem occur at intervals of about 42 mm when the black developing assembly is used or about 50mm when the CD unit is used?	YES	Check the developing assembly.
Drum cleaner input gear	6	Does the problem occur at intervals of about 52 mm?	YES	Check the drum cleaner.
Drum drive system			NO	Check the drum drive system.

19. The image is foggy (in cross-feed direction).

Cause	Step	Check	YES/NO	Correction
	1	Does the problem occur always at the same position in the DIRECT mode?	YES	Go to step 4.
Scanning lamp, Lamp regulator	2	Does the scanning lamp flicker while the scanner is moving forward?	YES	Check the scanning lamp, lamp regulator, and 24V power supply.
Black developing assembly	3	Is the coating of toner on the developing cylinder normal?	NO	Check the developing bias.
Scanner	4	Make a reduced copy, and compare it with one made in the DIRECT mode. Are the positions different?	YES	Check the scanner.
Feeder assembly			NO	Check the feeder system.

20. The image lacks sharpness.

Cause	Step	Check	YES/NO	Correction
Copyboard glass	1	Is oil noted on the copyboard glass?	YES	Clean the copyboard glass.
Mirror (position)	2	Is the horizontal reproduction ratio in the DIRECT mode within the standards?	NO	Adjust the distance between the No. 1 and No. 2 mirrors.
Scanner (dirt)	3	Clean the scanning lamp reflector plate, mirror, lens, and dust-proof glass. Is the problem corrected?	YES	End.
Drum unit	4	Replace the drum unit. Is the problem corrected?	YES	End.
Lens drive assembly			NO	Check the operation of the lens drive assembly.

21. The copy is blank.

Cause	Step	Check	YES/NO	Correction
Primary corona assembly	1	Is the primary corona assembly set correctly?	NO	Set the primary corona assembly correctly.
	2	Is the corona wire or the grid wire broken?	YES	Re-route the corona wire or the grid wire.
Developing assembly (engagement)	3	Is the developing assembly forced against the drum during copying operation?	NO	See "The developing assembly fails to engage/ disengage."
DC controller PCB	4	Does the blank exposure lamp (LASER) remain OFF while the scanner is moving forward?	NO	Check the DC controller PCB.
Connector (contact)	5	Are the connectors on each PCB connected correctly?	NO	Re-connect them.
High-voltage cord	6	Is there electrical continuity on the high-voltage cord connected to each corona assembly, i.e., 0 Ω or 10K Ω?	NO	Replace the high-voltage cord without continuity.
High-voltage transformer			YES	Check the high-voltage transformer.

22. The copy is solid black.

Cause	Step	Check	YES/NO	Correction
	1	Does the scanning lamp remain ON during copying operation?	NO	See "The scanning lamp fails to go ON."

CHAPTER 4 OPERATION TROUBLESHOOTING

I. TROUBLESHOOTING MALFUNCTIONS

1. E000

Cause	Step	Check	YES/NO	Correction
	1	Clear the error 'E000' in the service mode (✱ 4 ✱ ; 'ERROR'), and open the front door and the delivery assembly to cool the fixing heater. Does the fixing heater go ON 3 sec after the machine is switched ON? (Check by the naked eye; switch the machine OFF immediately after the check.)	NO	See "The fixing heater fails to go ON."
Thermistor (open)	2	Open the front door and the delivery assembly to cool the fixing roller. Close the front door and the delivery assembly, and check 'FTMP' in the service mode (✱ 1 ✱) for 10 sec. Does the reading remain '14°C'? (Be sure to switch the machine OFF after the check.)	YES	Check the wiring between J111 on the DC controller PCB and the thermistor (TH1); if normal, replace the thermistor.
Thermistor (attachment)	3	Is the thermistor in even contact with the upper fixing roller?	NO	Re-attach the thermistor.
Thermistor (dirt)	4	Clean the contact face of the thermistor. Is the problem corrected?	YES	End.
Environment	5	Does the problem occur only when the machine is switched ON in the morning?	YES	• Advise the user that the operating environment is outside the specification. • Advise the user not to switch the machine ON until the room temperature is high enough.
Thermistor	6	Replace the thermistor. Is the problem corrected?	YES	End.
DC controller PCB			NO	Replace the DC controller PCB.

2. E001

Cause	Step	Check	YES/NO	Correction
	1	Clear the error 'E000' in the service mode (✱ 4 ✱ ; 'ERROR'), and open the front door and the delivery assembly to cool the fixing roller. Switch the machine ON again; is 'E001' indicated immediately after power-on?	NO	See 'E004'.
Thermistor (TH1; shorted)	2	Switch the machine OFF, and disconnect J60 from the fixing assembly. Set the meter to the 1K Ω range, and connect the probes to J60-1 and J60-3 on the harness side. Is the resistance about 0 Ω? (Be sure to connect J60 after the check.)	YES	Check the wiring between J111 on the DC controller PCB and the thermistor; if normal, replace the thermistor.
DC controller PCB			NO	Replace the DC controller PCB.

3. E002, E003

Cause	Step	Check	YES/NO	Correction
	1	Clear the error 'E002', 'E003' in the service mode (⊠ 4 ⊠ ; 'ERROR'), and switch the machine ON. Are the following true? • The fixing heater fails to go ON. • 'E000' is indicated.	YES	Go to the respective section.
Wiring	2	Is the contact of J111-A3 and J111-A4 on the DC controller PCB and J60 (2-pin) of the fixing assembly normal? Is the wiring between the thermistor and J111 of the DC controller PCB normal?	NO	Re-connect the connectors.
Thermistor (attachment)	3	Is the thermistor in even contact with the upper fixing roller?	NO	Re-attach the thermistor.
Thermistor (dirt)	4	Clean the contact face of the thermistor. Is the problem corrected?	YES	End.
Environment	5	Does the problem occur only when the machine is switched ON in the morning?	YES	• Advise the user that the operating environment is outside the specification. • Advise the user not to switch the machine ON until the room temperature is high enough.
Thermistor	6	Replace the thermistor. Is the problem corrected?	YES	End.
DC controller PCB			NO	Replace the DC controller PCB.

4. E004

Cause	Step	Check	YES/NO	Correction
Fixing heater	1	Is the fixing heater operating about 3 sec after power-on?	NO	See "The fixing heater fails to go ON."
SSR	2	Replace the SSR. Is the problem corrected?	YES	End.
DC controller PCB			NO	Replace the DC controller PCB.

5. E010

Cause	Step	Check	YES/NO	Correction
	1	Does the main motor rotate until 'E010' goes ON?	NO	Go to step 3.
Main motor (M1)	2	Set the meter to the 12VDC range. Does the voltage between J814-5 (+; M1CLK) and J814-4 (–; 0V) on the motor driver PCB change from about 0V to about 2.6V and from about 5 V to about 2.6 V when the COPY START key is pressed or when WMUPR starts?	NO	Replace the main motor; the clock pulse generator is faulty.
DC controller PCB			YES	Check J814 and J812 on the motor driver PCB for contact, and check the wiring between J812 and J102 on the DC controller PCB; if normal, replace the motor diver PCB or the DC controller PCB.
Chain	3	Is the chain fitted correctly?	NO	Re-fit it.
DC power supply	4	Is the voltage between the following connectors on the motor driver PCB normal? J811-1 (+; 24V) and J811-2 (–; 0 V) J811-6 (+; 5V) and J811-7 (–; 0V)	NO	Check the fuse on the fuse PCB; if normal, see "The DC power supply fails to go ON."
DC controller PCB	5	Set the meter to the 12VDC range. Does the voltage between J812-5 (+; MMD) and J811-7 (–; 0 V) on the motor driver change from about 5 V to about 0 V immediately before 'E010' is indicated?	NO	Check the wiring between J812 and J102 on the DC controller PCB; if normal, replace the DC controller PCB.

Cause	Step	Check	YES/NO	Correction
M1/M2 Motor driver PCB	6	Replace the motor driver PCB. Is the problem corrected?	YES	End.
Main motor (M1)			NO	Replace the main motor.

6. E020

Cause	Step	Check	YES/NO	Correction
Toner sensor (Q17; black developing assembly)	1	Is 'PA2-6' ($\overline{\text{BTSP}}$) in the service mode ([*] [2] [*]) '1'?	YES	Replace the toner sensor (Q17) if toner is not found inside the developing assembly.
Hopper motor	2	Drive the hopper motor using 'HPPR_MTR' in the service mode ([*] [4] [*]). Does the hopper motor rotate?	NO	See "The hopper motor fails to rotate."
Hopper toner sensor (Q18)	3	Is the hopper toner sensor normal? (Make sure that it recognizes the absence of toner in the hopper.)	NO	Replace the toner sensor (Q18).
Toner supply mouth (developing assembly), Shutter (hopper)	4	Detach the hopper from the machine. Does the shutter at the bottom of the hopper function normally?	NO	Check the toner supply mouth of the developing assembly and the shutter of the hopper.
Feedscrew (hopper)	5	Detach the hopper motor, and rotate the drive gear of the feedscrew. Does it rotate smoothly?	NO	Check the rotation mechanism of the feedscrew.
DC controller PCB			YES	Check the harness between the toner sensor (Q17, Q18) and the DC controller; if normal, replace the DC controller PCB.

7. E030

Cause	Step	Check	YES/NO	Correction
	1	Does the total copy counter operate normally?	NO	See "The counter fails to operate."
DC controller PCB			YES	Replace the DC controller PCB.

8. E080

Cause	Step	Check	YES/NO	Correction
DC power supply	1	Set the meter to the 12 VDC range. Is the voltage between J903-2 (+; 5 V) and J903-4 (-; 0V) on the CD unit changer controller PCB about 5 V?	NO	Check the contact of the connector and the wiring; if normal, see "The DC power is absent."
Connector, Wiring	2	Are the contact and the wiring of connector J907 and relay connector J21 (28P) on the CD unit changer controller PCB and connector J107 on the DC controller PCB normal?	NO	Re-connect or re-wire the connector(s).
CD unit changer controller PCB	3	Replace the CD unit changer controller PCB. Is the problem corrected?	YES	End.
DC controller PCB			NO	Replace the DC controller PCB.

9. E081

Cause	Step	Check	YES/NO	Correction
	1	Switch the machine OFF and then ON again. Does the vertical drive motor rotate?	NO	Go to step 4.
Upper limit switch (MS903), Lower limit switch (MS904)	2	Switch the machine OFF, and disconnect connector J902 from the CD unit changer controller PCB. Set the meter to the ×1KΩ range. Is the resistance at the following terminals on the harness side of J902 0Ω? MS903: J902-1 and J902-2 MS904: J902-3 and J902-4	NO	1. Check the stop position of the compartment. 2. Check the continuity between J902 and MS903/MS904; if normal, replace MS903 or MS904.
Vertical drive home position sensor (Q963)	3	Set the tester to the 12 VDC range. Is the voltage between J904-B13 (+) and J903-4 (–) on the CD unit changer controller PCB 5 V when Q963 is blocked?	NO	Check the wiring between the CD unit changer PCB and Q963; if normal, replace Q963.
CD unit changer controller PCB			YES	Replace the CD unit changer controller PCB.
Vertical drive motor release solenoid (SL901)	4	Switch the machine OFF, and disconnect connector J904 from the CD unit changer controller PCB. Set the meter to the ×1KΩ range. Is the resistance between J904-A1 and -A2 on the harness side of J904 about 160Ω?	NO	Check the continuity between J904 and SL901; if normal, replace the vertical drive motor release solenoid.
Compartment	5	Switch the machine OFF. Turn the rotar found behind the vertical motor while pulling the vertical motor release solenoid (SL901). Does the compartment move up and down smoothly?	NO	1. Check the drive gear attached to the vertical drive motor for damage. 2. Check for an obstacle when moving the compartment up and down.
Vertical drive motor (M901)	6	Set the meter to the 12 VDC range, and measure the voltage between J901-2 (+; VMCLK) and J901-3 (–; 0V) on the CD unit changer controller PCB. Switch the machine ON. Does the voltage change from about 0 V to about 2.6 V or from about 5 V to about 2.6 V 4 sec before E081 is indicated?	NO	Replace the vertical drive motor.
CD unit changer controller PCB			YES	Replace the CD unit changer controller PCB.

10. E082

Cause	Step	Check	YES/NO	Correction
CD unit stop position	1	Detach the front cover, rear cover, and upper cover while E082 is indicated, and check the position of the CD unit. 1. inside the compartment, i.e., the CD unit fixing claw is down. 2. between the CD unit changer and the copier. 3. connected to the CD connector on the copier side.		
	2	Switch the machine OFF and then ON. Does the horizontal drive motor rotate?	YES	Go to the pages that follow depending on the position of the CD unit checked in step 1.
Horizontal drive motor driver PCB, Horizontal drive motor	3	Set the meter to the 12 VDC range. Does the voltage between J909-5 (+; HMD) and J903-4 (-; 0V) on the CD unit controller PCB change from about 7 V to 0 V when the copier is switched ON?	YES	1. Replace the horizontal drive motor driver PCB. 2. Replace the horizontal drive motor.
CD unit changer controller PCB			NO	Replace the CD unit changer controller PCB.

① The CD unit is inside the compartment, i.e., the CD unit fixing claw is down.

Cause	Step	Check	YES/NO	Correction
Compartment	1	Is the stop position of the compartment within the specification? • Position of Holders in Compartment. 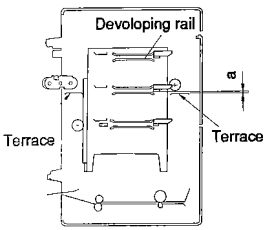 1) Select holder 1; check that dimension a is 0.5 mm to 1 mm. 2) Select holders 2 and 3; check dimension a is 0 mm to 1 mm for each. **Note:** Take measurements at two points (front, rear) each; 6 points in total.	NO	Go to the next page for correction. • Checking Dimension a Insert a straight rod (5 mm dia.) in the rail as shown, and check the gap to the terrace with 150-mm rulers (0.5 mm thick). A single ruler should slide in smoothly; second, with force. **Note:** Be sure to remove the rod; its presence may damage the CD unit changer when the power is returned. 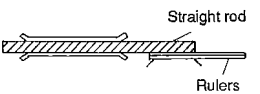
CD unit claw release	2	Press the plunger of the CD unit claw release solenoid (SL905) with a finger. Is the movement of the plunger smooth, i.e., does the plunger return smoothly?	NO	Check to see if the sector gear of the fixing claw release is free of interference and has a good backlash; also check the condition of the solenoid. As necessary, replace the parts.
CD unit claw release solenoid	3	Press the plunger of the CD unit claw solenoid with a finger. Does the CD unit fixing claw become disengaged from the CD unit?	NO	Check to make sure that the release lever is level between the front and the rear; if normal, adjust the stroke of the solenoid. • Adjusting the CD Unit Claw Release Solenoid. 1) Select holder 1. 2) Pull the solenoid so that the release lever is 0.5 mm to 1.0 mm off the CD unit as shown. Check both front and rear; 2 points in total. 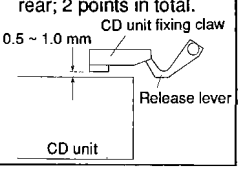

Cause	Step	Check	YES/NO	Correction
CD unit claw release solenoid (SL902)	4	Switch the copier OFF, and disconnect connector J904 from the CD unit changer controller PCB. Set the meter to the ×100Ω range. Is the resistance between J904-A3 and J904-A4 on the harness side about 100Ω?	NO	Check the continuity between J904 and the solenoid; if normal, replace the CD unit claw release solenoid.
Horizontal home position plate	5	Does the horizontal home position plate return by its own weight?	NO	Check for grease and foreign matter; then, replace the parts as necessary.
Horizontal home position sensor (Q961)	6	Switch the copier OFF, and set the meter to the 12 VDC range. Is the voltage between J904-B10 (+; HHP) and J903-4 (-; 0 V) on the CD unit changer controller PCB 5 V when Q961 is blocked?	NO	Replace the horizontal home position sensor.
Horizontal motor controller PCB	7	Replace the horizontal drive motor controller PCB. Is the problem corrected?	YES	End.
CD unit changer controller PCB			NO	Replace the CD unit changer controller PCB.

Correction

1) Select holder 1; if a discrepancy is noted overall even though the front and rear are level in height, move the vertical drive home position sensor (Q963).
   EX. If lower by 0.5 mm, move it up by 0.5 mm.

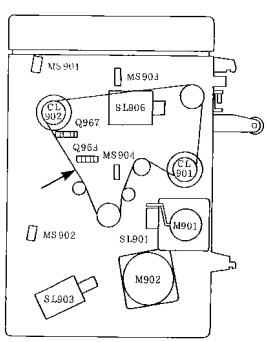

2) If the front and rear is not level in height, pull out the compartment, and change the rack position.
   EX. If the rear is higher than the front, loosen the rack screw at the front, and move the front up; if otherwise, move it down.

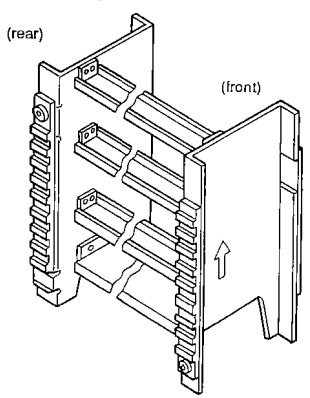

② The CD unit is between the CD unit changer and the copier.

Cause	Step	Check	YES/NO	Correction
CD unit	1	Detach the top plate of the CD unit changer, and look inside from above. Is the CD unit found with its front/rear 3 mm lower than rear/front in relation to the stay? 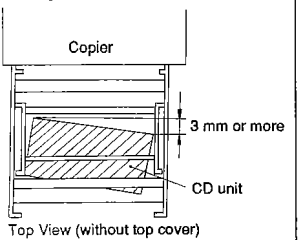 Top View (without top cover)	YES	Go to step 7.
CD unit locking cam	2	Is the CD unit locking cam positioned correctly? 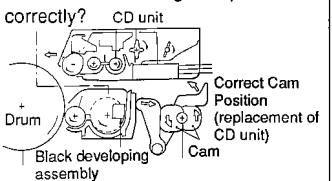	NO	Correct the position of the locking cam; after correction, make a copy to make sure that the sleeve of the CD unit is not scratched.
Compartment	3	Is the stop position of the compartment within the specification? (see p. 4-10)	NO	Correct the stop position.
Horizontal home position plate	4	Does the horizontal home position plate return smoothly by its own weight?	NO	Check for grease and foreign matter; then, replace the parts as necessary.
Horizontal home position sensor (Q961)	5	Switch the copier ON, and set the meter to the 12 VDC range. Is the voltage between J904-B10 (+; HHP) and J903-4 (-; 0V) on the CD unit changer 5 V when Q961 is blocked?	NO	Replace the horizontal home position sensor.
IN clutch (CL901), OUT clutch (CL902), drive solenoid (SL906)	6	Switch the copier OFF, and disconnect connector J904 from the CD unit changer controller PCB. Set the meter to the ×100Ω range, and measure the resistance at the following on the harness side; is the resistance at each normal? CL901: J904-A7 and J904-A8 145Ω* CL902: J904-A15 and J904-B16 145Ω* SL906: J904-B1 and J904-B2 47Ω* *Approx.	NO	Replace any faulty clutch or solenoid.
CD unit changer controller PCB			YES	Replace the CD unit changer controller PCB.

Cause	Step	Check	YES/NO	Correction
CD unit	7	Check the CD unit for the following problems: • The rack is chipped. • The connector has poor contact or is biting a cord. • The front cover is not attached properly.	NO	Replace the CD unit.
CD unit changer	8	Is the CD unit installed in the copier correctly? • Installation to Copier • The CD unit changer is fixed to the copier at both front and rear (2 points). 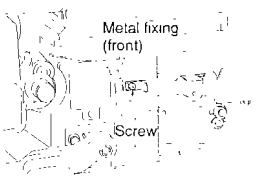 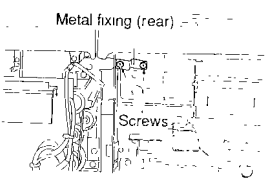	NO	Re-attach the CD unit changer. • Check that the top of the CD unit changer and that of the copier are more or less flush. • Take care not to damage the CD unit release detection lever. • Make sure that the hooks (4 points) on the CD unit changer are on the side plate. • After installation, open the CD unit door, and insert a hand. Check that the gear shaft moves up and down; if not, reinstall the unit. 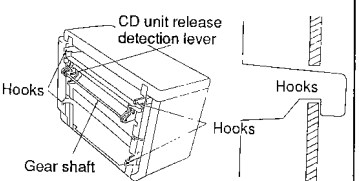
Foreign metter	9	Is there any foreign matter in the CD unit changer?	NO	Remove the foreign matter.
Positioning plate	10	Is the copier's positioning plate firmly butted against the end plate and the developing rail in the direction of the arrows and fixed properly? 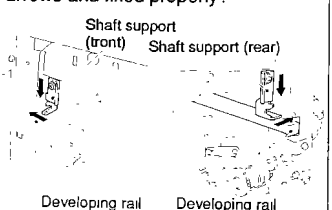	NO	Re-attach the positioning plate.

Cause	Step	Check	YES/NO	Correction
Compartment	11	Is the stop position within the specification? (see p. 4-10)	NO	Correct the stop position.
Feeder solenoid (SL906)	12	Are the position and the movement of the feeder solenoid normal?	NO	Correct the position of the solenoid.
CD unit changer controller PCB	13	Is the degree of adjustment as shown below? • Drive Gear Adjustment Spec. While pushing the plunger of the solenoid with a finger, push the drive gear for its play; check that the drive gear sticks out the side plate by 18.5 ± 0.5 mm. 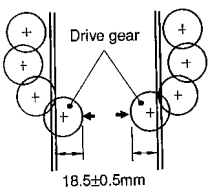 	YES	Replace the CD unit changer PCB.
Feeder gear			NO	Adjust the feeder gear as shown below.

Adjusting the Drive Gear

1) Remove the top cover, and pull out the compartment. (Pull and hold the solenoid mounted to the vertical drive motor unit, and turn the rotar mounted at the rear of the motor by hand.)
   The length of movement to the top before removal is as ;follows:
   if at holder 1, ...118 mm
   if at holder 2, ...62 mm
   if at holder 3, ...6 mm
   Select holder 3 to facilitate removal.
2) Pull and hold the drive solenoid (SL906), and adjust the protrusion of the drive gear at the front to about 18.5 mm using the adjusting screw.
   (Take measurements with a ruler placed against the inside face of the side plate.)
   Adjust protrusion of the drive gear at the rear by adjusting the stroke of the drive solenoid.
3) After adjustment, put the compartment back in; take care so that the compartment is level.
   (Misengagement of a single tooth results in an incline of 2 mm to 3 mm.)
4) Check that the hight (stop) is withing spec.; for checks and corrections, see the description for ①.

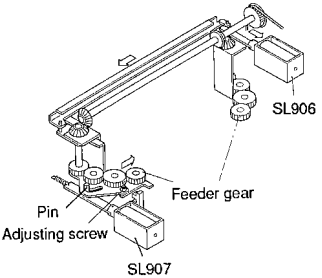

③ The CD unit is connected to the CD connector on the copier side.

Cause	Step	Check	YES/NO	Correction
IN clutch (CL901)	1	Is the IN clutch operating normally when the CD unit is driven into the copier?	YES	Go to step 3.
	2	Switch the copier OFF, and disconnect connector J904 from the CD unit changer controller PCB. Set the meter to the 100Ω range. Is the resistance between J904-A7 and J904-A8 on the harness side about 145Ω?	NO	Replace the IN clutch.
CD unit changer controller PCB			YES	Replace the CD unit controller PCB.
CD unit locking clutch	3	Check the position of the CD unit connector as shown below.	NO	Replace the CD unit locking clutch.
CD unit connector			YES	End.

Checking the CD Unit Connector on the Copier

①

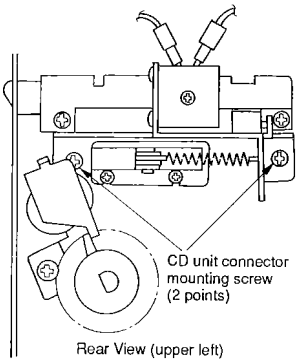

Rear View (upper left)

Remove the rear cover of the copier, remove the two screws above, and disconnect the CD unit connector. (Keep the screws apart for correct identification.)

Note:
Take care not to trap the wiring when installing the connector unit.

②

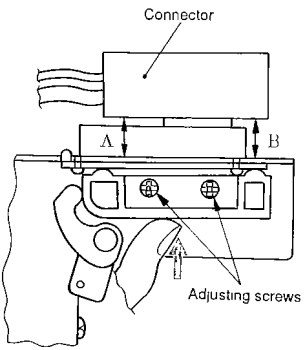

While pushing the molded section with a finger, measure distances A and B.
Normal if A and B are nearly identical; if different by 0.4 mm or more, adjust it using the adjusting screw.
The nominal value for A and B is 12.1 mm.

11. E083

Cause	Step	Check	YES/NO	Correction
CD unit horizontal drive sensor right	1	Are the CD unit horizontal drive sensor right (Q962) and the light-blocking plate normal? (See p. 2-26.)	NO	Replace Q962 or the light-blocking plate.
CD unit changer controller PCB			YES	Replace the CD unit changer controller PCB.

12. E084

Cause	Step	Check	YES/NO	Correction
CD unit horizontal drive sensor right		Are the CD unit horizontal drive sensor right (Q964) and the light-blocking plate normal? (See p. 2-27.)	NO	Replace Q964 or the light-blocking plate.
CD unit changer controller PCB			YES	Replace the CD unit changer controller PCB.

13. E085

Cause	Step	Check	YES/NO	Correction
Skew	1	Switch the copier OFF, and release the feeder gear; then, return the CD unit to the claw lock position. Switch the copier ON, and execute the following for each holder. • drive it inside the copier. • drive it to the CD unit door. • drive it from the CD unit door. Are the operations normal?	YES	• End. • Check to make sure there is no obstacle in the CD unit path and the plates are not bent; further, check to make sure that the CD unit door grip moves smoothly.
	2	Does the feeder gear remain engaged when E085 is ON?	NO	Go to step 7
Compartment	3	Is the compartment level in relation to the front and rear end plates?	NO	Re-attach it, see p. 4-11.
Spring, Lubrication	4	Switch the copier OFF, and press the CD unit feeder solenoid (SL906) at the rear of the CD unit changer and the CD unit release solenoid (SL907) at the front in turn. Does the feeder gear engage and disengage smoothly?	NO	Check the spring of the solenoid plunger; further, lubricate the pins shown in p 4-14 as necessary. Adjust the position of SL907; see p. 4-14.
CD unit release solenoid (SL907)	5	Disconnect connector J904 of the CD unit changer, and set the meter to the ×100Ω range. Is the resistance between J904-A5 and -A6 on the harness side about 100Ω?	NO	Check the wiring; if normal, replace SL907.
SL907	6	Connect J904, and set the meterr to the 30 VDC range; then, measure the voltage between J904-A5 (+; 24 V) and J904-A6 (-; FRSD). Does the voltage change from about 0 V to about 24 V when the copier is switched ON?	YES	Replace SL907.
CD unit changer controller PCB			NO	Replace the CD unit changer controller PCB.
CD unit release sensor (Q965)	7	Is the CD unit release sensor (Q965) normal? (See p. 2-27.)	NO	Replace Q965.
CD unit controller PCB			YES	Replace the CD unit controller PCB.

14. E086

Cause	Step	Check	YES/NO	Correction
CD unit changer	1	Is the CD unit changer installed to the copier properly? (See p. 4-13.)	NO	Re-install the CD unit changer.
	2	Is the developing fixing claw inside the compartment engaged in the CD unit?	YES	Go to step 4.
CD unit release solenoid (SL902)	3	Press the plunger of the CD unit claw release solenoid (S902) with a finger. Is the movement of the plunger smooth?	NO	Check to see if the sector gear of the fixing claw release is free of interference and has a good backlash; also check the condition of the solenoid. As necessary, replace the parts.
CD unit skew			YES	If the CD unit is found askew, see the following: *The CD unit is found between the CD unit changer and the copier; E082.*
Compartment	4	Is the stop position of the compartment within the specification? (See P. 4-10.)	NO	Correct the stop position of the compartment.
CD unit changer controller PCB	5	Set the tester to the 1 2VDC range. Connect the probes of the meter to J905-9 (+; $\overline{\text{CLRD}}$) and J903-3 (-; 0V) on the CD unit changer controller PCB, and block Q966 or Q967. Does the voltage change from 5 V to 0 V?	YES	Replace the CD unit controller PCB.
CD unit claw release sensor (Q966, Q967)			NO	Replace the CD unit claw release sensor; then, make checks on the items shown below.

If the stop position has been corrected or the sensor has been replaced, be sure to perform the following:

① Select holder 1.
② Check if the sensor is normal using a tester.
1) Set the meter to '12 VDC'.
2) Connect the (–) probe to J903-3 (GND) and (+) probe to J905-9 of the DC controller. The reading should be about 5 V when the sensor is blocked in this condition.
③ Check the margin for the sensor.
Measure the distance between the top of the side plate and that of the compartment frame with a gauge as shown (both front and rear). Call the distance A.
Move the vertical drive motor by hand, and measure the point at which the reading changes from 5 V to 0 V. Call the value B.
Take measurements to the top and bottom from A; check that the measurements satisfy the following:
$|A - B| \neq 2.0$ mm to 3.0 mm
④ Check holders 2 and 3 likewise. (Check both front and rear for each holder; 6 points in total.)

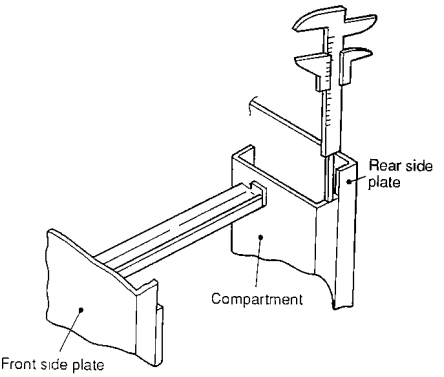

15. E089

Cause	Step	Check	YES/NO	Correction
CD unit horizontal drive sensor left (Q964)	1	Are the CD unit horizontal drive sensor left (Q964) and the light-blocking plate normal? (See p. 2-27.)	NO	Check the wiring; if normal, replace the sensor.
CD unit controller PCB			YES	Replace the CD unit controller PCB.

16. E100

Cause	Step	Check	YES/NO	Correction
J500	1	Is connector J500 on the laser driver PCB connected?	NO	Connect the connector.
Optical fiber	2	Is the optical fiber connected to the image processor PCB?	NO	Connect the optical fiber.
BD mirror	3	Clean the BD mirror Is the problem corrected?	YES	End.
Optical fiber, Laser scanner, Laser driver PCB, Image processor PCB, DC controller PCB			NO	Replace the following in turn: • Optical fiber • Laser scanner • Laser driver PCB • Image processor PCB • DC controller PCB

17. E110

Cause	Step	Check	YES/NO	Correction
J902	1	Is connector J902 on the laser scanner driver PCB connected?	NO	Connect the connector.
	2	Is the sound of the rotating laser scanner motor heard during standby?	YES	Go to step 4.
DC power supply	3	Set the meter to the 30 VDC range. Is the voltage between J901-1 (+; 24 V) and J901-2 (-; 0 V) on the laser scanner driver PCB about 24 V?	NO	Check the following connectors and fuse. • Laser Scanner Driver PCB J901-1, -2 • DC Power Supply PCB 1 J802-2, -3 • FU452
Laser scanner, Laser scanner driver PCB			YES	Replace the following in turns: • Laser scanner • Laser scanner driver PCB
DC controller PCB	4	Set the meter to the 30 VDC range, and measure the voltage between J902-4 (+; LMRDY) and J902-2 (-; 0 V) on the laser scanner drive PCB. Does the voltage change from about 5 V to about 0 V when the copier is switched ON?	YES	Check the wiring; if normal, replace the DC controller PCB.
Laser scanner, Laser scanner driver PCB			NO	Replace the following in turns: • Laser scanner • Laser scanner driver PCB

18. E140

Cause	Step	Check	YES/NO	Correction
Laser (adjustment; *4*)	1	Was 'LASER' (service mode, *4*) executed during replacement of the laser unit?	NO	Execute it.
J500, J501, J116	2	Is the following connectors connected? • Laser Driver PCB J500, J501 • DC Controller PCB J116	NO	Connect the connector(s).
Laser unit, Laser driver PCB, DC controller PCB			YES	Replace the following in turn: • Laser unit • Laser driver PCB • DC controller PCB

19. E202 (The keys on the control panel are locked.)

Cause	Step	Check	YES/NO	Correction
	1	Is the scanner at the home position when 'E202' goes ON?	NO	See "The scanner fails to move forward or in reverse."
Scanner home position sensor (Q8)		Is the scanner home position sensor (Q8) normal? (See p. 2-23.)	NO	Check the wiring between the DC controller PCB and the scanner home position sensor; if normal, replace the sensor.
DC controller PCB			YES	Replace the DC controller PCB.

20. E203

Cause	Step	Check	YES/NO	Correction
	1	Does the scanner move until 'E203' goes ON?	NO	See "The scanner fails to move forward or in reverse."
Scanner motor (M2)	2	Set the meter to the 12VDC range. Does the voltage between J813-6 (+; M2CLK) and J813-5 (–5; 0 V) on the motor driver change from about 0 V or about 5 V to about 2.6 V when the scanner starts to move forward?	NO	Replace the scanner motor; the clock pulse generator is faulty.
DC controller PCB			YES	Check J812 and J813 on the motor diver PCB for contact, and check the wiring between J812 and J102 on the DC controller PCB; if normal, replace the motor driver PCB or the DC controller PCB.

21. E204 (The keys on the control panel are locked.)

Cause	Step	Check	YES/NO	Correction
	1	Does the scanner move forward when the COPY START key is pressed?	NO	See "The scanner fails to move forward or in reverse."
Scanner document leading edge sensor (Q9)	2	Is the scanner document leading edge sensor (Q9) normal? (See p. 2-23.)	NO	Check the wiring between the DC controller PCB and the scanner document leading edge sensor; if normal, replace the sensor.
DC controller PCB			YES	Replace the DC controller PCB.

22. E210

Cause	Step	Check	YES/NO	Correction
	1	Does the lens move to the left when the machine is switched ON?	NO	See "The lens fails to move."
	2	After having moved to the left, does the lens stop at the lens home position before it hits the left edge?	YES	See "The lens fails to move."
Lens home position sensor (Q7)	3	Is the lens home position sensor (Q7) normal? (See p. 2-22.)	NO	Check the wiring between the DC controller and the lens home position sensor; if normal, replace the sensor.
DC controller PCB			YES	Replace the DC controller PCB.

23. E223

Cause	Step	Check	YES/NO	Correction
	1	Switch the copier ON. Does the filter motor go ON?	NO	Go to step 3.
Filter home position sensor (Q20)	2	Is the filter home position normal?	NO	Check the wiring between the DC controller PCB and Q20; if normal, replace Q20.
DC controller PCB			YES	Replace the DC controller PCB.
Filter motor (M13)	3	Set the meter to the ×100Ω range, and disconnect J115 from the DC controller PCB. Is the resistance on the following terminals normal?	NO	Check the wiring between the DC controller PCB and M13; if normal, replace M13.
DC controller PCB			YES	Replace the DC controller PCB.

Connector		Resistance (approx.)
J115-4	J115-5	135Ω
J115-7	J115-8	135Ω

24. E240, E710, E712, E714

Cause	Step	Check	YES/NO	Correction
	1	Switch the machine OFF and then ON. Is the problem corrected?	YES	End.
DC controller PCB			NO	Replace the DC controller PCB.

25. E660

Cause	Step	Check	YES/NO	Correction
IC card	1	Insert a different IC card, and execute an operation. Is 'E660' indicated?	NO	Advise the user that the IC card is faulty.
IC card unit			YES	Replace the IC card unit.

26. E800

Cause	Step	Check	YES/NO	Correction
Power switch (SW1)	1	Disconnect J22 (2-pin) of the power switch. Is there continuity between J22-1 and J22-2 on the power switch side?	NO	Replace the power switch.
DC controller PCB			YES	Check the wiring between J111 and J22 on the DC controller PCB; if normal, replace the DC controller PCB.

27. AC power is absent.

Cause	Step	Check	YES/NO	Correction
E code indication	1	Switch the machine ON. Is an E code indicated and then does the machine go OFF about 20 sec later?	YES	See the respective section on the error code.
Power plug	2	Is the power plug connected to the power outlet?	NO	Connect the plug.
Covers	3	Are the front door and the delivery cover closed firmly?	NO	Close the door and the cover.
Main power	4	Is the specified voltage present at the power outlet?	NO	Advise the user that the problem is not the copier.
	5	Is the specified voltage present between J1-1 an J1-2? (J1 is found near the power cord mount.)	YES	Go to step 7.
Circuit breaker (CB1; faulty or OFF)	6	Check both terminals of the circuit breaker (CB1) for electrical continuity. Is it 0 Ω?	NO	Press the button on the circuit breaker to check the continuity once again; if not 0 Ω, replace the breaker.
Power cord, Line filter (LF1; open)			YES	Check or replace the power cord or line filter.
Door switch (DS1)	7	Detach the door switch (DS1), and connect the probes of the meter to 1A and 1B or 3A and 3B. Is the resistance 0 Ω when the actuator is pressed and ∞Ω when it is released?	NO	Replace the door switch.
Power switch (SW1; faulty)	8	Connect the probes of the meter to both terminals (fastons) of the power switch (SW1). Is the resistance 0 Ω when the switch is ON and ∞Ω when OFF?	NO	Replace the power switch.
			YES	Check the wiring of the AC power line and the connector for contact.

28. DC power is absent.

Cause	Step	Check	YES/NO	Correction
AC power (supply)	1	Is AC power present between the following terminals? • DC power supply PCB J801-1 and J801-4 • DC power supply PCB for RDF/ sorter J806-1 and J806-2	NO	See "AC power is absent."
Wiring, DC load	2	Switch the machine OFF, and disconnect all the following connectors: • DC power supply PCB J802, J803, J804, J805 • DC power supply PCB for RDF/sorter J807, J808 Set the meter to the 30VDC range, switch the machine ON, and measure the voltage between the terminals shown in Table 4-1. Is the voltage correct?	YES	Switch the machine OFF, connect one of the disconnected connectors, and then switch the machine ON; repeat the steps for all connectors to identify the faulty connector. Check the wiring and DC loads that lead from the faulty connector.
Fuse, Wiring	3	Has any of the following fuses blown? • DC power supply PCB F101 • Fuse PCB FU451, FU452, FU453, FU454, FU455 • DC power supply PCB for RDF/sorter F1	YES	Replace the fuse. Check the DC loads and the wiring that lead from the blown fuse.
DC power supply PCB, Fuse PCB			NO	Replace the faulty PCB.

PCB	+ probe	– probe	Voltage (approx.)	PCB	+ probe	– probe	Voltage (approx.)
DC power supply	J802-1	J802-4	24V	DC power supply for RDF/ sorter	J807-3	J807-1	24V
	J802-6	J802-8	24V		J807-4	J807-2	24V
	J802-7	J802-9	24V		J808-3	J808-1	24V
	J803-1	J803-2	12V		J804-3	J808-2	24V
	J803-3	J805-4	5V				
	J803-2	J805-5	–9V				
	J804-1	J804-3	5V				
	J804-2	J804-4	5V				
	J804-1	J804-3	5V				
	J804-2	J804-4	5V				
	J804-6	J804-4	12V				
	J805-7	J805-8	5V				

Table 4-1

29. The photosensitive drum fails to rotate.

Cause	Step	Check	YES/NO	Correction
	1	Is 'E010' indicated?	YES	See 'E010'.
Drum unit (attachment)	2	Re-attach the drum unit. Is the problem corrected?	YES	End.
Chain (displacement)	3	Is the drive chain fitted correctly?	NO	Re-fit the chain.
Drum drive assembly			YES	Detach the drum drive assembly; repair or replace the parts as necessary.

30. The pick-up mechanism fails (cassette).

Cause	Step	Check	YES/NO	Correction
	1	Does the 'ADD PAEPR' message remain ON?	YES	See "The 'ADD PAPER' message fails to go OFF."
	2	Slide out and in the cassette. Is the sound of the lifter moving down or the lifter motor rotating heard?	NO	See "The lifter fails to move up."
Chain (displacement)	3	Is the drive chain fitted correctly?	NO	Re-fit the chain.
Upper right door (lower right door)	4	Is the upper right door (lower right door) firmly closed? *The parts in parentheses apply to the cassette feeding unit/paper deck pedestal only.*	NO	Close the door firmly.
Leaf spring (for engagement)	5	Is the upper right door (lower right door) engage the No. 2, and No. 3 (No. 4) registration rollers? *The parts in parentheses apply to the cassette feeding unit/paper deck pedestal only.*	NO	Check the leaf spring for engagement.
	6	Is the leading edge of the copy paper moved to the No. 1 and No. 2 (No. 3, No. 4) registration roller assemblies? *The parts in parentheses apply to the cassette feeding unit/paper deck pedestal only.*	YES	See "The registration roller fails to rotate."
Pick-up assembly	7	Open the upper right door (lower right door), and press the COPY START key with a screwdriver in the door switch. Does the feeder/ separation roller rotate?	YES	Go to step 10.
Pick-up clutch 1 (CL2), Pick-up drive switch solenoid (SL6), Pick-up roller release solenoid 1 (SL7)	8	Switch the machine OFF, and disconnect the connectors shown in Table 4-2. Set the meter to the '×100 Ω' range, and measure the resistance between the terminals. Is it correct?	NO	Check the wiring; if normal, replace CL2, SL6, SL7, M803, CL801, SL804, or SL805.

<table>
<tr><th>Cause</th><th>Step</th><th>Check</th><th>YES/NO</th><th>Correction</th></tr>
<tr><td>Pick-up motor (M803), Pick-up clutch (CL801), Pick-up roller release solenoid 2 (SL804), Pick-up drive switch solenoid 2 (SL805)</td><td rowspan="2">9</td><td rowspan="2">Connect the connectors, and switch the machine ON. Set the meter to the 30VDC range, and measure the voltage of the following terminals. Does the voltage change from about 0 V to about 24 V?
<table><tr><th></th><th>+</th><th>–</th></tr><tr><td>CL2</td><td>J75-1</td><td>J75-2</td></tr><tr><td>SL6</td><td>SL6 faston</td><td>SL6 faston*</td></tr><tr><td>SL7</td><td>SL7 faston</td><td>SL7 faston*</td></tr><tr><td>M803</td><td>J801-B6</td><td>J805-3</td></tr><tr><td>CL801</td><td>J801-B10</td><td>J805-3</td></tr><tr><td>SL804</td><td>J801-B11</td><td>J805-3</td></tr><tr><td>SL805</td><td>J801-B12</td><td>J805-3</td></tr></table>*Red harness</td><td>YES</td><td>Detach the pick-up assembly, and press the plunger of the solenoid with a finger to check the operation; if normal, replace CL2, SL6, SL7, M803, CL801, SL804, or SL805.</td></tr>
<tr><td>DC controller PCB</td><td>NO</td><td>Replace the DC controller PCB.</td></tr>
<tr><td>Sensor</td><td rowspan="2">10</td><td rowspan="2">Identify the sensor which has identified the jam using 'JAM, BODY' in the service mode (*1*). Is the sensor normal? (See p. 2-21.)</td><td>NO</td><td>Check the wiring and the lever; if normal, replace the sensor.</td></tr>
<tr><td>Pick-up assembly</td><td>YES</td><td>Detach the pick-up assembly, and check the spring.</td></tr>
</table>

PCB	Load	Connector	Resistance (approx.)
DC controller PCB	Pick-up clutch 1 (CL2)	J75-1 ↔ J75-2	120Ω
	Pick-up drive switch solenoid 1 (SL6)	J109-B14 ↔ J109-B2	95Ω
	Pick-up roller release solenoid 1 (SL7)	J109-B14 ↔ J109-B3	100Ω
Motor driver PCB (cassette feeding unit)	Pick-up motor (M803)	J7 (J2)-1 ↔ J7 (J2)-2	5Ω
		J7 (J2)-1 ↔ J7 (J2)-3	
		J7 (J2)-2 ↔ J7 (J2)-3	
Cassette feeding unit controller PCB	Pick-up clutch 2 (CL801)	J804-1 ↔ J804-4	120Ω
	Pick-up drive switch solenoid 2 (SL804)	J804-1 ↔ J804-5	90Ω
	Pick-up roller release solenoid 2 (SL805)	J804-1 ↔ J804-6	90Ω

Table 4-2

31. The lifter fails to move up (cassette pick-up).

Cause	Step	Check	YES/NO	Correction
Cassette size switch	1	Is the size of the cassette indicated on the display?	NO	Check the cassette size switch.
Gear, Lever	2	Slide out the cassette, and move up the lifter by hand. Does it move smoothly?	NO	Detach the pick-up assembly, and check the gears and the levers.
Grip latch (cassette)	3	Does the latch of the cassette move correctly?	NO	Re-attach the latch.
Spring, Lever	4	Move up the pick-up roller release lever with a finger. Does the pick-up roller move down?	NO	Detach the pick-up assembly, and check the spring and the lever.
Lifter position sensor	5	Is the lifter position sensor (Q12, Q13, Q851, Q853) normal? (See p. 2-23.)	NO	Check the lever and the wiring; if normal, replace the sensor.
Cassette 1 lifter motor (M8), Cassette 2 lifter motor (M9), Cassette 3 lifter motor (M801), Cassette 4 lifter motor (M802)	6	Switch the machine OFF, and disconnect J109 on the DC controller (and J803 of the cassette pedestal controller). Set the meter to the 'x100 Ω' range, and measure the resistance between the following terminals: M8: M8 fastons M9: M9 fastons M801: J803-1, -3 M802: J803-2, -3	NO	Check the wiring between the connectors and the motor; if normal, replace the motor.
M8, M9, M801, M802	7	Connect the connectors, and switch the machine ON; then, set the meter to the 30VDC range. Does the voltage between the following terminals change from about 0 V to about 24 V? M8: M8 fastons (–; blue harness) M9: M9 fastons (–; blue harness) M801: J105-1 (+; 24V) J801-B9 (–; $\overline{\text{C3LTMD}}$) M802: J105-1 (+; 24V) J801-A10 (–; $\overline{\text{C4LTMD}}$)	YES	Detach the pick-up assembly, and check the gears; if normal, replace the motor.
DC controller PCB			NO	Replace the DC controller PCB.

32. The manual pick-up mechanism fails (copier).

Cause	Step	Check	YES/NO	Correction
	1	Does the main motor start to rotate when copy paper is inserted?	YES	Go to step 3.
Manual feed paper sensor (Q4)	2	Is the manual paper sensor (Q4) normal? (See p. 2-22.)	NO	Check the lever and the wiring; if normal, replace the sensor.
DC controller PCB			YES	Replace the DC controller PCB.
Feeder assembly, Manual feed pick-up roller	3	Does the manual feed pick-up roller rotate in step 1?	YES	• Check the paper path for foreign matter. • Replace the manual feed pick-up roller.
	4	Is the pick-up mechanism for the cassette normal?	NO	See "The registration roller fails to rotate." The No. 2 registration roller clutch may be faulty.
Gears			YES	Detach the pick-up assembly, and check the gears between the No. 2 registration clutch and the manual pick-up roller.

33. The registration roller fails to rotate.

Cause	Step	Check	YES/NO	Correction
Upper right door (lower right door)	1	Is the upper right door (lower right door) closed firmly? *The parts in parentheses apply to the cassette feeding unit/paper deck pedestal only.*	NO	Close the door.
Leaf spring (for engagement)	2	Does the upper right door (lower right door) engage the No. 2 and No. 3 (No. 4) registration rollers? *The parts in parentheses apply to the cassette feeding unit/paper deck pedestal only.*	NO	Check the leaf spring for engagement.
Sensor	3	Check the following sensors. Are they normal? (See p. 2-22.) • No. 1 pre-registration paper sensor (Q5) • No. 2 pre-registration paper sensor (Q15) • No. 3 pre-registration paper sensor (Q16) • No. 4 pre-registration paper sensor (Q854)	NO	Check the lever and the wiring; if normal, replace the sensor.
No. 1 registration roller clutch (CL1), No. 2 registration clutch solenoid (SL8), No. 3 registration roller clutch (CL4), No. 4 registration roller clutch solenoid (SL802)	4	Switch the machine OFF, and disconnect the connectors shown in Table 4-3; then, measure the resistance on the harness side. Is it normal?	NO	Check the wiring; if normal, replace CL1, SL8, CL4, or SL802.
	5	Connect the connectors, and switch the machine ON. Set the tester to the 30 VDC range, and check the voltage between the terminals shown in Table 4-3. Does the voltage change from about 0 V to about 24 V at the correct timing when the COPY START key is pressed?	YES	Check the spring clutches; If normal, replace CL1, SL8, CL4, or SL802.
DC controller PCB			NO	Replace the DC controller PCB.

PCB	Load	Connector	Resistance (approx.)
DC controller PCB	No. 1 registration roller clutch (CL1)	J49-2 (+: 24V) J49-1 (–: $\overline{\text{RGCD 1}}$)	155Ω
	No. 2 registration roller clutch solenoid (SL8)	J77-1 (+: 24V) J77-2 (–: $\overline{\text{RGCD 2}}$)	165Ω
Cassette feeding unit controller PCB	No. 3 registration roller clutch (CL4)	J78-1 (+: 24V) J78-2 (–: $\overline{\text{RGCD 3}}$)	150Ω
	No. 4 registration roller clutch solenoid (SL802)	J804-1 (+: 24V) J804-3 (–. $\overline{\text{RGSD 4}}$)	160Ω

Table 4-3

34. The scanner fails to move forward or in reverse.

Cause	Step	Check	YES/NO	Correction
Cable (broken, displacement)	1	Is the scanner drive cable routed correctly?	NO	Re-route the cable.
Scanner path	2	Is the scanner rail free of dirt? Move the scanner by hand. Does it move smoothly?	NO	Check the scanner rail for dirt and foreign matter or obstacle; clean, oil, or repair the rail as necessary. Note: If the rail is soiled, clean it using alcohol.
DC power supply	3	Set the meter to the 30VDC range, and measure the voltage between J811-3 (+; 24 V) and J811-4 (–; 0 V) on the M1/M2 motor driver PCB. Is it about 24 V?	NO	See "DC power is absent.'
DC controller PCB	4	Set the meter to the 12VDC range, and measure the voltage between J811-7 (–; 0 V) on the M1/M2 motor driver PCB and the following terminals. Is the voltage normal when AE is deactivated and the COPY START key is pressed? J812-1 (+; SCMD) changes from about 5 V to about 0 V J812-2 (+; SCFW) about 5 V when in reverse and about 0 V otherwise	NO	Check the wiring between J812 and the DC controller PCB; if normal, replace the DC controller PCB.
M1/M2 motor driver PCB	5	Replace the M1/M2 motor driver PCB. Is the problem corrected?	YES	End.
Scanner motor (M2)			NO	Replace the scanner motor (M2).

35. The pre-exposure lamp fails to go ON.

Cause	Step	Check	YES/NO	Correction
Pre-exposure lamp PCB	1	Switch the machine OFF, and disconnect J35 of the pre-exposure lamp. Set the meter to the 'x100 Ω' range, and measure the resistance between J35-1 and J35-2 on the pre-exposure lamp PCB. Is it about 30 Ω?	NO	Check the wiring; if normal, replace the pre-exposure lamp PCB.
	2	Connect the connectors, and switch the machine ON. Set the meter to the 30VDC range, and measure the voltage between J35-2 (+; 24 V) and J35-1 (–; PEXP). Does it change from about 0 V to about 24 V when the COPY START key is pressed?	YES	Replace the pre-exposure lamp.
DC controller PCB			NO	Check the DC power supply; if normal, replace the DC controller PCB.

36. The scanning lamp fails to go ON.

Cause	Step	Check	YES/NO	Correction
Lamp (attachment)	1	Switch the machine OFF, and disconnect the plug. Is the lamp attached correctly?	NO	Re-attach the lamp.
Thermoswitch (TS3)	2	Set the meter to the 1K Ω range. Does the index of the tester swing when the probes are connected to both terminals?	NO	Replace the thermoswitch. Note: The lamp may have gone ON wrongly, the thermoswitch may have been attached wrongly, or the cooling fan may have failed; be sure to make checks after replacement.
Lamp (open)	3	Disconnect J4 (2P), and set the meter to the '1K Ω' range. Does the index of the tester swing when the probes are connected to both terminals of the lamp?	NO	Replace the lamp.

Cause	Step	Check	YES/NO	Correction
DC controller PCB	4	Connect the plug, and switch the machine ON. Set the meter to the 12VDC range, and connect the + probe to J403-3 ($\overline{\text{LRD}}$) and – probe to J403-6 (GND) on the lamp regulator PCB. Is the voltage about 0 V when the machine is switched ON and about 24 V when the COPY START key is pressed.?	NO	Replace the DC controller PCB.
DC controller PCB	5	Set the meter to the 30VDC range, and connect the + probe to J403-4 (LINT) and the – probe to J403-6 (GND) on the lamp regulator PCB. Is the voltage between 10 V and 16 V when the machine is switched ON?	NO	Replace the DC controller PCB.
Lamp regulator PCB	6	Replace the lamp regulator PCB. Is the problem corrected?	YES	End.
Wiring			NO	Check the AC harness from the power switch to the lamp regulator and to the lamp; check the DC harness from the DC controller PCB to the lamp regulator.

37. The developing assembly fails to engage/disengage.

Cause	Step	Check	YES/NO	Correction
	1	Is the CD unit changer used?	NO	Go to step 3.
CD unit release sensor (Q968)	2	Is the CD unit release sensor (Q968) and the light-blocking plate normal? (See p. 2-27.)	NO	Replace it.
	3	Does the black developing assembly release solenoid (SL4) go ON and OFF at the specified timing? (Check by the naked eye.)	YES	Go to step 6.
Black developing assembly release solenoid (SL4)	4	Switch the copier OFF, and disconnect connector J52 of the black developing assembly release solenoid. Set the meter to the ×100Ω, and measure the resistance between J52-1 and J52-2 on the black developing assembly release solenoid side. Is it about 160Ω?	NO	Replace SL4
DC controller PCB	5	Connect the connector, and switch the copier ON. Set the meter to the 30 VDC range, and measure the voltage between J52-2 (+; 24 V) and J52-1 (–; BDRSD). Does it change from about 0 V to about 24 V and then to about 0 V when the COPY START key is pressed with the CD unit selected?	YES	Replace SL4.
			NO	Replace the DC controller PCB.
Spring clutch	6	Is the spring clutch used to lock/release the black developing assembly matched with the position of the solenoid lever?	NO	Loosen the hex screw, and adjust it.
Spring clutch (gap)	7	Is the gap between the clutch drum and the control ring of the spring clutch assembly between 0.15 and 0.20 mm?	NO	Loosen the hex screw, and adjust it.
Spring clutch assembly			YES	Check and, if necessary, replace the spring clutch and control ring. Check to see that the spring clutch is free of deformation, rust, and dirt; and clean, lubricate, or oil as necessary.

38. The hopper motor fails to rotate.

Cause	Step	Check	YES/NO	Correction
	1	Select 'HPPR_MTR' in the service mode (✳ 4 ✳), and press the OK key. Does the hopper motor (M10) rotate? (Be sure to press the OK key and set 'HPPR_MTR: 0' after the check.	YES	The hopper is normal; see "The 'ADD BLACK TONER' message fails to go ON."
Hopper motor (M10)	2	Switch the machine OFF, and disconnect J59 (2-pin) of the hopper. Set the meter to the 'x100 Ω' range, and measure the resistance between J59-1 and -2 on the hopper side. Is it about 120 Ω?	NO	Check the wiring between the connector and the hopper motor; if normal, replace the motor.
	3	Connect the connector, and switch the machine ON. Set the meter to the 30VDC range, and measure the voltage between J59-1 (–; $\overline{\text{HMD}}$) and -2 (+; 24 V). Is the voltage about 24 V when operated as in step 1?	YES	Replace the hopper motor.
DC controller PCB			NO	Replace the DC controller PCB.

39. The fixing heater fails to go ON.

Cause	Step	Check	YES/NO	Correction
	1	Is 'E001' indicated?	YES	See 'E001'.
	2	Switch the machine OFF, and open the delivery assembly. Detach the connector cover, and disconnect J2 (2-pin). Set the meter to the '×1kΩ' range, and measure the resistance between J2-1 and J2-2. Does the index of the meter swing?	YES	Go to step 5.
Thermoswitch (TS1)	3	Detach the fixing assembly, and connect the probes of the meter to both terminals of the thermoswitch. Does the index of the tester swing?	NO	Replace the thermoswitch. Note: The heater may have gone ON wrongly, the SSR may be faulty, or the themoswitch may be attached wrongly; replace the parts as necessary, and investigate the cause. Further, the fixing roller or the separation claw may be damaged; check the parts.
Fixing heater (H1)	4	Connect the probes of the meter to both terminals of the fixing heater. Does the index of the meter swing?	NO	Replace the fixing heater.
AC harness			YES	Check the AC harness inside the fixing assembly.
DC controller PCB	5	If 'E000', 'E002', 'E003', or 'E004' is indicated, select 'ERROR' in the service mode (*4*), and press the OK key. Set the meter to the 12 VDC range, and measure the voltage between J111-B11 (+; HTRD) and J111-B10 (–; 0V) on the DC controller PCB. Is it about 5V when the machine is switched ON?	NO	Replace the DC controller PCB.
SSR	6	Replace the SSR. Is the problem corrected?	YES	End.
Harness			NO	Check the DC harness between the DC controller and the SSR and the AC harness between the SSR and the heater.

40. The lens fails to move.

Cause	Step	Check	YES/NO	Correction
Lens cable	1	Is the lens cable routed correctly?	NO	Re-route the cable.
Cable, Pulley, Rail	2	Switch the machine OFF, and turn the pulley of the lens by hand. Does the lens move smoothly?	NO	Check the cable, pulley, and rail used to drive the lens.
Lens home position sensor (Q7)	3	Is the lens home position sensor (Q7) normal? (See p. 2-22.)	NO	Check the wiring; if normal, replace the sensor.
Lens motor (M3)	4	Switch the machine OFF, and disconnect J53 of the lens motor. Set the meter to the '×100 Ω' range, and measure the resistance between J53-4 (LNSTB) on the motor side. Is it about 55 Ω? J53-A1 (LNA) J53-A2 (LNA) J53-A3 (LNB) J53-A5 (LNB)	NO	Replace the lens motor.
DC controller PCB	5	Replace the DC controller PCB. Is the problem corrected?	YES	End.
			NO	Check the wiring between J114 and J53.

41. The counter fails to operate.

Cause	Step	Check	YES/NO	Correction
Counter (CNT1, CNT2)	1	Switch the machine OFF, and disconnect J27 (total copy counter) or J28 of the counter. Set the meter to the 'x 1KΩ' range, and measure the resistance between the following terminals on the harness side. Is it about 480 Ω? CNT1: J27-1, -2 CNT2 J28-1, -2	NO	Check the wiring between the DC controller PCB and the counter; if normal, replace the counter.
	2	Connect J27 (J28), and switch the machine ON. Set the meter to the 30VDC range, and measure the voltage between J27-2 or J28-2 (+; 24 V) and the following terminals. Does the voltage change from about 0 V to about 24 V and then to about 0 V when the COPY START key is pressed? CNT1: J27-1 (–; $\overline{\text{CNT1D}}$) CNT2: J28-1 (–; CNT2D)	YES	Replace the counter.
DC controller PCB			NO	Replace the DC controller PCB.

42. The ADD PAPER message fails to go OFF.

Cause	Step	Check	YES/NO	Correction
Cassette size sensor switch	1	Is the size of the cassette indicated on the message display?	NO	Check the cassette size sensor switch.
	2	Does the lifter move up?	NO	See "The lifter fails to move up."
Paper sensor	3	Are the following sensors normal? (See p 2-23.) Q10: cassette 1 paper sensor Q11: cassette 2 paper sensor Q850: cassette 3 paper sensor Q852: cassette 4 paper sensor	NO	Check the lever and the wiring, if normal, replace the sensor.
DC controller PCB			YES	Replace the DC controller PCB.

43. The 'JAM' message fails to go OFF.

Cause	Step	Check	YES/NO	Correction
Jam paper	1	Check which sensor has identified the jam in the service mode (JAM; ✳ 1 ✳). Is the jam near the sensor?	YES	Remove the jam.
Sensor	2	Is the sensor checked in step 1 normal? (See p. 2-22.)	NO	Check the lever wiring; if normal, replace the sensor.
DC controller PCB			YES	Replace the DC controller PCB.

44. The 'ADD BLACK TONER' message fails to go OFF.

Cause	Step	Check	YES/NO	Correction
Stirring spring	1	Detach the black developing assembly. Is the spring used to stir toner over the hopper toner sensor (Q18) normal?	NO	Re-attach it.
Toner sensor (Q18)	2	Replace the hopper toner sensor (Q18). Is the problem corrected?	YES	End.
DC controller PCB			NO	Check the wiring between the toner sensor and the DC controller PCB; if normal, replace the DC controller PCB.

45. The 'ADD COLOR TONER' message fails to go ON (no toner inside the cylinder assembly of the CD unit).

Cause	Step	Check	YES/NO	Correction
Connector	1	Is the wiring between connector J851 on the color toner concentration sensor PCB and connector J101 on the DC controller PCB normal?	NO	Replace the connector.
VR851	2	Turn VR851. Is the problem corrected?	YES	Replace the starter, and make adjustments according to the instructions given in the CD UNIT INSTALLATION PROCEDURE.
Color toner concentration sensor PCB	3	Replace the color toner sensor PCB. Is the problem corrected?	YES	
DC controller PCB			NO	Replace the DC controller PCB.

46. The 'ADD COLOR TONER' message fails to go OFF (toner inside the hopper of the CD unit).

Cause	Step	Check	YES/NO	Correction
Gear	1	Detach the CD unit. Is the gear at the rear of the CD unit normal?	NO	Re-install the CD unit.
	2	Install the CD unit. Select COLOR COPY, and press the COPY START key. Is the color toner supply solenoid ON before the ADD COLOR TONER message goes ON? (Check by the naked eye.)	YES	Go to step 5.
Color toner supply solenoid (SL3)	3	Switch the copier OFF, and disconnect the connector of the color toner supply solenoid (SL3). Set the meter to the ×100Ω range, and measure the resistance between the connectors of the color toner supply solenoid (SL3). Is it about 130Ω?	NO	Replace SL3.
SL3	4	Connect the connector of the color toner supply solenoid, and switch the copier ON. Set the meter to the 30 VDC range, and measure the voltage between the fastons of the color toner supply solenoid. Select COLOR COPY, and press the COPY START key. Does the voltage change from about 0 V to about 24V?	YES	Replace SL3.
DC controller PCB			NO	Replace the DC controller PCB.
Connector	5	Is the contact of connector J852 on the color toner concentration sensor PCB inside the CD unit good?	NO	Re-connect it.
Color toner sensor assembly	6	Replace the color toner sensor assembly. Is the problem corrected?	YES	Replace the starter, and make adjustments according to the instructions given in the CD UNIT INSTALLATION PROCEDURE.
Color toner concentration sensor PCB			NO	Replace the color toner concentration sensor PCB.

47. The pick-up mechanism fails (paper deck pedestal).

<table>
<tr><th>Cause</th><th>Step</th><th>Check</th><th>YES/NO</th><th>Correction</th></tr>
<tr><td></td><td>1</td><td>Does the 'ADD PAPER' message fail to go OFF?</td><td>YES</td><td>• Check the drive of the lifter.
• Check the condition (attachment) of the left/ right deck and the left feeder assembly.</td></tr>
<tr><td>Sensor</td><td>2</td><td>Check which sensor has identified the jam in the service mode (JAM, BODY; ✳1✳). Is the sensor normal? (See p 2-22.)</td><td>NO</td><td>Check the wiring and the sensor lever; if normal, replace the sensor.</td></tr>
<tr><td>Pick-up roller, Feeder roller, Separation roller</td><td>3</td><td>Is the orientation of the pick-up roller, feeder roller, and separation roller correct?</td><td>NO</td><td>Re-attach the pick-up roller, feeder roller, and separation roller.</td></tr>
<tr><td>Connector (J700)</td><td>4</td><td>Is the connector (J700) connected correctly?</td><td>NO</td><td>Re-connect it.</td></tr>
<tr><td></td><td>5</td><td>Is the leading edge of the copy paper forwarded to the No. 3 registration roller?</td><td>YES</td><td>Check the No. 3 registration roller assembly.</td></tr>
<tr><td>Lower right door</td><td>6</td><td>Is the lower right door closed firmly?</td><td>NO</td><td>Close the door.</td></tr>
<tr><td>Clutch, Solenoid</td><td>7</td><td>Set the meter to the 30VDC range, and connect the probes of the meter to the deck controller PCB. Does the voltage change from 0 V to about 24 V when the COPY START key is pressed?
<table>
<tr><th></th><th>+</th><th>−</th></tr>
<tr><td>Right pick-up clutch (CL 701)</td><td>J706-3</td><td>J706-4</td></tr>
<tr><td>Left pick-up clutch (CL702)</td><td>J706-5</td><td>J706-6</td></tr>
<tr><td>Right pick-up roller release solenoid (SL701)</td><td>J706-1</td><td>J706-2</td></tr>
<tr><td>Left pick-up roller release solenoid (SL702)</td><td>J708-1</td><td>J708-2</td></tr>
</table></td><td>YES</td><td>Check the wiring between the deck controller PCB and each load; if normal, replace CL701, CL702, SL701,or SL702.</td></tr>
</table>

Cause	Step	Check	YES/NO	Correction
Deck motor (M701)	8	Set the meter to the 12VDC range. Does the voltage between J703-5 (+; DKMD) and J703-6 (–; 0 V) on the paper deck controller PCB change from about 5 V to about 0 V?	YES	Check the wiring between the paper deck controller PCB and the deck motor ; if normal, replace the deck motor (M701).
Deck controller PCB	9	Replace the deck controller PCB. Is the problem corrected?	YES	End.
DC controller PCB			NO	Check the wiring between the deck controller PCB and the DC controller PCB; if normal, replace the DC controller PCB.

CHAPTER 5 TROUBLESHOOTING THE FEEDING PROBLEMS

I. JAMS

Jams tend to occur in the following sections of the machine.

① Pick-up assembly
② Separation/feeder assembly
③ Drum cleaner assembly
④ Fixing/delivery assembly
⑤ Lower feeder assembly

The steps to identify and correct jams are organized according to the above sections.

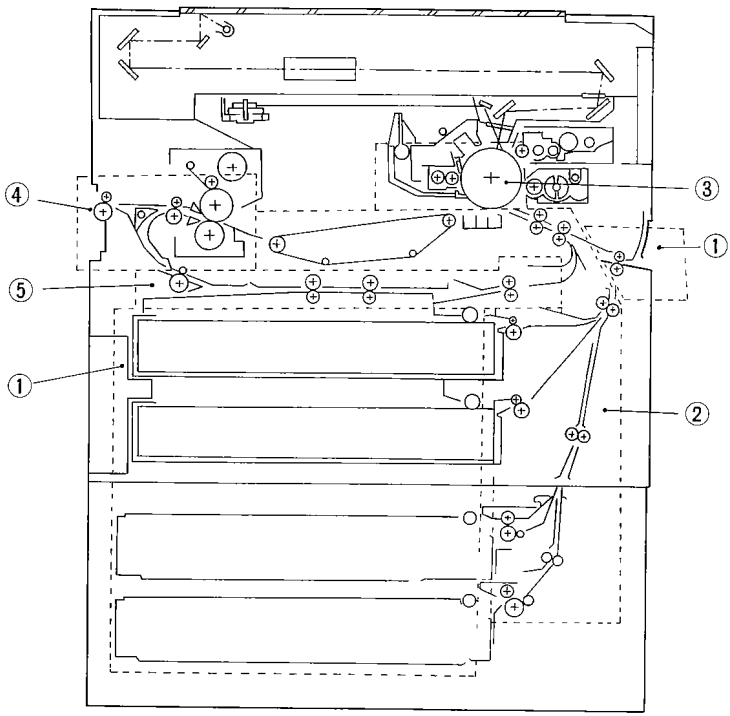

Figure 5-1

1. Pick-Up Assembly

Cause	Step	Check	YES/NO	Correction
	1	Was the pick-up from the cassette?	NO	Go to step 8.
Cassette	2	Is the cassette set in the machine correctly?	NO	Set it correctly.
	3	Use a different cassette. Is the problem corrected?	YES	Check the inside of the cassette for foreign matter.
Copy paper	4	Is the copy paper curly or wavy?	YES	Replace the paper; advise the user on the correct method of storage.
	5	Try paper of a type recommended by Canon.	YES	Advise the user to use recommended paper.
DC controller PCB, Pick-up clutch	6	Does the pick-up roller of the selected cassette holder rotate during copying operation?	NO	See "The pick-up mechanism fails."
Pick-up roller	7	Is the pick-up roller deformed or worn?	NO	Replace the pick-up roller.
Arching			YES	Adjust the degree of arching.
	8	Insert copy paper into the manual feed assembly. Does the main motor start to rotate?	NO	See "The manual feed mechanism fails."
Copy paper	9	Try paper of a type recommended by Canon.	YES	Advise the user to use recommended paper.
Pick-up roller, Leaf spring			NO	1. Check the pick-up roller for deformation and wear. 2. Check the leaf spring.

2. Separation/Feeder Assembly

Cause	Step	Check	YES/NO	Correction
Cassette (1st, 2nd, 3rd, 4th) separation roller	1	Is the separation roller of the 1st, 2nd, 3rd, or 4th cassette deformed or worn?	YES	Replace the deformed or worn separation roller.
Cassette (1st, 2nd, 3rd, 4th) feeder roller	2	Is the feeder roller of the 1st, 2nd, 3rd, or 4th feeder roller deformed or worn?	YES	Replace any deformed or worn feeder roller.
Registration roller drive assembly	3	Does the registration roller operate normally?	NO	See "The registration roller fails to rotate."
Registration roller	4	Is the No. 1, No. 2, No. 3, or No. 4 registration roller deformed or worn?	YES	Replace the deformed or worn registration roller.
Transfer/ Separation corona assembly	5	Is the transfer/separation corona assembly set correctly?	NO	Check the transfer/separation corona assembly.
Burrs	6	Are there burrs on the paper guide of the transfer/separtion corona assembly?	YES	Remove the burrs.
Copy paper	7	Try paper of a type recommended by Canon.	YES	Advise the user to use recommended paper.
Separation claw (under cleaner assembly)	8	Is the separation claw under the cleaner assembly damaged?	YES	Replace the separation claw.
Feeder belt	9	Are the three feeder belts moving correctly?	NO	Check the belts and the pulley.
Feeder fan			YES	Check the feeder fan to make sure that it is operating correctly.

3. Fixing/Delivery Assembly

Cause		Step	Checks	YES/NO	Correction
Separation claw (delivery assembly)		1	Is the separation claw deformed or worn?	YES	1. Replace the separation claw. 2. If dirt is found, clean it using solvent.
Fixing assembly	Upper roller, Lower roller	2	Is the upper or lower roller deformed or scratched?	YES	Replace the roller.
	Paper guide	3	Is the paper guide soiled with toner?	YES	Clean it using solvent.
		4	Is the height of the paper guide correct?	NO	Adjust it.
	Nip width	5	Is the lower roller pressure (nip width) within the standards?	NO	Adjust it.
	Cleaning belt	6	Is the cleaning belt taken up correctly?	NO	Check the fixing cleaner assembly.
Delivery assembly	Delivery lever	7	Does the delivery sensor lever move smoothly?	NO	Adjust it.
	Delivery sensor (Q2)	8	Does the delivery sensor function correctly? (See p. 2-20.)	NO	Replace the sensor.
	Delivery feeder motor (M7)	9	Does the No. 2 delivery roller/paper deflector rotate correctly?	NO	Check the gear; if normal, replace the delivery feeder motor.
Leading edge margin				YES	Check if there is a margin along the leading edge of the copy paper.

4. Cleaning Assembly

Cause	Step	Check	YES/NO	Correction
Transfer/ Separation corona assembly	1	Is the transfer/separation corona assembly attached correctly?	NO	Re-attach the transfer/ corona assembly.
Separation claw (cleaner assembly)	2	Is the separation claw under the drum cleaner assembly damaged?	YES	Replace the separation claw.
Copy paper	3	Try paper of a type recommended by Canon.	YES	Advise the user to use recommended paper.
High-voltage AC transformer, High-voltage transformer, DC controller PCB			NO	1. Check the high-voltage AC transformer. 2. Check the high-voltage transformer. 3. Check the DC controller PCB.

5. Lower Feeder Assembly

Cause	Step	Check	YES/NO	Correction
Lower feeder No. 1 motor (M5)	1	Are set-back rollers 1 and 2 rotating smoothly?	NO	Check the set-back roller drive assembly; if normal, replace the lower feeder No. 1 motor.
Lower feeder No. 2 motor (M6)	2	Is the lower feeder outlet roller rotating smoothly?	NO	Check the lower feeder outlet roller drive assembly; if normal, replace the lower feeder No. 2 motor.
Lower feeder inlet roller	3	Is the lower feeder inlet roller rotating smoothly?	NO	Check the lower feeder inlet roller drive assembly.
Set-back rollers 1, 2	4	Is set-back roller 1 or 2 deformed or worn?	YES	Replace set-back roller 1 or 2.
Lower feeder outlet roller	5	Is the lower feeder outlet roller deformed or worn?	YES	Replace the lower feeder outlet roller.
Lower feeder inlet roller	6	Is the lower feeder inlet roller deformed or worn?	YES	Replace the lower feeder inlet roller.
Feeder guide plate			NO	Check the guide plate for foreign matter or burrs.

II. FAULTY FEEDING

1. Double Feeding

Cause	Step	Check	YES/NO	Correction
Separation roller	1	Is the separation roller deformed or worn?	YES	Replace the separation roller.
Spring			NO	Replace the spring that pulls the separation roller.

2. Wrinkle

Cause		Step	Check	YES/NO	Correction
Pick-up assembly		1	Switch the machine OFF while the copy paper is moving through the feeder assembly. Is the copy paper wrinkled at the time? Or, is it moving askew?	YES	Check the pick-up assembly. Check the registration roller.
Copy paper		2	Try fresh paper. Is the problem corrected?	YES	The paper may be moist; advise the user on the correct method of storage.
		3	Is the paper of a type recommended by Canon?	NO	Advise the user to use recommended paper.
Fixing assembly	Paper guide	4	Is the paper guide soiled with toner?	YES	Clean it using solvent.
		5	Is the height of the paper guide correct?	NO	Adjust the height of the guide.
	Lower roller pressure	6	Is the lower roller pressure (nip width) within the standards?	NO	Adjust it.
	Upper roller, Lower roller			YES	Replace the upper and lower rollers in turn.

A. Sensors

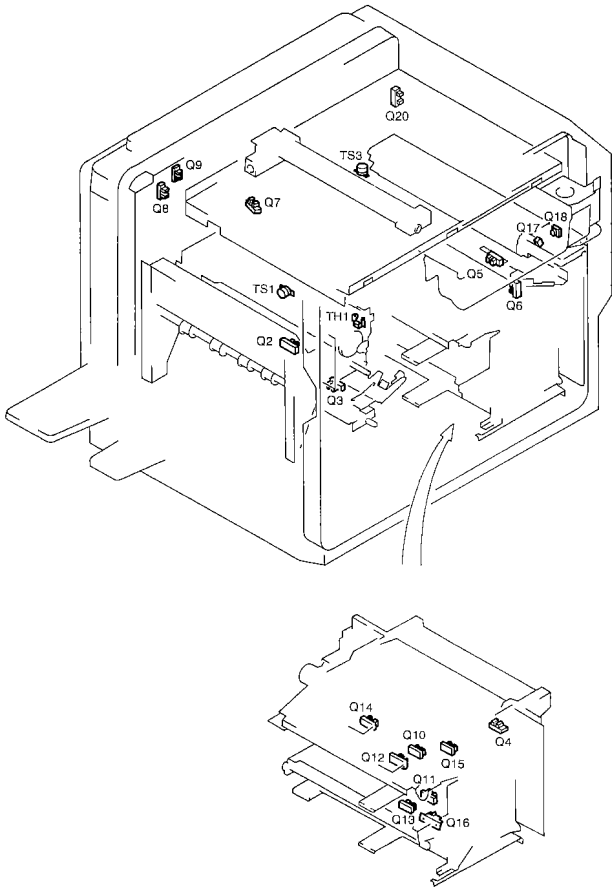

Figure 6-1

Symbol	Name	Notation	Description
	Photointerrupter	Q2	delivery sensor
		Q3	lower feeder assembly inlet paper sensor
		Q4	manual feed paper sensor
		Q5	No. 1 pre-registration paper sensor
		Q6	horizontal registration paper edge sensor
		Q7	lens home position sensor
		Q8	scanner home position sensor
		Q9	scanner document leading edge sensor
		Q10	cassette 1 paper sensor
		Q11	cassette 2 paper sensor
		Q12	cassette 1 lifter position sensor
		Q13	cassette 2 lifter position sensor
		Q14	lower feeder outlet paper sensor
		Q15	No. 2 pre-registration paper sensor
		Q16	No. 3 pre-registration paper sensor
		Q20	filter home position sensor
	Toner sensor	Q17	black developing assembly toner sensor
		Q18	hopper toner sensor
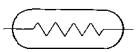	Thermistor	TH1	fixing roller surface temperature sensor
	Thermoswitch	TS1	fixing assembly overheating sensor
		TS3	scanner overheating sensor

Table 6-1

B. Switches, Breakers, Counters, Clutches, Solenoids, SSR, and Relays

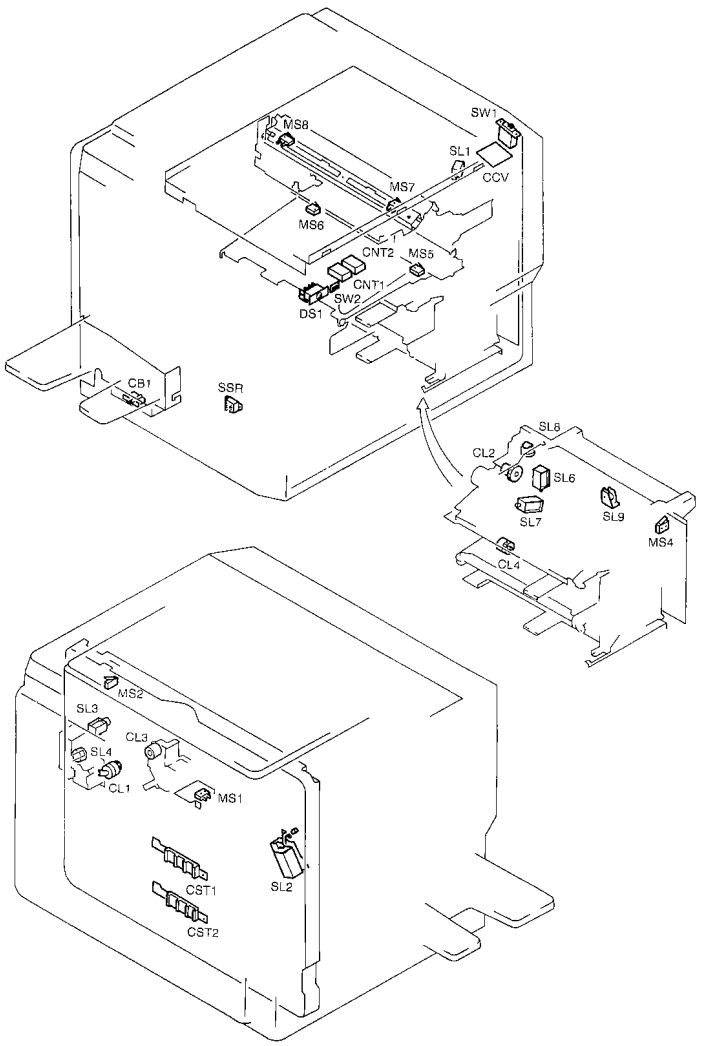

Figure 6-2

Symbol	Name	Notation	Description
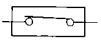	Microswitch/ Switch	MS1	waste toner sensor
		MS2	copyboard cover open/closed sensor
		MS4	manual feed door sensor
		MS5	transfer/separation cleaner home position sensor
		MS6	transfer/separation cleaner reversal sensor
		MS7	primary corona cleaner home position sensor
		MS8	primary corona cleaner reversal sensor
		SW1	power switch
		SW2	heater switch (100/230V models only)
	Push switch	DS1	door switch
		CST1	cassette 1 size sensor
		CST2	cassette 2 size sensor
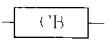	Circuit breaker	CB1	AC power line overcurrent sensor
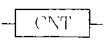	Counter	CNT1	total copy counter
		CNT2	small copy counter
		CCV	control card
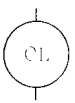	Clutch	CL1	No. 1 registration roller clutch
		CL2	pick-up clutch 1
		CL3	color developing assembly clutch
		CL4	No. 3 registration roller clutch
	Solenoid	SL1	add-on shutter solenoid
		SL2	cleaning belt drive solenoid
		SL3	color toner supply soelnoid
		SL4	black developing assembly release solenoid
		SL6	pick-up drive switch solenoid
		SL7	pick-up roller release solenoid
		SL8	No. 2 registration roller clutch solenoid
		SL9	manual feed shutter solenoid
	SSR	SSR	fixing heater drive

Table 6-2

C. Lamps, Heaters, Motors, and Fans

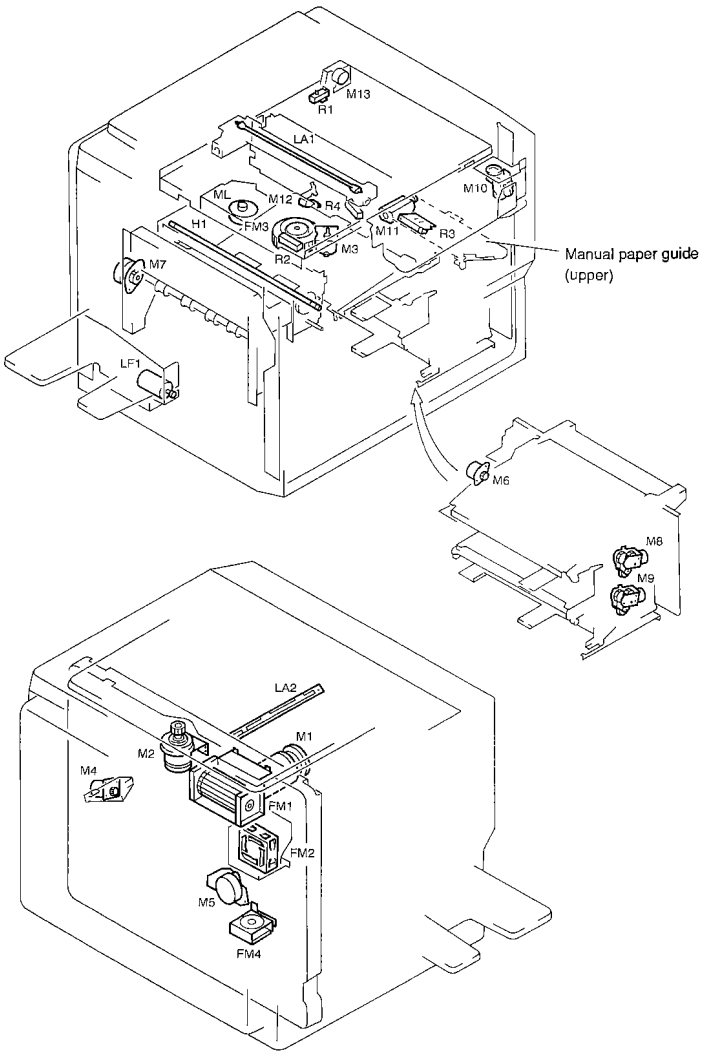

Figure 6-3

Symbol	Name	Notation	Description
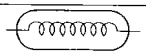	Lamp	LA1	scanning lamp
		LA2	pre-exposure lamp
	Heater	H1	fixing heater
		R1-R4	anti-condensation resistor (100/230V models only)
	Motor	M1	main motor
		M2	scanner motor
		M3	lens motor
		M4	horizontal registration motor
		M5	lower feeder No. 1 motor
		M6	lower feeder No. 2 motor
		M7	delivery feeder motor
		M8	cassette 1 lifter motor
		M9	cassette 2 lifter motor
		M10	hopper motor
		M11	primary corona wire cleaner motor
		M12	transfer/separation corona cleaner motor
		M13	filter motor
		ML	laser scanner motor
	Fan motor	FM1	scanner cooling fan
		FM2	heat exhaust fan
		FM3	feeder fan
		FM4	power supply cooling fan
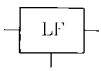	Line filter	LF1	noise filter

Table 6-3

D. PCBs

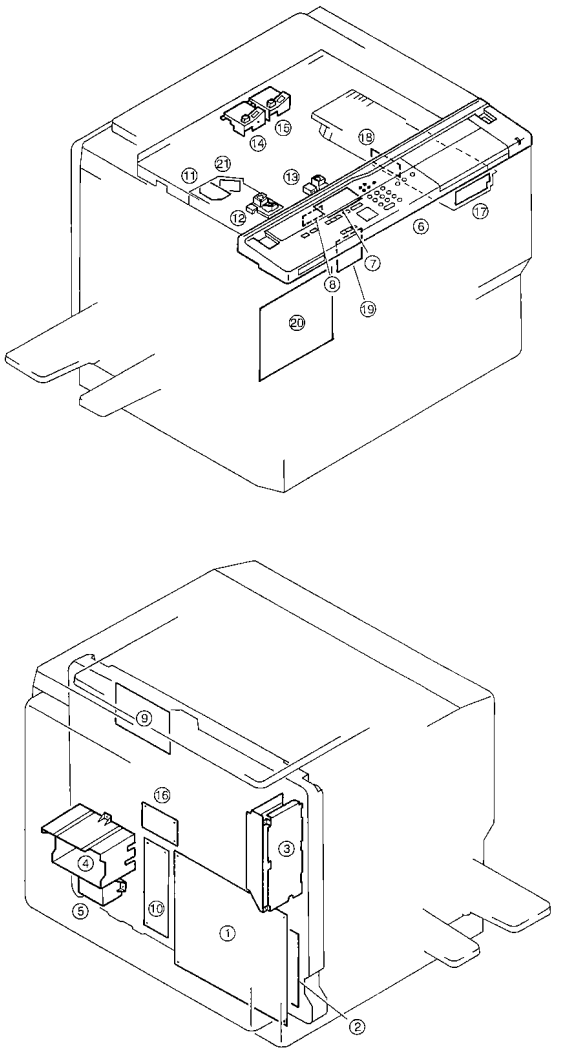

Figure 6-4

Ref.	Name	Description
①	DC controller PCB	controls the sequence
②	DC power supply	supplies DC power
③	DC power supply for options	supplies DC power to the RDF and the sorter
④	HVT	high-voltage output for the corona assemblies and development bias
⑤	HVTAC	AC high-voltage output for the separation/pre-transfer corona assembly
⑥	Control panel keyboard	control assembly keys and lamps
⑦	LCD control panel	LCD, touch panel
⑧	LCD control panel power supply	DC/AC converter for lamps
⑨	M1/M2 motor driver PCB	drives the main motor and the scanner motor
⑩	lamp regulator	controls the ON voltage of the scanning lamp
⑪	laser PCB	drives the laser
⑫	Document size sensor 1	identifies the document size
⑬	Document size sensor 2	identifies the document size (100/230V models only)
⑭	Document size sensor 3	identifies the document size
⑮	Document size sensor 2	identifies the document size (115V models only)
⑯	Fuse PCB	fuse for DC power supply
⑰	color toner concentration sensor PCB	detects developer concentration inside the CD unit
⑱	CCD driver PCB	drives CCD
⑲	analog processor PCB	processes analog images
⑳	image processor PCB	processes digital images
㉑	laser scanner motor PCB	drives the laser scanner motor

Table 6-4

E. Cassette Feeding Unit-D1

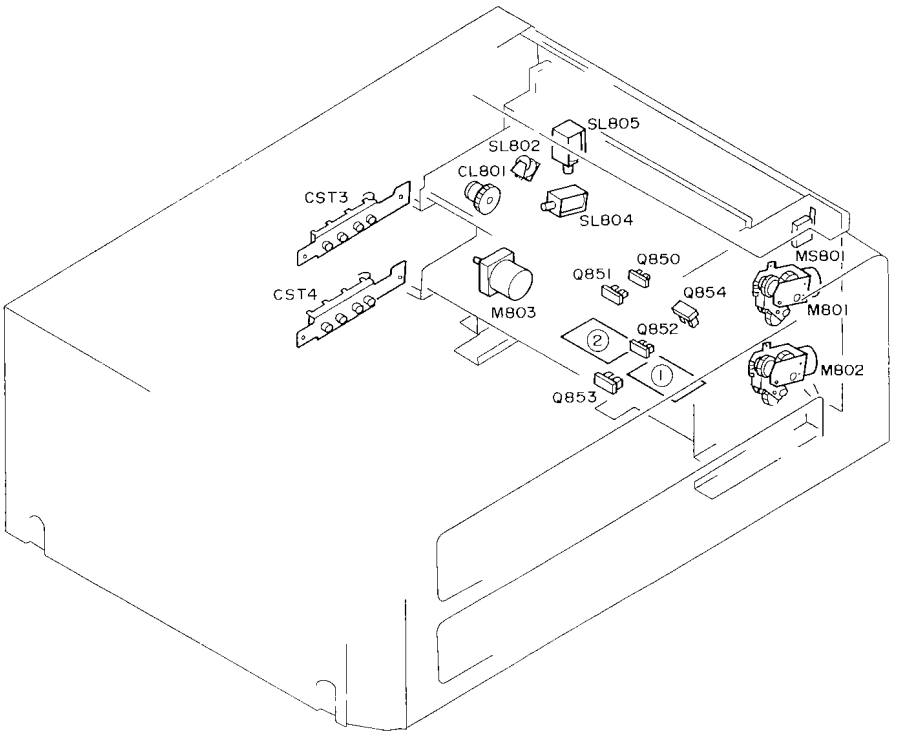

Figure 6-5

Symbol	Name	Notation	Description
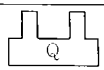	Photointerrupter	Q850 Q851 Q852 Q853 Q854	cassette 3 paper sensor cassette 3 lifter position sensor cassette 4 paper sensor cassette 4 lifter position sensor No. 4 pre-registration paper sensor
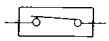	Microswitch	MS801	lower right door sensor
	Push switch	CST3 CST4	cassette 3 size sensor cassette 4 size sensor
	Motor	M801 M802 M803	cassette 3 lifter motor cassette 4 lifter motor pick-up motor
	Clutch	CL801	pick-up clutch 2
	Solenoid	SL802 SL804 SL805	No. 4 registration roller clutch solenoid pick-up roller release solenoid 2 pick-up drive switch solenoid 2
	Cassette feeding unit controller PCB	①	relay mount
	Pick-up motor driver PCB	②	pick-up motor drive

Table 6-5

F. Paper Deck Pedestal

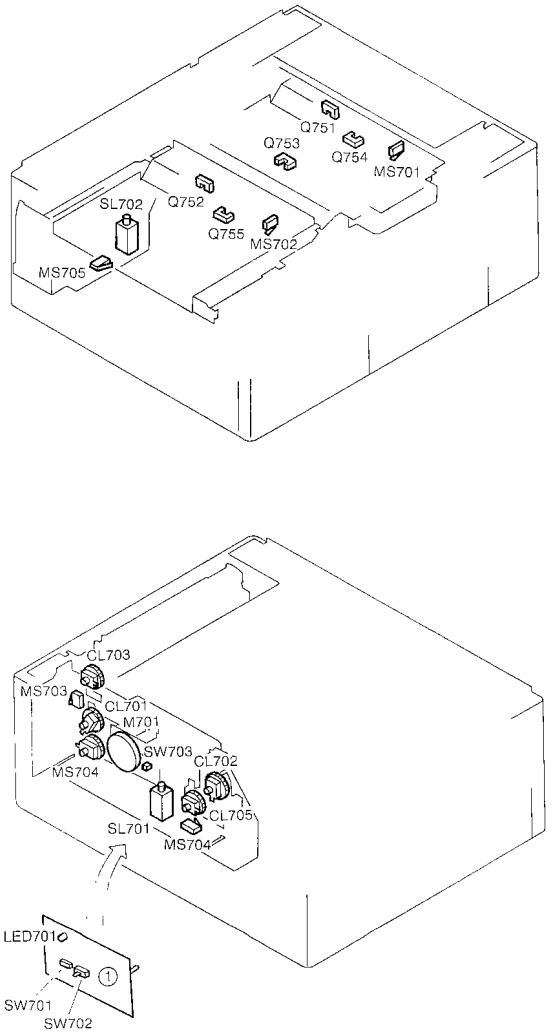

Figure 6-6

Symbol	Name	Notation	Description
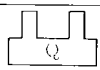	Photointerrupter	Q751	right deck paper sensor
		Q752	left deck paper sensor
		Q753	left feeder paper sensor
		Q754	right lifter position sensor
		Q755	left lifter position sensor
	LED	LED701	deck motor rotation sensor
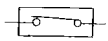	Microswitch	MS701	right lifter limit sensor
		MS702	left lifter limit sensor
		MS703	side door open/closed sensor
		MS704	right deck open/closed sensor
		MS705	left deck open/closed sensor
	Motor	M701	deck motor
	Clutch	CL701	right deck pick-up
		CL702	left deck pick-up
		CL703	drives left feeder
		CL704	drives right lifter
		CL705	drives left lifter
	Solenoid	SL701	releases right pick-up roller
		SL702	releases left pick-up roller
	DIP switch	SW701	deck motor speed switch
		SW702	deck size switch
	Deck contorller PCB	①	deck control, relay mount

Table 6-6

G. CD Unit Changer

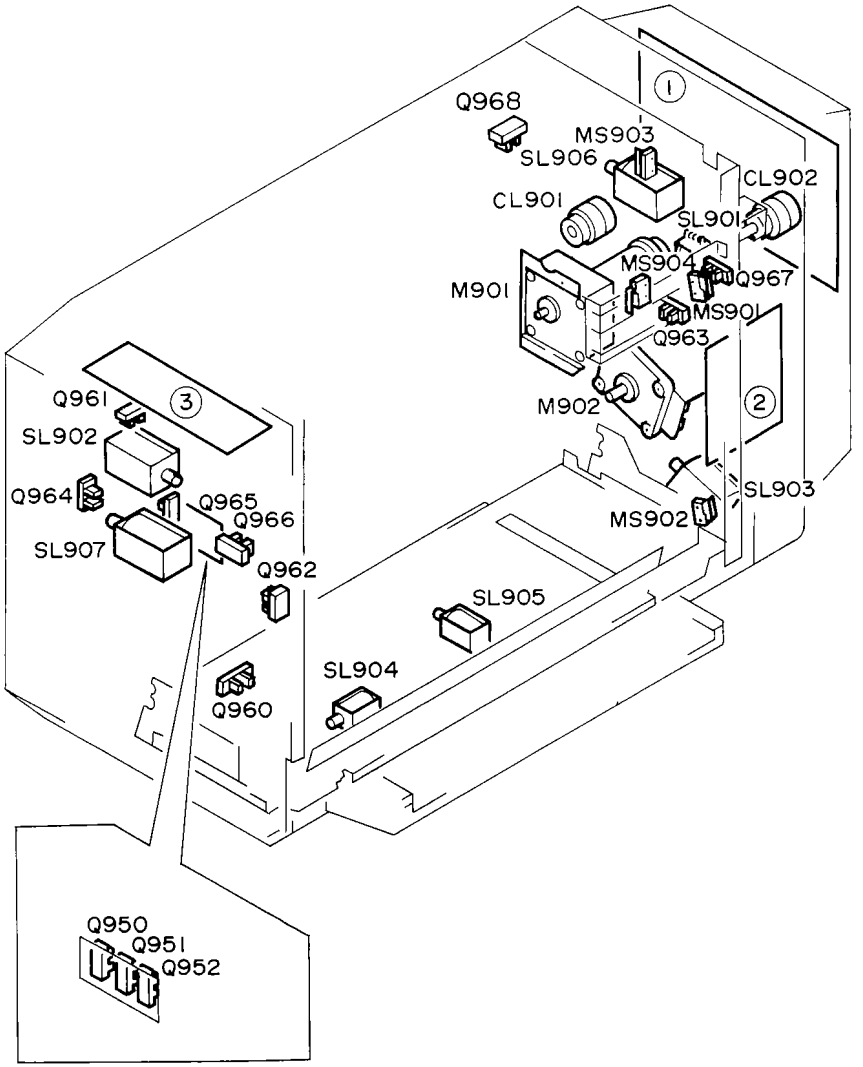

Figure 6-7

Symbol	Name	Notation	Description
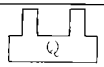	Photointerrupter	Q950	CD unit color sensor 1
		Q951	CD unit color sensor 2
		Q952	CD unit color sensor 3
		Q960	manual feed paper sensor
		Q961	CD unit horizontal drive home position sensor
		Q962	CD unit horizontal drive sensor right
		Q963	CD unit vertical drive home position sensor
		Q964	CD unit horizontal drive sensor left
		Q965	CD unit release sensor
		Q966	CD unit claw release sensor front
		Q967	CD unit claw release sensor rear
		Q968	CD unit release sensor
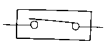	Microswitch	MS901	CD unit door sensor
		MS902	manual feed door sensor
		MS903	upper limit sensor
		MS904	lower limit sensor
	Solenoid	SL901	vertical motor clock release solenoid
		SL902	CD unit claw release solenoid
		SL903	manual feed drive solenoid
		SL904	manual feed skew roller drive solenoid
		SL905	manual feed shutter solenoid
		SL906	CD unit feeder solenoid
		SL907	CD unit release solenoid
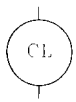	Clutch	CL901	CD unit IN clutch
		CL902	CD unit OUT clutch
	Motor	M901	vertical drive motor
		M902	horizontal drive motor
	CD unit changer controller PCB	①	CD unit sequence control
	Motor driver PCB	②	horizontal drive motor drive
	Control panel PCB	③	switch, LED

Table 6-7

H. NP-Editor

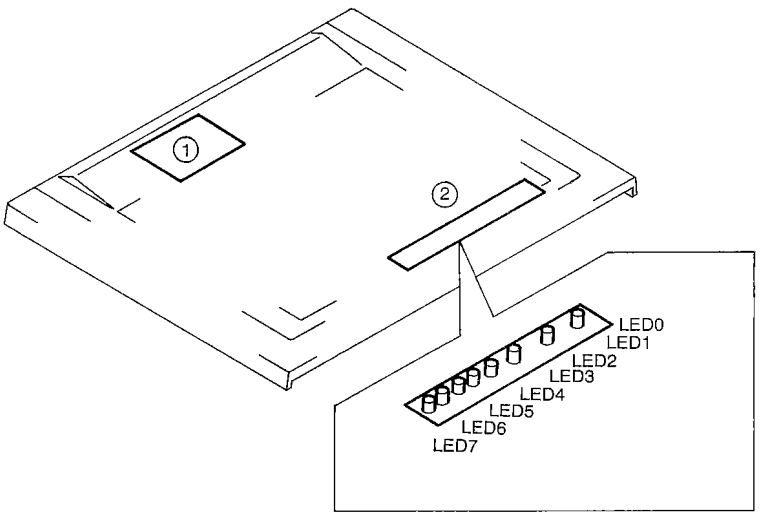

Figure 6-8

Ref.	Description	Remarks
1	editor control	controls the editor.
2	mode indication	indicates the modes.

Table 6-8

I. Variable Resistors (VR), Light Emitting Diodes (LED), and Check Pins by PCB

Of the VRs, LEDs, and check pins used in the machine, those that can be used in the field are discussed.

Note:

i. Some LEDs emit light even when they are OFF; this is a normal condition and must be kept in mind.

ii. VRs that may be used in the field..... ⊘

VRs that must not be used in the field..... ⊘

Note:

Those VRs and check pins not listed herein are for factory adjustments and require special instruments and high precision; do not touch them in the field.

1. DC Controller PCB

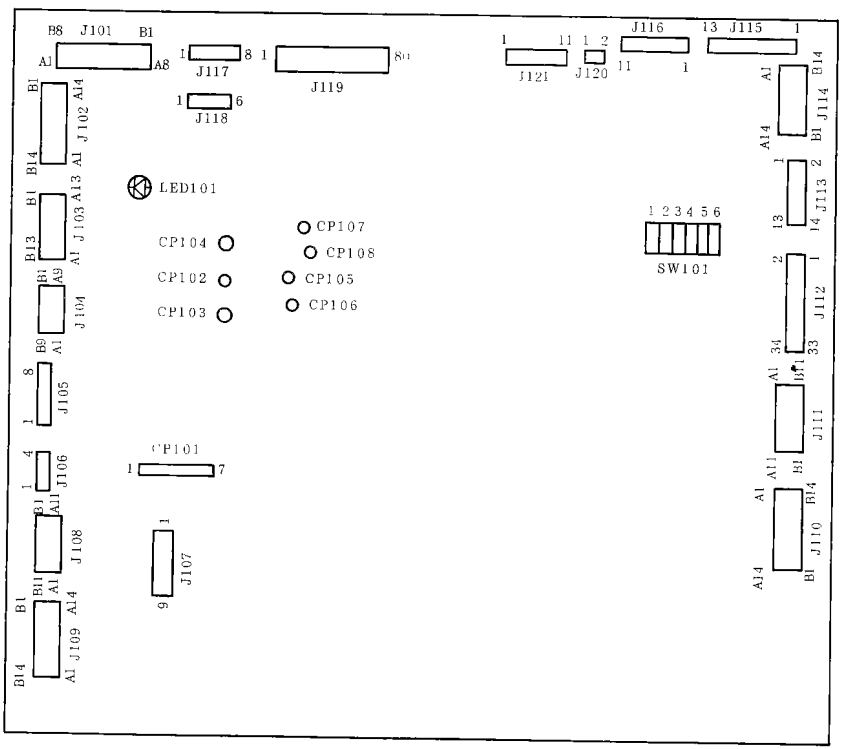

Figure 6-9

DIP Switch (SW101)

Model	DIP switch setting	bits		
		bits 1 and 2	bits 3 and 4	bits 5 and 6
		reserved	fixed repro	counter spec
100V		—	• 4R4E • AB	• total copy counter only (black) • S-size copy counter only (option)
115V	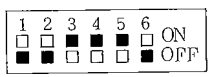	—	• 4R3E • inch	• total copy counter (black + CD) • S-size copy counter: S-size only (option)
230V		—	• 4R4E • AB/inch	• total copy counter (black + CD) • S-size copy counter: S-size only (option)
230V		—	• 2R2E • A	• total copy counter (black + CD) • S-size copy counter: S-size only (option)

Table 6-9

LED	Description
LED 101	goes ON when the power supply PCB cooling fan (FM4) is rotating.

Table 6-10

Check pin	Check item	Check pin	Check item
CP102	HVBDC	CP101-1	24VU
CP103	HVPR	CP101-2	0VU
CP104	HVSP	CP101-3	24VR
CP105	HVGB	CP101-4	0VR
CP106	HVTR	CP101-5	12V
CP107	LINT	CP101-6	5V
CP108	HVPT	CP101-7	0V

Table 6-11

2. High-Voltage Transformer PCB

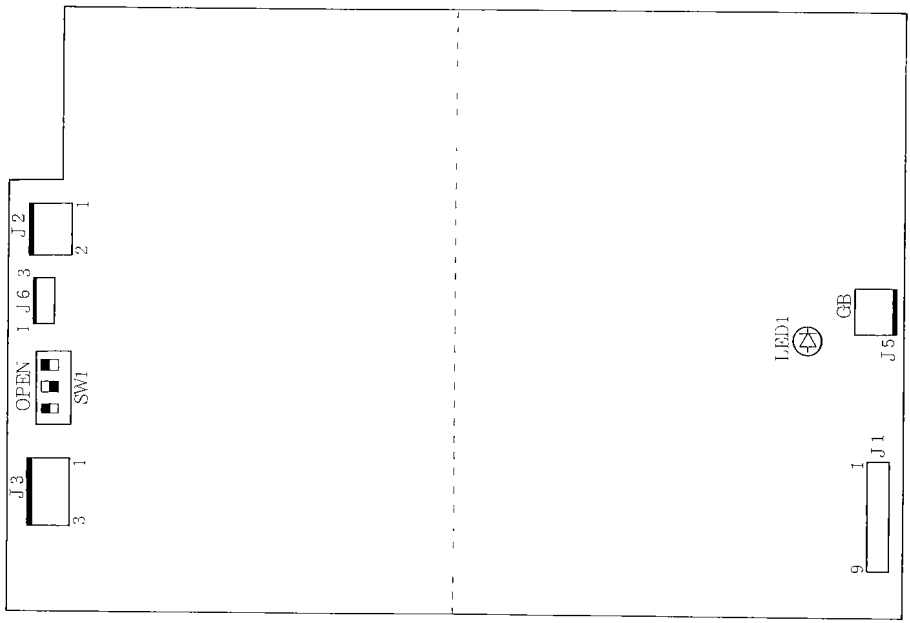

Figure 6-10

LED	Description
LED 1	remains ON while high-voltage output is present for the primary/transfer corona assembly.

Table 6-12

3. Color Toner Concentration Sensor PCB

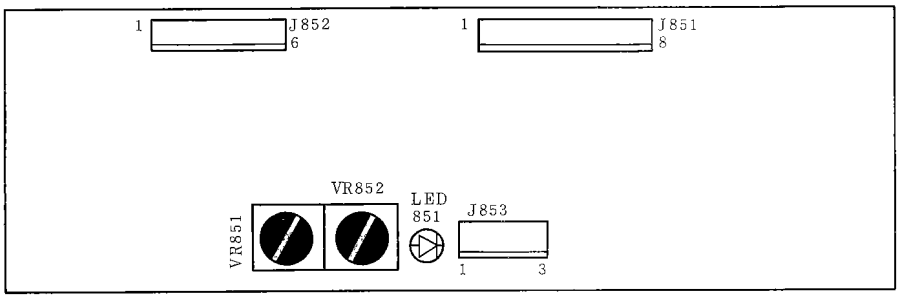

Figure 6-11

VR/LED	Description
VR851	adjusts color tonern (rough)
VR852	adjusts color toner concentration (fine)
LED851	ON when the color toner concentration is within standards.

Table 6-13

4. Editor Controller PCB

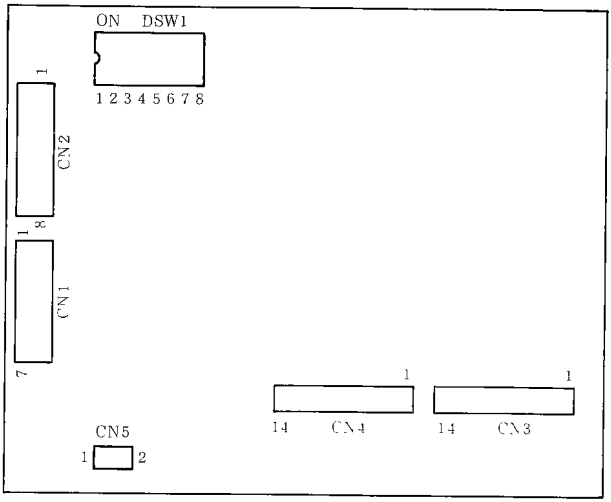

Figure 6-12

■ Zero-Level Adjustment

Be sure to set the DIP switch (DSW1) on the editor controller PCB as shown on the label whenever the editor controller PCB or the tablet assembly has been replaced.

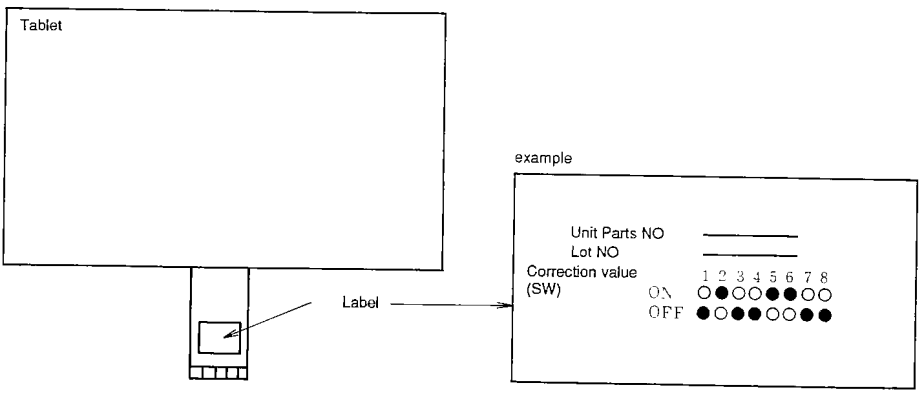

Figure 6-13

5. Deck controller PCB

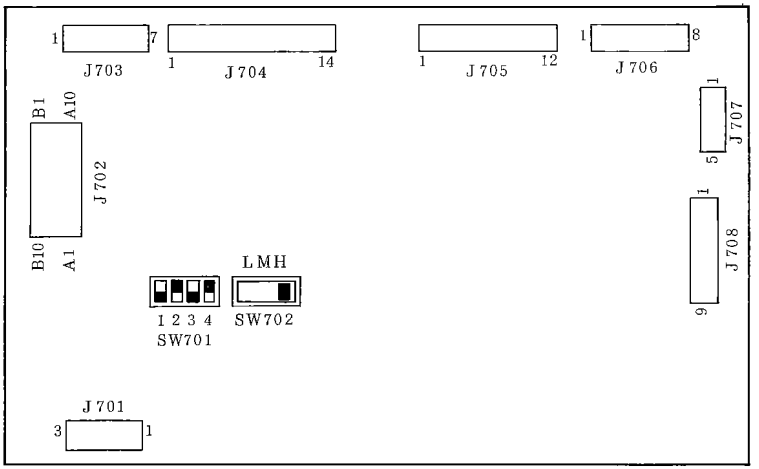

Figure 6-14

SW	Description
SW701	• Use it for switching the copy paper size. • Bits 1 and 2 are for the right deck; 3 and 4, the left deck. • The combination of bits represents the following: Copy paper size / SW bits: B5  ; A4 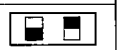 ; LTR 
SW702	• Use it to switch the lifter stop (up) timing. • Switch it to suit the type of copier; for the copier, set it to 'H'.

Table 6-14

CHAPTER 7 SERVICE MODE

A. Outline

The machine's service mode is divided into the following six modes:

Item	Display	Description
1	DISPLAY	control display mode
2	I/O DISPLAY	I/O display mode
3	ADJUST	adjustment mode
4	FUNCTION	function/inspection mode
5	USER OPTION	machine settings mode
6	COUNTER	counter mode

Table 7-1

B. Using the Service Mode

1) Open the front door, and insert the door switch actuator. To check items under 'I/O display mode' while making copies, set the desired copy mode.
2) Press the service mode switch (SW501) using a hex key.
   - The machine enters the service mode and indicates '$' on its display.

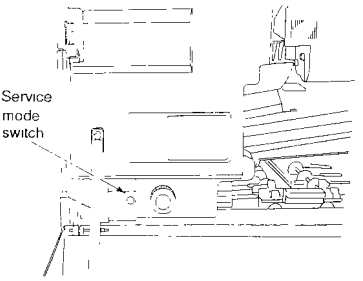

Figure 7-1

3) Enter the No. of the mode (Table 7-1) using the [*] key and the numeric keypad; e.g , press [*], [3], and then [*].
   - The display shows the service mode screen.
4) Press the [△] key or [▽] key to select the desired screen.
5) Make checks or adjustments.
6) Press the RESET key to clear the service mode screen.
7) Press the RESET key once again to leave the service mode.

Note:
Making copies while the service mode screen is displayed slows down the copying operation.

To ensure that the service modes will be used correctly, the first screen of each mode indicates explanations of the mode together with available keys.

See Figure 7-2 for a sample screen (*3*).

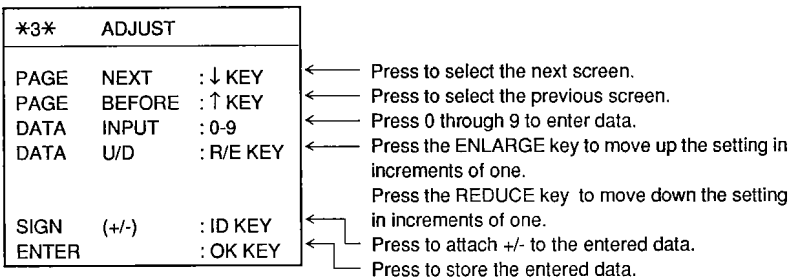

Figure 7-2

C. Using the Adjustment Mode and the Settings Mode

In the adjustment mode and the settings mode, the settings entered from the control panel will be stored in the RAM on the DC controller PCB; once stored, they will be available to serve the functions of VRs and switches.

Figure 7-3 shows the label attached behind the copier's front door.

Each copier is individually adjusted at the factory, and the settings are recorded on the label.

If the DC controller PCB has been replaced or the RAM has bee cleared, it is important that the settings recorded on the label be entered; the DC controller available as a service part holds standard settings. Record all new settings made in the field.

If the ROM has been replaced, simply check the settings; it is often not necessary to enter new settings.

	TYP		
LIGHT_BK			
LIGHT_R			
AE_SLOP			
REGIST			
LE_BLANK			
SI_BLANK			
BRAKE_SC			
GRID_N			
GRID_P			
BIAS_N			
BIAS_C			
BIAS_P			
BIASCCD			
BIASMKR			
TRN_1			
TRN_2			
TRN_C			
SEP_1			
SEP_2			
CHARACTE			
REDTHICK			
SHADE			
SCREEN			
BOOK_ERA			
AD_P			

	TYP	
AD_A		
OL2_XM_S		
OL2_XM_L		
LSR_ORGN		
CCD_ORGN		
LSR_X_D		
LSR_Y_D		
LSR_YM_D		
LSR_X_R		
LSR_Y_R		
LSR_YM_R		
LSR_X_E		
LSR_Y_E		
LSR_YM_E		
BIAS_BL		
BIAS_GR		
BIAS_BR		
SZ1_ADJ		
SZ2_ADJ		
SZ3_ADJ		
BK_BELT		
DOC_STOP		

Figure 7-3

D. Control Display Mode (✱ 1 ✱)

Select the desired screen using the △ and ▽ keys.

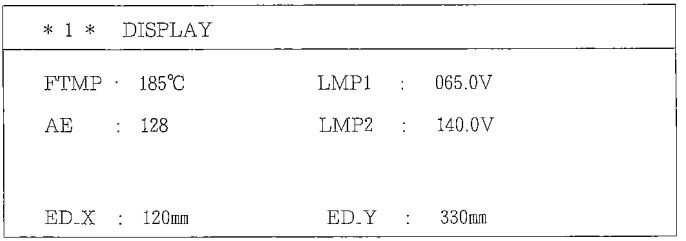

Figure 7-4 DISPLAY1

Item	Description	Remarks
TEMP	surface temperature of the upper fixing roller (output of thermistor)	unit: °C
AE	density of the document (output of CCD)	0 to 255
LMP1 LMP2	ON voltage of the scanning lamp LMP1: 100/115V models LMP2: 220/240V models	unit: V
ED_X ED_Y	editor input coordinates ED_X: X direction ED_Y: Y direction	unit: mm

Table 7-2

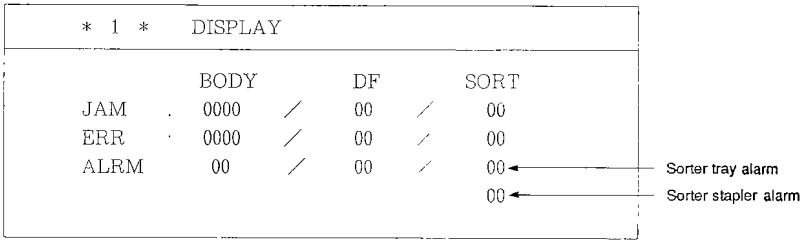

Figure 7-5 DISPLAY2

Item	Description	Remarks
JAM	Location of jam BODY: copier (Table 7-4) DF: RDF-B1 (Table 7-5) SORT: Sorter, Stapler Sorter, Stapler Folder (Table 7-6)	flashes*
ERR	Results of self diagnosis (Tables 7-7, -7-8).	flashes*
ALRM	Warning (Tables 7-9, -10, -11, -12) EX 'SET DOCUMENT AGAIN'	flashes*

* Indicates the previous condition if the machine is reset by switching OFF and then ON.

Table 7-3

Code	Type of jam	Code	Type of jam
0000	door open during copying*	0100	delay jam at lower feeder inlet (Q3)
0001	delay jam at No. 3 pre-registration (Q16)	0200	timing/stationary jam at lower feeder inlet (Q3)
0002	timing/stationary jam at No. 3 pre-registration (Q16)	0400	delay jam at lower feeder outlet (Q14)
0004	delay jam at No. 2 pre-registration (Q15)	0800	timing/stationary jam at lower feeder outlet (Q14)
0008	timing/stationary jam at No. 2 pre-registration (Q15)	1000	delay jam at No. 4 pre-registration (Q854)/left feeder assembly (Q753)
0010	delay jam at No. 1 pre-registration (Q5)	2000	timing/stationary jam at No. 4 pre-registration (Q854)/left feeder assembly (Q753)
0020	timing/stationary jam at No. 1 pre-registration (Q5)	4000	delay jam at manual feed (Q4)
0040	delay jam at delivery (Q2)	8000	timing/stationary jam at manual feed (Q4)
0080	timing/stationary jam at delivery (Q2)	FFFF	paper over sensor at power-on

* For details, see '02' and '03' of Table 7-9.

Table 7-4 BODY (copier)

Code	Description
01	document is pulled out at time of pick-up
02	delay jam identified by pick-up sensor
03	delay jam identified by registration/skew sensor
04	leading edge skew jam identified by registration/skew sensor
05	stationary jam identified by registration/skew sensor
06	double feeding identified by registration/skew sensor
07	trailing edge skew jam identified by registration/skew sensor
09	leading edge bend identified by registration/skew sensor
11	delay jam 1 identified by reversal sensor
12	stationary jam identified by reversal sensor
13	delay jam 2 identified by reversal sensor
20	initial stationary jam identified by reversal sensor
21	reversal pick-up delay jam identified by registration/skew sensor
22	reversal leading edge skew jam identified by registration/skew sensor
23	reversal pick-up stationary jam identified by registration/skew sensor
24	reversal trailing edge skew jam identified by registration/skew sensor
26	leading edge bend at time of reversal/pick-up identified by registration/skew sensor
41	delay jam identified by delivery sensor
42	stationary jam identified by delivery sensor
81	DF open
82	pick-up tray or upper cover open
83	delivery document not detected by document sensor
84	document detected by sensor at pick-up

Code	Description
85	jam unique to test mode
86	tray guide narrower than delivery document width at delivery
87	double feeding of document (double feeding detection ON)
88	document detected at pick-up of 1st document
89	recycle lever malfunction during document circulation (2nd or later)

Table 7-5 RDF

Code	Description
01	delay jam identified by folded paper sensor
02	stationary jam identified by folded paper sensor
03	delay jam identified by paper sensor
04	stationary jam identified by paper sensor
05	timing jam identified by paper sensor
06	staple jam
07	paper detected by sensor at power-on
08	joint switch or cover switch OFF during copying operation
0A	stationary jam on stapler tray
0B	stapler safety mechanism ON

Table 7-6 Sorter

Code	Description
01	E401 ON signal
02	E402 ON signal
03	E403 ON signal
04	E404 ON signal
11	E411 ON signal

Table 7-7 RDF Error

Code	Description
10	E510 ON signal
11	E511 ON signal
12	E512 ON signal
14	E514 ON signal
20	E520 ON signal
30	E530 ON signal
31	E531 ON signal
35	E535 ON signal
40	E540 ON signal
41	E541 ON signal

Table 7-8 Sorter Error/Code

Code	Description
02	right door open
03	lower right door open
10	horizontal registration error
30	cleaning belt out
40	waste toner full
61	primary corona wire cleaning error*
62	transfer/separation corona wire cleaning error*
63	primary, transfer/separation corona wires (both) cleaning error*

* The alarm data will be retained in memory until cleared in the user mode ([*] [11] [OK]); during the period, the corona wire cleaning mechanism will be prohibited.

Table 7-9 Alarm (copier)

Code	Description
01	recycle lever idle swing
02	document edge sensor does not detect document
03	separation fails at document pick-up
04	skew at document pick-up
05	document overrides stop plate at document pick-up
11	document count different after jam removal
12	document count excess
13	document pulled out during operation

The above data are sent to the copier when the RDF detects misplacement of the document.

Table 7-10 Alarm (RDF)

Code	Description
01	paper folder unit power OFF
02	overstacking

Table 7-11 Alarm (sorter tray)

Code	Description
01	stapler down
02	staple jam
05	stapler overstacking
06	stapler full stacking
07	mixed paper size (horizontal)
08	stapler unit absent
09	stapled paper in bin
0A	staple out

Table 7-12 Alarm (sorter stapler)

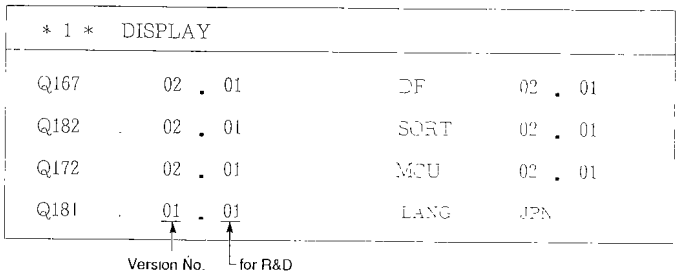

Figure 7-6 DISPLAY3

Item	Description	Remarks
	indicates the version and language for each ROM.	
Q167	indicates the version of the ROM for sequence.	
Q182	indicates the version of the ROM for sequence.	
Q172	indicates the version of the ROM for messages.	
Q181	indicates the version of the ROM for subsequence.	
DF	indicates the version of the ROM for the RF.	
SORT	indicates the version of the ROM for the sorter.	
MCU	indicates the version of the ROM (Q905) for the CD unit changer.	
LANG	indicates the language.	

Table 7-13

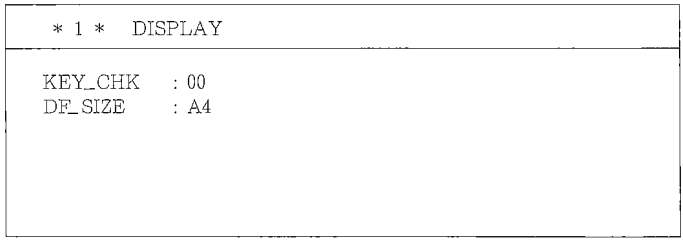

Figure 7-7 DISPLAY4

Item	Description	Remarks
KEY _ CHK	indicates the key code in response to the respective key (except RESET, up/down key); for the key codes, see Table 3-514.	
DF_SIZE	indicates the size of the last document identified by the RDF; for document sizes, see Table 7-16.	

Table 7-14

Code	Name	Code	Name
00H	numeric keypad 0	20H	M1 key (copy mode memory)
01H	numeric keypad 1	21H	M2 key (copy mode memory)
02H	numeric keypad 2	22H	M3 key (copy mode memory)
03H	numeric keypad 3	23H	STANDBY key
04H	numeric keypad 4	24H	ID key
05H	numeric keypad 5	25H	AUTOMATIC COLOR REPRODUCTION key
06H	numeric keypad 6		
07H	numeric keypad 7	26H	FOLD key
08H	numeric keypad 8	27H	SORT/STAPLE/GROUP key
09H	numeric keypad 9	28H	PHOTO key
0AH	AE key	29H	MARGIN key
0BH	* key	2AH	CORRECT key
0CH	OK key	2BH	AREA key
0DH	CLEAR/STOP key	2CH	DATE/TIME key
0EH	RESET key*	2DH	COLOR EDIT key
0FH	COPY START key	2EH	FRAME ERASE key
10H	DIRECT key	2FH	NUMBERING key
11H	OVERLAY MODE key	30H	FREEHAND key
12H	TWO-SIDED MODE key	31H	ERASE key
13H	TWO-PAGE SEPARATION MODE key	32H	INTERRUPT key
		33H	MC key
14H	COLOR key		
15H	ENLARGE key		
16H	REDUCE key		
17H	PAPER SELECT key		
18H	GUIDE key		
19H	AUTO ZOOM key		
1AH	UP SHIFT key**		
1BH	DOWN SHIFT key**		
1CH	DARKER key		
1DH	LIGHTER key		
1EH	ZOOM (+) key		
1FH	ZOOM (–) key		

* Returns to the standard screen when the RESET key is pressed.
** Returns to the previous/next screen when up/down key is pressed.

Table 7-15 Key Codes

Code	Document size	(unit: mm)
B5	B5	182 × 257
FOOLSCAP	FOOLSCAP	330 × 216
A4	A4	210 × 297
B5R	B5R	257 × 182
B4	B4	364 × 257
A4R	A4R	297 × 210
A3	A3	420 × 297
STMT	STATEMENT	140 × 216
LTR	LETTER	216 × 279
LGL	LEGAL	356 × 216
LTRR	LETTER-R	279 × 216
11" × 17"	11" × 17"	432 × 279
A5	A5	148 × 210
COMPUTER	Computer form	381 × 279

Table 7-16 Document Sizes

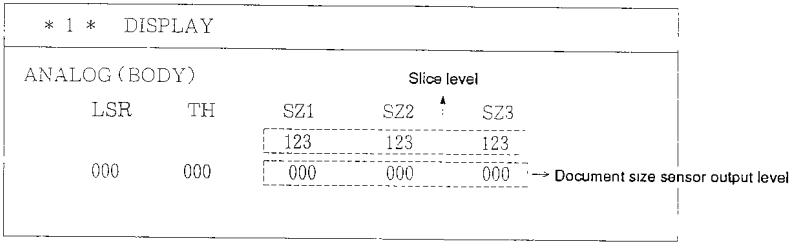

Figure 7-8 DISPLAY5

Microprocessor Input Level (analog signals)

Item	Display	Display	Remarks
ANALOG (BODY; copier)	LSR	Laser output level	000: 0V 255: 5V
	TH	thermistor output level	
	SZ1	document size sensor output level	
	SZ2	document size sensor output level	
	SZ3	document size sensor output level	

Table 7-17

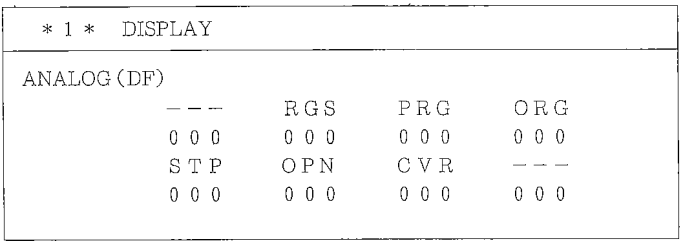

Figure 7-9 DISPLAY6

Microprocessor Input Level (analog signals)

Item	Display	Display	Remarks
ANALOG (DF; RDF-B1 in use)	—	reserved	000: 0V 255: 5V
	RGS	registration sensor output level	
	PRG	pre-registration sensor output level	
	ORG	document sensor output level	
	STP	document stop position volume	
	OPN	RDF switch output	
	CVR	upper cover switch output	
	—	reserved	

Table 7-18

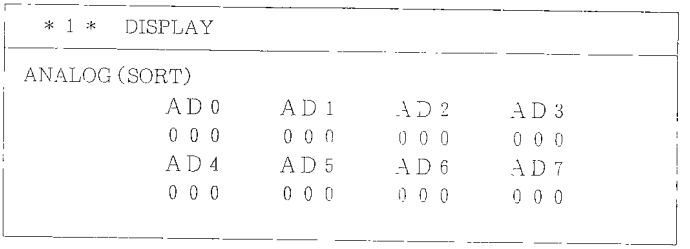

Figure 7-10 DISPLAY6

Microprocessor Input Levels (analog) <Stapler Sorter-A1/Soter-B1>

<table>
<tr><th>Item</th><th>Display</th><th>Remarks</th></tr>
<tr><td>AD0</td><td>Output of bits 3 and 4 (DIP switch; SW1)</td><td>
<table>
<tr><th>Display</th><th>Bit 3</th><th>Bit 4</th></tr>
<tr><td>000 — 115</td><td>ON</td><td>ON</td></tr>
<tr><td>116 — 151</td><td>OFF</td><td>ON</td></tr>
<tr><td>152 — 215</td><td>ON</td><td>OFF</td></tr>
<tr><td>216 — 255</td><td>OFF</td><td>OFF</td></tr>
</table>
</td></tr>
<tr><td>AD1</td><td>Output of bits 1 and 2 (DIP switch; SW1)</td><td>
<table>
<tr><th>Display</th><th>Bit 1</th><th>Bit 2</th></tr>
<tr><td>000 — 115</td><td>ON</td><td>ON</td></tr>
<tr><td>116 — 151</td><td>OFF</td><td>ON</td></tr>
<tr><td>152 — 215</td><td>ON</td><td>OFF</td></tr>
<tr><td>216 — 255</td><td>OFF</td><td>OFF</td></tr>
</table>
</td></tr>
<tr><td>AD2</td><td>Output of bin unit UP/DOWN switch (SW2/SW3)</td><td>
<table>
<tr><th>Display</th><th>SW2(UP)</th><th>SW3(DOWN)</th></tr>
<tr><td>000 — 115</td><td>ON</td><td>ON</td></tr>
<tr><td>116 — 151</td><td>OFF</td><td>ON</td></tr>
<tr><td>152 — 215</td><td>ON</td><td>OFF</td></tr>
<tr><td>216 — 255</td><td>OFF</td><td>OFF</td></tr>
</table>
</td></tr>
<tr><td>AD3</td><td>For factory</td><td></td></tr>
<tr><td>AD4</td><td>Output of Staple sentor (PI 13)</td><td>000 — 092: staple present
093 — 255: staple absent</td></tr>
<tr><td>AD5</td><td>Reserved</td><td></td></tr>
<tr><td>AD6</td><td>Output of bin inside paper sensor (PT1)</td><td>000 — 103: paper present
104 — 255: paper absent</td></tr>
<tr><td>AD7</td><td>Level of 24 power</td><td>000 — 191: power out
192 — 255: returns to normal</td></tr>
</table>

Table 7-19A

Microprocessor Input Levels (analog) <AUTO Stapler Folder-A1>

<table>
<tr><th>Item</th><th>Display</th><th>Remarks</th></tr>
<tr><td>AD0</td><td>Level of 24V power</td><td>000 — 127: 24V not detected
128 — 255: 24V detected</td></tr>
<tr><td>AD1</td><td>Joint sensor (MS2) and stapler cover open/closed sensor (MS5).</td><td><table><tr><th>Display</th><th>Bit 1</th><th>Bit 2</th></tr><tr><td>000 — 063</td><td>CLOSE</td><td>CLOSE</td></tr><tr><td>064 — 190</td><td>CLOSE</td><td>OPEN</td></tr><tr><td>191 — 255</td><td>OPEN</td><td>OPEN</td></tr></table></td></tr>
<tr><td>AD2</td><td>Output of lower left door open/closed sensor (MS2) and AC power supply.</td><td><table><tr><th>Display</th><th>MS2</th><th>AC power supply</th></tr><tr><td>000 — 063</td><td>OPEN</td><td>OFF</td></tr><tr><td>064 — 190</td><td>CLOSE</td><td>ON</td></tr><tr><td>191 — 255</td><td>CLOSE</td><td>OFF</td></tr></table></td></tr>
<tr><td>AD3</td><td>Output of swing unit open/closed sensor. (MS3).</td><td>000 — 127: closed
128 — 255: open</td></tr>
<tr><td>AD4</td><td>Output of staple tray paper sensor (PI3).</td><td>000 — 127: paper present
128 — 255: paper absent</td></tr>
<tr><td>AD5</td><td>Reserved</td><td></td></tr>
<tr><td>AD6</td><td>Output of stack tray paper sensor (PI 12).</td><td>000 — 127: paper present
128 — 255: paper absent</td></tr>
<tr><td>AD7</td><td>Output of staple sensor (PT1).</td><td>000 — 127: paper present
128 — 255: paper absent</td></tr>
</table>

Table 7-19B

Microprocessor Input Levels (analog) <Soter-A1>

Item	Display	Remarks
AD0	Level of 24V power	000 — 197: 24V not detected 198 — 255: 24V detected
AD1	for factory	
AD2	for factory	
AD3	reserved	
AD4	reserved	
AD5	reserved	
AD6	reserved	
AD7	reserved	

Table 7-19C

E. I/O Display Mode (✱2✱)

Select the desired screen using the △ and ▽ keys.
The input/output (8 bits) of each port may be checked; each address represents the following:

PA0 to PC6:	main CPU port
SPA to SPF:	sub CPU port
MT6 to MTB:	indicates the states of the switches wired in a matrix (static).
DF0 to DF4:	CPU port on RDF controller PCB
ST0 to ST7:	CPU port on sorter controller PCB
AC0 to AC5:	CPU port on CD unit changer contrller CPU

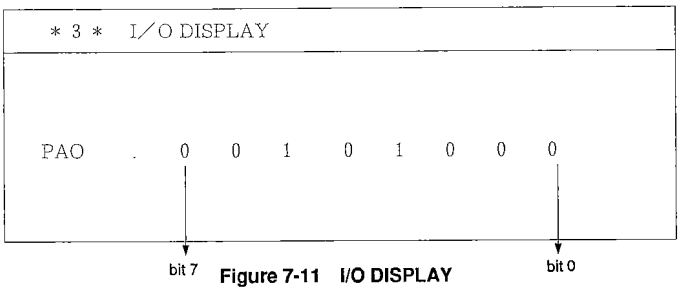

Figure 7-11 I/O DISPLAY

Address	bit	Signal	Notation	Jack No.	Remarks
PA0 (input)	0	manual feed paper sensor (Q4) signal	$\overline{\text{MFPD}}$	J109-A7	0: paper present
	1	No. 3 pre-registration paper sensor (Q16) signal	PDP7	J109-A9	1: paper present
	2	No. 4 pre-registration paper sensor (Q854) signal Left feeder assembly paper sensor (Q753) signal	$\overline{\text{PDP8}}$ $\overline{\text{LPPDE}}$	J108-A8	0: paper present
	3	No. 2 pre-registration paper sensor (Q15) signal	$\overline{\text{PDP6}}$	J109-A6	0: paper present
	4	No. 1 pre-registration paper sensor (Q5) signal	PDP1	J104-B5	1: paper present
	5	delivery paper sensor (Q2) signal	$\overline{\text{PDP3}}$	J110-A4	0: paper present
	6	lower feeder inlet paper sensor (Q3) signal	$\overline{\text{PDP4}}$	J111-B2	0: paper present
	7	lower feeder outlet paper sensor (Q14) signal	$\overline{\text{PDP5}}$	J109-A5	0: paper present
PB0 (outpit)	0	manual feed shutter solenoid (SL9) drive command	$\overline{\text{MFSSD}}$	J109-B5	1: SL9 ON
	1	No. 1 registration roller clutch (CL1) drive command	$\overline{\text{RGCD1}}$	J104-B7	1: CL1 ON
	2	No. 2 registration roller clutch solenoid (SL8) drive command	$\overline{\text{RGSD2}}$	J109-B4	1: SL8 ON
	3	No. 3 registration roller clutch (CL4) drive command	$\overline{\text{RGCD3}}$	J109-B12	1: CL4 ON
	4	pick-up motor (M803) drive command deck motor (M701) drive command	$\overline{\text{PUMD}}$ $\overline{\text{DKMD}}$	J108-B5	1: M803/M701 ON
	5	pick-up roller release solenoid 1 (SL7) drive command	$\overline{\text{PRSD1}}$	J109-B3	1: SL7 ON
	6	pick-up drive switch solenoid 1 (SL6) drive command	$\overline{\text{PSSD1}}$	J109-B2	1: SL6 ON
	7	pick-up clutch 1 (CL2) drive command	$\overline{\text{PUCD1}}$	J109-B1	1: CL2 ON
PC0 (output)	0	pick-up clutch 2 (CL801) drive command right pick-up clutch (CL701) drive command	$\overline{\text{PUCD2}}$ $\overline{\text{PRUDR}}$	J108-B3	1: CL701/CL801 ON
	1	pick-up drive switch solenoid 2 (SL805) drive command	$\overline{\text{PSSD2}}$	J108-B2	1: SL805 ON
	2	left pick-up roller release solenoid (SL702) drive signal	$\overline{\text{LPURL}}$	J108-B11	1: SL702 ON
	3	reserved.			
	4	pick-up roller release solenoid 2 (SL804) drive command right pick-up roller release solenoid (SL701) drive command	$\overline{\text{PRSD2}}$ $\overline{\text{PRURL}}$	J108-B4	1: SL701/SL804 ON

Table 7-20A

Address	bit	Signal	Notation	Jack No.	Remarks
PC0 (output)	5	No. 4 registration roller clutch solenoid (SL802) drive command left feeder drive clutch (CL703) drive command	$\overline{\text{RGSD4}}$ $\overline{\text{LPPDR}}$	J108-B1	1: CL703/802 ON
	6	power switch (SW1) OFF command	$\overline{\text{PWOFF}}$	—	1: SW1 OFF; if error in lamp/heater, PWOFF=0 regardless of the state.
	7	add-on shuther solenoid (SL1) drive signal	$\overline{\text{ADSA}}$	J110-A1	1: SL1 ON
PA1 (inout)	0	cassette 1 lifter position sensor (Q12) signal	C1LTP	J109-A3	1: lifter UP
	1	cassette 2 lifter position sensor (Q13) signal	C2LTP	J109-A4	1: lifter UP
	2	cassette 3 lifter position sensor (Q851) signal	C3LTP	J108-B7	1:lifter UP
	3	cassette 4 lifter position sensor (Q853) signal	C4LTP	J108-A10	1: lifter UP
	4	scanner home position sensor (Q8) signal	SCHP	J114-B5	1: at home position
	5	reserved.			
	6	copyboard cover open/closed sensor (MS2) signal	$\overline{\text{CBCC}}$	J102-A7	0: closed
	7	reserved.			
PB1 (output)	0	cassette 1 lifter motor (M8) drive command	C1LTMD	J109-A13	1: M8 ON
	1	cassette 2 lifter motor (M9) drive command	C2LTMD	J109-A14	1: M9 ON
	2	cassette 3 lifter motor (M801) drive command	$\overline{\text{C3LTMD}}$	J108-B8	1: M801 ON
	3	cassette 4 lifter motor (M802) drive command	$\overline{\text{C4LTMD}}$	J108-A11	1: M802 ON
	4	reserved.			
	5	cleaning belt drive solenoid (SL2) drive command	$\overline{\text{CLBSD}}$	J111-A5	1: SL2 ON
	6	counter (CNT1, CCV) drive command	$\overline{\text{CNT1D}}$ $\overline{\text{CCD}}$	J110-B1 J101-B8	0: counter ON
	7	counter (CNT2) drive command	$\overline{\text{CNT 2D}}$	J110-B3	1: CNT2 ON
PC1 (output)	0	hopper motor (M10) drive command	$\overline{\text{HMD}}$	J111-A1	1: M10 ON
	1	heat exhaust fan (FM2) drive command	$\overline{\text{FM2D}}$	J120-2	1: FM2 ON
	2	heat exhaust fan (FM2)/feeder fan (FM3) high-speed rotation command	FM2STB FM3STB	J120-1 J117-1	1: high-speed rotation
		power supply cooling fan (FM4) drive signal	$\overline{\text{FM4D}}$	J102-B11	1: FM4 ON
	3	scanner cooling fan (FM1) drive command	$\overline{\text{FM1D}}$	J102-B9	1: FM1 ON

Table 7-20B

Address	bit	Signal	Notation	Jack No.	Remarks
PC1 (output)	4	feeder fan (FM3) drive command	FM3D	J117-2	1: FM3 ON
	5	main motor (M1), pre-exposure lamp (LA2) drive command	$\overline{\text{MMD}}$ $\overline{\text{PEXP}}$	J102-A5 J102-B1	1: M1, LA2 ON
	6	scanner motor (M2) drive command	$\overline{\text{SCMD}}$	J102-A1	1: M2 ON
	7	scanner forward command	$\overline{\text{SCFW}}$	J102-A2	1: scanner forward
PA2 (inout)	0	cassette 1 paper sensor (Q10) signal	C1PD	J109-A1	1: paper present
	1	cassette 2 paper sensor (Q11) signal	C2PD	J109-A2	1: paper present
	2	cassette 3 paper sensor (Q850) signal right deck paper sensor (Q751) signal	$\overline{\text{C3PD}}$ RPADE	J108-B6	1: paper present
	3	cassette 4 paper sensor (Q852) signal left deck paper sensor (Q752) signal	$\overline{\text{C4PD}}$ LPADE	J108-A9	1: paper present
	4	CD unit changer manual feed paper sensor (Q960) signal	MFPD	J107-5	1: paper present
	5	reserved.			
	6	black toner supply signal (Q17)	$\overline{\text{BTSP}}$	J111-A13	0: black toner supply
	7	control card sensor signal (CCV)	$\overline{\text{CCDT}}$	J111-B7	0: control card present
PB2 (output)	0	D/A converter data 0	DA DATA0	—	
	1	D/A converter data 1	DA DATA1	—	
	2	D/A converter data 2	DA DATA2	—	
	3	reserved.			
	4	reserved.			
	5	reserved.			
	6	scanning lamp (LA1) ON command	$\overline{\text{LRD}}$	J103-A4	1: LA1 ON
	7	fixing heater (H1) ON signal	$\overline{\text{HTRD}}$	J111-B11	1: H1 ON
PC2 (output)	0	delivery motor (M7) FD/RV switch command	DFFW	—	
	1	DP request signal	DPRQ	—	
	2	lower feeder drive command	LFON	—	
	3	CCV count command	CCNTD	J110-B8	O: ON
	4	primary corona wire cleaner reverse command	$\overline{\text{PCLMR}}$	—	1 for-ward 0 / 0 re-verse 1
	5	primary corona wire cleaner forward command	$\overline{\text{PCLMF}}$	—	

Table 7-20C

Address	bit	Signal	Notation	Jack No.	Remarks
PC2 (output)	6	transfer/separation corona wire cleaner reverse command	$\overline{\text{TCLMR}}$	—	1 → 0: reverse; 0 → 1: forward
	7	transfer/separation corona wire cleaner forward command	$\overline{\text{TCLMF}}$	—	
PA3 (inout)	0	key read signal 0	RTN0	J104-A6 J112-4 J108-A7	reads input from switches on control panel
	1	key read signal 1	RTN1	J104-A5 J112-3 J108-A6	
	2	key read signal 2	RTN2	J104-A4 J112-6 J108-A5	
	3	key read signal 3	RTN3	J104-A3 J112-5 J108-A4	
	4	key read signal 4	RTN4	J112-8 J108-A3	
	5	key read signal 5	RTN5	J112-7	
	6	key read signal 6	RTN6	J112-10	
	7	key read signal 7	RTN7	J112-9 J111-B9	
PB3 (inout)	0	oscillation signal 0	KDGT0	J112-11	power supply for reading input from switches on control panel
	1	oscillation signal 1	KDGT1	J112-14	
	2	oscillation signal 2	KDGT2	J112-13	
	3	oscillation signal 3	KDGT3	J112-16	
	4	oscillation signal 4	KDGT4	J112-15	
	5	oscillation signal 5	KDGT5	J112-18	
	6	oscillation signal 6	KDGT6	J110-17 J119-74	
	7	oscillation signal 7	KDGT7	J104-A1	
PC3 (output)	0	oscillation signal 8	KDGT8	J104-A2	
	1	oscillation signal 9	KDGT9	J108-A2	
	2	oscillation signal 10	KDGT10	J108-A1	
	3	oscillation signal 11	KDGT11	J121-11	
	4	developing bias AC drive command	$\overline{\text{HVBAC}}$	J103-B8	1: developing bias AC component ON
	5	AC transformer drive command	$\overline{\text{HVAC}}$	J104-A7	1: AC transformer ON
	6	control panel lamp drive command	CPLD	J112-34	1: lamp ON

Table 7-20D

Address	bit	Signal	Notation	Jack No.	Remarks
PC3 (output)	7	oscillation signal	WATCHDOG1	—	checking erratic error
PA4 (input)	0	CD unit door sensor (MS3) signal	$\overline{\text{CDUDC}}$	J103-B10	0: door closed
	1	manual feed door sensor (MS4) signal	$\overline{\text{MFDC}}$	J109-A8	0: door closed
	2	lower right door sensor (MS703/MS801) signal	$\overline{\text{RLDC}}$ $\overline{\text{RDODE}}$	J108-B9	0: door closed
	3	scanner motor PLL lock signal	$\overline{\text{M2LK}}$	J102-A4	0: rotation normal
	4	main motor PLL lock signal	$\overline{\text{M1LK}}$	J102-A6	0: rotation normal
	5	SSR error sensor signal	SRER	J103-A5	0: error
	6	waste toner sensor (MS1) signal	$\overline{\text{WTOF}}$	J102-A9	alternately '1' and '0' when drum is full of waste toner.
	7	counter (CNT1) open circuit signal	CNTRERR	J110-B1	1: CNT1 open circuit
PB4 (output)	0	oscillation signal 0	LDGT0	J112-28	control panel LED ON power supply
	1	oscillation signal 1	LDGT1	J112-27	
	2	oscillation signal 2	LDGT2	J112-30	
	3	oscillation signal 3	LDGT3	J112-29	
	4	oscillation signal 4	LDGT4	J112-32	
	5	oscillation signal 5	LDGT5	J112-31	
	6	reserved.			
	7	power check LED ON command	$\overline{\text{PLEDD}}$	J112-33	1: LED ON
PC4 (output)	0	ON signal 0	SEG0	J112-20	control panel LED ON signal
	1	ON signal 1	SEG1	J112-19	
	2	ON signal 2	SEG2	J112-22	
	3	ON signal 3	SEG3	J112-21	
	4	ON signal 4	SEG4	J112-24	
	5	ON signal 5	SEG5	J112-23	
	6	ON signal 6	SEG6	J112-26	
	7	ON signal 7	SEG7	J112-25	
PA5 (input)	0	primary corona wire cleaner home position sensor (MS7)	$\overline{\text{PCLHP}}$	J102-B7	0: HP
	1	transfer/separation corona wire cleaner home position sensor (MS8)	$\overline{\text{TSCHP}}$	J117-7	0: HP
	2	primary corona wire cleaner reversal sensor (MS6)	$\overline{\text{PCLRP}}$	J102-B5	0. reversal position

Table 7-20E

Address	bit	Signal	Notation	Jack No.	Remarks
PA5 (input)	3	transfer/separation corona wire cleaner reversal sensor (MS5)	$\overline{\text{TSCHP}}$	J117-5	0: reversal position
	4	DP busy signal	DPBS	—	
	5	reserved.			
	6	hopper black toner out signal (Q18)	$\overline{\text{BTEP}}$	J111-A10	0: below specified level
	7	power switch OFF command open circuit signal	PWOFF	J111-A7	0: normal
PB5 (output)	0	data output to analog processor PCB	DADATA	J119-53	
	1	clock signal to analog processor PCB	DACLK	J119-52	
	2	LOAD signal to analog processor PCB	DALOAD	J119-54	
	3	communication to image processor PCB	AESEL	J119-72	
	4	communication to image processor PCB	SHSEL	J119-68	
	5	communication to image processor PCB	BDSEL	J119-69	
	6	reserved.			
	7	reserved			
PC5	0	document leading edge signal for No. 1 registration clutch	—	—	
	1	No. 1 registration clutch ON signal (internal)	—	—	0: ON
	2	No. 1 registration clutch OFF signal (internal)	—	—	0: OFF
	3	document leading edge signal for image processor	—	—	
	4	No. 1 registration clutch ON sensor signal (internal)	—	—	
	5	communication to image processor PCB	GRAIPRCFC	J119-59	
	6	reserved.			
	7	reserved.			

Table 7-20F

Address	bit	Signal	Notation	Jack No.	Remarks
PA6 (input)	0	color toner out signal 1	$\overline{\text{CTEP1}}$	J101-B1	
	1	color toner out signal 2	$\overline{\text{CTEP2}}$	J101-B2	
	2	color toner signal 1	CT1	J101-B5	
	3	color toner signal 2	CT2	J101-B4	
	4	color toner signal 3	CT3	J101-B3	
	5	BD ready signal	BDRDY	J116-64	0: ready
	6	laser scanner motor ready signal	$\overline{\text{LMRDY}}$	J115-10	0: ready
	7	laser power ready signal	LPRDY	J116-7	0: ready
PB6 (output)	0	black developing assembly release solenoid (SL4) drive signal	$\overline{\text{BDRSD}}$	J103-B12	1: SL4 ON
	1	color toner supply solenoid (SL3) drive signal	$\overline{\text{CTSSD}}$	J101-A2	1: SL3 ON
	2	color toner concentration sensor lamp (LA851) ON signal	CTLON	J101-B7	0: lamp ON
	3	reserved.			
	4	CD unit changer manual feed start command	$\overline{\text{MFON}}$	J107-9	1: start
	5	CD unit changer manual feed shutter solenoid (SL905) drive signal	$\overline{\text{MFSSD}}$	J107-8	1: SL905 ON
	6	CD unit changer manual feed skew roller drive solenoid (SL904) drive signal	$\overline{\text{MFRSD}}$	J107-7	1: SL904 ON
	7	CD unit changer reset signal	$\overline{\text{RESET}}$	J107-6	1: reset
PC6 (output)	0	laser scanner motor (ML) drive signal	$\overline{\text{LMD}}$	J115-11	1: motor ON
	1	laser scanner motor high-speed rotation signal	LMH	J115-9	0: high-speed rotation
	2	color developing clutch (CL3) drive signal	$\overline{\text{CDVLD}}$	J101-A4	1: clutch ON
	3	reserved.			
	4	reserved.			
	5	laser intensity adjustment signal	LDATA	J116-1	
	6	data shift clock signal	LPC_CLK	J116-3	
	7	laser intensity adjustment data read signal	LPC_LOAD	J116-5	

Table 7-20G

Address	bit	Signal	Notation	Jack No.	Remarks
SPA (output)	0	lower feeder No. 1 motor (M5) drive command	LF1A	J109-B6	alternates between '1' and '0' while M5 rotates
	1		LF1B	J109-B9	
	2		$\overline{\text{LF1A}}$	J109-B7	
	3		$\overline{\text{LF1B}}$	J109-B10	
	4	lower feeder No. 2 motor (M6) drive command	LF2A	J118-1	alternates between '1' and '0' while M6 rotates
	5		LF2B	J118-4	
	6		$\overline{\text{LF2A}}$	J118-2	
	7		$\overline{\text{LF2B}}$	J118-5	
SPB (output)	0	delivery feeder motor (M7) drive command	DFA	J110-A6	alternates between '1' and '0' while M7 rotates
	1		DFB	J110-A9	
	2		$\overline{\text{DFA}}$	J110-A7	
	3		$\overline{\text{DFB}}$	J110-A10	
	4	lens motor (M3) drive command	$\overline{\text{LNA}}$	J114-A2	alternates between '1' and '0' while M3 rotates
			LNA	J114-A1	
	5		$\overline{\text{LNB}}$	J114-A5	
			LNB	J114-A3	
	6	horizontal registration motor (M4) drive command	$\overline{\text{CRGA}}$ CRGA	J103-8 J103-7	alternates between '1' and '0' while M4 rotates
	7		$\overline{\text{CRGB}}$ CRGB	J103-11 J103-10	
SPC (input)	0	lens motor (M3) power supply switch signal	LNSTB	J114-A4	1: 5V 0: 24V
	1	horizontal registration motor (M4) power supply switch signal	CRGSTB	J103-A9	1: 5V 0: 24V
	2	delivery motor (M7) FW/RV switch command	DFFW	—	0: clockwise rotation
	3	DP request signal	DPRQ	—	
	4	lower feeder control signal	DFCTL	—	
	5	lower feeder outlet paper sensor (Q14) signal	$\overline{\text{PDP5}}$	J109-A5	0: paper present
	6	lens home position sensor (Q7) signal	LHP	J114-B13	1: at home position
	7	horizontal paper edge sensor (Q6) signal	PDP2	J104-B2	1: paper present

Table 7-20H

Address	bit	Signal	Notation	Jack No.	Remarks
SPF (input)	0	filter moter (M13) drive command	FMA	J115-4	alternates between '1' and '0' while MB rotates
	1		FMB	J115-7	
	2		$\overline{\text{FMA}}$	J115-4	
	3		$\overline{\text{FMB}}$	J115-38	
	4	reserved.		—	
	5	reserved.		—	
	6	DP busy signal	DPBS		
	7	Filter home position sensor (Q20) signal	FILHP	J115-2	1: at home position
MT6 (input)	0	key read signal	RTN0	—	reads input from switches on control panel
	1		RTN1	—	
	2		RTN2	—	
	3		RTN3	—	
	4	reserved.			
	5	reserved.			
	6	reserved.			
	7	reserved.			
MT7 (input)	0	cassette 1 (machine top) size switch	RTN0	J104-A6	when pressed, '1'
	1		RTN1	J104-A5	
	2		RTN2	J104-A4	
	3		RTN3	J104-A3	
	4	inch configuration connect signal	RTN4	—	depends on combination with SW101 on DC controller PCB
	5	metric configuration connect signal	RTN5	—	
	6	counter non-Japanese configuration connect signal	RTN6	—	
	7	reserved.			
MT8 (input)	0	cassette 2 (machine top) size switch	RTN0	J104-A6	when pressed, '1'
	1		RTN1	J104-A5	
	2		RTN2	J104-A4	
	3		RTN3	J104-A3	
	4	reserved.			
	5	reserved.			
	6	reserved.			
	7	service mode input push switch (SW501)	RTN7	J111-B9	1: SW501 ON

Table 7-20I

Address	bit	Signal	Notation	Jack No.	Remarks
MT9 (input)	0	cassette 3 (cassette feeding unit top) size switch/paper deck pedestal size switch	RTN0	J108-A7	when pressed, '1'; if paper deck pedestal, PTN2 is reserved.
	1		RTN1	J108-A6	
	2		RTN2	J108-A5	
	3		RTN3	J108-A4	
	4	cassette feeding unit/paper deck pedestal connect signal	RTN4	J108-A3	*
	5	reserved.			
	6	reserved.			
	7	reserved.			
MTA (input)	0	cassette 4 (cassette feeding unit bottom) size switch/paper deck pedestal size switch	RTN0	J108-A7	when pressed, '1'.
	1		RTN1	J108-A6	
	2		RTN2	J108-A5	
	3		RTN3	J108-A4	
	4	cassette feeding unit/paper deck pedestal connect signal	RTN4	J108-A3	*
	5	reserved.			
	6	reserved.			
	7	reserved.			
MTB		for factory.			

Table 7-20J

* The cassette feeding unit and the paper deck pedestal are distinguished based on the following combinations:

Address	bit	Cassette feeding unit	Paper deck pedestal
MT9	4	1	0
MTA	4	1	1

RDF-B1

Address	bit	Signal	Notation	Jack No.	Remarks
DF0 (output)	0	recycle motor (M4) drive command	RMD	J8-6	1: motor ON
	1	document set indicator LED ON command	$\overline{\text{DSD}}$	J8-4	0: LED ON
	2	reserved.			
	3	brake drive command	$\overline{\text{BKD}}$	J6-2	0: brake ON
	4	stop plate solenoid (SL1) drive command	$\overline{\text{STPSLD}}$	J5-4	0: solenoid ON
	5	paper deflector plate solenoid (SL3) drive command	$\overline{\text{DFSLD}}$ FLPSL	J4-2	0: solenoid ON
	6	for microprocessor	—	—	
	7	mixed document size mode switch input	$\overline{\text{DSM}}$	J8-7	0: mode set
DF1 (output)	0	mixed document size mode indicator LED ON command	$\overline{\text{DSMD}}$	J8-8	0: LED ON
	1	belt motor pulse signal	BMPWM		
	2	belt motor rotation direction signal	BMRD	—	1: RV 0: FD
	3	belt motor (M3) drive command	BMON	—	1: ON
	4	feeder motor (M2) drive command	FMD	J11-1	
	5	feeder motor short brake signal	FMON	—	
	6	pick-up motor (M1) drive command	PUMD	J12-1	1: motor ON
	7	paper retainer solenoid (SL2) drive command	$\overline{\text{WSLD}}$	J5-2	0: solenoid ON
DF2 (input)	0	for communication with external devices	DI	—	
	1	for communication with external devices	DO	—	
	2	for microprocessor			
	3	belt motor clock sensor (S10) signal	BMCLK	J9-23	
	4	for microprocessor	—	—	
	5	for microprocessor	—	—	
	6	for microprocessor	—	—	
	7	for microprocessor	—	—	
DF3 (input)	0	reversal sensor (S8) signal	PDP5	J9-17	1: paper present
	1	pick-up roller sensor (S5) signal	$\overline{\text{PUSP}}$	J9-8	1: pick-up roller at home position
	2	pick-up sensor (S7) signal	PDP1	J9-14	1: paper present
	3	delivery sensor (S6) signal	PDP2	J9-11	1: paper present

Table 7-21A

Address	bit	Signal	Notation	Jack No.	Remarks
DF3 (input)	4	recycle sensor (S11) signal	LDD	J8-2	0: recycle lever on document
	5	LED1 ON signal	LED1	—	
	6	LED2 ON signal	LED2	—	
	7	LED3 ON signal	LED3	—	
DF4 (input)	0	DIP switch setting	DIPSW1	—	
	1	DIP switch setting	DIPSW2	—	
	2	DIP switch setting	DIPSW3	—	
	3	DIP switch setting	DIPSW4	—	
	4	DIP switch setting	DIPSW5	—	
	5	DIP switch setting	DIPSW6	—	
	6	push switch signal	SW1	—	
	7	editor set signal	$\overline{\text{DCNT}}$	J10-3	0: editor set

Table 7-21B

Stapler Sorter-A1/Sorter-B1

Address	bit	Signal	Notation	Jack No.	Remarks
ST0 (input)	0	reserved.			
	1	stapling home position sensor (PI12)	SPL-HP	J11-3	1: stapling home position
	2	stapler unit swing sensor (MS9) signal	SWG SET	J8-5	1: home position or stapling position
	3	stapler cover open/closed sensor (MS5) signal	SPLOPN	J10-3	1: stapler cover open
	4	guide bar home position sensor (PI7) signal	SGBHP	J12-6	1: at home position
	5	lead cam home position sensor (PI5) signal	LCHP	J14-5	1: at home position
	6	reserved.			
	7	reserved.			
ST1 (output)	0	guide bar swing motor (M3) phase A excitation signal	$\overline{MA}$	J13-3, 5	alternates between '1' and '0' while motor rotates
	1	guide bar swing motor (M3) phase B excitation signal	$\overline{MB}$	J13-4, 6	
	2	guide bar swing motor (M3) drive command	MON	J13-2	1: motor ON
	3	stapler motor (M4) forward rotation signal	$\overline{SPLMFW}$	—	0: forward
	4	stapler motor (M4) reverse rotation signal	$\overline{SPLMRW}$	—	0: reverse
	5	switch-back path solenoid (SL1) drive command	$\overline{PSLD}$	J7-8	0: SL1 ON
	6	paper path switch solenoid (SL2) drive command	PSLD	J7-8	0: SL2 ON
	7	paper retainer solenoid (SL3) drive command	PHSLD	J5-2	0: SL3 ON
ST2 (output)	0	motor switch signal	—	—	
	1	stapling ready indicator ON signal	SPLOK	J8-4	1: LED ON
	2	bin paper sensor LED ON signal	BPD	J12-2	
	3	motor clock signal	—	—	
	4	stapler unit swing motor (M5) drive command	$\overline{SWGMD}$	J9-1	1: M5 ON
	5	feeder motor clock sensor (PI6) signal	FMCLK	J5-4	
	6	reserved.			
	7	feeder motor (M1) brake signal	—	—	1: M1 OFF

Table 7-22A

Stapler Sorter-A1/Sorter-B1

Address	bit	Signal	Notation	Jack No.	Remarks
ST3 (input)	0	stapling position sensor signal	SPD	J8-8	1: paper present
	1	reserved.			
	2	manual stapling key signal	MNSPL	J8-1	0: switch ON
	3	non-sort paper sensor signal	$\overline{\text{NSPEXT}}$	J7-5	0: paper present
	4	sort paper sensor signal	$\overline{\text{SPEXT}}$	J7-2	0: paper present
	5	bin unit home position sensor signal	BHP	J14-2	1: bin unit at home position
	6	joint sensor signal	$\overline{\text{SOP}}$	J2-2	0: sorter released
	7	reset signal	—	—	
ST4 (input)	0	stapler position set sensor signal	SPL-SET	J10-6	0: stapler position
	1	reserved.			
	2	reserved.			
	3	reserved.			
	4	reserved.			
	5	reserved.			
	6	reserved.			
	7	reserved.			

Table 7-22B

Auto Stapler Folder-A1/Auto Stapler-A1

Address	bit	Signal	Notation	Jack No.	Remarks
ST0 (output)	0	stapler guide plate drive motor (M7) drive pulse signal	PMA	J7-11	alternates between '1' and '0' while M7 rotates
	1		$\overline{\text{PMA}}$	J7-12	
	2		PMB	J7-13	
	3		$\overline{\text{PMB}}$	J7-14	
	4	staple guide plate drive motor (M7) drive power supply	PMON	J7-9	1: drive power supply ON
	5	No. 2 paper path drive solenoid (SL3) drive command	$\overline{\text{P2SLD}}$	J4-2	0: SL3 ON
	6	paper deflector plate 1 solenoid (SL1) drive command	$\overline{\text{D1SLD}}$	J4-4	0: SL1 ON
	7	paper deflector 2 solenoid (SL2) drive command	$\overline{\text{D2SLD}}$	J4-6	0: SL2 ON
ST1 (output)	0	feeder motor (M1) drive command	FMD	J7-3	1: M1 ON
	1	No. 1 delivery motor (M4) drive command	DM1D	J7-1	1: M4 ON
	2	No. 2 delivery motor (M2) forward rotation signal	$\overline{\text{DM2FW}}$	—	1: M2 forward
	3	No. 2 delivery motor (M2) reverse signal	$\overline{\text{DM2RW}}$	—	1: M2 reverse
	4	stapler motor (M6) forward rotation signal	$\overline{\text{SPLMFW}}$	—	0: M6 forward
	5	stapler motor (M6) reverse rotation signal	$\overline{\text{SPLMRV}}$	—	0: M6 reverse
	6	shift motor (M8) drive command	SFMD	J5-5	1: M8 ON
	7	swing unit drive motor (M5) drive command	SWMD	J7-5	1: M5 ON
ST2 (input)	0	No. 2 delivery motor clock sensor (PI2) signal	DM2CLK	J9-B13	alternates between '1' and '0' while M2 rotates
	1	stack motor clock sensor (PI10) signal	STMCLK	J6-2	alternates between '1' and '0' while M3 rotates
	2	staple guide plate home position sensor (PI1) signal	SGHP	J9-A13	1: home position
	3	No. 1 delivery motor clock sensor (PI6)	DMICLK	J9-B7	alternates between '1' and '0' while M1 rotates
	4	No. 1 paper path sensor (PI9) singnal	$\overline{\text{PP1D}}$	J9-A10	0: paper present
	5	No. 2 paper path sensor (PI8) signal	$\overline{\text{PP2D}}$	J9-B10	0: paper present
	6	swing unit home position sensor (PI7) signal	$\overline{\text{SWHP}}$	J9-A4	0: swing unit at top or bottom

Table 7-23A

Auto Stapler Folder-A1/Auto Stapler-A1

Address	bit	Signal	Notation	Jack No.	Remarks
ST2	7	sub tray solenoid (SL4) drive command	$\overline{SSLD}$	J5-4	0: SL4 ON
ST3 (input)	0	stack tray upper limit sensor (MS6) signal	$\overline{VLS}$	J4-10	1: stack tray topmost
	1	stack tray lower limit sensor (MS7) signal	$\overline{LLS}$	J4-12	1: stack tray bottommost
	2	stack tray shift width sensor (MS8) signal	$\overline{SFTW}$	J6-10	0: left/right shift end
	3	stack tray left/right position sensor (PI11) signal	$\overline{LPD}$	J6-5	0: stack tray left
	4	DIP switch (SW1-1)	—		for factory.
	5	DIP switch (SW1-2)	—		0: ON
	6	DIP switch (SW1-3)	—		0: ON
	7	manual stapling key (SW10) signal	MNSPL	J9-B4	0: key ON
ST4 (output)	0	folder feeder motor (M1) drive command	$\overline{PFMD}$	J10-6	1: M1 ON
	1	skew correction solenoid (SL8) drive command	$\overline{SRSD}$	J11-8	1: SL8 ON
	2	lock solenoid (SL3) drive command	$\overline{PSD}$	J11-5	1: SL3 ON
	3	B4Z-fold No. 1 solenoid (SL4) drive command	$\overline{ZMSD}$	J11-4	1: SL4 ON
	4	A3Z-fold solenoid (SL5) drive command	$\overline{ZLSD}$	J11-3	1: SL5 ON
	5	B4 1/2-fold solenoid (SL6) drive command	$\overline{HMSD}$	J11-2	1: SL6 ON
	6	middle deflector plate solenoid (SL2) drive signal	$\overline{PMSD}$	J11-6	1: SL2 ON
	7	B4 Z-fold No. 2 solenoid (SL7) drive command	$\overline{ZMSSD}$	J11-1	1: SL7 ON
ST5 (input/ output)	0	paper folder unit connect signal	$\overline{PFSET}$	J10-3	0: paper fold unit present
	1	folded paper sensor (PT3) signal	$\overline{PD}$	J10-3	0: paper present
	2	stapling home position sensor (MS4) signal	SPLHP	J8-3	1: home position
	3	stapler unit connect signal	$\overline{SPLSET}$	J8-1	0: stapler unit present
	4	reserved.			
	5	reserved.			
	6	stack motor (M3) down signal	$\overline{STMDWN}$		1: M3 forward
	7	stack motor (M3) up signal	$\overline{STMUP}$		1: M3 reverse

Table 7-23B

Auto Stapler Folder-A1/Auto Stapler-A1

Address	bit	Signal	Notation	Jack No.	Remarks
ST6 (input)	0	reserved.			
	1	reserved.			
	2	reserved.			
	3	swing unit open/closed sensor (MS3) signal	SWDWN	J2-4	0: swing unit closed
	4	staple tray paper sensor (PI3) signal	SPD	J9-A16	1: paper present
	5	stack level sensor (PI4) signal	STL	J9-B16	1: paper is on stack tray
	6	stack tray paper sensor (PI12) signal	STD	J6-8	1: paper present
	7	staple sensor (PT1) signal	HKEMP	J8-6	0: staple present
ST7 (input)	0	joint sensor (MS2) signal	$\overline{\text{SOP}}$	J2-2	0: not connected to copier
	1	stapler cover open/closed sensor (MS5) signal	$\overline{\text{SPLOPN}}$	J4-8	0: stapler cover open
	2	paper folder unit power supply sensor signal	PFPW	J10-5	1: power available
	3	lower left door open/closed sensor (MS2) signal	LLOPN	J12-1	0: lower left door open
	4	reserved.			
	5	reserved.			
	6	reserved.			
	7	reserved.			

Table 7-23C

Sorter-A1

Address	bit	Signal	Notation	Jack No.	Remarks
ST0	0	lead cam position sensor (PI1) signal	LCHP	J4-2	1: lead cam home position
	1	non-sort position sensor (PI2) signal	BNSP	J4-5	1: bin at non-sort position
	2	push switch (SW2)	—	—	0: SW2 ON
	3	push switch (SW3)	—	—	0: SW3 ON
	4	DIP switch (SW1-1)	—	—	0: SW1-1 PN
	5	DIP switch (SW1-2)	—	—	0: SW1-2 ON
	6	joint switch (MS1)	$\overline{\text{SIP}}$	J4-7	0: MS1 ON
	7	paper sensor (PI3) signal	$\overline{\text{PDP}}$	J5-2	0: paper present
ST1	0	bin motor down signal	BMDWN	—	1: bin DOWN
	1	bin motor up signal	BMUP	—	1: bin UP
	2	paper deflector plate solenoid (SL1)	PDSD	J6-2	1: SL1 ON
	3	reserved.			
	4	LED1 ON signal	—	—	0: LED1 ON
	5	reserved			
	6	reserved.			
	7	reserved.			
ST2	0	for factory.		J2-7	
	1			J2-5	
	2			J2-3	
	3			J2-1	
	4	reserved.			
	5	reserved.			
	6	feeder motor (M2) drive command	PFMD	J5-4	1: M2 ON
	7	IPC error signal			
ST3		address/data bus	—	—	
ST4		address bus	—	—	

Table 7-24

CD Unit Changer

Address	bit	Signal	Notation	Jack No.	Remarks
AC0	0	Horizontal move moter (M902) drive signal	$\overline{\text{HMC}}$	J909-5	0: M902 ON
	1	Horizontal move motor (M902) move-out signal	$\overline{\text{HMF0}}$	J909-6	0: M902 rotates in move-out direction.
	2	Not used.			
	3	Not used.			
	4	CD unit changer in operation	BUSY	J907-5	
	5	Not used.			
	6	CD unit claw release detection (Q965)signal	FRD	J905-6	1: Released.
AC1	7	CD unit claw release detection (Q966/ Q967)signal	$\overline{\text{CLRD}}$	J905-9	0: Both front and rear released.
	0	Manual feed door dection (MS902) signal	MFD0	J903-5	0: Manual feed dppr open.
	1	CD unit move-out switch (SW902) signal	$\overline{\text{SELECT}}$	J906-4	0: SW902 ON
	2	CD unit move-out switch (901) signal	$\overline{\text{EJECT}}$	J906-3	0: SW901 ON
	3 4 5 6 7	For factory adjustmant.		J910-1 J910-2 J910-3 J910-4 J910-5	
AC2	0	Communication with copier.	TXD	J907-8	
	1		RXD	J907-7	
	2	Manual feed pick-up start signal	$\overline{\text{MFON}}$	J907-1	0: Manual feed pickup start.
	3	Horizontal move moter (M902) clock	HMCLK	J909-9	Alternates beteem '1' and'0' while in rotation.
	4	Vertical move motor (M901) down signal	VMDWN	—	1: M901 rotates in ascent direction.
	5	Vertical move motor (M901) up signal	VMUP	—	1: M901 rotates in ascent direction.
	6	Vertical move motor (M901) brake signal	VMBK	—	1: M901 braked.
	7	CD unit release detection (Q968) signal	$\overline{\text{CRD}}$	J905-11	0: Released.

Table 3-25A

CD Unit changer

Address	bit	Signal	Notation	Jack No.	Remarks
AC3	0	Cd unit vertical move home position detection (Q963) signal	$\overline{VHP}$	J904-B13	1: At home position
	1	Cd unit horizontal move home position detection (Q961) signal	$\overline{HHP}$	J904-B10	0: At home position
	2	Cd unit horizonral move detection right (Q962) signal	$\overline{HRP}$	J904-A13	0: CD unit detected.
	3	Cd unit horizontal move detection left (Q964) signal	$\overline{HLP}$	J904-A16	0: CD unit detected.
	4	Color toner signal 1	CT1	J908-3	See Table 3-400. in the SERVICE MANUAL.
	5	Color toner signal 2	CT2	J908-4	
	6	color toner signal 3	CT3	J908-5	
	7	CD unit door detection (MS901) signal	—	—	'1' when MS901 OFF, and 24V DC cut.
AC4	0	Vertical motor lock release solenoid (SL 901) drive signal	$\overline{VMLSD}$	J904-A2	0: SL901 ON
	1	CD unit move soleniod (SL 906) drive signal	$\overline{FSD}$	J904-B2	0: SL906 ON
	2	CD unit move-out clutch (SL902) drive signal	$\overline{FOCD}$	J904-B16	0: SL902 ON
	3	CD unit move release soleniod (SL 907) drive signal	$\overline{FRSD}$	J904-A6	0: SL907 ON
	4	CD unit move release soleniod (SL902) drive signal	$\overline{CRSD}$	J904-A4	0: SL902 ON
	5	Manual feed switch solenoid (SL903) drive signal	$\overline{MFSD}$	J904-B4	0: SL903 ON
	6	CD unit move-in clitch (CL901) drive signal	$\overline{FICD}$	J904-A8	0: SL901 ON
	7	Not used.			
AC5	0	CD unit changer control panel LED ON signal	$\overline{LED\text{-}DRV}$	J906-12	0: LED ON
	1		$\overline{LED\text{-}BR}$	J906-11	
	2		$\overline{LED\text{-}G}$	J906-10	
	3		$\overline{LED\text{-}BL}$	J906-9	
	4		$\overline{LED\text{-}R}$	J906-8	
	5		$\overline{LED\text{-}L}$	J906-7	
	6		$\overline{LED\text{-}M}$	J906-6	
	7		$\overline{LED\text{-}U}$	J906-5	

Table 7-25B

F. Adjustment Mode (✳3✳)

Select the desired screen using the △ and ▽ keys.

- Pressing the density key allows the items to be selected in groups of five.
- Enter the settings using the numeric keypad or the ENLARGE/REDUCE key.
- Reverse the +/– using the ID key.
- Press the OK key to store the settings; the settings must be within the ranges given.

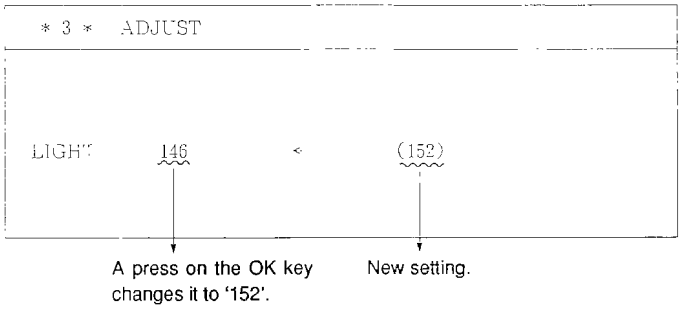

Figure 7-12 ADJUST Screen

Item	Adjustment	Range	Remarks
LIGHT_BK	adjusts light intensity (copy density 5, applies to both manual and AE)	80 to 215	A higher setting lowers the copy density; after the adjustment, be sure to execute 'CCD-LAMP' (✳4✳); unit, 0.14 V.
LIGHT_R	corrects intensity for red erasing	–127 to +127	A higher setting lowers the copy density.
AE_SLOP	AE slope	0 to 255	A higher setting lowers the copy density of newspapers.
REGIST	adjusts leading edge margin (registration roller ON timing)	0 to 255	A higher setting delays the registration roller ON timing, thereby increasing the leading edge margin; unit, 0.48 mm.
LE_BLANK	adjusts leading edge non-image width (laser exposure OFF timing)	1 to 255	A higher setting delays the laser exposure OFF timing, thereby increasing the leading edge non-image width; unit, 0.127 mm.

Table 7-26A

Item	Adjustment	Range	Remarks
SI_BLANK	adjusts side non-image width (laser ON/OFF timing)	0 to 255	A higher setting decreases the non-image width at the front, thereby increasing the non-image width at the rear; unit, 0.127 mm.
BRAKE_SC	adjusts scanner stop position (scanner brake ON timing)	1 to 50	A higher setting moves the stop position to the left; unit, 2 ms.
GRID_N	adjusts grid bias	0 to 63	A higher setting (closer to 63) increases the bias (closer to –960 V), thereby increasing the copy density.
GRID_P	adjusts grid bias for photo mode		
BIAS_N	adjusts developing bias (DC component) for black copy	0 to 63	A higher setting (closer to 63) increases the bias (closer to –500 V), thereby decreasing the copy density.
BIAS_C	adjusts developing bias (DC component) for color copy		
BIAS_CCD	corrects developing bias (DC component) for formation of latent images y laser	–32 to +32	
BIAS_MKR	corrects developing bias (DC component) for formation of analog latent images with red filter while reading by CCD		
TRAN_1	adjusts transfer current	0 to 63	A higher setting (closer to 63) increases the current.
TRAN_2	adjusts transfer current for 2nd side of overlay/two-sided copy		
TRAN_C	adjusts transfer current difference for color copy		
SEP_1	adjusts separation current	0 to 63	A higher setting (closer to 63) increases the current.
SEP_2	adjusts separation current for 2nd side of overlay/two-sided copy		
CHARACTE	adjusts thickness of characters	0 to 4	A higher setting increases the width of characters in the add-on mode.
RED THICK	adjustment of red recognition level	–8 to +8	Increasing the setting lessens the possibility of erroneous detection of red. However, fine red lines do not reproduce well.

Table 7-26B

Item	Adjustment	Range	Remarks
SHADE	adjusts the size of shading dots for highlight mode	0 to 4	A higher setting increases the shading dots in the highlight mode.
SCREEN	adjusts the size of shading dots on screen	0 to 4	A higher setting increases the shading dots in the screen mode.
BOOK_ERA	adjusts book frame erasing width	1 to 100	A higher setting increases the erasing width; unit, 1 mm.
AD_P	adjusts position of standard add-on (memo, number, date)	1 to 50	A higher setting moves the output to the center; unit, 1 mm.
AD_A	adjusts frame of standard add-on (memo, number, date)	1 to 50	A higher setting increases the erasing width; unit; 1 mm.
OL2_XM_S	corrects scanner vertical repro ratio for 2nd side of small-size paper overlay/two-sided copy	–127 to +127	A higher setting increases the scanner vertical repro ratio; unit, 0.1 %. (See p. 2-17.) Small size: A4, B5, A3, LTR, STMT Large size: B4, A4-R, B5-R, LTR-R, 11" X 17", LEGAL
OL2_XM_L	corrects scanner vertical repro ratio for large-size overlay copy	–127 to +127	
LSR_ORGN	adjusts laser scanning origin	–127 to +127	for factory.
CCD_ORGN	adjusts CCD read origin	–127 to +127	for factory.
LSR_X_D	corrects laser erase sub scanning (DIRECT)	–8 to +7	A higher setting advances the laser ON timing in sub scanning direction; see p. 2-18.
LSR_Y_D	corrects laser erase main scanning (DIRECT)	–127 to +127	A higher setting advances the laser ON timing in main scanning direction; see p. 2-18.
LSR_YM_D	corrects laser erase main scanning repro ratio (DIRECT)	–127 to +127	A higher setting increases the repro ratio in main scanning direction; see p. 2-18.
LSR_X_R	corrects laser erase sub scanning (REDUCE)	–8 to +7	A higher setting advances the laser ON timing in sub scanning direction; see p. 2-18.
LSR_Y_R	corrects laser erase main scanning direction (REDUCE)	–127 to +127	A higher setting advances the laser ON timing in main scanning direction; see p. 2-18.

Table 7-26C

Item	Adjustment	Range	Remarks
LSR_YM_R	laser erase main scanning repro ratio (REDUCE)	–127 to +127	A higher setting increases the repro ratio in main scanning direction; see p. 2-18.
LSR_X_E	laser erase sub scanning (ENLARGE)	–8 to +7	A higher setting advances the laser ON timing in sub scanning direction; see p. 2-18.
LSR_Y_E	corrects laser erase main scanning (ENLARGE)	–127 to +127	A higher setting advances the laser ON timing in main scanning direction; see p. 2-18.
LSR_YM_E	corrects laser erase main scanning repro ratio (REDUCE)	–127 to +127	A higher setting increases the repro ratio in main scanning direction; see p. 2-18.
BIAS_BL	adjusts developing bias (DC component) difference for blue copy	–32 to +32	Sets the difference for each color in relation to BIAS-C (red).
BIAS_GR	adjusts developing bias (DC component) difference for green copy		
BIAS_BR	adjusts the developing bias (DC component) difference for brown copy		
SZ1_ADJ	for factory.		
SZ2_ADJ			
SZ3_ADJ			
BK_BELT	for factory only.		
DOC_STOP	adjusts document stop position (for RF)	–7 to +7	A higher setting moves the document to the right; see p. 2-21. (unit: 0.33 mm)
IP_PCB	adjusts at the time of replacing the image processor PBC	0 to 255	When the image processor PCB and the DC controller PCB are replaced, enter the version number indicated on the image processor PCB.
MKR_TH	red recognition level adjustment in freehand editing mode	0 to 4	Increasing the setting lessens the possibility of erroneous detection of red. However, lighter areas tend to be hard to recognize.

Table 7-26D

G. Function/Inspection Mode (✱4✱)

- Select the desired screen using the ▽ key and △ key.
- Press the OK key to execute the operation; a second press stops the operation.

The operation under each item must be executed in the standby state only.

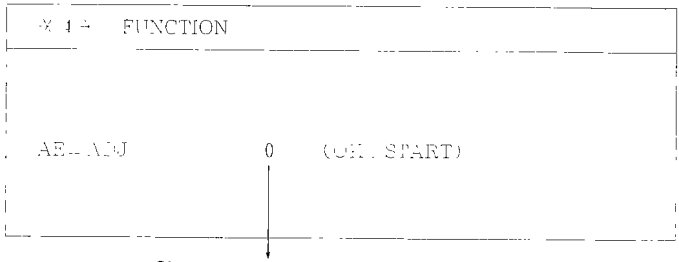

Changes to '1' during execution.

Figure 7-13 FUNCTION Screen

Item	Adjustment	Remarks
DEV_REL	engages black developing assembly/ CD unit	A press on the OK key releases the black developing assembly; thereafter, returns to '0' automatically.
TONER_S	supplies black toner at time of installation	A press on the OK key supplies black toner to the black developing assembly from the hopper (7 min max.); thereafter, stops automatically.
CD_ROT	idle rotation mode for CD unit (at time of installation) 00 ← toner detection CD_ROT:0 (if '1', toner present)	A press on the OK key causes the main motor to rotate, thereby stirring the developer inside the CD unit; 3 min later, stops automatically. Do NOT execute unless starter has been replaced.
LCD_CHK	missing dot check mode (LCD)	The white and black screens are brought up 1 sec each.
ERROR	clear mode for E000, E001, E002, E004, and E020; clear mode for 'WASTE TONER FULL' message	To clear the error code, press the OK key so that the indication is '1'. The 'WASTE TONER FULL' message will not disappear except by this mode.
SCAN LAMP	checks scanning lamp ON	A press on the OK key causes the scanning lamp to go ON; if the lamp is kept ON for 40 sec or more, the error ON sensor circuit causes the power switch to go OFF.

Table 7-27A

Item	Adjustment	Remarks
HPPR_MTR	checks hopper motor operation; No. 3 registration roller clutch operation	A press on the OK key causes the main motor, hopper motor, and No. 3 registration roller clutch to go ON. Do not keep it ON too long, or toner may overflow the black developing assembly.
DISP_LED	checks LED ON (control panel)	A press on the OK key causes the LEDs on the control panel to flash; another press causes them to go OFF.
LSR_MRR	checks laser/laser scanner motor operation; use for BD adjuustment	A press on the OK key causes the main motor, laser, and laser scanner motor to go ON. Turn them OFF within 10 sec to protect the photosensitive drum except for BD adjustment; see the P2-6.
LASER	adjusts	Adjust the laser warm-up time after replacement of the DC controller PCB or the laser unit. A press on the OK key activates automatic adjustment; see p. 2-20.
CCD_LAMP	adjusts analog processor PCB gain/offset	A press on the OK key activates automatic adjustment. □ ← CCD_LAMP After automatic adjustment, end 'CCD_LAMP'; if '1' through '3' is indicated, see the Image Adjustment Basic Procedure.
L_TEST1	outputs test pattern 1	Outputs a character pattern; see the figure 7-14.
L_TEST2	outputs test pattern 2	Outputs a grid pattern; see the figure 7-15.
L_TEST3	black latent image laser erase mode	Set a *black* document on the copyboard; a press on the OK key forms a black latent image on the photosensitive drum, which will be erased by the laser and output as a copy image. Use it to check the discrepancy in analog latent images.
L_TEST4	red latent image laser erase mode	Set a *black/red* document on the copyboard; a press on the OK key forms a black/red latent image on the photosensitive drum, which will be erased by the laser and output as a copy image. Use it to check the discrepancy in analog latent images and the red areas read by the CCD.
ADJ_PRMT_	adjustment mode (*3*) setting output	Use it to obtain hard copy of the settings made in the adjustment mode; see the figure 7-16.

Table 7-27B

Item	Adjustment	Remarks
IP_CHK	checks operation of image processor PCB	In response to a press on the OK key, the operation of the image processor PCB is checked, and the results are displayed; see p. 2-20. no indication: OK 1: PCB error 2: error in DC controller/IP harness
RAM_INIT	initializes RAM data	A press on the ID key initializes the RAM on the DC controller PCB; execute it only after replacement of the DC controller, and enter the values shown on the label (*3*; settings and others) once again and be sure to execute 'CCD-LAMP' (*4*) as well.

Table 7-27C

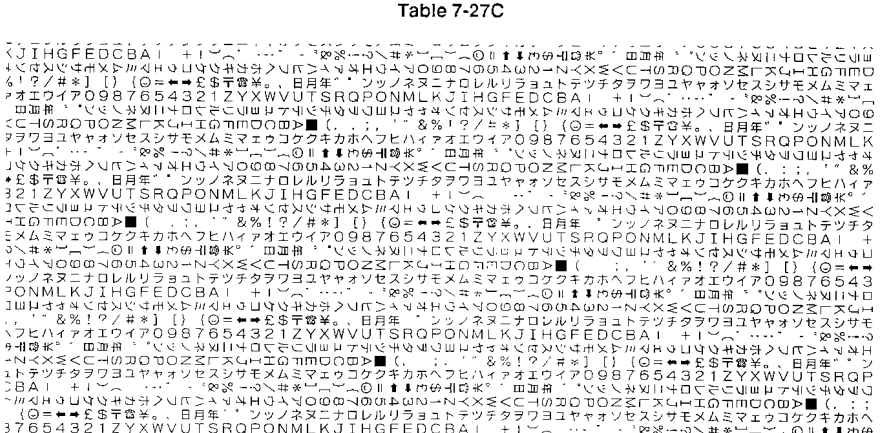

Figure 7-14 L_TEST 1

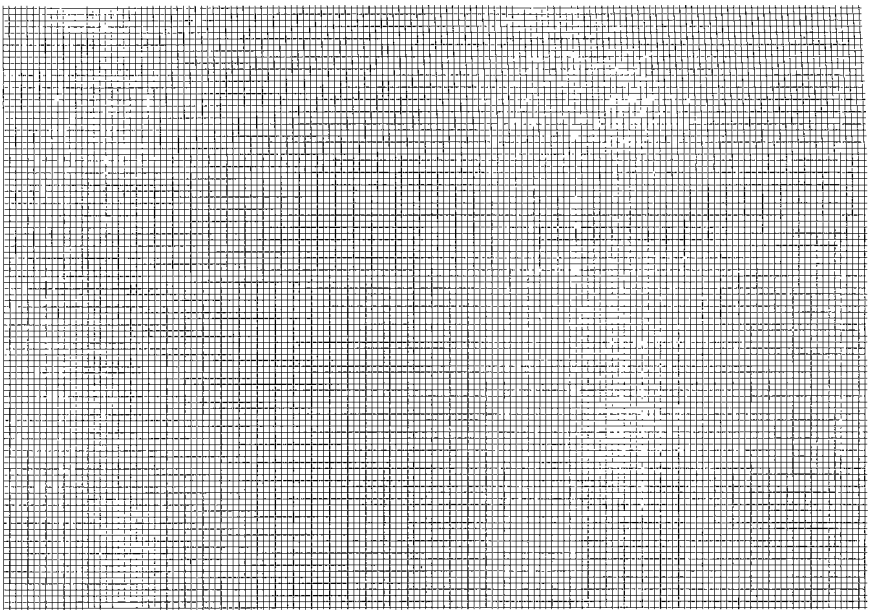

Figure 7-15 L_TEST 2

```
 -- ADJUST --                                  NO/ ID / COUNT
LIGHT-BK  180  REDTHICK     0
LIGHT-R     0  SHADE        3                   1/0000/     0
AE-SLONE   92  SCREEN       1                   2/0000/     0
REGIST    121  BOOK-ERA    10                   3/0000/     0
LE-BLANK   31  AD-P         8                   4/0000/     0
SI-BLANK  140  AD-A        14                   5/0000/     0
BLAKE-SC   20  OL2-XM-S     0                   6/0000/     0
GRID-N     40  OL2-XM-L-    8                   7/0000/     0
GRID-P     28  LSR-ORGN-   36                   8/0000/     0
                                                9/0000/     0

BIAS-N     24  CCD-ORGN-   62                  10/0000/     0
BIAS-C     25  LSR-X-D -    3                  11/0000/     0
BIASCCD     0  LSR-Y-D -   85                  12/0000/     0
BIASMKR     0  LSR-YM-D     2                  13/0000/     0
TRN-1      35  LSR-X-R      0                  14/0000/     0
TRN-2      30  LSR-Y-R   -127                  15/0000/     0
TRN-C       0  LSR-YM-R     0                  16/0000/     0
SEP-1      19  LSR-X-E      2                  17/0000/     0
SEP-2      18  LSR-Y-E   -127                  18/0000/     0
CHARACTE    2  LSR-YM-E     0                  19/0000/     0
                                               20/0000/     0
                                               21/0000/     0
                                               22/0000/     0
                                               23/0000/     0
                                               24/0000/     0
                                               25/0000/     0
```

Item Value

Figure 7-16 ADJ_PRNT

H. User Option Mode (✱5✱)

- Select the desired screen using the △ and ▽ keys.
- Change the settings using the numeric keypad.
- Press the OK key to store the settings.

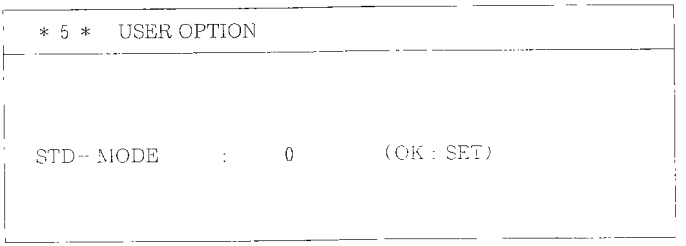

Figure 7-17 USER OPTION Screen

Item	Use	Description	Remarks
STD_MODE	sets the standard mode	allows automatic selection of modes in response to a press on the RESET key.	have the desired mode displayed, select the item, and press the OK key.
AUTO_CAS	enables/disables auto cassette change mechanism	when enabled, the mechanism automatically switches cassettes when the selected cassette runs out of paper during continuous copying; both cassettes must have paper of the same size. 1: disable 0: enable	
1_SORT	selects sort mechanism for 1st document	when enabled, sorting/grouping will be possible even when the document is a single-page document (RDF in use). 0: disable 1: enable	
BIND	selects image shift A or B	when enabled, a binding margin may be created on the 2nd side of the page when in the 'one-sided documents to two-sided copy' or 'two-sided document to one-sided copies' mode. 0 (A): enable 1 (B): disable	

Table 7-28A

Item	Use	Description	Remarks
MODE_INT	initializes to standard mode	Resets the data stored under 'STD-MODE' and under "USER OPTION' (✳5✳); after execution, the settings will be those stored at the factory.	Defaults: • DIRECT • auto paper selection • AE • 1 copy
SHUT_OFF	enables/disables auto shut-off mechanism	enables or disables the auto shut-off time (2 hr.). 0: enable 1: disable	
SIZE-DET	enables/disables size identification	enables or disables the document size identification mechanism. 0: enable 1: disable	
C_DENS	selects/de-selects color density adjustment mode	Use it to switch the color density adjustment mode. 0: execute color density mode. 1: execute color density mode at all times.	upon shipment: 0
DATE_TIM	enables/disables display of date/time	0: enably 1: disable	
DATE_SEL	selects mode of date display	enables selection of any of the following: if April 26, 0: 4/26 1: 26/4 2: APR/26	press '0', '1', or '2'; then, press the OK key.
DENS. IND	switches density indications (9/17)	selects indications by LED between 9 levels and 17 levels. 0: 9 levels 1: 17 levels	
OHP EDGE1 OHP EDGE2 OHP EDGE3 OHP EDGE4	prohibits the horizontal control mechanism for the No. 1 registration roller; this is to prevent a jam when OHP is fed from the cassette. (The horizontal registration paper edge sensor does not detect OHP.)	disables horizontal control of the No. 1 registration at time of pick-up (user option). 0: do not prohibit 1: prohibid	may differ between cassette holders; OHP_EDGE1 represents cassette 1.

Table 7-28B

Item	use	Description	Remarks
TRN_CHG	switches transfer output	switches the output of transfer current; use it when transfer faults occur in a high-temperature/humidity environment. 0: normal 1: increase by 50μA	
WARM_UP	switches wait time (warm-up time)	switches the target fixing temperatures (e.g., to shorten the wait period; Japanese models only). 0: shorter wait time (160°C) 1: longer wait time (190°C)	Do not use the mode; fixing failure may accur when the machine is switched ON in the morning.
WEB	switches cleaning belt drive solenoid (SL2) drive frequency	0: normal 1: twice normal	The cleaning belt drive solenoid, as a rule, is driven depending on the length of paper: if 216 mm or less, once; if 216 mm or more, twice.
US1 US2 UL1 UL2	stores size of universal cassette	stores the size of the paper used in the universal cassette, thereby enabling the use of the auto reproduction ratio selection mechanism.	LENGTH: paper feed direction WIDTH: front/rear direction

Table 7-28C

Position of Cassette Tabs (1: present)

	left			right
US1	1	0	0	0
US2	1	0	0	1
UL1	1	0	1	0
UL2	0	0	1	0

Note:
Coler copier of documents with limited images (E.G., stamps) made in the continuous copying mode tend to be light in density, and the color density adjustment is used to correct such a problem. The problem, however, is more or less absent in a low temperature/humidity environment, and keeping the mode OFF decreases color toner consumption.

I. Counter Mode (✱6✱)

- Select the desired screen using the △ and ▽ keys.
- A press on the CLEAR/STOP key while holding down the service mode switch (Figure 7-18) clears the respective counter reading.

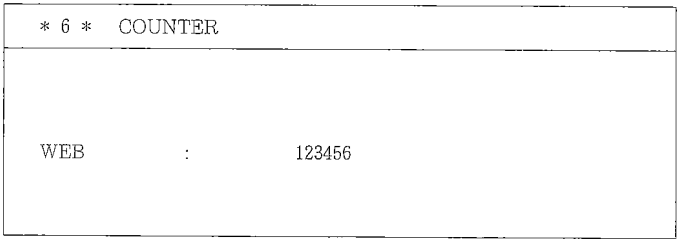

Figure 7-18 COUNTER Screen

Item	Display (max.)	Description
COLOR	color copy tonal copy counter	999999 (returns to 000000 thereafter)
RED	red copy counter	
BLUE	bule copy counter	
GREEN	green copy counter	
BROWN	brown copy counter	
WEB	number of times cleaning belt drive solenoid has gone ON*	
MANUAL	number of manual feed pick-ups	
CST_1	number of pick-ups from cassette 1	
CST_2	number of pick-ups from cassette 2	
CST_3	number of pick-ups from cassette 3	
CST_4	number of pick-ups from cassette 4	
TWO_SIDE	number of pick-ups from lower feeder assembly (two-sided copy)	
OVERLAY	number of pick-ups from lower feeder assembly (overlay copy)	
DF	number of document pick-ups from RDF	

* At the 300,000th copy, indicates the 'BELT SHORT' message on the display; reset the counter to '000000' to clear the message.

Table 7-29

CHAPTER 8 SELF DIAGNOSIS

The copier is equipped with a self diagnostic mechanism that checks the condition of the machine (sub-systems). The mechanism is initiated by the microprocessor on the DC controller PCB and, if an error is identified, displays a corresponding error code.

<Copier self diagnosis>

Code	Cause	Description
E000	• Thermistor (TH1; contact) • SSR (faulty) • DC controller (faulty)	The output of TH1 does not reach 50°C within 90 sec after the machine has been switched ON; see Notes i. and ii.
E001	• Thermistor (TH1; short circuit) • SSR (faulty) • DC controller PCB (faulty)	The output of TH1 exceeds 223°C; see Notes i. and ii.
E002	• Thermistor (TH1; contact) • Heater (H1; open circuit) • Thermoswitch (TS1; activation) • SSR (faulty) • DC controller (faulty)	The output of TH1 does not reach 190°C within 6 min after it has reached 50°C; see Notes i. and ii.
E003		The output of TH1 drops below 40°C after wait-up; see Notes i. and ii.
E004	• SSR (short circuit; error) • Heater (H1; open circuit) • Thermoswitch (TS1; activation)	• A short circuit is detected in SSR during the heater OFF period immediately after power-on. • A short circuit is detected in SSR during the heater OFF period at 200°C or more.
E010	• Main motor (M1; faulty) • Motor driver PCB (faulty) • DC controller PCB (faulty)	The PLL lock signal is not received for 0.5 sec after the main motor drive signal has been generated.
E020	• Hopper motor (M10; faulty) • Developing assembly toner sensor (Q17; faulty) • Hopper toner sensor (Q18; faulty) • DC controller PCB (faulty)	• The black toner supply signal (BTSP) and the black toner out signal (BTEP) remain '1' for 3 hr during copying operation (accumulative). • The black toner supply signal (BTSP) remains '0' and the black toner out signal (BTEP) remains '1' for about 20 sec during copying operation (accumulative).

Table 8-1A

<Copier self diagnosis>

Code	Cause	Description
E030	• Counter (CNT1; open circuit) • DC controller PCB (faulty)	Checks are made immediately before the counter goes ON and OFF: normal if '0' when ON; normal if '1' when OFF.
E080	• CD unit changer controller PCB (faulty) • DC controller PCB (faulty) • Wiring (faulty) • 5 VDC power supply to CD unit changer controller PCB (faulty)	An error has occurred in the communication between the CD unit changer controller PCB and the DC controller PCB.
E081	• Vertical drive motor (M901) • CD unit changer controller PCB • Vertical motor lock release solenoid (SL901; faulty)	The execution has taken 4 sec or more for a single pulse of the encoder output while the motor is ON.
E082	• Horizontal drive motor (M902) • Motor driver PCB (faulty) • CD unit horizontal home position sensor (Q961; faulty) • CD unit changer controller PCB (faulty) • CD unit (feeding faulty) • CD unit release sensor (Q968; faulty)	• The execution has taken 2 sec or more for a single pulse of the encoder output while the motor is ON. • The CD unit horizontal home position sensor (Q961) does not go ON or OFF within a specific time. • The CD unit does not reach the copier connector within a specific time when it is brought inside the copier.
E083	• CD unit horizontal drive sensor right (Q962; faulty) • CD unit changer controller PCB (faulty)	The sensor goes ON while the compartment is moving vertically.
E084	• CD unit horizontal drive sensor left (Q964; faulty) • CD unit changer controller PCB (faulty)	The sensor goes ON while the compartment is moving vertically.

Table 8-1B

<Copier self diagnosis>

Code	Cause	Description
E085	• CD unit feeder release sensor (Q965; faulty) • CD unit feeder release solenoid (SL907; faulty) • Gear release spring (faulty)	• The sensor goes ON when the compartment is moving vertically. • The sensor does not detect the gear disengagement after the CD unit has been moved left and right 20 times.
E086	• CD unit claw release sensor (Q966, Q967; faulty) • CD unit claw release solenoid (SL902; faulty)	The sensor does not detect the engagement of the claws after the CD unit has been moved left and right 20 times.
E089	• CD unit changer (faulty operation)	The CD unit changer does not complete operation within 1 min after it has started to operate.
E 100	• Laser unit (faulty) • BD mirror (faulty) • Optical fiber (faulty) • Laser driver PCB (faulty) • Image processor PCB (faulty) • DC controller PCB (faulty)	• The BD signal is not generated within 2 sec after the laser has gone ON. • The frequency of BD signals has suffered a discrepancy.
E 110	• Laser scanner motor (LM; faulty) • Laser scanner driver PCB (faulty) • DC controller PCB (faulty)	• The speed of the laser scanner motor does not reach the specified speed within 2, 3 sec after the COPY START key has been pressed. • The motor fails to maintain the specified speed for 2 sec or more after it has reached a specific speed.
E 140	• Laser unit (faulty) • Laser driver PCB (faulty) • DC controller PCB (faulty) • Laser adjustment (not executed in advance)	The laser power does not reach the specified value within 0.4 sec after the laser has gone ON.

Table 8-1C

<Copier self diagnosis>

Code	Cause	Description
keys on control panel locked (E202); see Note iii.	• Scanner home position sensor (Q8; faulty) • Scanner motor (M2; faulty) • Motor driver PCB (faulty) • DC controller PCB (faulty)	The scanner does not return to the home position within 5 sec after it has started to move.
E203	• Scanner motor (M2; faulty) • Scanner cable (faulty) • Motor driver PCB (faulty) • DC controller PCB (faulty)	The PLL lock signal is not received from the motor driver for 0.4 sec after the scanner motor drive signal has been generated.
keys on control panel locked (E204); see Note iii.	• Scanner document leading edge sensor (Q9; faulty) • Motor driver PCB (faulty) • DC controller PCB (faulty)	The scanner document leading edge signal is not generated within 0.5 sec after the scanner has started forward.
E210	• Lens home position sensor (Q7; faulty) • Lens motor (M3; faulty) • Lens cable (faulty) • DC controller PCB (faulty)	• The lens home position signal (LHP) is not generated within a specific period of time after the machine has been switched ON. • The lens home position signal (LHP) remains ON more than a specific period of time.
E223	• Filter drive motor (faulty) • Filter home position sensor (faulty) • DC controller PCB	• The filter home position signal (FILHP) is not generated within a specific time when the filter returns to the home position. • The filter home position signal (FILHP) is generated for more than a specific time when the filter moves from the home position.
E240	• DC controller PCB (faulty)	An error has occurred in the communication between the main CPU (Q197) and the sub CPU (Q172).
E660	• IC card unit (faulty) • IC card (faulty)	The input signal is not received within a specific time after the output signal is sent to the IC card unit.
E710	• DC controller PCB (faulty)	The IPU (Q169) cannot be initialized when the power switch is turned ON.

Table 8-1D

<Copier self diagnosis>

Code	Cause	Description
E711	• DC controller PCB	An IPU communication error has been detected twice or more within 1 sec.
E714	• DC controller PCB (faulty) • IC card unit harness (faulty)	The communication error with the IC card unit cannot be cleared.
E800	• Power-off circuit (SW1 relay drive circuit; faulty)	An open circuit is detected.

Table 8-1E

Note:

i. When an error has occurred, the copier may be reset by switching it OFF once and then ON; this, however, does not apply to E000, E0001, E002, E003, or E020.
To reset the copier, execute 'ERROR' in the service mode (✳ 4 ✳), and press the OK key; this consideration is made to prevent the user from carelessly resetting the machine without realizing possible faults in the thermistor, causing the fixing rollers to overheat and become damaged.

ii. E000, E001, E002, E003, E004, and E020 are displayed upon detection of respective errors without delay; the machine is shut OFF about 20 sec later.

iii. E202 and E204 can be checked under 'ERR' in the service mode (✳ 1 ✳).

<RDF>

Code	Cause	Description
E401	• Pick-up motor (faulty)	The shaft of the pick-up motor (M1) is equipped with a flag which blocks the pick-up roller sensor (S5); S5 does not go ON/OFF twice or more within 1 sec.
E402	• Belt motor (faulty)	The number of belt clock pulses for 200 ms is below the specified value.
E403	• Feeder motor (faulty)	The number of belt clock pulses for 200 ms is below the specified value.
E411	• Document sensor faulty	The output of the sensor is 2.3V or more in the absence of paper.
E712	• DC controller PCB (faulty) • DF controller PCB (faulty) • DF cable (faulty)	The communication error with the RDF cannot be cleared.

Table 8-2

Note
When the machine is switched OFF and then ON in response to an error in the 400's, self diagnosis will be executed once again, and the message 'FEEDER FAULT' will be indicated; copies may still be made using the feeder as the copyboard cover.

<Sorter/Stapler and Sorter/Stapler Folder>

Code	Description		
	Stapler Sorter/Sorter-B1	Stapler folder	Sorter-A1
E500	An error has occurred in the communication with the copier.	An error has occurred in the communication with the copier.	Communication error between the sorter and copier.
E510	The clock signal from the feed motor is not received for 250 ms or more.	The clock signal is not received for 500 ms or more while the feeder motor drive signal is generated.	—
E512	—	The clock signal is not received for 500 ms or more while the No. 1 delivery motor drive signal is generated.	—
E514	—	The clock signal is not received for 500 ms or more while the No. 2 delivery motor drive signal is generated	—
E520	—	• The upper limit sensor (MS6) does not go ON within 8 sec after the stack motor drive signal has been generated. • The clock signal is not received for 500 ms or more while the stack motor drive signal is generated.	—
E530	The home position sensor (P17) does not go OFF after the guide bar swing motor drive signal has been generated for 2560 pulses.	The stapler guide plate home position sensor (PI1) does not go OFF within 4 sec after the staple guide plate drive motor drive signal has been generated.	—

Table 8-3A

Code	Description		
	Stapler Sorter/Sorter-B1	Stapler folder	Sorter-A1
E531	• The stapler unit swing sensor (MS9) does not go ON within 500 ms after the Stapler unit swing motor drive signal has been generated. • The sensor does not go OFF within 1000 ms after it has gone ON.	• The stapling home position sensor (MS4) does not go OFF within 300 ms after the staple motor drive signal has been generated. • The sensor does not go ON within 800 ms after the reversal signal has been generated in response to a staple jam.	—
E535	—	• The swing unit home position sensor (PI7) does not go OFF within 300 ms after the swing unit drive motor drive signal has been generated. • The sensor does not go ON within 1 sec after it has gone OFF.	—
E540	• The lead cam home position sensor (PI2) does not go OFF within 2000 ms after the bin shift motor drive signal has been generated. • The sensor does not go ON within 2000 ms after it has gone OFF.	• The stack tray shift width sensor (MS8) does not go OFF within 500 ms after the shift motor drive signal has been generated. • The sensor does not go ON within 1 sec after it has gone ON.	The lead cam home position sensor does not go OFF within 0.5 second after the bin motor drive signal has been output.
E541	—	—	The lead cam home position sensor does not go ON with 1.0 second after the lead cam position sensor has gone OFF.

Table 8-3B

Note:
When the machine is switched OFF and then ON in response to an error in the 500's except 'E500', self diagnosis will be executed once again, and the message 'SORTER AT FAULT' will be indicated; copies may still be made by detaching the sorter (sliding it to the left while holding the grip.

<Image Editing Unit>

The editor is equipped with a self diagnostic mechanism that, upon detection of an error, flashes LEDs to indicate the type of the error.

	Pattern	Cause	Description
1	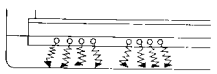	• Harness (open circuit, disconnection) • Editor controller (faulty)	upon power-on
2	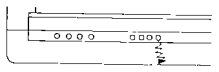	• Cable (between plane-shaped resistor and editor controller; open circuit, disconnection)	at power-on
3	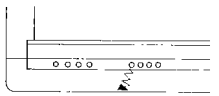	• Plain-shaped resistor (short circuit; more than specific pressure is imposed on editor input face at time of power-on)	at power-on
4	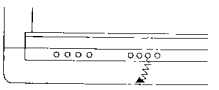	• Data communication (error)	at all time; communication absent 200 ms or more

Table 8-4

The LEDs are flashed ON and OFF at intervals of 1 sec.

The machine may be reset by turning it OFF and then ON if for patterns 1 and 4.

The machone will be reset upon removal of the cause if for patterns 2 and 3.

1. GENERAL TIMING CHART

A4, 2 Copies, Pick-Up from 1st Cassette, One-Sided Copy

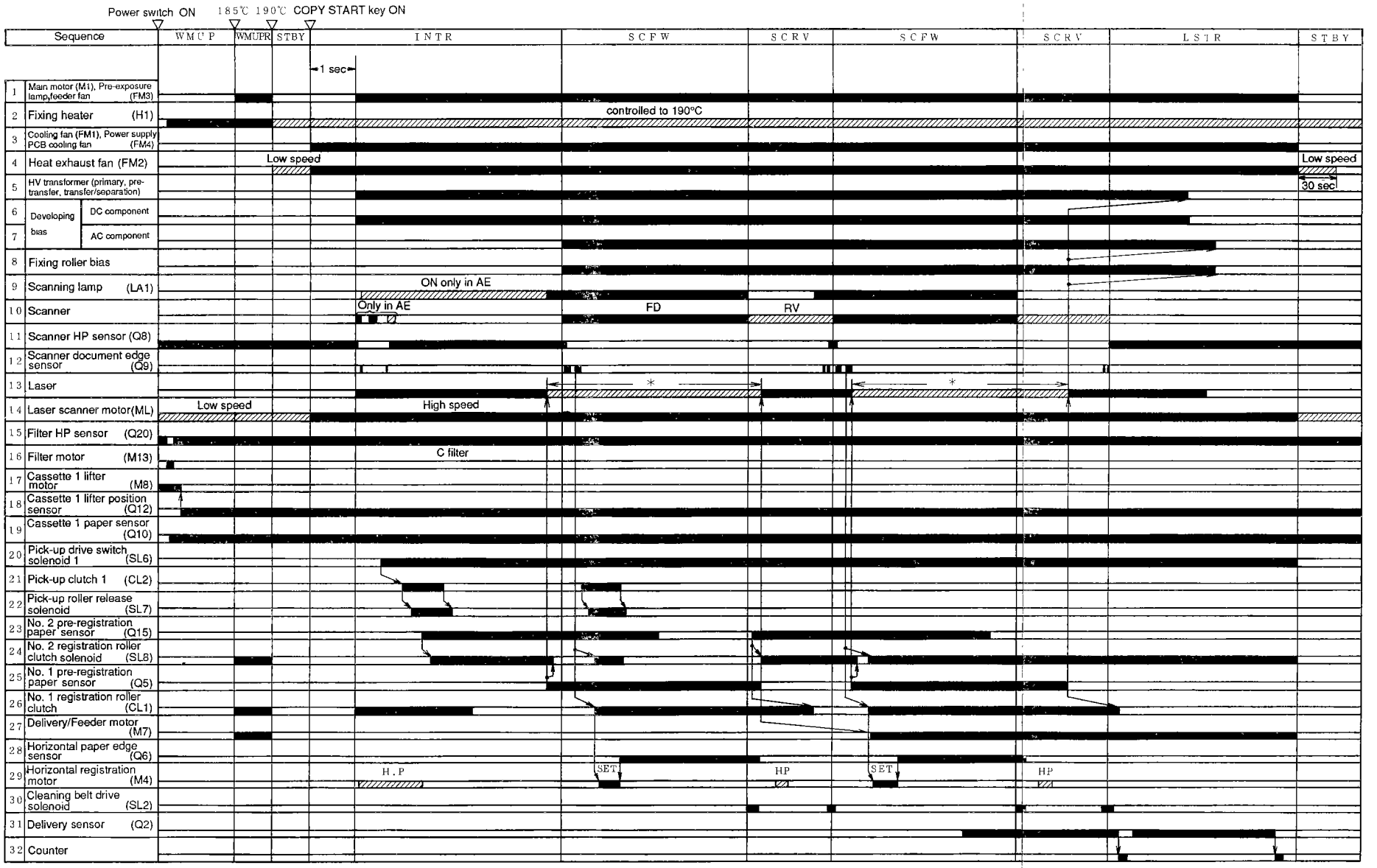

*The laser ON control varies depending on the copy mode.

A4, 2 Copies, Pick-Up from 1st Cassette, Two-Sided Copy
(1st; black copy, 2nd; mono-color copy, Red ellimination mode)

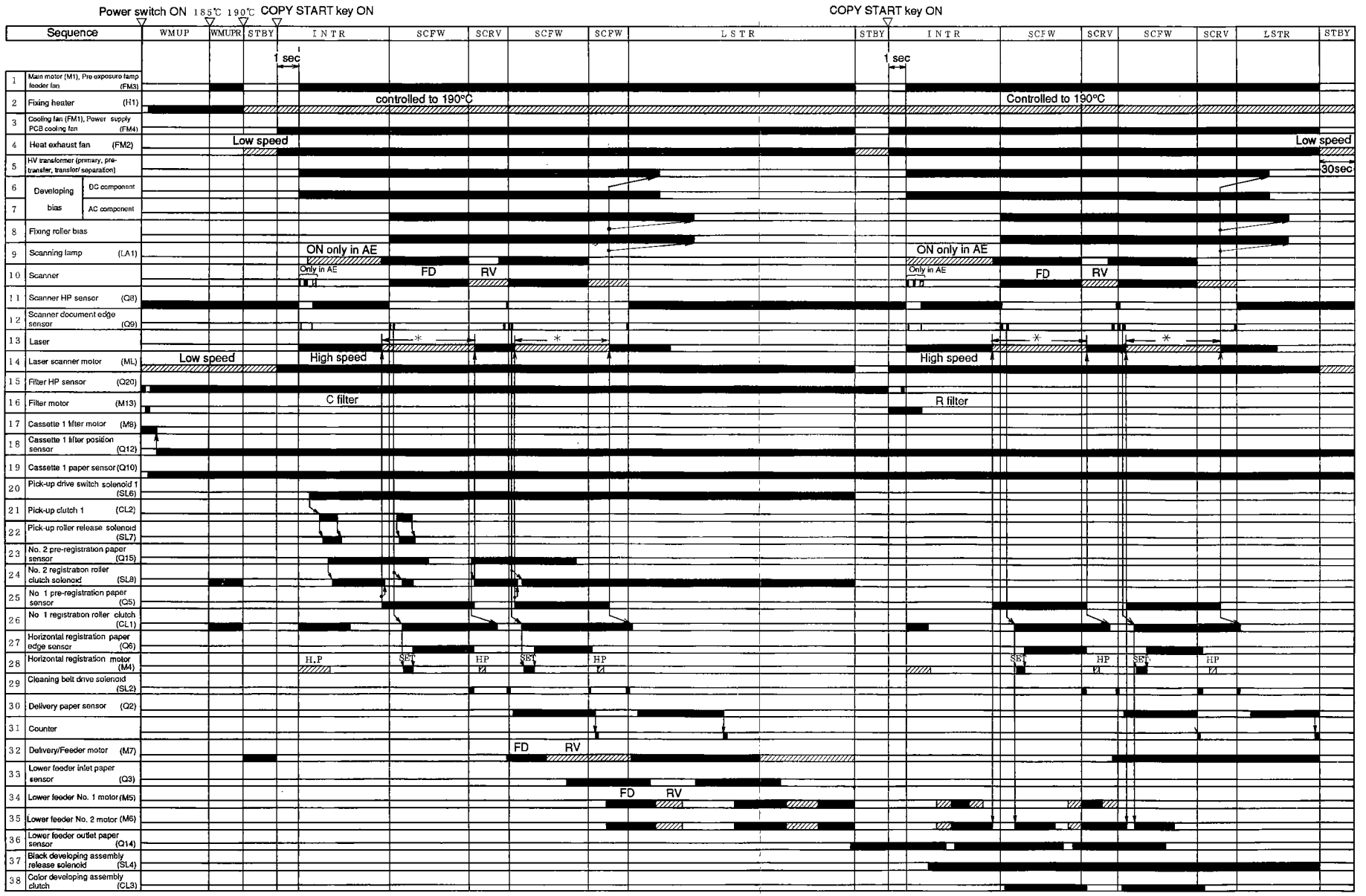

*The laser ON control varies depending on the copy mode.

1. SIGNALS/COMMANDS

ADSD	ADD-ON SHUTTER SOLENOID DRIVE command
BD	BEAM DETECT signal
BDRSD	BLACK DEVELOPING UNIT RELEASE CLUTCH SOLENOID DRIVE command
BTEP	BLACK TONER OUT signal
BTSP	BLACK TONER SUPPLY signal
BUSY	BUSY signal
C1LTMD	CASSETTE 1 LIFTER MOTOR DRIVE command
C2LTMD	CASSETTE 2 LIFTER MOTOR DRIVE command
C3LTMD	CASSETTE 3 LIFTER MOTOR DRIVE command
C4LTMD	CASSETTE 4 LIFTER MOTOR DRIVE command
C1LTP	CASSETTE 1 LIFTER POSITION signal
C2LTP	CASSETTE 2 LIFTER POSITION signal
C3LTP	CASSETTE 3 LIFTER POSITION signal
C4LTP	CASSETTE 4 LIFTER POSITION signal
C1PD	CASSETTE 1 PAPER DETECTION signal
C2PD	CASSETTE 2 PAPER DETECTION signal
C3PD	CASSETTE 3 PAPER DETECTION signal
C4PD	CASSETTE 4 PAPER DETECTION signal
CBCC	COPYBOARD COVER CLOSED signal
CCD	CONTROL COUNTER DRIVE command
CCDT	CONTROL COUNTER DETECTION signal
CDUDC	CD UNIT DOOR CLOSE signal
CDVLD	COLOR DEVELOPING UNIT CLUTCH DRIVE command
CLBSD	CLEANING BELT DRIVE SOLENOID DRIVE command
CLRD	CD UNIT CLAW RELEASE DETECT signal
CNT1D	COUNTER 1 DRIVE command
CNT2D	COUNTER 2 DRIVE command
CRD	CD UNIT RELEASE DETECT signal
CRGA	CROSS FEED REGISTRATION MOTOR DRIVE PULSE command A
CRGB	CROSS FEED REGISTRATION MOTOR DRIVE PULSE command B
CRGSTB	CROSS FEED REGISTRATION MOTOR STROVE signal
CRSD	CD UNIT CLAW RELEASE SOLENOID DRIVE command
CT1	COLOR TONER signal 1
CT2	COLOR TONER signal 2
CT3	COLOR TONER signal 3
CTEP1	COLOR TONER OUT signal 1
CTEP2	COLOR TONER OUT signal 2
CTLON	COLOR TONER LIGHT ON command
CTSSD	COLOR TONER SUPPLY SOLENOID DRIVE command
DFA	DELIVERY FEED MOTOR DRIVE PULSE command A
DFB	DELIVERY FEED MOTOR DRIVE PULSE command B
DKMD	DECK MOTOR DRIVE command
DLEDD1	DOCUMENT SIZE DETECTION LED DRIVE command 1
DLEDD2	DOCUMENT SIZE DETECTION LED DRIVE command 2
DLEDD3	DOCUMENT SIZE DETECTION LED DRIVE command 3
DSIN	DF SERIAL INPUT signal
DSOUT	DF SERIAL OUTPUT signal
DSZ1	DOCUMENT SIZE DETECTION signal 1 (analog)
DSZ2	DOCUMENT SIZE DETECTION signal 2 (analog)
DSZ3	DOCUMENT SIZE DETECTION signal 3 (analog)
EJECT	CD UNIT EJECT KEY signal
FICD	CD UNIT FEED IN CLUTCH DRIVE command
FILHP	FILTER HOME POSITION signal
FM1D	SCANNER INTAKE FAN (FM1) DRIVE command
FM2D	EXHAUST FAN (FM2) DRIVE command
FM3D	FEED FAN (FM3) DRIVE command
FM4D	POWER SUPPLY PCB COOLING FAN (FM4) DRIVE command
FM4ON	POWER SUPPLY PCB COOLING FAN (FM4) ON signal
FMA	FILTER MOTOR DRIVE PULSE A
FMB	FILTER MOTOR DRIVE PULSE B
FOCD	CD UNIT FEED OUT CLUTCH DRIVE command
FRD	CD UNIT FEED RELEASE DETECT signal
FRSD	CD UNIT FEED RELEASE SOLENOID DRIVE command
FRST	FIXING ROLLER SURFACE TEMPERATURE signal (analog)
FSD	CD UNIT FEED SOLENOID DRIVE command
HHP	CD UNIT HORIZONTAL FEED HOME POSITION signal
HLP	CD UNIT HORIZONTAL FEED LEFT POSITION signal
HMCLK	HORIZONTAL FEED MOTOR CLOCK signal
HMD	HORIZONTAL FEED MOTOR DRIVE command
HMD	HOPPER MOTOR DRIVE command
HMFO	HORIZONTAL FEED MOTOR FEED OUT command
HRP	CD UNIT HORIZONTAL FEED RIGHT POSITION signal
HTRD	HEATER DRIVE command
HVAC	AC TRANSFORMER DRIVE command
HVBAC	AC DEVELOPING BIAS DRIVE command
HVBDC	DC DEVELOPING BIAS CONTROL command (analog)
HVGB	GRID BIAS CONTROL command (analog)
HVPR	PRIMARY CORONA CURRENT CONTROL command (analog)
HVPT	PRE-TRANSFER CORONA CURRENT CONTROL command (analog)
HVSP	SEPARATION CORONA CURRENT CONTROL command (analog)
HVTR	TRANSFER CORONA CURRENT CONTROL command (analog)
LAON	SCANNING LAMP ON signal
LD	LASER DIODE DRIVE command (analog)
LDATA	LASER DATA signal
LDDE	LEFT DECK DETECT command
LHP	LENS HOME POSITION signal
LINT	LIGHT INTENSITY signal (analog)
LLDR	LEFT LIFTER CLUTCH DRIVE command
LLPDE	LEFT LIFTER POSITION DETECT signal
LLUL	LEFT LIFTER UPPER LIMIT signal
LMC	LASER MOTOR CONTROL command
LMCLK	LASER MOTOR CLOCK signal
LMD	LASER MOTOR DRIVE command
LMRDY	LASER MOTOR READY signal
LNA	LENS MOTOR DRIVE PULSE command A
LNB	LENS MOTOR DRIVE PULSE command B
LNSTB	LENS MOTOR STROVE signal
LPADE	LEFT PAPER DETECT signal
LPPDE	LEFT PAPER PATH PAPER DETECTION signal
LPPDR	LEFT PAPER CLUTCH DRIVE command
LPUDR	LEFT PAPER PICK-UP CLUTCH DRIVE command
LPURL	LEFT PAPER PICK-UP ROLLER RELEASE SOLENOID command
LRD	LAMP REGULATOR DRIVE command
LTDWN	LIFTER DOWN command
LF1A	LOWER FEED MOTOR 1 DRIVE PULSE command A
LF1B	LOWER FEED MOTOR 1 DRIVE PULSE command B
LF1STB	LOWER FEED MOTOR 1 STROVE signal
LF2A	LOWER FEED MOTOR 2 DRIVE PULSE command A
LF2B	LOWER FEED MOTOR 2 DRIVE PULSE command B
LF2STB	LOWER FEED MOTOR 2 STROVE signal
M2CLK	SCANNER MOTOR (M2) CLOCK signal
M2LK	SCANNER MOTOR (M2) PLL LOCK signal
MFDC	MANUAL FEED DOOR CLOSED signal
MFDO	MANUAL FEED DOOR OPEN signal
MFPD	MANUAL FEED PAPER DETECTION signal
MFRSD	MANUAL FEED ROLLER SOLENOID DRIVE command
MFSD	MANUAL FEED SELECT SOLENOID DRIVE command
MFSSD	MANUAL FEED SHUTTER SOLENOID DRIVE command
MMD	MAIN MOTOR DRIVE command
PCLHP	PRIMARY CORONA WIRE CLEANER HP signal
PCLMF	PRIMARY CORONA WIRE CLEANER FW command
PCLMR	PRIMARY CORONA WIRE CLEANER RV command
PCLRP	PRIMARY CORONA WIRE CLEANER RP signal
PD	PHOTO DIODE signal (analog)
PDP	PAPER DETECTION signal
PDP1	PAPER DETECTION signal 1
PDP2	PAPER DETECTION signal 2
PDP3	PAPER DETECTION signal 3
PDP4	PAPER DETECTION signal 4
PDP5	PAPER DETECTION signal 5
PDP6	PAPER DETECTION signal 6
PDP7	PAPER DETECTION signal 7
PDP8	PAPER DETECTION signal 8
PDPD	PAPER DETECTION signal
PEXP	PRE-CONDITIONING EXPOSURE LAMP LIT command
PRSD1	PICK-UP ROLLER RELEASE SOLENOID 1 DRIVE command
PRSD2	PICK-UP ROLLER RELEASE SOLENOID 2 DRIVE command
PSSD1	PICK-UP DRIVE SELECT SOLENOID 1 DRIVE command
PSSD2	PICK-UP DRIVE SELECT SOLENOID 2 DRIVE command
PUCD1	PICK-UP ROLLER CLUTCH 1 DRIVE command
PUCD2	PICK-UP ROLLER CLUTCH 2 DRIVE command
PUMD	PICK-UP ROLLER MOTOR DRIVE command
PWOFF	POWER SWITCH OFF command
RDDE	RIGHT DECK DETECTION signal
RGCD1	REGISTRATION ROLLER 1 CLUTCH DRIVE command
RGCD3	REGISTRATION ROLLER 3 CLUTCH DRIVE command
RGSD2	REGISTRATION ROLLER 2 CLUTCH SOLENOID DRIVE command
RGSD4	REGISTRATION ROLLER 4 CLUTCH SOLENOID DRIVE command
RLDC	RIGHT LOWER DOOR CLOSED signal
RLDR	RIGHT LIFTER CLUTCH DRIVE command
RLPDE	RIGHT LIFTER POSITION DETECTION signal
RLUL	RIGHT LIFTER UPPER LIMIT signal
RPADE	RIGHT PAPER DETECTION signal
RPUDR	RIGHT PAPER PICK-UP CLUTCH DRIVE command
RPURL	RIGHT PAPER PICK-UP ROLLER RELEASE SOLENOID command
SCCLK	SCANNER SPEED CONTROL command
SCDP	SCANNER AT LEADING EDGE POSITION signal
SCFW	SCANNER FORWARD command
SCHP	SCANNER HOME POSITION signal
SCMD	SCANNER MOTOR DRIVE command
SDODE	SIDE DOOR DETECT signal
SELECT	CD UNIT SELECT KEY signal

SRER	SSR ERROR signal
TCLMF	TRANSFER/SEPARATION CORONA WIRE CLEANER FW command
TCLMR	TRANSFER/SEPARATION CORONA WIRE CLEANER RV command
TSCHP	TRANSFER/SEPARATION CORONA WIRE CLEANER HP signal
TSCRP	TRANSFER/SEPARATION CORONA WIRE CLEANER RP signal
VHP	CD UNIT VERTICAL FEED HOME POSITION signal
VMBK	VERTICAL FEED MOTOR BRAKE command
VMCLK	VERTICAL FEED MOTOR CLOCK signal
VMDWN	VERTICAL FEED MOTOR DOWN command
VMLSD	VERTICAL FEED MOTOR LOCK RELEASE SOLENOID DRIVE command
VMUP	VERTICAL FEED MOTOR UP command
VSYNC	VERTICAL SYNCHRONOUS signal
WTOF	EXCESS WASTE TONER signal

2. LIST OF ABBREVIATIONS

INTR	INITIAL ROTATION
LSTR	LAST ROTATION
SCFW	SCANNER FORWARD
SCRV	SCANNER REVERSE
STBY	STANDBY
WAIT	WAIT
WMUP	WARM UP
WMUPR	WARM UP ROTATION

DC CONTROLLER CIRCUIT DIAGRAM (A501: block diagram)

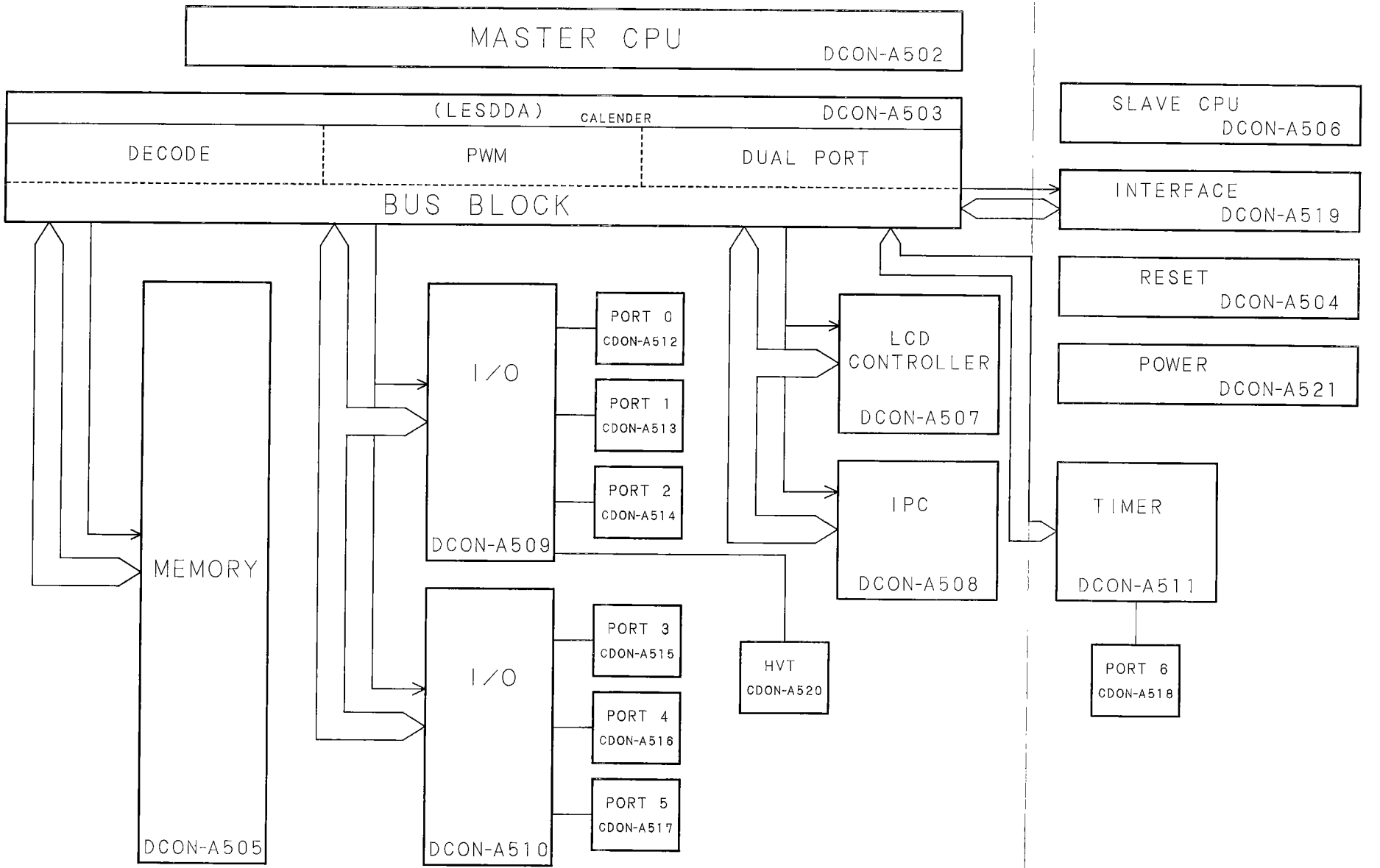

DC CONTROLLER CIRCUIT DIAGRAM (A502: CPU)

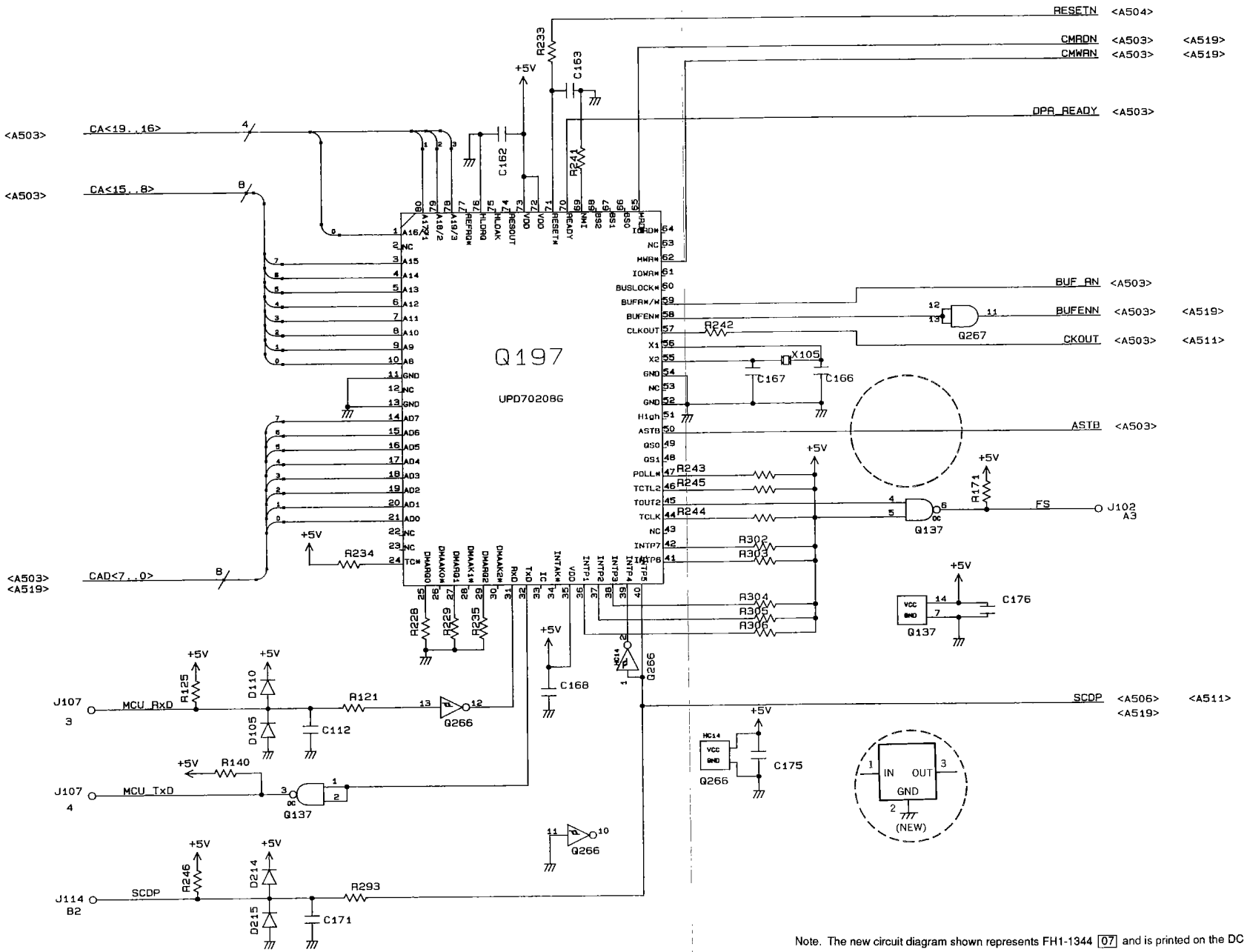

Note. The new circuit diagram shown represents FH1-1344 [07] and is printed on the DC controller PCB.

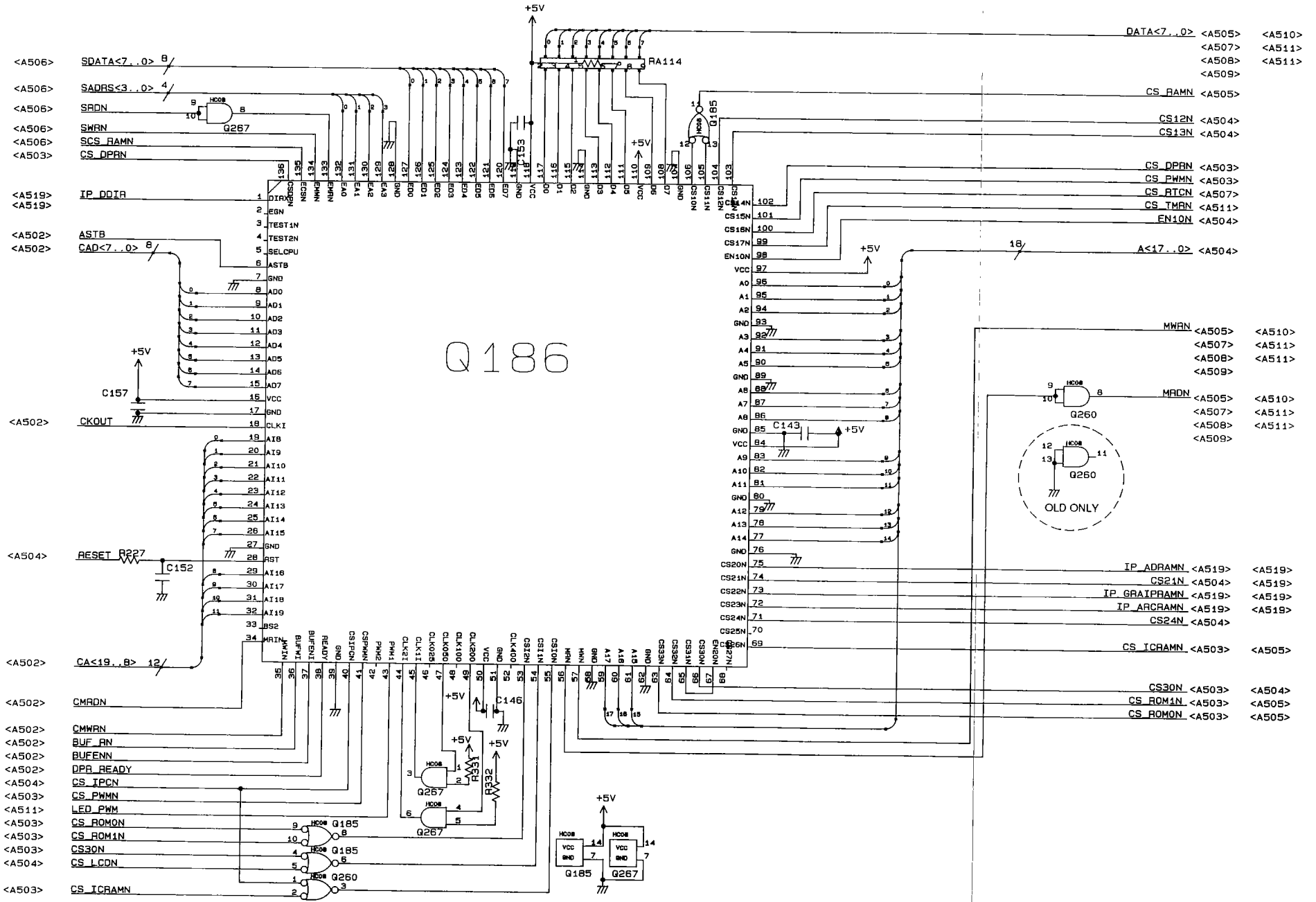
Q186
SDATA<7..0>
SADRS<3..0>
SRDN
SWRN
SCS_RAMN
CS_DPRN
IP_DDIR
ASTB
CAD<7..0>
CKOUT
RESET
CA<19..8>
CMRDN
CMWRN
BUF_RN
BUFENN
DPR_READY
CS_IPCN
CS_PWMN
LED_PWM
CS_ROMON
CS_ROM1N
CS3ON
CS_LCDN
CS_ICRAMN
DATA<7..0>
CS_RAMN
CS12N
CS13N
CS_DPRN
CS_PWMN
CS_RTCN
CS_TMRN
EN1ON
A<17..0>
MWRN
MRDN
OLD ONLY
IP_ADRAMN
CS21N
IP_GRAIPRAMN
IP_ARCRAMN
CS24N
CS_ICRAMN
CS3ON
CS_ROM1N
CS_ROMON
RA114
C153
C157
C152
C143
C146
R227
R331
R332
Q267
Q185
Q260

DC CONTROLLER CIRCUIT DIAGRAM (A504: reset circuit)

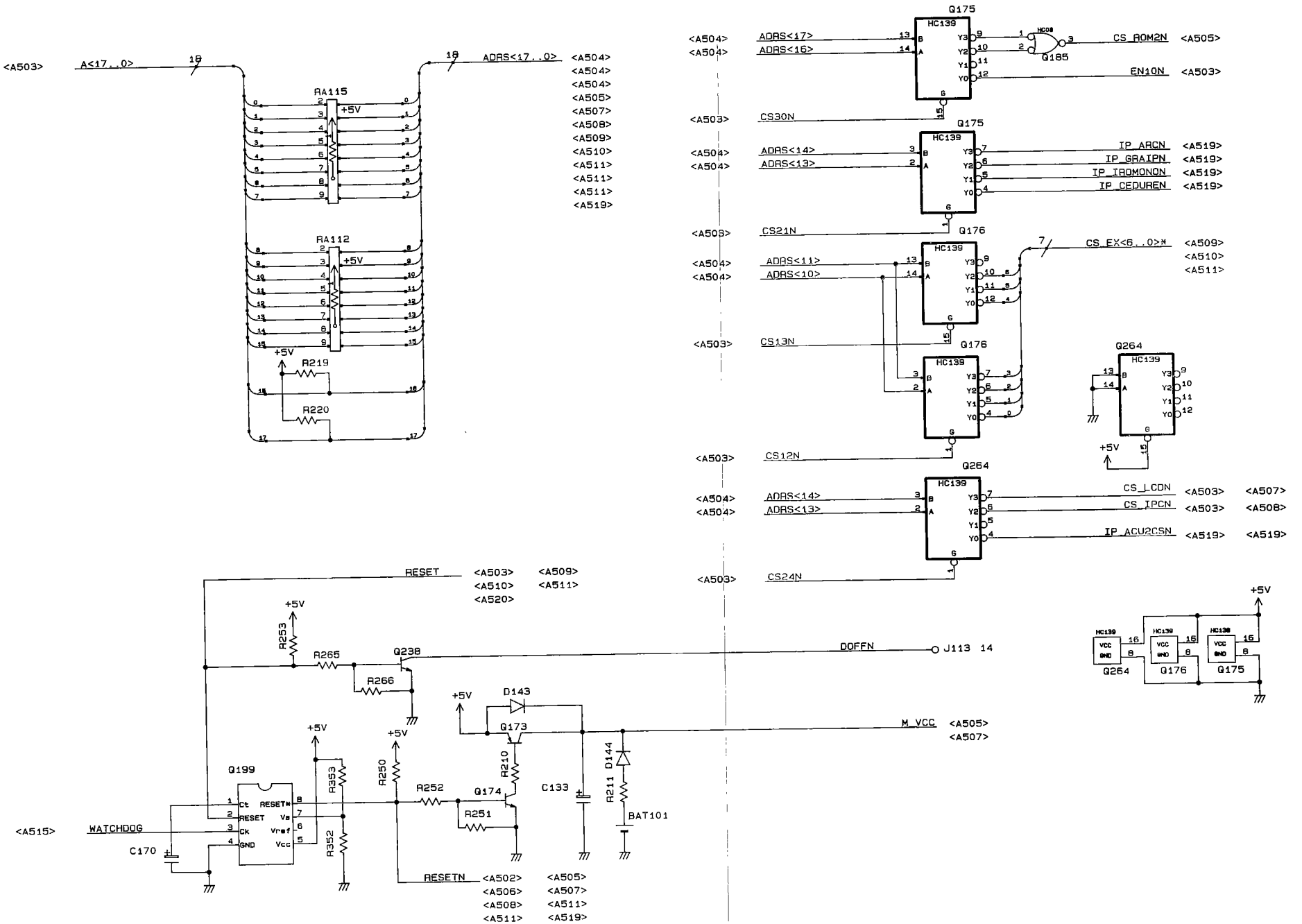

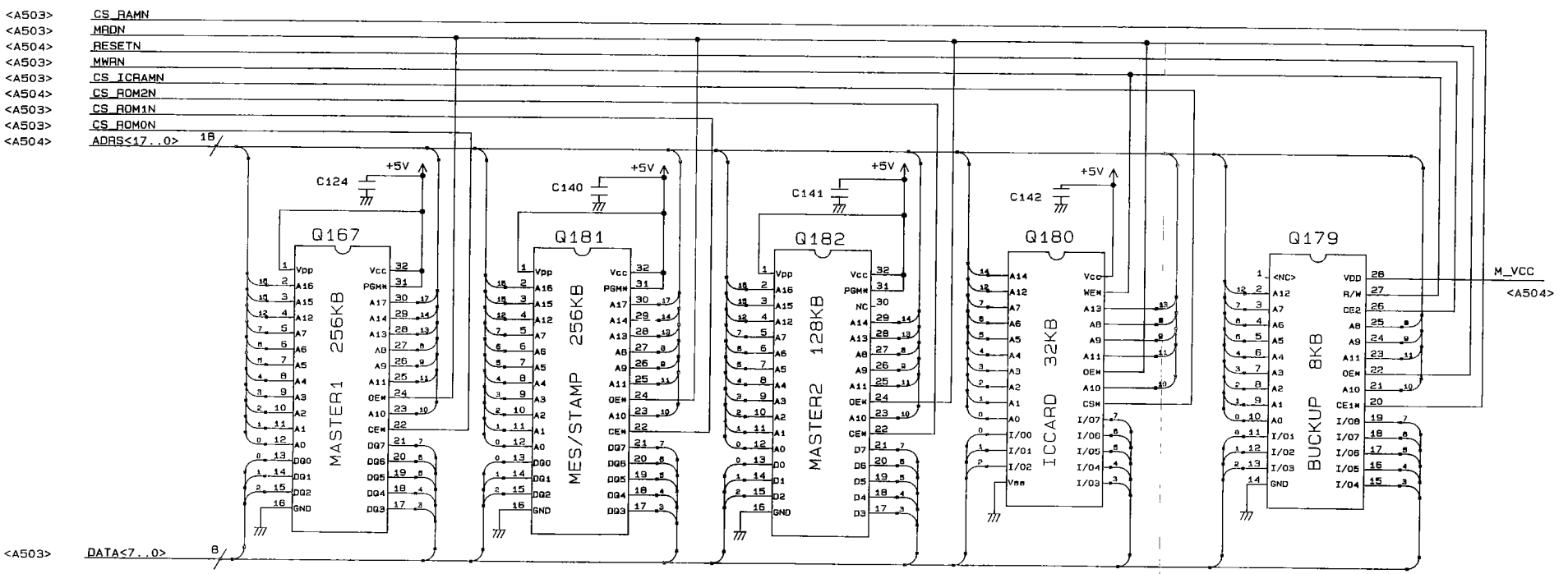
<A503> CS_RAMN
<A503> MRDN
<A504> RESETN
<A503> MWRN
<A503> CS_ICRAMN
<A504> CS_ROM2N
<A503> CS_ROM1N
<A503> CS_ROM0N
<A504> ADRS<17..0>
18
<A503> DATA<7..0>
8
C124
C140
C141
C142
+5V
Q167
MASTER1 256KB
Q181
MES/STAMP 256KB
Q182
MASTER2 128KB
Q180
ICCARD 32KB
Q179
BUCKUP 8KB
M_VCC
<A504>

DC CONTROLLER CIRCUIT DIAGRAM (A506: Sub CPU)

NEW

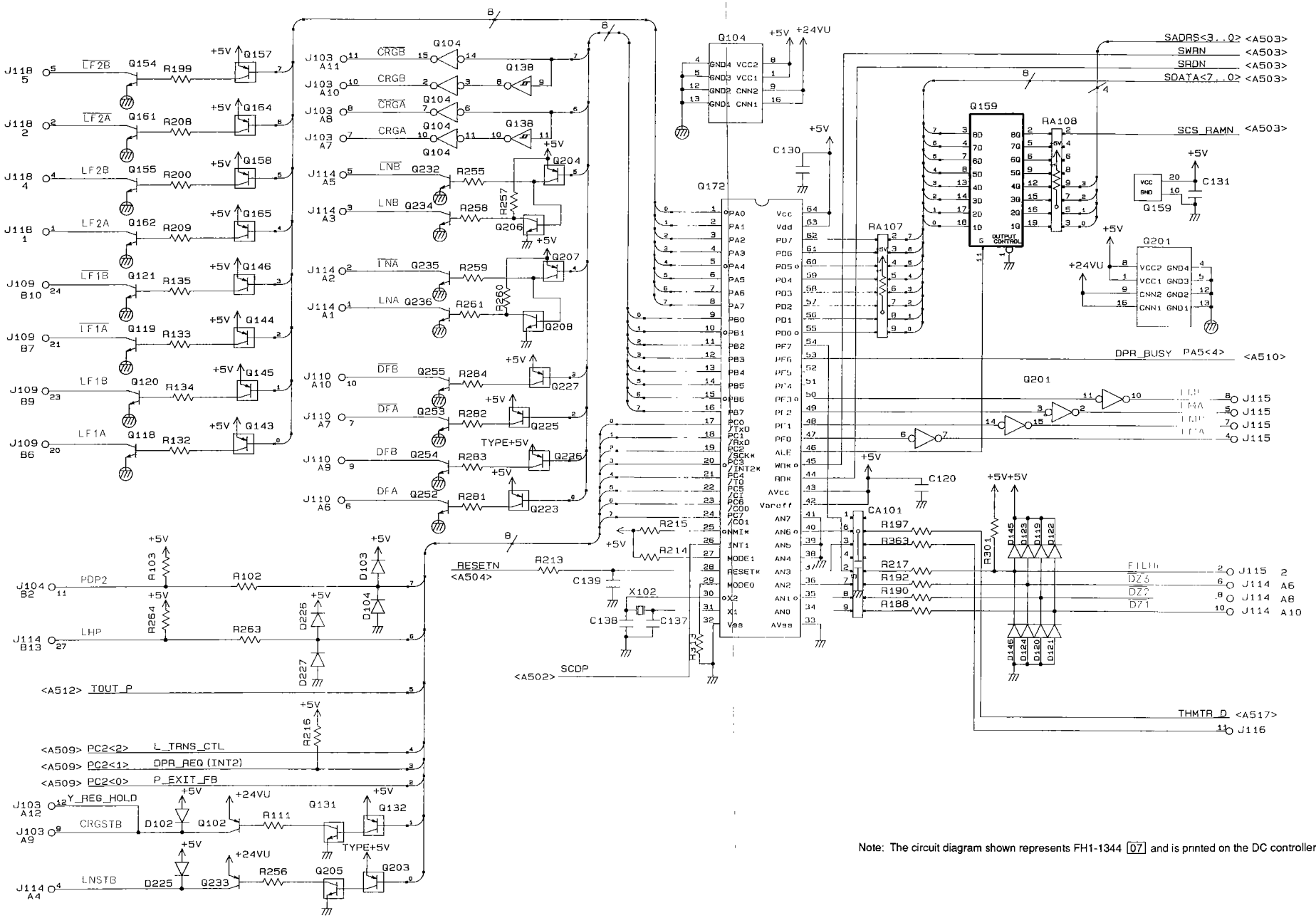

Note: The circuit diagram shown represents FH1-1344 [07] and is printed on the DC controller PCB.

DC CONTROLLER CIRCUIT DIAGRAM (A506: Sub CPU)

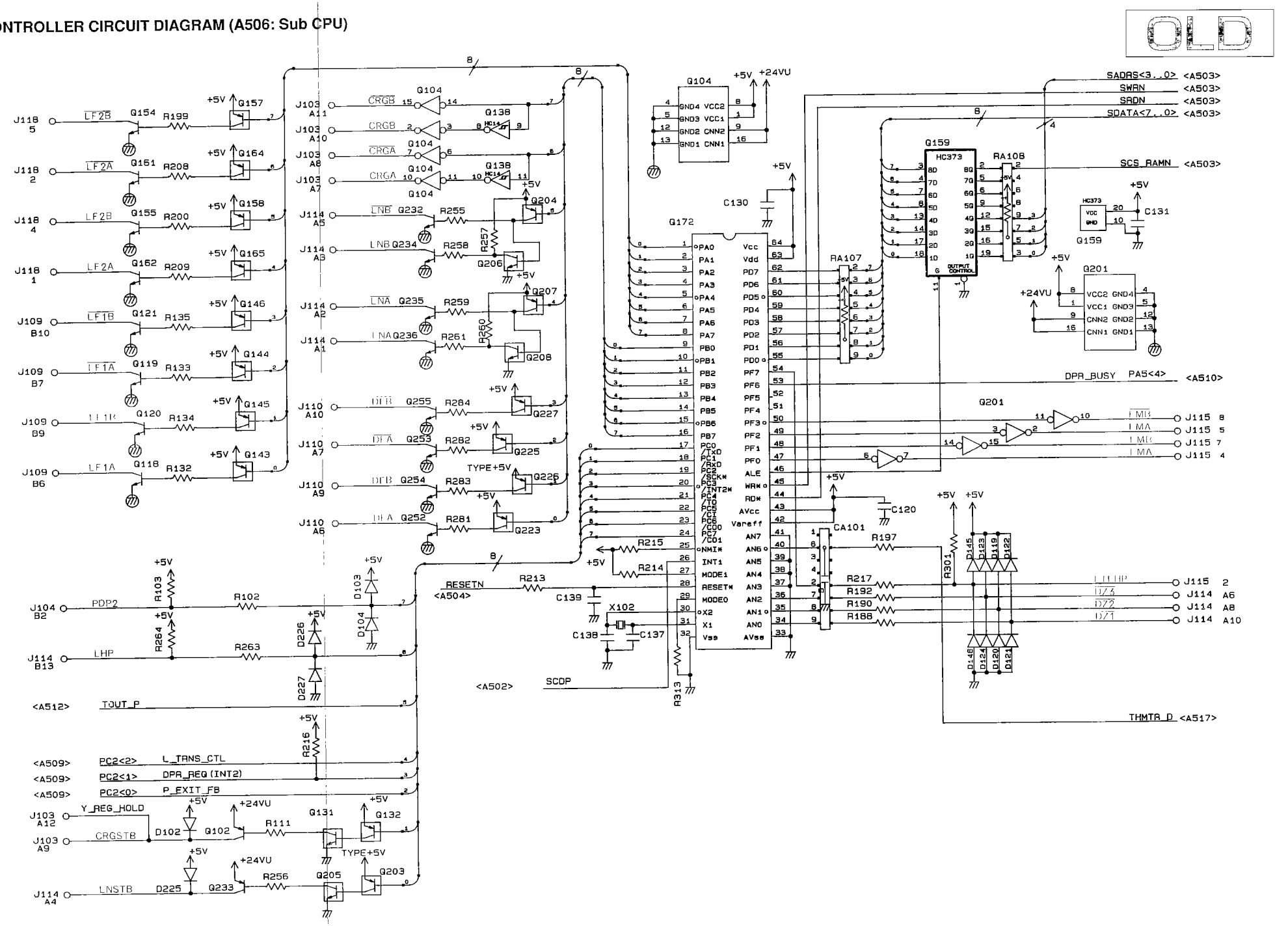

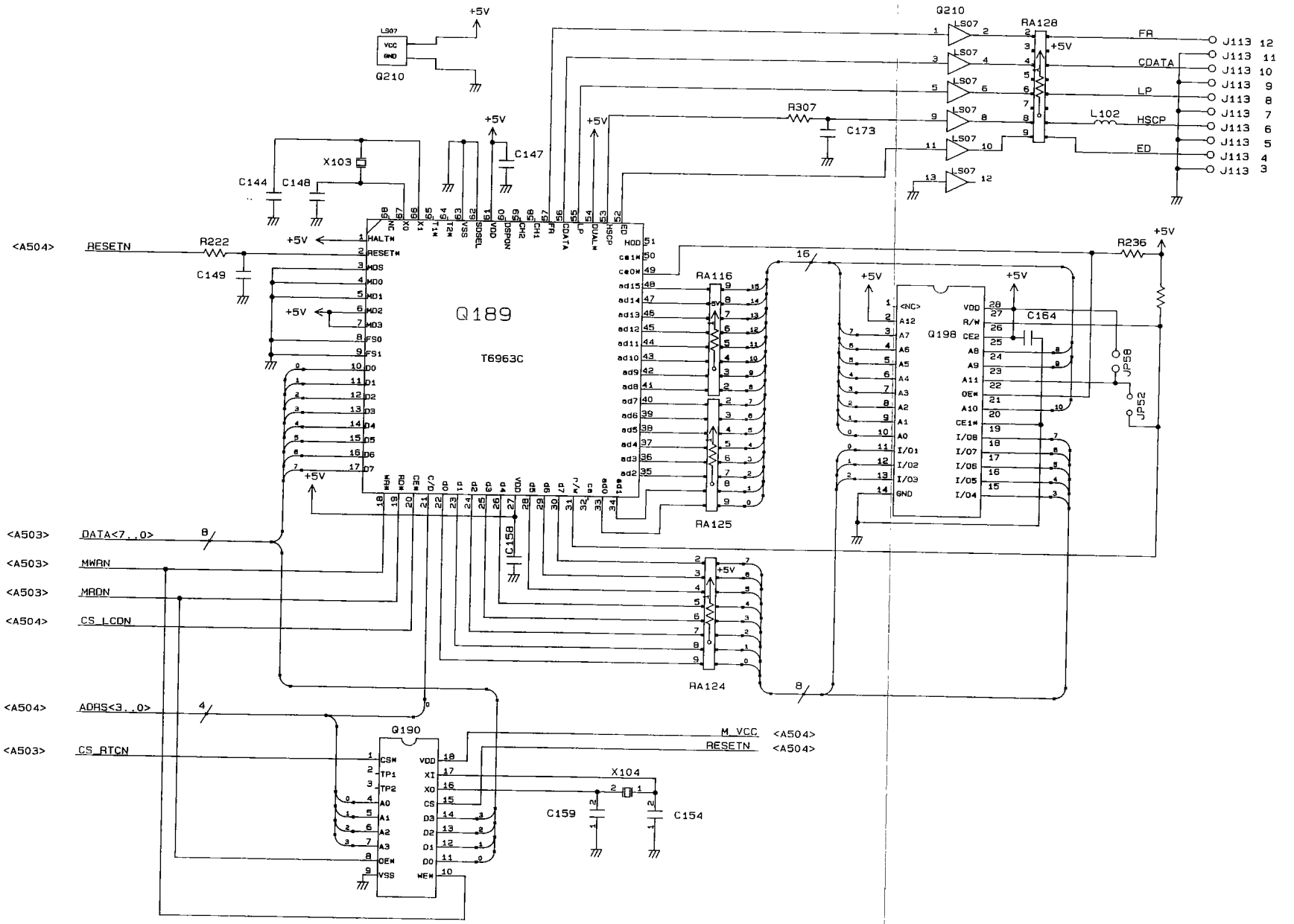
Q189
T6963C
Q210
Q190
Q198
RA116
RA125
RA124
RA128
RA222
RA236
C144
C148
C147
C149
C158
C159
C154
C164
C173
X103
X104
R307
L102
JP58
JP52
+5V
RESETN
DATA<7..0>
MWRN
MRDN
CS_LCDN
ADRS<3..0>
CS_RTCN
M_VCC
FR
CDATA
LP
HSCP
ED
J113 12
J113 11
J113 10
J113 9
J113 8
J113 7
J113 6
J113 5
J113 4
J113 3

DC CONTROLLER CIRCUIT DIAGRAM (A508: IPC)

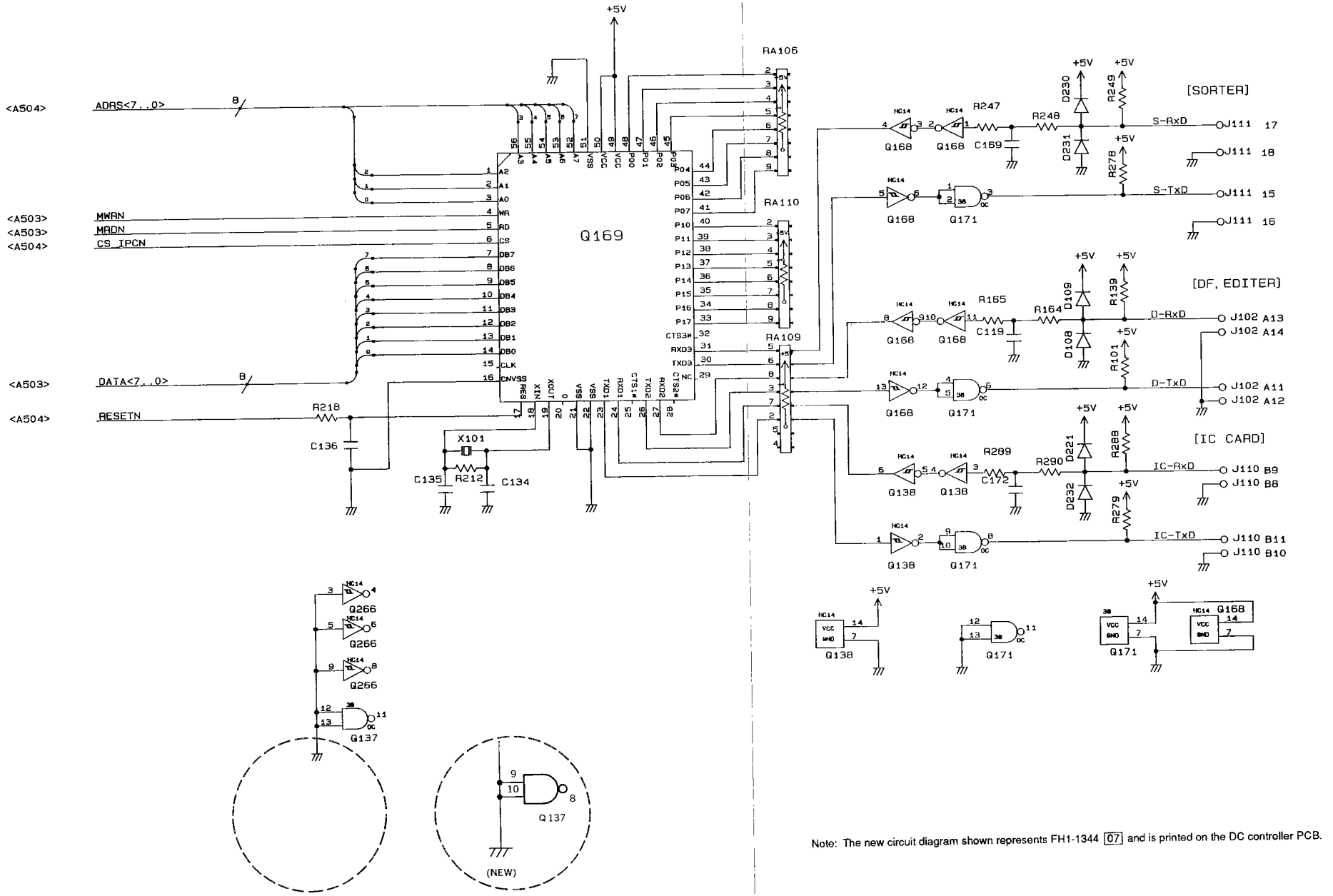

Note: The new circuit diagram shown represents FH1-1344 [07] and is printed on the DC controller PCB.

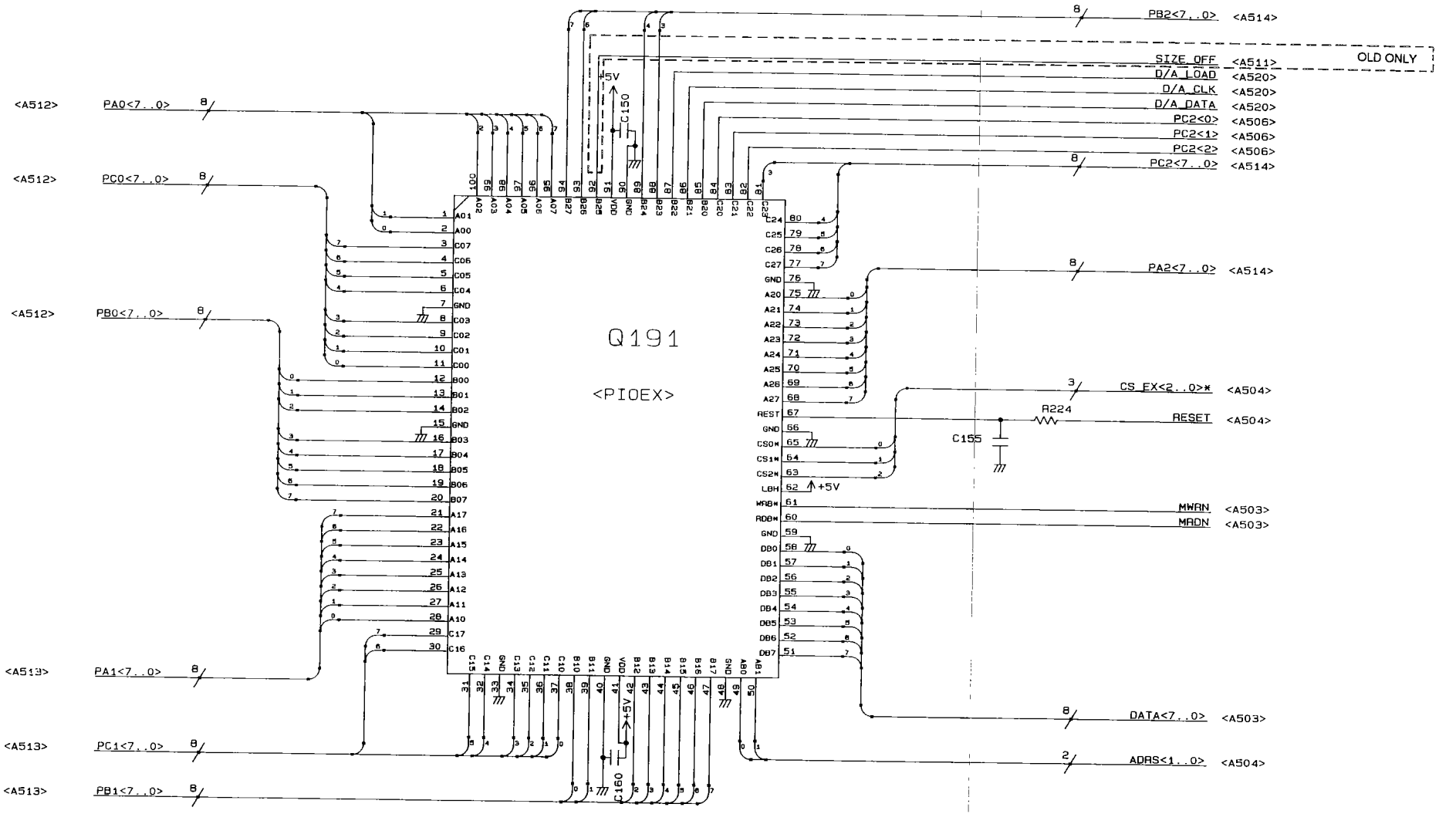
Q191
<PIOEX>
PB2<7..0> <A514>
SIZE_OFF <A511>
OLD ONLY
D/A_LOAD <A520>
D/A_CLK <A520>
D/A_DATA <A520>
PC2<0> <A506>
PC2<1> <A506>
PC2<2> <A506>
PC2<7..0> <A514>
PA2<7..0> <A514>
CS_EX<2..0>* <A504>
RESET <A504>
MWRN <A503>
MRDN <A503>
DATA<7..0> <A503>
ADRS<1..0> <A504>
<A512> PA0<7..0>
<A512> PC0<7..0>
<A512> PB0<7..0>
<A513> PA1<7..0>
<A513> PC1<7..0>
<A513> PB1<7..0>
C150
C155
C160
R224
+5V

DC CONTROLLER CIRCUIT DIAGRAM (A510: I/O expansion 2)

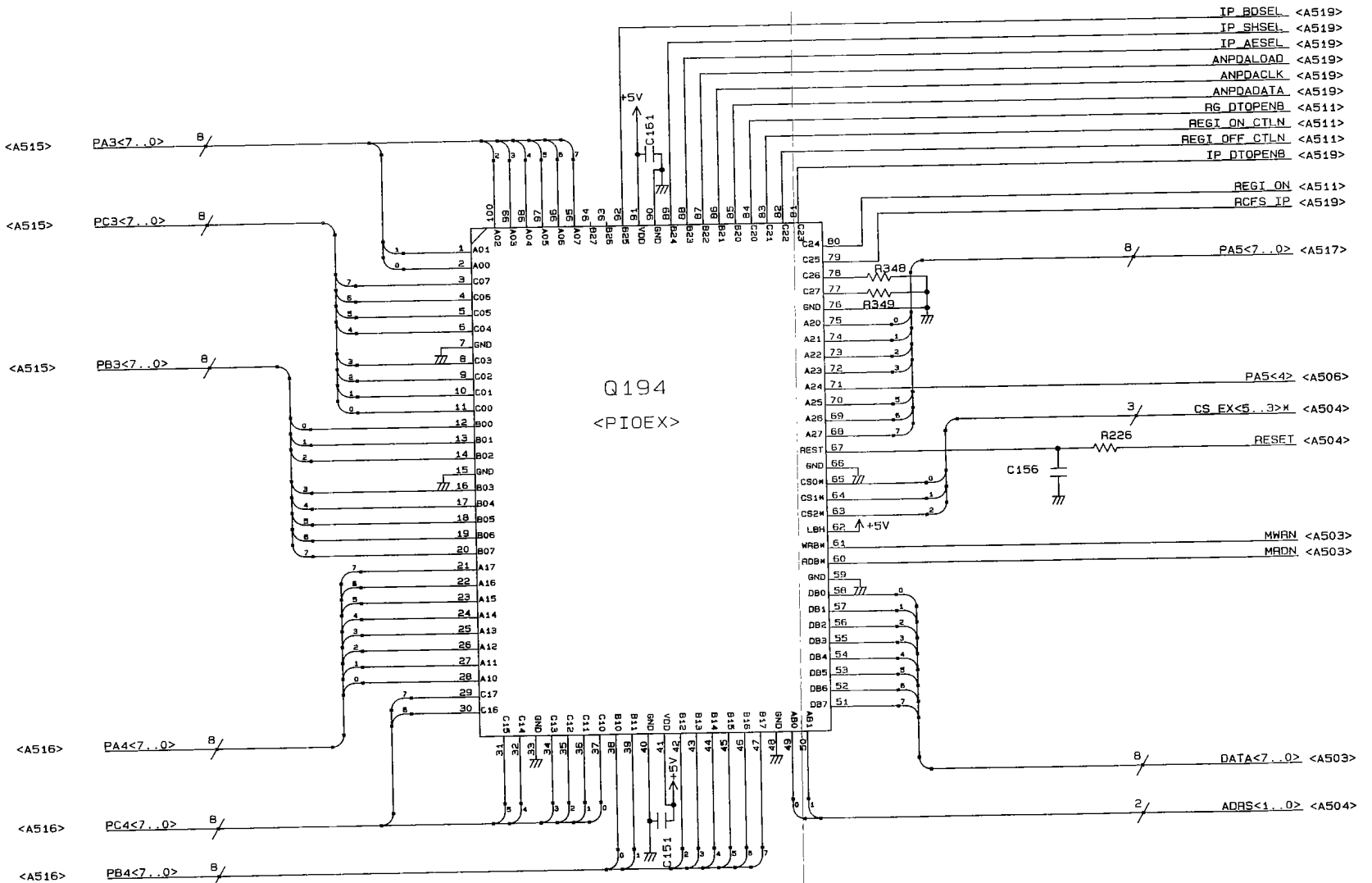

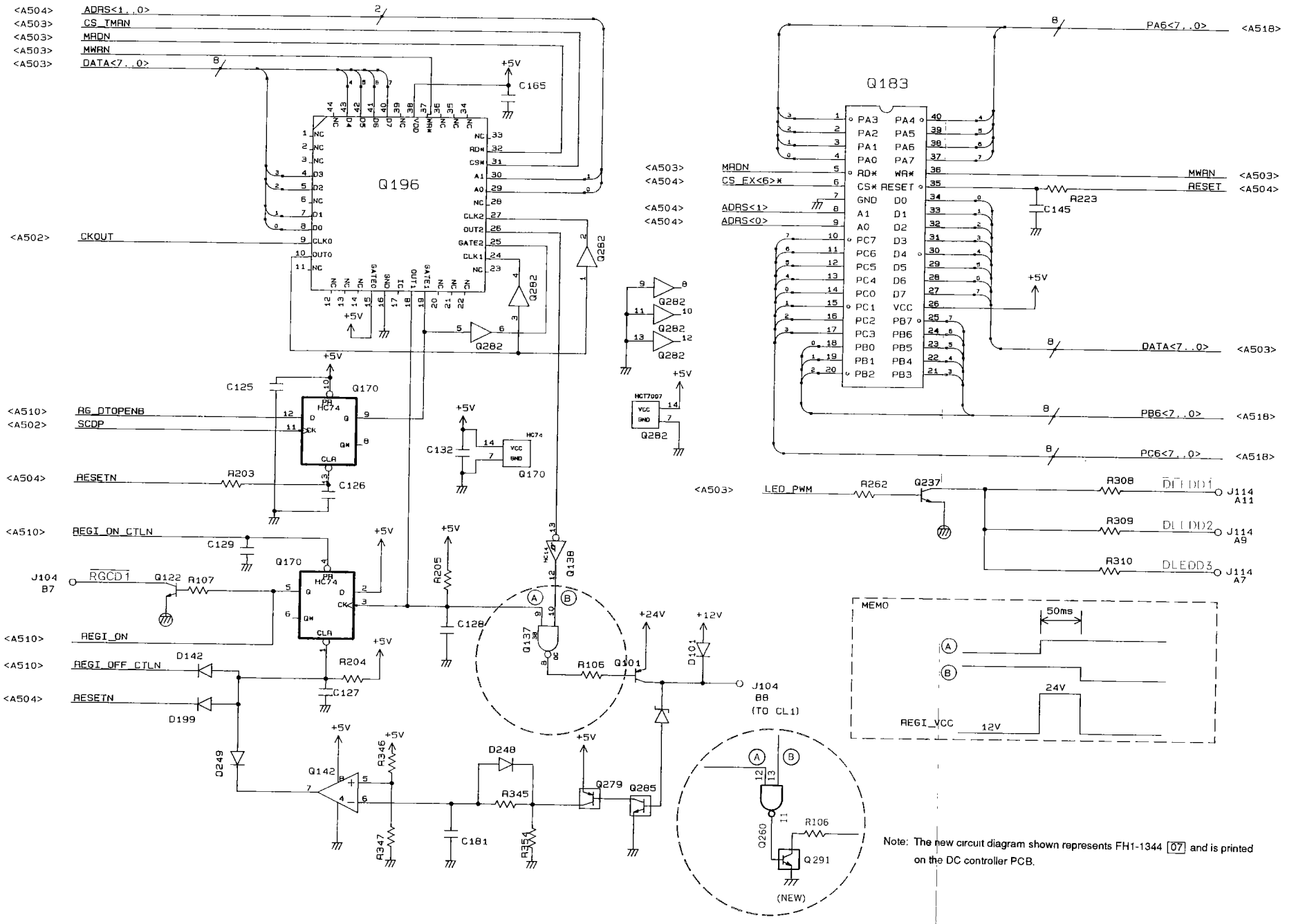

Note: The new circuit diagram shown represents FH1-1344 [07] and is printed on the DC controller PCB.

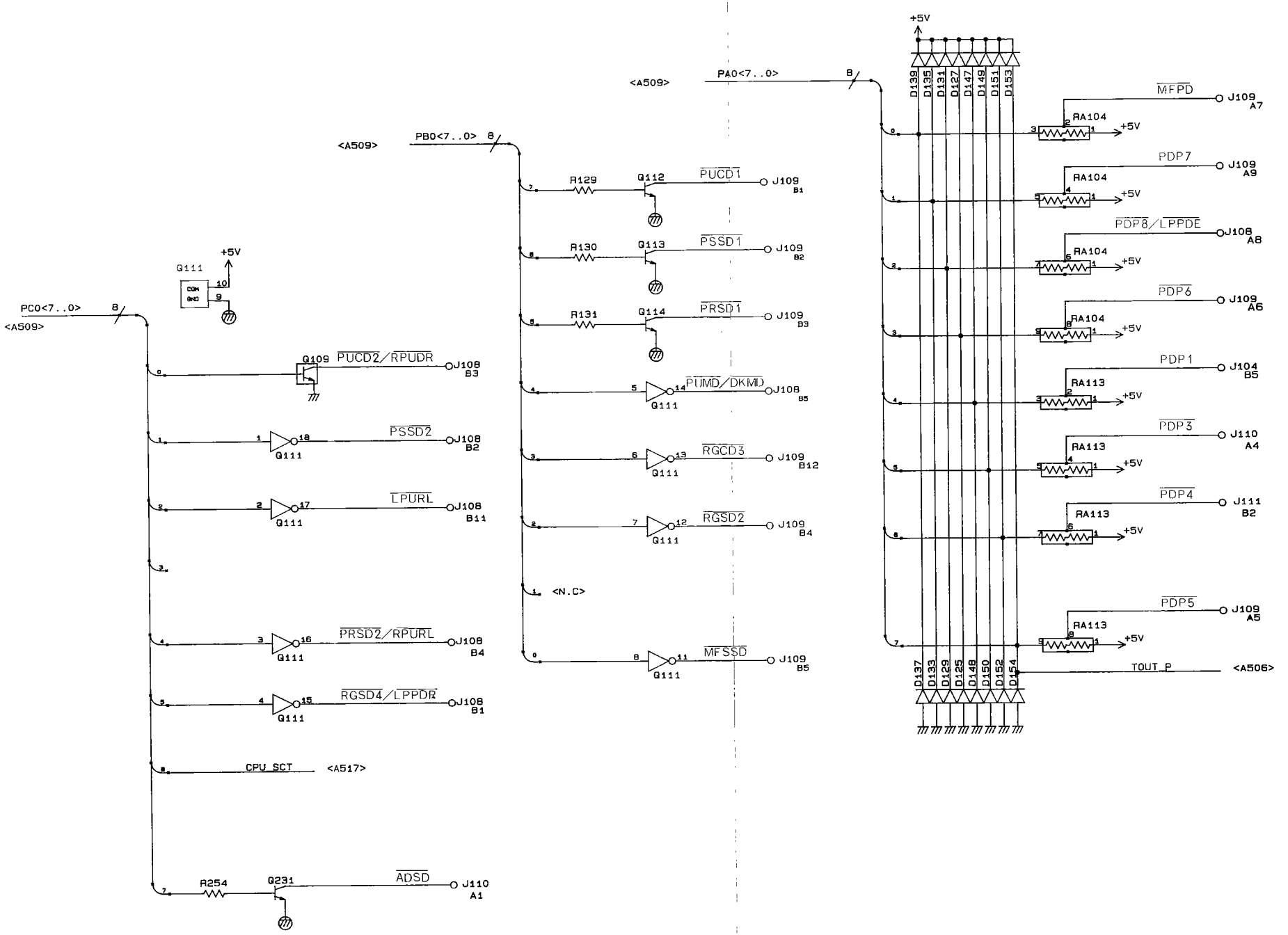
+5V
<A509>
PA0<7..0>
8
D139
D135
D131
D127
D147
D149
D151
D153
MFPD
J109 A7
RA104
PDP7
J109 A9
PDP8/LPPDE
J108 A8
PDP6
J109 A6
PDP1
J104 B5
RA113
PDP3
J110 A4
PDP4
J111 B2
PDP5
J109 A5
TOUT_P
<A506>
D137
D133
D129
D125
D148
D150
D152
D154
<A509>
PB0<7..0>
8
R129
Q112
PUCD1
J109 B1
R130
Q113
PSSD1
J109 B2
R131
Q114
PRSD1
J109 B3
PUMD/DKMD
J108 B5
RGCD3
J109 B12
RGSD2
J109 B4
<N.C>
MFSSD
J109 B5
Q111
<A509>
PC0<7..0>
8
Q109
PUCD2/RPUDR
J108 B3
PSSD2
J108 B2
LPURL
J108 B11
PRSD2/RPURL
J108 B4
RGSD4/LPPDR
J108 B1
CPU_SCT
<A517>
R254
Q231
ADSD
J110 A1

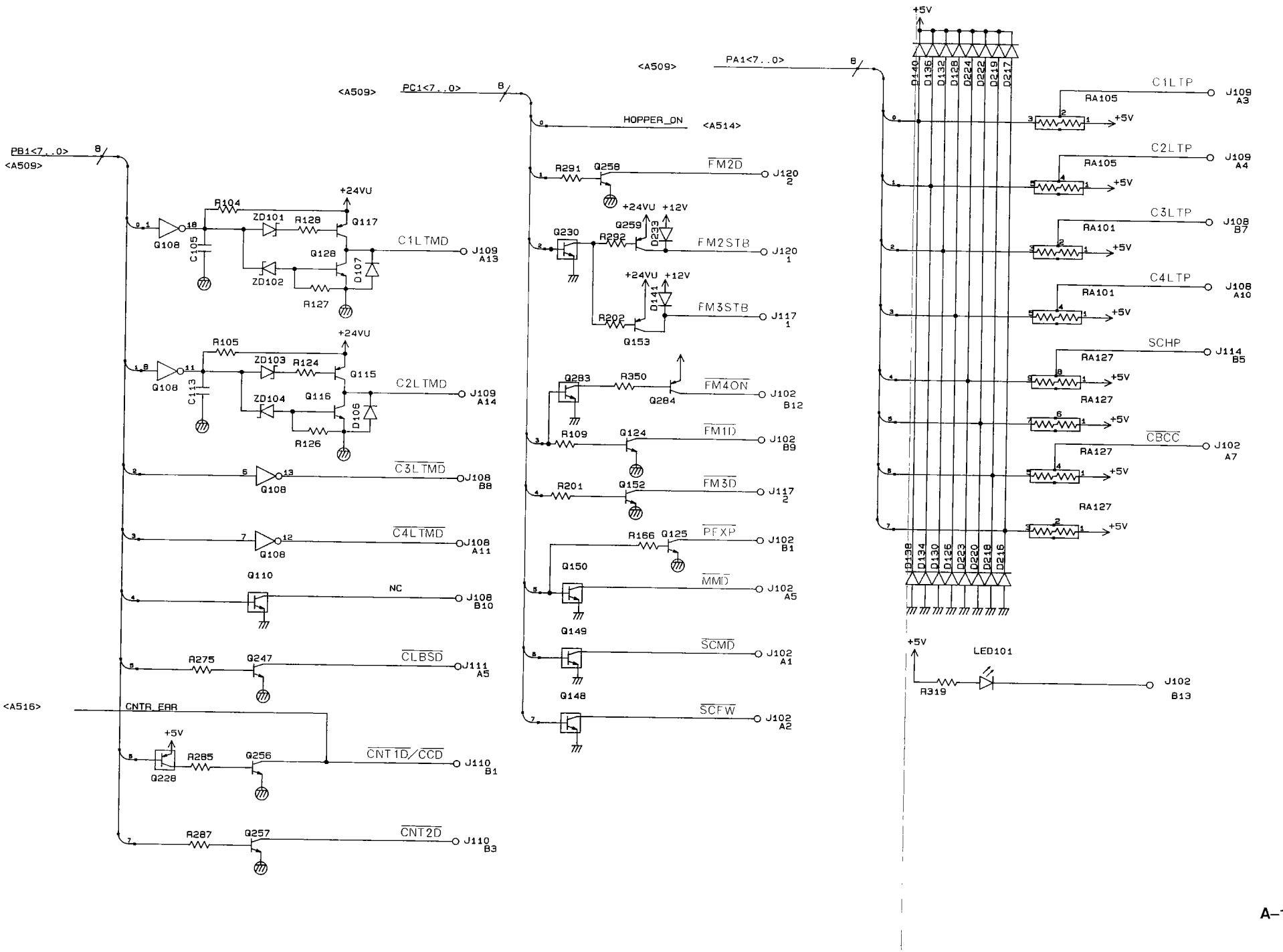
PB1<7..0>
<A509>
PC1<7..0>
<A509>
PA1<7..0>
<A509>
HOPPER_ON
<A514>
+24VU
+12V
+5V
R104
ZD101
R128
Q117
Q108
C105
Q128
C1LTMD
J109 A13
ZD102
D107
R127
R105
ZD103
R124
Q115
C2LTMD
J109 A14
C113
ZD104
Q116
D106
R126
C3LTMD
J108 B8
C4LTMD
J108 A11
Q110
NC
J108 B10
R275
Q247
CLBSD
J111 A5
<A516>
CNTR_EAR
R285
Q256
CNT1D/CCD
J110 B1
Q228
R287
Q257
CNT2D
J110 B3
R291
Q258
FM2D
J120 2
Q230
R292
Q259
D233
FM2STB
J120 1
R202
Q153
D141
FM3STB
J117 1
Q283
R350
Q284
FM4ON
J102 B12
R109
Q124
FM1D
J102 B9
R201
Q152
FM3D
J117 2
R166
Q125
PFXP
J102 B1
Q150
MMD
J102 A5
Q149
SCMD
J102 A1
Q148
SCFW
J102 A2
D140
D136
D132
D128
D224
D222
D219
D217
D138
D134
D130
D126
D223
D220
D218
D216
C1LTP
RA105
J109 A3
C2LTP
RA105
J109 A4
C3LTP
RA101
J108 B7
C4LTP
RA101
J108 A10
SCHP
RA127
J114 B5
RA127
CBCC
RA127
J102 A7
RA127
LED101
R319
J102 B13

DC CONTROLLER CIRCUIT DIAGRAM (A514: EX2)

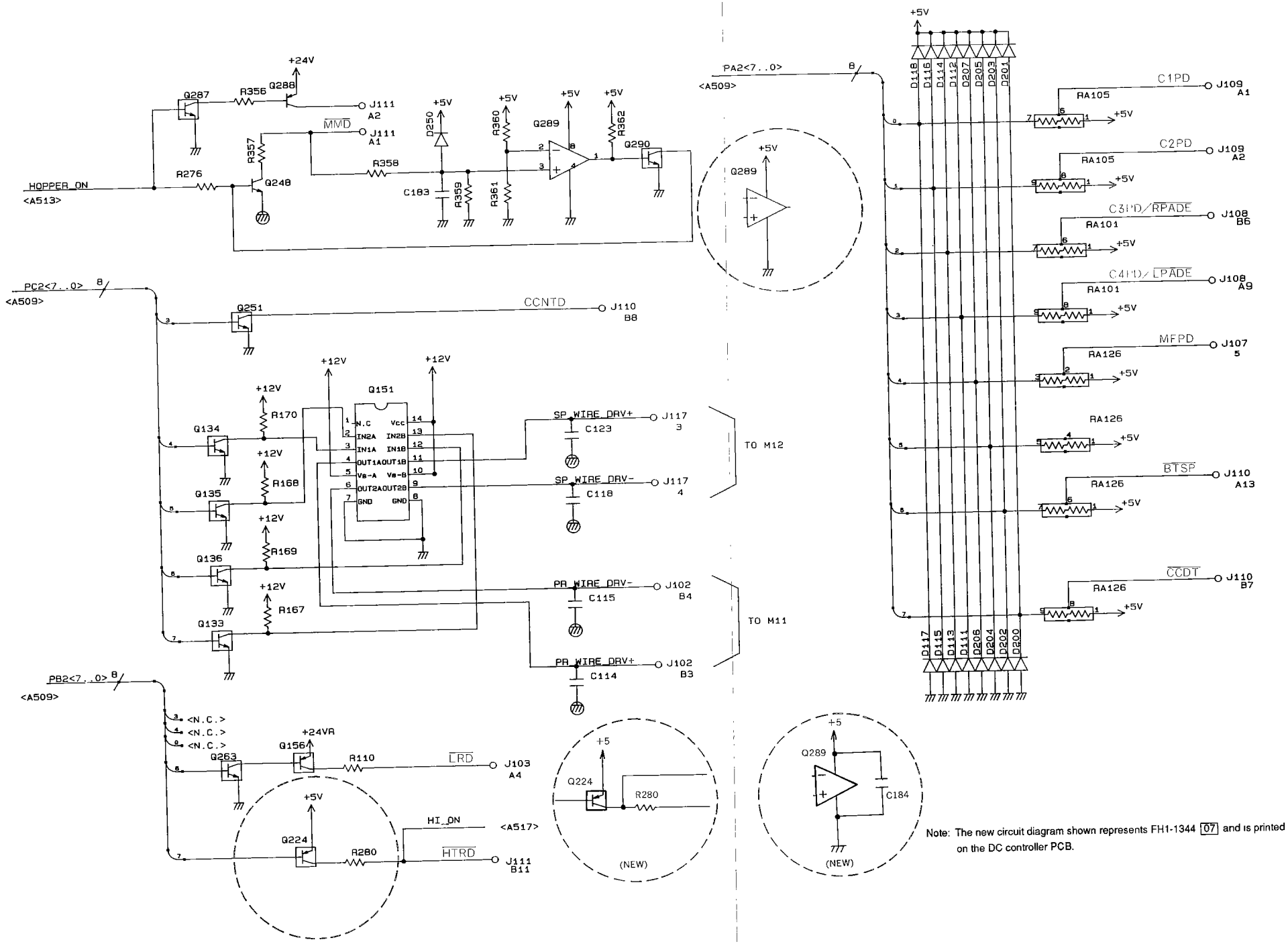

Note: The new circuit diagram shown represents FH1-1344 07 and is printed on the DC controller PCB.

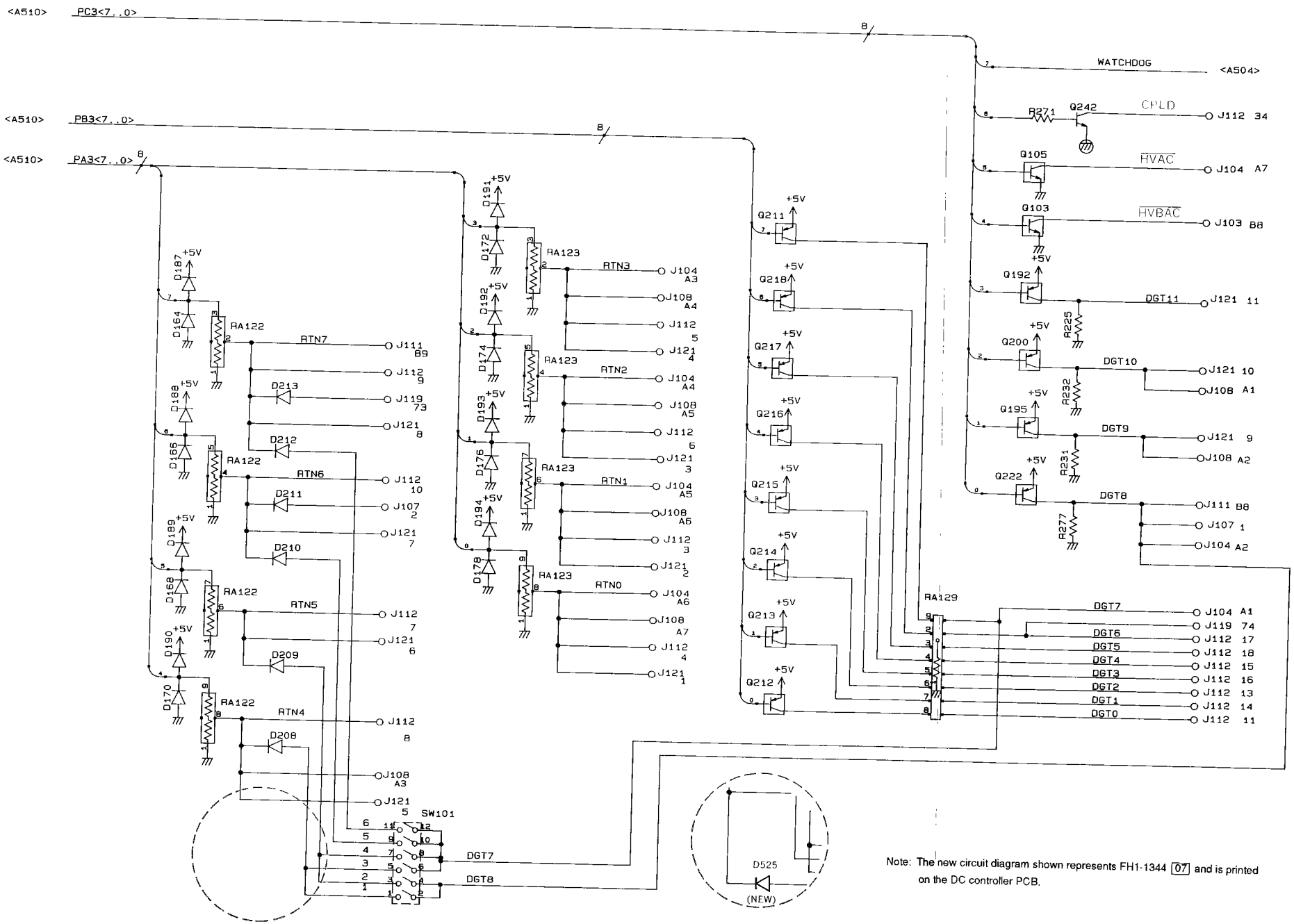

Note: The new circuit diagram shown represents FH1-1344 [07] and is printed on the DC controller PCB.

DC CONTROLLER CIRCUIT DIAGRAM (A516: EX4)

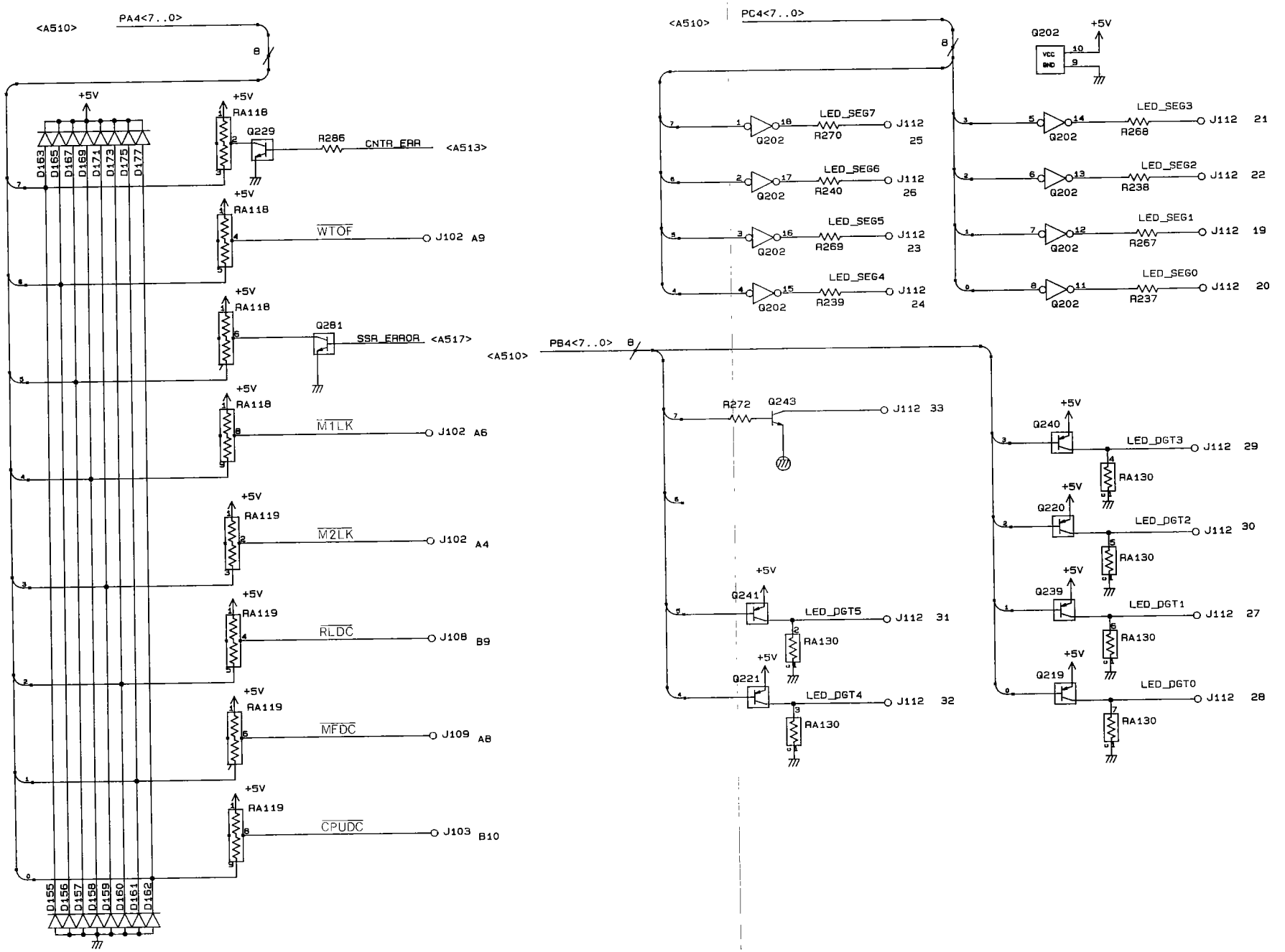

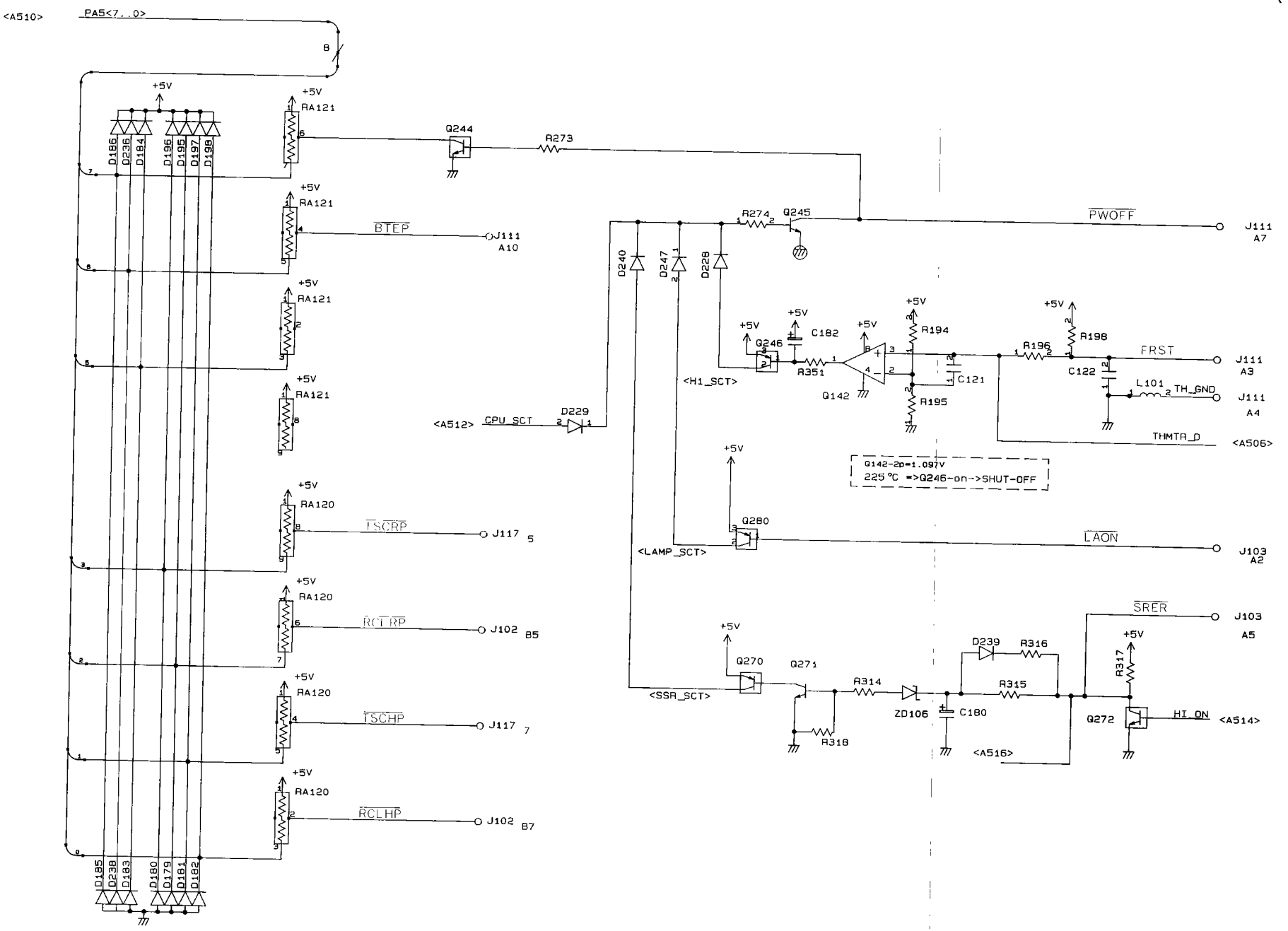
<A510>
PA5<7..0>
8
+5V
RA121
RA120
D186
D236
D184
D196
D195
D197
D198
D185
D238
D183
D180
D179
D181
D182
Q244
R273
Q245
R274
D240
D247
D228
D229
<A512>
CPU_SCT
BTEP
J111 A10
TSCRP
J117 5
RCTRP
J102 B5
TSCHP
J117 7
RCLHP
J102 B7
PWOFF
J111 A7
Q246
C182
R351
<H1_SCT>
Q142
R194
R195
C121
R196
R198
C122
L101
FRST
J111 A3
TH_GND
J111 A4
THMTR_D
<A506>
Q142-2p=1.097V
225°C =>Q246-on->SHUT-OFF
Q280
<LAMP_SCT>
LAON
J103 A2
Q270
Q271
<SSR_SCT>
R314
ZD106
C180
<A516>
R318
D239
R316
R315
R317
SRER
J103 A5
Q272
HI_ON
<A514>

DC CONTROLLER CIRCUIT DIAGRAM (A518: EX6)

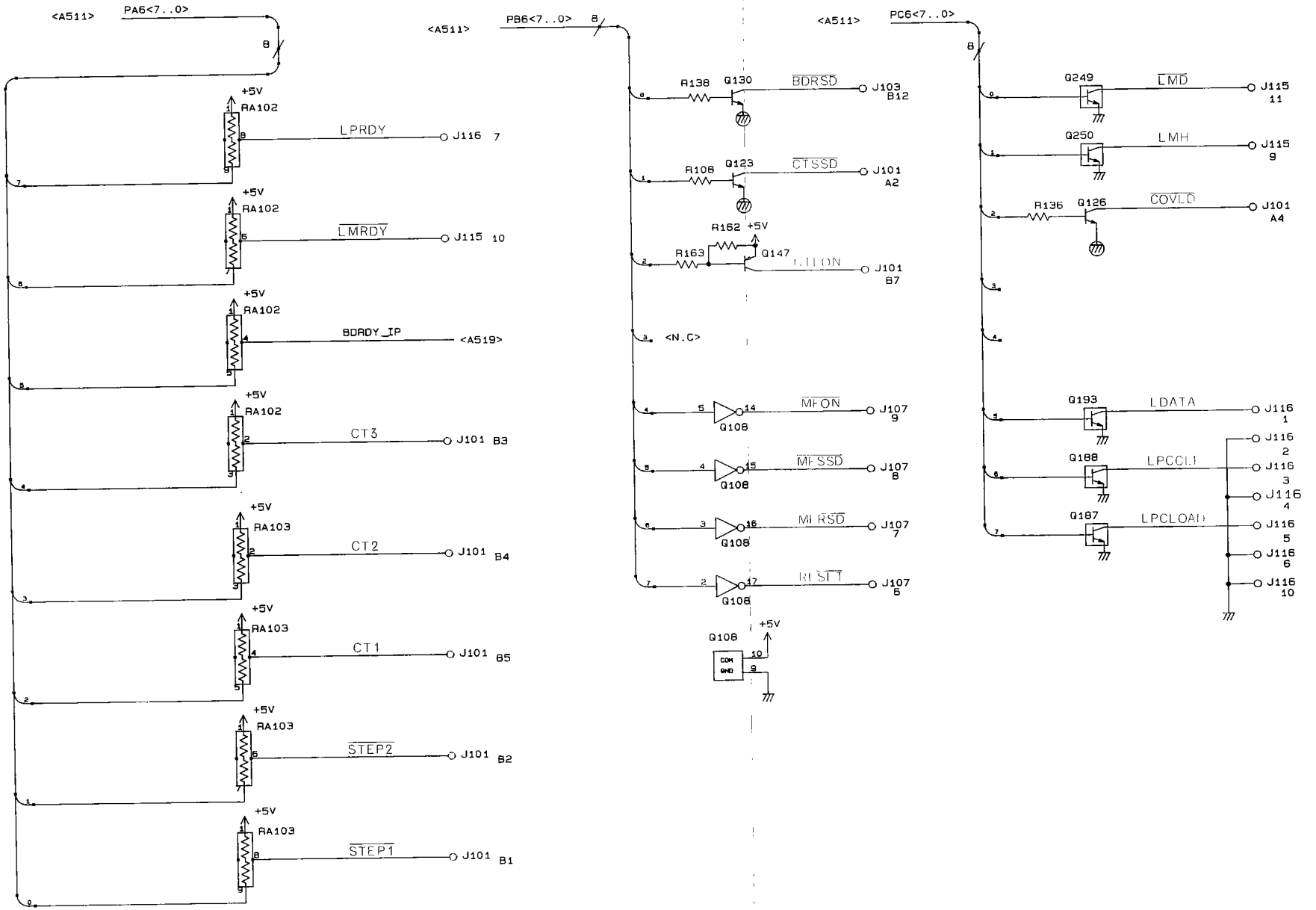

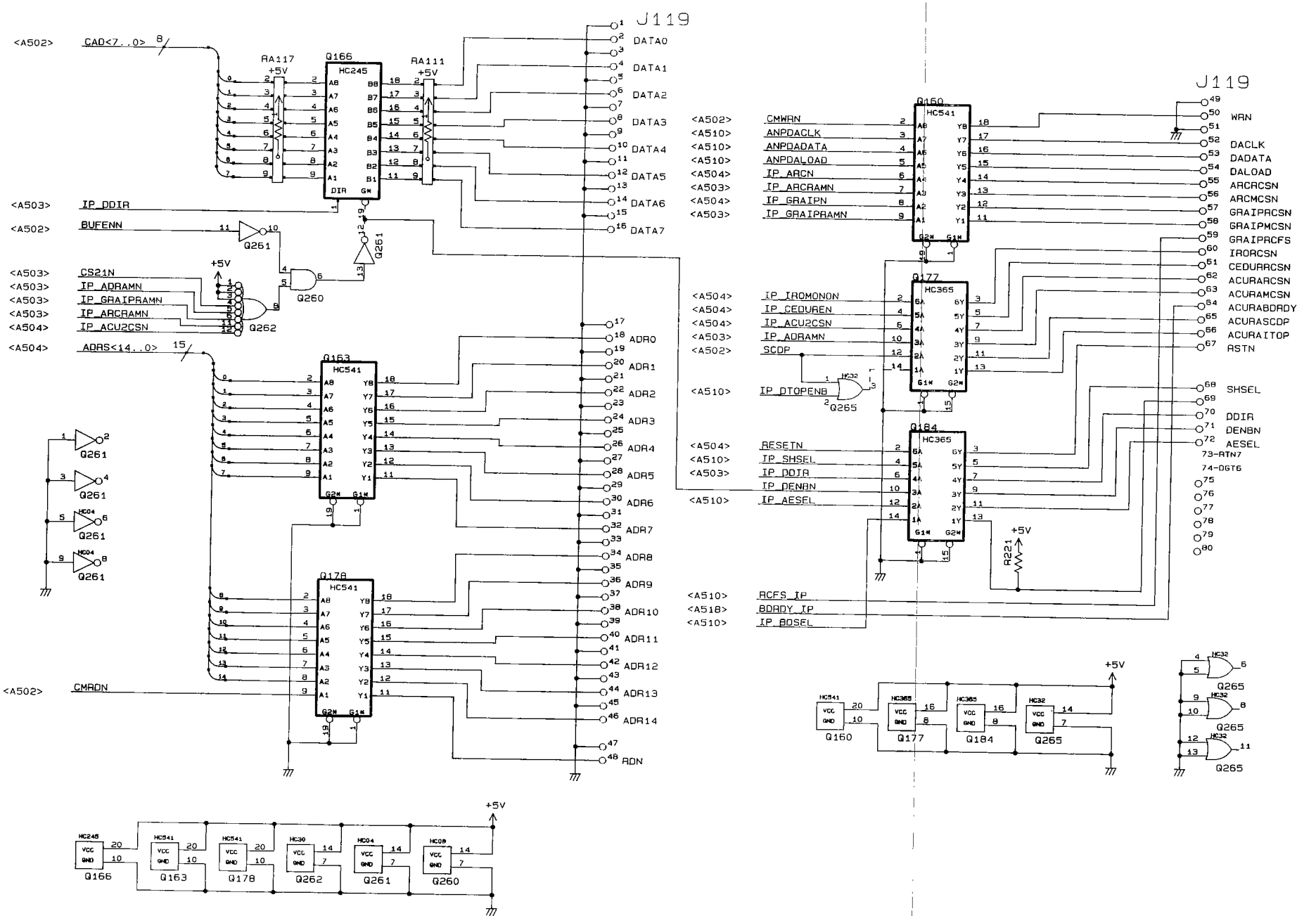
J119
<A502> CAD<7..0> 8
RA117
RA111
+5V
Q166
HC245
DATA0
DATA1
DATA2
DATA3
DATA4
DATA5
DATA6
DATA7
<A503> IP_DDIR
<A502> BUFENN
Q261
Q260
<A503> CS21N
<A503> IP_ADRAMN
<A503> IP_GRAIPRAMN
<A503> IP_ARCRAMN
<A504> IP_ACU2CSN
Q262
<A504> ADRS<14..0> 15
Q163
HC541
ADR0
ADR1
ADR2
ADR3
ADR4
ADR5
ADR6
ADR7
ADR8
ADR9
ADR10
ADR11
ADR12
ADR13
ADR14
Q178
<A502> CMRDN
ADN
<A502> CMWAN
<A510> ANPDACLK
<A510> ANPDADATA
<A510> ANPDALOAD
<A504> IP_ARCN
<A503> IP_ARCRAMN
<A504> IP_GRAIPN
<A503> IP_GRAIPRAMN
Q160
Q177
HC365
Q184
<A504> IP_IROMONON
<A504> IP_CEDUREN
<A504> IP_ACU2CSN
<A503> IP_ADRAMN
<A502> SCDP
<A510> IP_DTOPENB
Q265
<A504> RESETN
<A510> IP_SHSEL
<A503> IP_DDIR
IP_DENBN
<A510> IP_AESEL
R221
<A510> RCFS_IP
<A518> BDRDY_IP
<A510> IP_BDSEL
WRN
DACLK
DADATA
DALOAD
ARCRCSN
ARCMCSN
GRAIPRCSN
GRAIPMCSN
GRAIPRCFS
IRORCSN
CEDURRCSN
ACURARCSN
ACURAMCSN
ACURABDRDY
ACURASCDP
ACURAITOP
RSTN
SHSEL
DDIR
DENBN
AESEL
73-RTN7
74-DGT6

DC CONTROLLER CIRCUIT DIAGRAM (A520: analog signal for HV)

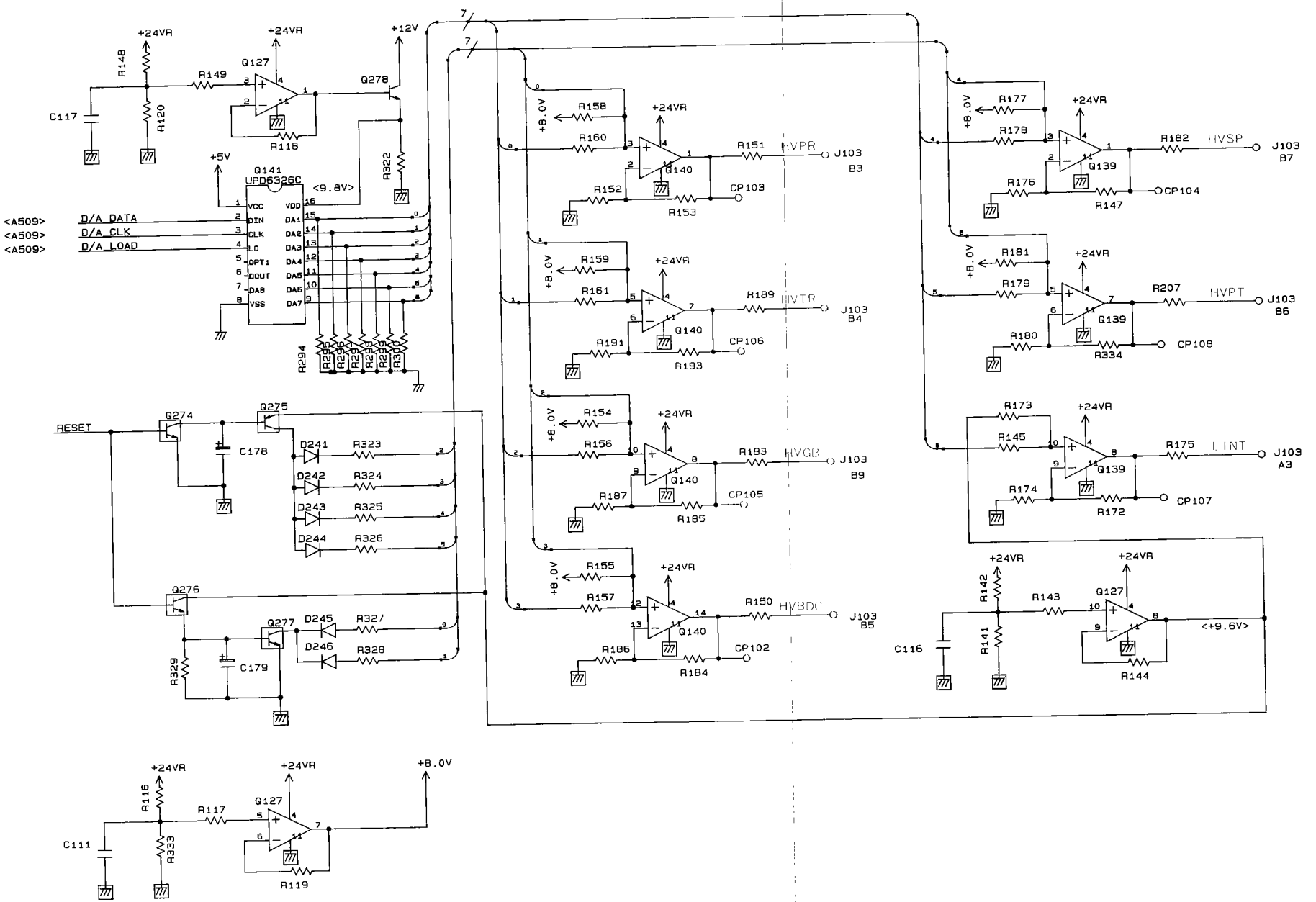

[P.C.B Power Line]

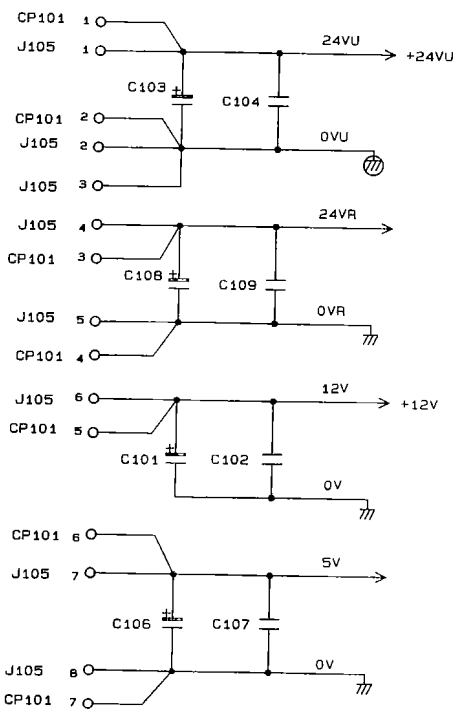

[N.C. Pin]

O J101	A5	O J114	B7
O J101	A6	O J114	B8
O J101	A7	O J114	B9
O J101	A8	O J114	B10
O J102	B14	O J114	B11
O J103	A13		
O J104	B9		
O J112	12		
O J113	1		
O J113	2		

[Through Power Line]

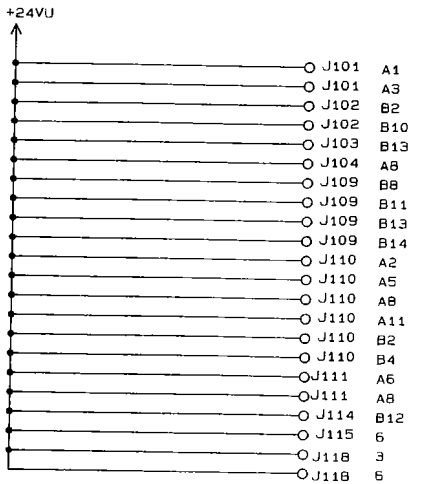

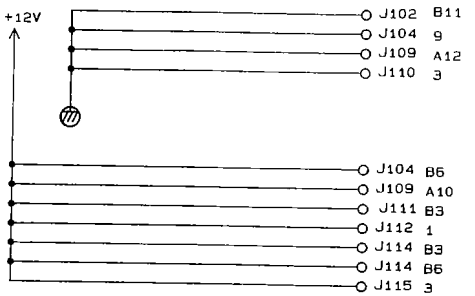

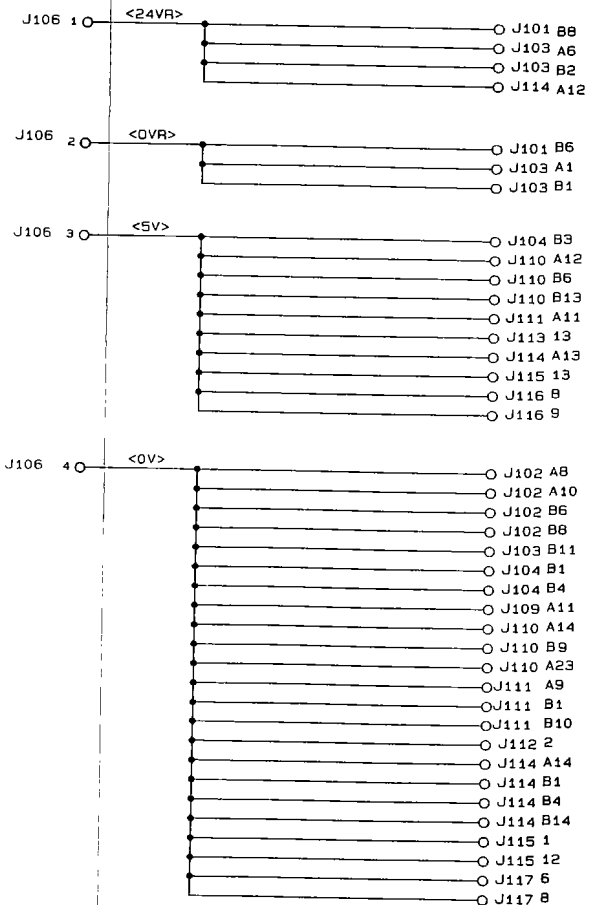

5. IMAGE PROCESSOR CIRCUIT DIAGRAM

IMAGE PROCESSOR CIRCUIT DIAGRAM (A501)

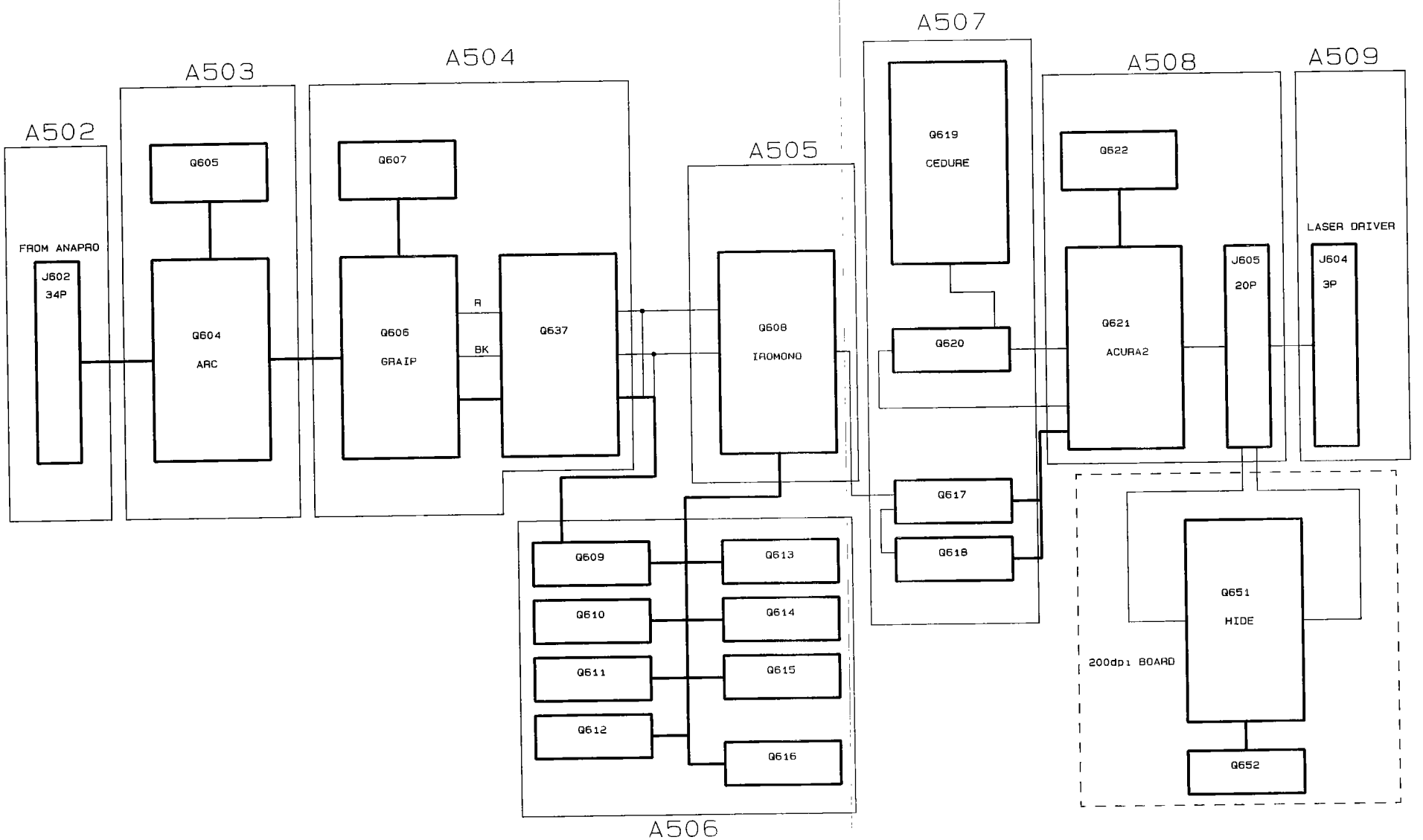

NEW

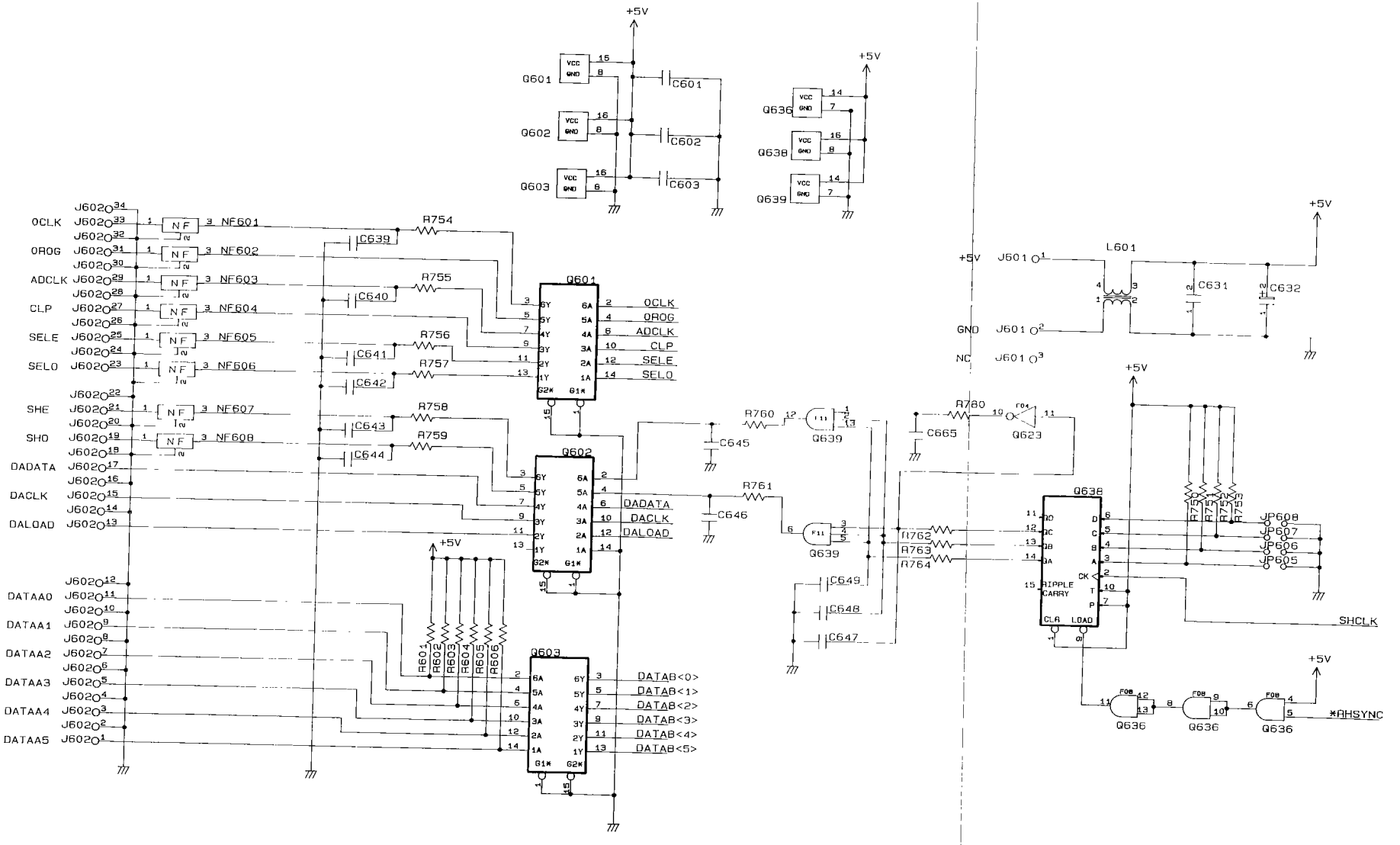

Note The circuit diagram shown represents FH1-1345 [06] and is printed on the Image processor PCB.

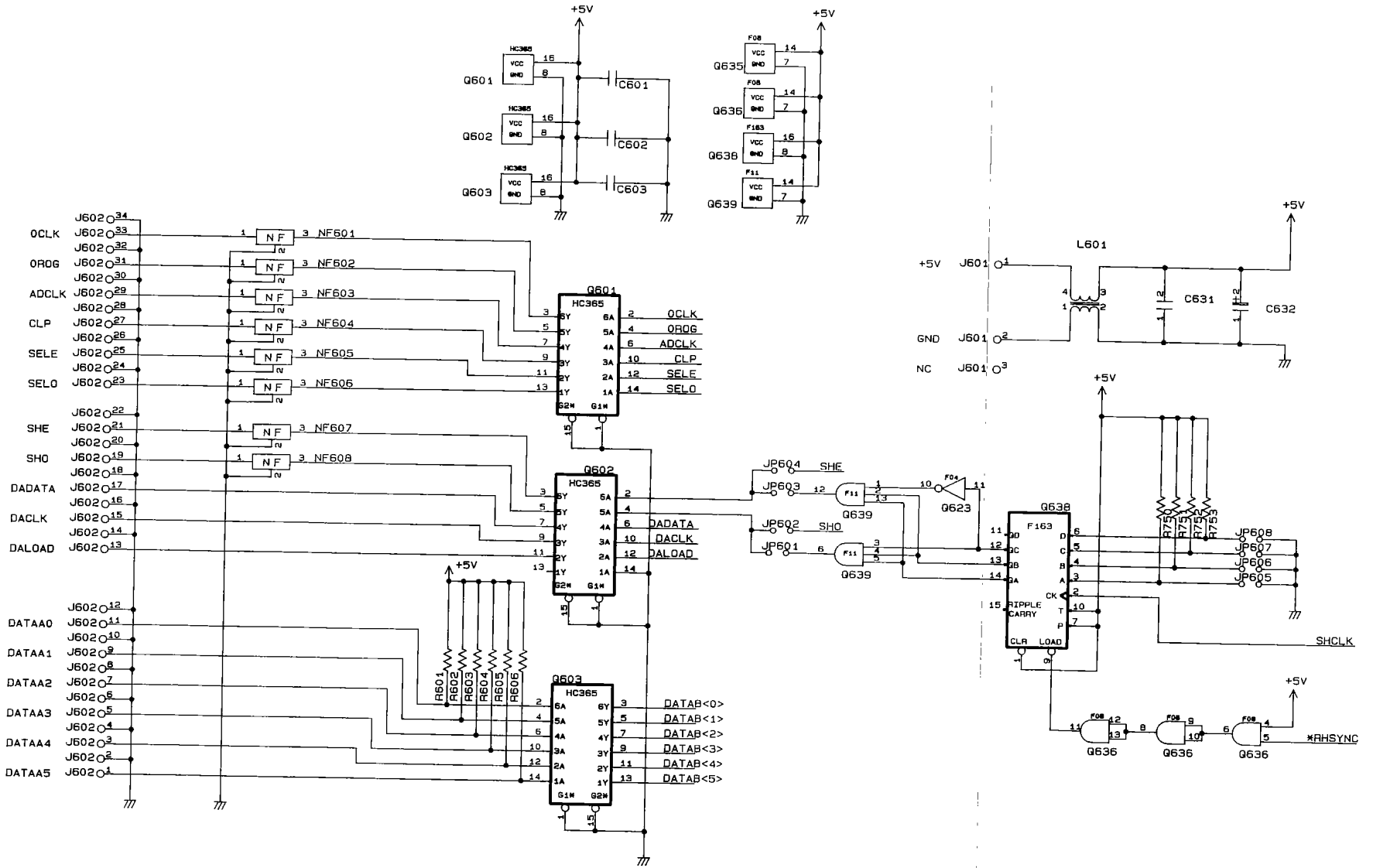
+5V
Q601
Q602
Q603
C601
C602
C603
Q635
Q636
Q638
Q639
L601
C631
C632
J601
GND
NC
OCLK
OROG
ADCLK
CLP
SELE
SELO
SHE
SHO
DADATA
DACLK
DALOAD
DATAA0
DATAA1
DATAA2
DATAA3
DATAA4
DATAA5
NF601
NF602
NF603
NF604
NF605
NF606
NF607
NF608
HC365
F163
JP604
JP603
JP602
JP601
JP608
JP607
JP606
JP605
R601
R602
R603
R604
R605
R606
R753
R754
R755
R756
DATAB<0>
DATAB<1>
DATAB<2>
DATAB<3>
DATAB<4>
DATAB<5>
SHCLK
*RHSYNC

IMAGE PROCESSOR CIRCUIT DIAGRAM (A503)

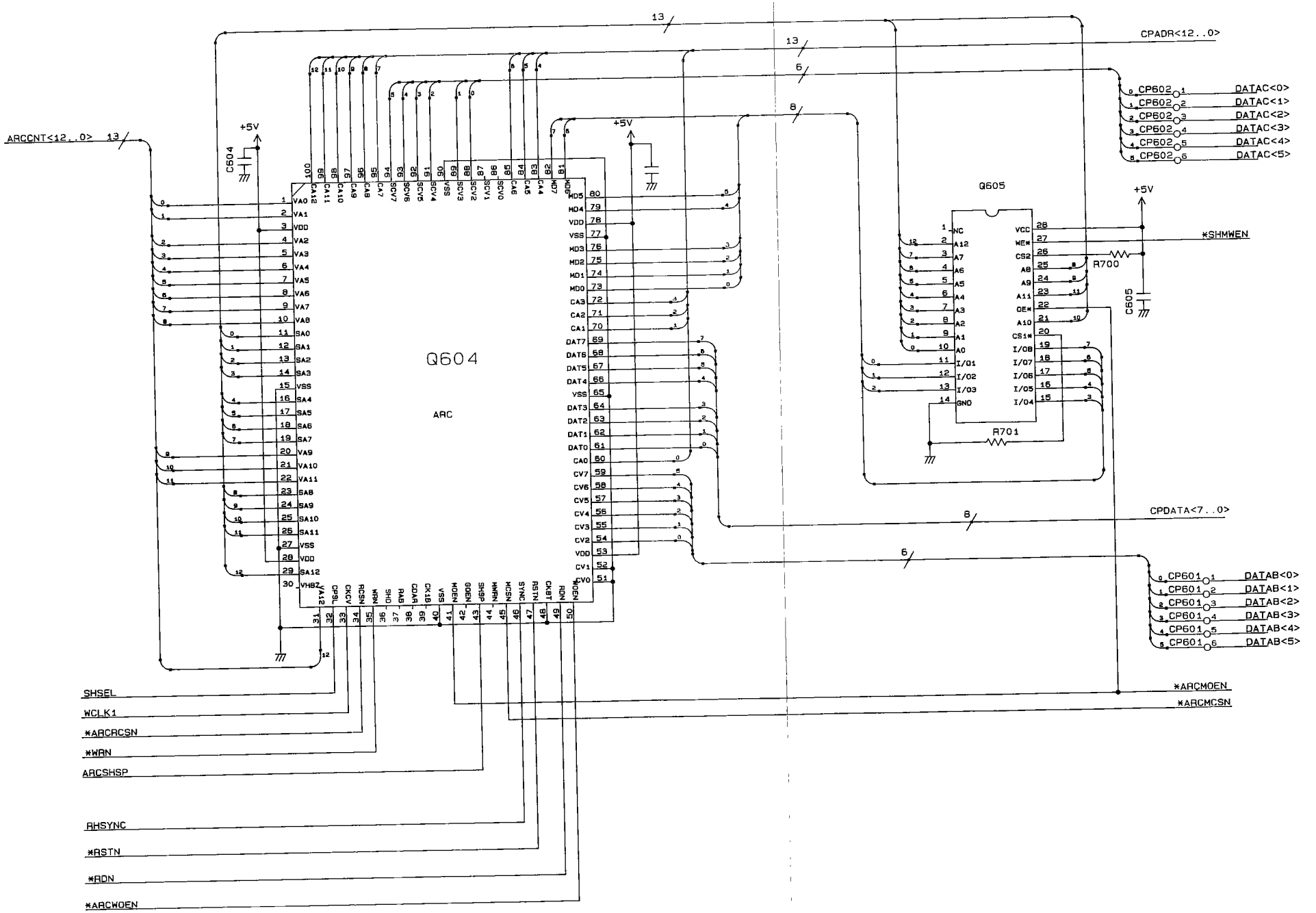

NEW

IMAGE PROCESSOR CIRCUIT DIAGRAM (A504)

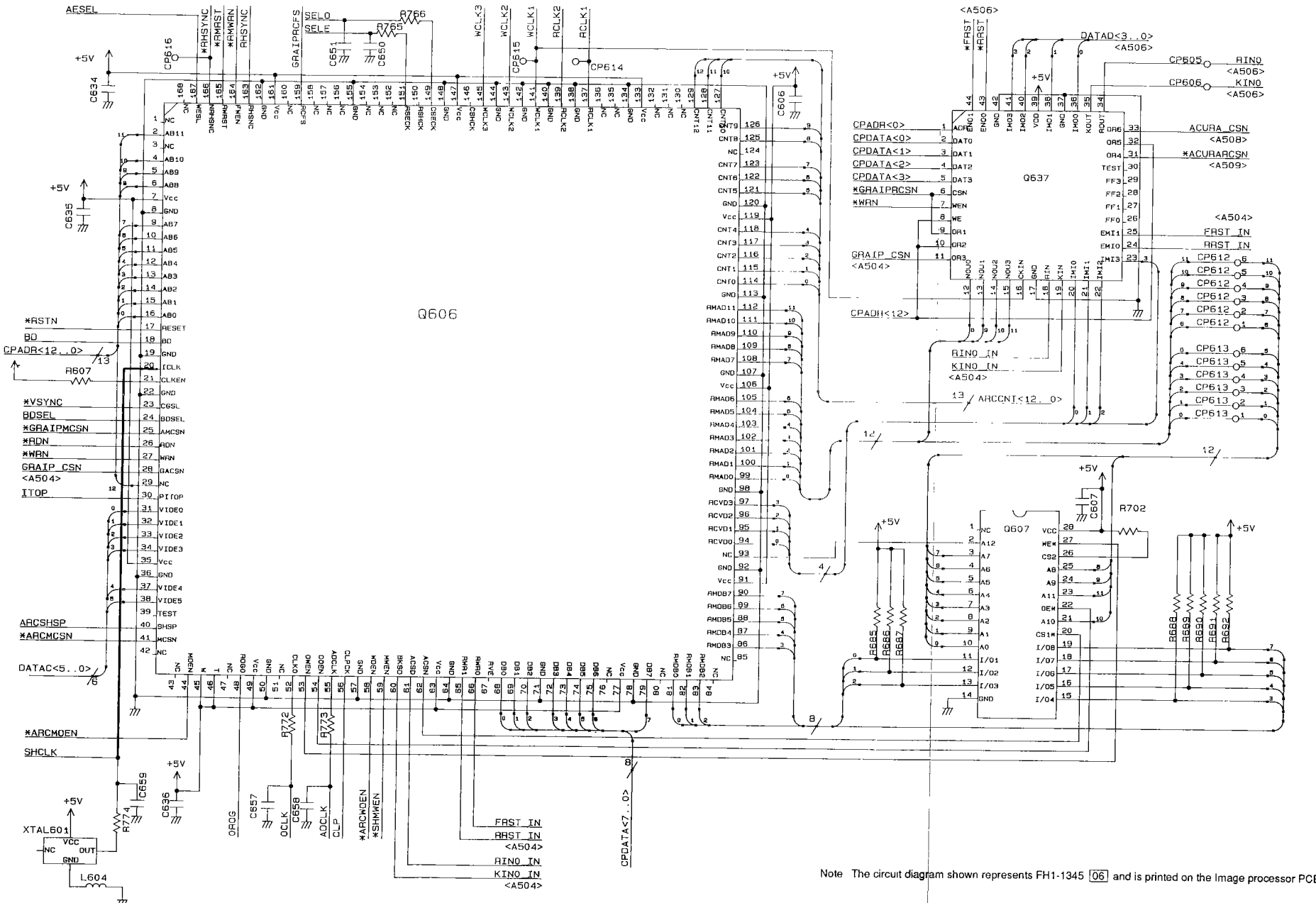

Note The circuit diagram shown represents FH1-1345 [06] and is printed on the Image processor PCB

OLD

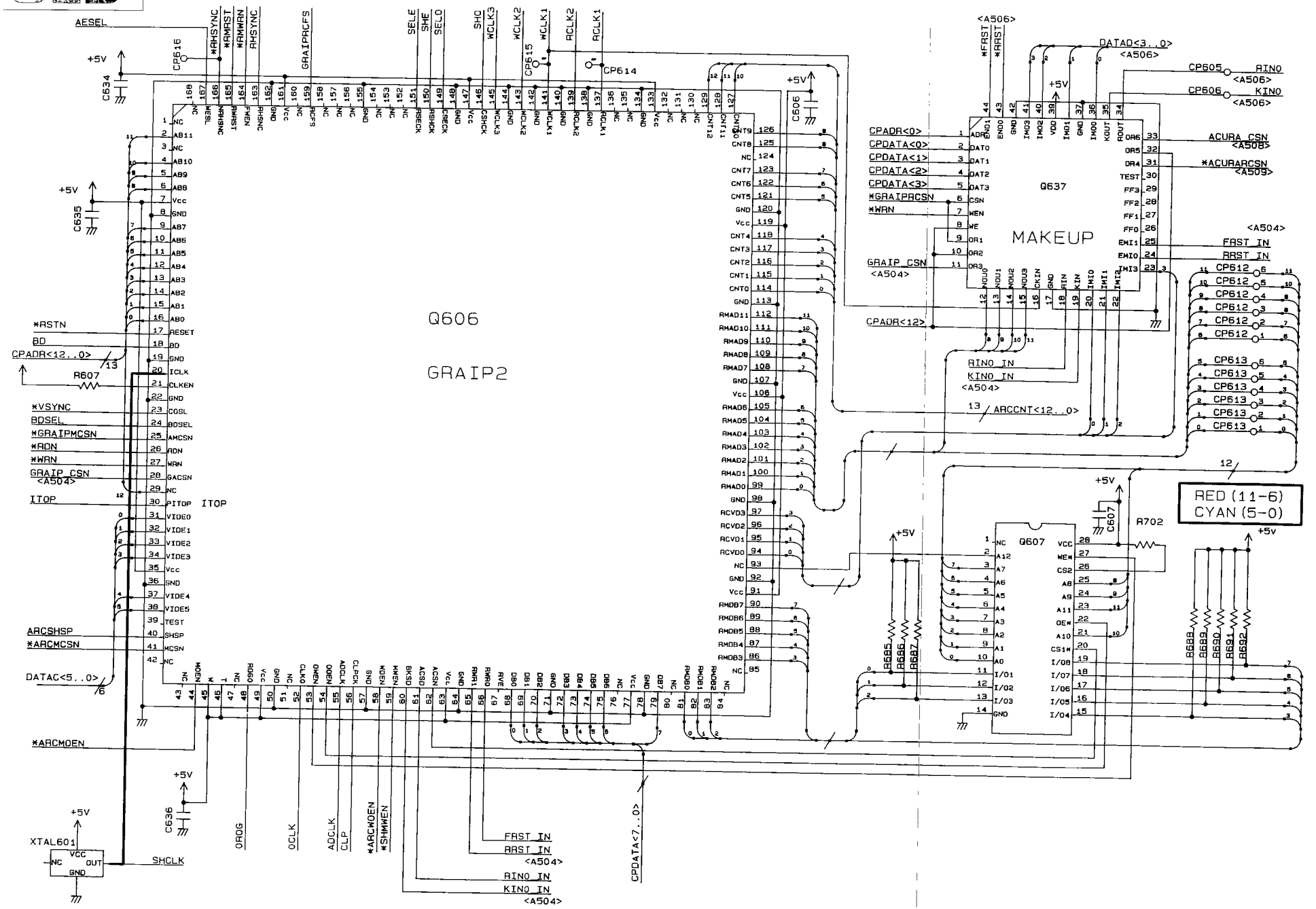
Q606
GRAIP2
Q637
MAKEUP
Q607
ITOP
RED (11-6)
CYAN (5-0)
AESEL
*RHSYNC
*RMRST
*RMWRN
RHSYNC
GRAIPRCFS
SELE
SHE
SELO
SHO
WCLK3
WCLK2
WCLK1
RCLK2
RCLK1
CP615
CP614
CP616
C634
C635
C606
C607
C636
R607
R702
*RSTN
BD
CPADR<12..0>
*VSYNC
BDSEL
*GRAIPMCSN
*RDN
*WRN
GRAIP_CSN
<A504>
DATAC<5..0>
*ARCMOEN
ARCSHSP
*ARCMCSN
XTAL601
SHCLK
OROG
OCLK
ADCLK
CLP
*ARCWOEN
*SHMWEN
CPDATA<7..0>
FAST_IN
RRST_IN
RINO_IN
KINO_IN
<A506>
*FAST
*RRST
DATAD<3..0>
CP605
RINO
CP606
KINO
CPADR<0>
CPDATA<0>
CPDATA<1>
CPDATA<2>
CPDATA<3>
*GRAIPRCSN
*WRN
GRAIP_CSN
ACURA_CSN
<A508>
*ACURARCSN
<A509>
<A504>
FAST_IN
RRST_IN
CP612
CP613
13
ARCCNT<12..0>
12
R685
R686
R687
R688
R689
R690
R691
R692
+5V

IMAGE PROCESSOR CIRCUIT DIAGRAM (A505)

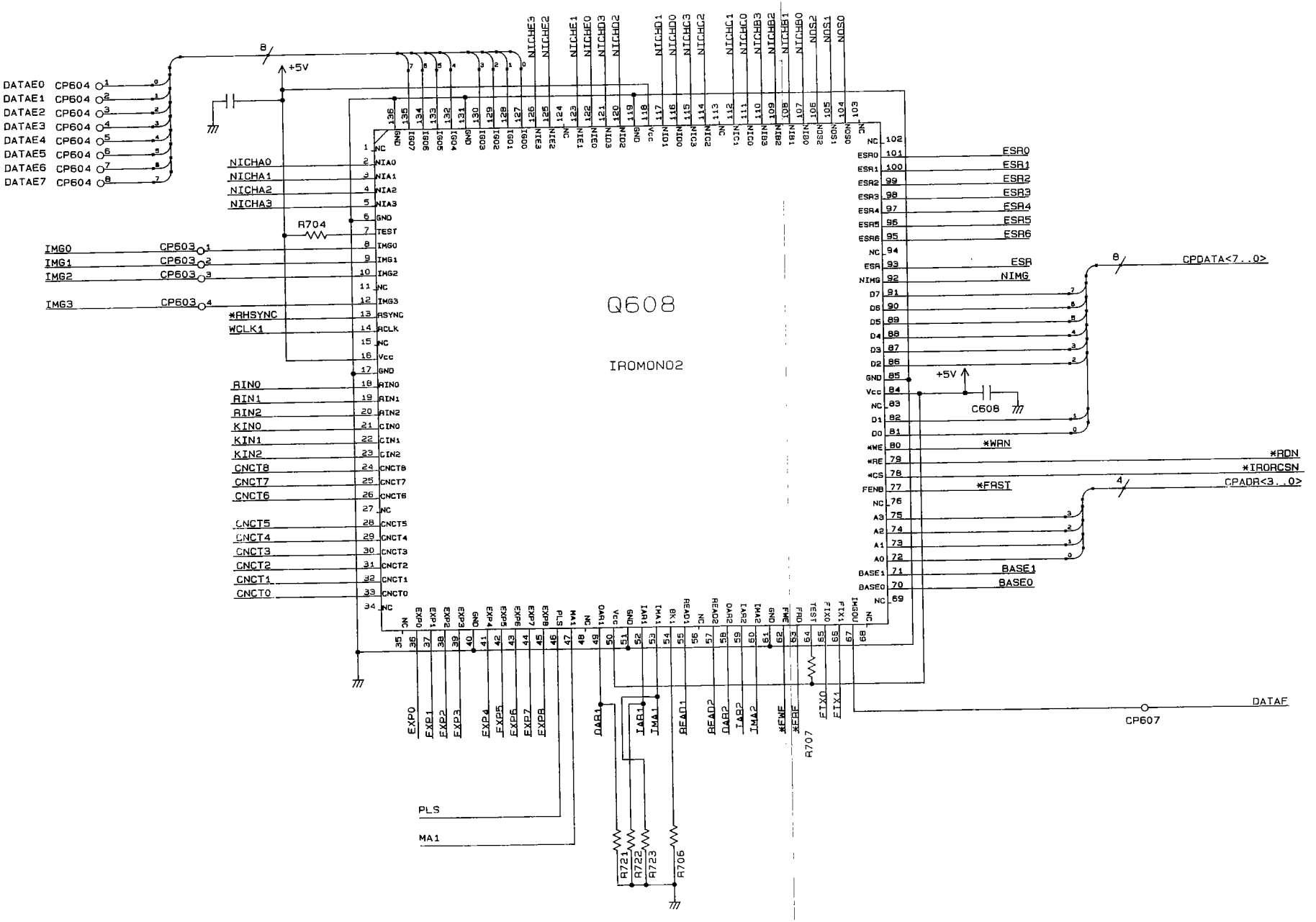

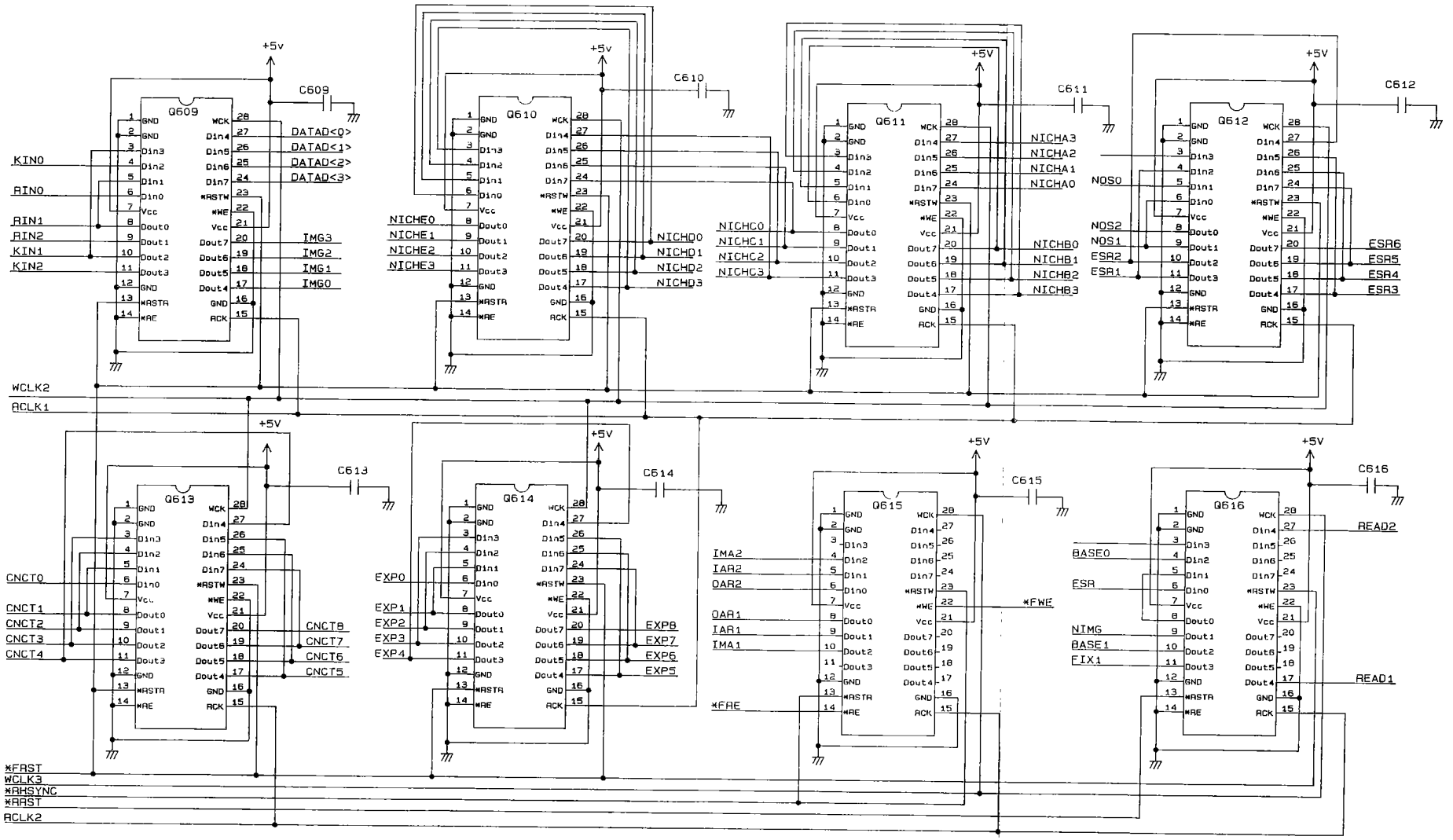
+5v
C609
Q609
C610
Q610
C611
Q611
C612
Q612
C613
Q613
C614
Q614
C615
Q615
C616
Q616
KIN0
RIN0
RIN1
RIN2
KIN1
KIN2
DATAD<0>
DATAD<1>
DATAD<2>
DATAD<3>
IMG3
IMG2
IMG1
IMG0
NICHE0
NICHE1
NICHE2
NICHE3
NICHD0
NICHD1
NICHD2
NICHD3
NICHC0
NICHC1
NICHC2
NICHC3
NICHA3
NICHA2
NICHA1
NICHA0
NICHB0
NICHB1
NICHB2
NICHB3
NOS0
NOS2
NOS1
ESR2
ESR1
ESR6
ESR5
ESR4
ESR3
WCLK2
ACLK1
CNCT0
CNCT1
CNCT2
CNCT3
CNCT4
CNCT8
CNCT7
CNCT6
CNCT5
EXP0
EXP1
EXP2
EXP3
EXP4
EXP8
EXP7
EXP6
EXP5
IMA2
IAR2
OAR2
OAR1
IAR1
IMA1
*FWE
*FRE
BASE0
ESR
NIMG
BASE1
FIX1
READ2
READ1
*FRST
WCLK3
*RHSYNC
*RRST
ACLK2

IMAGE PROCESSOR CIRCUIT DIAGRAM (A507)

NEW

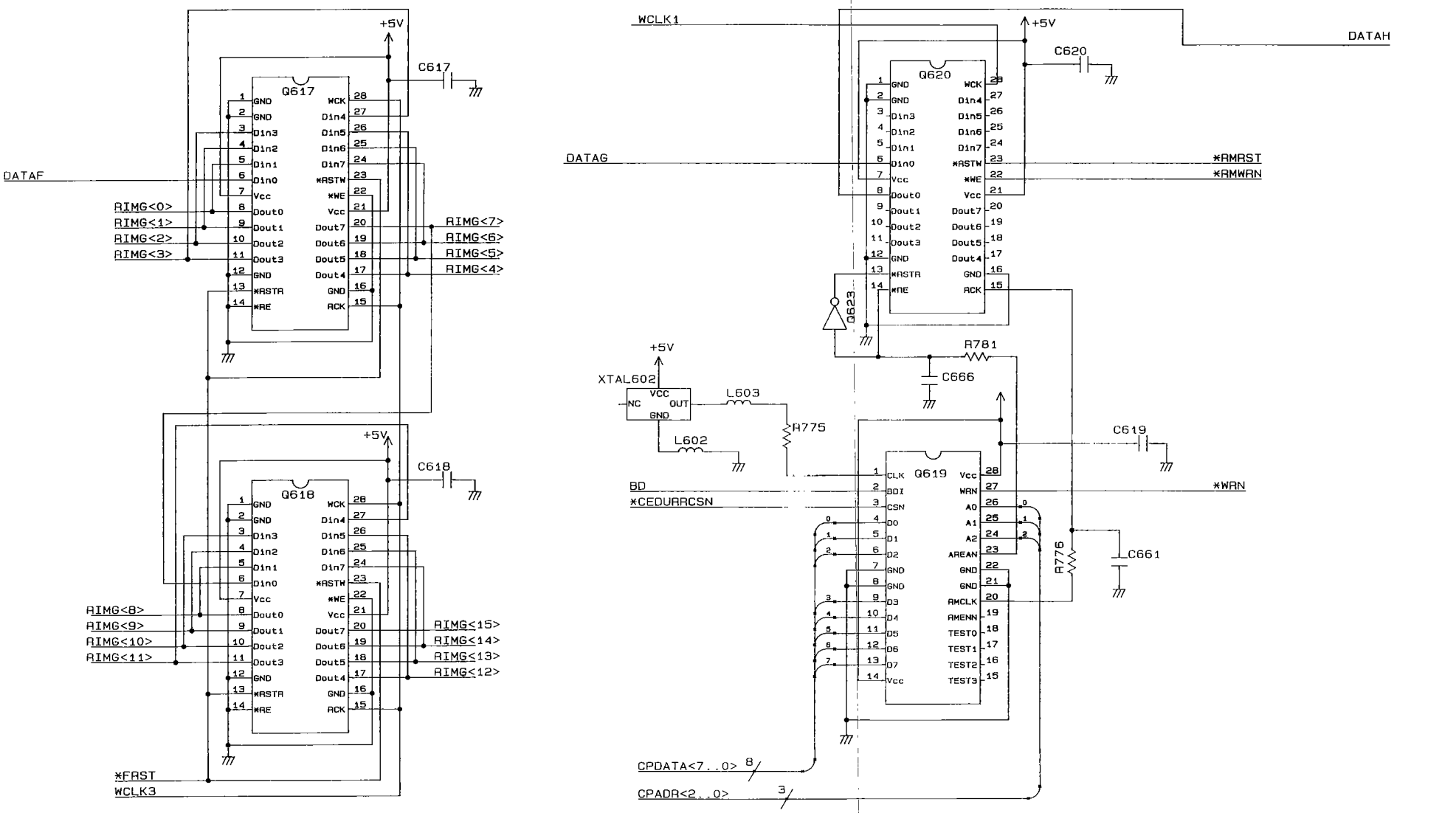

Note: The circuit diagram shown represents FH1-1345 [06] and is printed on the Image processor PCB.

OLD

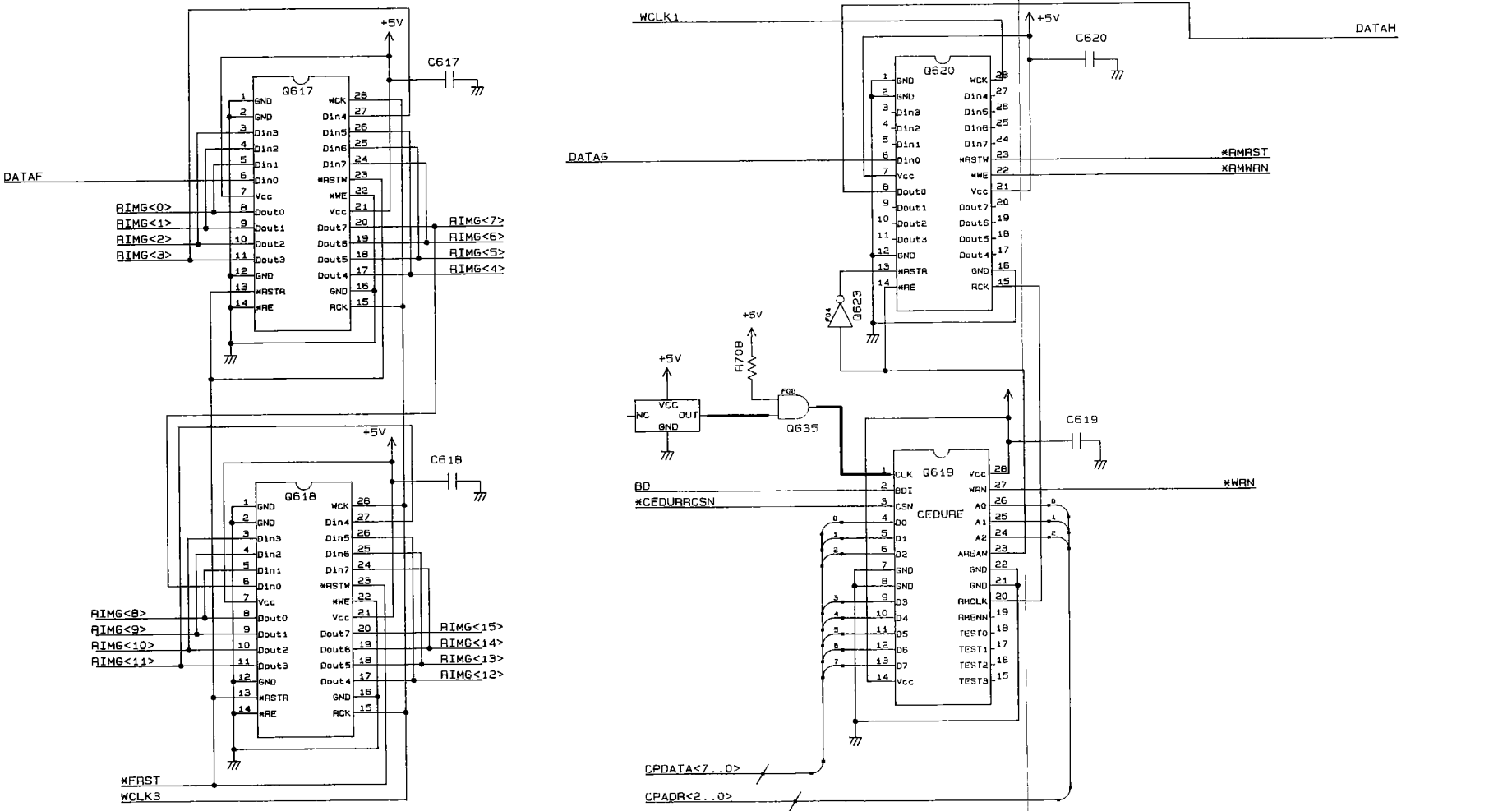
DATAF
DATAG
DATAH
WCLK1
WCLK3
*FRST
BD
*CEDURRCSN
*WRN
*AMRST
*AMWRN
CPDATA<7..0>
CPADR<2..0>
RIMG<0>
RIMG<1>
RIMG<2>
RIMG<3>
RIMG<4>
RIMG<5>
RIMG<6>
RIMG<7>
RIMG<8>
RIMG<9>
RIMG<10>
RIMG<11>
RIMG<12>
RIMG<13>
RIMG<14>
RIMG<15>
+5V
C617
C618
C619
C620
Q617
Q618
Q619
Q620
Q623
Q635
R708
CEDURE

NEW

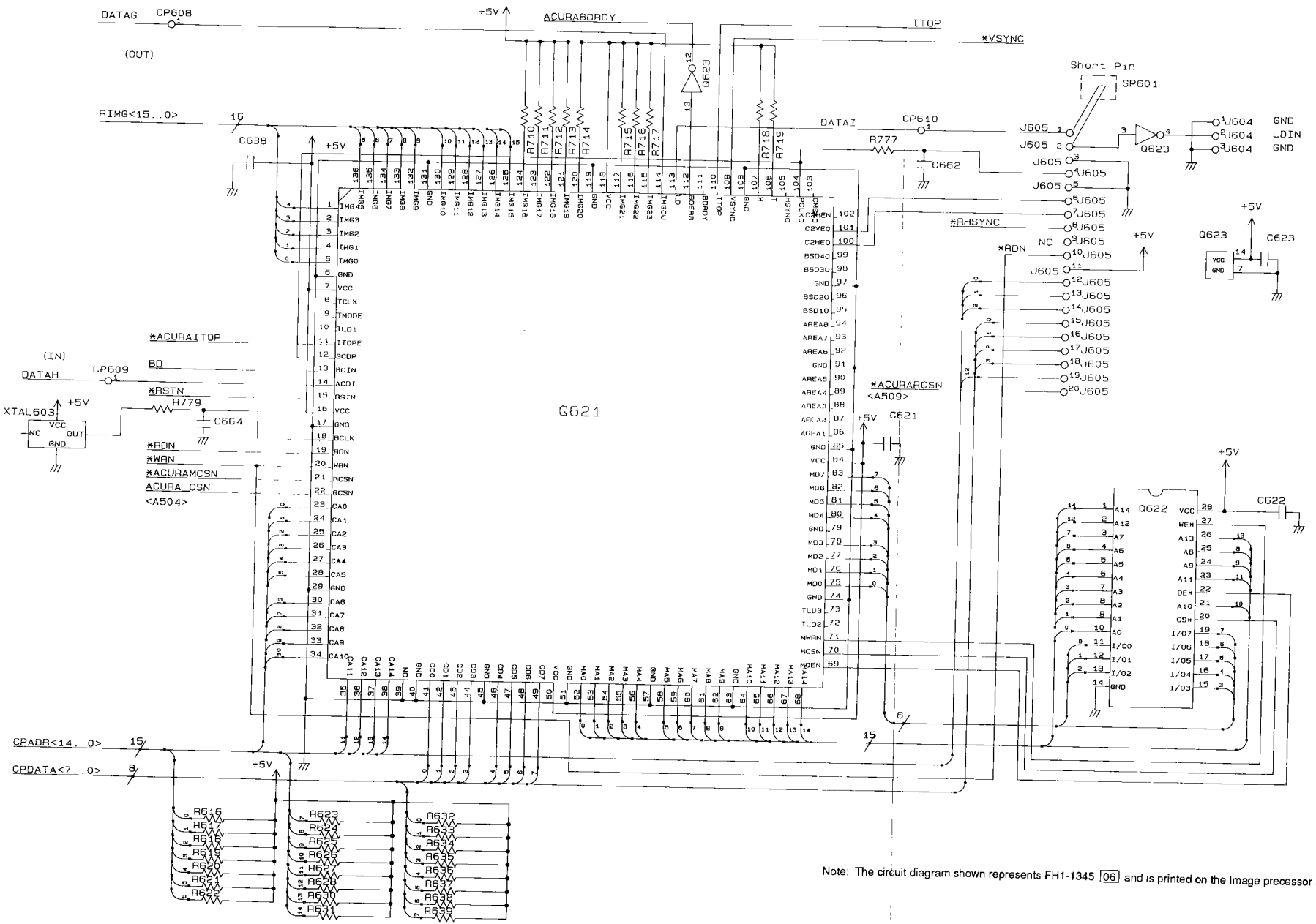

Note: The circuit diagram shown represents FH1-1345 [06] and is printed on the Image precessor PCB.

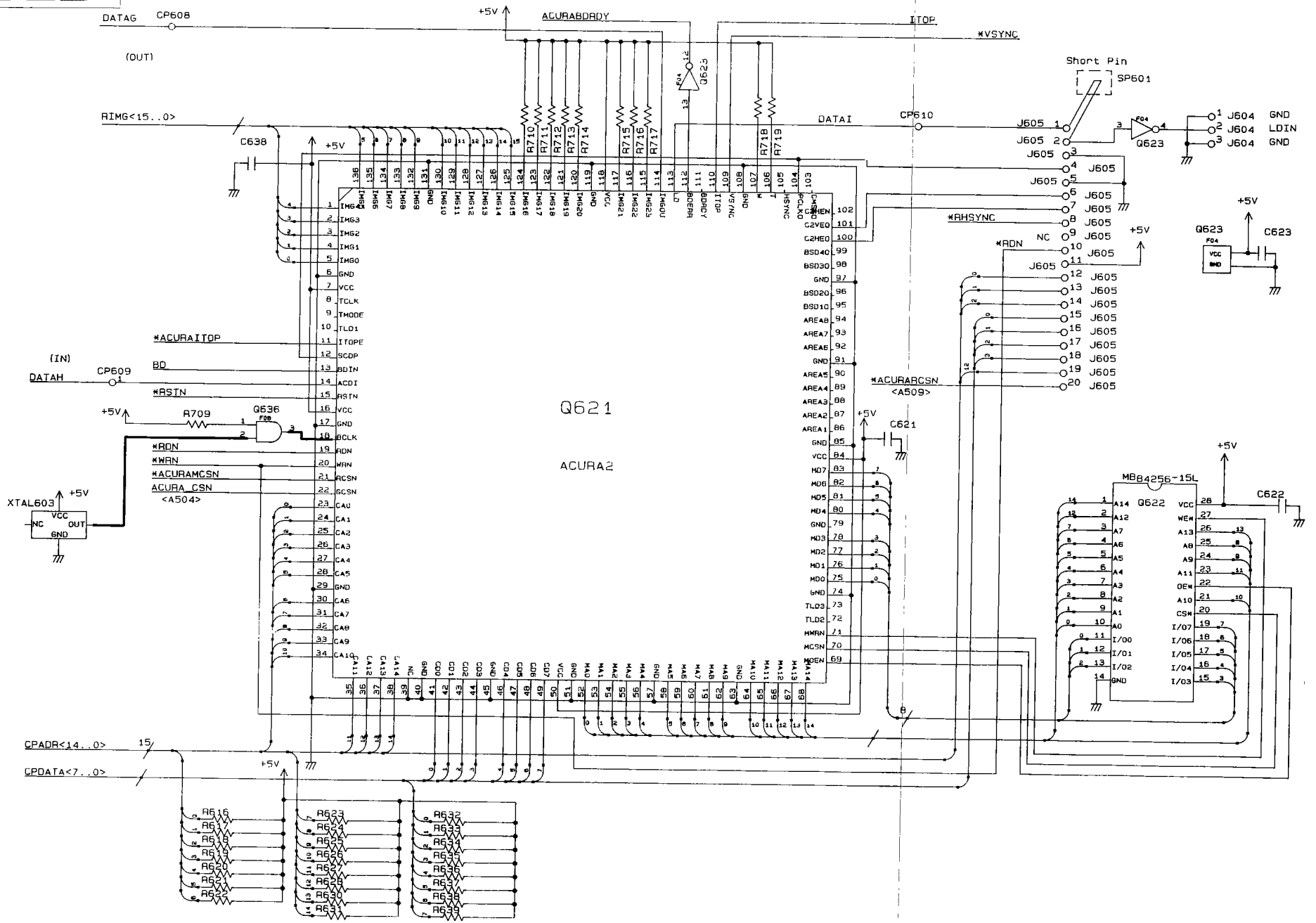
DATAG
CP608
(OUT)
+5V
ACURABDRDY
ITOP
*VSYNC
Short Pin
SP601
RIMG<15..0>
C638
R710
R711
R712
R713
R714
R715
R716
R717
R718
R719
Q625
DATAI
CP610
J605
J604
GND
LDIN
Q623
*RHSYNC
*RDN
NC
C623
Q621
ACURA2
*ACURAITOP
(IN)
DATAH
CP609
BD
*RSIN
R709
Q636
*WRN
*ACURAMCSN
ACURA_CSN
<A504>
XTAL603
*ACURARCSN
<A509>
C621
MB84256-15L
Q622
C622
CPADR<14..0>
CPDATA<7..0>
R616
R623
R632

IMAGE PROCESSOR CIRCUIT DIAGRAM (A509)

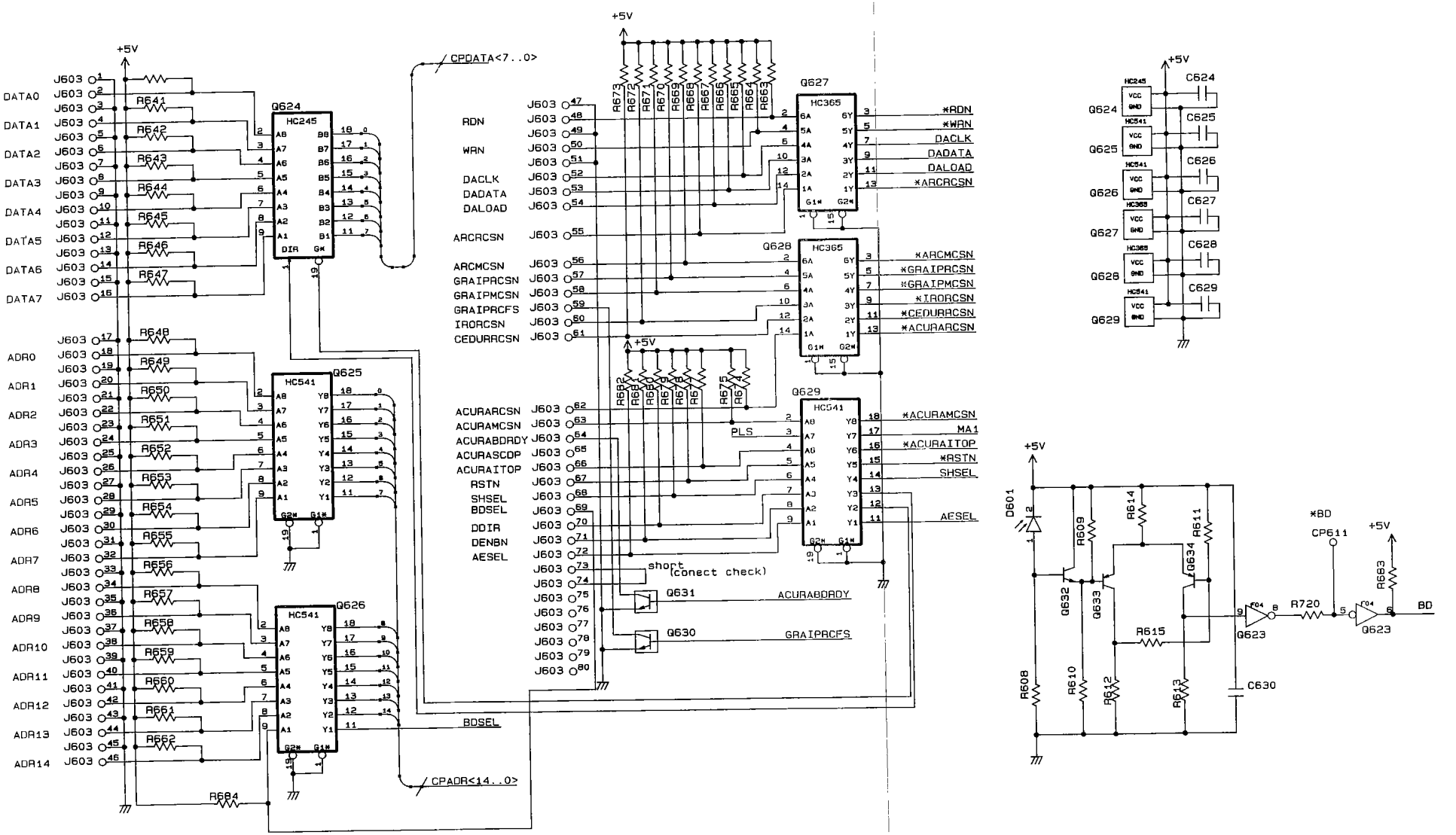

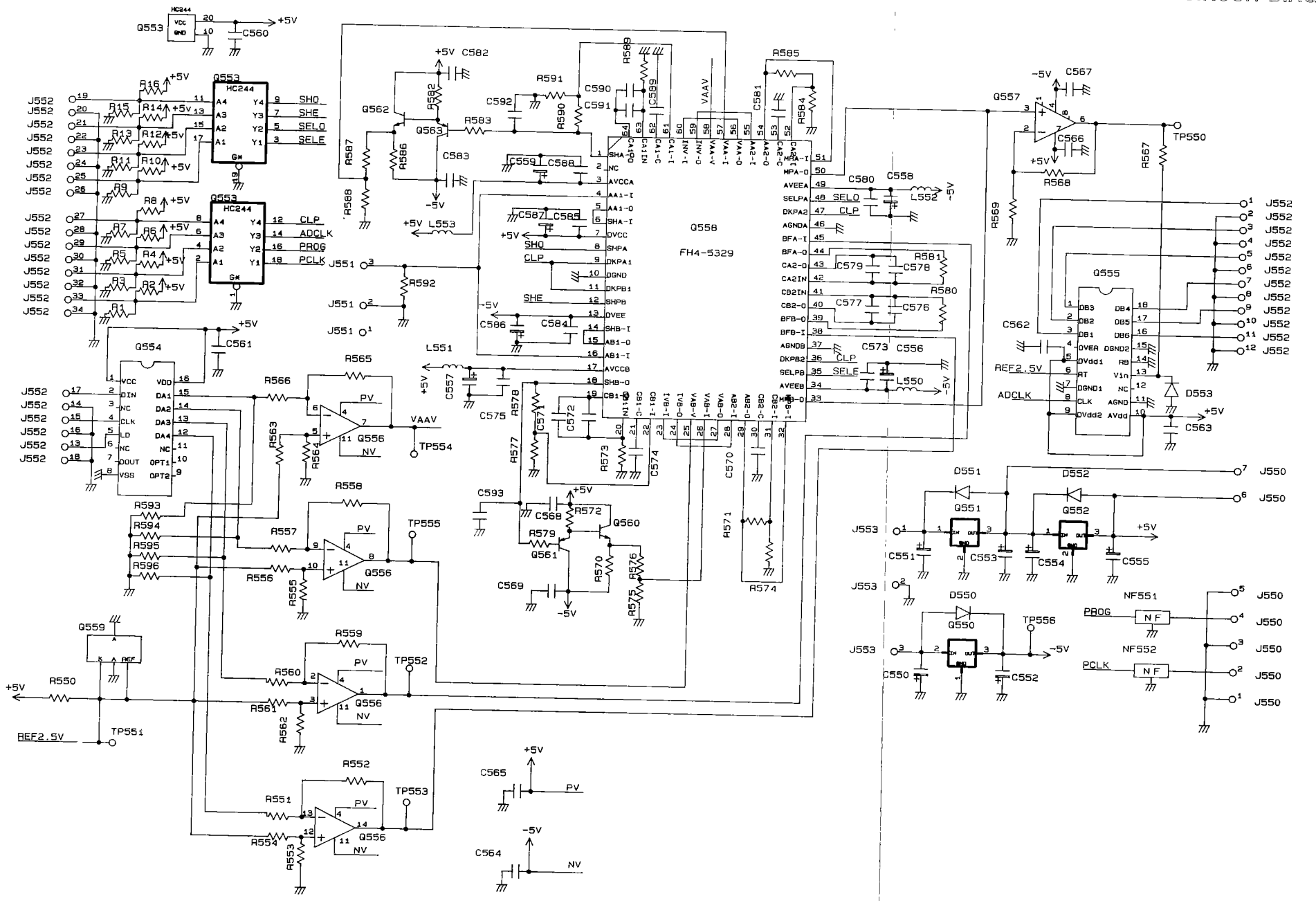
Q558
FH4-5329
Q553
HC244
Q554
Q555
Q556
Q557
Q559
Q560
Q561
Q562
Q563
Q550
Q551
Q552
SHO
SHE
SELO
SELE
CLP
ADCLK
PROG
PCLK
REF2.5V
VAAV
PV
NV
TP550
TP551
TP552
TP553
TP554
TP555
TP556
D550
D551
D552
D553
NF551
NF552
NF
+5V
-5V

7. CCD DRIVER CIRCUIT DIAGRAM

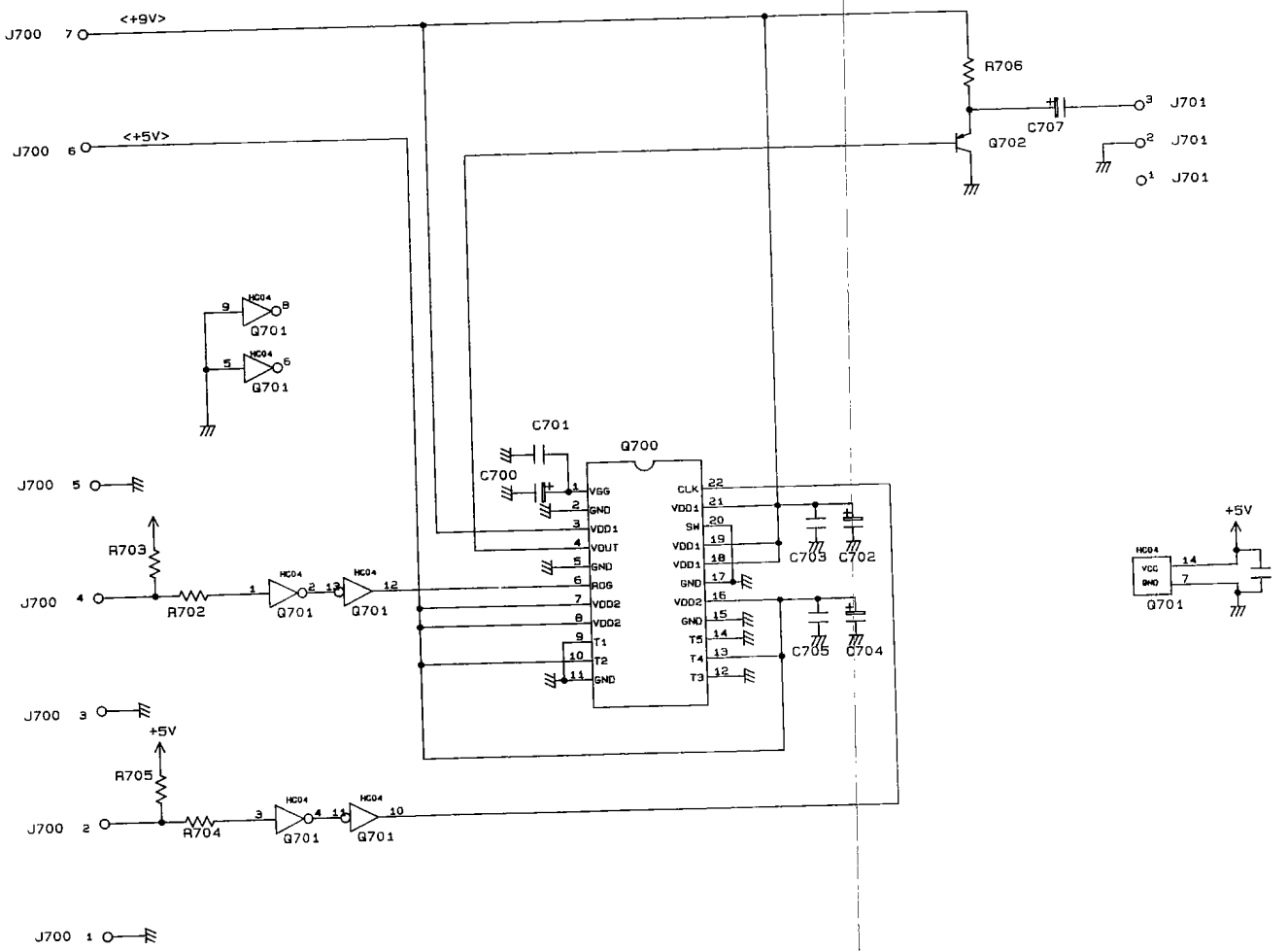

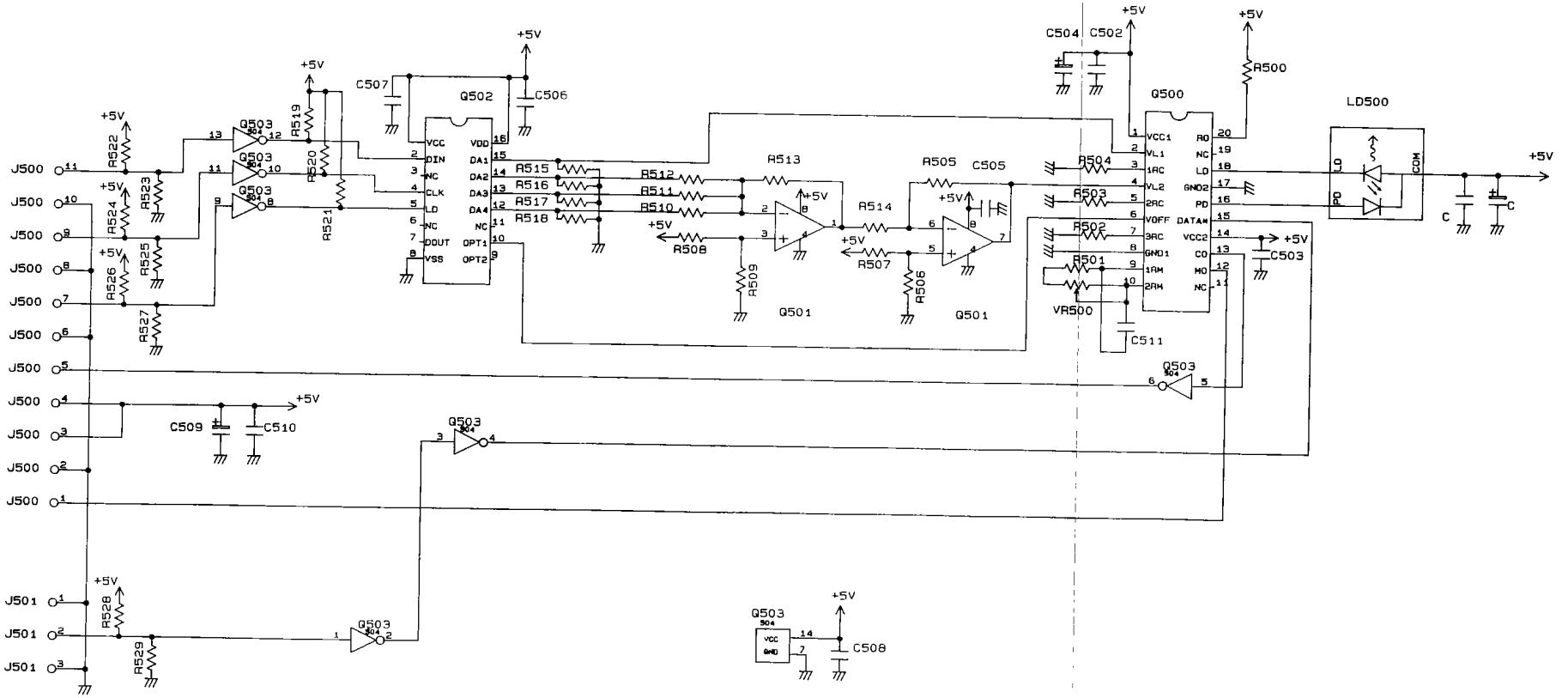
J500
J501
+5V
R522
R523
R524
R525
R526
R527
R528
R529
R519
R520
R521
Q503
Q502
C507
C506
VCC
DIN
NC
CLK
LD
NC
DOUT
VSS
VDD
DA1
DA2
DA3
DA4
NC
OPT1
OPT2
R515
R516
R517
R518
R512
R511
R510
R508
R509
R513
R514
R505
C505
R507
R506
Q501
C509
C510
C504
C502
R500
Q500
LD500
VCC1
VL1
1RC
VL2
2RC
VOFF
3RC
GND1
1RM
2RM
RO
NC
LD
GND2
PD
DATAM
VCC2
CO
MO
NC
R504
R503
R502
R501
VR500
C511
C503
C
LD
PD
COM
C508

9. DOCUMENT SIZE DETECTION CIRCUIT DIAGRAM

NEW

Note. The circuit diagram shown represents FH1-1348, 1349 [02] and is printed on the document size detection PCB

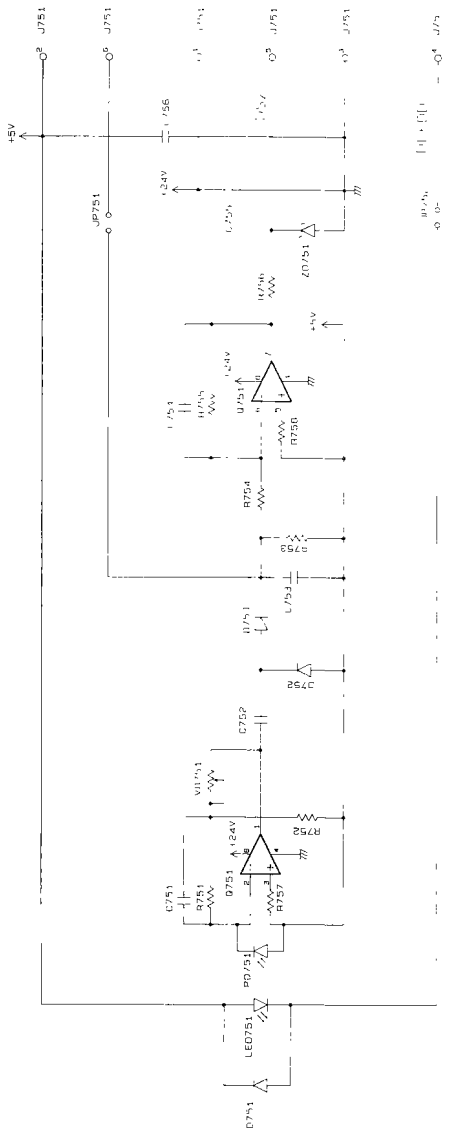

OLD

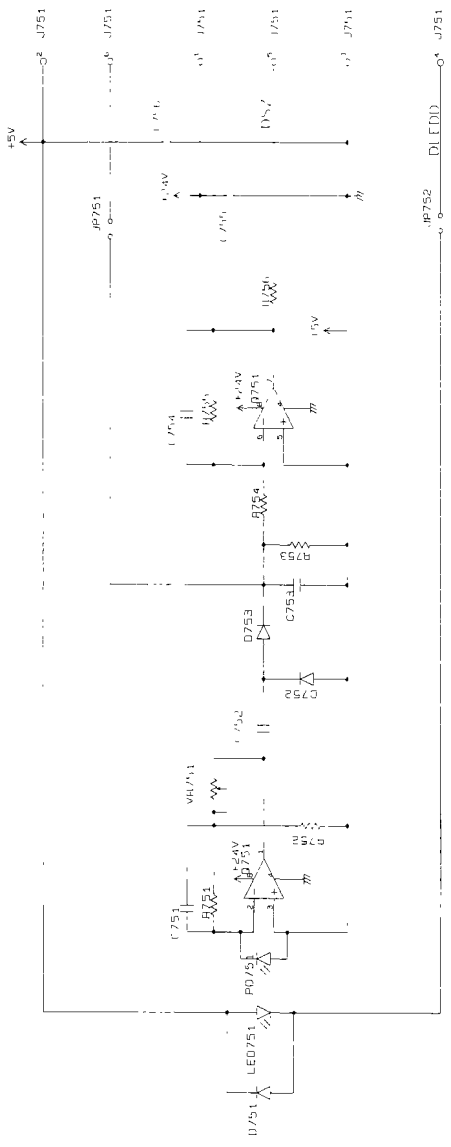
J751
+5V
JP751
JP752
DLED0
Q751
R754
R753
C753
D753
C752
R751
C751
PD751
LED751
D751

10. COLOR TONER CONCENTRATION DETECTION CIRCUIT DIAGRAM

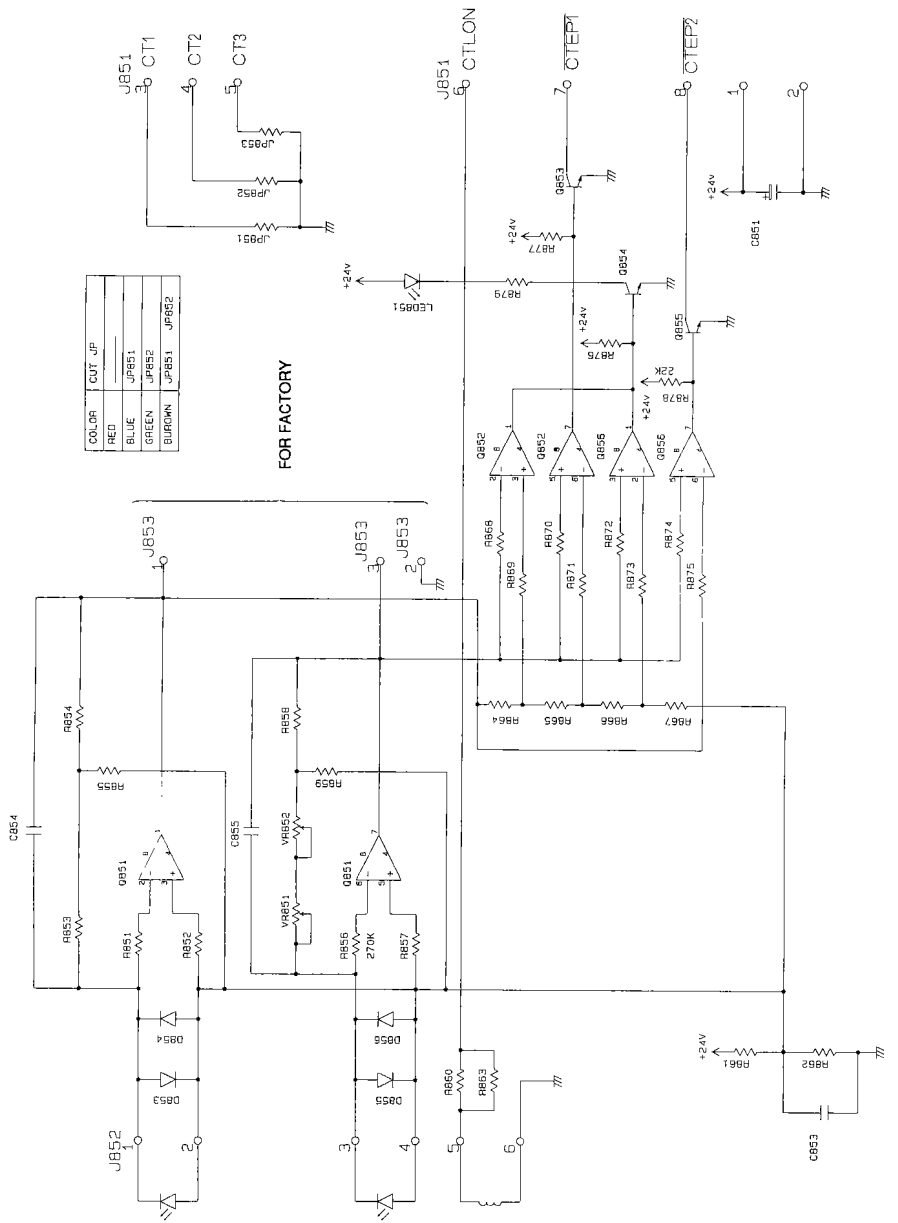

NEW

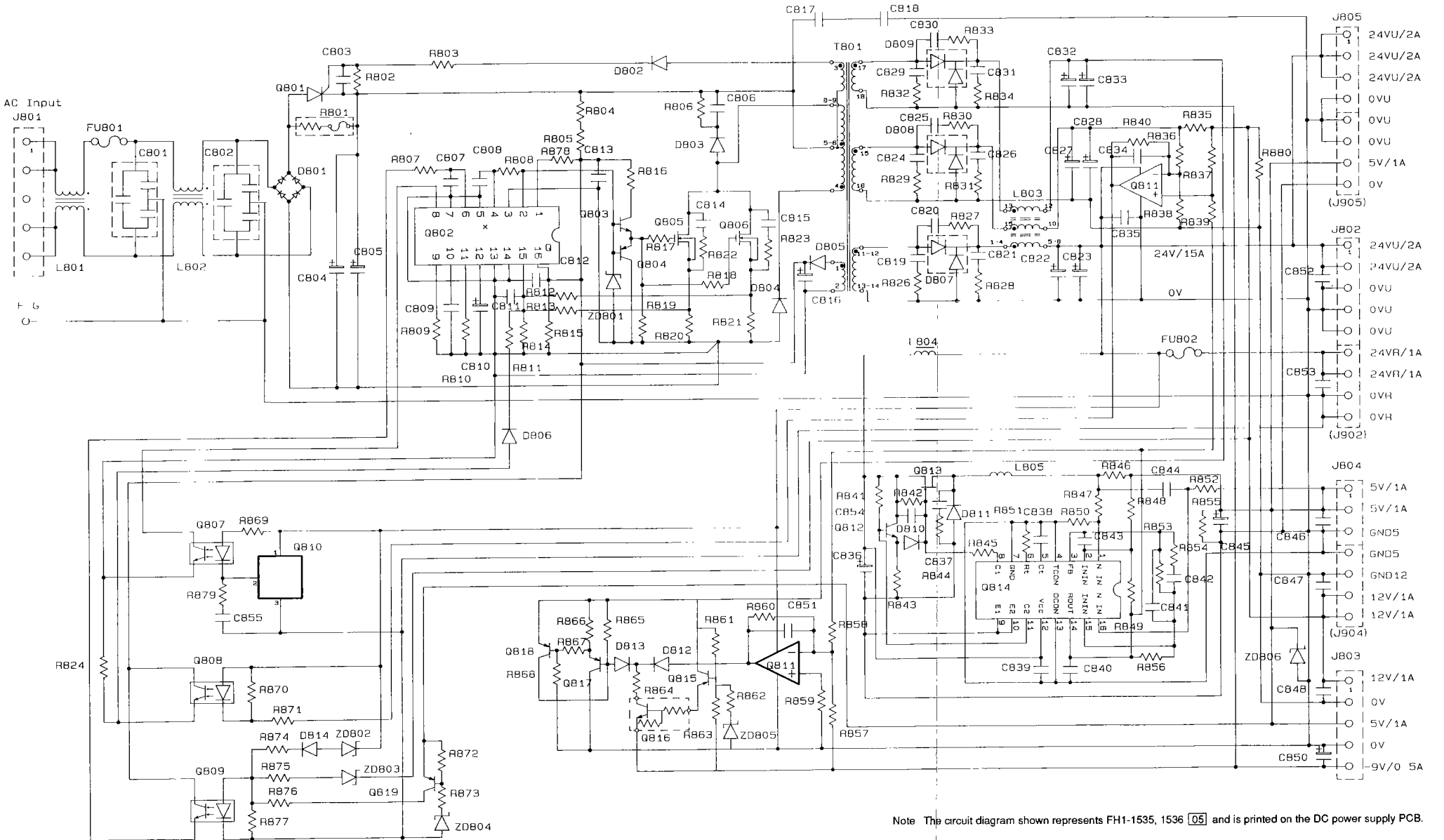

Note The circuit diagram shown represents FH1-1535, 1536 [05] and is printed on the DC power supply PCB.

OLD

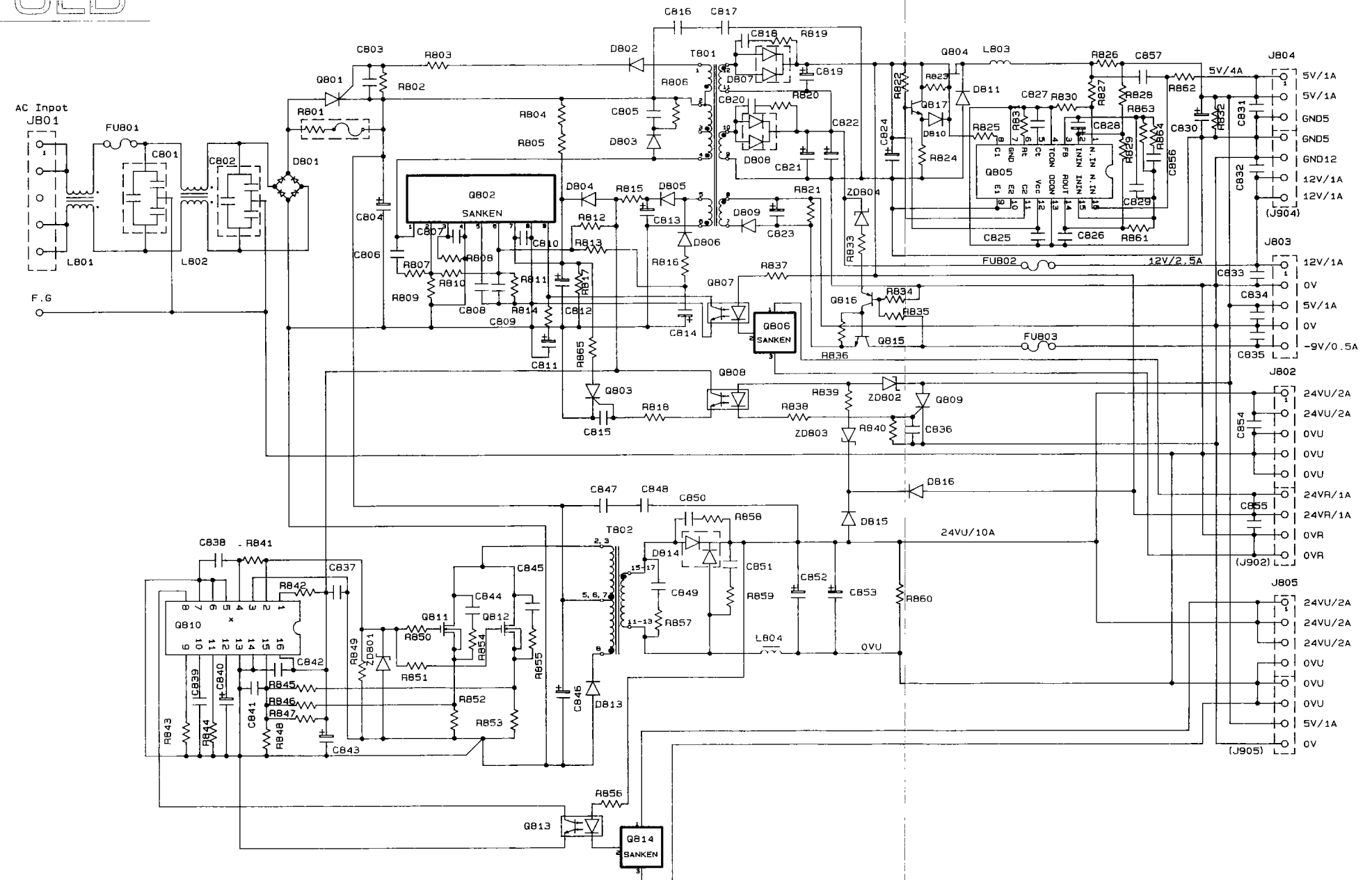
AC Inpot
J801
FU801
C801
C802
D801
L801
L802
F.G
Q801
R801
C803
R802
R803
D802
T801
C816
C817
C818
R819
D807
C819
R806
C805
D803
R804
R805
C820
R820
D808
C821
C822
Q802
SANKEN
D804
R815
D805
R812
C813
D806
R813
C804
C806
C807
R807
R808
R810
R809
C808
R811
R814
C809
C810
R817
C812
C811
R816
R821
D809
C823
ZD804
R833
Q807
R837
Q806
SANKEN
C814
R865
Q803
R818
C815
Q808
R839
ZD802
Q809
R838
ZD803
R840
C836
Q804
L803
R826
C857
R822
R823
D811
Q817
D810
R824
C824
R825
R827
R828
R862
R863
C827
R830
C828
R829
R864
C856
C830
R832
C831
C832
Q805
C825
C826
R861
C829
FU802
12V/2.5A
5V/4A
J804
5V/1A
5V/1A
GND5
GND5
GND12
12V/1A
12V/1A
(J904)
J803
12V/1A
0V
5V/1A
0V
-9V/0.5A
C833
C834
C835
Q816
R834
R835
Q815
R836
FU803
J802
24VU/2A
24VU/2A
0VU
0VU
0VU
24VR/1A
24VR/1A
0VR
0VR
(J902)
C854
C855
D816
D815
24VU/10A
C847
C848
C850
R858
T802
D814
C851
C849
R859
R857
C852
C853
R860
L804
0VU
J805
24VU/2A
24VU/2A
24VU/2A
0VU
0VU
0VU
5V/1A
0V
(J905)
C838
R841
C837
R842
Q810
C842
C839
C840
C841
R843
R844
R845
R846
R847
R848
C843
R849
ZD801
R850
R851
Q811
C844
Q812
R854
R855
C845
R852
R853
C846
D813
R856
Q813
Q814
SANKEN

12. DC POWER SUPPLY DIAGRAM FOR DF/SORTER

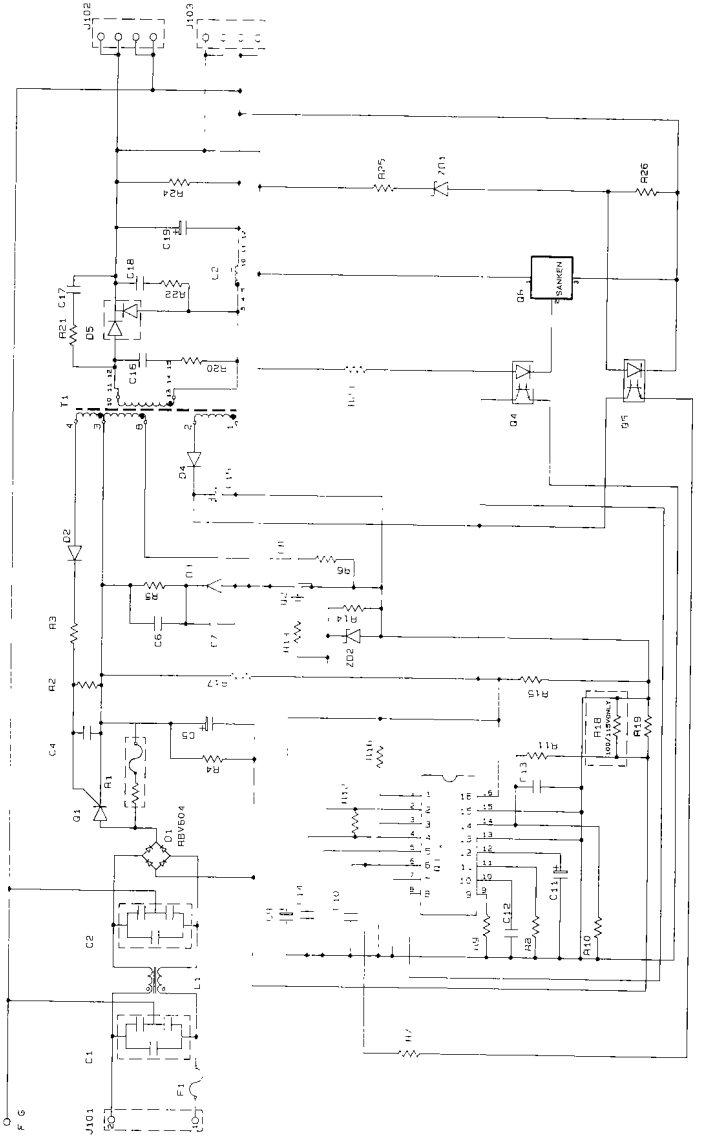

NEW

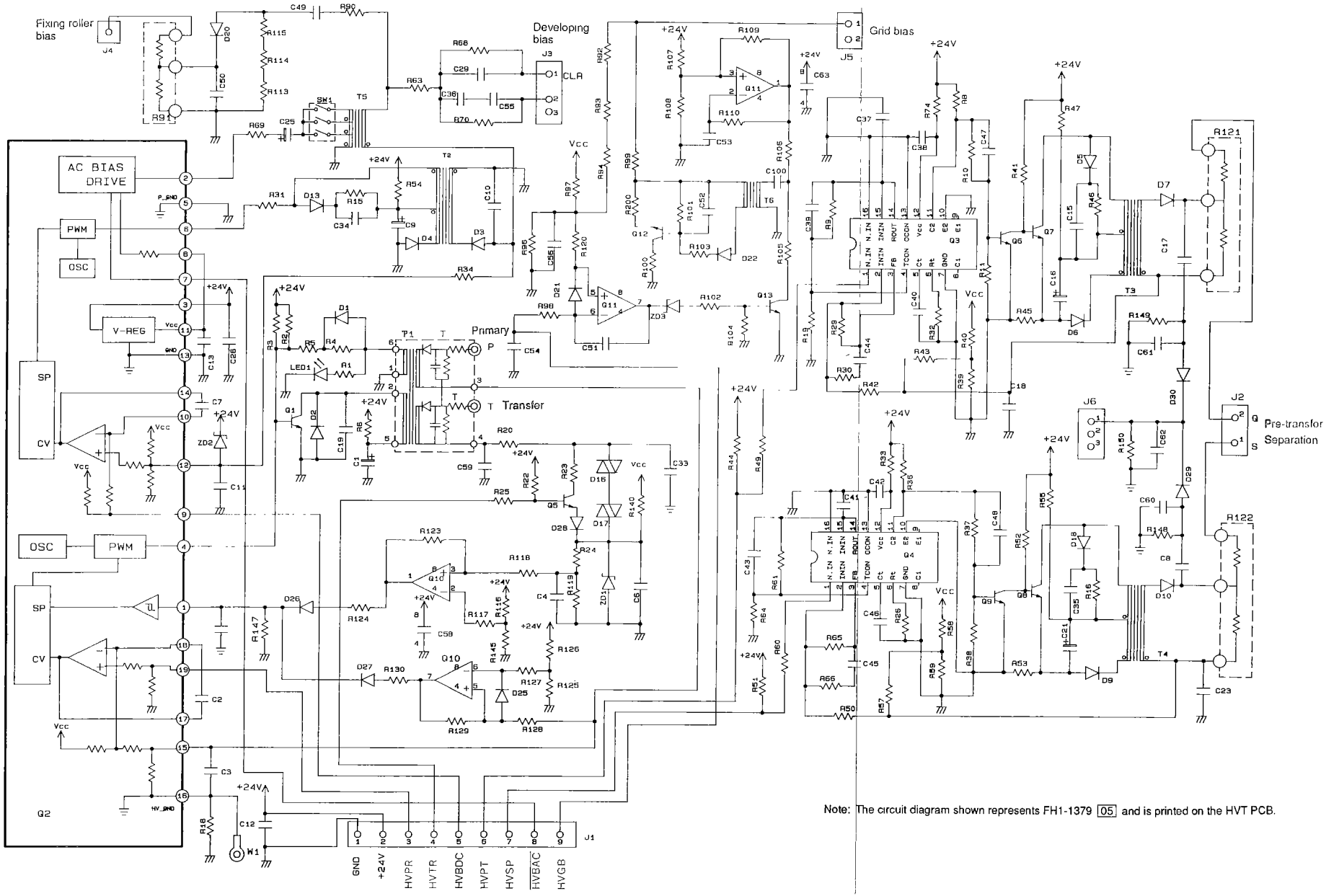

Note: The circuit diagram shown represents FH1-1379 [05] and is printed on the HVT PCB.

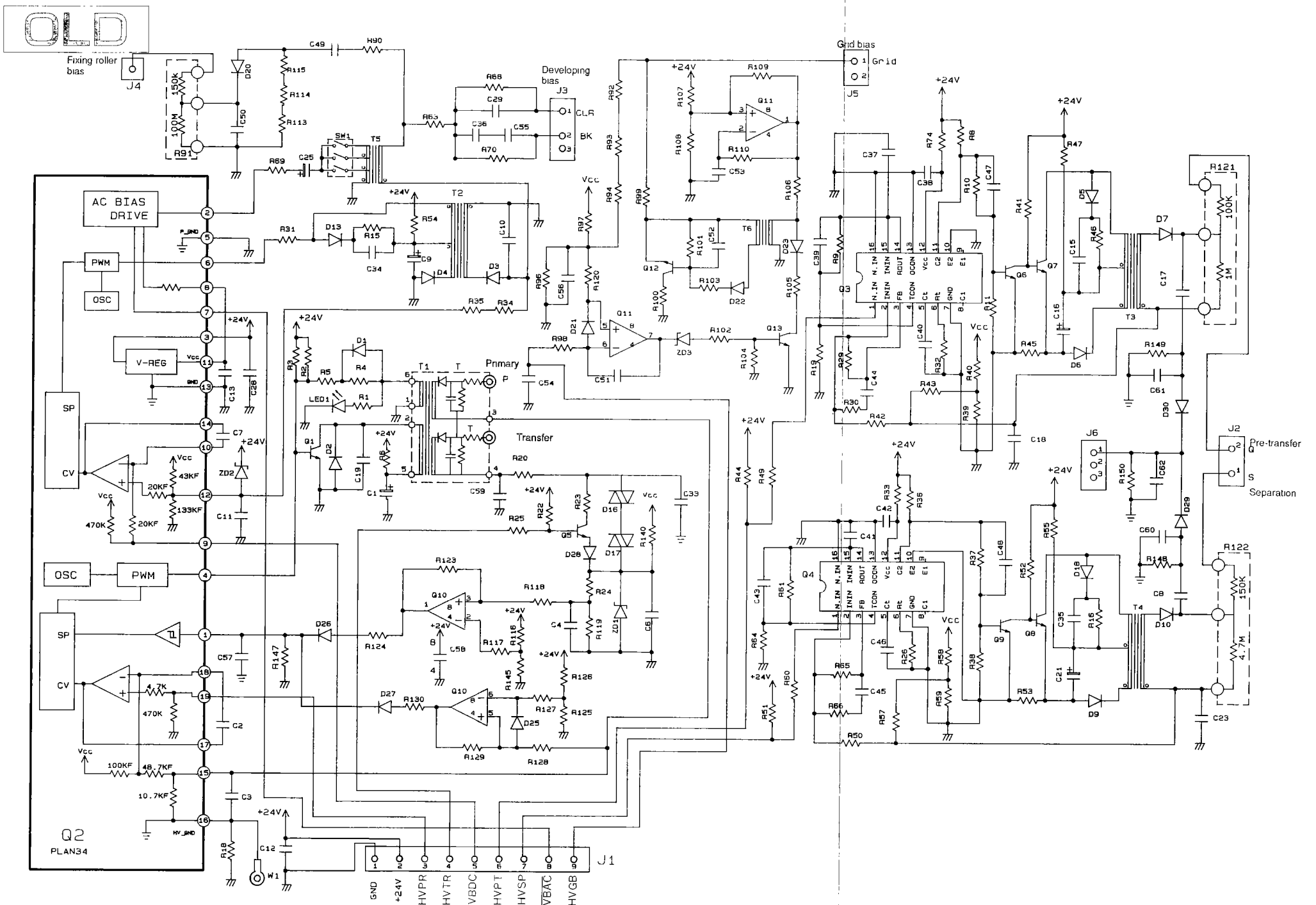
OLD
Fixing roller bias
J4
Developing bias
J3
CLR
BK
Grid bias
Grid
J5
AC BIAS DRIVE
PWM
OSC
V-REG
SP
CV
Primary
Transfer
Pre-transfer
Separation
J6
J2
Q2
PLAN34
J1
GND
+24V
HVPR
HVTR
HVBDC
HVPT
HVSP
HVBAC
HVGB

14. HVTAC CIRCUIT DIAGRAM

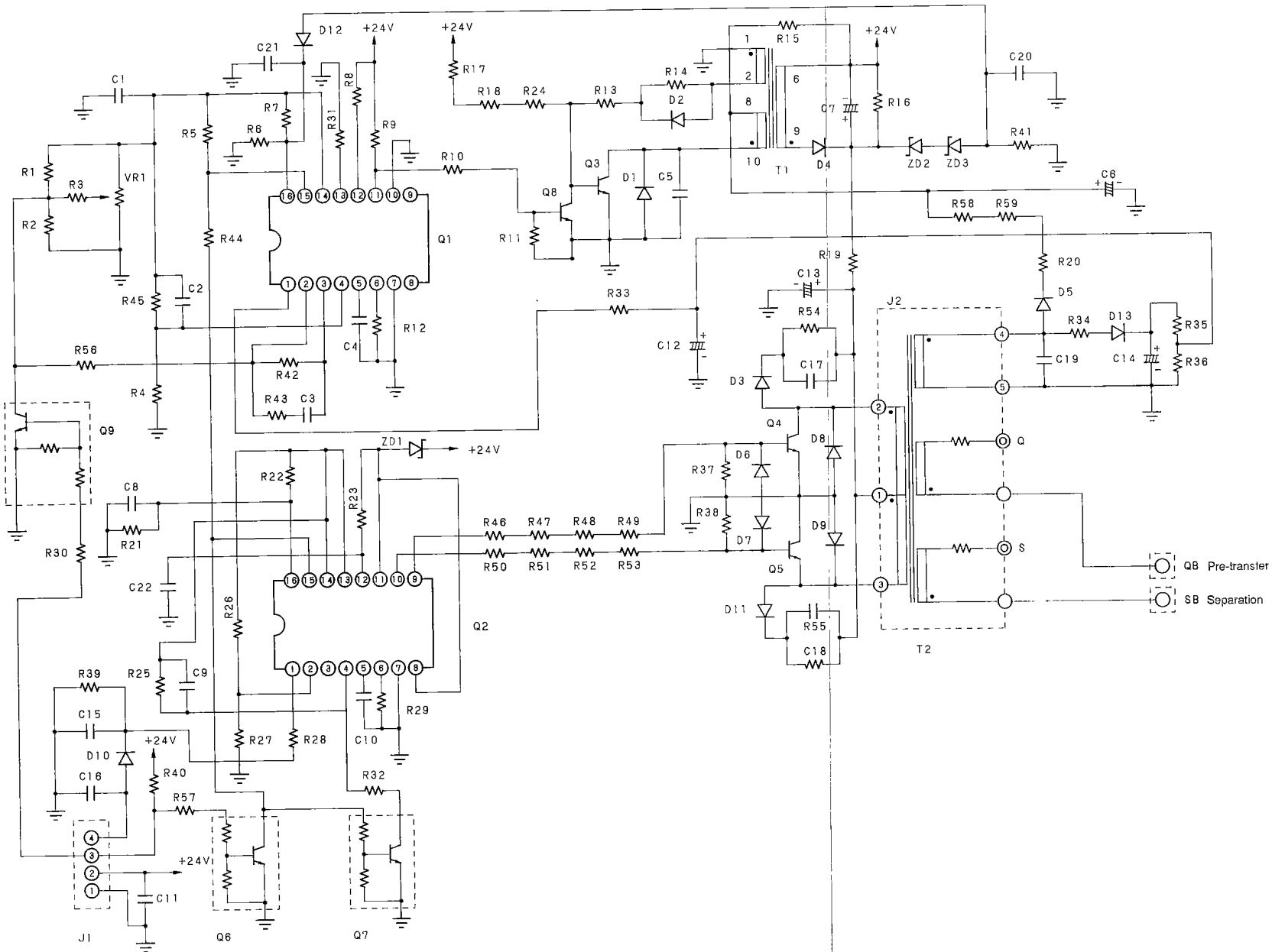

15. FUSE CIRCUIT DIAGRAM

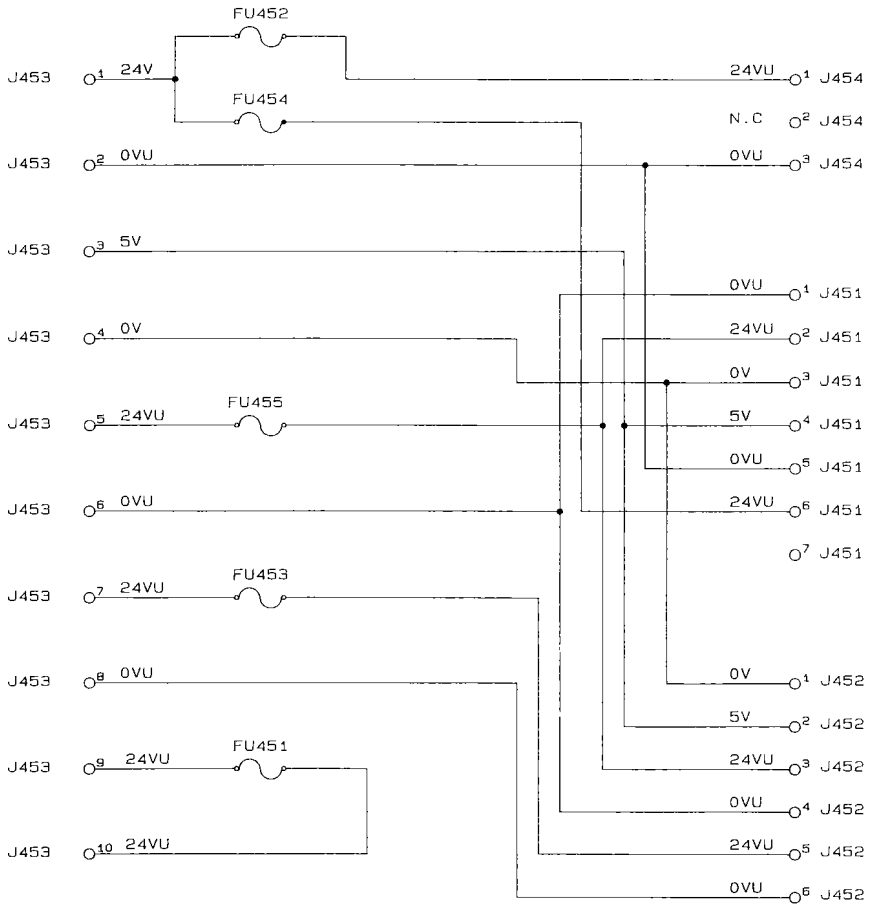

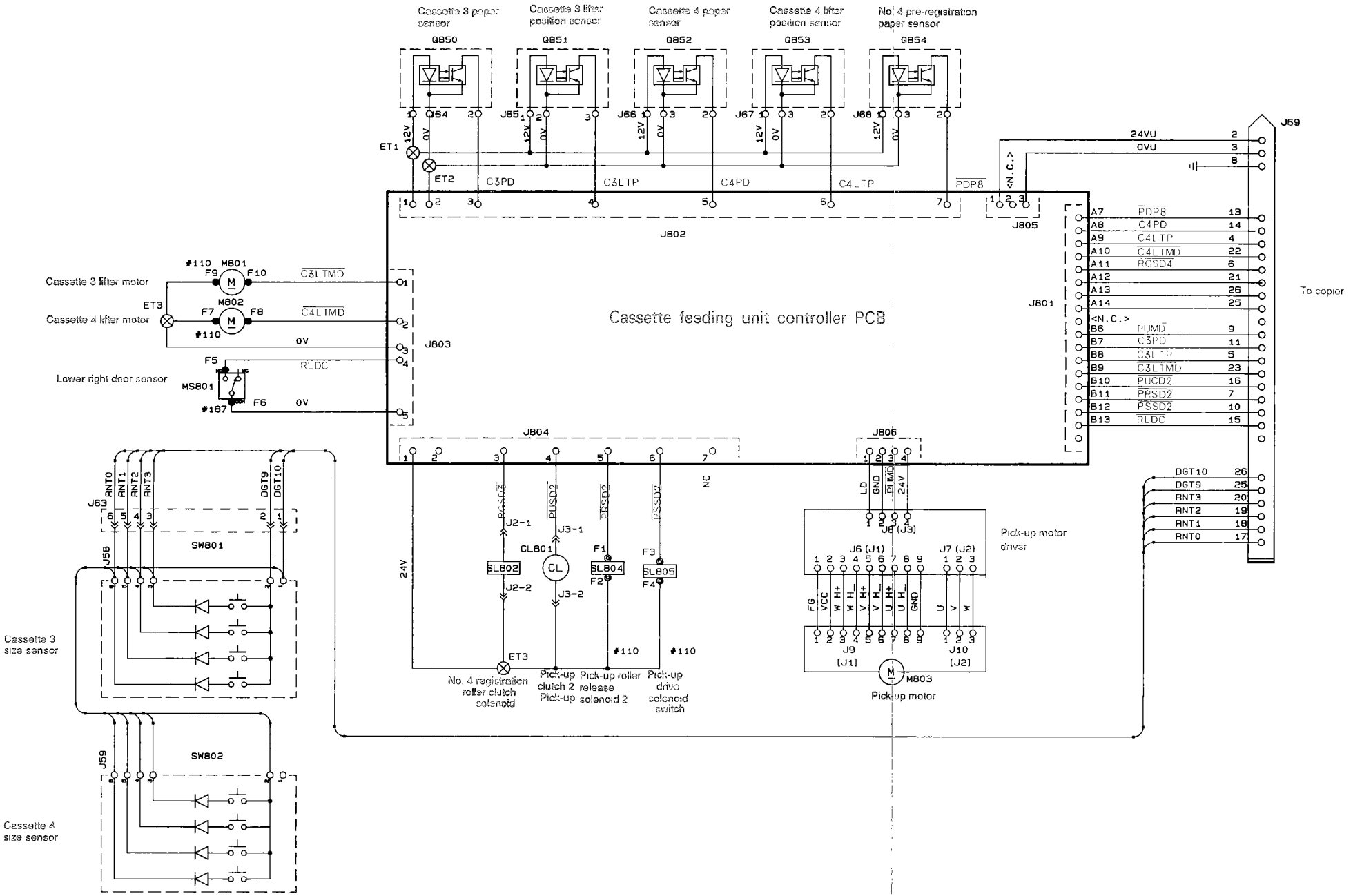
Cassette 3 paper sensor
Cassette 3 lifter position sensor
Cassette 4 paper sensor
Cassette 4 lifter position sensor
No. 4 pre-registration paper sensor
Q850
Q851
Q852
Q853
Q854
ET1
ET2
C3PD
C3LTP
C4PD
C4LTP
PDP8
J802
J805
J69
24VU
0VU
<N.C.>
To copier
Cassette feeding unit controller PCB
J801
Cassette 3 lifter motor
Cassette 4 lifter motor
Lower right door sensor
M801
M802
MS801
C3LTMD
C4LTMD
RLDC
J803
ET3
J804
J806
NC
SW801
SW802
Cassette 3 size sensor
Cassette 4 size sensor
No. 4 registration roller clutch solenoid
Pick-up clutch 2
Pick-up roller release solenoid 2
Pick-up drive solenoid switch
Pick-up motor driver
Pick-up motor
M803
CL801
SL802
SL804
SL805

17. CASSETTE FEEDING UNIT CONTROLLER CIRCUIT DIAGRAM

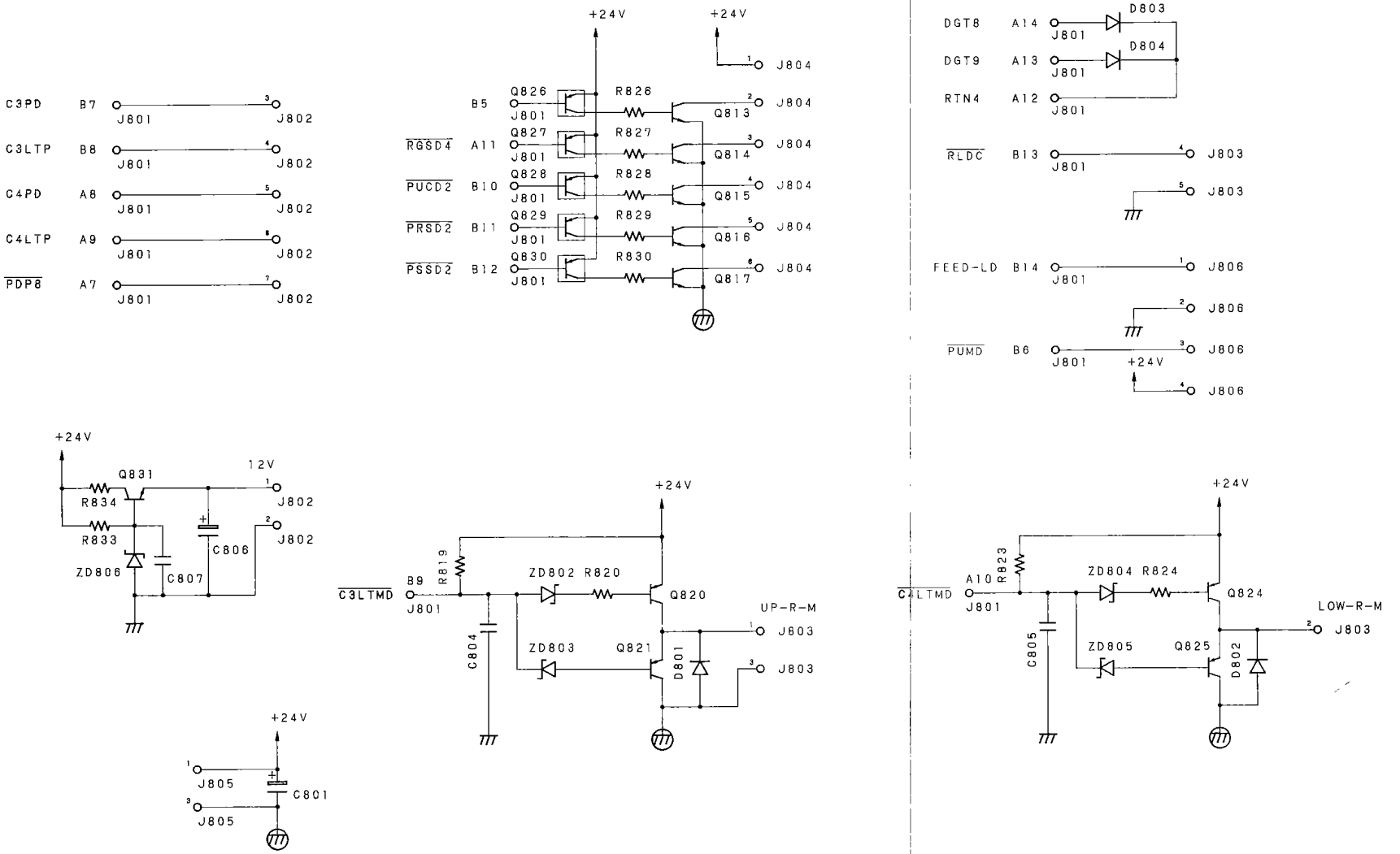

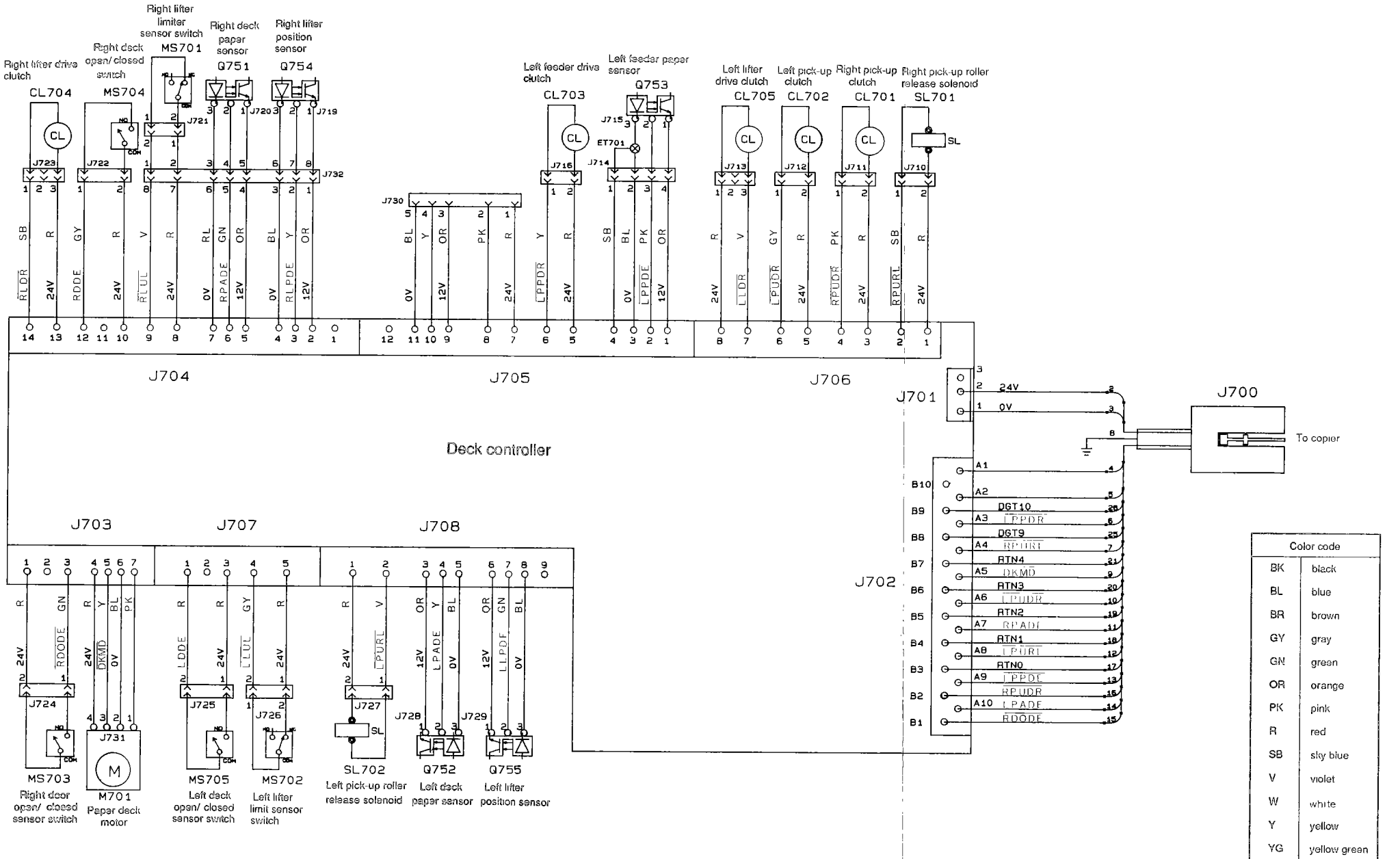

Color code	
BK	black
BL	blue
BR	brown
GY	gray
GN	green
OR	orange
PK	pink
R	red
SB	sky blue
V	violet
W	white
Y	yellow
YG	yellow green

19. DECK CONTROLLER CIRCUIT DIAGRAM

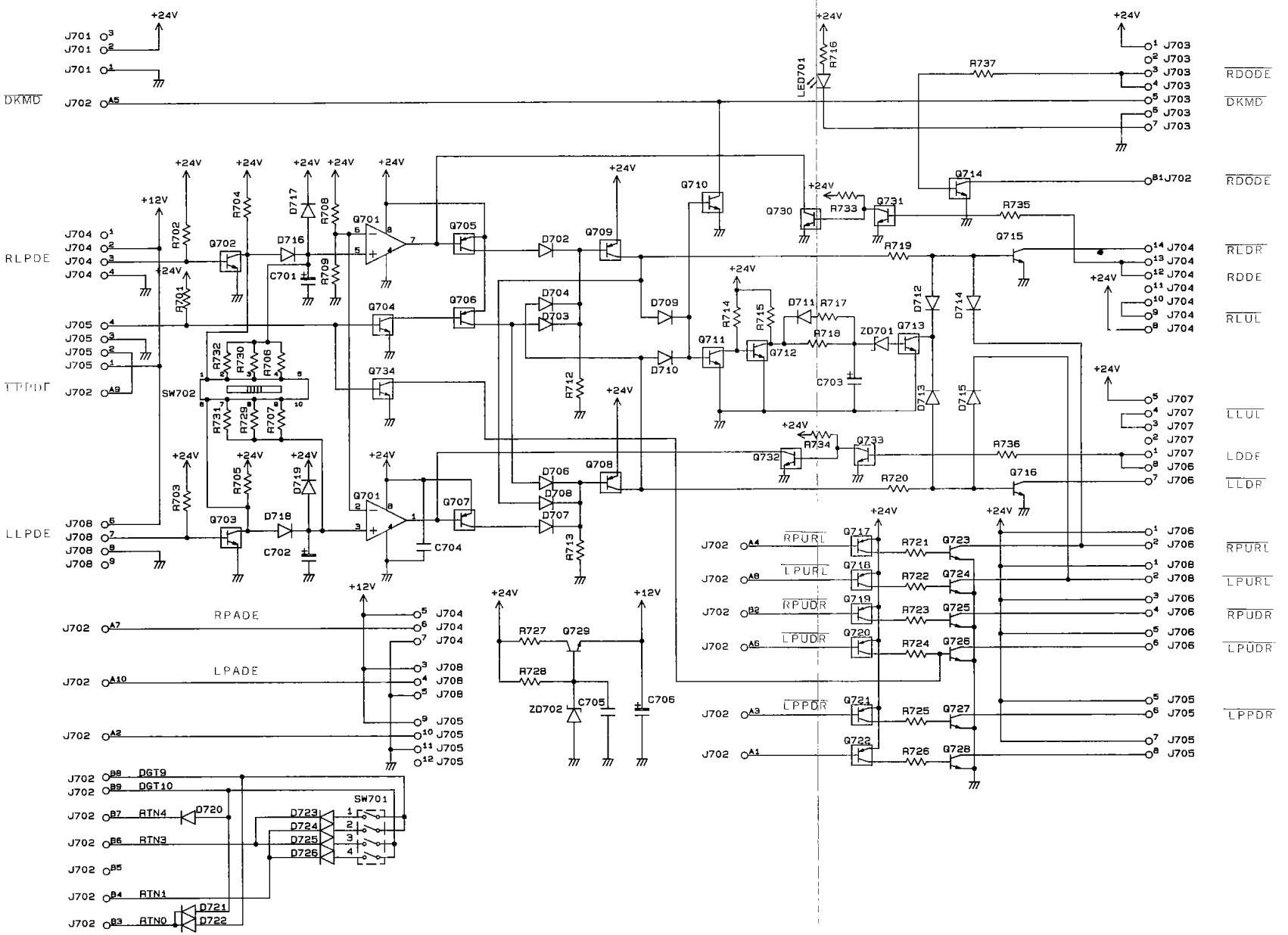

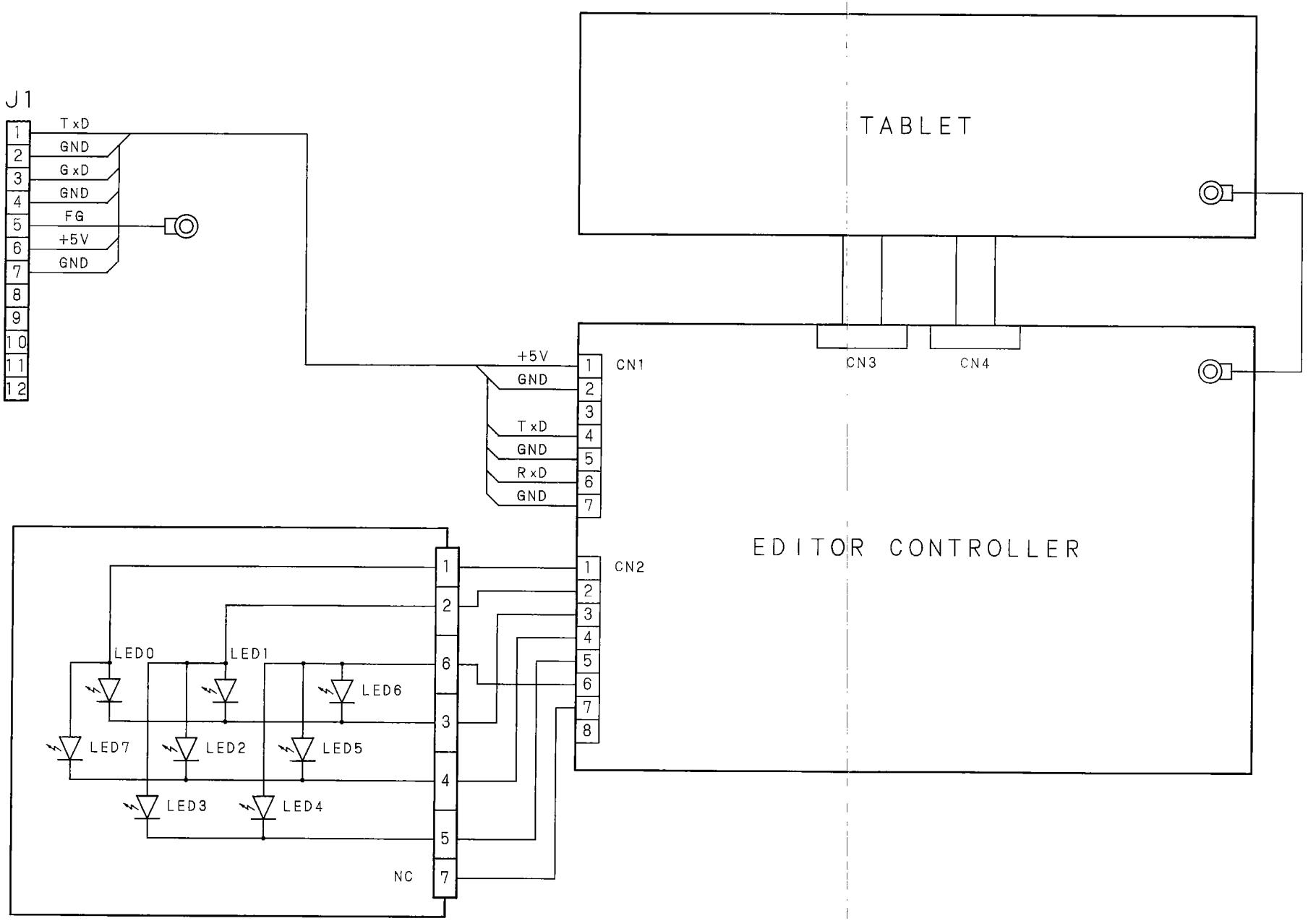
TABLET
J1
TxD
GND
GxD
GND
FG
+5V
GND
CN1
CN3
CN4
+5V
GND
TxD
GND
RxD
GND
CN2
EDITOR CONTROLLER
LED0
LED1
LED6
LED7
LED2
LED5
LED3
LED4
NC

21. NP EDITOR CONTROLLER CIRCUIT DIAGRAM

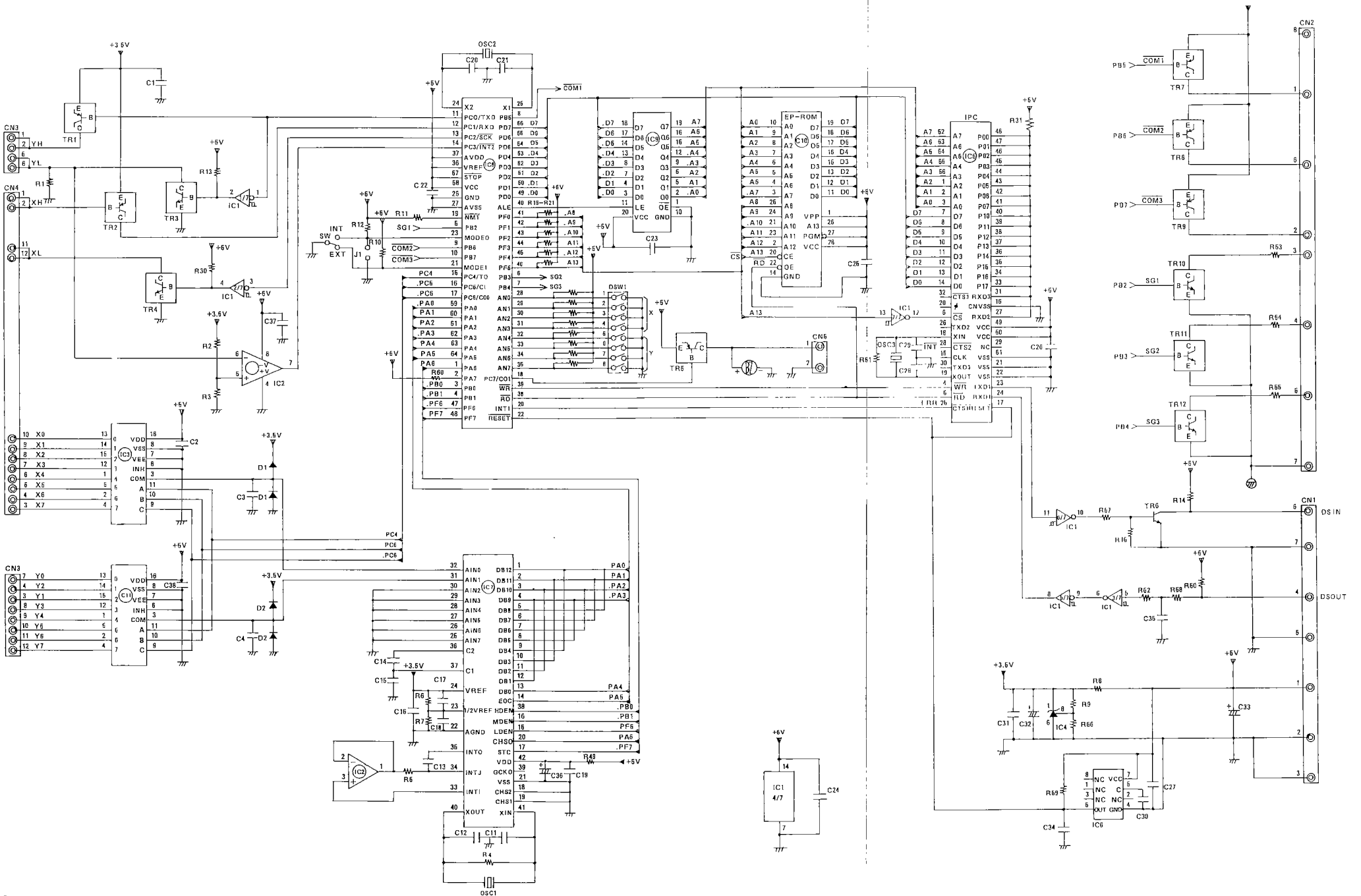

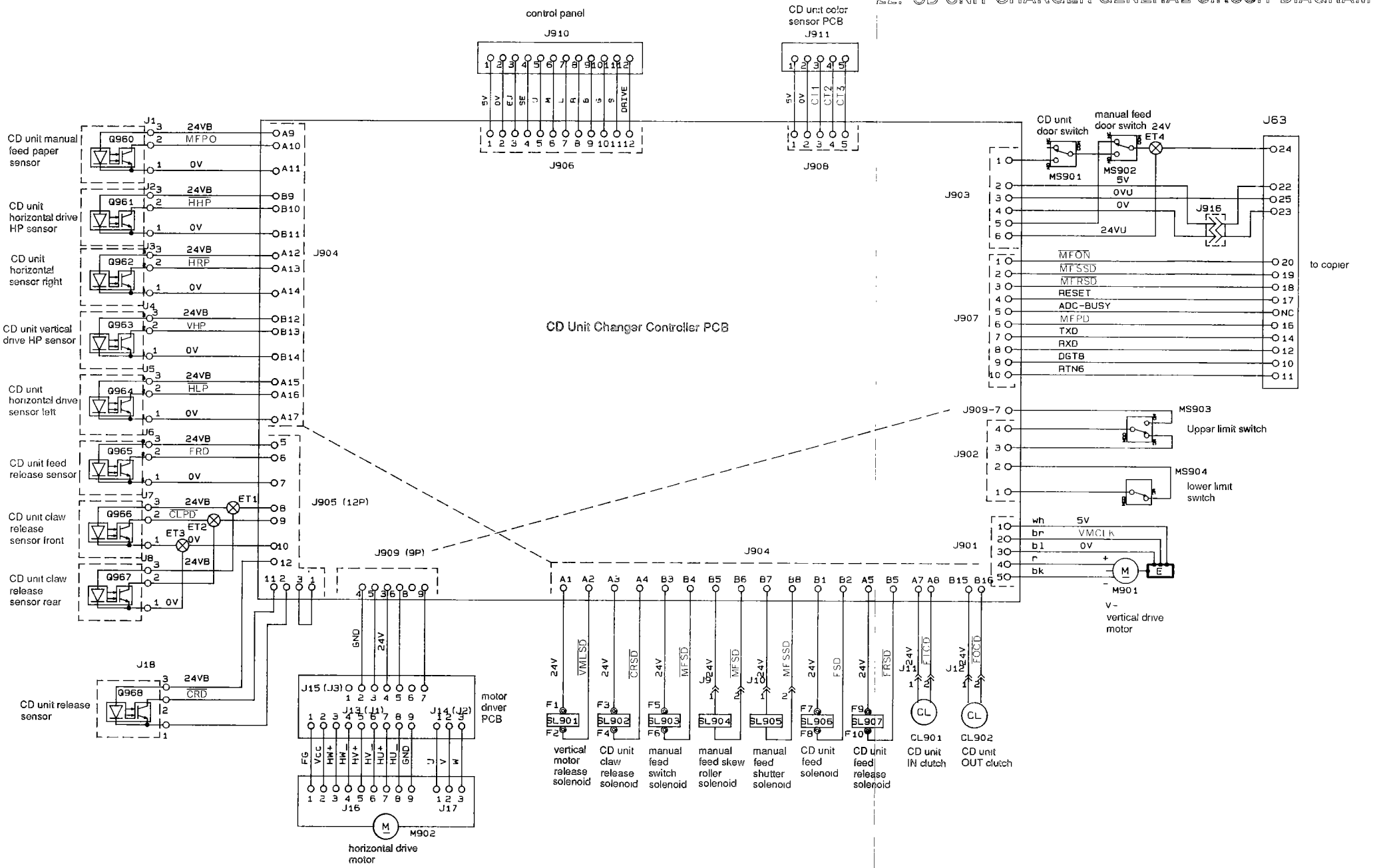
control panel
J910
J906
CD unit color sensor PCB
J911
J908
CD unit manual feed paper sensor
Q960
MFPO
CD unit horizontal drive HP sensor
Q961
HHP
CD unit horizontal sensor right
Q962
HRP
CD unit vertical drive HP sensor
Q963
VHP
CD unit horizontal drive sensor left
Q964
HLP
CD unit feed release sensor
Q965
FRD
CD unit claw release sensor front
Q966
CLPD
CD unit claw release sensor rear
Q967
CD unit release sensor
Q968
CRD
24VB
0V
J904
J905 (12P)
J909 (9P)
CD Unit Changer Controller PCB
J903
J907
J902
J901
J63
to copier
CD unit door switch
MS901
manual feed door switch
MS902
ET4
5V
0VU
0V
24VU
J916
MFON
MFSSD
MFRSD
RESET
ADC-BUSY
MFPD
TXD
RXD
DGTB
RTN6
MS903
Upper limit switch
MS904
lower limit switch
wh 5V
br VMCLK
b1 0V
r +
bk -
M901
V- vertical drive motor
ET1
ET2
ET3
J18
J15 (J3)
J13 (J1)
J14 (J2)
J16
J17
M902
horizontal drive motor
motor driver PCB
FG
Vcc
HW+
HW-
HV+
HV-
HU+
HU-
GND
U
V
W
SL901
SL902
SL903
SL904
SL905
SL906
SL907
vertical motor release solenoid
CD unit claw release solenoid
manual feed switch solenoid
manual feed skew roller solenoid
manual feed shutter solenoid
CD unit feed solenoid
CD unit feed release solenoid
CL901
CD unit IN clutch
CL902
CD unit OUT clutch

23. CD UNIT CHANGER CONTROLLER CIRCUIT DIAGRAM

CD UNIT CONTROLLER 1/3

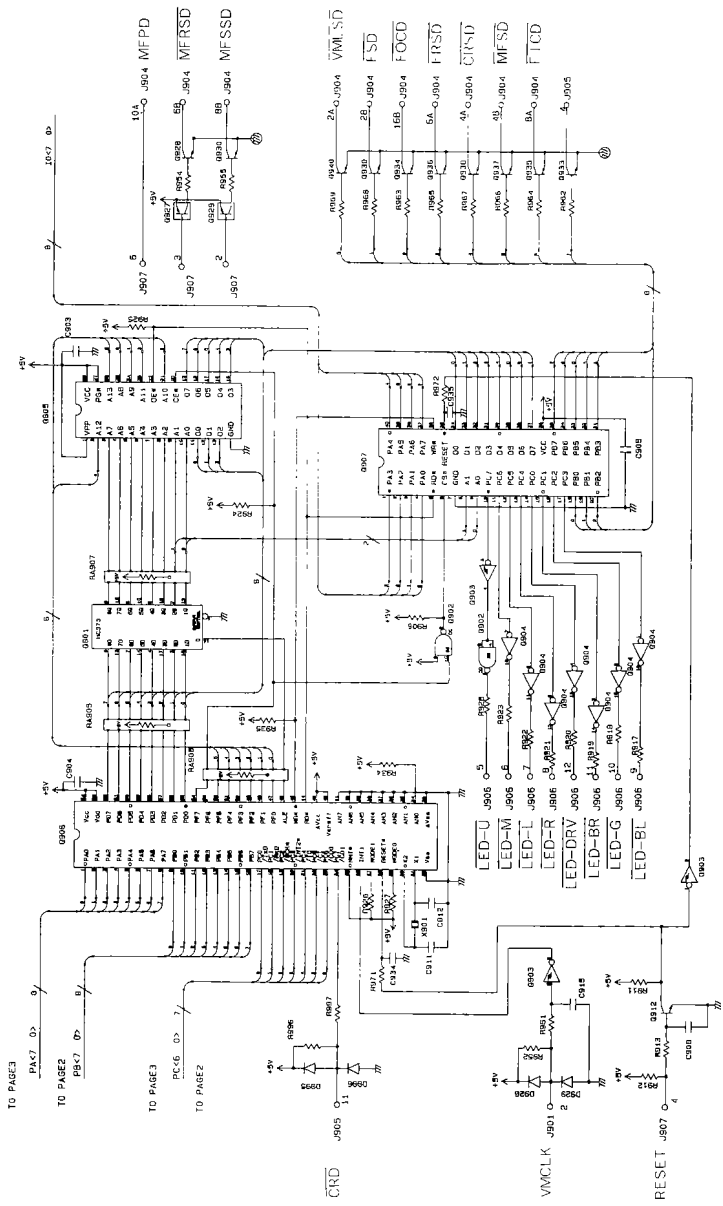

CD UNIT CONTROLLER 2/3

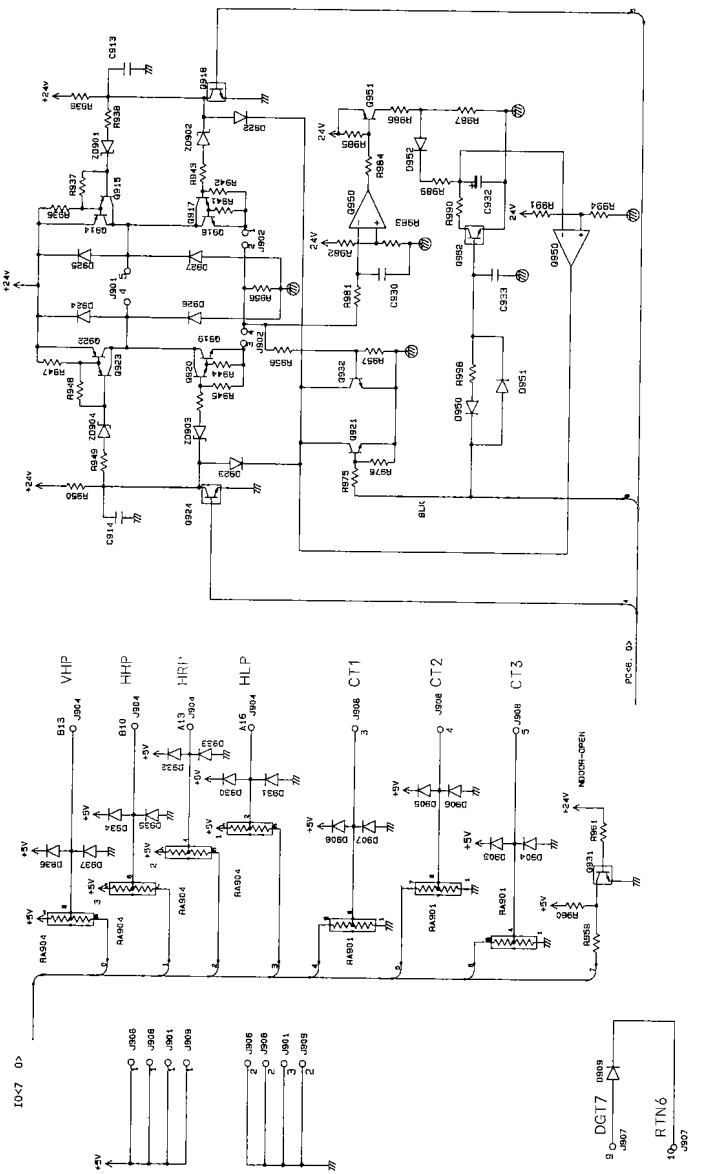

CD UNIT CONTROLLER 3/3

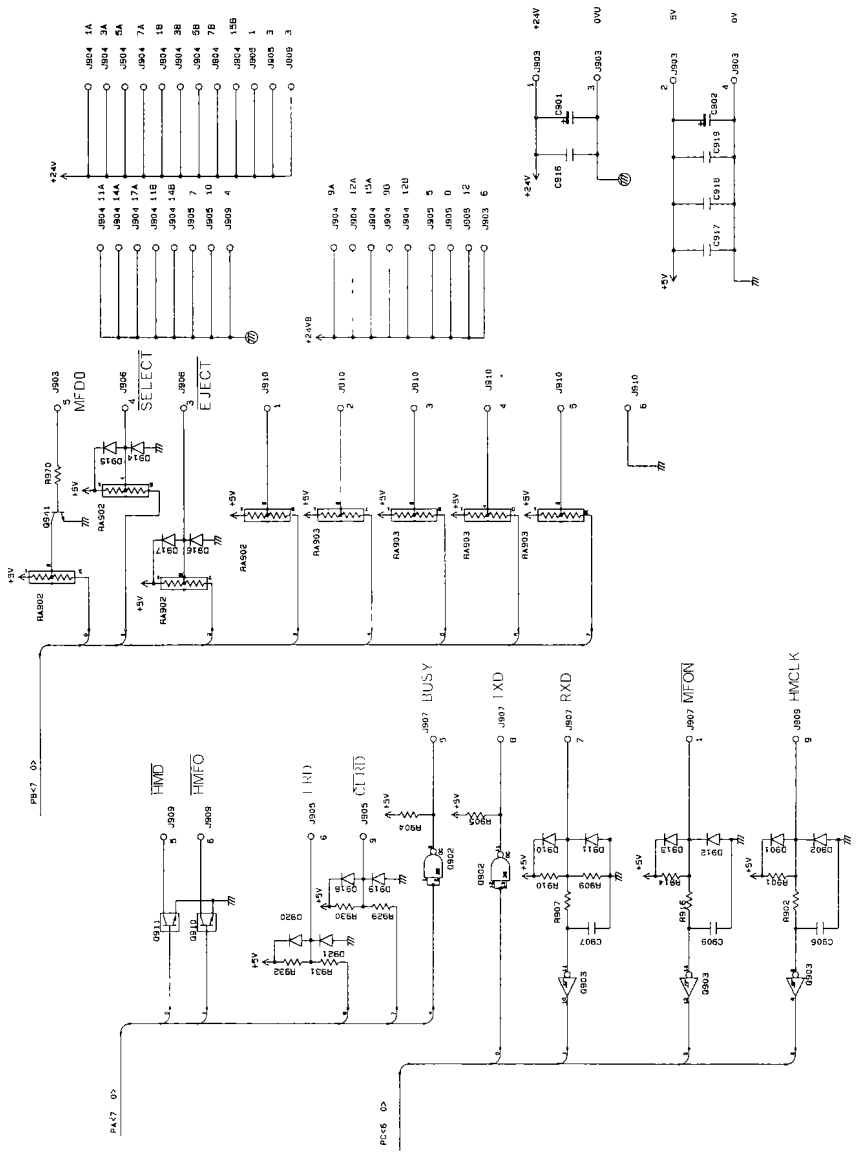

24. CD UNIT COLOR DETECTION CIRCUIT DIAGRAM

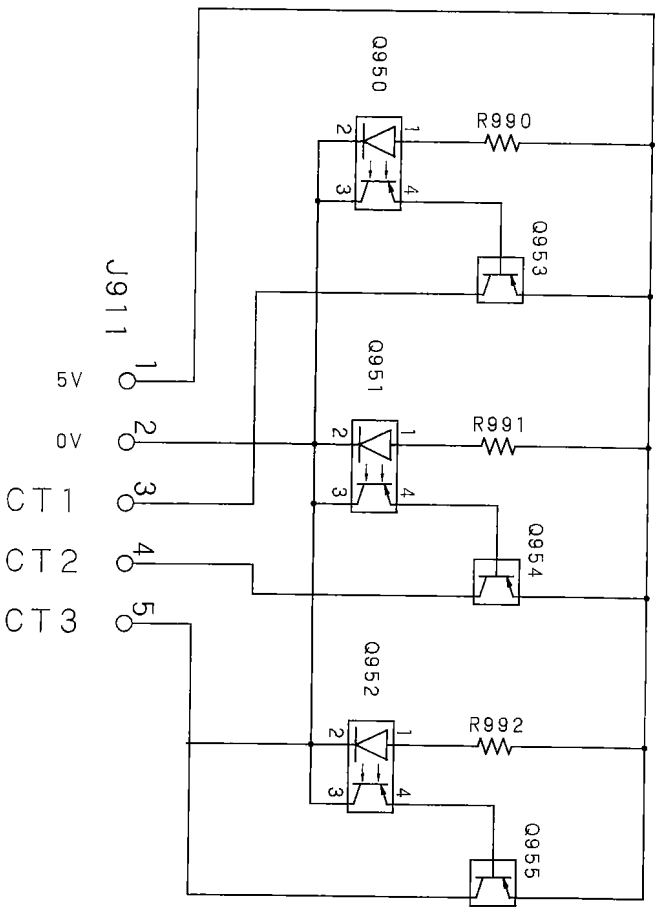

25. CD UNIT CONTROL PANEL CIRCUIT DIAGRAM

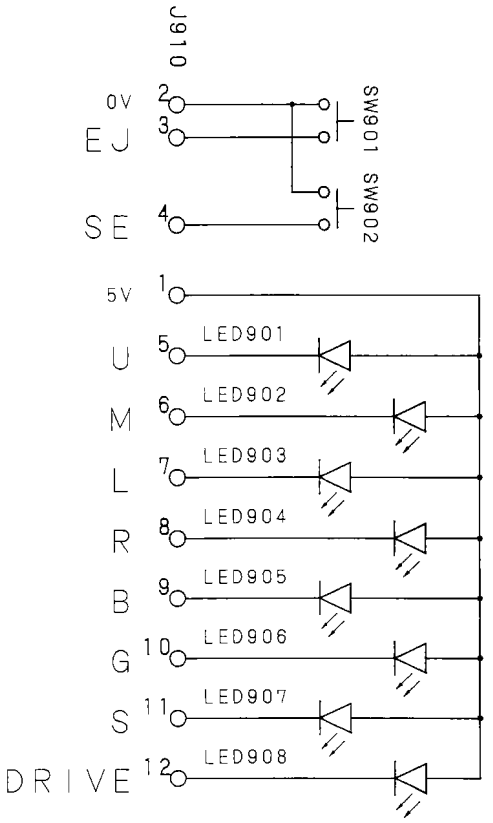

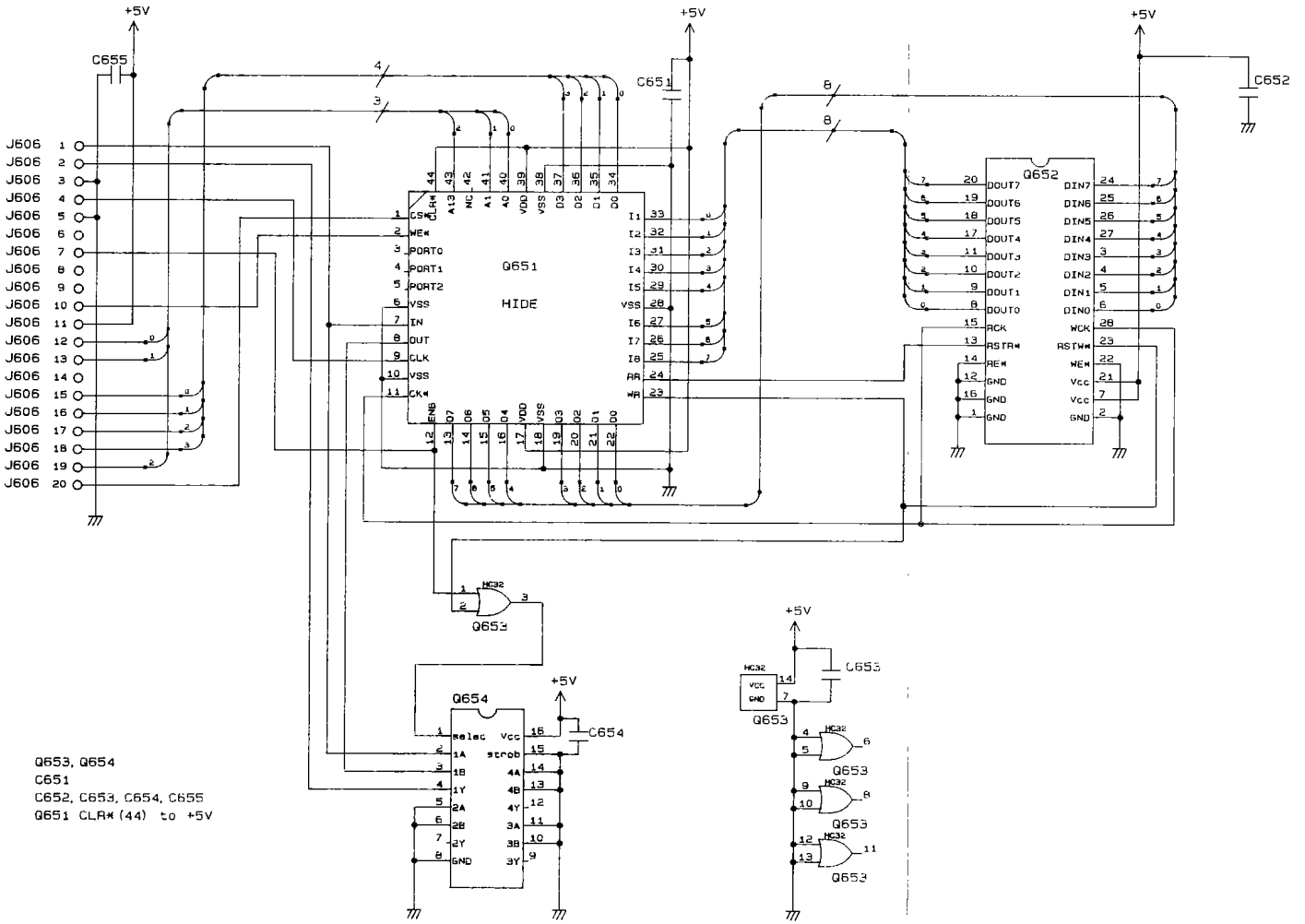
+5V
C655
C651
C652
J606 1
J606 2
J606 3
J606 4
J606 5
J606 6
J606 7
J606 8
J606 9
J606 10
J606 11
J606 12
J606 13
J606 14
J606 15
J606 16
J606 17
J606 18
J606 19
J606 20
Q651
HIDE
Q652
Q653
Q654
C653
C654
Q653, Q654
C651
C652, C653, C654, C655
Q651 CLR# (44) to +5V

27. SPECIFICATIONS

A. System

Item	Description
Copier body	Desk top
Copyboard	Fixed
Light source	Halogen lamp 270 W (100/115V models) 300 W (230V models)
Lens	Zoom lens
Photosensitive medium	OPC

B. Type

Item		Description
Reproduction		Indirect electrophotographic
Charging		Corona
Exposure		Slit (moving light source)
Copy density adjustment		Automatic (AE) or Manual
Development		Dry (black, toner projection; color, two-component)
Pick-up	Automatic	2 cassettes or 4 cassettes
	Manual	Manual
Transfer		Corona
Separation		Corona (electro static separation)
Cleaning		Blade
Fixing		Heat roller (880 W: 230 V, 800 W: 100/115 V)

C. Performance

Item			Description
Document type			Sheet, Book, 3-D object (2 kg max.)
Document size (max.)			A3 (297 × 420 mm)/LDG (11"× 17")
Reproduction ratio			DIRECT, 4R4E or 2R2E (see Table A-1), 50% to 200% (ZOOM)
Wait time			4 min (approx., 20°C)
First copy			6 sec or less (A4; non-AE; upper cassette)
Continuous copying			999 (max.)
Copying speed			See Table A-2.
Copy size			A3/LDG (297 × 431.8 mm; max.) Postcard (100 × 148 mm)
Copy paper type	Cassette		Plain paper (64 to 80 g/m²), Tracing paper, Colored paper*
	Manual		Plain paper (64 to 128 g/m²), Tracing paper, Colored paper*, OHP film*, Commercial postcard*, Label sheet*
	Two-sided/ Overlay copy	Automatic	Plain paper (64 to 80 g/m²), Colored paper*
		Manual	Plain paper (64 to 128 g/m²), Colored paper*, OHP film* (overlay only), Commercial postcard*
Cassette			Clawless, Front loading; 54 mm deep (about 500 sheets of 80 g/m²)
Copy tray			100 sheets (approx.; 80 g/m²)
Non-image width			2.5 ±1.5 mm (leading edge; one-sided), 2.0 ±1.0 mm (left/right; one-sided, two-sided, overlay), 2.5 ±2.0 mm (leading edge; two-sided, overlay)
Auto clear			Available (2 min standard; may be varied between 1 and 9 min in 1-min increments; may be disabled)
Auto shut-off			Available (2 hr standard; may be disabled)
Weekly shut-off			Available (set in 1-min increments)
Option			RDF-B1/RDF-B1 Image Editing Unit, Stapler Sorter-A1**, Sorter-A1, Auto Stapler Folder-A1, Auto Stapler-A1, Sorter 20-B1**, Control Card V, NP Image Editing Unit, Cassette Pedestal-D1, Paper Deck Pedestal-D1, CD unit Changer-A1, IC Card-A1

*Of a type recommended by Canon.
**No tandem configuration.

D. Others

Item		Description	
Operating environment	Temperature	15° to 30°C	
	Humidity	5% to 80%	
	Atmospheric pressure	0.6 to 1 atm	
Power source		Serial No.	
	220V 50 Hz	PAD xxxxx PET xxxxx	
	240V 50 Hz	RAC xxxxx RET xxxxx	
	220V 50 Hz	UAE xxxxx UET xxxxx	
Power consumption	Maximum	1.5 kW or less	
	Standby	0.171 kWh (approx., average; reference only)	
	Continuous copying	1.013 kWh (approx., average; A4; reference only)	
Noise	Copying	71 dB or less	Sound power level as prescribed by ISO.
	Standby	As prescribed by ISO (50 dB or less)	
Ozone (average over 8 hr)		0.1 ppm or less	
Dimensions	Width	760 mm	
	Depth	690 mm	
	Height	623 mm*, 958 mm**	
Weight		95 kg* (approx.)	
Consumables	Copy paper	Keep wrapped to protect against humidity.	
	Toner	Avoid direct sunlight; keep it under 40°C, 85% or less.	

*Copyboard type, including 2 cassettes.
**Copyboard type, including 4 cassettes.

DIRECT	REDUCE	ENLARGE	
1:1 (±0.5%)	1:0.500 1:0.707 1:0.816 1:0.865	1:1.154 1:1.224 1:1.414 1:2.000	4R4E
	1:0.500 1:0.707	1:1.414 1:2.000	2R2E

Table A-1 Fixed Reproduction Ratios

Reproduction ratio		Copy size	Copies/min
DIRECT	1:1 (±0.5%)	A3 (297 × 420 mm)	23
		A4 (210 × 297 mm)	40
		B4 (257 × 364 mm)	26
		B5 (182 × 257 mm)	40
		A4R (297 × 210 mm)	31
		B5 (257 × 182 mm)	35
REDUCE	1:0.707 (±1.0%)	A3 → A4R	29
		B4→ B5R	33
	1:0.816 (±1.0%)	B4 → A4R	30
	1:0.865 (±1.0%)	A3 → B4	25
		A4 → B5	40
ENLARGE	1:1.414 (±1.0%)	A4R → A3	23
		B5R → B4	26
	1:1.224 (±1 0%)	A4R → B4	26
	1:1.154 (±1.0%)	B4 → A3	23
		B5 → A4	40

Table A-2 Copying Speeds

E. Cassette Feeding Unit

Type of copy paper	Same as copier.
Cassette	Same as copier.
Power supply	24 VDC (from copier)
Dimensions	700 (W) x 575 (D) x 337 (H) mm
Weight	27 kg

F. Paper Deck Pedestal

Type of copy paper	A4, B5, LTR (plain paper, 64 to 80 g/m^2, colored paper*)
Deck	No claw, Front loading; 162 mm deep (max; about 1500 sheets of 80g/m^2)
Power supply	24 VDC (from copier)
Dimensions	702.5 (W) x 575 (D) x 335.4 (H) mm
Weight	42 kg

* Of a type recommended by Canon.

G. Image Editing Unit

Effective area	297 × 432 mm
Area accuracy	±1.00 mm (editor only; excluding input inaccuracies of the pen or other controlling unit)
Input	by pen; beep upon input
Areas	8 max. (diagonal; 16 max. if by multiple points)
Image conversion	Framing, Masking, 2-color
Text input	18 characters/line (max.) × 3 lines; up to 3 units; orientation (vertical, horizontal) may be specified; output position may be specified; color may be specified; text may be combinations of alphabets and numerals
Stamp	1 (of 5 types; up to 3 types may be stored); orientation (vertical, horizontal) may be specified, output position may be specified, color may be specified
Screen	all or 4 areas
Highlight	4 areas max.; color may be specified; shading, solid, frames
Power supply	5 V (front copier)
Weight	3 kg
Dimensions	555 (W) × 490 (D) × 43 (H) mm

H. CD Unit Changer

Number of CD units	3 (max.)
Control panel	CD UNIT POSITION indicator, CD UNIT OUT key, CD UNIT SELECT key, CD UNIT COLOR indicator
Switching time	28 sec max.
Noise	55 dB or less
Power supply	24 VDC (from copier)
Dimensions	285/245* (W) × 625 (D) × 365 (H) mm **Including the manual feed tray.*
Weight	20 kg

28. SPECIAL TOOLS

Special tools which are required for servicing this copier (in addition to the standard tools set) are listed below.

No.	Tool name	Tool No.	Shape	Code	Application/Remarks
1	Door switch actuator	TKN-0093	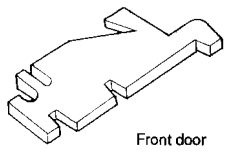 Front door	A	
2	Spring scale (compression)	CK-0054	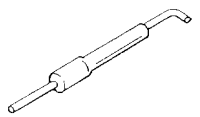	B	• Measuring strength of cassette springs • Adjust scanner drive cable tension
3	Extension blades for pliers	CK-0426	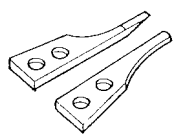	B	For removing grip rings: 4 – 9 mm
4	Cleaning oil	TKN-0464	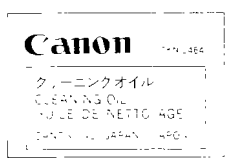	A	Cleaning fixing rollers (10 pcs./1 carton)
5	CD unit polarity orientation tool	TKN-0472	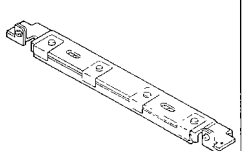	B	

No.	Tool name	Tool No.	Shape	Code	Application/remarks
6	Laser unit cleaning tool	TKN-0471	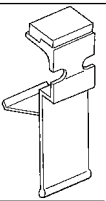	A	
7	Damping material	CK-0437		A	For corona wire (200g/tube)
8	Gap gauge	FY9-3006	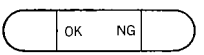	B	For adjusting the gap between the developing blade and the developing cylinder.

***Code**

A: Each service technician should carry one with him.
B: A group of five service technicians should share one.
C: Each workshop should keep one.

29. SOLVENTS/OILS TABLE

No.	Material name	Use	Chemical formula, Mixture ratio, etc.	Source	Remarks
1.	Ethyl alcohol (Ethanol) Isopropyl alcohol (Isopropanol)	Cleaning: copyboard, glass, mirror, etc.	C_2H_5O $(CHZ_3)_2$ CHOH	Locally	Flammable. Use in a well-ventilated area. Avoid breathing concentrated vapor.
2.	MEK	Removing toner or oil stains	$CH_3COC_2H_5$ Methylethyl ketone	Locally	Flammable. Use in a well-ventilated area and avoid breathing concentrated vapor. Avoid contact with eyes or skin. Do not use for cleaning the drum, plastic molded parts, or corona wires.
3.	Heat-resistant grease	Lubricating the drive mechanisms, e.g., copyboard driving gear, fixing drive gear, fixing ass'y, etc.		CANON	Tool No.: CK-0427 (500g can) (Equivalent grease can be used, but should be able to with-stand 200°C for extended periods of time.)
4.	Lubricating oil (low viscosity)	Lubrication points: Scanner rail, etc.	ISO VG 68 oil ESSO Febis K68 MOBIL Vactaoil No. 2 SHELL Tonna oil T68	Locally	Equivalent oil can be used. Tool No.: CK-0451 (100cc)
5.	Lubricating oil (low viscosity)	Lubrication point: One-way clutch in pick-up control unit	ISO VG 220 oil ESSO Febis K220 MOBIL Vactraoil No. 4	Locally	Equivalent oil can be used. Tool No.: CK-0524 (100cc)
6.	Detergent	Cleaning covers and panels of the machine	Mild detergent solution	Locally	Dish-washing detergent is acceptable.