NP6045

SERVICE HANDBOOK

REVISION 1

Canon

MAR. 1997 FY8-23AN-010

COPYRIGHT © 1997 CANON INC.
CANON NP6045 REV.1 MAR. 1997 PRINTED IN JAPAN (IMPRIME AU JAPON)

IMPORTANT

THIS DOCUMENTATION IS PUBLISHED BY CANON INC., JAPAN, TO SERVE AS A SOURCE OF REFERENCE FOR WORK IN THE FIELD.

SPECIFICATIONS AND OTHER INFORMATION CONTAINED HEREIN MAY VARY SLIGHTLY FROM ACTUAL MACHINE VALUES OR THOSE FOUND IN ADVERTISING AND OTHER PRINTED MATTER.

ANY QUESTIONS REGARDING INFORMATION CONTAINED HEREIN SHOULD BE DIRECTED TO THE COPIER SERVICE DEPARTMENT OF THE SALES COMPANY.

THIS DOCUMENTATION IS INTENDED FOR ALL SALES AREAS, AND MAY CONTAIN INFORMATION NOT APPLICABLE TO CERTAIN AREAS.

COPYRIGHT © 1997 CANON INC.

Printed in Japan
Imprimé au Japon

Use of this manual should be strictly supervised to avoid disclosure of confidential information.

Prepared by

OFFICE IMAGING PRODUCTS TECHNICAL SUPPORT DEPT.1
OFFICE IMAGING PRODUCTS TECHNICAL SUPPORT DIV.

CANON INC.

30-2, Shimomaruko 3-chome, Ohta-ku, Tokyo 146 Japan

CONTENTS

CHAPTER 1 MAINTENANCE AND INSPECTION

A. Image Adjustment Basic Procedure.....1-1
B. Points to Note for Scheduled Servicing 1-2

CHAPTER 2 STANDARDS AND ADJUSTMENTS

A. Image Adjustment 2-1
1. Adjusting the Leading Edge Margin 2-1
2. Adjusting the Leading Edge Non-Image Width (registration) 2-1
3. Adjusting the Left/Right Registration (paper deck and cassette position) 2-1
4. Adjusting the Left/Right Registration (holding tray position; 2nd side of a two-sided/overlay copy) 2-3
5. Adjusting the Left/Right Margin 2-4
6. AE Auto Adjustment.....2-4
7. Adjusting the AE Slope 2-5
B. Exposure System 2-6
1. Adjusting the Scanner Home Position 2-6
2. Routing the Scanner Drive Cable.....2-7
3. Adjusting the Tension of the Scanner Cable 2-8
4. Adjusting the Mirror Position 2-8
5. Cleaning the Mirror (No. 5 mirror).....2-9
6. Installing the Light-Blocking Belts ...2-9
7. Installing the Lens X Direction Drive Belt.....2-10
C. Image Formation System 2-11
1. Routing the Grid for the Primary Charging Assembly 2-11
2. Adjusting the Height of the Charging Wire 2-13
3. Adjusting the Blank Exposure Lamp 2-14
4. Position of the Roller Electrode ..2-15
5. Position of the Side Seal in the Cleaning Assembly 2-15
6. Cleaning the Cleaner Side Scraper.....2-15
D. Pick-Up/Feeding System.....2-17
1. Orientation of the Pick-Up Roller (cassette/deck).....2-17
2. Orientation of the Separation Roller (cassette/deck) 2-18
3. Orientation of the Feeding Roller (cassette/deck).....2-18
4. Orientation of the Pick-Up Roller (multifeeder) 2-19
5. Orientation of the Feeding Roller (multifeeder) 2-20
6. Adjusting the Pressure of the Separation Roller (cassette/deck).....2-20
7. Adjusting the Pressure of the Separation Roller (holding tray) 2-21
8. Adjusting the Pressure of the Pick-Up/Feeding Roller (multifeeder).....2-21
9. Positioning the Pick-Up Roller Releasing Solenoid (cassette) 2-22
10. Adjusting the Position of the Pick-Up Roller Releasing Solenoid (deck) 2-22
11. Adjusting the Pick-Up Roller Releasing Solenoid (multifeeder) 2-23
12. Routing the Timing Belt for the Multifeeder Assembly Side Guide 2-23

13. Adjusting the Position of the Delivery Paper Deflecting Drive Solenoid 2-24
14. Adjusting the Position of the Holding Tray Paper Deflecting Plate Drive Solenoid 2-24
15. Installing the Holding Tray Assembly Side Guide Assembly.....2-25
16. Installing the Holding Tray Paper Jogging Guide Assembly 2-25
17. Installing the Timing Belt for the Holding Tray Assembly Paper Jogging Guide Plate.....2-26
18. Adjusting the Position of the Holding Tray Paper Jogging Solenoid 2-26
19. Installing the Drive Belt 2-27
E. Fixing System.....2-28
1. Points to Note When Handling the Fixing Heater.....2-28
2. Position of the Fixing Assembly Paper Guide.....2-28
3. Adjusting the Pressure of the Lower Roller (nip).....2-29
4. Adjusting the Fixing Clutch ...2-30
F. Electrical System.....2-31
1. When Replacing the DC Controller PCB 2-31
2. Checking the Surface Potential Control System.....2-31
3. Checking the Potential Control System 2-35
4. Potential Control System Conversion Table 2-37
5. Checking the Environment Sensor.....2-42
6. Checking the Photointerrupters....2-42
7. Registering the Cassette/ Multifeeder Paper Width Basic Value (✻4✻).....2-49

CHAPTER 3 ARRANGEMENT AND FUNCTIONS OF THE ELECTRICAL PARTS

A. Sensors 3-2
B. Switches and Solenoids.....3-6
C. Motors and Fans 3-10
D. Clutches 3-12
E. Lamps, Heaters, and Photosensors 3-14
F. PCBs 3-16
G. Variable Resistors, Light-Emitting Diodes, and Check Pins by PCB 3-18
1. DC Controls PCB 3-18
2. AC Driver PCB 3-21
3. DC Power Supply PCB 3-21
4. Control CPU PCB 3-22
5. Holding Tray Driver PCB.....3-23
6. Potential Measurement PCB.3-24
7. HVT1 PCB.....3-25
8. HVT2 PCB.....3-26
9. Inverter PCB.....3-26
10. Lamp Regulator PCB 3-27
11. Counter PCB 3-27

CHAPTER 4 SERVICE MODE

A. Outline.....4-1
B. Using Service Mode.....4-1
C. Using Adjustment Mode and Option Settings Mode 4-2
D. Control Display Mode (✻1✻) 4-3
E. I/O Display Mode (✻2✻) 4-14
F. Adjustment Mode (✻3✻).....4-50
G. Function Mode (✻4✻) 4-58
H. Options Mode (✻5✻).....4-63
I. Counter Mode (✻6✻) 4-70

CHAPTER 5 SELF DIAGNOSIS

A. Copier.....5-1
B. RDF Self Diagnosis.....5-6
C. Sorter Self Diagnosis 5-7

APPENDIX

A. GENERAL TIMING CHART.....A-1
B. SIGNALS AND ABBREVIATIONS A-2
C. GENERAL CIRCUIT DIAGRAM ..A-5
D. RDF-H1 GENERAL CIRCUIT DIAGRAM A-7
E. SPECIFICATIONS A-9
1. Type A-9
2. System A-9
3. Performance A-10
4. Others A-13

CHAPTER 1 MAINTENANCE AND INSPECTION

A. Image Adjustment Basic Procedure

Make adjustments in non-AE and at copy density 5.

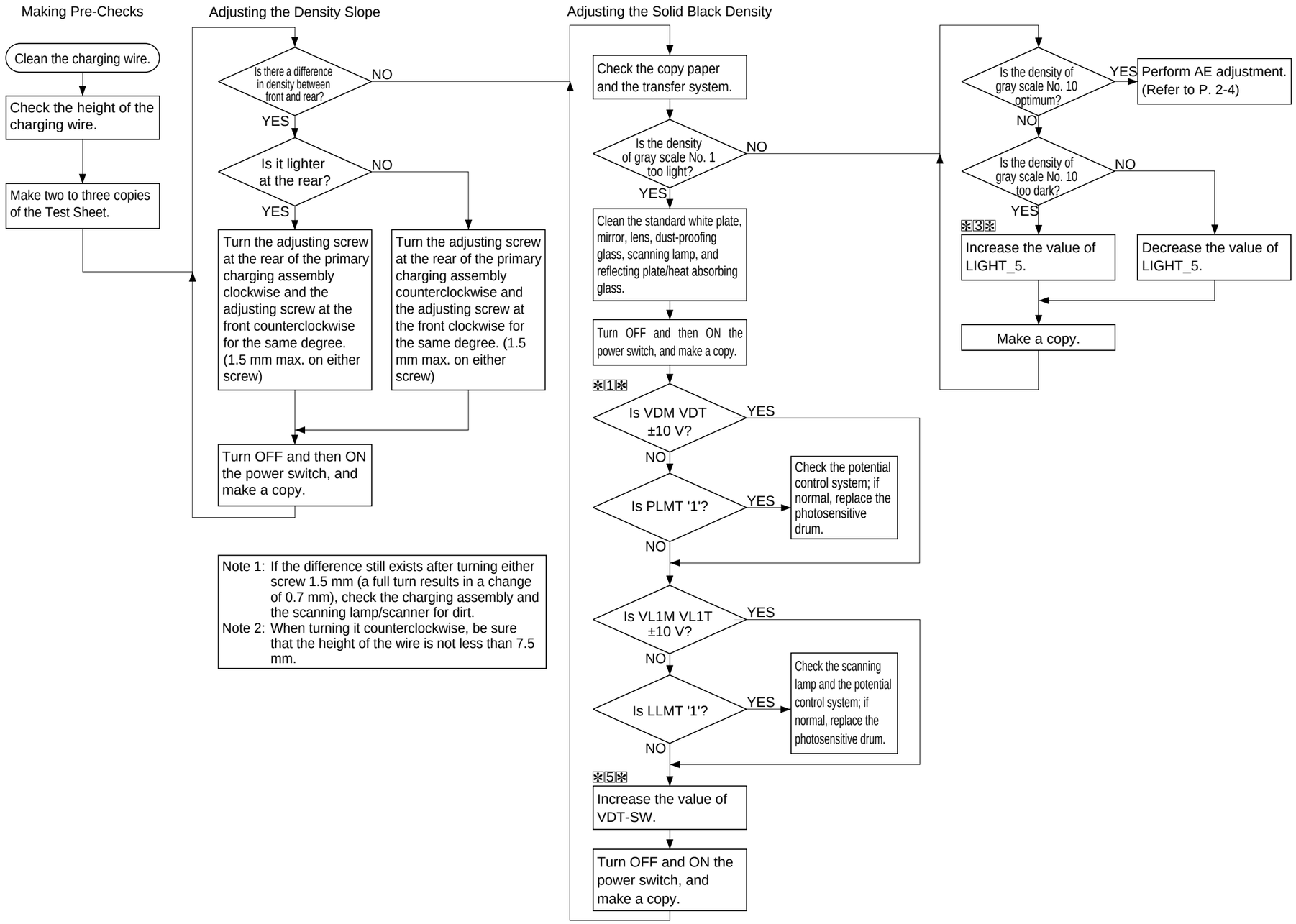

Note 1: If the difference still exists after turning either screw 1.5 mm (a full turn results in a change of 0.7 mm), check the charging assembly and the scanning lamp/scanner for dirt.
Note 2: When turning it counterclockwise, be sure that the height of the wire is not less than 7.5 mm.

B. Points to Note for Scheduled Servicing

Note:

- Make thorough checks to be sure that the block (front, rear) is free of melting, thermal deformation, cracking, and yellowing because of leakage. If an abnormal condition is noted, replace it with a new part without delay.
- Inspect and clean both outside and inside of the block (front, rear).
- Do NOT use a cloth coated with metal powder.
- Do NOT use a moist cloth. Dry wipe with lint-free paper, and use alcohol. Make sure that the part is completely dry before installing it.
- Be sure to complete scheduled servicing and replacement within a specific period of time.

Part	Tool/solvent	Work/remarks
Copyboard glass	Alcohol	Cleaning
Lens	Blower brush	Cleaning
Standard white plate	Lint-free paper	Dry wiping, cleaning
Reflecting plate	Blower brush	Cleaning
No. 1 mirror through No. 3 mirror	Blower brush or lint-free paper	Cleaning with a blower brush; using lint-free paper if dirt is excessive

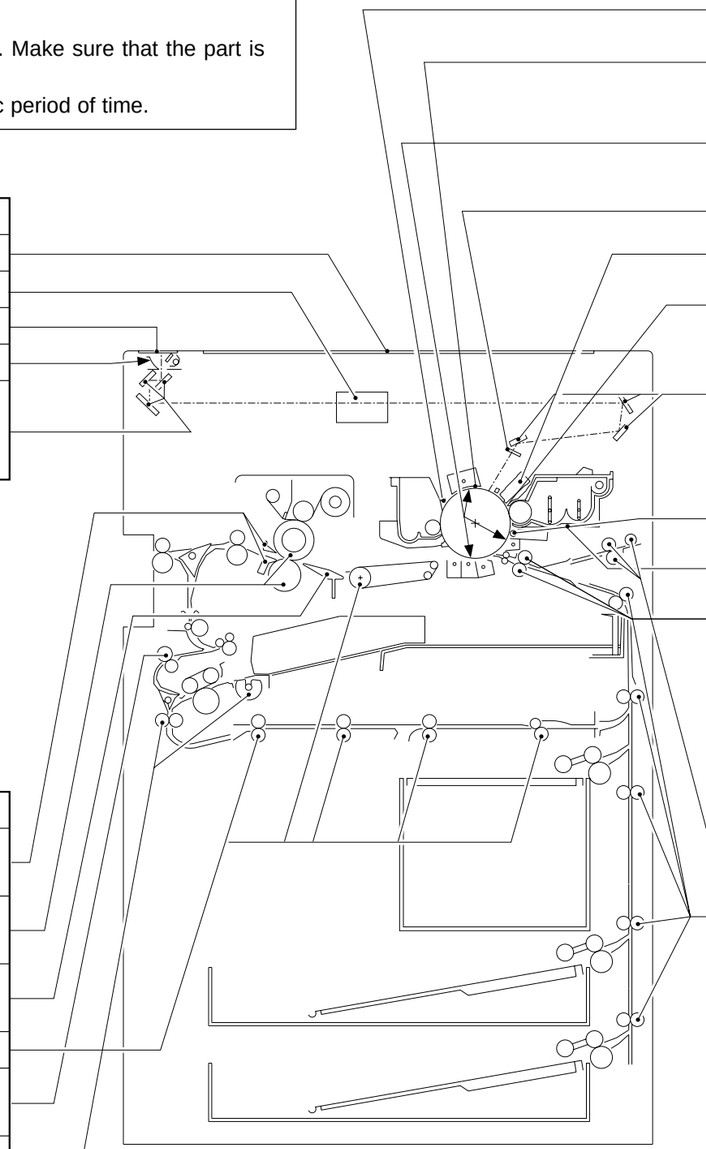

Part	Tool/solvent	Work/remarks
Pre-exposure lamp		Cleaning
Primary charging anti-stray sheet		Cleaning
Primary charging assembly, Transfer/separation assembly, Pre-transfer assembly	Alcohol and lint-free paper	Dry wiping; then, cleaning with lint-fee paper moistened with alcohol
Dust-proofing glass	Lint-free paper	Cleaning
Blank exposure lamp		Cleaning
Developing anti-stray sheet		Cleaning
No. 4 mirror to No. 6 mirror	Blower brush or lint-free paper	Cleaning with a blower brush; cleaning with lint-free paper if dirt is excessive; use the mirror cleaning tool for the No. 5 mirror
Roller electrode		Disposing of the toner collecting on the roller electrode
Developing assembly base	Moist cloth (Note 1)	Cleaning
Registration roller	Alcohol and lint-free paper	Cleaning

Note: Do not leave any droplets of water.

Part	Tool/solvent	Work/remarks
Separation claw	Solvent and lint-free paper	Cleaning
Upper roller, Lower roller	Cleaning oil and lint-free paper	Cleaning
Paper guide	Solvent and lint-free paper	Cleaning
Feeding assembly	Moist cloth (Note 1)	Cleaning
Re-pick up assembly, Reversing roller	Alcohol and lint-free paper	Cleaning
Re-pick up assembly, Pick-up roller, Registration roller	Alcohol and lint-free paper	Cleaning

Part	Tool/solvent	Work/remarks
Manual feed tray, Pick-up roller, Feeding roller	Alcohol and lint-free paper	Cleaning
Vertical path roller	Alcohol and lint-free paper	Cleaning

CHAPTER 2 STANDARDS AND ADJUSTMENTS

A. Image Adjustment

1. Adjusting the Leading Edge Margin

Select 'LE_BLANK' in service mode (✻3✻).

Make adjustments so that the leading edge non-image width is 4.5±1.5 mm when the Test Sheet is copied in Direct.

(unit: 0.1 mm)

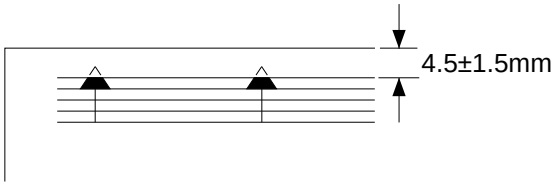

Figure 2-1

2. Adjusting the Leading Edge Non-Image Width (registration)

Select 'REGIST' in service mode (✻3✻).

Make adjustments so that the leading edge margin is 4.5±1.5 mm when the Test Sheet is copied.

(unit: REGIST:0.1mm)

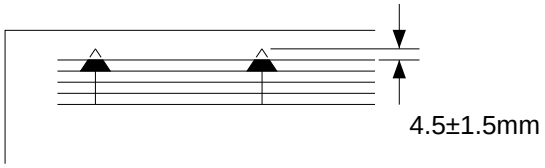

Figure 2-2

3. Adjusting the Left/Right Registration (paper deck and cassette position)

Make adjustments by moving the horizontal adjusting plate of the paper deck and each cassette so that the distance between the edge of the copy image and that of the copy paper is 0 ±1.5 mm when the Test Sheet is copied.

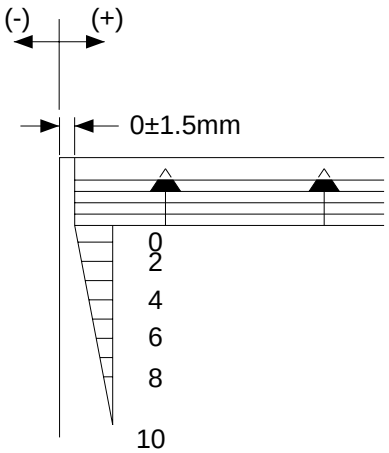

Figure 2-3

a. Paper Deck

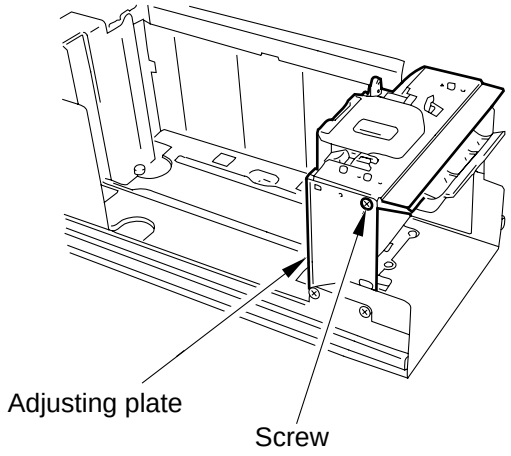

Figure 2-4a

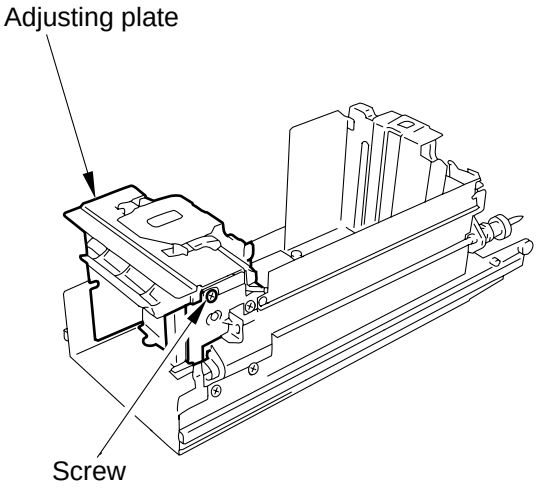

Figure 2-4b

b. Cassette

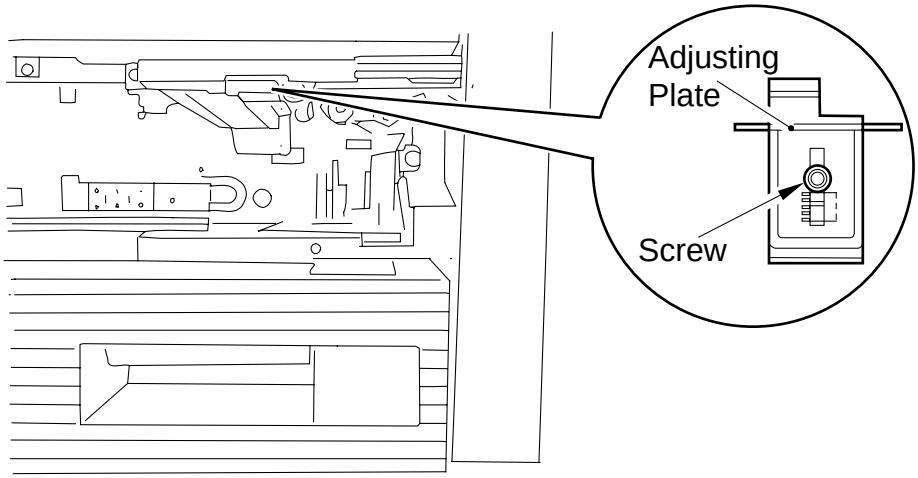

Figure 2-5

Note:
If you have adjusted the front/rear registration for the cassette, you will have to register the paper width basic value. (p. 2-49)

4. Adjusting the Left/Right Registration (holding tray position; 2nd side of a two-sided/overlay copy)

Loosen the two screws, and move the position of the guide plate of the holding tray assembly so that the distance between the edge of the copy image and that of the copy paper is 0 ±2.0 mm in Direct mode.

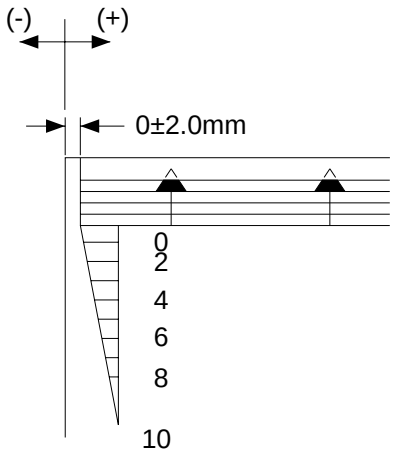

Figure 2-6

5. Adjusting the Left/Right Margin

Make adjustments so that the image left/right margin is 2.75 ±2.5 mm when the Test Sheet is copied in Direct mode.

You must have adjusted the “left/right registration” before making this adjustment.

a. Front Margin Adjustment (left margin)
Select ‘F-BLANK’ in service mode (✻3✻), and change the setting.
Increasing the setting increases the front margin.
(unit: 0.1 mm)

b. Rear Margin (right margin)
Select ‘R-BLANK’ in service mode (✻3✻), and change the setting.
Increasing the setting increases the rear margin.
(unit: 0.1 mm)

6. AE Auto Adjustment

1) Open the front door, and insert the door switch actuator into the door switch assembly.
2) Push the service mode switch with a clip or the like over the cover.
3) Select AE_ADJ: 0 ← (✻: START) (0: F5, 1: F9) in service mode (✻4✻).
4) Place the Test Sheet on the copyboard, and close the copyboard cover.

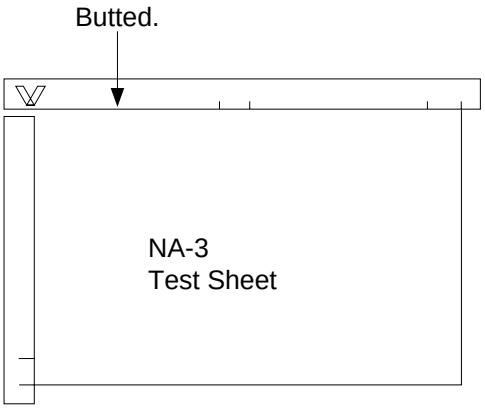

Figure 2-7

5) Press the ✻ user mode key once.
The scanning lamp will turn ON, and auto adjustment will be executed.

AE_ADJ : 1 ← (✻:START)
Changes to ‘1’.

6) Place a newspaper on the copyboard, and close the copyboard cover.
7) Press the ✻ user mode key once.
   The scanning lamp will turn ON, and auto adjustment will be executed.

   AE_ADJ : 0 ← (✻:START)
   Changes to '0'.
8) Press the Reset key twice to end service mode.

7. Adjusting the AE Slope

After executing AE auto adjustment, make a copy of a dark original (e.g., newspaper). If the copy is foggy or too light, perform the following:

1) Open the front door, and insert the door switch actuator into the door switch assembly.
2) Press the service mode switch over the cover with a clip.
3) Select 'AE_SLOP' in service mode (✻3✻).
4) Place a dark original (e.g., newspaper).
5) Change the setting using the keypad, and press the ✻ user mode key.
   ① If the setting was decreased in adjustment mode, the copy of a newspaper will be lighter.
   ② If the setting was increased in adjustment mode, the copy of a newspaper will be darker.

Note:
You can make copies by pressing the Copy Start key.

6) Press the Reset key twice to end service mode.

B. Exposure System

1. Adjusting the Scanner Home Position

Make copies, and remove the control panel; then, check to make sure that the line in section A on the electrode (front) of the No. 1 mirror mount is within section B of the hole in the glass support (front).

Otherwise, change the setting of 'BRAKE_SC' in service mode (✻3✻) so that the line in section Ⓐ is within section Ⓑ.

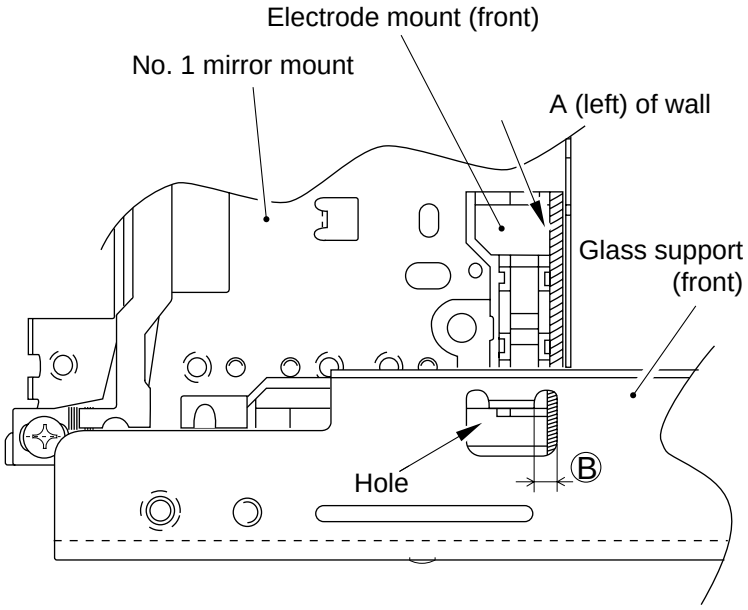

Figure 2-8

2. Routing the Scanner Drive Cable

Route the cable as indicated by numbers ① through ⑧, and perform “adjusting the wire tension” and “adjusting the mirror position” shown on the next page.

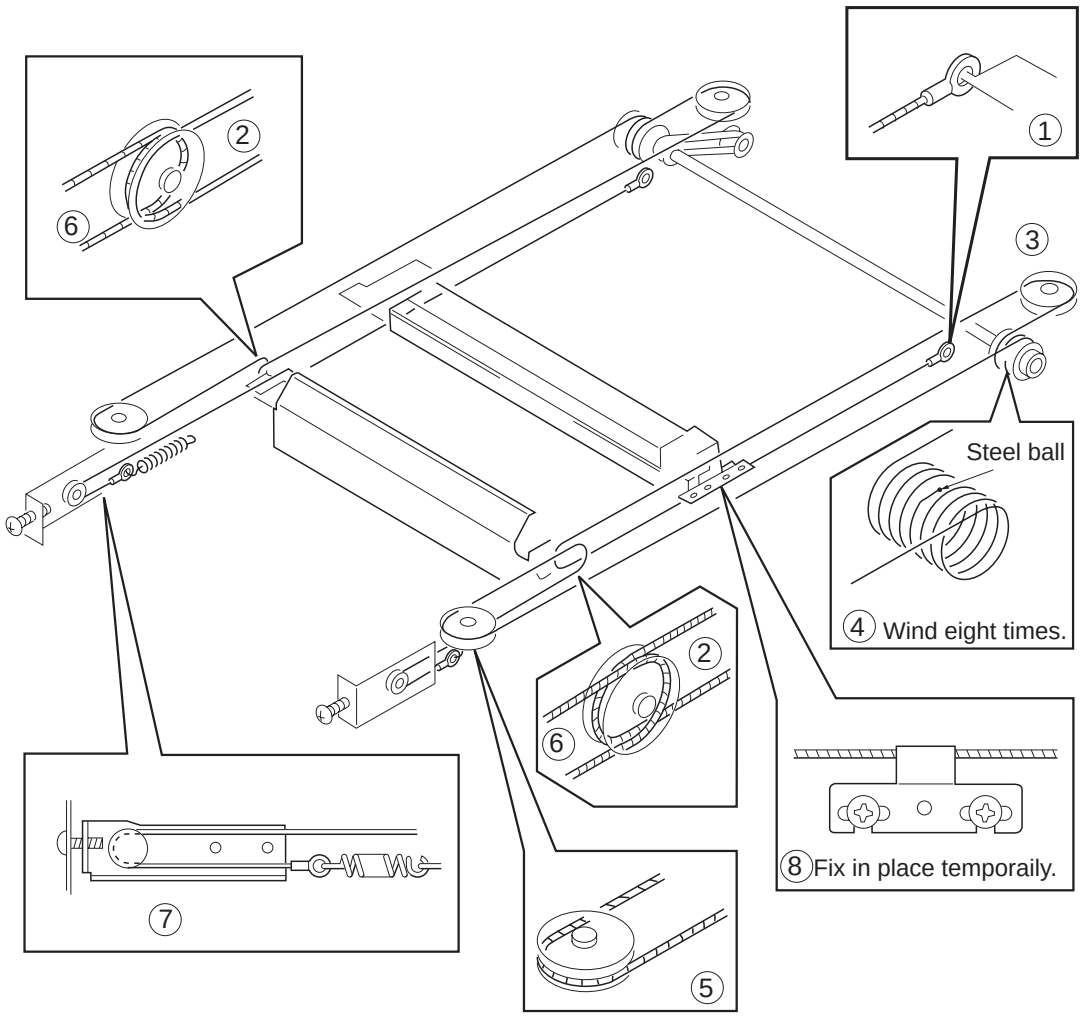

Figure 2-9

3. Adjusting the Tension of the Scanner Cable

Be sure to perform the following whenever you have installed the scanner cable.

1) Remove the two mounting screws, and remove the left cover.
2) Loosen the fixing screw on the tension spring bracket.
3) Turn the tension adjusting screw so that the value is as indicated:
   - Turn the tension adjusting screw A so that the reading of the spring gauge is 200 ±50 g when the middle of the scanner cable is pulled about 10 mm.

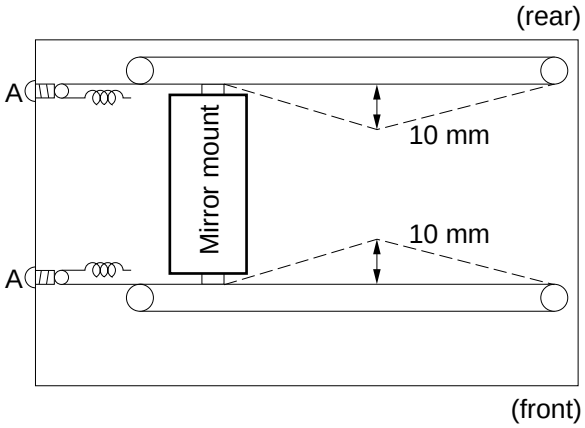

Figure 2-10

4. Adjusting the Mirror Position

1. Routing the Scanner Drive Cable and Adjusting the Mirror Position

Be sure to perform the following whenever you have installed the scanner drive wire:

1) Move the No. 1 mirror mount and the No. 2/No. 3 mirror mount to the left.
2) Set the mirror positioning tool (front, rear; FY9-3011) as shown:

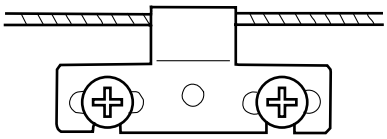

Figure 2-11

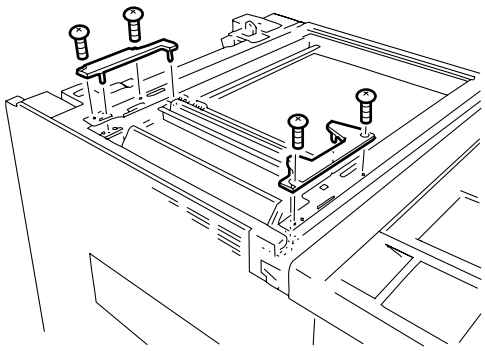

Figure 2-12

5. Cleaning the Mirror (No. 5 mirror)

1) Remove the copyboard glass.
2) Remove the lens hood.
3) Remove the mirror guide plate.
4) Move the lens stage in Enlarge direction.
5) Remove the screw, and remove the mirror cleaning tool.
6) As shown, butt the mirror cleaning tool ① against the No. 5 mirror, and clean the mirror by moving the tool in the direction of the arrows. (At this time, take care so that the No. 4 mirror will not come into contact with the cleaning tool or your fingers.)

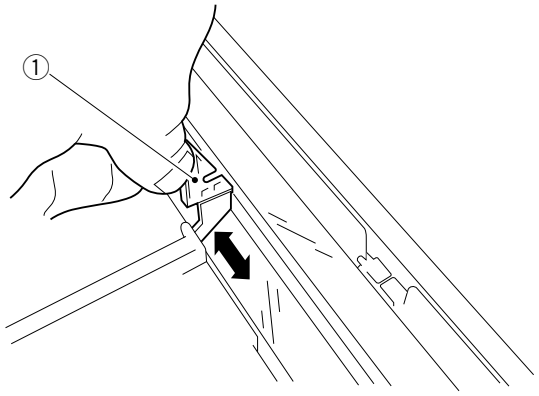

Figure 2-13

6. Installing the Light-Blocking Belts

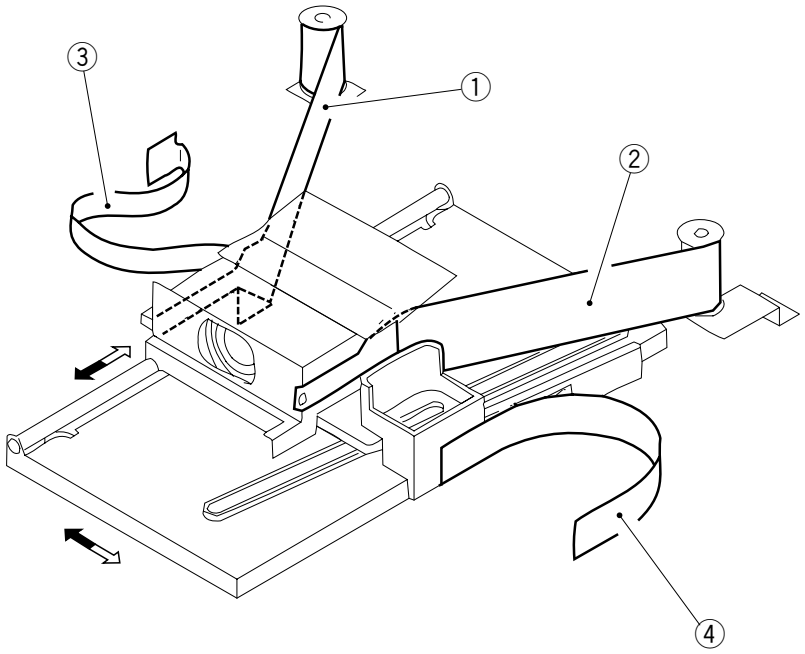

① Light-blocking belt 1
② Light-blocking belt 2
③ Light-blocking belt 3
④ Light-blocking belt 4

Figure 2-14

7. Installing the Lens X Direction Drive Belt

Install the lens X direction drive belt with a mounting screw ② where the lens X direction drive motor ① has lowered on its own weight.

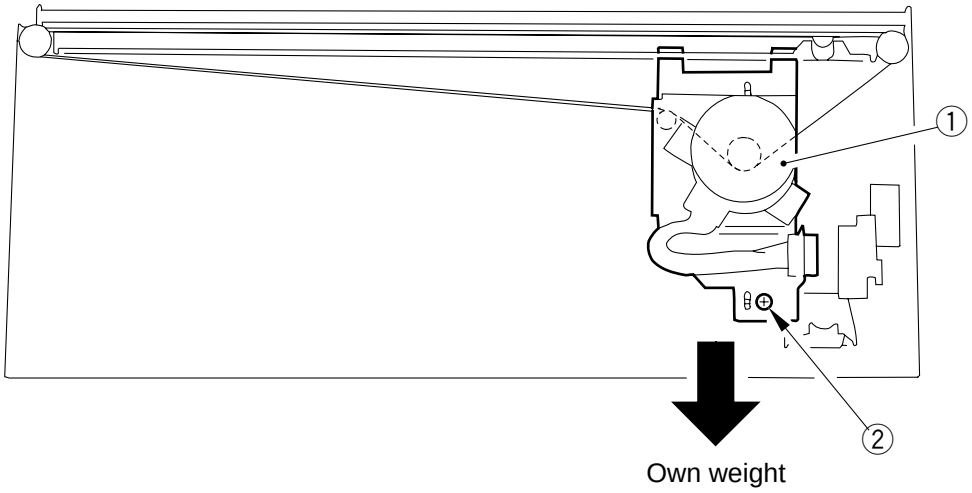

Figure 2-15

C. Image Formation System

1. Routing the Grid for the Primary Charging Assembly

1) Loosen the two mounting screws used to fix the left/right shielding plate in place.
2) Loosen the three mounting screws used to fix the motor unit in place at the front.

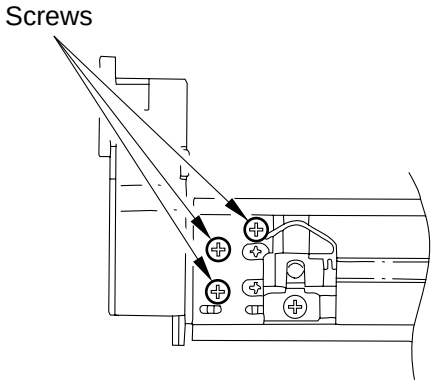

Figure 2-16

3) Loosen the mounting screw, and move it in the direction shown in Figure 2-17; then, fix it temporarily.

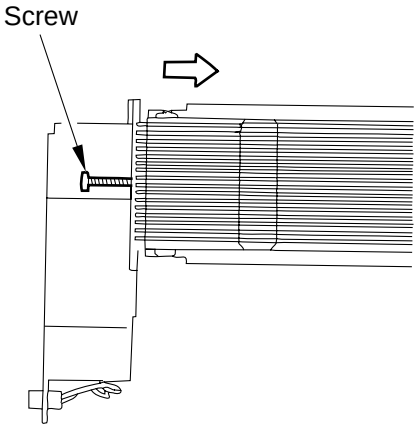

Figure 2-17

4) Free a length of about 5 cm from a 0.1mm-dia. charging wire reel, and form a loop of about 2 mm in diameter.

Reference:

When forming a loop, wind the charging wire around a hex key once, and twist the hex key three to four times; then, twist the charging wire.

5) Cut the twisted wire (excess wire) by a nipper.
6) Hook the loop on stud A shown in Figure 2-18.
7) When you have routed the wire for 31 runs, lead it through section B, give it a half turn, and put it between the washer and the motor unit; then, wind it about once (clockwise) around the mounting screw, and tighten the mounting screw.

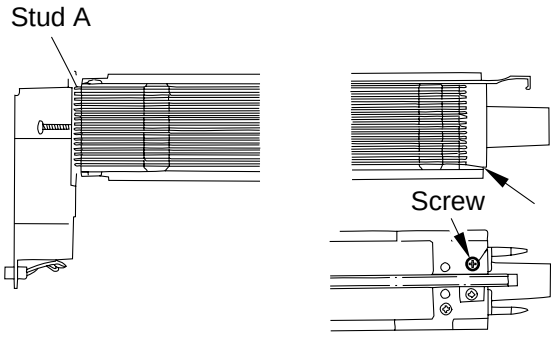

Figure 2-18

8) Cut the excess charging wire with a nipper.
9) Tighten the mounting screw you loosened in step 3).
   Keep tightening the screw until the tension of the grid wire is even.
   Pay attention so that the charging assembly is not deformed; try to tighten the mounting screw (front) on the left/right shielding plate as early as possible.

2. Adjusting the Height of the Charging Wire

Charging assembly	Height of charging wire	Range
Primary	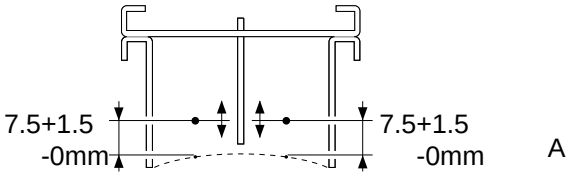	±1mm
Pre-transfer	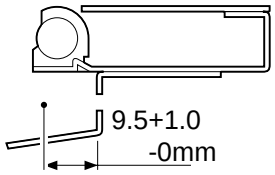	No adjusting mechanism
Transfer	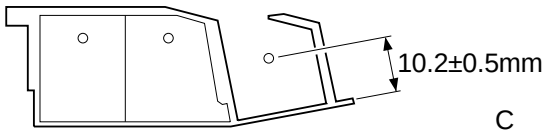	±2mm
Separation	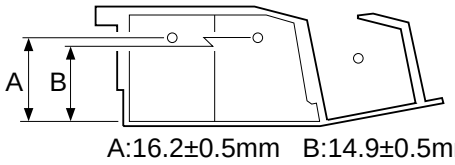	±2mm

Table 2-1

Reference:

The height (position) of the primary and transfer/separation charging wire may be adjusted by turning the screw behind the charging assembly. A full turn of the screw changes the position of the charging wire by about 0.7 mm.

3. Adjusting the Blank Exposure Lamp

1) Place the Test Sheet on the copyboard.
2) Select A4.
3) Make a copy, and check to make sure that the left/right registration is correct.
4) Make a copy in Direct.
5) Check the image, and measure the non-image width shown in Figure 2-19.

Paper size	Left/right non-image width
All paper sizes	2.75±2.5mm

(with standard frame erasing ON)

Table 2-2

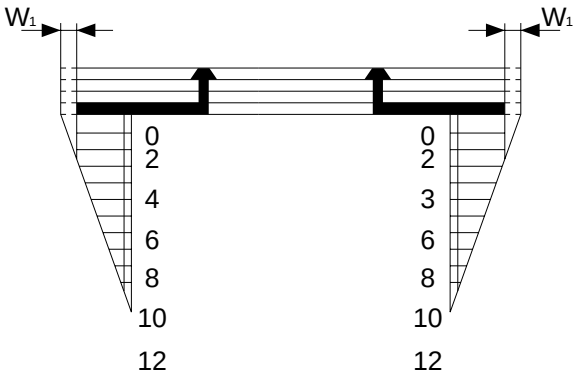

Figure 2-19

6) If the non-image width is not as specified, turn the adjusting screw to adjust the position of the blank exposure lamp assembly.

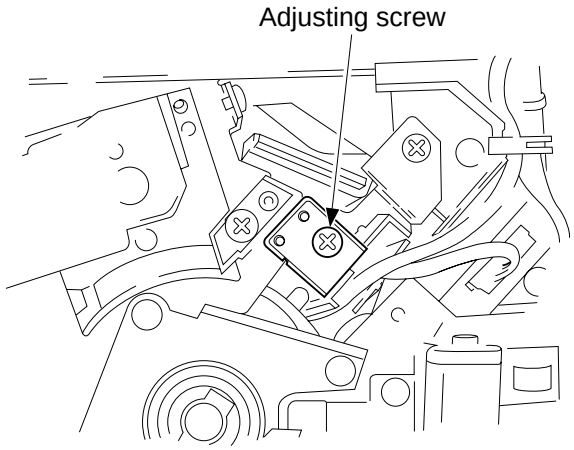

Figure 2-20

4. Position of the Roller Electrode

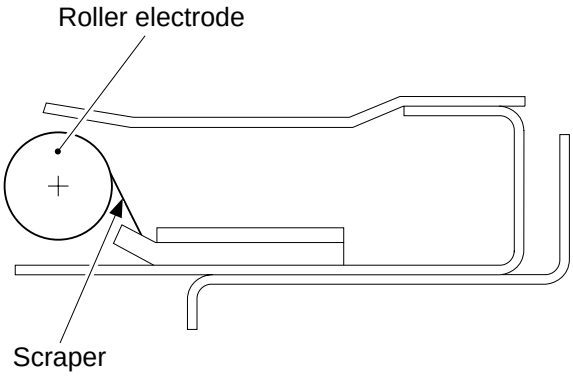

Figure 2-21

5. Position of the Side Seal in the Cleaning Assembly

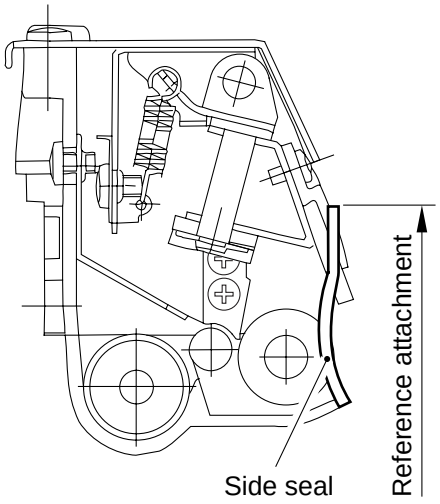

Be sure that the side seal does not extend inside the cleaner housing.

Figure 2-22

6. Cleaning the Cleaner Side Scraper

Perform the following when replacing the side scraper and, thereafter, for every 500,000 copies made.

1) Remove the cleaning blade.
2) Remove paper lint collecting at the tip of the side scraper (between the magnet roller and the toner guide roller; Ⓐ) with tweezers.

3) Remove the coating of toner from the surface of the magnet roller. (Use a sheet of copy paper shaping it like the letter U.)

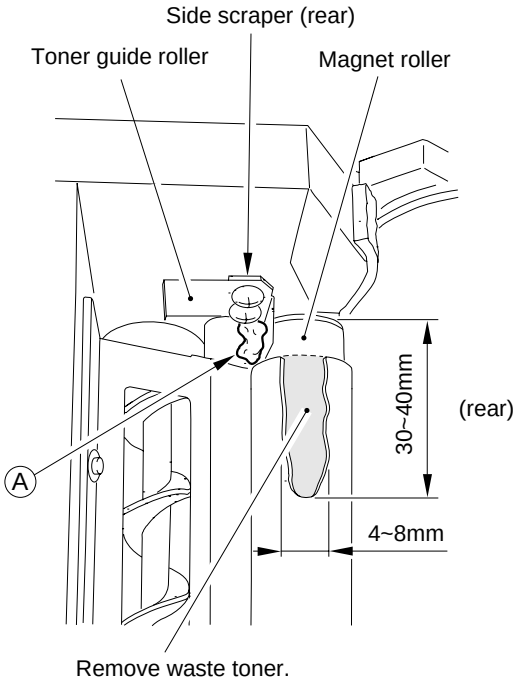

Figure 2-23

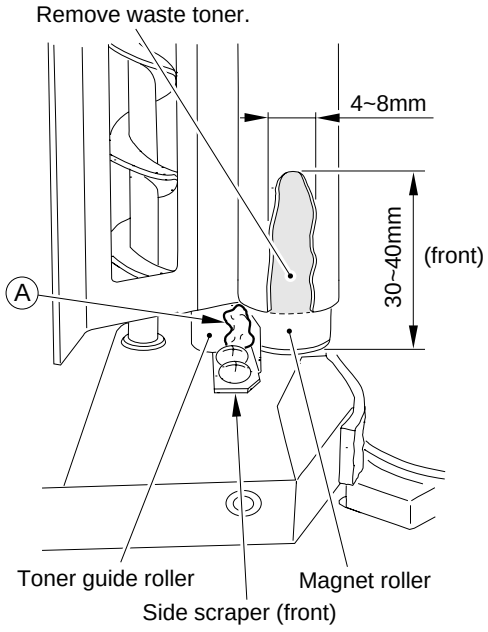

Figure 2-24

4) Turn the magnet roller clockwise (viewing from the front).
5) If a coating of toner develops again where toner was removed in step 3), repeat steps 3) through 5).

D. Pick-Up/Feeding System

1. Orientation of the Pick-Up Roller (cassette/deck)

Install the pick-up roller by reversing the steps used to remove it with the following in mind:

- The front and rear pick-up rollers are not interchangeable.
- The collar of the front pick-up roller is gold.
  When installing the pick-up roller ① to the pick-up assembly, make sure that the round marking ② on the side of the roller and the round marking ③ on the collar (gold) are toward the front of the machine.

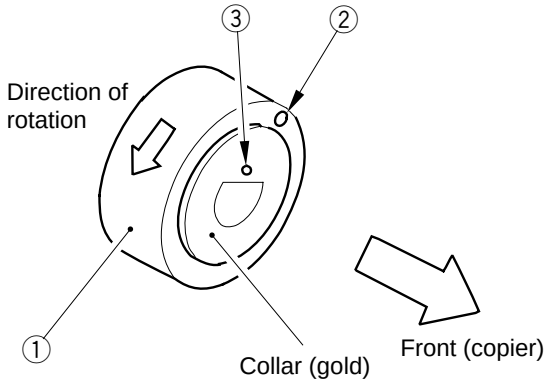

Figure 2-25

- The collar of the rear pick-up roller is silver. When installing the pick-up roller ④ to the pick-up assembly, make sure that the round marking ⑤ on the collar (silver) is toward the rear of the machine.

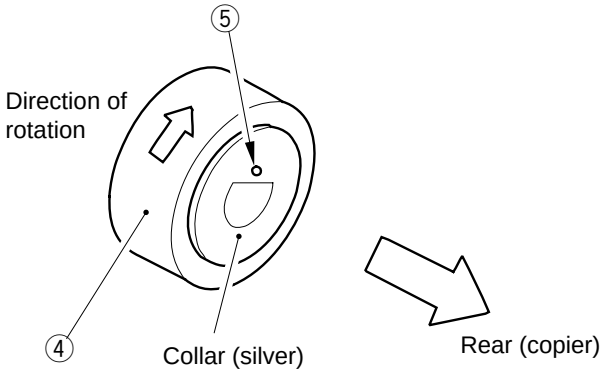

Figure 2-25a

2. Orientation of the Separation Roller (cassette/deck)

Keep the following in mind when replacing the separation roller.

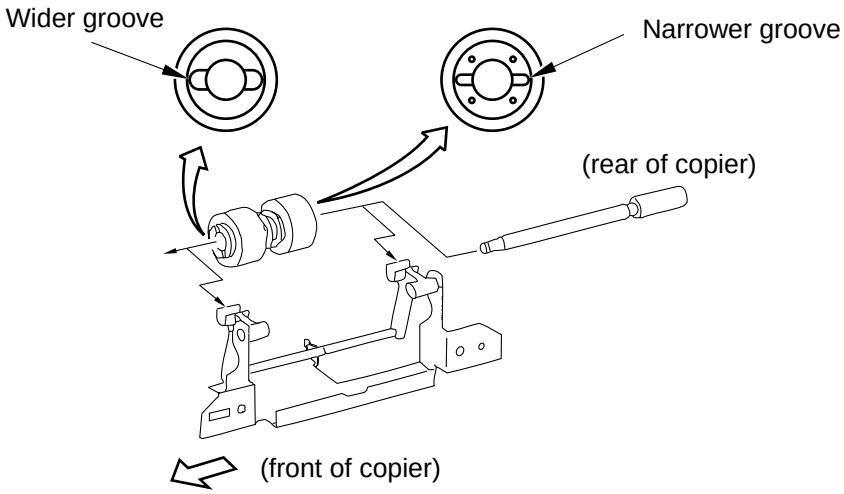

Figure 2-26

3. Orientation of the Feeding Roller (cassette/deck)

When installing the feeding roller assembly ① to the cassette/deck pick-up assembly, make sure that the belt pulley ② is toward the front of the machine.

When installing the feeding roller ③ to the feeding roller shaft ④, make sure that the marking '5' ⑤ is toward the front of the machine.

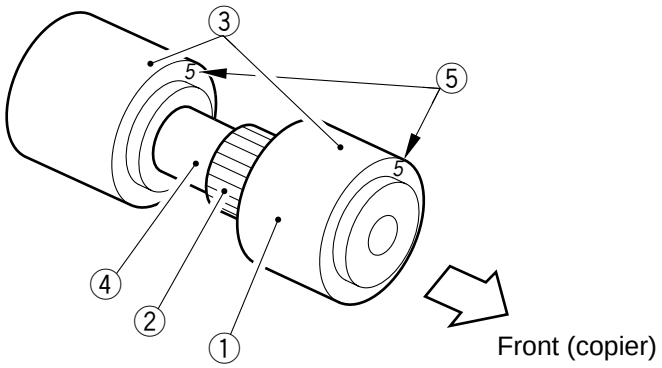

Figure 2-27

4. Orientation of the Pick-Up Roller (multifeeder)

Install the pick-up roller by reversing the steps used to remove it with the following in mind:

- The front and rear pick-up rollers are not interchangeable.
- The collar of the front pick-up roller is silver.
  When installing the pick-up roller ① to the pick-up assembly, make sure that the round marking ② is toward the front of the machine.

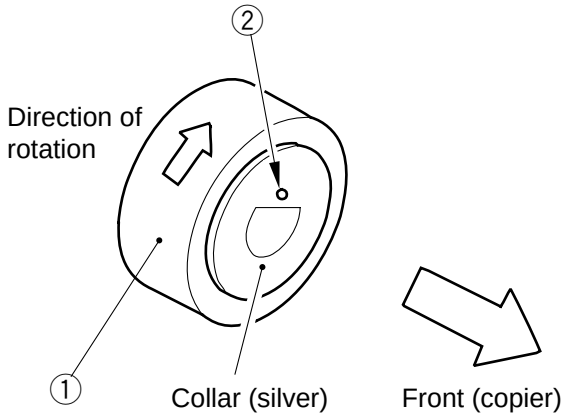

① Pick-up roller
② Marking (collar)

Figure 2-28

- The collar of the rear pick-up roller is gold.
  When installing the pick-up roller ③ to the pick-up assembly, make sure that the round marking ④ on the side of the roller and the round marking ⑤ on the collar (gold) are toward the rear of the machine.

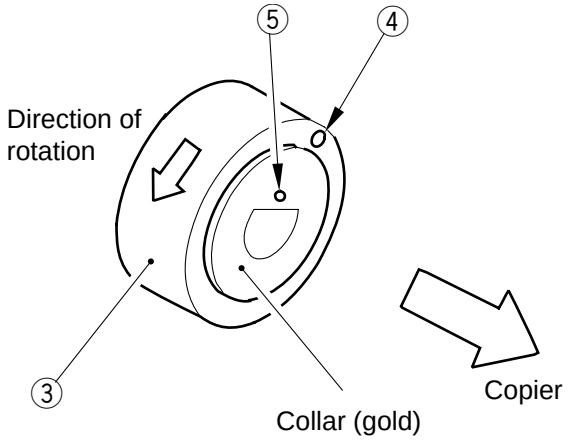

③ Pick-up roller
④ Marking (roller)
⑤ Marking (collar)

Figure 2-28a

5. Orientation of the Feeding Roller (multifeeder)

When installing the pick-up roller ① to the multifeeder pick-up assembly, make sure that the belt pulley ② and the marking '5' ③ are toward the front of the machine.

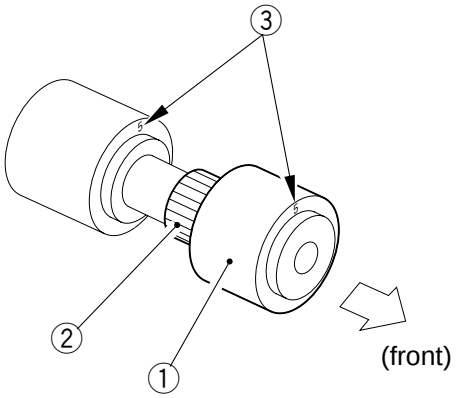

Figure 2-29

6. Adjusting the Pressure of the Separation Roller (cassette/deck)

If double feeding or pick-up failure occurs during pick-up operation, change the position of the pressure spring of the separation roller:

- If double feeding occurs, change the position of the spring hook to side B.
- If pick-up failure occurs, change the position of the spring hook to side A.

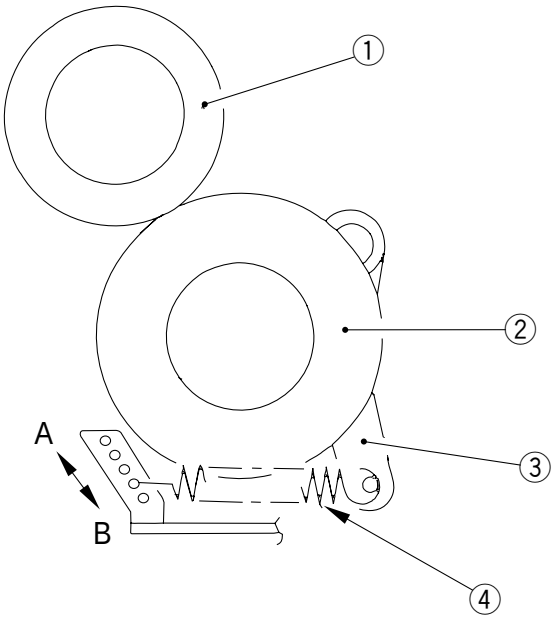

① Feeding roller
② Separation roller
③ Locking lever
④ Pressure spring

Figure 2-30

7. Adjusting the Pressure of the Separation Roller (holding tray)

Turn the separation adjusting roller so that the distance between the shafts are 32.7 ±0.1 mm.

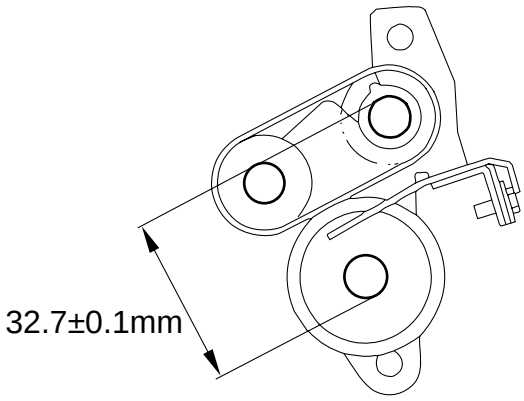

Figure 2-31

8. Adjusting the Pressure of the Pick-Up/Feeding Roller (multifeeder)

When pick-up double feeding or pick-up failure occurs during pick-up operation, adjust the position of the pressure spring of the separation roller.

- If double feeding occurs, change the position of the spring hook to side A.
- If pick-up failure occurs, change the position of the spring hook to side B.

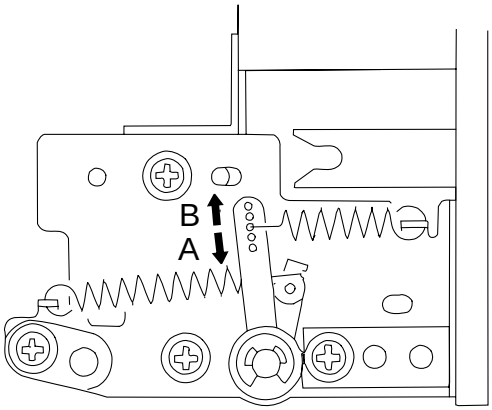

Figure 2-32

9. Positioning the Pick-Up Roller Releasing Solenoid (cassette)

Make adjustments so that the distance from the bottom of the pick-up unit in each cassette holder to the bottom end of the bushing of the roller support A is 36 ±0.5 mm when the plunger of the pick-up releasing roller is drawn as shown.

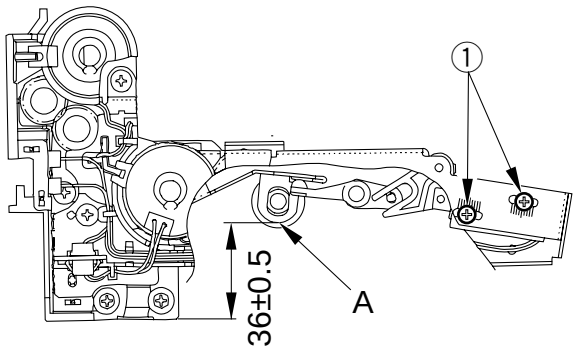

Figure 2-33

10. Adjusting the Position of the Pick-Up Roller Releasing Solenoid (deck)

Adjust the position of the solenoid so that the distance from the center of the hole A in the solenoid to the left end of the right solenoid arm is 57.2 ±0.5 mm as shown in Figure 2-34.

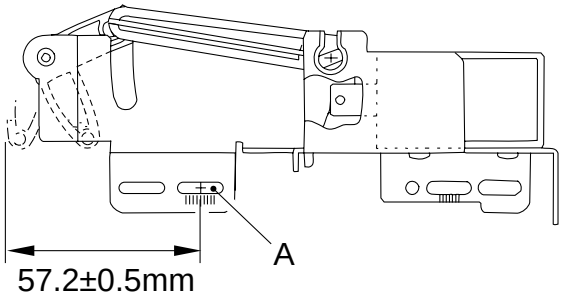

Figure 2-34

11. Adjusting the Pick-Up Roller Releasing Solenoid (multifeeder)

Make adjustments by sliding the solenoid in the direction of A so that the distance between the shutter ① and the shutter plate ② is 0.4 ±0.2 mm when the solenoid is pulled.

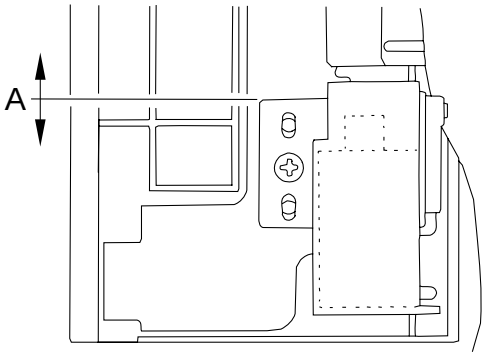

Figure 2-35

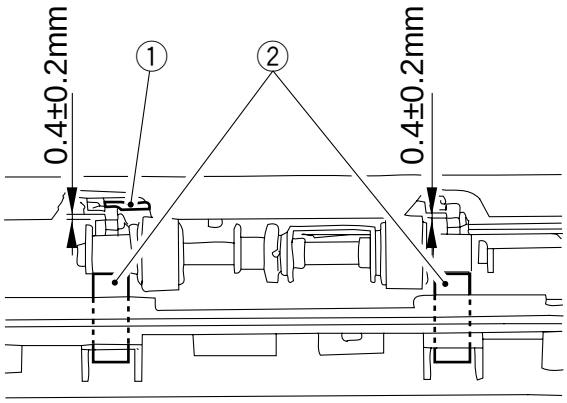

Figure 2-35a

12. Routing the Timing Belt for the Multifeeder Assembly Side Guide

Butt the rack plate of the multifeeder against section A (open state).

Move the slide volume in the direction of B, and install the timing belt to the pulley.

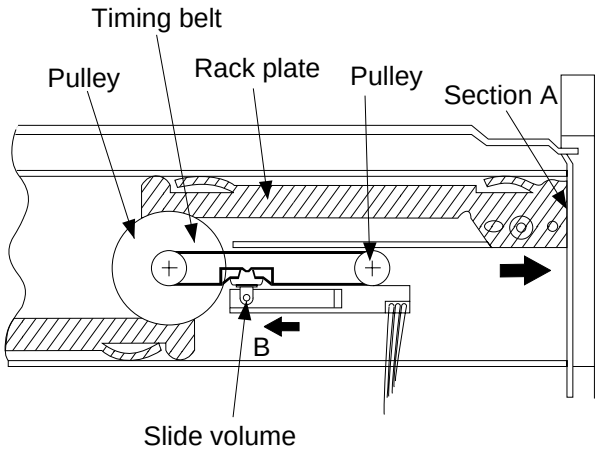

Figure 2-36

13. Adjusting the Position of the Delivery Paper Deflecting Drive Solenoid

Temporarily fix the delivery paper deflecting plate drive solenoid with a screw; then, push down the lever ① in the direction of A to push in the delivery paper deflecting plate drive solenoid ② in the direction of B, and tighten the mounting screw ③.

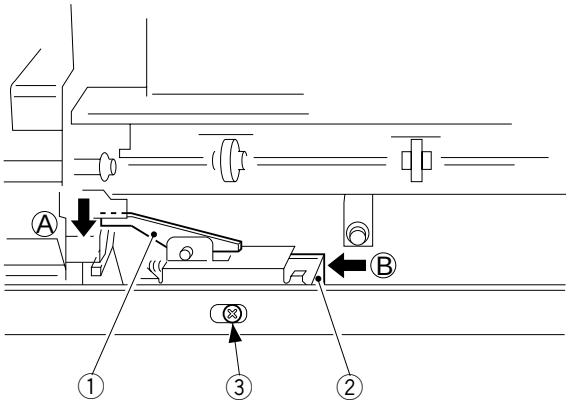

Figure 2-37

14. Adjusting the Position of the Holding Tray Paper Deflecting Plate Drive Solenoid

Install the solenoid so that its stroke is 5.6 ±0.3 mm, i.e., between the rubber silencer and the end of the solenoid.

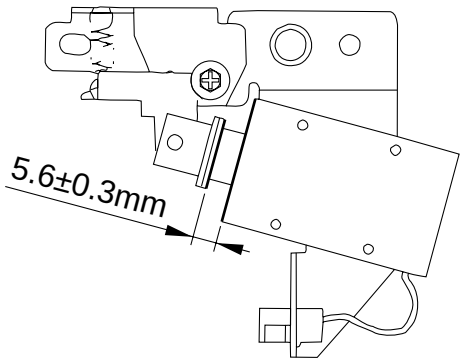

Figure 2-38

15. Installing the Holding Tray Assembly Side Guide Assembly

Mark the position of the side guide plate assembly with a scriber for installation later.

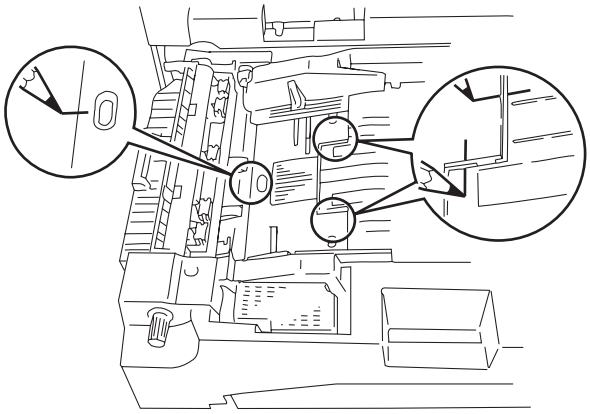

Figure 2-39

16. Installing the Holding Tray Paper Jogging Guide Assembly

Mark the position of the paper jogging guide assembly with a scriber for installation later.

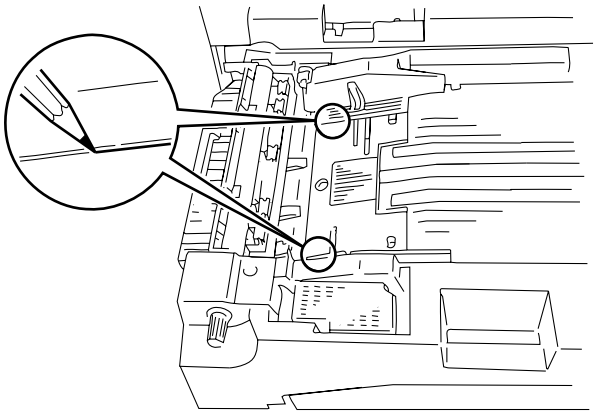

Figure 2-40

17. Installing the Timing Belt for the Holding Tray Assembly Paper Jogging Guide Plate

Butt the rack plate of the paper jogging guide plate against section A (open state). Install the timing belt on the pulley.

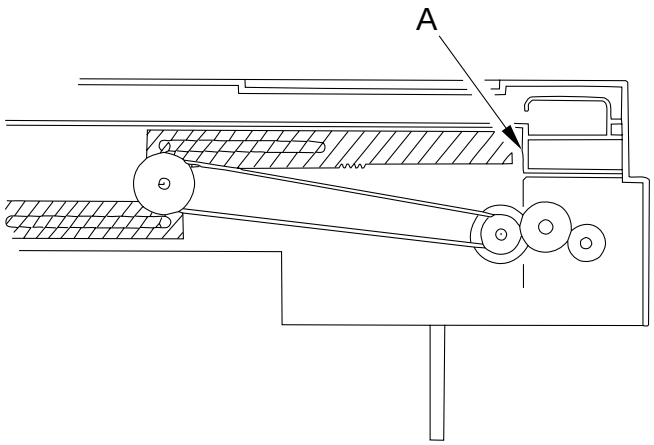

Figure 2-41

18. Adjusting the Position of the Holding Tray Paper Jogging Solenoid

Install the solenoid so that the stroke is 1.5 ±0.3 mm, i.e., between the rubber silencer and the end of the solenoid.

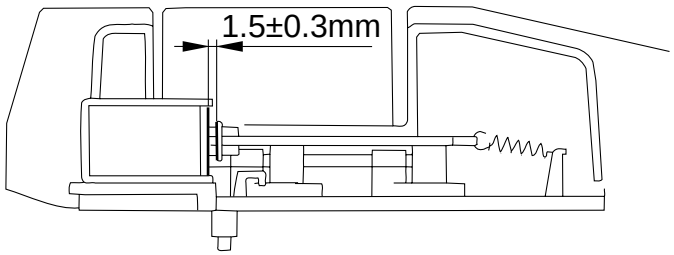

Figure 2-42

19. Installing the Drive Belt

Install the drive belt on the gears and rollers as follows:

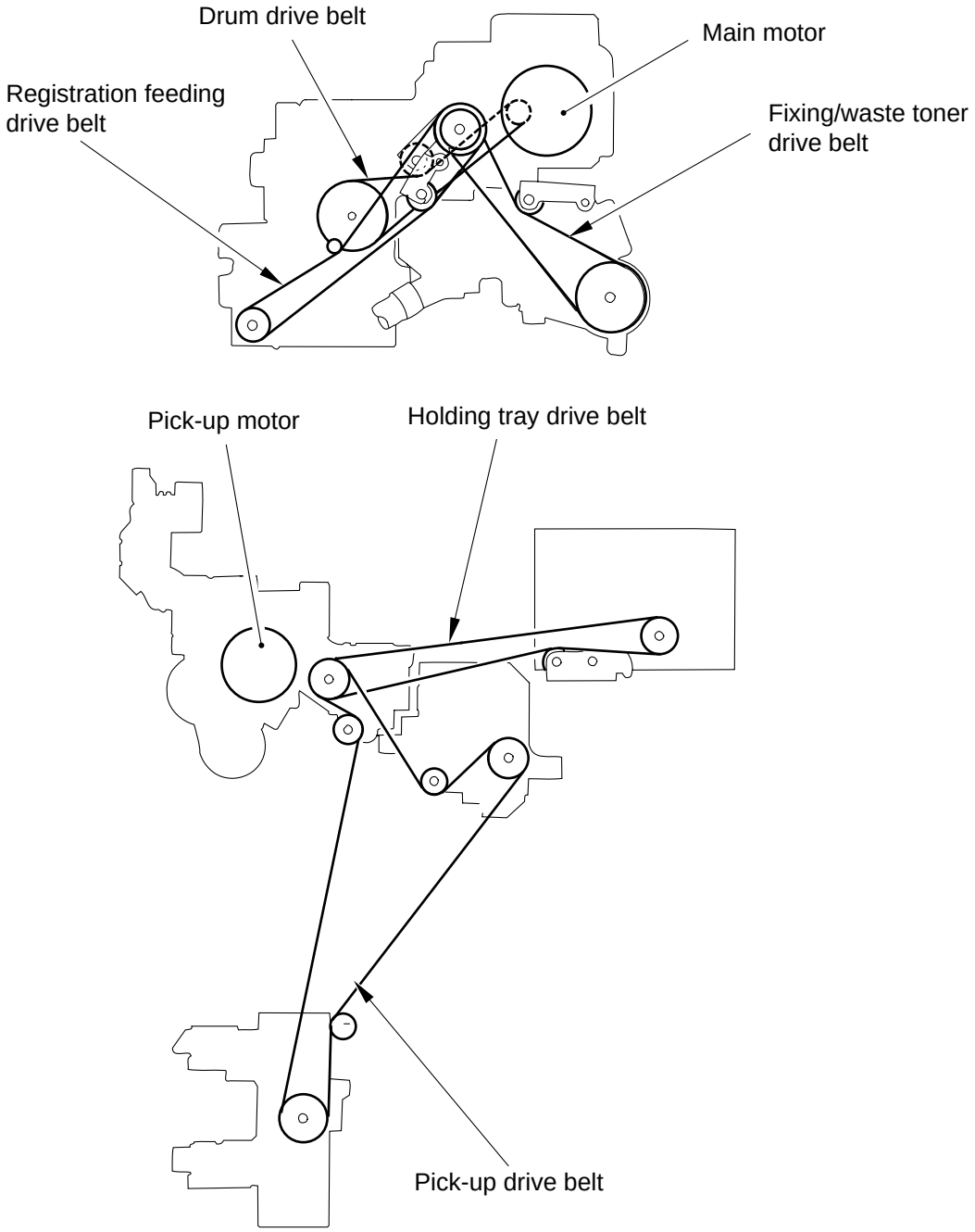

Figure 2-43

Caution:

When attaching the holding tray drive belt, attach it on the pulley so that it is toward the front (away from you when viewed from the rear) while the pick-up drive belt is toward the rear (closer to you when viewed from the rear).

E. Fixing System

1. Points to Note When Handling the Fixing Heater

a. Do not touch the heater surface.
b. Install both heaters so that the side with the longer heater wire is toward the front.
c. In the case of the 120V model, install the main heater (790 W) on the right and the sub heater (410 W) on the left when viewing from the front of the fixing assembly. In the case of the 220/240V model, install the main heater (1200 W) on the right side.
d. Use the faston on the right for the main heater and that at the top for the sub heater for heater connection at the rear.

2. Position of the Fixing Assembly Paper Guide

Keep the following in mind when working in the field:

a. See Figure 2-44 for the position of the guide.
b. The height of the lower guide is when the solenoid (SL16) is ON.
c. Make sure that the difference in height of the guide between front and rear is 0.5 mm or less.
d. To adjust the height of the guide, loosen the fixing screw on the height adjusting support plate.
e. Make checks by removing the lower roller.

Height of the Fixing Inlet Guide
(dimensions refer to the center of the guide)

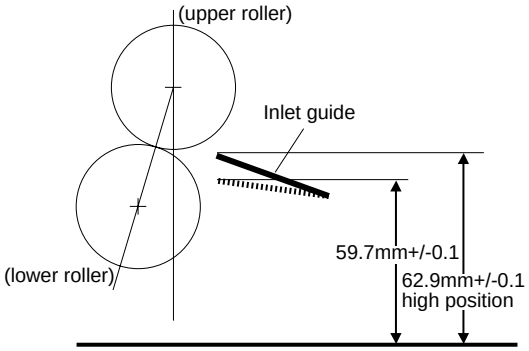

Difference in Height between Front and Rear

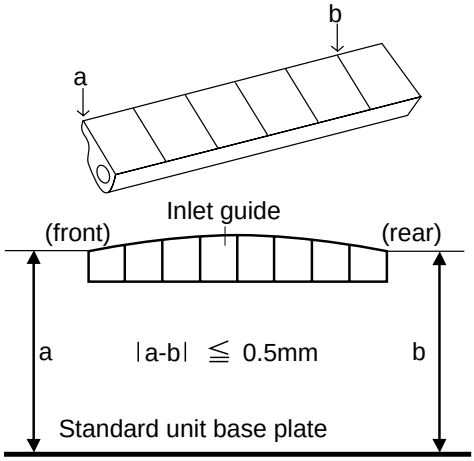

Figure 2-44

Caution:

Do not loosen the mounting screw on the paper guide mount; otherwise, the paper guide position must be adjusted. If you have loosened it for some reason, make sure that the original position is maintained with reference to the notches provided on the fixing assembly.

3. Adjusting the Pressure of the Lower Roller (nip)

The nip width must be as indicated in Table 2-3. Otherwise, make adjustments by turning the pressure adjusting nut.

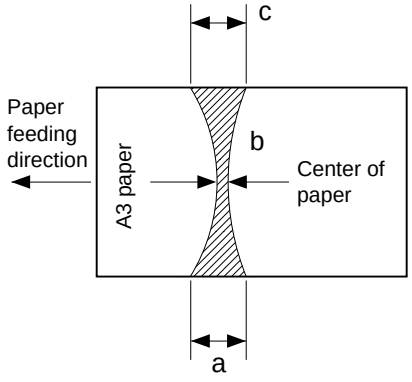

Figure 2-45

Note:
a and c represent points 10 mm from either side.

Dimension	Measured when both upper and lower rollers have been heated sufficiently.
b	7.3±0.5mm
|a-c|	0.5mm or less

Table 2-3

a. Measuring the Nip
Wait for 15 min after the copier has completed its warm-up period, make 20 A4 copies, and measure the nip.

1) Select A3.
2) Open the copyboard cover.
3) Select 'NIP' in service mode (✻ 4 ✻).
4) Press the ✻ user mode key.
The copier will pick up A3 copy paper and become ready for measurement as shown in Figure 2-45.

Reference:
The paper will stop between fixing rollers halfway and then will be delivered automatically after about 20 sec.

5) Measure the nip.

4. Adjusting the Fixing Clutch

If you have replaced any of the component parts shown below, adjust the gap between the 41T gear ① and the control ring ② so that it is 0.1 to 0.3 mm (equivalent of four sheets of 64 g/m^2 plain paper) with a set screw ③.

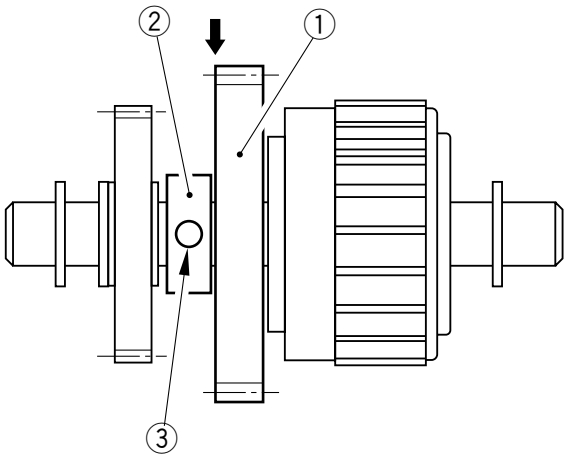

Figure 2-46

F. Electrical System

1. When Replacing the DC Controller PCB

1) Install a new DC controller PCB.
2) Press the service mode switch over the cover with a clip.
3) Select RAM_INIT:0 ← (✻: START) in service mode (✻4✻).
4) Press the ✻ user mode key.
5) Execute AE adjustment.
6) Enter the values recorded on the label attached behind the front door.
7) Enter the appropriate settings for the user in service mode (✻5✻).
8) Press the Reset key twice.

2. Checking the Surface Potential Control System

a. Outline

If image faults are noted, you must first find out whether the problem is in the latent image formation block including the photosensitive drum and the potential control system or it is in the developing/transfer mechanism.

To do so, it is important to check to see whether the surface potential is optimum.

You can check the surface potential in service mode.

b. Disabling the Auto Control Mechanism

You may disable the auto control mechanism as a way to find out whether the corona current control, lamp intensity control, or developing bias control mechanism is faulty (non-auto control mode).

You may also use non-auto control mode as a tentative remedy for a fault in the auto control mechanism. In non-auto control mode, all outputs are fixed to their appropriate values.

① Steps

1) Select 'PO_CONT' in service mode (✻4✻).
2) Check to make sure that the indication on the message display is as follows:

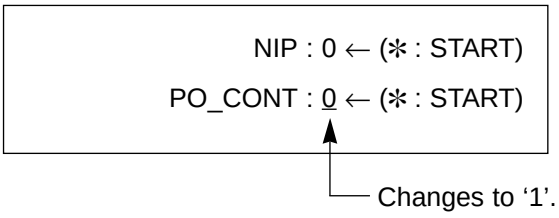

3) Press the ✻ user mode key. (non-auto control mode selected)

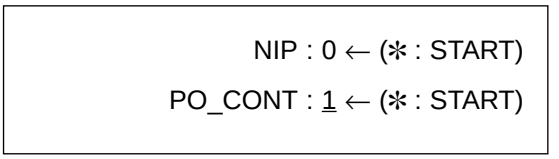

4) Press the Reset key twice.

Caution:

In non-auto control mode, all values for corona current control, lamp intensity control, and developing bias control are set to their respective default values.

② Using Non-Auto Control Mode

When image faults are noted, you may use non-auto control mode to find out weather the cause is on the input side or the output side of the microprocessor on the DC controller PCB.

If the images are corrected in non-auto control mode, the cause is on the input side, i.e., potential measuring unit or the DC controller PCB.

c. Zero-Level Check

You may make use of a zero-level check to decide whether the surface potential control circuit is normal or faulty.

Reference:

The term zero-level check refers to a check made to find out if the microprocessor recognizes 0 V when the drum surface potential is 0 V.

This way, you can decide whether the microprocessor on the DC controller PCB is normal or faulty.

There are two types of zero-level checks: in method 1, the level shift circuit of the DC controller PCB is checked and in method 2, the potential measurement circuit:

① Method 1

1) Turn OFF the power switch.
2) Short J127-1 and -2 on the DC controller PBC. Disconnect J103.
3) Insert the door switch actuator into the door switch assembly, and turn ON the power switch.
4) Start service mode (✻2✻), and check if the indication of address PC023 (hexadecimal analog value) is between ‘0003’ and ‘001B’ during initial rotation.

If it is not between ‘003’ and ‘001B’, the DC controller PCB may be faulty.

5) Turn OFF the power switch, and remove the door switch actuator.
6) Remove the jumper wire from the DC controller PCB.
7) Connect the connector to J103 on the DC controller PCB.
8) Turn ON the power switch.

② Method 2
1) Turn OFF the power switch.
2) Remove the blank exposure lamp assembly.
3) Connect the connector of the potential sensor.
4) Attach the potential sensor check electrode (FY9-3012) to the potential sensor.

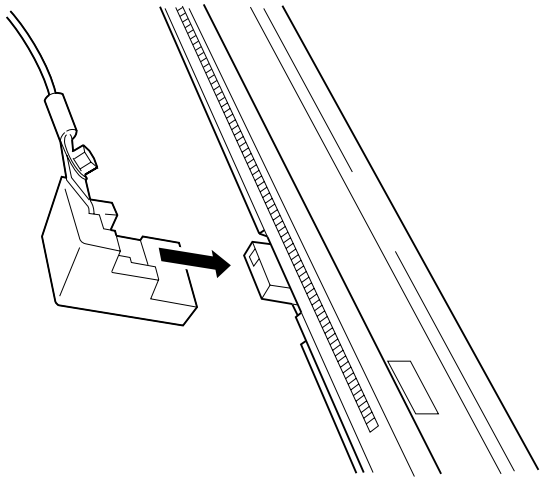

Figure 2-47

Caution:
When attaching the check electrode to the potential sensor, take care so that its magnet will not come into contact with the potential sensor cover.

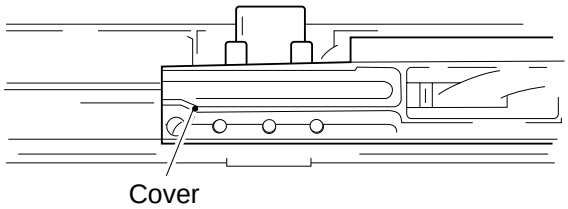

Figure 2-48

Caution:
Be sure to keep the clip far away from the sensor window so that it will never come into contact with the sensor cover.

5) Connect the cable for the potential sensor check electrode to J-1 on the potential measurement PCB.
6) Insert the door switch actuator into the door switch assembly.
7) Turn ON the power switch.

Caution:
Do not touch the potential sensor assembly once you have turned ON the power switch.

8) Start service mode (✻2✻), and check to make sure that the indication of address P023 (hexadecimal analog value) is between '0003' and '0001B' during initial rotation.

Reference:
1. If the value is within the range in method 1 but not in method 2, the sensor may be soiled or the potential measuring unit may be faulty.
2. If the value is within the range in both method 1 and method 2, the operations throughout the signal paths from the potential sensor unit to the microprocessor on the DC controller PCB are likely to be normal.

9) Turn OFF the power switch.
10) Remove the potential sensor check electrode.
11) Install the blank exposure lamp assembly.
12) Turn ON the power switch.

3. Checking the Potential Control System

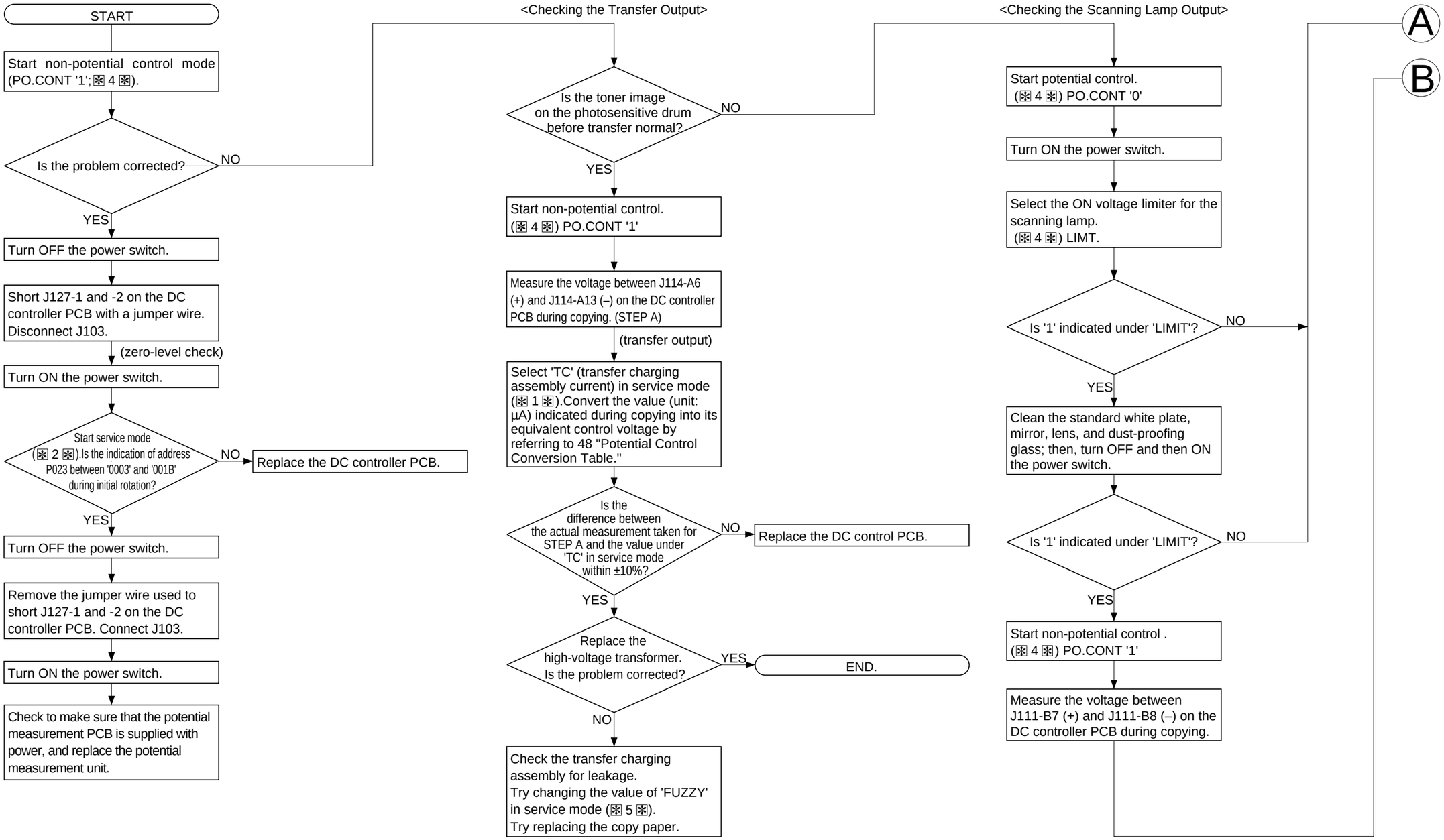

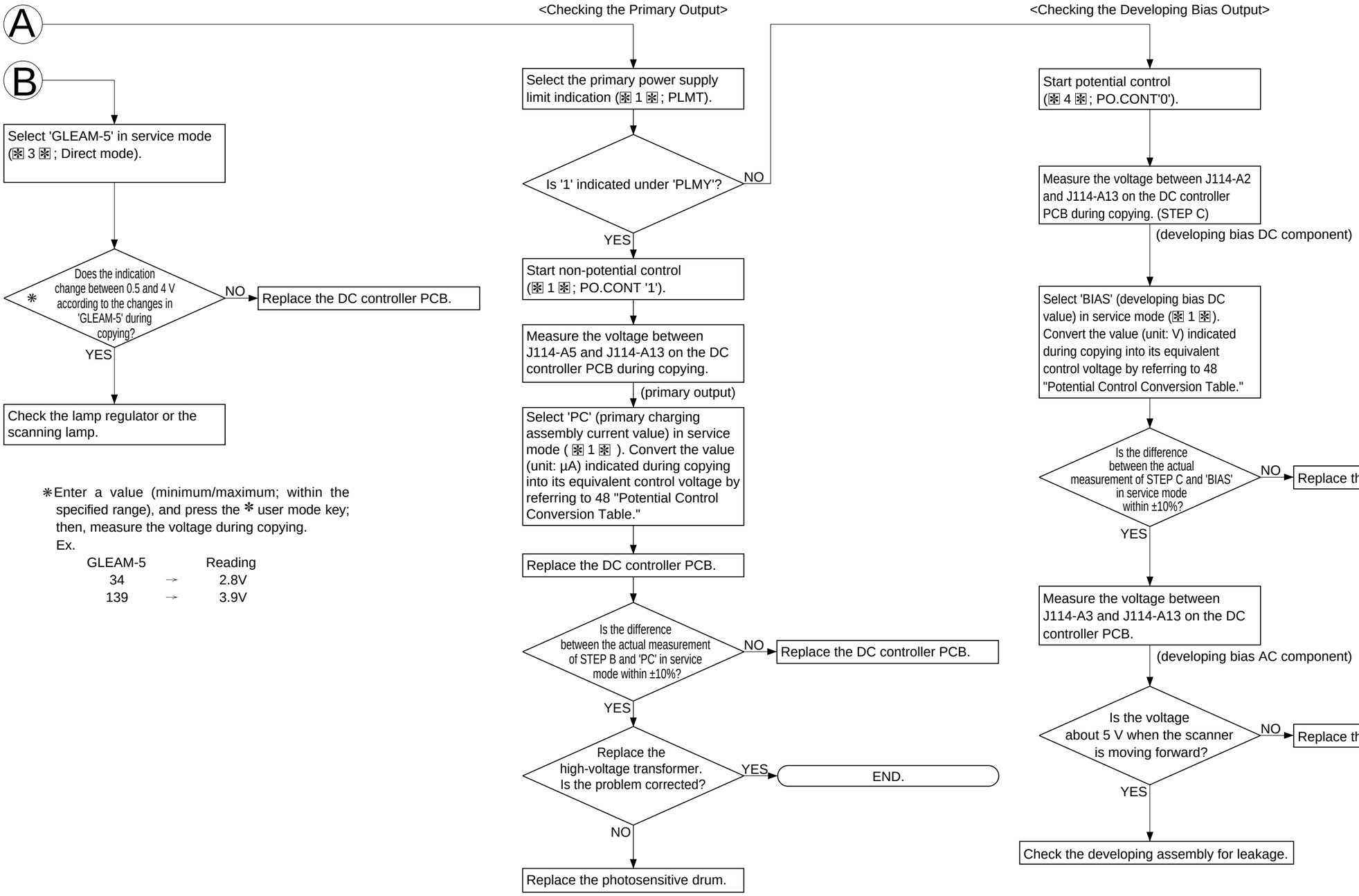

✻Enter a value (minimum/maximum; within the specified range), and press the ✻ user mode key; then, measure the voltage during copying.
Ex.

GLEAM-5		Reading
34	→	2.8V
139	→	3.9V

4. Potential Control System Conversion Table

Control (V)	Primary (µA)	Developing bias (V)	Pre-transfer (µA)	Transfer (µA)	Separation (µA)
3.00	1,400	0	0	440	100
3.05	1,391	3	-2	437	96
3.10	1,382	7	-4	434	92
3.15	1,373	11	-6	431	88
3.20	1,365	15	-8	429	85
3.25	1,356	18	-10	426	81
3.30	1,347	22	-12	423	77
3.35	1,338	26	-14	420	73
3.40	1,330	30	-16	418	70
3.45	1,321	33	-18	415	66
3.50	1,312	37	-20	412	62
3.55	1,303	41	-22	409	58
3.60	1,295	45	-24	407	55
3.65	1,286	48	-26	404	51
3.70	1,277	52	-28	401	47
3.75	1,268	56	-30	398	43
3.80	1,260	60	-33	396	40
3.85	1,251	63	-35	393	36
3.90	1,242	67	-37	390	32
3.95	1,233	71	-39	387	28
4.00	1,225	75	-41	385	25
4.05	1,216	78	-43	382	21
4.10	1,207	82	-45	379	17
4.15	1,198	86	-47	376	13
4.20	1,190	90	-49	374	10
4.25	1,181	93	-51	371	6
4.30	1,172	97	-53	368	2
4.35	1,163	101	-55	365	-1
4.40	1,155	105	-57	363	-5
4.45	1,146	108	-59	360	-8
4.50	1,137	112	-61	357	-12
4.55	1,128	116	-63	354	-16
4.60	1,120	120	-66	352	-20

Control (V)	Primary (µA)	Developing bias (V)	Pre-transfer (µA)	Transfer (µA)	Separation (µA)
4.65	1,111	123	-68	349	-23
4.70	1,102	127	-70	346	-27
4.75	1,093	131	-72	343	-31
4.80	1,085	135	-74	341	-35
4.85	1,076	138	-76	338	-38
4.90	1,067	142	-78	335	-42
4.95	1,058	146	-80	332	-46
5.00	1,050	150	-82	330	-50
5.05	1,041	153	-84	327	-53
5.10	1,032	157	-86	324	-57
5.15	1,023	161	-88	321	-61
5.20	1,015	165	-90	319	-65
5.25	1,006	168	-92	316	-68
5.30	997	172	-94	313	-72
5.35	938	176	-96	310	-76
5.40	980	180	-99	308	-80
5.45	971	183	-101	305	-83
5.50	962	187	-103	302	-87
5.55	953	191	-105	299	-91
5.60	945	195	-107	297	-95
5.65	936	198	-109	294	-98
5.70	927	202	-111	291	-102
5.75	918	206	-113	288	-106
5.80	910	210	-115	286	-110
5.85	901	213	-117	283	-113
5.90	892	217	-119	280	-117
5.95	883	221	-121	277	-121
6.00	875	225	-123	275	-125
6.05	866	228	-125	272	-128
6.10	857	232	-127	269	-132
6.15	848	236	-129	266	-136
6.20	840	240	-132	264	-140
6.25	831	243	-134	261	-143
6.30	822	247	-136	258	-147

Control (V)	Primary (µA)	Developing bias (V)	Pre-transfer (µA)	Transfer (µA)	Separation (µA)
6.35	813	251	-138	255	-151
6.40	805	255	-140	253	-155
6.45	796	258	-142	250	-158
6.50	787	262	-144	247	-162
6.55	778	266	-146	244	-166
6.60	770	270	-148	242	-170
6.65	761	273	-150	239	-173
6.70	752	277	-152	236	-177
6.75	743	281	-154	233	-181
6.80	735	285	-156	231	-185
6.85	726	288	-158	228	-188
6.90	717	292	-160	225	-192
6.95	708	296	-162	222	-196
7.00	700	300	-165	220	-200
7.05	691	303	-167	217	-203
7.10	682	307	-169	214	-207
7.15	673	311	-171	211	-211
7.20	665	315	-173	209	-215
7.25	656	318	-175	206	-218
7.30	647	322	-177	203	-222
7.35	638	326	-179	200	-226
7.40	630	330	181	198	-230
7.45	621	333	-183	195	-233
7.50	612	337	-185	192	-237
7.55	603	341	-187	189	-240
7.60	595	345	-189	187	-245
7.65	586	348	-191	184	-248
7.70	577	352	-193	181	-252
7.75	568	356	-195	178	-256
7.80	560	360	-198	176	-260
7.85	551	363	-200	173	-263
7.90	542	367	-202	170	-267
7.95	533	371	-204	167	-271
8.00	525	375	-206	165	-275

Control (V)	Primary (µA)	Developing bias (V)	Pre-transfer (µA)	Transfer (µA)	Separation (µA)
8.05	516	378	-208	162	-278
8.10	507	382	-210	159	-282
8.15	498	386	-212	156	-286
8.20	490	390	-214	154	-290
8.25	481	393	-216	151	-293
8.30	472	397	-218	148	-297
8.35	463	401	-220	145	-301
8.40	455	405	-222	143	-305
8.45	446	408	-224	140	-308
8.50	437	412	-226	137	-312
8.55	428	416	-228	134	-316
8.60	420	420	-231	132	-320
8.65	411	423	-233	129	-323
8.70	402	427	-235	126	-327
8.75	393	431	-237	123	-331
8.80	385	435	-239	121	-335
8.85	376	438	-2341	118	-338
8.90	367	442	-243	115	-342
8.95	358	446	-245	112	-346
9.00	350	450	-247	110	-350
9.05	341	453	-249	107	-353
9.10	332	457	-251	104	-357
9.15	323	461	-253	101	-361
9.20	315	465	-255	99	-365
9.25	306	468	-257	96	-368
9.30	297	472	-259	93	-372
9.35	288	476	-261	90	-376
9.40	280	480	-264	88	-380
9.45	271	483	-266	85	-383
9.50	262	487	-268	82	-387
9.55	253	491	-270	79	-391
9.60	245	495	-272	77	-395
9.65	236	498	-274	74	-398
9.70	227	502	-276	71	-402

Control (V)	Primary (µA)	Developing bias (V)	Pre-transfer (µA)	Transfer (µA)	Separation (µA)
9.75	218	506	-278	68	-406
9.80	210	510	-280	66	-410
9.85	201	513	-282	63	-413
9.90	192	517	-284	60	-417
9.95	183	521	-286	57	-421
10.00	175	525	-288	55	-425
10.05	166	528	-290	52	-428
10.10	157	532	-292	49	-432
10.15	148	536	-294	46	-436
10.20	140	540	-97	44	-440
10.25	131	543	-299	41	-443
10.30	122	547	-301	38	-447
10.35	113	551	-303	35	-451
10.40	105	555	-305	33	-455
10.45	96	558	-307	30	-458
10.50	87	562	-309	27	-462
10.55	78	566	-311	24	-466
10.60	70	570	-313	22	-470
10.65	61	573	-315	19	-473
10.70	52	577	-317	16	-477
10.75	43	581	-319	13	-481
10.80	35	585	-321	11	-485
10.85	26	588	-323	8	-488
10.90	17	592	-325	5	-492
10.95	8	596	327	2	-496
11.00	0	600	-330	0	-500

5. Checking the Environment Sensor

1) Start service mode (✻ 1 ✻), and check the temperature/humidity on the control panel display; then, record the values.
   Data A
   'RTMP' °C .....Data A1
   'RHUM' % .....Data A2
2) Press the Reset key twice, and turn OFF the power switch.
3) Remove the environment sensor, and insert the environment sensor tool (FY9-3014) in its place.
4) Turn ON the power switch, and leave the machine alone for 5 min.
5) Start service mode (✻ 1 ✻), and check the temperature/humidity on the control panel display; record the values.
   Data B
   'RTMP' °C .....Data B1
   'RHUM' % .....Data B2
6) Compare data A and data B.
   • difference between data A1 and data B1 is 0 ±5
   • difference between data A2 and data B2 is 0 ±20
   If the difference between data A and data B is outside the specification, replace the environment sensor.
7) Press the Reset key twice, and turn OFF the power switch.
8) Remove the environment sensor tool, and install the environment sensor.
9) Install all covers.

Caution:
The environment sensor tool (FY9-3014) is adjusted at the factory to high precision; keep it in an airtight case with a drying agent.

6. Checking the Photointerrupters

The copier's photointerrupters may be checked either using a conventional meter or service mode.

a. Using a Meter

1) Set the tester's range to 30VDC.
2) Connect the tester's - probe to GND on the DC controller PCB.
3) Connect the tester's + probe to the terminal (DC controller PCB) shown.
4) Make a check as instructed.

b. Using Service Mode

1) Open the front door, and insert the door switch actuator into the door switch assembly.
2) Press the service switch with a clip over the cover.
3) Press ✻, 2, and ✻ in sequence on the control panel.
4) Using the keypad on the control panel, enter the address of the appropriate photointerrupter, and check the indication.

Caution:
The machine's motor can start to operate in response to the changes in the sensor state; take adequate care.

Name	+ probe / Address	Checks		Display indication	Voltage reading on meter
PS1 Scanner home position sensor (SCHP)	J111A-2 PC007-03	Move the scanner by hand in standby.	The light-blocking plate is at PS1.	1	5V
			The light-blocking plate is not at PS1.	0	0V
PS3 Scanner original leading edge 1 sensor (SCDP1)	J111A-5 PC107-6	Move the scanner by hand in standby.	The light-blocking plate is at PS3.	0	5V
			The light-blocking plate is not at PS3.	1	0V
PS5 Copyboard cover open/closed sensor (CBCC)	J112A-4 PC007-02	Move the copyboard cover by hand in standby.	The copyboard cover is closed.	1	5V
			The copyboard cover is opened.	0	0V
PS6 Lens X home position sensor (LXHP)	J110A-8 PC102-02	Put paper over the lens Y home position sensor in standby.	The light-blocking plate is not at PS6.	0	0V
			The light-blocking plate is at PS6.	1	5V
PS7 Lens Y home position sensor (LYHP)	J110B-2 PC102-03	Put paper over the lens Y home position sensor in standby.	The light-blocking plate is not at PS7.	0	0V
			The light-blocking plate is at PS7.	1	5V
PS8 Holding tray feeding assembly 1 paper sensor (PS8D)	J119A-4 PC002-04	Put paper in the detecting lever assmbly of PS8 in standby.*	Paper is present.	1	5V
			Paper is not present.	0	0V

* Or, tape the detecting lever in place, and push in the feeding unit, holding tray, and holding tray feeding assmebly inside the machine.

Name	+ probe / Address	Checks		Display indication	Voltage reading on meter
PS9 Holding tray feeding assmbly 2 paper sensor (PS9D)	J113B-12 / PC002-03	Put paper in the detecting lever assmbly of PS9 in standby.*	Paper is present.	1	5V
			Paper is not present.	0	0V
PS10 External delivery sensor (EXDPD)	J108B-7 / PC005-04	Put paper in the detecting lever assembly of PS10 in standby.*	Paper is present.	1	5V
			Paper is not present.	0	0V
PS11 Fixing cleaning belt length sensor (CBOP)	J108A-13 / PC005-05	Put paper in the detecting lever assembly of PS11 in standby.**	Paper is present.	1	5V
			Paper is not present.	0	0V
PS12 Internal delivery sensor (IDPD)	J108B-12 / PC005-02	Put paper in the detecting lever assmbly of PS12 in standby.*	Paper is present.	0	0V
			Paper is not present.	1	5V
PS14 Holding tray registration sensor (PS14D)	J113A-3 / PC005-07	Put paper in the detecting lever assmbly of PS14 in standby.*	Paper is present.	1	5V
			Paper is not present.	0	0V
PS15 Holding tray inlet paper sensor (PS15D)	J113B-10 / PC005-06	Put paper in the detecting lever assmbly of PS15 in standby.*	Paper is present.	1	5V
			Paper is not present.	0	0V

* Or, tape the detecting lever in place, and push in the feeding unit, holding tray, and holding tray feeding assmebly inside the machine.

** Or, put paper over the sensor to block its photocell.

Name	+ probe / Address	Checks		Display indication	Voltage reading on meter
PS17 Holding tray pick-up sensor (PS17D)	J113B-11 PC005-09	Put paper in the detecting lever assembly of PS17 in standby.*	Paper is present.	1	5V
			Paper is not present.	0	0V
PS19 Holding tray re-circulating bar home position sensor (HPLPD)	J113B-6 PC005-10	Put paper in the detecting lever assembly of PS19 in standby.*	Copy paper is present.	1	5V
			Copy paper is not present.	0	0V
PS20 Holding tray Y home position sensor (HTYHP)	J113A-10 PC100-3	Move the rear partition by hand in standby.	The light-blocking plate is at PS20.	1	5V
			The light-blocking plate is not at PS20.	0	0V
PS21 Holding tray X home position sensor (HTXHP)	J113B-1 PC100-2	Move the side guide by hand in standby.	The light-blocking plate is at PS21.	1	5V
			The light-blocking plate is not at PS21.	0	0V
PS22 Multifeeder paper sensor (MFS)	J115B-7 PC002-05	Put paper into the detecting lever assembly of PS22 in standby.	Paper is present.	1	5V
			Paper is not present.	0	0V
PS23 Registration paper sensor (RGPD)	J108A-7 PC002-02	Move the detecting lever by hand in standby.	The light-blocking plate is at PS23.	1	5V
			The light-blocking plate is not at PS23.	0	0V
PS24 Pick-up vertical path 0 sensor (PS24D)	J116B-7 PC002-00	Move the detecting lever by hand in standby.	The light-blocking plate is at PS24.	1	5V
			The light-blocking plate is not at PS24.	0	0V

* Or, tape the detecting lever in place, and push in the feeding unit, holding tray, and holding tray feeding assembly inside the machine.

Name	+ probe / Address	Checks		Display indication	Voltage reading on meter
PS25 Casette 3 lifter position sensor (C3LTP)	J117A-4 PC008-08	Move the detecting lever by hand in standby.	The light-blocking plate is at PS25.	1	5V
			The light-blocking plate is not at PS25.	0	0V
PS26 Casette 3 paper sensor (C3PD)	J117A-7 PC008-06	Move the detecting lever by hand in standby.	The light-blocking plate is at PS26.	1	5V
			The light-blocking plate is not at PS26.	0	0V
PS27 Pick-up vertical path 3 sensor (PS27D)	J117B-4 PC008-04	Move the detecting lever by hand in standby.	The light-blocking plate is at PS27.	1	5V
			The light-blocking plate is not at PS27.	0	0V
PS28 Casette 4 lifter position sensor (C4LTP)	J130A-4 PC008-09	Move the detecting lever by hand in standby.	The light-blocking plate is at PS28.	1	5V
			The light-blocking plate is not at PS28.	0	0V
PS29 Casette 4 paper sensor (C4PD)	J130B-7 PC008-07	Move the detecting lever by hand in standby.	The light-blocking plate is at PS29.	1	5V
			The light-blocking plate is not at PS29.	0	0V
PS30 Pick-up vertical path 4 sensor (PS30D)	J130B-4 PC008-05	Move the detecting lever by hand in standby.	The light-blocking plate is at PS30.	1	5V
			The light-blocking plate is not at PS30.	0	0V
PS31 Deck lifter position sensor (RDLTP)	J116A-4 PC007-14	Move the detecting lever by hand in standby.	The light-blocking plate is at PS31.	1	5V
			The light-blocking plate is not at PS31.	0	0V
PS32 Deck paper sensor (RDPD)	J116A-7 PC007-10	Move the detecting lever by hand in standby.	The light-blocking plate is at PS32.	1	5V
			The light-blocking plate is not at PS32.	0	0V

Name	+ probe / Address	Checks		Display indication	Voltage reading on meter
PS33 Pick-up vertical path 1 sensor (PS33D)	J119A-7 PC007-12	Move the detecting lever by hand in standby.	The light-blocking plate is at PS33.	1	5V
			The light-blocking plate is not at PS33.	0	0V
PS36 Pick-up vertical path 2 sensor (PS36D)	J121B-10 PC007-13	Move the detecting lever by hand in standby.	The light-blocking plate is at PS36.	1	5V
			The light-blocking plate is not at PS36.	0	0V
PS37 Deck limiter sensor (RDEL)	J116B-13 —	Move the detecting lever by hand in standby.	The light-blocking plate is at PS37.	—	5V
			The light-blocking plate is not at PS37.	—	0V
PS38 Deck open/closed sensor (RDEOP)	J116B-10 PC007-04	Move the detecting lever by hand in standby.	The light-blocking plate is at PS38.	1	5V
			The light-blocking plate is not at PS38.	0	0V
PS41 Upper right door sensor (RUPDOP)	J119B-4 PC007-00	Move the detecting lever by hand in standby.**	The light-blocking plate is at PS41.	1	5V
			The light-blocking plate is not at PS41.	0	0V
PS42 Lower right door sensor (RLWDOP)	J119B-7 PC007-01	Move the detecting lever by hand in standby.**	The light-blocking plate is at PS42.	1	5V
			The light-blocking plate is not at PS42.	0	0V
PS46 Multifeeder door sensor (MFDC)	J105A-9 PC005-03	Move the detecting lever by hand in standby.	The light-blocking plate is at PS46.	1	5V
			The light-blocking plate is not at PS46.	0	0V

* Or, tape the detecting lever in place, and push in the feeding unit, holding tray, and holding tray feeding assmebly inside the machine.
** Or, put paper over the sensor to block its photocell.

Name	+ probe / Address	Checks		Display indication	Voltage reading on meter
PS47 Fixing assembly outlet paper sensor (FXDEL)	J108B-4 PC005-08	Move the detecting lever by hand in standby.*	The light-blocking plate is at PS47.	1	5V
			The light-blocking plate is not at PS47.	0	0V
PS50 (cassette 3 open/closed sensor)	J117B-7 PC009-5	Hold the grip of the cassette 3, and move it.	When the light-blocking plate is at PS50	1	5V
			When the light-blocking plate is not at PS50	0	0V
PS51 (cassette 4 open/closed sensor)	J130B-7 PC009-6	Hold the grip of the cassette 4, and move it.	When the light-blocking plate is at PS51	1	5V
			When he light-blocking plate is not at PS51	0	0V
PS52 (claw jam sensor)	J108A-19 PC009-1	Move the detecting lever by hand in standby*.	The light-blocking plate is at PS52.	1	5V
			The light-blocking plate is not at PS52.	0	0V
PS53 (fixing/feeding unit sensor)	J108A-2 PC005-1	Move the releasing lever of the fixing/feeding unit by hand in standby.	The light-blocking plate is at PS53.	0	0V
			The light-blocking plate is not at PS53 (unit set).	1	5V

* Or, tape the detecting lever in place, and push in the feeding unit, holding tray, and holding tray feeding assmebly inside the machine.

** Or, put paper over the sensor to block its photocell.

7. Registering the Cassette/Multifeeder Paper Width Basic Value (✻4✻)

Perform this under the following conditions:

- If you have replaced the paper width detecting VR of the copier (including the multifeeder).
- If you have adjusted the front/rear registration for the cassette.

For the cassettes 1 through 5, you must register values for two types (STMTR/A4R) for each cassette; for the multifeeder, you must register values for three types (A6R, A4R, A4).

a. Cassettes 3 and 4

The following uses the cassette 3 as an example.

1) Select the 8th screen in service mode (✻4✻).
2) Slide out the cassette 3, and set the paper width guide plate inside the cassette to 'STMTR', and set the cassette to the copier.
3) Press 'C3_STMTR' on the control panel display.
4) Press '✻' key.
   - Check to make sure that the value XXX under 'C3_STMTR:XXX' is '(XXX)'.
5) Slide out the cassette 1, and set the paper width guide plate inside the cassette to 'A4R', and set the cassette in the copier.
6) Press 'C3_A4R' on the control panel screen.
7) Press '✻' key.
   - Check to make sure that the value YYY under 'C3_A4R:YYY' is '(YYY)'.

b. Multifeeder

Perform the steps shown for the cassettes 3 and 4; however, in the case of the multifeeder, you must perform them for A6R (105 mm width), A4R, and A4.

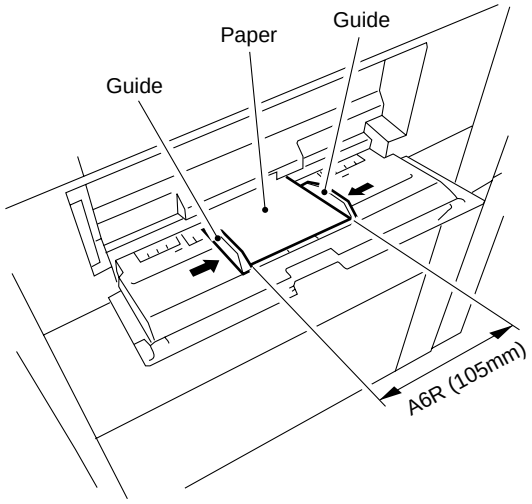

Figure 2-49

CHAPTER 3 ARRANGEMENT AND FUNCTIONS OF THE ELECTRICAL PARTS

A. Sensors

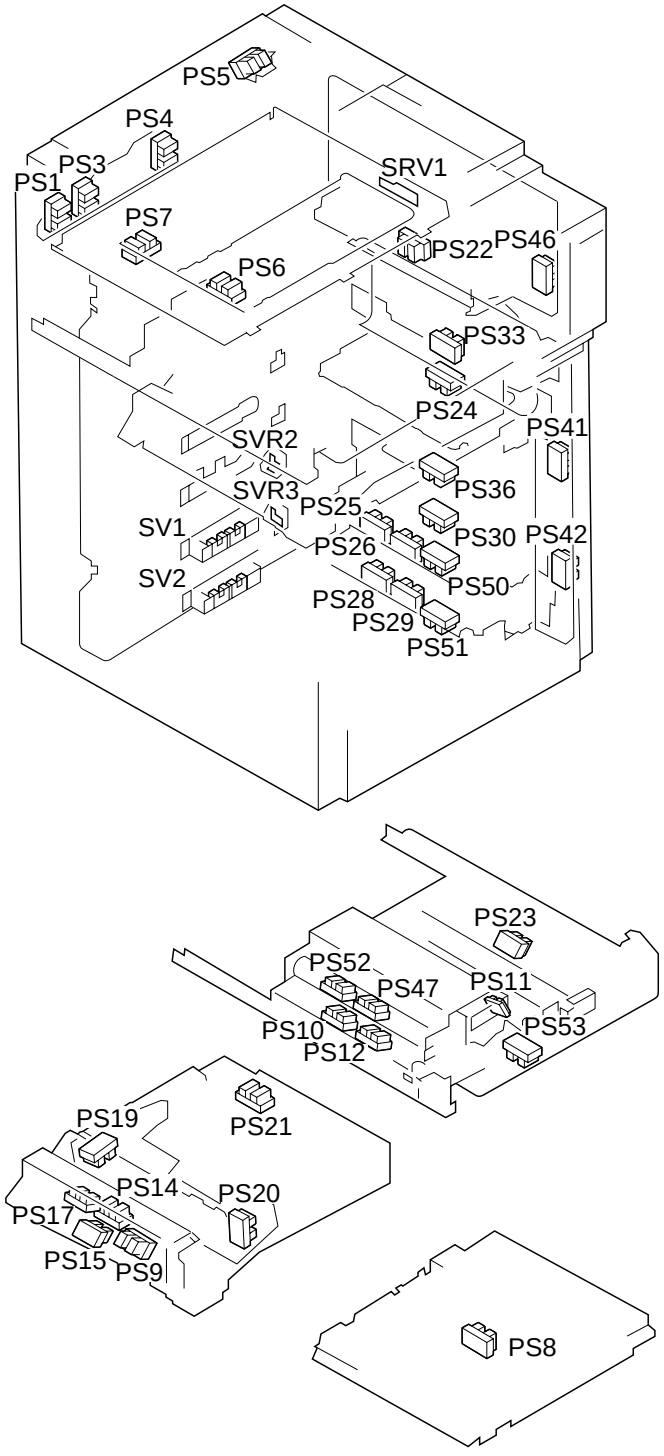

Figure 3-1

Symbol	Name	Notation	Function
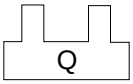	Photointerrupter	PS1	Scanner home position detection
		PS3	Scanner original leading edge 1 detection
		PS5	Copyboard cover open/closed detection
		PS6	Lens X home position detection
		PS7	Lens Y home position detection
		PS8	Holding tray feeding assembly 1 paper detection
		PS9	Holding tray feeding assembly 2 paper detection
		PS10	External delivery paper detection
		PS11	Fixing cleaning belt length detection
		PS12	Internal delivery assembly paper detection
		PS14	Holding tray registration paper detection
		PS15	Holding tray inlet paper detection
		PS17	Holding tray pick-up detection
		PS19	Holding tray re-circulating bar home position detection
		PS20	Holding tray Y home position detection
		PS21	Holding tray X home position detection
		PS22	Multifeeder pick-up detection
		PS23	Registration paper detection
		PS24	Pick-up vertical path 0 paper detection
		PS25	Cassette 3 lifter detection
		PS26	Cassette 3 paper detection
		PS27	Pick-up vertical path 3 paper detection
		PS28	Cassette 4 lifter detection
		PS29	Cassette 4 paper detection
		PS30	Pick-up vertical path 4 paper detection
		PS33	Pick-up vertical path 1 paper detection
		PS36	Pick-up vertical path 2 paper detection
		PS41	Upper right door open detection
		PS42	Lower right door open detection
		PS46	Multifeeder door open detection
		PS47	Fixing assembly outlet paper detection
		PS50	Cassette 3 open/closed detection
		PS51	Cassette 4 open/closed detection
		PS52	Claw jam detection
		PS53	Fixing/feeding unit detection
		SV1	Cassette 3 paper length detection
		SV2	Cassette 4 paper length detection
	Variable resistor	SVR1	Multifeeder paper width detection
		SVR2	Cassette 3 paper width detection
		SVR3	Cassette 4 paper width detection

Table 3-1

Paper Deck

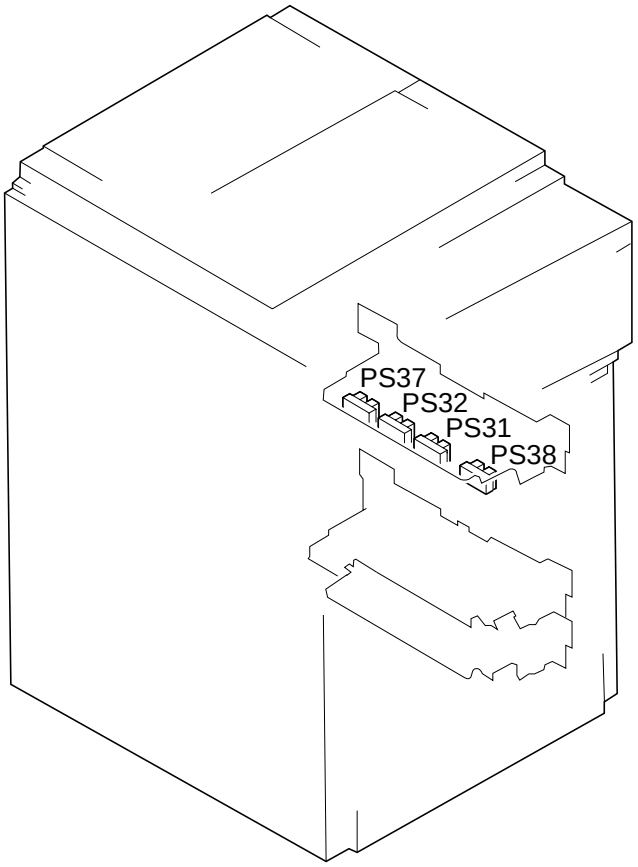

Figure 3-2

Symbol	Name	Notation	Function
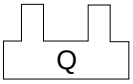	Photointerrupter	PS31	Deck lifter position detection
		PS32	Deck paper detection
		PS37	Deck lifter limit detection
		PS38	Deck open/closed detection

Table 3-2

B. Switches and Solenoids

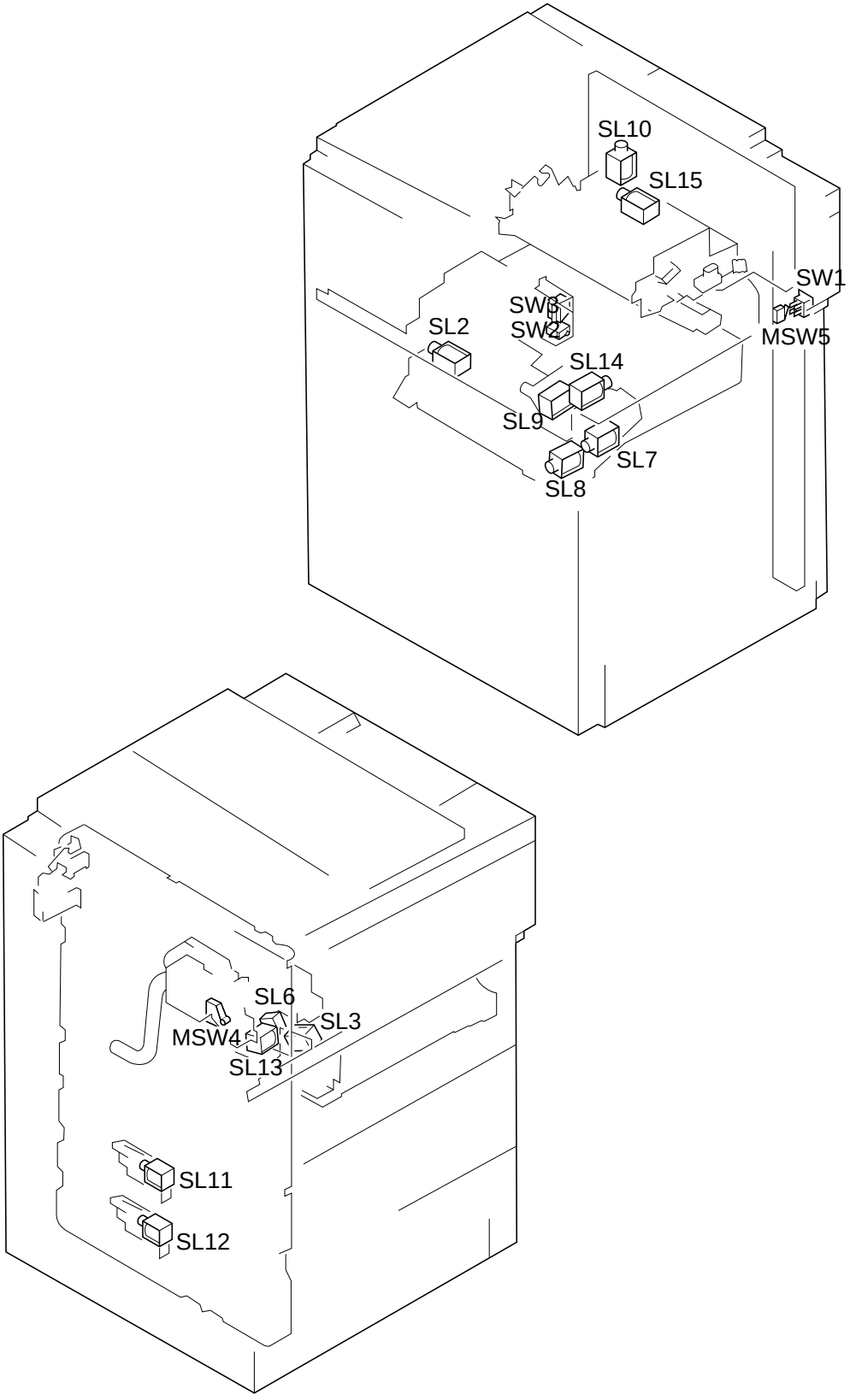

Figure 3-3

Symbol	Name	Notation	Function
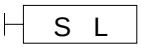	Solenoid	SL2	Drives the delivery paper deflecting plate.
		SL3	Drives the fixing assembly.
		SL6	Drives the holding tray re-pick up roller (D-cut roller).
		SL7	Drives the holding tray weight.
		SL8	Drives the holding tray paper deflecting plate.
		SL9	Moves the holding tray.
		SL10	Drives multifeeder pick-up.
		SL11	Releases the cassette 3 pick-up roller.
		SL12	Releases the cassette 4 pick-up roller.
		SL13	Locks the fixing/feeding unit.
		SL14	Drives the cleaning belt.
		SL15	Relays drive for multifeeder pick-up.
		SL16	Drives the fixing assembly inlet guide.
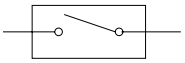	Microswitch/switch	MSW4	Detects the locked state of the waste toner feeding screw.
		MSW5	High-voltage multifeeder door switch
		SW1	Power switch
		SW2	Door switch
		SW3	Drum heater switch

Table 3-3

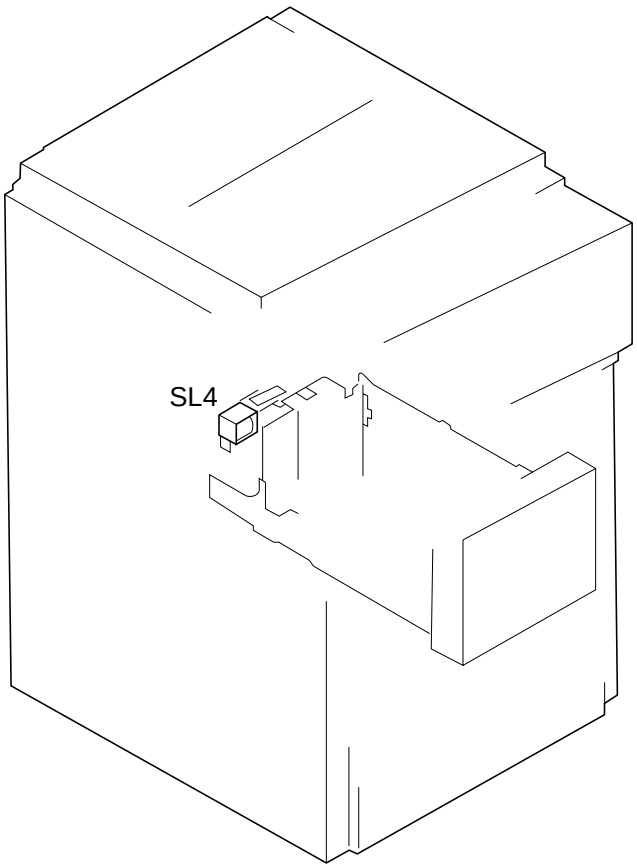

Figure 3-4

Symbol	Name	Notation	Function
S L	Solenoid	SL4	Releases the deck pick-up roller.

Table 3-4

C. Motors and Fans

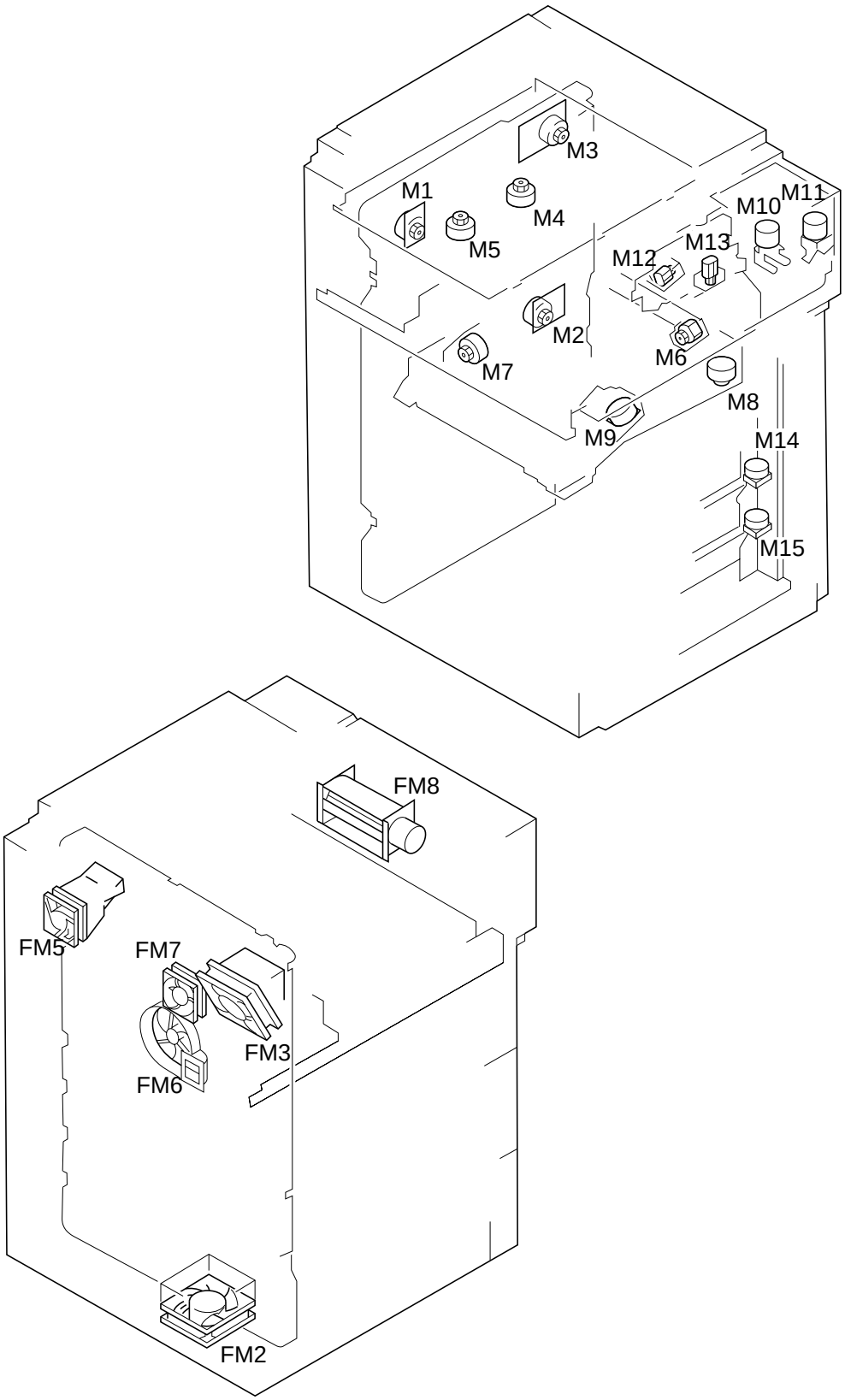

Figure 3-5

Symbol	Name	Notation	Function
	Fan	FM2	Exhaust fan
		FM3	Fixing assembly heat exhaust fan
		FM5	Developing fan
		FM6	Feeding fan
		FM7	Cleaner fan
		FM8	Scanner cooling fan
	Motor	M1	Main motor
		M2	Pick-up motor
		M3	Scanner motor
		M4	Lens X motor
		M5	Lens Y motor
		M6	Transfer/separation charging wire cleaner motor
		M7	Holding tray re-circulating bar motor
		M8	Holding tray X motor
		M9	Holding tray Y motor
		M10	Hopper motor (toner supply)
		M11	Hopper motor (toner stirring)
		M12	Primary charging wire cleaner motor
		M13	Pre-transfer charging wire cleaner motor
		M14	Cassette 3 lifter motor
		M15	Cassette 4 lifter motor

Table 3-5

D. Clutches

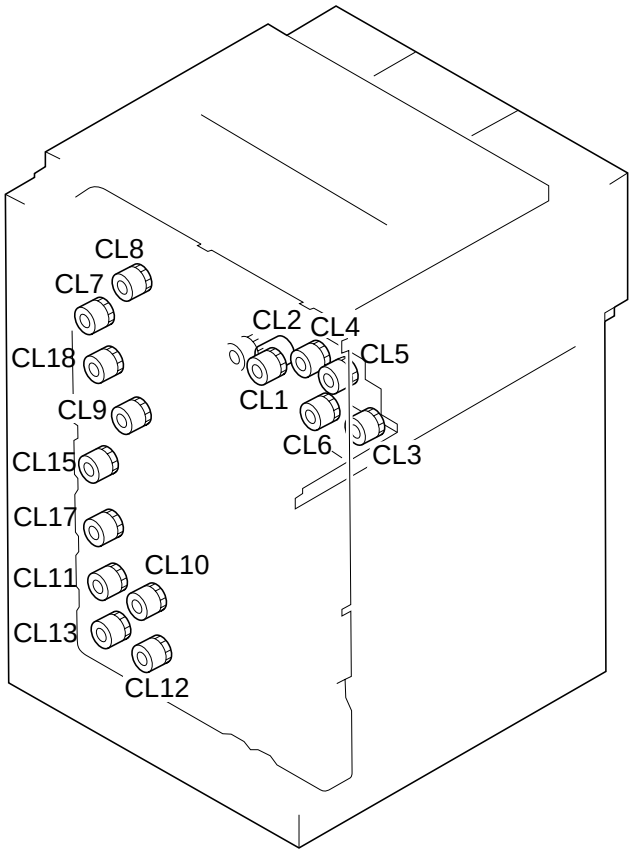

Figure 3-6

Symbol	Name	Notation	Function
CL	Clutch	CL1	Holding tray feeding 1
		CL2	Holding tray feeding 2
		CL3	Holding tray registration
		CL4	Holding tray reversal
		CL5	Holding tray forward
		CL6	Holding tray separation
		CL7	Multifeeder pick-up
		CL8	Development
		CL9	Registration roller drive
		CL10	Cassette 3 pick-up
		CL11	Vertical path roller 3 drive
		CL12	Cassette 4 pick-up
		CL13	Vertical path roller 4 drive
		CL15	Vertical path roller 1 drive
		CL17	Vertical path roller 2 drive
		CL18	Vertical path roller 0 drive

Table 3-6

Front Paper Deck

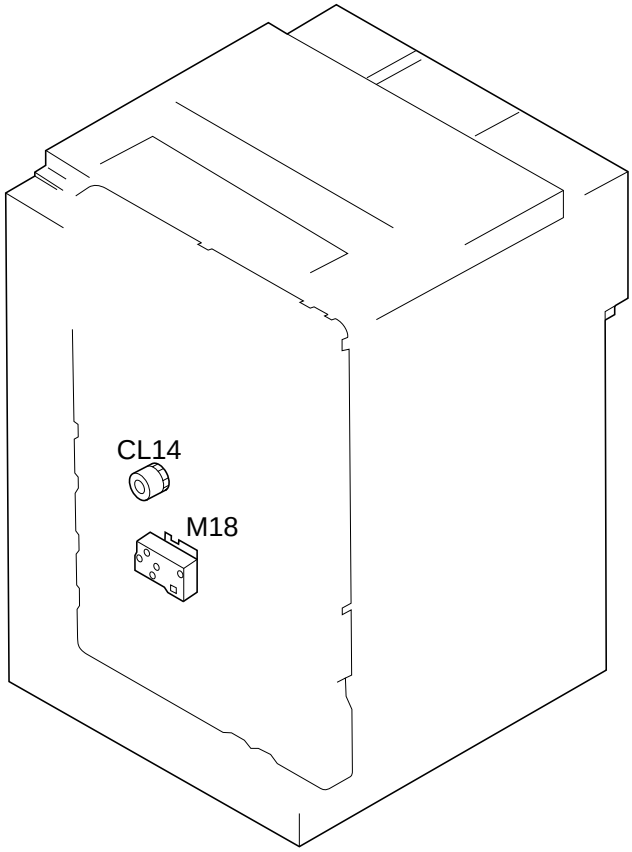

Figure 3-7

Symbol	Name	Notation	Function
M	Motor	M18	Deck lifter drive motor
CL	Clutch	CL14	Deck pick-up

Table 3-7

E. Lamps, Heaters, and Photosensors

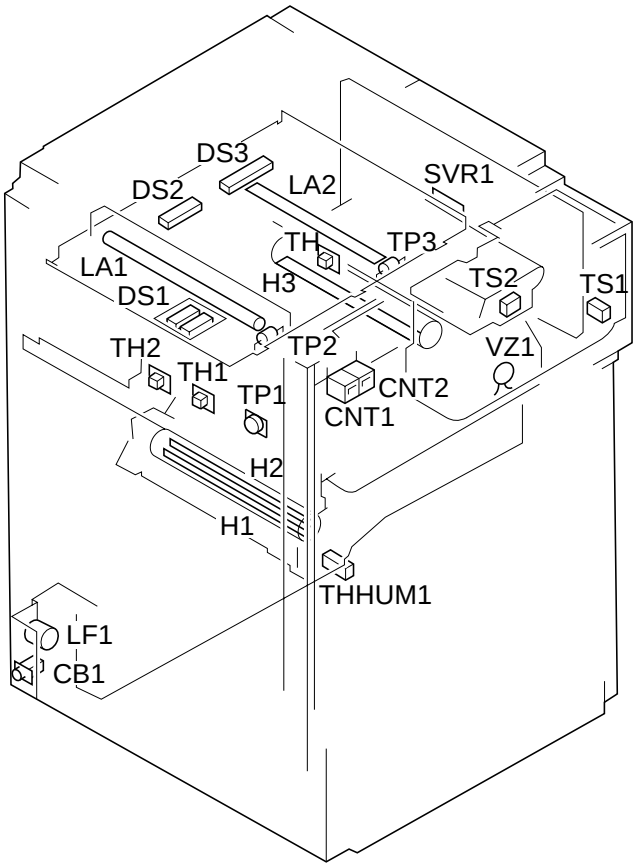

Figure 3-8

Symbol	Name	Notation	Function
C B	Circuit breaker	CB1	Circuit breaker
CNT	Counter	CNT1	Total counter
		CNT2	Option counter
	Photosensor	DS1	Original size 1 detection
		DS2	Original size 2 detection
		DS2	Original size 3 detection
	Heater	H1	Fixing main heater
		H2	Fixing sub heater
		H3	Drum heater
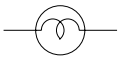	Lamp	LA1	Scanning lamp
		LA2	Pre-exposure LED
L F	Line filter	LF1	Noise filter
	Variable resistor	SVR1	Multifeeder paper width detecting VR
	Thermistor	TH	Drum heater thermistor
		TH1	Fixing heater main thermistor
		TH2	Fixing heater sub thermistor
	Environment sensor	THHUM1	Temperature/humidity sensor (internal temperature sensor)
	Toner sensor	TS1	Hopper toner sensor
		TS2	Detecting assembly toner sensor
	Varistor	VZ1	Varistor
	Thermal switch	TP1	Fixing heater thermal switch
	Thermal fuse	TP2	Scanning lamp thermal fuse
		TP3	Drum heater thermal fuse

Table 3-8

F. PCBs

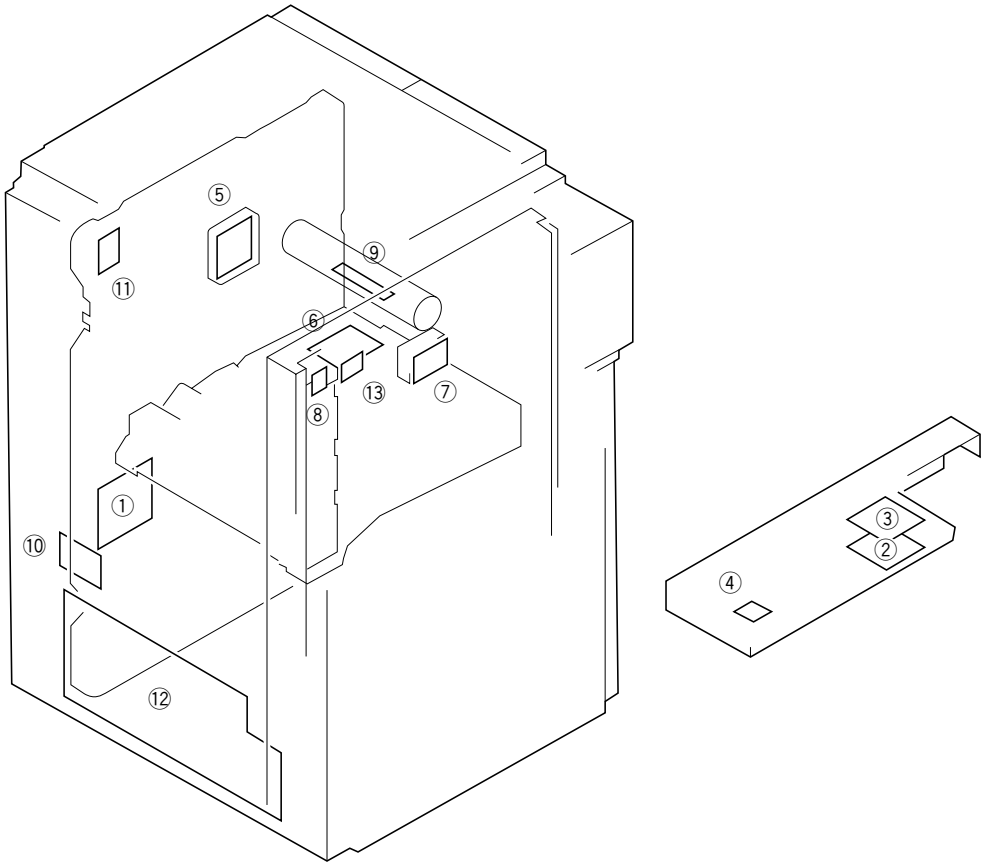

Figure 3-9

Ref.	Name	Description
①	DC controller PCB	Controls sequence.
②	Control panel CPU PCB	Controls the control panel.
③	Control pane key PCB	Receives key inputs from the control panel; Controls LED indications.
④	FL inverter PCB	Supplies power for the control panel backlight lamp.
⑤	HVT PCB	Generates high voltage.
⑥	Holding tray control PCB	Controls the holding tray sensors, solenoids, and clutches.
⑦	Potential control PCB	Controls the surface potential of the photosensitive drum.
⑧	Option counter PCB	Relays the counter signals for options.
⑨	Drum heater controller PCB	Controls the drum heater.
⑩	AC driver PCB	Controls the AC circuit.
⑪	Lamp regulator	Controls the scanning lamp.
⑫	DC power supply PCB	Supplies DC power.
⑬	Service switch PCB	Switches to service mode.

Table 3-9

G. Variable Resistors, Light-Emitting Diodes, and Check Pins by PCB

Of the variable resistors (VR), light-emitting diodes (LED), and check pins found, those that may be used in the field are discussed:

Caution:

1. Some LEDs emit dim light because of leak current when OFF; this is a normal condition and should be kept in mind.
2. VRs that may be used in the field..... ⊘
   VRs that must not be used in the field..... ⊘

Caution:

Do not use VRs and check pins not given in the list; they are for the factory only and require special instruments and high precision.

1. DC Controls PCB

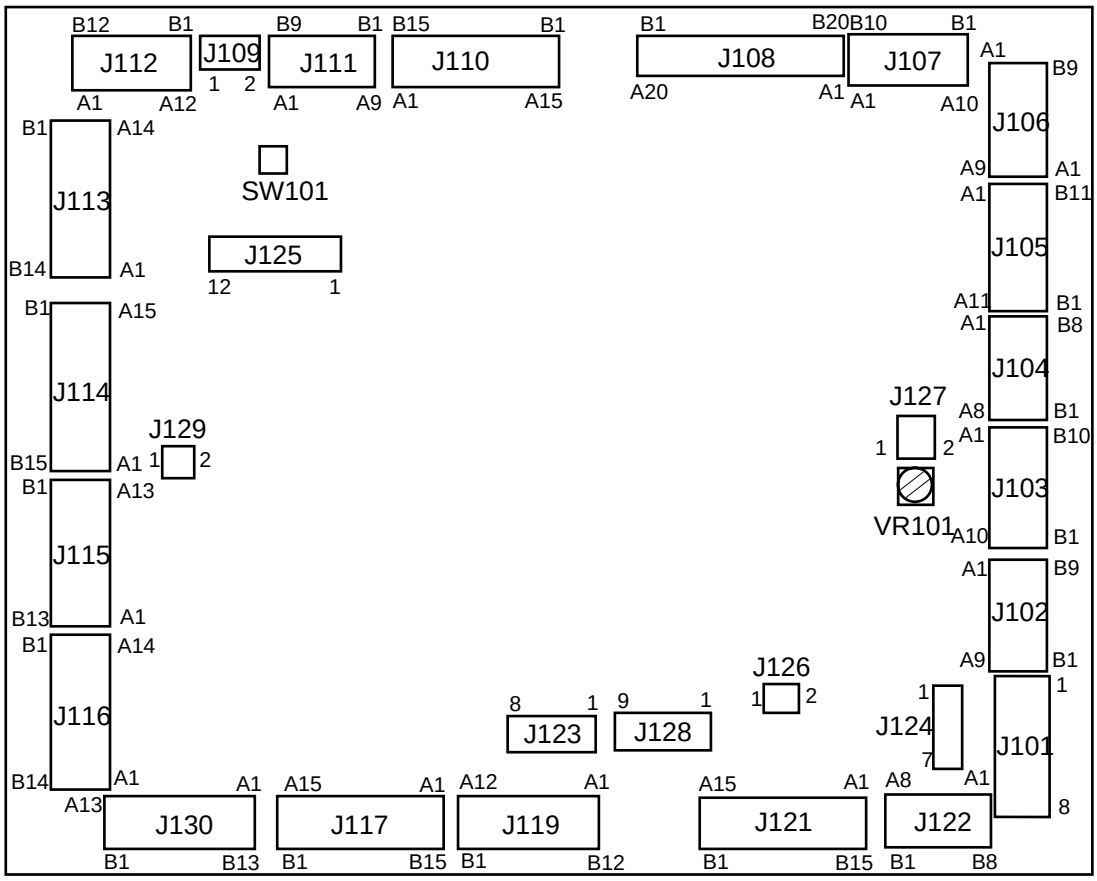

Figure 3-10

SW101-2	SW101-2	SW101*-3	No Trans.	Vertical size
OFF	OFF	—	100V	AB-configuration
OFF	ON	—	230V	AB/Inch-configuration
ON	OFF	—	230V	A-configuration
ON	ON	—	120V	Inch-configuration

Caution:
DIP SW101-3 on the DC controller PCB is for the factory; do not change the settings to avoid malfunction.

Table 3-10

AB-configuration (4R4E)	Ratio
200%	200.0%
A4→A3, B5→B4	141.1%
A4→B4	122.4%
B4→A3, B5→A4	115.4%
100%	100.0%
A3→B4, A4→B5	86.5%
B4→A4	81.6%
A3→A4, B4→B5	70.7%
50%	50.0%

Table 3-11

Inch-configuration (4R3E)	Ratio
200%	200.0%
LTR→11"×17"	129.4%
LGL→11"×17"	121.4%
100%	100.0%
LGL→LTR	78.6%
LGL→11"×17"	73.3%
11"×17→"LTR	64.7%
50%	50.0%

Table 3-12

A-configuration (2R2E)	Ratio
200%	200.0%
A4→A3	141.4%
100%	100.0%
A3→A4	70.7%
50%	50.0%

Table 3-13

AB/Inch-configuration (4R4E)	Ratio
200%	200.0%
A4/LTR→A3, B5→B4	141.4%
A4/LTR→B4	122.4%
B4→A3, B5→A4/LTR	115.4%
100%	100.0%
A3→B4, A4/LTR→B5	86.5%
B4→A4/LTR	81.6%
A3→A4/LTR, B4→B5	70.7%
50%	50.0%

Table 3-14

Connector	Description
J123	For factory
J125	For factory
J126	For factory
J129	For factory

Table 3-15

2. AC Driver PCB

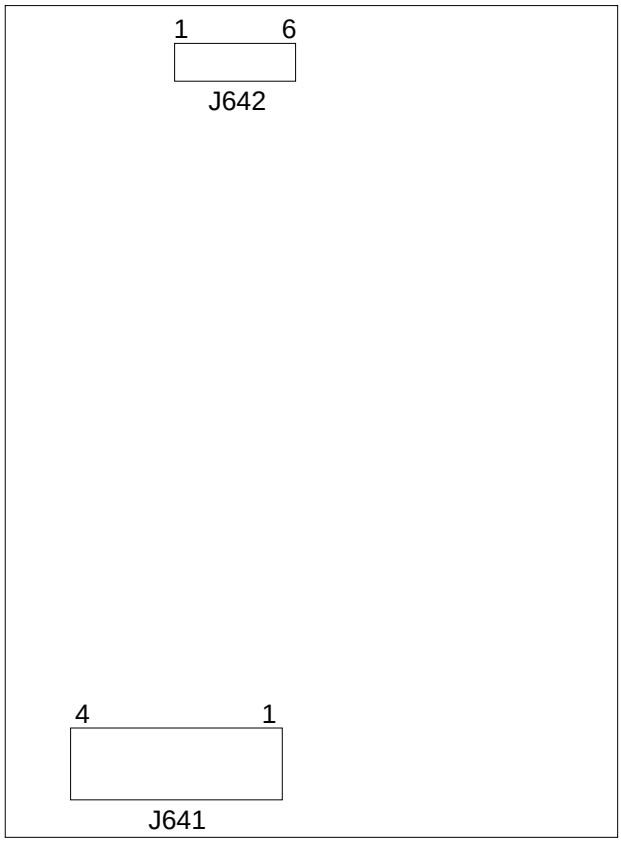

Figure 3-11

3. DC Power Supply PCB

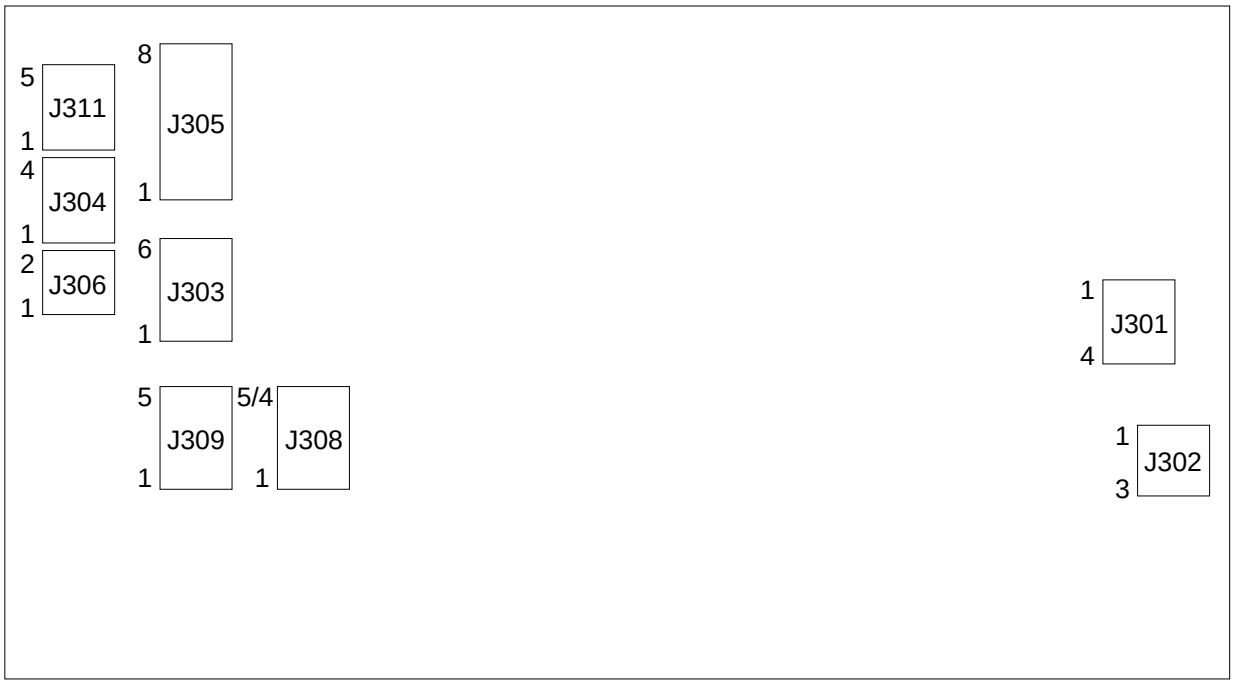

Figure 3-12

4. Control CPU PCB

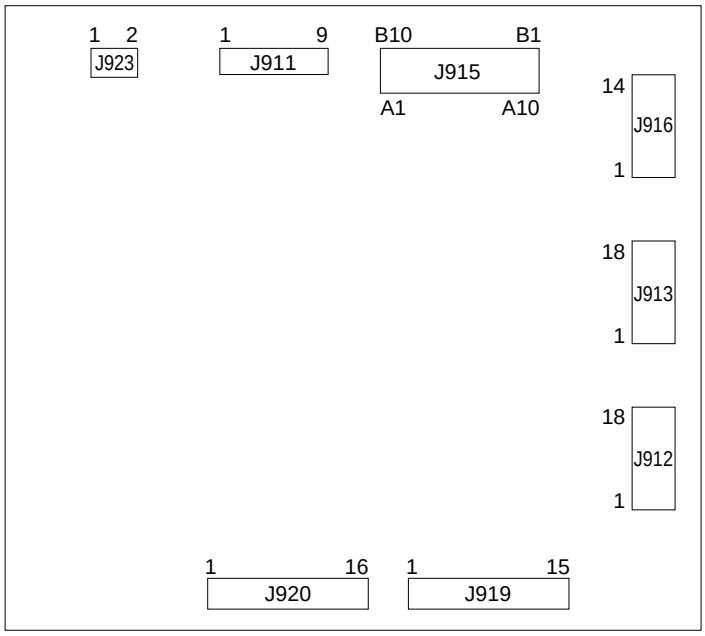

Figure 3-13

5. Holding Tray Driver PCB

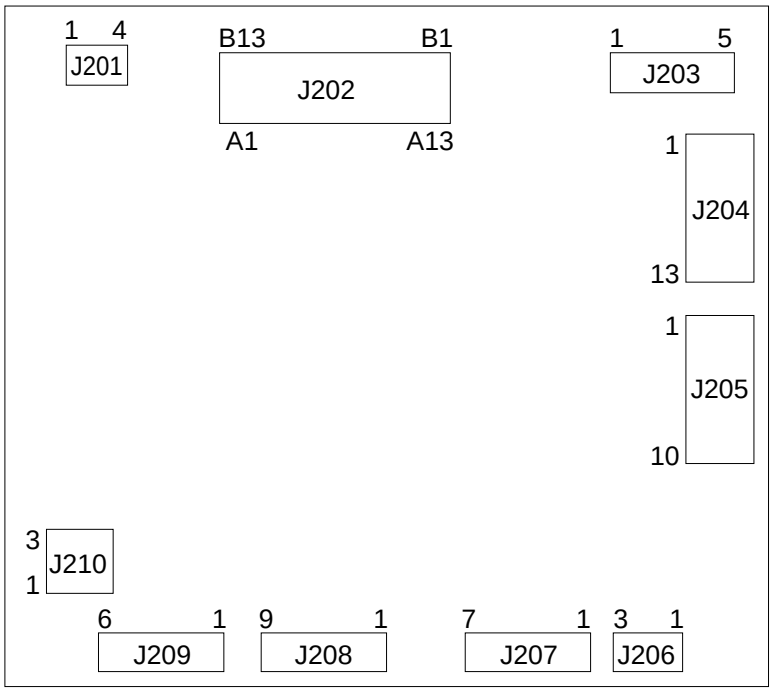

Figure 3-14

6. Potential Measurement PCB

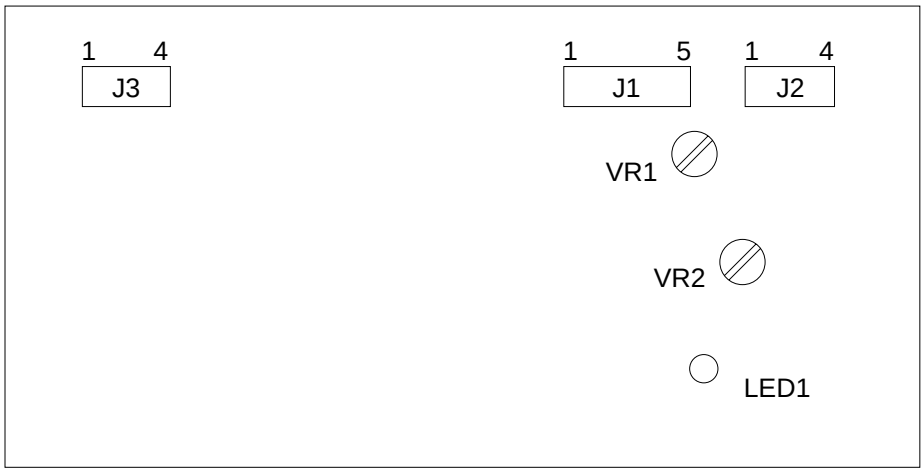

Figure 3-15

VR	Description
VR1	For factory
VR2	For factory

Table 3-16

LED	Description
LED1	Remains ON while measuring the surface potential of the drum.

Table 3-17

7. HVT1 PCB

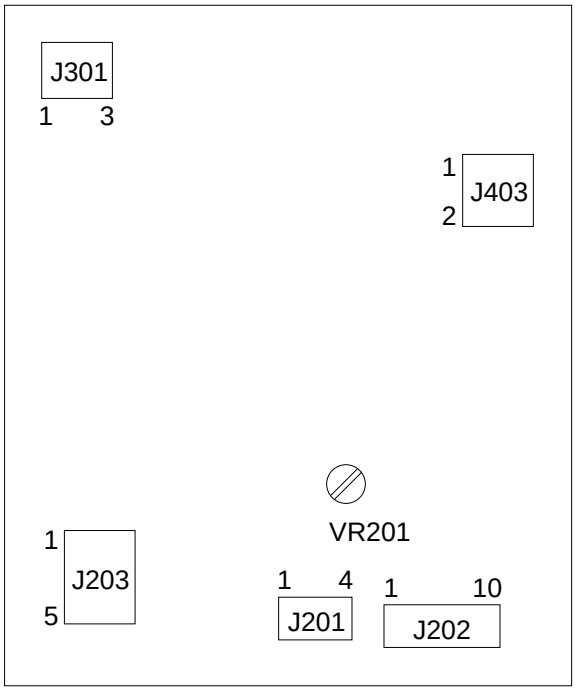

Figure 3-16

VR	Description
VR201	For factory

Table 3-18

8. HVT2 PCB

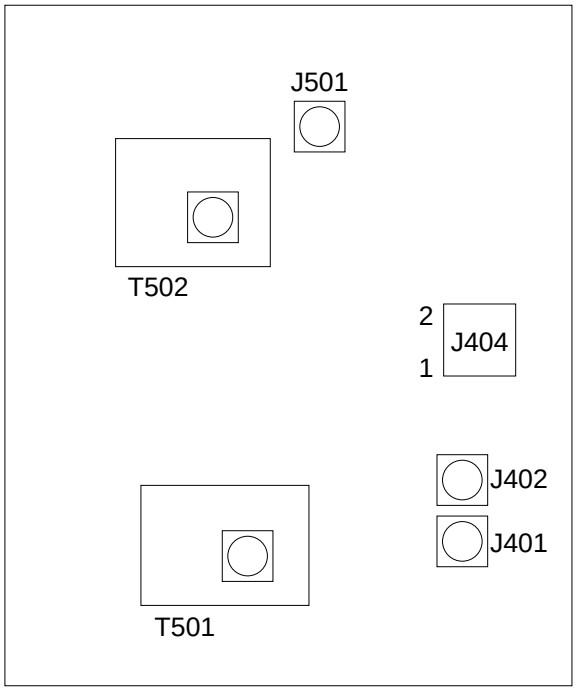

Figure 3-17

9. Inverter PCB

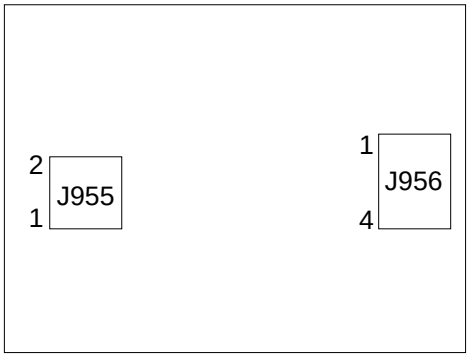

Figure 3-18

10. Lamp Regulator PCB

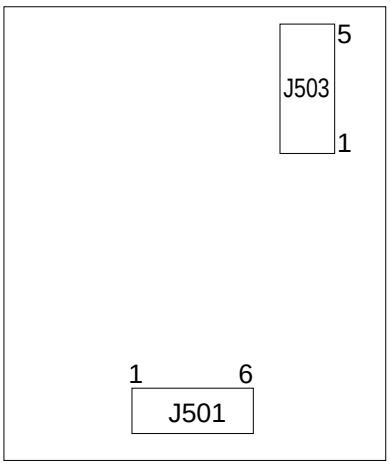

Figure 3-19

11. Counter PCB

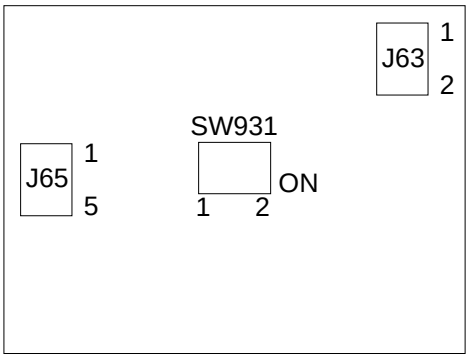

Figure 3-20

SW931-1	SW931-2	Mode
0	0	So that the sub counter is assumed to be not connected.
1	0	So that the sub counter is used as a small copy counter.
0	1	So that the sub counter is used as a two-sided copy counter.
1	1	So that the sub counter is used as a large-size copy counter.

Table 3-19

CHAPTER 4 SERVICE MODE

A. Outline

The machine's service mode is divided into the following six:

Item	Notation	Description
∗1∗	DISPLAY	Control/display mode
∗2∗	I/O DISPLAY	I/O display mode
∗3∗	ADJUST	Adjustment mode
∗4∗	FUNCTION	Function mode
∗5∗	OPTION	Optional settings mode
∗6∗	COUNTER	Counter mode

Table 4-1

Each mode has items which may be checked on the message display.

Reference:

When a specific mode is selected, the appropriate page number will be indicated in the upper right corner of the message display.

B. Using Service Mode

1) Open the front door, and insert a door switch actuator. If you want to make checks (e.g., I/O display mode) while making copies, set the appropriate copying mode.
2) Press the service mode key with a hex key.
   • '$' will be indicated in the upper right corner of the message display when service mode starts.
3) Enter the number of the mode (Table 4-1) using the ✻ key and the keypad.
   Ex.
   ✻ → 3 → ✻
4) Press the ◀◀ / ▶▶ key to select the appropriate screen.
5) Make a check or adjustments.
   To accept the input data, press the user mode key (✻).
6) End service mode.
   • Press the Reset key (//) once to end the current mode.
   • Press the Reset key twice to end service mode.
   • Or, turn OFF the power switch or disconnect the power plug to end service mode.
   (Opening the front door or the pick-up assembly door will not end service mode.)

C. Using Adjustment Mode and Option Settings Mode

In adjustment mode or option settings mode, settings made on the control panel are stored in RAM on the DC controller PCB, thereby simulating operations executed by conventional VRs and SWs.

Table 4-2 shows the label attached behind the front door.

At the factory, each machine is adjusted, and the adjustment values are recorded on the label.

If you have replaced the DC controller PCB or initialized the RAM, you must enter the values recorded on the label.

In addition, be sure to record any values you entered in the field on the label.

	TYP				TYP		
LIGHT_5				MF_A6R			
LIGHT_5P				MF_A4R			
AE_SLOP				MF_A4			
GLEAM_5				BOOK_ERA			
BRAKE_SC				ATM			
REGIST				DOC_ST			
LE_BLANK				P_INT_RVL			
F_BLANK				RFAE_F5L			
R_BLANK				REAE_F9L			
TE_BLANK				RFAE_F5R			
PRIMARY				RFAE_F9R			
BIAS				LA_LCKPS			
PRETRANS				LA_SPEED			
TRN_1				RF_LENSY			
TRN_DUP				11x17PSZ			
TRN_OVL				LGL_PSZ			
SEP_1				LTR_PSZ			
SEP_DUP				LTRR_PSZ			
SEP_OVL				STMT_PSZ			
C1_STMTR				A3_PSZ			
C1_A4R				A4_PSZ			
C2_STMTR				A4R_PSZ			
C2_A4R				A5_PSZ			
C3_STMTR				B4_PSZ			
C3_A4R				B5_PSZ			
C4_STMTR				B5R_PSZ			
C4_A4R							

Table 4-2

D. Control Display Mode (✻1✻)

Press the <</>> key to select the screen.

<Screen 1-1>

Item	Description	Remarks
FTMP	Indicates the surface temperature of the fixing roller. (output of the main thermistor TH1)	Unit: °C
RTMP	Indicates the machine internal temperature. (output of the thermal sensor on the DC controller PCB)	
RHUM	Indicates the machine internal humidity. (output of the humidity sensor on the DC controller PCB)	
LMP1	Indicates the ON voltage of the scanning lamp (100/120V model)	Unit: V
LMP2	Indicates the ON voltage of the scanning lamp. (230V model)	Unit: V
WIRE	Indicates a value other than '0' if the primary, pre-transfer, or transfer/separation charging wire cleaner stops at a point not its home position. Executing wiring cleaning for the appropriate wire in user mode will return the wire cleaner to its home position.	
PLMT	Indicates '1' when the current value reaches the upper limit or the lower limit during current control on the primary charging assembly.	1: Error 0: Normal
LLMT	Indicates '1' when the ON voltage of the scanning lamp reaches '1' and '2' if it reaches the lower limit.	0: Normal 1: Error 2: Error
LIFT	Indicates '1' if the lifter position sensor does not turn ON within 8 sec after the lifter up command is issued for the paper deck/cassette lifter. Order of flags Deck, cassette 3, cassette 4	Resetting is by turning OFF and ON the power switch.

- LMP1 and LMP2 indicate the ON control voltage even when the scanning lamp is OFF.

Note:
If ‘0’ is indicated under ‘WIRE’, be sure to execute ‘wire cleaning’ in user mode (✻). If the wire cleaner motor and the wire cleaner unit are normal, executing wire cleaning will activate the cleaner unit, causing it to stop at home position and clearing the indication to ‘0’.
(Unless you execute wire cleaning, wire cleaning will remain prohibited and will not be reset by turning OFF/ON the power.)

<Screen 1-2>

Item	Description	Remarks
DPOT	Indicates the surface potential of the drum.	Unit: V
VAE	Indicates the average surface potential during AE measurement.	Unit: V
VL1T	Indicates the average surface potential during AE measurement.	Unit: V
VL1M	Indicates the measured value of VL1 (light area potential).	Unit: V
VL2M	Indicates the measured value of VL2 (light area potential for developing bias).	Unit: V
VDT	Indicates the target value of VD (dark area potential).	Unit: V
VDM	Indicates the measured value of VD (dark area potential).	Unit: V

<Screen 1-3>

Item	Description	Remarks
PC	Indicates the current value of the primary charging assembly.	
GRID	Indicates the current value of the grid of the primary charging assembly.	
PTC	Indicates the current value of the pre-transfer charging assembly.	
TC	Indicates the current value of the transfer charging assembly.	
SC	Indicates the current value of the separation charging assembly.	
BIAS	Indicates the DC value of the developing bias.	

• The indication will change to '0' when the HVT unit turns OFF.

<Screen 1-4>

Item	Description	Remarks
DCMET-1	Indicates the output of the original size sensor 1.	
DCMET-2	Indicates the output of the original size sensor 2.	
DCMET-3	Indicates the output of the original size sensor 3.	
DCMET-4	Indicates the output of the original size sensor 4.	

<Screen 1-5>

Item	Description	Remarks
B-JAM0	Indicates the location of the most recent jam and second most recent jam inside the copier.	See Table 4-3. (*3)
B-JAM3	Indicates the location of the third, fourth, and fifth most recent jams inside the copier.	See Table 4-3. (*3)
B-JAM6	Indicates the location of the sixth, seventh, and eighth most recent jams in the copier.	See Table 4-3. (*3)
B-ALRM *1	Note used.	
B-ER1 *2	Indicates the most recent self diagnosis code for the inside of the copier and the sorter (not RDF).	
B-ER2 *2	Indicates the second most recent diagnosis code of the inside of the copier and the sorter (not RDF).	
B-ER3 *2	Indicates the third most recent diagnosis code of the inside of the copier and the sorter (not RDF).	
A	Indicates the type of 'E002' (error occurring when the temperature of the fixing roller does not reach a specific value within a specific period of time).	1: 70 °C~100 °C 2: 100°C~150 °C
B	Indicates the type of 'E001'. (The temperature of the fixing roller exceeds a specific value.)	1: Main thermistor (TH1) 2: Sub thermistor (TH2)

*1: No data exists representing a copier alarm condition.

*2: The indication of the rightmost four bits of 'B-ER 1 through 3' will remain '0000', and no E code will be indicated.

*3: The jam code related to the RDF indicated under 'B-JAM' is '0700' only; for details, see the next screen 'DF-JAM'.

<Screen 1-6>

Item	Description	Remarks
DF-JAM	Indicates the location of an RDF jam.	See Tables 4-7, -8, and -9.
S-JAM	Indicates the location of a jam in the sorter.	See Table 4-4.
DF-ERR *1	Indicates the nature of the results of self diagnosis in the RDF. (*2)	
S-ERR *1	Indicates the nature of the results of self diagnosis in the sorter. (*3)	
DF-ALM	Indicates the nature of an alarm for the RDF.	
S-ALM	Indicates the nature of an alarm in the sorter.	See Tables 4-5 and 4-6.

*1: The rightmost four bits of 'DF-ERR' and 'S-ERR' will remain '0000', i.e., they will not change.
*2: For instance, if 'E480' is indicated,
DF-ERR: 8000 0000
'4' of 'E480' represents the RDF and is omitted for DF-ERR notation. (This, however, does not apply to 'E400'.)
*3: For instance, if 'E530' is detected,
S-ERR: 3000 0000
'5' of 'E530' represents the sorter and is omitted for S-ERR notation. (This, however, does not apply to 'E500'.)

High-order 2 digits

Display code	Jam location	Display code	Sensor name	Sensor No.
01	Delay jam	01	Pick-up vertical path 0	PS24
02	Stationary jam	02	Pick-up vertical path 1	PS33
03	Power-on jam	03	Pick-up vertical path 2	PS36
04 (*1)	Double feeding jam	04	Pick-up vertical path 3	PS27
05	Timing jam	05	Pick-up vertical path 4	PS30
06	Sorter-related jam	06	Holding tray pick-up	PS17
		07	Holding tray registration	PS14
		08	Holding tray feeding assembly 1	PS8
		09	Holding tray feeding assembly 2	PS9
		10	Fixing claw jam	PS52 (*3)
		0A	Registration	PS23
		0B	Holding tray inlet	PS15
		0C	Fixing assembly outlet	PS47
		0D	External delivery	PS10
		0E		
		0F	Internal delivery assembly	PS12 (*2)

To reset, open the front door, remove the jam, and close the front door.
*1: A double feeding jam location (low-order 2 digits) indication is '00' only; 01, 02 will not be displayed.
*2: Power-on jam only.
*3: Power-on jam and jam during initial rotation.

Table 4-3

Sorter Jam Code

Display code	Description
03	Feeding delay jam
04	Feeding stationary jam
07	Power-on jam
08	Door open jam (while feeding copy paper)
09	Door open jam (during stapling)
0A	Bin external sensor jam

Table 4-4

Sorter Alarm Code

Tray Alarm Code

Display code	Alarm	Resetting
02	Overstacking	Remove all copy paper from the bin.

Table 4-5

Stapler Alarm Code

Display code	Alarm	Resetting
01	Staple down	Run a self check. (Done if the results are good.)
02	Staple jam	Open the front door, remove all staple jams, and close the front door.
03	Stapler safety mechanism ON	Open the front door, remove all jams, and close the front door.
05	Stapling capacity	Remove all copy paper from the bin.
06	Stapling full	Remove all copy paper from the bin.
07	Different paper sizes	Remove all copy paper from the bin.
09	Paper in bin	Remove all copy paper from the bin.
0A	No staple	Set a new staple cartridge.

Table 4-6

RDF Alarm Code

Display code	Alarm	RDF operation	Resetting
01	Re-circulating bar idle rotation	Stops	Turn ON/OFF the original sensor (S1).
03	Pick-up separation failure	Stops	Turn ON/OFF the original sensor (S1).
05	Original over stopper plate	Stops	Turn ON/OFF the original sensor (S1), and open/close the RDF.
11	Different number of originals after jam recovery	Stops	Turn ON/OFF the original sensor (S1).
12	Wrong number of originals	Stops at 100th original	Turn ON/OFF the original sensor (S1), and open/close the RDF.
13	Original forced off	Stops	Turn ON/OFF the original sensor (S1), and open/close the RDF.
14	Original size error	Stops	Turn ON/OFF the original sensor (S1), and open/close the RDF.
15	Mixed original sizes in image composition	Stops	Turn ON/OFF the original sensor (S1), and open/close the RDF.

Table 4-7

RDF Jam Codes

	Type of original jam	Sensor	Conditions	Code
Pick-up	Original forced off	S1, S7	The sensor (S7) does not detect the leading edge of an original and, in addition, the sensor (S1) has not detected an original 1500 ms after the pick-up motor (M1) has turned on.	01
	Pick-up delay	S7	The sensor (S7) does not detect the leading edge of an original 1500 ms after the pick-up motor (M1) has turned on.	02
	Registration delay	S3, S7	The sensor (S3) does not detect the leading edge of an original 350 ms after the sensor (S7) has detected the leading edge of an original.	03
	Double-feeding	S3	The sensor (S3) does not detect an original even after the first original has been placed on the copyboard glass.	06
	Leading edge retreat	S3	The sensor (S3) does not detect the leading edge of an original after original pick-up operation has started.	08
Reversal	Reversal delay 1	S8	During original reversal or delivery, the sensor (S8) does not detect the leading edge of an original 140 mm or 225 ms after the belt motor (M3) has started to rotate in clockwise direction.	11
	Reversal stationary	S8	During original reversal or delivery, the sensor (S8) does not detect the trailing edge of an original.	12
	Reversal delay 2	S8	During original delivery pick-up, the original to be delivered is brought back in the direction of the copyboard glass together with the original that has been picked up. The error occurs when the sensor (S8) does not detect the advance original 50 mm after the belt motor has started to rotate counterclockwise.	13
	Reversal initial paper	S8	During original reversal, the sensor (S8) detects an original.	20
	Reversal pick-up delay	S3, S8	During original reversal, the sensor (S3) does not detect the leading edge of an original 100 mm or 300 ms after the sensor (S8) has detected the original.	21
	Reversal pick-up stationary	S3, S8	The sensor (S3) does not detect the trailing edge of an original ‘original size + 180 mm’ after the sensor (S8) has turned on.	23

Table 4-8

	Type of original jam	Sensor	Conditions	Code
Delivery	Delivery delay	S6, S8	During original delivery, the sensor (S6) does not detect an original 100 mm or 250 ms after the sensor (S8) has detected the leading of an original.	41
	Delivery stationary	S6	The sensor (S6) does not detect the trailing edge of an original 100 mm or 250 ms after a check for a reversal delivery check.	42
	RF open	MS1	The RDF is opened while in operation.	81
	Upper cover open	MS2 S4	The upper cover is opened while the RDF is in operation.	82
	Original re-circulation fault	S1	The sensor (S1) does not detect an original delivered to the original tray.	83
	Remaining jam	S6, S3 S8, S7	At the beginning of original pick-up operation, any of the sensors (S6), (S3), or (S8) detects an original. (If the paper stop plate is up, includes S7.)	84
	Remaining original	S8	During pick-up of the first original, an original is detected on the copyboard glass.	88
	Re-circulating lever idle swing (2nd original and later)	S13	For the second or subsequent originals, the re-circulating lever swung without coming into contact with an original.	89

Table 4-9

<Screen 1-7>

Item	Description	Remarks
Q161	Indicates the version of the ROM (Q161) on the DC controller PCB.	See "Guide to Version."
Q160	Indicates the version of the ROM (Q160) on the DC controller PCB.	See "Guide to Version."
Q156	Indicates the version of the ROM (Q156) on the DC controller PCB.	See "Guide to Version."
Q140	Indicates the version of the ROM (Q140) on the DC controller PCB.	See "Guide to Version."
Q937	Indicates the version of the ROM (Q937) on the control panel PCB.	See "Guide to Version."
DF	Indicates the version of the ROM (IC2) on the RDF controller PCB.	See "Guide to Version."
SORT	Indicates the version of the ROM (Q937) on the sorter controller PCB.	See "Guide to Version."

Guide to Version

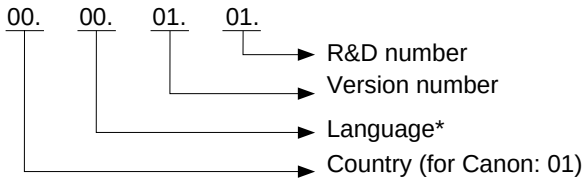

*Language
10: Japanese
20: English
(20: North America; 21: UK)
30: French
40: German
50: Danish
60: Dutch
70: Finnish
80: Italian
90: Norwegian
A0: Portuguese
B0: Spanish
C0: Swedish

<Screen 1-8>

Item	Description	Remarks
KEY-CHK	Indicates the code of the key pressed on the control panel. (*1)	See Table 4-10.
DF-SIZE	Indicates the size of the original detected by the RDF.	
DOC-SIZE	Indicates the size of the original detected by the copier's original size sensor.	
DOC-STS1	Indicates the output (0/1) of the copier's original size sensor.	
DOC-STS2	Indicates the output (0/1) of the copier's original size sensor.	

1 Touch panel.

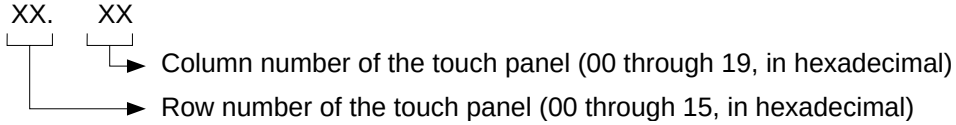

Display	Key	Display	Key	Display	Key	Display	Key
00. 0F	Reset	05. 0F	7	0A. 0F	0	0F. 0F	Pre-Heat
01. 0F	Stop	06. 0F	Clear	0B. 0F	3	10. 0F	Interrupt
02. 0F	Start	07. 0F	2	0C. 0F	6	11. 0F	Use mode
03. 0F	1	08. 0F	5	0D. 0F	9	12. 0F	Guide
04. 0F	4	09. 0F	8	0E. 0F	ID		

Table 4-10

Corresponding original size sensor number.

DOC,STSI: X X X X
↓ ↓ ↓ ↓
1 0 3 2

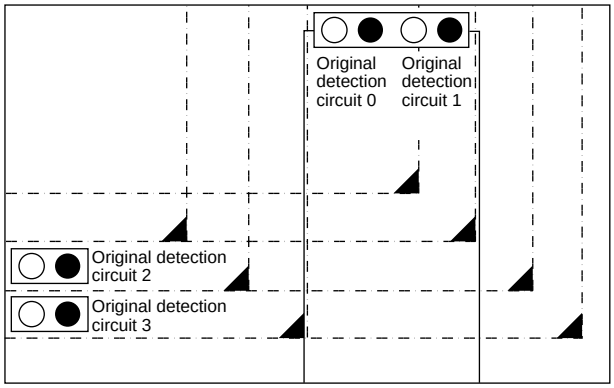

Note:
The Inch-configuration type does not have original detection circuit 3.

<Screen 1-9>

Item	Description	Remarks
MULTI	Indicates the outputs of the copy paper width sensor and the paper size sensor set on the multifeeder. WIDE: output of paper width sensor (analog) SW: output of paper length sensor (0/1) SIZE: paper width (mm)	
CST-1	Indicates the outputs of the copy paper width and the paper size sensor set in the paper deck. WIDE: output of paper sensor (analog) SW: output of paper length sensor (0/1) SIZE: paper width (mm)	
CST-2	Indicates the outputs of the copy paper width and the paper size sensor set in the left deck. WIDE: output of paper width sensor (analog) SW: output of paper length sensor (0/1) SIZE: paper width (mm)	100V model only.
CST-3	Indicates the output of the copy paper width and the paper size sensor set in the cassette 3. WIDE: output of paper width sensor (analog) SW: output of paper length sensor (0/1) SIZE: paper width (mm)	
CST-4	Indicates the outputs of the copy paper width sensor and the paper size sensor set in cassette 4. WIDE: output of paper width sensor (analog) SW: output of paper length sensor (0/1) SIZE: paper width (mm)	

E. I/O Display Mode (✻2✻)

Press numeric keys to select the screen.
The screen will indicate the states of the input port and the output port.

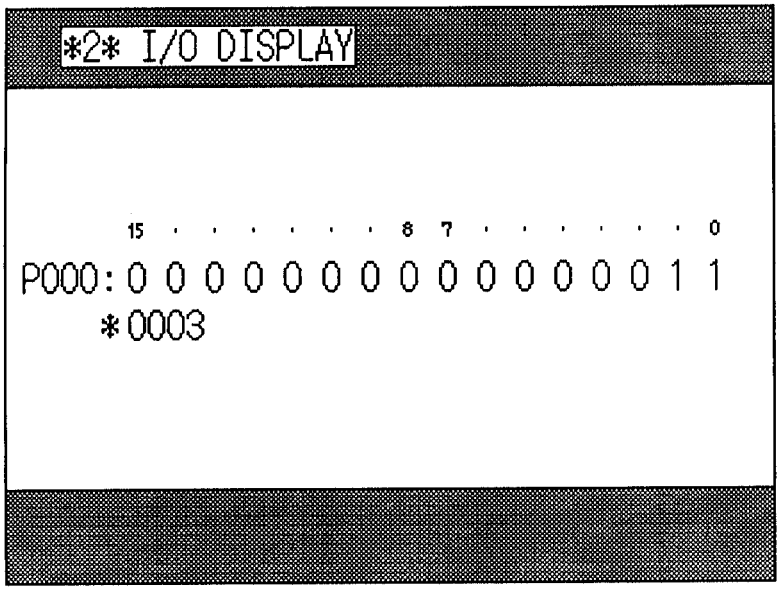

Screen 2-1

Bit data is converted to hexadecimal data for checks on analog data (e.g., address P023 photosensitive drum potential signal).

Address	Description	Name	Signal	Jack	Remarks
PC000-00	Pick-up motor drive signal	M02	M2ON	J114B-8	0: rotate
PC000-01	Drum motor drive signal	M01	M1ON	J111B-4	0: rotate
PC000-02	Developing fan drive signal	FM05	FM5D	J115A-1	1: rotate
PC000-03	Developing clutch drive signal	CL08	DEVCD	J112A-2	1: ON
PC000-04	Holding tray feeding 1 clutch drive signal	CL01	HTF1CD	J112A-7	1: ON
PC000-05	Scanner locking solenoid drive signal (4-cassette type only)	SL01	SLCKSD	J114A-12	1: ON
PC000-06	Multifeeder pick-up roller clutch drive signal	CL07	MFPCD	J115B-2	1: ON
PC000-07	Multifeeder pick-up solenoid drive signal	SL10	SL10BD SL10FD	J115B-12	1: ON
PC000-08	Vertical path roller drive clutch drive signal	CL18	CL18D*	J115A-4	1: ON
PC000-09	Right deck pickup clutch drive signal	CL14	RDPUCD/ C1PUCD	J116A-2	1: ON
PC000-10	Cassette 2 pick-up clutch drive signal	CL16	C2PUCD	J121A-2	1: ON
PC000-11	Cassette 1 lifter motor drive signal (4-cassette type only)	M16	C1MD	J119B-11	1: ON
	Deck lifter drive motor drive signal (paper deck type only)	M18	RDLMD	J119B-11	1: ON
PC000-12	Cassette 2 lifter motor drive signal (4-cassette type only)	M17	C2LMD	J119B-9	1: ON
PC000-13	Vertical path roller 1 drive clutch drive signal	CL15	CL15D*	J117A-15	1: ON
PC000-14	Vertical path roller 2 drive clutch drive signal	CL17	CL17D*	J121B-8	1: ON
PC000-15	Deck/cassette 1 pick-up roller releasing solenoid drive signal	SL04	RDPURR/ C1PURR	J121A-15/ J116A-10	1: ON

Address	Description	Name	Signal	Jack	Remarks
PC001-00	Holding tray paper deflecting plate solenoid drive signal	SL08	HTPDD	J113B-9	1: ON
PC001-01	Holding tray weight solenoid drive signal	SL07	HTWSD	J113A-4	1: ON
PC001-02	Holding tray D-cut (pick-up) roller solenoid drive signal	SL06	HTDSD	J113A-5	1: ON
PC001-03	Fixing inlet guide drive signal	SL16	FXGDSD	J108B-15	1: ON
PC001-04	Holding tray swing solenoid drive signal	SL09	HTJSD	J113B-5	1: ON
PC001-05	Cassette 3 lifter motor drive signal	M14	C3LMD	J119A-9	1: rotate
PC001-06	Cassette 4 lifter motor drive signal	M15	C4LMD	J119A-11	1: rotate
PC001-07	Cassette 3 pick-up clutch drive signal	CL10	C3PUCD	J117A-2	1: ON
PC001-08	Cassette 4 pick-up clutch drive signal	CL12	C4PUCD	J130A-2	1: ON
PC001-09	Pick-up vertical path roller 3 drive clutch drive signal	CL11	CL11D	J117B-2	1: ON
PC001-10	Pick-up vertical path roller 4 drive clutch drive signal	CL13	CL13D	J130B-2	1: ON
PC001-11	Cassette 3 pick-up roller releasing solenoid drive signal	SL11	C3PURR	J117A-10	1: ON
PC001-12	Cassette 4 pick-up roller releasing solenoid drive signal	SL12	C4PURR	J130A-10	1: ON
PC001-13	Fixing assembly inlet guide drive signal	SL16	FXGUSD	J108B-14	1: ON
PC001-14	Wire cleaner motor home position signal			—	
PC001-15	Size detection drive			J110B-4/ 7/10	

Address	Description	Name	Signal	Jack	Remarks
PC002-00	Pick-up vertical path 0 paper detection signal	PS24	PS24D	J116B-7	1: paper present
PC002-01	Stream reading home position detection signal	PS04	SCDP2	J111A-8	0: home position
PC002-02	Registration paper detection signal	PS23	RGPD	J108A-7	1: paper present
PC002-03	Holding tray feeding assembly 2 paper detection signal	PS09	PS9D	J113B-12	1: paper present
PC002-04	Holding tray feeding assembly 1 paper detection signal	PS08	PS8D	J119A-4	1: paper present
PC002-05	Multifeeder paper detection signal	PS22	MFS	J115B-7	1: paper present
PC002-06	Fixing sub heater ON detection signal	H2	SHOND	J102B-4	1: ON
PC002-07	Fixing main heater ON detection signal	H1	MHOND	J102B-6	1: ON
PC002-08	Waste toner level signal	MSW4	WTFL	J114B-1	1: ON
PC002-09	Developing assembly toner level signal	TS2	DTEP	J106B-8	0: toner absent
PC002-10	Hopper toner level signal	TS1	TEP	J105A-6	0: toner absent
PC002-11	Original size 1 detection signal	DS1	DSZ1	J110B-5	0: original present
PC002-12	Original size 2 detection signal	DS2	DSZ2	J110B-8	0: original present
PC002-13	Original size 3A detection signal	DS3	DSZ3A	J110B-12	0: original present
PC002-14	Original size 3 B detection signal	DS3	DSZ3B	J110B-11	0: original present
PC002-15	Not used				

Address	Description	Name	Signal	Jack	Remarks
PC003-00	Cassette 2 pick-up roller releasing solenoid drive signal	SL05	C2PURR	J121A-13	1: ON
PC003-01	CC-X count signal	CCX10	CCXNTD	J123-6	1: count
PC003-02	High-voltage output enable signal	HVT	HVTRMT	J114A-10	0: high-voltage-output ON
PC003-03	Control Card V drive signal	CCV	CCNTD	J106B-1	1: count
PC003-04	Feeding fan/cleaner fan drive signal (half speed)	FM06/07	FM6D	J109-1/ J114B-3	1: half speed
PC003-05	Feeding fan/cleaner fan drive signal (full speed)	FM06/07	FM6D	J109-1/ J114B-3	1: full speed
PC003-06	Fixing assembly delivery/discharge drive signal (half speed)	FM02 FM03	FM2D FM3D	J117B-12 J104A-1	1: half speed
PC003-07	Discharge/drive signal (full speed)	FM02	FM2D	J117B-12	1: full speed
PC003-08	Potential sensor power-on signal	POT	POT-S-ON	J103B-8	1: ON
PC003-09	Multi solenoid drive signal	SL15		J115B-10	1: ON
PC003-10	Developing bias AC output signal	HVT	BIASAC	J114A-3	0: ON
PC003-11	Roller electrode bias output signal	HVT	PSTBIAS	J114A-1	0: ON
PC003-12	Post-separation AC output signal	HVT	PSTAC SPAC	J114A-7	0: ON
PC003-13	Scanning lamp ON signal	LA1	LAON	J111B-8	0: ON
PC003-14	Fixing main heater drive signal	H1	MHRD	J102B-5	0: ON
PC003-15	Fixing sub heater drive signal	H2	SHRD	J102B-3	0: ON

Address	Description	Name	Signal	Jack	Remarks
PC004-00	Scanner motor brake signal	M03	M03BK	J112B-5	1: brake ON
PC004-01	Scanner motor forward signal	M03	M03FW	J112B-7	0: forward 1: reverse
PC004-02	Scanner motor drive signal	M03	M03ON	J112B-6	0: ON
PC004-03	Scanner motor (overcurrent control) current limit	M03	M03CL	J112B-4	1: current limiter ON
PC004-04	Scanner motor mode 1 signal	M03	M03MD0	J112B-10	
PC004-05	Scanner motor mode 2 signal	M03	M03MD1	J112B-9	
PC004-06	Scanner motor mode 3 signal	M03	M03MD2	J112B-8	
PC004-07	Blank exposure power supply (0V) signal	LED2	B0V	J103A-8	0: blank ON
PC004-08	Control panel LCD back light signal	LCD	LCDGHT	J105B-11	1: ON
PC004-09	Control panel CPU reset signal	OPEPANE	OPRST	J105B-5	0: reset
PC004-10	Internal signal (watch dog)				
PC004-11	Power switch OFF signal	SW01	PWOFF	J104A-8	1: ON
PC004-12	FT prohibit signal	M3	PWOFF	J112B-1	1: ON
PC004-13	Not used				
PC004-14	Internal signal (tray X shift star)				
PC004-15	Internal signal (tray Y shift start)				

Address	Description	Name	Signal	Jack	Remarks
PC005-00	Front door open detection signal	SW02	FDOD	J104A-4	1: open
PC005-01	Fixing/feeding unit detection signal	PS53	FFUCNT	J108A-2	0: fixing/feeding unit connected
PC005-02	Internal delivery signal	PS12	IDPD	J108B-12	0: paper present
PC005-03	Multifeeder door open detection signal	PS46	MFDC	J105A-9	1: closed 0: open
PC005-04	External delivery signal	PS10	EXDPD	J108B-7	1: paper present
PC005-05	Fixing cleaning belt length detection signal	PS11	CBOP	J108A-13	1: belt out
PC005-06	Holding tray inlet paper detection signal	PS15	PS15D	J113B-10	1: paper present
PC005-07	Holding tray registration paper detection	PS14	PS14D	J113A-3	1: paper present
PC005-08	Fixing assembly outlet paper detection signal	PS47	FXDEL	J108B-4	1: paper present
PC005-09	Holding tray pick-up detection signal	PS17	PS17D	J113B-11	1: paper present
PC005-10	Holding tray re-circulating lever home position signal	PS19	HTLPD	J113B-6	0: home position
PC005-11	Hopper assembly connector detection signal			J105A-4	0: hopper connector off
PC005-12	Holding tray unit detection signal	HT	HTCNT	J113A-14	0: holding tray unit connected
PC005-13	Power switch ON detection signal	SW1	SW1ON	J102A-6	0: ON
PC005-14	Control card detection signal	CCV	CCNNT	J106B-2	1: card present
PC005-15	Internal signal (encoder error detection)				1: error

Address	Description	Name	Signal	Jack	Remarks
PC006-00	Hopper motor (toner stirring) drive signal	M11	M11ON	J105A-4	1: ON
PC006-01	Pre-exposure LED ON signal	LED1	PEXP	J103B-2	1: ON
PC006-02	Hopper motor (toner supply) drive signal	M10	M10ON	J105A-2	1: ON
PC006-03	Drum heater full-wave/half-wave switching signal	H3	DHRD	J102B-2	1: half-wave 0: full-wave
PC006-04	Total copy counter drive signal	CNT1	TCNTD	J104B-2	1: count
PC006-05	Option copy counter drive signal	CNT2	OPCNTD	J104B-6	1: count
PC006-06	Scanner scanning fan drive signal (half wave)	FM08	FM8D	J104A-5	1: half wave
PC006-07	Scanner cooling fan drive signal (full speed)	FM08	FM8D	J104A-5	1: full speed
PC006-08	Fixing drive solenoid drive signal	SL03	FXDSD	J108B-18	1: ON
PC006-09	Fixing cleaning belt drive signal	SL14		J108A-11	1: ON
PC006-10	Delivery paper deflecting plate solenoid drive signal	SL02	DPDSD	J108B-10	1: ON
PC006-11	Holding tray re-circulating bar motor drive signal	M07	M7ON	J113A-9	1: ON
PC006-12	Holding tray registration clutch drive signal	CL03	HTRGCD	J113B-7	1: ON
PC006-13	Holding tray separation clutch drive signal	CL06	HTSPCD	J113B-8	1: ON
PC006-14	Holding tray forward clutch drive signal	CL05	HTFWCD	J113A-7	1: ON
PC006-15	Holding tray reversing clutch drive signal	CL04	HTRVCD	J113A-6	1: ON

Address	Description	Name	Signal	Jack	Remarks
PC007-00	Upper right door open detection signal	PS41	RUPDOP	J119B-4	1: closed 0: open
PC007-01	Lower right door open detection signal	PS42	RLWDOP	J119B-7	1: closed 0: open
PC007-02	Copyboard cover closed signal	PS05	CBCC	J112A-4	1: closed 0: open
PC007-03	Scanner home position signal	PS01	SCHP	J111A-2	1: home position
PC007-04	Deck/cassette 1 open/closed detection signal	PS38	RDEOP C1OP	J116B-10	1: closed 0: open
PC007-05	Cassette 2 open/closed detection signal	PS40	LDEOP C2OP	J121B-13	1: closed 0: open
PC007-06	Cassette-1 paper length signal	SV3	C1PL0	J122A-5	
PC007-07	Cassette-1 paper length signal	SV3	C1PL1	J122A-6	
PC007-08	Cassette-2 paper length signal	SV4	C2PL0 C2PL1	J122B-5	
PC007-09	Cassette-2 paper length signal	SV4	C2PL1	J122B-6	
PC007-10	Right deck paper detection signal	PS32	RDPD/ C1PD	J116A-7	1: paper present
PC007-11	Cassette 2 paper detection signal	PS35	C2PD	J121A-10	1: paper present
PC007-12	Pick-up vertical path 1 paper detection signal	PS33	PS33D	J119A-7	1: paper present
PC007-13	Pick-up vertical path 2 paper detection signal	PS36	PS36D	J121B-10	
PC007-14	Deck/cassette 1 lifter position sensor signal	PS31	C1LTP RDEL	J116A-4	1: lifter position
PC007-15	Cassette 2 lifter position sensor signal	PS34	C2LTP	J121A-7	1: lifter position

Address	Description	Name	Signal	Jack	Remarks
PC008-00	Cassette 3 paper length 0 signal	SV-1	C3PL0	J122A-1	
PC008-01	Cassette 3 paper length 1 signal	SV-1	C3PL1	J122A-2	
PC008-02	Cassette 4 paper length 0 signal	SV-2	C4PL0	J122B-1	
PC008-03	Cassette 4 paper length 1 signal	SV-2	C4PL1	J122B-2	
PC008-04	Pick-up vertical path 3 paper detection signal	PS27	PS27D	J117B-4	1: paper present
PC008-05	Pick-up vertical path 4 paper detection signal	PS30	PS30D	J130B-4	1: paper present
PC008-06	Cassette 3 paper detection signal	PS26	C3PD	J117A-7	1: paper present
PC008-07	Cassette 4 paper detection signal	PS29	C4PD	J130B-7	1: paper present
PC008-08	Cassette 3 lifter position sensor signal	PS25	C3LTP	J117A-4	1: upper limit
PC008-09	Cassette 4 lifter position sensor signal	PS28	C4LTP	J130A-4	1: upper limit
PC008-10	Internal signal (fixing assembly temperature error detection)				
PC008-11	Internal signal (CVR error detection)				
PC008-12	Internal signal (SSR error detection)				
PC008-13	Internal signal (power switch open circuit detection)				
PC008-14	Internal signal (total copy counter open circuit detection)				
PC008-15	Internal signal (option counter open circuit detection)				

Address	Description	Name	Signal	Jack	Remarks
PC009-00	Holding tray feeding unit detection	HT	HTFCNT	—	0: holding tray feeding unit-connected
PC009-01	Fixing claw jam detection signal	PS52	FXCJS	J108A-19	1: paper present
PC009-02	Service switch detection signal	SSW1	SSWON	J106B-5	1: ON
PC009-03	Scanner locked detection signal	PS48	SCLK	J114A-14	1: locked
PC009-04	Left deck pick-up outlet paper detection signal	PS49	LEXTPD	J121B-5	1: paper present
PC009-05	Cassette 3 open/closed detection	PS50	C3SS	J117B-7	1: open 0: closed
PC009-06	Cassette 4 open/closed detection	PS51	C4SS	J130B-7	1: open 0: closed
PC009-07	Sub thermistor error detection	TH2	—	J108A-9	1: error

Address	Description	Name	Signal	Jack	Remarks
PC010-00	Not used				
PC010-01	Holding tray feeding 2 clutch drive signal	CL02	HTF2CD	J112A-9	1: ON
PC010-02	Fixing/feeding unit locking solenoid drive signal	SL13	FFULSD	J108B-2	1: ON
PC010-03	Power supply unit internal relay drive signal	RL401	RL401D	J102A-5	1: ON
PC010-04	Not used				
PC010-05	Not used				
PC010-06	Not used				
PC010-07	Not used				

Address	Description	Name	Signal	Jack	Remarks
PC011-00	Not used				
PC011-01	Not used				
PC011-02	Not used				
PC011-03	Not used				
PC011-04	Multifeeder pick-up solenoid drive signal	SL10	SL10D	J115B-13	1: ON
PC011-05	Not used				
PC011-06	Internal signal (clock)				
PC011-07	Pick-up motor brake signal	M02	M02BLK	J114B-5	1: brake ON

Address	Description	Name	Signal	Jack	Remarks
PC012-00	Internal signal (digit)			J125-1	
PC012-01	Internal signal (digit)			J125-2	
PC012-02	Internal signal (digit)			J125-3	
PC012-03	Internal signal (digit)			J125-4	
PC012-04	Not used				
PC012-05	Not used				
PC012-06	Not used				
PC012-07	Not used				

Address	Description	Name	Signal	Jack	Remarks
PC017-00	Internal signal (key return)			J125-5	
PC017-01	Internal signal (key return)			J125-6	
PC017-02	Internal signal (key return)			J125-7	
PC017-03	Internal signal (key return)			J125-8	
PC017-04	Internal signal (key return)			J125-9	
PC017-05	Internal signal (key return)			J125-10	
PC017-06	Internal signal (key return)			J125-11	
PC017-07	Internal signal (key return)			J125-12	

Address	Description	Name	Signal	Jack	Remarks
PC020	Multifeeder paper width signal (analog)	SVR1		J115B-4	
PC021	Cassette 1 paper width signal	SVR4	C1PW	J130B-10	
PC022	Cassette 2 paper width signal	SVR5	C2PW	J130A-12	
PC023	Photosensitive drum potential signal (analog)		POT	J103B-9	
PC024	Cassette 3 paper width signal	SVR2	C3PW	J117B-10	
PC025	Cassette 4 paper width signal	SVR3	C4PW	J117A-12	
PC026	Not used				

RDF-H1 (1/4)

Address	Description	Name	Signal	Jack	Remarks
PC027-00	Stopper plate solenoid (SL1)		STPSL	J5-10	1: ON
PC027-01	Paper deflecting plate solenoid (SL3)		DFSLD	J4-2	1: ON
PC027-02	Not used.				
PC027-03	Not used.				
PC027-04	Not used.				
PC027-05	Not used.				
PC027-06	Not used.				
PC027-07	Not used.				
PC028-00	Pick-up roller sensor (S5)		PUSP	J5-2	1: paper present
PC028-01	Delivery sensor 1 (S6)		PSP3	J9-6	1: paper present
PC028-02	Pick-up sensor (S7)		PDP1	J9-9	1: paper present
PC028-03	Not used.				
PC028-04	PCB internal signal				
PC028-05	PCB internal signal				
PC028-06	Not used.				
PC028-07	Not used.				
PC029-00	Original sensor (S1)		DEP1	J5-1	1: paper present
PC029-01	Registration sensor (S3)		PDP2	J9-20	1: paper present
PC029-02	Original width detecting VR		DMPW	J8-8	A/D value stored in adjustment mode
PC029-03	Not used				
PC029-04	Reversal sensor (S8)		RVPD	J9-12	1: paper present
PC029-05	Delivery sensor 2 (S12)		PDP4	J8-2	1: paper present
PC029-06	Original tray paper sensor (LED1)				1: light ON
PC029-07	Registration sensor (LED2)				1: light ON

RDF-H1 (2/4)

Address	Description	Name	Signal	Jack	Remarks
PC030-00	Belt motor clock sensor (S10)		BMCLK	J9-18	alternates between 1 and 0 during rotation
PC030-01	Feeding motor clock sensor (S9)		FMCLK	J9-15	alternates between 1 and 0 during rotation
PC030-02	Registration roller clock sensor (S11)		RRCLK	J5-5	alternates between 1 and 0 during rotation
PC030-03	PCB internal signal				
PC030-04	PCB internal signal				
PC030-05	Not used.				
PC030-06	Not used.				
PC030-07	Not used.				
PC031-00	Copier communication signal				
PC031-01	Copier communication signal				
PC031-02	Copier communication signal				
PC031-03	Not used.				
PC031-04	Copier communication signal				
PC031-05	Not used.				
PC031-06	Not used.				
PC031-07	Not used.				
PC032-00	PCB internal signal				
PC032-01	Not used.				
PC032-02	PCB internal signal				
PC032-03	Belt motor drive signal				1: ON (PCB internal signal)
PC032-04	PCB internal signal				
PC032-05	Feeding motor drive signal				1: ON (PCB internal signal)
PC032-06	PCB internal signal				
PC032-07	Pick-up motor drive signal				1: ON (PCB internal signal)

RDF-H1 (3/4)

Address	Description	Name	Signal	Jack	Remarks
PC033-00	PCB internal signal				1: belt motor CW rotation
PC033-01	PCB internal signal				1: pick-up motor CW rotation
PC033-02	PCB internal signal				
PC033-03	Original detection LED		DSD	J8-4	1: ON
PC033-04	PCB internal signal				
PC033-05	Brake		BKD	J6-2	1: ON
PC033-06	Clutch		CLD	J13-2	1: ON
PC033-07	Paper retaining solenoid (SL2)		WSLD	J5-12	1: ON
PC034-00	Push switch (SW1)		SW1		1: pressed
PC034-01	Push switch (SW2)		SW2		1: pressed
PC034-02	Push switch (SW3)		SW3		1: pressed
PC034-03	Re-circulation sensor (S13)		LDD	J14-1	1: paper present
PC034-04	Upper cover switch (MS2)		UPCC1	J3-2	1: closed
PC034-05	RDF switch (MS1)		RFC	J2-6	1: closed
PC034-06	PCB internal signal				
PC034-07					
PC035-00	LED (PCB internal signal)				
PC035-01	LED (CPB internal signal)				
PC035-02	Not used.				
PC035-03	Not used.				
PC035-04	Not used.				
PC035-05	Not used.				
PC035-06	Not used.				
PC035-07	Not used.				

RDF-H1 (4/4)

Address	Description	Name	Signal	Jack	Remarks
PC036-00	DIP SW1				1: ON
PC036-01	DIP SW2				1: ON
PC036-02	DIP SW3				1: ON
PC036-03	DIP SW4				1: ON
PC036-04	DIP SW5				1: ON
PC036-05	DIP SW6				1: ON
PC036-06	DIP SW7				1: ON
PC036-07	DIP SW8				1: ON
PC037-00 to PC046-07	Not used.				
PC048-00	Original sensor (S1)		DEP1	J5-7	in hexadecimal notation.
PC048-01	Registration sensor (S3)		PDP2	J9-20	in hexadecimal notation.
PC048-02	Original width volume (VR1)		DMPS	J8-8	in hexadecimal notation.
PC048-03	Not used.				
PC048-04	Not used.				
PC048-05	Not used.				
PC048-06	Original tray sensor LED1 ON signal				
PC048-07	Registration sensor LED3 ON signal				

Stapler Sorter-E2 (1/9)

Address	Description	Name	Signal	Jack	Remarks
PC062-00	Feeding motor (M1) control signal		FDPWM		1: ON
PC062-01	Push bar drive motor (M7) rotation control signal				1: Up
PC062-02	Not used				
PC062-03	Push bar drive motor (M7) drive signal				1: ON
PC062-04	Guide bar motor (M8) pulse signal 1		GBMA		1: ON
PC062-05	Guide bar motor (M8) pulse signal 2		GBMB		1: ON
PC062-06	Guide bar motor (M8) pulse signal 3		GBMA		1: ON
PC062-07	Guide bar motor (M8) pulse signal 4		GBMB		1: ON
PC063-00	Reference wall drive motor (M6) control signal 1		GWMA		1: ON
PC063-01	Reference wall drive motor (M6) control signal 2		GWMB		1: ON
PC063-02	Non sort paper detection signal (PI3)		NSPEXT		1: paper present
PC063-03	Reference wall home position signal (PI13)		GWHP		1: home position
PC063-04	Sort paper detection signal (PI4)		SPEXT		1: paper present
PC063-05	Guide bar home position signal(PI16)		GBHP		1: home position
PC063-06	Multi guide drive motor control signal 1 (M5)		MGMA		1: ON
PC063-07	Multi guide drive motor control signal 1 (M5)		MGMB		1: ON

Stapler Sorter-E2 (2/9)

Address	Description	Name	Signal	Jack	Remarks
PC064-00	D/A converter serial signal				
PC064-01	Not used				
PC064-02	Feeding motor (M1) speed change signal		FDMVC		1: control speed
PC064-03	D/A converter load signal				0: load
PC064-04	D/A converter serial communication clock signal				
PC064-05	Not used				
PC064-06	Not used				
PC064-07	Not used				
PC065-00	Feeding motor (M1) CW rotation signal		FDMCCW		1: ON
PC065-01	Feeding motor (M1) CCW rotation signal		FDMCCW		1: ON
PC065-02	Stapler unit fixed claw releasing solenoid (SL5) drive signal		MHRSLD		1: ON
PC065-03	Paper path switching solenoid (SL1) drive signal		PSLD		1: ON
PC065-04	Paper retaining solenoid (SL3) drive signal		PHSLD		1: ON
PC065-05	Stapler unit position fixing claw releasing solenoid (SL5) drive signal		HDRSLD		1: ON
PC065-06	Stapler motor (M2) CCW rotation signal		SPMCCW		1: ON
PC065-07	Stapler motor (M2) CW rotation signal		SPMCW		1: ON

Stapler Sorter-E2 (3/9)

Address	Description	Name	Signal	Jack	Remarks
PC066-00	Bin shift motor (M9) drive signal				1: Up
PC066-01	Stapler unit swing motor (M4) rotation signal				1: ON
PC066-02	Stapler unit swing motor (M4) drive signal				1: ON
PC066-03	Not used				
PC066-04	Not used				
PC066-05	Not used				
PC066-06	Not used				
PC066-07	Not used				
PC067-00	Stapler unit shift home position signal (S2)		MVHP		1: home position
PC067-01	Logic voltage monitor signal				0: voltage down
PC067-02	Not used				
PC067-03	Bin internal paper sensor 2 analog input signal (S7)				at input, alternates between 1 and 0.
PC067-04	Stapler inside paper sensor analog input signal				at input, alternates between 1 and 0.
PC067-05	Bin internal paper sensor analog input signal (S4)				at input, alternates between 1 and 0.
PC067-06	Feeding motor current value analog input signal				at input, alternates between 1 and 0.
PC067-07	Feeding motor speed change analog input signal				at input, alternates between 1 and 0.
PC068-00	Not used				
PC068-01	Not used				
PC068-02	Not used				
PC068-03	Not used				
PC068-04	Stapler unit shift motor (M3) pulse signal 1		SLDMB		1: ON
PC068-05	Stapler unit shift motor (M3) pulse signal 2		SLDMA		1: ON
PC068-06	Stapler unit shift motor (M3) pulse signal 3		SLDMB		1: ON
PC068-07	Stapler unit drive motor (M3) pulse signal 4		SLDMA		1: ON

Stapler Sorter-E2 (4/9)

Address	Description	Name	Signal	Jack	Remarks
PC069-00	Stapler unit swing motor (PI8) clock signal		SWMCLK		alternates between 0 and 1.
PC069-01	Bin shift motor (PI17) clock signal		BMCLK		alternates between 0 and 1.
PC069-02	Feeding motor (PI5) clock signal		FMCLK		alternates between 0 and 1.
PC069-03	Lead cam position detection signal (PI20)		LDP		alternates between 0 and 1.
PC069-04	Lead cam center position detection signal (PI21)		LDCP		1: ON
PC069-05	Not used				1: ON
PC069-06	Not used				
PC069-07	Not used				
PC070-00	Stapler unit swing motor (M4) pulse oscillation signal				
PC070-01	Push bar drive motor (M7) pulse oscillation signal				
PC070-02	Feeding motor (M1) rotation speed reference signal		FDREF		
PC070-03	Not used				
PC070-04	Bin shift motor (M9) pulse signal 1		SFTA		1: ON
PC070-05	Bin shift motor (M9) pulse signal 2		SFTB		1: ON
PC070-06	Bin shift motor (M9) pulse signal 3		SFTA		1: ON
PC070-07	Bin shift motor (M9) pulse signal 4		SFTB		1: ON
PC071-00	Matrix digit output signal 0				
PC071-01	Matrix digit output signal 1				
PC071-02	Matrix digit output signal 2				
PC071-03	Matrix digit output signal 3				
PC071-04	Matrix digit output signal 4				
PC071-05	Matrix SEG output signal 0				
PC071-06	Matrix SEG output signal 1				
PC071-07	Matrix SEG output signal 2				

Stapler Sorter-E2 (5/9)

Address	Description	Name	Signal	Jack	Remarks
PC072-00	Matrix COM input signal 0				
PC072-01	Matrix COM input signal 1				
PC072-02	Matrix COM input signal 2				
PC072-03	Matrix COM input signal 3				
PC072-04	Matrix COM input signal 4				
PC072-05	Gear swing (SL4) drive signal		GCSLD		1: ON
PC072-06	Not used				
PC072-07	All solenoids drive signal				1: all ON
PC073-00	Stapling home position detection signal (Q1)		SPL-HP		1: home position
PC073-01	Reference wall home position detection signal (PI13)		GWHP		1: home position
PC073-02	Stapler unit swing home position detection signal (PI9)		SWHP		1: home position
PC073-03	Multi guide home position detection signal (PI12)		MGHP		1: home position
PC073-04	Stapler unit swing prohibit position signal (MSW2)		SGSTPP		1: stapling reading
PC073-05	Stapler unit orientation position 2 signal (S1)		HLD2		1: front 1 location
PC073-06	Stapler unit orientation position 1 signal (S1)		HLD1		1: 2 locations/rear signal location
PC073-07	Paper retaining signal (PI11)		PHS		1: paper retaining position
PC074-00	Not used				
PC074-01	Multi guide drive motor/reference wall drive motor drive signal				1: ON
PC074-02	Not used				
PC074-03	Not used				
PC074-04	Not used				
PC074-05	Not used				
PC074-06	Not used				
PC074-07	Not used				

Stapler Sorter-E2 (6/9)

Address	Description	Name	Signal	Jack	Remarks
PC075-00	Stapling position LED 4 ON signal				1: ON
PC075-01	Stapling position LED 1 ON signal				1: ON
PC075-02	Staple absent LED ON signal				1: ON
PC075-03	Stapling position LED 5 ON signal				1: ON
PC075-04	Stapling position LED 2 ON signal				1: ON
PC075-05	Front retrieval key LED ON signal				1: ON
PC075-06	Stapling position LED 3 ON signal				1: ON
PC075-07	Staple key LED ON signal				1: ON
PC076-00	DIP switch 1-4 detection signal				1: ON
PC076-01	DIP switch 1-3 detection signal				1: ON
PC076-02	DIP switch 1-2 detection signal				1: ON
PC076-03	DIP switch 1-1 detection signal		JNTS		1: ON
PC076-04	Joint signal (PI1)				1: connected
PC076-05	Not used				
PC076-06	Not used				
PC076-07	Not used				

Stapler Sorter-E2 (7/9)

Address	Description	Name	Signal	Jack	Remarks
PC077-00	DIP switch 1-8 detection signal				1: ON
PC077-01	DIP switch 1-7 detection signal				1: ON
PC077-02	DIP switch 1-6 detection signal				1: ON
PC077-03	DIP switch 1-5 detection signal				1: ON
PC077-04	Front door open signal (MSW3)		DROPN		1: closed
PC077-05	Not used				
PC077-06	Not used				
PC077-07	Not used				
PC078-00	Staple mode key check signal				1: ON
PC078-01	Stapler unit set detection signal				1: stapler unit present
PC078-02	Staple absent signal (SW1)		HKEPN		1: staple absent
PC078-03	Stapler safety detection signal (MSW1)		SFTYSW		1: ON
PC078-04	Stapler unit swing position signal (PI10)		SWGP		1: ON
PC078-05	Not used				
PC078-06	Not used				
PC078-07	Not used				
PC079-00	Front retrieval key check signal				1: ON
PC079-01	Shift down key check signal				1: ON
PC079-02	Bin home position signal (PI18)		BHP		1: home position
PC079-03	PCB check signal				0: S-order PCB
PC079-04	Front door open internal signal		DROPN		1: door closed
PC079-05	Not used				
PC079-06	Not used				
PC079-07	Not used				

Stapler Sorter-E2 (8/9)

Address	Description	Name	Signal	Jack	Remarks
PC080-00	Staple start key check signal				1: ON
PC080-01	Shift up key check signal				1: ON
PC080-02	Feeding guide home position detection signal (PI6)				1: ON
PC080-03	Bin external paper detection signal (PI7)				1: paper present
PC080-04	Feeding guide up signal (PI2)				1: UP
PC080-05	Not used				
PC080-06	Not used				
PC080-07	Not used				
PC081-00	Not used				
PC081-01	Not used				
PC081-02	Not used				
PC081-03	Not used				
PC081-04	Not used				
PC081-05	Controller PCB LED 1 ON signal				1: ON
PC081-06	Controller PCB LED 2 ON signal				1: ON
PC081-07	Not used				
PC083-00~07	Bin internal paper sensor 2 (S7) A/D input value				hexadecimal, 4-digit notation
PC084-00~07	Stapler internal sensor (S5) A/D input value				
PC085-00~07	Bin internal paper sensor (S4) A/D input value				
PC086-00~07	Feeding motor current value (M1) A/D input value				
PC087-00~07	Feeding motor speed change (M1) A/D input value				
PC088-00~07	Stapler internal paper sensor (S5) D/A output signal				
PC089-00~07	Swing motor current value (M4) D/A output value				
PC090-00~07	Stapler unit shift motor current value (M3) D/A output value				

Stapler Sorter-E2 (9/9)

Address	Description	Name	Signal	Jack	Remarks
PC091-00~07	Bin sift motor current value (M9) D/A output value				hexadecimal, 4-digit notation
PC092-00~07	Guide bar drive motor current value (M8) D/A output value				
PC093-00~07	Bin internal sensor intensity value (S4) D/A output value				
PC094-00~07	Push bar drive motor current value (M7)				
PC095-00~07	Bin internal paper sensor 2 intensity value (S7) D/A output value				

Sorter-E1 (1/2)

Address	Description	Name	Signal	Jack	Remarks
PC062-00	Serial clock for EEPROM		EESCK		
PC062-01	Serial output data EEPROM		EEDI		
PC062-02	Chip select signal for EEPROM		EECS		1: ON
PC062-03	Bin shift motor (M2) drive signal		BSMD		1: ON
PC062-04	Bin shift motor (M2) PWM signal		BSM		
PC062-05	Bin shift motor (M2) DOWN signal		BMDWN		
PC062-06	Bin shift motor (M2) UP signal		BMUP		
PC062-07	Feeding motor (M1) PWM signal		FEEDPWM		
PC063-00	Delivery sensor (PI1) signal		PD		1: paper present
PC063-01	Bin home position signal		BHP		0: home position
PC063-02	Lead cam HP sensor (PI3) signal		LDP		1: home position
PC063-03	Joint sensor (MS1) signal		JNTS		0: not connected
PC063-04	24V DOWN detection signal				0: 24V DOWN
PC063-05	Not used				
PC063-06	EEPROM serial input data		EED 0		
PC063-07	EEPROM BUSY signal		EEBSY		0: BUSY
PC064-00	DIP SW 0				
PC064-01	DIP SW 1				
PC064-02	DIP SW 2				
PC064-03	DIP SW 3				
PC064-04	PUSH SW 1				
PC064-05	PUSH SW 2				
PC064-06	Not used				
PC064-07	Not used				

Sorter-E1 (2/2)

Address	Description	Name	Signal	Jack	Remarks
PC065-00	Not used				
PC065-01	Feeding motor (M1) CW/CCW signal		FMA/FMB		0: CW
PC065-02	Feeding motor (M1) current switching signal 1		FMCCC1		
PC065-03	Feeding motor (M1) current switching signal 2		FMCCC2		
PC065-04	LED1 ON signal		LED		0: ON
PC065-05	Not used				
PC065-06	Not used				
PC065-07	Not used				

Stapler Sorter-G1/Sorter-G1 (1/3)

Address	Description	Name	Signal	Jack	Remarks
PC062-00	Joint signal (MS1)	MS1	SOP		1: open
PC062-01	Stapler cover (MS5)	MS5	SPLOPN		1: open
PC062-02	Stapler set signal (MS6)	MS6	SPL-SET		1: at HP
PC062-03	Staple sensor (PI13)	PI13	HKEMP		0: staple absent
PC062-04	Stapler home position sensor	PI12	SPL-HP		1: at HP
PC062-05	Stapler swing signal (MS9)	MS9	SWGSET		0: at HP
PC062-06	Bin paper sensor				0: paper present
PC062-07	Not used				
PC063-00	Staple LED signal		SPLPK		1: ON
PC063-01	Not used				
PC063-02	Stapler swing motor drive signal	M5	SWGMD		0: motor ON
PC063-03	Not used				
PC063-04	Not used				
PC063-05	Not used				
PC063-06	Not used				
PC063-07	Not used				
PC064-00	Bin paper sensor	PT1	BPD		1: paper present
PC064-01	24V detection				1: power down
PC064-02	Bin HP sensor connector OFF detection				0: OFF
PC064-03	Lead cam sensor connector OFF detection				0: OFF
PC064-04	Bin shift clock sensor connector OFF signal				0: OFF
PC064-05	Guide bar HP connector OFF detection				0: OFF
PC064-05					0: OFF
PC064-07	Stapler HP sensor connector OFF detection				0: OFF

Stapler Sorter-G1/Sorter-G1 (2/3)

Address	Description	Name	Signal	Jack	Remarks
PC065-00	Feeding motor clock sensor	PI6	FMCLK		
PC065-01	Bin shift motor clock sensor	PI9	BMCLK		
PC065-02	Lead cam sensor	PI2	LCHP		1: at level (HP)
PC065-03	Bin HP sensor	PI3	BHP		1: at HP
PC065-04	Guide bar HP sensor	PI7	SGBHP		1: at HP
PC065-05	Not used				
PC065-06	Not used				
PC065-07	Not used				
PC066-00	Stapler motor CW rotation signal	M4	SPLMFW		1: CW
PC066-01	Stapler motor CCW rotation signal	M4	SPLMRV		1: CCW
PC066-02	Guide bar swing motor pulse signal 0	M3	GBMA		
PC066-03	Guide bar swing motor pulse signal 1	M3	GBMB		
PC066-04	Feeding motor clock sensor	PI6	FMCLK		
PC066-05	Not used				
PC066-06	Bin shift motor clock sensor	PI9	BMCLK		
PC066-07	Guide bar swing motor control signal		GBMON		1: ON
PC067-00	Feeding motor PWM signal	M1	FMD		0: ON
PC067-01	Feeding motor brake signal	M1			1: brake
PC067-02	Bin shift motor PWM signal	M2			1: ON
PC067-03	Bin shift motor ON signal	M2			1: ON
PC067-04	Paper path switching solenoid drive signal	SL2	PSLD		1: ON
PC067-05	Not used				
PC067-06	Paper holding solenoid drive signal	SL3	PHSLD		1: ON
PC067-07	Bin shift motor UP signal	M2	BMUP		0: UP

Stapler Sorter-G1/Sorter-G1 (3/3)

Address	Description	Name	Signal	Jack	Remarks
PC068-00	DIP SW1				0: ON
PC068-01	DIP SW2				0: ON
PC068-02	DIP SW3				0: ON
PC068-03	DIP SW4				0: ON
PC068-04	PUSH SW2				0: ON
PC068-05	PUSH SW3				0: ON
PC068-06	Stapler present/absent switch signal				0: stapler sorter
PC068-07	Manual staple key		MNSPL		0: ON
PC069-00	Bin paper sensor D/A output 0				
PC069-01	Bin paper sensor D/A output 1				
PC069-02	Bin paper sensor D/A output 2				
PC069-03	Bin paper sensor D/A output 3				
PC069-04	Bin paper sensor D/A output 4				
PC069-05	Bin paper sensor D/A output 5				
PC069-06	Bin paper sensor D/A output 6				
PC069-07	Bin paper sensor D/A output 7				
PC070-00	Joint sensor (PI)				0: open
PC070-01	Door sensor (PI)				0: open
PC070-02	Not used				
PC070-03	Not used				
PC070-04	Sort sensor				1: paper present
PC070-05	Non-sort sensor				1: paper present
PC070-06	Not used				
PC070-07	Not used				
Hereafter	Not used				

Address	Description	Name	Signal	Jack	Remarks
PC097-00 PC097-01	Primary charging wire cleaning motor drive signal	M12	PCLM	J103B-3 J103B-4	1/0:motor CW 0/1:motor CCW
PC097-02 PC097-03	Pre-transfer charging wire cleaning motor drive signal	M13	PTRCLM	J103A-1 J103A-2	1/0:motor CW 0/1:motor CCW
PC097-04 PC097-05	Transfer/separation charging wire cleaning motor drive signal	M06	TSCLM	J108B-19 J108A-1	1/0:motor CW 0/1:motor CCW
PC097-06	Primary charging wire cleaner home position signal		PCLHP		1: home position
PC097-07	Not used				

Address	Description	Name	Signal	Jack	Remarks
PC098-00	Not used				
PC098-01	Pre-transfer charging wire cleaner home position signal		PTCLHP		1: home position
PC098-02	Transfer/separation charging wire cleaner home position signal		TSCLHP		1: home position
PC098-03	Not used				
PC098-04	Holding tray Y motor home signal	M08	M08HLD	J113A-12	
PC098-05	Holding tray Y motor (phase A) signal	M08	M08A	J113A-13	
PC098-06	Holding tray Y motor (phase B) signal	M08	M08B	J113A-11	
PC098-07	Holding tray X motor hold signal	M09	M09HLD	J113B-3	

Address	Description	Name	Signal	Jack	Remarks
PC100-00	Holding tray X motor (phase A) signal	M09	M09A	J113B-2	
PC100-01	Holding tray X motor (phase B) signal	M09	M09B	J113B-4	
PC100-02	Holding tray Y home position signal	PS20	HTXHP	J113A-10	
PC100-03	Holding tray X home position signal	PS21	HTYHP	J113B-1	1: home position
PC100-04	Lens X motor hold signal	M04	M04ACM M04BCM	J110A-3 J110A-6	
PC100-05	Lens X motor (phase A) signal	M04	M04A	J110A-1 J110A-2	
PC100-06	CVR PWM signal			J111B-7	
PC100-07	Not used				

Address	Description	Name	Signal	Jack	Remarks
PC101-00	Lens X motor (phase B) signal	M04	M04B	J110A-4 J110A-5	
PC101-01	Lens Y motor hold signal	M05	M05ACM M05BCM	J110A-12 J110A-15	
PC101-02	Not used				
PC101-03	Not used				
PC101-04	Not used				
PC101-05	Not used				
PC101-06	Not used				
PC101-07	Not used				

Address	Description	Name	Signal	Jack	Remarks
PC102-00	Lens Y motor (phase A) signal	M05	M05A	J110A-10 J110A-11	
PC102-01	Lens Y motor (phase B) signal	M05	M05B	J110A-13 J110A-14	
PC102-02	Lens X home position signal	PS06	LXHP	J110A-8	1: home position
PC102-03	Lens Y home position	PS07	LYHP	J110B-2	1: home position
PC102-04	Internal signal (lens X drive end)				
PC102-05	Internal signal (lens Y drive end)				
PC102-06	Internal signal (holding tray X drive end)				
PC102-07	Internal signal (holding tray Y drive end)				

Address	Description	Name	Signal	Jack	Remarks
PC104-00	Not used				
PC104-01	Not used				
PC104-02	Internal signal (holding tray X drive start)				
PC104-03	Not used				
PC104-04	Not used				
PC104-05	Not used				
PC104-06	Not used				
PC104-07	Not used				

Address	Description	Name	Signal	Jack	Remarks
PC105-00	Internal signal (holding tray Y drive start)				
PC105-01	Not used				
PC105-02	Not used				
PC105-03	Not used				
PC105-04	Not used				
PC105-05	Not used				
PC105-06	Not used				
PC105-07	Not used				

Address	Description	Name	Signal	Jack	Remarks
PC118-00	Digit 0 input				
PC118-01	Digit 0 input				
PC118-02	Digit 0 input				
PC118-03	Digit 0 input				
PC118-04	Digit 0 input				
PC118-05	Digit 0 input				
PC118-06	Digit 0 input				
PC118-07	Digit 0 input				

Address	Description	Name	Signal	Jack	Remarks
PC119-00	Digit 1 input				
PC119-01	Digit 1 input				
PC119-02	Digit 1 input				
PC119-03	Digit 1 input				
PC119-04	Digit 1 input				
PC119-05	Digit 1 input				
PC119-06	Digit 1 input				
PC119-07	Digit 1 input				

Address	Description	Name	Signal	Jack	Remarks
PC120-00	Digit 2 input				
PC120-01	Digit 2 input				
PC120-02	Digit 2 input				
PC120-03	Digit 2 input				
PC120-04	Digit 2 input				
PC120-05	Digit 2 input				
PC120-06	Digit 2 input				
PC120-07	Digit 2 input				

Address	Description	Name	Signal	Jack	Remarks
PC121-00	Digit 3 input				
PC121-01	Digit 3 input				
PC121-02	Digit 3 input				
PC121-03	Digit 3 input				
PC121-04	Digit 3 input				
PC121-05	Digit 3 input				
PC121-06	Digit 3 input				
PC121-07	Digit 3 input				

F. Adjustment Mode (✻3✻)

Press the <</>> key to select the screen.
Press the appropriate item to highlight.
Enter the appropriate value on the keypad, and press the OK key to accept. (Use the User Mode key to check.)

<Screen 3-1>

Item	Description	Settings	Remarks
LIGHT-5	Use it to adjust the reference ON voltage of the scanning lamp for copying.	-35~35	A higher setting will make the copies lighter.
LIGHT-5P	Use it to adjust the reference ON voltage of the scanning lamp for copying in photo mode.	-35~35	A higher setting will make the copies lighter.
AE-SLOP	Use it to adjust the intensity for newspaper originals in AE mode.	0~1023	A higher setting will make newspaper copies darker.
GLEAM-5	Use it to adjust the optimum exposure.	53~139	A higher setting will make the copies lighter.

<Screen 3-2>

Item	Description	Settings	Remarks
BRAKE-SC	Use it to adjust the braking applied when the scanner moves in reverse.	0~100	A higher setting will increase the braking.
REGIST	Use it to adjust the margin (registration) along the leading edge of copies.	-100~100	A higher setting will delay the timing at which the registration roller turns ON, thereby decreasing the leading edge margin. (in 0.1mm increments)

<Screen 3-3>

Item	Description	Settings	Remarks
LE-BLANK	Use it to adjust the leading edge non-image width (ON period of the blank exposure lamp).	-100~100	A higher setting will increase the leading edge non-image margin.
F-BLANK	Use it to adjust the margin along the front (ON period of the blank exposure lam).	-100~100	A higher setting will increase the margin along the front.
R-BLANK	Use it to adjust the rear margin (ON period of the blank exposure lamp).	-100~100	A higher setting will decrease the rear margin.
TE-BLANK	Use it to adjust the trailing edge non-image width (ON period of the blank exposure lamp).	-100~100	A higher setting will decrease the trailing edge non-image margin.

<Screen 3-4>

Item	Description	Settings	Remarks
PRIMARY	Use it to adjust the application voltage for the primary charging assembly. (Be sure to enter the value recorded on the service label when replacing the DC controller PCB in the field.)	0~1023	
BIAS	Use it to adjust the developing bias. (Be sure to enter the value on the service label whenever replacing the DC controller PCB in the field.)	Label value ±34	
PRETRANS	Use it to adjust the current for the pre-transfer charging assembly. (Be sure to enter the value recorded on the service label whenever replacing the DC controller PCB in the field.)	Label value ±200	

<Screen 3-5>

Item	Description	Settings	Remarks
TRN-1	Use it to adjust the current (1st side) for the transfer charging assembly. (Be sure to enter the value recorded on the service label whenever replacing the DC controller PCB in the field.)	Label value ±100	
TRN-DUP	Use it to adjust the current (2nd side, 2-sided copy) for the transfer charging assembly. (Be sure to enter the value recorded on the service label whenever replacing the DC controller PCB in the field.)	Label value ±100	
TRN-OVL	Use it to adjust the current (2nd side, overlay copy) for the transfer charging assembly. (Be sure to enter the value on the service label whenever replacing the DC controller PCB in the field.)	Label value ±100	

<Screen 3-6>

Item	Description	Settings	Remarks
SEP-1	Use it to adjust the current (1st side) for the separation charging assembly. (Be sure to enter the value on the service label whenever replacing the DC controller PCB in the field.)	Label value ±200	
SEP-DUP	Use it to adjust the current (2nd side, 2-sided copy) for the separation charging assembly. (Be sure to enter the value recorded on the service label whenever replacing the DC controller PCB in the field.)	Label value ±200	
SEP-OVL	Use it to adjust the current (2nd side, overlay copy) for the separation charging assembly. (Be sure to enter the value recorded on the service label whenever replacing the DC controller PCB.)	Label value ±200	

<Screen 3-7>

Item	Description	Settings	Remarks
C1-STMTR			100V model only
C1-A4R			100V model only
C2-STMTR			100V model only
C2-A4R			100V model only

<Screen 3-8>

Item	Description	Settings	Remarks
C3-STMTR	Use it to fine-adjust and enter the paper width basic value (STMTR) for the cassette 3.	000~255	See p. 2-49.
C3-A4R	Use it to fine-adjust or enter the paper width basic value (A4R) for the cassette 3.	000~255	See p. 2-49.
C4-STMTR	Use it to fine-adjust or enter the paper width basic value (STMTR) for the cassette 4.	000~255	See p. 2-49.
C4-A4R	Use it to fine-adjust or enter the paper width basic value (A4R) for the cassette 4.	000~255	See p. 2-49.

<Screen 3-9>

Item	Description	Settings	Remarks
MF-A6R	Use it to fine-adjust or enter the paper width basic value (A6R) for the multifeeder.	000~255	See p. 2-49.
MF-A4R	Use it to fine-adjust or enter the paper width basic value (A4R) for the multifeeder.	000~255	See p. 2-49.
MF-A4	Use it to fine-adjust or enter the paper width basic value (A4) for the multifeeder.	000~255	See p. 2-49.

<Screen 3-10>

Item	Description	Settings	Remarks
BOOK-ERA	Use it to adjust the margin for book frame erasing mode.	10~30	Unit:1 mm A higher setting will increase the margin.
ATM	Use it to set the operating environment (atmospheric pressure of the site of installation). 0:1 ~ 0.75 atm (up to an elevation of 2500 m) 1:0.75 ~ 0.70 atm (between 2500 and 3000 m) 2:0.70 ~ 0.65 atm (between 3000 and 3500 m)	0~2	Decrease the target potential for potential control to avoid leakage under a low atmospheric pressure.

<Screen 3-11>

Item	Description	Settings	Remarks
DOC-ST	Use it to adjust the original stop position when the RDF is in use.	-1023~ 1023	Unit:0.5 mm The effective range is between -10 and +10; values outside the range will have no effect.
P-INTRVL *	Use it to adjust the sheet-to-sheet distance for the RDF (2-on-1 mode).	-1023~ 1023	Unit:0.5 mm The effective range is between -10 and + 10; values outside the range will have no effect.

* Used to adjust the sheet-to-sheet distance for page composition mode with the RDF in use. (The service manual shows how to make adjustments on the RDF; the same may be performed in the copier's service mode, by changing the setting instead of pressing the DIP switch.)

<Screen 3-12>

Item	Description	Settings	Remarks
RFAE-F5L (100V model only)	Use it to adjust the RDF (AE mode and left pick-up) scanning lamp reference ON voltage.	-1023~ 1023	A higher setting will make the slope less steep.
RFAE-F9L (100V model only)	Use it to adjust the RDF (AE mode and left pick-up) newspaper original intensity.	-1023~ 1023	A higher setting will make the slope steeper.
RFAE-F5R (100V model only)	Use it to adjust the RDF (AE mode and right pick-up) scanning lamp reference ON voltage adjustment.	-1023~ 1023	A higher setting will make the slope less steep.
RFAE-F9R (100V model only)	Use it to adjust the RDF (AE mode and right pick-up) newspaper original intensity.	-1023~ 1023	A higher setting will make the slope steeper.

Note:

Keep the following in mind for 'DOC-ST', 'P-INTRVL', and 'LA-SPEED' in RDF-relate service mode:

1. These items affect the values stored in the memory on the RDF controller PCB; therefore, initializing the copier's RAM will not clear these values, not requiring re-input.
2. Changes in these items will change the values stored in the memory on the RDF controller PCB, and inputs will not directly affect the values in the memory; the operation will be as follows:

   Operation 1

   When 'DOC-ST $5^{NEW} \leftarrow (2)^{OLD}$' is entered, (5-2 = +3), causing the original stop position to shift by +3 units.

   Operation 2

   When 'P-INTRVL:-7 ← (-5)' is entered, {-7 - (-5) = -2}, causing the original stop position to shift by -2 units.

3. For these items, pick-up and delivery settings will be by the User Mode key (∗) on the copier's control panel instead of SW1 on the RDF controller PCB.

<Screen 3-13>

Item	Description	Settings	Remarks
LA-LCKPS (100V model only)	Use it to adjust the RDF (stream reading mode) image leading edge.	2300~ 2500	A higher setting will advance the timing at which the registration roller turns ON, thereby increasing the margin.
LA-SPEED (100V model only)	Use it to adjust the original feeding speed for stream reading.	-1023~ 1023	A higher setting will increase the speed, thereby reducing the image. About ±3 mm (6 mm total)
RF-LENSY (100V model only)	Use it to correct offset in Y direction of the lens when the RDF's right pick-up mode is used (i.e., to correct the displacement of the lens reference position in right pick-up mode in relation to left pick-up mode).	-50~50	A higher setting will increase the margin in stream reading, thereby shifting the copy image to the rear. Unit: 0.1 mm

<Screen 3-14>

Item	Description	Settings	Remarks
11X17PSZ LGL_PSZ LTR_PSZ	Use it to fine-adjust the drive distance of the paper guide plate of the duplexing unit for each paper size. Use this mode if pick-up failure or skew movement occurs when paper is picked up from the duplexing unit in two-sided/overlay copying mode.	-10~+10	Step: 0.183 mm x 2 Each step will affect both front and rear paper guides so that a signal step will result in a change of 0.367 mm. (A negative value will make the distance smaller.)

<Screen 3-15>

Item	Description	Settings	Remarks
LTRR_PSZ STMT_PSZ	Use it to fine-adjust the drive distance of the paper guide plate of the duplexing unit for each paper size. Use this mode if pick-up failure or skew movement occurs when paper is picked up from the duplexing unit in two-sided/overlay copying mode.	-10~+10	Step: 0.183 mm x 2 Each step will affect both front and rear paper guides so that a signal step will result in a change of 0.367 mm. (A negative value will make the distance smaller.)

<Screen 3-16>

Item	Description	Settings	Remarks
A3_PSZ A4_PSZ A4R_PSZ A5_PSZ	Use it to fine-adjust the drive distance of the paper guide plate of the duplexing unit for each paper size. Use this mode if pick-up failure or skew movement occurs when paper is picked up from the duplexing unit in two-sided/overlay copying mode.	-10~+10	Step: 0.183 mm x 2 Each step will affect both front and rear paper guides so that a signal step will result in a change of 0.367 mm. (A negative value will make the distance smaller.)

A negative value will make the distance smaller.
A single step represents a distance of 0.367 mm; since a single step will affect both front and rear, each step will result in a change of 0.183 × 2 mm.

<Screen 3-17>

Item	Description	Settings	Remarks
B4_PSZ B5_PSZ B5R_PSZ	Use it to fine-adjust the drive distance of the paper guide plate of the duplexing unit for each paper size. Use this mode if pick-up failure or skew movement occurs when paper is picked up from the duplexing unit in two-sided/overlay copying mode.	-10~+10	Step: 0.183 mm x 2 Each step will affect both front and rear paper guides so that a signal step will result in a change of 0.367 mm. (A negative value will make the distance smaller.)

G. Function Mode (✻4✻)

Press the <</>> key to select the screen.
Press the item to highlight, and press the User Mode key (*) to start the operation.
Check to make sure that the machine is in standby state when executing any operations.

<Screen 4-1>

Item	Description	Remarks
TONER-S	Use it for toner supply (at time of installation). The notation indicates the supply duration in sec: normally, 7 to 9 min (420 to 540 sec). Check to make sure that the developing assembly is installed properly and locked in place; then, press the OK key to start toner supply.	The operation will stop automatically.

Note:
The message "Check the Developer" will appear in response to the first press on the ✻ key. After making sure that the developing assembly has been installed, press the OK key on the touch panel and then the ✻ key.

<Screen 4-2>

Item	Description	Remarks
ERROR	Use it to reset E000, E001, E002, E003, E05, E013, E020 and the jam history, error history, sorter jam, RDF jam, or alarm history. Resetting E000, however, will not reset the jam history.	

<Screen 4-3>

Item	Description	Remarks
DISP-LED	Use it to turn ON the LEDs on the control panel.*	
LCD-CHK	Use it to turn ON the LCD on the control panel. (The LCD back light will remain OFF for 3 sec and then return.)	
SCANLAMP	Use it to turn ON the scanning lamp. (The scanner cooling fan will also turn ON.)	The lamp will remain ON for 3 sec.

* : The Start key red LED,
The Start key green LED,
The Pre-Heat key LED,
The Interrupt key LED,
The User Mode key LED,
The Pilot Lamp LED will turn ON and OFF in sequence.

<Screen 4-4>

Item	Description	Remarks
BLANK	Use it to turn ON the blank exposure lamp.	The lamp will remain ON for 3 sec.
PRE-EXP	Use it to turn ON the pre-exposure LED lamp.	The lamp will remain ON for 3 sec.
HPPR-MTR	Use it to operate the hopper motor. (M10 and M11 will rotate simultaneously.)	The motor will operate for 3 sec.
BK-ROT	Use it to operate the developing cylinder.	The cylinder will operate for abut 2 min.

<Screen 4-5>

Item	Description	Remarks
AE-ADJ	Use it to specify how density measurement level automatic adjustment should be executed in AE mode: If set to 0, set F5 original. If set to 1, set F9 original.	

<Screen 4-6>

Item	Description	Remarks
NIP	Use it to specify how nip automatic measurement should be executed for the fixing roller. A solid black image will be created automatically and stopped at the fixing roller; in about 20 sec, automatic discharge will occur.	See p. 2-29.
PO-CONT	Use it to turn ON/OFF potential control.	1:OFF 0:ON

<Screen 4-7>

Item	Description	Remarks
C1-STMTR		100V model only.
C1-A4R		100V model only.
C2-STMTR		100V model only.
C2-A4R		100V model only.

<Screen 4-8>

Item	Description	Remarks
C3-STMTR	Use it for automatic adjustment of paper width reference point 1 (STMTR) for cassette 3.	
C3-A4R	Use it for automatic adjustment of paper width reference point 2 (A4R) for cassette 3.	
C4-STMTR	Use it for automatic adjustment of paper width reference point 1 (STMTR) for cassette 4.	
C4-A4R	Use it for automatic adjustment of paper width reference point 2 (A4R) for cassette 4.	

* Slide out the cassette, set the paper width guide plate inside the cassette to suit the paper size, and slide in the cassette. Thereafter, select the item on the screen to read the paper width reference point.

<Screen 4-9>

Item	Description	Remarks
MF-A6R	Use it for automatic adjustment of paper width reference point 1 (A6R) for the multifeeder.	
MF-A4R	Use it for automatic adjustment of paper width reference point 2 (A4R) for the multifeeder.	
MF-A4	Use it for automatic adjustment of paper width reference point 3 (A4) for the multifeeder.	

* Slide out the cassette, set the paper width guide plate inside the cassette to suit the paper size, and slide in the cassette. Thereafter, select the item on the screen to read the paper width reference point.

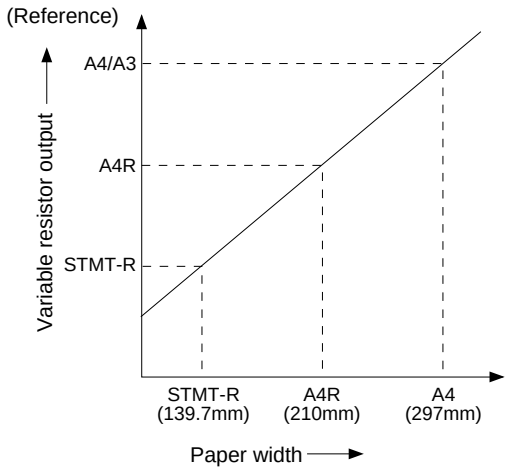

Figure 4-1

Note:
The value ‘A6R’ (width) is used as one of the basic values when the paper width detecting VR of the multifeeder is replaced.
However, the size label does not show “A6R,” and the width guide will not click into position.
As a guide, keep in mind that A6R is the result of A4 paper folded into four with the width being 105 mm.

<Screen 4-10>

Item	Description	Remarks
RFSKEW	Use it to correct skew movement in the RDF.	
RF-AE	Use it for automatic adjustment of the RF AE sensor.	100V model only.
RFSE-INT	Use it to initialize the RDF sensor.	*
S-BCLN	Use it to clean the RDF separation belt.	

* Executing 'START' will keep the indication on the screen '0'. Refer to LEDs 1, 2, and 3 of the RDF controller PCB (flash in sequence or simultaneously) .

<Screen 4-11>

Item	Description	Remarks
RAM-INIT	Use it to initialize the RAM on the DC controller PCB.	After initialization, the Copy Start screen will appear.

H. Options Mode (✻5✻)

Press the <</>> key to select the screen.
Press the appropriate item to highlight; then, enter the appropriate value on the keypad.
Use user mode to set/re-set each mode.

<Screen 5-1>

Item	Description	Remarks
SHUT-OFF	Use it to turn ON/OFF the auto shut-off function.	1:OFF 0:ON
DENS-ID	Use it to switch copy density notation.	0:9-step 1:17-step
SIZE-DET	Use it to turn ON/OFF the size detection function.	1:OFF 0:ON
COIN-SET	Use it to switch between "coin" and "copy card" for the display of the control card on the control panel.	0:control card 1:coin 2:copy card

<Screen 5-2>

Item	Description	Remarks
DK-SZ-R	Use it to switch the paper sizes for the deck.	0:A4 1:LTR 2:B5
DK-SZ-L (Not used)	Use it to switch the paper size for the left deck.	0:A4 1:LTR 2:B5
COPY-LIM	Use it to set the copy count upper limit. (May be any number between 1and 999.)	
CALL-SW	1. You may use any available area within the current mode memory. 2. Use 'OPTION CALL SW' in service mode (✻5✻) 0 : Disable call function. (All will be used for mode memory.) 1~9 : Enable call for the settings (copying modes). The initial value is '0' and may be set to between '1' and '9'. 3. A call function may be recalled in the same way a mode memory is recalled. 4. The settings will be stored in response to a normal copy start (not after jam, alarm, interrupt, suspension). For instance, if the setting is '3', mode memory 7: most recent copying mode mode memory 8: second most recent copying mode counting from memory 7 mode memory 9: second most recent copying mode counting from memory 8 mode memory 1~6: functions as normal mode memory	

<Screen 5-3>

Item	Description	Remarks
M-NOTATI	Use it to change the available paper size listing of the multifeeder.	

<Screen 5-4>

Item	Description	Remarks
U-NOTATI	Use it to switch the notation for universal size papers: 0: indicates U1, U2, U3, U5 1: indicates the size selected under 'CST-GRP'	
AE-SW	Use it to specify whether to use the RDF's AE or the copier's AE. (Normally, the RDF's AE will be used whenever the RDF is used; select the copier's AE if the RDF's AE fails for some reason.) Note that stream reading will not be available when the RDF's AE is not used.	100V model only. 1: Copier 0: RDF
DOC-F-SW	Use it to enable/disable stream reading.	100V model only. 0: Enable 1: Disable
DF-SIZE	Use it to specify auto paper selection for a stack of mixed AB- and Inch-configuration papers. Enable it according to the model used; detection will occur, for instance, when A4 and LTR paper are used at the same time.	0: Enable detection 1: Disable detection

<Screen 5-5>

Item	Description	Remarks
CST-GRP1	Use it to select the type of notation when 'U-NOTATI' for universal size paper is set to '1'. 0: G LTR (indicated as LTR) 1: K LGL (indicated as U)	
CST-GRP2	Use it to select the type of notation when 'U-NOTATI' for universal size paper is set to 1'. 0: FLSC (indicated as FLSC) 1: OFI (indicated as OFI) 2: E-OFI (indicated as OFI) 3: A-LGL (indicated as LGL) 4: S-OFI (Indicated as OFI)	
CST-GRP3	Use it to select the type of notation when 'U-NOTATI' for universal size paper is set to '1'. 0: G LGL (indicated as LGL) 1: FOLI (indicated as FOLI) 2: A FLS (indicated as FLSC)	
CST-GRP4	Use it to select the type of notation when 'U-NOTATI' for universal size paper is set to '1'. 0: LTR (indicated as LTR) 1: A LTR (indicated as LTR)	

<Screen 5-6>

Item	Description	Remarks
FUZZY	Use it for controlling (fuzzy) the current applied to the pre-transfer, transfer, and separation charging assemblies according to the ambient temperature. You may disable control and opt for one of three environment settings.	0: Fuzzy control ON 1: If the image is light under high humidity condition 2: If the humidity condition is normal 3: If copy paper comes into contact with the cleaner separation claw under low humidity condition Select '0', '1', '2', or '3' on the keypad, and press the ✻ key.
VDT-SW	Use it to switch the dark area target potential (VDT) for potential control if the solid areas of copy images are too light.	-2: for lighter images -1: for somewhat lighter images 0: default +1: for somewhat darker images +2: for darker images
CPMKP-SW	Use it to turn ON/OFF the special sequence in which the copying speed is decreased to maintain fixing of copy images in a low-temperature environment.	0: ON 1: OFF
OHP-TEMP	Use it to lower the fixing temperature by a specific range.	0: Normal control temp 1: –5°C 2: –10°C 3: –15°C 4: –20°C

<Screen 5-7>

Item	Description	Remarks
IDL-SW	Use it to turn ON/OFF the drum idle rotation mode to prevent distortion of images under high-humidity conditions or light images at time of power-on (e.g., in the morning).	0: OFF (no idle rotation) 1: ON (control by IDL-MODE setting)
IDL-MODE	Use it to switch the idle rotation mode when the power switch is turned ON with the surface temperature of the fixing roller 75°C or less. If the humidity increases at times and causes image faults, select '1' or '2' even in a normal operating environment.	0: automatic control using humidity sensor data 1: idle rotation for 2 min 2: idle rotation for 5 min
TSPLY-SW	Use it to switch toner supply in reference to the humidity sensor.	0: control toner supply motor using humidity data Medium to low humidity: ON for 2 sec OFF for 1 sec High humidity: ON for 4 sec OFF for 2 sec 1: toner supply motor ON for 2 sec and OFF for 1 sec
AL-DISP	Use it to specify whether the indication of the web length alarm and the waste toner full alarm should be in service mode only or at all times.	0: in service mode only 1: at all times

<Screen 5-8>

Item	Description	Remarks
F-POT-SW	Enter '1' if transfer separation faults occur because of an error (faulty) in the potential sensor. Use it as a tentative remedy until replacing the potential sensor.	
F-POT-D	Use it when changing the setting 'F-POT-SSW' (0 → 1). 0: If the user uses text-oriented originals. 1: If the user uses photo-oriented originals. 2: If re-transfer (white spots at points 50 mm around the leading edge) occurs. The degree of separation current is in the order of 0 > 1 > 2.	
F-HUM-SW	Enter '1' if an error (fault) is found in the environment sensor (so that the copier will assume the input of F-HUM-D as the output of the humidity sensor). Use it as a tentative remedy until replacing the environment sensor.	
F-HUM-D	Enter an approximate humidity value of the site of installation; between 30% and 99%.	Factory default : 35

<Screen 5-9>

Item	Description	Remarks
SCAN_SEL	Use it to turn ON/OFF the original size detection function for RDF non-default original sizes. ON: So that an assumed original size will be used if the size of an original is not one of the defaults for such modes as require identification of original size (APS, AMS, frame erasing).	0: OFF 1: ON
2SIDE_SL	Use it to select two-sided mode (one-sided to two-sided) as standard copying mode. (If '0' is selected, you must initialize the standard mode in user mode for the notation 'two-sided' to appear.)	0: OFF 1: ON
M-LENGTH	Use it to register a non-default size paper for multiple manual feeding. **Note:** Copying is allowed only when the copier is not equipped with a sorter. (Otherwise, a sorter jam would occur because of a length error.)	432 to 600 mm (in 0.1 mm)
PO-CNTMD	Use it to specify whether to turn ON/OFF potential control for the first normal copying run in 10/60 min after standby (following power-on).	0: ON 1: OFF

I. Counter Mode (✻6✻)

•Press the <</>> key to select the screen.
•Press the item to highlight; then, depressing the service switch while the screen is on the display, press the C key on the control panel to reset the counter reading to '00000000'.

<Screen 6-1>

Item	Description	Remarks
L-TOTAL	Use it for the large-size total copy counter. (paper length 300 mm or more or non-default size)	Returns to '00000000' after '99999999'.
L-MULTI	Use it for the large-sized multifeeder copy counter. (paper length 300 mm or more or non-default size)	Returns to '00000000' after '99999999'.
L-CST1	Use it so that copies from the paper deck will not be counted but copies from the large-size cassette 1 will be counted. (paper length 300 mm or more or non-default size)	Returns to '00000000' after '99999999'.
L-CST2	Use it so that copies from the paper deck will not be counted but copies from the large-size cassette 2 will be counted. (paper length 300 mm or more or non-default size)	Returns to '00000000' after '99999999'.
L-CST3	Use it so that copies from the large-size cassette 3 will be counted. (paper length 300 mm or more or non-default size)	Returns to '00000000' after '99999999'.
L-CST4	Use it so that copies from the large-size cassette 4 will be counted. (paper length 300 mm or more or non-default size)	Returns to '00000000' after '99999999'.

<Screen 6-2>

Item	Description	Remarks
L-OVERLAY	Use it so that the 2nd sides of large-size overlay copies will be counted. (paper length 300 mm or more or non-default size)	Returns to '00000000' after '99999999'.
L-2-SIDE	Use it so that the 2nd sides of large-size two-sided copies will be counted. (paper length 300 mm or more or non-default size)	Returns to '00000000' after '99999999'.
L-DF	Use it so that large-size originals will be counted. (paper length 300 mm or more or non-default size)	Returns to '00000000' after '99999999'.

<Screen 6-3>

Item	Description	Remarks
S-TOTAL	Small-size total copy counter (paper length 300 mm or less)	Returns to '00000000' after '99999999'.
S-MULTI	Small-size multifeeder copy counter (paper length 300 mm or less)	Returns to '00000000' after '99999999'.
S-CST1	Small-size cassette 1/right deck pick-up copy counter (paper length 300 mm or less)	Returns to '00000000' after '99999999'.
S-CST2	Small-size cassette 2 pick-up copy counter (paper length 300 mm or less) (100V model only)	Returns to '00000000' after '99999999'.
S-CST3	Small-size cassette 3 pick-up copy counter (paper length 300 or less)	Returns to '00000000' after '99999999'.
S-CST4	Small-size cassette 4 pick-up copy counter (paper length 300 or less)	Returns to '00000000' after '99999999'.

<Screen 6-4>

Item	Description	Remarks
S-OVERLAY	Small-size overlay 2nd side copy counter (paper length 300 mm or less)	Returns to '00000000' after '99999999'.
S-2-SIDE	Small-size 2nd side 2-sided copy counter (paper length 300 mm or less)	Returns to '00000000' after '99999999'.
S-DF	Small size original counter (paper length 300 mm or less)	Returns to '00000000' after '99999999'.

<Screen 6-5>

Item	Description	Remarks
WEB	Copy counter after replacement of the fixing cleaning belt (An alarm will be issued at the start of service mode after making 250,000 copies.)	Returns to '00000000' after '99999999'.
WSTTNR	Copy counter after disposal of the waste toner from the waste toner case (An alarm will be issued at the start of service mode after making 250,000 copies.)	Returns to '00000000' after '99999999'.
L_PU*	RDF left pick-up counter	Returns to '00000000' after '99999999'.
R_PU*	RDF right pick-up counter (100V model only.)	Returns to '00000000' after '99999999'.
PRINT-JAM	Copier/sorter jam counter	Returns to '00000000' after '99999999'.
DH-JAM	Feeder jam counter	Returns to '00000000' after '99999999'.

* In view of such durables as requiring replacement by pick-up source (e.g., RDF separation pad).

■ Incrementing the Counter Reading

① TOTAL
- For the 1st side of overlay/2-sided copies, when paper is stacked on the holding tray.
- For one-sided copies and the 2nd side of overlay/2-sided copies, when the paper is discharged outside the machine. (If a sorter is installed, when the paper is discharged to the sorter bin.)

② OVERLAY, 2_SIDE
- When the paper (overlay/2-sided copy) is discharged outside the machine.

③ MULTI, CST
- When the copy paper picked up from each of these sources is discharged outside the machine.
- For the 1st side of an overlay/2-sided copy, when the paper is stacked on the holding tray.

④ RDF
- When the size of the original is identified after picking it up in the RDF.

CHAPTER 5 SELF DIAGNOSIS

The microprocessor of the machine's DC controller is equipped with a function that checks the condition of the machine (particularly the condition of its sensors); it will indicate an error code on the control panel upon detection of an error.

A. Copier

Code	Cause	Description
E000	• Main thermistor (TH1; poor contact, open circuit) • Fixing heater (H1, H2; open circuit) • Thermal switch (TS1; open circuit) • SSR (faulty) • DC controller PCB (faulty) • Sub thermistor (TH2; poor contacrt; open circuit i.e., the power switch turns off in about 5 sec after 'E000' is indicated.)	• The temperature of the upper fixing roller does not reach 70°C within 3 min 30 sec after power-on.
E001	• Main thermistor (TH1; short circuit) • SSR (faulty) • Sub thermistor (TH2; overheating) • DC controller PCB (faulty)	• The temperature of the upper fixing roller exceeds 230°C for 2 sec or more.
E002	• Main thermistor (TH1; poor contact, open circuit) • Fixing heater (H1, H2; open circuit) • Thermal switch (TS1; open circuit) • SSR (faulty) • DC controller PCB (faulty)	• The temperature of the upper fixing roller does not reach 100°C within 2 min after it has exceeded 70°C. • The temperature of the upper fixing roller does not reach 150°C within 2 min after it has exceeded 100°C.
E003	• Main thermistor (TH1; poor contact, open circuit) • Fixing heater (H1, H2; open circuit) • SSR (faulty) • DC controller PCB	• The temperature of the upper fixing roller is 70°C or less for 2 sec or more after it has reached 100°C.
E004	• SSR (faulty) • DC controller PCB (faulty)	• An open circuit is detected in the SSR used to drive the fixing heater.
E005	• Cleaning belt (fixing assembly; taken up) • Cleaning belt sensor (PS11; faulty) • DC controller PCB (faulty)	• The take-up length of the cleaning belt inside the fixing assembly exceeds a specific value.
E006	• Connector (fixing assembly rear; poor contact) • DC controller PCB (faulty)	• The fixing feeding assembly has become displaced during copying operation.
E010	• Main motor (M1; faulty) • DC controller PCB (faulty)	• Clock pulses (2 or more) are not generated within 1 sec after the main motor drive signal has been generated.

Code	Cause	Description
E013	• Waste toner feeding screw (faulty) • DC controller PCB (faulty)	• The waste toner feeding screw cannot rotate, and the detecting switch (MSW4) has been pressed a multiple number of times within a specific period of time.
E015 Note 2	• Pick-up motor (M2; faulty) • DC controller PCB (faulty)	• Clock pulses (2 or more) are not generated within 1 sec after the pick-up motor drive signal has been generated.
E020	• Hopper motor (M10, M11; faulty) • Developing assembly toner level detection circuit (faulty) • Hopper toner level detection circuit (faulty) • DC controller PCB (faulty) • Hopper connector (not connected)	• The toner supply signal remains '0' (toner absent) for 2 min or more during copying operation. • The toner supply signal does not go '1' in 10 min when toner supply sequence is initiated at time of installation.
E030	• Total copy counter (open circuit) • DC controller PCB (faulty)	• An open circuit is detected in the total copy counter when the toner copy counter drive is OFF.
E031	• Option counter (open circuit) • DC controller PCB (faulty) • Vertical path drive electromagnetic clutch (C215; open circuit in harness)	• An open circuit is detected in the option counter when the option counter drive is OFF.
E050	• Holding tray X home position sensor (PS21; faulty) • Holding tray X motor (M8; faulty) • DC controller PCB (faulty)	• The holding tray X home position signal (HTXHP) is not generated within 4 sec when the holding tray X motor (M8) drive signal is being generated. • The holding tray X home position signal (HTXHP) is generated for 2 sec or more when the holding tray X motor (M8) drive signal is being generated.
E051	• Holding tray Y home position sensor (PS20; faulty) • Holding tray Y motor (M9; faulty) • DC controller PCB (faulty)	• The holding tray Y home position signal (HTYHP) is not generated within 4 sec when the holding tray Y motor (M9) drive signal is being generated. • The holding tray Y home position signal (HTYHP) is generated for 2 sec or more when the holding tray Y motor (M9) drive signal is being generated.

Code	Cause	Description
E203	• Scanner home position sensor (PS1; faulty) • DC controller PCB (faulty)	• The scanner home position signal (SCHP) is generated for 0.5 sec or more when the scanner motor (M3) drive signal is being generated.
(E202) No code indication; keys are locked;	• Scanner motor (M3; faulty) • Scanner home position sensor (PS1; faulty) • DC controller PCB (faulty)	• The scanner home position signal (SCHP) is not generated within 10 sec after the power switch or the Copy Start key has been turned ON.
(E204) No code indication; keys are locked; Note 2.	• Scanner motor (M3; faulty) • Scanner original leading edge sensor (PS3, PS4; faulty) • DC controller PCB (faulty)	• The scanner leading edge signal (SCDP1) is not generated within 0.8 sec after the scanner starts to move forward. • The scanner leading edge signal (SCDP2) is not generated within 1.0 sec after the scanner starts to move forward. (100V model only)
E210	• Lens X home position sensor (PS6; faulty) • Lens X motor (M4; faulty) • DC controller PCB (faulty)	• The lens X home position signal (LXHP) is not generated within 9 sec after the power switch or the Copy Start key has been pressed. • The lens X home position signal (LXHP) is generated for 2 sec or more.
E212	• Lens Y home position sensor (PS7; faulty) • Lens Y motor (M5; faulty) • DC controller PCB (faulty)	• The lens Y home position signal (LYHP) is not generated within 9 sec after the power switch or the Copy Start key is pressed. • The lens Y home position signal (LYHP) is generated for 2 sec or more.
E213 (100V model only)	• Scanner lock sensor (PS48; faulty) • Scanner locking solenoid (SL1; faulty) • DC controller PCB (faulty)	• The scanner lock sensor signal (SCLK) is not generated within a specific period of time after scanner locking is initiated in stream reading mode. • The scanner doe not stop at the scanner original leading edge 2 sensor (PS4).
E220	• Lamp regulator (faulty) • PC controller PCB (faulty)	• The scanning lamp turns ON during standby. • The scanning lamp turns OFF during copying. • The lamp ON detection signal (CVRON) is generated even when the scanning lamp ON signal (LAON) is '0'.

Code	Cause	Description
E240	• DC controller PCB (faulty)	• An error has occurred in the communication between the master (Q156) and the slave (Q140) in the microprocessor on the DC controller PCB.
E243	• DC controller PCB (faulty) • Control panel PCB (faulty)	• An error has occurred in the communication between the master (Q156) on the microprocessor on the DC controller PCB and the slave (Q140) in the microprocessor on the control panel PCB.
E710	• DC controller PCB (faulty)	• The RAM (Q136, Q137, Q138, Q162) on the DC controller PCB cannot be initialized at power-on.
E711	• DC controller PCB (faulty)	• The RAM (Q136, Q137, Q138, Q162) on the DC controller PCB goes out of order after power-on.
E712	• RDF controller PCB (faulty) • Connector (poor contact) • 24V power supply (faulty)	• The communication IC on the RDF controller PCB goes out of order.
E713	• Sorter controller PCB (faulty) • Connector (poor contact) • 24V power supply (faulty)	• The communication IC on the sorter controller PCB goes out of order.
E800	• Auto power-off circuit (open circuit) • DC controller PCB (faulty)	• An open circuit is detected in the auto power-off circuit. • The auto power-off signal has occurred twice or more within 2 sec.
E802	• Auto power-off circuit (faulty) • DC controller PCB (faulty)	• The relay (RY401) in the power supply unit does not operate in response to the auto power-off signal.

Caution:

1. When the self diagnosis function has turned ON, you can reset the machine by turning its power switch OFF once.
   E000, E001, E002, E003, E004, E005, E013, or E020 is not reset by turning OFF the power switch; this is to prevent the user from casually resetting the machine when the thermistor has an open circuit, since such would overheat and damage the fixing roller and would cause overflowing of toner from the hopper.
   For E000 through E003, the power switch will automatically turn off in about 20 sec when it is turned on without resetting the copier. In the case of an open circuit in the sub thermistor (TH2), however, the power switch will turn off in about 5 sec after 'E000' is indicated.
   To clear E000, E001, E002, E003, E004, E005, E013 or E020, you must clear the data in the RAM on the DC controller PCB as follows:

1) Start service mode (✻ 4 ✻).
2) Press the ◀◀/▶▶ key to select 'ERROR'.
3) Press the OK key to clear the E code.
4) The message display on the control panel will be refreshed, and the copy mode screen will return.

2. E015, E202, or E204 may be checked under 'B-ERR1', 'B-ERR2', or 'B-ERR3' in service mode (✻ 1 ✻).

B. RDF Self Diagnosis

Code	Cause	Description
E400	• Data communication with copier (faulty)	• The communication is monitored at all times, and this error is detected if the communication is disrupted for 5 sec or more.
E401	• Pick-up motor (M1; fails to rotate) • Pick-up roller sensor (S5; faulty)	• A flag is attached to the spindle of the pick-up motor (M1), and the rotation of the motor is monitored with reference to the flag blocking the pick-up roller sensor (S5). This error is detected when S5 does not turn on and off twice or more with 1 sec.
E402	• Belt motor (M3; fails to rotate) • Belt motor clock sensor (S10; faulty)	• The number of belt clock pulses within 200 msec is below a specific number.
E403	• Feeding motor (M2; fails to rotate) • Feeding motor clock sensor (S9; faulty)	• The number of feeding motor clock pulses within 200 ms is below a specific number.
E411	• Original tray paper sensor (S1; faulty) • Registration sensor (S3; faulty)	• The output of the sensor is 2.3 V or more in the absence of paper.

Note:
When the self diagnosis mechanism has turned on, turn off and then on the power switch to reset.
You may continue to make copies even when the RDF has gone out of order; simply disconnect the lattice connector from the RDF, open the RDF, and place the original on the copyboard glass.

C. Sorter Self Diagnosis

Code	Cause	Description
E500	• CPU or communication IC	• An error has occurred in the communication between the sorter and the copier.
E510	• Feeding motor (fails to rotate) • Feeding guide up/down mechanism (e.g., interference)	• The lock signal from the motor is off for a specific period or more.
E522	• Push bar motor (fails to rotate)	• The operation does not end within a specific period after the motor drive signal has been generated.
E523	• Reference wall motor (fails to rotate)	• The operation does not end within a specific period after the motor drive signal has been generated.
E524	• Multiguide motor (fails to operate)	• The operation does not end within a specific period after the motor drive signal has been generated.
E525	• Bin paper sensor automatic adjustment (faulty)	• Automatic adjustment of the bin paper sensor cannot be executed; or, there is an error in the adjustment value.
E526	• Bin paper sensor automatic adjustment (faulty)	• Automatic adjustment of the bin paper sensor cannot be executed; or, there is an error in the adjustment value.
E530	• Guide bar drive motor (fails to rotate)	• The motor does not stop operation within a specific period of time after the motor drive signal has been generated.
E531	• Stapler unit drive motor (fails to rotate)	• The motor does not stop to operate within a specific period after the motor drive signal has been generated. • The clock signal is absent from the clock sensor of the motor within a specific period. • The input signal from the drive home position sensor remains unchanged for a specific period.

■ Sorter

• Error Indications, Error Types, and Timing of Detection

Code	Cause	Description
E532	• Stapler unit drive motor (fails to rotate)	• The operation does not end within a specific time after the motor drive signal has been generated.
E533	• Stapler internal paper sensor (faulty adjustment)	• The stapler internal automatic adjustment mechanism has failed or an error has occurred in the automatic adjustment value.
E540	• Bin shift motor (fails to rotate)	• The operation does not end within a specific period after the motor drive signal has been generated. • Clock signals from the clock sensor of the motor are absent for a specific period. • The input signal from the lead cam position sensor does not change for a specific period.
E550	• Power supply (faulty)	• 24 VP is absent during the copier's initial rotation or when the Copy Start key is pressed.

■ Resetting

When the copier is making a copy,

① The copier indicates 'Jam'.
② After jam resetting, the copier indicates 'Turn On the Power'.
③ After the power has been turned off and then on, the copier runs a self check, and will reset itself if the results are good. (If the results are not good, it will enter "down" state* , indicating 'E5XX' on its control panel.)

When the copier is not making a copy,

① The copier indicates 'Turn On the Power'.
② After the power has been turned off and then on, the copier runs a self check, and will reset itself if the results are good. (If the results are not good, it will enter "down" state* , indicating 'E5XX' on its control panel.)

• In "down" state,

① The copier indicates 'E5XX'.
You can disconnect the sorter and continue to make copies † (as long as you are not using a function which requires a sorter).
If you select a mode which requires a sorter, the copier will indicate 'Mode Is Not Available'.
The copier will run a self check and will reset itself if the results are good.

* A state in which an 'E' indication is displayed.
† You need not detach the sorter from the copier.

APPENDIX
A. GENERAL TIMING CHART

• A4, 2 Copies, Continuous, Paper Deck

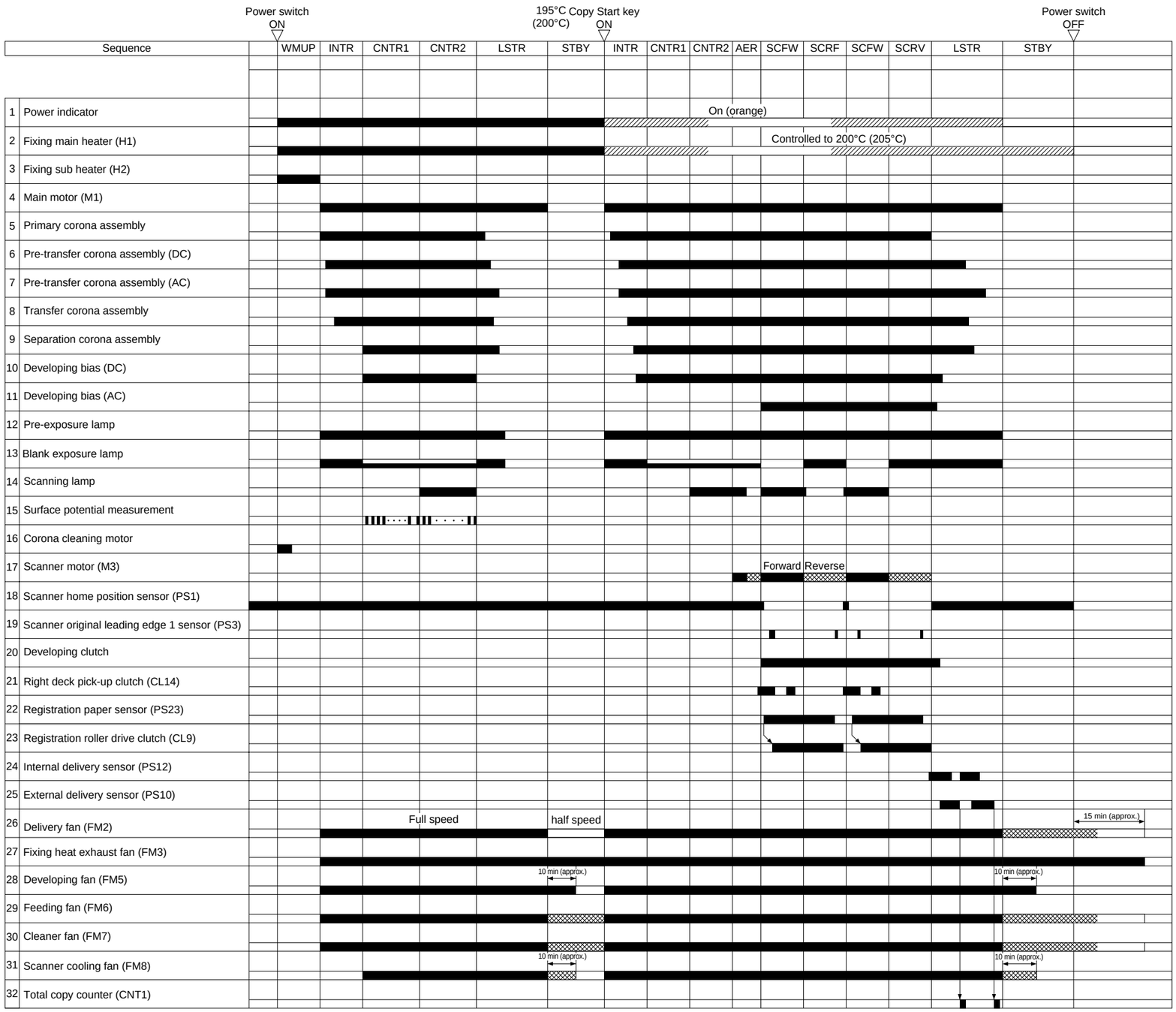

B. SIGNALS AND ABBREVIATIONS

What follows below is a list of signals and abbreviations used in the chapters of the manual and circuit diagrams.
The abbreviations within parentheses represent analog signals, which cannot be expressed in terms of '1' or '0'.

1. Signals

ACBTP	AC BIAS TIMING PULSE command
ACON	AC TRANSFORMER DRIVE command
LED2ON	BLANK EXPOSURE (0V) command
RDLTP	RIGHT DECK LIFTER POSITION signal
C3LMD	CASSETTE 3 LIFTER MOTOR DRIVE command
C3LTP	CASSETTE 3 LIFTER POSITION signal
C3PD	CASSETTE 3 PAPER DETECT signal
C3PL0	CASSETTE-3 PAPER LENGTH signal
C3PL1	CASSETTE-3 PAPER LENGTH signal
C3PUCD	CASSETTE 3 PICK-UP ROLLER CLUTCH DRIVE command
C3PURR	CASSETTE 3 PICK-UP ROLLER RELEASE SOLENOID DRIVE command
C3PW	CASSETTE-3 PAPER WIDTH signal
C3SS	CASSETTE 3 SET UP signal
C4LMD	CASSETTE 4 LIFTER MOTOR DRIVE command
C4LTP	CASSETTE 4 LIFTER POSITION signal
C4PD	CASSETTE 4 PAPER DETECT signal
C4PL0	CASSETTE-4 PAPER LENGTH signal
C4PL1	CASSETTE-4 PAPER LENGTH signal
C4PUCD	CASSETTE 4 PICK-UP ROLLER CLUTCH DRIVE command
C4PURR	CASSETTE 4 PICK-UP ROLLER RELEASE SOLENOID DRIVE command
C4PW	CASSETTE-4 PAPER WIDTH signal
C4SS	CASSETTE 4 SET UP signal
CBCC	COPYBOARD COVER CLOSED signal
CBOP	CLEANING BELT OUT PRECAUTION signal
CCNNT	CONTROL CARD DETECT signal
CCNTD	CONTROL CARD DRIVE command
CL11D	VERTICAL PATH ROLLER 3 CLUTCH DRIVE command
CL13D	VERTICAL PATH ROLLER 4 CLUTCH DRIVE command
CL15D*	VERTICAL PATH ROLLER 1 CLUTCH DRIVE command
CL18D*	VERTICAL PATH ROLLER 0 CLUTCH DRIVE command
DCBC	DC BIAS CONTROL signal
DCBTP	DC BIAS TIMING PULSE command
DEVCD	DEVELOPING CLUTCH DRIVE command
DHRD	DRUM HEATER DRIVE command
DPDSD	DELIVERY PAPER DEFLECTOR SOLENOID DRIVE command
DSZ1	DOCUMENT SIZE 1 signal
DSZ2	DOCUMENT SIZE 2 signal
DSZ3A	DOCUMENT SIZE 3 signal
DSZ3B	DOCUMENT SIZE 3 signal
DTEP	DEVELOPER TONER signal
EXDPD	EXTERNAL DELIVERY PAPER DETECT signal
FCBSD	FIXING CLEANING BELT DRIVE SOLENOID DRIVE command
FDOD	FRONT DOOR OPEN DETECT signal
FFUCNT	FIXING/FEEDER UNIT CONNECT signal
FFULSD	FIXING/FEEDER UNIT LOCK SOLENOID DRIVE command
FM2D	EXHAUST FAN DRIVE command (HALF SPEED)
FM3D	EXHAUST FAN DRIVE command (HALF SPEED)
FM7D	EXHAUST FAN DRIVE command (HALF SPEED)
FM2D	EXHAUST FAN DRIVE command (FULL SPEED)
FM3D	EXHAUST FAN DRIVE command (FULL SPEED)
FM5D	DEVELOPING UNIT COOLING FAN DRIVE command
FM6D	FEEDER FAN DRIVE command
FM7D	EXHAUST FAN DRIVE command (FULL SPEED)
FM8D	SCANNING LAMP COOLING FAN DRIVE command
FXCJS	FIXING ASSEMBLY CLAW JAM signal
FXDEL	FIXING UNIT DELIVERY PAPER DETECT signal
FXDSD	FIXING UNIT DRIVE SOLENOID command
FXGDSD	FIXING ASSEMBLY GUIDE DOWN SOLENOID DRIVE command
FXGUSD	FIXING ASSEMBLY GUIDE UP SOLENOID DRIVE command
HTCNT	HOLDING TRAY CONNECT signal
HTDSD	HOLDING TRAY D-CUT SOLENOID DRIVE command
HTF1CD	HOLDING TRAY FEEDER 1 CLUTCH DRIVE command
HTF2CD	HOLDING TRAY FEEDER 2 CLUTCH DRIVE command
HTFCNT	HOLDING TARY FEEDER UNIT CONNECT signal
HTFWCD	HOLDING TRAY FORWARD CLUTCH DRIVE command
HTJSD	HOLDING TRAY JOGGING SOLENOID DRIVE command
HTLPD	HOLDING TRAY LAST PAPER DETECT HOME POSITION signal
HTPDD	HOLDING TRAY PAPER DEFLECTOR SOLENOID DRIVE command
HTRGCD	HOLDING TRAY REGISTRATION ROLLER CLUTCH DRIVE command
HTRVCD	HOLDING TRAY REVERSE CLUTCH DRIVE command
HTSPCD	HOLDING TRAY SEPARATION CLUTCH DRIVE command
HTWSD	HOLDING TRAY WEIGHT SOLENOID DRIVE command
HTXHP	HOLDING TRAY X HOME POSITION signal
HTYHP	HOLDING TRAY Y HOME POSITION signal
HUM1	MACHINE INSIDE HUMIDITY signal 1
HUM2	MACHINE INSIDE HUMIDITY signal 2
HVPCT	PRE-TRANSFER CORONA CURRENT CONTROL command
HVSCT	SEPARATION CORONA CURRENT CONTROL command
HVTCT	TRANSFER CORONA CURRENT CONTROL command
HVTPC	PRIMARY CORONA CURRENT CONTROL command
IDPD	INSIDE DELIVERY PAPER DETECT signal
LAON	SCANNING LAMP DRIVE command
LCDLGHT	LCD BACK-LIGHT ON command
LED2CK	BLANK EXPOSURE command (CLOCK)
LED2DT	BLANK EXPOSURE command (DATA)
LED2LD	BLANK EXPOSURE command (DATA LATCH)
LINT	CVR PWM signal
LXHP	LENS X HOME POSITION signal
LYHP	LENS Y HOME POSITION signal
M1H/L	MAIN MOTOR SPEED CHANGE command
M2BLK	PAPER PICK UP MOTOR BRAKE command
M2H/L	PAPER PICK-UP MOTOR SPEED CHANGE command
M3BRK	SCANNER MOTOR BRAKE command
M3F/R	SCANNER MOTOR FORWARD command
M3FS	SCANNER MOTOR SPEED signal
M3MD0	SCANNER MOTOR REPRODUCTION RATIO SELECT (0) command

M3MD1	SCANNER MOTOR REPRODUCTION RATIO SELECT (1) command
M3MD2	SCANNER MOTOR REPRODUCTION RATIO SELECT (2) command
M3ON	SCANNER MOTOR DRIVE command
M3CL	SCANNER MOTOR PLL CONTOL command
M4A	LENS X MOTOR (A) command
X-HOLD	LENS X MOTOR (HOLD) command
M4B	LENS X MOTOR (B) signal
M5A	LENS Y MOTOR (A) signal
Y-HOLD	LENS Y MOTOR (HOLD) signal
M5B	LENS Y MOTOR (B) signal
M8A	HOLDING TRAY X MOTOR (A) command
M8B	HOLDING TRAY X MOTOR (B) command
M8HLD	HOLDING TRAY X MOTOR (HOLD) command
M9A	HOLDING TRAY Y MOTOR (A) command
M9B	HOLDING TRAY Y MOTOR (B) command
M9HLD	HOLDING TRAY Y MOTOR (HOLD) command
M1FG	MAIN MOTOR 1/4 CLOCK PULSE signal
M1ON	MAIN MOTOR DRIVE command
M10ON	HOPPER MOTOR (TONER SUPPLY) DRIVE command
M11ON	HOPPER MOTOR (TONER STIRRING) DRIVE command
M2ON	PAPER FEED MOTOR DRIVE command
M7ON	HOLDING TRAY LAST PAPER DETECT MOTOR DRIVE command
MFDC	MULTIFEEDER DOOR OPEN DETECT signal
MFPCD	MULTIFEEDER PICK-UP CLUTCH ROLLER DRIVE command
MFPW	MULTI FEEDER PAPER WIDTH signal
MFRLSD	MULTIFEEDER PICK-UP RELAY SOLENOID DRIVE command
MFS	MULTIFEEDER PAPER DETECT signal
MHOND	MULTIFEEDER PAPER DETECT signal
MHRD	MAIN HEATER DRIVE command
OPCNTD	OPTION COUNTER DRIVE command
OPRST	OPERATION PANEL CPU RESET command
PCLHP	PRIMARY CORONA WIRE CLEANER HOME POSITION signal
PCLM	PRIMARY CORONA WIRE CLEANER MOTOR DRIVE command
PEXP	PRE-EXPOSURE LED DRIVE command
POT	PHOTOSENSITIVE DRUM SURFACE POTENTIAL signal MOTOR
POT-S-ON	PHOTOSENSITIVE DRUM SURFACE POTENTIAL SENSOR POWER ON command
PS14D	HOLDING TRAY REGISTRATION PAPER DETECT signal
PS15D	HOLDING TRAY ENTRANCE PAPER DETECT signal
PS17D	HOLDING TRAY PAPER DETECT signal
PS24D	PICK-UP VERTICAL PATH-0 PAPER DETECT signal
PS27D	PICK-UP VERTICAL PATH-3 PAPER DETECT signal
PS30D	PICK-UP VERTICAL PATH-4 PAPER DETECT signal
PS33D	PICK-UP VERTICAL PATH-1 PAPER DETECT signal
PS36D	PICK-UP VERTICAL PATH-2 PAPER DETECT signal
PS8D	HOLDING TRAY FEEDER 1 PAPER DETECT signal
PS9D	HOLDING TRAY FEEDER 2 PAPER DETECT signal
PTCLHP	PRE-TRANSFER CORONA WIRE CLEANER HOME POSITION signal
PTRCLM	PRE-TRANSFER CORONA WIRE CLEANER MOTOR DRIVE command
PWOFF	POWER SWITCH OFF command
RDEL	RIGHT DECK LIFTER LIMIT signal
RDEOP	RIGHT DECK OPEN DETECT signal
RDFEDGE	RDF DOCUMENT LEADING EDGE signal
RDLMD	RIGHT DECK LIFTER MOTOR DRIVE command
RDPD	RIGHT DECK PAPER DETECT signal
RDPUCD	RIGHT DECK PICK-UP ROLLER CLUTCH DRIVE command
RDPURR	RIGHT DECK PICK-UP ROLLER RELEASE SOLENOID DRIVE command
RGCD	REGISTRATION ROLLER CLUTCH DRIVE command
RGPD	REGISTRATION PAPER DETECT signal
RL401D	PWU RELAY DRIVE command
RLWDOP	RIGHT LOWER DOOR OPEN DETECT signal
ROED	ROLLER ELECTRO BIAS DRIVE command
RUPDOP	RIGHT UPPER DOOR OPEN DETECT signal
SCDP1	SCANNER DOCUMENT LEADING EDGE 1 signal
SCHP	SCANNER HOME POSITION signal
SHOND	SUB HEATER ON DETECT signal (120V)
SHRD	SUB HEATER DRIVE command (120V)
SL10BD	MULTIFEED ROLLER SOLENOID DRIVE command
SL10FD	MULTIFEED ROLLER SOLENOID DRIVE command
SL10D	MULTI FEEDER PICK-UP SOLENOID DRIVE command
SSWON	SERVICE SWITCH signal
SW1ON	POWER SWITCH ON DETECT signal
TCNTD	TOTAL COUNTER DRIVE command
TEP	HOPPER TONER signal
TH1	FIXING HEATER THERMISTOR signal 1
TH2	FIXING HEATER THERMISTOR signal 2
TH	DRUM HEATER THERMISTOR signal
TSCLHP	TRANSFER/SEPARATION CORONA WIRE CLEANER HOME POSITION signal
TSCLM	TRANSFER/SEPARATION CORONA WIRE CLEANER DRIVE command
WTFL	WASTE TONER FEEDING SCREW LOCK DETECT signal

2. Abbreviations

AER	AE (MEASUREMENT) ROTATION
CNTR1	CONTROL ROTATION 1
CNTR2	CONTROL ROTATION 2
INTR	INITIAL ROTATION
LSTR	LAST ROTATION
SCFW	SCANNER FORWARD
SCRV	SCANNER REVERSE
STBY	STANDBY
WAIT	WAIT
WMUP	WARM UP
WMUPR	WARM UP ROTATION

C. GENERAL CIRCUIT DIAGRAM

Not available

D. RDF-H1 GENERAL CIRCUIT DIAGRAM

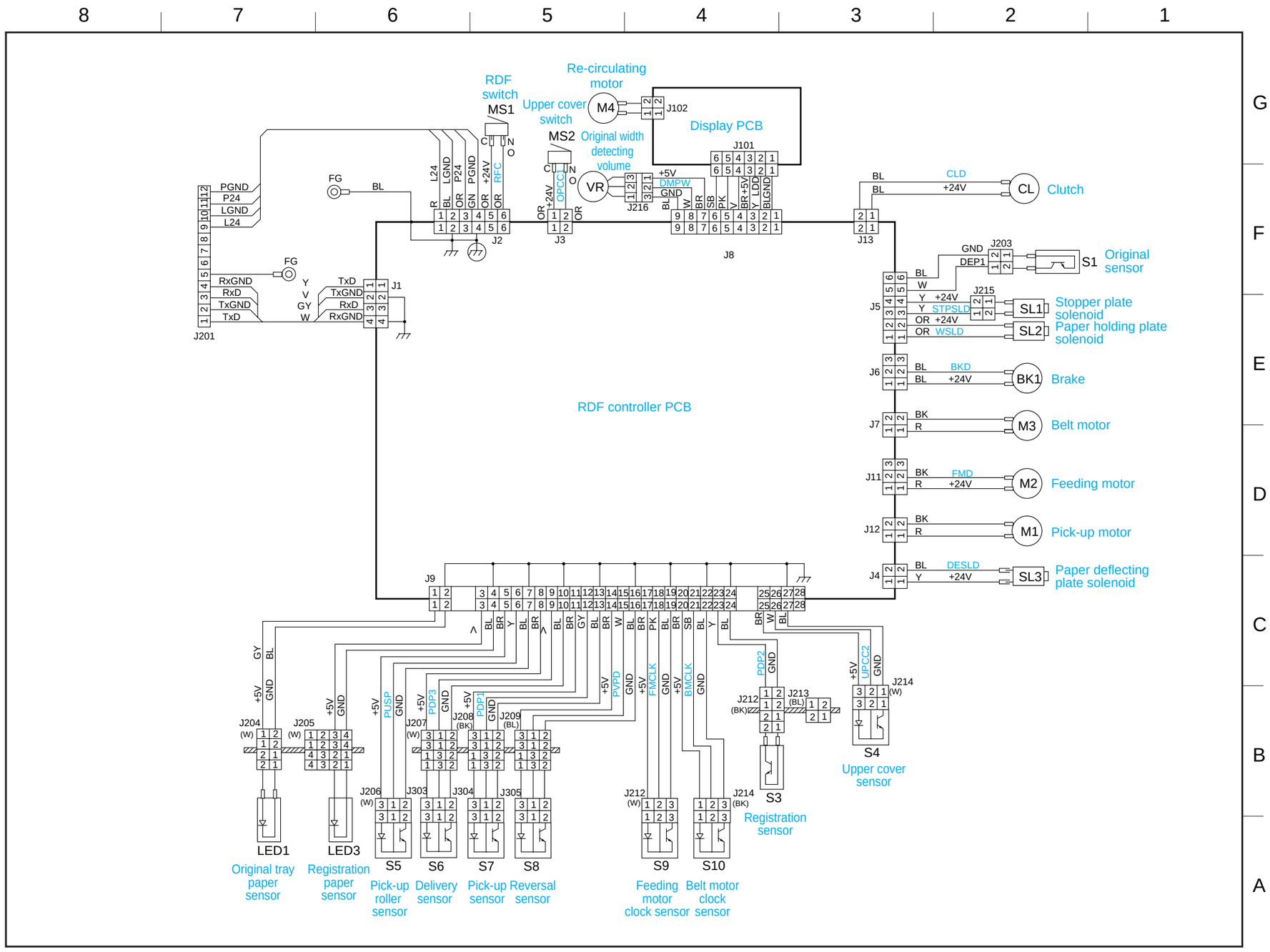

E. SPECIFICATIONS

1. Type

Body	Console
Copyboard	Fixed
Light source	Halogen lamp (70 V, 265 W)
Lens	Zoom lens
Photosensitive medium	Amorphous silicon (ø80)

2. System

Body		Front deck paper deck type
Copying		Indirect electrostatographic
Charging		Corona
Exposure		Slit (moving light source)
Copy density adjustment		Automatic or manual
Development		Dry (toner projection)
Pick-up	Automatic	2 front cassettes 1 front paper deck
	Manual	Multifeeder (5.5 mm deep; 50 sheets of 80 g/m^2 paper)
Transfer		Corona
Separation		Corona (static separation)
Cleaning		Blade
Fixing		Heating roller (790 W + 410 W; 120 V), (1200 W; 220/240 V)

3. Performance

Original type		Sheet, book, 3-D object (2 kg max.)		
Maximum original size		A3/11" × 17"		
Copying ratios	Direct	1:1		
	Reduce I	1:0.500		
	Reduce II	1:0.707		
	Reduce III	1:0.816		
	Reduce IV	1:0.865		
	Enlarge I	1:2.000		
	Enlarge II	1:1.414		
	Enlarge III	1:1.224		
	Enlarge IV	1:1.154		
	Zoom	1:0.490 to 2.040 (1% increments)		
Wait time		5 min or less (at 20°C room temperature)		
First copy		3.0 sec (A4, non-AE, top cassette/paper deck)		
Continuous copying		999 copies max.		
Copy size		One-sided	Metric	A3 max. A6 (vertical, postcard) min.
			Inch	11" × 17" max. STMT min.
		Two-sided	Metric	A3 max. A5 (horizontal) min.
			Inch	11" × 17" max. STMT (horizontal) min.

Copy paper type	Cassette		• Plain Paper (64 to 90 g/m^2) A3, B4, A4, B5, A4R, B5R, 11" × 17", LGL, LTR, LTR-R, A5, A5R, STMT, STMTR, Foolscap, GLTR, GLTR-R, KLGL, K-LGL-R, OFFICIO, E-OFFICIO, A-OFFICIO, B-OFFICIO, A-LTR, ALTR-R, A-LGL • Tracing Paper* (SM-1) A3, B4, A4, B5, A4R, B5R • Colored Paper (Canon-recommended) B4, A4
	Paper deck		• Plain Paper (64 to 90 g/m^2) A4, B5, LTR • Colored Paper (Canon-recommended) A4
	Automatic		• Plain Paper (64 to 90 g/m^2) A3, B4, A4, B5, A4, B5R, 11" × 17", LGL, LTR, LTR-R, STMT-R*, postcard • Tracing Paper (SM-1)* A3, B4, A4, B5, A4R, B5R • Transparency* (Canon-recommended) A4, LTR • Colored Paper* (Canon-recommended) B4, A4 • Label Sheet (Canon-recommended) A4, LTR • Thick Paper* (91 to 200 g/m^2)
	Two-sided copying	Automatic	• Plain Paper* (64 to 90 g/m^2) A3, B4, A4, B5, A4R, B5R, 11" × 17", LGL, LTR, LTR-R, A5, STMT • Colored Paper (Canon-recommended) B4, A4
		Multifeeder	• Plain Paper* (64 to 90 g/m^2) A3, B4, A4, B5, A4R, B5R, 11" × 17", LGL, LTR, LTR-R, STMT-R, A5, STMT • Colored Paper* (Canon-recommended) B4, A4
	Overlay copying	Automatic	• Plain Paper* (64 to 90 g/m^2) A3, B4, A4, B5, A4R, B5R, 11" × 17", LGL, LTR, LTR-R, A5, STMT • Colored Paper* (Canon-recommended) B4, A4
		Multifeeder	• Plain Paper* (64 to 90 g/m^2) A3, B4, A4, B5, A4R, B5R, 11" × 17", LGL, LTR, LTR-R, STMT-R, A5, STMT • Colored Paper* (Canon-recommended) B4, A4

Tray	Claw		None
	Cassette		55 mm deep (500 sheets each of 80 g/m^2 paper)
	Paper deck		162 mm deep (about 1500 sheets each of 80 g/m^2 paper)
	Copy tray		250 sheets (approx.; A3, 80 g/m^2)
Non-image width	Leading edge		4.5±1.5 mm in Direct (4.5±1.5 mm in non-Direct, Overlay, Two-sided)
	Trailing edge		2.0 ±1.0 mm (2.0 ±1.0 mm in non-Direct, Overlay, Two-sided)
	Left/right (1st side)	A4 horizontal, B5 horizontal, B4, A3, LTR horizontal	2.75±2.5mm
	Left/right (2nd side)	A4 horizontal, B5 horizontal, B4, A3, LTR horizontal	2.75±2.5mm
Auto Clear			Provided (2 min standard; may be changed from 0 to 9 min in 1-min increments and from 0 to 50 sec in 10-sec increments)
Auto Power-Off			Provided (1 hr standard; may be changed from 0 to 2 hr; in 10-min increments up to 1st 1 hr, in 1-hr increments up to 24 hr)
Accessory			• Stapler Sorter-E2 • Stapler Sorter-G1 • CC-V • Sorter-E1 • Sorter-G1 • Cassette Heater

4. Others

		Front paper deck
Operating environment	Temperature	7.5° to 32.5°C/45.5° to 90.5°F
	Humidity	5 to 80% RH
	Atmospheric pressure	810.6hPa to 1013.3hPa (0.8 to 1.0 atm)
Power supply	120 V 220/240 V(ITA) 220/240 V(UK) 220/240 V(FRN) 220/240 V(GER) 220/240 V(AMS) 220/240 V(CA) 220/240 V	NGQ XXXXX FGB XXXXX DGB XXXXX BGB XXXXX AGB XXXXX UBW XXXXX, CGB XXXXX RBJ XXXXX PCL XXXXX, EGB XXXXX
Power consumption	Maximum	1.5 kW or less
	Standby	0.3 kWh or less (reference only)
	Continuous copying	1.2 kWh or less (reference only)
Noise	Copying	71 dB or less (sound power level by ISO standards)
	Standby	50 dB or less (as required)
Ozone (avr over 8 hr)		0.05 ppm or less

Dimensions	Width	620 mm/24.4 in
	Depth	725 mm/28.5 in
	Height	1136 mm/44.7 in
Weight		187 kg/412.2 lb (approx.; w/RDF)
Consumables	Copy paper	Keep wrapped to protect against moisture.
	Toner	Avoid direct sunshine, and store at 40°C, 85% or less.

Ratio		Size	Copy size	Copies/min
Direct		A3(297 × 420mm)	A3	24
		A4(210 × 297mm)	A4	45
		B4(257 × 364mm)	B4	30
		B5(182 × 257mm)	B5	45
		A4R(297 × 210mm)	A4R	35
		B5R(257 × 182mm)	B5R	39
Reduce	Ⅰ (50%)	A3 → 5R	A5R	44
	Ⅱ (70%)	A3 → 4R	A4R	35
		B4 → B5R	B5R	39
		A4 → A5	A5	45
	Ⅲ (81%)	B4 → A4R	A4R	35
	Ⅳ (86%)	A3 → B4	B4	30
		A4 → B5	B5	45
Enlarge	Ⅰ (200%)	A5R → A3	A3	23
	Ⅱ (141%)	A4R → A3	A3	24
		B5R → B4	B4	29
		A5 → A4	A4	45
	Ⅲ (122%)	A4R → B4	B4	30
	Ⅳ (115%)	B4 → A3	A3	24
		B5 → A4	A4	45

Table A-1 Copying Speed (copier only)

Ratio		Size	Copy paper size	Copies/min
Direct		LTR	LTR	45
		11” × 17”	11” × 17”	24
		LGL	LGL	30
		LTRR	LTRR	37
		STMT/STMTR	STMT/STMTR	45
Reduce	Ⅰ (50%)	11” × 17” → STMTR	STMTR	43
	Ⅱ (64.7%)	11” × 17” → LTRR	LTRR	37
	Ⅲ (73.3%)	11” × 15” → LTRR	LTRR	30
	Ⅰ (200%)	STMR → 11” × 17”	11” × 17”	24
Enlarge	Ⅱ (129.4%)	LTRR → 11” × 17”	11” × 17”	24
	Ⅲ (121.4%)	LGL → 11” × 17”	11” × 17”	24

Table A-2 Copying Speed (copier only)

Specifications are subject to change without notice.

Prepared by
OFFICE IMAGING PRODUCTS TECHNICAL SUPPORT DEPT.1
OFFICE IMAGING PRODUCTS TECHNICAL SUPPORT DIV.
CANON INC.
Printed in Japan

REVISION 0 (OCT. 1996) [33130/18723]
REVISION 1 (MAR. 1997) [18723]

30-2, Shimomaruko 3-chome, Ohta-ku, Tokyo 146 Japan

Canon



This publication is printed on
70% reprocessed paper.

PRINTED IN JAPAN (IMPRIME AU JAPON) 0397S2.8-2