NP6218

SERVICE MANUAL

REVISION 0

Canon

MAY 1997 FY8-13EX-000

COPYRIGHT © 1997 CANON INC.

CANON NP6218 REV.0 MAY 1997 PRINTED IN JAPAN (IMPRIMÉ AU JAPON)

IMPORTANT

THIS DOCUMENTATION IS PUBLISHED BY CANON INC., JAPAN, TO SERVE AS A SOURCE OF REFERENCE FOR WORK IN THE FIELD.

SPECIFICATIONS AND OTHER INFORMATION CONTAINED HEREIN MAY VARY SLIGHTLY FROM ACTUAL MACHINE VALUES OR THOSE FOUND IN ADVERTISING AND OTHER PRINTED MATTER.

ANY QUESTIONS REGARDING INFORMATION CONTAINED HEREIN SHOULD BE DIRECTED TO THE COPIER SERVICE DEPARTMENT OF THE SALES COMPANY.

THIS DOCUMENTATION IS INTENDED FOR ALL SALES AREAS, AND MAY CONTAIN INFORMATION NOT APPLICABLE TO CERTAIN AREAS.

COPYRIGHT © 1997 CANON INC.

Printed in Japan
Imprimé au Japon

Use of this manual should be strictly supervised to avoid disclosure of confidential information.

Prepared by

OFFICE IMAGING PRODUCTS TECHNICAL SUPPORT DEPT. 1
OFFICE IMAGING PRODUCTS TECHNICAL SUPPORT DIV.

CANON INC.

5-1, Hakusan 7-chome, Toride-shi, Ibaraki 302 Japan

INTRODUCTION

This Service Manual contains the bsic facts and figures about the plain paper copier NP6218, and is compiled to serve as a handy reference for servicing the machine in the field.

The NP6218 is designed to enable fully automated copying work and may be configured with the following accessories:

1. Cassette Feeding Module-B2*
2. Cassette Feeding Module-A2*
3. Control Card IV N
4. ADF-E1
5. Staple Sorter B2/D1
6. MS-B1
7. Remote Diagnostic Device II

This manual is limited to the descriptions of the NP6218, Cassette Feeding Module-B2/Cassette Feeding Module-A2.

* May not be available in some areas but discussed in this manual.

This Service Manual covers the copier only, and consists of the following chapters:

Chapter 1 *General Description* introduces the copier's features and specifications, shows how to operate the copier, and explains how copies are made.

Chapter 2 *Basic Operation* provides outlines of the copier's various mechanical workings.

Chapter 3 *Exposure System* discusses the principles of operation used for the copier's lens drive unit and scanner drive unit. It also explains the timing at which these drive units are operated, and shows how they may be disassembled/assembled and adjusted.

Chapter 4 *Image Formation System* discusses the principles of how images are formed. It also explains the timing at which the various units involved in image formation are operated, and shows how they may be disassembled/assembled and adjusted.

Chapter 5 *Pick-Up/Feeding System* explains the principles used from when copy paper is picked up to when a copy is delivered in view of the functions of electrical and mechanical units and in relation to their timing of operation. It also shows how these units may be disassembled/assembled and adjusted.

Chapter 6 *Fixing System* explains the principles used to fuse toner images to transfer media in view of the functions of electrical and mechanical units and in relation to their timing of operation. It also shows how these units may be disassembled/assembled and adjusted.

Chapter 7 *Externals/Auxiliary Mechanisms* shows the copier's external parts, and explains the principles used for the copier's various control mechanisms in view of the functions of electrical and mechanical units and in relation to their timing of operation. It also shows how these units may be disassembled/assembled and adjusted.

Chapter 8 *Installation* introduces requirements for the site of installation, and shows how the copier may be installed using step-by-step instructions.

COPYRIGHT © 1997 CANON INC.

Chapter 9 *Maintenance and Servicing* provides tables of periodically replaced parts and consumables/durables and scheduled servicing charts.

Chapter 10 *Troubleshooting* provides tables of maintenance/inspection, standards/adjustments, and problem identification (image fault/malfunction).

Appendix contains a general timing chart and general circuit diagrams.

In addition to the above chapters, this SERVICE MANUAL contains a set of appendixes consisting of a general timing chart and general circuit diagrams.

A separate document entitled SERVICE HANDBOOK is also available for troubleshooting problems in the copier.

The following rules apply throughout this volume:

1. Each chapter contains sections explaining the purpose of specific functions and the relationship between electrical and mechanical systems with reference to the timing of operation.

   In the diagrams, represents the path of mechanical drive—where a signal name accompanies the symbol , the arrow indicates the direction of the electric signal.

   The expression “turn on the power” means flipping on the power switch, closing the front door, and closing the delivery unit door, which will result in supplying the machine with power.

2. In the digital circuits, ‘1’ is used to indicate that the voltage level of a given signal is “High,” while ‘0’ is used to indicate “Low.” (The voltage value, however, differs from circuit to circuit.)

   In practically all cases, the internal mechanisms of a microprocessor cannot be checked in the field. Therefore, the operations of the microprocessors used in the machines are not discussed: they are explained in terms of from sensors to the input of the DC controller PCB and from the output of the DC controller PCB to the loads.

The contents of this manual may be updated from time to time to reflect improvements rendered to the copier; a Service Information bulletin will be issued as necessary to cover major changes.

All service persons are expected to be thoroughly familiar with the information contained in this manual, SERVICE HANDBOOK, and Service Information bulletins, for quick response to the user’s needs.

COPYRIGHT © 1997 CANON INC.
CANON NP6218 REV.0 MAY 1997 PRINTED IN JAPAN (IMPRIMÉ AU JAPON)

System Configuration

The NP6218 may be configured with the following systems options:



ADF-E1
Sends originals one by one from a stack set on its tray

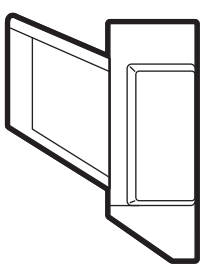

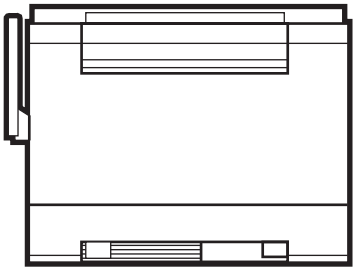



Control Card IV N
Allows the user to control copy volume.

Stapler Sorter B2/D1, MS-B1
Automatically sorts or (page collation) or groups up to 10 sets of copies; with the sorting function, the sorted copies may automatically be stapled. (Not applicable to MS-B1.)



Cassette Feeding Module-B2
Adds an additional cassette.

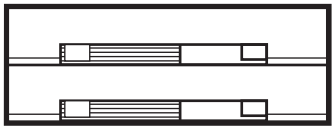

Cassette Feeding Module-A2
Adds additional two cassettes.

COPYRIGHT © 1997 CANON INC.
CANON NP6218 REV.0 MAY 1997 PRINTED IN JAPAN (IMPRIMÉ AU JAPON)

COPYRIGHT © 1997 CANON INC.
CANON NP6218 REV.0 MAR. 1997 PRINTED IN JAPAN (IMPRIMÉ AU JAPON)

CONTENTS

CHAPTER 1 GENERAL DESCRIPTION

I. FEATURES 1-1
II. SPECIFICATIONS 1-2
A. Copier 1-2
1. Type 1-2
2. System 1-2
3. Features 1-3
4. Others 1-4
B. Cassette Feeding Module-B2/ Cassette Feeding Module-A2 1-5
III. NAMES OF PARTS 1-6
A. Exterior View 1-6
B. Cross Section 1-7
1. Body 1-7
2. Cassette Feeding Module-A2 1-8
IV. OPERATION 1-9
A. Control Panel 1-9
B. Operation Mode 1-10
C. Making Two-Sided/Overlay Copies (manual) 1-11
D. User Mode 1-12
1. Outline 1-12
2. Common Operations 1-13
3. Changing the Auto Clear Time (U 1) 1-13
4. Changing the Auto Power-Off Time (U 2) 1-13
5. Zoom Fine-Adjustment (U 3) 1-14
6. Turning On and Off the Auto Cassette Change Mechanism (U 4) 1-15
7. Turning On/Off the Auto Sort/ Non-Sort (with ADF and sorter installed—option) (U 5) 1-16
8. Cleaning the Feeder (with ADF installed—option) (U 6) 1-16
9. Selecting the Density Adjustment Method for Standard Mode (U 9) 1-17
10. Initializing User Mode (U 0) 1-17
11. Quick Guide to User Mode 1-18
E. Handling the Toner Bottle 1-19
V. WARNINGS AND ACTIONS 1-19
VI. ROUTINE MAINTENANCE BY THE USER 1-19
VII. IMAGE FORMATION 1-20
A. Outline 1-20

CHAPTER 2 BASIC OPERATION

I. BASIC CONSTRUCTION 2-1
A. Functional Construction 2-1
B. Outline of the Electrical Circuitry 2-2
C. Basic Sequence of Operations (2 copies continuous, AE) 2-3
D. Main Motor Control Circuit 2-4
1. Outline 2-4
2. Mechanism 2-4
E. Inputs to the DC Controller PCB 2-5
1. Inputs to the DC Controller PCB (1/3) 2-5
2. Inputs to the DC Controller PCB (2/3) 2-6
3. Inputs to the DC Controller PCB (3/3) 2-7
F. Outputs from the DC Controller PCB 2-8
1. Outputs from the DC Controller PCB (1/3) 2-8
2. Outputs from the DC Controller PCB (2/3) 2-9
3. Outputs from the DC Controller PCB (3/3) 2-10
G. Inputs to and Outputs from the 1-Cassette Unit Driver PCB 2-11
1. Inputs to and Outputs from the 1-Cassette Unit Driver PCB (1/1) 2-11
H. Inputs to and Outputs from the 2-Cassette Unit Driver PCB 2-12
1. Inputs to and Outputs from the 2-Cassette Unit Driver PCB (1/2) 2-12
2. Inputs to and Outputs from the 2-Cassette Unit Driver PCB (2/2) 2-13

COPYRIGHT © 1997 CANON INC.
CANON NP6218 REV.0 MAY 1997 PRINTED IN JAPAN (IMPRIMÉ AU JAPON)

CHAPTER 3 EXPOSURE SYSTEM

I. BASIC OPERATION 3-1
A. Varying the Reproduction Ratio 3-1
II. LENS DRIVE SYSTEM 3-1
A. Outline 3-1
B. Lens Motor Drive Circuit.....3-3
1. Keeping the Lens Motor Stationary 3-3
2. Driving the Lens Motor 3-3
C. Basic Sequence of Operations (lens drive system; non-Direct).....3-4
III. SCANNING DRIVE SYSTEM.....3-5
A. Driving the Scanner.....3-5
1. Outline 3-5
2. Relationship between the Scanner Sensor and Signals....3-6
3. Basic Sequence of Operations (scanner).....3-6
4. Driving the Scanner Motor 3-7
5. Scanner Operations in Page Separation Mode (non-AE, page separation, A4, 2 copies)..3-8
IV. DISASSEMBLY AND ASSEMBLY 3-9
A. Scanner Drive Assembly 3-9
1. Detaching the Scanner Drive Motor 3-9
2. Detaching the Scanner Cable ..3-10
3. Assembling the Mirror Position Tool 3-12
4. Routing the Scanner Cable 3-13
5. Adjusting the Position of the Mirrors (optical length of No. 1, 2, and 3 mirrors).....3-16
6. Cleaning the Scanner No. 6 Mirror 3-17
B. Lens Drive Assembly.....3-18
1. Detaching the Lens Drive Motor 3-18
2. Routing the Lens Cable.....3-20
3. Adjusting the Position of the Change Solenoid.....3-21

CHAPTER 4 IMAGE FORMATION SYSTEM

I. PROCESSES 4-1
A. Outline 4-1
B. Basic Sequence of Operations (image formation system).....4-3
C. Controlling the Scanning Lamp 4-4
1. Outline 4-4
2. Turning On and Off the Scanning Lamp 4-5
3. Pre-Heating Control (scanning lamp).....4-5
4. Sequence of Operations (scanning lamp pre-heating control; AE, A4, continuous, 2 copies).....4-5
5. Controlling the Intensity of the Scanning Lamp (FL1).....4-7
6. Controlling the Fluorescent Lamp Heater.....4-8
7. Fluorescent Lamp Automatic ...4-9
8. Fluorescent Lamp Protection Mechanism 4-9
D. Controlling the Primary Charging Roller Bias 4-10
1. Outline 4-10
2. Turning On and Off the Primary Charging Roller Bias 4-11
3. Controlling the Primary Charging Roller Bias to a Constant Voltage 4-11
4. Switching the Primary Charging Roller Bias Application Voltage Level 4-11
5. Application Voltage Level (APVC) for the Primary Charging Roller and Scanning Lamp On Voltage Level Automatic Correction 4-12
E. Controlling the Transfer Roller Bias...4-13
1. Outline 4-13
2. Turning On and Off the Transfer Roller Bias 4-15
3. Controlling the Transfer Bias to a Constant Voltage 4-15
4. Controlling the Transfer Bias Voltage Level Correction (ATVC control) 4-15
5. Current Limiter Circuit (transfer bias) 4-15
6. Current Limiter Circuit (cleaning bias) 4-15
F. Controlling the Static Eliminator Bias.....4-16

COPYRIGHT © 1997 CANON INC.
CANON NP6218 REV.0 MAY 1997 PRINTED IN JAPAN (IMPRIMÉ AU JAPON)

1. Outline 4-16
2. Switching the Static Eliminator Bias Voltage Level 4-17
3. Ensuring Proper Separation of Thin Paper 4-17
G. Controlling Blank Exposure 4-18
1. Outline 4-18
2. Blanking (Whiting) of Non-Image Areas for Reduction....4-19
3. Blanking (Whiting) Out the Leading/Trailing Edges and between Copies....4-19
H. Controlling the Primary Corona Roller Cleaning Mechanism 4-20
1. Outline 4-20
2. Primary Charging Roller Cleaning Operation 4-20
I. Releasing the Transfer Roller 4-21
1. Outline 4-21
II. DEVELOPING ASSEMBLY AND CLEANING ASSEMBLY 4-22
A. Outline 4-22
B. Controlling the Toner Level Detection 4-23
C. Controlling the Development Bias....4-25
1. Outline 4-25
2. Turning On and Off the DC Component of the Developing Bias and Controlling the Voltage to a Constant Level 4-25
3. Turning On and Off the AC Component of the Development Bias 4-26
4. Controlling the Voltage Level of the DC Component of the Development Bias 4-26
D. Automatic Control of Copy Density....4-27
1. Outline 4-27
2. Control Method....4-27
3. AE Adjustment....4-29
III. DISASSEMBLY AND ASSEMBLY 4-30
A. Illumination Assembly....4-30
1. Detaching the Scanning Lamp/Fluorescent Lamp Heater....4-30
2. Points to Note When Attaching the Fluorescent Lamp Heater/Scanning Lamp....4-32
3. Detaching the Blank Exposure Assembly....4-34
4. Detaching the Blank Exposure Lamp 4-35
5. Detaching the Blank Shutter Solenoid 4-36
6. Positioning the Blank Shutter Solenoid 4-37
7. Routing the Blanking Cable....4-38
8. Positioning the Left/Right Margin 4-38
B. Drum Unit 4-39
1. Detaching the Drum Unit....4-39
2. Cleaning 4-40
C. Primary Corona Assembly....4-41
1. Detaching the Primary Corona Assembly....4-41
2. Cleaning the Cleaning Pad and the Primary Corona Roller 4-42
3. Positioning the Solenoid for the Primary Charging Roller....4-43
D. Transfer Charging Assembly 4-44
1. Detaching the Transfer Roller ...4-44
2. Attaching the Drum Heater....4-44
E. Developing System....4-47
1. Removing the Developing Assembly....4-47
2. Removing the Blade Assembly....4-47
3. Removing the Developing Cylinder Side Seal....4-48
4. Installing the Side Seal and the Blade Assembly....4-51

CHAPTER 5 PICK-UP/FEEDING SYSTEM

I. PICK-UP/FEEDING SYSTEM 5-1
A. Outline 5-1
II. PICK-UP OPERATION (COPIER)....5-3
A. Outline 5-3
B. Sequence of Operations (pick-up/feeding assembly; A4, 2 copies)....5-4
III. PICK-UP FROM THE CASSETTE FEEDING MODULE-A2....5-5
A. Pick-Up Operation 5-5
B. Sequence of Operations (cassette 2; A4, 2 copies)....5-6
IV. MULTIFEEDER....5-7
A. Outline 5-7
B. Identifying the Size of Paper on the Multifeeder....5-8
C. Sequence of Operations (multifeeder; A4, 2 copies)....5-9
V. IDENTIFYING THE CASSETTE SIZE....5-10
VI. IDENTIFYING JAMS 5-12
A. Pre-Registration Delay Jam....5-12
B. Pre-Registration Timing Jam 5-13

COPYRIGHT © 1997 CANON INC. CANON NP6218 REV.0 MAY 1997 PRINTED IN JAPAN (IMPRIMÉ AU JAPON)

C. Pre-Registration Stationary Jam ...5-13
D. Separation Delay Jam 5-14
E. Separation Stationary Jam 5-14
F. Delivery Delay Jam.....5-15
G. Delivery Stationary Jam 5-15
VII. DISASSEMBLY AND ASSEMBLY 5-16
A. Pick-Up Assembly 5-16
1. Detaching the Pick-Up Roller Unit 5-16
2. Detaching the Pick-Up Roller ...5-19
3. Points to Note When Attaching the Pick-Up Roller 5-20
4. Detaching the Pick-Up Clutch ...5-20
5. Detaching the Separation Pad ..5-21
6. Adjusting the Left/Right Registration 5-22
B. Multifeeder Assembly 5-23
1. Detaching the Multifeeder Assembly 5-23
2. Detaching the Multifeeder Pick-Up Roller Unit 5-24
3. Detaching the Multifeeder Pick-Up Roller 5-25
4. Points to Keep Note When Attaching the Multifeeder Pick-Up Roller 5-26
5. Detaching the Separation Pad ..5-26
6. Detaching the Multifeeder Drive Unit.....5-27
7. Detaching the Multifeeder Clutch 5-28
8. Positioning the Multifeeder Assembly (paper guide plate cam) 5-29
9. Adjusting the Left/Right Registration 5-30
10. Points to Note When Attaching the Multifeeder Assembly Rack Plate 5-30
C. Registration Roller Assembly 5-31
1. Detaching the Registration Clutch 5-31
2. Detaching the Upper Registration Roller.....5-31
3. Detaching the Lower Registration Roller.....5-33
D. Feeding Assembly 5-34
1. Detaching the Feeding Belt 5-34
E. Cassette Unit.....5-36
1. Detaching the Copier from the Cassette Unit.....5-36
2. Detaching/Attaching the Pick-Up Roller 5-36
3. Detaching the Pick-Up Clutch ..5-36

CHAPTER 6 FIXING SYSTEM

I. BASIC OPERATIONS.....6-1
A. Outline 6-1
B. Controlling the Fixing Heater Temperature 6-3
C. Controlling the Supply Power for the Fixing Heater.....6-5
D. Detecting Overheating at the End of the Fixing Heater.....6-6
E. Protection Mechanism.....6-6
1. Thermistor (TH1, TH2) 6-6
2. Thermal Fuse (FU1).....6-6
3. Heater ON Detection Circuit (230V model only) 6-6
F. Correcting Displacement of the Fixing Film 6-7
1. Outline 6-7
2. Controlling the Fixing Film Motor 6-10
II. DISASSEMBLY AND ASSEMBLY 6-11
A. Fixing Assembly 6-11
1. Construction1 6-11
2. Detaching the Upper Fixing Unit 6-12
3. Detaching the Fixing Film, Tension Roller, Drive Roller, Fixing Cleaning Brush, and Fixing Heater Unit 6-13
4. Points to Note When Attaching the Fixing Film 6-20
5. Points to Note When Attaching the Heater Connector.....6-20
6. Points to Note When Replacing the Fixing Upper Unit 6-21
7. Adjusting the Fixing Film Drive Roller Pressure.....6-21
8. Detaching the Lower Fixing Unit 6-23
9. Detaching the Separation Claw/Lower Fixing Claw and Fixing Cleaning Roller 6-24
10. Adjusting the Lower Fixing Roller Nip.....6-25
B. Delivery Assembly 6-27

COPYRIGHT © 1997 CANON INC.
CANON NP6218 REV.0 MAY 1997 PRINTED IN JAPAN (IMPRIMÉ AU JAPON)

CHAPTER 7 EXTERNALS/AUXILIARY MECHANISMS

I. POWER SUPPLY 7-1
A. Outline 7-1
B. Power Supply Circuit Assembly.....7-2
C. Detecting Errors in the Power Supply PCB 7-4
1. Communication Error between DC Controller PCB and Composite Power Supply PCB ..7-4
2. Error in the High-Voltage Output Data 7-4
3. Low-Voltage Output Data Error ..7-4
4. Overcurrent in the Low-voltage Power Supply 7-4
D. Protection Mechanisms for the Power Supply Circuit 7-5
II. DISASSEMBLY AND ASSEMBLY 7-6
A. External Covers 7-6
B. Control Panel 7-9
1. Detaching the Control Panel 7-9
C. Fans 7-10
1. Detaching the Exhaust Fan 7-10
D. Main Motor/Main Drive Assembly..7-11
1. Detaching the Main Motor Unit..7-11
2. Detaching the Main Drive Assembly 7-11
3. Routing the Drive Belt 7-13
E. Cassette unit 7-14
1. Detaching the Pick-Up Drive Unit 7-14
2. Detaching the Cassette Motor..7-15
3. Detaching the Cassette Driver PCB 7-16
F. DC Controller PCB 7-17
1. Detaching the DC Controller PCB 7-17
2. Points to Note When Replacing the DC Controller PCB 7-17
G. Composite Power Supply PCB.....7-18
1. Detaching the Composite Power Supply PCB 7-18
2. Points to Note When Handling the Composite Power Supply PCB 7-20
H. AE Sensor PCB.....7-21
1. Points to Note When Replacing the AE Sensor 7-21
I. Intensity Sensor PCB 7-21
1. Points to Note When Replacing the Intensity Sensor 7-21

CHAPTER 8 INSTALLATION

I. SELECTING THE SITE 8-1
II. UNPACKING AND INSTALLING THE COPIER.....8-2
A. Unpacking and Removing Fixings ..8-2
B. Turning On the Copier 8-5
C. Checking the Images and Operations 8-8
D. Attaching the Drum Unit 8-9
E. Changing the Cassette Size.....8-10
III. RELOCATING THE COPIER.....8-13
IV. REPLACING THE DRUM UNIT.....8-14
V. INSTALLING THE CONTROL CARD IV N.....8-17
VI. CASSETTE HEATER KIT 5 INSTALLATION PROCEDURE 8-19
A. Unpacking.....8-19
B. Installation (to a Cassette Feeding Module-A2/B2).....8-20
VII. INSTALLING THE REMOTE DIAGNOSTIC DEVICE II.....8-26
A. Unpacking.....8-26
B. Installation to the Copier 8-27

CHAPTER 9 MAINTENANCE AND SERVICING

I. PERIODICALLY REPLACED PARTS 9-1
A. Periodically Replaced Parts.....9-1
II. DURABLES 9-2
A. Copier 9-2
B. Cassette Feeding Module-B2/ Cassette Feeding Module-A2 9-3
III. PERIODICAL SERVICING 9-4
IV. SERVICING CHART.....9-5
V. NOTES ON DRUM KIT 9-6

COPYRIGHT © 1997 CANON INC.

CHAPTER 10 TROUBLESHOOTING

I. MAINTENANCE AND INSPECTION..10-3
A. Image Adjustment Basic Procedure.....10-3
B. Periodical Servicing.....10-4
II. STANDARDS AND ADJUSTMENTS..10-5
A. Image Adjustment 10-5
1. Adjusting the Image Leading Edge Margin ([3], No.305; registration ON timing) 10-5
2. Adjusting the Leading Edge Non-Image Width ([3], No. 306; blank shutter ON timing).....10-6
3. Adjusting the Image Trailling Edge Non-Image Width ([3], No.309; blank shutter timing).....10-7
4. Adjusting the Left/Right Registration 10-8
5. Adjusting the Left/Right Margin (No.311; left/right margin).....10-9
6. Adjusting the Scanning Lamp Intensity.....10-10
7. AE Adjustment 10-11
B. Exposure System 10-15
1. Routing the Scanner Drive Cable.....10-15
2. Adjusting the Mirror Position optical distance between No.1 mirror and No.2/No.3 mirror) ..10-16
3. Adjusting the Scanner Cable Tension.....10-17
4. Assembling the Mirror Positioning Tool 10-17
5. Points to Note When Attaching the Fluorescent Lamp Heater/ Scanning Lamp 10-18
6. Positioning the Change Solenoid 10-20
C. Image Formation System.....10-21
1. Positioning the Blank Shutter Solenoid 10-21
2. Routing the Blank Shutter Cable.....10-22
3. Positioning the Solenoid for the Primary Charging Roller.....10-22
4. After Replacing the Drum Unit.....10-23
5. Attaching the Drum Heater 10-23
D. Pick-Up/Feeding System.....10-25
1. Orientation of the Pick-Up Roller.....10-25
2. Orientation of the Multifeeder Pick-up Roller.....10-25
3. Positioning the paper Guide Plate Cam (multifeeder) 10-26
E. Fixing System.....10-27
1. Points to Note when Attaching the Fixing Film.....10-27
2. Points to Note when Attaching the Heater Connector.....10-27
3. Adjusting the Fixing Film Drive Roller Pressure 10-28
4. Points to Note after Replacing the Fixing Upper Unit 10-29
5. Adjusting the Nip.....10-30
6. Routing the Drive Belt.....10-31
7. Storing the Fixing Heater Registance 10-31
8. Setting the Fixing Heater Temperature Control Value.....10-32
F. Electrical.....10-35
1. After Replacing the PCB 10-35
2. Clearing the Back-Up RAM....10-35
3. Checking the Photointerrupters.....10-36
4. Adjusting the Multifeeder Paper width Sensor.....10-43
5. Setting the Paper Size for the Universal Cassette 10-44
III. TROUBLESHOOTING IMAGE FAULTS.....10-45
A. Initial Checks 10-45
1. Site Environment.....10-45
2. Checking the Originals 10-45
3. Checking the Copyboard Cover and the Copyboard Glass 10-45
4. Checking the Paper.....10-45
5. Others.....10-46
B. Samples of Image Faults.....10-48
C. Troubleshooting Faulty Images....10-49
1. The copy is too light (half-tone only). 10-49
2. The copy is too light (black solid also).....10-50
3. The copy is too light (overall, extremely). 10-50
4. The copy has uneven density (front too dark).....10-52
5. The copy has uneven density (front too light). 10-52
6. The copy is foggy (overall). 10-53
7. The copy is foggy (vertical). ...10-54
8. The copy has black lines (vertical; thick fuzzy lines). 10-54
9. The copy has black lines (vertical, fine).....10-54

COPYRIGHT © 1997 CANON INC.
CANON NP6218 REV.0 MAY 1997 PRINTED IN JAPAN (IMPRIMÉ AU JAPON)

10. The copy has white spot (vertical).....10-55
11. The copy has white lines (vertical).....10-55
12. The copy has white spots (horizontal). 10-56
13. The back of the copy is soiled. 10-57
14. The copy has a fixing fault. 10-58
15. The leading edge of the copy is displaced. 10-58
16. The leading edge of the copy is displaced. 10-58
17. The leading edge of the copy is displaced. 10-58
18. The copy has a blurred image.....10-59
19. The copy is foggy (horizontal). 10-60
20. The copy has poor sharpness.....10-61
21. The copy is blank. 10-62
22. The copy is solid black. 10-62

IV. TROUBLESHOOTING MALFUNCTIONS 10-63
A. Troubleshooting Malfunctions.....10-63
1. E000 10-63
2. E001 10-64
3. E002, E003 10-64
4. E004 10-65
5. E007 10-65
6. E010 10-66
7. E030 10-66
8. E064 10-67
9. E202 (keys on control panel invalidated) 10-67
10. E210 10-68
11. E220 10-68
12. E240 10-68
13. E261 10-69
14. E710, E711, E712, E717 10-69
15. E803 10-69
16. AC power supply is absent.....10-70
17. DC power supply is absent. ...10-71
18. The blank shutter fails to move.....10-72
19. The photosensitive drum fails to rotate. 10-72
20. The pick-up operation fails (from cassette). 10-73
21. The pick-up operation from the multifeeder fails. 10-73
22. The scanner fails to move forward/in reverse. 10-74
23. The registration roller fails to rotate. 10-74
24. The scanning lamp fails to turn on. 10-75
25. The lens fails to move. 10-75
26. The fixing heater fails to operate. 10-76
27. The pre-exposure lamp fails to turn on. 10-76
28. The add paper indicator fails to turn off. 10-76
29 The jam message fails to turn off. 10-77

V. TROUBLESHOOTING FEEDING PROBLEMS.....10-78
A. Jams (copy paper).....10-78
1. Pick-Up Assembly 10-79
2. Separation/Feeding Assembly.....10-80
3. Fixing/Delivery Assembly 10-80
B. Feeding Faults.....10-81
1. Double feeding 10-81
2. Wrinkling.....10-81

VI. ARRANGEMENT AND FUNCTIONS OF THE ELECTRICAL PARTS.....10-82
A. Sensors 10-82
B. Clutches, Solenoids, and Switches 10-84
C. Motors, Heaters, and Lamps.....10-86
D. PCBs 10-88
E. Cassette Feeding Module-A2.....10-90
F. Variable Registors (VR) and check Pins by PCB.....10-92
1. DC controller PCB.....10-92
2. Composite power supply PCB 10-93

VII. SERVICE MODE 10-94
A. Outline 10-94
B. Using Service Mode 10-94
1. Activating Service Mode.....10-94
2. Selecting a Service Mode 10-95
3. Selecting Items.....10-95
4. Using Adjustment Mode [3] and Specification Mode [5].....10-95
5. Using Operation/Inspection Mode [4] 10-95
6. Clearing Stored Error 10-95
7. Recording on the Service Mode Label 10-96
C. Control Display Mode [1].....10-97
D. I/O Mode [2] 10-99
E. Adjustment Mode [3] 10-102
F. Operation/Inspection Mode [4] 10-105
G. Specification Settings Mode [5]...10-107
H. Counter Mode [6] 10-108

VIII. SELF DIAGNOSIS.....10-109
A. Copier.....10-109
B. Self Diagnosis (ADF).....10-113
C. Self Diagnosis (Sorter).....10-114

COPYRIGHT © 1997 CANON INC. CANON NP6218 REV.0 MAY 1997 PRINTED IN JAPAN (IMPRIMÉ AU JAPON)

APPENDIX

A. GENERAL TIMING CHART.....A-1
B. SIGNALS AND ABBREVIATIONS.....A-2
C. GENERAL CIRCUIT DIAGRAM.....A-3
not available
D. SPECIAL TOOLS.....A-5
E. SOLVENTS/OILS.....A-6

COPYRIGHT © 1997 CANON INC.
CANON NP6218 REV.0 MAY 1997 PRINTED IN JAPAN (IMPRIMÉ AU JAPON)

CHAPTER 1

GENERAL DESCRIPTION

This chapter introduces features and specifications, and explains how the machines are operated and copies are made.

I. FEATURES 1-1
II. SPECIFICATIONS 1-2
A. Copier 1-2
B. Cassette Feeding Module-B2/ Cassette Feeding Module-A2 1-5
III. NAMES OF PARTS 1-6
A. Exterior View 1-6
B. Cross Section 1-7
IV. OPERATION 1-9
A. Control Panel 1-9
B. Operation Mode 1-10
C. Making Two-Sided/Overlay Copies (manual) 1-11
D. User Mode 1-12
E. Handling the Toner Bottle 1-19
V. WARNINGS AND ACTIONS 1-19
VI. ROUTINE MAINTENANCE BY THE USER 1-19
VII. IMAGE FORMATION 1-20
A. Outline 1-20

COPYRIGHT © 1997 CANON INC. CANON NP6218 REV. 0 MAY 1997 PRINTED IN JAPAN (IMPRIME AU JAPON)

I. FEATURES

The copier becomes ready to make copies as soon as it is turned on. When fitted with options, it provides a maximum of four paper sources.

1. **Multiple front loading and multifeeder for space saving.**
   - The cassette may be slid out to the front for paper supply work.
   - With the adjustable cassette and the multifeeder, various types of paper may be used.
2. **Office amenities and ecology.**
   - The copier is equipped with a heating mechanism, which makes the copier ready for copying work at power-on without wait time.
   - The copier is designed compact, enabling effective use of office space.
   - The use of roller charging has proved to reduce the generation of ozone significantly. (1/100 to 1/1000 compared to other Canon copiers)
   - As the pick-up mechanism, center-reference is adopted in consideration of the use of recycled paper.
   - A significant number of parts are made of plastic in an effort to promote recycling.
   - The copier is designed as a clamshell type to facilitate clearing of jammed paper.
3. **Dependable high image quality.**
   - The new HQ (high-quality) toner ensures faithful reproduction of solid black, text, and photos.
   - In addition to Canon's own single-component toner projection development method, the use of auto image control (AIC) ensures stable reproduction of images.
4. **Practical basic features.**
   - As many as 18 copies (A4, horizontal) may be made per minute.
   - Copies may be as large as A3/Ledger or as small as A5/STMT, accommodating postcards.
   - The AE mechanism promises enhanced reproduction of newspapers or diazo originals.
   - Using page separation mode, a book may be copied with its left and right pages processed separately.
   - Copies may be made in zoom between 49% and 204%.
   - The zoom fine-adjustment mechanism ensures better control for faithful reproduction of originals.
   - The auto power-off mechanism helps further saving of energy.
   - The interrupt mechanism enables cutting in on a continuous copying session.

COPYRIGHT © 1997 CANON INC.
CANON NP6218 REV. 0 MAY 1997 PRINTED IN JAPAN (IMPRIME AU JAPON)

II. SPECIFICATIONS

A. Copier

1. Type

Item	Description
Body	Desk top
Copyboard	Fixed
Light source	Fluorescent lamp
Lens	Zoom
Photosensitive medium	OPC (ø30)

2. System

Item		Description
Copying		Indirect electrophotographic
Charging		Roller (direct charging)
Exposure		Slit (moving light source)
Copy density adjustment		Automatic (AE) or manual
Development		Dry (toner projection)
Pick-up	Auto	1 cassette
	Manual	Multifeeder
Transfer		Roller
Separation		Curvature + static eliminator
Cleaning		Cleaning blade
Fixing		Fixing (by plane-shaped heater; 1100 W max.)

COPYRIGHT © 1997 CANON INC.
CANON NP6218 REV. 0 MAY 1997 PRINTED IN JAPAN (IMPRIME AU JAPON)

3. Features

Item			Specification
Original type			Sheet, book, 3-D object (2 kg max.)
Maximum original size			A3 (297 × 420 mm)/LDG (11" × 17") Center reference
Reproduction ratio			Direct, 2R2E (Table 1-201) Zoom 49% to 204%
Wait time			0 sec
First copy			8.2 sec or less (11.6 sec or less at power-on; A4, Direct, non-AE, from cassette)
Continuous copying			100 (max.; upper limit may be varied in service mode)
Copying speed			See Table 1-202.
Copy size			Cassette: A3/11" × 17" to A5/STMT 3.94" × 5.88" Manual: A3/11" × 17" to postcard (vertical)
Copy paper	Cassette		Plain paper (64 to 80 g/m^2), tracing paper (SM1), colored paper, recycled paper (64 to 80 g/m^2), ecology paper (80 g/m^2)
	Manual		Plain paper (64 to 80 g/m^2), tracing paper (SM1, GNT80), colored paper, recycled paper (64 to 80 g/m^2), ecology paper (80 g/m^2), transparency, postcard, label sheet, thick paper (81 to 128 g/m^2)
	Two-sided/ overlay	Manual	Plain paper (64 to 80 g/m^2), colored paper, postcard, recycled paper (64 to 880 g/m^2), ecology paper (80 g/m^2)
Cassette			34 mm deep (approx.; about 250 sheets of 80 g/,m^2 paper), clawless, front loading (center reference)
Multifeeder			5 mm high (max.; about 50 sheets of 80 g/m^2), clawless (center reference)
Copy tray			100 sheets (approx.; A3 size, 80 g/m^2)
Non-image width	One-sided		2.0 ±1.0 mm (leading edge), 2.5 ±1.5 mm (left/right, trailing edge)
	Multi manual		2.0 ±1.0 mm (leading edge), 3.5 ±1.5 mm (left/right, trailing edge)
Auto clear			Available (2 min standard; may be varied between 1 to 9 min in 1-minute increments; may be disabled)
Auto power-off			Available (5 min standard; may be varied in user mode to 2, 5, 10, 15, 30, 60, 120 min)
Option			Cassette Feeding Module-B2, Cassette Feeding Module-A2, Control Card IV N, Stapler Sorter B2/D1, MS-B1 ADF-E1

Caution:

1. Use Canon-recommended paper.
2. Remove curling before feeding for a second time.
3. Fan out the transparencies before setting them on the multifeeder to prevent adhesion.

COPYRIGHT © 1997 CANON INC.
CANON NP6218 REV. 0 MAY 1997 PRINTED IN JAPAN (IMPRIME AU JAPON)

4. Others

Item		Specifications	
Operating environment	Temperature	7.5°C to 32.5°C/45.5°F to 90.5°F	
	Humidity	5% RH to 85% RH	
	Atmospheric pressure	810.6 hPa to 1013.3 hPa (0.8 to 1 atm)	
Power supply		Serial numbers	
	230 V (50Hz)	UCDXXXXX	
Power consumption	Maximum	1.5 kW or less	
	Standby	97.2 kJ per hr (27 wh average; reference only)	
	Continuous	2088 kJ (580 wh average; reference only)	
Noise	Copying	49.7 dB or less (1 m front)	Sound power level by ISO method
	Standby	—	
Ozone (average over 8 hr)		0.01 ppm or less (average); 0.02 ppm or less (max.)	
Dimensions	Width	585 mm/23.0 in	
	Depth	622 mm/24.5 in	
	Height	345 mm/13.6 in	
Weight		48 kg (approx.)	
Consumables	Copy paper	Keep wrapped to protect against humidity.	
	Cartridge	Avoid direct rays of the sun; keep at 40°C/104°F, 85% RH.	

Reproduction ratio	DIRECT	1: 1 (±0.5%)
	REDUCE I	1: 0.500
	REDUCE II	1: 0.707
	ENLARGE I	1: 1.414
	ENLARGE II	1: 2.000
	ZOOM	49% to 204% (1% increments)

Table 1-201 Standard Reproduction Ratios

COPYRIGHT © 1997 CANON INC.
CANON NP6218 REV. 0 MAY 1997 PRINTED IN JAPAN (IMPRIME AU JAPON)

Reproduction ratio		Copy size			Copies/min
DIRECT	1: 1 (±0.5%)	A3	(297 × 420)		10
		A4	(210 × 297)		18
		A5	(148 × 210)		21
		A4R	(297 × 210)		14
		A5R	(210 × 148)		18
REDUCE	1: 0.500 (+1.0%)	A3	→	A5R	20
	1: 0.707 (+1.0%)	A3	→	A4R	12
		A4	→	A5	12
ENLARGE	1: 2.000 (+1.0%)	A5R	→	A3	11
	1: 1.414 (+1.0%)	A4R	→	A3	10
		A5	→	A4	19

Table 1-202 Copying Speed

Specifications subject to change without notice.

B. Cassette Feeding Module-B2/Cassette Feeding Module-A2

Copy paper	As per copier.
Cassette	As per copier.
Power supply	34 V DC, 24V, 5V (from copier)
Dimensions	Cassette Feeding Module-B2: 585W × 622D × 105H (mm) /23.0in x 24.5in x 8.3in Cassette Feeding Module-A2: 585W × 622D × 210H (mm) /23.0in x 24.5in x 4.1in
Weight	Cassette Feeding Module-B2: 9kg Cassette Feeding Module-A2: 16kg

Table 1-203

COPYRIGHT © 1997 CANON INC.
CANON NP6218 REV. 0 MAY 1997 PRINTED IN JAPAN (IMPRIME AU JAPON)

III. NAMES OF PARTS

A. Exterior View

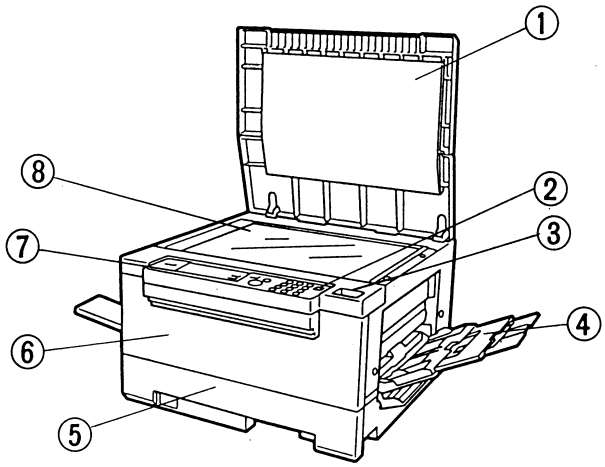

① Copyboard cover
② Power switch
③ Clip tray
④ Multifeeder
⑤ Cassette
⑥ Front door
⑦ Control panel
⑧ Copyboard glass

Figure 1-301

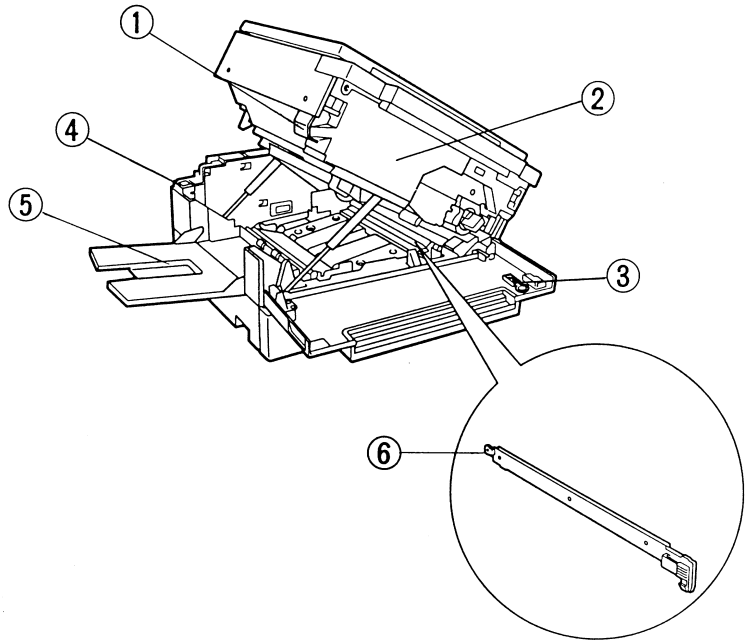

① Open/close lever
② Copy density correction knob
③ Static eliminator cleaner
④ Heater switch
⑤ Copy tray
⑥ Static eliminator

Figure 1-302

COPYRIGHT © 1997 CANON INC.
CANON NP6218 REV. 0 MAY 1997 PRINTED IN JAPAN (IMPRIME AU JAPON)

B. Cross Section

1. Body

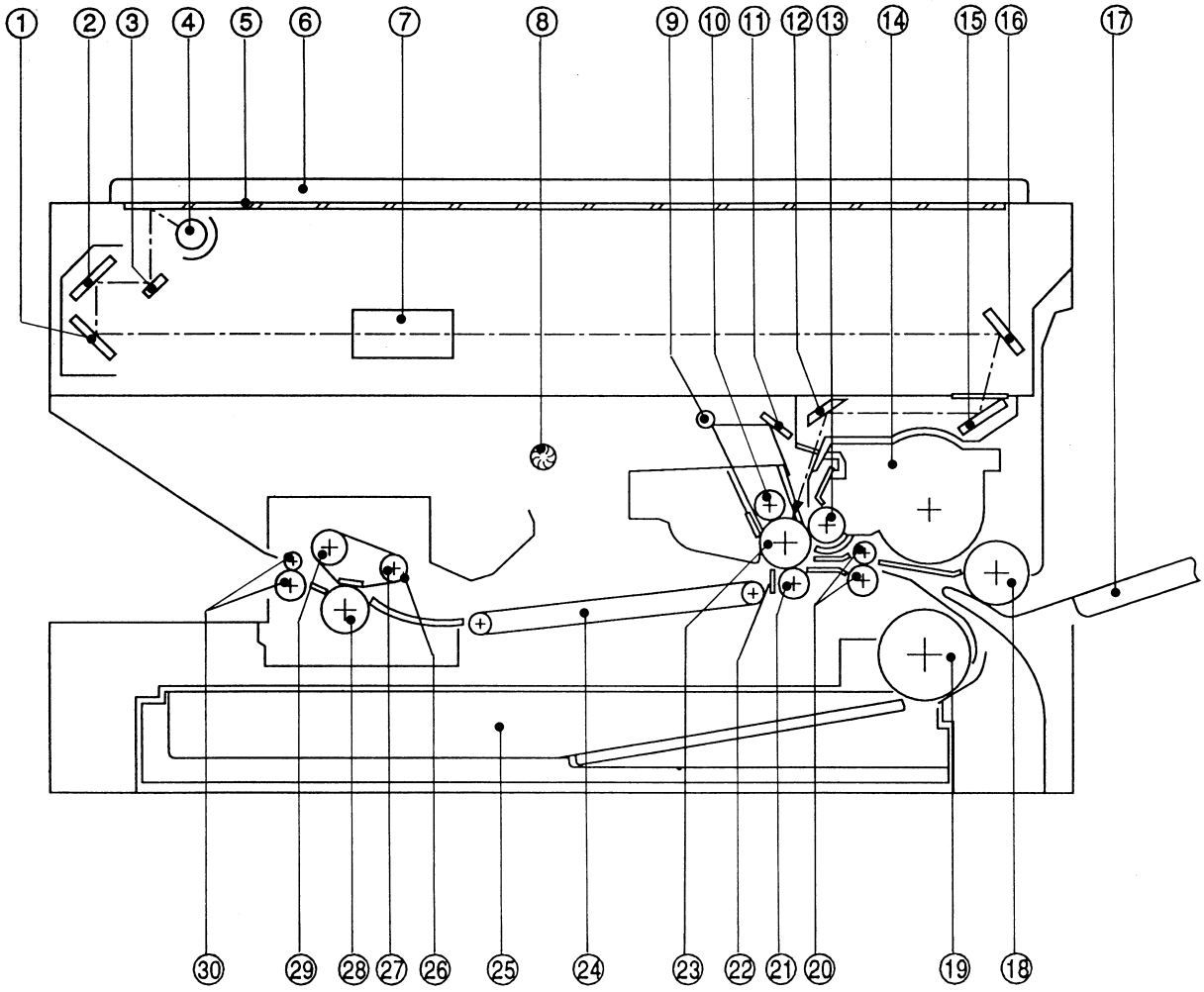

① No. 3 mirror
② No. 2 mirror
③ No. 1 mirror
④ Scanning lamp
⑤ Copyboard glass
⑥ Copyboard cover
⑦ Lens
⑧ Exhaust fan
⑨ Pre-exposure lamp
⑩ Primary charging roller
⑪ Reflecting plate
⑫ No. 6 mirror
⑬ Developing cylinder
⑭ Developing assembly
⑮ No. 5 mirror
⑯ No. 4 mirror
⑰ Multifeeder tray
⑱ Multifeeder pick-up roller
⑲ Cassette pick-up roller
⑳ Registration roller
㉑ Transfer roller
㉒ Separation static eliminator
㉓ Photosensitive drum
㉔ Feeding assembly
㉕ Cassette
㉖ Fixing film
㉗ Film tension roller
㉘ Film pressure roller
㉙ Film drive roller
㉚ Delivery roller

Figure 1-303

COPYRIGHT © 1997 CANON INC.

2. Cassette Feeding Module-A2

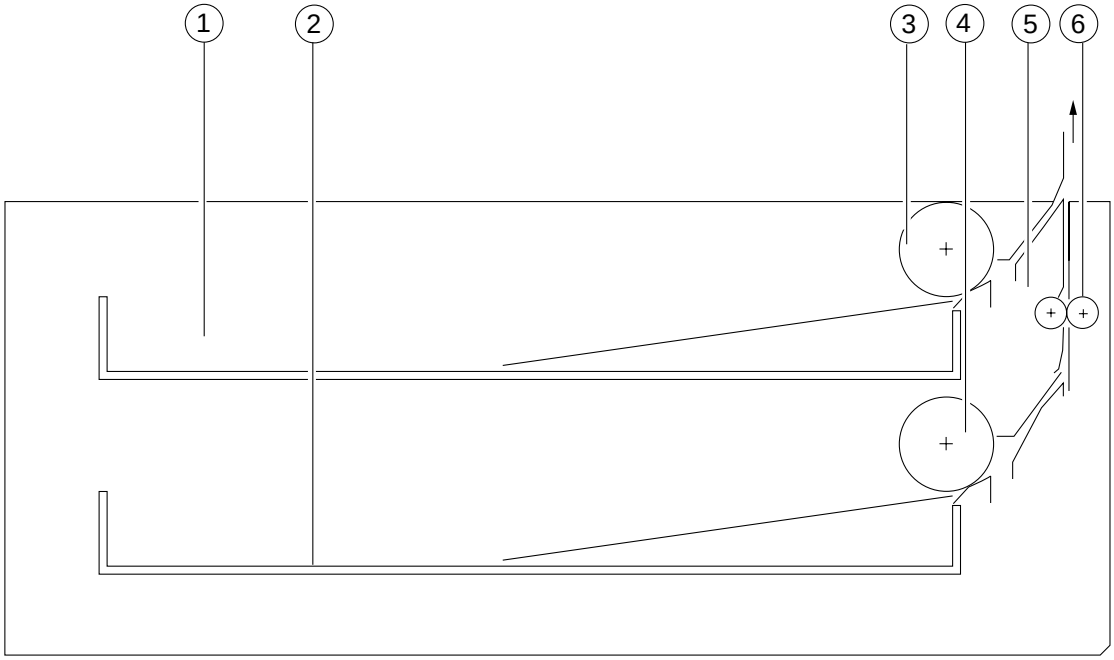

① Cassette 2
② Cassette 3
③ Cassette 2 pick-up roller
④ Cassette 3 pick-up roller
⑤ Drive roller
⑥ Feeding roller

Figure 1-304

COPYRIGHT © 1997 CANON INC.
CANON NP6218 REV. 0 MAY 1997 PRINTED IN JAPAN (IMPRIME AU JAPON)

IV. OPERATION

A. Control Panel

① Image Compose key
② Page Separate key
③ Warning indicator
④ Display
⑤ % key
⑥ Reset key
⑦ Keypad
⑧ Power switch
⑨ Interrupt key
⑩ Clear key
⑪ Stop key
⑫ Start key
⑬ Auto Ratio key
⑭ Zoom key
⑮ Paper Select key
⑯ Cassette/Jam indicator
⑰ Direct key
⑱ Reduce/Enlarge key
⑲ Copy density key
⑳ AE key
㉑ Sorter key
㉒ Sorter indicator

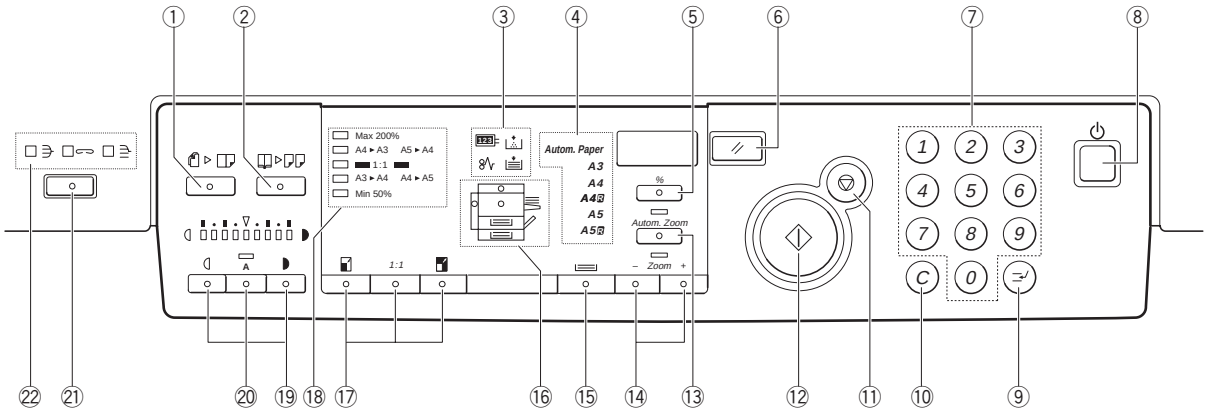

Figure 1-401

B. Operation Mode

Mode	Description	Remarks
Image Composition mode	Press to set/reset image composition mode.	Only when an ADF (accessory) is installed.
Page Separation mode	Press to set/reset page separation mode.	
Interrupt mode	Press to interrupt an ongoing copying session.	
Auto Ratio mode	Press it to set/reset auto ratio mode.	Only when an ADF (accessory) is installed.
AE mode	Press to set/re-set AE mode or user mode.	
Sort/staple sort/group mode	Press it to select/reset sort, staple sort, or group mode.	Only when an sorter (accessory) is installed.

Table 1-401

COPYRIGHT © 1997 CANON INC.
CANON NP6218 REV. 0 MAY 1997 PRINTED IN JAPAN (IMPRIME AU JAPON)

C. Making Two-Sided/Overlay Copies (manual)

You can make two-sided or overlay copies by manually feeding paper. You must, however, keep the following in mind when making such copies:

① Be sure to orient the paper the same way for both sides when turning it over.
② Make sure that the paper has not absorbed moisture.
③ Make sure that the paper has no curling.
④ After copying on the first side, sufficiently cool the paper; then, correct any curling before feeding it for a second time.
⑤ Use paper of 60 to 128 g/m^2.
⑥ Correct any curling on postcards or thick paper (128 g/m^2) before copying on the second side.

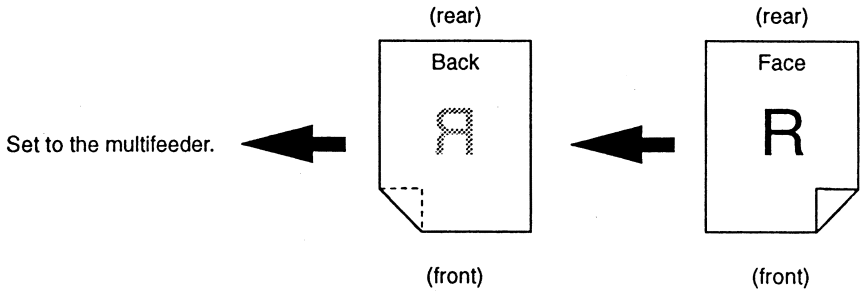

Figure 1-405

D. User Mode

1. Outline

The copier provides user mode, which allows the user to change various settings or to make various adjustments on his/her own; see Table 1-402.

Menu No.	Display	Function	Description	Default settings
1	U 1	Changing the auto clear time	You may set the auto clear time between 1 and 9 min in 1-min increments. Setting it to '0' disables the function.	2 min
2	U 2	Changing the auto power-off time	You can set the auto power-off time to either 2, 5, 10, 15, 30, 60, or 120 min.	5 min
3	U 3	Fine adjusting (zoom)	You can correct a slight discrepancy between original and copy sizes (direct); enlarge in X direction and reduce in Y direction independent of each other.	± 0%
5	U 5	Turning on/off auto sort/non-sort (with ADF* and sorter* installed) *Accessory	You may specify whether to evecute auto sort/non-sort.	On
6	U 6	Cleaning the feeder (with ADF* installed) Option	Use it to clean the pick-up assembly of the ADF.	
9	U 9	Selecting a density adjustment method for standard mode	You can specify either AE or manual for density adjustment for standard mode.	AE
0	0 0	Initializing user mode	You can return settings changed in user mode to initial settings.	

Table 1-402

COPYRIGHT © 1997 CANON INC.
CANON NP6218 REV. 0 MAY 1997 PRINTED IN JAPAN (IMPRIME AU JAPON)

2. Common Operations

a. Keys to Use in User Mode

- Clear Key
  Use it to return to the previous step; or, use it to clear a setting entered by mistake when making mode settings.
- Start Key
  Use it to accept a selected item when making user mode settings.
- AE Key
  Use it to return to copy mode when making user mode settings.

b. Operation

1) Hold down the AE key for about 4 sec or more.
   • This will turn on the display, indicating " U 1 ".
2) Enter the menu number of each function using the keypad.
3) Press the Start key.
   • The current setting of the respective function appears.
4) Enter a new setting using the appropriate key.
5) Press the start key.
   • The copy count/ratio indictor turns on to indicate the user mode being changed.
   • The setting of the respective user mode is changed.
6) Press the AE key.
   • The copier returns to standby state.

3. Changing the Auto Clear Time (U 1)

1) Hold down the AE key for 4 sec or more.
   • " U 1 " appears on the display.
2) Press the Start key.
   • The display indicates the current setting (if initial, indicates '1-2').
3) Enter a desired setting using the keypad.
   • The display indicates the new setting (if 5 min, indicates '1-5').
4) Press the Start key. " U 1 "
5) Press the AE key.
   • The copier returns to standby state.

4. Changing the Auto Power-Off Time (U 2)

1) Hold down the AE key for 4 sec or more.
   • " U 1 " appears on the display.
2) Enter '2' using the keypad so that the display indicates " U 2 ".
3) Press the Start key.
   • The display indicates the current setting (if initial, indicates '2-2').
4) Enter a desired setting using the keypad.

COPYRIGHT © 1997 CANON INC.

Auto power-off time (min)	Settings
2	2-1
5	2-2
10	2-3
15	2-4
30	2-5
60	2-6
120	2-7

Table 1-403

- The display indicates the new setting (if 10 min, indicates '2-3').

5) Press the Start key.
   - The auto power-off time is changed, and the display returns to " U 2 ".
6) Press the AE key.
   - The copier returns to standby state.

Reference:
If you want to disable the auto power-off function, use service mode (See p. 10-109.).

5. Zoom Fine-Adjustment (U 3)

1) Hold down the AE key for 4 sec or more.
   - The display indicates " U 1 ".
2) Enter '3' using the keypad so that the display indicates " U 3 ".
3) Press the Start key.
   - The display indicates '3-1' suggesting the direction of adjustment.

Direction of adjustment	Display
X direction (horizontal)	3-1
Y direction (vertical)	3-2

Table 1-404

Further, the copy density indicator shows the current setting. (See Figure 1-406.)

4) Press the copy density key to adjust the reproduction ratio in X direction. (See Figure 1-406.)
5) Press the Start key.
   - The reproduction ratio in X direction is fine-adjusted, and the display indicates '3-2'.

   Further, the copy density indicator shows the current setting. (See Figure 1-406.)
6) Press the Density key to adjust the reproduction ratio in Y direction. (See Figure 1-406.)

COPYRIGHT © 1997 CANON INC.
CANON NP6218 REV. 0 MAY 1997 PRINTED IN JAPAN (IMPRIME AU JAPON)

7) Press the Start key.
   • The zoom reproduction is fine-adjusted, and the display returns to " U 3 ".
8) Press the AE key.
   • The copier returns to standby state.

The fine-adjustment reproduction ratios as shown in the copy density display are as follows:

■ Zoom Fine-Adjustment (Reduce)
Press the Lighter key.

■ Zoom Fine-Adjustment (Enlarge)
Press the Darker key.

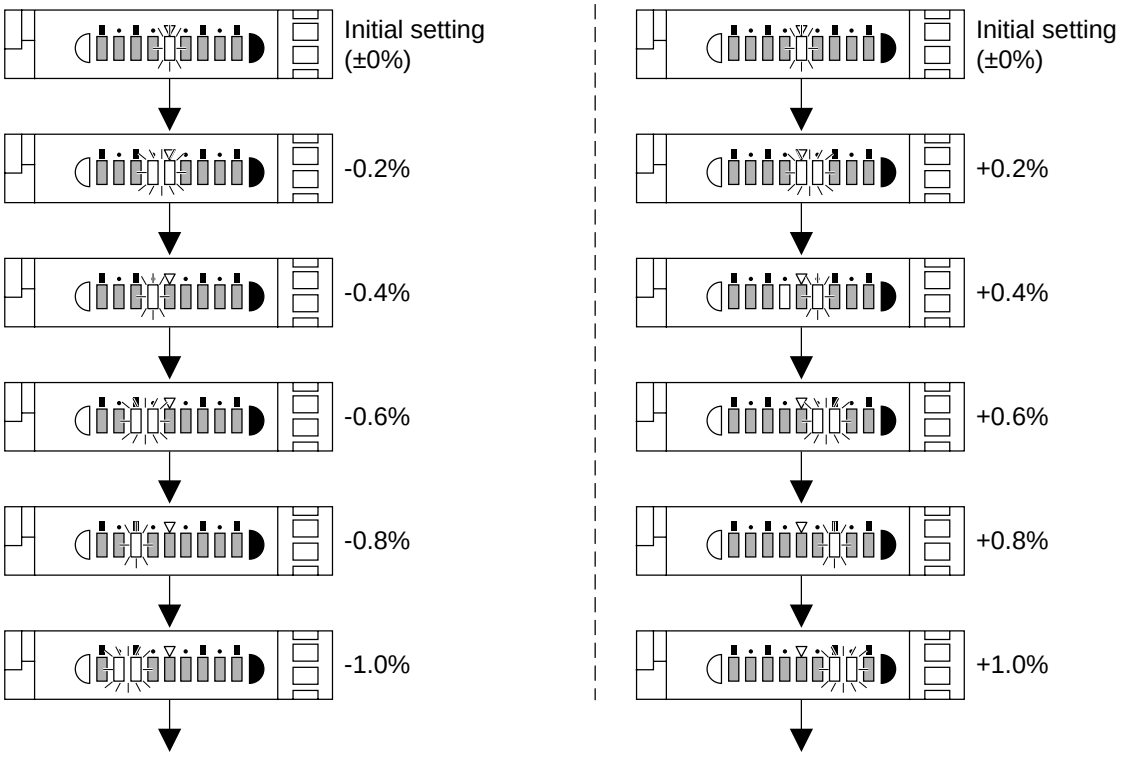

Figure 1-402

6. Turning On and Off the Auto Cassette Change Mechanism (U 4)

1) Hold down the AE key for 4 sec or more.
   • The display indicates " U 1 ".
2) Enter ④ using the keypad so that the display indicates " U 4 ".
3) Press the Start key.
   • The display indicates the current setting (if initial setting, '4-1').

State of auto cassette change function	Settings
On	4-1
Off	4-0

Table 1-405

COPYRIGHT © 1997 CANON INC.

4) Enter ① or ⓪ using the keypad to specify 'On' or 'Off'.
   • The display indicates the new setting (if Off, '4-0'.)
5) Press the Start key.
   • The auto cassette change function is turned on or off, and the display returns to " U 4 ".
6) Press the AE key.
   • The copier returns to standby state.

7. Turning On/Off the Auto Sort/Non-Sort (with ADF and sorter installed—option) (U 5)

1) Hold down the AE key for 4 sec or more.
   • The display indicates " U 1 ".
2) Enter ⑤ using the keypad so that the display indicates " U 5 ".
3) Press the Start key.
   The display indicates the current setting (if initial settings, '5-1').

Turning on/off the auto cassette change mechanism	Settings
On	5-1
Off	5-0

Table 1-406

4) Enter ① or ⓪ using the keypad to select On or Off.
   • The display indicates the new setting (if Off, '5-0').
5) Press the Start key.
   • The auto cassette change will be either On or Off, and the display returns to " U 5 ".
6) Press the AE key.
   • The copier returns to standby state.

8. Cleaning the Feeder (with ADF installed—option) (U 6)

1) Hold down the AE key for 4 sec or more.
   • The display indicates " U 1 ".
2) Enter ⑥ using the keypad so that the display indicates " U 6 ".
3) Place about 10 sheets of blank copy paper (white) on the ADF's original tray.
4) Press the Start key.
   • Feeder cleaning starts; to stop, press the Stop key.
   During the cleaning operation, " U 6 " on the display flashes; then, " U 6 " stops flashing and remains on.
5) Press the AE key.
   • The copier returns to standby state.

COPYRIGHT © 1997 CANON INC.
CANON NP6218 REV. 0 MAY 1997 PRINTED IN JAPAN (IMPRIME AU JAPON)

9. Selecting the Density Adjustment Method for Standard Mode (U 9)

1) Hold down the AE key for 4 sec or more.
   • The display indicates " U 1 ".
2) Enter ⑨ using the keypad so that the display indicates " U 9 ".
3) Press the Start key.
   • The display indicates '9-1'.

Selecting the density adjustment method for standard mode	Settings
AE (automatic)	9-1
Manual	9-0

Table 1-407

4) Enter ① or ⓪ using the keypad to select AE or manual so that the display indicates the new specification (if manual, indicates '9-0').
5) Press the Start key.
   • The new specification is stored, and the display returns to " U 9 ".
6) Press the AE key.
   • The copier returns to standby state.

10. Initializing User Mode (U 0)

1) Hold down the AE key for 4 sec or more.
   • The display indicates " U 1 ".
2) Enter ⓪ using the keypad so that the display indicates " U 0 ".
3) Press the Start key.
   • The display indicates '0-1'.
4) Enter ⓪ using the keypad.
   • The display indicates " U 0 ".
5) Press the Start key.
   • User mode is initialized, and the display returns to " U 0 ".
6) Press the AE key.
   • The copier returns to standby state.

COPYRIGHT © 1997 CANON INC.

11. Quick Guide to User Mode

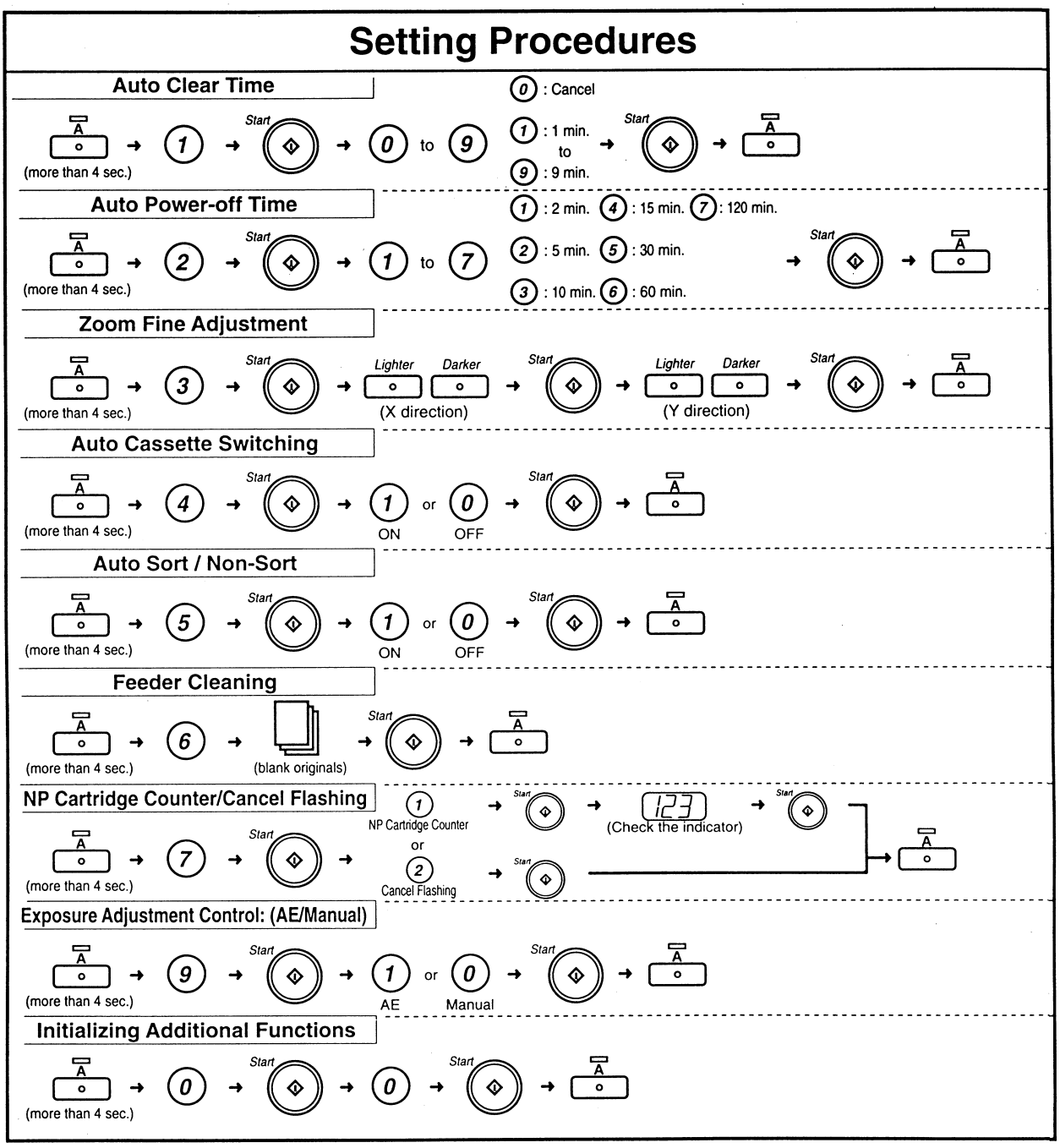

Table 1-408

COPYRIGHT © 1997 CANON INC.

E. Handling the Toner Bottle

Instruct the user to dispose of any empty toner bottle as nonflamable material.

⚠ Caution:
Do not dispose of the toner bottle into fire.
It may explode.

V. WARNINGS AND ACTIONS

• Handling the Toner Bottle

Instruct the user to dispose of any empty toner bottle as nonflammable material.

⚠ Caution:
Do NOT throw the cartridges into fire; it can burst or explode.

VI. ROUTINE MAINTENANCE BY THE USER

Make sure that the user cleans the following parts once a week:

① Copyboard Glass
Use a cloth moistened with water or mild detergent solution; then, dry wipe it.

② Copyboard Cover
Use a cloth moistened with water or mild detergent solution; then, dry wipe it.

③ Static Eliminator
If separation jams occur frequently, use the special brush (accessory) to clean it; the eliminator need not be cleaned as often as once a week.

COPYRIGHT © 1997 CANON INC.
CANON NP6218 REV. 0 MAY 1997 PRINTED IN JAPAN (IMPRIME AU JAPON)

VII. IMAGE FORMATION

A. Outline

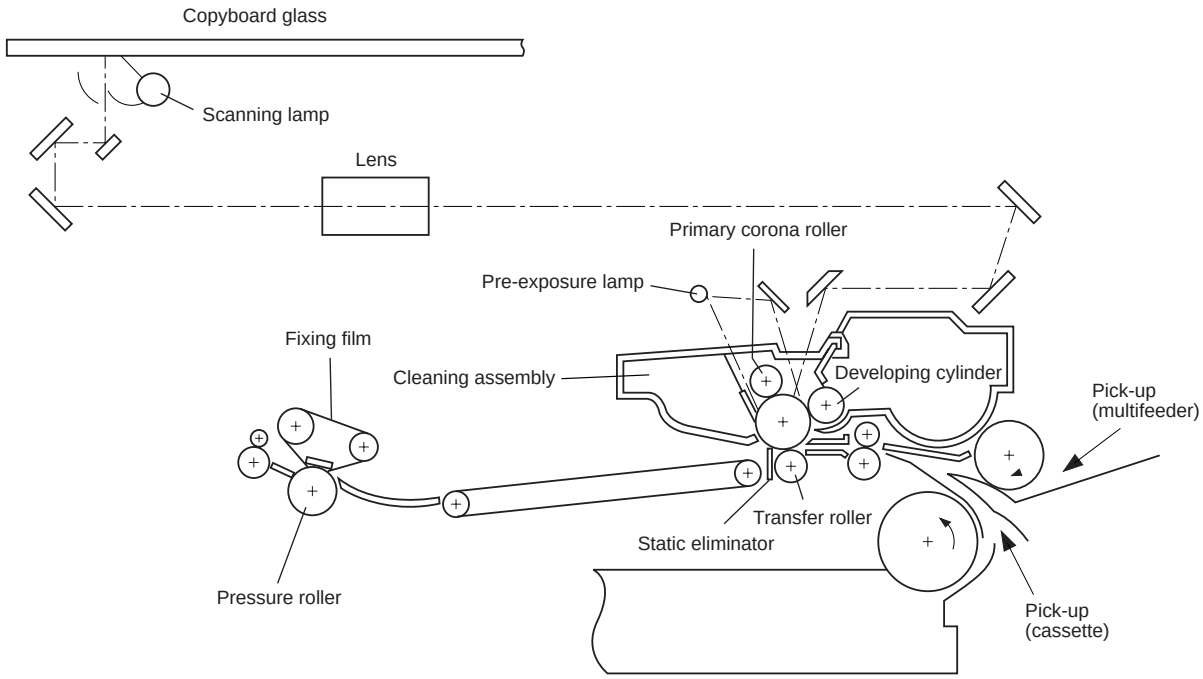

Figure 1-601

The copier uses an electrostatographic method to produce images and is constructed as shown in Figure 1-601.

It is equipped with an automatic control mechanism to ensure stable reproduction of high-quality images.

COPYRIGHT © 1997 CANON INC.
CANON NP6218 REV. 0 MAY 1997 PRINTED IN JAPAN (IMPRIME AU JAPON)

The NP6218 generates images in the following eight steps.
Step 1. Pre-exposure
Step 2. Primary charging
Step 3. Image exposure
Step 4. Development (AC + positive DC)
Step 5. Transfer (positive DC)
Step 6. Seperation (AC + positive DC)
Step 7. Fixing
Step 8. Drum cleaning

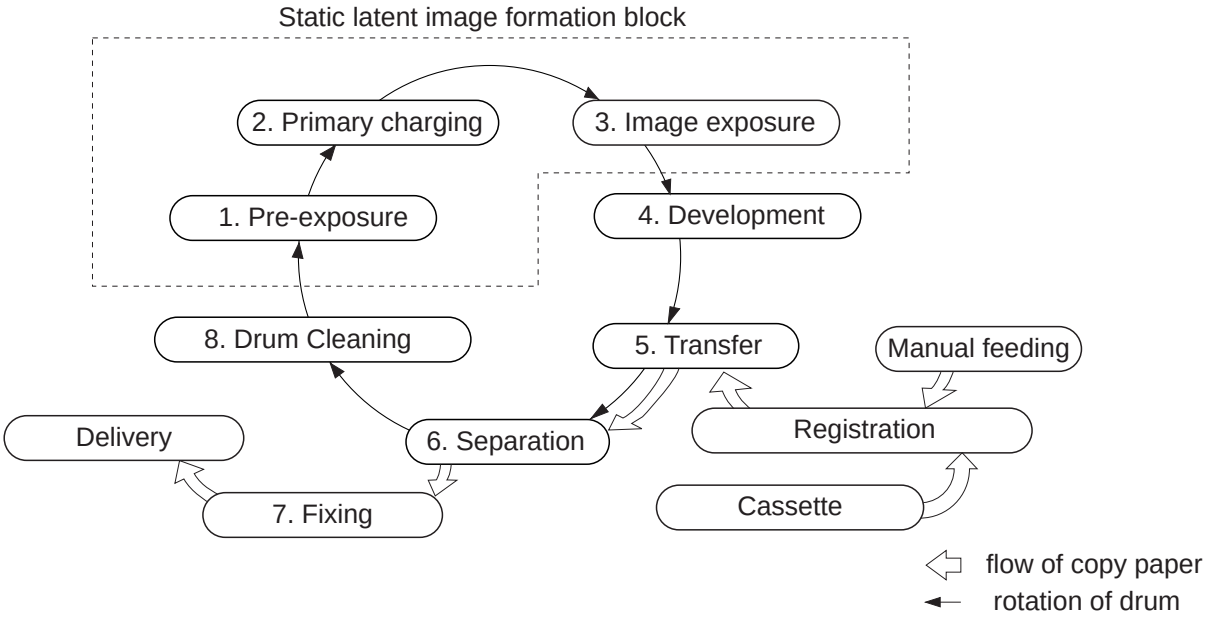

Figure 1-602

COPYRIGHT © 1997 CANON INC.
CANON NP6218 REV. 0 MAY. 1997 PRINTED IN JAPAN (IMPRIME AU JAPON)

CHAPTER 2

BASIC OPERATION

This chapter provides outlines of the copier's various operational workings. (Note that a single rotation of the drum takes about 0.29 sec.)

I. BASIC CONSTRUCTION 2-1
A. Functional Construction.....2-1
B. Outline of the Electrical Circuitry...2-2
C. Basic Sequence of Operations (2 copies continuous, AE) 2-3
D. Main Motor Control Circuit.....2-4
E. Inputs to the DC Controller PCB ...2-5
F. Outputs from the DC Controller PCB 2-8
G. Inputs to and Outputs from the 1-Cassette Unit Driver PCB.....2-11
H. Inputs to and Outputs from the 2-Cassette Unit Driver PCB.....2-12

COPYRIGHT © 1997 CANON INC. CANON NP6218 REV. 0 MAY 1997 PRINTED IN JAPAN (IMPRIME AU JAPON)

I. BASIC CONSTRUCTION

A. Functional Construction

The copier may be divided into four blocks; namely, the pick-up/feeding system, exposure system, image formation system, and control system.

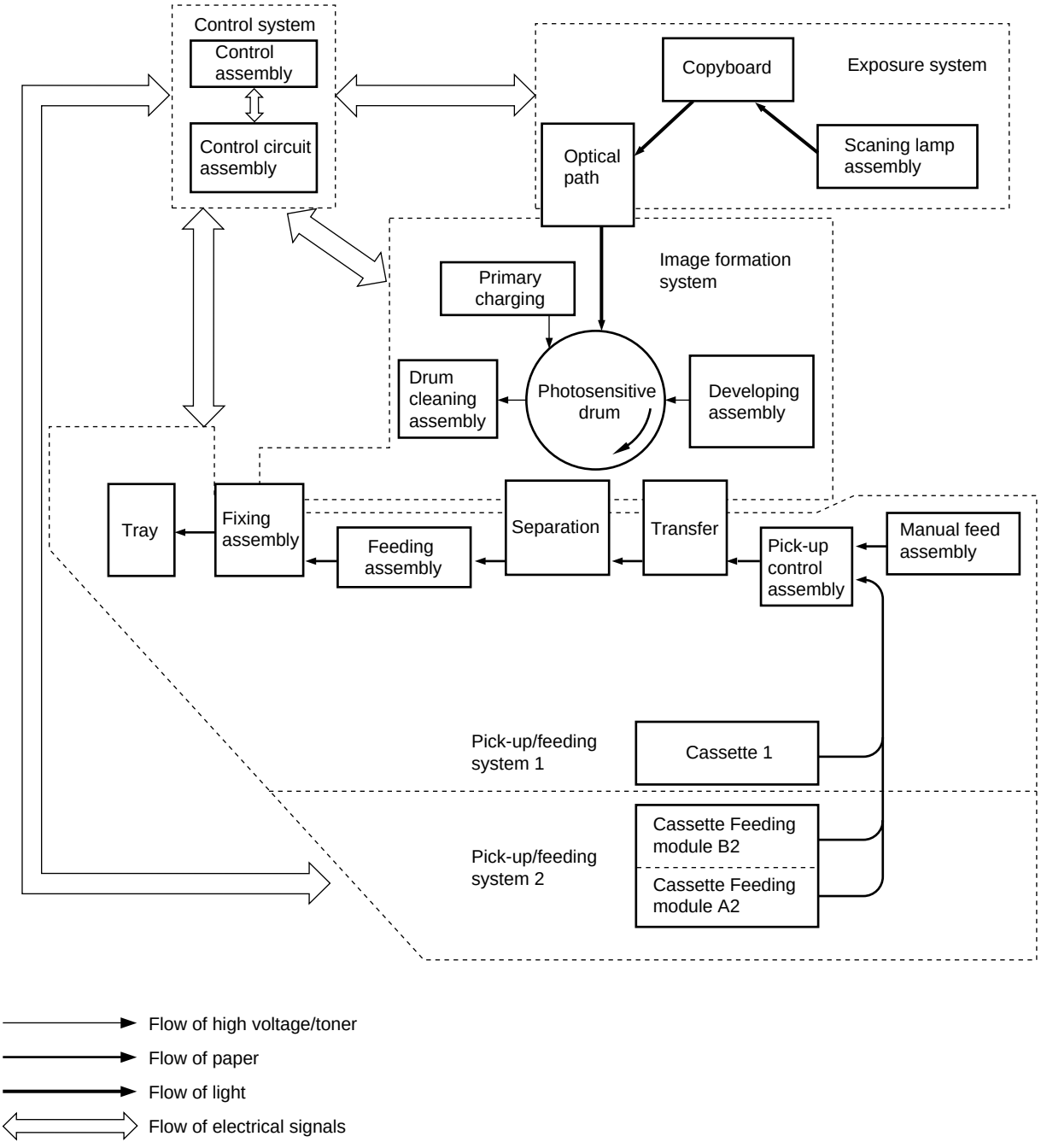

Figure 2-101

COPYRIGHT © 1997 CANON INC.

B. Outline of the Electrical Circuitry

The copier's principal electrical mechanisms are controlled by the microprocessor on the DC controller PCB. The microprocessor reads the input signals from the sensors and operation keys according to the stored program and generates signals used to drive such loads as motors, solenoids, and lamps.

The microprocessor is capable of reading both digital and analog signals because of its built-in A/D converter.

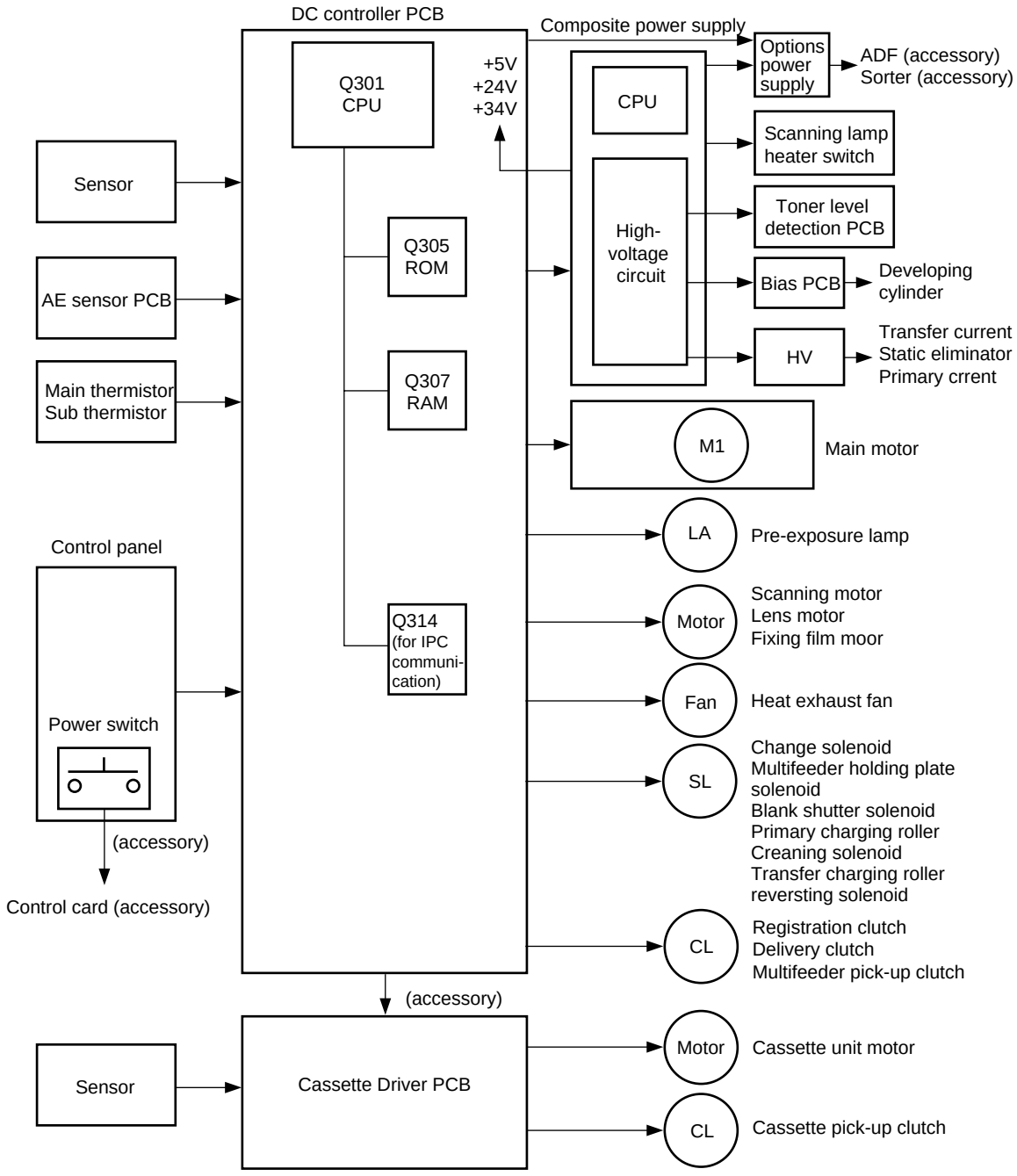

Figure 2-102

COPYRIGHT © 1997 CANON INC.
CANON NP6218 REV. 0 MAY 1997 PRINTED IN JAPAN (IMPRIME AU JAPON)

C. Basic Sequence of Operations (2 copies continuous, AE)

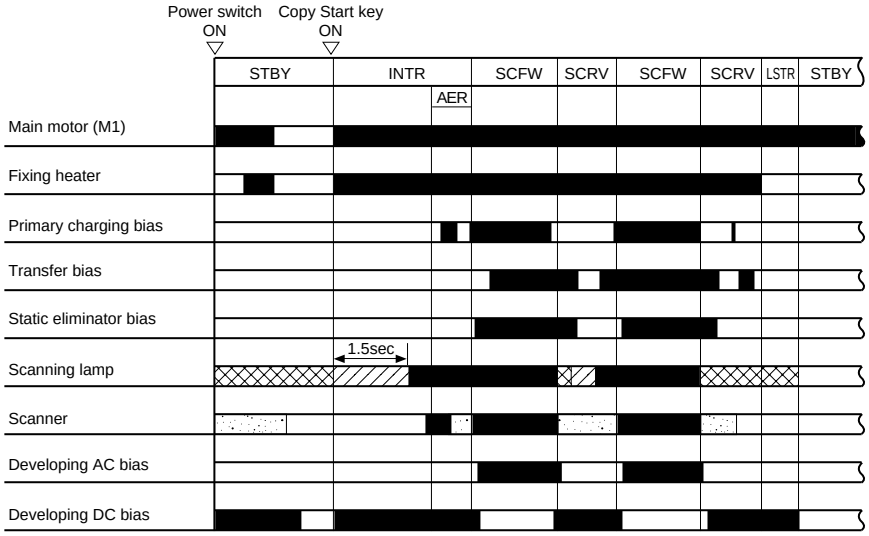

Figure 2-103

Period		Description	Remarks
STBY (standby)	• Between when LSTR is over and when the Copy Start key is pressed or the Power switch is pressed. • Between when the Power switch has been pressed and when the Copy Start key is pressed.	Until the Copy Start key or another operation key is pressed.	• Upon completion of LSTR, the indications on the control panel return to indications for standard mode after 2 min.
INTR (initial rotation)	For at least 1 sec after the Copy Start key has been pressed.	The drum sensitivity is stabilized in preparation for a copy run.	
AER (AE rotation)		The scanner is moved about 65 mm forward and in reverse to measure the density of the original.	AE mode only.
SCFW (scanner forward)	While the scanner is moving forward. • The distance of forward travel varies depending on the cassette size and reproduction ratio. • The distance of reverse travel varies depending on the selected reproduction ratio.	The scanning lamp illuminates the original, and the reflected optical image is projected on the photosensitive drum through mirrors and lenses.	
SCRV (scanner reverse)	While the scanner is moving in reverse.	The scanner is returned to the home position in preparation for the next copy run.	The registration signal is generated to move the copy paper to the transfer assembly.
LSTR (last rotation)	Between when SCRV is over and when the copy paper moves past the delivery sensor.	The surface of the photosensitive drum is cleaned using static electricity as post treatment.	The last copy is discharged.

Table 2-101

COPYRIGHT © 1997 CANON INC.

D. Main Motor Control Circuit

1. Outline

Figure 2-104 shows the circuit used to control the main motor (M1); the circuit has the following functions:

① turns on and off the main motor.
② controls the main motor to a specific rotation speed.

The main motor (M1) is a DC motor that has a built-in clock pulse generator. When the motor rotates, it generates clock pulse signals (MMCLK*) according to the revolution of the motor. The speed control circuit matches the phases of the frequency of these clock pulses and that of the reference signals to control the main motor (M1) to a specific revolution speed.

2. Mechanism

When the main motor drive signal (MMD) from the DC controller circuit goes '1', the drive circuit of the motor driver turns on, thereby rotating the main motor (M1) at a constant speed.

While the main motor is rotating at a specific speed, the motor driver PCB keeps sending the specific speed state signal=0 (MLOCK*) to the DC controller PCB. If, for some reason, an irregularity occurs in the rotation of the main motor, the MLOCK* signal goes '1'.

If the main motor drive signal (MMD) remains '1' and the MLOCK*=0 remains unchanged for about 1 sec, the DC controller identifies a main motor error and stops the main motor and, at the same time, indicates 'E010'.

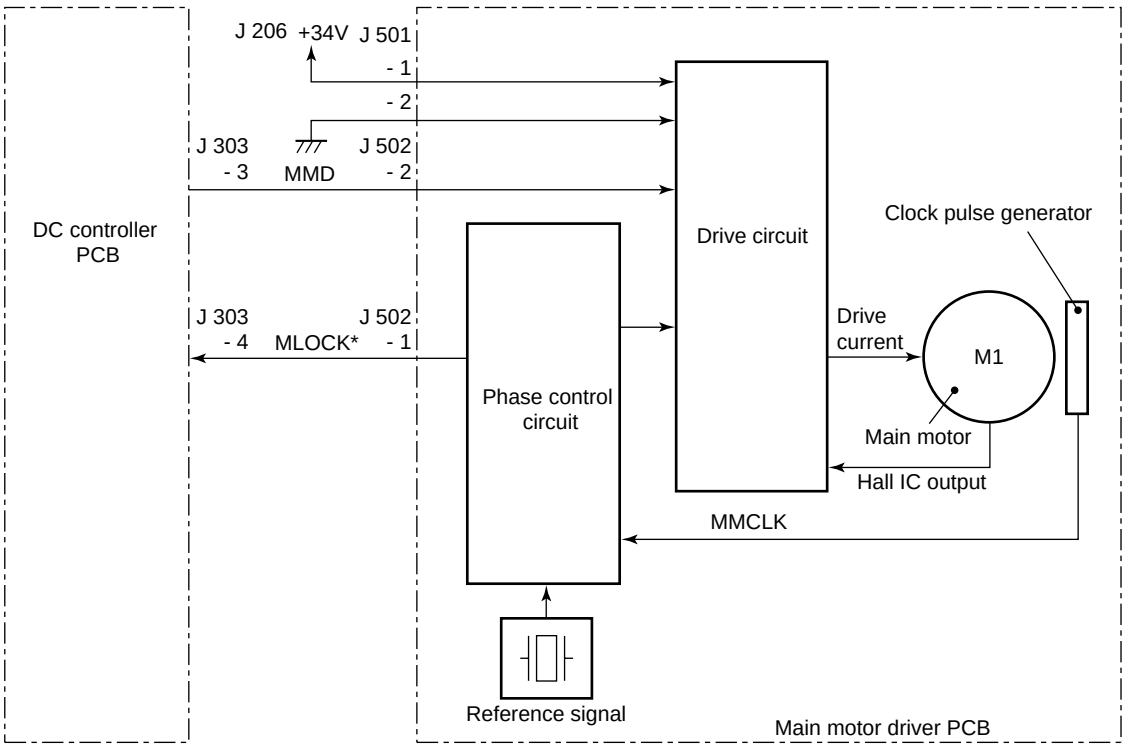

Figure 2-104

COPYRIGHT © 1997 CANON INC.
CANON NP6218 REV. 0 MAY 1997 PRINTED IN JAPAN (IMPRIME AU JAPON)

E. Inputs to the DC Controller PCB

1. Inputs to the DC Controller PCB (1/3)

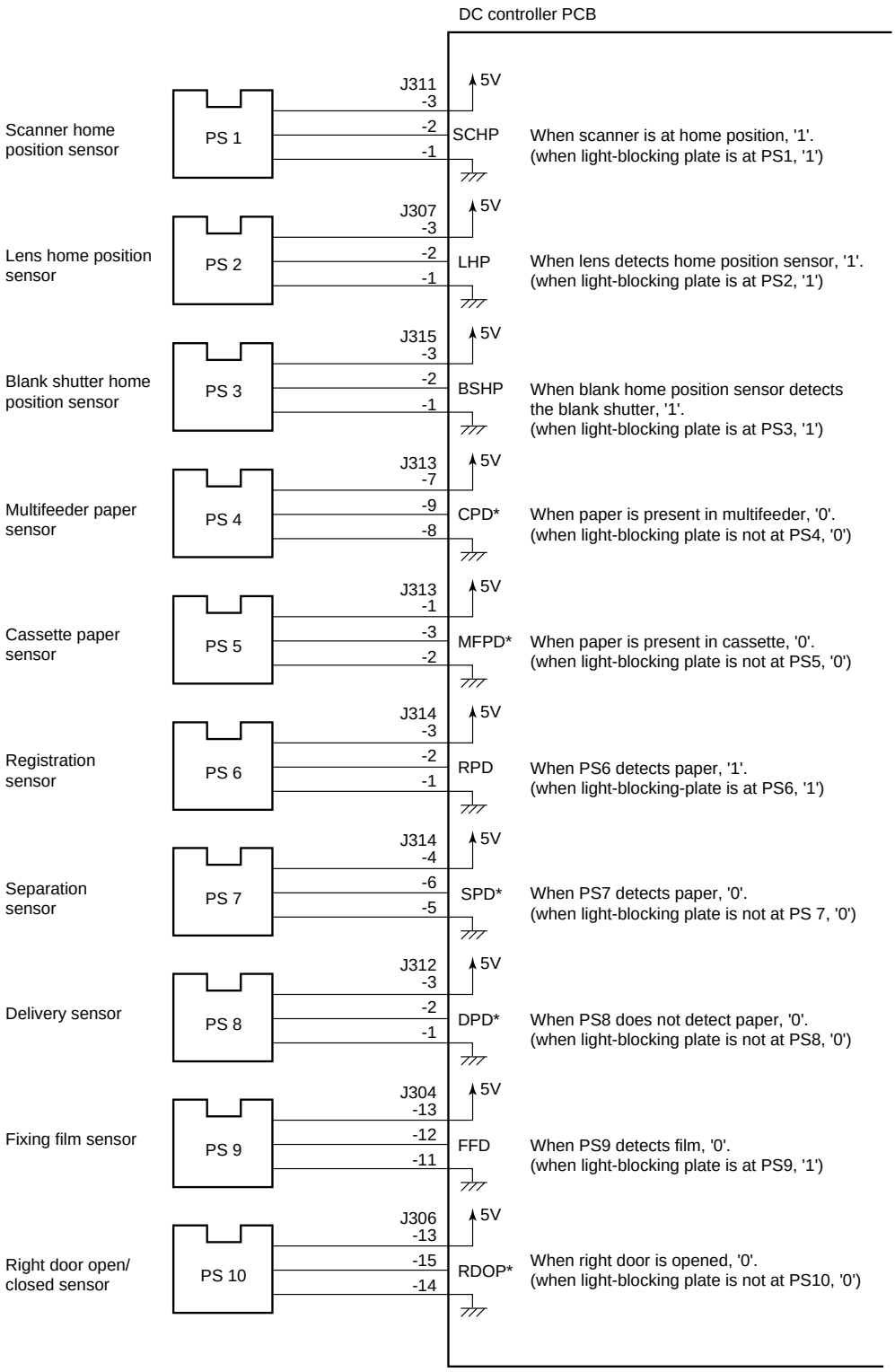

Figure 2-105

COPYRIGHT © 1997 CANON INC.

2. Inputs to the DC Controller PCB (2/3)

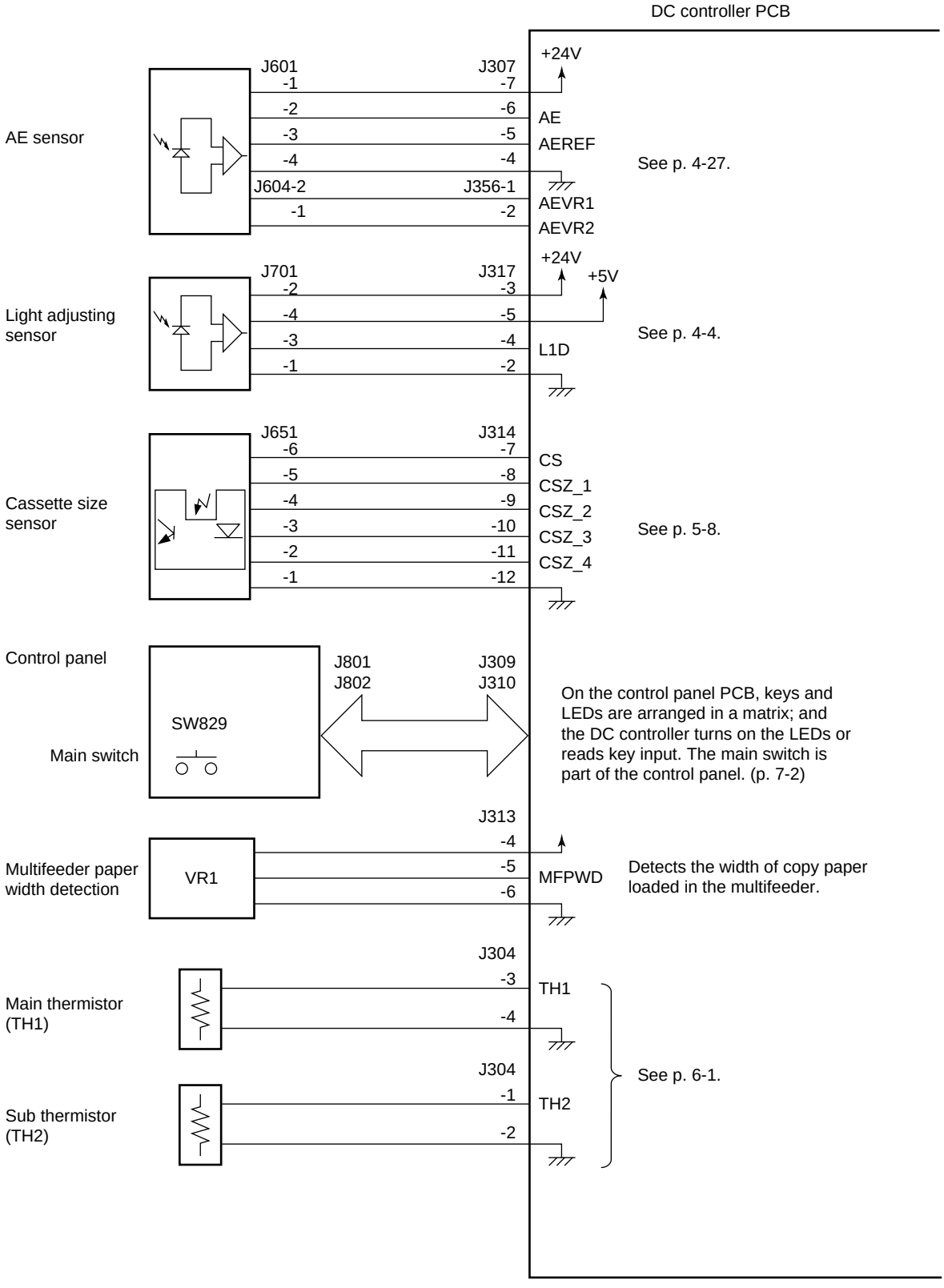

Figure 2-106

COPYRIGHT © 1997 CANON INC.
CANON NP6218 REV. 0 MAY 1997 PRINTED IN JAPAN (IMPRIME AU JAPON)

3. Inputs to the DC Controller PCB (3/3)

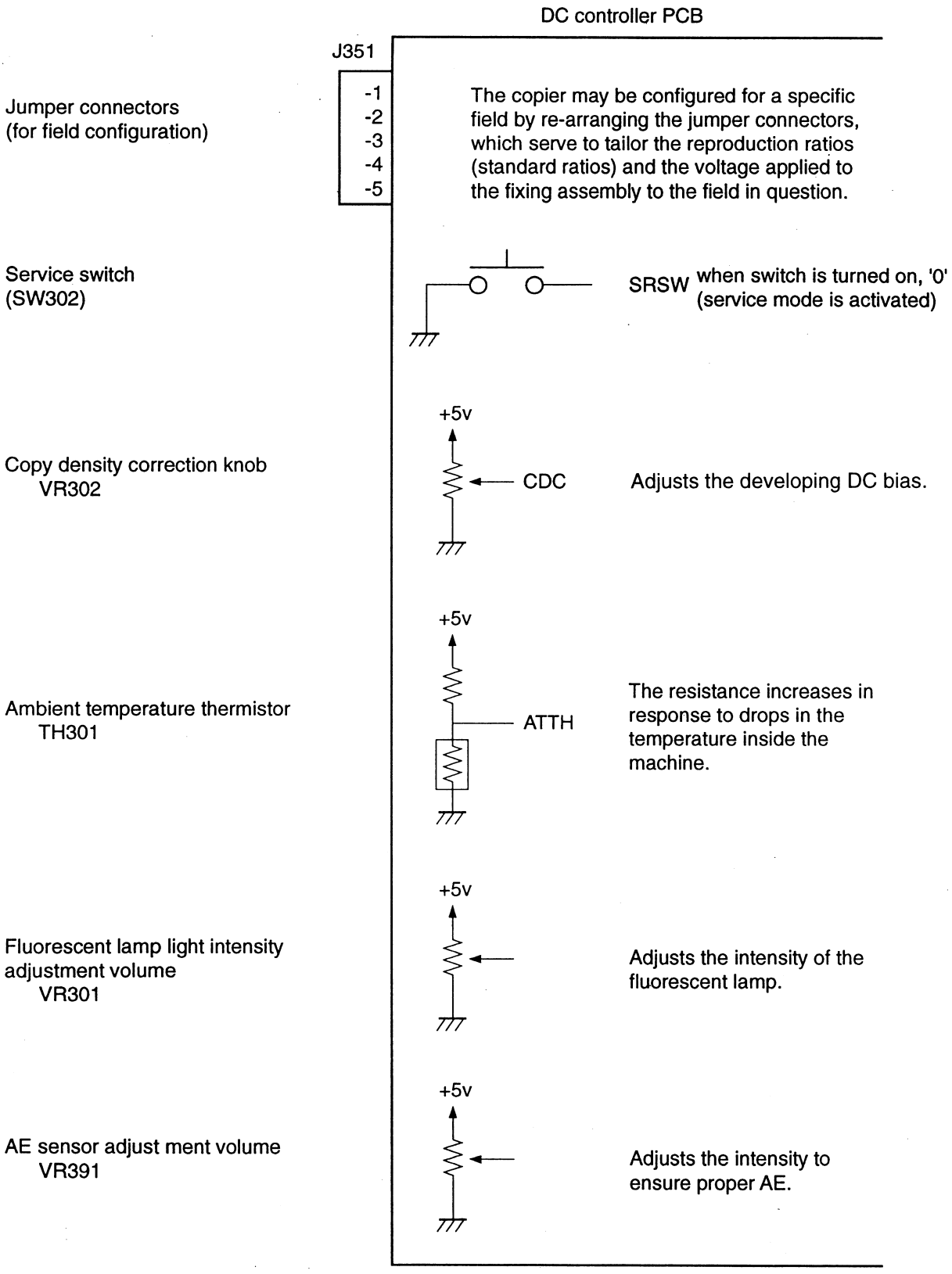

Figure 2-107

COPYRIGHT © 1997 CANON INC.

F. Outputs from the DC Controller PCB

1. Outputs from the DC Controller PCB (1/3)

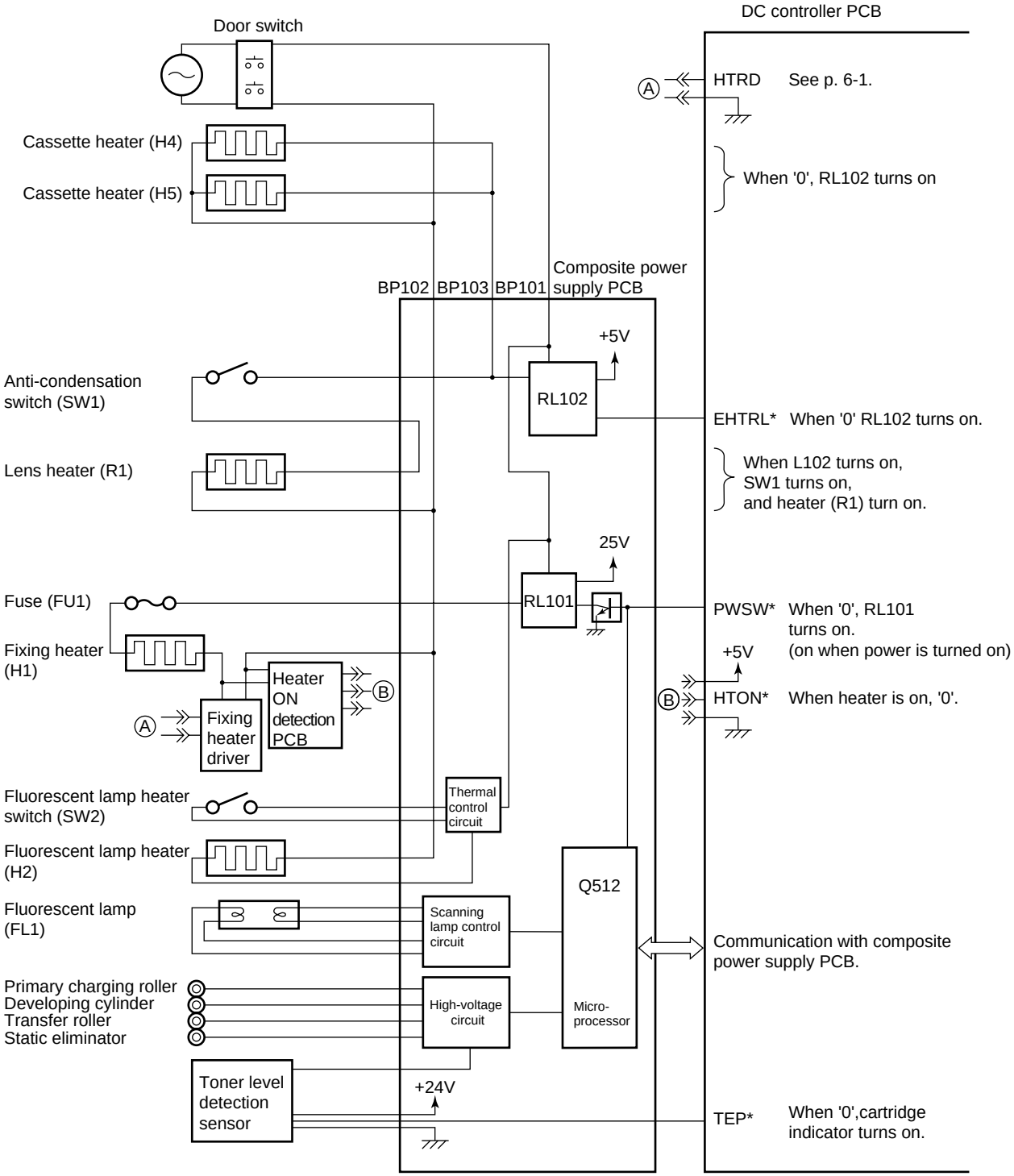

Figure 2-108

COPYRIGHT © 1997 CANON INC.
CANON NP6218 REV. 0 MAY 1997 PRINTED IN JAPAN (IMPRIME AU JAPON)

2. Outputs from the DC Controller PCB (2/3)

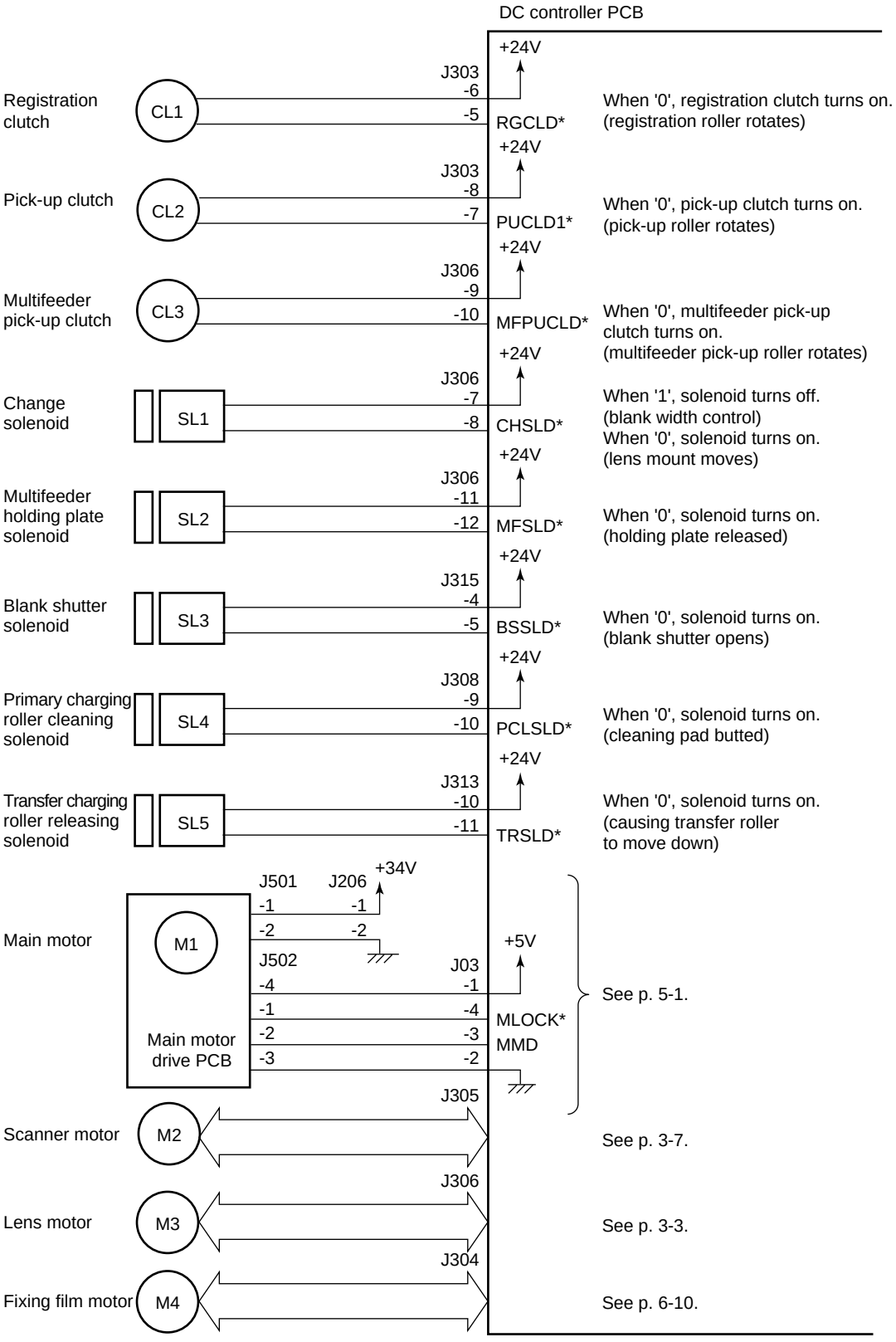

Figure 2-109

COPYRIGHT © 1997 CANON INC.

3. Outputs from the DC Controller PCB (3/3)

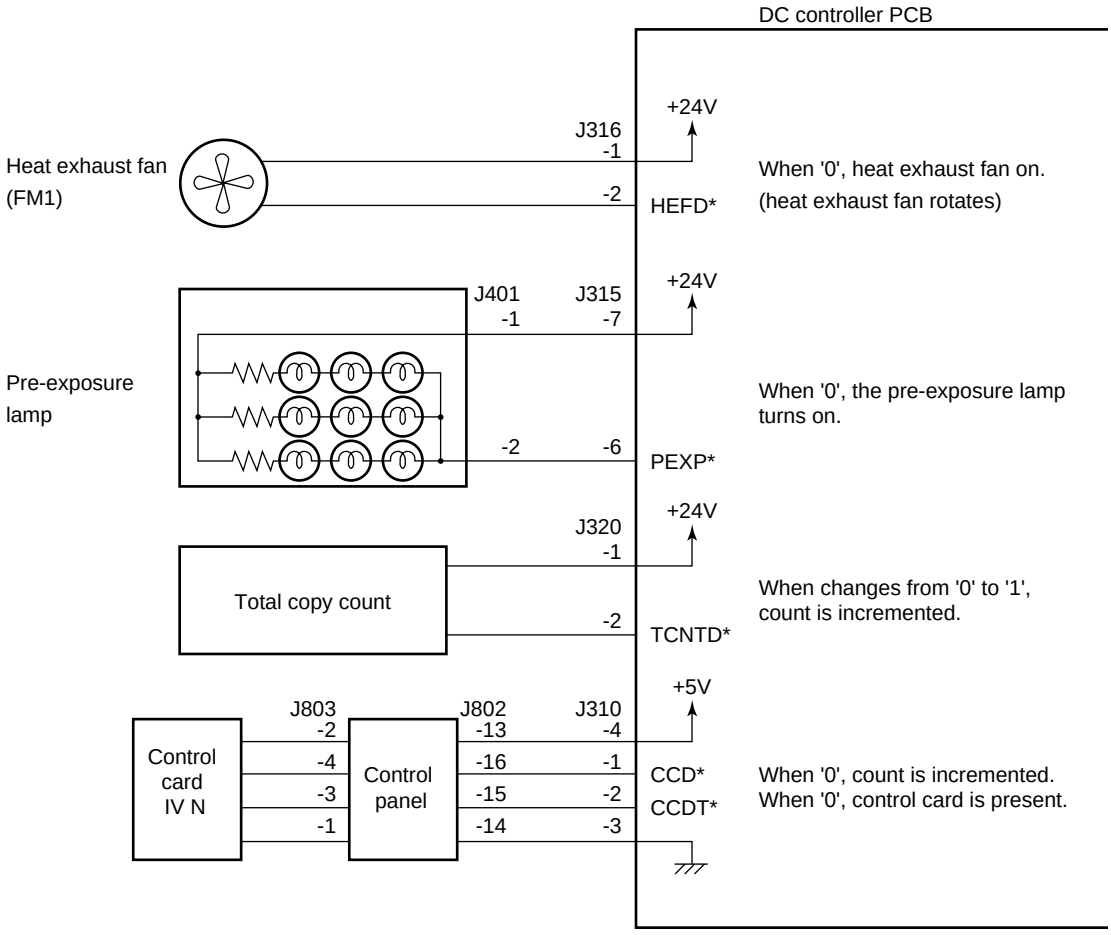

Figure 2-110

COPYRIGHT © 1997 CANON INC.
CANON NP6218 REV. 0 MAY 1997 PRINTED IN JAPAN (IMPRIME AU JAPON)

G. Inputs to and Outputs from the 1-Cassette Unit Driver PCB

1. Inputs to and Outputs from the 1-Cassette Unit Driver PCB (1/1)

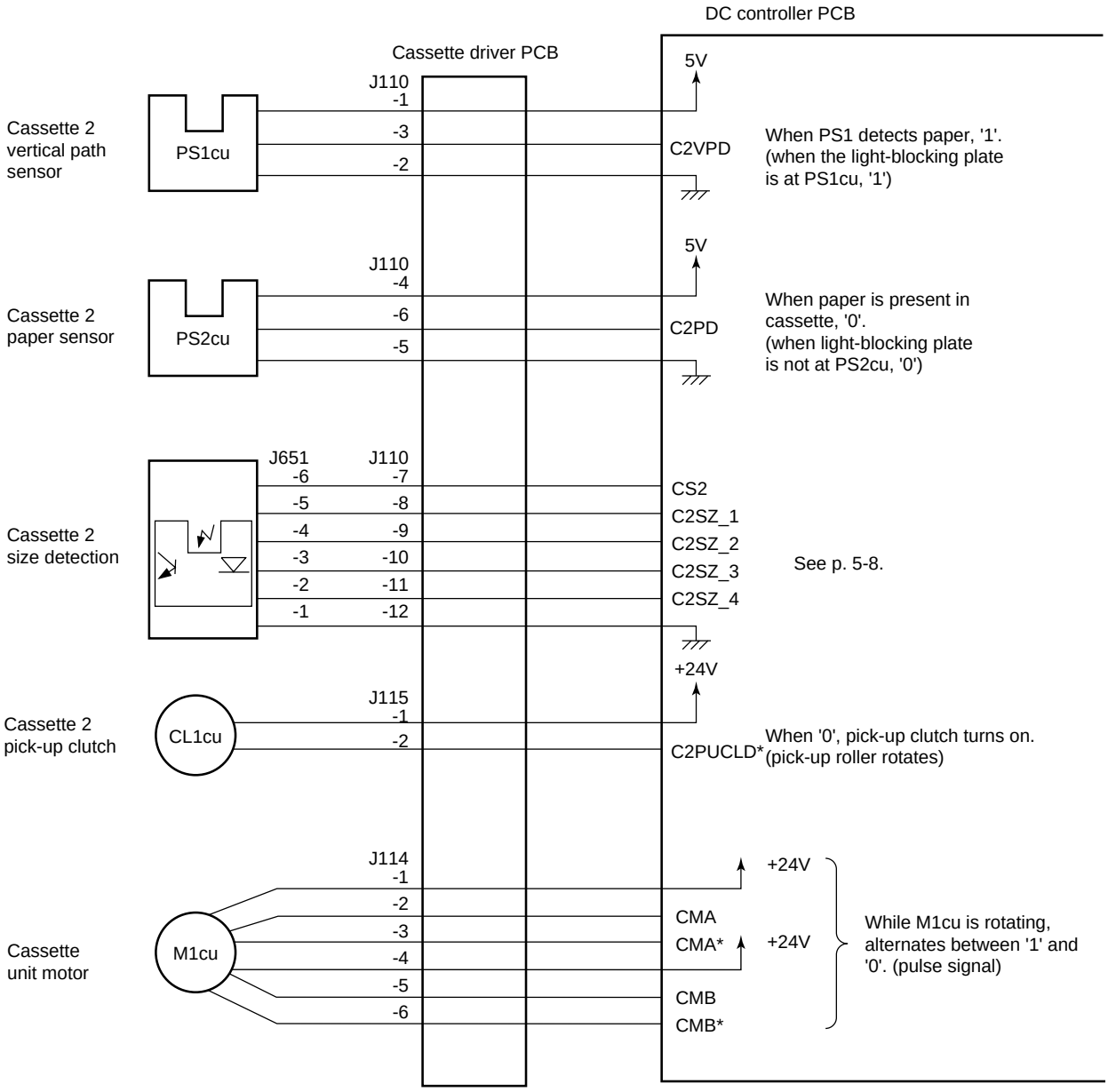

Figure 2-111

H. Inputs to and Outputs from the 2-Cassette Unit Driver PCB

1. Inputs to and Outputs from the 2-Cassette Unit Driver PCB (1/2)

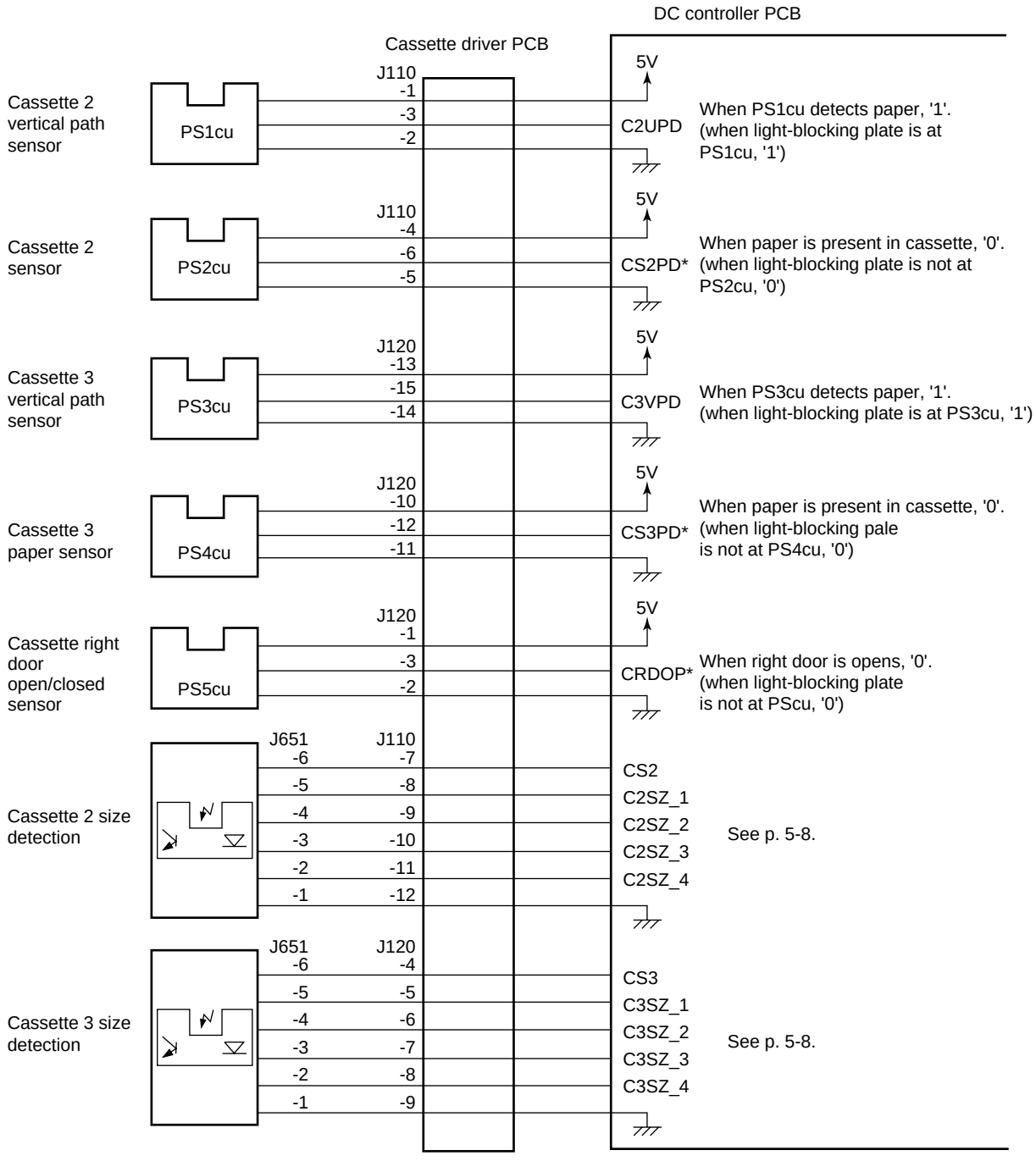

Figure 2-112

COPYRIGHT © 1997 CANON INC.
CANON NP6218 REV. 0 MAY 1997 PRINTED IN JAPAN (IMPRIME AU JAPON)

2. Inputs to and Outputs from the 2-Cassette Unit Driver PCB (2/2)

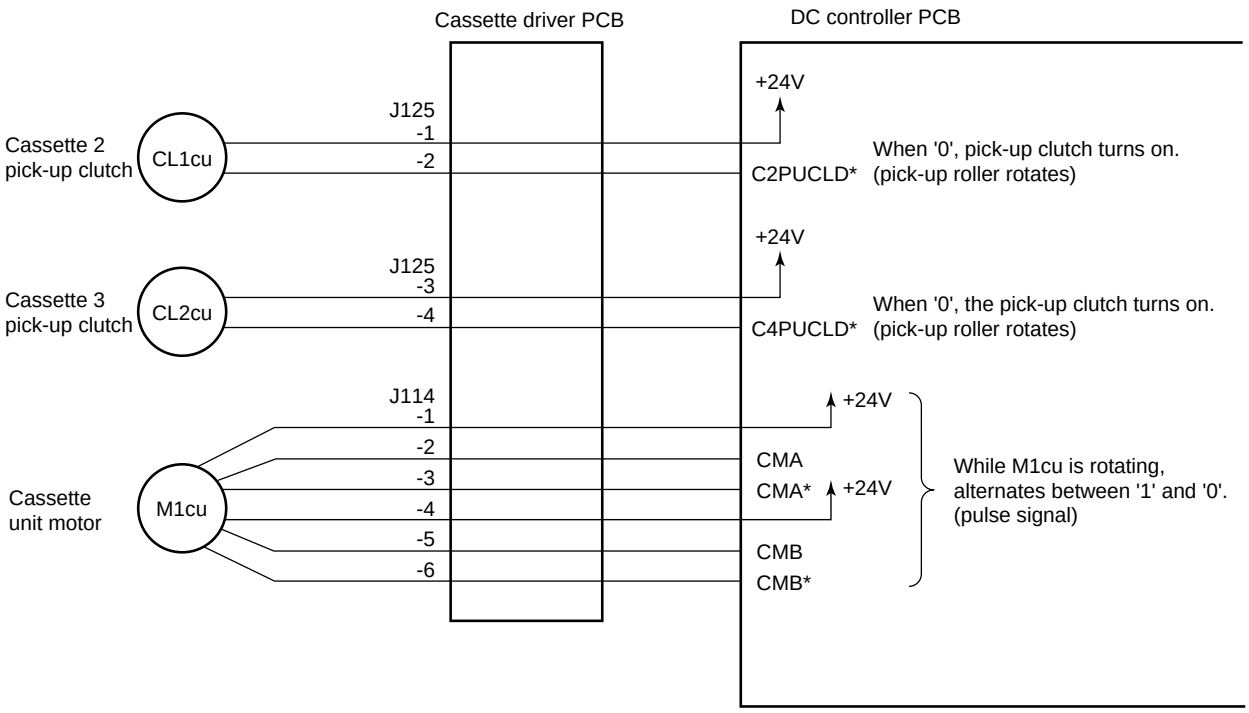

Figure 2-113

COPYRIGHT © 1997 CANON INC.
CANON NP6218 REV. 0 MAY 1997 PRINTED IN JAPAN (IMPRIME AU JAPON)

COPYRIGHT © 1997 CANON INC.
CANON NP6218 REV. 0 MAR. 1997 PRINTED IN JAPAN (IMPRIME AU JAPON)

CHAPTER 3

EXPOSURE SYSTEM

This chapter discusses the principles of operation used for the copier's lens drive unit and scanner drive unit. It also explains the timing at which these drive units are operated, and shows how they may be disassembled/assembled and adjusted.

I. BASIC OPERATION 3-1
A. Varying the Reproduction Ratio 3-1
II. LENS DRIVE SYSTEM 3-1
A. Outline 3-1
B. Lens Motor Drive Circuit.....3-3
C. Basic Sequence of Operations (lens drive system; non-Direct).....3-4
III. SCANNING DRIVE SYSTEM.....3-5
A. Driving the Scanner.....3-5
IV. DISASSEMBLY AND ASSEMBLY 3-9
A. Scanner Drive Assembly 3-9
B. Lens Drive Assembly.....3-18

COPYRIGHT © 1997 CANON INC. CANON NP6218 REV. 0 MAY 1997 PRINTED IN JAPAN (IMPRIME AU JAPON)

I. BASIC OPERATION

A. Varying the Reproduction Ratio

The reproduction ratio across the photosensitive drum is varied by the lens drive system; on the other hand, the ratio around the drum is varied by the scanner drive system.

The lens drive system uses a zoom lens; as shown in Figure 3-101, the position and focal distance of the lens are changed to vary the reproduction ratio across the photosensitive drum.

The scanner drive system varies the reproduction ratio around the photosensitive drum by moving the No. 1 mirror relatively faster (reduction) or slower (enlargement) than the peripheral speed of the photosensitive drum.

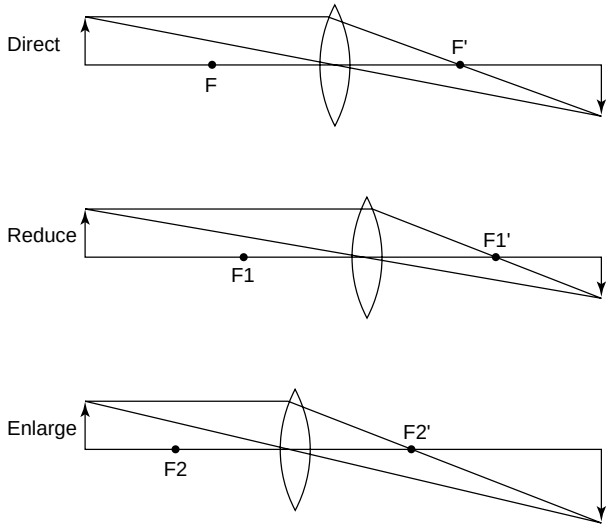

Figure 3-101

II. LENS DRIVE SYSTEM

A. Outline

The lens drive system is driven by the lens motor (M3). The drive of the lens motor is transmitted to the blank exposure unit through a relay gear. (See p. 4-18.)

When the lens is moved, the solenoid (SL1) is turned on to engage the relay gear with the lens gear; when the lens motor rotates in the direction of the arrow in this condition, the lens is moved in the direction of enlargement (←) by the work of the relay lens gear and lens cable.

The blank exposure shutter, on the other hand, moves according to the distance traveled by the lens for reduction, thereby blanking (whiting) out the areas on both ends of the copy.

The copier's scanner lens home position sensor (PS2) is located at the center of the scanner lens drive rail so that the scanner lens home position may be detected early upon power-on, thereby speeding up the generation of the first copy. In addition, the scanning lens moves to the appropriate position in response to a press on each ratio button, thereby shortening the time it takes to generate the first copy.

COPYRIGHT © 1997 CANON INC.
CANON NP6218 REV. 0 MAY 1997 PRINTED IN JAPAN (IMPRIME AU JAPON)

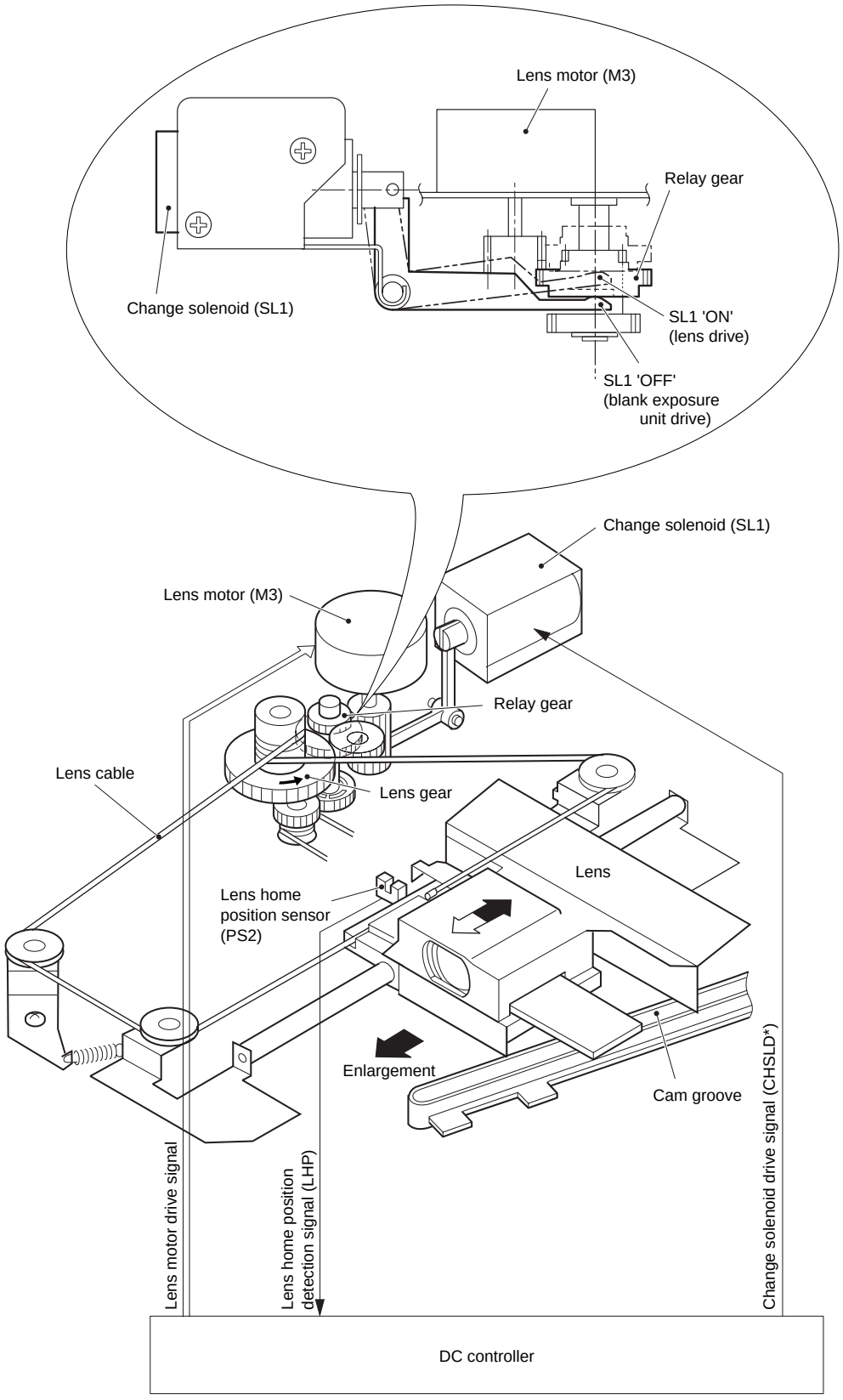

Figure 3-201

COPYRIGHT © 1997 CANON INC.
CANON NP6218 REV. 0 MAY 1997 PRINTED IN JAPAN (IMPRIME AU JAPON)

B. Lens Motor Drive Circuit

The lens motor (M3) is a stepping motor and rotates in response to drive power LNSC-A and LNSC-B and pulse signals LNSA, LNSA*, LNSB, and LNSB*.

1. Keeping the Lens Motor Stationary

All LNSA, LNSA*, LNSB, and LNSB* are caused to go OFF, thereby stopping and retaining the motor stationary.

2. Driving the Lens Motor

Pulses are applied to each phase in sequence to rotate the motor.

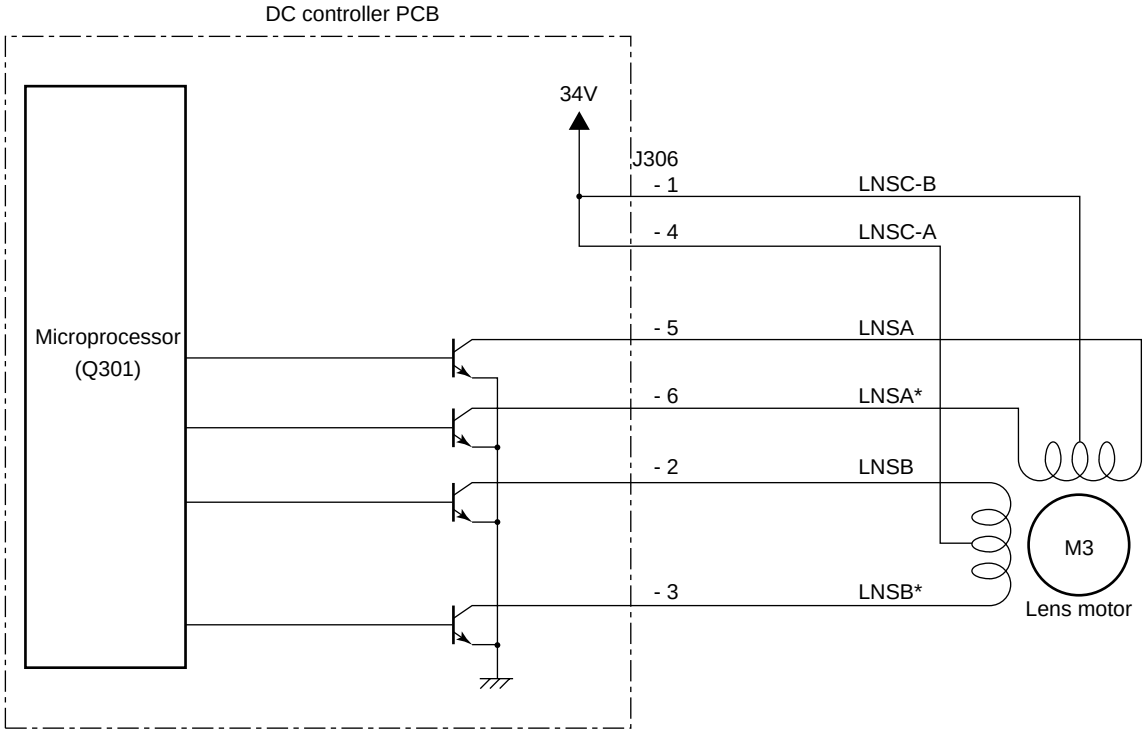

Figure 3-202

C. Basic Sequence of Operations (lens drive system; non-Direct)

When a specific reproduction ratio is selected, the lens always returns to the home position before moving to the position appropriate to the selected ratio. This also holds true when the reproduction ratio is reset to Direct.

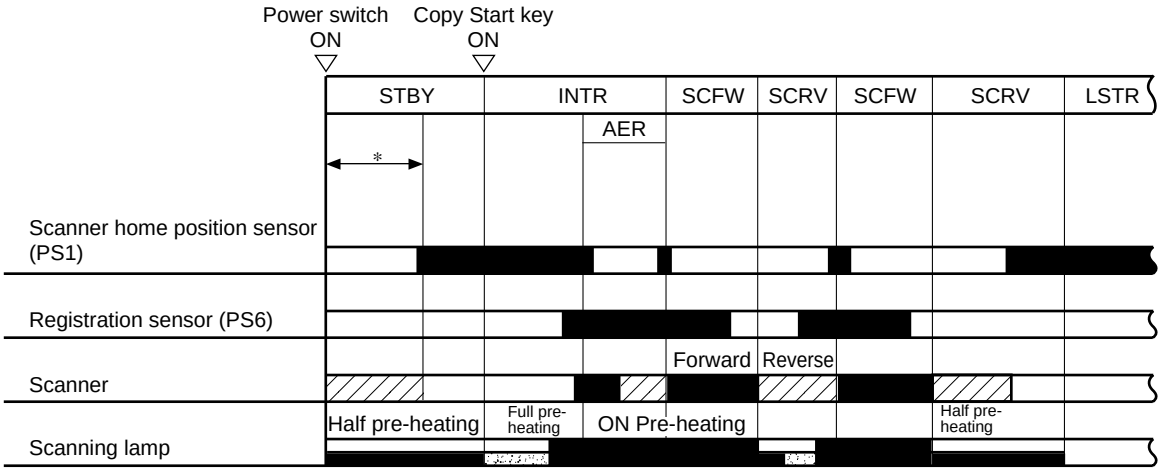

*Unless it is at the home position already, the scanner returns to the home position at power-on.

Figure 3-203

COPYRIGHT © 1997 CANON INC.
CANON NP6218 REV. 0 MAY 1997 PRINTED IN JAPAN (IMPRIME AU JAPON)

III. SCANNING DRIVE SYSTEM

A. Driving the Scanner

1. Outline

The scanner drive system is driven by the scanner motor (M2). The scanner motor changes the direction of its rotation between when the scanner moves forward and when it moves in reverse; the speed of its rotation varies according to the selected reproduction ratio. However, the speed of its rotation remains constant regardless of the reproduction ratio when the scanner is moving in reverse; 2. 5 times as fast as when the scanner is moving forward.

The distance traveled by the scanner varies according to the length of copy paper and the selected reproduction ratio.

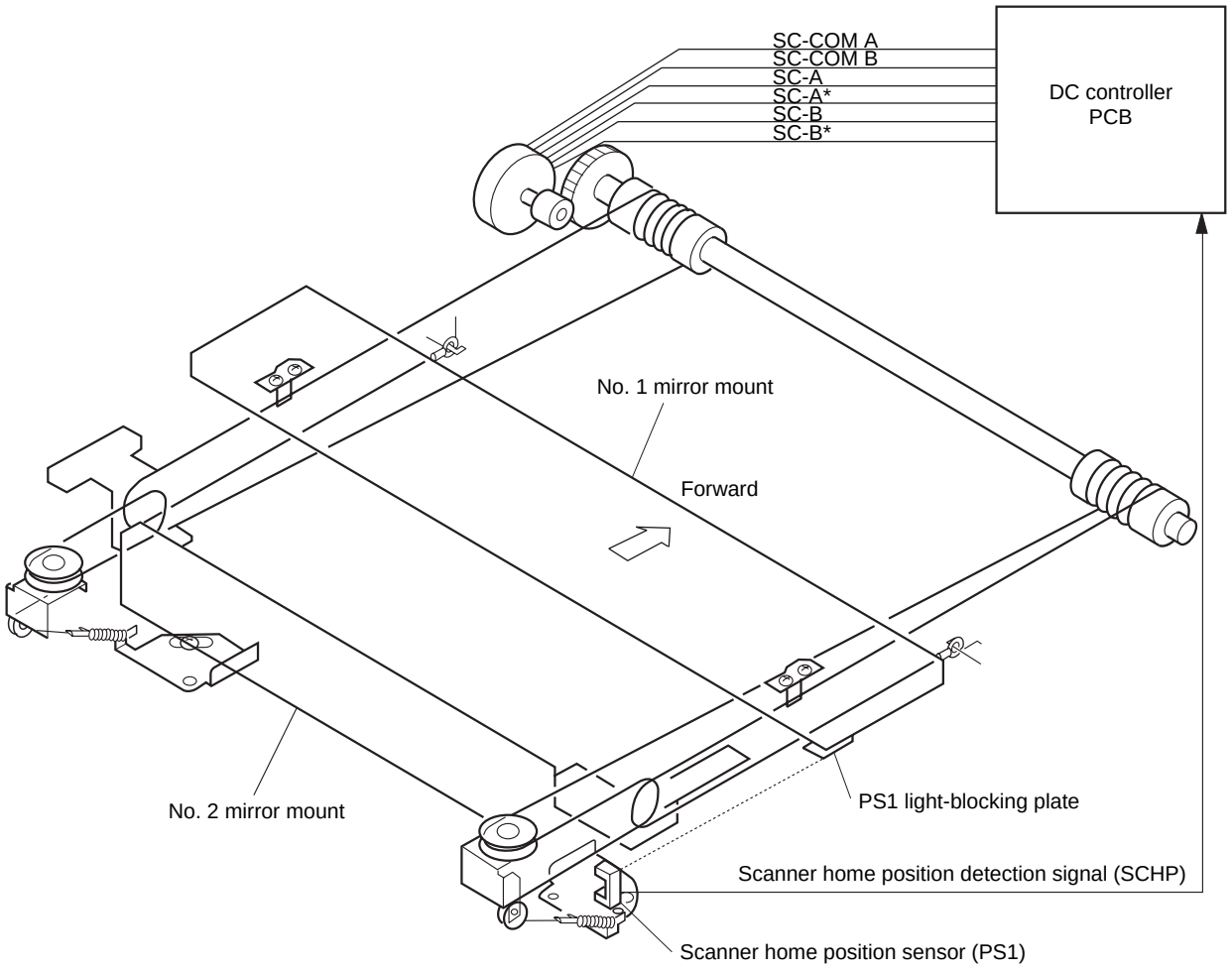

Figure 3-301

COPYRIGHT © 1997 CANON INC.

2. Relationship between the Scanner Sensor and Signals

Scanner sensor	Signal	Scanner		Description
		Forward	Reverse	
PS1 (scanner home position sensor)	SCHP	↓		Registration clutch turns on.
			↓	After 0.1 sec, the scanner stops moving in reverse.

Table 3-301

Reference:

The registration clutch is turned on in response to a press on the Copy Start key or when the scanner starts to move forward.

3. Basic Sequence of Operations (scanner)

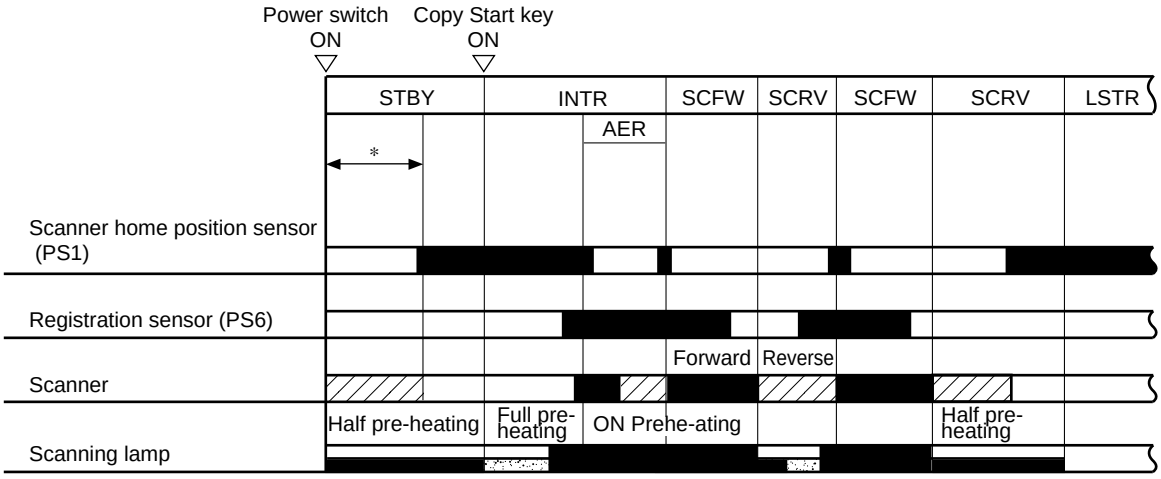

*Unless it is at the home position already, the scanner returns to the home position at power-on.

Figure 3-302

COPYRIGHT © 1997 CANON INC.
CANON NP6218 REV. 0 MAY 1997 PRINTED IN JAPAN (IMPRIME AU JAPON)

4. Driving the Scanner Motor

a. Outline

The scanner motor (M2) is a 4-phase control stepping motor. The direction and the speed of the scanner motor (M2) are switched by controlling the output timing of drive power SC-COMA and SC-COMB and pulse signals A, A*, B, and B*.

b. Mechanism

The microprocessor (Q301) on the DC controller PCB receives such instructions as on copy mode and reproduction ratio from the control panel circuit; in response, it sends drive pulses to the scanning motor (M2) through the motor drive circuit.

The scanner motor is a 4-phase control stepping motor, and is used to control the sequence of drive pulses (SC-A through SC-B*) and frequency, thereby controlling the direction of scans and speed.

The motor drive voltage ON/OFF switching circuit supplies or deprives the motor with or of power, thereby controlling the motor drive.

The current switching control circuit sets the current that flows through the motor according to the revolution, and the motor driver circuit controls the constant current according to the value that has been set.

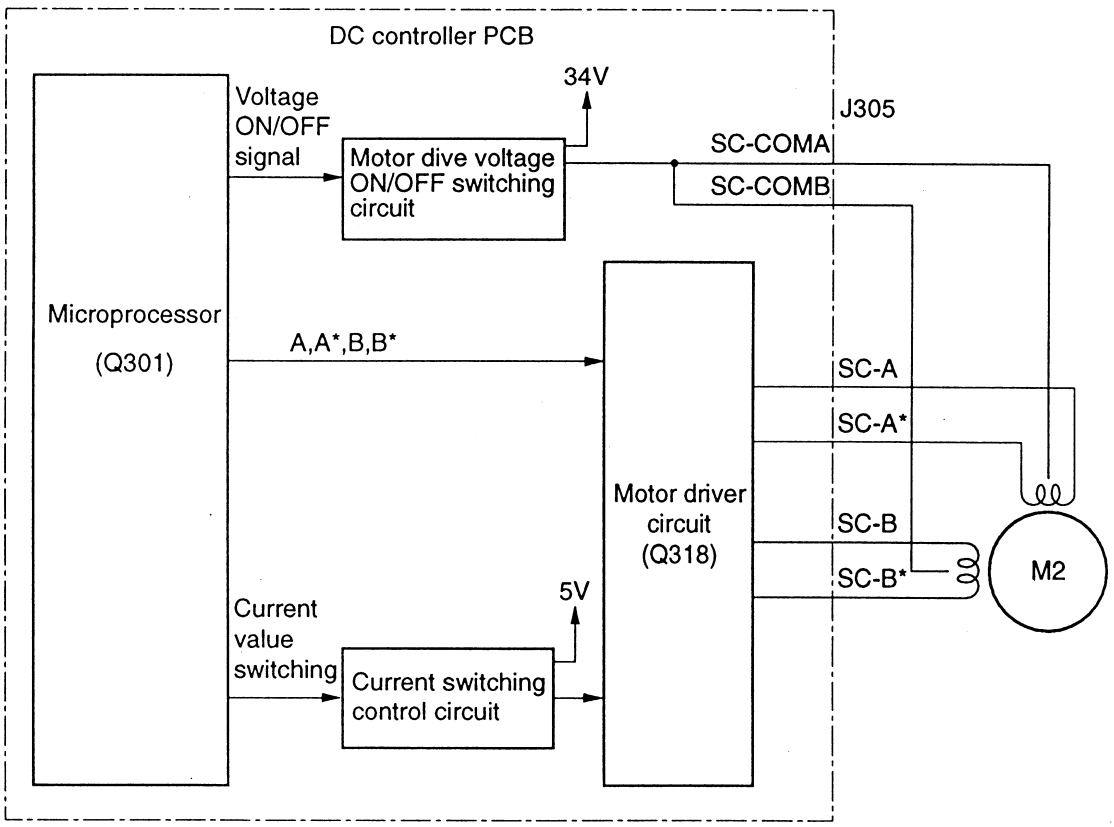

Figure 3-303

COPYRIGHT © 1997 CANON INC.

5. Scanner Operations in Page Separation Mode (non-AE, page separation, A4, 2 copies)

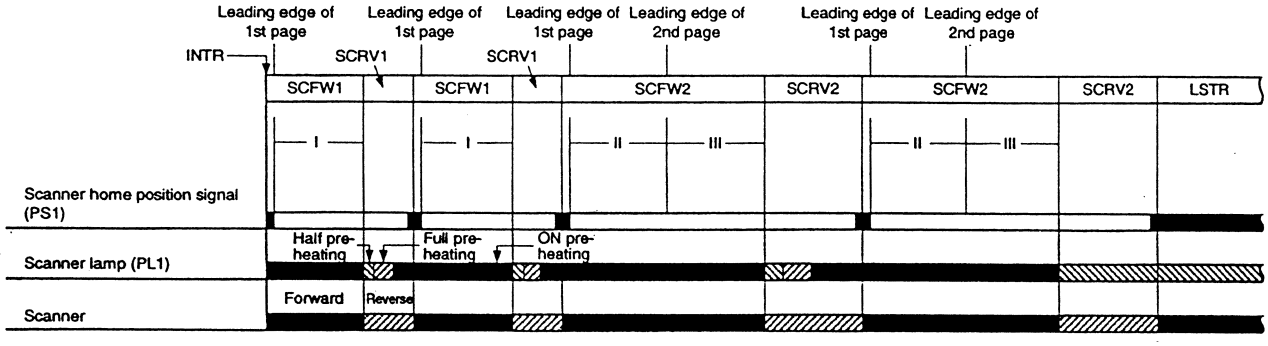

Figure 3-304

I, II, and III shown in Figure 3-108 are controlled by the microprocessor on the DC controller PCB with reference to the scanner home position signal (falling edge of SCHP) of the first original.

The microprocessor determines the distance to be traveled by the scanner according to the size of the selected cassette.

I, II: The distance traveled by the scanner is determined by the reproduction ratio and cassette size.

III: The copier does not have a mechanism that detects the size of originals; for this reason, control for page separation is exerted with reference to the size of the cassette.

If the distance traveled by the scanner forward (II in Figure 3-304) exceeds 216 mm (approx.), the copier assumes a point corresponding to 216 mm to be the leading edge of the second page.

The size of originals is checked only if an ADF (accessory) is installed.

The microprocessor identifies the result of dividing the identified size by 2 as the center of the original and operates the scanner assuming that the center represents the leading edge of the second original.

COPYRIGHT © 1997 CANON INC.

IV. DISASSEMBLY AND ASSEMBLY

This section explains mechanical characteristics and describes how to disassemble/assemble the machine.

Be sure to observe the following whenever disassembling/assembling the machine:

1. ⚠ Disconnect the power plug before starting the work.
2. Unless otherwise shown, assemble the parts by reversing the steps given to disassemble them.
3. Identify each screw by type (length, diameter) and location.
4. A washer is used for one of the mounting screws on the rear cover to protect against static electricity; be sure to use the washer when assembling the part.
5. A washer is used for some mounting screws (for grounding wire, varistor) to ensure correct electrical continuity; be sure to use the washer when assembling the part.
6. As a rule, do not operate the machine while any of its parts are removed.
7. When sliding out the duplexing unit or the fixing assembly, be sure to turn off the front door switch or the power switch.

A. Scanner Drive Assembly

1. Detaching the Scanner Drive Motor

1) Remove the upper rear cover.
2) Disconnect the connector ① of the motor, and remove the two screws ②; then, detach the scanner drive motor ③.

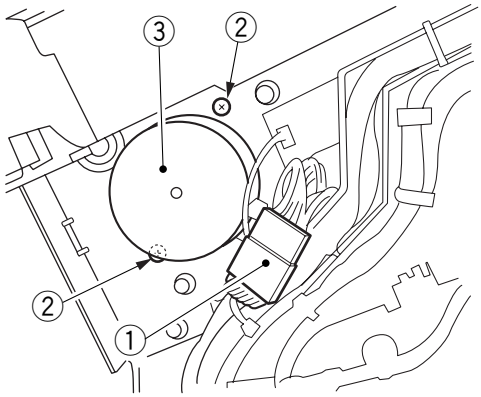

Figure 3-401

COPYRIGHT © 1997 CANON INC. CANON NP6218 REV. 0 MAY 1997 PRINTED IN JAPAN (IMPRIME AU JAPON)

2. Detaching the Scanner Cable

1) Detach the copyboard cover, right cover, left cover, upper rear cover, and lower rear cover.
2) Detach the copyboard glass.
3) Detach the control panel.
4) Detach the copyboard cover support ①.

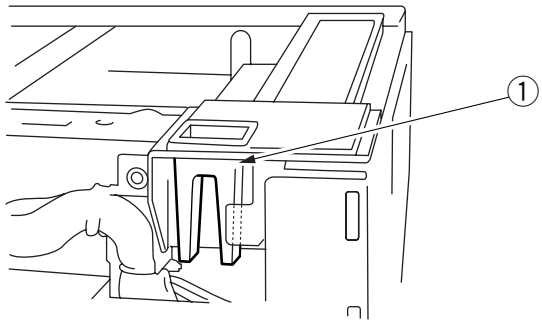

Figure 3-402

5) Remove the six screws ②, and detach the upper left stay ③.

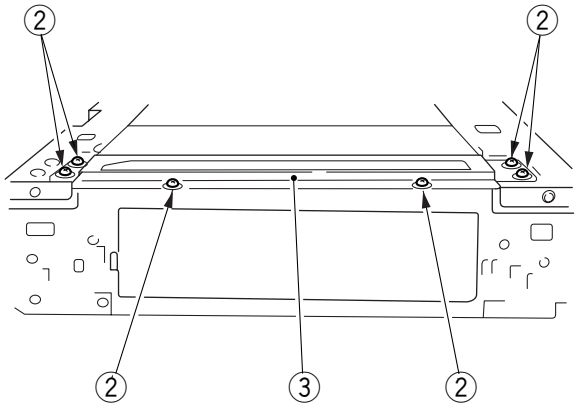

Figure 3-403

6) Fix the cable in place using a pully clip (FY9-3010)



Figure 3-404

COPYRIGHT © 1997 CANON INC.
CANON NP6218 REV. 0 MAY 1997 PRINTED IN JAPAN (IMPRIME AU JAPON)

7) Loosen the two screws ④ to loosen the cable tension (both front and right).

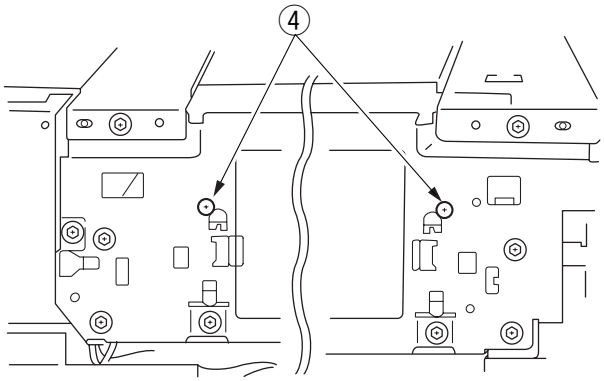

Figure 3-405

8) Move the No. 1 mirror mount to the front to align the long hole in the front side plate and the cable fixing screw ⑤.
Then, detach the cable fixing screw ⑤ to separate the No. 1 mirror mount and the scanner cable (both front and rear).

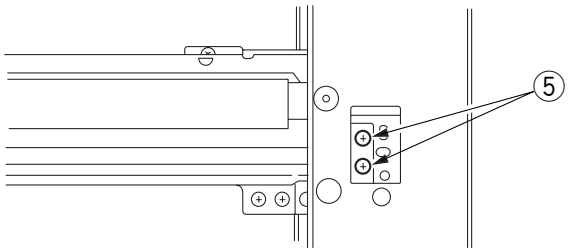

(front)

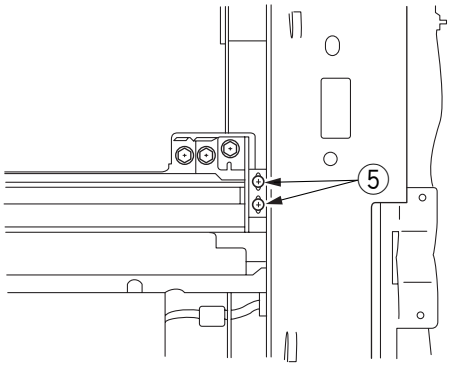

(rear)

Figure 3-406

COPYRIGHT © 1997 CANON INC.

9) Remove the pully clip, and detach the scanner cable (both front and rear).

3. Assembling the Mirror Position Tool

1) Remove the screw found in position B.

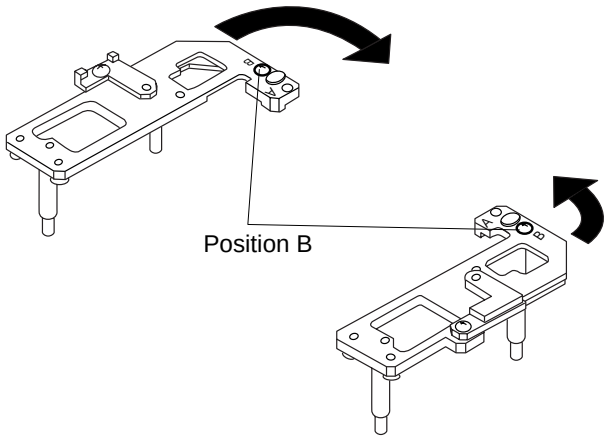

Figure 3-407

2) Fit the screw removed in step 1) in position A, and tighten it slightly.
3) Extend the arm accommodated by the main frame unit it butts against the stopper as in Figure 3-408.
4) Tighten the screw.

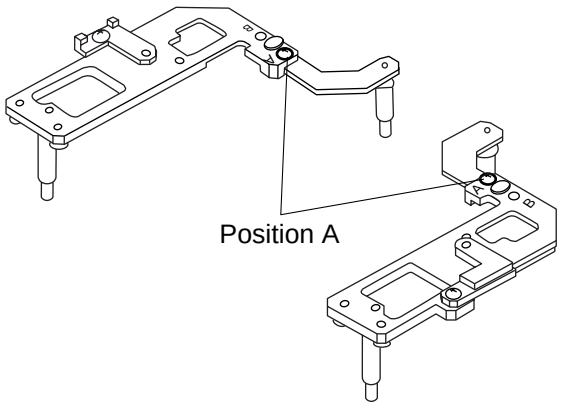

Figure 3-408

COPYRIGHT © 1997 CANON INC.
CANON NP6218 REV. 0 MAY 1997 PRINTED IN JAPAN (IMPRIME AU JAPON)

4. Routing the Scanner Cable

Keep the mirror positioning tool (FY9-3009) and pulley clip (FY9-3010) handy when routing the scanner cable.

Further, if you are using the mirror positioning tool, assemble it in advance by referring to “3. Assembling the MIrror Positioning Tool.”

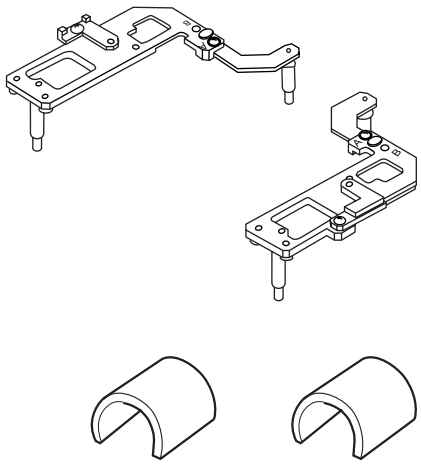

Figure 3-409

COPYRIGHT © 1997 CANON INC.

1) Put the steel ball into the hole of the pulley, and wind the cable four times toward the flange and then nine times in the opposite direction; thereafter, fix it in place using the pulley clip.
2) As in ②, set the mirror positioning tool between the No. 1 and No. 2 mirror mounts.
3) Loosen the screw on the mirror pulley mount as in ③; then, temporarily fix the cable in position on the left stay.
4) Route the cable as shown in the illustration; engage ⑤ on the hook on the side plate, and engage the ⑧ on the tension plate on the lens mount.
5) Tighten the screw loosened in ③, and fix the cable to the left stay.
6) Loosen the screws on the drive pulley once so that the tension of the scanner cable is even as in ⑩; then, tighten it once again.
7) Fix the No. 1 mirror mount and the scanner cable fixing as in ⑪.
8) Make adjustments so that the length of the cable is 34 ±1 mm as in ⑨ using a ruler.

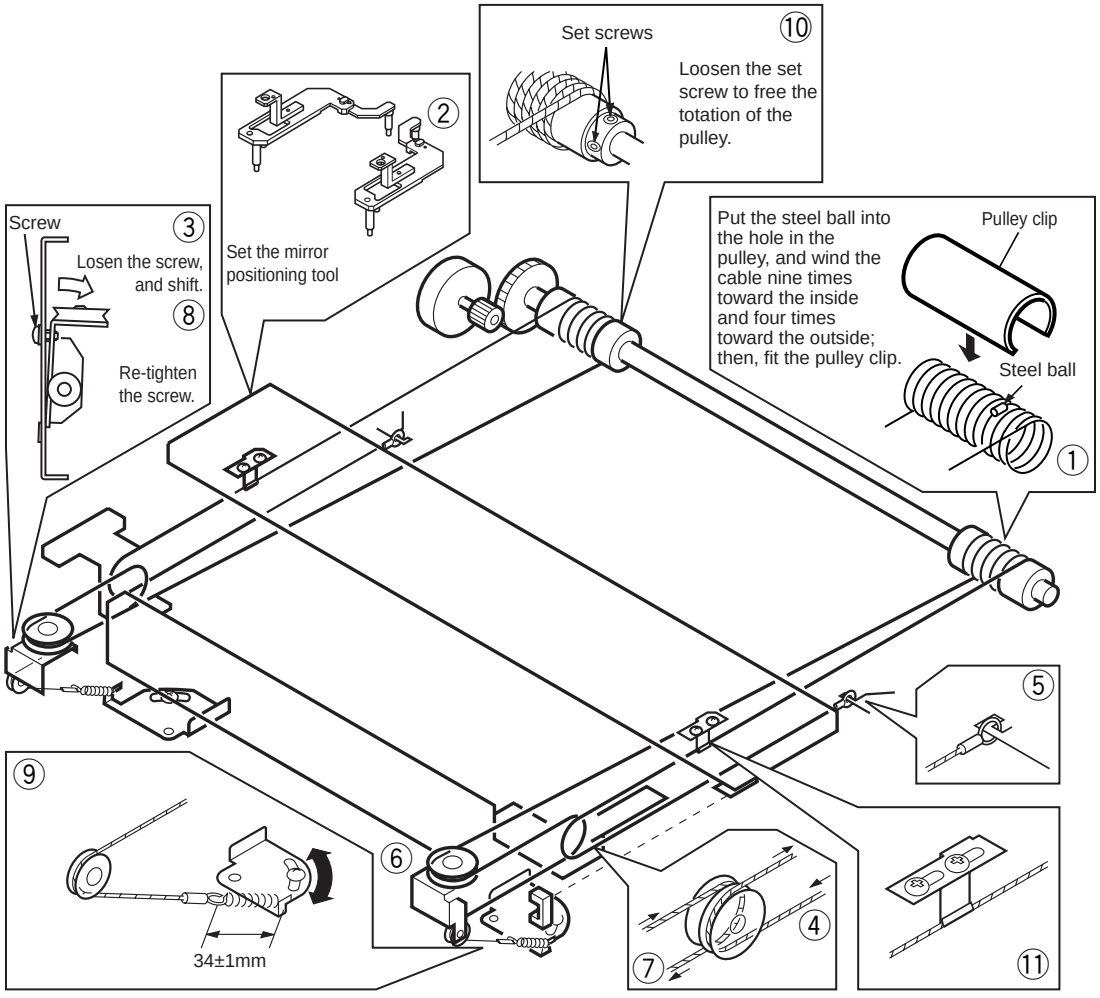

Figure 3-410

COPYRIGHT © 1997 CANON INC.
CANON NP6218 REV. 0 MAY 1997 PRINTED IN JAPAN (IMPRIME AU JAPON)

Caution:

When attaching the wire spring, pay attention to the orientation of the spring; see the diagrams below. If not attached correctly, its hook tip could interfere with the cable.

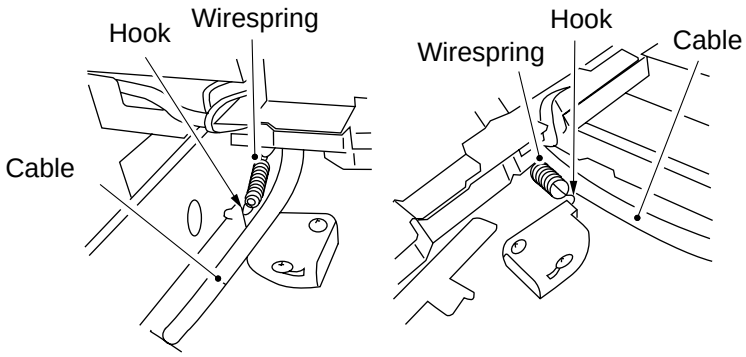

Figure 3-411

COPYRIGHT © 1997 CANON INC.

5. Adjusting the Position of the Mirrors (optical length of No. 1, 2, and 3 mirrors)

1) Keep the mirror positioning tool handy.
   (See “3. Assembling the Mirror Positioning Tool.”)
2) Move the No. 1 mirror mount toward the front, and align the angular hole in the front side plate and the cable fixing screw ①.

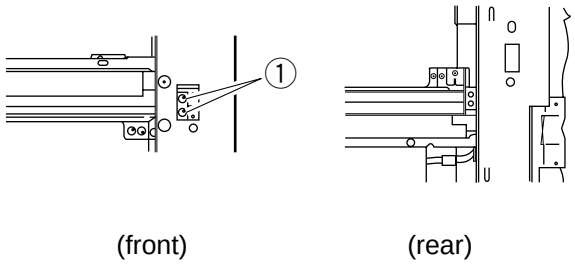

Figure 3-412

3) Loosen the set screw on the pulley.
4) Set the mirror positioning tool ② to the No. 1 mirror mount and the No. 2 mirror mount (both front and rear).

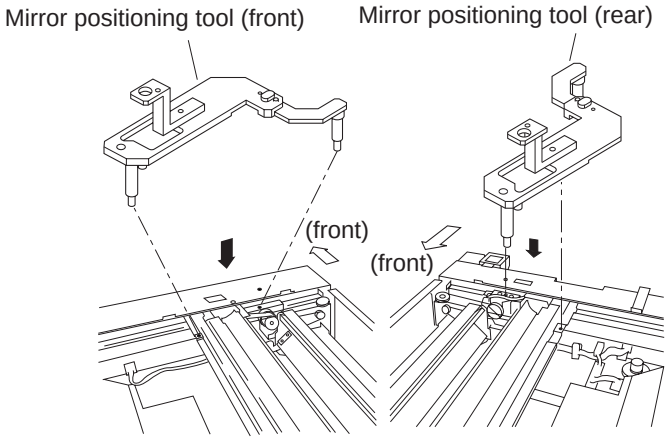

Figure 3-413

COPYRIGHT © 1997 CANON INC.
CANON NP6218 REV. 0 MAY 1997 PRINTED IN JAPAN (IMPRIME AU JAPON)

5) Attach the scanner cable fixing to the No. 1 mirror mount using two screws ③ (both front and rear).
6) Tighten the screw on the pulley.
7) Detach the tool (FY9-3009).

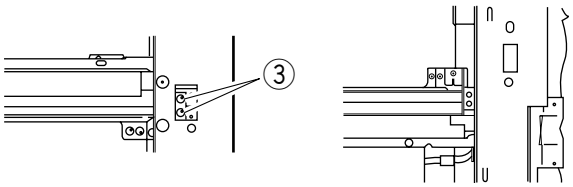

Figure 3-414

6. Cleaning the Scanner No. 6 Mirror

1) Open the front cover.
2) Open the copier by operating the copier open/close lever.
3) Detach the dust-proofing glass ① and dust-proof mirror cover ②.

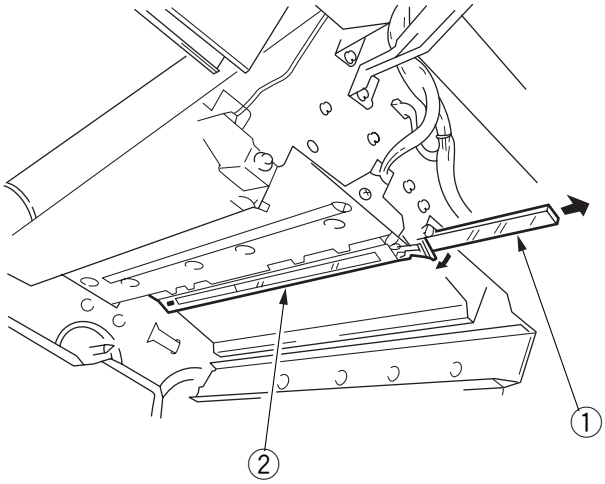

Figure 3-415

4) Clean the No. 6 mirror using a blower brush or lint-free paper moistened with alcohol.

COPYRIGHT © 1997 CANON INC.

B. Lens Drive Assembly

1. Detaching the Lens Drive Motor

1) Detach the upper rear cover and right glass rerainer.
2) Detach the copyboard glass.
3) Move the No. ① mirror assembly 1 to the left.
4) Remove the two screws ②, and detach the lens cover ③.

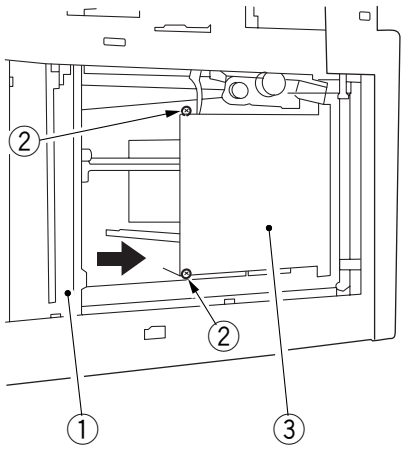

Figure 3-416

5) Loosen the tension on the spring ④, and detach the cable ⑤.

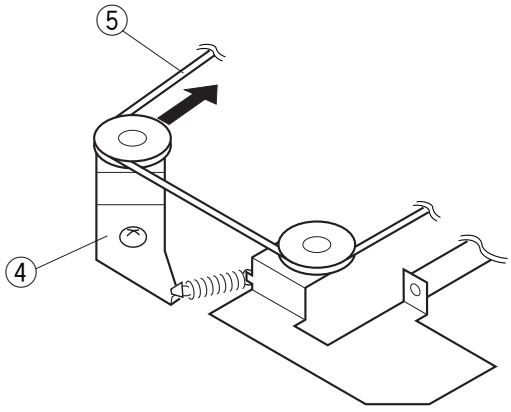

Figure 3-417

COPYRIGHT © 1997 CANON INC.
CANON NP6218 REV. 0 MAY 1997 PRINTED IN JAPAN (IMPRIME AU JAPON)

6) Disconnect the two connectors ⑥ from the copier's rear.

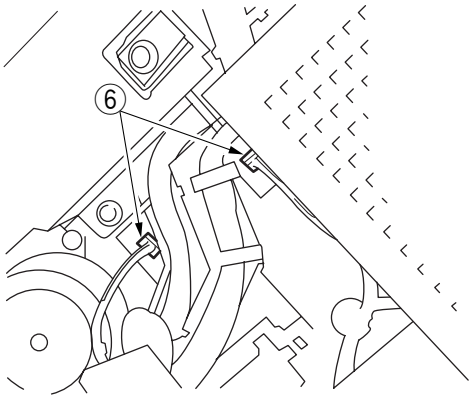

Figure 3-418

7) Remove the two screws ⑦, and detach the lens drive unit ⑧.

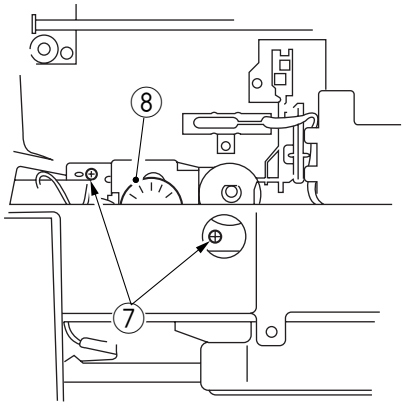

Figure 3-419

8) Remove the two screws, and disconnect the connector ⑩; then, detach the lens motor ⑪.

Caution:

Disconnect the connector ⑩ first before removing the screw ⑨; otherwise, the harness and driver will come into contact with each other.

COPYRIGHT © 1997 CANON INC.

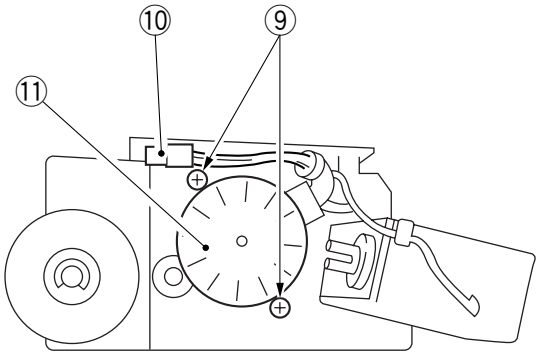

Figure 3-420

2. Routing the Lens Cable

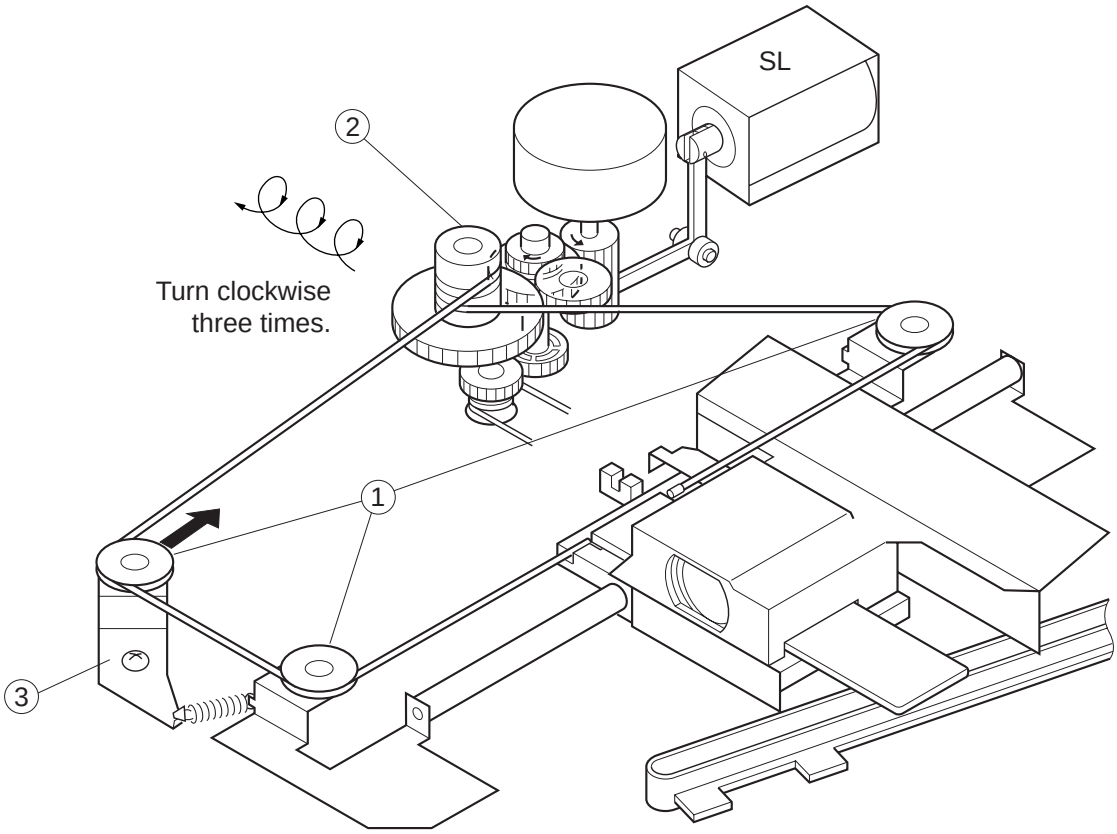

Figure 3-421 Lens Drive Assembly

1) Attach the lens cable to each pulley ① while winding it around the lens pulley ② as indicated in Figure 3-421.
2) Move the tension pulley ③ to hook the cable.

COPYRIGHT © 1997 CANON INC.
CANON NP6218 REV. 0 MAY 1997 PRINTED IN JAPAN (IMPRIME AU JAPON)

3. Adjusting the Position of the Change Solenoid

Make adjustments by loosening the two screws ⑤ so that the gear ④ is moved fully in the direction of b by the arm ③ when the steel core ① of the solenoid is fully pushed in the direction of B by a finger, i.e., when the E-ring ② comes into contact with the solenoid.

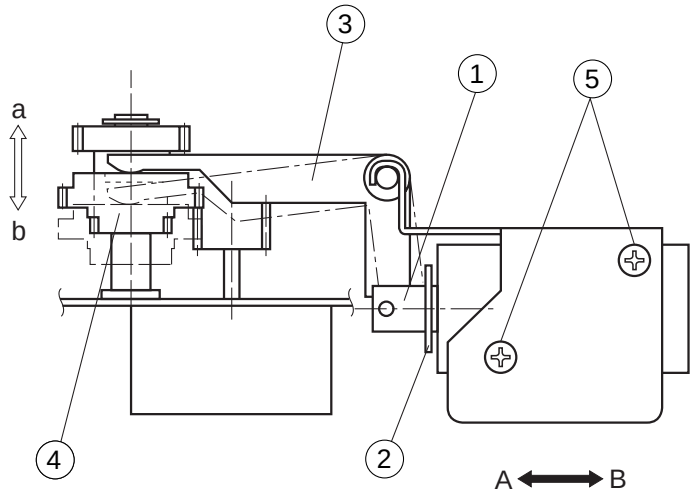

Figure 3-422

COPYRIGHT © 1997 CANON INC.
CANON NP6218 REV. 0 MAR. 1997 PRINTED IN JAPAN (IMPRIME AU JAPON)

CHAPTER 4

IMAGE FORMATION SYSTEM

This chapter discusses the principles of how images are formed. It also explains the timing at which the various units involved in image formation are operated, and shows how they may be disassembled/assembled and adjusted.

I. PROCESSES 4-1
- A. Outline 4-1
- B. Basic Sequence of Operations (image formation system).....4-3
- C. Controlling the Scanning Lamp 4-4
- D. Controlling the Primary Charging Roller Bias 4-10
- E. Controlling the Transfer Roller Bias.....4-13
- F. Controlling the Static Eliminator Bias.....4-16
- G. Controlling Blank Exposure 4-18
- H. Controlling the Primary Corona Roller Cleaning Mechanism 4-20
- I. Releasing the Transfer Roller 4-21

II. DEVELOPING ASSEMBLY AND CLEANING ASSEMBLY 4-22
- A. Outline 4-22
- B. Controlling the Toner Level Detection 4-23
- C. Controlling the Development Bias.....4-25
- D. Automatic Control of Copy Density.....4-27

III. DISASSEMBLY AND ASSEMBLY 4-30
- A. Illumination Assembly.....4-30
- B. Drum Unit 4-39
- C. Primary Corona Assembly.....4-41
- D. Transfer Charging Assembly 4-44
- E. Developing System.....4-47

COPYRIGHT © 1997 CANON INC. CANON NP6218 REV. 0 MAY 1997 PRINTED IN JAPAN (IMPRIME AU JAPON)

I. PROCESSES

A. Outline

Figure 4-101 shows the basic construction of the copier's image formation system, whose main functions are as follows:

- scanning lamp control
- primary charging control
- transfer charging control
- separation static eliminator control
- developing bias control
- blank exposure lamp control

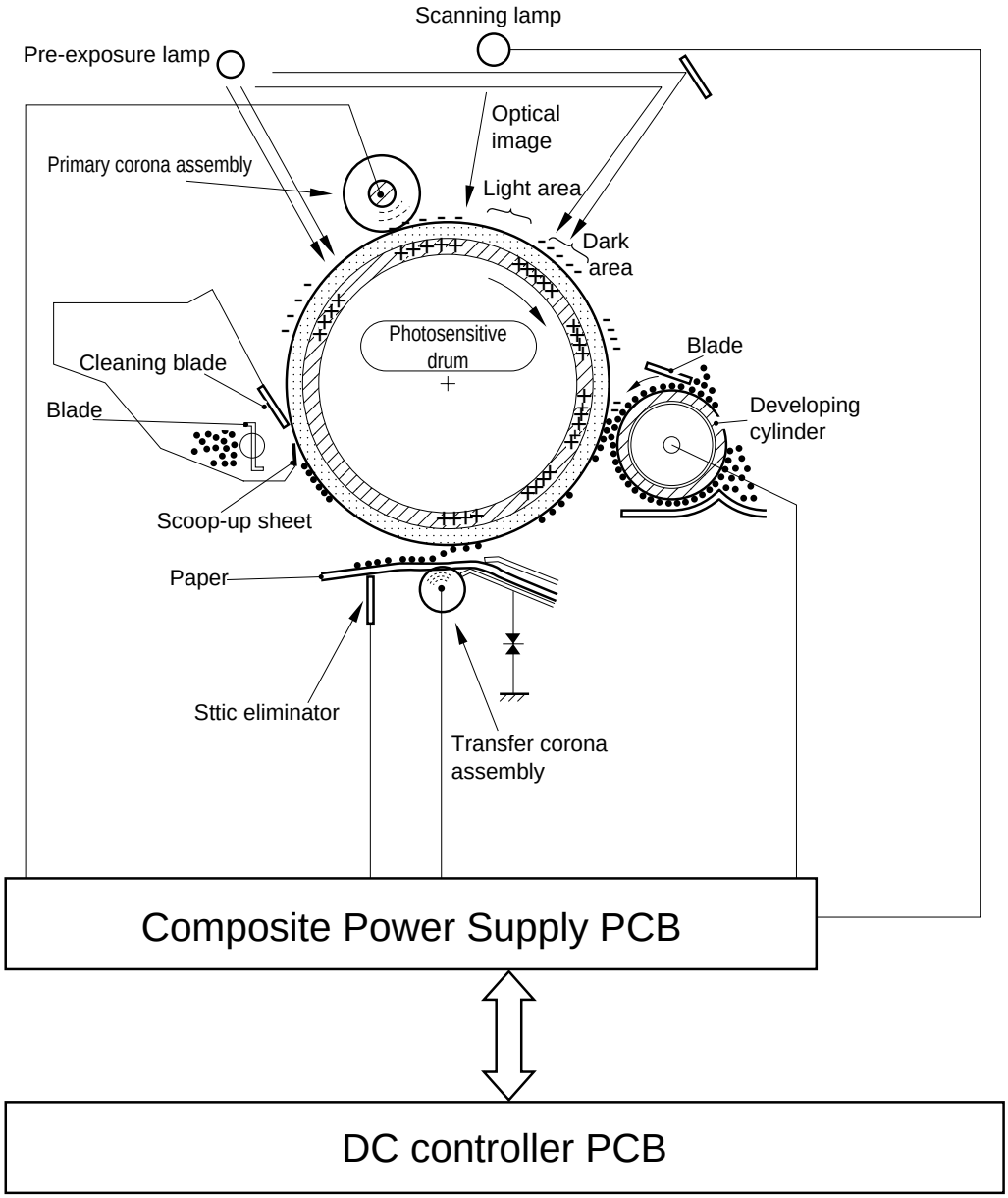

Figure 4-101

COPYRIGHT © 1997 CANON INC. CANON NP6218 REV. 0 MAY 1997 PRINTED IN JAPAN (IMPRIME AU JAPON)

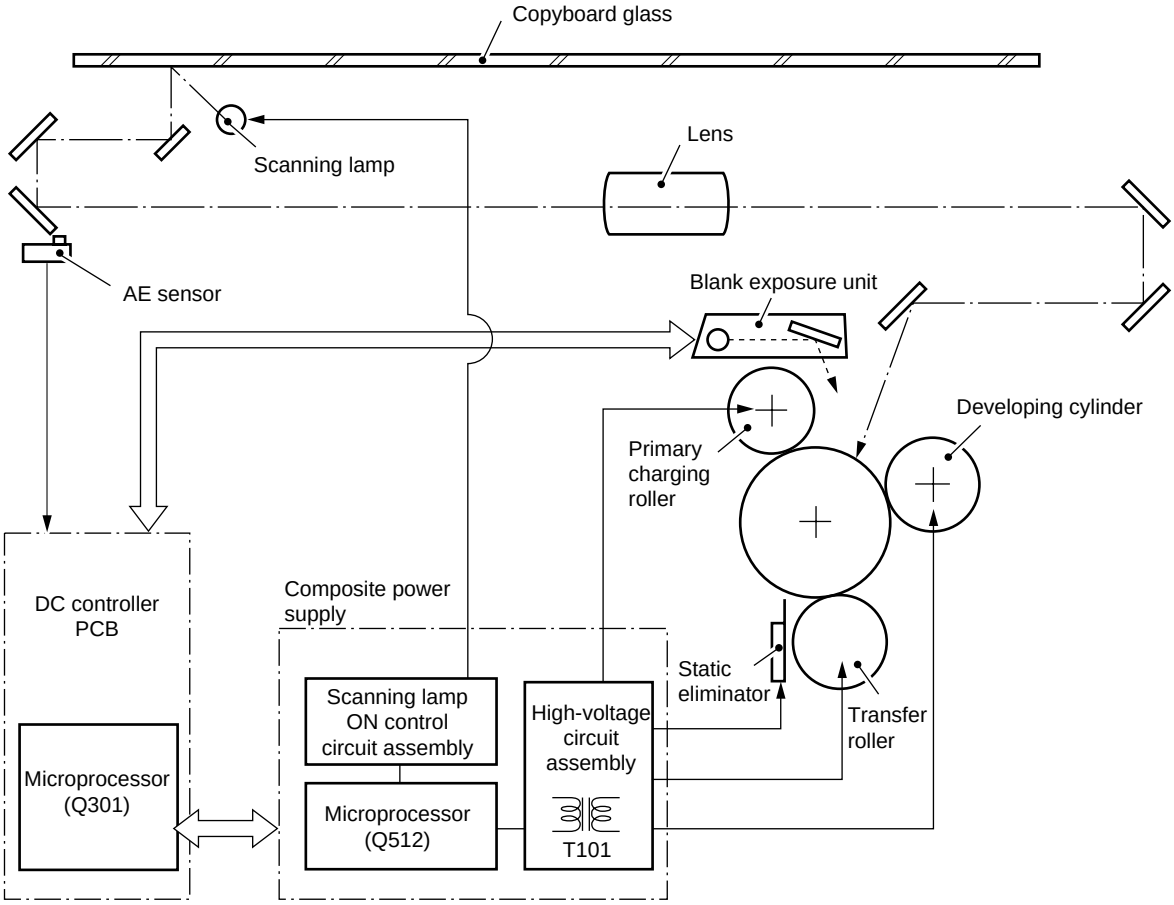

Figure 4-102

COPYRIGHT © 1997 CANON INC.
CANON NP6218 REV. 0 MAY 1997 PRINTED IN JAPAN (IMPRIME AU JAPON)

B. Basic Sequence of Operations (image formation system)

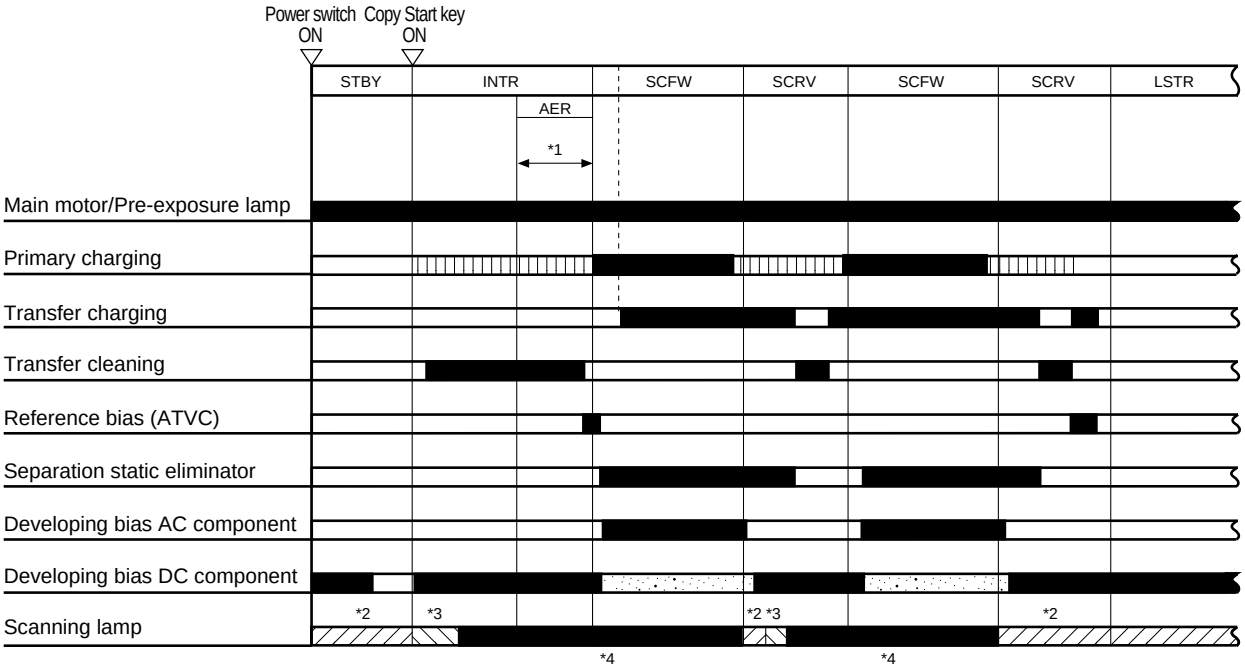

1 AE only.
2 half pre-heating control.
3 full pre-heating control.
4 ON pre-heating control.

Figure 4-103

C. Controlling the Scanning Lamp

1. Outline

Figure 4-104 shows the circuit that controls the scanning lamp; the circuit has the following functions:

- turns on and off the scanning lamp.
- controls scanning lamp pre-heating operation.
- controls scanning lamp intensity.
- controls the scanning lamp heater.

The copier's scanning lamp is a fluorescent lamp.

In general, a fluorescent lamp is low in intensity immediately after power-on, gradually increasing in intensity as time passes, without control; in particular, it takes a long time before the intensity stabilizes in a low temperature environment.

If the ambient temperature drops below 15°C, the copier may enter and remain in wait state before a specific intensity can be obtained. To prevent this from occurring, a fluorescent lamp is provided for installation in low temperature environments.

To ensure that the lamp exposes an original at a stable intensity, a fluorescent lamp adjusting sensor is used to monitor the intensity of the lamp during copying operation, thereby controlling it to a specific value.

In addition, half pre-heating is executed between power-on and a press on the Copy Start key so as to ensure that the lamp reaches its optimum intensity within a short period of time after a press on the Copy Start key; thereafter, full pre-heating is performed. (See Figure 4-105.)

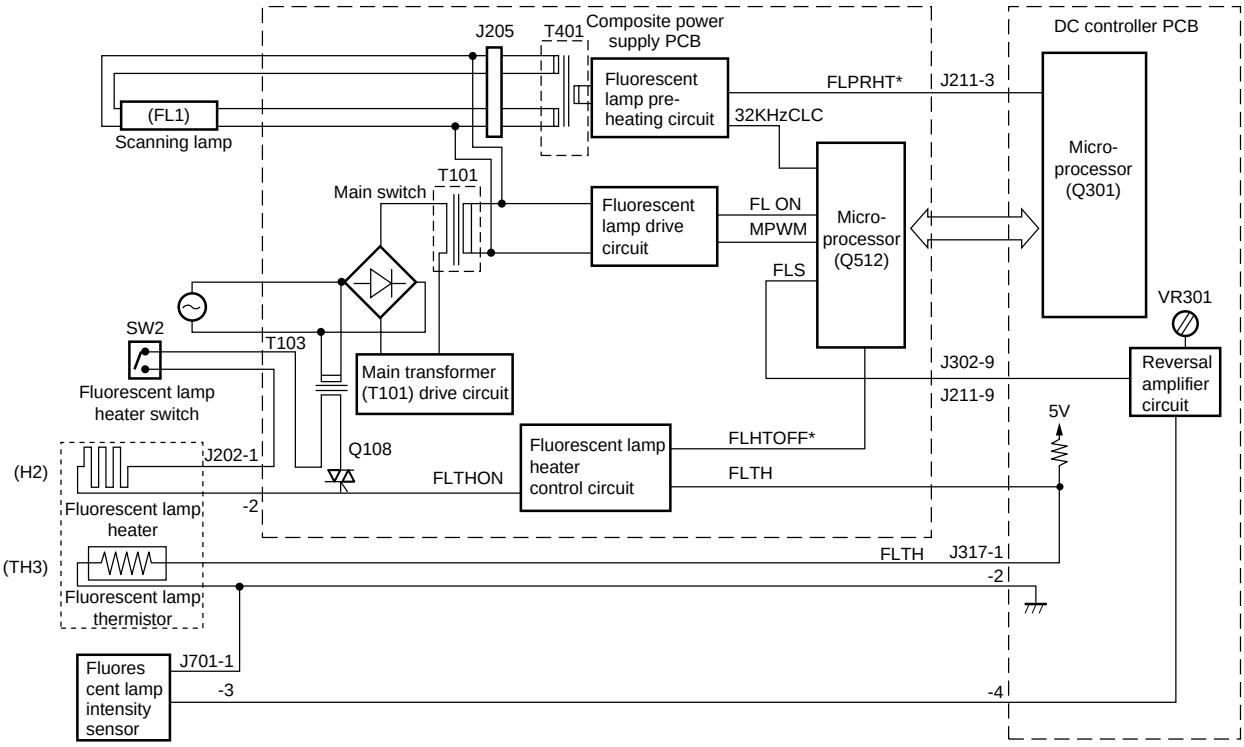

Figure 4-104

COPYRIGHT © 1997 CANON INC.
CANON NP6218 REV. 0 MAY 1997 PRINTED IN JAPAN (IMPRIME AU JAPON)

2. Turning On and Off the Scanning Lamp

The microprocessor (Q301) on the DC controller PCB exerts control so that the microprocessor (Q512) on the composite power supply PCB generates the scanning lamp ON signal (FLON)=0 (pulse signal, 1 kHz). At the time, the fluorescent lamp drive circuit applies the output of the secondary side of the transformer (T101) to the scanning lamp (FL1), thereby allowing current to flow through the scanning lamp and causing the lamp to turn on at a high frequency (about 120 kHz).

3. Pre-Heating Control (scanning lamp)

The copier exerts four modes of control; namely, half pre-heating, full pre-heating, ON pre-heating I, and ON pre-heating II.

These modes of control are executed by the microprocessor (Q301) on the DC controller by varying the duty ratio of the fluorescent lamp pre-heat signal (FLPRHT; pulse) of 5 kHz to suit each pre-heat control mode sent to each scanning lamp pre-heat circuit. Based on the signal, the scanning lamp pre-heat circuit modulates the amplitude of the signal (32 kHz); in response, the secondary side of the transformer (T401) turns on to allow the fluorescent lamp pre-heat current to flow, thereby starting pre-heating operation. (For the sequence of operations, see Figure 4-105.)

4. Sequence of Operations (scanning lamp pre-heating control; AE, A4, continuous, 2 copies)

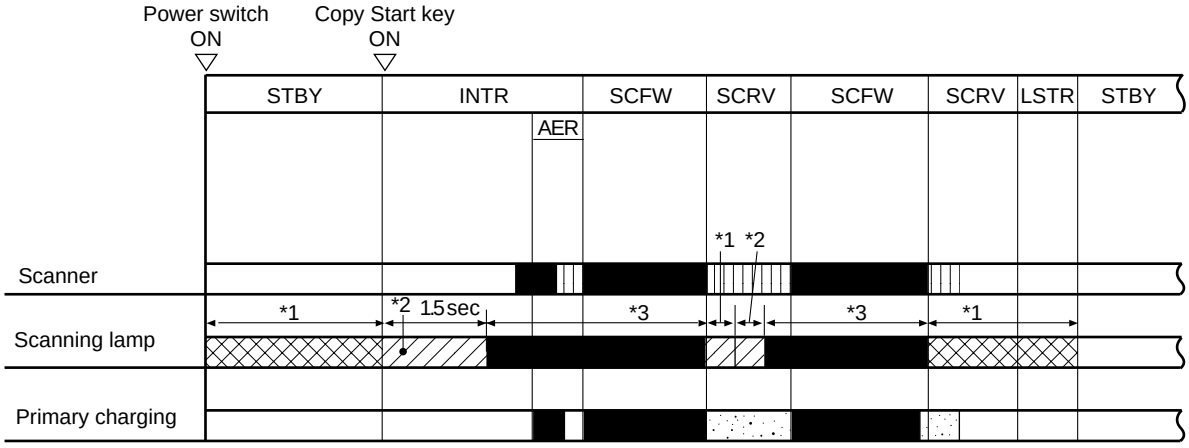

1 half pre-heating control.
2 full pre-heating control.
3 ON pre-heating I or II control.

Figure 4-105

■ Input Signals from the DC Controller to the Composite Power Supply PCB

	Half preheating	Full preheating	Fluorescent lamp ON I*	Fluorescent lamp ON II*
Duty ratio (5 kHz)	25.9 %	60 %	44.4 %	55 %
Filament voltage	2.5Vrms	4.5Vrms	3.6Vrms	4.1Vrms

*ON duty ratio of FLOW signal (in relation to 1kHz):
40% or more .....ON I
less than 40% .....ON II

Table 4-101

■ Half Pre-Heating Control (between press on Power switch and press on Copy Start key; part of scanner reverse travel)

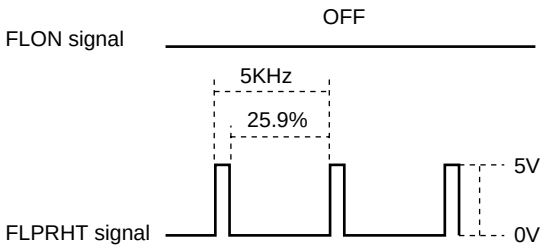

Figure 4-106

■ Full Pre-Heating Control (initial rotation, last rotation, part of scanner reverse travel)

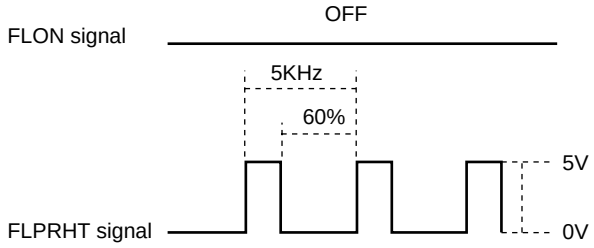

Figure 4-107

COPYRIGHT © 1997 CANON INC.
CANON NP6218 REV. 0 MAY 1997 PRINTED IN JAPAN (IMPRIME AU JAPON)

■ Scanning Lamp ON Pre-Heating Control (during copying operation I)

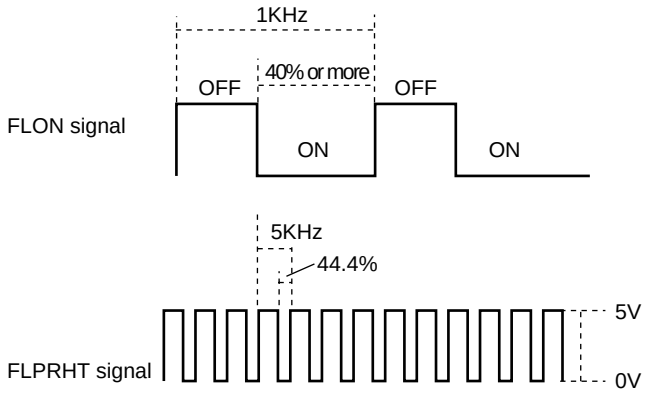

Figure 4-108

5. Controlling the Intensity of the Scanning Lamp (FL1)

- If the intensity of the fluorescent lamp is too low at power-on,
  The starting power of the intensity adjustment sensor lowers, and the fluorescent lamp intensity adjustment signal (FLS) of the amplifier circuit on the DC controller increases. In response to the signal, the microprocessor (Q512) on the composite power supply PCB reduces the duty ratio, thereby increasing the ON time of the FLON signal.
  The current flows through the filament of the fluorescent lamp when both the MPWM signal (150 kHz) and the FLON signal (1 kHz) are on.
- If the intensity of the fluorescent lamp is too high at power-on,
  The starting power of the intensity adjustment sensor rises, and the fluorescent lamp intensity adjustment signal (FLS) of the amplifier circuit on the DC controller PCB decreases. In response to the signal, the microprocessor (Q512) on the composite PCB increases the duty ratio, thereby decreasing the ON time of the FLON signal.

Caution:

Gain Adjustment for the Intensity Adjustment Sensor (VR301)
If you replaced the intensity adjustment sensor or the scanning lamp (fluorescent lamp, FL1), or the DC controller PCB, you must always perform gain adjustment for the intensity adjustment sensor using VR301 on the DC controller PCB. (See the p. 10-10.)

COPYRIGHT © 1997 CANON INC. CANON NP6218 REV. 0 MAY 1997 PRINTED IN JAPAN (IMPRIME AU JAPON)

■ Input to the Reversal Amplifier Circuit (if the intensity increased gradually)

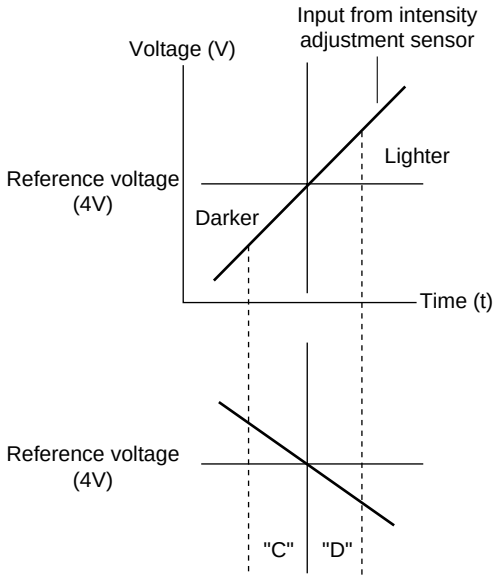

Figure 4-109

■ Changes in the Duty Ratio of the FLON signal

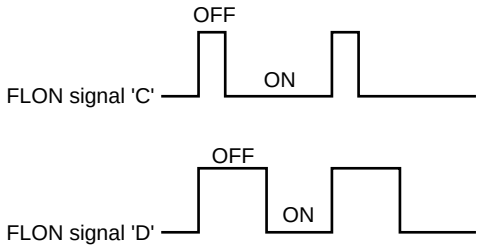

Figure 4-110

6. Controlling the Fluorescent Lamp Heater

As the temperature around the scanner increases, the resistance of the fluorescent lamp thermistor (TH3) lowers, thereby lowering the voltage of the fluorescent lamp thermal signal (FLTH). Based on the voltage, the fluorescent lamp heater control circuit on the composite power supply PCB turns on and off the fluorescent lamp heater drive signal (FLTHON).

You can force the fluorescent heater off by turning off the scanning lamp (fluorescent lamp) heater switch (SW2) during the months in which the heater is not needed.

COPYRIGHT © 1997 CANON INC.
CANON NP6218 REV. 0 MAY 1997 PRINTED IN JAPAN (IMPRIME AU JAPON)

7. Fluorescent Lamp Automatic

Correction Control (ALVC control)

The copier executes control (ALVC control) that automatically corrects the scanning lamp on voltage to make up for the change that otherwise could occur as a result of deterioration of the photosensitive drum.

8. Fluorescent Lamp Protection Mechanism

If the fluorescent lamp fails or flickers continuously after copying is started, the microprocessor on the DC controller increases the application voltage to turn on the lamp properly.

This, however, imposes an excessive voltage to the fluorescent lamp, speeding up its deterioration. To prevent such a problem, the DC controller turns off the power when an error in the application voltage is detected on the composite power supply PCB.

Reference:

If the same problem occurs when the power is returned, the fluorescent lamp may be faulty. Try replacing it.

Warning:

Do not execute operations that turn on the fluorescent lamp (coying, service mode) without installing the fluorescend lamp.

COPYRIGHT © 1997 CANON INC.

D. Controlling the Primary Charging Roller Bias

1. Outline

Figure 4-111 shows the circuit that controls the voltage applied to the primary charging roller; the circuit has the following functions:

- turns on and off the primary charging roller bias.
- controls the primary charging roller bias to a constant voltage.
- switches the application voltage level for the primary charging roller bias.
- switches the application voltage level for the primary charging roller bias.
- corrects the scanning lamp on voltage level

The main transformer (T101) is driven by the drive signal (MPWM) generated by the main transformer (T101).

The main transformer (T101), further, is used also as the high voltage transformer for the DC power supply and others in addition to providing the above functions.

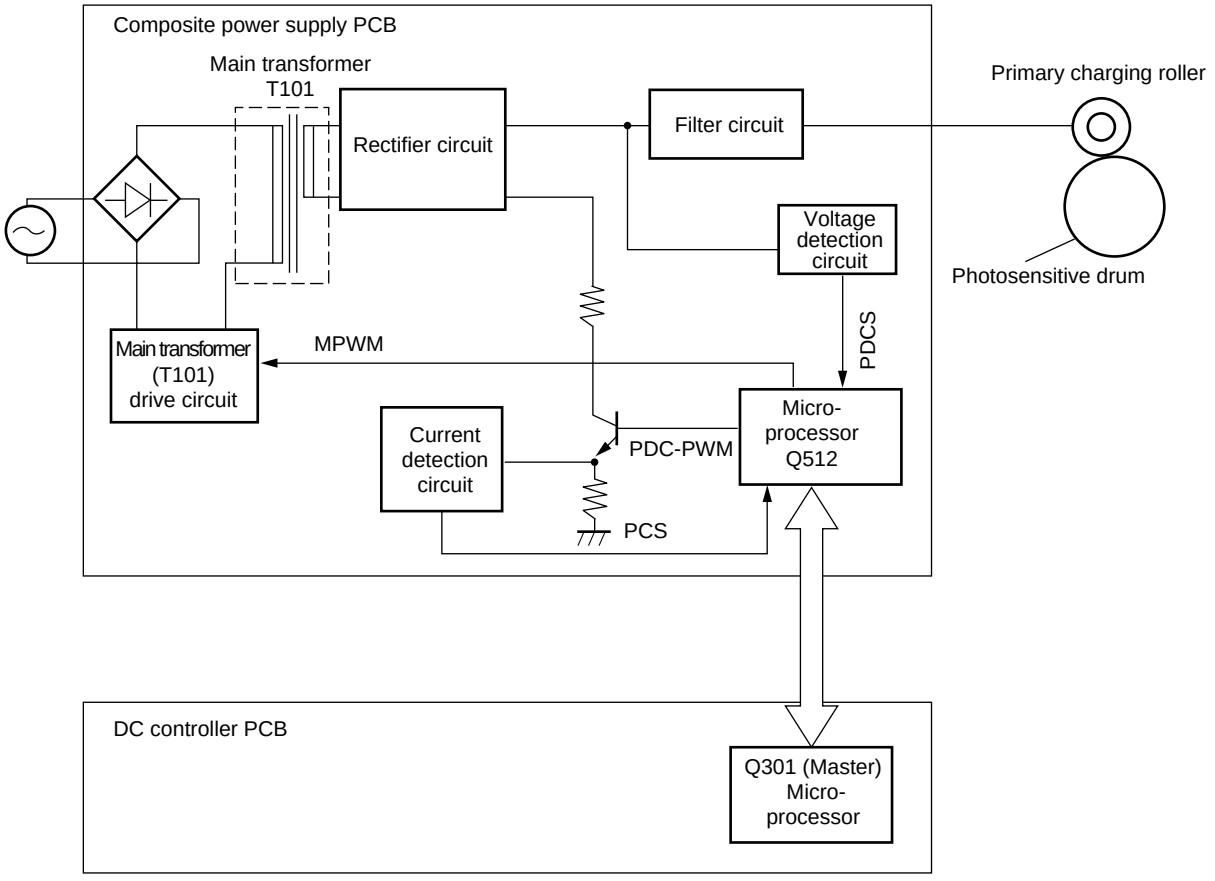

Figure 4-111

COPYRIGHT © 1997 CANON INC.
CANON NP6218 REV. 0 MAY 1997 PRINTED IN JAPAN (IMPRIME AU JAPON)

2. Turning On and Off the Primary Charging Roller Bias

The microprocessor (Q512) on the composite power supply PCB generates the PDCPWN signal (pulse signal) under the control of the microprocessor master (Q301) on the DC controller PCB. In response to the signal, the secondary side of the main transformer (T101) turns on to apply a primary charging roller bias.

The main transformer (T101) is driven by the drive signal (MPWM) from the microprocessor (Q512). The main transformer (T101) is also used as the high-voltage transformer for the DC power supply and other loads.

3. Controlling the Primary Charging Roller Bias to a Constant Voltage

While a bias voltage is being applied to the primary charging roller, the microprocessor (Q512) on the composite power supply PCB reads the PDCS signal (analog signal) from the voltage detection circuit to control the PDCPWM signal so that the output voltage is maintained at a specific level.

4. Switching the Primary Charging Roller Bias Application Voltage Level

The copier applies a cleaning bias to the transfer roller during initial rotation (INT), while the scanner is moving in reverse (SCRV), and during last rotation, thereby cleaning the transfer charging roller. (See p. 4-21.)

To enhance the result of cleaning by the cleaning bias and to prevent drum memory caused by the cleaning bias, a cleaning primary charging roller bias is applied during initial rotation and while the scanner is moving in reverse.

COPYRIGHT © 1997 CANON INC. CANON NP6218 REV. 0 MAY 1997 PRINTED IN JAPAN (IMPRIME AU JAPON)

5. Application Voltage Level (APVC) for the Primary Charging Roller and Scanning Lamp On Voltage Level Automatic Correction

Changes in the static latent image could cause the quality of copies; such changes, in turn, may be attributed to the following factors:

- changes in the drum sensitivity
- changes in the charge volume of the primary charging roller.

These changes occur as a result of changes in the environment in which the copier is installed (temperature, humidity), deterioration of parts, or wear and dirt on parts.

In the case of the copier, the light potential (V_L) and dark potential (V_D) tend to increase, and the primary charging roller bias application voltage level is corrected (APVC control) to compensate for possible problems while at the same time executing scanning lamp on voltage level correction (ALVC control); specifically, the control serves to ensure constant light potential (V_L) and dark potential (V_D).

See the following for the flow of operations that occur after the power is switched on and during initial rotation:

- Flow

A constant voltage of about –1.46 kV is applied to the primary charging roller for about 1.5 sec.

↓

The current at the time is measured by the current detection circuit, and the result is sent to the microprocessor (Q512).

↓

The microprocessor (Q512), in turn, sends the result to the microprocessor (Q301) on the DC controller, which determines the application voltage for the primary charging roller bias based on the input.

Caution:

You must store the APVC value recorded on the label attached to the composite power supply PCB in service mode whenever you have replaced the composite power supply PCB. (See p. 10-102.)

Caution:

You must enter the APVC correction voltage setting recorded on the label attached to the front of the drum unit whenever you have replaced the drum unit. (See p. 10-102.)

COPYRIGHT © 1997 CANON INC.
CANON NP6218 REV. 0 MAY 1997 PRINTED IN JAPAN (IMPRIME AU JAPON)

E. Controlling the Transfer Roller Bias

1. Outline

The copier uses a direct transfer method by a roller to transfer images to paper. For this reason, its bias control differs from that of conventional copiers, which transfer images by corona charging.

The following three types of transfer roller bias are used; go through the descriptions for the function and output timing of each.

a. Transfer Bias

This bias corresponds to the transfer bias of conventional copiers, and is a negative voltage (constant voltage, –3.5 kV to –6.0 kVDC).

b. Cleaning Bias

Since the copier uses a direct transfer method, jams could cause toner on the photosensitive drum to deposit itself on the transfer roller.

To remove such deposits of toner, the copier applies a positive voltage (constant voltage, DC) at the following timing, thereby returning the toner from the transfer roller to the photosensitive drum.

Cleaning Bias Output Timing

- during initial rotation after a press on the Copy Start key
- while the scanner is moving in reverse (certain period)
- during last rotation (certain period)

c. Reference Bias (ATVC)

Changes in the environment or deterioration of the transfer roller can affect the resistance of the transfer roller, ultimately affecting the transfer efficiency.

To limit the changes in the image quality brought about by such changes in the transfer efficiency, the copier corrects the application voltage level of the transfer bias.

The transfer ATVC bias (constant current, –10 µA DC) is the bias applied to determine the correction value each time the Start button is pressed.

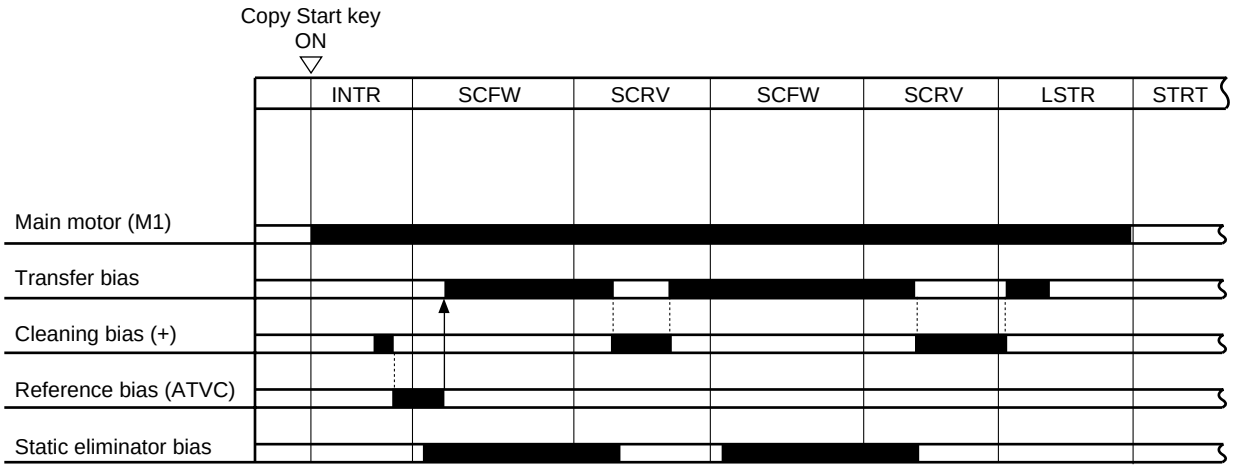

Figure 4-112

COPYRIGHT © 1997 CANON INC.

Figure 4-113 shows the circuit used to control the foregoing three types of bias; the circuit has the following functions:

- turns on and off the transfer roller bias
- controls the transfer bias to a constant voltage
- controls the correction of the transfer bias voltage level

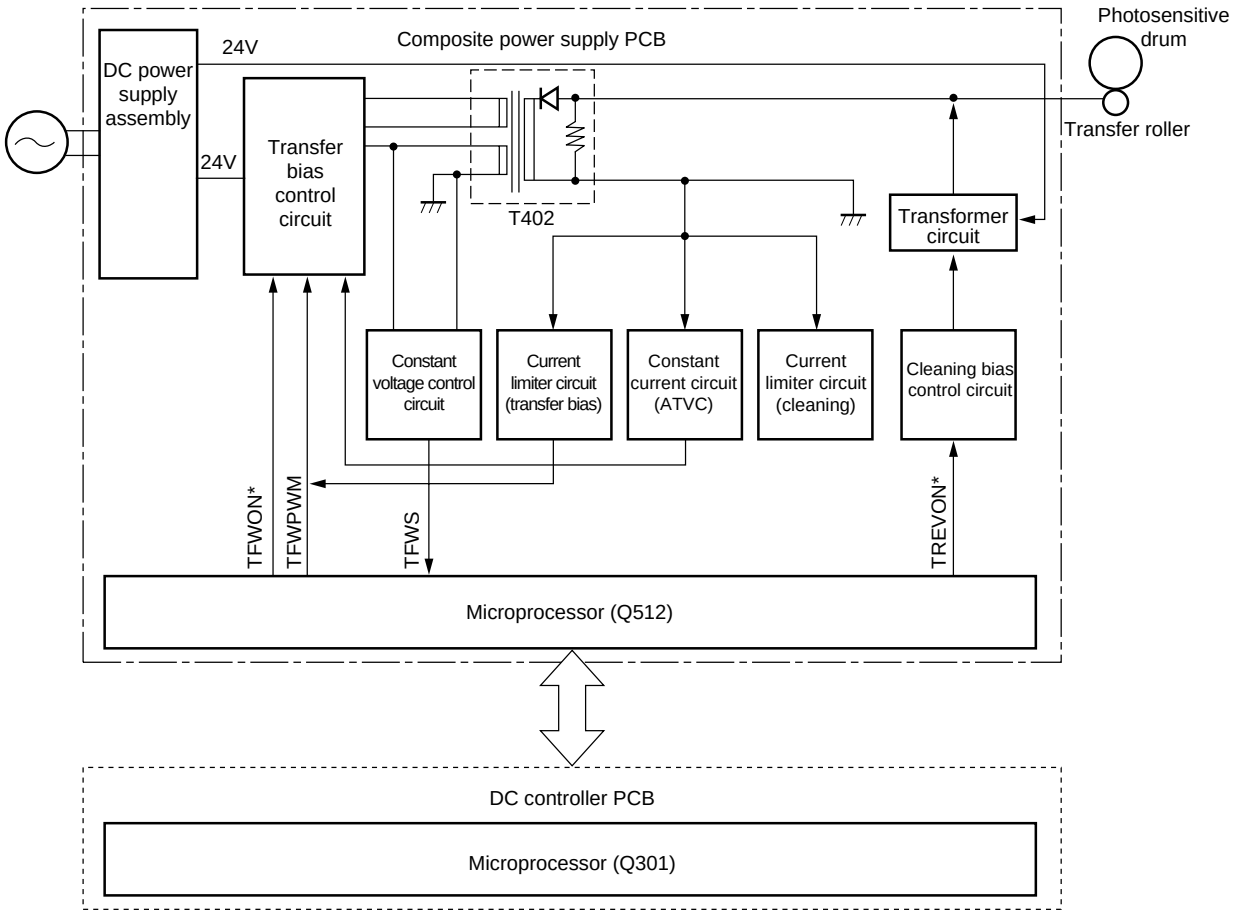

Figure 4-113

COPYRIGHT © 1997 CANON INC.
CANON NP6218 REV. 0 MAY 1997 PRINTED IN JAPAN (IMPRIME AU JAPON)

2. Turning On and Off the Transfer Roller Bias

The TFWON signal is generated under the control of the microprocessor (Q512) on the composite power supply PCB. The signal causes the secondary side of the transfer transformer (T402) to turn on, thereby applying a DC bias to the transfer roller.

Table 4-102 shows combinations of signals that are used when determining the transfer roller bias.

	TREVON*	TFWON*	TFWPWM
Transfer bias output	OFF	ON	ON
Cleaning bias output	ON	OFF	OFF
Reference bias output (A TVC)	OFF	ON	OFF

Table 4-102

3. Controlling the Transfer Bias to a Constant Voltage

While the transfer DC bias is being generated, the microprocessor (Q512) on the composite power supply PCB reads the TFWS signal (analog signal) from the constant voltage control circuit and changes the duty ratio so that the application voltage is maintained at a constant level, thereby controlling the TFWPWM signal.

4. Controlling the Transfer Bias Voltage Level Correction (ATVC control)

To correct the changes in the transfer efficiency caused by changes in the environment or deterioration of the transfer roller, the application voltage level of the transfer bias is corrected automatically.

A constant current (–10 µA) is let to flow during initial rotation after a press on the Copy Start key. The microprocessor (Q512) on the composite power supply PCB takes in the transfer roller application voltage at the time from the constant voltage control circuit, and sends the data to the microprocessor (Q512) on the DC controller; the DC controller, in turn, determines the level of the voltage to be applied to the transfer roller based on the data.

This control is executed only once during initial rotation immediately after a press on the Copy Start button; for this reason, the application voltage will never vary during continuous copying operation.

5. Current Limiter Circuit (transfer bias)

Should an overcurrent flow to the secondary side of the transformer (T402) while a transfer bias is being generated because of changes in the environment, the current limiter circuit exerts control so as to prevent any occurrence of a current which is 50 µA or more.

6. Current Limiter Circuit (cleaning bias)

Should an overcurrent flow to the secondary side of the transformer (T402) while a transfer bias is being generated, the current limiter circuit exerts control to prevent any occurrence of a current which is 10 µA or more.

COPYRIGHT © 1997 CANON INC.

F. Controlling the Static Eliminator Bias

1. Outline

Figure 4-114 shows the circuit that controls the static eliminator bias; the circuit has the following functions:

- turns on and off the static eliminator bias and controls the voltage to a constant level
- switches the static eliminator bias voltage level

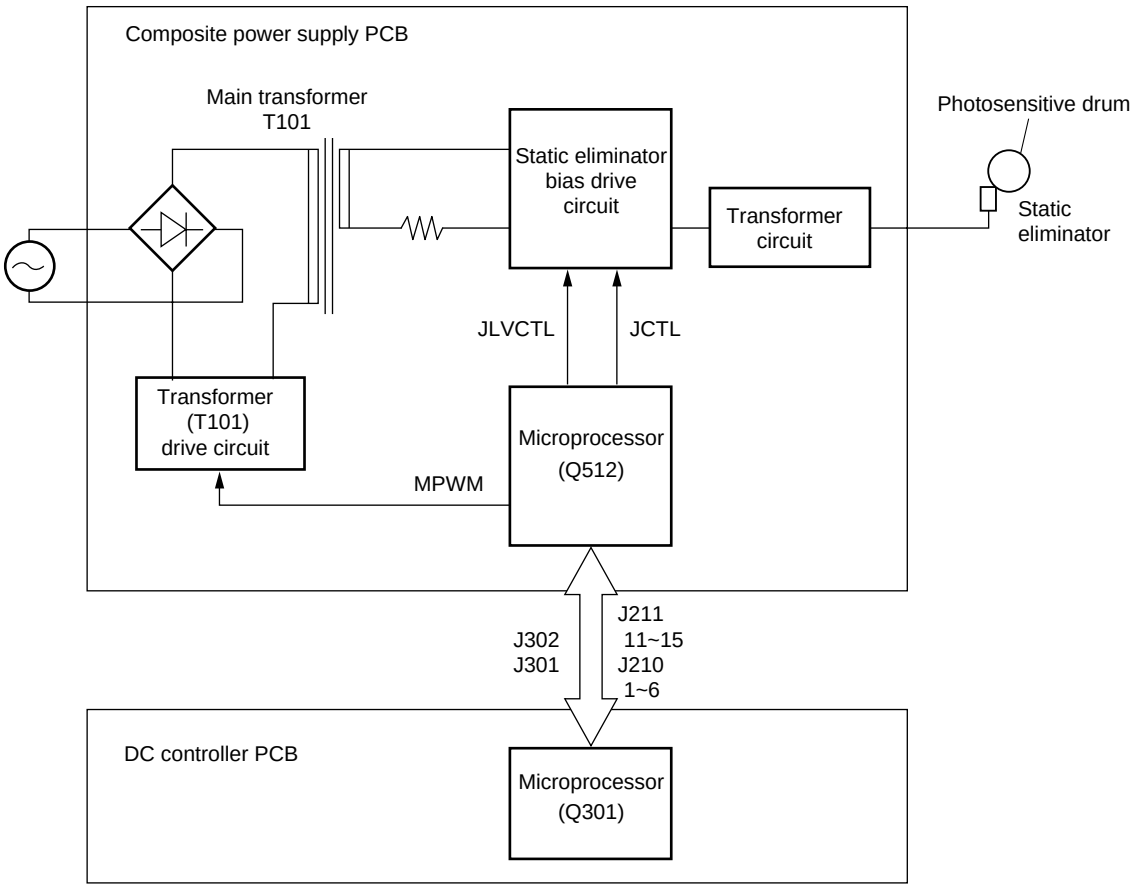

Figure 4-114

COPYRIGHT © 1997 CANON INC.
CANON NP6218 REV. 0 MAY 1997 PRINTED IN JAPAN (IMPRIME AU JAPON)

2. Switching the Static Eliminator Bias Voltage Level

The microprocessor (Q512) on the composite power supply PCB generates the JCTL signal (analog signal) under the control of the DC controller PCB. In response, the secondary side of the main transformer (T101) turns on to generate a bias for the static eliminator with the help of the main transformer (T101).

The output of voltages (2.5 kV, 4.0 kV) is switched by the JLVCTL signal.

When the JCTL signal turns on, the drive circuit turns on to generate the static eliminator bias.

3. Ensuring Proper Separation of Thin Paper

Under some environmental conditions, thin paper can fail to separate at times.

To ensure proper separation, the voltage applied to the static eliminator may be permanently set to 4.0 kV.

To do this, use service mode No. 506 (separation static eliminator output voltage; see p. 10-107).

COPYRIGHT © 1997 CANON INC. CANON NP6218 REV. 0 MAY 1997 PRINTED IN JAPAN (IMPRIME AU JAPON)

G. Controlling Blank Exposure

1. Outline

The copier uses the reflecting plate to direct the light of the pre-exposure lamp to the photosensitive drum by way of executing blank exposure, thereby blanking (whiting) out the non-image areas and areas between copies.

The area of blank exposure is controlled by the two slide shutters and one open/close shutter.

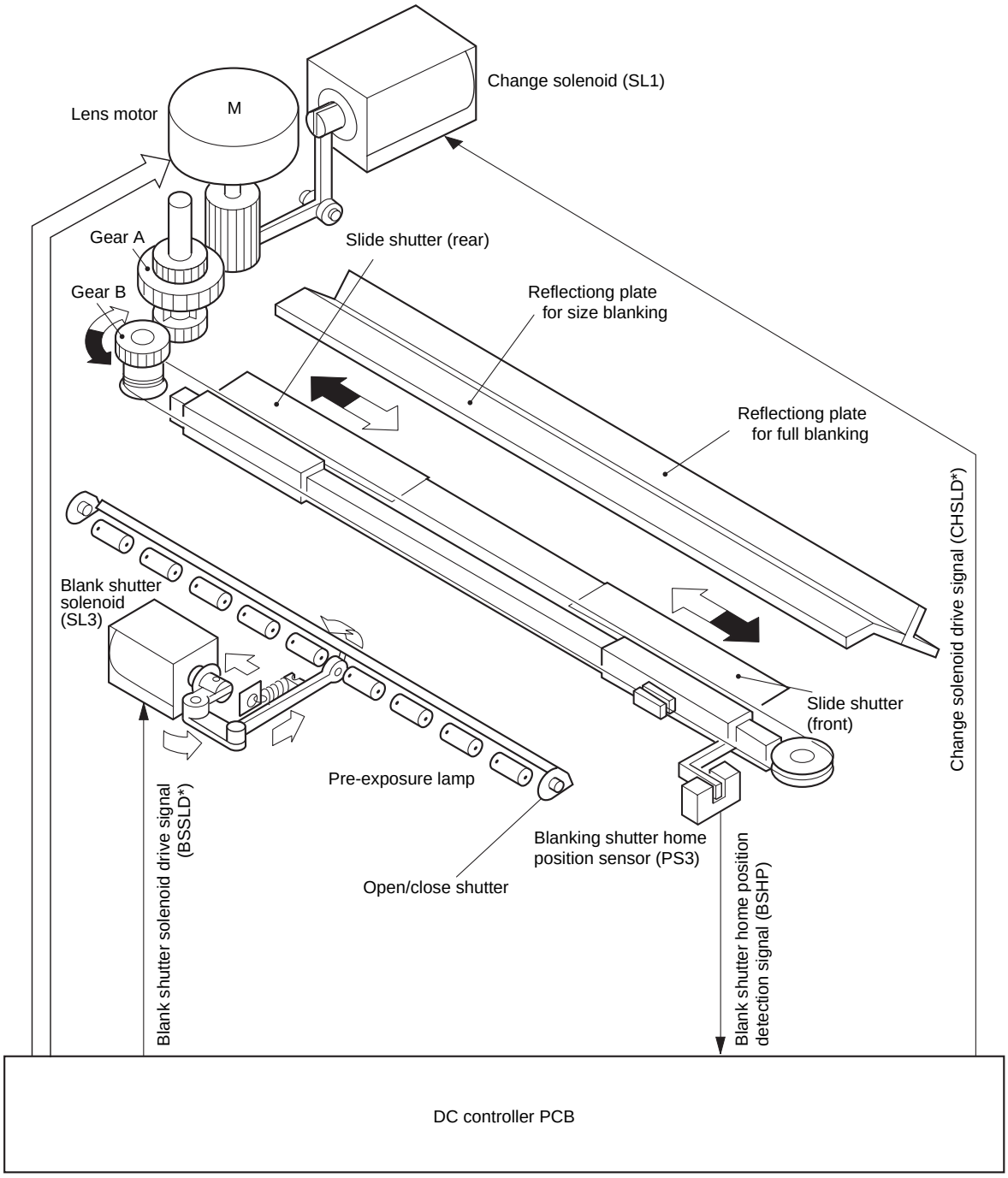

Figure 4-115

COPYRIGHT © 1997 CANON INC.
CANON NP6218 REV. 0 MAY 1997 PRINTED IN JAPAN (IMPRIME AU JAPON)

2. Blanking (Whiting) of Non-Image Areas for Reduction

In Reduce mode, the change solenoid (SL1) turns on, and the lens moves according to the selected reproduction ratio. When the change solenoid (SL1) turns off, the drive of the lens motor is transmitted to gears A and B, thereby moving the slide shutter (rear, front) for the appropriate distance to open the exposure window. In this condition, the light from the pre-exposure lamp is directed to the photosensitive drum by way of the reflecting plate for size blanking.

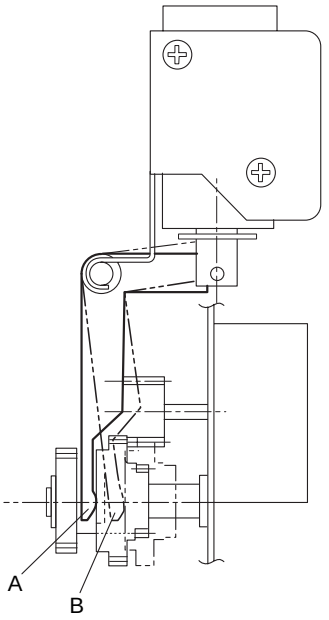

Figure 4-116

3. Blanking (Whiting) Out the Leading/Trailing Edges and between Copies

The blank shutter solenoid drive signal (BSSSLD) turns on or off under the control of the microprocessor (Q301) on the DC controller. The leading/trailing edge and the area between copies are blacked (whited) out by opening the open/close shutter in this way.

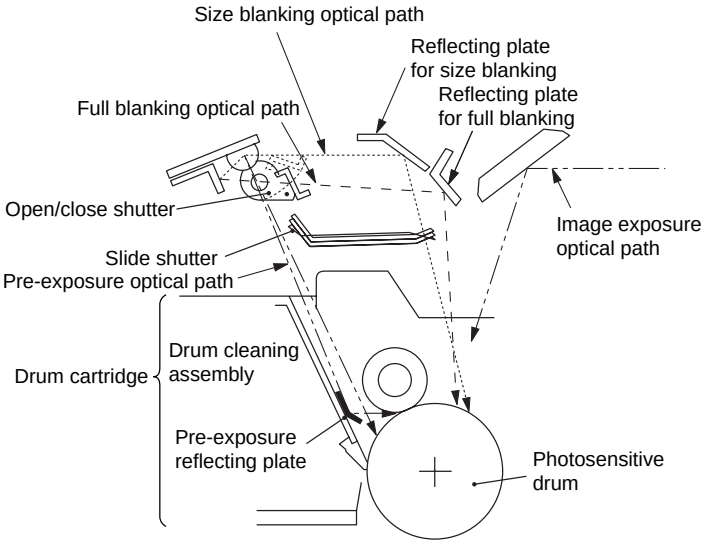

Figure 4-117

COPYRIGHT © 1997 CANON INC.

H. Controlling the Primary Corona Roller Cleaning Mechanism

1. Outline

The copier's primary charging roller is equipped with an automatic cleaning mechanism.

The automatic cleaning mechanism cleans the primary charging roller during initial rotation(INTR) after having made 250 or more copies, i.e., after executing transfer roller release control five times.

2. Primary Charging Roller Cleaning Operation

The primary charging roller cleaning solenoid (SL4) on signal (PCLSLD) is generated under the control of the microprocessor (Q301) on the DC controller PCB. In response to the signal, the cleaning pad is butted against the roller for 2 sec, during which time the cleaning roller makes about 4 rotations.

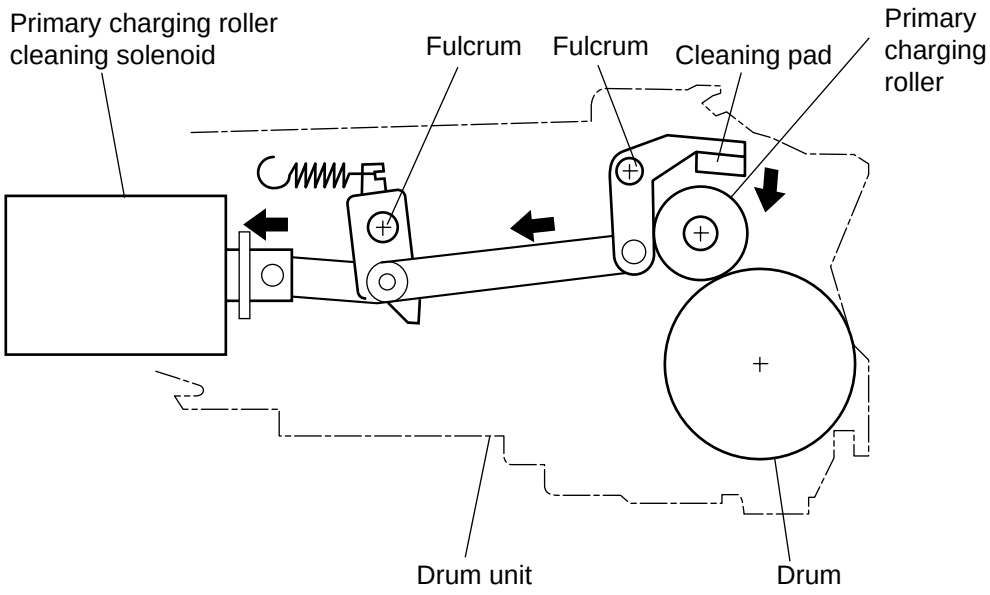

Figure 4-118

COPYRIGHT © 1997 CANON INC.
CANON NP6218 REV. 0 MAY 1997 PRINTED IN JAPAN (IMPRIME AU JAPON)

I. Releasing the Transfer Roller

1. Outline

The copier's transfer roller is equipped with a releasing mechanism.

The releasing mechanism releases the transfer roller to prevent adhesion of toner to the roller under the following condition:

- during post rotation (LSTR) after as many as 50 copies or more have been made (cumulative)

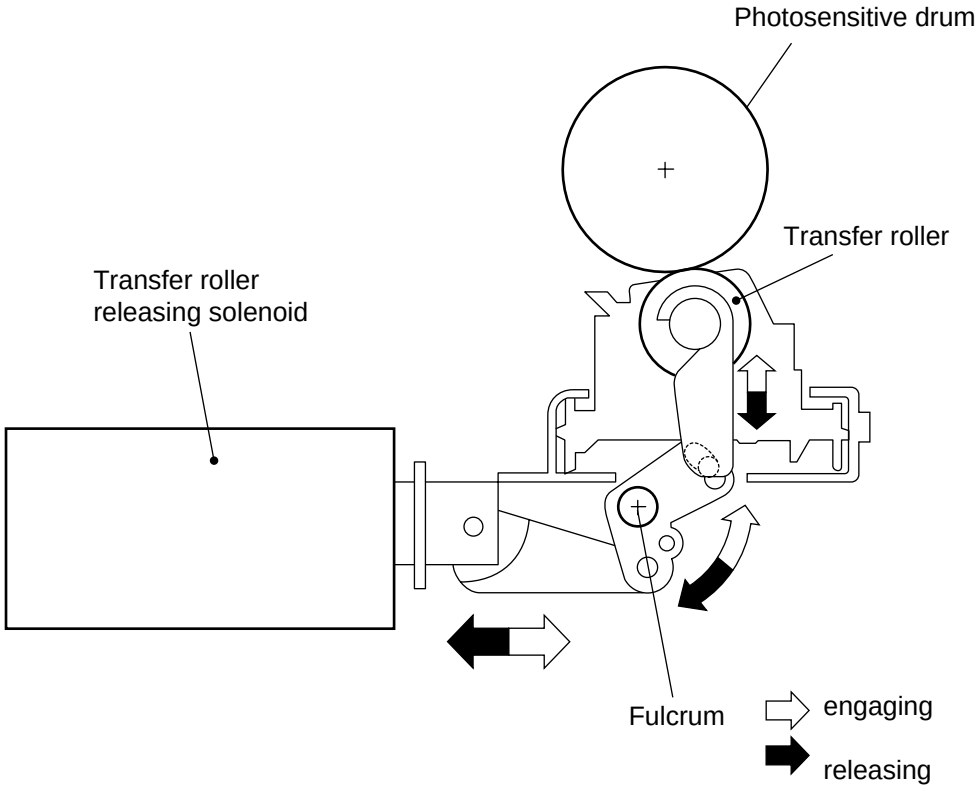

Figure 4-119

II. DEVELOPING ASSEMBLY AND CLEANING ASSEMBLY

A. Outline

The copier's photosensitive drum, developing cylinder, No. 1 stirring rod, and No. 2 stirring blade are rotated by the drive of the main motor (M1).

The level of the toner inside the developing assembly is monitored by the toner sensor; when it drops below a specific level, the Add Toner indicator flashes on the display of the control panel.

The No. 1 stirring rod serves to supply toner to the developing cylinder and stir the toner flow layer inside the developing chamber.

The No. 2 stirring blade is used to stir the toner inside the toner container and, at the same time, to supply toner to the developing chamber.

The waste toner collected by the cleaning blade is forwarded by the waste toner feed blade for collection inside the waste toner assembly.

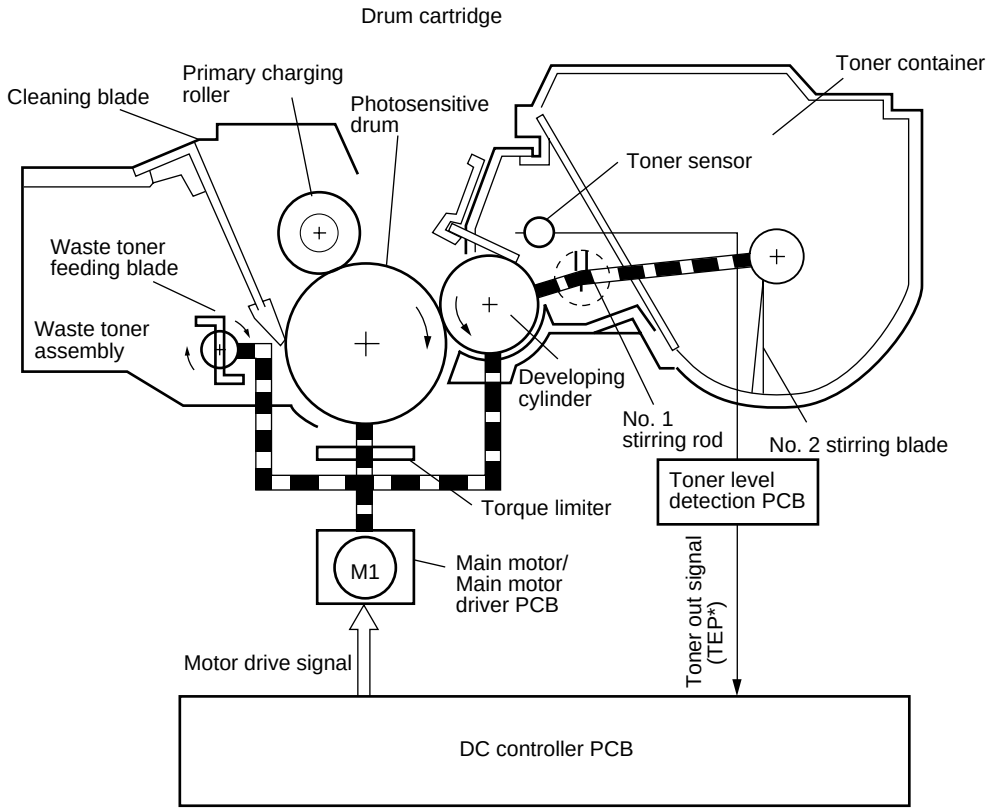

Figure 4-201

COPYRIGHT © 1997 CANON INC.
CANON NP6218 REV. 0 MAY 1997 PRINTED IN JAPAN (IMPRIME AU JAPON)

B. Controlling the Toner Level Detection

The level of toner inside the cartridge is monitored by the antenna sensor circuit.

The toner level sensor is found inside the cartridge, and an AC bias is applied to the developing cylinder.

The developing cylinder and the toner level sensor are connected by means of static electricity; the volumes of charges between the two vary according to the amount of toner inside the cartridge; as a result, an AC bias that represents the level of the toner is checked by the toner level sensor, and the data is sent to the antenna sensor circuit.

The antenna sensor circuit receives a reference signal from the composite power supply circuit; the reference signal is an AC bias with a specific AC bias that has gone through attenuation.

In the antenna circuit, the signal coming from the toner level sensor and the reference signal are compared to find out the level of toner.

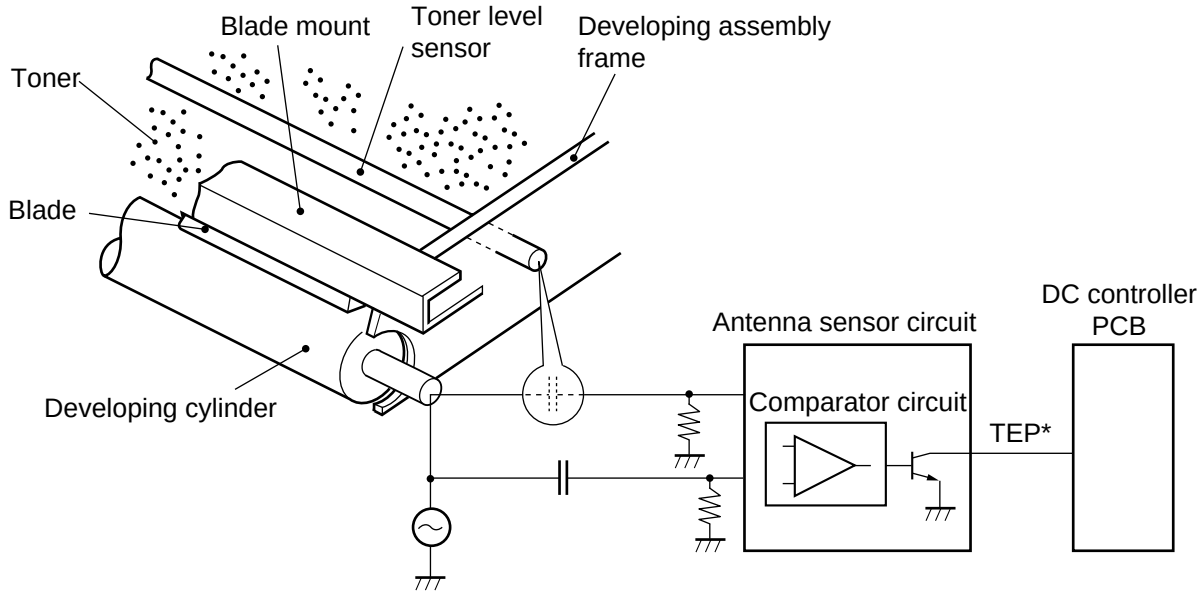

Figure 4-202

① When the Level of Toner Is Adequate

The presence of toner around the toner level sensor causes the AC bias generated by the sensor to be larger than the reference signal.

The condition causes the output from the comparator circuit to go '1' and the toner out signal (TEP*) to go '0'.

② When the Level of toner Is Inadequate

The toner around the toner level sensor decreases in amount, causing the AC bias generated by the sensor to lower.

Since the reference signal, on the other hand, remains unchanged, the output voltage remains high.

The difference in the potential causes the output of the comparator circuit to go '0', causing the toner out signal (TEP*) to go '1'.

The condition causes the microprocessor (Q301) in the DC controller cirucit to make checks only during copying operating (AC bias ON); if it detects the toner out signal=0, each lasting 0.25 sec or more, for a total time equivalent of three copies, the Cartridge indicator is flashed on the display of the control panel.

③ Torque Limiter

If an excessive load is imposed on the photosensitive drum because of excessive amounts of waste toner or some other reason while the drum is rotating, the torque limiter cuts off the drive from the main motor to stop the rotating of the drum.

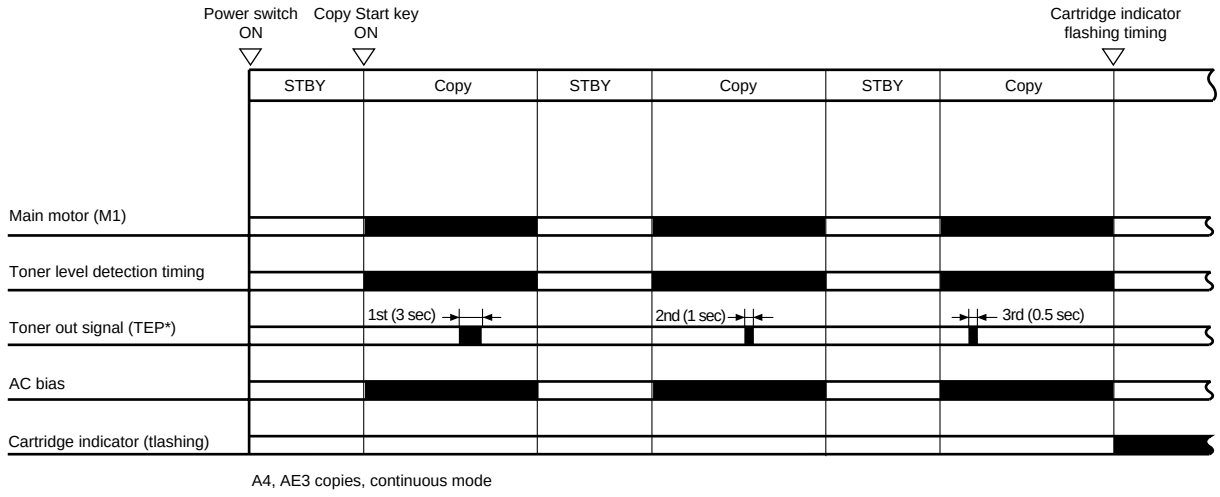

Figure 4-203

COPYRIGHT © 1997 CANON INC.
CANON NP6218 REV. 0 MAY 1997 PRINTED IN JAPAN (IMPRIME AU JAPON)

C. Controlling the Development Bias

1. Outline

Figure 4-204 shows the circuit used to control the development bias; the circuit has the following functions:

- turns on and off the AC component of the development bias
- turns on and off the DC component of the development bias
- controls the voltage level of the DC component of the development bias
- controls the DC component of the development bias to a constant level

2. Turning On and Off the DC Component of the Developing Bias and Controlling the Voltage to a Constant Level

The microprocessor (Q512) on the composite power supply PCB generates the BPWM signal (pulse signal) under the control of the microprocessor master (Q301) on the DC controller PCB. In response, the secondary side of the main transformer (T101) turns on to apply the DC component of the development bias.

In addition, while the DC component of the development bias is being applied, the application voltage is taken in from the development DC bias voltage detection circuit in the form of the BIASS signal (analog signal) to exert control so that the output voltage is maintained at a constant level.

The main transformer (T101) is driven by the drive signal (MPWM) from the microprocessor (Q512). In addition to the foregoing functions, the main transformer (T101) is also used as the high-voltage transformer for the DC power supply and other loads.

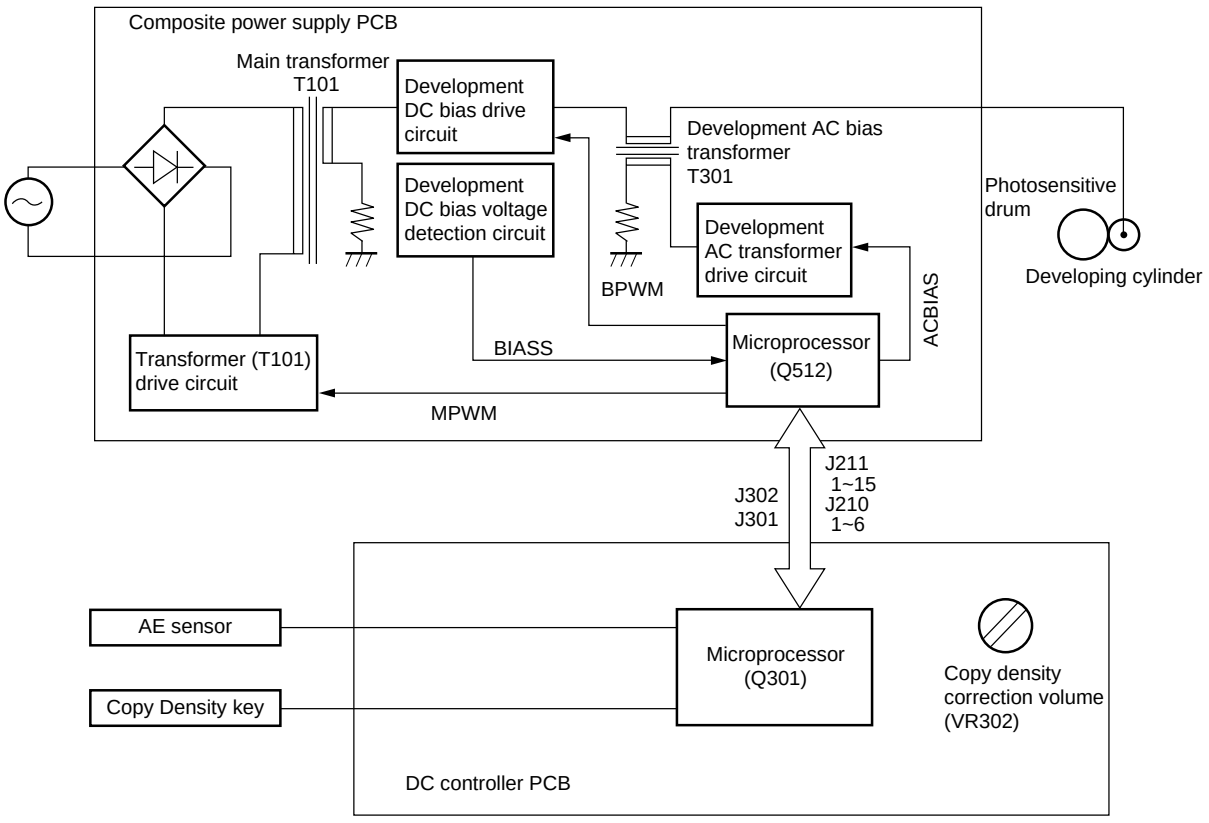

Figure 4-204

COPYRIGHT © 1997 CANON INC.

3. Turning On and Off the AC Component of the Development Bias

The microprocessor (Q512) on the composite power supply PCB generates the ACBIAS signal (pulse signal) under the control of the microprocessor master (Q301) on the DC controller PCB. In response to the signal, the development bias AC component generating transformer (T301) turns on to add the AC component of the development bias to the DC component for application.

- application frequency 2400 Hz (approx.)
- application voltage 1300 Vp-p (approx.)

4. Controlling the Voltage Level of the DC Component of the Development Bias

The copier modifies the voltage level of the DC component of the development bias based on the following factors:

- setting of the Copy Density key
- output of the AE sensor
- position of the Copy Density Correction knob (VR302)

The copier controls so that the voltage of the DC component of the development bias varies between –80 and –560 V (in actual terms) by varying the output of the BPWM signal.

To ompensate increases in the *light* potential (V_L) caused by deterioration of the photosensitive drum, the copier is equipped with a copy density correction volume. You may operate the volume (VR302) on the DC controller PCB to adjust the potential of the DC bias for any increase in V_L, thereby freeing the copies of fogging.

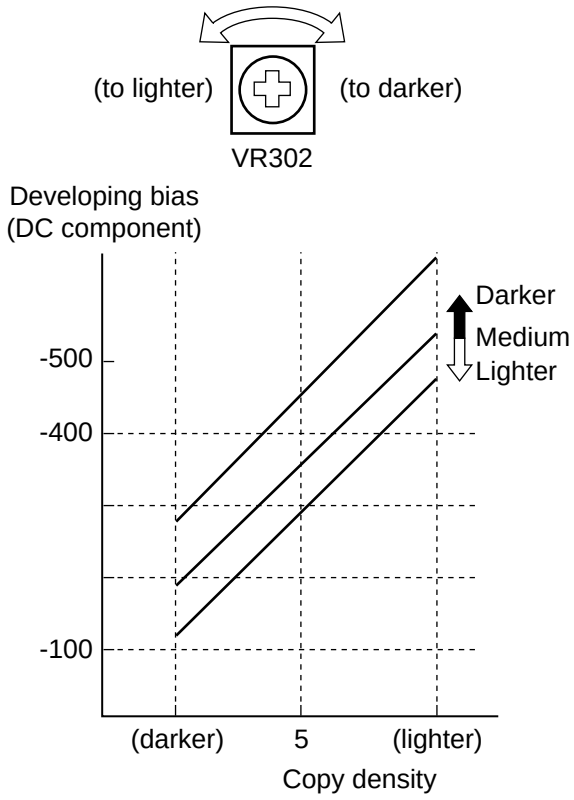

Figure 4-205

COPYRIGHT © 1997 CANON INC.
CANON NP6218 REV. 0 MAY 1997 PRINTED IN JAPAN (IMPRIME AU JAPON)

D. Automatic Control of Copy Density

1. Outline

The copier has an automatic density adjustment mechanism (AE), which automatically controls the DC component of the development bias according to the density of originals. As long as the original is more or less uniform in density, the AE mechanism varies the DC component of the development bias accordingly to ensure fogging-free copies.

The DC component controlled in AE mode is indicated in the copy density display of the control panel.

2. Control Method

During initial rotation (INTR), the scanning lamp (FL1) is turned on at a specific intensity and the scanner is moved forward about 65 mm to expose the original.

With the scanner in this position, the reflected light over the area shown in Figure 4-207 is measured by the AE sensor (photodiode), and the measurements are sent to the DC controller PCB.

In response, the DC controller PCB computes the optimum value of the development DC bias for copying operation, and generates the result to the microprocessor on the composite power supply. Figure 4-206 shows the changes in the DC component of the development bias caused by the changes in the density of an original.

The graph is based on the amount of exposure that brings optimum density without fogging when copies are made of a newspaper or a Test Sheet.

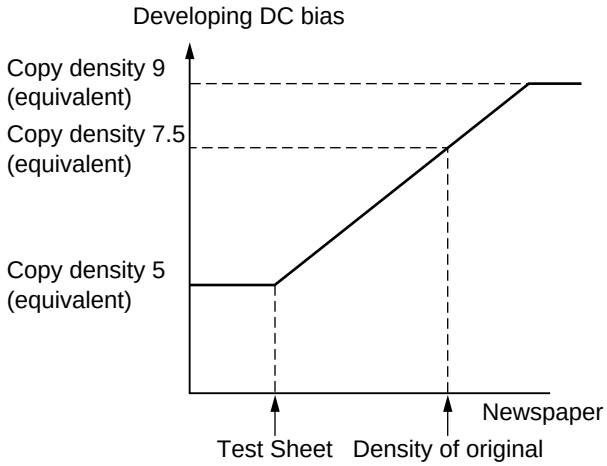

Figure 4-206

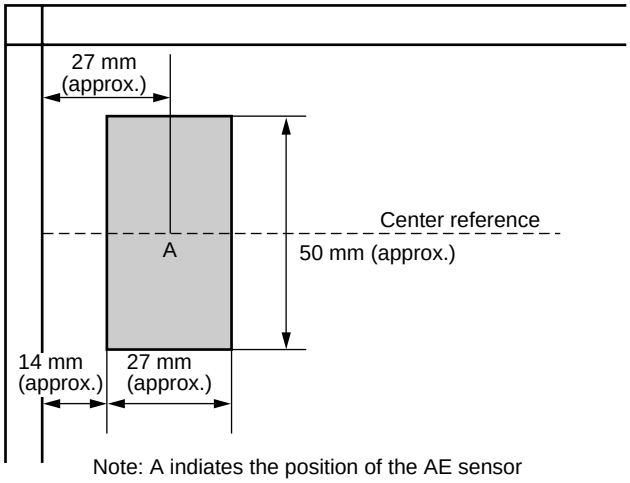

Note: A indiates the position of the AE sensor

Figure 4-207 (Area Read by the AE Sensor)

Reference:

When copies are made in AE using an ADF-E1 (accessory), the density is checked for each original.

COPYRIGHT © 1997 CANON INC.
CANON NP6218 REV. 0 MAY 1997 PRINTED IN JAPAN (IMPRIME AU JAPON)

3. AE Adjustment

The copier's AE adjustment is executed in service mode and consists of the following three types:

- lamp intensity automatic adjustment (No. 301) during AE scans
- copy density (development bias) standard adjustment (No. 302) during AE mode
- copy density (development bias) slope adjustment (No. 303) during AE mode

Item	Description	Adjustments	Remarks
No. 301	Lamp intensity automatic adjustment during AE scans	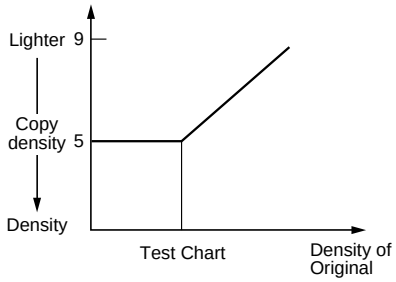	The density is adjusted automatically so that the copy density will be 5 when making copies of the Test Chart.
No. 302	Copy density (development bias) standard adjustment during AE mode	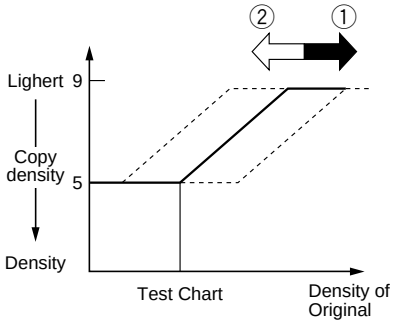	① If the setting is decreased in service mode, →AE copies will be darker. ② If the setting is increased in service mode, →AE copies will be lighter. default: 0 settings: -26 to +26
No. 303	Copy density (development bias) slope adjustment during AE mode	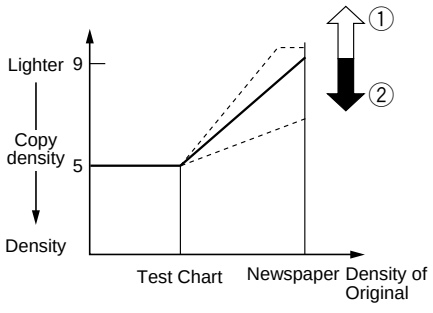	① If the setting is increased in service mode, →copies of a newspaper will be lighter. ② If the setting is decreased in service mode, →copies of a newspaper will be darker. default: 0 settings: -26 to +26

Table 4-201

COPYRIGHT © 1997 CANON INC.

III. DISASSEMBLY AND ASSEMBLY

This section explains mechanical characteristics and describes how to disassemble/assemble the machine.

Be sure to observe the following when disassembling/assembling the machine:

1. ⚠ Disconnect the power plug before starting the work.
2. Unless otherwise shown, assemble the parts by reversing the steps given to disassemble them.
3. Identify each screw by type (length, diameter) and location.
4. A washer is used for one of the mounting screws on the rear cover to protect against static electricity; be sure to use the washer when assembling the part.
5. A washer is used for some mounting screws (for grounding wire, varistor) to ensure correct electrical continuity; be sure to use the washer when assembling the part.
6. As a rule, do not operate the machine while any of its parts are removed.
7. When sliding out the duplexing unit or the fixing assembly, be sure to turn off the front door switch or the power switch.

A. Illumination Assembly

1. Detaching the Scanning Lamp/Fluorescent Lamp Heater

1) Disconnect the power plug.
2) Detach the copyboard glass.
3) Detach the upper rear cover.
4) Move the scanner unit near the center.
5) Remove the two screws ①, and detach the light-blocking plate ②.

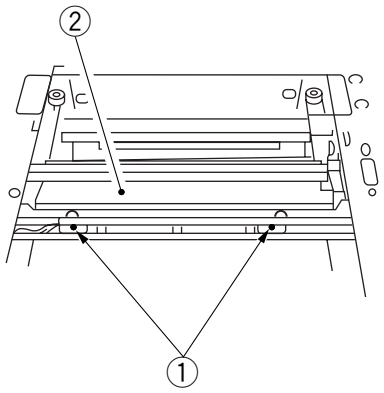

Figure 4-301

COPYRIGHT © 1997 CANON INC.
CANON NP6218 REV. 0 MAY 1997 PRINTED IN JAPAN (IMPRIME AU JAPON)

6) Disconnect the connectors ③, ④.

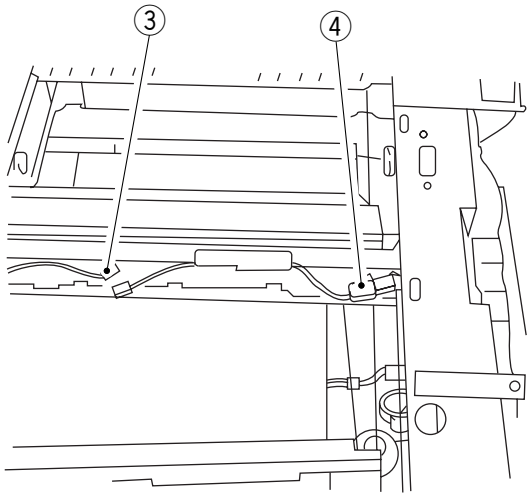

Figure 4-302

7) Remove the screw ⑤, and disconnect the connector ⑥.
8) Pull the fluorescent lamp ⑦ slowly toward the front to detach.

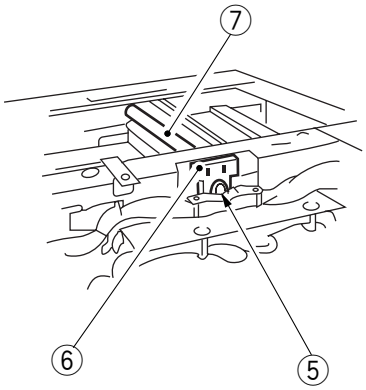

Figure 4-303

Caution:
Do not touch the fluorescent lamp. (Use lint-free paper.)

COPYRIGHT © 1997 CANON INC. CANON NP6218 REV. 0 MAY 1997 PRINTED IN JAPAN (IMPRIME AU JAPON)

9) Detach the fluorescent lamp heater ⑧ from the fluorescent lamp.

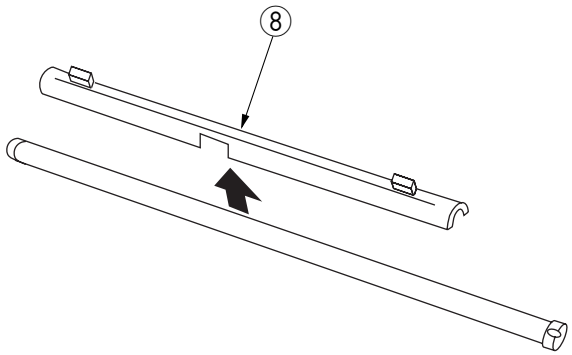

Figure 4-304

2. Points to Note When Attaching the Fluorescent Lamp Heater/Scanning Lamp

• Attach the heater to the lamp as follows:

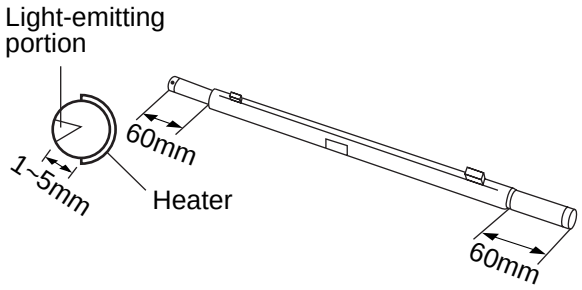

Figure 4-305

Caution:

Do not touch the fluorescent lamp. (Use lint-free paper.)
Do not block the light-emitting portion by the fluorescent lamp heater.

COPYRIGHT © 1997 CANON INC.
CANON NP6218 REV. 0 MAY 1997 PRINTED IN JAPAN (IMPRIME AU JAPON)

Attach the scanning lamp so that its light-emitting portion (open side) is to the left when viewed from the front of the copier as shown in Figure 4-306.

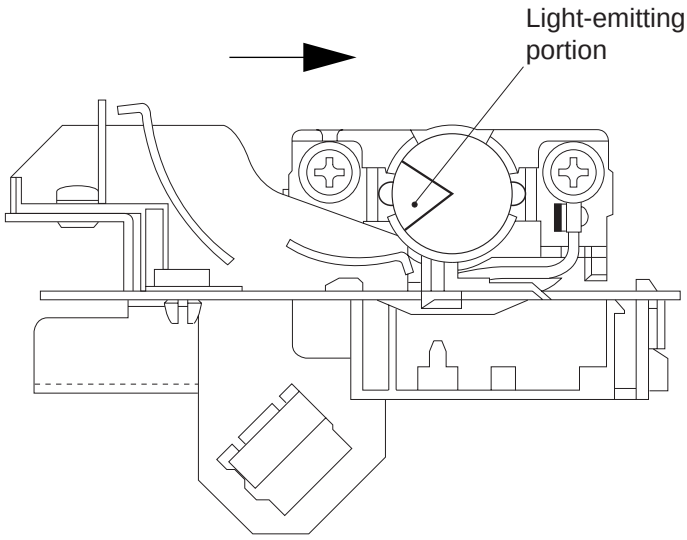

Figure 4-306 (front view)

Caution:

Do not touch the fluorescent lamp. (Use rint-free paper)

Be sure to adjust the gain and AE whenever you have replaced the fluorescent lamp. (See p. 10-10.)

- Make sure that the cut-off of the fluorescent heater is correctly oriented in relation to the intensity adjustment sensor.

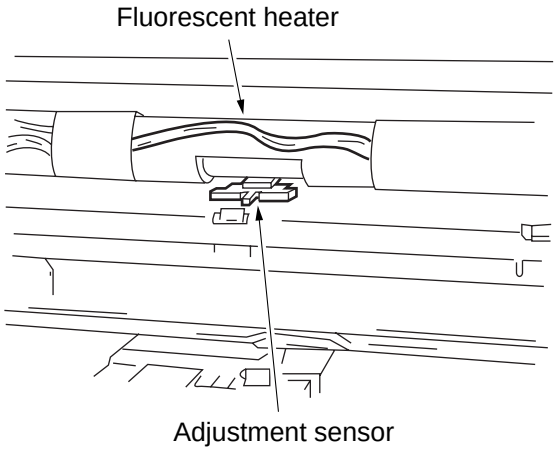

Figure 4-307

COPYRIGHT © 1997 CANON INC. CANON NP6218 REV. 0 MAY 1997 PRINTED IN JAPAN (IMPRIME AU JAPON)

Reference:

The fluorescent lamp heater will not operate unless the copier's heater switch is turned on.

3. Detaching the Blank Exposure Assembly

1) Open the front cover.
2) Pull the copier's open/close lever to open the copier.
3) Detach the inside cover.
4) Detach the exhaust fan and Drum cartridge. (See "Detaching the Exhaust Fan".)
5) Disconnect the connector ① (J315) on the DC controller PCB, and remove the two screws ②.

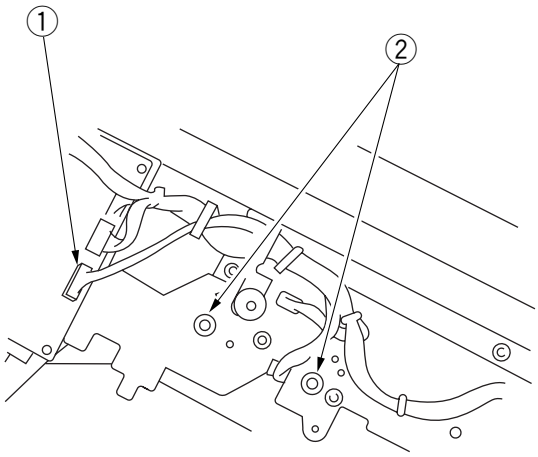

Figure 4-308

6) Push up the blank exposure assembly ③ lightly upward, and pull it out toward the bottom front.

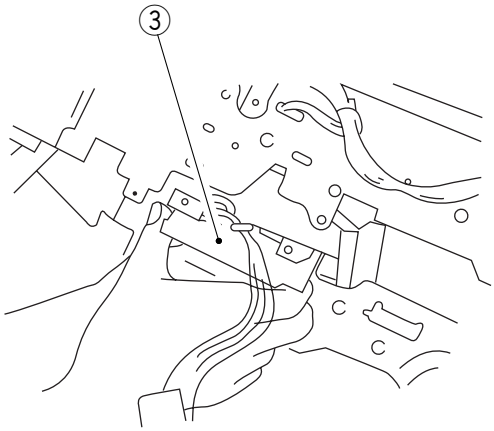

Figure 4-309

COPYRIGHT © 1997 CANON INC.
CANON NP6218 REV. 0 MAY 1997 PRINTED IN JAPAN (IMPRIME AU JAPON)

4. Detaching the Blank Exposure Lamp

1) Detach the blank exposure assembly. (See “3. Detaching the Blank Exposure Assembly on p. 4-34.”)
2) Remove the four screws ①, and disconnect the connector ②.

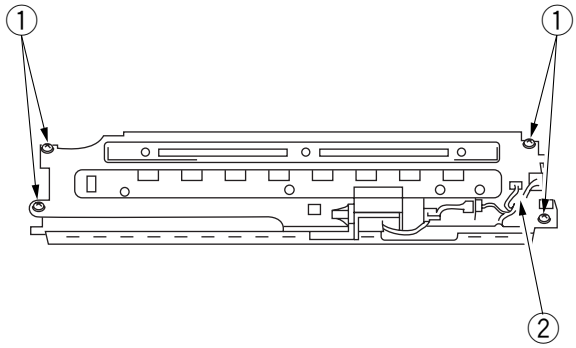

Figure 4-310

3) Disconnect the connector ③.

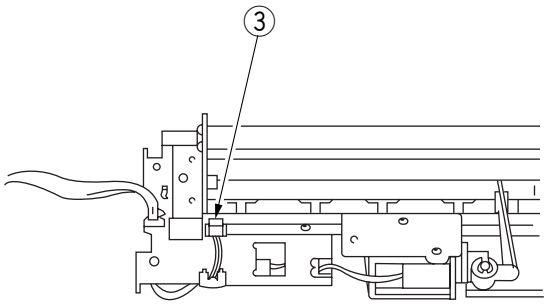

Figure 4-311

COPYRIGHT © 1997 CANON INC.

4) Remove the three screws ④, and detach the blank exposure lamp ⑤.

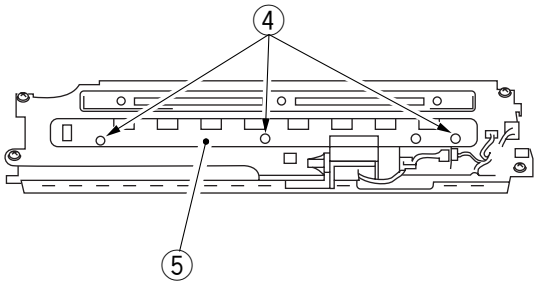

Figure 4-312

5. Detaching the Blank Shutter Solenoid

1) Detach the blank exposure assembly.
2) Detach the blank shutter upper plate, and disconnect the connector ①. (See "3. Detaching the Blank Exposure Assembly on p. 4-34.")
3) Remove the E-ring ②, and detach the link arm ③ from the blank shutter.
4) Remove the two screws ④, and pull out the blank shutter solenoid.

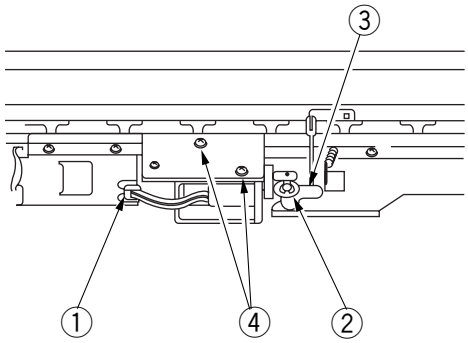

Figure 4-313

COPYRIGHT © 1997 CANON INC.
CANON NP6218 REV. 0 MAY 1997 PRINTED IN JAPAN (IMPRIME AU JAPON)

6. Positioning the Blank Shutter Solenoid

Adjust the position of the solenoid so that the bottom A is 7.7 ±0.5 mm on both sides of the shutter when the solenoid is moved in the direction of activation. When taking measurements, do not push down the shutter.

After adjustments, make sure that the solenoid moves smoothly.

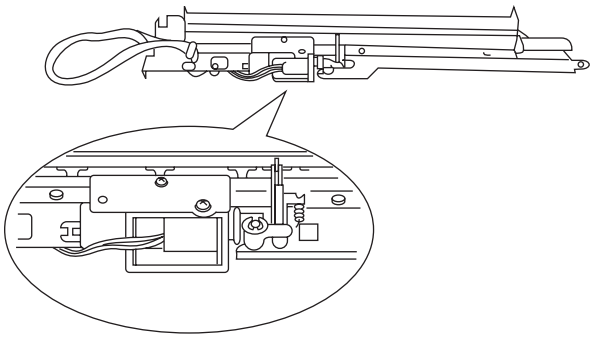

Figure 4-314ⓐ

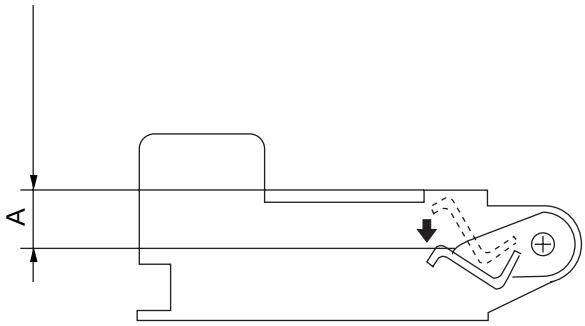

Figure 4-314ⓑ

COPYRIGHT © 1997 CANON INC.

7. Routing the Blanking Cable

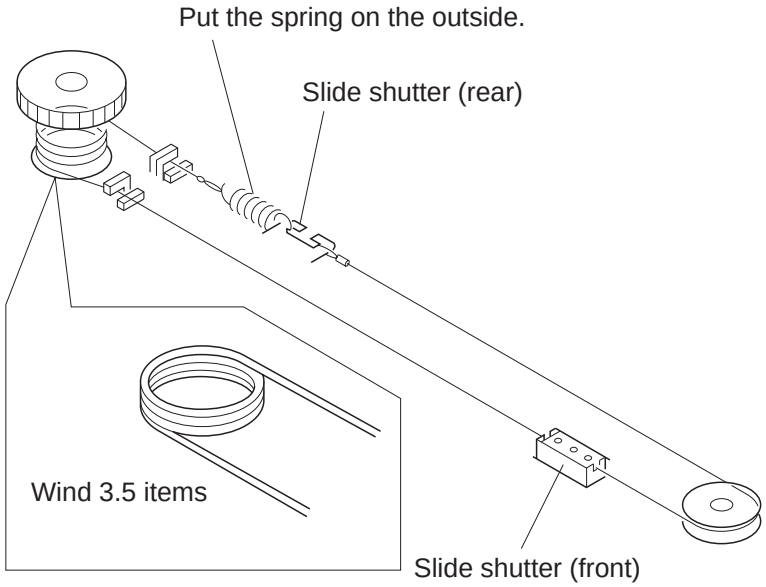

Figure 4-315

8. Positioning the Left/Right Margin

Turn the blanking shutter adjusting screw on the copier's front side plate shown in Figure 4-316 so that the standards are met.

① clockwise turn moves the margin to the front.
② counterclockwise turn moves the margin to the rear.
③ a full turn moves about 1 mm.

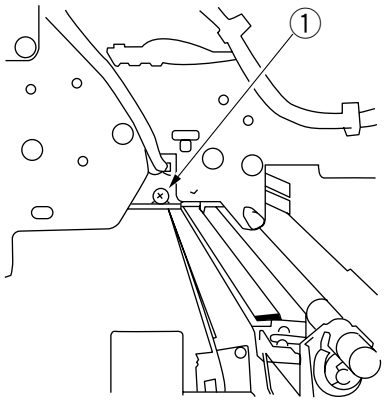

Figure 4-316

COPYRIGHT © 1997 CANON INC.
CANON NP6218 REV. 0 MAY 1997 PRINTED IN JAPAN (IMPRIME AU JAPON)

B. Drum Unit

1. Detaching the Drum Unit

1) Open the front door.
2) Pull out the developing assembly releasing lever ① toward the front, and turn it clockwise.

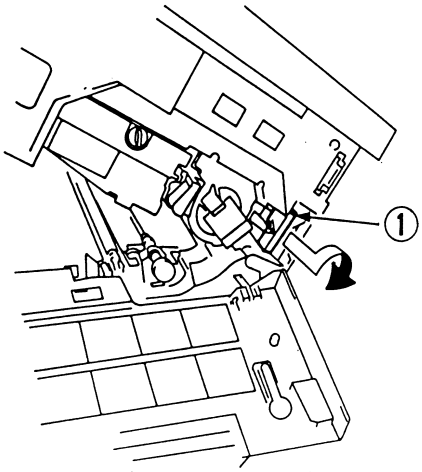

Figure 4-317

3) Open the copier's top unit.
4) Turn the knob ② counterclockwise to detach.
5) Pull out the drum unit ③ toward the front.

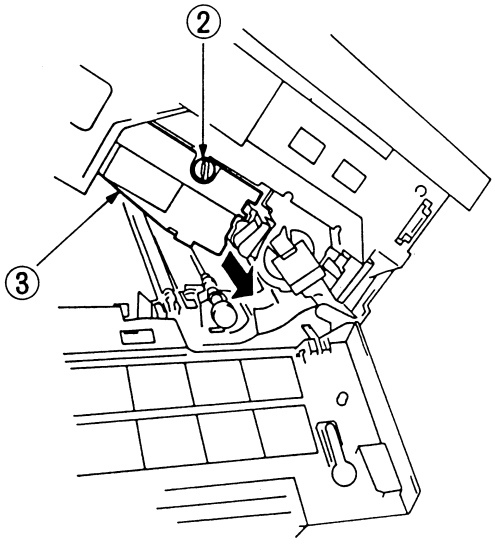

Figure 4-318

COPYRIGHT © 1997 CANON INC. CANON NP6218 REV. 0 MAY 1997 PRINTED IN JAPAN (IMPRIME AU JAPON)

Caution:

Take care not to damage the photosensitive drum.

The photosensitive drum is highly susceptible to light, and exposure even to room lighting can lead to white spots or black bands on the copies.

As a rule, do not turn on the copier with the drum unit removed; otherwise, the registration roller and the transfer guide will interfere with each other, and rotation of the registration roller during WMUP will damage the roller.

2. Cleaning

If the surface of the photosensitive drum has become soiled, clean it with a flannel cloth coated with toner; do not use paper, lint-free or otherwise.

Caution:

Do not dry-wipe or use solvent.

Do not use drum cleaning powder.

COPYRIGHT © 1997 CANON INC.
CANON NP6218 REV. 0 MAY 1997 PRINTED IN JAPAN (IMPRIME AU JAPON)

C. Primary Corona Assembly

1. Detaching the Primary Corona Assembly

1) Detach the drum unit.
2) Slide the lock ① of the top of the drum unit in the direction of the arrow.

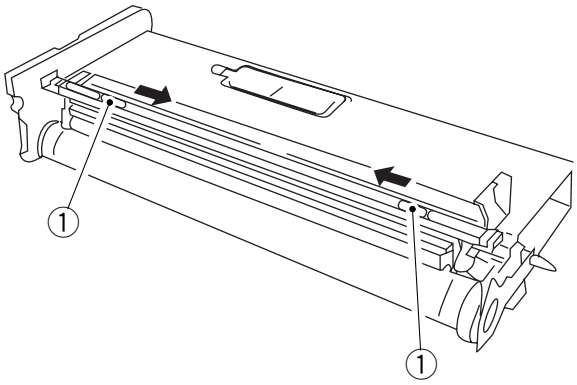

Figure 4-319

3) Detach the primary corona assembly unit ② together with the holder while rotating it in the direction of the arrow.

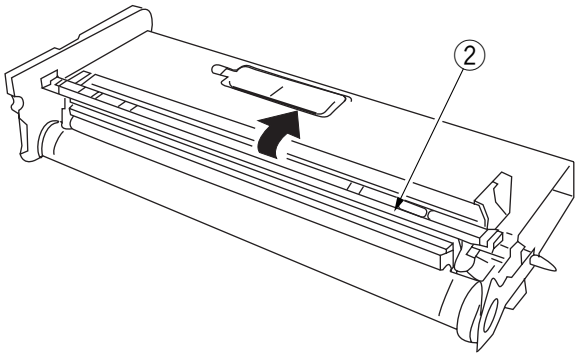

Figure 4-320

COPYRIGHT © 1997 CANON INC.

2. Cleaning the Cleaning Pad and the Primary Corona Roller

1) Detach the primary corona unit.
2) Place the primary corona assembly as shown in the figure, and clean the cleaning pad ③ with a cotton wad ④ or folded lint-free paper.

Caution:
- Dry-wipe only. Do not use water, alcohol, or solvent.
- Be sure to use strokes in one direction only.

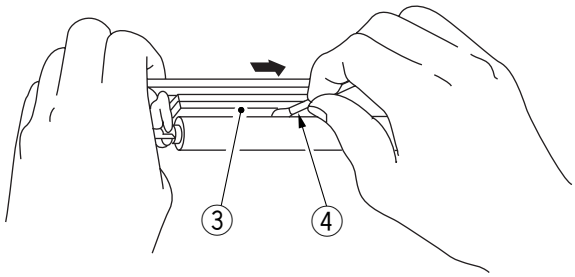

Figure 4-321

3) Clean the primary charging roller ⑤ with lint-free paper ⑥ while rotating it.

Caution:
- Dry-wipe only. Do not use water, alcohol, or solvent.
- Be sure to use strokes in one direction only.

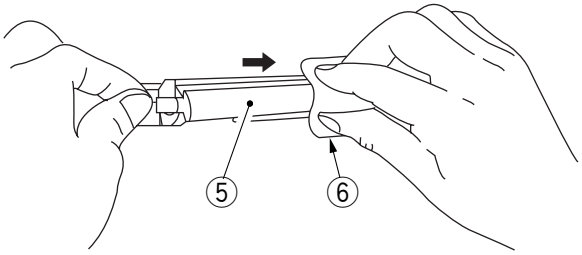

Figure 4-322

COPYRIGHT © 1997 CANON INC.
CANON NP6218 REV. 0 MAY 1997 PRINTED IN JAPAN (IMPRIME AU JAPON)

3. Positioning the Solenoid for the Primary Charging Roller

Make adjustments by loosening the two screws used to fix the solenoid ③ in place and moving the solenoid ③ into the direction of arrow B so that ℓ in Figure 4-323 is 4.0 ±0.2 mm when the joint ① is butted against point ⓐ of the solenoid support ②.

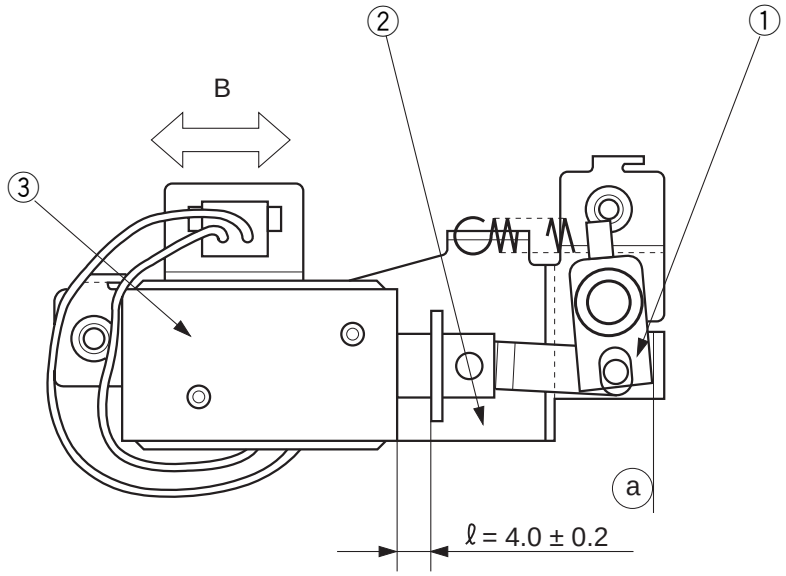

Figure 4-323

Caution:
You must make the adjustment whenever you have replaced the solenoid.

COPYRIGHT © 1997 CANON INC.

D. Transfer Charging Assembly

1. Detaching the Transfer Roller

1) Open the front door.
2) Open the copier's top body.
3) Detach the static eliminator.
4) Detach the bushing ①, and lift the transfer roller ② to detach.

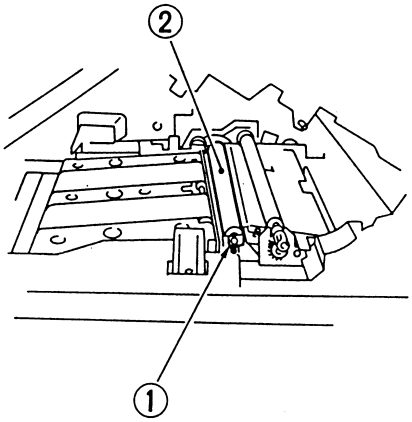

Figure 4-324

Caution:
Do not touch the surface of the roller.
Do not soil the surface of the roller.

2. Attaching the Drum Heater

1) Detach the front cover.
2) Open the copier's top body by operating the copier open/close lever.
3) Detach the inside cover.
4) Remove the three fixing screws ②, and detach the harness cover ①.

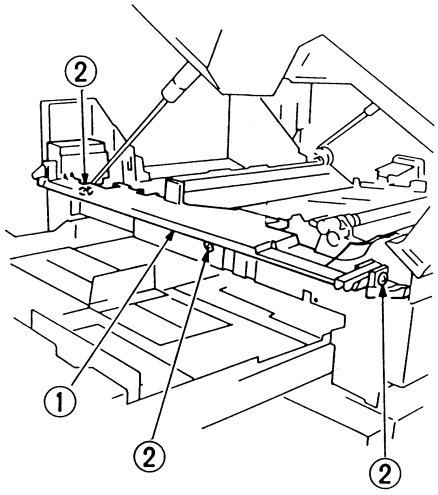

Figure 4-325

COPYRIGHT © 1997 CANON INC.
CANON NP6218 REV. 0 MAY 1997 PRINTED IN JAPAN (IMPRIME AU JAPON)

5) Detach the transfer roller and the static eliminator.
6) Detach the transfer guide.
7) While butting the two heaters against the transfer guide as shown in Figure 4-326, fix them in place using two screws ③; then, fix the harness using two harness bands ④ (front, rear).
8) Fix the harness with two SK binders ⑤ (front, rear) in place, and insert it into the transfer guide.

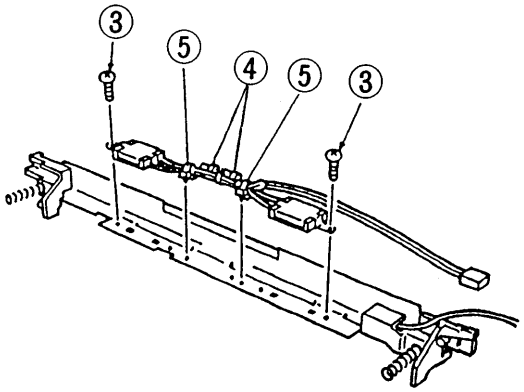

Figure 4-326

Caution:
When fixing the harness in place, make sure that the cap portions of the terminal are alternated as shown in Figure 4-327; if bundled in parallel, the harness will come into contact with the transfer roller.

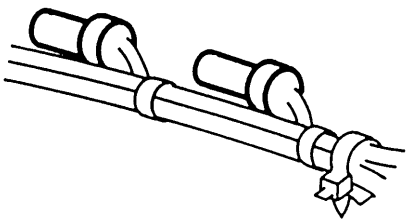

Figure 4-327

COPYRIGHT © 1997 CANON INC.

9) Connect the connector ⑥ as shown in Figure 4-328.

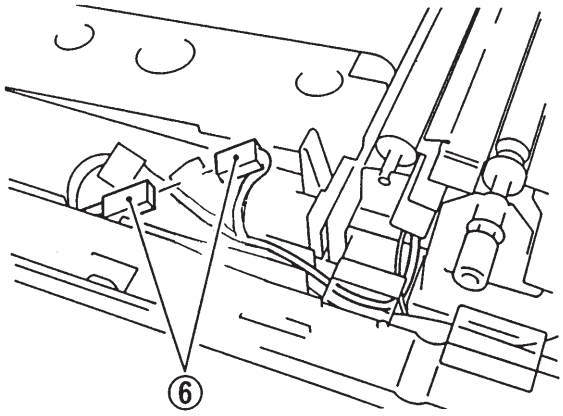

Figure 4-328

Caution:
Make sure that the spring at the rear is securely in the groove when attaching the transfer guide to the copier after attaching the drum heater.

COPYRIGHT © 1997 CANON INC.
CANON NP6218 REV. 0 MAY 1997 PRINTED IN JAPAN (IMPRIME AU JAPON)

E. Developing System

1. Removing the Developing Assembly

1) Open the copier's front door.
2) Operate the open/close lever to open the top body.
3) Turn the locking lever ① clockwise to unlock the developing assembly.
4) Remove the screw ②.
5) Pull the developing assembly ③ slowly to the front.

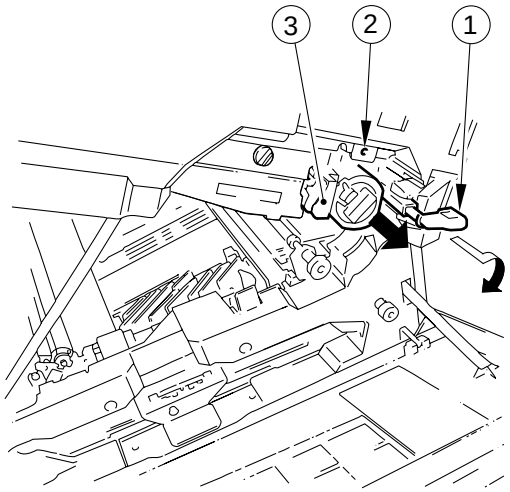

Figure 4-329

2. Removing the Blade Assembly

1) Remove the developing assembly from the copier.
2) Remove the four screws ①, and remove the developing cover ②.

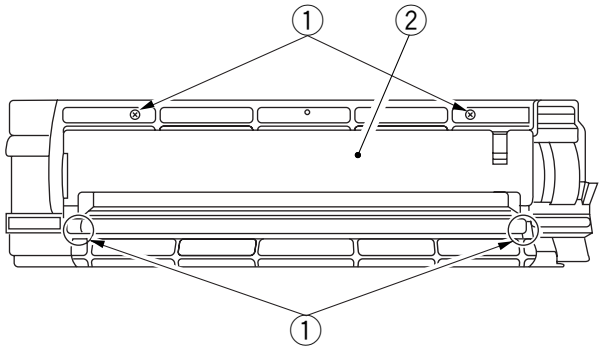

Figure 4-330

COPYRIGHT © 1997 CANON INC. CANON NP6218 REV. 0 MAY 1997 PRINTED IN JAPAN (IMPRIME AU JAPON)

3) Place a newspaper or the like on the floor or a desk top, and pour out the toner from the developing assembly.
4) Remove the two screws ③, and remove the blade assembly* ④.

* consisting of the blade and its mount.

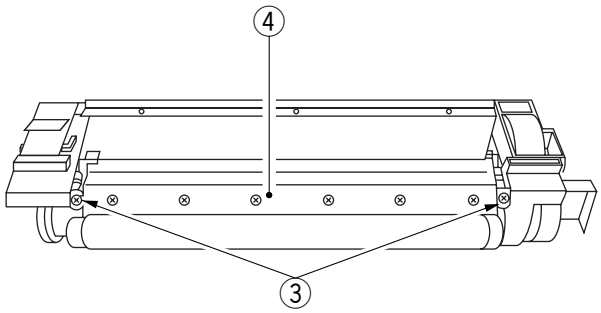

Figure 4-331

3. Removing the Developing Cylinder Side Seal

1) Remove the developing assembly from the copier.
2) Remove the blade assembly.

Caution:
The blade must be installed at high precision. Do not remove it in the field. If necessary, remove it intact on its mounting plate.

3) Remove the screw ①, and remove the front cover ②.

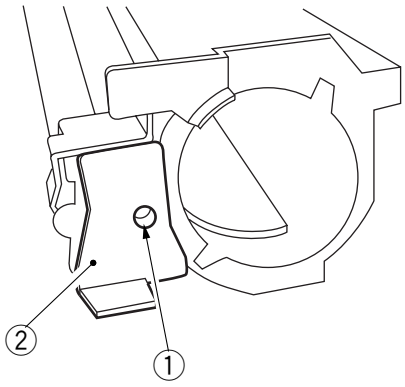

Figure 4-332

COPYRIGHT © 1997 CANON INC.
CANON NP6218 REV. 0 MAY 1997 PRINTED IN JAPAN (IMPRIME AU JAPON)

4) Remove the three screws ③, and remove the terminal ④, roll case ⑤, and roll ⑥.

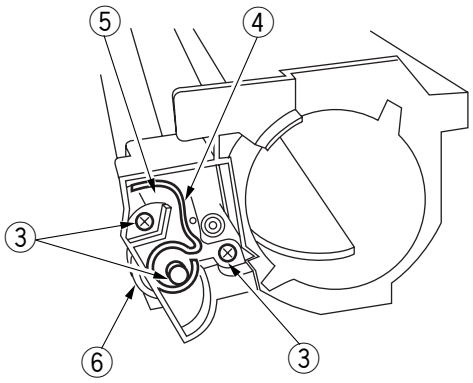

Figure 4-333

5) Remove the three E-rings ⑦, and gear ⑧, gear ⑨, and gear ⑩.

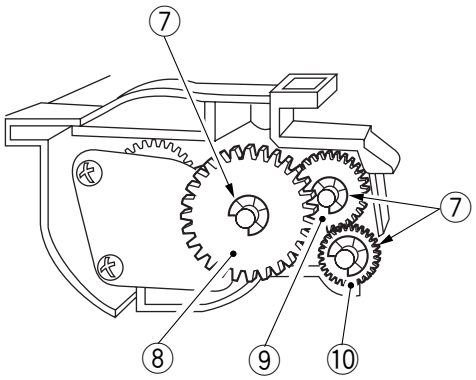

Figure 4-334

COPYRIGHT © 1997 CANON INC.

6) Remove the screw ⑪, and remove the butting roll ⑫ and roll case ⑬.

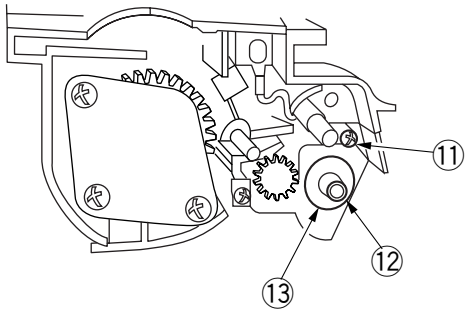

Figure 4-335

7) Remove the developing cylinder ⑭.

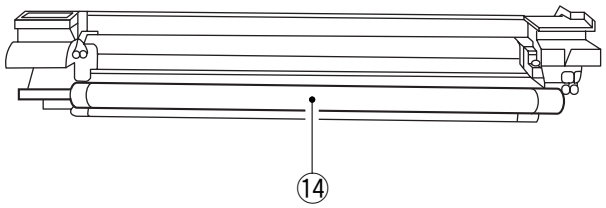

Figure 4-336

COPYRIGHT © 1997 CANON INC.
CANON NP6218 REV. 0 MAY 1997 PRINTED IN JAPAN (IMPRIME AU JAPON)

8) Remove the side seal ⑮. (both sides)

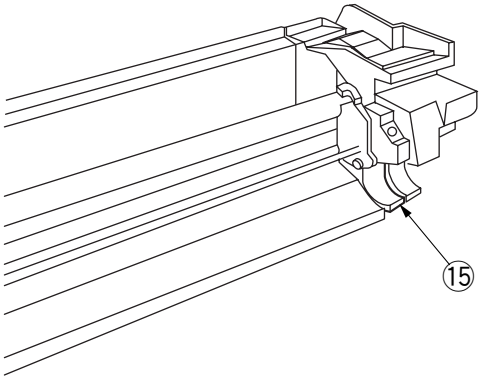

Figure 4-337

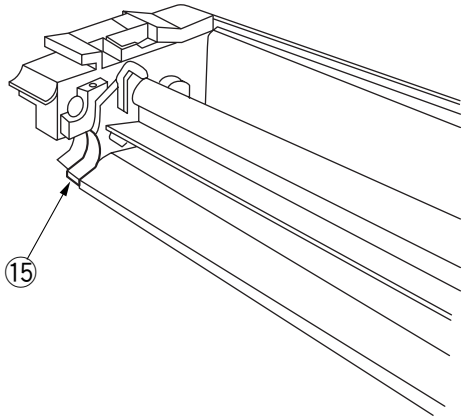

Figure 4-338

4. Installing the Side Seal and the Blade Assembly

1) Clean the area where the side seal will be installed with alcohol.
2) Attach the side seal as indicated in Figure 4-339.

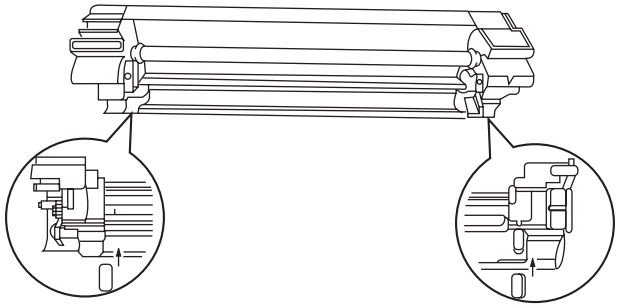

Figure 4-339

COPYRIGHT © 1997 CANON INC.

3) Check that the side seal and the container are in firm contact.
4) Push the developing blade unit attachment section all the way against the upper side and secure it with the screw.

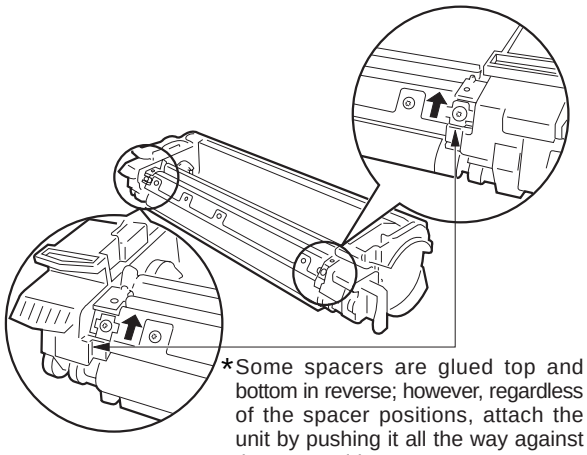

*Some spacers are glued top and bottom in reverse; however, regardless of the spacer positions, attach the unit by pushing it all the way against the Upper side.

Figure 4-340

COPYRIGHT © 1997 CANON INC.
CANON NP6218 REV. 0 MAY 1997 PRINTED IN JAPAN (IMPRIME AU JAPON)

CHAPTER 5

PICK-UP/FEEDING SYSTEM

This chapter explains the principles used from when copy paper is picked up to when a copy is delivered in view of the functions of electrical and mechanical units and in relation to their timing of operation. It also shows how these units may be disassembled/assembled and adjusted.

I. PICK-UP/FEEDING SYSTEM 5-1
A. Outline 5-1
II. PICK-UP OPERATION (COPIER).....5-3
A. Outline 5-3
B. Sequence of Operations (pick-up/ feeding assembly; A4, 2 copies) ...5-4
III. PICK-UP FROM THE CASSETTE FEEDING MODULE-A2.....5-5
A. Pick-Up Operation 5-5
B. Sequence of Operations (cassette 2; A4, 2 copies).....5-6
IV. MULTIFEEDER.....5-7
A. Outline 5-7
B. Identifying the Size of Paper on the Multifeeder.....5-8
C. Sequence of Operations (multifeeder; A4, 2 copies) 5-9
V. IDENTIFYING THE CASSETTE SIZE.....5-10
VI. IDENTIFYING JAMS 5-12
A. Pre-Registration Delay Jam.....5-12
B. Pre-Registration Timing Jam.....5-13
C. Pre-Registration Stationary Jam ...5-13
D. Separation Delay Jam 5-14
E. Separation Stationary Jam.....5-14
F. Delivery Delay Jam.....5-15
G. Delivery Stationary Jam 5-15
VII. DISASSEMBLY AND ASSEMBLY 5-16
A. Pick-Up Assembly 5-16
B. Multifeeder Assembly 5-23
C. Registration Roller Assembly 5-31
D. Feeding Assembly.....5-34
E. Cassette Unit.....5-36

COPYRIGHT © 1997 CANON INC. CANON NP6218 REV. 0 MAY 1997 PRINTED IN JAPAN (IMPRIME AU JAPON)

I. PICK-UP/FEEDING SYSTEM

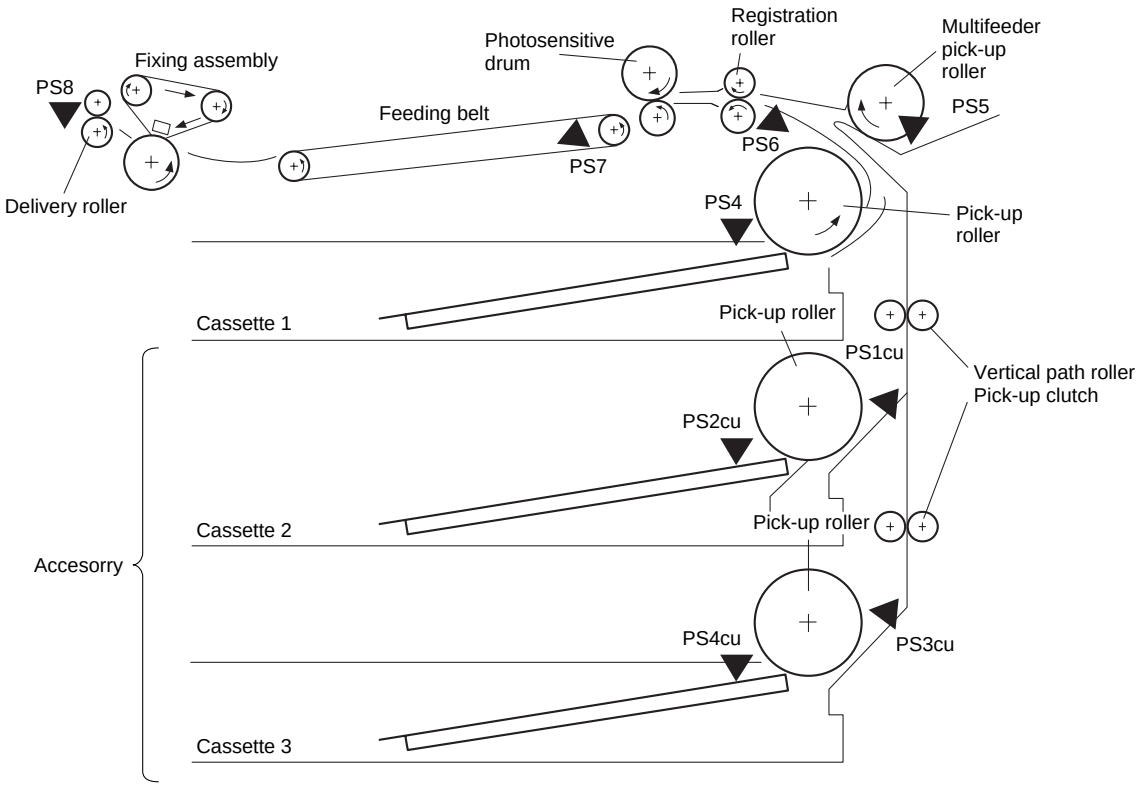

Figure 5-101

A. Outline

The NP6218 uses center reference, in which copy paper is moved through the center of the pick-up/feeding path for stable pick-up/feeding operation.

Pick-up operation may be the cassette 1 pick-up from the copier, cassette 2/3 pick-up from the Cassette feeding Module-B2/A2 and multifeeder pick-up.

When making copies, copy paper picked up from the cassette 1/2/3 or multifeeder is controlled by the registration roller so that the leading edge of the image on photosensitive drum matches with the leading edge of the copy paper; the paper is then sent to the copy tray through the transfer, separation, feeding, fixing, and delivery assemblies.

COPYRIGHT © 1997 CANON INC.

Sensor No.	Name
PS4	Multifeeder paper sensor
PS5	Cassette paper sensor
PS6	Registration sensor
PS7	Separation sensor
PS8	Delivery sensor
PS1CU	Cassette 2 vertical path sensor (Accessory)
PS2CU	Cassette 2 paper sensor (Accessory)
PS3CU	Cassette 3 vertical path sensor (Accessory)
PS4CU	Cassette 3 paper sensor (Accessory)

Table 5-101

COPYRIGHT © 1997 CANON INC.
CANON NP6218 REV. 0 MAY 1997 PRINTED IN JAPAN (IMPRIME AU JAPON)

II. PICK-UP OPERATION (COPIER)

A. Outline

When the pick-up clutch (CL2 or CL3) turns on while the main motor (M1) is rotating, the pick-up roller rotates to move paper as far as the registration roller.

The copy paper is controlled so that its leading edge and the leading edge of the image on the photosensitive drum match; then, it is moved through the transfer assembly, feeding assembly, fixing assembly, and delivery assembly to reach the copy tray.

As many as three photointerrupters (PS6, PS7, PS8) are provided along the paper path, turning on the Jam indicator on the control panel when jams are identified in terms of whether paper has reached or has moved past the respective sensors within a specific period of time.

The presence/absence of paper inside the cassette or the multifeeder is monitored by separate photointerpreters (PS4, PS5); when the absence of paper is identified, the Paper indicator is flashed on the control panel.

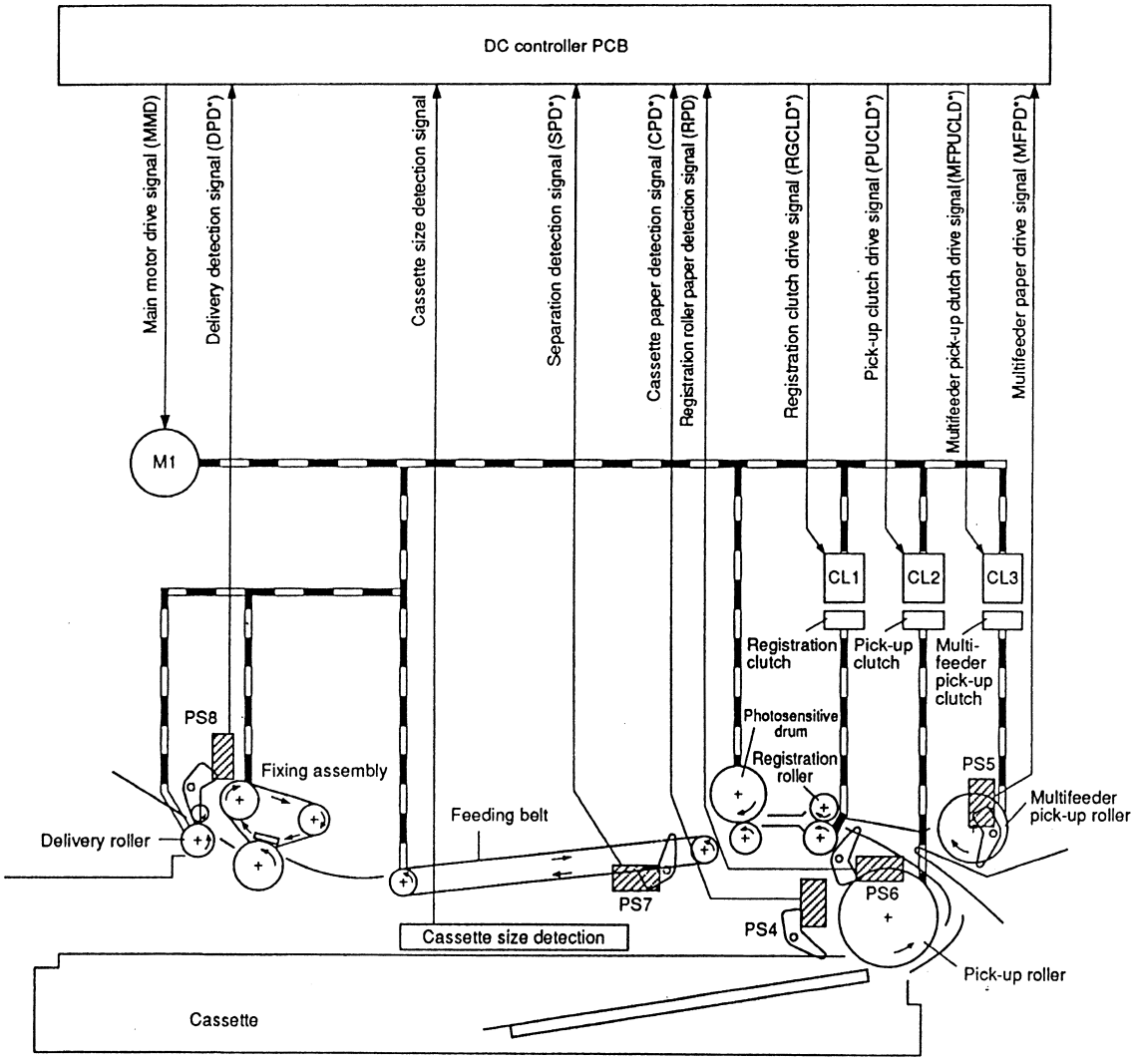

Figure 5-201

COPYRIGHT © 1997 CANON INC.

B. Sequence of Operations (pick-up/feeding assembly; A4, 2 copies)

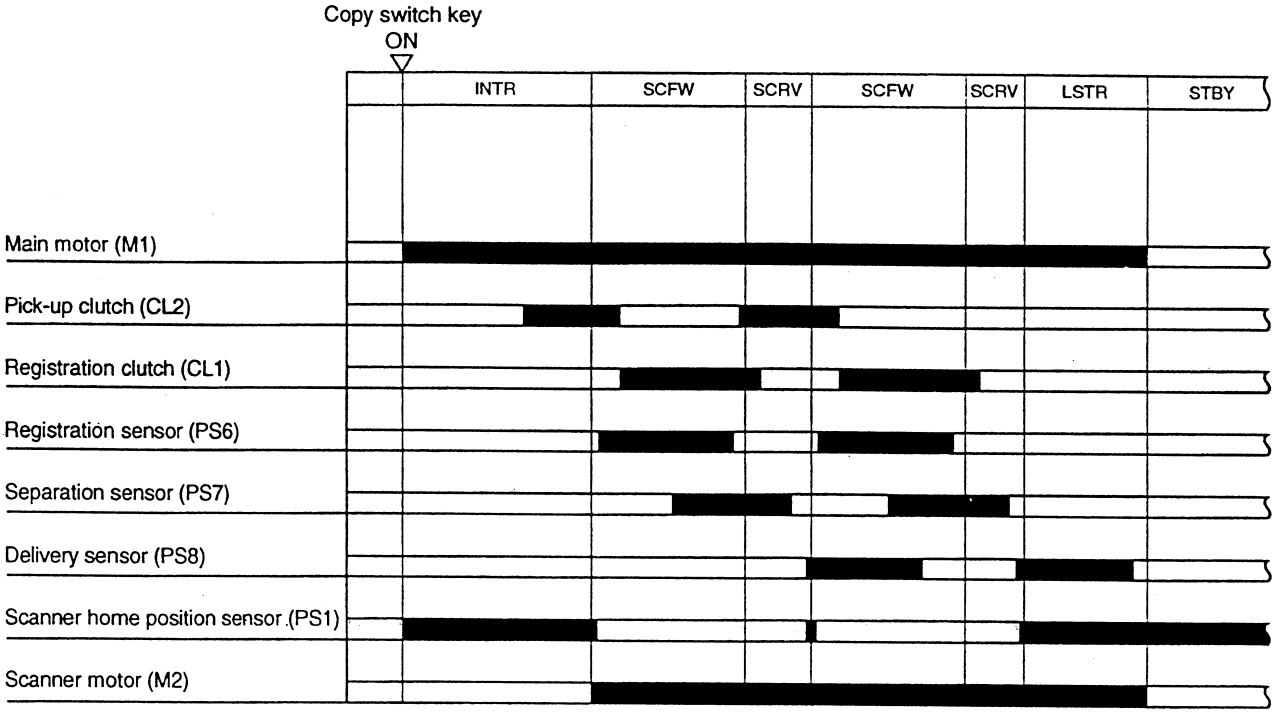

Figure 5-202

COPYRIGHT © 1997 CANON INC.
CANON NP6218 REV. 0 MAY 1997 PRINTED IN JAPAN (IMPRIME AU JAPON)

III. PICK-UP FROM THE CASSETTE FEEDING MODULE-A2

A. Pick-Up Operation

When the pick-up clutch (CL1cu, CL2cu) turns on while the cassette unit motor (M1cu), the pick-up roller starts to rotate to pick up copy paper; the paper is then moved to the registration roller by the vertical path roller. (The sequence that follows is the same as when paper is picked up from the cassette in the copier.)

For pick-up operation from the cassette feeding unit, pick-up sensors (PS1cu, PS3cu) are used to check the arrival of paper, thereby deciding when to turn off the pick-up roller according to the size of paper.

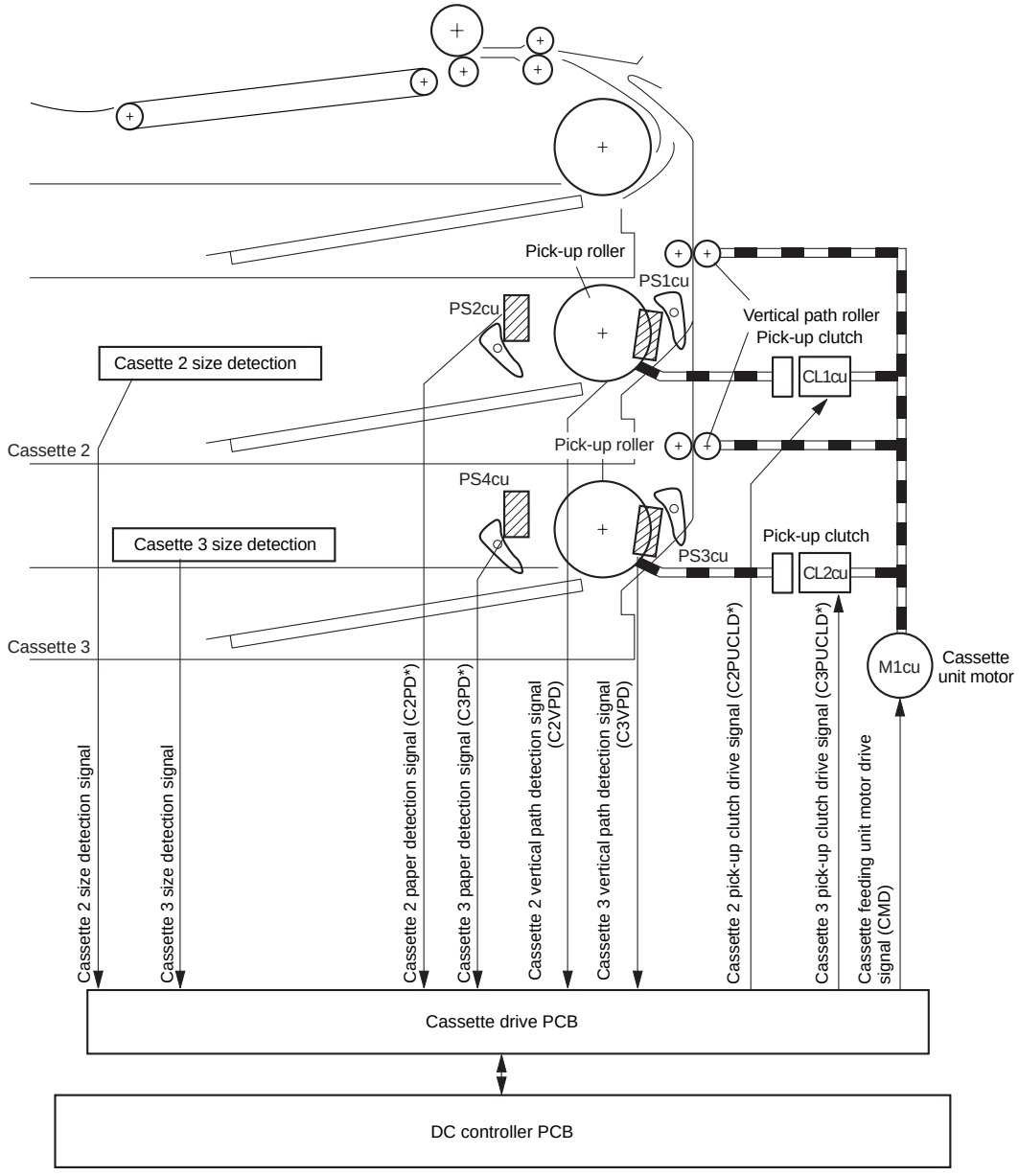

Figure 5-301

COPYRIGHT © 1997 CANON INC.

B. Sequence of Operations (cassette 2; A4, 2 copies)

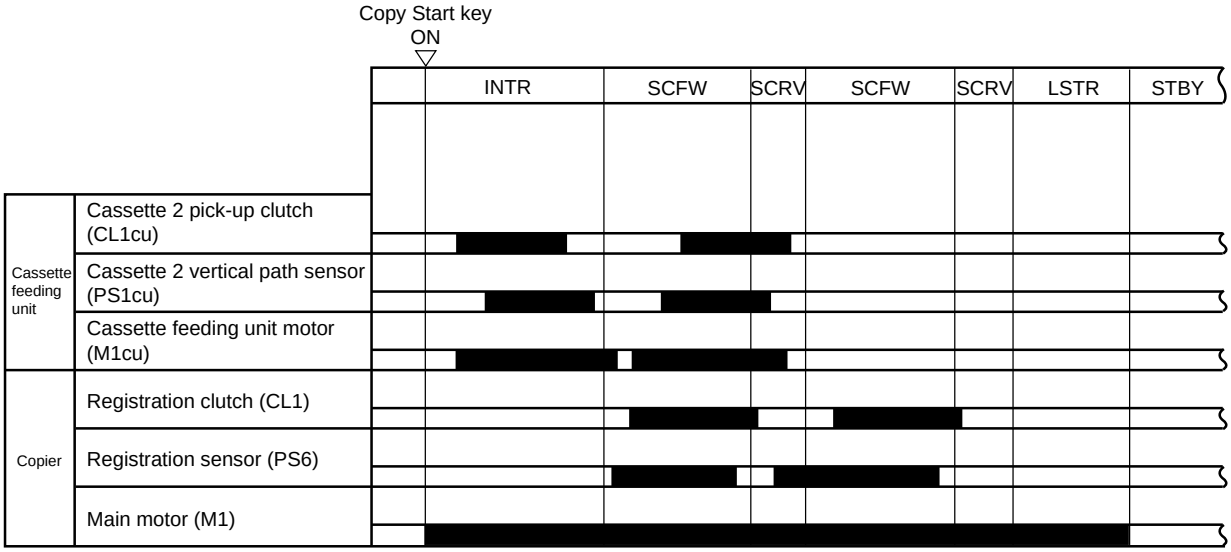

Figure 5-302

COPYRIGHT © 1997 CANON INC.
CANON NP6218 REV. 0 MAY 1997 PRINTED IN JAPAN (IMPRIME AU JAPON)

IV. MULTIFEEDER

A. Outline

The multifeeder is designed to pick up paper loaded on its tray and is capable of continuous pick-up operation.

Paper on the tray is detected by the multifeeder sensor (PS5).

Paper loaded on the tray is butted against the pick-up roller by the paper guide plate; the drive from the main motor (M1) is transmitted to the pick-up roller through a clutch to rotate the pick-up roller.

By the work of the pick-up roller and the separation pad, a single sheet of copy paper is forwarded to the registration roller.

The series of operations is executed for each pick-up operation.

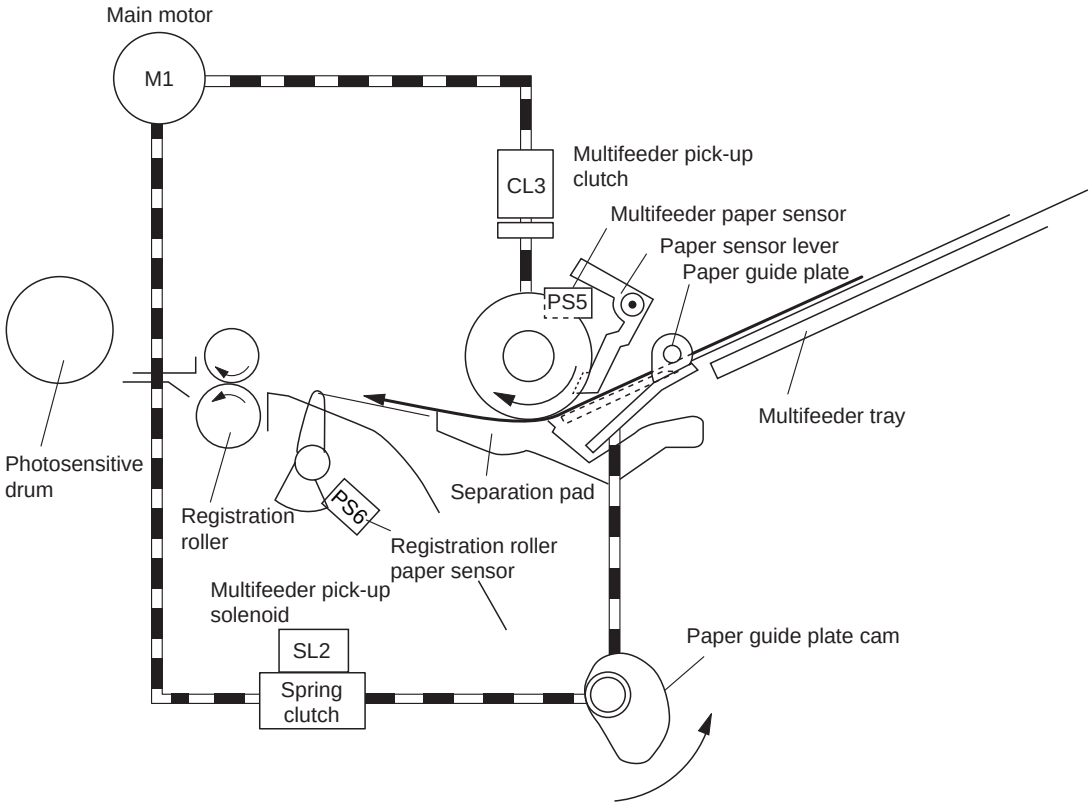

Figure 5-401

COPYRIGHT © 1997 CANON INC.

B. Identifying the Size of Paper on the Multifeeder

The width of copy paper is identified by a variable resistor (VR1) which operates in response to the location of the slide guide, which is adjusted by the user to suit the size of paper.

The identified width of copy paper is used for blank exposure control.

The length of paper when the multifeeder is used is identified by the period of time during which the registration sensor (PS6) remains on.

The data collected in such a way is used to control the length of blank exposure, activation of the registration roller, and high voltage.

Reference:

The maximum length of paper is 432 mm (LDG size); paper longer than this will lead to a jam.

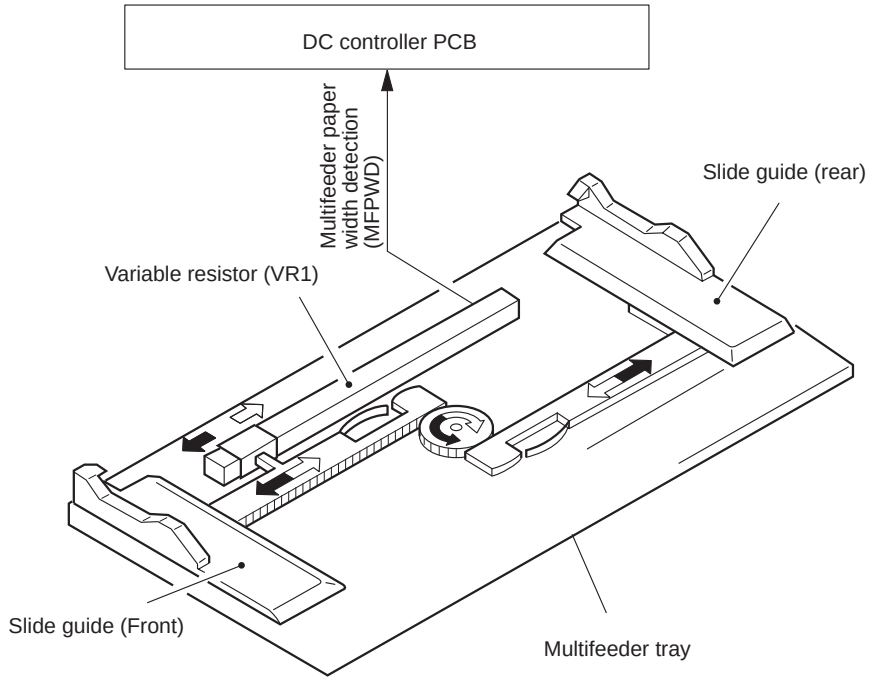

Figure 5-402

COPYRIGHT © 1997 CANON INC.
CANON NP6218 REV. 0 MAY 1997 PRINTED IN JAPAN (IMPRIME AU JAPON)

C. Sequence of Operations (multifeeder; A4, 2 copies)

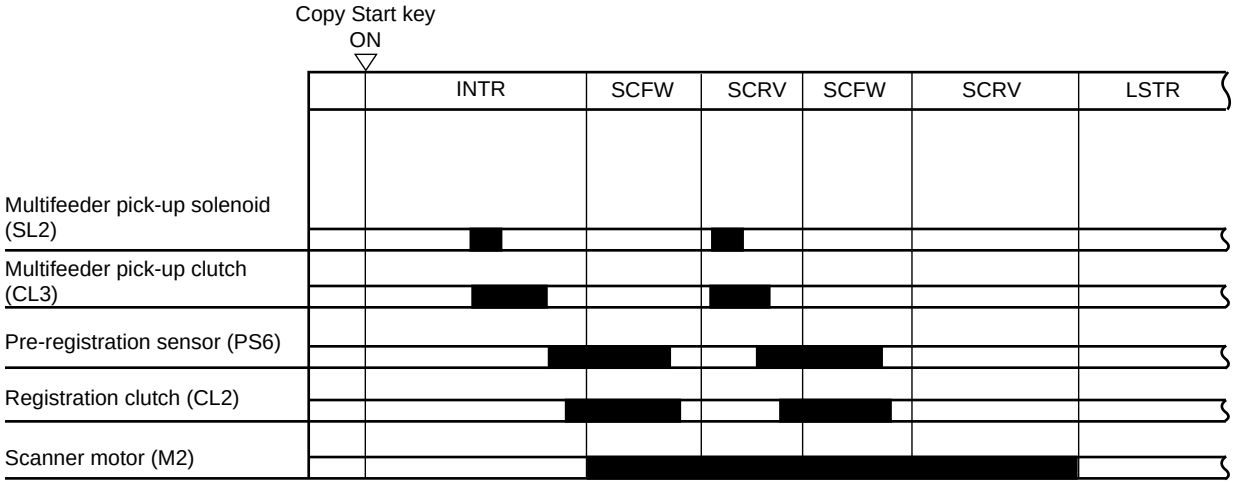

Figure 5-403

V. IDENTIFYING THE CASSETTE SIZE

When a cassette is set in the cassette holder, appropriate photointerrupters (Q651, Q652, Q653, Q654) turn on or off.

The microprocessor on the DC controller PCB identifies the presence/absence of a cassette based on the combinations of the photointerrupters which are either on or off (Table 5-501); accordingly, the microprocessor controls where the scanner must be reversed or when to execute blank exposure.

Arrangement / Cassette size	 (Left)			 (right)
No cassette	0	0	0	0
B5R (182 × 257)	0	0	0	1
A4 (297 × 220)	0	0	1	0
A3 (297 × 420)	0	0	1	1
Mini (STMTR) 5.5" × 8.5" (148 × 216)	0	1	0	0
Legal 8.5" × 14" (356 × 216)	0	1	0	1
Letter 11" × 8.5" (279 × 216)	0	1	1	0
A4R (210 × 297)	0	1	1	1
Letter R 8.5" × 11" (216 × 279)	1	0	0	0
A5R (149 × 218)	1	0	0	1
A5 (218 × 149)	1	0	1	0
Mini-R (STMT) 8.5" × 5.5" (216 × 148)	1	0	1	1
B5 (257 × 182)	1	1	0	0
B4 (364 × 257)	1	1	0	1
Ledger 11" × 17" (182 × 257)	1	1	1	0
*U (182 ~ 283 × 198 ~ 354)	1	1	1	1

(unit: mm)

1: photointerrupter is blocking light.
0: photointerrupter is not blocking light.
*size may be stored; must be within the range specified in mm; for details, see p. 10-43.

Table 5-501

COPYRIGHT © 1997 CANON INC.
CANON NP6218 REV. 0 MAY 1997 PRINTED IN JAPAN (IMPRIME AU JAPON)

To change the cassette size, you must not only move the guide plate (horizontal, vertical) inside the cassette to suit the copy paper but also move the paper size lever located toward the front of the cassette (Figure 5-501) to the left or right so that the arrow points to the appropriate paper size.

Caution:

A discrepancy between the size set by the paper size lever and the size of copy paper will result in jams or soiling because of the wrong copying sequence.
Advise the user to be sure to match the size set by the paper size lever and the size of copy paper.

Reference:

Paper size configurations differ from area to area; however, you may still make sure of a specific copy control sequence for the size of paper that does not fall under the respective category—the size, nevertheless, will not be indicated on the display.
For instance, you may use LTR paper for a metric model. (The paper size lever, in this case, will be set to LTR.) This arrangement causes the copier to execute the copying sequence intended for LTR copies.

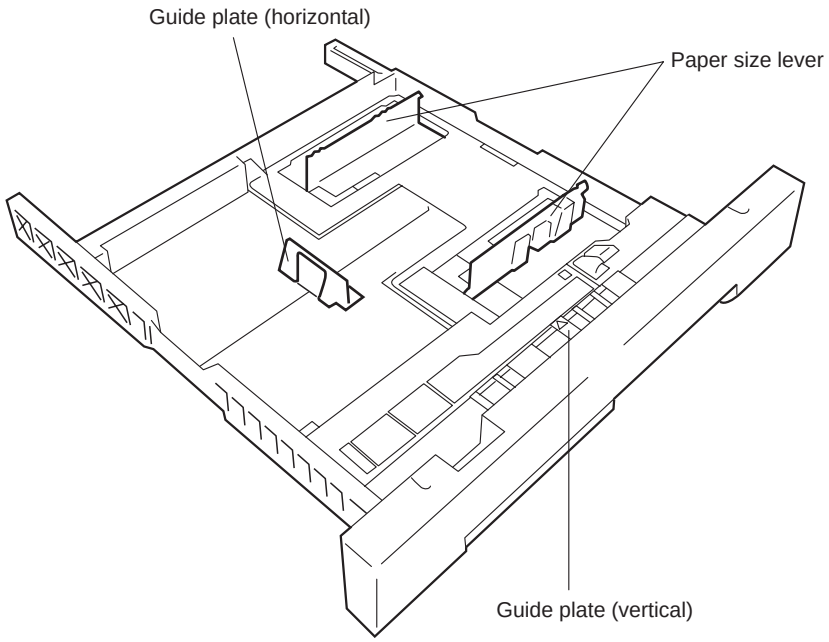

Figure 5-501

COPYRIGHT © 1997 CANON INC.

VI. IDENTIFYING JAMS

As many as six (3 in the cassette feeding unit) are used to monitor the movement of copy paper:

- registration sensor (PS6)
- separation sensor (PS7)
- delivery sensor (PS8)

A jam is identified in terms of the presence/absence of paper at the respective sensors at such times as stored in the microprocessor.

The copier has a mechanism to remember how many copies remain to be made after a jam and the current copy mode; it still retains such information even when it is deprived of power by opening of the front cover.

The microprocessor has the jam detection sequence that is described below and, further, identifies the presence of paper as detected by a sensor at power-on.

When the copier identifies a jam, it immediately stops the ongoing copying operation and cuts off the power to the fixing heater (H1); at the same time, it flashes the Jam indicator on the control panel and flashes also any of the location indicator.

The activation of the jam detection mechanism will not increment the copy count for the copy which has jammed.

A. Pre-Registration Delay Jam

Copy paper does not reach the registration sensor (PS6) within a specific period of time after the pick-up clutch (CL2) has gone on because of feeding problems.

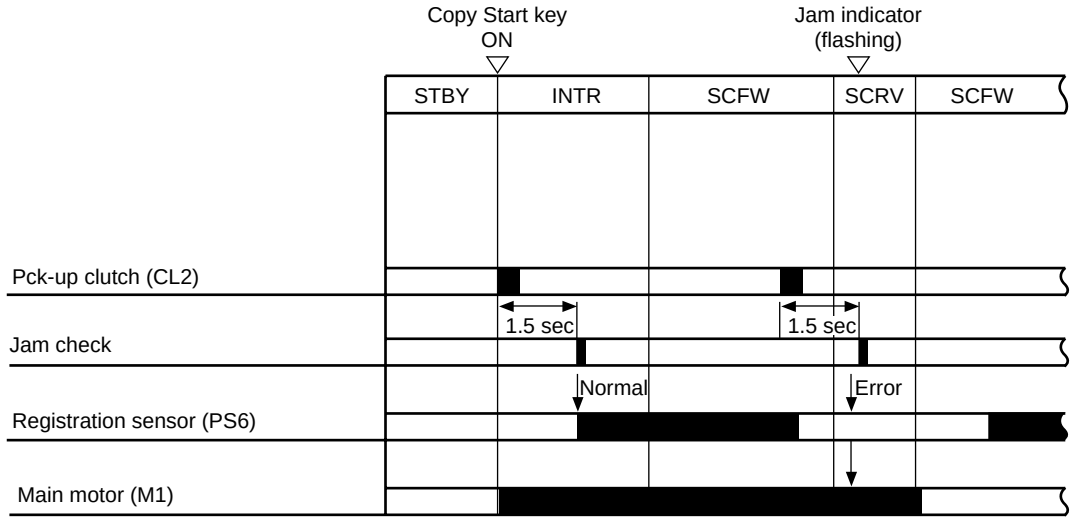

Figure 5-601 Pre-Registration Delay Jam Sequence

COPYRIGHT © 1997 CANON INC.
CANON NP6218 REV. 0 MAY 1997 PRINTED IN JAPAN (IMPRIME AU JAPON)

B. Pre-Registration Timing Jam

Copy paper reaches the registration sensor (PS6) before a specific period of time after the pick-up clutch (CL2) has gone on because of feeding problems.

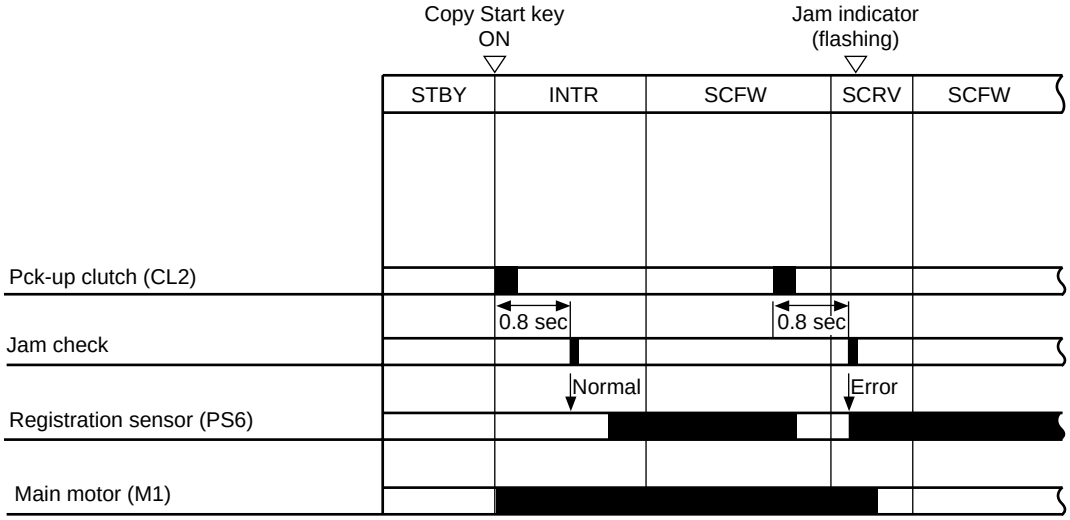

Figure 5-602 Pre-Registration Timing Jam Sequence

C. Pre-Registration Stationary Jam

Copy paper does not move past the registration sensor (PS6) within a specific period of time after the pick-up clutch (CL2) has turned on because of feeding problems.

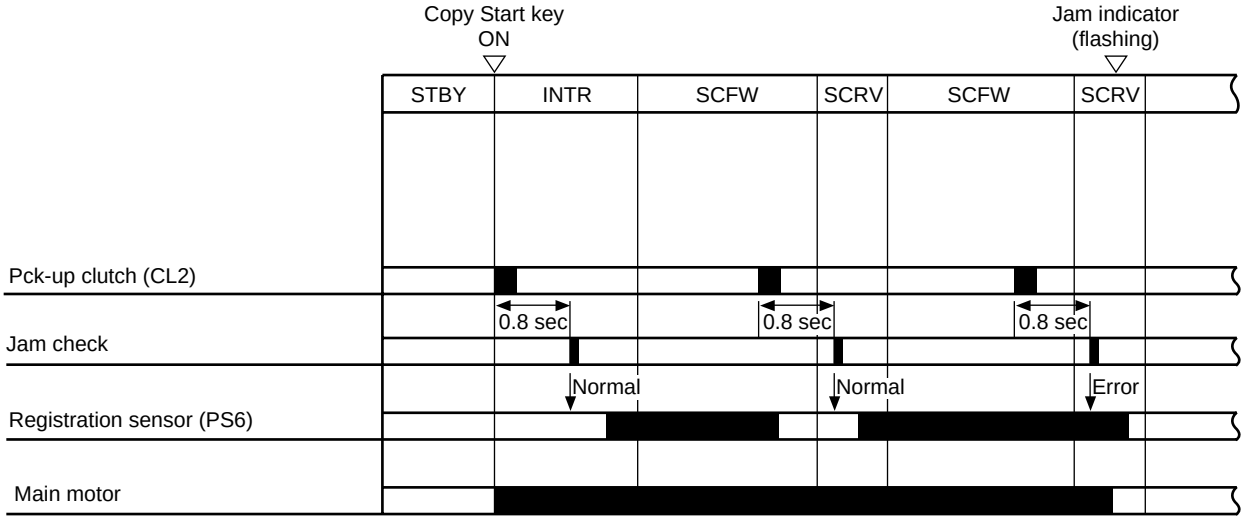

Figure 5-603 Pre-Registration Stationary Jam Sequence

COPYRIGHT © 1997 CANON INC.

D. Separation Delay Jam

Copy paper does not reach the separation sensor (PS7) within a specific period of time after the registration clutch (CL1) has gone on because of feeding problems.

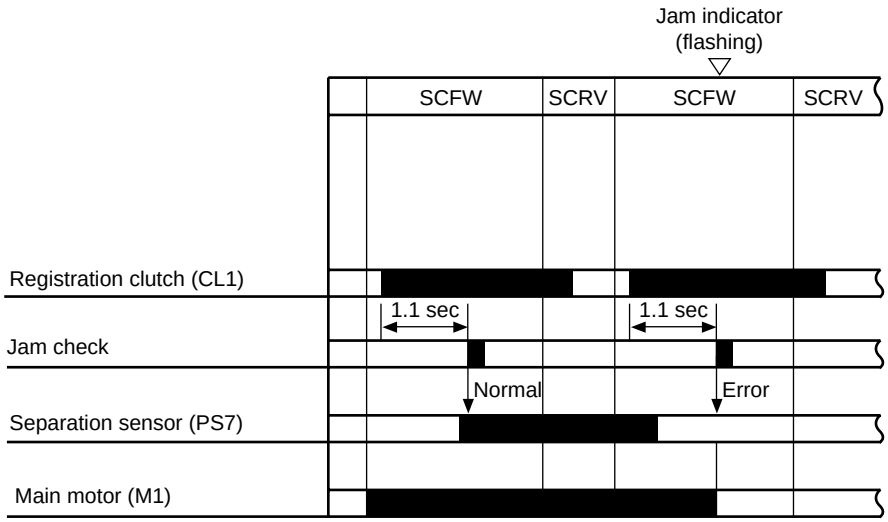

Figure 5-604 Separation Delay Jam Sequence

E. Separation Stationary Jam

Copy paper does not move past the separation sensor (PS7) within a specific period of time after the registration clutch (CL1) has gone on because of feeding problems.

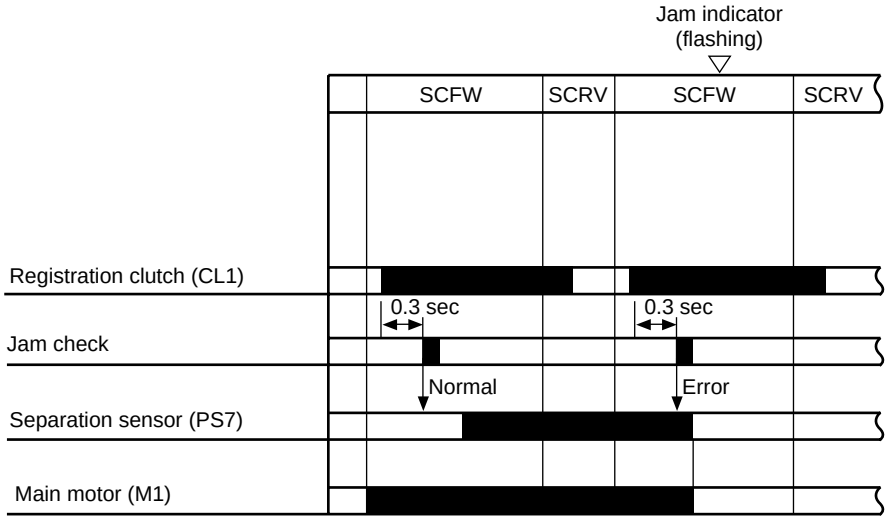

Figure 5-605 Separation Stationary Jam Sequence

COPYRIGHT © 1997 CANON INC.
CANON NP6218 REV. 0 MAY 1997 PRINTED IN JAPAN (IMPRIME AU JAPON)

F. Delivery Delay Jam

Copy paper does not reach the delivery sensor (PS8) within a specific period of time after it has moved past the separation sensor (PS7) because of feeding problems.

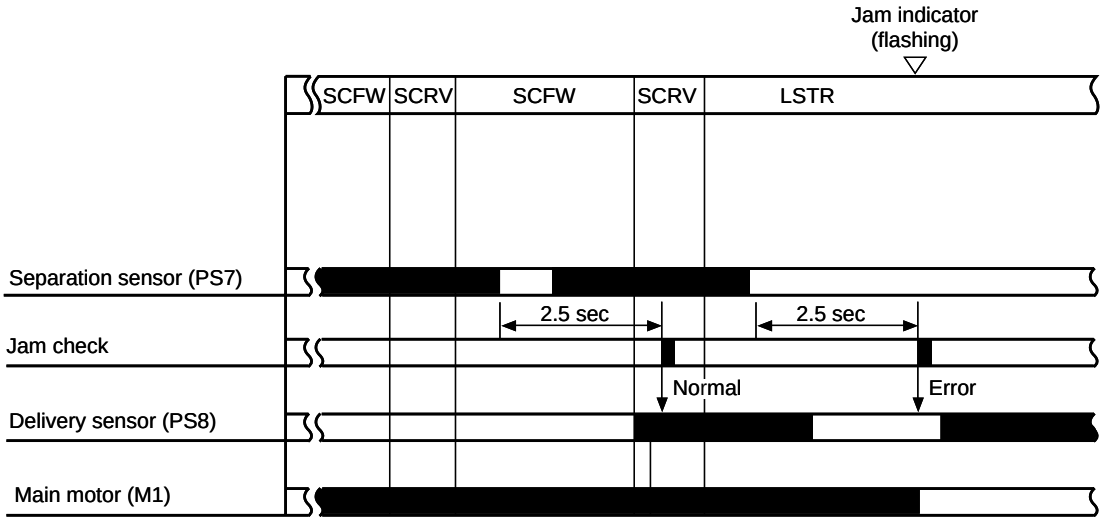

Figure 5-606 Delivery Delay Jam Sequence

G. Delivery Stationary Jam

Copy paper does not move past the delivery sensor within a specific period of time after the delivery sensor (PS8) has gone on because of feeding problems.

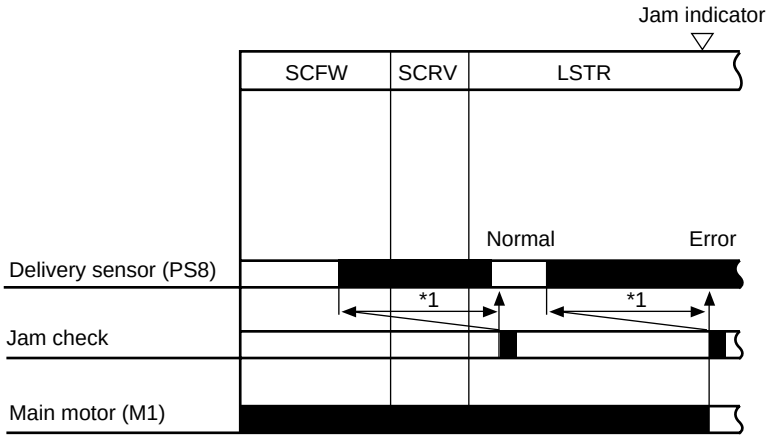

Figure 5-607 Delivery Stationary Jam Sequence

COPYRIGHT © 1997 CANON INC.

VII. DISASSEMBLY AND ASSEMBLY

This section explains mechanical characteristics and describes how to disassemble/assemble the machine.

Be sure to observe the following whenever disassembling/assembling the machine:

1. ⚠ Disconnect the power plug before starting the work.
2. Unless otherwise shown, assemble the parts by reversing the steps given to disassemble them.
3. Identify each screw by type (length, diameter) and location.
4. A washer is used for one of the mounting screws on the rear cover to protect against static electricity; be sure to use the washer when assembling the part.
5. A washer is used for some mounting screws (for grounding wire, varistor) to ensure correct electrical continuity; be sure to use the washer when assembling the part.
6. As a rule, do not operate the machine while any of its parts are removed.
7. When sliding out the duplexing unit or the fixing assembly, be sure to turn off the front door switch or the power switch.

A. Pick-Up Assembly

1. Detaching the Pick-Up Roller Unit

1) Pull out the cassette.
2) Remove the stop ring ① (plastic) from the front of the pick-up roller unit.

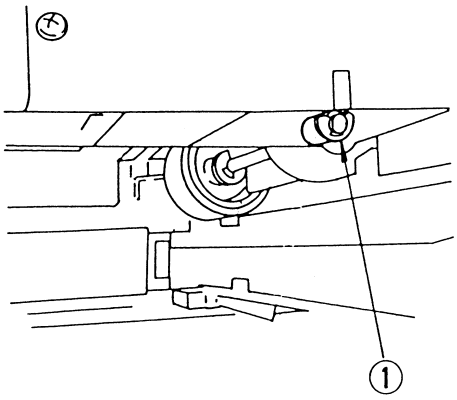

Figure 5-701

COPYRIGHT © 1997 CANON INC.
CANON NP6218 REV. 0 MAY 1997 PRINTED IN JAPAN (IMPRIME AU JAPON)

3) Open the lower right cover.
4) Remove the two screws ②, and pull out the paper guide plate toward the front.

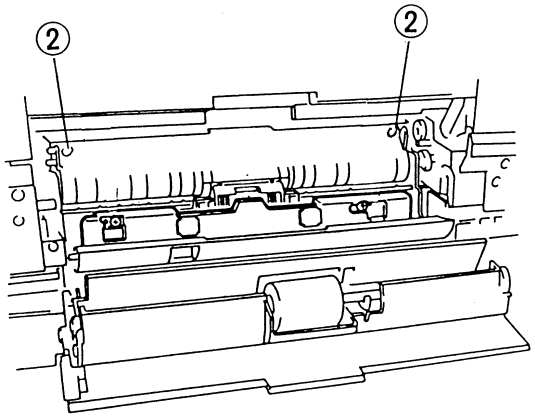

Figure 5-702

Note:
You will have sufficient access to the pick-up roller and the bushing at the rear in this condition.

5) Push in the pick-up roller ③ from the direction of step 4) toward the rear, and remove the bushing ④ while lowering it to the lower left.

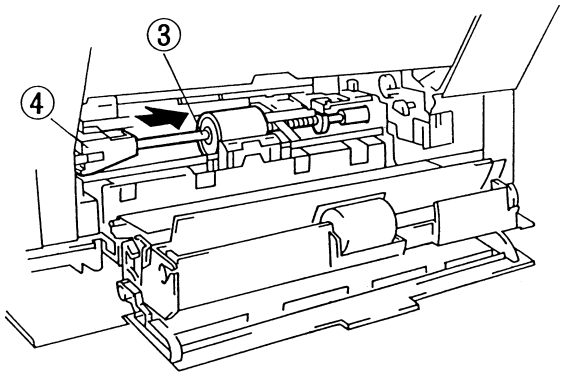

Figure 5-703

COPYRIGHT © 1997 CANON INC.

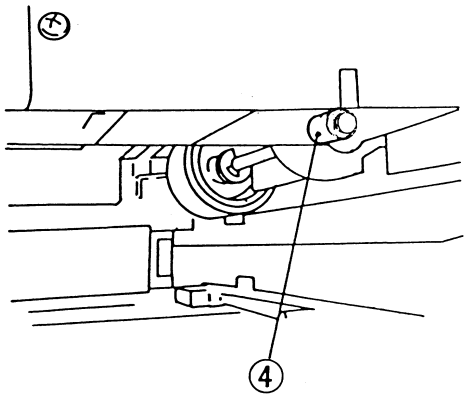

Figure 5-704

6) Push in the bushing ⑤ at the rear toward the front, and lower the spring pressure to remove the pick-up unit toward the left of the copier.

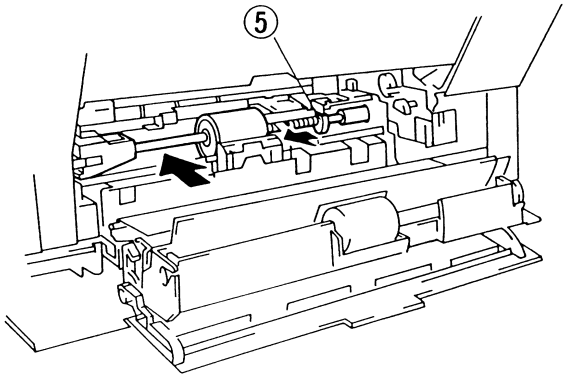

Figure 5-705

Note:
When removing the pick-up roller Assembly, separate the right side black bushing from the key.

COPYRIGHT © 1997 CANON INC.
CANON NP6218 REV. 0 MAY 1997 PRINTED IN JAPAN (IMPRIME AU JAPON)

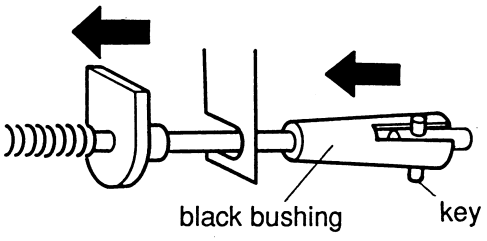

Figure 5-706

Caution:
Check that the paper registration sensor (PS 6) is properly seated after this procedure is completed.

2. Detaching the Pick-Up Roller

1) Detach the pick-up roller unit. (See “1. Detaching the Pick-Up Roller Unit” on p. 5-14.)
2) Remove the E-ring ① and the E-ring ②; then, pull out the pick-up roller ③ together with the collar.

Caution:
Take care not to drop the pin found toward the rear.

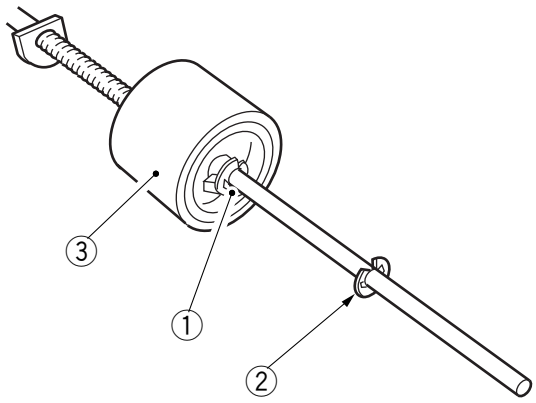

Figure 5-707

COPYRIGHT © 1997 CANON INC.

3. Points to Note When Attaching the Pick-Up Roller

When attaching the pick-up roller ①, attach it so that the side ② shown in Figure 5-708 is toward the rear.

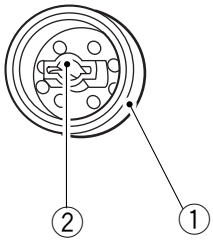

Figure 5-708

4. Detaching the Pick-Up Clutch

1) Detach the main motor unit. (See “1. Detaching the Main Motor Unit” on p. 7-11.)
2) Remove the two screws ①, and detach the connector mount ②.

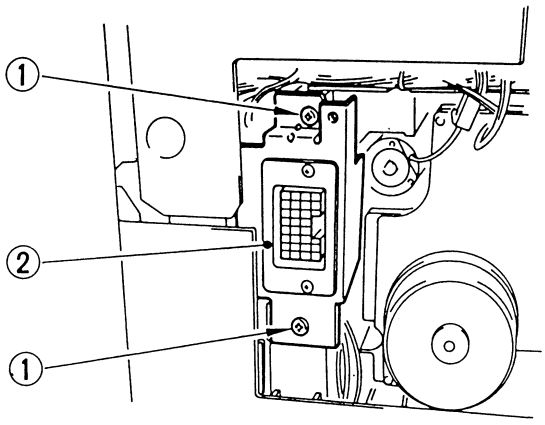

Figure 5-709

COPYRIGHT © 1997 CANON INC.
CANON NP6218 REV. 0 MAY 1997 PRINTED IN JAPAN (IMPRIME AU JAPON)

3) Disconnect the connector ③, and remove the clip ring ④; then, detach the pick-up clutch ⑤.

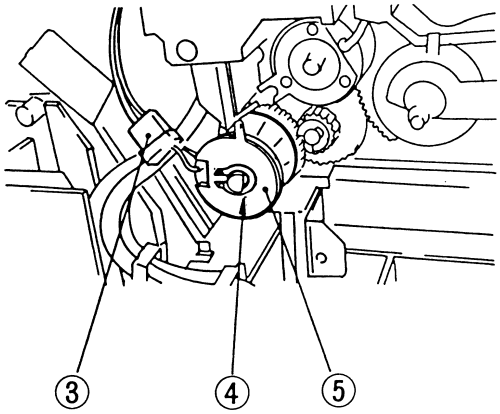

Figure 5-710

5. Detaching the Separation Pad

1) Open the right door.
2) Remove the two screws ①, and detach the separation cover ②.

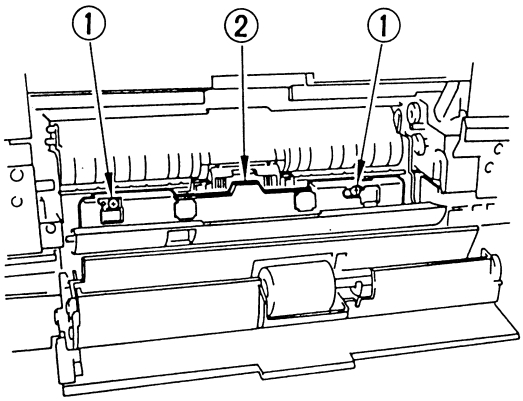

Figure 5-711

COPYRIGHT © 1997 CANON INC.

3) Remove the two screws ③, and detach the separation pad unit ④.

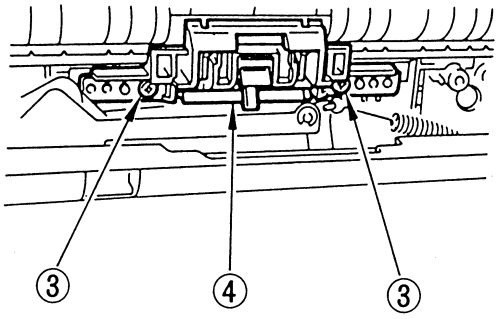

Figure 5-712

6. Adjusting the Left/Right Registration

Make adjustments so that the position of the image is as shown in Figure 5-714 when the Test Sheet is copied in Direct.

a. Pick-Up from the Cassette

Turn the screw ① shown in Figure 5-713 to adjust the position of the cassette hook plate.

standard: 0 ±1.5 mm
clockwise turn: moves the paper in the direction of – shown in Figure 5-714
counterclockwise turn: moves the paper in the direction of + shown in Figure 5-714

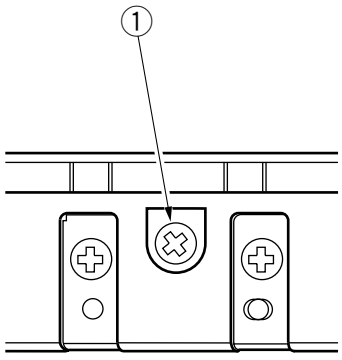

Figure 5-713

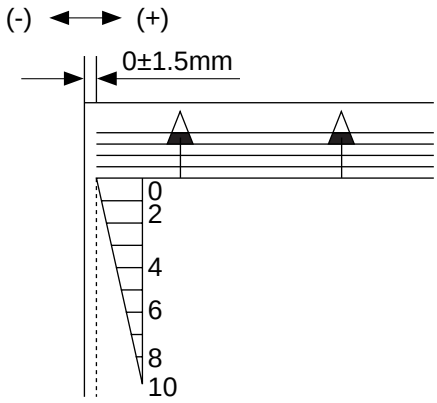

Figure 5-714

COPYRIGHT © 1997 CANON INC.
CANON NP6218 REV. 0 MAY 1997 PRINTED IN JAPAN (IMPRIME AU JAPON)

B. Multifeeder Assembly

1. Detaching the Multifeeder Assembly

1) Open the right door.
2) Remove the two screws ①, and shift the multifeeder assembly ② toward the front to detach.

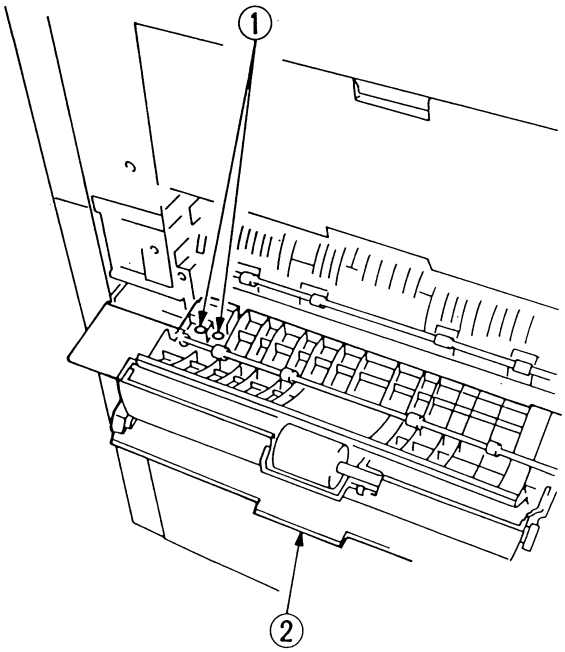

Figure 5-715

COPYRIGHT © 1997 CANON INC. CANON NP6218 REV. 0 MAY 1997 PRINTED IN JAPAN (IMPRIME AU JAPON)

2. Detaching the Multifeeder Pick-Up Roller Unit

1) Open the right door.
2) Remove the E-ring ①, and pull out the bushing ②.
3) Remove the two screws ③.

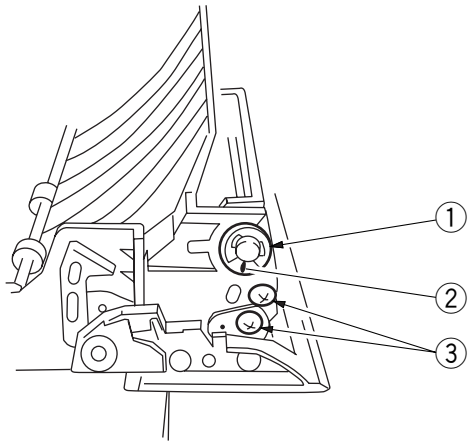

Figure 5-716

4) Remove the screw ④, and detach the roller cover ⑤.

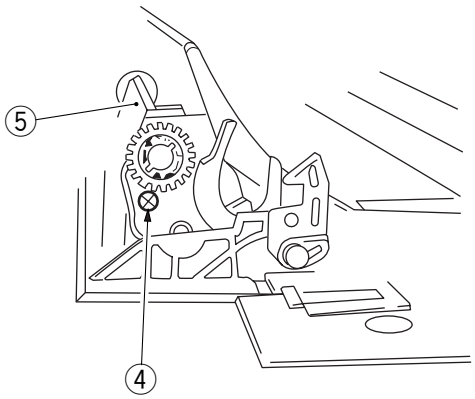

Figure 5-717

COPYRIGHT © 1997 CANON INC.
CANON NP6218 REV. 0 MAY 1997 PRINTED IN JAPAN (IMPRIME AU JAPON)

5) Shift the multifeeder pick-up roller unit ⑥ toward the rear to detach.

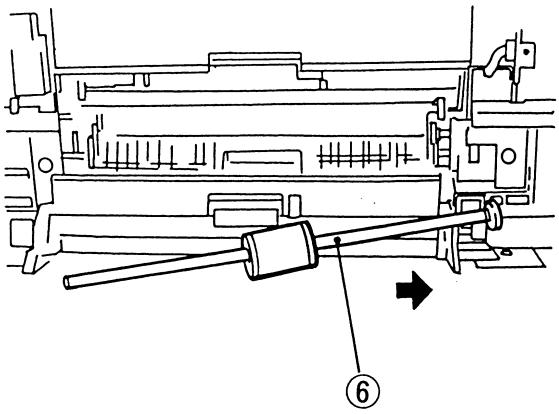

Figure 5-718

3. Detaching the Multifeeder Pick-Up Roller

1) Detach the multifeeder pick-up roller unit. (See “2. Detaching the Multifeeder Pick-Up Roller Unit on p. 5-22.”)
2) Remove the stop ring ① (plastic), and pull out the pick-up roller ② together with the collar.

Caution:

Take care not to drop the pin found at the rear.

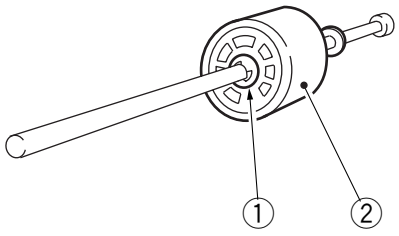

Figure 5-719

COPYRIGHT © 1997 CANON INC.

4. Points to Keep Note When Attaching the Multifeeder Pick-Up Roller

When attaching the multifeeder pick-up roller ①, make sure that the side with a cross ② on the collar is toward the rear.

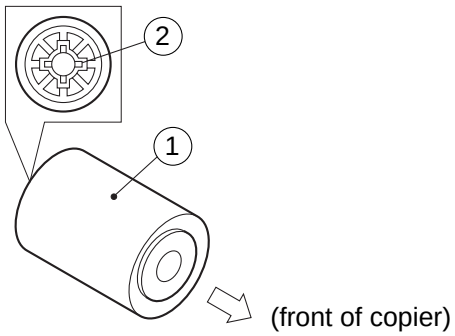

Figure 5-720

5. Detaching the Separation Pad

1) Open the upper right door.
2) Remove the two screws ①, and detach the separation pad ②.

Caution:

At this time, take care not to lose the spring on the separation pad assembly.

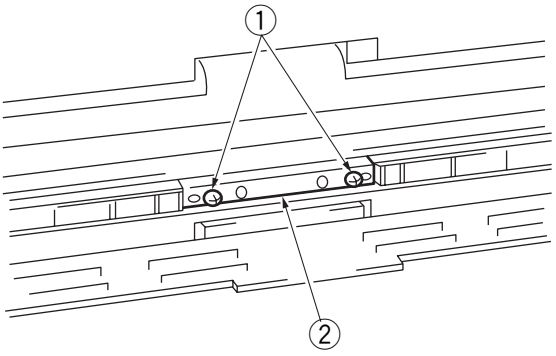

Figure 5-721

COPYRIGHT © 1997 CANON INC.
CANON NP6218 REV. 0 MAY 1997 PRINTED IN JAPAN (IMPRIME AU JAPON)

6. Detaching the Multifeeder Drive Unit

1) Detach the multifeeder assembly. (See “1. Detaching the Multifeeder Assembly on p. 5-21.”)
2) Detach the connector mount.
3) Remove the screw ①.

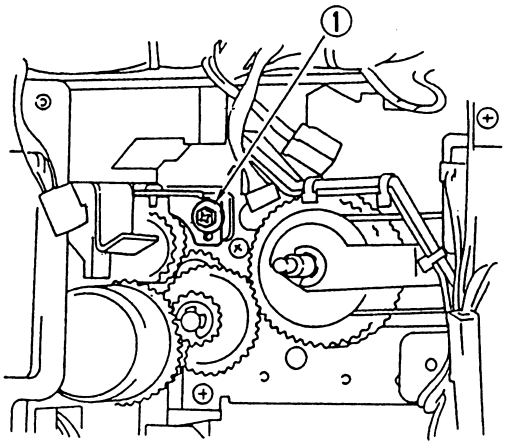

Figure 5-722

4) Remove the screw ②, and disconnect the connector ③; then, detach the multifeeder drive unit ④.

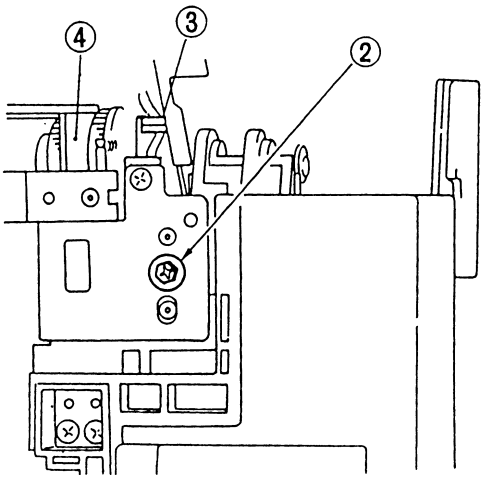

Figure 5-723

COPYRIGHT © 1997 CANON INC.

7. Detaching the Multifeeder Clutch

1) Detach the multifeeder drive unit. (See “6. Multifeeder drive Unit on p. 5-25.”)
2) Remove the E-rings ① ② and screws ③ ④ ⑤; then, detach the support mount.
3) Detach the multifeeder pick-up clutch ⑥.

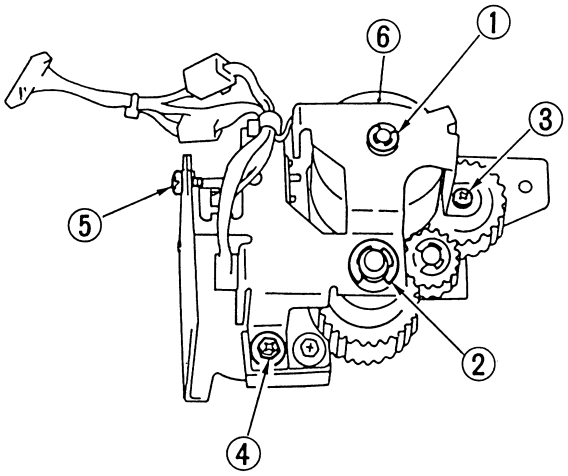

Figure 5-724

COPYRIGHT © 1997 CANON INC.

8. Positioning the Multifeeder Assembly (paper guide plate cam)

Temporarily fix the screw equipped with a hex nut on the spring clutch assembly, and rotate the control ring. Make adjustments so that the hole in the cam and the hole in the multifeeder drive unit match as shown in Figure 5-725 when the claw is engaged with the solenoid plate; then, fix in position.

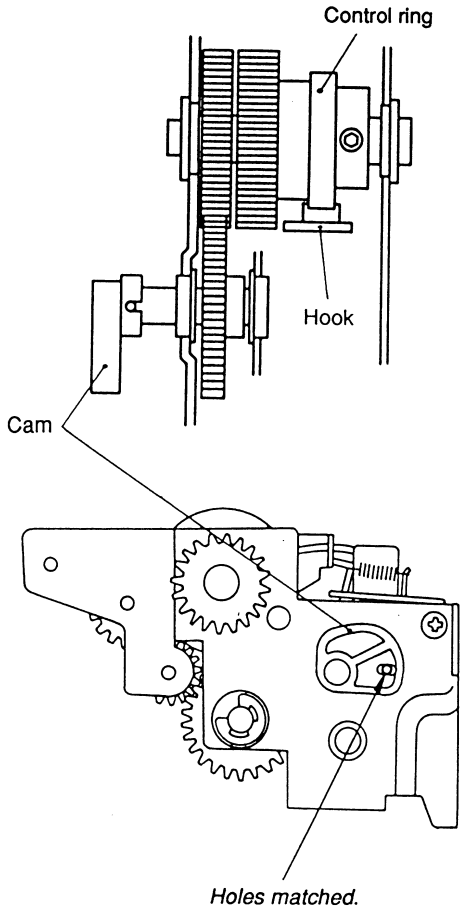

Figure 5-725

COPYRIGHT © 1997 CANON INC.

9. Adjusting the Left/Right Registration

If the right/left registration is not correct when copies are made using the multifeeder, loosen the screw ①, and adjust the position of the tray.

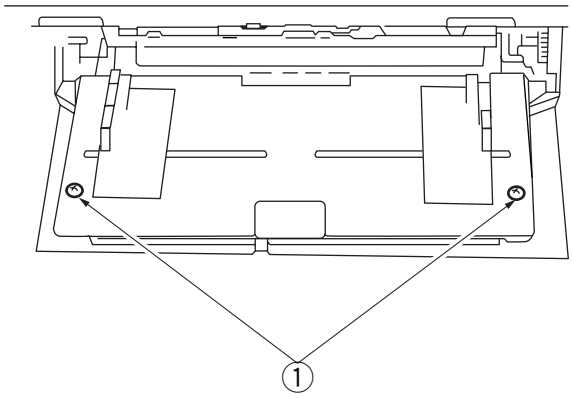

Figure 5-726

10. Points to Note When Attaching the Multifeeder Assembly Rack Plate

Attach the rack plate of the multifeeder to the pulley while both its right and left are fully open.

COPYRIGHT © 1997 CANON INC.
CANON NP6218 REV. 0 MAY 1997 PRINTED IN JAPAN (IMPRIME AU JAPON)

C. Registration Roller Assembly

1. Detaching the Registration Clutch

1) Detach the connector cover or the lattice connector
2) Remove the clip ring ①, and disconnect the connector ②; then, detach the registration clutch ③.

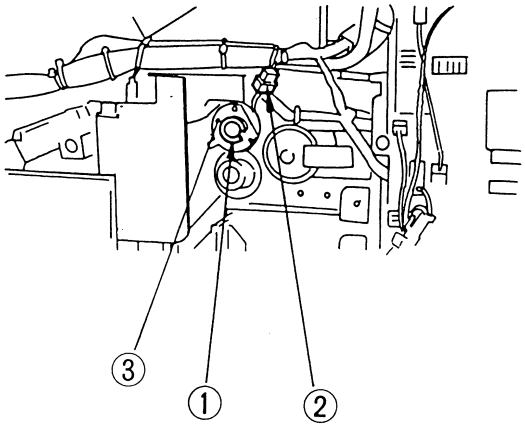

Figure 5-727

2. Detaching the Upper Registration Roller

1) Detach the registration clutch. (See "1. Detaching the Registration Clutch on p. 5-29.")
2) Remove the spring ① (front) and spring ② (rear).

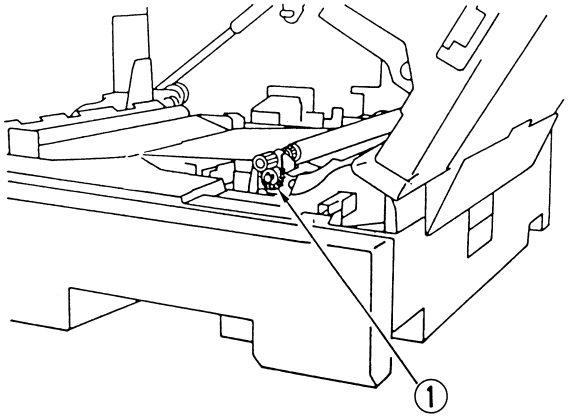

Figure 5-728

COPYRIGHT © 1997 CANON INC. CANON NP6218 REV. 0 MAY 1997 PRINTED IN JAPAN (IMPRIME AU JAPON)

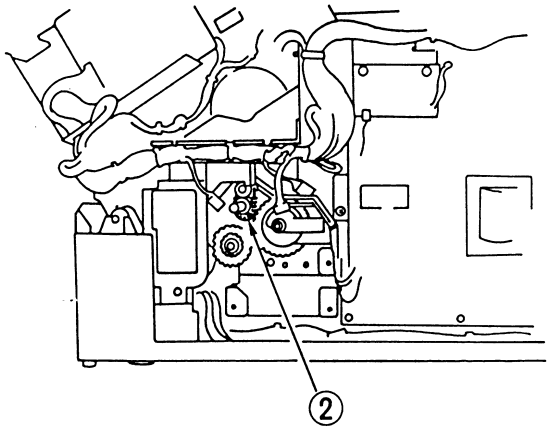

Figure 5-729

Caution:
Take care not to misplace the springs (front, rear).

3) Lift the upper registration roller ③ to detach.

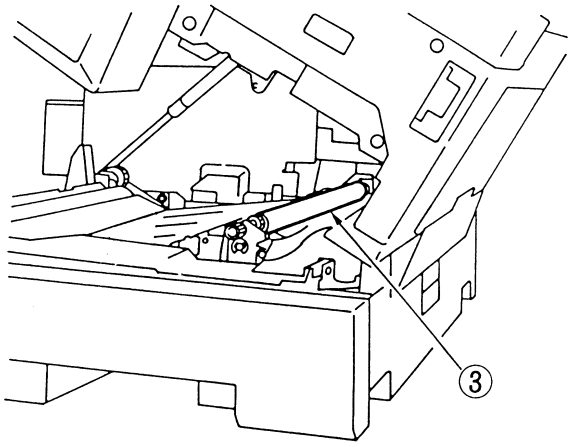

Figure 5-730

COPYRIGHT © 1997 CANON INC.
CANON NP6218 REV. 0 MAY 1997 PRINTED IN JAPAN (IMPRIME AU JAPON)

3. Detaching the Lower Registration Roller

1) Detach the upper registration roller. (See “2. Detaching the Upper Registration Roller on p. 5-29.”)
2) Open the lower right door, and remove the two screws ① to shift the pick-up guide ② toward the right side of the copier.

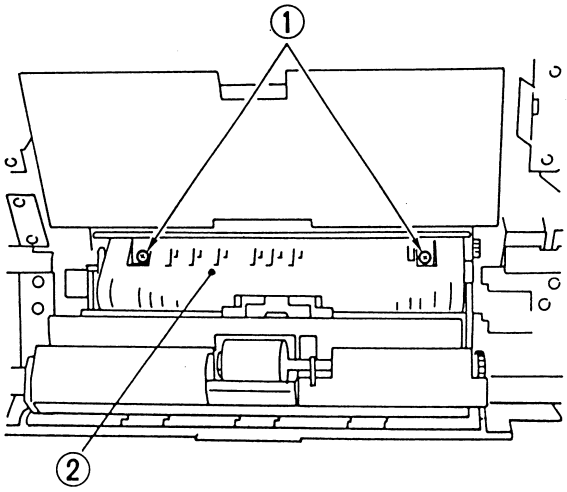

Figure 5-731

3) Remove the E-ring ③ (front), and shift the bushing ④.
4) Detach the registration roller ⑤.

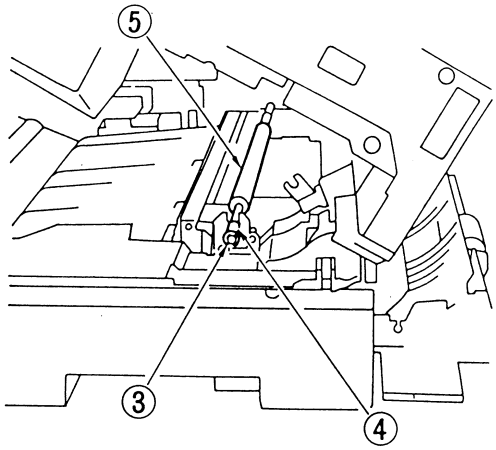

Figure 5-732

COPYRIGHT © 1997 CANON INC. CANON NP6218 REV. 0 MAY 1997 PRINTED IN JAPAN (IMPRIME AU JAPON)

D. Feeding Assembly

Be sure to detach the cartridge before detaching the feeding assembly.

1. Detaching the Feeding Belt

1) Detach the lower fixing unit. (See “8. Detaching the Lower Fixing Unit” on p. 6-23.)
2) Remove the three screws ①, and shift the feeding retention plate ②.

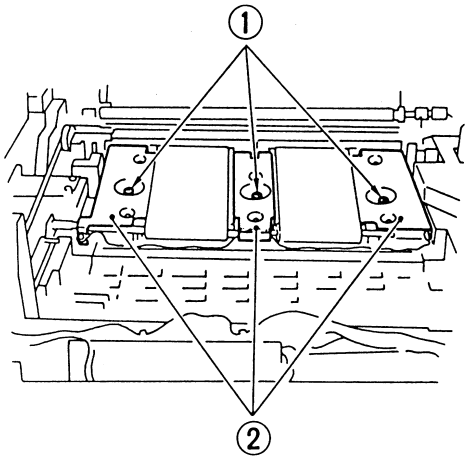

Figure 5-733

3) Disconnect the connector ③, and shift the feeding retention plate ②.

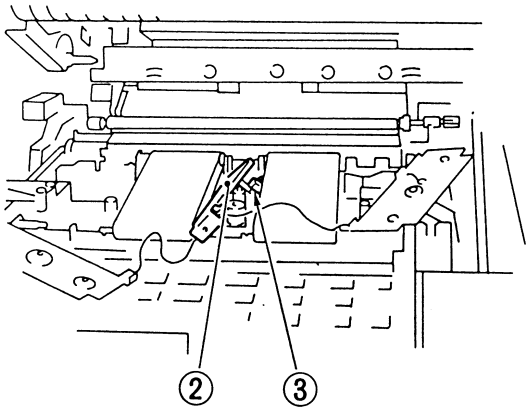

Figure 5-734

COPYRIGHT © 1997 CANON INC.
CANON NP6218 REV. 0 MAY 1997 PRINTED IN JAPAN (IMPRIME AU JAPON)

4) Detach the feeding spacer ④ by pulling it toward the fixing assembly.

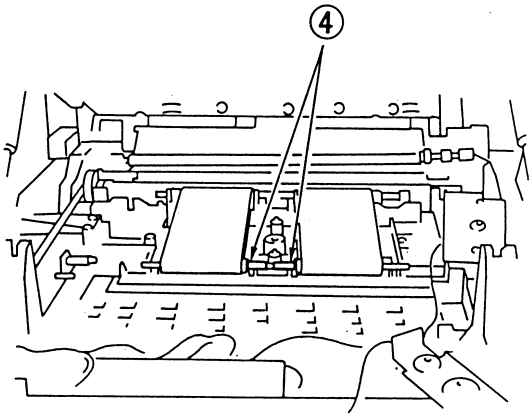

Figure 5-735

5) Detach the static eliminator.
6) Detach the feeding spacer ⑤ from the hook (arrow).

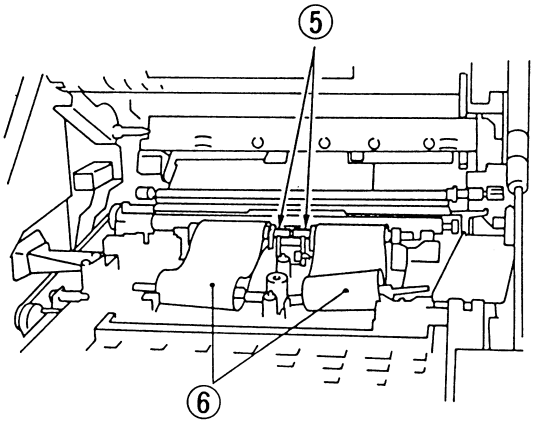

Figure 5-736

Caution:

Take care not to touch the transfer roller. Do not damage the area where the feeding spacers are in contact.

COPYRIGHT © 1997 CANON INC.

E. Cassette Feeding Module

1. Detaching the Copier from the Cassette Feeding Module

1) Disconnect the copier's power plug.
2) Disconnect the connector ① of the cassette feeding module.

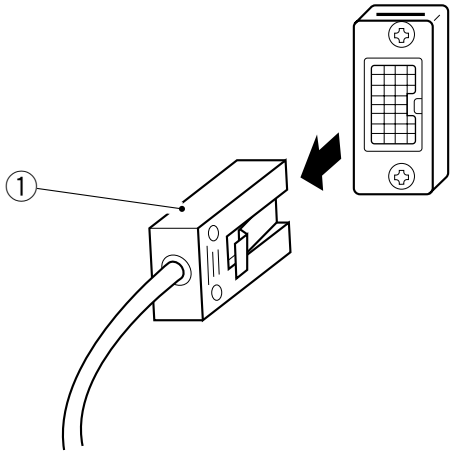

Figure 5-737

3) Hold the copier's grips, and detach the copier from the cassette feeding module.

2. Detaching/Attaching the Pick-Up Roller

See p. 5-14 "1. Detaching the Pick-Up Roller Unit", p. 5-17 "2. Detaching the Pick-Up Roller" and p. 5-18 "3. Points to Note When Attaching the Pick-Up Roller."

3. Detaching the Pick-Up Clutch

1) Detach the pick-up drive unit. (See p. 7-14 "1. Detaching the Pick-Up Drive Unit.")
2) Detach the cassette motor. (See p. 7-15 "2. Detaching the Cassette Motor.")
3) Remove the three screws ①, and detach the bushing ② and side plate ③; then, detach the pick-up clutch ④.

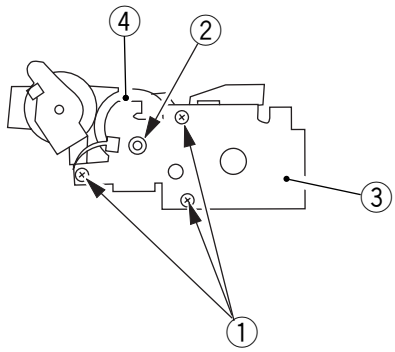

Figure 5-738

COPYRIGHT © 1997 CANON INC.
CANON NP6218 REV. 0 MAY 1997 PRINTED IN JAPAN (IMPRIME AU JAPON)

CHAPTER 6

FIXING SYSTEM

This chapter explains the principles used to fuse toner images to transfer medium in view of the functions of electrical and mechanical units and in relation to their timing of operation. It also shows how these units may be disassembled/assembled and adjusted.

I. BASIC OPERATIONS.....6-1
- A. Outline.....6-1
- B. Controlling the Fixing Heater Temperature.....6-3
- C. Controlling the Supply Power for the Fixing Heater.....6-5
- D. Detecting Overheating at the End of the Fixing Heater.....6-6
- E. Protection Mechanism.....6-6
- F. Correcting Displacement of the Fixing Film.....6-7

II. DISASSEMBLY AND ASSEMBLY.....6-11
- A. Fixing Assembly.....6-11
- B. Delivery Assembly.....6-27

COPYRIGHT © 1997 CANON INC. CANON NP6218 REV. 0 MAY 1997 PRINTED IN JAPAN (IMPRIME AU JAPON)

I. BASIC OPERATIONS

A. Outline

The drive roller of the fixing assembly is driven by the main motor (M1).

When the drive roller rotates, the fixing film rotates and, in conjunction, the pressure roller rotates.

Part of the inside of the fixing film is heated by the fixing heater.

The temperature of the fixing heater is monitored by a thermistor (TH1), and the result is sent to the microprocessor in the DC controller circuit in the form of the fixing heater temperature detection signal (TH1).

Based on the result (TH1 signal), the microprocessor on the DC controller varies the fixing heater drive signal (HTRD) to control the temperature of the fixing heater.

Further, a thermistor (TH2) is also provided on the end (rear) of the fixing heater to monitor overheating.

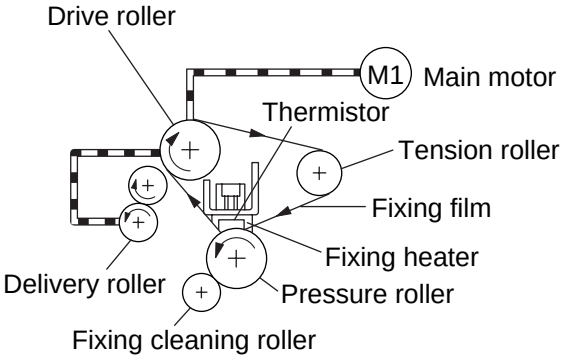

Figure 6-101

COPYRIGHT © 1997 CANON INC.
CANON NP6218 REV. 0 MAY 1997 PRINTED IN JAPAN (IMPRIME AU JAPON)

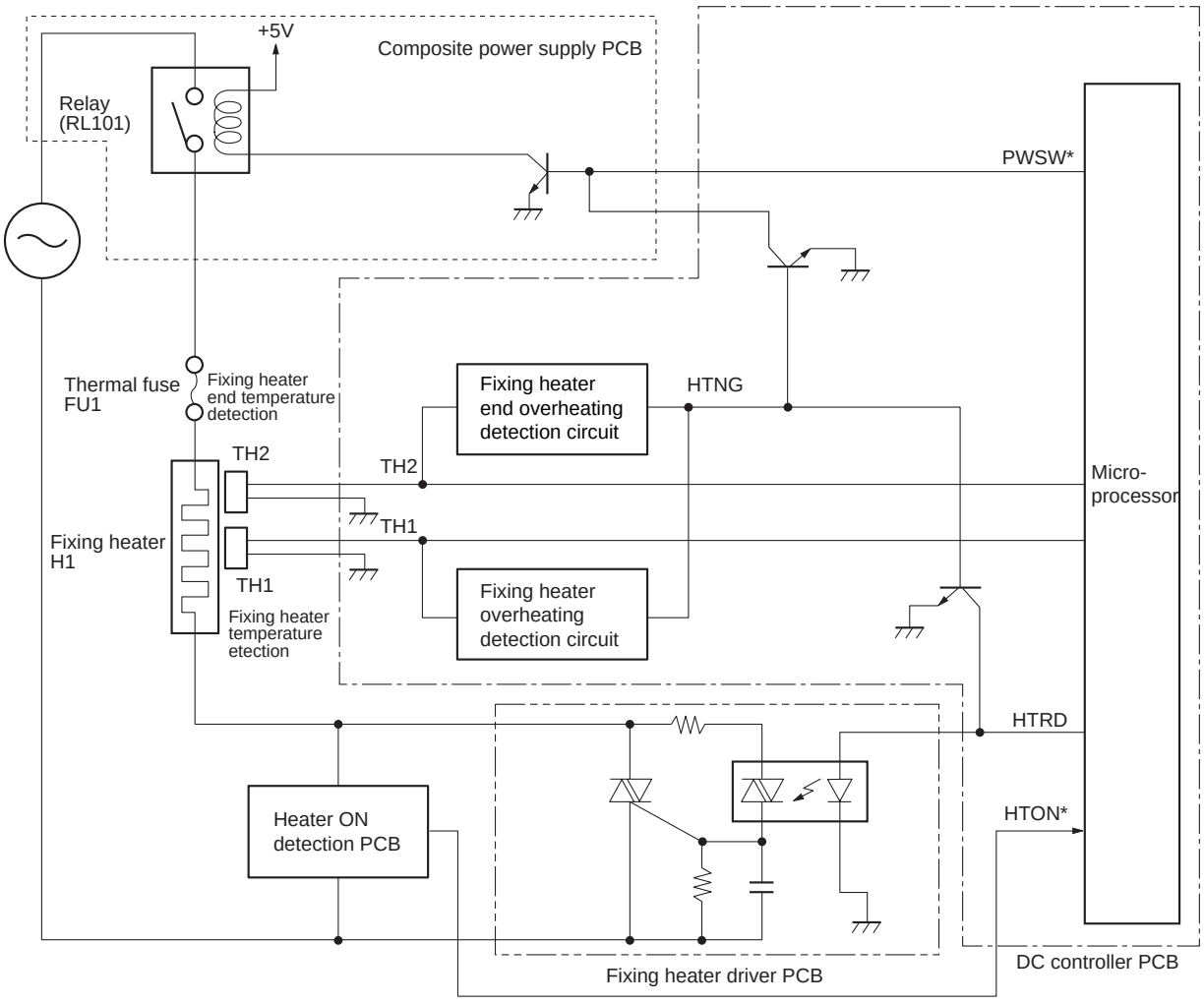

Figure 6-102

COPYRIGHT © 1997 CANON INC.
CANON NP6218 REV. 0 MAY 1997 PRINTED IN JAPAN (IMPRIME AU JAPON)

B. Controlling the Fixing Heater Temperature

The fixing heater remains off while the copier is in standby state. To prevent fixing faults caused by low temperature, its temperature is controlled in any of the following three modes depending on the temperature at the time copying is started (as measured by the main thermistor TH1) and the number of copies to be made in continuous mode:

a. If the temperature at the time copying is started is 140°C or more, it is controlled so that it remains 180°C at all times.
- 1st to 100th copy → 180°C

b. If the temperature at the time copying is started is 120°C or more and less than 140°C, it is controlled so that it remains between 200° and 180°C depending on the number of copies to be made.
- 1st copy → 200°C
- 2nd to 9th copy → 195°C
- 10th to 20th copy → 190°C
- 21st to 25th copy → 185°C
- 26th to 100th copy → 180°C

c. If the temperature at the time copying is started is less than 120°C or less, the temperature is controlled to 225°-180°C, 215°-180°C, or 200°-180°C selected by service mode. (See the Service Handbook.)

■Control 1
- 1st to 4th copy → 225°C
- 5th copy → 220°C
- 6th copy → 215°C
- 7th copy → 210°C
- 8th copy → 205°C
- 9th to 20th copy → 200°C
- 21st to 25th copy → 195°C
- 26th to 40th copy → 190°C
- 41st to 45th copy → 185°C
- 46th to 100th copy → 180°C

■Control 2 (default)
- 1st to 4th copy → 215°C
- 5th copy → 210°C
- 6th copy → 205°C
- 7th to 20th copy → 200°C
- 21st to 25th copy → 195°C
- 26th to 40th copy → 190°C
- 41st to 45th copy → 185°C
- 46th to 100th copy → 180°C

■Control 3
- 1st to 20th copy → 200°C
- 21st to 25th copy → 195°C
- 26th to 40th copy → 190°C
- 41st to 45th copy → 185°C
- 46th to 100th copy → 180°C

COPYRIGHT © 1997 CANON INC.
CANON NP6218 REV. 0 MAY 1997 PRINTED IN JAPAN (IMPRIME AU JAPON)

Reference:

Normally, control 2 is used. Use control 1 to increase the control temperature if a fixing fault occurs; or use control 3 to lower the control temperature if offset occurs. (See the p. 10-32.)

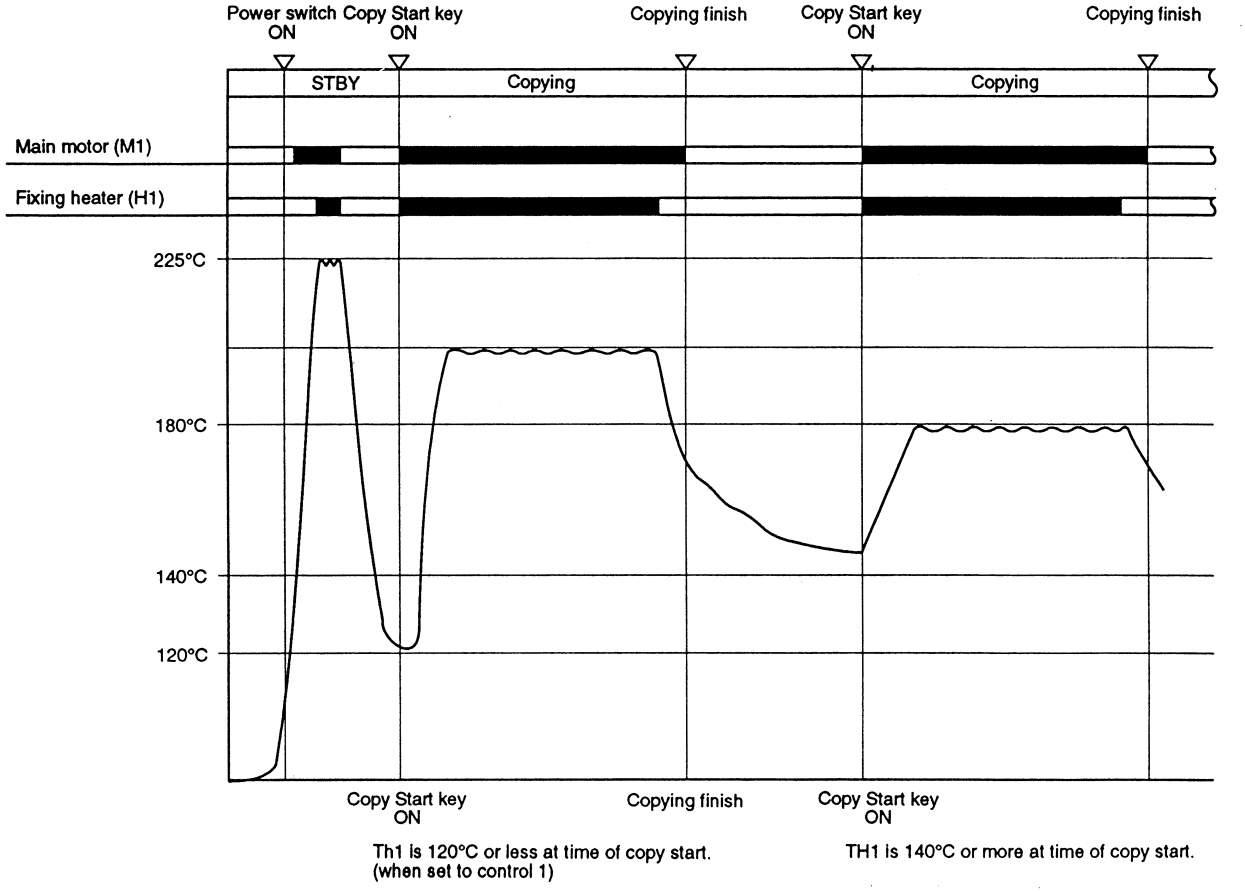

Figure 6-103

COPYRIGHT © 1997 CANON INC.
CANON NP6218 REV. 0 MAY 1997 PRINTED IN JAPAN (IMPRIME AU JAPON)

C. Controlling the Supply Power for the Fixing Heater

The temperature of the fixing heater is controlled by controlling the power supplied to the fixing heater.

The resistance of the plane-shaped heater used as the fixing heater may show some variation depending on which production lot it comes from.

For this reason, whenever you have replaced the copier's heater, you must store the resistance value in service mode (No. 304; see p. 10-31); this way, the microprocessor on the DC controller PCB can exert proper control over power.

Caution:

The resistance of the fixing heater is stored in service mode at the time the copier is shipped out of the factory; do not change it unless you have replaced the fixing heater.

The power of the fixing heater is controlled by a phase power control method.

The microprocessor controls the output timing of the fixing heater drive signal (HTRD) so that power that suits the target temperature of the fixing heater may be supplied to the heater (potential control of the supply power).

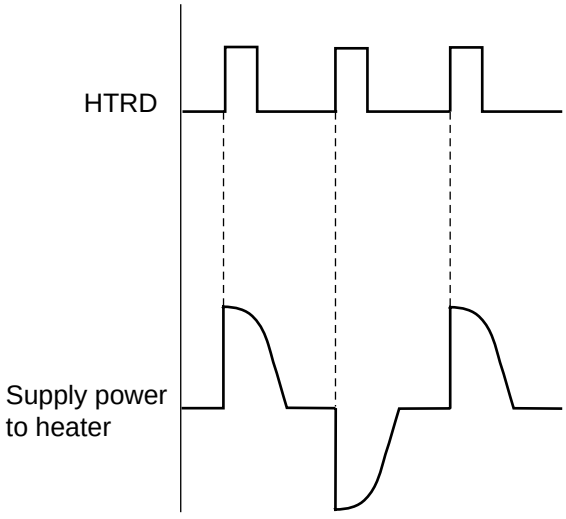

Figure 6-104

COPYRIGHT © 1997 CANON INC. CANON NP6218 REV. 0 MAY 1997 PRINTED IN JAPAN (IMPRIME AU JAPON)

D. Detecting Overheating at the End of the Fixing Heater

A sub thermistor (TH2) is provided at the end (rear) of the copier's fixing heater to monitor overheating.

This consideration to prevent damage to the fixing film caused by overheating of the area where paper (smaller than B4) does not come into contact.

When TH2 registers 250°C or more, the distance between copies is increased to facilitate discharge of heat by the fixing heater, thereby preventing overheating.

The copier continues to make copies maintaining such a distance even after TH2 registers a value lower than 250°C.

If the temperature further increases after the distance has been increased and if the value reaches 260°C or more, the ongoing copying operation will be stopped and the power will be cut off; at the times E001 information is stored. (See p. 10-109.)

E. Protection Mechanism

The copier is equipped with the following protective functions to prevent malfunction of the fixing heater:

1. Thermistor (TH1, TH2)

1) The microprocessor on the DC controller monitors the voltage of the thermistor (TH1, TH2); if it detects a high or low temperature error, it stops the power to the heater and cuts off all the power. At the time, E000 thorugh E003 information is stored. (See p. 10-109.)
2) If the overheating detection circuit identifies that TH1 has registered 260°C or TH2 has registered 270°C for 0.3 sec or more, the heater error detection signal (HTNG) turns off the relay (RL101) to stop power to the fixing heater and cut off all the power. (See p. 10-109.)

Caution:

Be sure to disconnect the connector (J4) of the fixing heater and press the service switch (SW301) on the DC controller when turning on the power.

2. Thermal Fuse (FU1)

If the temperature around the thermal fuse remains 226°C or more for a specific period of time, the fuse melts to cut off the power to the fixing heater.

3. Heater ON Detection Circuit

The period of time during which the fixing heater drive signal (HTRD) remains off is detected; if an error is found, the power is cut off and E004 information is stored at the time.

COPYRIGHT © 1997 CANON INC.
CANON NP6218 REV. 0 MAY 1997 PRINTED IN JAPAN (IMPRIME AU JAPON)

F. Correcting Displacement of the Fixing Film

1. Outline

The fixing film at times becomes displaced toward the front or rear as it keeps turning. To correct such displacement, the copier is equipped with a correction mechanism.

The control is executed by the fixing film sensor (PS9), which detects the position of the film, and the fixing film motor (M4), which physically corrects displacement.

Reference:

If you turn on the power by inserting the door switch actuator into the door switch with the top body of the copier open, E007 will be detected, since the condition prevents the fixing film from turning.

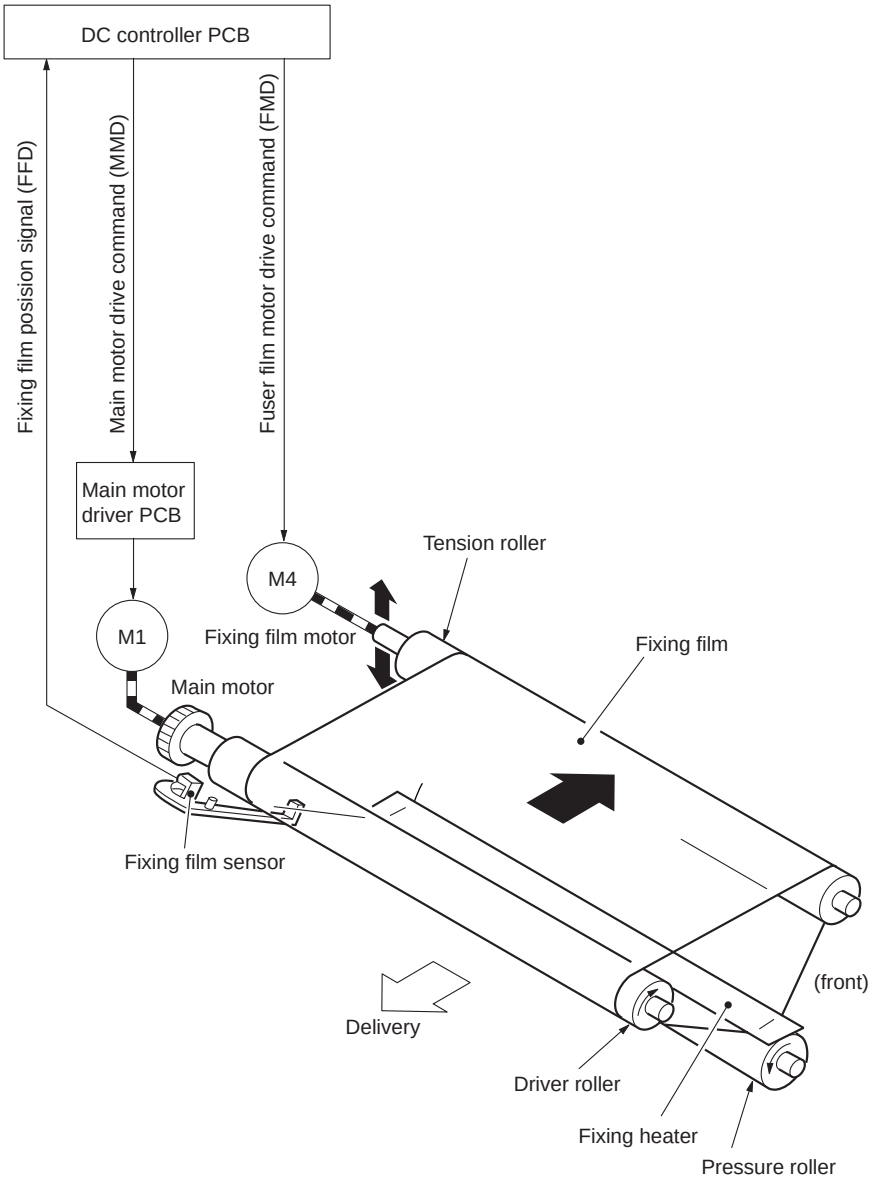

Figure 6-105

The fixing film sensor (PS9) is used to detect the position of the fixing film and found at the end of the film.

The rear (sensor side) of the fixing film is provided with a cut as shown in Figure 6-106 so that the fixing film sensor continuously goes on and off.

Normally, the on and off periods of the sensor are identical as long as the fixing film remains centered.

If the film starts to become displaced toward the rear, however, the on period becomes longer; the off period becomes longer if the film starts to be displaced toward the front. (See Figure 6-107)

The DC controller monitors the on and off periods of the sensor and computes the difference to correct the position of the fixing film.

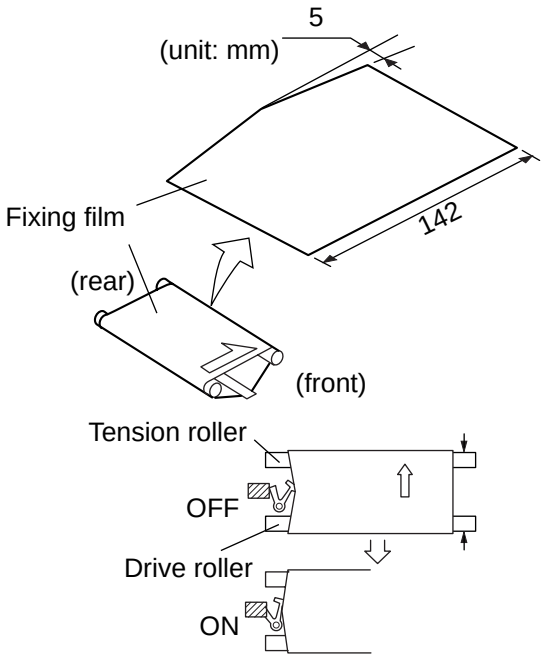

Figure 6-106

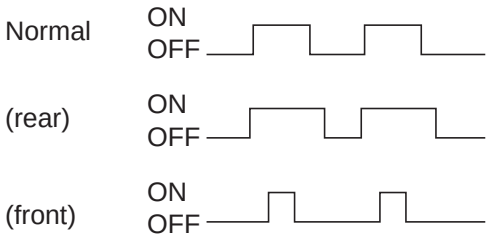

Figure 6-107

COPYRIGHT © 1997 CANON INC.
CANON NP6218 REV. 0 MAY 1997 PRINTED IN JAPAN (IMPRIME AU JAPON)

Displacement of the fixing film is physically corrected by the fixing film motor (M4).

When it identifies displacement of the fixing film, the DC controller rotates the fixing film motor to move the rear of the tension roller up and down, thereby moving the fixing film to the center to correct the displacement.

When the fixing film becomes displaced toward the rear, the tension roller is moved down to move the fixing film toward the front.

When the fixing film becomes displaced toward the front, on the other hand, the tension roller is moved up to move the fixing film toward the rear.

The fixing film is positioned properly by repeating these operations as necessary. If the film has become displaced so much that the mechanism fails to make adequate correction, 'E007' is indicated on the display. (See p. 10-110.)

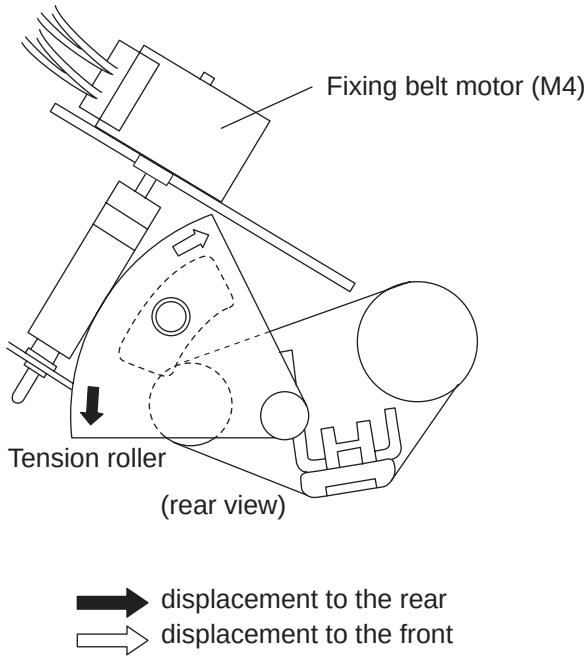

Figure 6-108

2. Controlling the Fixing Film Motor

The fixing film motor is a stepping motor, and is rotated by the drive signal FMD and pulse signals FFA, FFA*, FFB, and FFB*.

When FMD is '1', the drive voltage FFCA and FFBC are imposed; the motor starts to rotate when pulses are applied to each phase in specific sequence.

The motor is rotated in reverse by applying these pulses in reverse order.

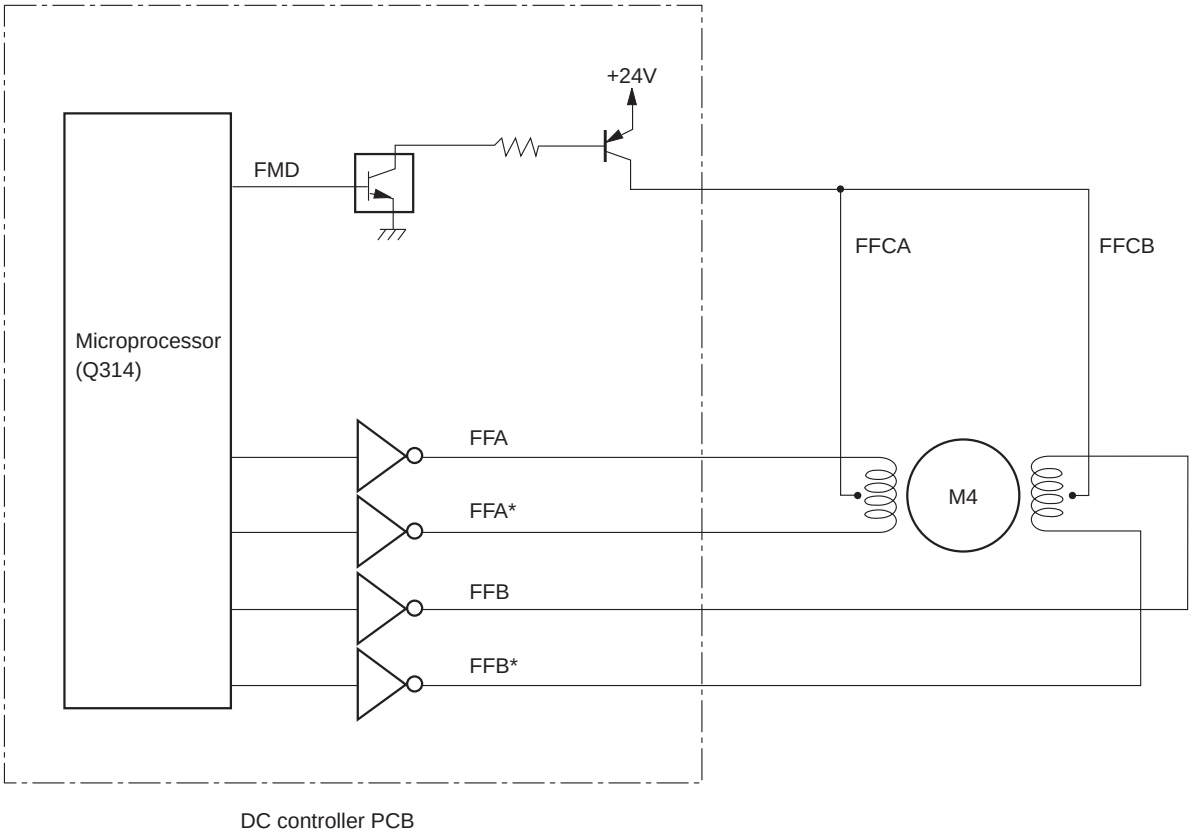

Figure 6-109

COPYRIGHT © 1997 CANON INC.
CANON NP6218 REV. 0 MAY 1997 PRINTED IN JAPAN (IMPRIME AU JAPON)

II. DISASSEMBLY AND ASSEMBLY

This section explains mechanical characteristics and describes how to disassemble/assemble the machine.

Be sure to observe the following whenever disassemblig/assembling the machine:

1. ⚠ Disconnect the power plug before starting the work.
2. Unless otherwise shown, assemble the parts by reversing the steps given to disassemble them.
3. Identify each screw by type (length, diameter) and location.
4. A washer is used for one of the mounting screws on the rear cover to protect against static electricity; be sure to use the washer when assembling the part.
5. A washer is used for some mounting screws (for grounding wire, varistor) to ensure correct electrical continuity; be sure to use the washer when assembling the part.
6. As a rule, do not operate the machine while any of its parts are removed.
7. When sliding out the duplexing unit or the fixing assembly, be sure to turn off the front door switch or the power switch.

A. Fixing Assembly

1. Construction1

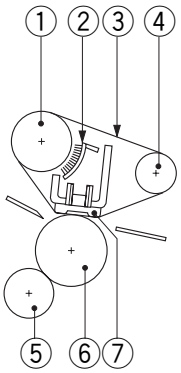

① Drive roller
② Cleaning brush
③ Fixing film
④ Tension roller
⑤ Fixing cleaning roller
⑥ Lower fixing roller
⑦ Fixing heater

Figure 6-201

Caution:

The fixing film is made of special material; do not touch it or soil it.

If you must replace the upper fixing unit, replace it on a unit basis in the field and leave component replacement to the workshop.

COPYRIGHT © 1997 CANON INC.

2. Detaching the Upper Fixing Unit

1) Open the copier's front cover.
2) Open the copier's top body.
3) Remove the two screws ①, and detach the fixing assembly cover ②.

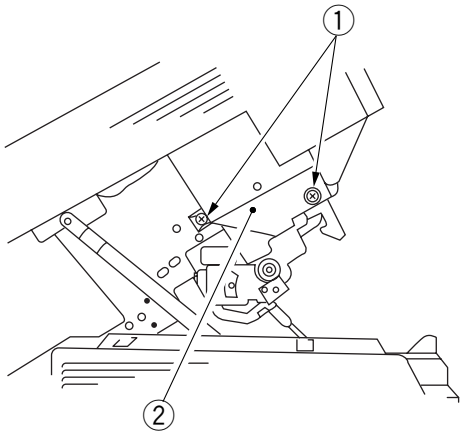

Figure 6-202

4) Disconnect the four connectors ③, and remove the screw ④.

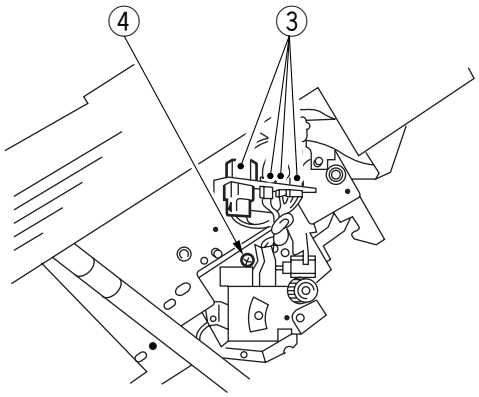

Figure 6-203

COPYRIGHT © 1997 CANON INC.
CANON NP6218 REV. 0 MAY 1997 PRINTED IN JAPAN (IMPRIME AU JAPON)

5) Open the fixing shutter ⑤, and put the screw removed in step 4) into the hole ⑥ in the front side plate.

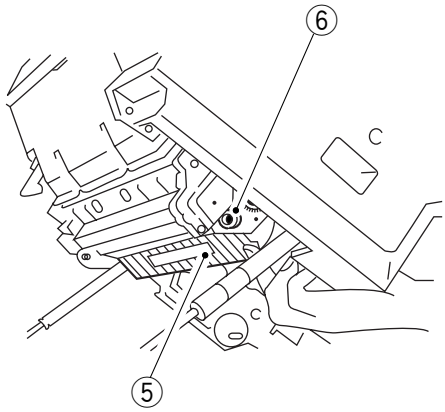

Figure 6-204

6) Pull out the upper fixing unit toward the rear.

Caution:
Do not touch the fixing film.

3. Detaching the Fixing Film, Tension Roller, Drive Roller, Fixing Cleaning Brush, and Fixing Heater Unit

Caution:
Before going through the steps, make sure that the heater and the heater connector have cooled sufficiently.

1) Detach the upper fixing unit. (See “2. Detaching the Upper Fixing Unit on p. 6-12.”)
2) Remove the screw ①, and detach the heater connector ② (front).

Caution:
If you are removing the screw ①, you must first make sure that the heater connector has cooled.
The screw ① is a special screw; take care not to drop it.

COPYRIGHT © 1997 CANON INC. CANON NP6218 REV. 0 MAY 1997 PRINTED IN JAPAN (IMPRIME AU JAPON)

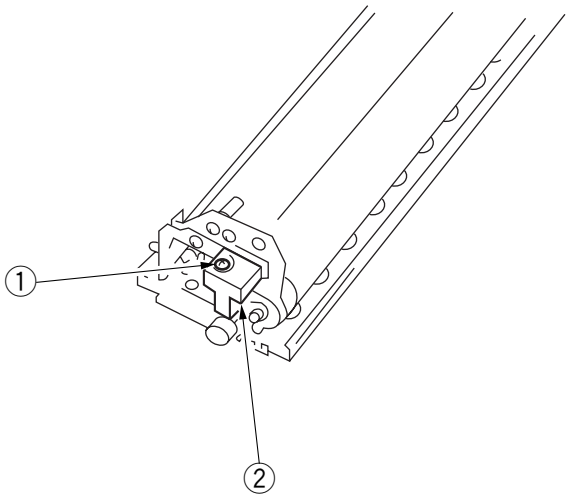

Figure 6-205

3) Remove the two E-rings ③ and the two washers ④.
4) Remove the screw ⑤.

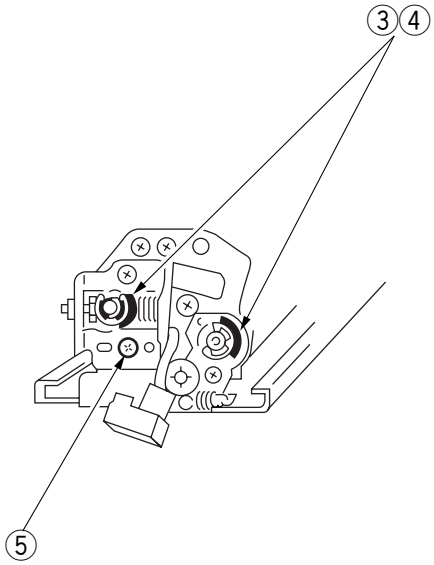

Figure 6-206

COPYRIGHT © 1997 CANON INC.
CANON NP6218 REV. 0 MAY 1997 PRINTED IN JAPAN (IMPRIME AU JAPON)

5) Release the pressure by positioning the screw ⑤ as shown in Figure 6-207.
6) Remove the screw ⑥, and detach the bushing ⑦.

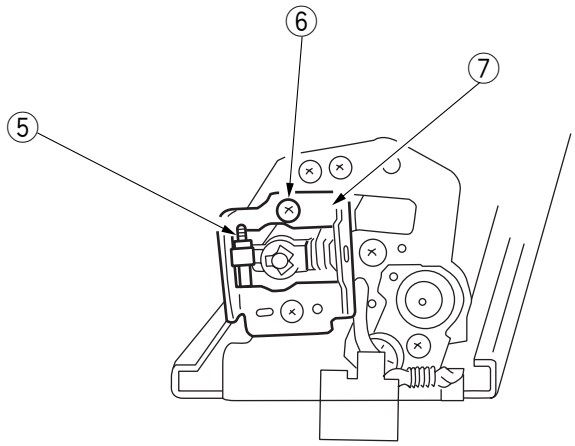

Figure 6-207

7) Remove the screw ⑧, and detach the bushing ⑨; then, detach the upper fixing top side plate ⑩.

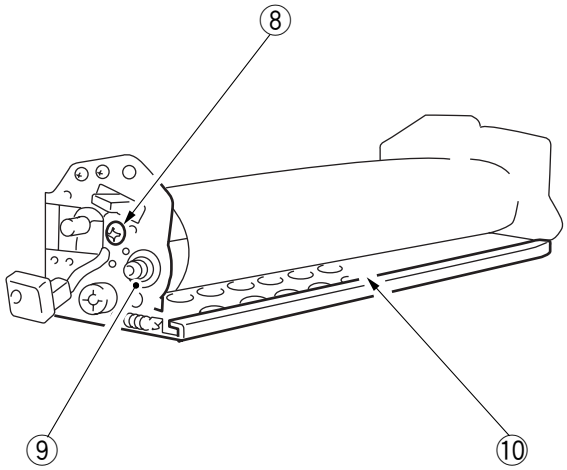

Figure 6-208

COPYRIGHT © 1997 CANON INC.

8) Release the pressure by positioning the screw ⑥ and the bushing (rear) as shown in Figure 6-209.

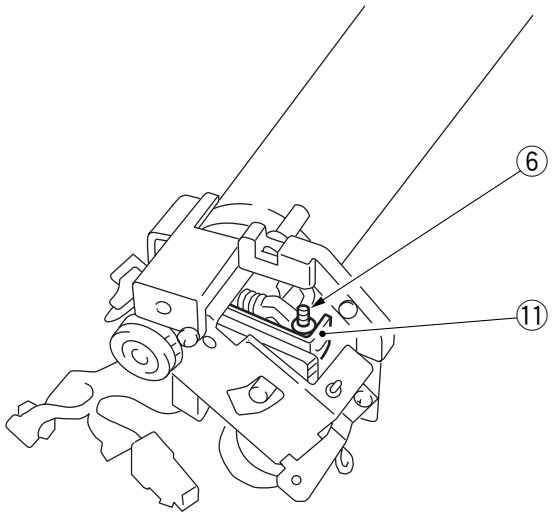

Figure 6-209

9) Pull out the fixing film ⑫ toward the front.
10) Detach the tension roller ⑬.

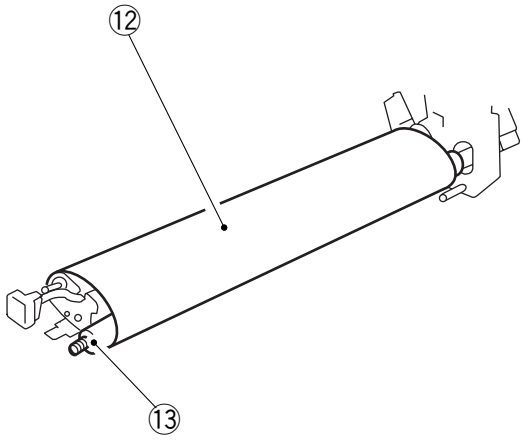

Figure 6-210

COPYRIGHT © 1997 CANON INC.
CANON NP6218 REV. 0 MAY 1997 PRINTED IN JAPAN (IMPRIME AU JAPON)

11) Remove the screw ⑭, and detach the fixing film sensor ⑮.

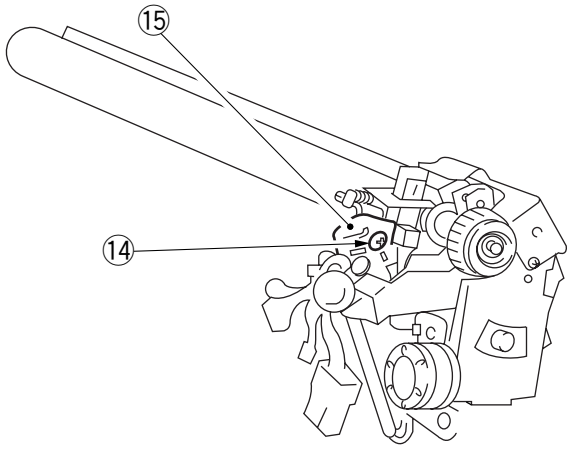

Figure 6-211

12) Remove the E-ring ⑯.

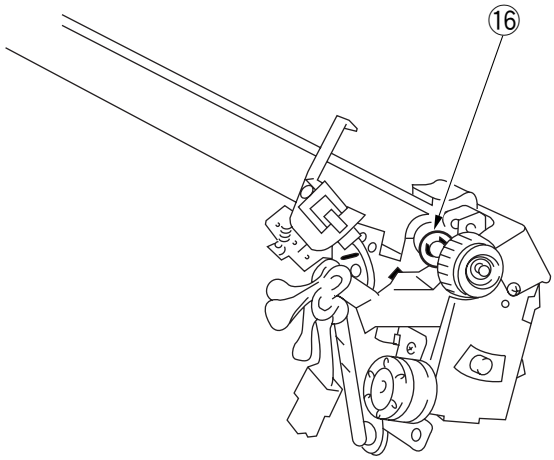

Figure 6-212

COPYRIGHT © 1997 CANON INC. CANON NP6218 REV. 0 MAY 1997 PRINTED IN JAPAN (IMPRIME AU JAPON)

13) Remove the washer ⑰ and the bushing ⑱, and detach the drive roller ⑲.

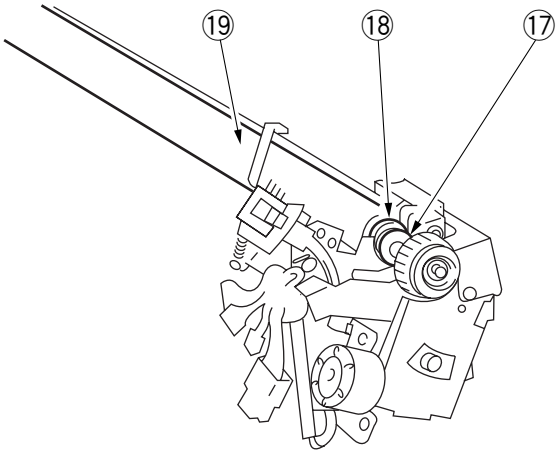

Figure 6-213

14) Life the delivery side, and detach the fixing cleaning brush ⑳.

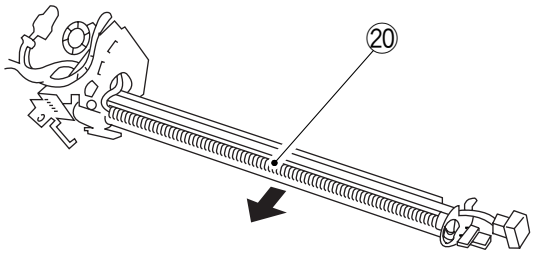

Figure 6-214

15) Remove the two screws ㉑, and detach the cover ㉒.

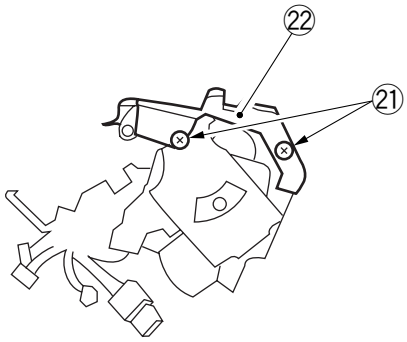

Figure 6-215

COPYRIGHT © 1997 CANON INC.
CANON NP6218 REV. 0 MAY 1997 PRINTED IN JAPAN (IMPRIME AU JAPON)

16) Remove the two screws ㉓, and detach the fixing film motor unit ㉔.

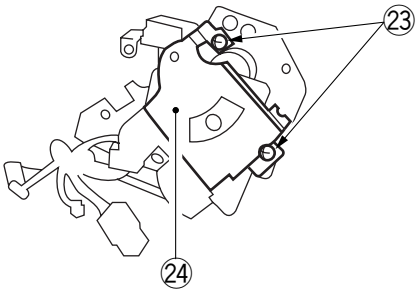

Figure 6-216

17) Remove the screw ㉕, and detach the cover ㉖.
18) Remove the screw ㉗, and disconnect the heater connector ㉘.

Caution:

If you are removing the screw ㉗, you must first make sure that the heater connector has cooled.

The screw ㉗ is a special screw; take care not to lose it.

19) Remove the C-ring ㉙, and detach the bushing ㉚, leaving the fixing heater behind.

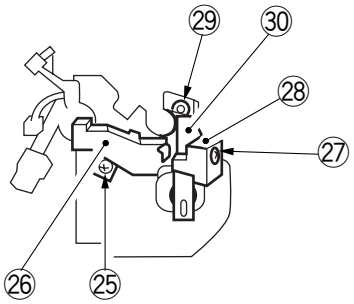

Figure 6-217

Caution:

Do not touch the surface of the heater.

COPYRIGHT © 1997 CANON INC. CANON NP6218 REV. 0 MAY 1997 PRINTED IN JAPAN (IMPRIME AU JAPON)

4. Points to Note When Attaching the Fixing Film

- Make sure that the cut off is toward the rear.
- Make sure that the front side is aligned with the groove of the heater.

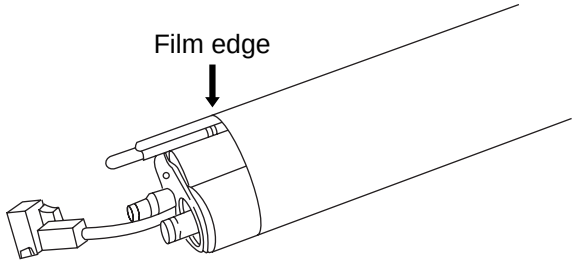

Figure 6-218

5. Points to Note When Attaching the Heater Connector

- When attaching the heater connector to the fixing heater, take care not to damage the heater.
- When tightening the screw, hold the connector taking care that its top and bottom are free of pressure; be careful not to tighten the screw excessively.

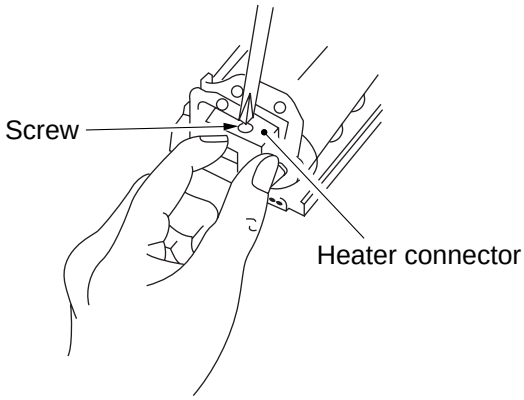

Figure 6-219

COPYRIGHT © 1997 CANON INC.
CANON NP6218 REV. 0 MAY 1997 PRINTED IN JAPAN (IMPRIME AU JAPON)

6. Points to Note When Replacing the Fixing Upper Unit

• If you have replaced the upper fixing unit, you must store the resistance of the heater in service mode (No. 304; see p. 10-31.)

Caution:
Do not touch the surface of the heater.

7. Adjusting the Fixing Film Drive Roller Pressure

If a fixing fault occurs, be sure to go through the following to adjust the pressure of the drive roller.

1) Detach the fixing cover.
2) Detach the inside cover of the copier's front side.
3) Close the copier's upper body, and insert the door switch actuator.
4) Press the service mode switch (SW302).
   • The copier enters service mode, and the display indicates '1'.
5) Press '4' on the keypad.
   • The display indicates '4'.
6) Press the AE key.
   • The copier enters operation check mode, and the display indicates '401'.
7) Press '5' on the keypad.
   • The display indicates '405'.
8) Press the Start key.
   • The copier enters fixing film initial rotation mode (405) to return the fixing film to its proper position.
   • The fixing film stops automatically as soon as it reaches its proper position.
   • The copier indicates the position of the film in the copy density indicator.
9) Open the copier's top body.
10) Check that the arrow ① is at the middle of the memory as shown in Figure 6-220.

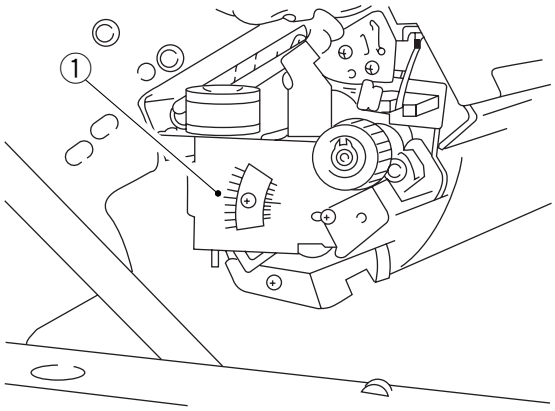

Figure 6-220 (rear view)

11) Close the copier's top body, and activate service mode.
12) Press '4' on keypad; when the display indicates '4', press the AE key.

COPYRIGHT © 1997 CANON INC. CANON NP6218 REV. 0 MAY 1997 PRINTED IN JAPAN (IMPRIME AU JAPON)

13) Press '4' on the keypad; when the display indicates '404', press the Start key.
- The copier enters fixing tension roller mode (404).
- The fixing tension roller becomes fixed, and the fixing film rotates idly.
- The count indicator indicates how long the fixing film sensor has remained on.

Caution:
If the copy count indicator keeps indicating '0' or '528' during adjustment, immediately press the Stop key to de-activate service mode.

If the copy countis '180' or higher and '348' or lower and has not changed, go to step 17). Or, if 10's and 100's do not change, go to step 17);
14) Loosen the fixing screw ② slightly; i.e., move it to the left about 1 mm.
15) Turn the adjusting screw ③ so that the copy count is '180' or higher' and '348' or lower.

Caution:
Adjust so that 10's and 100's will not change; ignore 1's may change ±5.)

- A clockwise turn decreases the reading.
- A counterclockwise turn increases the reading.

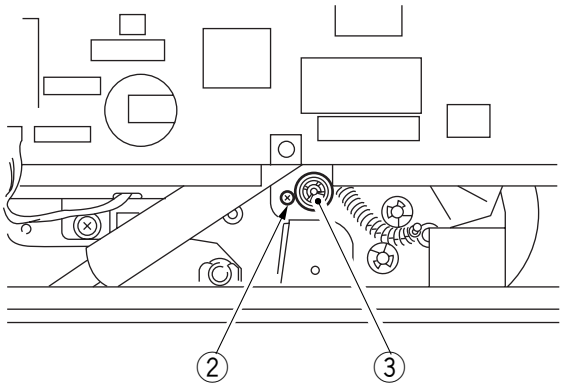

Figure 6-221

16) When the reading in the copy counter is appropriately correct, tighten the screw ②; make sure that the reading is appropriate after tightening the screw.
17) Press the Start key.
- The copier enters check mode (404), and the fixing film rotates idly for about 2.5 min; check that the fixing film has not shifted from the adjusted position.
- The copy count indicator indicates "00" or "n0"; if "n0" is indicated, repeat steps starting with 13).
  If "00" is indicated, repeat steps 4) through 10).

18) Attach the cover.

COPYRIGHT © 1997 CANON INC.
CANON NP6218 REV. 0 MAY 1997 PRINTED IN JAPAN (IMPRIME AU JAPON)

8. Detaching the Lower Fixing Unit

1) Detach the delivery roller. (See “1. Detaching the Delivery Roller.” on p. 6-28.)
2) Detach the delivery cover.
3) Remove the screw ①, and detach the fixing shutter open/close block ②.

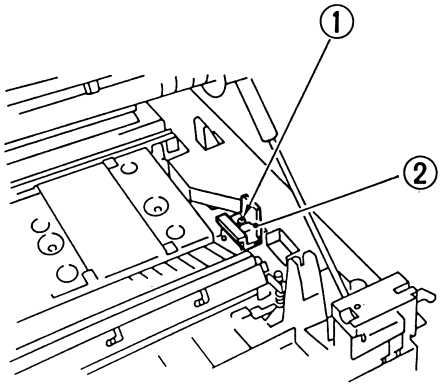

Figure 6-222

4) Remove the E-ring ③, and detach the lower fixing unit ④.

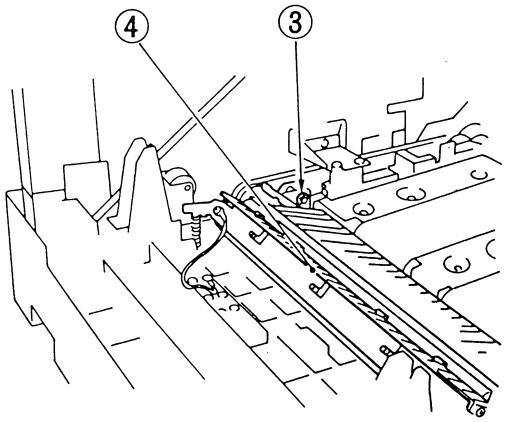

Figure 6-223

Caution:
Do not touch the surface of the fixing cleaning roller or the lower fixing roller.

COPYRIGHT © 1997 CANON INC. CANON NP6218 REV. 0 MAY 1997 PRINTED IN JAPAN (IMPRIME AU JAPON)

9. Detaching the Separation Claw/Lower Fixing Claw and Fixing Cleaning Roller

1) Detach the front door.
2) Remove the screw ①, and detach the separation claw unit ②.

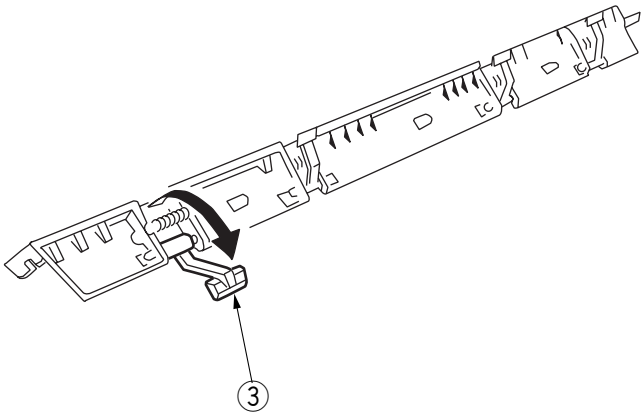

Figure 6-224

3) Detach the separation claw ③ from the separation claw unit.

Caution:
Take care not to misplace the spring.

4) Detach the lower fixing roller ④ together with the bushing ⑤.

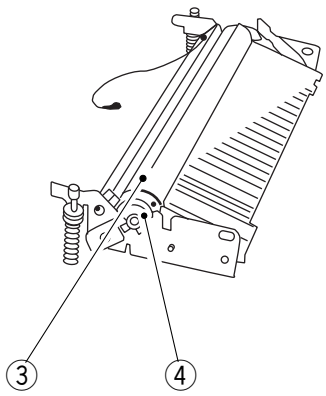

Figure 6-225

COPYRIGHT © 1997 CANON INC.
CANON NP6218 REV. 0 MAY 1997 PRINTED IN JAPAN (IMPRIME AU JAPON)

5) Detach the bushing ⑥ found at the front, and detach the HIGH-TEMPERATURE WARNING cover ⑦.

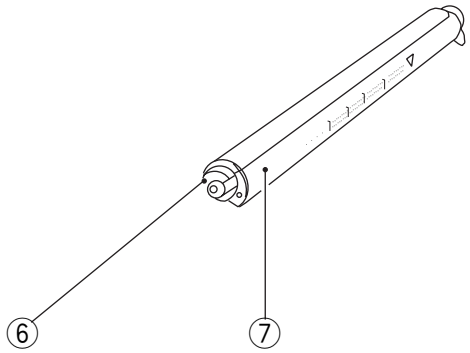

Figure 6-226

6) Lift the fixing cleaning roller to detach.

10. Adjusting the Lower Fixing Roller Nip

If fixing faults occur, make the following adjustments.
The nip is correct if as shown below; otherwise, turn the bolt to make adjustments.

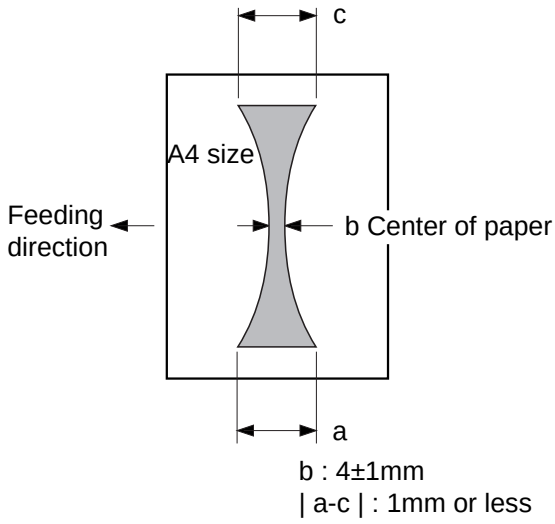

Figure 6-227

Note:
a and c represent points 10 mm from both ends of copy paper.

COPYRIGHT © 1997 CANON INC.

a. Measuring the Nip

Measure the nip immediately after turning on the copier before the beginning of a work day.

1) Open the copyboard cover, and make a solid black copy in A4.
2) Place the copy in the multifeeder with the solid black face up.
3) Press the service mode switch (SW302) using a hex key.
   • The copier enters service mode, and the display indicates '1'.
4) Press '4' on the keypad.
   • The display indicates '4'.
5) Press the AE key.
   • The copier enters operation/check mode, and the display indicates '401'.
6) Press '6 on the keypad.
   • The display indicates '406'.
7) Press the Start key.
   • The above operations cause the multifeeder to pick up paper so that you can take measurements as in Figure 6-227; the paper will then be discharged.

Reference:

The copy paper stops while it is half way under the fixing roller; and, about 10 sec later, it will be automatically discharged.

8) Measure the nip.

COPYRIGHT © 1997 CANON INC.
CANON NP6218 REV. 0 MAY 1997 PRINTED IN JAPAN (IMPRIME AU JAPON)

B. Delivery Assembly

1. Detaching the Delivery Roller
1) Open the copier's top body.
2) Remove the E-ring ①.
3) Shift the bushing ② (rear) and bushing ③ (front); then, detach the delivery roller ④.

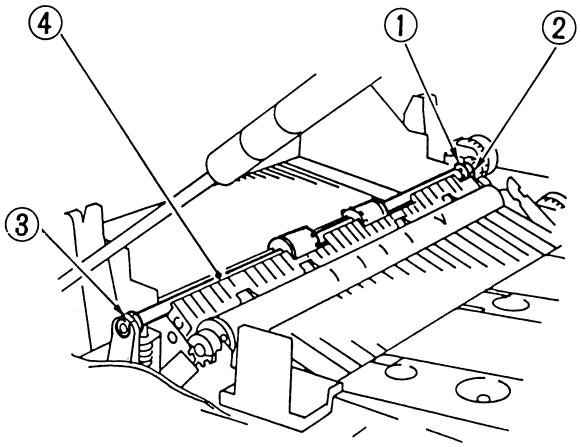

Figure 6-228

COPYRIGHT © 1997 CANON INC.

COPYRIGHT © 1997 CANON INC.
CANON NP6218 REV. 0 MAR. 1997 PRINTED IN JAPAN (IMPRIME AU JAPON)

CHAPTER 7

EXTERNALS/AUXILIARY MECHANISMS

This chapter shows the copier's external parts, and explains the principles used for the copier's various control mechanisms in view of the functions of electrical and mechanical units and in relation to their timing of operation. It also shows how these units may be disassembled/assembled and adjusted.

I. POWER SUPPLY 7-1
A. Outline 7-1
B. Power Supply Circuit Assembly.....7-2
C. Detecting Errors in the Power Supply PCB 7-4
D. Protection Mechanisms for the Power Supply Circuit 7-5
II. DISASSEMBLY AND ASSEMBLY 7-6
A. External Covers 7-6
B. Control Panel 7-9
C. Fans 7-10
D. Main Motor/Main Drive Assembly..7-11
E. Cassette unit 7-14
F. DC Controller PCB 7-17
G. Composite Power Supply PCB.....7-18
H. AE Sensor PCB.....7-21
I. Intensity Sensor PCB 7-21

COPYRIGHT © 1997 CANON INC. CANON NP6218 REV. 0 MAY 1997 PRINTED IN JAPAN (IMPRIME AU JAPON)

I. POWER SUPPLY

A. Outline

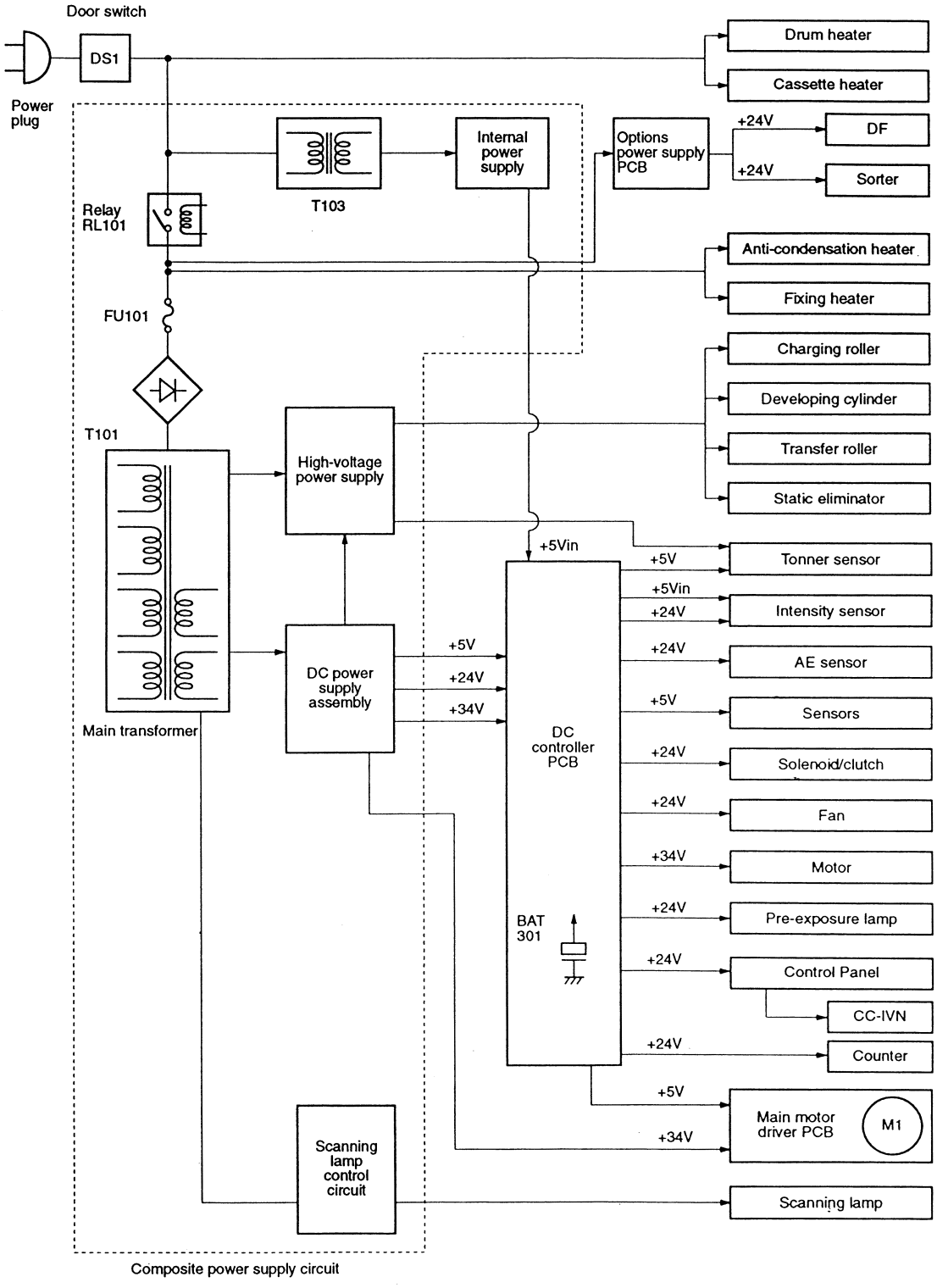

Figure 7-101

COPYRIGHT © 1997 CANON INC.
CANON NP6218 REV. 0 MAY 1997 PRINTED IN JAPAN (IMPRIME AU JAPON)

B. Power Supply Circuit Assembly

The copier's power supply assembly is a composite power supply circuit which uses a single main transformer (T101) as the source of DC power, high-voltage power, and power for the fluorescent lamp.

AC power is supplied to the DC power supply assembly when the power switch (SW829) and the door switch are turned on.

When the power switch on the control panel is pressed, signals are sent to the composite power supply assembly to generate internal power supply +5 Vin.

In response, the microprocessor (Q512) turns on to turn on relays RL101 and RL501 to supply power.

The DC power supply generates +34 V, +24 V, and +5 V.

When the power switch is pressed for a second time, the microprocessor turns off RL501 and the main transformer; thereafter, it turns off Q503 to turn off RL101, thereby cutting off +5 Vin.

The condition deprives the DC controller circuit of DC power; to compensate for the absence of power, a lithium battery (BAT301) is provided to back up the data in the RAM (Q307) in the DC controller circuit.

Caution:

Voltage is supplied up to the AC power supply even when the power is off.

⚠ Caution:

Replace the lithium battery only with the one listed in the Parts Catalog. Use of a different battery may present a risk of fire or explosion. The battery may present a fire or chemical burn hazard if mistreated. Do not recharge, disassemble, or dispose of it in fire.

Keep the battery out of reach of children and discare any used battery promptly.

Reference:

The tolerances for the DC voltage are as follows:

- +34 V ±20%
- +24 V ±5%
- + 5 V ±5%

However, the above applies only when the error in the AC input is limited to ±10%.

COPYRIGHT © 1997 CANON INC.
CANON NP6218 REV. 0 MAY 1997 PRINTED IN JAPAN (IMPRIME AU JAPON)

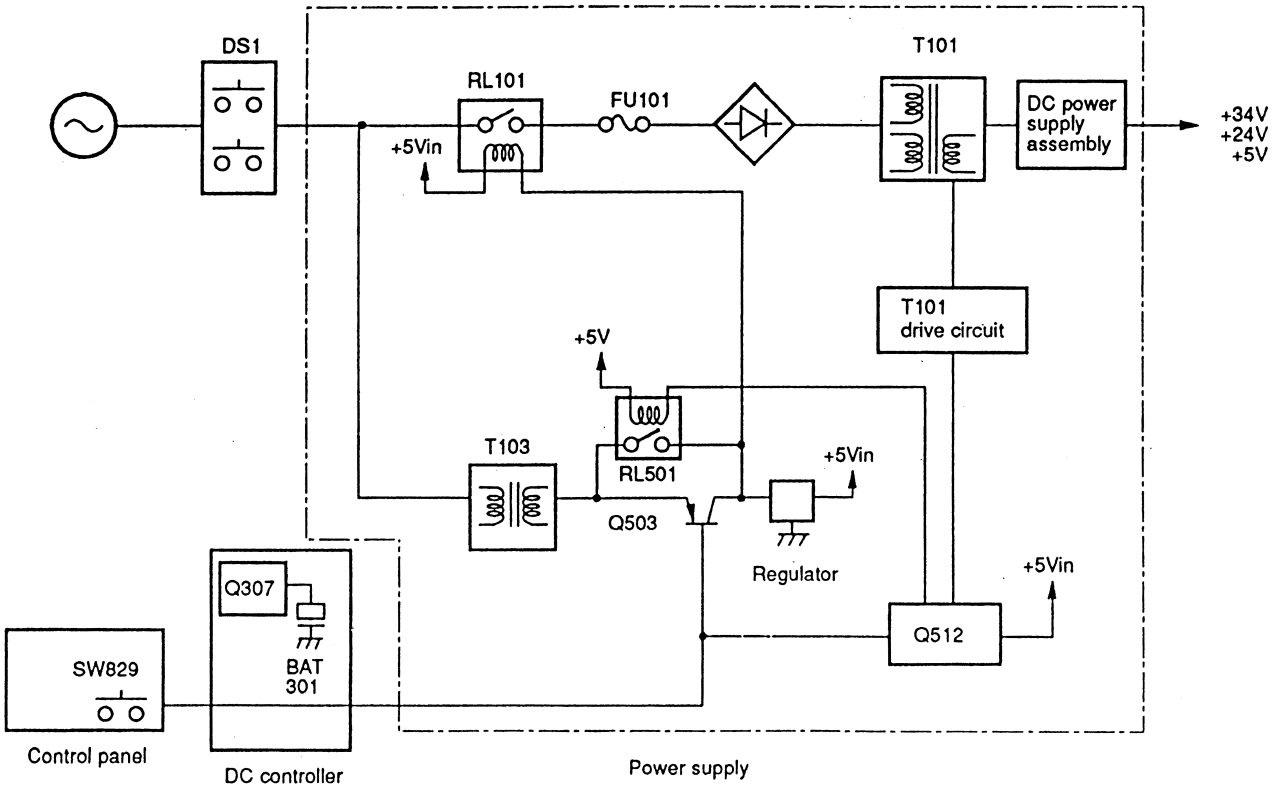
DS1
RL101
FU101
T101
DC power supply assembly
+34V
+24V
+5V
+5Vin
T101 drive circuit
+5V
T103
RL501
+5Vin
Q503
Regulator
+5Vin
Q307
BAT 301
SW829
Q512
Control panel
DC controller
Power supply

Figure 7-102

C. Detecting Errors in the Power Supply PCB

The microprocessor (Q512) on the composite power supply PCB either displays an error message on the display by communicating with the DC controller or flashes LED501 to indicate the presence of an error if any of the following is identified.

1. Communication Error between DC Controller PCB and Composite Power Supply PCB

If an error occurs in the communication between the DC controller PCB and the composite power supply PCB, E240 is indicated as soon as it is detected by the microprocessor on the DC controller PCB. If an error is detected by the composite power supply, the LED is flashed at intervals of 5 sec.

2. Error in the High-Voltage Output Data

If the difference between the setting associated with the high voltage generated by the microprocessor (Q512) on the composite power supply PCB and the control value is greater than the specified value, the microprocessor (Q512) sends error data to the DC controller PCB, which in turn indicates E064.

3. Low-Voltage Output Data Error

If the difference between the setting associated with the low voltage generated by the microprocessor (Q512) on the composite power supply PCB and the control value is greater than the specified value, the microprocessor (Q512) communicates with the DC controller PCB, which in turn indicates E803.

4. Overcurrent in the Low-voltage Power Supply

If the composite power supply PCB identifies overcurrent because of an error in a DC load or wire is trapped, the LED is flashed at intervals of 2 sec for 20 sec.

Reference:

Normally, the LED is flashing at intervals of 0.5 sec.

COPYRIGHT © 1997 CANON INC.
CANON NP6218 REV. 0 MAY 1997 PRINTED IN JAPAN (IMPRIME AU JAPON)

D. Protection Mechanisms for the Power Supply Circuit

The composite power supply PCB is equipped with an overcurrent detection circuit; if a short circuit occurs in a load for some reason, the protection mechanism is activated to stop the output.

When the output is cut out, you may reset the output by opening the front door to turn off the door switch, correcting the load, and turning on the door switch and power switch (SW829) once again.

Caution:

Be sure to disconnect the connector (J4) of the fixing heater before resetting the output.

Repeated short circuiting and resetting can cause the built-in fuse (FU101) to blow.

COPYRIGHT © 1997 CANON INC.
CANON NP6218 REV. 0 MAY 1997 PRINTED IN JAPAN (IMPRIME AU JAPON)

II. DISASSEMBLY AND ASSEMBLY

This section explains mechanical characteristics and describes how to disassemble/assemble the machine.

Be sure to observe the following whenever disassemblig/assembling the machine:

1. ⚠ Disconnect the power plug before starting the work.
2. Unless otherwise shown, assemble the parts by reversing the steps given to disassemble them.
3. Identify each screw by type (length, diameter) and location.
4. A washer is used for one of the mounting screws on the rear cover to protect against static electricity; be sure to use the washer when assembling the part.
5. A washer is used for some mounting screws (for grounding wire, varistor) to ensure correct electrical continuity; be sure to use the washer when assembling the part.
6. As a rule, do not operate the machine while any of its parts are removed.
7. When sliding out the duplexing unit or the fixing assembly, be sure to turn off the front door switch or the power switch.

A. External Covers

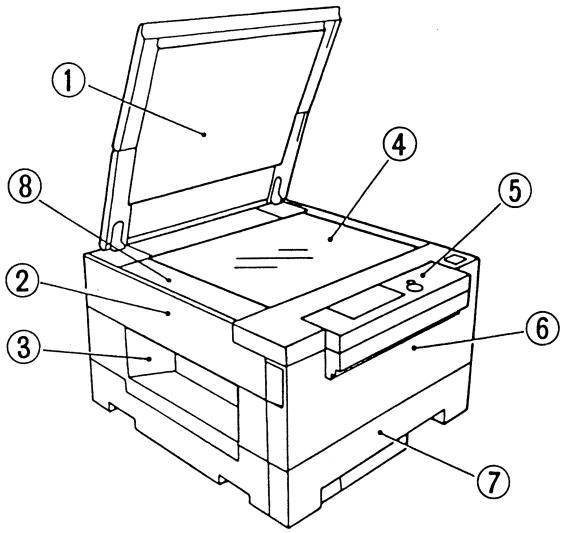

① Copyboard cover
② Left cover
③ Delivery cover
④ Copyboard
⑤ Control panel
⑥ Front door
⑦ Cassette
⑧ Upper left cover

Figure 7-201

COPYRIGHT © 1997 CANON INC.
CANON NP6218 REV. 0 MAY 1997 PRINTED IN JAPAN (IMPRIME AU JAPON)

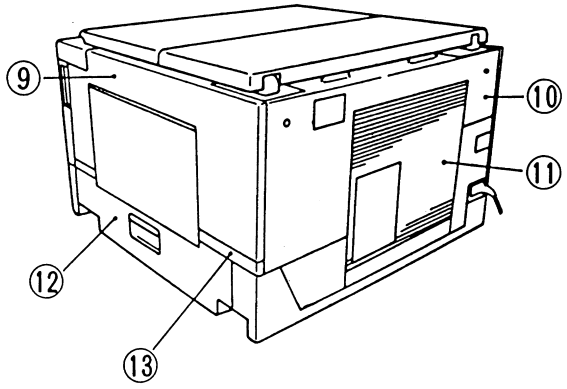

⑨ Right cover
⑩ Upper rear cover
⑪ Rear cover
⑫ Lower right cover
⑬ Lower right back

Figure 202 cover

Note:
Detach the covers when cleaning, inspecting, or repairing the inside of the copier as necessary.
Covers that may be detached merely by removing their respective mounting screws are omitted from the discussion.

Caution:
When attaching the rear cover, be sure that the harness is housed inside the upper rear cover so that its portion shown in the diagram will not spring out the cover or the harness will not come into contact with the connector plate.

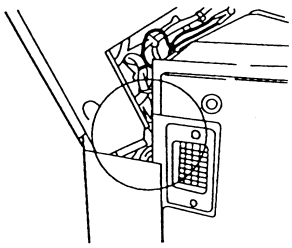

Figure 7-203

COPYRIGHT © 1997 CANON INC.

When attaching the copyboard glass, make sure that it is firmly in contact with the vertical size plate without a gap to prevent intrusion of foreign matter.

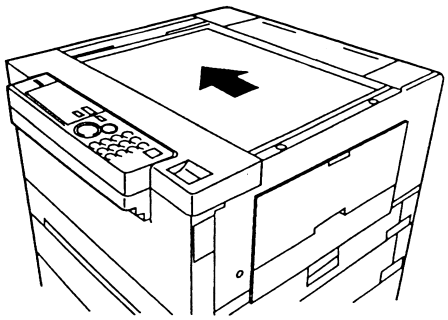

Figure 7-204

COPYRIGHT © 1997 CANON INC.
CANON NP6218 REV. 0 MAY 1997 PRINTED IN JAPAN (IMPRIME AU JAPON)

B. Control Panel

1. Detaching the Control Panel

1) Detach the copyboard glass.
2) Detach the upper left cover.
3) Open the front door.
4) Pull the copier's open/close lever to open the copier.
5) Detach the upper rear cover.
6) Detach the right cover.
7) Detach the left cover.
8) Remove the five screws ①, and detach the inside cover ②.

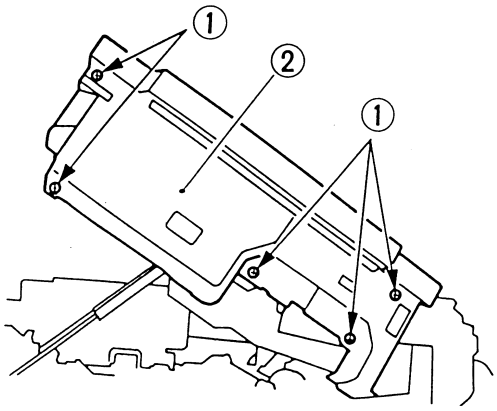

Figure 7-205

9) Disconnect the two connectors ④ (J309, J310) on the DC controller PCB; then, detach the control panel ⑤.

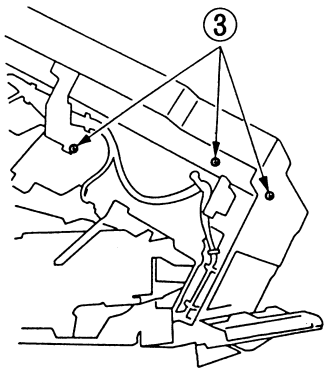

Figure 7-206

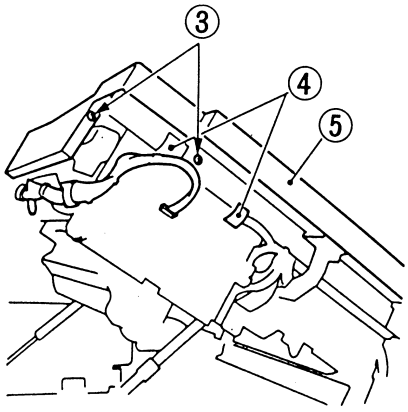

Figure 7-207

COPYRIGHT © 1997 CANON INC. CANON NP6218 REV. 0 MAY 1997 PRINTED IN JAPAN (IMPRIME AU JAPON)

C. Fans

1. Detaching the Exhaust Fan

1) Open the front door.
2) Pull the copier's open/close lever to open the copier.
3) Detach the DC controller PCB. (See "1. Detaching the DC Controller PCB" on p. 7-17.)
4) Remove the screw ① at the copier's rear, and remove the two screws ② at the front.

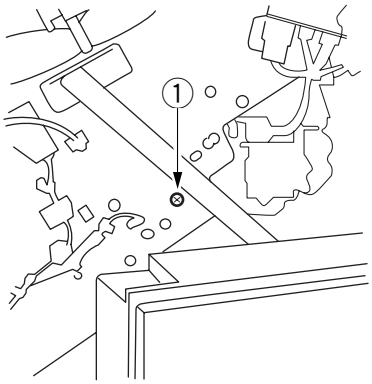

Figure 7-208

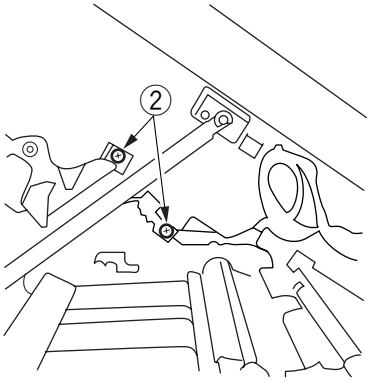

Figure 7-209

5) Pull out the exhaust fan assembly ③ toward the front while supporting it.

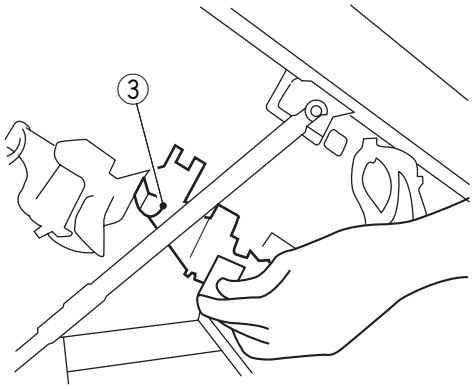

Figure 7-210

6) Remove the four screws ④, and detach the exhaust fan ⑤.

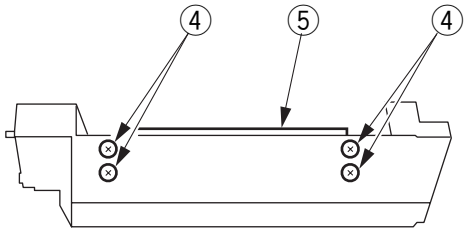

Figure 7-211

COPYRIGHT © 1997 CANON INC.
CANON NP6218 REV. 0 MAY 1997 PRINTED IN JAPAN (IMPRIME AU JAPON)

D. Main Motor/Main Drive Assembly

1. Detaching the Main Motor Unit

1) Detach the rear cover.
2) Disconnect the two connectors ①, and remove the three screws ②; then, detach the main motor unit ③.

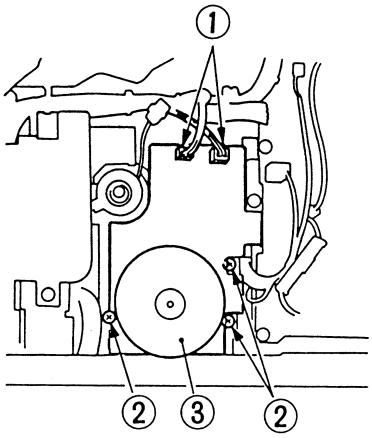

Figure 7-212

2. Detaching the Main Drive Assembly

1) Open the front door.
2) Pull out the drum cartridge.
3) Detach the multifeeder unit.
4) Detach the rear cover.
5) Detach the main motor.
6) Remove the clip ring ①, and disconnect the connector ②; then, detach the registration clutch ③.

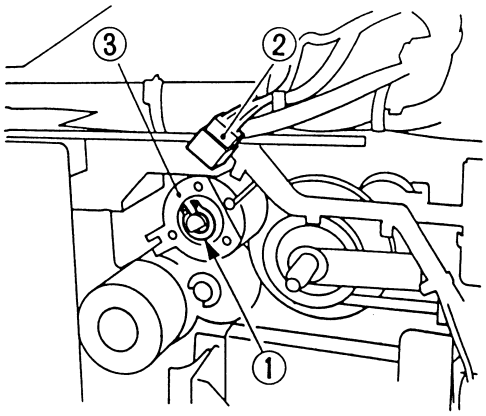

Figure 7-213

COPYRIGHT © 1997 CANON INC.

7) Remove the screw ④, and detach the composite power supply support plate ⑤.

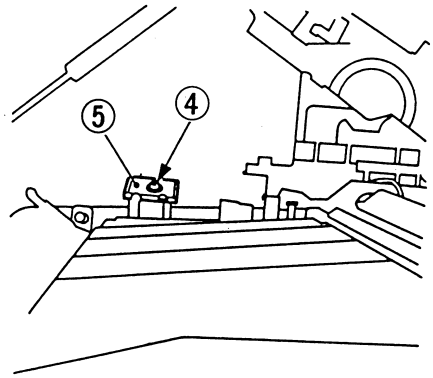

Figure 7-214

8) Detach the belt from the belt tensioner ⑥ of the fixing drive assembly.

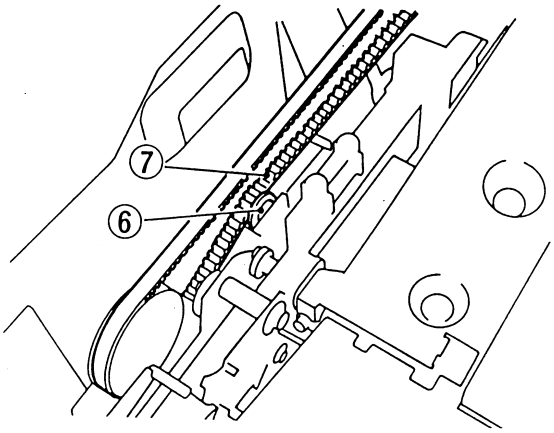

Figure 7-215

9) Turn the pulley ⑧ clockwise, and detach the belt ⑨.

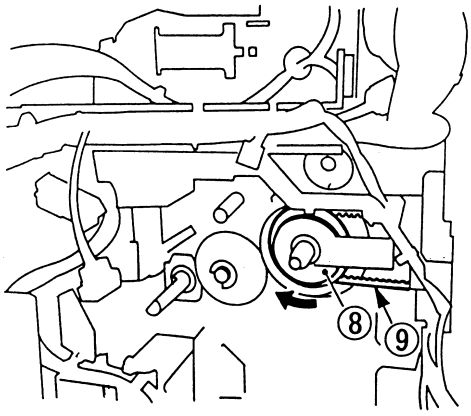

Figure 7-216

COPYRIGHT © 1997 CANON INC.
CANON NP6218 REV. 0 MAY 1997 PRINTED IN JAPAN (IMPRIME AU JAPON)

10) Remove the E-ring ⑩ and clip ring ⑪; then, detach the bushing ⑫. In this condition, detach the gear and pulley ⑬ from the main drive assembly.

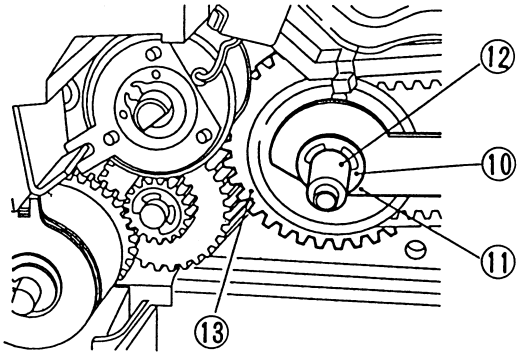

Figure 7-217

3. Routing the Drive Belt

Route the drive belt attaching them to the pulley and the tensioner as shown in Figure 4-218.

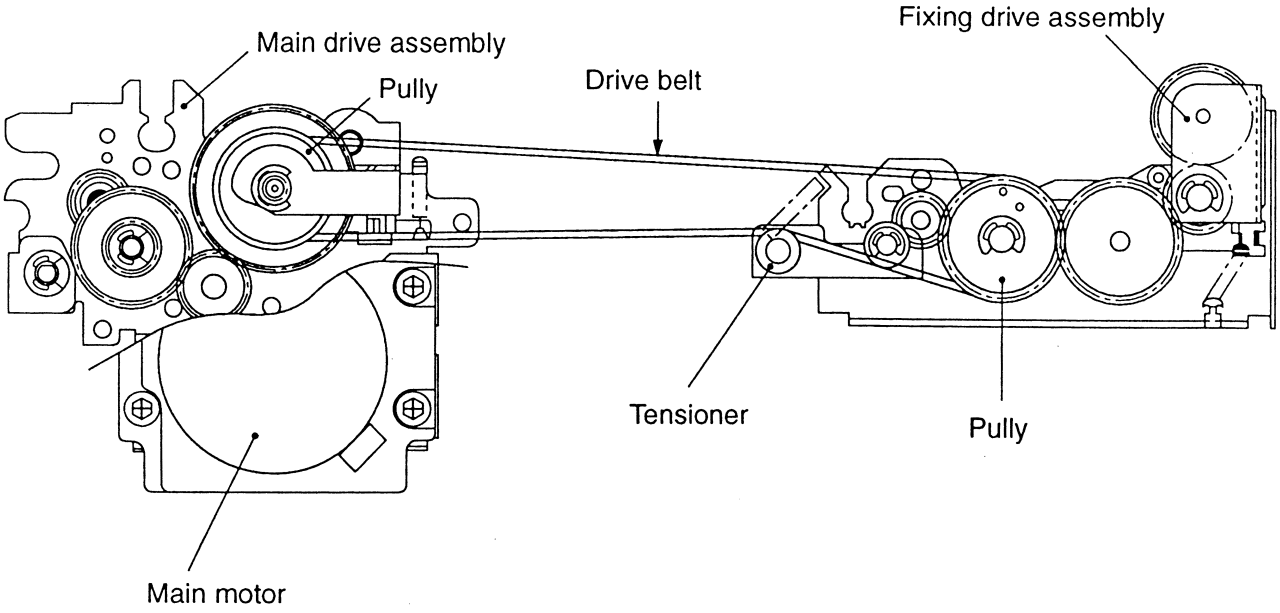

Figure 7-218

COPYRIGHT © 1997 CANON INC.

E. Cassette unit

1. Detaching the Pick-Up Drive Unit

1) Detach the rear cover and right cover.
2) Remove the screw ①.

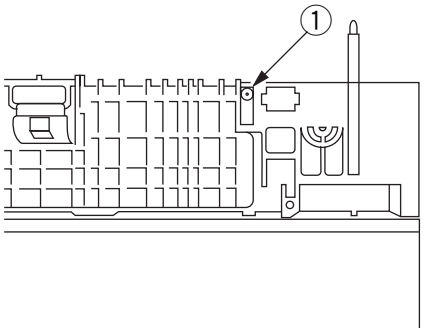

Figure 7-219

3) Remove the screw ②, and detach the harness guide ③.

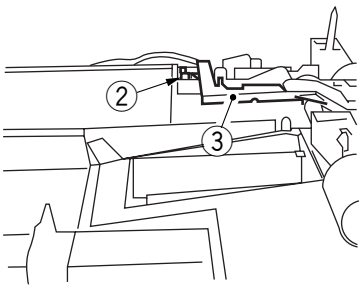

Figure 7-220

COPYRIGHT © 1997 CANON INC.
CANON NP6218 REV. 0 MAY 1997 PRINTED IN JAPAN (IMPRIME AU JAPON)

4) Remove the four screws ④, and disconnect the two connectors ⑤; then, detach the pick-up drive unit ⑥.

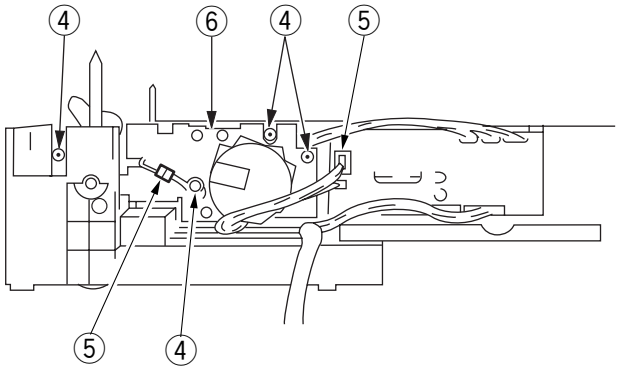

Figure 7-221

2. Detaching the Cassette Motor

1) Detach the rear cover.
2) Remove the two screws ①, and disconnect the connector ② (J114); then, detach the motor ③.

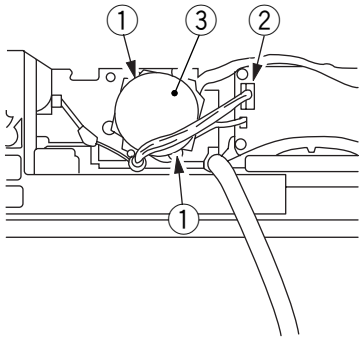

Figure 7-222

COPYRIGHT © 1997 CANON INC. CANON NP6218 REV. 0 MAY 1997 PRINTED IN JAPAN (IMPRIME AU JAPON)

3. Detaching the Cassette Driver PCB

1) Detach the rear cover.
2) Disconnect all connectors from the cassette driver PCB ①.
3) Remove the three screws ②, and detach the driver PCB ①.

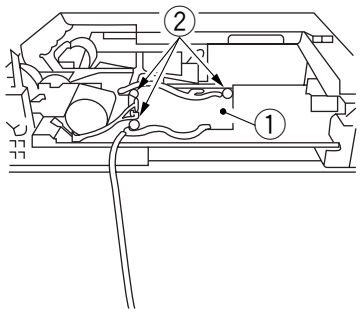

Figure 7-223

COPYRIGHT © 1997 CANON INC.
CANON NP6218 REV. 0 MAY 1997 PRINTED IN JAPAN (IMPRIME AU JAPON)

F. DC Controller PCB

1. Detaching the DC Controller PCB

1) Disconnect the connector of the DC controller.
2) Remove the four screws ①, and detach the DC controller PCB together with its mount.

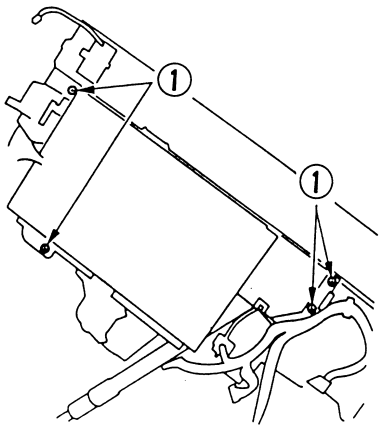

Figure 7-224

2. Points to Note When Replacing the DC Controller PCB

- When sending the DC controller PCB to the workshop or factory, put it in a conducting bag while keeping it intact with the mount. Use a conducting bag whose one side is transparent, and make sure that the face of the DC controller PCB shows through the transparent side of the bag.
- After replacement, perform following; see p. 7-20:
  ① enter the value recorded on the service label;
  ② adjust the multifeeder paper width sensor;
  ③ adjust the intensioy of the scanning lamp; and
  ④ adjust AE.

COPYRIGHT © 1997 CANON INC.

G. Composite Power Supply PCB

1. Detaching the Composite Power Supply PCB

1) Detach the lower rear cover and the delivery cover.
2) Remove the screw ①, and detach the switch support plate ②.
3) Remove the screw ③, and detach the power cord cover 1 ④.

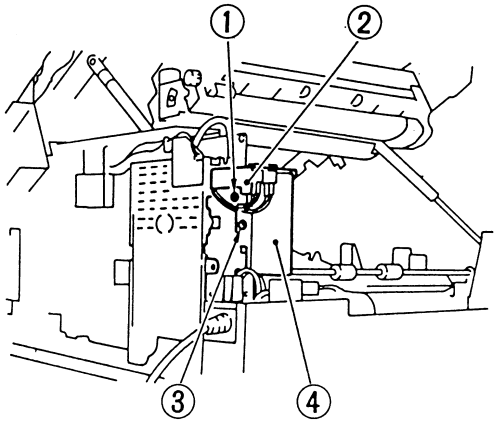

Figure 7-225

4) Remove the screw ⑤, and shift the power cord cover 2 ⑥.
5) Disconnect the AC connector ⑦, and remove the screw ⑧ to detach the grounding wire ⑨.

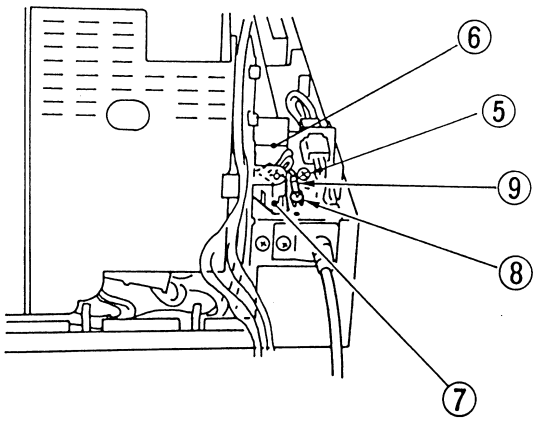

Figure 7-226

COPYRIGHT © 1997 CANON INC.
CANON NP6218 REV. 0 MAY 1997 PRINTED IN JAPAN (IMPRIME AU JAPON)

6) Remove the three screws ⑩, and detach the power cord mount ⑪.

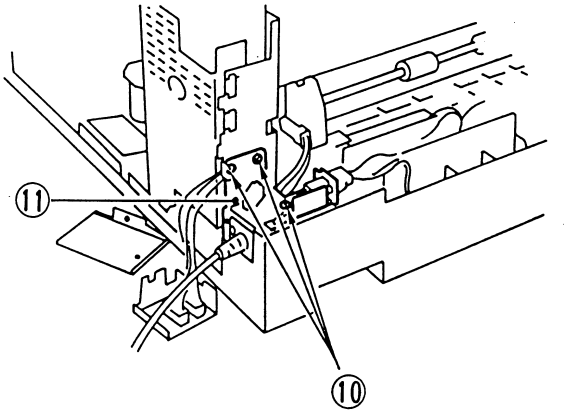

Figure 7-227

7) Disconnect all connectors from the composite power supply PCB.
8) Remove the screw ⑫, and detach the grounding wire ⑬; then, detach the harness guide ⑭ from the power supply side plate.

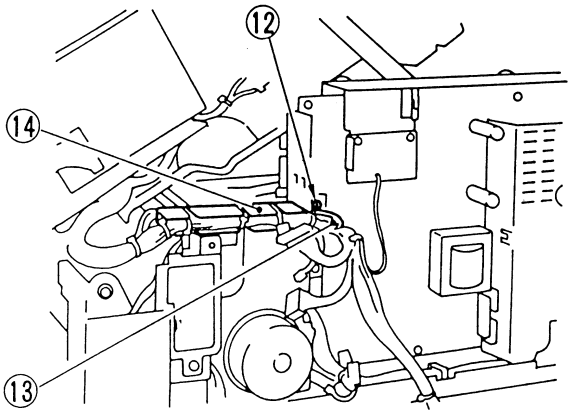

Figure 7-228

9) Remove the screw ⑮, and detach the composite power supply PCB ⑯.

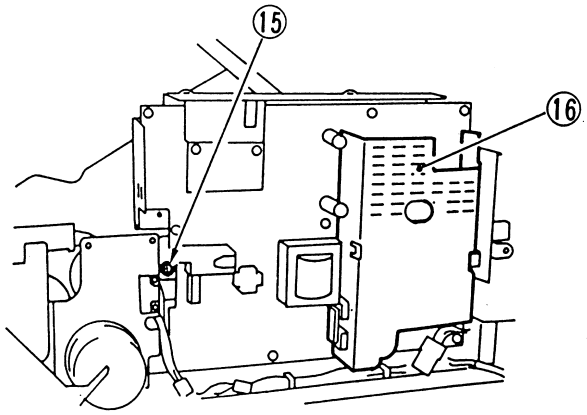

Figure 7-229

COPYRIGHT © 1997 CANON INC.

2. Points to Note When Handling the Composite Power Supply PCB

- Some capacitors used on the PCB may retain charges even when the copier remains off. For this reason, you must take care never to short the terminals of the capacitor whenever you have detached the PCB.
- Enter the settings (Nos. 315 through 318) recorded on the label attached to the composite power supply (service part) in service mode. (See p. 10-103)

COPYRIGHT © 1997 CANON INC.
CANON NP6218 REV. 0 MAY 1997 PRINTED IN JAPAN (IMPRIME AU JAPON)

H. AE Sensor PCB

1. Points to Note When Replacing the AE Sensor

- After replacement, perform the following; see p. 10-11:
  ① Adjust AE.

I. Intensity Sensor PCB

1. Points to Note When Replacing the Intensity Sensor

- After replacement, perform the following; see p. 10-11:
  ① Adjust the intensity of the scanning lamp; and
  ② Adjust AE.

COPYRIGHT © 1997 CANON INC.
CANON NP6218 REV. 0 MAY 1997 PRINTED IN JAPAN (IMPRIME AU JAPON)

COPYRIGHT © 1997 CANON INC.
CANON NP6218 REV. 0 MAR. 1997 PRINTED IN JAPAN (IMPRIME AU JAPON)

CHAPTER 8

INSTALLATION

This chapter introduces requirements for the site of installation, and shows how the copier may be installed using step-by-step instructions.

I. SELECTING THE SITE.....8-1
II. UNPACKING AND INSTALLING THE COPIER.....8-2
- A. Unpacking and Removing Fixings.....8-2
- B. Turning On the Copier.....8-5
- C. Checking the Images and Operations.....8-8
- D. Attaching the Drum Unit.....8-9
- E. Changing the Cassette Size.....8-10

III. RELOCATING THE COPIER.....8-13
IV. REPLACING THE DRUM UNIT 8-14
V. INSTALLING THE CONTROL CARD IV N.....8-17
VI. CASSETTE HEATER KIT 5 INSTALLATION PROCEDURE.....8-19
- A. Unpacking.....8-19
- B. Installation (to a Cassette Feeding Module-A2/B2).....8-20

VII. INSTALLING THE REMOTE DIAGNOSTIC DEVICE II.....8-26
- A. Unpacking.....8-26
- B. Installation to the Copier 8-27

COPYRIGHT © 1997 CANON INC. CANON NP6218 REV. 0 MAY 1997 PRINTED IN JAPAN (IMPRIME AU JAPON)

I. SELECTING THE SITE

Keep the following in mind when selecting the site of installation; if possible, pay a visit to the user's before the delivery of the machine.

1. The site must provide a power outlet that may be used exclusively for the machine and that meets the rating ±10%.
2. The site must be 7.5°C/45.5°F to 30°C/86.0°F in temperature and 10% RH to 80% RH in humidity. In particular, avoid areas near water faucets, boilers, humidifiers, or refrigerators.
3. Avoid areas near sources of fire, areas subject to dust or ammonium gas, or areas exposed to the direct rays of the sun; if necessary, provide curtains to shut out the sun.
4. The site must be well ventilated.
5. Make sure that the floor will remain in contact with the copier's feet and will keep the copier level.
6. Make sure that there will be work space that meets the measurements shown in Figure 8-101; in other words, there must be distances A and B around the copier when measured with its front door open.

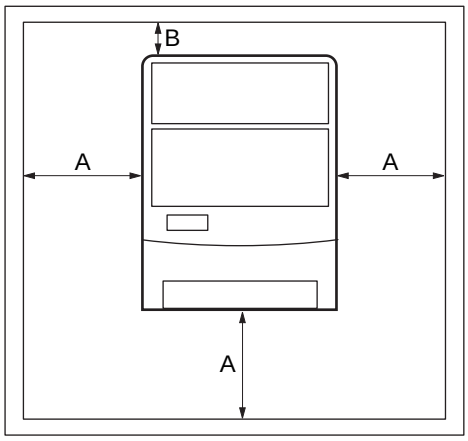

A: 50cm/19.7in
B: 10cm/ 3.9in

Figure 8-101

COPYRIGHT © 1997 CANON INC.

II. UNPACKING AND INSTALLING THE COPIER

When a metal part is brought in from a cold to warm environment, droplets of water can develop on the surface of the part. This phenomenon is called condensation, and condensation in a copier can lead to faulty images. If the copier has been moved from a cold to warm place, leave it alone for about one hour or more before unpacking it.

A. Unpacking and Removing Fixings

Step	Work	Remarks
1	Unpack the copier.	
2	Detach the plastic cover, and place the copier on the pedestal holding its grips; be sure to work in a group of two. Install the Cassette Feeding Module-B2 or -A2 (accessory) according to its Installation Procedure if the copier is to be placed on it.	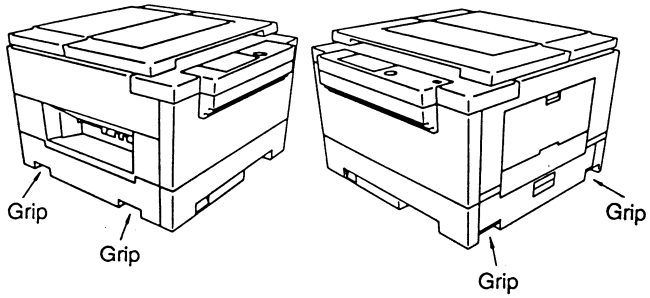
3	Open the cardboard box, and take out all the accessories.	Check that none of the following accessories is missing: • Copy tray • Cassette (Universal) • Installation Procedure • Operator's Manual
4	Remove all tape from the outside of the copier. Take out the cassette from the cardboard box, and remove the cushions from inside the cassette; then, slide the cassette into the copier.	Make sure that the paper size plate and size label (1 pc. each) is inside the cassette.
5	Remove the tape from the scanner fixing found on the outside of the left cover, remove the screw, and slide the fixing to the right to detach it to the front. • Keep the fixing stored for possible relocation of the machine.	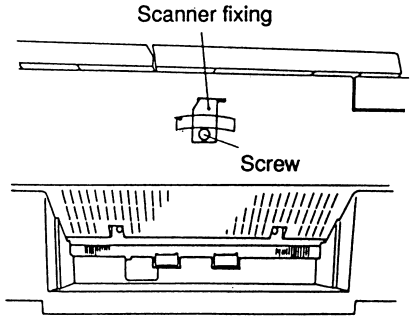

COPYRIGHT © 1997 CANON INC.
CANON NP6218 REV. 0 MAY 1997 PRINTED IN JAPAN (IMPRIME AU JAPON)

Step	Work	Remarks
6	Open the copyboard cover, and remove the protective sheet.	
7	Open the front cover, and push the lever found on the left side up in the direction of the arrow to open the copier's top body.	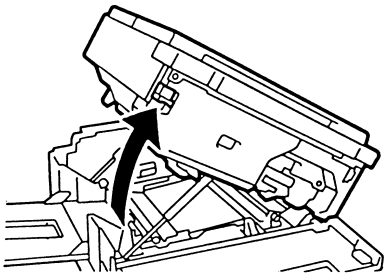
8	Pull up the spacer (front and rear, 1 pc. each) of the fixing roller in the direction of the arrow until a click is heard.	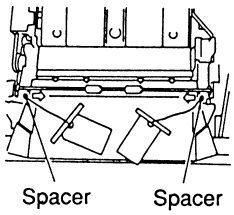
		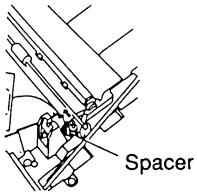
9	Remove the two pieces of cardboard (cushion) from the feeding assembly.	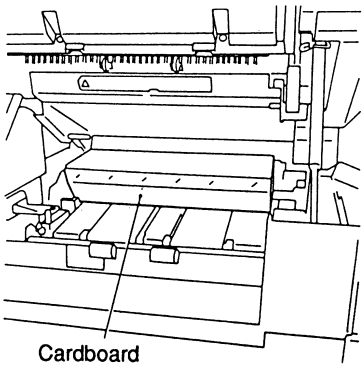

COPYRIGHT © 1997 CANON INC. CANON NP6218 REV. 0 MAY 1997 PRINTED IN JAPAN (IMPRIME AU JAPON)

Step	Work	Remarks
10	Pull the developing locking lever toward the front, and turn it clockwise to release it.	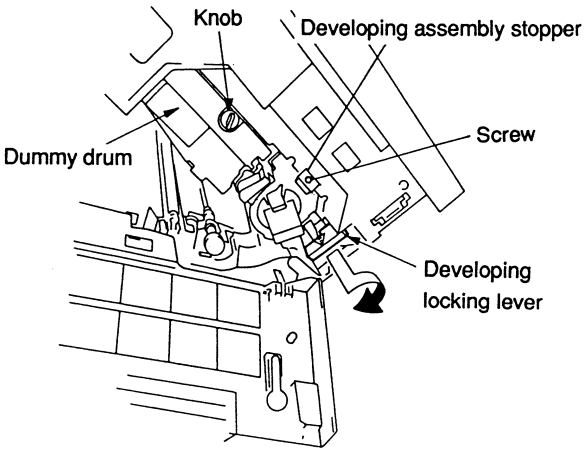
11	Remove the knob, and remove the dummy drum from the copier. (Keep the knob for later.)	
12	Remove the screw, and remove the developing assembly stopper.	
13	Remove the developing assembly, and check that the developing cylinder is free of scratches or dirt.	
14	Install the developing assembly, and attach the developing assembly stopper with a screw.	
15	Engage the developing assembly.	
16	Close the copier's top unit.	

COPYRIGHT © 1997 CANON INC.
CANON NP6218 REV. 0 MAY 1997 PRINTED IN JAPAN (IMPRIME AU JAPON)

B. Turning On the Copier

Step	Work	Remarks
1	Connect the power plug to the power outlet.	**Caution:** • Make sure that the power outlet is the rating ±10%.
2	Turn on the power switch.	Make sure that the Add Paper message flashes. • Press the keypad and the Clear key to make sure that the copy count indication is correct.
3	Turn off the power switch.	
4	Supply toner according to the instructions given on the toner supply label attached behind the front door.	**Caution:** When turning the toner cartridge counterclockwise to set it, you must fully turn it until it is locked; the developing assembly can cause a fault if you operate the machine without locking the cartridge.
5	Release the developing assembly by the developing assembly locking lever.	
6	Install the drum unit.	See “D. Attaching the Drum Unit.”
7	Lock the developing assembly, and close the copier’s top unit.	
8	Insert the door switch activator into the door switch, and turn on the power.	

COPYRIGHT © 1997 CANON INC.
CANON NP6218 REV. 0 MAY 1997 PRINTED IN JAPAN (IMPRIME AU JAPON)

Step	Work	Remarks
9	Select service mode No. 313/314, and enter the settings recorded on the drum label. To select service mode, • Press the service mode switch (SW302) with a hex key. Select '3' of the mode by pressing '3' on the keypad and AE key; then, select 'No. 3 xx' by pressing 'x' and 'x' on the keypad and the start key.	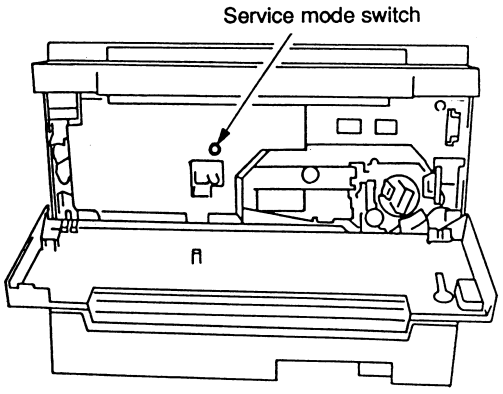 To enter settings, • Select 'No. 313' in service mode, and enter the setting recorded on the label (PRIMARY) using the keypad. (To enter '-', press the % key before entering the setting.) Then, press the Start key to store the setting. To enter the setting for IP_OFST, select 'No. 314' in service mode and work in the same way.
10	Execute 'No. 401' in service mode. • Press the service mode switch (SW302), '4' on the keypad, AE Key, and Start key in sequence.	The copier supplies toner from the toner container to the developing assembly (about 5 min). **Caution:** • Do not turn off the power or remove the door switch actuator while the machine is operating.
11	Make sure that step 10 has been completed; then, turn off the power, and open the copier's top unit.	
12	Remove the static eliminator, and clean it with the static eliminator brush; then, set the static eliminator.	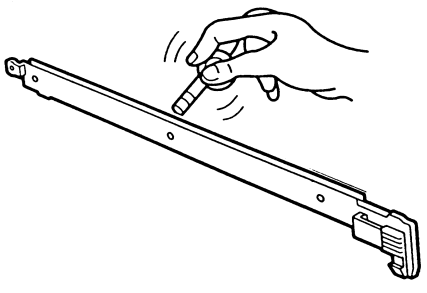

COPYRIGHT © 1997 CANON INC.
CANON NP6218 REV. 0 MAY 1997 PRINTED IN JAPAN (IMPRIME AU JAPON)

Step	Work	Remarks
13	Turn on the power.	
14	Execute ‘No. 412’ in service mode. • Press the service mode swicth (SW302), ‘4’ on the keypad, AE key, ‘1’ and ‘2’ on the keypad, and Start key in sequence.	The copier automatically sets the APVC value; it stops in about 23 sec.
15	Set the settings for user mode and settings mode in service mode to suit the needs of the user.	
16	Tailor the cassette to suit the desired size by operating the size guide plate and size detecting lever; then, attach the size label.	See “E. Changing the Size.”
17	Put copy paper in the cassette, and set the cassette in the copier.	• Make sure that the Add Paper message turns off. • Make sure that the paper indicator matches with the APVC value; it stops in about 23 sec. size of the cassette. • Press the keys on the control panel other than the Copy Start key to make sure that all respective operations are normal.
18	Attach the copy tray.	
19	Remove the door switch activator, and close the front door.	

COPYRIGHT © 1997 CANON INC.
CANON NP6218 REV. 0 MAY 1997 PRINTED IN JAPAN (IMPRIME AU JAPON)

C. Checking the Images and Operations

Step	Work	Check/Remarks
1	Place the Test Sheet on the copyboard, and check the copies.	• Make sure there is no abnormal sound. • Check the copy images for each standard reproduction ratio. • Make sure that as many copies as specified are made normally. • If the copy image is faulty, perform the “Image Adjustment Basic Procedure.”
2	Make copies in manual mode.	Make sure that the copying operation is normal.
3	Make sure that the external covers are free from scratches and deformations.	
4	Clean the area around the copier.	
5	Move the machine to its site of installation.	Make sure that the copier is more or less level.

COPYRIGHT © 1997 CANON INC.
CANON NP6218 REV. 0 MAY 1997 PRINTED IN JAPAN (IMPRIME AU JAPON)

D. Attaching the Drum Unit

Step	Work	Check/Remarks
1	Unpack the drum unit, and remove the light-blocking sheet.	
2	Remove the primary charging roller releasing spacer.	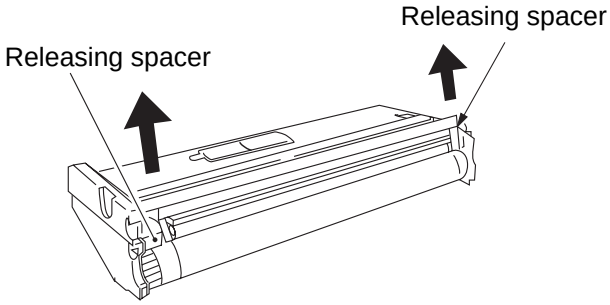 Take care not to damage the surface of the drum and not to touch the primary charging roller.
3	Set the drum unit to the copier, and fix it in position using the knob used to keep the dummy drum.	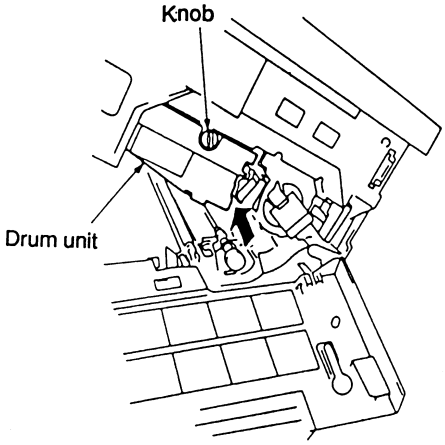 Be sure to insert the drum unit straight along the copier's rail.
4	Fill out the label, and attach it to the drum unit cover.	日付 date date Datum / カウンター counter compteur. Zahler / 備考 notes note Notiz

COPYRIGHT © 1997 CANON INC. CANON NP6218 REV. 0 MAY 1997 PRINTED IN JAPAN (IMPRIME AU JAPON)

E. Changing the Cassette Size

Change the cassette size to suit the user's needs.

1) Slide the cassette out of the copier.
2) Move the length plate inside the cassette to suit the length of the paper size.

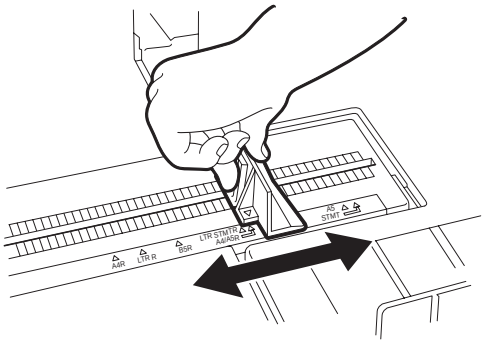

Figure 8-201

3) Move the width plate inside the cassette to suit the width of the paper to be used.

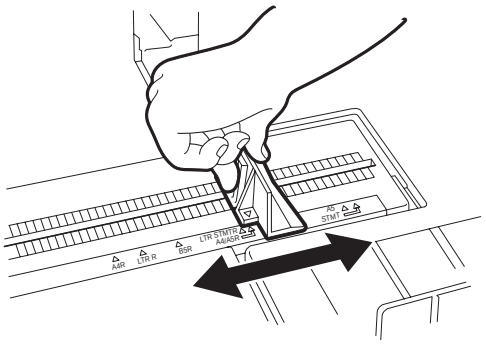

Figure 8-202

COPYRIGHT © 1997 CANON INC.
CANON NP6218 REV. 0 MAY 1997 PRINTED IN JAPAN (IMPRIME AU JAPON)

4) Move the paper size lever found toward the front of the cassette so that it is aligned with the size of the paper to be used.

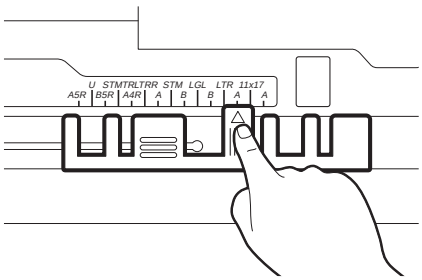

Figure 8-203

Caution:
Failure to adjust the paper size lever will lead to jams or soiling.

5) Take out the paper size plates for the cassette, and pick out the four plates representing the most frequently used size; attach the labels.

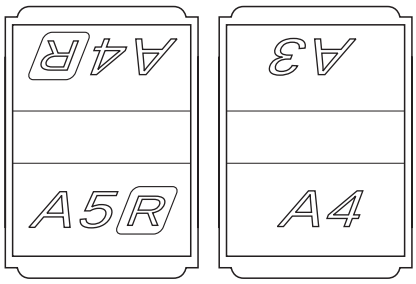

Figure 8-204

COPYRIGHT © 1997 CANON INC.

6) Set the paper size plates selected in step 4).

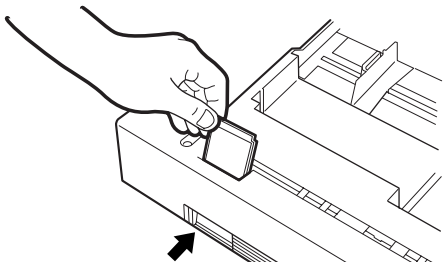

After setting the size plate, make sure it corresponds to the paper size you have selected.

Figure 8-205

Caution:

If you are setting the plate for the position representing the universal (u) cassette, you must perform the work described for “universal cassette paper size setting (505); see p. 10-44.

■ Points to Note When Handling the Photosensitive Drum after Installation

The copier’s photosensitive drum is highly susceptible to light; mere exposure to room light can affect the drum enough to produce white spots or black lines on the copies. Keep the following in mind:

- Do not spend more than 5 min when removing jams.
- After detaching the drum unit from the copier during servicing work, be sure to protect it in the light-blocking sheet that came with the drum or fresh copy paper, and place the drum in a dark place.

Do not touch the photosensitive drum or primary charging roller.

If you have soiled the surface of the drum inadvertently, wipe it using a flannel cloth coated with toner; do not use paper, lint-free or otherwise.

Do not dry wipe or use solvent to clean the drum.

COPYRIGHT © 1997 CANON INC.
CANON NP6218 REV. 0 MAY 1997 PRINTED IN JAPAN (IMPRIME AU JAPON)

III. RELOCATING THE COPIER

If you must relocate the copier by truck or using other means of transportation, perform the following work:

Step	Work	Checks	Remarks
1	Move the lens to the Direct position.		*Direct position* refers to the position of the lens after warm-up initiated by power-on.
2	Take out the drum unit.	Put the drum unit in a box for transport.	
3	Fix the scanner in place.		Use the fixing removed at time of installation.
4	Tape the front door and delivery assembly in place.		
5	Place A3 copy paper on the copyboard glass, and tape the copyboard cover in place.		

COPYRIGHT © 1997 CANON INC.
CANON NP6218 REV. 0 MAY 1997 PRINTED IN JAPAN (IMPRIME AU JAPON)

IV. REPLACING THE DRUM UNIT

Go through the following when replacing the drum unit:

Step	Work	Remarks
1	Turn off the copier, and open the front door and the copier's top unit.	
2	Release the developing assembly, and remove the knob to remove the drum unit.	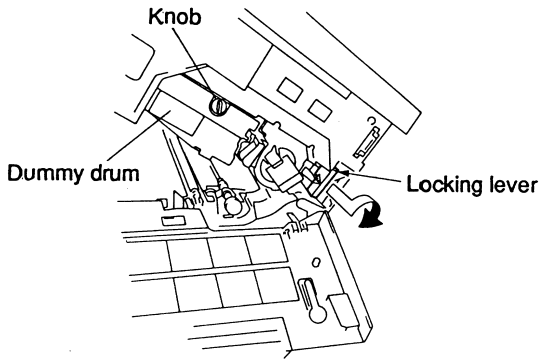
3	Unpack the new drum unit, and remove the light-blocking sheet.	
4	Remove the primary charging roller releasing spacer.	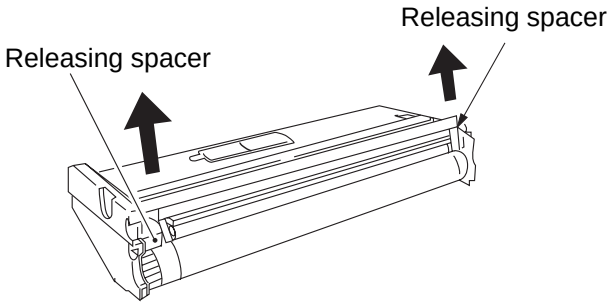 Take care not to damage the surface of the drum and not to touch the primary charging roller.
5	Set the drum unit to the copier, and attach the knob used to fix the old drum unit.	

COPYRIGHT © 1997 CANON INC.
CANON NP6218 REV. 0 MAY 1997 PRINTED IN JAPAN (IMPRIME AU JAPON)

<table>
<tr><th>Step</th><th>Work</th><th>Remarks</th></tr>
<tr><td>6</td><td>Fill out the label, and attach it to the drum unit cover.</td><td>
<table>
<tr><td>日付 date
date Datum</td><td>カウンター counter
compteur. Zahler</td><td>備考 notes
note Notiz</td></tr>
<tr><td></td><td></td><td></td></tr>
</table>
</td></tr>
<tr><td>7</td><td>Lock the developing assembly, and close the copier's top unit.</td><td></td></tr>
<tr><td>8</td><td>Turn on the door switch using the door switch actuator; then, shift the power switch to 'ON'.</td><td></td></tr>
<tr><td>9</td><td>Select service mode No. 313/314, and enter the settings recorded on the drum label.
To select service mode,
• Press the service mode switch (SW302) with a hex key.
Select '3' of the mode by pressing '3' on the keypad and AE key; then, select 'No. 3 xx' by pressing 'x' and 'x' on the keypad and the start key.</td><td>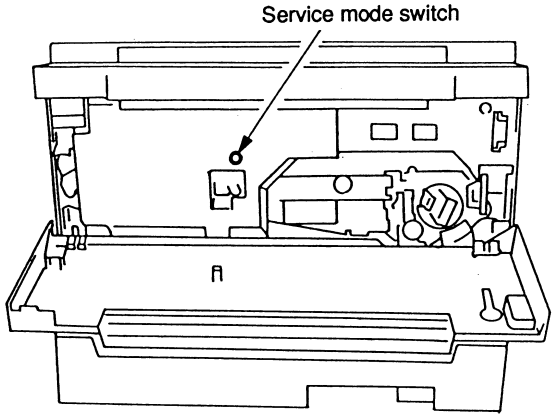

To enter settings,
• Select 'No. 313' in service mode, and enter the setting recorded on the label (PRIMARY) using the keypad. (To enter '-', press the % key before entering the setting.)
Then, press the Start key to store the setting.
To enter the setting for IP_OFST, select 'No. 314' in service mode and work in the same way.</td></tr>
<tr><td>10</td><td>Turn off the power, and open the copier's top unit.</td><td></td></tr>
<tr><td>11</td><td>Replace the static eliminator.</td><td></td></tr>
<tr><td>12</td><td>Turn on the power.</td><td></td></tr>
</table>

COPYRIGHT © 1997 CANON INC.

Step	Work	Remarks
13	Execute ‘No. 412’ in service mode. • Press the service mode swicth (SW302), ‘4’ on the keypad, AE key, ‘1’ and ‘2’ on the keypad, and Start key in sequence.	The copier automatically sets the APVC value; it stops in about 23 sec.
14	Remove the door switch actuator, and close the front door.	

COPYRIGHT © 1997 CANON INC.
CANON NP6218 REV. 0 MAY 1997 PRINTED IN JAPAN (IMPRIME AU JAPON)

V. INSTALLING THE CONTROL CARD IV N

Caution:
Be sure to disconnect the copier's power plug before starting the installation work.

1) Open the front cover
2) Open the copier's top body by operating its open/close lever.
3) Detach the front cover.
4) Take out the cartridge.
5) Detach the inside cover.
6) Loosen the screw on the upper rear cover.
7) Loosen the two screws on the copyboard glass.
8) Detach the face plate ① from the control card cable inlet.

(When detaching the face plate ①, detach it in the direction of the arrow using pliers or screwdriver.)

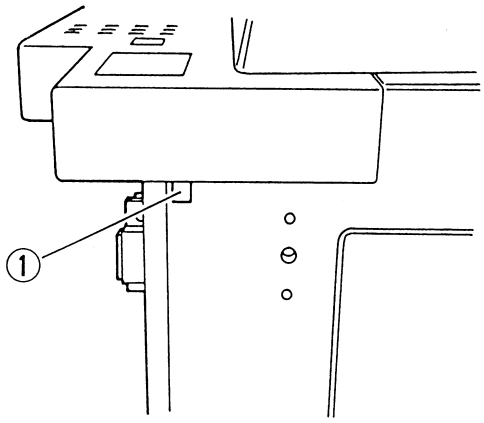

Figure 8-501

9) Fix the Control Card IV N to the copier using a screw ② (M4×12); at the time, be use that the copier's emboss ③ is fitted in the hole in the Control Card IV N.

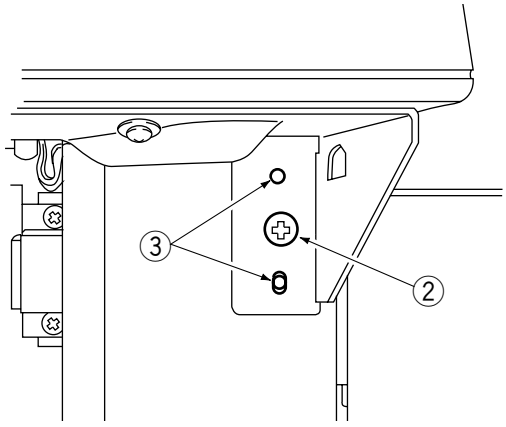

Figure 8-502

COPYRIGHT © 1997 CANON INC. CANON NP6218 REV. 0 MAY 1997 PRINTED IN JAPAN (IMPRIME AU JAPON)

10) Disconnect the copier's dummy connector ④.

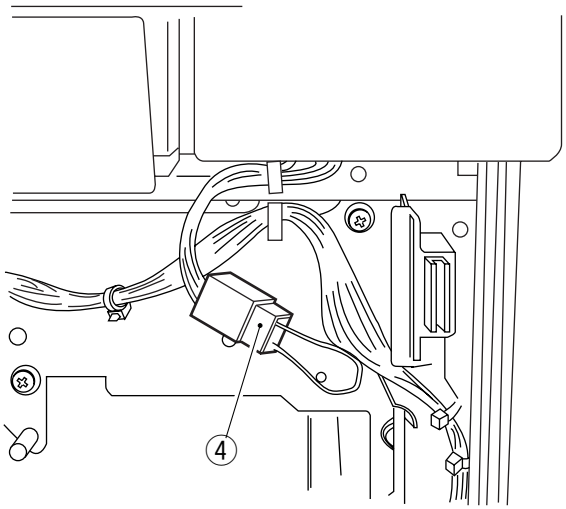

Figure 8-503

11) Connect the connector ⑤ of the Control Card IV N.

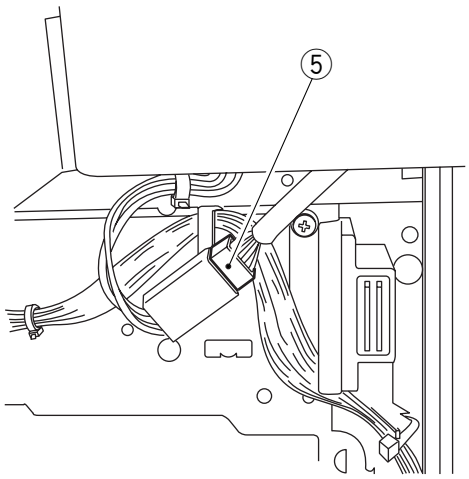

Figure 8-504

12) Connect the copier's power plug, and turn on its power switch to check the operation of the Control Card IV N.

COPYRIGHT © 1997 CANON INC.
CANON NP6218 REV. 0 MAY 1997 PRINTED IN JAPAN (IMPRIME AU JAPON)

VI. CASSETTE HEATER KIT 5 INSTALLATION PROCEDURE

A. Unpacking

Open the shipping box, and check to make sure that none of the parts shown in Fig. 8-601 is missing.

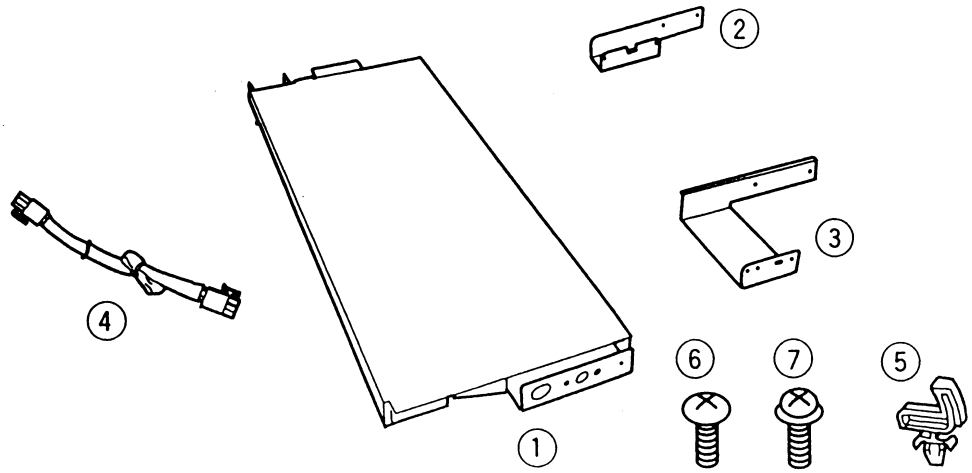

Figure 8-601

① Cassette Heater.....1
② Mounting plate 1.....1
③ Mounting plate 2.....1
④ Relay harness.....1
⑤ Cord clamp.....1
⑥ Binding screw (black; M4×6).....2
⑦ TP screw (white; M3×6).....2

B. Installation (to a Cassette Feeding Module-A2/B2)

1) Remove the cassettes and all rear covers from the cassette feeding unit/pedestal.
2) Remove the copier's rear cover.
3) Install the mounting plate 2 to the cassette heater with two screws (black; M4×6).

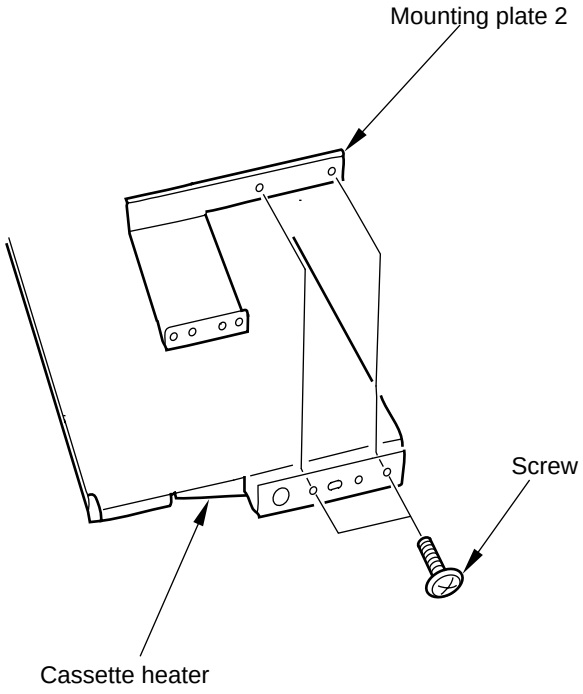

Figure 8-602

COPYRIGHT © 1997 CANON INC.
CANON NP6218 REV. 0 MAY 1997 PRINTED IN JAPAN (IMPRIME AU JAPON)

4) Insert the bend found at the rear of the heater into the heater mounting slit in the rear side plate of the cassette feeding unit/pedestal (bottom holder).

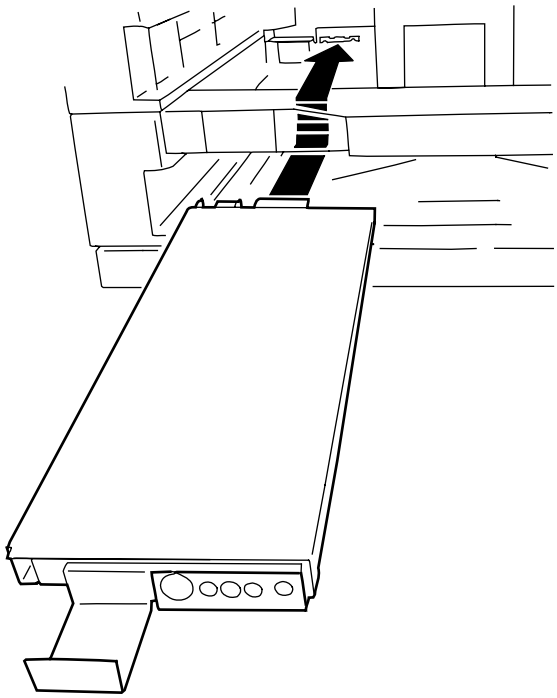

Figure 8-603

5) Open the cover on the front of the cassette feeding unit/module, and fix the mounting plate 2 in place to the front side plate with two screws (white; M3×6).

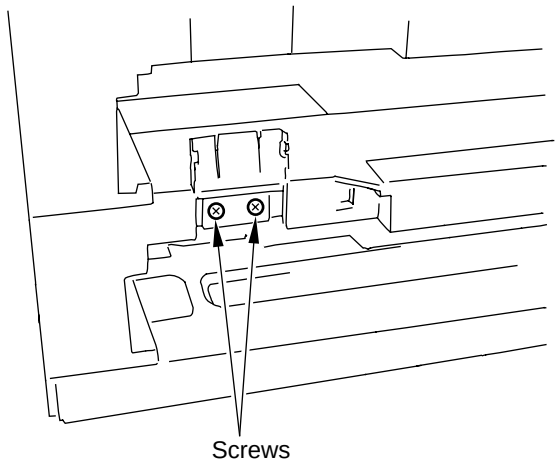

Figure 8-604

COPYRIGHT © 1997 CANON INC.

6) Close the cover.
7) Connect the connector on the relay harness to the connector of the cassette heater (rear side plate of the cassette feeding unit). (Connect the side where the harness is bundled with a tie-wrap.)

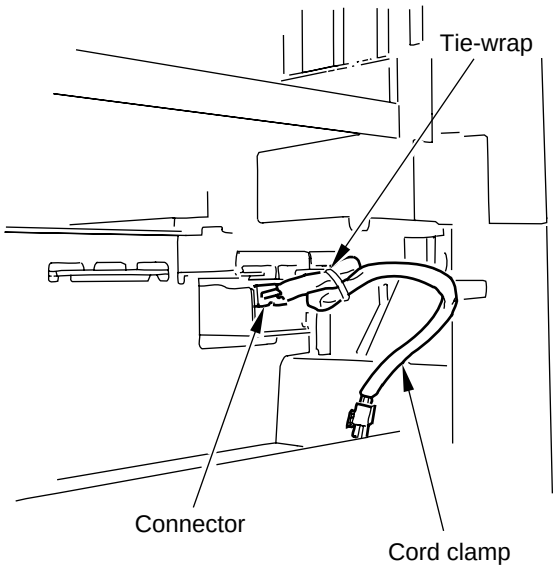

Figure 8-605

8) Install the cord clamp to the hole in the rear side plate of the cassette feeding unit/pedestal.
   • Cassette Feeding Module-A2

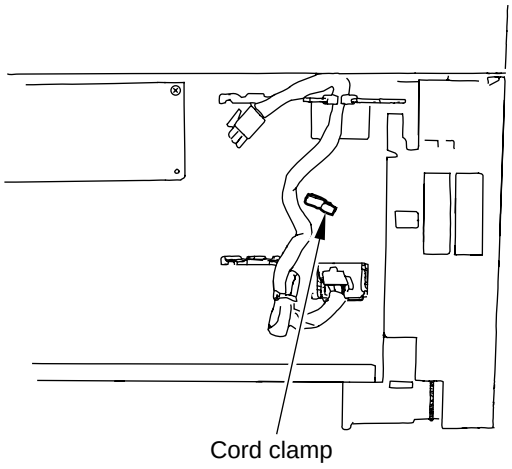

Figure 8-606

COPYRIGHT © 1997 CANON INC.
CANON NP6218 REV. 0 MAY 1997 PRINTED IN JAPAN (IMPRIME AU JAPON)

• Cassette Feeding Module-B2

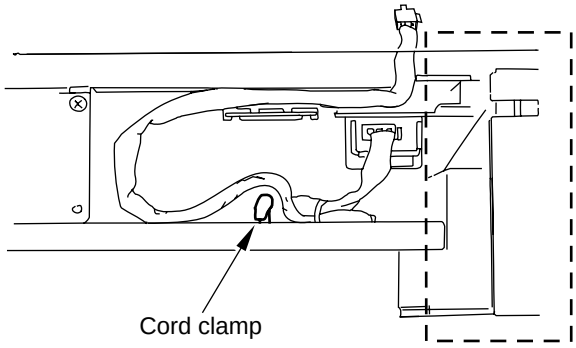

Figure 8-607

9) Lead the other connector on the relay harness through the copier's bottom plate as shown.

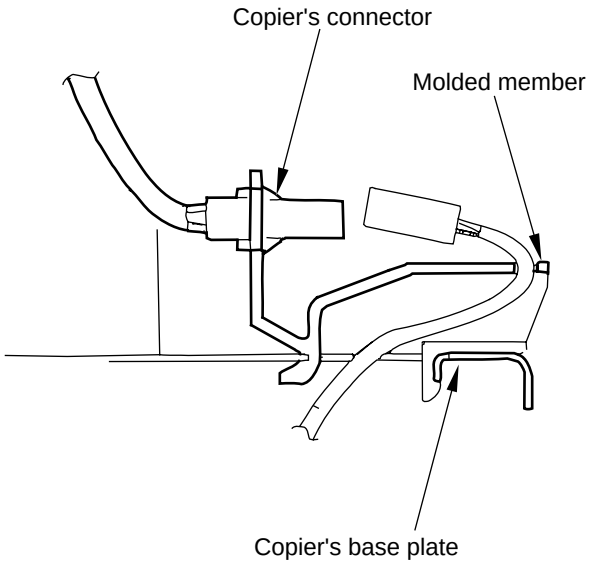

Figure 8-608

COPYRIGHT © 1997 CANON INC.

10) Connect the connector on the relay harness with the copier's connector.

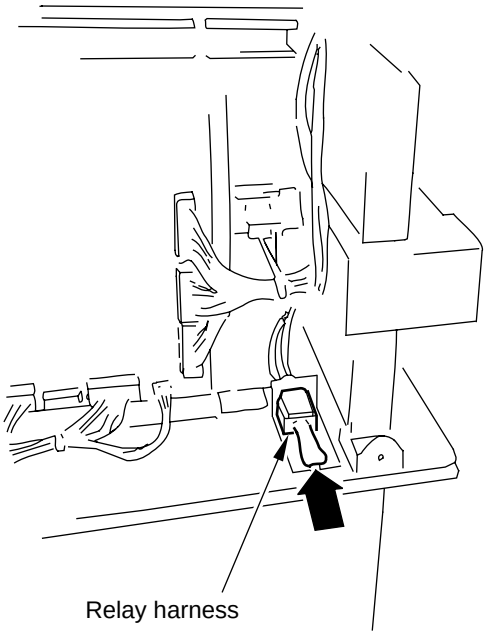

Figure 8-609

11) Fix the relay harness in place to the rear side plate with the cord clamp.
    • Cassette Feeding Module-A2

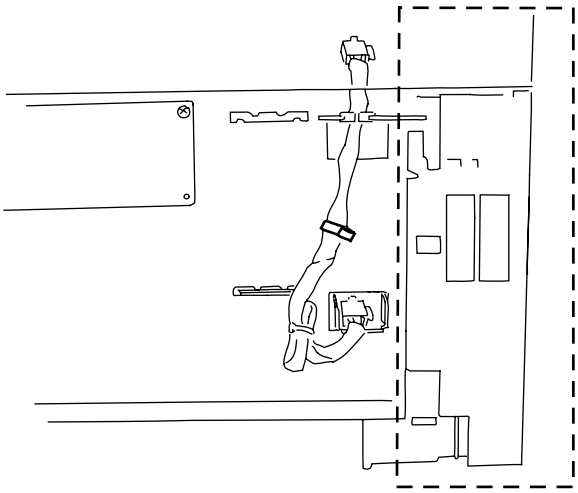

Figure 8-610

Caution:
Make sure that the relay harness is outside the area indicated by dashed lines to prevent it from interfering with the feet of the cassette.

COPYRIGHT © 1997 CANON INC.
CANON NP6218 REV. 0 MAY 1997 PRINTED IN JAPAN (IMPRIME AU JAPON)

• Cassette Feeding Module-B2

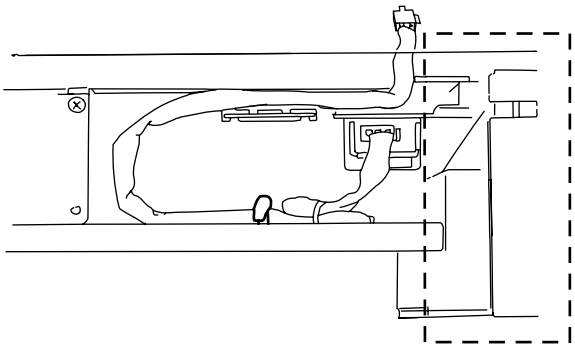

Figure 8-611

Caution:
Make sure that the relay harness is outside the area indicated by dashed lines to prevent it from interfering with the feet of the cassette.

12) Install the rear cover of the cassette pedestal and all covers.
13) Install the copier's rear cover.

COPYRIGHT © 1997 CANON INC. CANON NP6218 REV. 0 MAY 1997 PRINTED IN JAPAN (IMPRIME AU JAPON)

VII. INSTALLING THE REMOTE DIAGNOSTIC DEVICE II

A. Unpacking

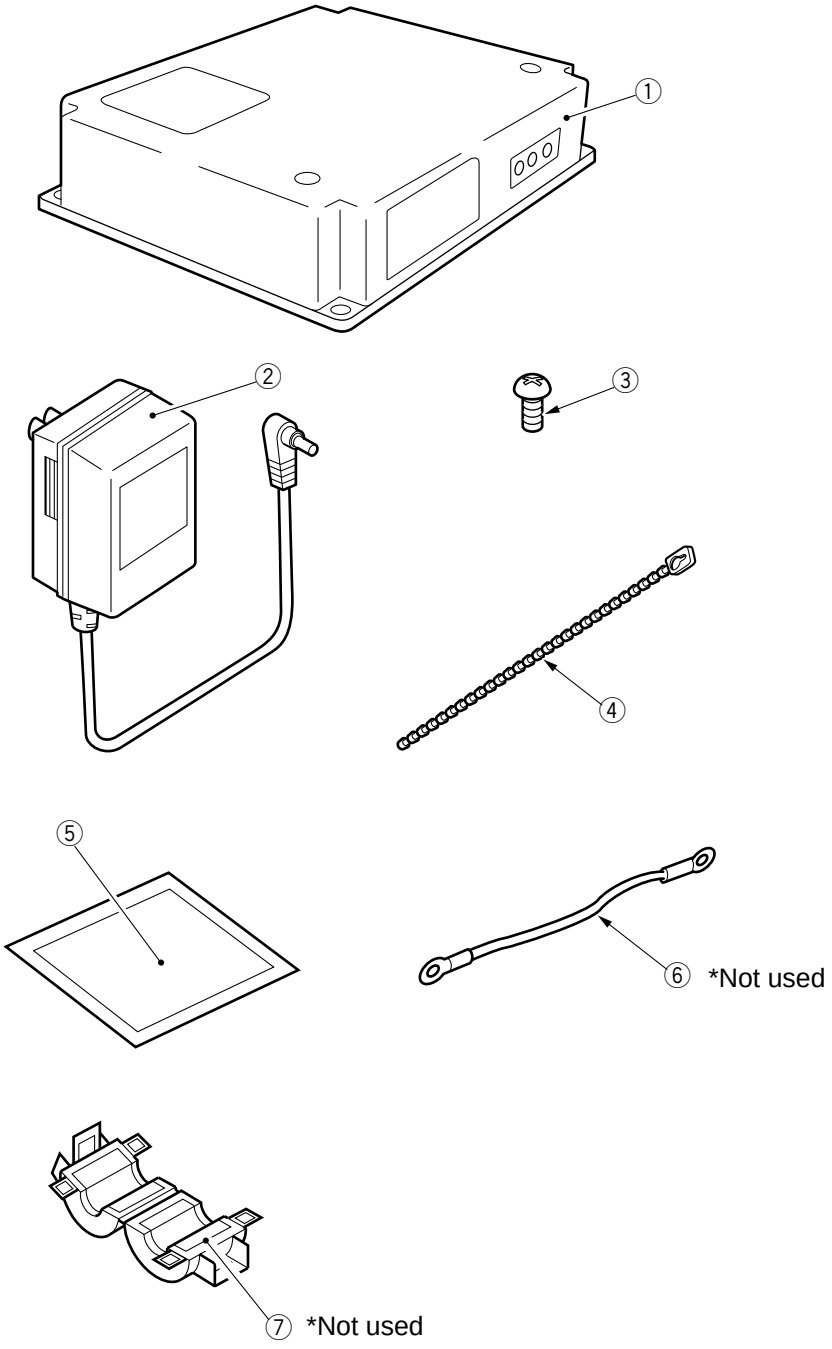

Figure 8-701

① RDD .....1 unit
② Power Supply Unit.....1 unit
③ Screw (M4×6).....4 pcs.
④ Harness band.....2 pcs.
⑤ Switch setting label.....1 pcs.
⑥ Grounding wire*.....1 pc.
⑦ Ferrite core .....1 pc.
*Not used.

COPYRIGHT © 1997 CANON INC.
CANON NP6218 REV. 0 MAY 1997 PRINTED IN JAPAN (IMPRIME AU JAPON)

B. Installation to the Copier

Caution:
This model may not be available for sale in some areas.

Caution:
Keep the following in mind when installing the RDD to the copier:

1. This Accessory is to be installed by a qualified personal.
2. Make sure the copier has been properly installed before starting the work.
3. Keep the copier's power cord disconnected during the work.
4. Be sure to use the appropriate screws (length, diameter).
5. Make sure the computer in the service station has been properly loaded with the RDD's settings data.

1) Remove the two screws ② to detach the RDD's top cover ①.

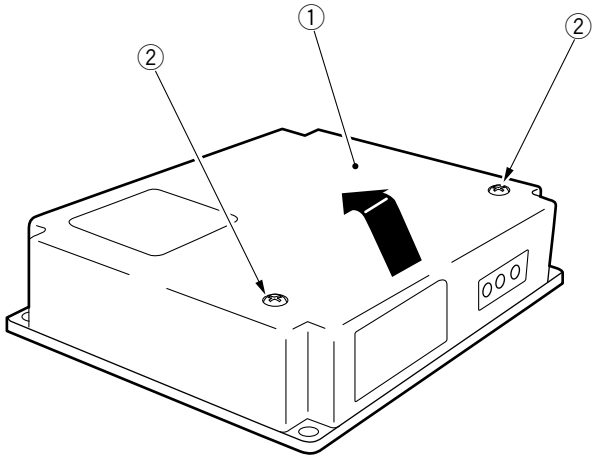

Figure 8-702

2) Connect the Power Supply Unit's connector ③ to the RDD's connector ④ as shown.

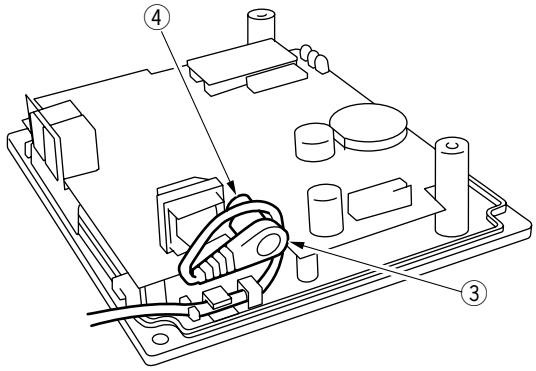

Figure 8-703

COPYRIGHT © 1997 CANON INC. CANON NP6218 REV. 0 MAY 1997 PRINTED IN JAPAN (IMPRIME AU JAPON)

3) Remove the two screws ⑥, and detach the face cover ⑤ from the copier's rear cover.

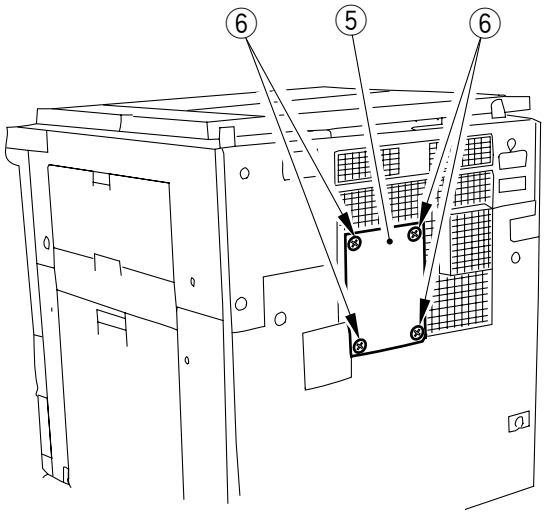

Fig. 8-704

4) Connect the cable ⑨ on the copier side and the RDD's cable ⑧.

Note:

If a conversion connector is found on the cable ⑪ from the copier, remove it.

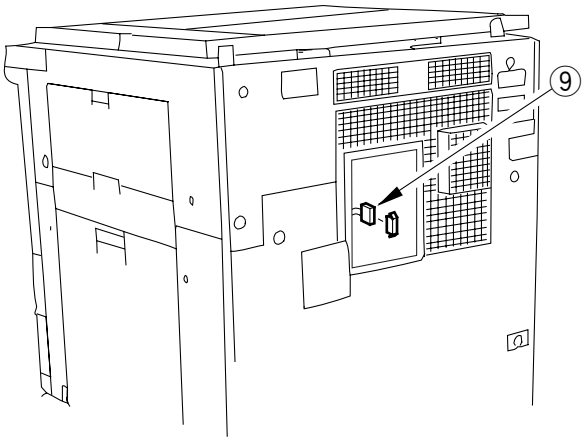

Fig. 8-705

COPYRIGHT © 1997 CANON INC.
CANON NP6218 REV. 0 MAY 1997 PRINTED IN JAPAN (IMPRIME AU JAPON)

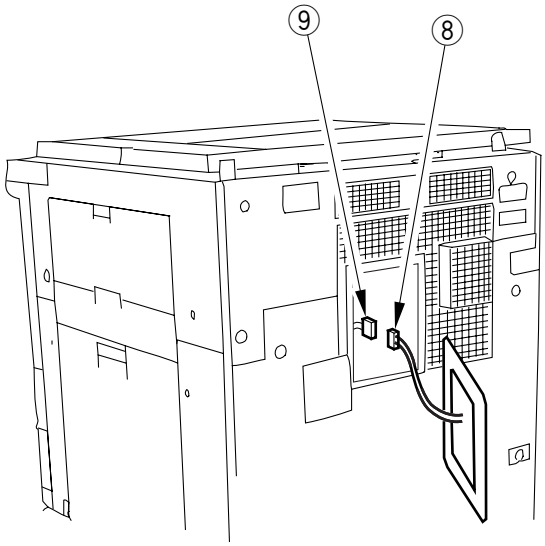

Fig. 8-706

5) Fix the RDD in place on the copier's rear cover with four screws ⑥; use the screws removed from the copier.

Modular Jack on the Right

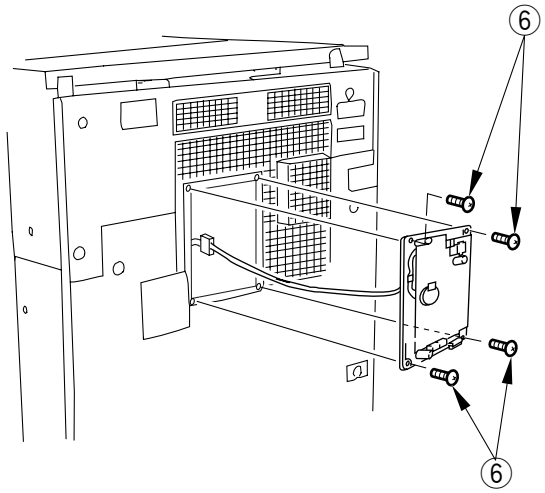

Fig. 8-707

COPYRIGHT © 1997 CANON INC.

6) Remove the slack from the cable between the copier and the RDD; keep the excess cable to the RDD using the harness band ⑩.

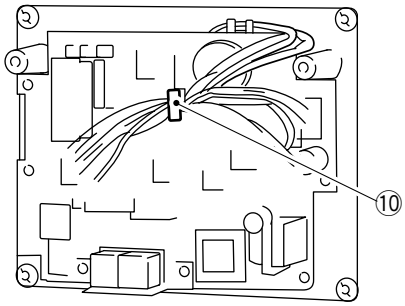

Fig. 8-708

7) Shift bit 4 of the DIP switch 2 ⑪ to ON so that the communication mode between the RDD and the copier is IPC mode.

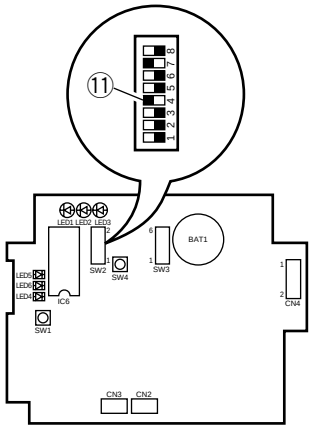

Fig. 8-709

8) If the ROM IC6 ⑫ is mounted on the RDD's PCB, shift bit 7 of the DIP switch 2 ⑬ to ON; otherwise, shift bit 7 of the DIP switch 2 to OFF.

Note:

1. If the ROM (IC6; ⑫) is not mounted, you need not mount it.
2. If you are mounting or replacing the ROM (IC6; ⑫ for upgrading the RDD, be sure to shift bit 7 of the DIP switch 2 ⑬ to ON.

COPYRIGHT © 1997 CANON INC.
CANON NP6218 REV. 0 MAY 1997 PRINTED IN JAPAN (IMPRIME AU JAPON)

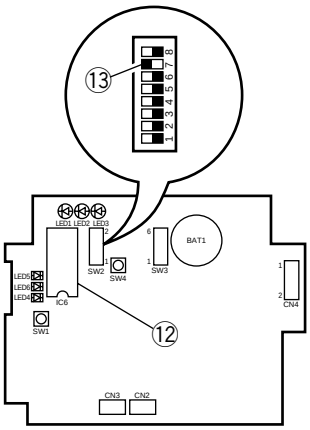

Fig. 8-710

9) Set the bits of the DIP switch 3 ⑭ on the RDD's PCB as indicated in the table.

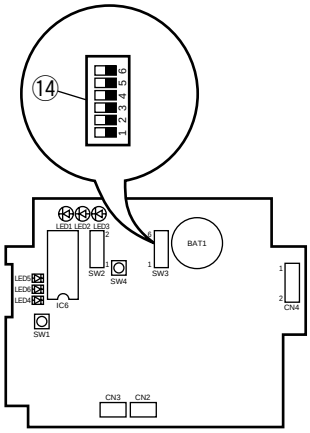

Fig. 8-711

COPYRIGHT © 1997 CANON INC.

Switch	Setting	Description
SW3-1	AII	
SW3-2	OFF	
SW3-3	ON	
SW3-4	ON	selects push pulse for RDD circuit confihuration
	OFF	selscts dial pulse for RDD circuit confihuration
SW3-5	ON	sets dial pulse speed to 20 PPS
	OFF	sets dial pulse speed to 10 PPS
SW3-6	—	reserved

Table 8-701

10) Fit the Power Supply Unit into the power plug, and check that LED 1 ⑮ (green) on the RDD's PCB comes on.

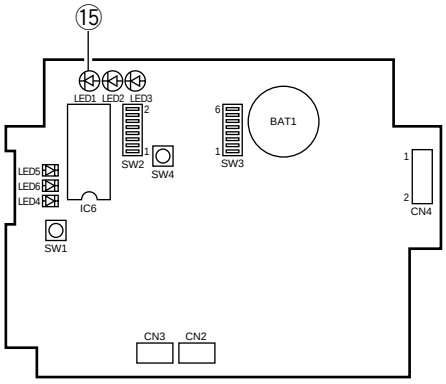

Fig. 5-712

COPYRIGHT © 1997 CANON INC.
CANON NP6218 REV. 0 MAY 1997 PRINTED IN JAPAN (IMPRIME AU JAPON)

11) Reset the RDD's RAM.
Set the bits on the DIP switch 2 ⑯ on the RDD's PCB as indicated in the table, and press the push switch 4 ⑰ to make sure that LED5 ⑱ (red) comes on.

bits on SW2	Setting
SW2-1	OFF
SW2-2	OFF
SW2-3	ON
SW2-4	ON
SW2-5	OFF
SW2-6	OFF
SW2-7	See step 9).
SW2-8	OFF

Table 8-702

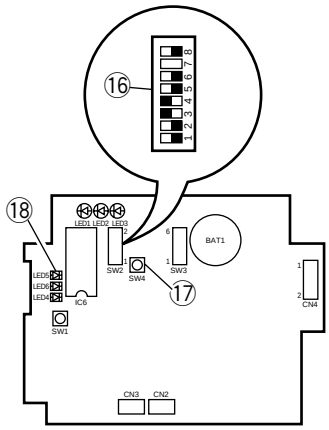

Fig. 8-713

12) After making sure that LED5 ⑱ (red) has come on, set the bits on the DIP switch 2 ⑯ on the RDD's PCB as indicated in the table, and press the push switch 4 ⑰ to make sure that LED5 ⑱ (red) goes out, indicating that the RAM has been reset.

bits on SW2	Setting
SW2-1	OFF
SW2-2	OFF
SW2-3	OFF
SW2-4	ON
SW2-5	OFF
SW2-6	ON
SW2-7	See step 9).
SW2-8	OFF

Table 8-703

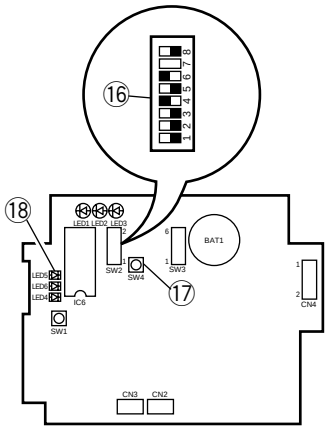

Fig. 8-714

COPYRIGHT © 1997 CANON INC.
CANON NP6218 REV. 0 MAY 1997 PRINTED IN JAPAN (IMPRIME AU JAPON)

13) Shift bit 6 of the DIP switch 2 ⑲ on the RDD's PCB to OFF.

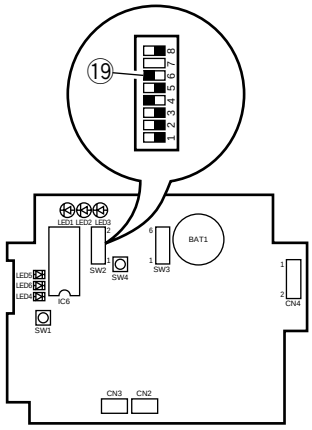

Fig. 8-715

14) Connect the RDD to the telephone line.
If you are connecting the RDD on its own, connect the modular jack cable to the RDD's connector ⑳ (LINE).
If you will be using the RDD's extra circuit, connect the existing telephone or fax machine to the RDD's connector ㉑ (TEL), and connect the telephone circuit to the RDD's connector ⑳ (LINE).

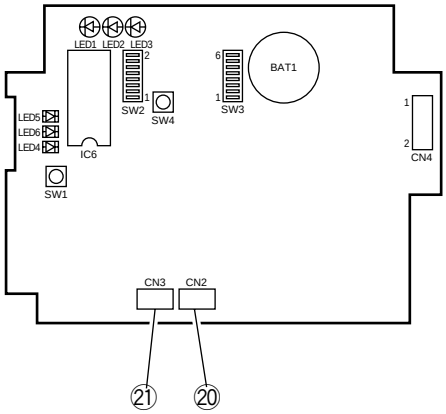

Fig. 8-716

15) Call up the service station, and request the RDD's initial settings. (LED 4 ㉒ (red) starts to flash upon receipt.)

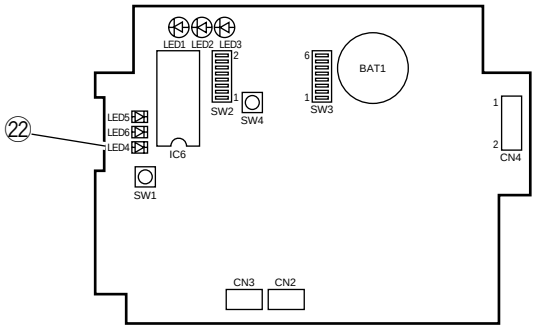

Fig. 8-717

16) Call up the service station to check if the initial settings have been successfully made; if the attempt has failed, reset the RAM once again starting with step 11) through 13).

Important:

You must confirm that the RDD's settings are correct by calling the service station.

17) Check that you can place a telephone call from the RDD to the computer in the service station.
Press the push switch 4 ⑰. LED6 ㉓ (red) should come on; it will go out when transmission ends successfully, or will start to flash if transmission fails.
Retransmission is executed in response to a press on the push switch 4 ⑰ while LED6 ㉓ is flashing.
Transmission is canceled in response to a press on the push switch 1 ㉔ while LED6 ㉓ is flashing.

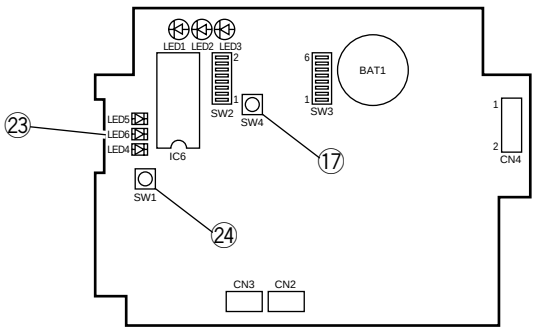

Fig. 8-718

COPYRIGHT © 1997 CANON INC.
CANON NP6218 REV. 0 MAY 1997 PRINTED IN JAPAN (IMPRIME AU JAPON)

18) Check that the communications between the RDD and the copier are executed normally.
Connect the copier's power plug, and switch it on to make sure that LED 2 ㉕ (orange) flashes.

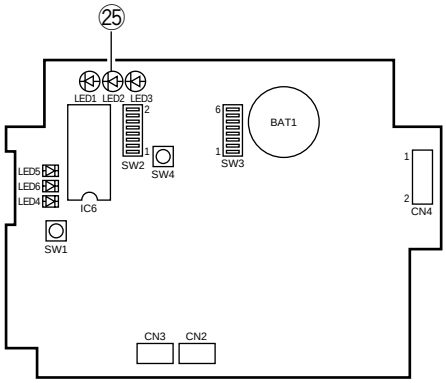

Fig. 8-719

19) Press the copier' COPY START key to make sure that LED3 ㉖ (pink) flashes each time a copy is delivered.

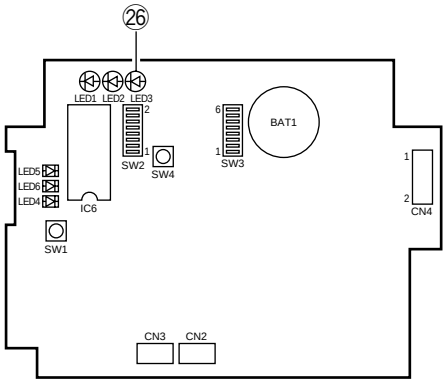

Fig. 8-720

COPYRIGHT © 1997 CANON INC.

20) Attach the Switch setting label ㉗, to the RDD's top cover ①; then, record the setting of each switch on the label.

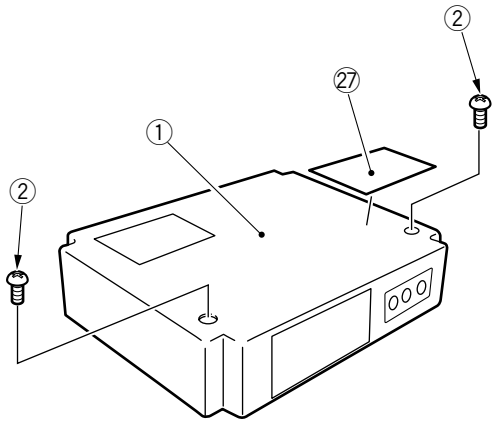

Fig. 8-721

21) Fix the RDD's top cover ① in place using two screws ②. (Make sure that the Power Unit's cable is fixed in place on the cable guide inside the RDD and is not trapped by the top cover ①.

COPYRIGHT © 1997 CANON INC.
CANON NP6218 REV. 0 MAY 1997 PRINTED IN JAPAN (IMPRIME AU JAPON)

CHAPTER 9

MAINTENANCE AND SERVICING

This chapter provides tables of periodically replaced parts and consumables/durables and scheduled servicing charts.

I. PERIODICALLY REPLACED PARTS 9-1
A. Periodically Replaced Parts.....9-1
II. DURABLES 9-2
A. Copier 9-2
B. Cassette Feeding Module-B2/ Cassette Feeding Module-A2.....9-3
III. PERIODICAL SERVICING 9-4
IV. SERVICING CHART.....9-5
V. NOTES ON DRUM KIT 9-6

COPYRIGHT © 1997 CANON INC. CANON NP6218 REV. 0 MAY 1997 PRINTED IN JAPAN (IMPRIME AU JAPON)

I. PERIODICALLY REPLACED PARTS

Some parts of the copier must be replaced on a periodical basis to ensure a specific level of performance; replace them as indicated regardless of the presence of visible damage.

Plan the replacement to coincide with a scheduled visit.

A. Periodically Replaced Parts

as of JAN. 1997

No.	Parts name	Parts No.	Q'ty	Life (copies)	Remarks
1	Static eliminator	FG5-2912	1	60,000	

Note:
The above values are estimates only and subject to change based on the future data.

COPYRIGHT © 1997 CANON INC.
CANON NP6218 REV. 0 MAY 1997 PRINTED IN JAPAN (IMPRIME AU JAPON)

II. DURABLES

The parts shown in the table may require replacement because of deterioration or damage over the period of warranty; replace them when they fail using the table as a guide.

A. Copier

as of JAN 1997

No.	Parts name	Parts No.	Q'ty	Life (copies)	Remarks
1	Pick-up roller	FB3-5153-00P	2	100,000	See Note 1.
2	Pick-up separation pad	FG5-2922-020	1	100,000	See Note 1.
3	Multifeeder pick-up roller	FB1-8581-000	1	100,000	See Note 1.
4	Multifeeder separation pad	FB2-2167-000	1	100,000	See Note 1.
5	Fluorescent lamp	FH7-3271-000	1	100,000	
6	Fixing cleaning roller	FB3-4494-00P	1	100,000	
7	Transfer roller	FB2-2223-000	1	100,000	
8	Upper fixing unit 220/240V	FG5-2928-140	1	200,000	
9	Lower fixing roller	FB2-2316-000	1	200,000	
10	Lower fixing separation claw	FB1-7275-000	1	200,000	
11	Pre-exposure lamp	FG5-2891-000	1	200,000	
12	Developing assembly	FG5-3275-04P	1	100,000	Replace with item 12 or 12-1 through 12-4
12-1	Developing cylinder	FB2-3834-000	1	100,000	
12-2	Side seal	FB2-3825-00P	2	100,000	
12-4	Developing blade unit	FG5-7012-00P	1	100,000	

Note:

1. The life represents the number of copies actually made using the part.
2. The above values are estimates only and subject to change based on future data.

COPYRIGHT © 1997 CANON INC.
CANON NP6218 REV. 0 MAY 1997 PRINTED IN JAPAN (IMPRIME AU JAPON)

B. Cassette Feeding Module-B2/Cassette Feeding Module-A2

as of JAN 1997

No.	Parts name	Parts No.	Q'ty	Life (copies)	Remarks
1	Pick-up roller	FB2-2251-000	1	100,000	Actual usage
2	Pick-up separation pad	FG5-3614-000	1	100,000	Actual usage

Note:
The above values are estimates only and subject to change based on future data.

COPYRIGHT © 1997 CANON INC.
CANON NP6218 REV. 0 MAY 1997 PRINTED IN JAPAN (IMPRIME AU JAPON)

III. PERIODICAL SERVICING

The copier does not have items that require periodical servicing; however, it is recommended that the following work items be performed during any visit to the user's.

Step	Work	Checks	Remarks
1	Meet the person in charge of the copier.	Check the general conditions.	
2	Make test copies in Direct, Reduce, Enlarge, and page separation.	Check the following: a. image density b. white background for soiling c. characters (clarity) d. leading edge (non-image width) e. left/right margin f. fixing, registration,back (soiling) g. abnormal noise h. counter (operation)	standard: 2.5 ±1.5 mm (Direct, one-sided) standard: 2.5 ±1.5 mm (Direct/one-sided)
3	Clean the static eliminator and feeding assembly.		Use the special brush (accessory) to clean the static eliminator.
4	Clean the fixing/delivery assembly. • paper guide plate • separation claw		Use solvent. Use solvent.
5	Perform work according to the number of copies made (See p. 9-2).		
6	Clean the copyboard cover and copyboard glass.		
7	Make test copies.		
8	Make sample copies.		
9	Arrange the sample copies, and clean the area around the copier.		
10	Record the final counter reading.		
11	Fill out the Servicing Sheet, and report to the person in charge.		

COPYRIGHT © 1997 CANON INC.
CANON NP6218 REV. 0 MAY 1997 PRINTED IN JAPAN (IMPRIME AU JAPON)

IV. SERVICING CHART

Caution:
Do not use solvents or oils other than those specified.

△ : clean ● : replace ☆ : lubricate □ : adjust ◎ : inspector clean

Unit	Parts	every 20,000	every 60,000	Remarks
External	Copyboard glass	△		Use alcohol.
Pick-up assembly	Pick-up roller	△		
Scanner drive assembly	Scanner rail		☆	Use alcohol solution; then, apply lubricant.
Feeding assembly	Transfer guide assembly	△		Use a moist cloth.
	Feeding belt	△		
	Feeding assembly mount	△		
Optical assembly	Reflecting plate for original exposure	△		Use a blower brush; if the soiling is excessive, use alcohol.
	Side reflecting plate for original exposure	△		
	No. 1 through No. 6 mirrors	△		
	Lens	△		
	Dust-proofing glass	△		
Drum kit	Clearner base	△		Actual use of the drum kit.
Charging assembly	Charging roller	△		
	Charging roller cleaner	△		
	Static eliminator	△	●	
Developing assembly	Developing spacer	△		

COPYRIGHT © 1997 CANON INC.
CANON NP6218 REV. 0 MAY 1997 PRINTED IN JAPAN (IMPRIME AU JAPON)

Unit	Parts	every 20,000	every 60,000	Remarks
Fixing assembly	Lower fixing roller	△		Use cleaning oil.
	Separation claw (lower)	△		Use solvent.
	Fixing inlet guide	△		
Delivery assembly	Delivery guide/ tray	△		
	Delivery spacer	△		

V. NOTES ON DRUM KIT

⚠ Caution:

Do NOT throw the drum kits into fire; it can burst or explode.
Otherwise, dispose of it as nonflammable material.

COPYRIGHT © 1997 CANON INC.
CANON NP6218 REV. 0 MAY 1997 PRINTED IN JAPAN (IMPRIME AU JAPON)

CHAPTER 10

TROUBLESHOOTING

This chapter provides tables of maintenance/inspection, standards/adjustments, and identification (image fault/malfunction).

I. MAINTENANCE AND INSPECTION..10-3
A. Image Adjustment Basic Procedure....10-3
B. Periodical Servicing....10-4
II. STANDARDS AND ADJUSTMENTS....10-5
A. Image Adjustment....10-5
B. Exposure System....10-15
C. Image Formation System....10-21
D. Pick-Up/Feeding System....10-25
E. Fixing System....10-27
F. Electrical....10-35
III. TROUBLESHOOTING IMAGE FAULTS....10-45
A. Initial Checks....10-45
B. Samples of Image Faults....10-48
C. Troubleshooting Image Faults....10-49
IV. TROUBLESHOOTING MALFUNCTIONS....10-63
A. Troubleshooting Malfunctions....10-63
V. TROUBLESHOOTING FEEDING PROBLEMS....10-78
A. Jams (copy paper)....10-78
B. Feeding Faults....10-81
VI. ARRANGEMENT/FUNCTIONS OF THE ELECTRICAL PARTS....10-82
A. Sensors....10-82
B. Clutches, Solenoids, and Switches....10-84
C. Motors, Heaters, and Lamps....10-86
D. PCBs....10-88
E. Cassette Feeding Module-A2....10-90
F. Variable Resistors (VR) and check Pins by PCB....10-92
VII. SERVICE MODE....10-94
A. Outline....10-94
B. Using Service Mode....10-94
C. Control Display Mode [1]....10-97
D. I/O Mode [2]....10-99
E. Adjustment Mode [3]....10-102
F. Operation/Inspection Mode [4]....10-105
G. Specification Settings Mode [5]...10-107
H. Counter Mode [6]....10-108
VIII. SELF DIAGNOSIS....10-109
A. Copier....10-109
B. Self Diagnosis (ADF)....10-113
C. Self Diagnosis (Sorter)....10-114

COPYRIGHT © 1997 CANON INC. CANON NP6218 REV. 0 MAY 1997 PRINTED IN JAPAN (IMPRIME AU JAPON)

Guide to Troubleshooting Tables

The troubleshooting procedures in this manual are prepared in the form of tables, rather than flow charts. Study the following for an idea of how to consult the tables.

EX. AC power is absent.

Cause/Fault	Step	Checks	YES/NO	Remedies
Power plug	1	Is the power plug connected to the outlet?	NO	Connect the plug.
Covers	2	Are the front door and delivery cover closed properly?	NO	Close the door and cover.
Main power	3	Is the specified voltage present at the power outlet?	NO	The problem is not the copier's; advise the user.
	4	Is the specified voltage present between J1-1 and J1-2? (J1 is located near the power supply cord mount.)	YES	Go to step 6.

- To find out the cause (faulty part) of a single problem, see the Cause/Fault column. In the case of "AC power is absent," you will learn that the power plug may not be connected, the covers may not be closed properly, or the main power may be absent.
- To find out checks to make or remedies to provide for a single problem, see the Remedy column as guided by YES/NO to the checks; or, move to the next step as necessary.

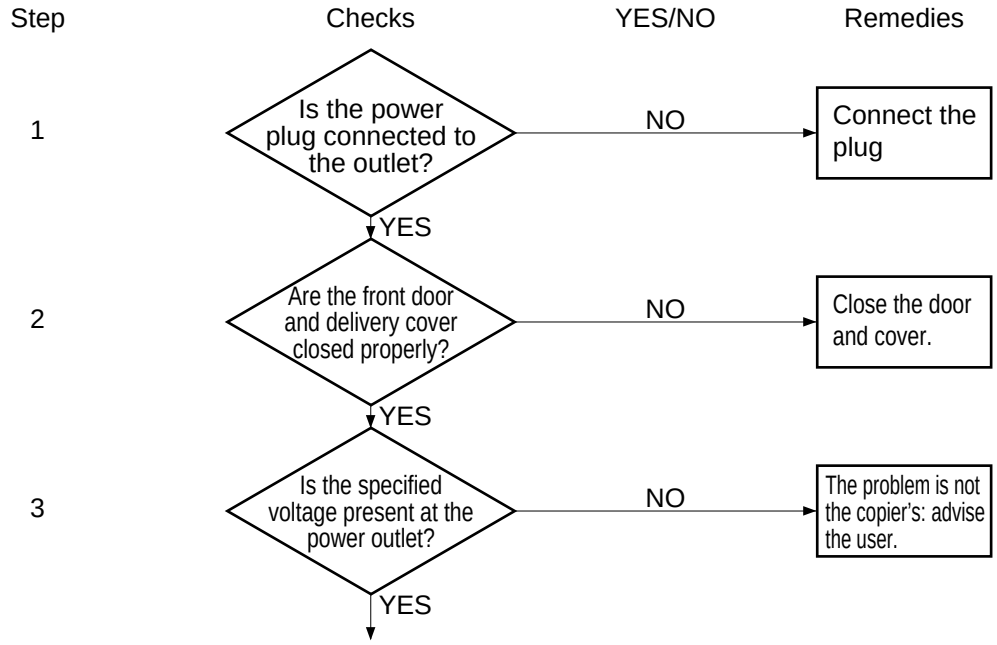

- The instruction "Measure the voltage between J109-1 (+) and J109-2 (–) on the DC controller PCB" asks you to connect the meter's positive probe (+) to J109-1 and negative probe to J109-2 (–).

COPYRIGHT © 1997 CANON INC.
CANON NP6218 REV. 0 MAY 1997 PRINTED IN JAPAN (IMPRIME AU JAPON)

COPYRIGHT © 1997 CANON INC. CANON NP6218 REV. 0 MAR. 1997 PRINTED IN JAPAN (IMPRIME AU JAPON)

A. Image Adjustment Basic Procedure

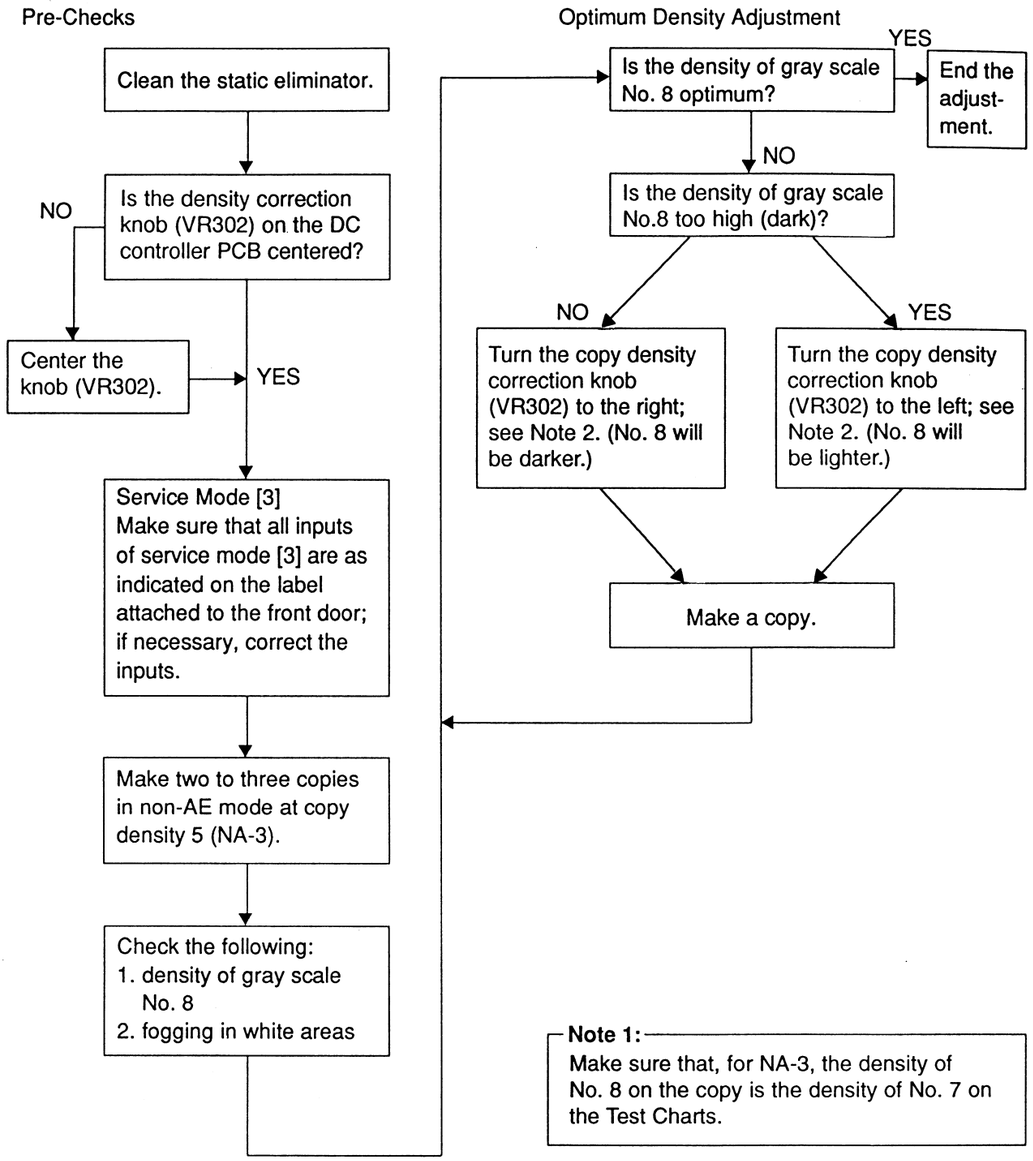

Note 1:
Make sure that, for NA-3, the density of No. 8 on the copy is the density of No. 7 on the Test Charts.

Note 2:
The development bias (DC component) control is shifted.

COPYRIGHT © 1997 CANON INC.
CANON NP6218 REV. 0 MAY 1997 PRINTED IN JAPAN (IMPRIME AU JAPON)

B. Periodical Servicing

Copyboard/Scanner

Part	Tool/Solvent	Remarks
Copyboard glass	Alcohol	Cleaning
Scanning lamp	Lint-free paper	Dry wiping
Reflecting plate	Blower brush	If the dirt is excessive, dry wipe it with lint-free paper.
No. 1 through No. 6 mirror		

Optical path

Part	Tool/Solvent	Remarks
Lens	Blower brush	Cleaning
Dust-proofing glass	Blower brush	Cleaning

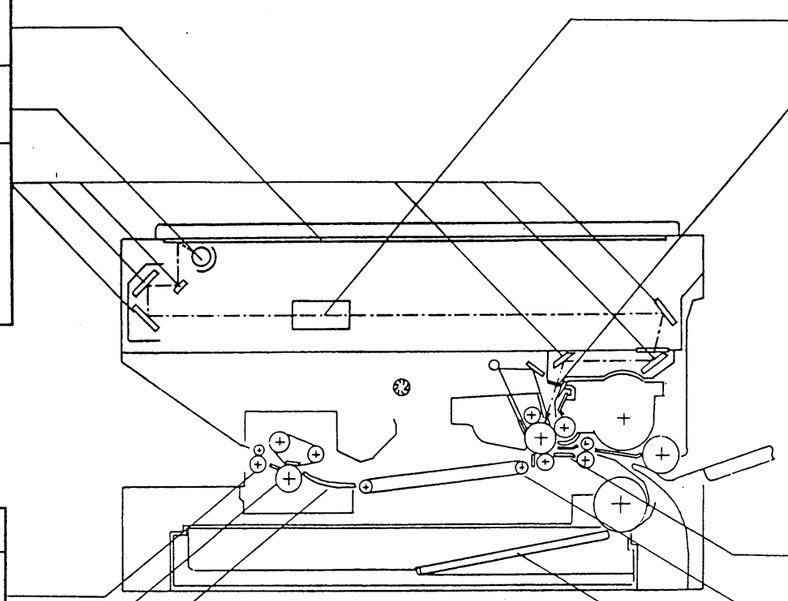

Fixing assembly/Delivery assembly

Part	Tool/Solvent	Remarks
Separation claw (lower)	—	—
Lower roller	Cleaning oil (TKN-0464)	Cleaning
Paper guide	Solvent	Cleaning

Feeding/Static eliminator

Part	Tool/Solvent	Remarks
Transfer guide	Moist cloth (Note)	Cleaning
Static eliminator	Special brush	Cleaning
Feeding belt/Feeding base	Moist cloth (Note)	Cleaning

Note: Make sure there are no droplets of water; do not turn on the power until the part is dry.

COPYRIGHT © 1997 CANON INC. CANON NP6218 REV. 0 MAY 1997 PRINTED IN JAPAN (IMPRIME AU JAPON)

II. STANDARDS AND ADJUSTMENTS

A. Image Adjustment

1. Adjusting the Image Leading Edge Margin ([3], No. 305; registration ON timing)

Activate [3] in service mode, and select 'No. 305' (leading edge margin adjustment), and make adjustments so that the image position is as indicated in Figure 10-201 when the Test Sheet is copied in Direct.

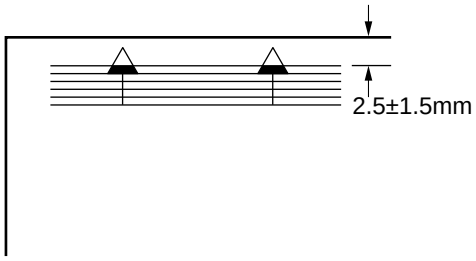

Figure 10-201

Making Adjustments

1) Activate [3] in service mode, and select 'No. 305' using the keypad.
   - The copy count indicator flashes 'No. 305'.
2) Press the Start key.
3) Change the value using the keypad.
   - The value flashes.
   - If the value is negative, '%' turns on. To enter a negative value, press the % key, then enter the value using the keypad.
4) Press the AE key.
   - The value flashes as soon as it is entered.
   - Press the Start key to start copying operation.
5) To change a value continuously, repeat steps 1) through 4).
6) Press the Clear key to return to selecting items.

   The relationship between the setting and the image position is as follows:
   - For each '1' in the setting, the position shifts about 0.27 mm.
   - '+' shifts the image forward.

COPYRIGHT © 1997 CANON INC.
CANON NP6218 REV. 0 MAY 1997 PRINTED IN JAPAN (IMPRIME AU JAPON)

2. Adjusting the Leading Edge Non-Image Width ([3], No. 306; blank shutter ON timing)

Activate [3] in service mode, select 'No. 306' (leading edge non-image width adjustment), and make adjustments so that the image leading edge non-image width is as indicated in Figure 10-202 when the Test Sheet is copied in Direct.

The copier varies the image leading edge non-image width by varying the timing at which the blank shutter is closed.

You must make this adjustment whenever you have replaced the blank shutter solenoid or the blank exposure assembly.

Leading Edge Non-Image Width

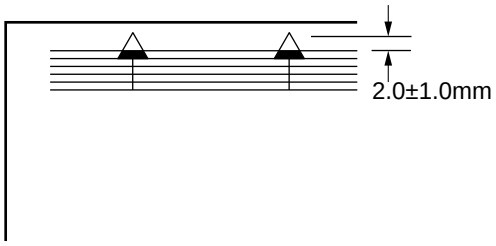

Figure 10-202

Reference:

6 mm or less in Reduce/Enlarge mode.

Making Adjustments

1) Activate [3] in service mode, and select 'No. 306' using the keypad.
   - The copy count indicator flashes 'No. 306'.
2) Press the Start key.
3) Change the value using the keypad.
   - The value flashes.
   - If the value is negative, '%' turns on. To enter a negative value, press the % key, then enter the value using the keypad.
4) Press the AE key.
   - The value flashes as soon as it is entered.
   - Press the Start key to start copying operation.
5) To change a value continuously, repeat steps 1) through 4).
6) Press the Clear key to return to selecting items.

   The relationship between the setting and the image position is as follows:
   - For each '1' in the setting, the position shifts about 0.27 mm.
   - '+' increases the non-image width.

COPYRIGHT © 1997 CANON INC.
CANON NP6218 REV. 0 MAY 1997 PRINTED IN JAPAN (IMPRIME AU JAPON)

3. Adjusting the Image Trailing Edge Non-Image Width ([3], No. 309; blank shutter timing)

Trailing Edge Non-Image Width

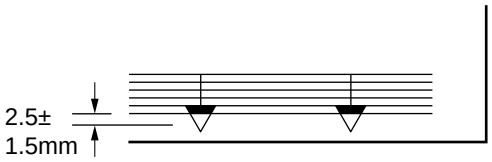

Figure 10-203

Activate [3] in service mode, and select 'No. 309' (leading edge non-image width adjustment); make adjustments so that the image trailing edge non-image width is as indicated in Figure 10-203 when the Test Sheet is copied in Direct.

The copier varies the image trailing edge non-image width by varying the timing at which the blank shutter is opened.

Making Adjustments

1) Activate [3] in service mode, and select 'No. 309' using the keypad.
   - The copy count indicator flashes 'No. 309'.
2) Press the Start key.
3) Change the value using the keypad.
   - The value flashes.
   - If the value is negative, '%' turns on. To enter a negative value, press the % key, then enter the value using the keypad.
4) Press the AE key.
   - The value flashes as soon as it is entered.
   - Press the Start key to start copying operation.
5) To change a value continuously, repeat steps 1) through 2).
6) Press the Clear key to return to selecting items.

   The relationship between the setting and the image position is as follows:
   - For each '1' in the setting, the position shifts about 0.27 mm.
   - '+' decreases the trailing edge non-image width.

COPYRIGHT © 1997 CANON INC.

4. Adjusting the Left/Right Registration

Make adjustments so that the position of the image is as indicated in Figure 10-205 when the Test Sheet is copied in Direct.

a. Pick-Up from the Cassette

Turn the screw 1 shown in Figure 10-204 to adjust the position of the cassette hook plate.

standard: 0.±1.5 mm

clockwise turn: paper moves in the direction of – shown in Figure 10-205.

counterclockwise turn: paper moves in the direction of + in Figure 10-205.

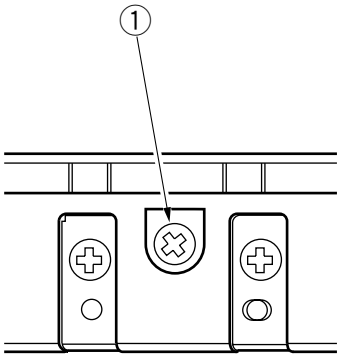

Figure 10-204

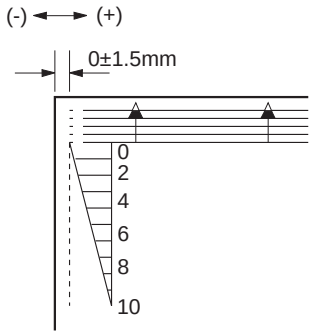

Figure 10-205

b. Pick-Up from the Multifeeder

Loosen the screw 1, and move the position of the tray so that it is 0 ±1.5 mm.

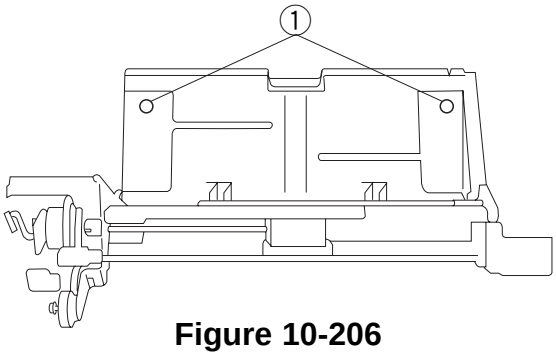

Figure 10-206

COPYRIGHT © 1997 CANON INC.
CANON NP6218 REV. 0 MAY 1997 PRINTED IN JAPAN (IMPRIME AU JAPON)

5. Adjusting the Left/Right Margin (No. 311; left/right margin)

Select 'No. 311' (left/right margin adjustment); make adjustments so that the left/right margin is 2.5 ±1.5 mm when the Test Sheet is copied in Direct.

You must adjust the left/right registration before making this adjustment.

Making Adjustments

a. Margin (adjusting the width)

1) Activate [3] in service mode, and select 'No. 311' using the keypad.
2) Press the Start key.
3) Enter a value using the keypad.
   - If the value is negative, '%' turns on. To enter a negative value, press the % key, then enter the value using the keypad.

The relationship between the setting and the image position is as follows:

- For each '1' in the setting, the margin (one side) shifts about 0.37 mm.
- range: 0 to 15 mm
- '+' increases the margin.
- '–' decreases the margin.

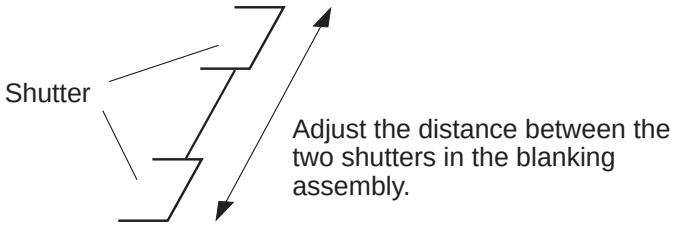

Figure 10-207

b. Left/Right Margin

Turn the blank shutter adjustment screw located on the front side plate shown in Figure 10-208 so that the value is as specified.

clockwise turn:moves the margin toward the front.

counterclockwise turn:moves the margin toward the rear.

a full turn: shifts the margin by about 1 mm.

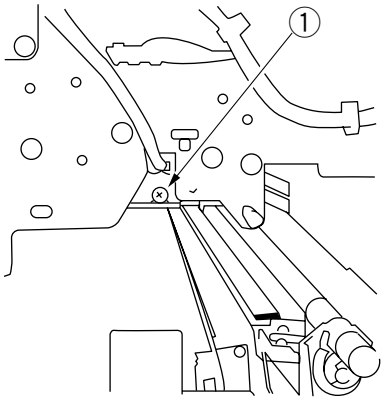

Figure 10-208

COPYRIGHT © 1997 CANON INC.

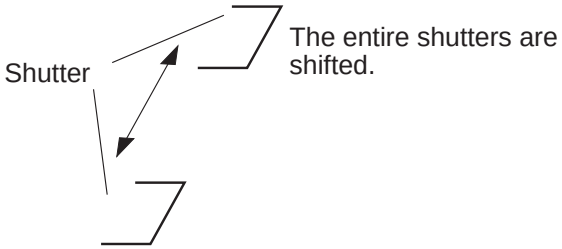

Figure 10-209

Caution:
After the adjustments (both a and b), turn on and off the power switch or change the reproduction ratio so that the blank exposure assembly performs home positioning.

6. Adjusting the Scanning Lamp Intensity

Turn VR301 on the DC controller as follows whenever you have replaced the scanning lamp, intensity sensor, or DC controller.

1) Set Test Sheet NA3 on the copyboard, and close the copyboard cover.
2) Adjust the copy density (AE off) to electrical central position (service mode 1/0 mode [2] No. 212 Value = 153~159).
   ❋ Without this adjustment, exposure value becomes invalid.
3) Turn VR301 on the DC controller so that the image is optimum.
   - If the image is too light, turn the VR slightly clockwise.
   - If the image is too dark, turn the VR slightly counterclockwise.

Reference:

1. The term optimum image refers to a copy whose gray scale No. 8 corresponds to gray scale No. 4 through 7 of the Test Sheet without fogging.
2. An excessive turn on the VR could put out the lamp. If that is the case, turn it clockwise until it stops, and turn off and then on the power for re-adjustment.

Caution:
Be sure to execute AE adjustment after these adjustments.

COPYRIGHT © 1997 CANON INC.
CANON NP6218 REV. 0 MAY 1997 PRINTED IN JAPAN (IMPRIME AU JAPON)

7. AE Adjustment

Adjust the AE mechanism using the following three service modes:

① AE Basic Adjustment
No. 410 .....scanner forward stop
No. 408 .....scanning lamp on check
No. 208 .....AE sensor voltage display
No. 301lamp intensity automatic adjustment at time of AE scan
② Copy Density in AE Mode (No. 302)
(developing bias) reference adjustment
③ Copy Density in AE Mode
(developing bias) slope adjustment

If the copy density is not optimum after executing AE basic adjustment ① (No. 410, No. 408, No. 208, No. 301), execute ② and then , if necessary, ③, i.e., No. 302 and No. 303.

If you have replaced the AE sensor, scanning lamp, or DC controller, adjust the scanning lamp intensity (VR 301); then, execute AE basic adjustment ①, scanner forward stop (No. 410), scanning lamp on check (No. 408), AE sensor voltage display (No. 208), and lamp intensity automatic adjustment (No. 301).

Go through the following when making adjustments; Table 10-1 is a list of service modes excluding scanner forward stop (No. 410), list of service modes excluding scanner forward stop (No. 410), scanning lamp on check (No. 408), and AE sensor voltage display (No. 208).

a. AE Basic Adjustment (No. 410, No. 408, No. 208, No. 301)

In this adjustment, the intensity of the scanning lamp is read by the lamp intensity sensor and the voltage of the AE sensor unit is adjusted by VR 391 on the DC controller. After the adjustment, execute the lamp intensity automatic adjustment for AE scans.

1) Place the Test Sheet NA-3 on the copyboard, and close the copyboard.
   Adjust to the appropriate copy density in non-AE mode (settings) by suing bias adjustment knob “VR302”. Then press the service mode switch (SW302) to activate service mode.
2) Enter ‘4’ using the keypad, and press the AE key.
   • The display indicates ‘401’.
3) Enter ‘410’ using the keypad.
   • The display indicates ‘410’.
4) Press the Start key once.
   • The scanner moves forward.

Caution:
Each press moves the scanner forward; do not press more than once.

5) Enter ‘408’ using the keypad, and press the Start key.
   • The display indicates ‘ON’, and turns off after about 1.5 sec.
6) Press the Clear key twice.
   • The display indicates ‘4’.
7) Press ‘2’ on the keypad, and press the AE key.
   • The display indicates ‘201’.

COPYRIGHT © 1997 CANON INC. CANON NP6218 REV. 0 MAY 1997 PRINTED IN JAPAN (IMPRIME AU JAPON)

8) Enter ‘208’ using the keypad, and press the start button.
   - The display indicates ‘208’.
9) Press the Start key.
   - The display indicates ‘0–255’.
10) Turn VR391 on the DC controller so that the reading on the display is ‘100~105’.

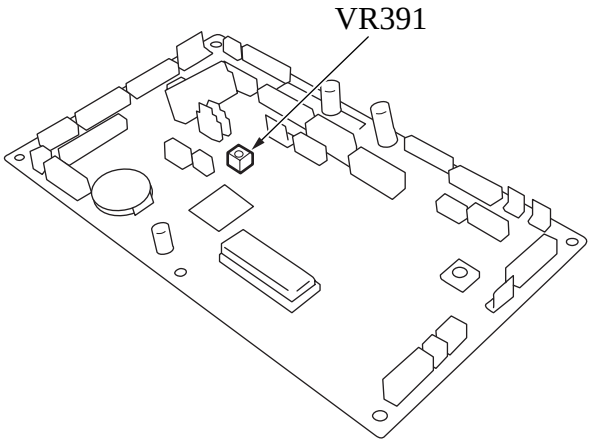

Figure 10-210 DC Controller PCB

11) Turn off and on the power switch.
   - This turns off and on the scanning lamp.
12) Press the service mode switch.
   - The copier enters service mode, and the display indicates ‘1’.
13) Enter ‘3’ using the keypad, and press the AE key.
   - The display indicates ‘301’.
14) Press the Start key.

Caution:
Wait until initial rotation is over.

   - After initial rotation is over, the AE indicators starts to flash.
15) Press the AE key; the following take place to indicate that the optimum intensity is adjusted automatically:
   - The AE indicator stops flashing and remains on.
   - The scanner moves to the AE measurement position.
   - When the intensity has stabilized, the reading taken by the AE sensor is stored in memory.
   - The lamp is turned off, and the scanner is returned to its original position.
16) When the above has ended, press the clear key twice.
   - The display indicated ‘3’.
17) Enter ‘1’ using the keypad, and press the AE key.
   - The display indicates ‘101’.
18) Enter ‘116’ using the keypad, and press the Start key.
   - Make sure that the display indicates ‘68–72’; otherwise, start with step 2) of operation/inspection mode for re-adjustment.

COPYRIGHT © 1997 CANON INC.
CANON NP6218 REV. 0 MAY 1997 PRINTED IN JAPAN (IMPRIME AU JAPON)

b. Copy Density (development bias) Reference Point Adjustment for AE Mode (No. 302)

1) If the indication is not in the 300's, activate adjustment mode (service mode) as in the case of 'No. 301'.
2) Press [2] on the keypad.
   - The copier indicates '302'.
3) Press the Start key.
   - The copier indicates the current setting.
4) Change the setting using the keypad, and press the AE key.
   - A higher setting causes the AE copies to be darker.
   - default: 0
     range: –26 to +26
   - If the setting is negative, the '%' is indicated. To enter a negative value, press the '%' key, and enter a setting.
   - When the copier has read the setting, the indication stops flashing and remains on.
5) Record the new setting on the service mode label.
6) To end, press the Clear key.
   - The copier returns to selection mode, and indicates '302'.
   - As necessary, execute 'No. 303'.

c. Copy Density (development bias) Slope Adjustment for AE Mode (No. 303)

1) If the indication is not in the 300's, activate adjustment mode (service mode) as in the case of No. 301.
2) Press [3] on the keypad.
   - The copier indicates '303'.
3) Press the Start key.
   - The copier indicates the current setting.
4) Change the setting with the keypad, and press the AE key.
   - A larger setting causes the AE copies to be darker.
   - default:.....0
     range:.....–26 to +26
   - If the setting is negative, '%' is indicated. To enter a negative value, press the '%' key, and enter a setting.
   - When the copier has read the setting, the indication stops flashing and remains on.
5) Record the new settings on the service mode label.
6) Press the Reset key.
   - The copier de-activates service mode.

COPYRIGHT © 1997 CANON INC. CANON NP6218 REV. 0 MAY 1997 PRINTED IN JAPAN (IMPRIME AU JAPON)

Item	Function	Description	Remarks\
No. 301	Automatic lamp intensity adjustment for AE scans	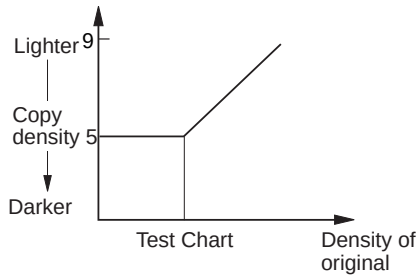	The lamp intensity is automatically adjusted so that the copies of the Test Chart will be made at density 5.
No. 302	Copy density (development bias) reference point adjustment for AE mode	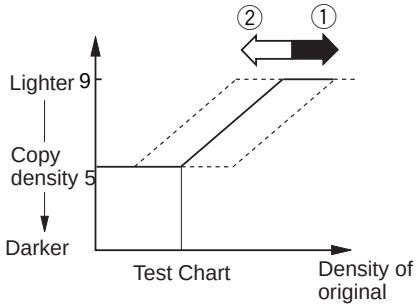	① A lower setting in service mode causes the AE copies to be darker. ② A higher settings in service mode causes the AE copies to be lighter. default: 0 range: –26 to +26 After adjustment with the test sheet NA-3, using AE mode, density adjustment should show '5'. In non-AE mode, density '5' must also be apprppriate (adjusted with knob VR302).
No. 303	Copy density (development bias) slope adjustment for AE mode	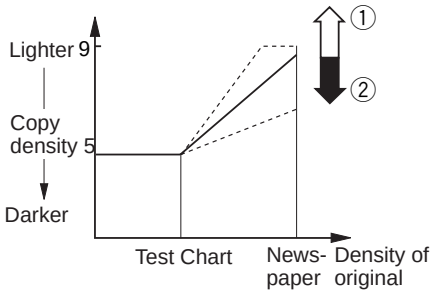	① A higher setting in service mode causes copies of a newspaper to be lighter. ② A lower setting in service mode causes copies of a newspaper to be darker. default: 0 range: –26 to +26

Table 10-201

COPYRIGHT © 1997 CANON INC.
CANON NP6218 REV. 0 MAY 1997 PRINTED IN JAPAN (IMPRIME AU JAPON)

B. Exposure System

1. Routing the Scanner Drive Cable

Route the cable as shown by ① through ⑩; then, adjust the cable tension and mirror position as described.

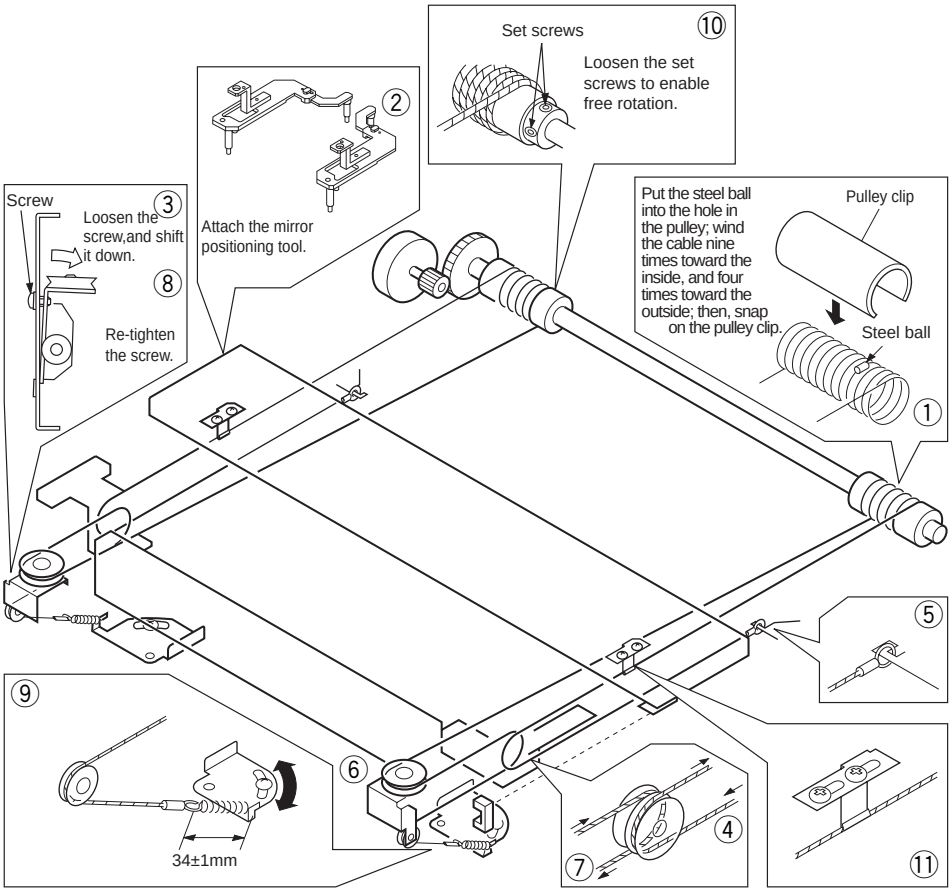

Figure 10-211

Caution:

When attaching the wire spring, pay attention to the orientation of the spring; see the diagrams below. If not attached correctly, its hook tip could interfere with the cable.

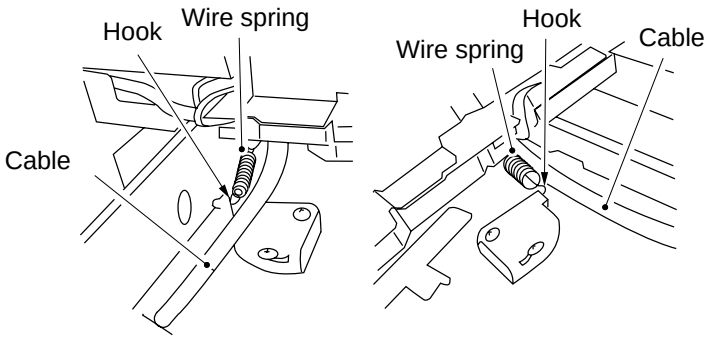

Figure 10-212

COPYRIGHT © 1997 CANON INC.

2. Adjusting the Mirror Position (optical distance between No. 1 mirror and No. 2/No. 3 mirror)

1) Keep the mirror positioning tool handy.
   (See “4 Assembling the Mirror Positioning Tool on P. 10-17.”)
2) Move the No. 1 mirror mount forward, and match the long hole in the front side plate and the cable fixing screw ①.

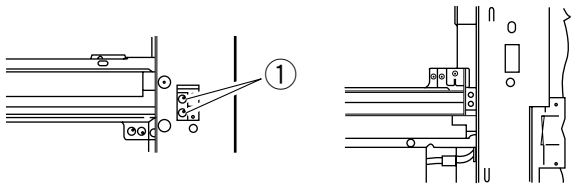

Figure 10-213

3) Loosen the set screw on the pulley.
4) Set the mirror positioning tool ② to the No. 1 mirror mount and the No. 2 mirror mount (both front and rear).

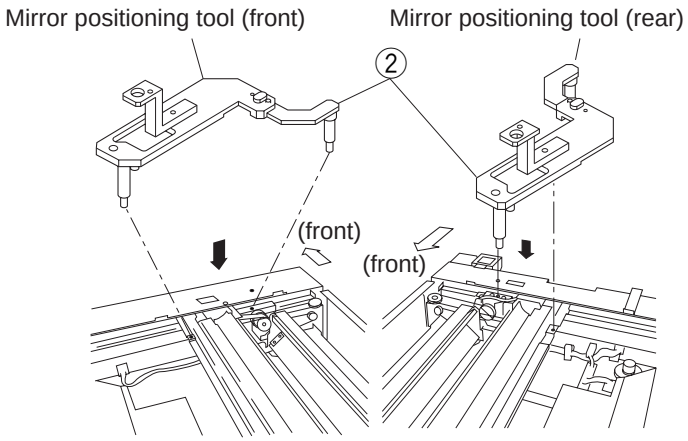

Figure 10-214

5) Attach the scanner cable fixing to the No. 1 mirror mount using two screws ③ (both front and rear).

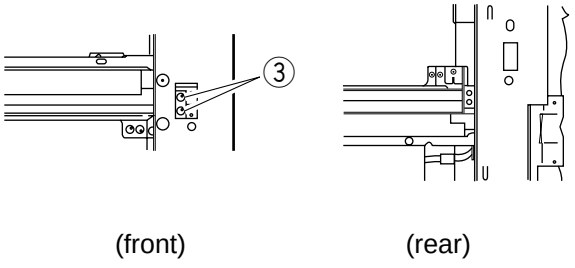

Figure 10-215

COPYRIGHT © 1997 CANON INC.
CANON NP6218 REV. 0 MAY 1997 PRINTED IN JAPAN (IMPRIME AU JAPON)

6) Tighten the screw on the pulley.
7) Detach the positioning tool (FY9-3009).

3. Adjusting the Scanner Cable Tension

Move the tension plate and tighten the screw ② so that the distance across the ends of the cable spring ① is 34 ±1 mm as indicated in Figure 10-216.

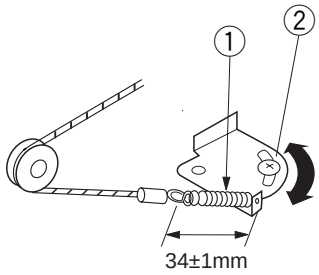

Figure 10-216

4. Assembling the Mirror Positioning Tool

1) Remove the screw found in position B.

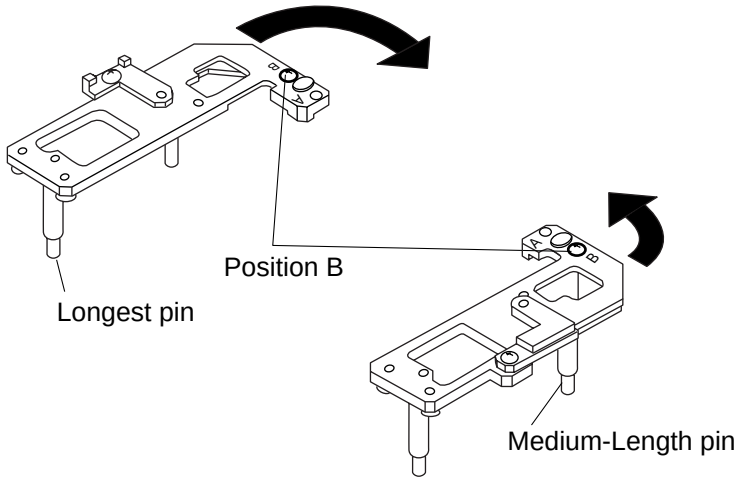

Figure 10-217

2) Fit the screw removed in step 1) in position A, and tighten it slightly.
3) Extend the arm accommodated by the main frame unit it butts against the stopper as in Figure 10-218.

COPYRIGHT © 1997 CANON INC.

4) Tighten the screw.

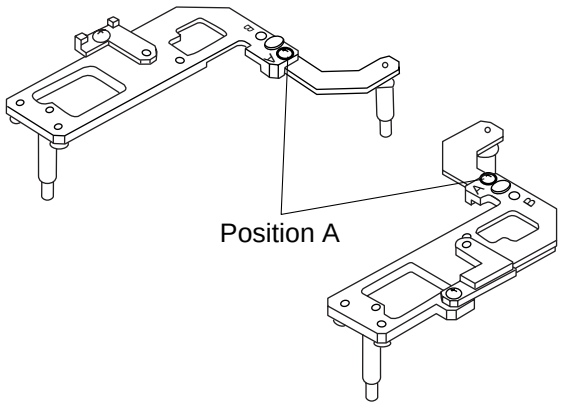

Figure 10-218

5. Points to Note When Attaching the Fluorescent Lamp Heater/Scanning Lamp

- Attach the heater to the lamp as follows:

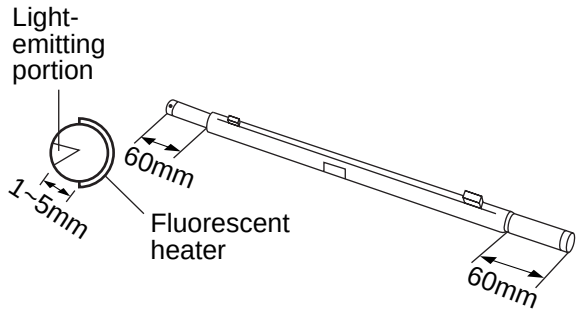

Figure 10-219

Caution:

Do not touch the fluorescent lamp. (Use lint-free paper.)
Do not block the light-emitting portion by the fluorescent lamp heater.

COPYRIGHT © 1997 CANON INC.
CANON NP6218 REV. 0 MAY 1997 PRINTED IN JAPAN (IMPRIME AU JAPON)

Attach the scanning lamp so that its light-emitting portion (open side) is to the left when viewed from the front of the copier as shown in Figure 10-220.

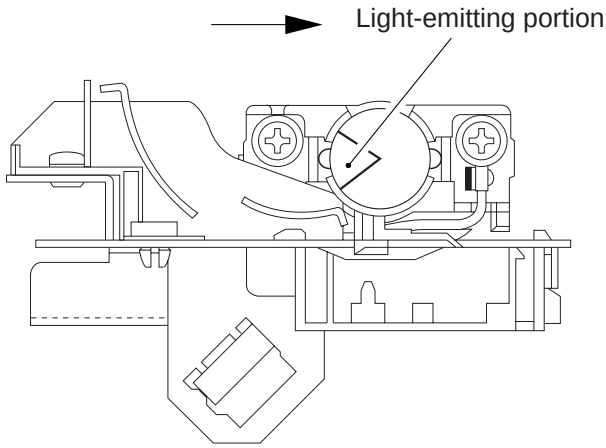

Figure 10-220 (front view)

Caution:

Do not touch the fluorescent lamp. (Use rint-free paper)

Be sure to adjust the gain and AE whenever you have replaced the fluorescent lamp. (See P. 10-11.)

- Make sure that the cut-off of the fluorescent heater is correctly oriented in relation to the intensity adjustment sensor.

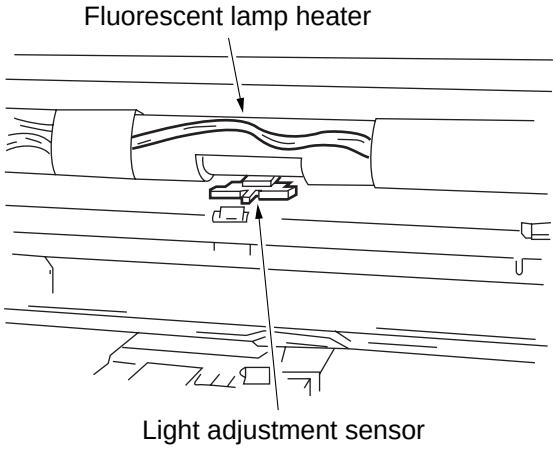

Figure 10-221

Reference:

The fluorescent lamp heater will not operate unless the copier's heater switch is turned on.

COPYRIGHT © 1997 CANON INC.

6. Positioning the Change Solenoid

Make adjustments by loosening the two screws ⑤ so that the gear ④ butts against the direction of b by the arm ③ when the steel core ① of the solenoid is fully pushed in the direction of B, i.e., when the E-ring comes into contact with the solenoid.

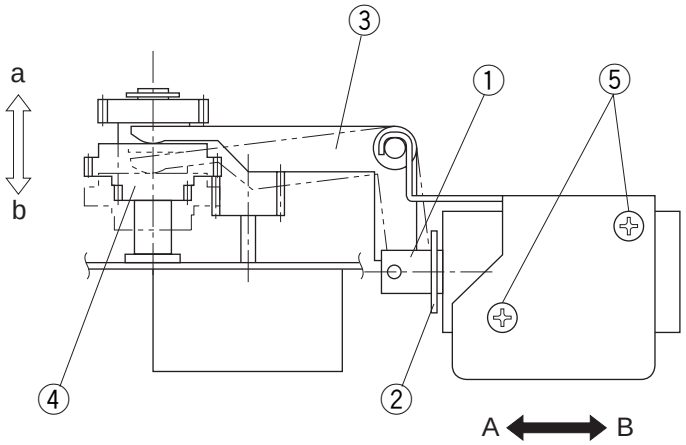

Figure 10-222

COPYRIGHT © 1997 CANON INC.
CANON NP6218 REV. 0 MAY 1997 PRINTED IN JAPAN (IMPRIME AU JAPON)

C. Image Formation System

1. Positioning the Blank Shutter Solenoid

Adjust the position of the blank shutter solenoid so that the bottom A is 9.5 ±0.5 mm on both sides when the solenoid is moved in the direction of ON; try not to force down the shutter.

After adjustments, make sure that the solenoid moves smoothly.

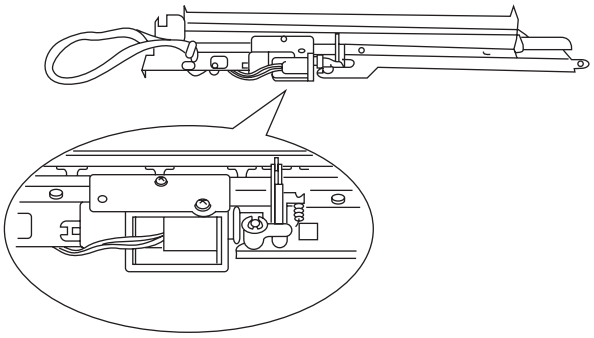

Figure 10-223a

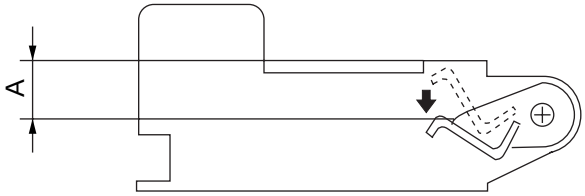

Figure 10-223b

COPYRIGHT © 1997 CANON INC.

2. Routing the Blank Shutter Cable

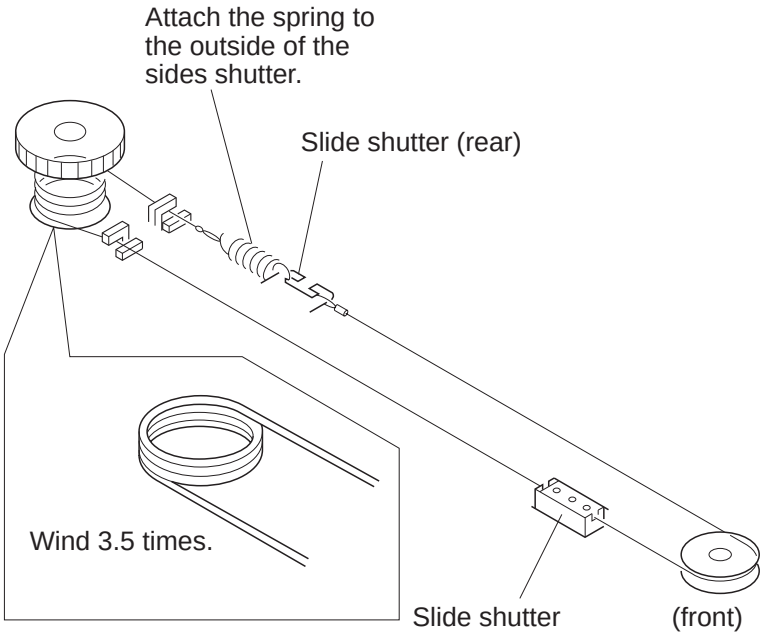

Figure 10-224

3. Positioning the Solenoid for the Primary Charging Roller

Loosen the two screws used to fix the solenoid ③ in place, and move the solenoid in the direction of B so that the ℓ in Figure 10-225 is 5.5 ±0.2 mm when the joint ① is butted against a of the solenoid support plate ②.

Caution:
Be sure to make the adjustment whenever you have replaced the solenoid.

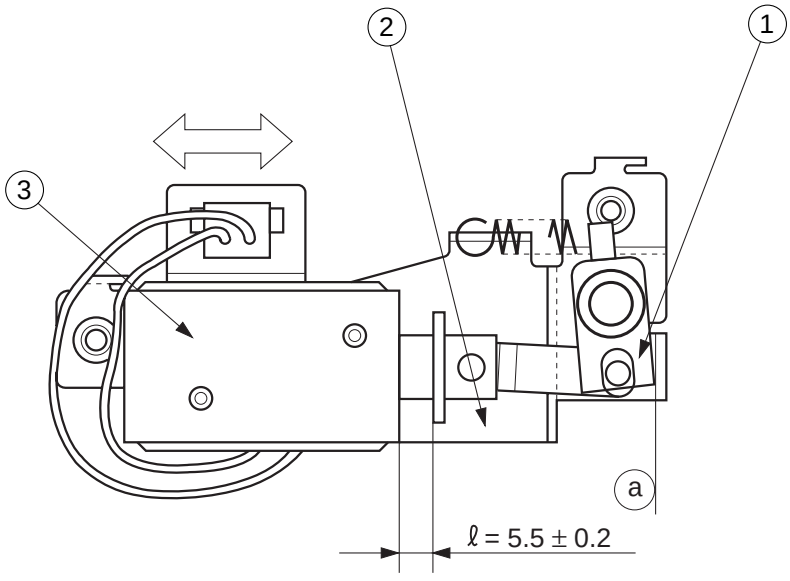

Figure 10-225

COPYRIGHT © 1997 CANON INC.
CANON NP6218 REV. 0 MAY 1997 PRINTED IN JAPAN (IMPRIME AU JAPON)

4. After Replacing the Drum Unit

Whenever you have replaced the drum unit, enter the date of replacement and the current counter reading on the label (Figure 10-226) that came with the drum unit; attach the label to the front cover of the new drum unit, and perform the image basic adjustment procedure.

日付 date date Datum	カウンター counter compteur. Zahler	備考 notes note Notiz

Figure 10-226

5. Attaching the Drum Heater

1) Detach the front cover.
2) Open the copier's top body by operating the copier open/close lever.
3) Remove the two fixing screws ②, and detach the harness cover ①.

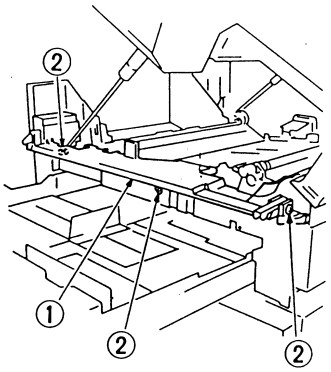

Figure 10-227

4) Detach the transfer roller and the static eliminator.
5) Detach the transfer guide.
6) Butt the two heaters against the transfer guide as shown in Figure 10-228, and fix the two mounts with two screws ③; further, fix the harness in place using two harness bands ④ (front, rear).

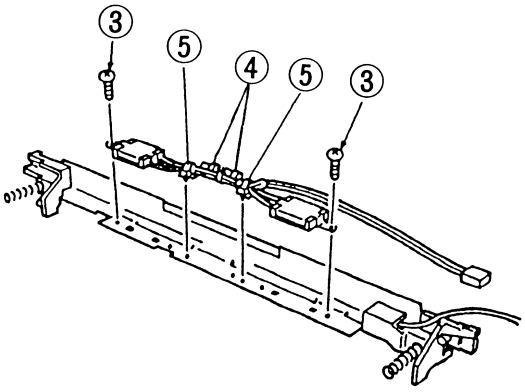

Figure 10-228

COPYRIGHT © 1997 CANON INC.

7) Fix the harness in place using two SK binders (WT2-5145; front, rear) ⑤; then, insert it into the transfer guide.

Caution:
When fixing the harness in place, make sure that the cap portions of the terminals alternate; keeping them in parallel will bring them in contact with the transfer roller.

8) Fix the harness with two SK binder ⑤ (front, rear) in place, and insert it into the transfer guide.

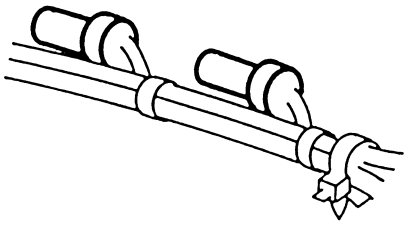

Figure 10-229

9) Connect the connector ⑥ as shown in Figure 10-230.

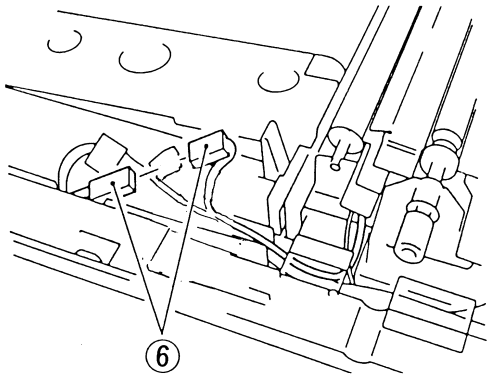

Figure 10-230

Caution:
When attaching the transfer guide to the copier after attaching the drum heater, make sure that the spring at the rear is firmly in the groove.

COPYRIGHT © 1997 CANON INC.
CANON NP6218 REV. 0 MAY 1997 PRINTED IN JAPAN (IMPRIME AU JAPON)

D. Pick-Up/Feeding System

1. Orientation of the Pick-Up Roller

Attach the pick-up roll ① so that the side ② shown in Figure 10-231 is toward the rear.

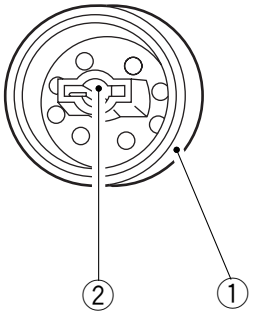

Figure 10-231

2. Orientation of the Multifeeder Pick-Up Roller

Attach the multifeeder pick-up roller ① so that the side with the collar with a cross ② is toward the rear.

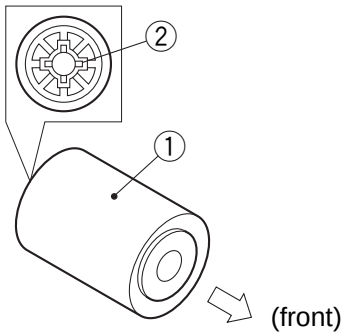

Figure 10-232

COPYRIGHT © 1997 CANON INC.
CANON NP6218 REV. 0 MAY 1997 PRINTED IN JAPAN (IMPRIME AU JAPON)

3. Positioning the Paper Guide Plate Cam (multifeeder)

Temporarily fix the screw with a hex nut of the spring clutch assembly in place; turn the control ring. Make adjustments so that the hole in the cam and the hole in the multifeeder drive unit match as indicated in Figure 10-233 when the claw of the control ring is engaged with the solenoid; then, fix in place.

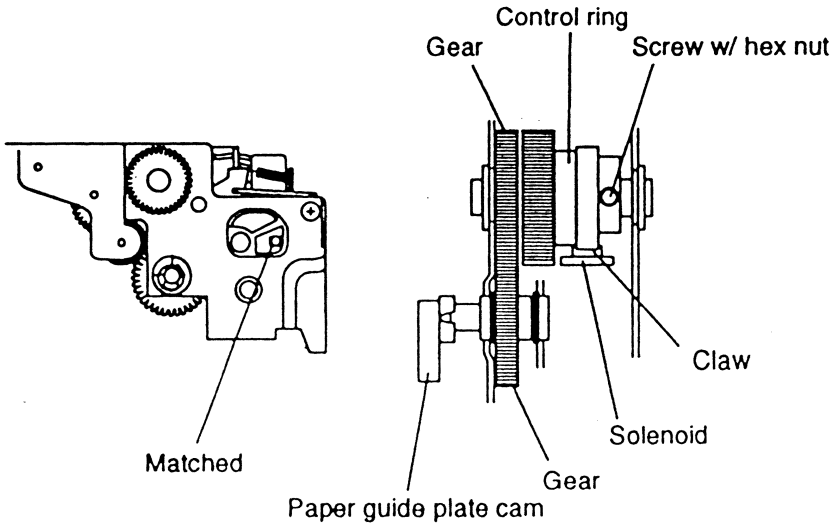

Figure 10-233

COPYRIGHT © 1997 CANON INC.
CANON NP6218 REV. 0 MAY 1997 PRINTED IN JAPAN (IMPRIME AU JAPON)

E. Fixing System

1. Points to Note When Attaching the Fixing Film

Orient it so that the cut-off is toward the rear.
Make sure that the end toward the front is along the middle groove.

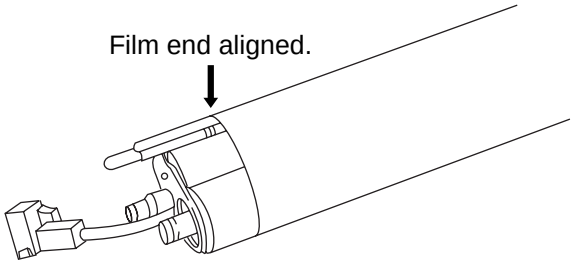

Figure 10-234

2. Points to Note When Attaching the Heater Connector

- When attaching the heater connector to the fixing heater, take care not to damage the heater.
- When tightening the screw, hold the connector making sure that both its top and bottom are free of pressure; do not tighten the screw excessively.

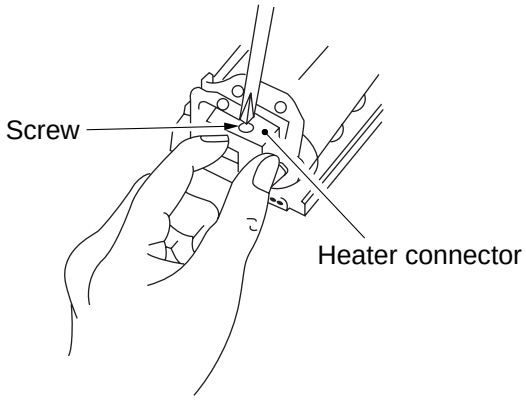

Figure 10-235

COPYRIGHT © 1997 CANON INC. CANON NP6218 REV. 0 MAY 1997 PRINTED IN JAPAN (IMPRIME AU JAPON)

3. Adjusting the Fixing Film Drive Roller Pressure

If a fixing fault occurs, be sure to go through the following to adjust the pressure of the drive roller.

1) Detach the fixing cover.
2) Detach the inside cover of the copier's front side.
3) Close the copier's upper body, and insert the door switch actuator.
4) Press the service mode switch (SW302).
   - The copier enters service mode, and the display indicates '1'.
5) Press '4' on the keypad.
   - The display indicates '4'.
6) Press the AE key.
   - The copier enters operation check mode, and the display indicates '401'.
7) Press '5' on the keypad.
   - The display indicates '405'.
8) Press the Start key.
   - The copier enters fixing film initial rotation mode (405) to return the fixing film to its proper position.
   - The fixing film stops automatically as soon as it reaches its proper position.
   - The copier indicates the position of the film in the copy density indicator.
9) Open the copier's top body.
10) Check that the arrow ① is at the middle of the memory as shown in Figure 10-236.

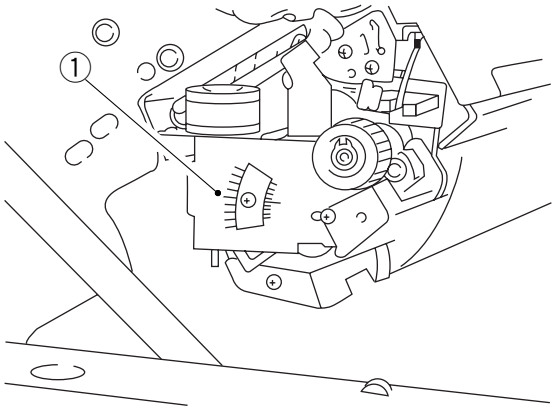

Figure 10-236 (rear view)

11) Close the copier's top body, and activate service mode.
12) Press '4' on keypad; when the display indicates '4', press the AE key.
13) Press '4' on the keypad; when the display indicates '404', press the Start key.
   - The copier enters fixing tension roller mode (404).
   - The fixing tension roller becomes fixed, and the fixing film rotates idly.
   - The count indicator indicates how long the fixing film sensor has remained on.

Caution:
If the copy count indicator keeps indicating '0' or '528' during adjustment, immediately press the Stop key to de-activate service mode.

COPYRIGHT © 1997 CANON INC.
CANON NP6218 REV. 0 MAY 1997 PRINTED IN JAPAN (IMPRIME AU JAPON)

If the copy countis ‘180’ or higher and ‘348’ or lower and has not changed, go to step 17). Or, if 10’s and 100’s do not change, go to step 17);

14) Loosen the fixing screw ② slightly; i.e., move it to the left about 1 mm.

15) Turn the adjusting screw ③ so that the copy count is ‘180’ or higher’ and ‘348’ or lower.

Caution:
Adjust so that 10’s and 100’s will not change; ignore 1’s may change ±5.)

- A clockwise turn decreases the reading.
- A counterclockwise turn increases the reading.

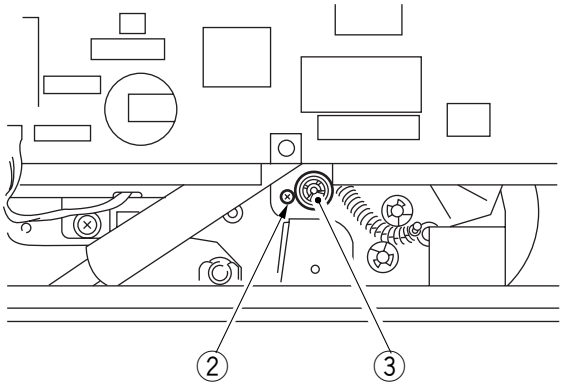

Figure 10-237

16) When the reading in the copy counter is appropriately correct, tighten the screw ②; make sure that the reading is appropriate after tightening the screw.

17) Press the Start key.
- The copier enters check mode (404), and the fixing film rotates idly for about 2.5 min; check that the fixing film has not shifted from the adjusted position.
- The copy count indicator indicates “ 00 ” or “ nG ”; if “ nG ” is indicated, repeat steps starting with 13).
  If “ 00 ” is indicated, repeat steps 4) through 10).

18) Attach the cover.

4. Points to Note after Replacing the Fixing Upper Unit

You must enter the resistance of the heater by selecting ‘No. 304’ in service mode whenever you have replaced the fixing upper unit. (See p. 10-31.)

COPYRIGHT © 1997 CANON INC. CANON NP6218 REV. 0 MAY 1997 PRINTED IN JAPAN (IMPRIME AU JAPON)

5. Adjusting the Nip

The nip should be as indicated in Figure 10-238. You must make the following adjustments if fixing faults occur.

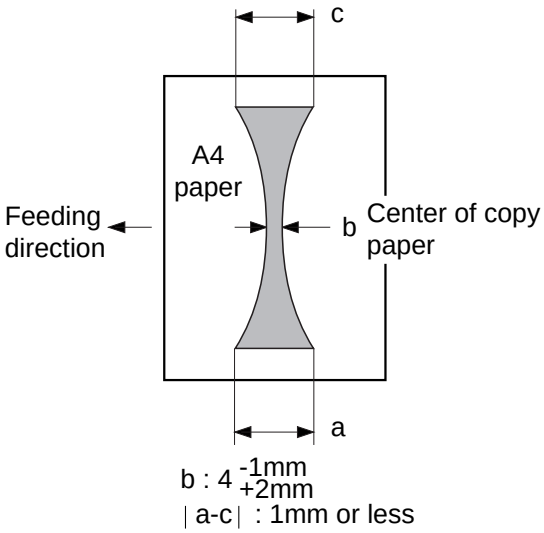

Figure 10-238

Note:
a and c represent points 10 cm from both edges of the copy.

a. Measuring the Nip

Measure the nip before starting the day's work; for example, first thing in the morning.

1) Open the copyboard cover, and make a solid black copy in A4.
2) Place the copy in the multifeeder with the solid black face up.
3) Press the service mode switch (SW302) using a hex key.
   - The copier enters service mode, and indicates '1'.
4) Press [4] on the keypad.
   - The copier indicates '4'.
5) Press the AE key.
   - The copier enters operation/inspection mode, and indicates '401'.
6) Press [6] on the keypad.
   - The copier indicates '406'.
7) Press the Start key.
   - The multifeeder picks up paper, and the copier positions the paper as in Figure 10-238 for measurement, and dischages it.

Reference:
The fixing rollers hold the paper and stop it when half of it has been delivered; the paper is discharged automatically about 10 sec later.

8) Measure the nip.

COPYRIGHT © 1997 CANON INC.
CANON NP6218 REV. 0 MAY 1997 PRINTED IN JAPAN (IMPRIME AU JAPON)

6. Routing the Drive Belt

Route the drive belt around the pulley and tensioner as shown in Figure 10-239.

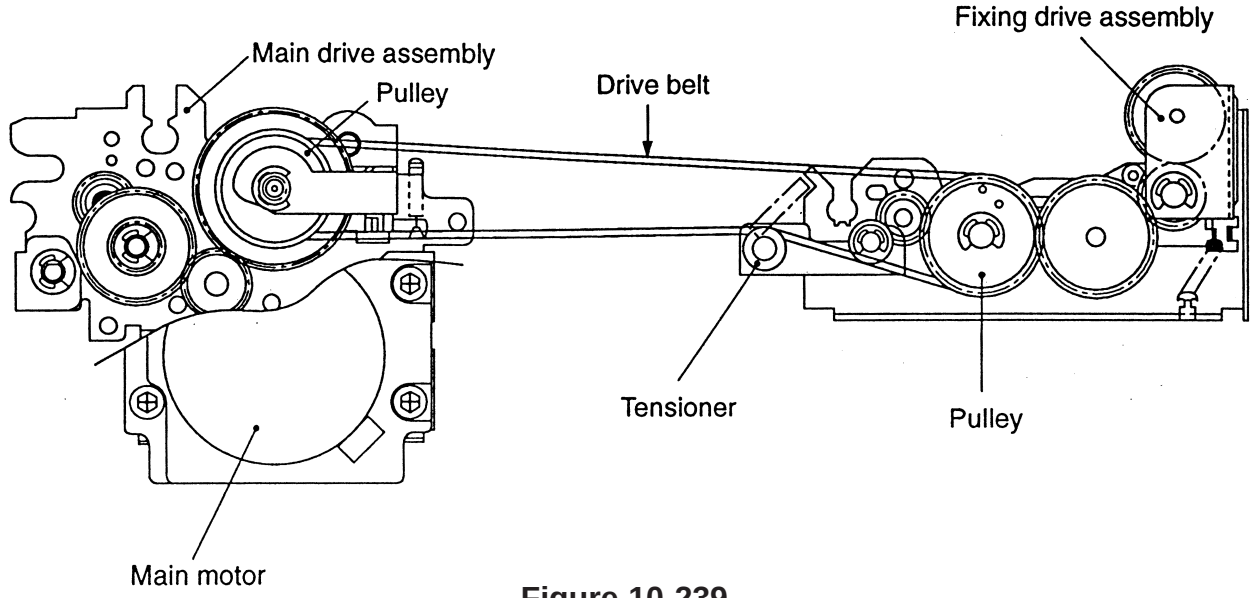

Figure 10-239

7. Storing the Fixing Heater Resistance

You must store the resistance of the fixing heater as follows whenever you are replacing the fixing upper unit; do not change the setting unless you have replaced the heater.

1) Take notes of the resistance (ohm) of the fixing heater recorded on the rear side plate of the fixing upper unit.
2) Attach the fixing upper unit to the copier.
3) Open the front door, and insert the door switch actuator into the door switch.
4) Press the service mode switch (SW302) with a hex key.
   - The copier activates service mode, and indicates '1'.
5) Press [3] on the keypad.
   - The copier activates adjustment mode, and indicates '3'.
6) Press the AE key.
   - The copier enters adjustment mode, and indicates '301'.
7) Press [0] and [4] on the keypad.
   - The copier indicates '304'.
8) Press the Start key.
   - The copier indicates the current setting.
9) Enter the measured reading, and press the AE key to store.
10) Record the new setting on the service mode label.
11) Press the Reset key.
   - The copier de-activates service mode.

unit: ohms; enter a value which is the result of the measured resistance multiplied by 10.

range (default)

220/240V: .....235 to 325 (280)

COPYRIGHT © 1997 CANON INC. CANON NP6218 REV. 0 MAY 1997 PRINTED IN JAPAN (IMPRIME AU JAPON)

Reference:

1. If the measured resistance is 9.5 ohms, enter '095'; if 28 ohms, enter '280'.
2. The power supplied to the fixing heater is phase-controlled based on the voltage of the power supply and the resistance being stored.

8. Setting the Fixing Heater Temperature Control Value

You can change the fixing temperature control value in the field in any of the following two ways:

8-1 When Replacing the Fixing Upper Unit

Set the initial control temperature value for the 1st to 4th copies under No. 508 of service mode for when the temperature of the fixing heater is less than 120°C at time copying is started.

1) Take notes of the value recorded on the label on the fixing upper unit heater stay (rear).

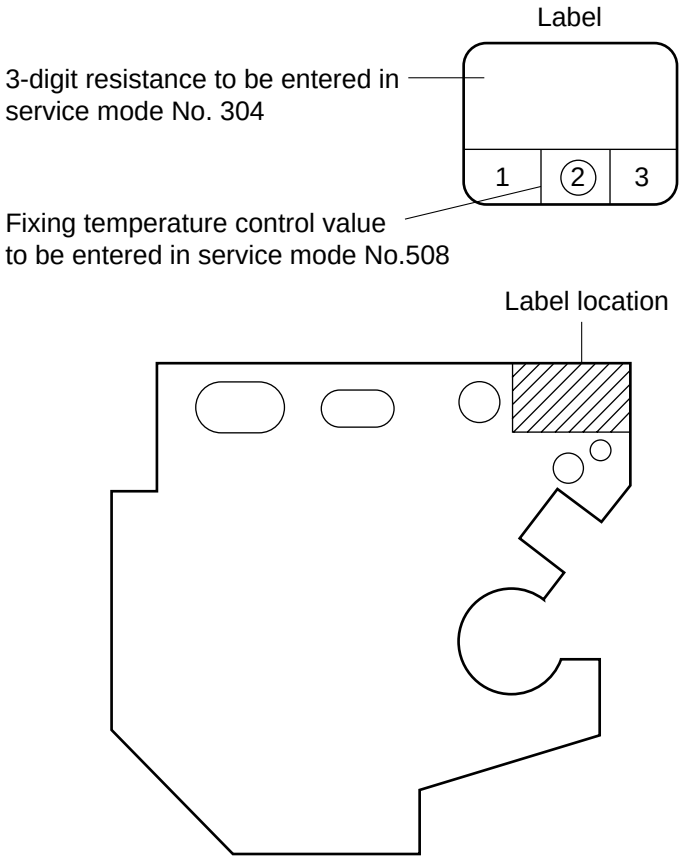

Figure 10-240 Heater Stay Side Plate (rear)

COPYRIGHT © 1997 CANON INC.
CANON NP6218 REV. 0 MAY 1997 PRINTED IN JAPAN (IMPRIME AU JAPON)

2) Replace the fixing upper unit.
3) Press the service switch (SW302).
   • The copier enters service mode and indicates ‘1’.
4) Enter ‘5’ using the keypad.
   • The display indicates ‘5’.
5) Press the AE key, and enter ‘8’ on the keypad.
   • The display indicates ‘508’.
6) Press the Start key.
   • The display indicates ‘001’, ‘002’, or ‘003’.
7) Enter the control value you have recorded in step 1) using the keypad.

Example:

If the value recorded on the heater stay (rear) of the fixing upper unit is ‘2’,
a. Enter ‘2’ using the keypad to change the value.
b. Press the AE key.
c. Press the Reset key.

Caution:
You must set the resistance of the heater also when replacing the fixing upper unit.

8-2 When Replacing the Fixing Film
1) Replace the fixing film.
2) Replace the copy paper in the cassette with A3 size copy paper.
3) Press the service switch (SW302).
   • The copier enters service mode and indicates ‘1’.
4) Enter ‘5’ using the keypad, and press the AE key.
   • The display indicates ‘501’.
5) Enter ‘5’ using the keypad, and press the Start key.
   • The display indicates ‘001’, ‘002’, or ‘003’.
6) Enter ‘2’ using the keypad, and press the Clear key.
8) Make 20 copies or more in A3 to warm up the entire fixing upper unit.
9) Place the Test Chart NA-3 on the copyboard, and put a blank sheet of paper (A3) to cover about 2/3 of the Test Chart (bottom).

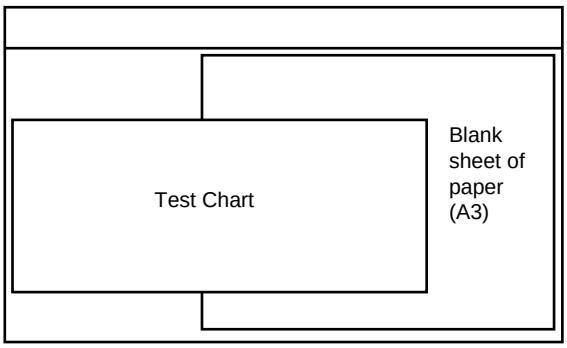

Figure 10-241

COPYRIGHT © 1997 CANON INC. CANON NP6218 REV. 0 MAY 1997 PRINTED IN JAPAN (IMPRIME AU JAPON)

10) Enter ‘4’ using the keypad, and set the copy count.
11) Press the service switch (SW302), thereby recalling the temperature of the No. 1 thermistor.
    - The display indicates ‘1’.
12) Press the AE key, and enter ‘9’ on the keypad.
    - The display indicates ‘109’.
13) Press the Start key.
    - Make 4 copies in A3.
14) When copying is finished, take note of the temperature reading in the display. Press the Start key once again when the reading is 116°–118°C.
    - Make four copies in A3.
15) Check if offset has occurred.
    - If offset is noted, change the temperature control value of the fixing heater. Go to step 16).
    - If offset is not noted, go to step 21).
16) Press the Clear key, and enter ‘5’ using the keypad.
    - The display indicates ‘508’.
17) Press the AE key, and enter ‘8’ using the keypad.
    - The display indicates ‘508’.
18) Press the Start key.
    - The display indicates ‘002’.
19) Enter ‘3’ using the keypad.
    - The display indicates ‘003’.
20) Press the AE key.
    - The setting is changed.
21) Press the Reset key.
    - The copier leaves service mode.

COPYRIGHT © 1997 CANON INC.
CANON NP6218 REV. 0 MAY 1997 PRINTED IN JAPAN (IMPRIME AU JAPON)

F. Electrical

1. After Replacing the PCB

You must make the adjustments that follow whenever you have replaced the following PCBs.

a. DC Controller PCB

1) Enter the value recorded on the service mode label attached behind the front door in service mode (‘3’; see p. 10-102).
2) Adjust the multifeeder paper width sensor; see p. 10-43.
3) Adjust the intensity of the scanning lamp; see p. 10-10.
4) Adjust AE; see p. 10-11.
   As necessary, change the settings in service mode and user mode.

Caution:
Be sure to record all new settings that you have entered.

b. Composite Power Supply PCB

1) Enter the values recorded on the label attached to the composite power supply in service mode (‘No. 315’ through ‘No. 318’; ‘3’ of adjustment mode); see p. 10-103.
   Be sure to record any new settings on the service mode label.

c. AE Sensor PCB

1) Adjust AE; see p. 10-11.

Caution:
Be sure to record all new settings that you have entered.

d. Intensity Sensor PCB

1) Adjust the intensity of the scanner lamp; see p. 10-10.
2) Adjust AE; see p. 10-11.

Caution:
Be sure to record all new settings that you have entered.

2. Clearing the Back-Up RAM

1) Open the front door, and insert the door switch activator into the door switch.
2) Press the service mode switch (SW302) with a hex key.
   - The copier activates service mode, and indicates ‘1’.
3) Press [4] on the keypad.
   - The copier indicates ‘4’.
4) Press the AE key.
   - The copier activates operation/inspection mode, and indicates ‘401’.
5) Press [5] and [0] on the keypad.
   - The copier indicates ‘450’.
6) Press the Start key.
   - The copier indicates ‘noP’.

COPYRIGHT © 1997 CANON INC.
CANON NP6218 REV. 0 MAY 1997 PRINTED IN JAPAN (IMPRIME AU JAPON)

7) Press the AE key.
   • The indication changes to ‘EE’.
8) Press the Start key.
   • The indication returns to ‘450’.
9) Turn off and on the power switch.
   • The copier clears the backup RAM, and returns the default settings.

Reference:

To cancel RAM clearing, press the Clear key and then the Reset key. To cancel it after having finished step 8), press the Start key once again; when ‘noP’ is indicated, press the Start key once again.

3. Checking the Photointerrupters

The copier allows checking the photointerrupters with a conventional meter or in service mode.

a. Using a Meter

1) Set the meter to the 12VDC range.
2) Connect the (–) probe of the meter to J301-4 (GND) on the DC controller.
3) Make checks as indicated.
   1: 5V
   0: 0V

Reference:

All photointerrupters except PS1, PS2, PS3, PS6, and PS9 are connected in the form of a matrix, and for this reason may show variations if checked by a meter; use service mode for these photointerrupters.

b. Using Service Mode

1) Open the front door, and insert a door switch actuator into the door switch.
2) Press the service mode switch (SW302) with a hex key.
3) Press [2] on the keypad.
• The copier indicates ‘2’.
4) Press the AE key.
• The copier activates I/O display mode, and indicates ‘201’.
5) Enter a number with the keypad, and press the Start key.
• The copier checks each photointerrupter; see the copy count indicator.

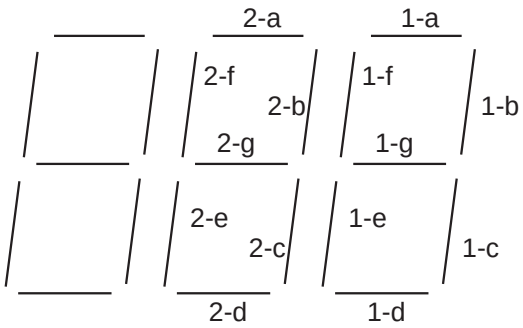

Figure 10-242

COPYRIGHT © 1997 CANON INC.
CANON NP6218 REV. 0 MAY 1997 PRINTED IN JAPAN (IMPRIME AU JAPON)

a. Copier

Name	+ probe / Service mode	Checks		Display indication	Voltage reading on meter
PS1 Scanner home position sensor (SCHP)	J311-2 —	Move the scanner by hand while in standby.	The scanner is at home position.	1	5V
			The scanner is not at home reposition.	0	0V
PS2 Lens home reposition sensor (LHP)	J307-2 No. 205 1-c	Move the lens mount by hand while in standby.	The light-blocking plate is present.	1	5V
			The light-blocking plate is not present.	0	0V
PS3 Blank shutter home position sensor (BSHP)	J315-2 No. 205 1-d	Detach the blank exposure assembly; do not disconnect J315. Move the blank shutter.	The light-blocking plate is present.	1	5V
			The light-blocking plate is not present.	0	0V
PS4 Cassette paper sensor (CPD*)	J313-9 No. 205 1-c	Slide out the cassette while in standby.	The cassette is slid out.	0	—
			The cassette with paper is slid in.	1	—
PS5 Multifeeder paper sensor (MFPD*)	J313-3 No. 204 1-d	Place paper on the multifeeder tray while in standby.	Paper is placed.	0	—
			Paper is not placed.	1	—
PS6 Registration sensor (RPD)	J314-2 No. 205 1-a	Open the right door while in standby, and insert paper along the paper guide plate.	Paper is inserted.	1	5V
			Paper is not inserted.	0	0V
PS7 Separation sensor (SPD*)	J314-6 No. 204 1-b	Move the detection lever with a finger while in standby.	The lever is moved.	0	—
			The lever is not moved.	1	—

COPYRIGHT © 1997 CANON INC.
CANON NP6218 REV. 0 MAY 1997 PRINTED IN JAPAN (IMPRIME AU JAPON)

Name	+ probe Service mode	Checks		Display indication	Voltage reading on meter
PS8 Delivery sensor (DSPD*)	J312-2 No. 204 1-g	Move the detection lever with a finger while in standby.	The lever is moved.	0	—
			The lever is not moved.	1	—
PS9 Fixing film sensor (FFD)	J304-12 No. 205 1-e	Move the detection lever with a finger while in standby	The light-blocking plate is present.	1	5V
			The light-blocking plate is not present.	0	0V
PS10 Right door open/closed sensor (RDOP*)	J306-15 No. 204 1-a	Open the right door while in standby	The right door is open.	0	—
			The right door is closed.	1	—
Q651 Cassette size sensor 1 (CSZ-1)	J314-8 No. 203 1-e	Slide out the cassette while in standby, and move the detection lever with a finger.	The lever is moved.	0	—
			The lever is not moved.	1	—
Q652 Cassette size sensor 2 (CSZ-2)	J314-9 No. 203 1-f	Slide out the cassette while in standby, and move the detection lever with a finger	The lever is moved.	0	—
			The lever is not moved.	1	—
Q653 Cassette size sensor 3 (CSZ-3)	J314-10 No. 203 1-g	Slide out the cassette while in standby, and move the detection lever with a finger.	The lever is moved.	0	—
			The lever is not moved.	1	—

COPYRIGHT © 1997 CANON INC.
CANON NP6218 REV. 0 MAY 1997 PRINTED IN JAPAN (IMPRIME AU JAPON)

Name	+ probe / Service mode	Checks		Display indication	Voltage reading on meter
Q654 Cassette size sensor 4 (CSZ-4)	J314-11 No. 203 2-a	Slide out the cassette while in standby, and move the detection lever with a finger.	The lever is moved.	0	—
			The lever is not moved.	1	—

b. Cassette Feeding Unit

Name	+ probe / Service mode	Checks		Display indication	Voltage reading on meter
PS1cu Cassette 2 vertical path sensor (C2VPD)	J319-A2 No. 204 2-b	Draw out the cassette 2 while in standby, and put copy paper over the pick-up guide plate.	Copy paper is inserted.	1	—
			Copy paper is not inserted.	0	—
PS2cu Cassette 2 paper sensor (C2PD*)	J319-A4 No. 204 1-e	Draw out the cassette 2 while in standby.	The cassette is drawn out.	0	—
			The cassette is put back with paper in it.	1	—
Q651-2 Cassette 2 size sensor 1 (C2SZ-1)	J319-B1 No. 201 1-e	Draw out the cassette while in standby, and move the detecting lever by a finger; be sure to set paper selection to cassette 2.	The lever is moved.	0	—
			The lever is not moved.	1	—

COPYRIGHT © 1997 CANON INC.
CANON NP6218 REV. 0 MAY 1997 PRINTED IN JAPAN (IMPRIME AU JAPON)

Name	+ probe / Service mode	Checks		Display indication	Voltage reading on meter
Q652-2 Cassette 2 size sensor 2 (C2SZ-2)	J319-B2 No. 201 1-f	Draw out the cassette while in standby, and move the detecting lever by a finger; be sure to set paper selection to cassette 2.	The lever is moved.	0	—
			The lever is not moved.	1	—
Q653-2 Cassette 2 size sensor 3 (C2SZ-3)	J319-B3 No. 201 1-g	Draw out the cassette while in standby, and move the detecting lever by a finger; be sure to set paper selection to cassette 2.	The lever is moved.	0	—
			The lever is not moved.	1	—
Q654-2 Cassette 2 size sensor 4 (C2SZ-4)	J319-B4 No. 201 2-a	Draw out the cassette while in standby, and move the detecting lever by a finger; be sure to set paper selection to cassette 2.	The lever is moved.	0	—
			The lever is not moved.	1	—
PS3cu Cassette 3 vertical path sensor (C3VPD)	J319-A7 No. 203 1-b	Draw out the cassette 3 while in standby, and put copy paper over the pick-up guide plate.	Copy paper is placed.	1	—
			Copy paper is not placed.	0	—

COPYRIGHT © 1997 CANON INC.
CANON NP6218 REV. 0 MAY 1997 PRINTED IN JAPAN (IMPRIME AU JAPON)

Name	+ probe / Service mode	Checks		Display indication	Voltage reading on meter
PS4cu Cassette 3 paper sensor (C3PD*)	J319-A9 No. 203 1-f	Draw out the cassette 3 while in standby.	The cassette is drawn out.	0	—
			The cassette is inserted with paper in it.	1	—
Q651-3 Cassette 3 size sensor 1 (C3SZ-1)	J319-B1 No. 202 1-e	Draw out the cassette while in standby, and move the detecting lever by a finger; be sure to set paper selection to cassette 3.	The lever is moved.	0	—
			The lever is not moved.	1	—
Q652-3 Cassette 3 size sensor 2 (C3SZ-2)	J319-B2 No. 202 1-f	Draw out the cassette while in standby, and move the detecting lever by a finger; be sure to set paper selection to cassette 3.	The lever is moved.	0	—
			The lever is not moved.	1	—
Q653-3 Cassette 3 size sensor 3 (C3SZ-3)	J319-B3 No. 202 1-g	Draw out the cassette while in standby, and move the detecting lever by a finger; be sure to set paper selection to cassette 3.	The lever is moved.	0	—
			The lever is not moved.	1	—

COPYRIGHT © 1997 CANON INC.
CANON NP6218 REV. 0 MAY 1997 PRINTED IN JAPAN (IMPRIME AU JAPON)

Name	+ probe / Service mode	Checks		Display indication	Voltage reading on meter
Q654-4 Cassette 3 size sensor 4 (C3SZ-4)	J319-B4 No. 202 2-a	Draw out the cassette while in standby, and move the detecting lever by a finger; be sure to set paper selection to cassette 3.	The lever is moved.	0	—
			When the lever is not moved.	1	—
PS5cu Cassette right door open/closed sensor (CRDOP*)	J319-A6 No. 204 2-a	Open the right door while in standby.	The lever is moved.	0	—
			The lever is not moved.	1	—

COPYRIGHT © 1997 CANON INC.
CANON NP6218 REV. 0 MAY 1997 PRINTED IN JAPAN (IMPRIME AU JAPON)

4. Adjusting the Multifeeder Paper Width Sensor

Store the characteristic of the multifeeder paper width sensor in service mode (501).

Perform the adjustment when you have replaced the sensor if the sensor fails to identify the paper size correctly.

1) Open the front door, and insert the door switch actuator into the door switch.
2) Press the service mode switch (SW302) with a hex key.
- The copier activates service mode, and indicates '1'.

3) Press [5] on the keypad.
- The copier indicates '5'.

4) Press the AE key.
- The copier activate specification settings mode, and indicates '501'.

5) Press the Start key.
- The copier indicates 'A3'.

6) A press on the keypad changes the indication as shown in Table 10-201. Select the size of paper to change. (Do not select CLR.)
- The indication will start to flash if you select a size which has not been stored.
- If you press the Start key when 'CLR' is indicated, the copier clears all stored settings and returns the default settings.

7) Shift the guide on the multifeeder to suit the size to be stored.
- Be sure to hear a click.

8) Press the AE key.
- When the setting is stored, the indication stops flashing and remains on.

9) Press the Reset key.
- The copier de-activates service mode.

Key	Indication	Remarks
1	A3	A3
2	Ldr	Ledger
3	b4	B4
4	LGL	Legal
5	A4r	A4R
6	b5r	B5R
7	A5r	A5R
8	Sr	Statement R
9	JPC	Postcard (100 mm wide)
0	CLr	Clear (Clears settings)

Table 10-201

Reference:

1. When storing JPC (No. 9), adjust the guide width to the smallest width.
2. At time of shipment, the settings are A3, A4R, and JPC; the copier retains the characteristics curves of the corresponding three points and uses them when identifying the size of paper during copying operation. When you store a size other than these three, the copier takes the new settings into account when making computations; for this reason, it is best to store sizes that the user tends to use most frequently.

COPYRIGHT © 1997 CANON INC.

5. Setting the Paper Size for the Universal Cassette

If the paper size lever for the cassette is at the universal cassette, set the appropriate paper size in service mode (505).

1) Open the front door, and insert the door switch actuator into the door switch.
2) Press the service mode switch (SW302) with a hex key.
• The copier activates service mode, and indicates '1'.
3) Press [5] on the keypad.
• The copier indicates '5'.
4) Press the AE key.
• The copier enters machine settings mode, and indicates '501'.
5) Press [0] and [5] on the keypad.
• The copier indicates '505'.
6) Press the Start key.
• The copier indicates the current setting for the universal cassette.
7) Select the size to store using the keypad according to Table 10-202.
8) Press the AE key to store the new setting.
9) Press the Reset key.
• The copier de-activates service mode.

Keypad	Paper	Size
0	Bolivian OFFICIO	355.0 x 216.0
1	Argentine OFFICIO	340.0 x 220.0
2	Argentine LEGAL	340.0 x 220.0
3	Australian FOOLSCAP	337.0 x 206.0
4	FOOLSCAP	330.2 x 215.9
5	FOLIO	330.0 x 210.0
6	Government LEGAL	330.2 x 203.2
7	Ecuadorian OFFICIO	320.0 x 220.0
8	OFFICIO	317.0 x 216.0
9	Argentine LTTER-R	280.0 x 220.0
10	Korean Government-R	268.0 x 190.0
11	Government LETTER-R	266.7 x 203.2
12	Argentine LETTER	220.0 x 280.0
13	Government LETTER	203.2 x 266.7
14	Korean Government	190.0 x 268.0

Table 10-202

COPYRIGHT © 1997 CANON INC.
CANON NP6218 REV. 0 MAY 1997 PRINTED IN JAPAN (IMPRIME AU JAPON)

III. TROUBLESHOOTING IMAGE FAULTS

A. Initial Checks

1. Site Environment

a. Make sure that the power supply is as specified (±10%).
b. Avoid high temperature/humidity conditions; near water faucets, water boilers, and humidifiers. Avoid areas subject to excessively low temperature, sources of fire, and dust.
c. Avoid areas subject to ammonium gas.
d. Avoid areas subject to direct rays of the sun; otherwise, instruct the user to provide curtains.
e. Make sure the room is well ventilated.
f. Make sure that the floor will keep the machine level.
Check the site to see if it complies with the above requirements.

2. Checking the Originals

Identify the problem as to whether it is caused by the machine or the original used.
a. Originals with a reddish tinge result in copies with poor contrast; for example, red sheets and slips.

Reference:

The operation of the following heaters may be controlled by the user by changing the respective settings; at time of shipment, the settings are at OFF—this means the copier may remain connected or disconnected at night. If the use of any of the heaters proves to be necessary because of unique site conditions, the copier should remain powered at night without disconnecting its power plug.

- fluorescent lamp heater (accessory)
- lens mount heater
- No. 2 mirror mount heater

b. Diazo copies or originals with high transparency can result in copies that can be mistaken for foggy copies. Originals prepared in pencil can result in copies that can be mistaken for light copies.

3. Checking the Copyboard Cover and the Copyboard Glass

Check the copyboard cover and the copyboard glass for dirt; if soiled, clean them using a solution of mild detergent or alcohol; if scratched, replace them.

4. Checking the Paper

a. Check if the paper is Canon-recommended paper.
b. Check if the paper is dry; try paper fresh out of the package.

COPYRIGHT © 1997 CANON INC.

5. Others

Moving a machine which has been cooled in a storage room or the like in winter to a warm room can lead to condensation inside the machine, causing various problems; for instance,

a. condensation on the scanning system (glass, mirror, lens) leads to light images.
b. condensation in the charging system leads to electrical leakage.
c. condensation on the pick-up/feeding guide leads to feeding problems.
   If condensation is noted, dry wipe the part or leave the machine alone powered for 60 min.

COPYRIGHT © 1997 CANON INC.
CANON NP6218 REV. 0 MAY 1997 PRINTED IN JAPAN (IMPRIME AU JAPON)

COPYRIGHT © 1997 CANON INC. CANON NP6218 REV. 0 MAY 1997 PRINTED IN JAPAN (IMPRIME AU JAPON)

B. SAMPLES OF IMAGE FAULTS

not available

COPYRIGHT © 1997 CANON INC.
CANON NP6218 REV. 0 MAY 1997 PRINTED IN JAPAN (IMPRIME AU JAPON)

C. Troubleshooting Faulty Images

1. The copy is too light (half-tone only).

Cause	Step	Checks	Results	Action
	1	Perform the Basic Image Adjustment Procedure. Is the problem corrected?	YES	End.
AE mechanism	2	Make copies in AE mode. Is the density too low, i.e., is the copy too light?	YES	Perform AE adjustment.
Developing assembly	3	Is the developing cylinder coated with a uniform layer of toner?	NO	Replace the developing assembly.
Scanner	4	Clean the mirror, lens, and dust-proofing glass. Is the problem corrected?	YES	End.
Drum cartridge			NO	Replace the drum cartridge.

COPYRIGHT © 1997 CANON INC.
CANON NP6218 REV. 0 MAY 1997 PRINTED IN JAPAN (IMPRIME AU JAPON)

2. The copy is too light (black solid also).
3. The copy is too light (overall, extremely).

Cause		Step	Checks	Results	Action
		1	Perform the Image Basic Adjustment Procedure. Is the problem corrected?	YES	End.
		2	Turn off the power switch during copying operation, and open the front door. Is the toner image on the photosensitive drum before transfer more or less normal?	NO	Go to step 7.
Transfer	Transfer charging roller	3	Is the transfer charging roller securely inserted?	NO	Re-insert the transfer charging roller.
		4	Is electrical leakage noted on the transfer charging roller?	YES	Check the transfer charging roller.
		5	Is dirt, crack, or scratch noted on the transfer charging roller?	YES	Replace the transfer charging roller.
		6	Are the position and condition of the pressure spring of the transfer charging roller normal?	NO	Correct or replace the spring.
	Copy paper	7	Try fresh copy paper. Is the problem corrected?		1. The paper may be moist; advise the user on the correct way of storing paper 2. Advise the user that the use of paper not of a type recommended by Canon may produce images falling short of expectations.
	Lower transfer guide	8	Set the feeding assembly in feeding position, and measure the resistance between the lower transfer guide and the base (metal) of the transfer charging assembly rail. Is the resistance 0 Ω?	YES	Check if the lower transfer guide is in contact with a metal portion (e.g., side plate of the feeding assembly).
	High-voltage cord, high-voltage transformer, DC controller PCB			NO	1. Check the electrical continuity of the high-voltage cord. 2. Check the high-voltage transformer and the DC controller PCB.

COPYRIGHT © 1997 CANON INC.
CANON NP6218 REV. 0 MAY 1997 PRINTED IN JAPAN (IMPRIME AU JAPON)

Cause		Step	Checks	Results	Action
Transfer	Toner level, toner level detection mechanism	9	Take out the developing assembly, and shake it. Is the problem corrected?	YES	The level of toner may be too low or the toner level detection mechanism may be faulty; advise the user to replace the toner cartridge.
Composite power supply PCB		10	Is the reading in service mode (105; primary current) 10 µA or less?	YES	Replace the composite power supply PCB.
Drum cartridge				NO	Replace the toner cartridge.

COPYRIGHT © 1997 CANON INC.

4. The copy has uneven density (front too dark).
5. The copy has uneven density (front too light).

Cause	Step	Checks	Results	Action
Scanner	1	Clean the scanning lamp, reflecting plate, side reflecting plate, mirror, lens, and dust-proofing glass. Is the problem corrected?	YES	End.
Primary charging roller	2	Execute 'No. 402' in service mode (primary charging roller cleaning). Is the problem corrected?	YES	End.
Transfer charging assembly	3	Execute 'No. 403' in service mode (transfer roller cleaning). Is the problem corrected?	YES	End.
	4	Make several blank (white) copies. Is the problem corrected?	YES	End.
	5	Is the transfer changing roller securely inserted?	NO	Re-insert the charging roller.
	6	Are the position and condition of the pressure spring of the transfer charging roller normal?	NO	Corrector replace the spring.
Pre-exposure lamp	7	Does the pre-exposure lamp turn on during copying operation?	NO	See "The pre-exposure lamp fails to turn on."
Developing assembly	8	Is the developing cylinder coated with a uniform layer of toner?	NO	Take out the developing assembly, and shake it several times; then, make copies. If the problem is not corrected, replace the developing assembly.

COPYRIGHT © 1997 CANON INC.
CANON NP6218 REV. 0 MAY 1997 PRINTED IN JAPAN (IMPRIME AU JAPON)

6. The copy is foggy (overall).

Cause	Step	Checks	Results	Action
	1	Perform the Basic Image Adjustment Procedure. Is the problem corrected?	YES	End.
Scanner	2	Clean the scanning lamp, reflecting plate, side reflecting plate, mirror, lens, and dust-proofing glass. Is the problem corrected?	YES	End.
Pre-exposure lamp, DC controller PCB	3	Does the pre-exposure lamp turn on during copying operation?	NO	See “The pre-exposure lamp fails to turn on.”
Developing spacer	4	Is the developing spacer worn?	YES	Replace the developing assembly.
Developing cylinder	5	Is the developing cylinder worn?	YES	Replace the developing assembly.
Developing cylinder	6	Is the developing cylinder insulated from the copier GND? Turn off the power supply, and disconnect J908. Check the continuity with the meter between the developing and copier sides of J908-2.	NO	Check the parts around the developing cylinder and the developing connector.
Drum cartridge	7	Is the reading for ‘No. 105’ in service mode (primary charging current) 10 µA or less?	NO	Replace the drum cartridge.
Composite power supply PCB			YES	Replace the composite power supply PCB.

COPYRIGHT © 1997 CANON INC.

7. The copy is foggy (vertical).
8. The copy has black lines (vertical; thick fuzzy lines).

Cause	Step	Checks	Results	Action
	1	Perform the Image Adjustment Basic Procedure. Is the problem corrected?	YES	End.
Primary charging roller	2	Execute 'No. 402' in service mode (primary charging roller cleaning). Is the problem corrected?	YES	End.
Scanner	3	Clean the scanning lamp, reflecting plate, side reflecting plate, lens, mirror, and dust-proofing glass. Is the problem corrected?	YES	End.
Pre-exposure lamp	4	Clean the pre-exposure lamp. Is the problem corrected?	YES	End.
Developing assembly	5	Is the developing cylinder coated with a uniform layer of toner?	NO	Replace the developing assembly.
Fixing assembly			YES	Check and clean the fixing assembly.

9. The copy has black lines (vertical, fine).

Cause	Step	Checks	Results	Action
	1	Make a copy, and turn off the power switch while the paper is in the feeding assembly. Are black lines noted on the copy before it moves through the fixing assembly?	NO	Go to step 3.
Transfer guide	2	Is the transfer guide soiled (in particular, the upper transfer guide) ?	YES	End.
Photosensitive drum	3	Are scratches or black lines noted around the photosensitive drum? Try wiping the photosensitive drum with a flannel cloth coated with toner. Do the lines disap pear?	YES	Replace the drum cartridge. If scratches are found, investigate the cause.
Exposure system			NO	Check the exposure system.
Fixing assembly	4	Are there scratches or black lines on the upper fixing film?	YES	Replace the upper fixing unit.
			NO	Check the inlet of the fixing assembly for dirt.

COPYRIGHT © 1997 CANON INC.
CANON NP6218 REV. 0 MAY 1997 PRINTED IN JAPAN (IMPRIME AU JAPON)

10. The copy has white spot (vertical).
11. The copy has white lines (vertical).

Cause	Step	Checks	Results	Action
Fixing assembly	1	Make a copy with the copyboard cover lifted, and turn off the power switch while the paper is moving through the feeding assembly. Are white spots or liens noted on the copy before it moves through the fixing assembly?	NO	1. Clean the inlet guide (upper, lower) of the fixing assembly. 2. Check the upper fixing unit.
Primary charging roller	2	Execute 'No. 402' in service mode (primary charging roller cleaning). Is the problem corrected?	YES	End.
Transfer charging roller	3	Execute 'No. 409' in service mode (transfer roller cleaning). Is the problem corrected?	YES	End.
	4	Is dirt, cracks, or scratches noted on the transfer charging roller?	YES	Replace the transfer charging roller.
	5	Are the position and condition of the transfer charging roller pressure spring normal?	NO	Correct or replace the spring.
Static eliminator	6	Clean the static eliminator. Is the problem corrected?	YES	End.
Developing assembly	7	Is the developing cylinder coated with a uniform layer of toner?	NO	Take out the developing assembly, and shake it several times. If the problem is not corrected, replace the developing assembly.
Copy paper	8	Try fresh copy paper. Is the problem corrected?	YES	The copy paper may be moist; advise the user on the correct method of storing paper.
Photosensitive drum	9	Are there scratches around the photosensitive drum?	YES	Replace the drum cartridge. (Be sure to investigate the cause of the scratches.)
Light from outside			NO	Check if the photosensitive drum is exposed to light from outside.

COPYRIGHT © 1997 CANON INC.

12. The copy has white spots (horizontal).

Cause	Step	Checks	Results	Action
Toner level	1	Take out the developing assembly, and shake it several times. Is the problem corrected?	YES	The toner level may not be adequate; advise the user.
Photosensitive drum	2	Is the problem noted at intervals of about 9.4 cm (scratches in the photosensitive drum)?	YES	1. Clean the drum. 2. If scratches are found on the drum, replace the drum cartridge.
Primary charging roller	3	Is the problem noted at intervals of about 5.1 cm?	YES	Check the primary charging roller for scratches and dirt.
	4	Execute 'No. 402' in service mode (primary charging roller cleaning). Is the problem corrected?	YES	End.
Transfer charging roller	5	Execute 'No. 403' (transfer roller cleaning) in service mode. Is the problem corrected?	YES	End.
	6	Is the problem noted at intervals of about 5.1 cm?	YES	Check the transfer charging roller for dirt and scratches.
	7	Is dirt, cracks, or scratches noted on the transfer charging roller?	YES	Replace the transfer charging roller.
	8	Are the position and condition of the transfer charging roller pressure spring normal?	NO	Correct or replace the spring.
Copy paper	9	Try fresh copy. Is the problem corrected?	YES	The paper may be moist; advise the user on the correct method of storing paper.
Scanner rail, scanner cable	10	Is the problem noted at the same location on all copies?	YES	1. Check the scanner rail for foreign matter. 2. Adjust the tension of the scanner cable.

COPYRIGHT © 1997 CANON INC.
CANON NP6218 REV. 0 MAY 1997 PRINTED IN JAPAN (IMPRIME AU JAPON)

13. The back of the copy is soiled.

Cause	Step	Checks	Results	Action
	1	Turn off the power switch while paper is moving through the feeding assembly. Is the back of the copy soiled?	NO	Go to step 7.
Transfer charging roller	2	Execute 'No. 403' in service mode (transfer roller cleaning). Is the problem corrected?	YES	End.
	3	Make several solid white copies. Is the problem corrected?	YES	End.
	4	Is the transfer charging roller soiled excessively?	YES	Replace the transfer charging roller.
Durm cartridge	5	Is the problem noted norizontally at intervals of about 4.2 cm?	YES	1. Clean the registration roller and transfer guide. 2. Check the drum cartridge for leakage of toner.
	6	Is the problem noted vertically at intervals of about 1.6 cm?	YES	1. Clean the manual feed roller. 2. Check the drum cartridge for leakage of toner.
Drum cleaning assembly (drum cartridge)			NO	1. Clean the cleaning assembly. 2. Check the drum cartridge for leakage of toner.
Fixing assembly	7	Is the fixing pressure roller or the fixing film soiled with toner?	YES	Clean the fixing pressure roller and the fixing film.
			NO	Clean the delivery roller and the fixing assembly paper guide plate.

COPYRIGHT © 1997 CANON INC.

14. The copy has a fixing fault.

Cause	Step	Checks	Results	Action
Fixing film	1	Is the problem noted vertically?	YES	Check the fixing film for scratches.
Lower fixing roller pressure	2	Is the nip of the fixing assembly within specification? (Use 'No. 402' of service mode.)	NO	Replace the lower fixing roller pressure spring.
Copy paper			YES	Try recommended paper; if the results are good, advise the user to use recommended paper.

15, 16, 17 The leading edge of the copy is displaced.

Cause	Step	Checks	Results	Action
Original	1	Is the original placed correctly?	NO	Re-place the original.
Copy paper	2	Is the copy paper of a type recommended by Canon?	NO	Try recommended paper; if the results are good, advise the user to use recommended paper.
Pick-up roller, separation pad	3	Has the pick-up roller or the separation pad of the cassette which caused the problem reached its average life?	YES	Check the rollers, and replace those worn.
Cassette, paper guide plate			NO	1. Check if paper is correctly set in the cassette. 2. Check the paper guide for foreign matter.
	4	Does each registration roller rotate normally?	NO	See "The registration roller fails to rotate."
Registration	5	Adjust the registration (leading edge margin; 'No. 305' in service mode). Is the problem corrected? (See p. 10-5.)	YES	End.

COPYRIGHT © 1997 CANON INC.
CANON NP6218 REV. 0 MAY 1997 PRINTED IN JAPAN (IMPRIME AU JAPON)

18. The copy has a blurred image.

Cause	Step	Checks	Results	Action
Scanner drive cable	1	Does the cable overlap on the cable pulley while the scanner is moving? Is the cable too loose or too tight?	YES	1. Re-route the cable. 2. If the cable is twisted or frayed, replace it.
Scanner rail	2	Is the scanner rail soiled? Is foreign matter found on the scanner rail?	YES	Clean the surface of the scanner rail.
Scanner drive system	3	Is the gear of the scanner drive assembly chipped?	YES	Replace the gear.
Photosensitive drum	4	Is the problem noted at intervals of about 9.4 cm?	YES	1. Check the drum drive gear. 2. Check the drum end, where it comes into contact with the developing spacer, for scratches or protrusions.
Developing gear	5	Is the problem noted at intervals of about 4.2 cm?	YES	Check the developing assembly.
Drum drive assembly			NO	Check the drum drive assembly.

COPYRIGHT © 1997 CANON INC.

19. The copy is foggy (horizontal).

Cause	Step	Checks	Results	Action
	1	Is the problem noted at the same position on all copies made in Direct?	YES	Go to step 5.
Scanning lamp	2	Does the scanning lamp flicker when the scanner is moving forward?	YES	Check the scanning lamp.
Developing assembly spacer	3	Check the developing assembly spacer for toner adhesion or deformation. Is toner noted on the portion (photosensitive drum surface) where the developing assembly spacer comes into contact?	YES	Clean or, as necessary, replace the developing assembly.
Development bias	4	Is the development bias applied normally?	NO	Re-insert the developing assembly; then, check the wiring.
Scanner	5	Make reduced copies, and check them against copies made in Direct. Is the problem noted at different positions?	YES	Check the scanner.
Feeding assembly			NO	Check the feeding assembly.

COPYRIGHT © 1997 CANON INC.
CANON NP6218 REV. 0 MAY 1997 PRINTED IN JAPAN (IMPRIME AU JAPON)

20. The copy has poor sharpness.

Cause	Step	Checks	Results	Action
Original	1	Is the original off the glass surface?	YES	1. Check the copyboard cover for warping. 2. Advise the user how to place an original.
Copyboard glass	2	Is copyboard glass stained with oil? Is the copyboard glass attached correctly?	YES	• Clean the copyboard glass. • Re-attach the copyboard glass.
Lens drive assembly	3	Turn off and on the power switch. Does the lens move smoothly?	NO	Check the lens drive assembly.
Transfer charging roller	4	Execute 'No. 403' in service mode (transfer roller cleaning). Is the problem corrected?	YES	End.
	5	Is the transfer charging roller securely inserted?	NO	Re-insert the charging roller.
	6	Is dirt, cracks, or scratches noted on the transfer charging roller?	YES	Replace the transfer charging roller.
	7	Are the position and condition of the transfer roller pressure spring normal?	NO	Correct or replace the spring.
Drum cartridge Developing assembly	8	Is the drum cartridge securely set? (Check if the spacer for the developing assembly is in contact with the photosensitive drum under pressure.)	NO	Replace the drum cartridge or the developing assembly.
Development bias	9	Is the development bias generated normally?	NO	• Replace the composite power supply PCB. (Replace the DC con troller PCB.)
Mirror	10	Is the horizontal reproduction ratio in Direct with on specification?	NO	Adjust the position between No. 1 and No. 2 mirrors.
Scanner			YES	Clean the scanning lamp, reflecting plate, mirrors, lens, and dust-proofing glass.

COPYRIGHT © 1997 CANON INC.

21. The copy is blank.

Cause	Step	Checks	Results	Action
Drum cartridge	1	Is the drum cartridge securely inserted?	NO	Insert the drum cartridge.
Drum drive assembly	2	Is the drum cartridge rotating during copying operation?	NO	1. Check if the photosensitive drum rotates smoothly. 2. Check the drum drive assembly.
Transfer charging assembly	3	Is the transfer charging roller securely inserted?	NO	Re-insert the transfer roller.
	4	Is electrical leakage noted on the transfer charging roller?	YES	Check the transfer charging roller.
Composite power supply PCB	5	Is the reading in 'No. 105' of service mode (primary charging current) 10 µA or less?	YES	Replace the composite power supply PCB.

22. The copy is solid black.

Cause	Step	Checks	Results	Action
	1	Does the scanning lamp remain on during copying operation?	NO	Make checks according to the descriptions under "The scanning lamp fails to turn on."
	2	Does the pre-exposure lamp turn on during copying operation?	NO	Make checks according to the descriptions under "The pre-exposure lamp fails to turn on."
Composite power supply PCB	3	Is the reading in 'No. 105' of service mode (primary charging current) 10 µA or less?	YES	Replace the composite power supply PCB.

COPYRIGHT © 1997 CANON INC.
CANON NP6218 REV. 0 MAY 1997 PRINTED IN JAPAN (IMPRIME AU JAPON)

IV. TROUBLESHOOTING MALFUNCTIONS

A. Troubleshooting Malfunctions

1. E000

Cause	Step	Checks	Results	Action
J47 (relay connector to thermistor)	1	Disconnect the connector (J4) of the fixing heater, and press the power switch while holding down the service mode switch. (This clears E000; about 2 sec later, the power switch turns off automatically. Is the connection of J47 (4-pin connector near the rear side plate fixing assembly) connected properly?	NO	Re-connect it.
Thermistor	2	Let the fixing assembly cool sufficiently, and disconnect J47. Is the resistance between J47-1 and -2 on the thermistor side about 1.4 M and resistance between J47-3 and -4 about 3.7 M ?	NO	Replace the fixing upper unit.
Heater	3	Is electrical continuity present between J4-1 and -2?	NO	Replace the fixing upper unit.
Thermistor	4	Replace the upper fixing unit. Is the problem corrected?	YES	End.
Fixing heater driver PCB	5	Replace the fixing heater driver PCB. Is the problem corrected?	YES	End.
DC controller PCB			NO	Replace the DC controller PCB.

COPYRIGHT © 1997 CANON INC.

2. E001

Cause	Step	Checks	Results	Action
Thermistor	1	Disconnect the connector (J4) of the fixing heater, and press the power switch while holding down the service mode switch. (This clears E001; about 2 sec later, the power switch turns off automatically.) Let the fixing assembly cool sufficiently; then, disconnect J4. Is the resistance between J47-1 and -2 about 0 and the resistance between J47-3 and-4 about 0 ?	YES	Replace the fixing upper unit.
Fixing heater driver PCB	2	Replace the fixing heater driver PCB. Is the problem corrected?	YES	End.
DC controller PCB			NO	Replace the DC controller PCB.

3. E002, E003

Cause	Step	Checks	Results	Action
	1	Disconnect the connector (J4) of the fixing heater, and press the power switch while pressing the service mode switch. (This clears the E code; about 2 sec later, the power switch turns off automatically.) Turn on the power switch; is E000 indicated?	YES	See the descriptions under “E000.”
Wiring	2	Is the wiring between J304 and J47 on the DC controller PCB proper?	NO	Correct the wiring.
DC controller PCB	3	Replace the DC controller PCB. Is the problem corrected?	YES	End.
Fixing heater driver PCB			NO	Replace the fixing heater driver PCB.

COPYRIGHT © 1997 CANON INC.
CANON NP6218 REV. 0 MAY 1997 PRINTED IN JAPAN (IMPRIME AU JAPON)

4. E004

Cause	Step	Checks	Results	Action
Fixing heater driver PCB	1	Replace the fixing heater driver PCB. Is the problem corrected?	YES	End.
DC controller PCB			NO	Replace the DC controller PCB.

5. E007

Cause	Step	Checks	Results	Action
Fixing film	1	Is the fixing film cut or torn?	YES	Replace the fixing upper unit
Fixing film tension roller pressure	2	Does the problem occur when the fixing film or the upper fixing unit has been replaced?	YES	Adjust the fixing roller pressure. (See p. 10-28.)
Fixing film	3	Have as many as 200,000 copies been made?	YES	Replace the upper fixing unit.
Fixing film sensor	4	Is the tension spring of the fixing film detecting lever normal? Does it move smoothly?	NO	Correct the spring.
Fixing film sensor (PS9)	5	Is the fixing film sensor (PS9) normal?	NO	Check the wiring between connectors J304 and PS9 on the DC controller PCB; if normal, replace PS9.
Fixing film motor (M4)	6	Replace the fixing film motor (M4). Is the problem corrected?	YES	End.
DC controller PCB			NO	Replace the DC controller PCB.

COPYRIGHT © 1997 CANON INC.

6. E010

Cause	Step	Checks	Results	Action
	1	Does the main motor rotate until E010 is turned on?	NO	Go to step 3.
Main motor unit (M1; refers to main motor and main motor driver PCB as single entity)	2	Set the meter to the 12VDC range. Does the voltage between J303-3 (+; MMD) and J303-2 (-; 0 V) on the DC controller PCB change from about 0 V to about 2.6 V or from about 5 V to about 2.6 V when the Copy Start key is pressed or when WMUPR starts?	NO	Replace the main motor unit (M1).
DC controller PCB			YES	Check the contact of the connector (J502) on the motor driver PCB and the wiring from J502 to the connector (J303) on the DC controller PCB; if normal, replace the main motor unit or the DC controller PCB.
Drive belt	3	Is the drive belt routed properly?	NO	Re-route the belt.
DC power supply	4	Is the voltage between the following connectors of the motor driver PCB normal? J501-1 (+; 34 V) and J501-2 (-; 0 V)	NO	Check the wiring between the connector (J206) on the composite power supply PCB and the connector J501) on the motor driver PCB; if normal, see “DC power supply is absent.”
Main motor unit	5	Replace the main motor unit. Is the problem corrected?	YES	End.
DC controller PCB			NO	Replace the DC controller PCB.

7. E030

Cause	Step	Checks	Results	Action
	1	Is the total copy counter operating normally?	NO	See “The copy counter fails to operate.”
DC controller PCB			YES	Replace the DC controller PCB.

COPYRIGHT © 1997 CANON INC.
CANON NP6218 REV. 0 MAY 1997 PRINTED IN JAPAN (IMPRIME AU JAPON)

8. E064

Cause	Step	Checks	Results	Action
Wire	1	Turn off and on the power switch, and set '1' as the copy count. Is E064 indicated after copying operation?	YES	Check the harness between the DC controller PCB and the composite power supply PCB.
Composite power supply PCB	2	Set '1' as the copy count, and press the Copy Start key once again. Is E064 indicated after copying operation?	YES	Go through steps 3 through 6; then, replace the composite power supply PCB.
Transfer charging assembly, Transfer charging roller	3	Is a fault noted in the transfer charging assembly/transfer roller or contacts?	YES	Replace the transfer corona assembly/transfer roller.
Primary charging roller	4	Detach the drum cartridge, and check the primary charging roller. Is a fault noted in the primary charging roller or the contacts?	YES	Replace the drum cartridge.
High-voltage cable	5	Detach the rear cover, and check the high-voltage cable. Is a scratch or crack found in the high-voltage cable?	YES	Replace the high-voltage terminal.

9. E202 (keys on control panel invalidated)

Cause	Step	Checks	Results	Action
	1	Is the scanner at home position when E202 is indicated?	NO	See "The scanner fails to move forward/ in reverse."
Scanner home position sensor (PS1)		Is the scanner home position sensor (PS1) normal? (See descriptions on how to check photointerrupters.)	NO	Check the wiring between the DC controller PCB and PS1; if normal, replace PS1.
DC controller PCB check			YES	Replace the DC controller PCB.

COPYRIGHT © 1997 CANON INC.

10. E210

Cause	Step	Checks	Results	Action
	1	Turn on the power switch. Does the lens move?	NO	See “The lens fails to move.”
Lens home position sensor (PS2)	2	Is the lens home position sensor (PS2) normal? (See the instructions on how to check photointerrupters.)	NO	Check the wiring between the connector (J307) on the DC controller PCB and the lens home position sensor (PS2); if normal, replace PS2.
DC controller PCB	3	Replace the DC controller PCB. Is the problem corrected?	YES	End.

11. E220

Cause	Step	Checks	Results	Action
	1	Does the scanning lamp turn on?	NO	See “The scanning lamp fails to turn on.”
DC controller	2	Replace the DC controller PCB. Is the problem corrected?	YES	Replace the DC controller PCB.
Composite power supply PCB			NO	Check the wiring between the DC controller PCB and the composite power supply PCB; if normal, replace the composite power supply PCB.

12. E240

Cause	Step	Checks	Results	Action
DC controller PCB	1	Turn on and off the power switch.	YES	End.
			NO	Replace the DC controller PCB.

COPYRIGHT © 1997 CANON INC.
CANON NP6218 REV. 0 MAY 1997 PRINTED IN JAPAN (IMPRIME AU JAPON)

13. E261

Cause	Step	Checks	Results	Action
Power supply frequency	1	Turn off and on the power supply. Is the problem corrected?	YES	End. • If the problem occurs frequently, advise the user to obtain a frequency stabilizer.
Composite power supply PCB	2	Replace the composite power supply PCB. Is the problem corrected?	YES	End.
DC controller PCB			NO	Replace the DC controller PCB.

14. E710, E711, E712, E717

Cause	Step	Checks	Results	Action
	1	Turn off and on the power switch.	YES	End.
DC controller PCB			NO	Replace the DC controller PCB.

15. E803

Cause	Step	Checks	Results	Action
Malfunction	1	Turn off and on the power switch. Is the problem corrected?	YES	End.
DC controller PCB	2	Replace the DC controller PCB. Is the problem corrected?	YES	End.
Composite power supply PCB			NO	Replace the composite power supply PCB.

COPYRIGHT © 1997 CANON INC.

16. AC power supply is absent.

Cause	Step	Checks	Results	Action
E code (E000, E001, E002, E003 E004)	1	Does an E code turn on when the power switch is turned on, and the power switch turn off within about 2 sec?	YES	Disconnect the connector (J4) of the fixing heater, and turn on the power switch while holing down the service mode switch to clear the E code; then, check the error in 'No. 108' of service mode for a reference to the appropriate description.
Power plug	2	Is the power plug connected securely?	NO	Re-connect the power plug.
Covers	3	Are the front door and the delivery cover closed securely?	NO	Close the door or the cover.
Main power supply	4	Is the specified voltage present at the power outlet?	NO	Advise the user that the problem is not of the copier.
	5	Is the specified voltage present between J1-1 and J1-2? (J1 is the 2-pin connector on the power cord mount.)	YES	Go to step 7.
Noise filter PCB (circuit breaker)	6	Is the circuit breaker on the noise filter PCB off? (Use a meter.)	YES	Remove the cause; turn on the circuit breaker.
Noise filter PCB	7	Is the specified voltage present between J13-1 and J13-2? (J13 is the relay connector located between the noise filter PCB and the door switch assembly.)	NO	Replace the noise filter PCB.
Door switch (DS1)	8	Detach the door switch (DS1), and connect the probes of the meter to F1 and F3 or F2 and F5 of the door switch (fastons). Is the resistance about 0 Ω when the actuator is pressed and ∞ Ω when released?	NO	Replace the door switch (DS1).
AC harness	9	Is the wiring between the door switch and the composite power supply PCB normal?	NO	Correct the wiring.

COPYRIGHT © 1997 CANON INC.
CANON NP6218 REV. 0 MAY 1997 PRINTED IN JAPAN (IMPRIME AU JAPON)

Cause	Step	Checks	Results	Action
Connector (J211, J302, J309)	10	Is electrical continuity present between J211-1 on the composite power supply PCB and J309-1 on the DC controller PCB?	NO	Check the connector (J302) on the DC controller PCB; if normal, replace the DC controller PCB.
Control panel	11	Replace the control panel.	YES	End.
DC controller PCB			NO	Replace the DC controller PCB.

17. DC power supply is absent.

Cause	Step	Checks	Results	Action
AC power supply	1	Is AC power supply present between the following terminals? Composite Power Supply PCB J2-1 (white) and J2-3 (black) (J2 is the 3-pin connector on the power supply cord mount.)	NO	See “AC power supply is absent.”
Wiring, DC load	2	Turn off the power switch, and disconnect all the following connectors. Composite Power Supply PCB J206, J210 Set the meter to the 20V DC range, and turn on the power switch; is the voltage between the following terminals normal?	YES	Turn off the power switch, and connect one of the disconnected connectors; then, turn on the power switch. Repeat the same on all connectors to find out the connector which activates the protection circuit; check the wiring from that connector to the DC loads.
Fuse		Is the fuse of the composite power supply PCB blown?	YES	Replace the fuse.
Composite power supply PCB			NO	Replace the composite power supply.

Connector	Pin No.	Output	Remarksr
J206	1 2	34V GND	to main motor driver PCB
J210	1 2 3 4 5 6	24V GND 5V GND 34V GND	DC con troller PCB

COPYRIGHT © 1997 CANON INC.

18. The blank shutter fails to move.

Cause	Step	Checks	Results	Action
Lens motor	1	Does the lens move?	NO	See “The lens fails to move.”
Blank shutter drive assembly	2	Is the drive of the lens motor transmitted to the gear of the blank drive assembly?	NO	Make corrections so that the drive is transmitted.
Blank shutter cable	3	Is the blank shutter cable routed correctly?	NO	Re-route the cable.

19. The photosensitive drum fails to rotate.

Cause	Step	Checks	Results	Action
	1	Is E010 indicated?	YES	See “E010.”
Drum cartridge	2	Re-insert the drum cartridge. Is the problem corrected?	YES	End.
Belt	3	Is the belt fro drive routed correctly?	NO	Re-route the belt.
Main drive assembly			YES	Detach the main drive assembly; correct or replace pats as necessary.

COPYRIGHT © 1997 CANON INC.
CANON NP6218 REV. 0 MAY 1997 PRINTED IN JAPAN (IMPRIME AU JAPON)

20. The pick-up operation fails (from cassette).

Cause	Step	Checks	Results	Action
Paper (inside cassette)	1	Is the paper inside the cassette under the claws?	NO	Advise the user on the correct method of setting paper.
Cassette	2	Slide out and then in the cassette. Is the problem corrected?	YES	End. • Advise the user on the correct way to set the cassette.
Pick-up clutch (CL2)	3	Does the pick-up roller rotate after the copy Start key is pressed?	NO	Check the wiring from the connector (J303) on the DC controller PCB and the pick-up clutch; if normal, replace the clutch.
Pick-up roller, pick-up separation pad	4	Is the life of the pick-up roller or the pick-up separation pad at its limit?	YES	Replace the pick-up roller or the pick-up separation pad.
DC controller PCB	5	Replace the DC controller PCB. Is the problem corrected?	YES	End.

21. The pick-up operation from the multifeeder fails.

Cause	Step	Checks	Results	Action
Multifeeder pick-up clutch (CL3)	1	Select the multifeeder, and press the copy Start key. Does the multifeeder pick-up roller rotate?	NO	Check the wiring; if normal, replace CL3.
Paper guide plate cam	2	Does the paper guide plate spring up when the Copy Start key is pressed?	YES	Check the position of the paper guide plate cam and separation pad; as necessary, adjust or replace.
Multifeeder pick-up solenoid (SL2)	3	Connect the (+) probe of the meter to J306-11 on the DC controller PCB. Does the voltage change from about 24 V to about 0 V when the Copy Start key is pressed?	YES	Check the wiring; if normal, replace SL2.
DC controller PCB			NO	Replace the DC controller.

COPYRIGHT © 1997 CANON INC.
CANON NP6218 REV. 0 MAY 1997 PRINTED IN JAPAN (IMPRIME AU JAPON)

22. The scanner fails to move forward/in reverse.

Cause	Step	Checks	Results	Action
Cable	1	Is the cable for the scanner routed correctly?	NO	Re-route the cable.
Scanner path	2	Is the scanner rail free of dirt, and does the scanner move smoothly when pushed by hand?	NO	Check the scanner rail for dirt and foreign matter; in addition check for objects that may come into contact with the scanner.
Composite power supply PCB	3	Set the meter to the 50V DC range. Does the index of the meter point to 34 V when the (+) probe is connected to JJ210-5 and the (-) probe is connected to J210-6 on the composite power supply PCB?	NO	See “DC power supply is absent.”
DC controller PCB	4	Replace the DC controller PCB. Is the problem corrected?	YES	End.
Scanner motor	5	Replace the scanner motor. Is the problem corrected?	YES	End.

23. The registration roller fails to rotate.

Cause	Step	Checks	Results	Action
Registration roller	1	Press the Copy Start key. Does the registration roller rotate for about 1 sec immediately after the scanner starts to move forward?	YES	Check the drive assembly of the registration roller.
DC controller PCB	2	Set the meter to the 30V DC range. Is the voltage between J303-5 (+) and J303-6 (-) on the DC controller PCB change from about 0 V to about 24 V when the Copy Start key is pressed?	NO	Replace the DC controller PCB.
Registration clutch (CL1)			YES	Check the wiring between the DC controller PCB and CL1; if normal, replace the CL1.

COPYRIGHT © 1997 CANON INC.
CANON NP6218 REV. 0 MAY 1997 PRINTED IN JAPAN (IMPRIME AU JAPON)

24. The scanning lamp fails to turn on.

Cause	Step	Checks	Results	Action
Scanning lamp	1	Turn off the power switch, and disconnect the power plug. Is the lamp attached correctly?	NO	Re-attach the lamp.
Scanning lamp	2	Are the ends of the scanning lamp black?	YES	Replace the scanning lamp.
DC controller PCB	3	Replace the DC controller PCB. Is the problem corrected?	YES	Replace the DC controller PCB.
Composite power supply PCB			NO	Check the wiring between the DC controller PCB and the composite power supply PCB; if normal, replace the composite power supply PCB.

25. The lens fails to move.

Cause	Step	Checks	Results	Action
Change solenoid (SL1)	1	Turn off the power switch, and detach the rear cover. Do the change solenoid (SL1) turn on at power-on? (Check with the naked eye.)	NO	Check the wiring between the DC controller and SL1; if normal, replace SL1.
Lens cable, pulley, rail	2	Are the lens cable, pulley, and rail normal?	NO	Check the lens cable, pulley, and rail; as necessary, clean or re-route the cable.
DC power supply	3	Is 34 V being generated at the J210-5 on the composite power supply PCB?	NO	See “DC power supply is absent.”
DC controller PCB	4	Replace the lens motor. Is the problem corrected?	NO	Replace the DC controller PCB.
Lens motor (M3)			YES	End.

COPYRIGHT © 1997 CANON INC.

26. The fixing heater fails to operate.

Cause	Step	Checks	Results	Action
	1	Is E000 indicated?	YES	See the descriptions under “E000.”
DC controller PCB	2	Replace the DC control PCB. Is the problem corrected?	YES	End.
Fixing heater driver			NO	Replace the fixing heater drive PCB.

27. The pre-exposure lamp fails to turn on.

Cause	Step	Checks	Results	Action
DC controller PCB	1	Detach the drum cartridge, and execute ‘No. 407’ in service mode. Does the pre-exposure lamp turn on normally?	NO	Replace the pre-exposure lamp.
Pre-exposure lamp	2	Replace the pre-exposure lamp. Does it turn on normally?	YES	End.
DC controller PCB			NO	Check the wiring between the pre-exposure lamp and the DC controller PCB; if normal, replace the DC controller PCB.

28. The add paper indicator fails to turn off.

Cause	Step	Checks	Results	Action
Cassette	1	Is the cassette set correctly?	NO	Set the cassette correctly.
Paper sensor	2	Is the following sensor normal (p. 10-39~10-41)? PS4: cassette paper sensor PS2cu: cassette 2 paper sensor (accessory) PS4cu: cassette 3 paper sensor (accessory)	NO	Check the lever and wiring; if normal, replace the sensor.
DC controller PCB			YES	Replace the DC controller PCB.

COPYRIGHT © 1997 CANON INC.
CANON NP6218 REV. 0 MAY 1997 PRINTED IN JAPAN (IMPRIME AU JAPON)

29 The jam message fails to turn off.

Cause	Step	Checks	Results	Action
Paper	1	Identify which sensor has detected the jam in 'No. 107' of service mode (jam history). Is paper found near the sensor?	YES	Remove the paper.
Sensor	2	Is the sensor identified in step 1 normal? (See p. 10-36.)	NO	Check the lever and the wiring; if normal, replace the sensor.
DC controller PCB			YES	Replace the DC controller PCB.

COPYRIGHT © 1997 CANON INC.

V. TROUBLESHOOTING FEEDING PROBLEMS

A. Jams (copy paper)

Jams tend to occur in the following locations of the copier:
① pick-up assembly
② separation/feeding assembly
③ fixing/delivery assembly

The descriptions that follow, therefore, are organized according to each of the above locations.

When a jam occurs, try to find out the location and the type of the jam in service mode ([1]; No. 101).

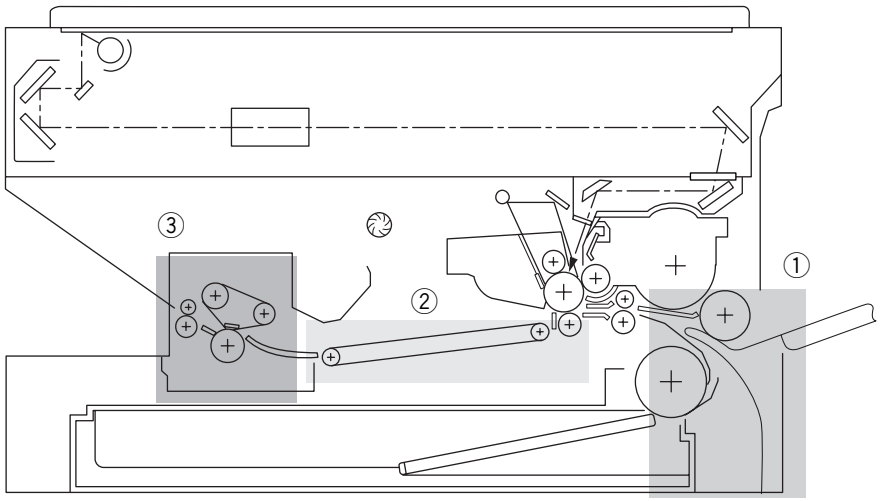

Figure 10-501

COPYRIGHT © 1997 CANON INC.
CANON NP6218 REV. 0 MAY 1997 PRINTED IN JAPAN (IMPRIME AU JAPON)

1. Pick-Up Assembly

Cause	Step	Checks	Results	Action
	1	Did the jam occur when the paper was picked up from the cassette?	NO	Go to step 8.
Cassette	2	Is the cassette set in the copier correctly?	NO	Set the cassette correctly.
	3	Try a different cassette. Is the problem corrected?	YES	Check the inside of the cassette for foreign matter.
Copy paper	4	Is the copy paper curled or wavy?	YES	Replace the copy paper; advise the user for the correct method of storing paper.
	5	Try Canon-recommended paper. Is the problem corrected?	YES	Advise the user to use recommended paper.
DC controller PCB, Pick-up switch	6	Does the pick-up roller of the selected cassette holder rotate during copying operation?	NO	See “The pick-up operation fails.”
Pick-up roller	7	Is the pick-up roller deformed or worn?	YES	Replace the pick-up roller.
	8	Try manual copying. Does the main motor rotate?	NO	See “The pick-up operation fails.”
Registration roller drive assembly	9	Does the registration roller operate normally?	NO	See “The registration roller fails to rotate.”
Registration roller, vertical path roller	10	Is the registration roller or the vertical path roller deformed or worn?	YES	Replace the deformed or worn roller.
Copy paper	11	Try Canon-recommended paper. Is the problem corrected?	YES	Advise the user to use recommended paper.
Pick-up roller			NO	Check the pick-up roller for wear or deformation.

COPYRIGHT © 1997 CANON INC.
CANON NP6218 REV. 0 MAY 1997 PRINTED IN JAPAN (IMPRIME AU JAPON)

2. Separation/Feeding Assembly

Cause	Step	Checks	Results	Action
Transfer charging assembly	1	Is the transfer charging assembly set correctly?	NO	Check the transfer charging assembly.
	2	Are there burrs on the paper guide of the transfer charging assembly?	YES	Remove the burrs.
Copy paper	3	Try Canon-recommended paper. Is the problem corrected?	YES	Advise the user to use recommended paper.
Feed belt	4	Are the two feeding belts rotating properly?	NO	Check the belt pulley.
			YES	Check the feed belt for deformation or wear.

3. Fixing/Delivery Assembly

Cause		Step	Checks	Results	Action
Delivery assembly separation claw		1	Is the separation claw worn or deformed?	YES	1. Replace the separation claw. 2. If dirt is found, clean with solvent.
Fixing assembly	Lower fixing roller, fixing film	2	Is the lower fixing roller or the fixing film deformed or worn?	YES	Replace the roller.
	Paper guide	3	Is the paper guide soiled with toner?	YES	Clean with solvent.
	Nip	4	Is the lower roller pressure (nip) within specification?	NO	Make adjustments.
Delivery assembly	Delivery lever	5	Does the delivery detection lever move smoothly?	NO	Make adjustments so that the lever moves smoothly.
	Delivery sensor (PS1)	6	Does the delivery sensor operate normally? (See the descriptions on how to check the photointerrupters.)	NO	Replace the sensor.
	Delivery roller drive assembly	7	Does the delivery roller move smoothly?	NO	Check the delivery roller drive assembly.
Leading edge margin				YES	Check if a margin exists along the leading edge of the copy.

COPYRIGHT © 1997 CANON INC.
CANON NP6218 REV. 0 MAY 1997 PRINTED IN JAPAN (IMPRIME AU JAPON)

B. Feeding Faults

1. Double feeding

Cause	Step	Checks	Results	Action
Separation pad	1	Is the separation pad deformed or worn?	YES	Replace the separation pad.
Spring			NO	Push up the separation pad, and try replacing the spring.

2. Wrinkling

Cause		Step	Checks	Results	Action
Pick-up assembly		1	Turn off the power while copy paper is moving through the feeding assembly. At the time, is wrinkling noted? Or, is the paper moving askew?	YES	Check the pick-up assembly; check the registration roller.
Copy paper		2	Try fresh paper. Is the problem corrected?	YES	The paper may be moist; advise the user on the correct method of storing paper.
		3	Is Canon-recommended paper used?	NO	Advise the user to use recommended paper.
Fixing assembly	Paper guide	4	Is the paper guide soiled with toner or the like?	YES	Clean with solvent.
	Lower roller pressure	5	Is the lower roller pressure (nip) within specification?	NO	Make adjustments.
	Top unit, lower roller			YES	Try replacing the top unit or the lower roller.

COPYRIGHT © 1997 CANON INC.

VI ARRANGEMENT/FUNCTIONS OF THE ELECTRICAL PARTS

A. Sensors

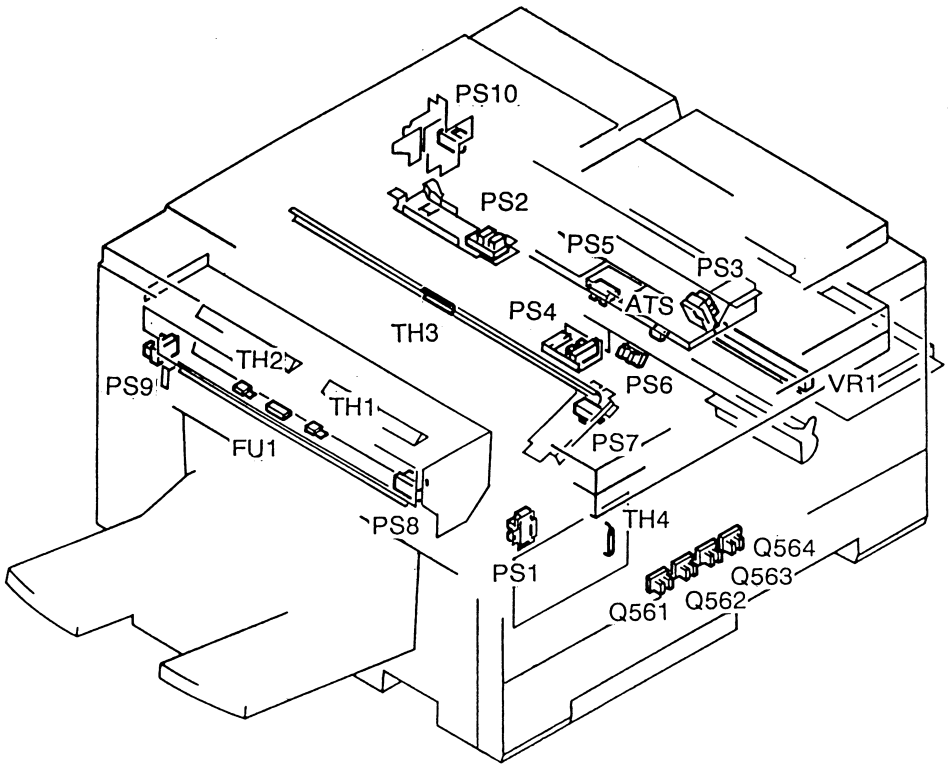

Figure 10-601

COPYRIGHT © 1997 CANON INC.
CANON NP6218 REV. 0 MAY 1997 PRINTED IN JAPAN (IMPRIME AU JAPON)

Symbol	Name	Ref.	Description
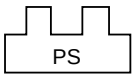	Photointerrupter	PS1 PS2 PS3 PS4 PS5 PS6 PS7 PS8 PS9 PS10 Q561 Q562 Q563 Q564	detects scanner home position detects lens home position detects blank shutter home position detects presence/absence of paper in cassette detects presence/absence of paper in multifeeder detects paper in front of registration roller detects paper in separation assembly detects paper in delivery assembly detects belt detects right door (open/closed) cassette size detection 1 cassette size detection 2 cassette size detection 3 cassette size detection 4
	Toner sensor	ATS	detects toner inside developing assembly
	Thermistor	TH1 TH2 TH3 TH4	fixing heater temperature detection 1 fixing heater temperature detection 2 fluorescent lamp temperature detection ambient temperature detection
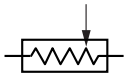	Volume	VR1	multifeeder paper width detection
	Thermal fuse	FU1	fixing heater overheating detection

Table 10-601

COPYRIGHT © 1997 CANON INC.

B. Clutches, Solenoids, and Switches

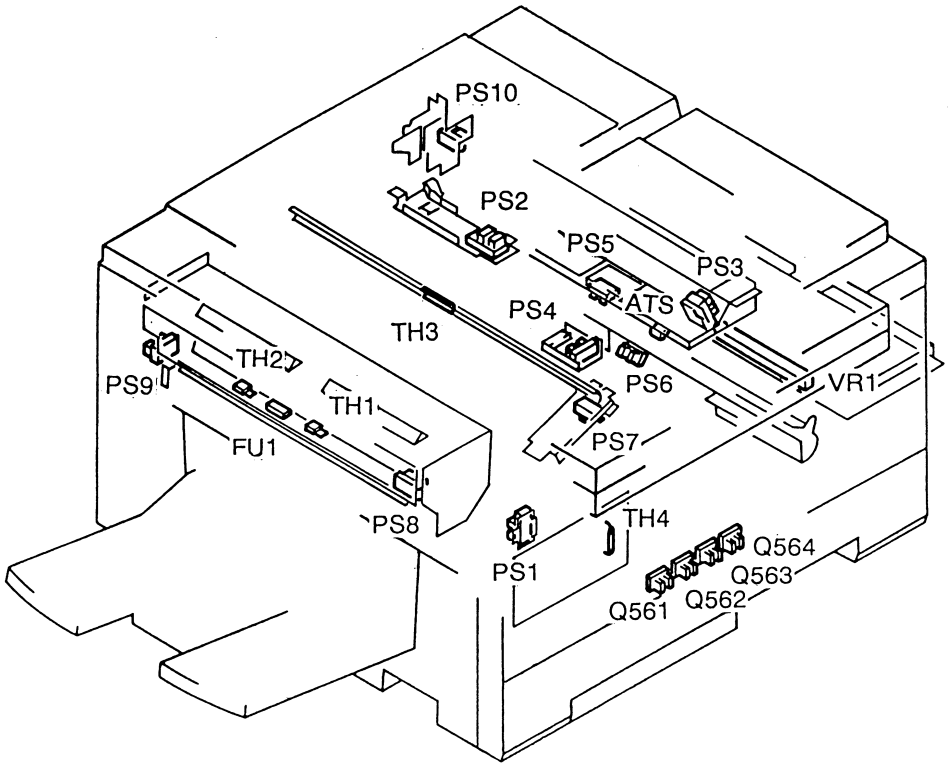

Figure 10-602

COPYRIGHT © 1997 CANON INC.
CANON NP6218 REV. 0 MAY 1997 PRINTED IN JAPAN (IMPRIME AU JAPON)

Symbol	Name	Ref.	Description
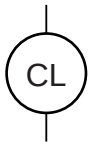	Clutch	CL1 CL2 CL3	registration clutch pick-up clutch multifeeder pick-up clutch
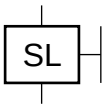	Solenoid	SL1 SL2 SL3 SL4 SL5	change solenoid multifeeder holding plate solenoid blank shutter primary charging roller cleaning solenoid transfer changing roller releasing solenoid
	Push switch	DS1	door switch
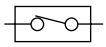	Switch	SW1 SW2	anti-condensation switch fluorescent lamp heater switch
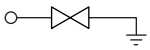	Varistor	ZD1 ZD2	transfer guide varistor attraction plate varistor
	Counter	CNT1 CNT2	total copy counter option counter

Table 10-602

COPYRIGHT © 1997 CANON INC.

C. Motors, Heaters, and Lamps

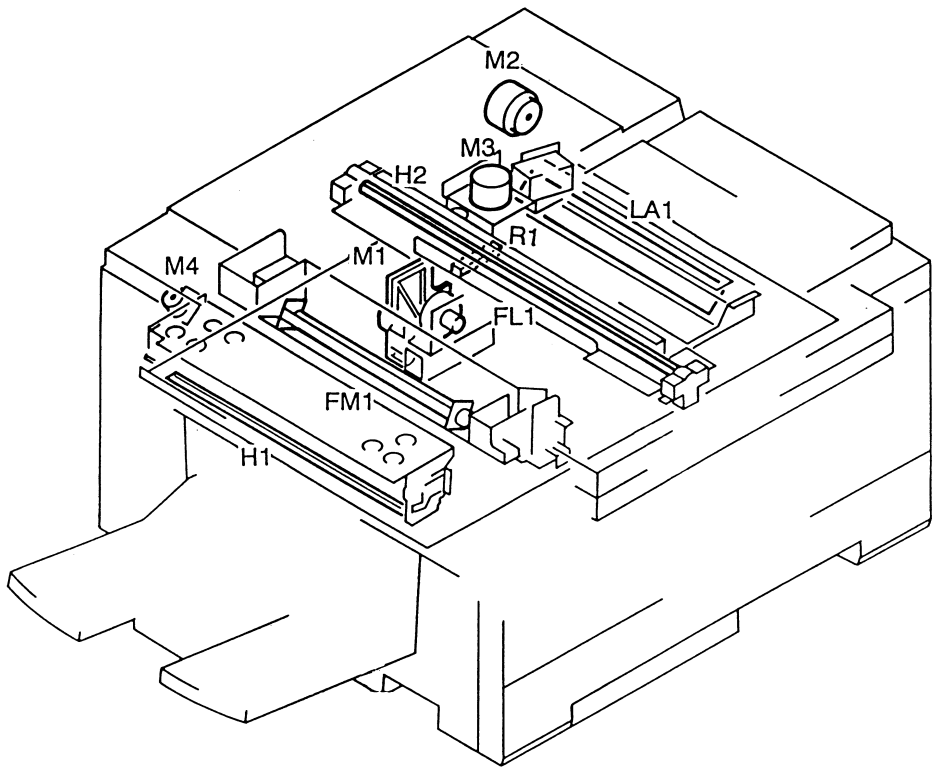

Figure 10-603

COPYRIGHT © 1997 CANON INC.
CANON NP6218 REV. 0 MAY 1997 PRINTED IN JAPAN (IMPRIME AU JAPON)

Symbol	Name	Ref.	Description
	Motor	M1 M2 M3 M4	main motor scanning motor lens motor fixing belt motor
	Fan motor	FM1	heat exhaust fan
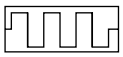	Heater	H1 H2 R1	fixing heater fluorescent lamp heater lens heater
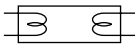	Fluorescent lamp	FL1	scanning lamp
	Lamp	LA1	pre-exposure lamp

Table 10-603

COPYRIGHT © 1997 CANON INC.

D. PCBs

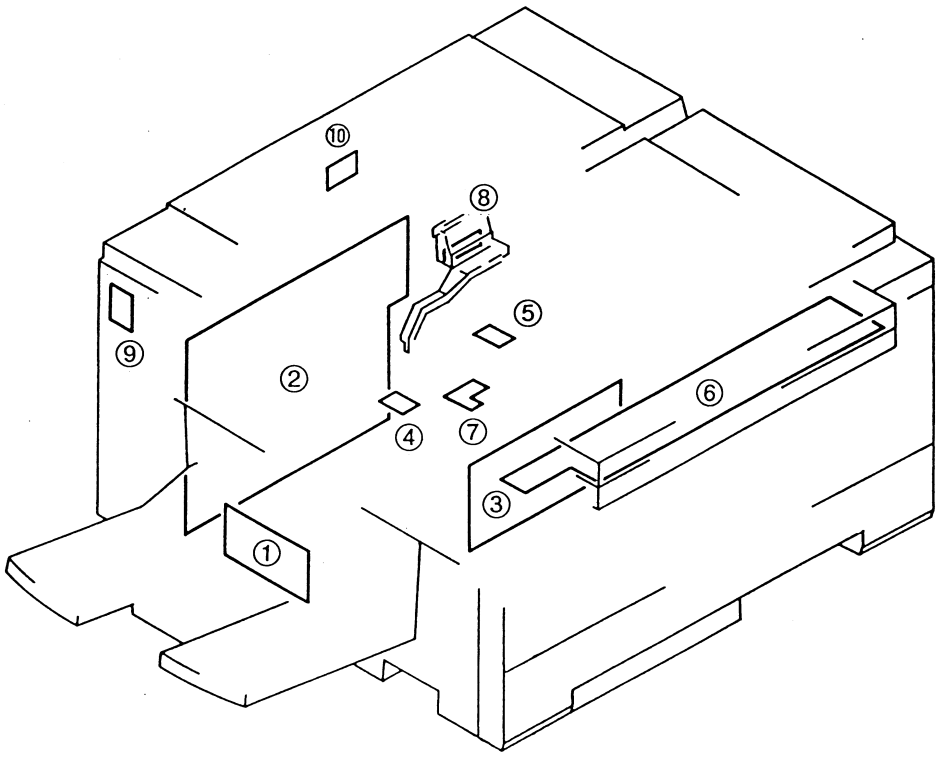

Figure 10-604

COPYRIGHT © 1997 CANON INC.
CANON NP6218 REV. 0 MAY 1997 PRINTED IN JAPAN (IMPRIME AU JAPON)

Ref.	Name	Function
1	Noise filter	noise prevention
2	Composite power supply	DC power supply, high-voltage generation
3	DC controller	sequence control
4	AE sensor	original density detection
5	Intensity sensor	fluorescent lamp intensity detection
6	Control panel	control panel keys, LEDs
7	High-voltage connector	charging, transfer, static eliminating power relay
8	Development bias connector	development power relay
9	Heater driver	fixing heater drive
10	Heater on detection	fixing heater drive detection

Table 10-604

COPYRIGHT © 1997 CANON INC.

E. Cassette Feeding Module – A2

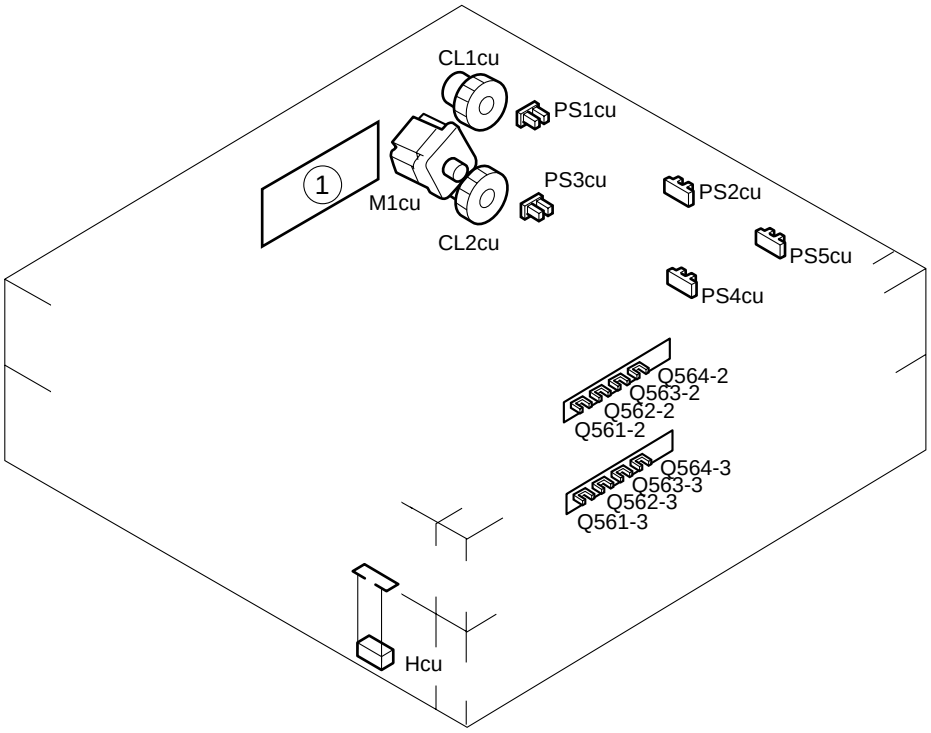

Figure 10-605

COPYRIGHT © 1997 CANON INC.
CANON NP6218 REV. 0 MAY 1997 PRINTED IN JAPAN (IMPRIME AU JAPON)

Symbol	Name	Ref.	Description
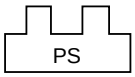	Photointerrupter	PS1cu PS2cu PS3cu PS4cu PS5cu Q561-2 Q562-2 Q563-2 Q564-2 Q561-3 Q562-3 Q563-3 Q564-3	mcassette 2 vertical path detection cassette 2 paper detection cassette 3 vertical path detection cassette 3 paper detection cassette right door open/closed detection cassette 2 paper size detection 1 cassette 2 paper size detection 2 cassette 2 paper size detection 3 cassette 2 paper size detection 4 cassette 3 paper size detection 1 cassette 3 paper size detection 2 cassette 3 paper size detection 3 cassette 3 paper size detection 4
	Motor	M1cu	cassette unit motor
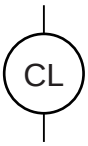	Clutch	CL1cu CL2cu	cassette 2 pick-up clutch cassette 3 pick-up clutch
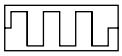	Heater	Hcu	cassette heater (accessory)
①	Cassette driver		relay PCB

Table 10-605

COPYRIGHT © 1997 CANON INC.

F. Variable Resistors (VR) and Check Pins by PCB

Of all the VRs and check pins found in the copier, those that are needed in the field are discussed.

Caution:
Do not touch the VRs and check pins that are not discussed herein; they are for factory adjustment only and require special tools and instruments and must be adjusted with high precision.

1. DC controller PCB

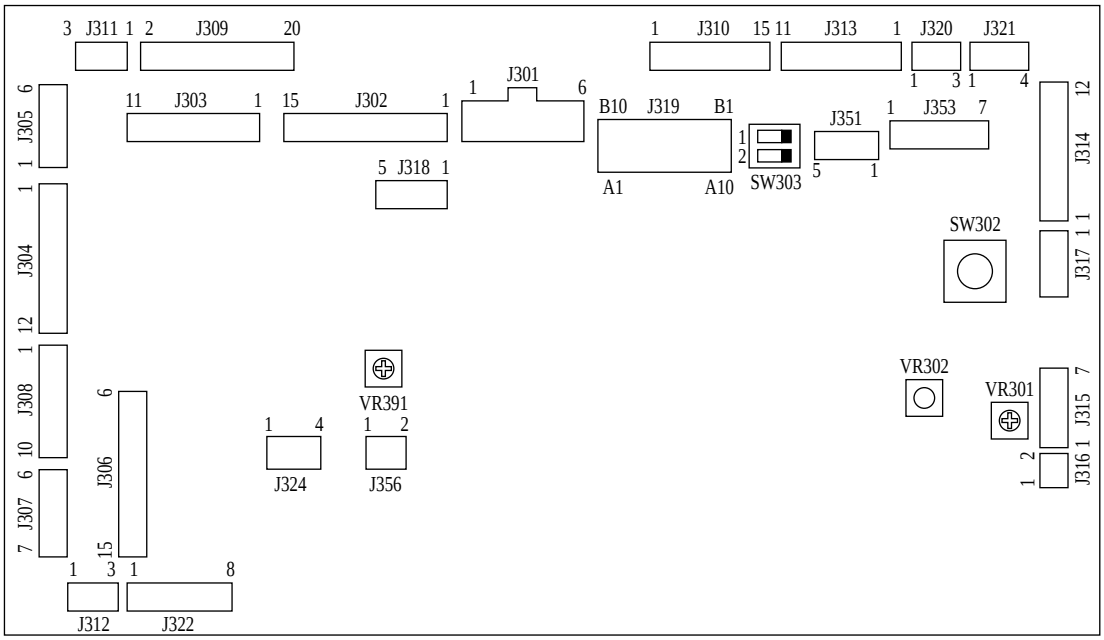

Figure 10-606

COPYRIGHT © 1997 CANON INC.
CANON NP6218 REV. 0 MAY 1997 PRINTED IN JAPAN (IMPRIME AU JAPON)

2. Composite power supply PCB

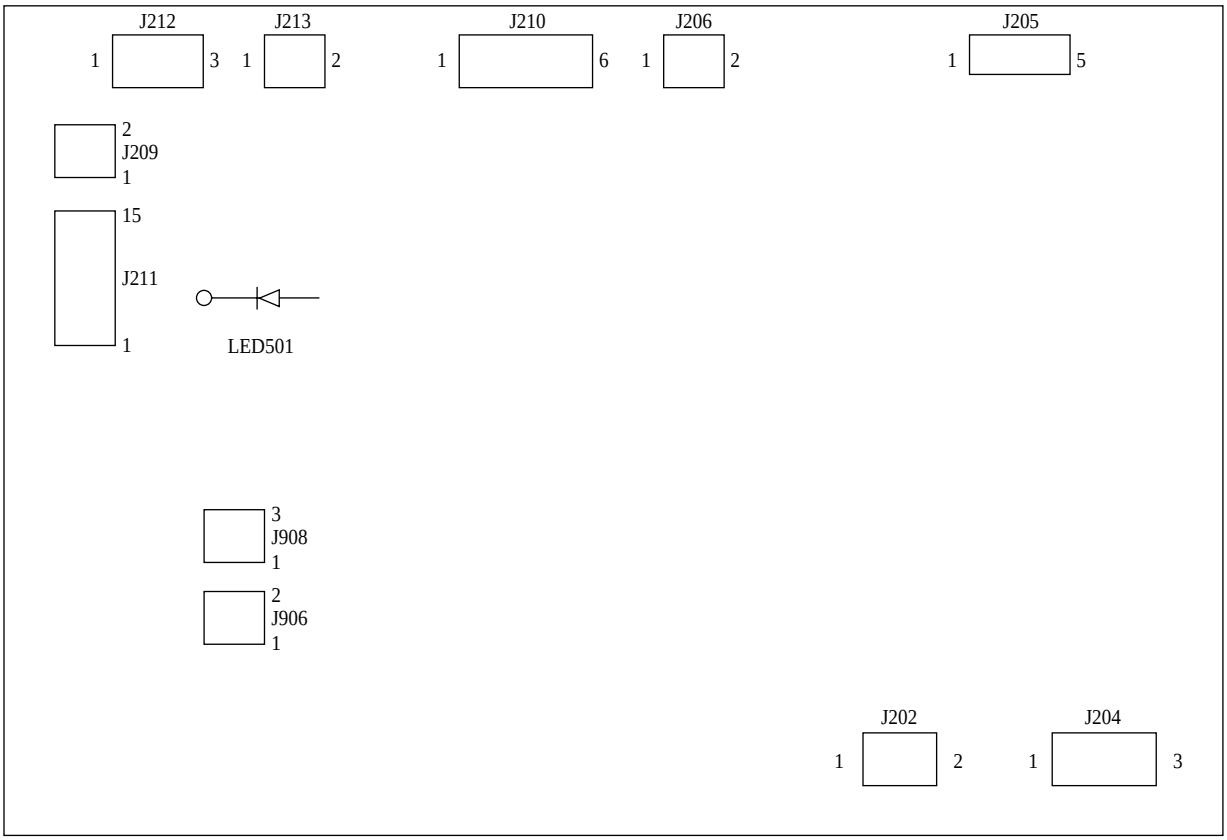

Figure 10-607

VII. SERVICE MODE

A. Outline

The copier's service mode may be classified into the following six:

Item	Description
[1]	control display mode
[2]	I/O display mode
[3]	adjustment mode
[4]	operation/inspection mode
[5]	specification mode
[6]	counter mode

Table 10-701

B. Using Service Mode

1. Activating Service Mode

1) Open the front door, and insert the door switch actuator.
   - If you want to make checks for I/O display mode or the like while making copies, set the copy mode.
2) Press the service mode switch (SW302) on the DC controller with hex key.
   - The copy count indicator indicates [1].
   - While service mode is activated, the copy density indicator LED indicates the position of the fixing belt.
   - A press on the reset key de-activates service mode.

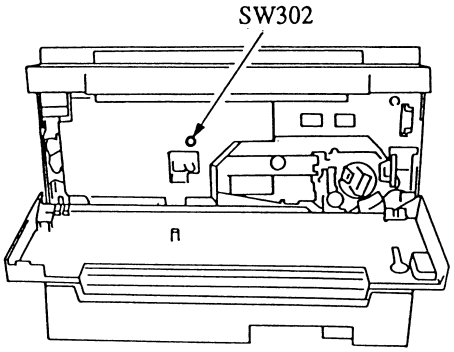

Figure 10-701

COPYRIGHT © 1997 CANON INC.
CANON NP6218 REV. 0 MAY 1997 PRINTED IN JAPAN (IMPRIME AU JAPON)

2. Selecting a Service Mode

1) While the copy count indicator is indicating [1], press a key from [1] through [6] to select the appropriate mode.
2) Press the AE key.
   - The copier activates the selected mode, and the copy count indicator indicates '301' or the like; '301' represents the first mode of those represented by [3].

3. Selecting Items

1) While the 100th digit on the copy count indicator is flashing ('301' or the like), press the keypad to select the mode to execute.
   - The copy count indicator indicates the selected number; only the 100th digit is flashing.
   - A press on the Clear key returns to selecting a mode ([3] or the like).
2) Press the Start key.
   - The copier activates the specified mode.

4. Using Adjustment Mode [3] and Specification Mode [5]

1) Press the keypad, and change the setting.
   - The value is flashed.
   - If the value is a negative value, '%' turns on. To enter a negative value, press the % key, and then enter the number using the keypad.
2) Press the AE key.
   - The copier stores the value, and flashes it.
   - A press on the Start key starts copying operation.
3) To change the settings continuously, repeat steps 1) and 2).
4) A press on the Clear key returns to selecting items.

5. Using Operation/Inspection Mode [4]

1) A press on the Start key executes the selected service mode.
2) A press on the Stop key stops the operation and then returns to selecting items.
   - If the mode is of a type that stops automatically, the operation stops and returns to selecting items automatically.

6. Clearing Stored Error Code

If E000, E001, E002, E003, E004, or E007 is indicated, remove the cause of the error, and clear the back-up information.

1) Open the front door, and insert the door switch actuator.
2) While holding down the service mode switch (SW302) on the DC controller with a hex key, press the power switch.
3) In about 2 sec, the power goes off; press the power switch once again.

Note:
The copier turns itself off automatically if it detects E000, E001, E002, E003, or E004, not responding to a press on the power switch. To check the error in service mode, perform the above after disconnecting the connector of the heater.

COPYRIGHT © 1997 CANON INC.

7. Recording on the Service Mode Label

Figure 10-702 shows the label attached behind the front door. At the factory, each machine is adjusted, and the settings used at the time are recorded on the label.
You must record new settings if you changed them in the field. If you replaced the DC controller, be sure to store the settings recorded on the label in service mode.
In addition, if you have replaced drun unit or the composite power supply, enter the settings recorded on the service label attached to the new drum unit or composite power supply and, at the same time, copy the setting on the service label (Figure 10-702)

No.		TYP		
301	AE_LIGHT			
302	AE_SHIFT			
303	AE_SLOPE			
304	HEATER			
305	REGIST			
306	LE_BLANK			
307	REGIST_R			
308	LE_BLANK_R			
309	TE_BLANK			
310	TE_BLANK_MF			
311	B_HOME			
312	B_HOME_RE			
313	PRIMARY			
314	IP_OFST			
315	PW_OFST			
316	IP_ADJ			
317	PH_ADJ			
318	ATVC_STD			
319	MF_LOOP			
320	C1_LOOP			
321	C2_LOOP			
322	C3_LOOP			
323	C1_CL_OFF			
324	C2_CL_OFF			
325	C3_CL_OFF			
326	LIGHT			

Figure 10-702

COPYRIGHT © 1997 CANON INC.
CANON NP6218 REV. 0 MAY 1997 PRINTED IN JAPAN (IMPRIME AU JAPON)

C. Control Display Mode [1]

- To select an item, press the appropriate key on the keypad and then the Start key.
- To clear an item, press the Clear key.
- A press on the Start key while a service mode is indicated executes the respective operation.

No.	Description	Remarks
101	Jam location	The display indicates the location of the jam on the copy count indicator; see below.
102	Fixing belt sensor ON time	unit: ms The actual ON time is the value that is obtained by multiplying the indicated value by 2.56; the copy density indicator indicates the position of the belt.
103	Power supply voltage	unit: V
104	Primary charging voltage	unit: V The actual primary charging voltage is the value obtained by turning the displayed value into negative and subtracting 1000 from it.
105	Primary charging current	unit: µA
106	Intensity	unit: lux The actual intensity (lux) is the value obtained by dividing the displayed value by 100.
107	Jam history	See below.
108	Error history (E code)	The display indicates a history of the most recent three errors; a press on [1], [2], or [3] on the keypad indicates the most recent, second recent, and third recent errors respectively.
109	Temperature detected by fixing main thermistor (TH1)	unit: °C
110	Temperature detected by fixing sub thermistor (TH2)	unit: °C
111	Temperature detected by ambient thermistor (TH301; DC controller)	unit: °C
112	AE sensor output	Normal if the value changes for each original in AE mode.
113	ROM version number	Indicates the parts number of the ROM.
114	ROM release number	Indicates the version of the program.
116	Intensity at time of scanning	Normal: between 68 and 72
137	Factory mode	
138	Factory mode	
139	Factory mode	
155	Factory mode	

Table 10-702

COPYRIGHT © 1997 CANON INC.

No. 101 Jam Location Indicator

In this mode, the copy count indicator turn on to indicate the type of jam. If both delay and stationary are indicated for the same sensor, i.e., at time of power-on or standby, the copier has detected copy paper when it was not making copies.

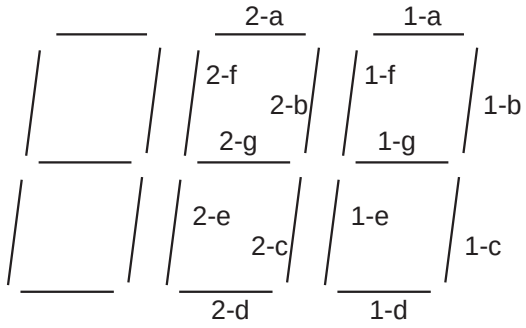

LED (ON)	Jam
1-a	pre-registration delay jam
1-b	pre-registration stationary jam
1-c	separation delay jam
1-d	separation stationary jam
1-e	delivery delay jam
1-f	delivery stationary jam
1-g	sorter jam
2-a	door open
2-b	cassette 2 pick-up delay jam
2-c	cassette 2 pick-up stationary jam
2-d	cassette 3 pick-up delay jam
2-e	cassette 3 pick-up stationary jam

Table 10-703

No. 104 Jam History

The 100th digit of the copy count indicator indicates how recent the jam is; to indicate the jam that occurred second most recently, press [2] on the keypad. As in 'No. 101' (jam location), the 10th digit indicates the type of jam.

Example: The most recent jam is a pre-registration delay jam.

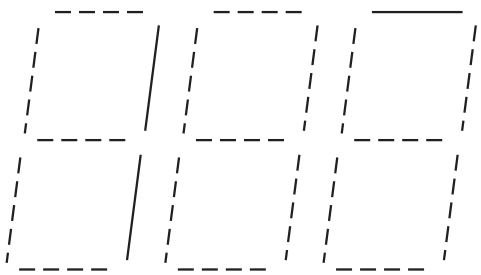

The second most recent jam is a door open jam.

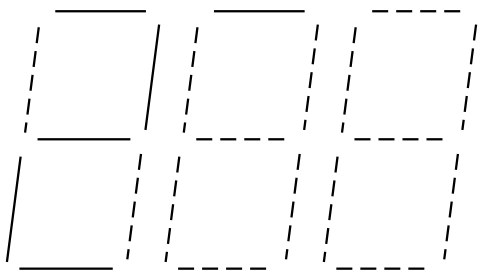

COPYRIGHT © 1997 CANON INC.

D. I/O Mode [2]

- Press [2] on the keypad and the AE key to activate I/O display mode.
- To clear an item, press the Clear key.
- A press on the Start key while a service mode is indicated executes the respective operation.

No.	Description	Remarks
201	Port C digit 4	When the mode is activated, the copy count indicator turns on to indicate the I/O of the input port; see below.
202	Port C digit 5	When the mode is activated, the copy count indicator turns on to indicate the I/O of the input port; see below.
203	Port C digit 6	When this mode is activated, the copy count indicator turns on to indicate the I/O of the input port; see below.
204	Port C digit 7	When this mode is activated, the copy count indicator turns on to indicate the I/O of the input port; see below.
205	Port H	When this mode is activated, the copy count indicator turns on to indicate the I/O of the input port; see below.
206	Fixing main thermistor (TH1) voltage	Indicates the measurement of voltage using 0 through 255.
207	Fixing sub thermistor (TH2) voltage	Indicates the measurement of voltage using 0 through 255.
208	AE sensor voltage	Indicates the measurement of voltage using 0 through 255.
209	Ambient temperature thermistor (TH301) voltage	Indicates the measurement of voltage using 0 through 255.
210	Multifeeder paper width sensor voltage	Indicates the measurement of voltage using 0 through 255.
211	Intensity sensor voltage	Indicates the measurement of voltage using 0 through 255.
212	Copy density correction knob/switch voltage	Indicates the measurement of voltage using 0 through 255.
213	Toner level sensor	Indicates the measurement of voltage using 0 through 255.

Table 10-12

COPYRIGHT © 1997 CANON INC.

LED (copy count indicator; from 201 to 205)

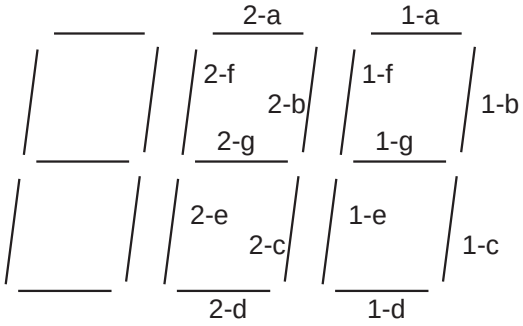

No. 201/202/203/204 Port C Digital Display

No.	LED	Description	Remarks
201	1-a	Cassette 2 connect	ON: connected
	1-b	Cassette 2 connect	ON: connected
	1-c	Options counter open circuit	ON: open
	1-d	Jumper connector 3	ON: connected
	1-e	Cassette size 1 (cassette 2)	ON: light-blocking plate present
	1-f	Cassette size 2 (cassette 2)	ON: light-blocking plate present
	1-g	Cassette size 3 (cassette 2)	ON: light-blocking plate present
	2-a	Cassette size 4 (cassette 2)	ON: light-blocking plate present
	2-b	Not used	
202	1-a	Main motor lock	ON: locked
	1-b	Control Card IV connect	ON: connected
	1-c	Total counter connect	ON: connected
	1-d	Option counter connect	ON: connected
	1-e	Cassette size 1 (cassette 3)	ON: light-blocking plate present
	1-f	Cassette size 2 (cassette 3)	ON: light-blocking plate present
	1-g	Cassette size 3 (cassette 3)	ON: light-blocking plate present
	2-a	Cassette size 4 (cassette 3)	ON: light-blocking plate present
	2-b	Not used	
203	1-a	Service mode switch	ON: pushed
	1-b	Jumper connector 1	ON: connected
	1-c	Jumper connector 2	ON: connected
	1-d	Total counter open circuit	ON: open
	1-e	Cassette size 1 (cassette 1)	ON: light-blocking plate present
	1-f	Cassette size 2 (cassette 1)	ON: light-blocking plate present
	1-g	Cassette size 3 (cassette 1)	ON: light-blocking plate present
	2-a	Cassette size 4 (cassette 1)	ON: light-blocking plate present
	2-b	Cassette 3 vertical path sensor (PS3cu)	ON: light-blocking plate present

COPYRIGHT © 1997 CANON INC.
CANON NP6218 REV. 0 MAY 1997 PRINTED IN JAPAN (IMPRIME AU JAPON)

No.	LED	Description	Remarks
204	1-a	Right door open/closed sensor (PS10)	ON: light-blocking plate present (paper present)
	1-b	Separation sensor (PS7)	ON: light-blocking plate present (right door closed)
	1-c	Cassette paper sensor (PS4)	ON: light-blocking plate present (paper absent)
	1-d	Multifeeder paper sensor (PS5)	ON: light-blocking plate present (paper absent)
	1-e	Cassette 2 paper sensor (PS2cu)	ON: light-blocking plate present (paper absent)
	1-f	Cassette 3 paper sensor (PS4cu)	ON: light-blocking plate present (paper absent)
	1-g	Delivery sensor (PS8)	ON: light-blocking plate present (paper present)
	2-a	Cassette right door open/closed sensor (PS5cu)	ON: light-blocking plate present (right door closed)
	2-b	Cassette 2 vertical path sensor (PS1cu)	ON: light-blocking plate present (paper present)

Table 10-13

No. 205 Port H Display

LED	Description	Signal	Connector	Remarks
1-a	Registration sensor	RPD	J314-2	ON: paper present
1-b	PCB check	PCBCH*	J353-6	For factory only
1-c	Lens home position sensor (PS2)	LHP	J307-2	ON: at HP
1-d	Blank shutter home position sensor (PS3)	BSHP	J315-2	ON: at HP
1-e	Fixing film sensor (PS9)	FFD	J304-12	ON film detected
1-f	Heater on detection (triac short circuit)	HTON*	J324-2	ON: heater ON detected
1-g	Composite power supply ACK	CP-ACK	J302-12	ON: acknowledged
2-a	AC pulse	AC-MNTR	J302-14	ON: H, OFF: L
2-b				

Table 10-14

COPYRIGHT © 1997 CANON INC.

E. Adjustment Mode [3]

- To activate adjustment mode, press [3] on the keypad and then the AE key.
- To select an item, press the appropriate key on the keypad and then the Start key.
- To change the setting, press the appropriate keys on the keypad and then the AE key.
- To cancel an item, press the Clear key.
- A press on the Start key executes the respective operation.
- If the value is a negative value, '%' is turned on; to enter a negative value, press the % key and the value on the keypad.

No.	Description	Settings	Remarks
301	Automatic lamp intensity adjustment for AE scans		See p. 10-11.
302	Copy density (development bias) reference point adjustment for AE mode	-26 ~ +26	See p. 10-13. default: 0
303	Copy density (development bias) slope adjustment for AE mode	-26 ~ +26	See p. 10-13. default: 0
304	Fixing heater resistance storage		See p. 10-31.
305	Leading edge margin adjustment (registration roller ON timing)	0 ~ 63	A higher value delays the copy paper in relation to the image, reducing the margin. default: 32 unit: 0.27 mm
306	Leading edge non-image width adjustment (timing at which blank open/close shutter for blank exposure is closed)	0 ~ 63	A higher setting increases the leading edge non-image width. default: 32 unit: 0.27 mm
307	Leading edge registration adjustment for right face in page separation (registration roller ON timing)	0 ~ 63	A higher setting delays the copy paper in relation to the image. default: 32 unit: 0.27 mm
308	Leading edge margin adjustment for right face in page separation (timing at which blank shutter is closed)	0 ~ 63	A higher setting increases the leading edge margin. default: 32 unit: 0.27 mm
309	Trailing edge non-image width adjustment (timing at which open/close shutter for blank exposure is opened)	0 ~ 63	A higher setting reduces the trailing edge margin. default: 32 unit: 0.27 mm
310	Leading edge non-image width for multifeeder (timing at which the open/close shutter for blank exposure is opened)	0 ~ 63	A higher setting reduces the trailing edge margin. default: 32 unit: 0.27 mm

Table 10-15-1

Note: A press on the Start key when in No. 305, 306, 307, or 308 makes copies in the mode that has been effective before the activation of the mode; when executing No. 307 or 308, it is recommended that page separation mode be selected before activating service mode.

COPYRIGHT © 1997 CANON INC.
CANON NP6218 REV. 0 MAY 1997 PRINTED IN JAPAN (IMPRIME AU JAPON)

No.	Description	Settings	Remarks
311	Left/right margin adjustment (Direct; home position for slide shutter for blank exposure)	0 ~ 15	A higher setting increases the margin on both left and right. default: 8 unit: 0.27 mm
312	Left/right margin adjustment (Reduce; travel distance of slide shutter for blank exposure)	-10 ~ +10	A higher setting increases the margin on both left and right. default: 0 unit: 0.27 mm
313	Primary output voltage correction (corrects output voltage determined by APVC)	-16 ~ +16	Enter the setting recorded on the label after replacing the drum cartridge.
314	APVC measured current shift (corrects the results of APVC)	-40 ~ +40	Enter the setting recorded on the label after replacing the drum cartridge.
315	Voltage correction for measurement in APVC (corrects voltage for measurement applied at time of APVC)	-16 ~ +16	default: 0 unit: 16 V Enter the value recorded on the label on the composite power supply when replacing the composite power supply.
316	Measurement current correction for APVC (corrects current measured at time of APVC)	-10 ~ +10	default: 0 Enter the value recorded on the label on the composite power supply when replacing the composite power supply.
317	Fluorescent lamp pre-heating current adjustment	-9 ~ +9	default: 0 Enter the value recorded on the label on the composite power supply when replacing the composite power supply.
318	Transfer output voltage adjustment (corrects transfer voltage determined by ATVC)	-4 ~ +4	Convert the value recorded on the label on the composite power supply as follows and change the value recorded on the service label; then, enter the value when replacing the composite power supply. Label → Input: 1 → 0, 2 → -1, 3 → -2, 4 → -3, 5 → -4, 6 → +1, 7 → +2, 8 → +3, 9 → +4
319	Arch adjustment when multifeeder is used (pick-up roller OFF timing)	0 ~ 63	A higher setting increases the arch. default: 25 unit: 0.27 mm

COPYRIGHT © 1997 CANON INC.

No.	Description	Settings	Remarks
320	Arch adjustment when cassette 2 is used (pick-up roller OFF timing)	0 ~ 63	A higher setting increases the arch. default: 25 unit: 0.27 mm
321	Arch adjustment when cassette 2 is used (pick-up roller OFF timing)	0 ~ 63	A higher setting increases the arch. default: 25 unit: 0.27 mm
322	Arch adjustment when cassette 2 is used (pick-up roller OFF timing)	0 ~ 63	A higher setting increases the arch. default: 25 unit: 0.27 mm
323	Pick-up clutch (CL2) off timing adjustment	0 ~ 63	For factory only default: 32
324	Cassette 2 pick-up clutch (CL1cu) off timing adjustment	0 ~ 63	For factory only default: 20
325	Cassette 3 pick-up clutch (CL2cu) off timing adjustment	0 ~ 63	For factory only default: 20
326	Scanning lamp intensity adjustment	0 ~ 76	For factory only default: 75

Table 10-15-2

COPYRIGHT © 1997 CANON INC.
CANON NP6218 REV. 0 MAY 1997 PRINTED IN JAPAN (IMPRIME AU JAPON)

F. Operation/Inspection Mode [4]

- To activate operation/inspection mode, press [4] on the keypad and then the AE key.
- To select an item, press the appropriate key on the keypad and then the Start key.
- To execute the mode, press the Start key.
- To stop the operation, press the Stop key; the copier returns to selecting an item.
- If the mode is of a type that stops automatically, the copier automatically returns to selecting an item.

No.	Description	Remarks
401	Developing assembly idle rotation	Use it after supplying toner at time of installation.
402	Primary roller cleaning	
403	Transfer roller cleaning	
404	Fixing tension roller	Use it to adjust the fixing film drive roller pressure for the upper fixing unit. (See p. 10-28.) Fix the fixing tension roller and cause the fixing film to rotate idly. The ON period of the fixing film sensor is indicated by the copy count indicator, and the film position is indicated by the copy density indicator. Another press on the Start key checks the position of the fixing film automatically.
405	Fixing film initial rotation mode	Execute the mode when you have replaced the fixing film or the upper fixing unit to return the fixing film to its appropriate position. (See p. 10-28.) The film stops as soon as it reaches the appropriate position automatically. The position of the film in travel is indicated by the copy density indicator.
406	Nip check	Use tit to check the nip or when adjusting the lower fixing roller. (See p. 10-30.)
407	Fixing film displacement correction	The fixing film stops when it reaches the appropriate position or when 30 sec has passed. The position of the film in travel is indicated by the copy density indicator, and the fixing film ON period is indicated by the copy count indicator. The position is normal if the copy density indicator indicates ‘5’ when the film stops; otherwise, check the fixing film and the tension roller. If the fixing film becomes displaced and E007 is indicated, try this mode. (This will prove to be highly useful if displacement occurs because of a minor accident.)
408	Scanning lamp ON check	A press on the Start key keeps the lamp on after about 1.5 sec.
409	Control panel indicators ON	

COPYRIGHT © 1997 CANON INC. CANON NP6218 REV. 0 MAY 1997 PRINTED IN JAPAN (IMPRIME AU JAPON)

No.	Description	Remarks
410	Scanner forward stop	
411	Pre-exposure lamp on	
412	Drum unit installation mode	Execute it when installing or replacing the drum unit; a press on the Start key will automatically activate APVC measurement mode; the mode ends in about 23 sec.
450	Back-up RAM clear	See p. 10-35

Table 10-16

COPYRIGHT © 1997 CANON INC.
CANON NP6218 REV. 0 MAY 1997 PRINTED IN JAPAN (IMPRIME AU JAPON)

G. Specification Settings Mode [5]

- To activate specification settings mode, press [5] on the keypad and then the AE key.
- To select an item, press the appropriate key on the keypad and then the Start key.
- To change the setting, press the appropriate keys on the keypad and then the AE key.
- To clear an item, press the Clear key.
- A press on the Start key executes the respective operation.

No.	Description	Remarks
501	Characteristics storage for multifeeder paper width sensor	See p. 10-43.
502	Copy density notation switching (9/17 steps)	9 steps: 0 17 steps: 1 default: 0 (9 steps)
503	Auto power-off cancel	• When '1' is entered on the keypad, the notation will be 'ON', activating the auto power-off function. • When '0' is entered on the keypad, the notation will be 'OFF', de-activating the auto power-off function. default: on. The auto power-off period is set in user mode; since the copier's WAIT time is 0, it is best to keep the auto power-off mechanism to be enabled.
504	Copy count upper limit	settings: 0 to 99 default: 0 When set to '0', the upper limit will be 100 copies.
505	Universal cassette paper size	See p. 10-44. settings: 0 to 14 default: 0
506	Separation static eliminator output voltage switching	002: 2.5 kV 004: 4 kV default: 0
507	Fixing forced wait	When activated, the period of initial rotation is increased; activate it if the fixing on the first copy is poor because of low temperature conditions. 0: disabled 1: enabled default: 0
508	Fixing control temperature switching	001: 225°C See p. 10-32. 002: 215°C 003: 200°C default: 002

Table 10-17

COPYRIGHT © 1997 CANON INC.

H. Counter Mode [6]

- To activate the mode, press [6] on the keypad and then the AE key.
- To select an item, press the appropriate key on the keypad and then the Start key.
- To cancel an item, press the Clear key.
- A press on the Start key executes the respective service operation.
- To obtain the actual count, multiply the indication by 100.

No.	Description	Remarks
601	Large copy counter	
602	Small copy counter	
603	Total copy counter/drum counter	For North America only; indicates the use of the drum unit in terms of copies made, and cleared when the drum unit is replaced.

Table 10-18

COPYRIGHT © 1997 CANON INC.
CANON NP6218 REV. 0 MAY 1997 PRINTED IN JAPAN (IMPRIME AU JAPON)

VIII. SELF DIAGNOSIS

A. Copier

The microprocessor on the copier's DC controller is provided with a self diagnosis mechanism that checks the condition of the machine (sensors, in particular). The copier runs self diagnosis and, when it identifies an error, indicates a code that represents each specific error. If the copier finds an error associated with E000, E001, E002, E003, and E004, it automatically shuts itself off (error auto power-off).

Code	Cause	Description
E000	• Thermistor (TH1, TH2; displacement, poor contact, open circuit) • Fixing heater (H1; open circuit, crack) • Thermal fuse (FU1; malfunction) • Triac (faulty) • DC controller (faulty)	• Beginning 1 second after the copy START key is pressed, the main thermister (TH1) does not reach 50°C for 200 ms. • Beginning 2 second after the copy START key is pressed, the main thermister (TH1) does not reach 60°C for 200 ms. • Beginning 4 second after the copy START key is pressed, the main thermister (TH1) does not reach 70°C for 200 ms.
E001	• Thermistor (TH1, TH2; short circuit) • Triac (faulty) • DC controller (faulty)	• The detection temperature of the thermistor (TH1) exceeds 250°C during copying operation. • The detection temperature of the sub thermistor (TH2) exceeds 260°C during copying operation. • The detection temperature of the thermistor (TH1, TH2) rises 30°C over the specified temperature during copying operation. • The detection temperature of the thermistor (TH1, TH2) rises 30°C over the specified temperature during copying operation. • The thermistor detects a rise in temperature of 40°C or more during standby. • The temperature has increased over 100°C or more within 1 sec after the thermistor (TH1, TH2) has detected 100°C.
E002	• Thermistor (TH1, TH2; displacement, poor contact, open circuit) • Fixing heater (H1; open circuit, crack) • Thermal fuse (FU1; malfunction) • Triac (faulty) • DC controller (faulty)	• Beginning 1 second after the main thermister (TH1) detection temperature reaches 60°C, the first thermister does not reach 70°C for 200 ms. • Beginning 1 second after the main thermister (TH1) detection temperature reaches 70°C, the first thermister does not reach 80°C for 200 ms. • Beginning 1 second after the main thermister (TH1) detection temperature reaches 80°C, the first thermister does not reach 90°C for 200 ms. • Beginning 1 second after the main thermister (TH1) detection temperature reaches 90°C, the first thermister does not reach 95°C for 200 ms.

Table 10-19-1

COPYRIGHT © 1997 CANON INC.

Code	Cause	Description
E003	• Thermistor (TH1, TH2; displacement, poor contact, open circuit) • Fixing heater (H1; open circuit, crack) • Thermal fuse (FU1; malfunction) • Triac (faulty) • DC controller (faulty)	• After the main thermistor (TH1) detection temperature reaches 95°C, the main thermister detects lower than 95°C for 200 ms. • After the sub thermistor (TH2) detection temperature reaches 70°C, the sub thermister detects less than 70°C for 200 ms.
E004	• Triac (faulty) • Heater ON detection PCB (faulty)	The fixing heater is identified as being on when the fixing heater drive signal is off (HTRD=0).
E007	• Fixing film (displacement, tear) • Tension roller (displacement, malfunction) • Fixing film motor (M4; faulty) • Fixing film sensor (PS9; faulty)	The fixing film sensor output remains '1' or '0' for 1.35 sec or more. **Reference:** The fixing film takes about 1.3 sec to make a full rotation.
E010	• Main motor (M1; faulty) • DC controller (faulty)	The main motor revolution is not as specified (MLOCK=0) for 1 sec or more while the main motor drive signal is on (MMD=1).
E030	• Counter (open circuit) • DC controller (faulty)	Checks are made immediately before the counter turns on or off and when copying operation is started. Normal if drive signal = 0 at time the counter turns on; Normal if drive signal = 1 at time the counter turns off. **Note:** Checks are made only when the counter is installed.
E064	• Composite power supply (faulty) • DC controller (faulty)	The high voltage of the composite power supply is different from the setting.
E202 (keys on control panel disabled)	• Scanner cable (displacement, tear) • Scanner home position sensor (PS1; faulty) • Scanner motor (M2; faulty) • DC controller (faulty)	The scanner does not return to the home position within 5 sec when it is started. E002 may be checked in 'No. 108' of service mode.

Table 10-19-2

COPYRIGHT © 1997 CANON INC.
CANON NP6218 REV. 0 MAY 1997 PRINTED IN JAPAN (IMPRIME AU JAPON)

Code	Cause	Description
E210	• Lens cable (displacement, tear) • Lens home position sensor (PS2; faulty) • Slide shutter (operation) • Blank shutter home position sensor (PS3; faulty) • Change solenoid (SL1; faulty) • Lens motor (M3; faulty) • DC controller (faulty)	• The lens home position sensor signal (LHP) is not generated within a specific period of time after the power switch has been turned on. • The lens home position signal (LHP) is generated longer than a specific period of time. • The blank shutter home position signal (BSHP) is not generated when the slide shutter is moving.
E220	• Scanning lamp (faulty) • Composite power supply (faulty) • DC controller (faulty)	• The lamp is identified as being on during standby. • The lamp is identified as being off during copying operation.
E240	• DC controller (faulty) • Composite power supply (faulty)	A communication error is detected between the CPU (Q301) on the DC controller and the CPU (Q512) on the composite power supply.
E261	• Power supply frequency (fluctuation) • Composite power supply (faulty)	The intervals of the zero cross signal is outside the tolerance.
E710	• DC controller (faulty)	The IPC (Q104) cannot be initialized at power-on.
E711	• DC controller (faulty)	An IPC communication error has been detected twice within 1 sec.
E712	• DC controller (faulty) • DF controller (faulty) • Connector (poor contact)	An error in communication with the DF cannot be cleared.
E717	• DC controller (faulty) • The Remote Diagnostic Device II controller (faulty) • Communication (with the Remote Diagnostic Device II)	• A communication with the Remote Diagnostic Device II has been successfully but failed in the middle. • An open circuit is detected on the line with the Remote Diagnostic Device II.

Table 10-19-3

COPYRIGHT © 1997 CANON INC.

Clearing an Error Code (back-up data)

When the self diagnosis mechanism has been activated, the copier may be reset by turning its power off and on. However, this does not work for E000, E001, E002, E003, or E004; this arrangement is to prevent the user from causally resetting any of the errors, which could damage the film or the heater in side the fixing assembly.

If E000, E001, E002, E003, or E004 is indicated, remove the cause and clear the back-up data as follows:

1) Open the front door, and insert the door switch actuator.
2) Press the power switch while holding down the service mode switch (SW302) on the DC controller with a hex key.
3) The power should go off in about 2 sec; turn on the power.

Caution:

Detection of E000, E001, E002, E003, or E004 automatically turns off the copier. To check the type of error in service mode, go through the above steps after disconnecting the fixing heater.

COPYRIGHT © 1997 CANON INC.
CANON NP6218 REV. 0 MAY 1997 PRINTED IN JAPAN (IMPRIME AU JAPON)

B. Self Diagnosis (ADF)

Code	Cause	Description
E400	• data communication with copier (error)	The data communication is monitored at all times; the error is identified if the communication with the copier is absent for 5 sec or more.
E402	• belt motor (fails to rotate) • belt motor clock sensor (faulty)	The belt clock pulses within 200 msec are below the specified number.
E404	• delivery motor (fails to rotate) • delivery motor clock sensor (faulty)	The delivery motor clock pulses within 200 msec are below the specified number.
E411	• document detection (faulty) • registration sensor (faulty) • document edge sensor (faulty)	The output of the sensor is 2.3 V or more in the absence of paper.

Table 10-20

Note:
To reset the copier after activation of the self diagnosis mechanism, switch the copier off and then on.
You can still continue to make copies even when the ADF is out of order; simply open the ADF, and set the documents on the copyboard glass.

COPYRIGHT © 1997 CANON INC.

C. Self Diagnosis (sorter)

Code	Cause	Description
E500	The CPU or the communications IC on the sorter controller is not operating normally.	An error is detected in the communication between the sorter and the copier.
E510	The feeder motor fails to rotate.	The clock signal from the motor is off for 250 msec or more.
E530	The stapler guide bar swing motor fails to rotate.	The home position sensor does not turn off after generation of 2560 pulses of the motor drive signal.
E531	The stapler unit swing motor fails to rotate.	• The stapler unit swing sensor does not turn off within 0.5sec after generation of the motor drive signal. • The sensor does not turn on again within 1.0sec after the stapler unit swing sensor has turned off.
E540	The bin shift motor fails to rotate.	• The reed cam home position sensor does not turn off within 2.0sec after generation of the motor drive signal. • The reed cam home position sensor does not turn on once again within 2.0sec after it has turned off.
E541	• Bin motor (faulty) • Reed cam drive gear (faulty mounting)	The reed cam position sensor does not turn on within 1.0 sec after it has turned off.

Table 10-21

Note:
Some copiers use ‘E500’ to represent all the above errors.

■ Error Condition
① The copier indicates the “TURN ON POWER” message.
② When the power has been turned off and then on, the sorter runs a self check: if the result is good*, it resets; otherwise, enters down state**.

■ Down State
① The copier indicates ‘E5XX’.
② When the sorter has been detached, the copier is available for operations other than those that must use the sorter.
③ If a mode that uses the sorter is selected, some copiers indicate the “MODE NOT AVAILABLE” message.

COPYRIGHT © 1997 CANON INC.
CANON NP6218 REV. 0 MAY 1997 PRINTED IN JAPAN (IMPRIME AU JAPON)

Note:

Even in down state, the sorter will run a self check and rest if the result is good if you have switched it off and then on without detaching it from the copier.

* Simply turn off the joint sensor (MS3) to detach the sorter from the copier; you need not disconnect the communication connector.

** When an E code is indicated.

COPYRIGHT © 1997 CANON INC.
CANON NP6218 REV. 0 MAY 1997 PRINTED IN JAPAN (IMPRIME AU JAPON)

COPYRIGHT © 1997 CANON INC.
CANON NP6218 REV. 0 MAR. 1997 PRINTED IN JAPAN (IMPRIME AU JAPON)

APPENDIX

A. GENERAL TIMING CHART A-1
B. SIGNALS AND ABBREVIATIONS.....A-2
C. GENERAL CIRCUIT DIAGRAM A-3
D. SPECIAL TOOLS A-5
E. SOLVENTS/OILS.....A-6

COPYRIGHT © 1997 CANON INC. CANON NP6218 REV. 0 MAY 1997 PRINTED IN JAPAN (IMPRIME AU JAPON)

A. GENERAL TIMING CHART

(A4, 2 copies, Direct, from copier cassette)



COPYRIGHT © 1997 CANON INC.
CANON NP6218 REV. 0 MAY 1997 PRINTED IN JAPAN (IMPRIME AU JAPON)

B. SIGNALS AND ABBREVIATIONS

1. Signals and Abbreviations

ACBIAS	DEVELOPING AC BIAS VOLTAGE DETECTION signal
AE	AE SENSOR OUTPUT signal AE
AEREF	AE SENSOR REFERENCE signal AE
ATTH	AMBIENT TEMPERATURE THERMISTOR signal
BIASS	DEVELOPING DC BIAS VOLTAGE DETECTION signal
BPWM	DEVELOPING BIAS DRIVE command
BSHP	BLANKING SHUTTER HOME POSITION signal
BSSLD	BLANKING SHUTTER SOLENOID DRIVE command
C2PUCLD	CASSETTE2 PICK-UP CLUTCH DRIVE command
C2SZ-1	CASSETTE2 SIZE signal
C2SZ-2	CASSETTE2 SIZE signal
C2SZ-3	CASSETTE2 SIZE signal
C2SZ-4	CASSETTE2 SIZE signal
C2PD	CASSETTE2 PAPER DETECTION signal
C2VPD	CASSETTE2 VERTICAL PATH PAPER DETECTION signal
C3PD	CASSETTE3 PAPER DETECTION signal
C3PUCLD	CASSETTE3 PICK-UP CLUCTH DRIVE command
C3SZ-1	CASSETTE3 SIZE signal
C3SZ-2	CASSETTE3 SIZE signal
C3SZ-3	CASSETTE3 SIZE signal
C3SZ-4	CASSETTE3 SIZE signal
C3VPD	CASSETTE3 VERTICAL PATH PAPER DETECTION signal
CCD	CONTROL CARD DRIVE command
CCDT	CONTROL CARD DETECTION signal
CDC	COPY DENSITY CORRECTION signal
CHSLD	CHANGE SOLENOID DRIVE command
CMA	CASSETTE UNIT MOTOR PULSE command A
CMA*	CASSETTE UNIT MOTOR PULSE command A*
CMB	CASSETTE UNIT MOTOR PULSE command B
CMB*	CASSETTE UNIT MOTOR PULSE command B
CMD	CASSETTE UNIT MOTOR DRIVE command
CPD	CASSETTE PAPER DETECTION signal
CRDOP	CASSETTE RIGHT DOOR OPEN signal
CS	CASSETTE SIZE DETECTION command
CS2	CASSETTE2 SIZE DETECTION command
CS3	CASSETTE3 SIZE DETECTION command
CSZ-1	CASSETTE SIZE signal 1
CSZ-2	CASSETTE SIZE signal 2
CSZ-3	CASSETTE SIZE signal 3
CSZ-4	CASSETTE SIZE signal 4
DPD	DELIVERY PAPER DETECTION signal
EHTRL	EARTH RL DRIVE command RL2
FFA	FUSER FILM MOTOR PULSE command A
FFA*	FUSER FILM MOTOR PULSE command A*
FFB	FUSER FILM MOTOR PULSE command B
FFB*	FUSER FILM MOTOR PULSE command
FFCA	FUSER FILM MOTOR VOLTAGE command A
FFCB	FUSER FILM MOTOR VOLTAGE command B
FFD	FIXING FILM POSITION signal
FLHT OFF	FLUORESCENT LAMP HETER OFF command
FL ON	FLUORESCENT LAMP ON command
FLPRHT	FLUORESCENT LAMP PRE-HEAT command
FLS	FLUORESCENT LAMP INTENSITY signal
FLTH	FLUORESCENT LAMP THERMISTOR signal
FLTH ON	FLUORESCENT LAMP HETER ON command
FMD	FUSER FILM MOTOR DRIVE command
HEFD	HEAT EXHAUST FAN DRIVE command
HTNG	FUSER HEATER NG signal
HTRD	HEATER DRIVE command
JCTL	DISCHARGE BIAS DRIVE command
JLVCTL	DISCHARGE BIAS CHANGE command
LHP	LENS HOME POSITION signal
LID	LIGHT INTENSITY signal
LNSA	LENS MOTOR PULSE command A
LNSA*	LENS MOTOR PULSE command A*
LNSB	LENS MOTOR PULSE command B
LNSB*	LENS MOTOR PULSE command B*
LNSC-A	LENS MOTOR DRIVE command A
LNSC-B	LENS MOTOR DRIVE command B
MFPD	MULTIFEEDER PAPER DETECTION signal
MFPUCLD	MULTIFEEDER PICK-UP CLUTCH DRIVE command
MFPWD	MULTIFEEDER PAPER WIDTH DETECTION signal
MFSLD	MULTIFEEDER SOLENOID DRIVE command
MLOCK	MAIN MOTER LOCK signal
MMCLK	MAIN MOTOR CLOCK signal
MMD	MAIN MOTER DRIVE command
MPWM	MAIN PULSE command
PCLSLD	PRIMARY CORONA ROLLER CLEANING SOLENOID command
PDCPWM	PRIMARY CORONA DETECT PULSE command
PDCS	PRIMARY CORONA DETECT command
PEXP	PRE-EXPOSURE LAMP LIT command
PUCLD	PICK-UP CLUTCH DRIVE command
PWSW	POWER SWITCH command
RDOP	RIGHT DOOR OPEN signal
RGCLD	REGISTRATION CLUTCH DRIVE command
RPD	REGISTRATION PAPER DETECTION signal
SC-A	SCANNER MOTOR PULSE command A
SC-A*	SCANNER MOTOR PULSE command A*
SC-B	SCANNER MOTOR PULSE command B
SC-B*	SCANNER MOTOR PULSE command B*
SC-COMA	SCANNER MOTOR DRIVE command A
SC-COMB	SCANNER MOTOR DRIVE command B
SCHP	SCANNE HOME POSITION signal
SPD	SEPARATION PAPER DETECTION signal
SRSW	SERVICE MODE SWITCH signal
TCNTD	TOTAL COUNTER DRIVE command
TEP	TONER EMPTY signal
TFWON	TRNSFER BIAS ON/OFF command
TFWPWM	TRNSFER BIAS LOW VOLTAGE signal
TFWS	TRNSFER BIAS PULSE command
TH 1	FIXING MAIN THERMISTOR signal
TH 2	FIXING SUB THERMISTOR signal
TREVON	TRNSFER REVERSE ON command

COPYRIGHT © 1997 CANON INC. CANON NP6218 REV. 0 MAY 1997 PRINTED IN JAPAN (IMPRIME AU JAPON)

C. GENERAL CIRCUIT DIAGRAM

not available

COPYRIGHT © 1997 CANON INC.
CANON NP6218 REV. 0 MAY 1997 PRINTED IN JAPAN (IMPRIME AU JAPON)

COPYRIGHT © 1997 CANON INC. CANON NP6218 REV. 0 MAR. 1997 PRINTED IN JAPAN (IMPRIME AU JAPON)

D. SPECIAL TOOLS

See the table for the special tools used to service the machine in addition to the standard tools set.

No.	Tool name	Tool No.	Shape	Rank	Remarks
1	Door switch actuator	TKN-0093-000	Point of use 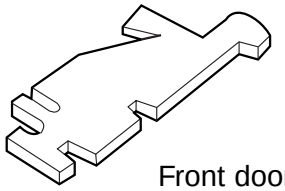 Front door	A	
2	Mirror positioning tool (comes in pairs; front, rear)	FY9-3009-040	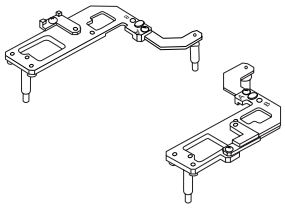	B	For adjusting the distance between No. 1 and No. 2 mirrors.
3	Pulley clip	FY9-3010-000	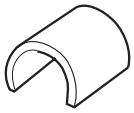	B	For fixing the scanning cable in place.

COPYRIGHT © 1997 CANON INC. CANON NP6218 REV. 0 MAY 1997 PRINTED IN JAPAN (IMPRIME AU JAPON)

E. SOLVENTS/OILS

No.	Name	Use	Composition	Description
1	Ethl alcohol (Ethanol) Isopropyl alcohol (Isopropanol)	Cleaning: copyboard glass, mirror, etc.	$C_2 H_5 OH$ $(CHZ_3)_2 CHOH$	• Flammable. • Use in a well ventilated area. • Avoid breathing concentrated vapor.
2	MEK	Removing toner or oil stains	$CH_3 \cdot CO \cdot C_2H_5$ Methylethyl ketone	• Flammable. • Use in a well-ventilated area and avoid breathing concentrated vapor. • Avoid contact with eyes or skin. • Do not use for cleaning the drum, plastic molded parts, or corona wires.
3	Heat-resis-tant grease	Lubricating the drive mechanisms; e.g., copyboard driving gear, fixing drive gear, fixing ass'y, etc.		Tool No.: CK-0427 (500g can) (Equivqlent grease can be used, but should be able to withstand 200°C for extended periods of time.)
4	Lubricating oil (low viscosity)	Lubrication points: Scanner rail, etc.	ISO VG 68 oil ESSO Febis K68 MOBIL Vactraoil No. 2 SHELL Tonna oil T68	Equivalent oil can be used. Tool No.: CK-0451 (100cc)
5	Lubricating oil (low viscosity)	Lubrication point: oneway clutch in pick-up control assembly	ISO VG 220 oil ESSO Febis K220 MOBIL Vactraoil No. 4	Equivalent oil can be used. Tool No.: CK-0524 (100cc).
6	Lubricating oil	Lubrication point: friction parts	Silicone oil	Tool No.: CK-0551 (20g)

COPYRIGHT © 1997 CANON INC.
CANON NP6218 REV. 0 MAY 1997 PRINTED IN JAPAN (IMPRIME AU JAPON)

Prepared by

OFFICE IMAGING PRODUCTS TECHNICAL SUPPORT DEPT. 1
OFFICE IMAGING PRODUCTS TECHNICAL SUPPORT DIV.

CANON INC.

Printed in Japan

REVISION 0 (MAY 1997) [31625]

5-1, Hakusan 7-chome, Toride-shi, Ibaraki 302 Japan

Canon

This publication is printed on
70% reprocessed paper.

PRINTED IN JAPAN (IMPRIMÉ AU JAPON) 0797S0.7-2