NP6320

PARTS CATALOG

REVISION 0

Canon

JAN. 2000

FY8-31EM-000

COPYRIGHT©2000 CANON INC.

PREFACE

This Parts Catalog contains listings of parts used in the Canon NP6320. Diagrams are provided with the listings to aid the service technician in identifying clearly, the item to be orderd.

Whenever ordering parts, consult this Parts Catalog for all of the information pertaining to each item. Be sure to include, in the Parts Request, the full item description, the item part number, and the quantity.

Canon Inc.

Office Imaging Products Technical Support Div.
5-1, Hakusan 7-chome,
Toride-city, Ibaraki 302-8501, Japan

COPYRIGHT © 2000 CANON INC.

Printed in Japan
Imprimé au Japon

Use of this manual should be strictly supervised to avoid disclosure of confidential information.

CONTENTS

A. ASSEMBLY LOCATION DIAGRAM

020. SORTER MOUNTING HARDWARE

100. EXTERNAL COVERS, PANELS, ETC.
101. MACHINE FRONT PLATE
102. INTERNAL COMPONENTS 1
103. INTERNAL COMPONENTS 2
104. MACHINE REAR PLATE
105. MACHINE BOTTOM PLATE
130. CONTROL PANEL ASSEMBLY
160. COPYBOARD COVER ASSEMBLY
190. EXHAUST FAN ASSEMBLY

210. LENS MOUNT ASSEMBLY
220. SCANNER DRIVE ASSEMEBLY
250. DRUM DRIVE ASSEMBLY
252. MAIN MOTOR ASSEMBLY
255. MAIN DRIVE ASSEMBLY

300. CASSETTE
315. CASSETTE TRAY ASSEMBLY
320. PAPER PICK-UP SHAFT ASSEMBLY
325. MULTI FEED TRAY ASSEMBLY
350. FEEDER ASSEMBLY
351. TRANSFER GUIDE ASSEMBLY

400. MIRROR ASSEMBLY 1
401. MIRROR ASSEMBLY 2
450. BLANK EXPOSURE LAMP ASSEMBLY

550. PRIMARY CORONA ASSEMBLY
560. TRANSFER CORONA ASSEMBLY

640. DEVELOPING ASSEMBLY

810. FIXING ASSEMBLY

930. DC CONTROLLER PCB ASSEMBLY

B. LIST OF CONNECTORS

-PAPER DECK PEDESTAL-J1-

RA. ASSEMBLY LOCATION DIAGRAM

R10. EXTERNAL COVERS, PANELS, ETC.
R11. INTERNAL COMPONENTS 1
R12. INTERNAL COMPONENTS 2
R13. INTERNAL COMPONENTS 3

R20. LIFTER ASSEMBLY

RB. LIST OF CONNECTORS

C. LIST OF STANDARD FASTENERS

D1. NUMERICAL INDEX
D2. NUMERICAL INDEX (PAPER DECK PEDESTAL-J1)

COPYRIGHT©2000 CANON INC.
CANON NP6320 REV.0 JAN. 2000 PRINTED IN JAPAN [IMPRIME AU JAPON]

NP6320

F13 - 1353	240V	QEP 00001-
F13 - 1393	220V	UEP 00001-

COPYRIGHT©2000 CANON INC.
CANON NP6320 REV.0 JAN. 2000 PRINTED IN JAPAN [IMPRIME AU JAPON]

CONTENTS

A. ASSEMBLY LOCATION DIAGRAM

020. SORTER MOUNTING HARDWARE

100. EXTERNAL COVERS, PANELS, ETC.
101. MACHINE FRONT PLATE
102. INTERNAL COMPONENTS 1
103. INTERNAL COMPONENTS 2
104. MACHINE REAR PLATE
105. MACHINE BOTTOM PLATE
130. CONTROL PANEL ASSEMBLY
160. COPYBOARD COVER ASSEMBLY
190. EXHAUST FAN ASSEMBLY

210. LENS MOUNT ASSEMBLY
220. SCANNER DRIVE ASSEMEBLY
250. DRUM DRIVE ASSEMBLY
252. MAIN MOTOR ASSEMBLY
255. MAIN DRIVE ASSEMBLY

300. CASSETTE
315. CASSETTE TRAY ASSEMBLY
320. PAPER PICK-UP SHAFT ASSEMBLY
325. MULTI FEED TRAY ASSEMBLY
350. FEEDER ASSEMBLY
351. TRANSFER GUIDE ASSEMBLY

400. MIRROR ASSEMBLY 1
401. MIRROR ASSEMBLY 2
450. BLANK EXPOSURE LAMP ASSEMBLY

550. PRIMARY CORONA ASSEMBLY
560. TRANSFER CORONA ASSEMBLY

640. DEVELOPING ASSEMBLY

810. FIXING ASSEMBLY

930. DC CONTROLLER PCB ASSEMBLY

B. LIST OF CONNECTORS

D1. NUMERICAL INDEX

COPYRIGHT©2000 CANON INC.
CANON NP6320 REV.0 JAN. 2000 PRINTED IN JAPAN [IMPRIME AU JAPON]

FIGURE A

ASSEMBLY LOCATION DIAGRAM (1/2)

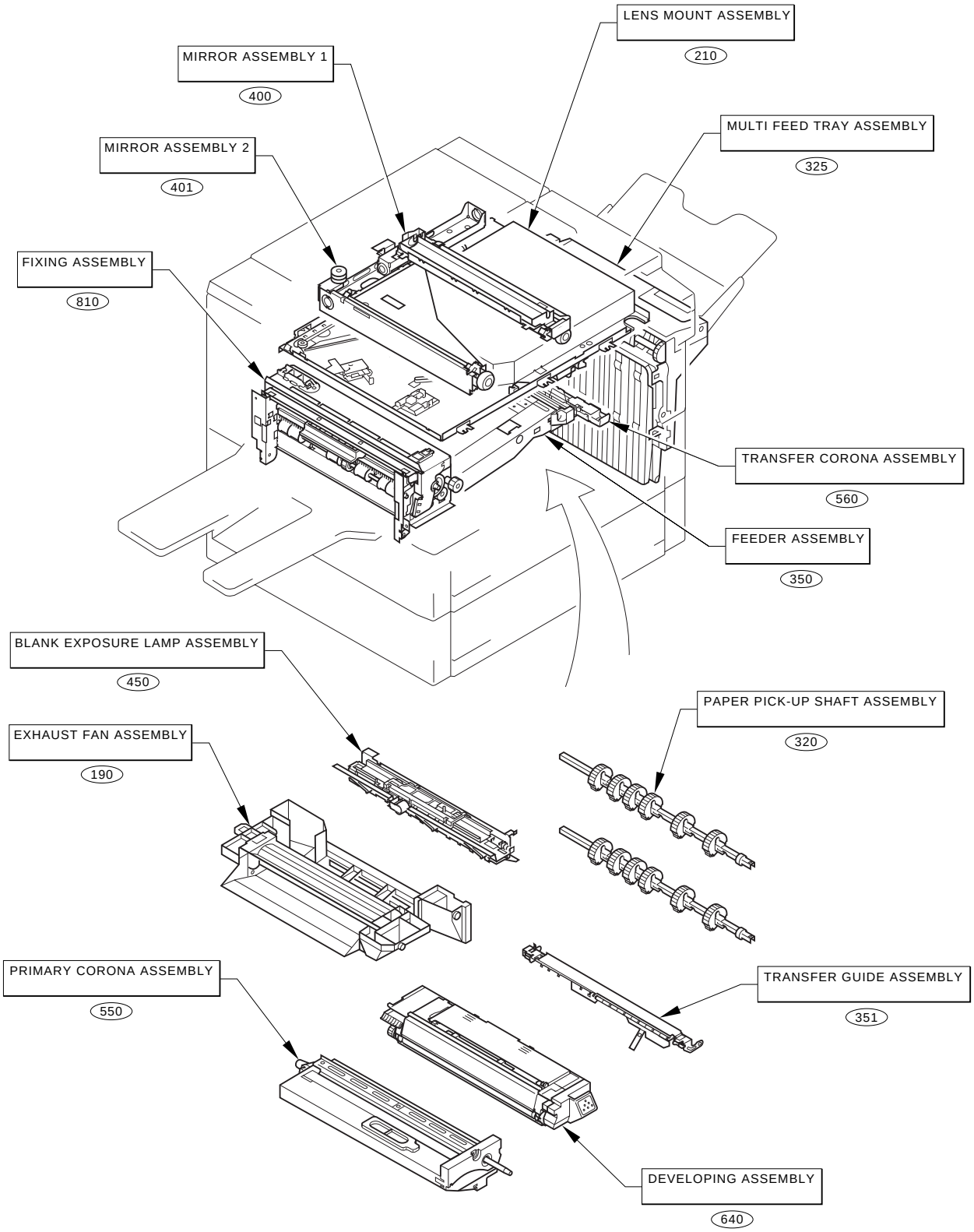

COPYRIGHT©2000 CANON INC.
CANON NP6320 REV.0 JAN. 2000 PRINTED IN JAPAN [IMPRIME AU JAPON]

FIGURE A

ASSEMBLY LOCATION DIAGRAM (2/2)

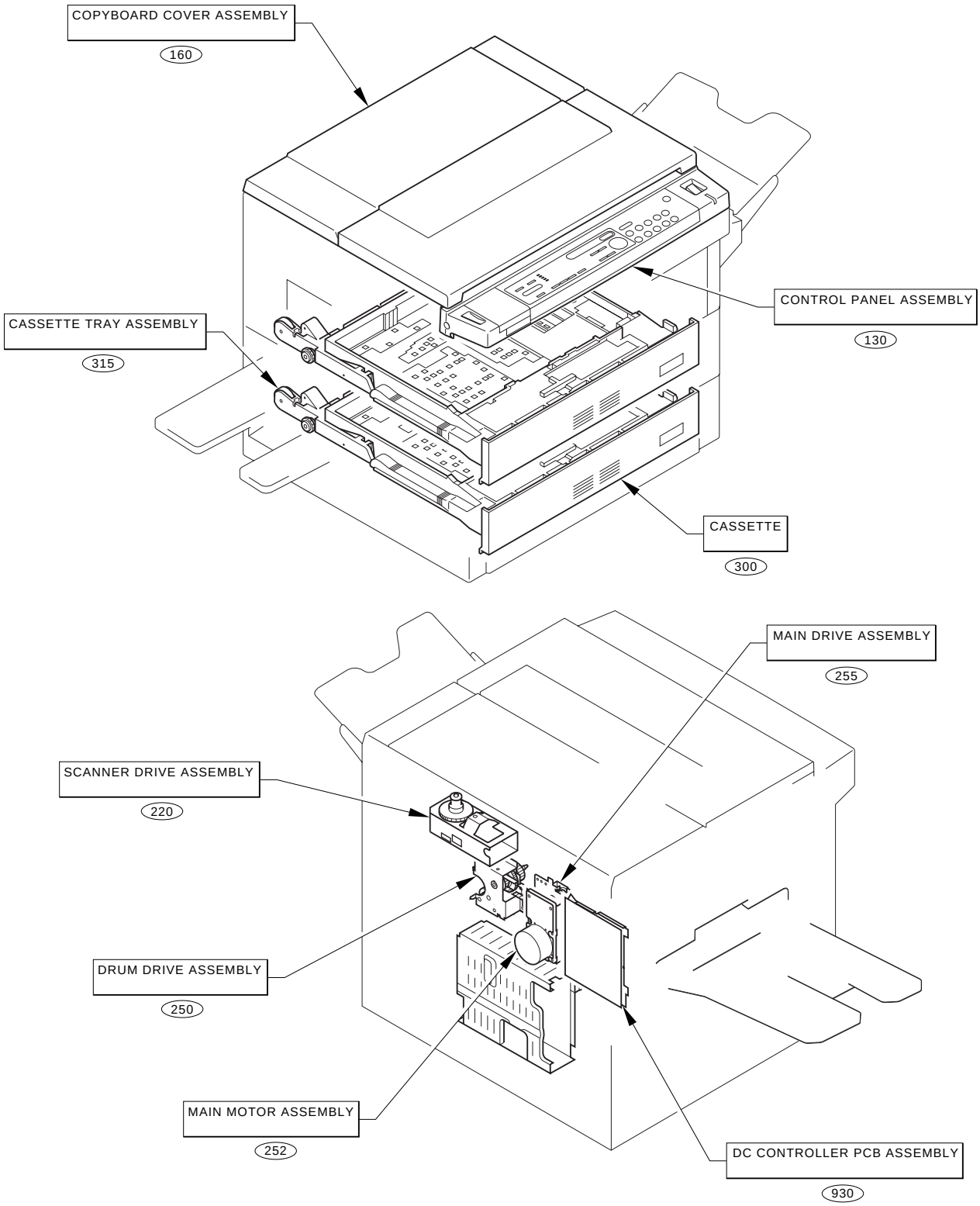

COPYRIGHT©2000 CANON INC.

FIGURE 020

SORTER MOUNTING HARDWARE

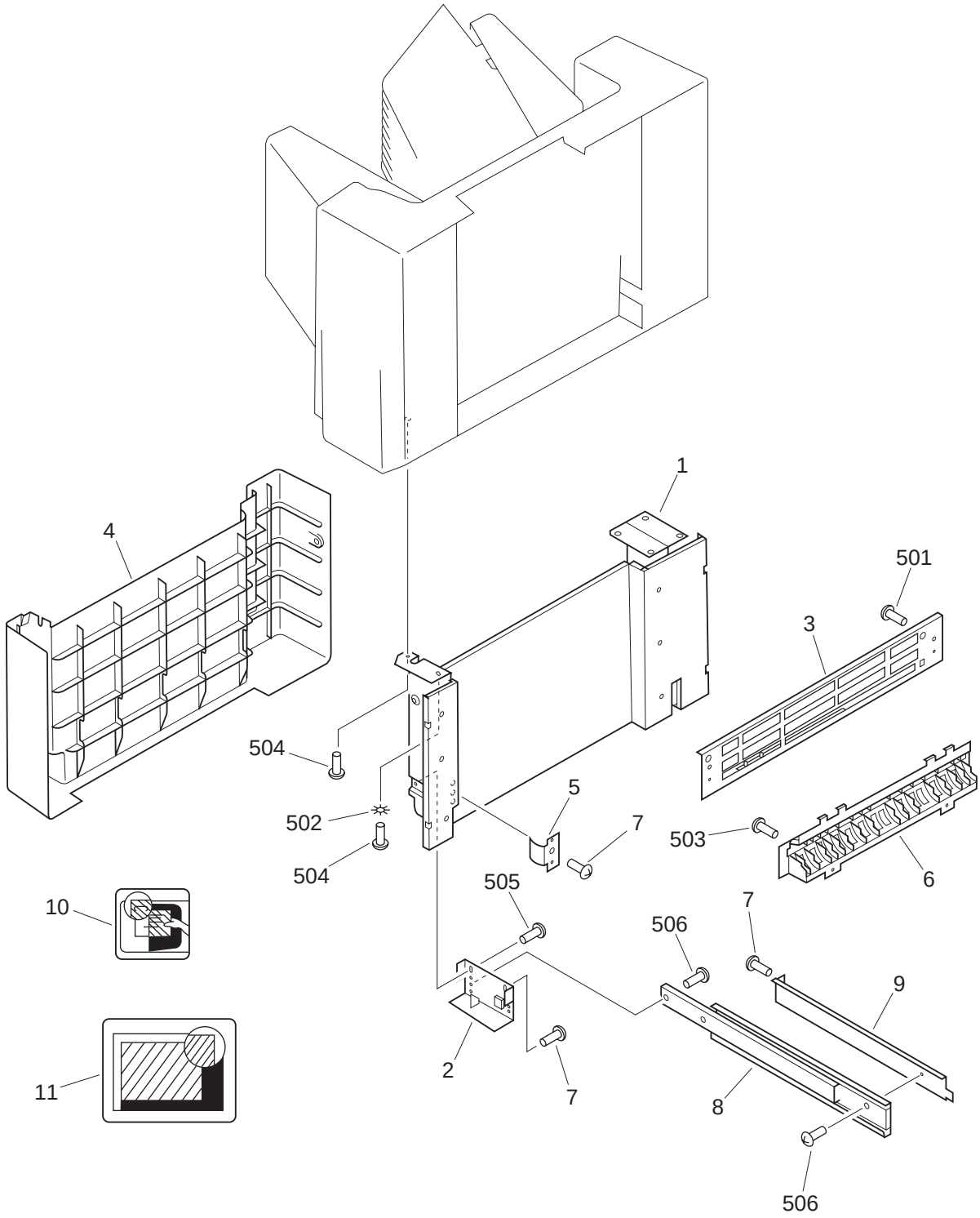

COPYRIGHT©2000 CANON INC.
CANON NP6320 REV.0 JAN. 2000 PRINTED IN JAPAN [IMPRIME AU JAPON]

FIGURE & KEY NO.	PART NUMBER	RANK	QTY	DESCRIPTION	SERIAL NUMBER / REMARKS
020 -	NPN		RF	SORTER MOUNTING HARDWARE	
1	FC1-1759-020		1	MOUNT, SORTER	
2	FC1-1760-000		2	PLATE, POSITIONING	
3	FC1-1762-030		1	PLATE, LATCH	
4	FC1-1763-000		1	COVER, FOOT	
5	FC1-1726-000		1	SPRING, LEAF, GROUNDING	
6	FA6-6843-000		1	GUIDE, PAPER	
7	XA9-0265-000		6	SCREW,W/WASHER,TRUSS HEAD	
8	XZ9-0324-000		2	RAIL, SORTER	
9	FC1-1724-000		2	MOUNT, RAIL	
10	FS8-8545-000		1	LABEL (FOR RF)	FOR RF
11	FS8-8546-000		1	LABEL (FOR COPIER)	FOR COPIER
501	XB1-2401-206		2	SCREW,MACH.,TRUSS HEAD,M4X12	
502	XD1-4200-402		1	WASHER,TOOTHED LOCK	
503	XB3-2301-006		3	SCREW,TAPPING,TRUSS HEAD,M3X10	
504	XB1-2402-009		4	SCREW,MACH.,TRUSS HEAD,M4X20	
505	XB1-2400-606		11	SCREW,MACH.,TRUSS HEAD,M4X6	
506	XB1-2400-609		4	SCREW,MACH.,TRUSS HEAD,M4X6	

COPYRIGHTⓒ2000 CANON INC.

FIGURE 100

EXTERNAL COVERS, PANELS, ETC.

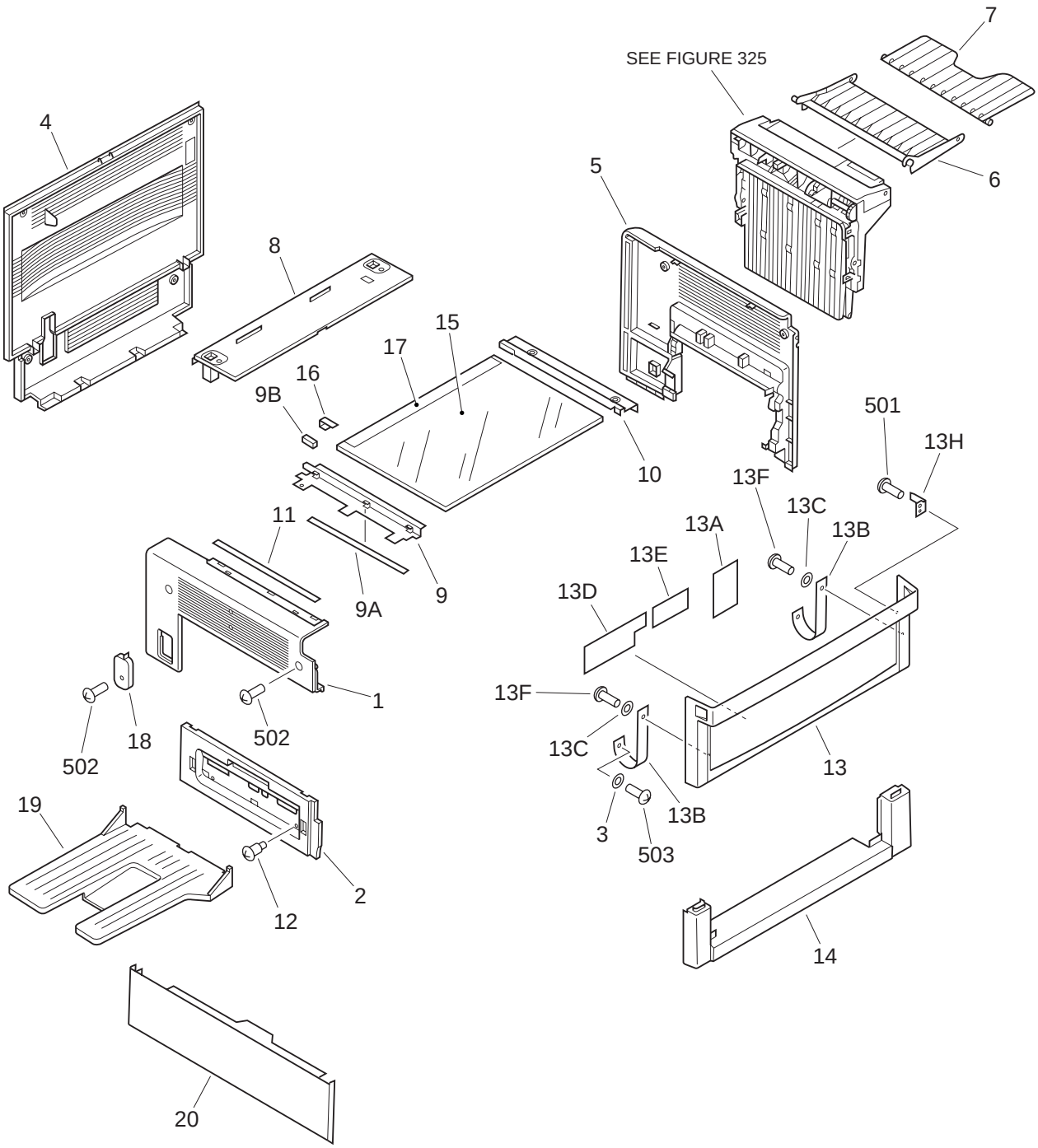

COPYRIGHT©2000 CANON INC.
CANON NP6320 REV.0 JAN. 2000 PRINTED IN JAPAN [IMPRIME AU JAPON]

FIGURE & KEY NO.	PART NUMBER	RANK	QTY	DESCRIPTION	SERIAL NUMBER / REMARKS
100 -	NPN		RF	EXTERNAL COVERS, PANELS, ETC.	
1	FC1-5361-00P		1	PANEL, LEFT	
2	FA0-0303-00P		1	PANEL, DELIVERY	
3	FA2-7162-000		2	PLAIN WASHERS	
4	FA0-0307-01P		1	PANEL, REAR	
5	FA0-0305-01P		1	PANEL, RIGHT	
6	FF0-0066-01P		1	TRAY, MANUAL FEED	
7	FA0-0657-00P		1	TRAY, MANUAL FEED	
8	FA0-0306-00P		1	PANEL, UPPER, REAR	
9	FF2-0012-030		1	PLATE, WHITE	
9A	FA9-1499-000		1	SPACER	
9B	FA5-2164-000		3	SEAL, SPONGE 1	
10	FA6-5625-000		1	RETAINER, COPYBOARD GLASS	
11	FS8-8185-000		1	PLATE, WIDTH INDEX	
12	FS1-9003-000		2	SCREW,STEPPED,M4	
13	FG0-1254-00P		1	DOOR, FRONT	
13A	FS9-0168-00P		1	LABEL, JAM BY-PASS	
13B	FA5-2121-000		2	STRAP, FRONT DOOR	
13C	FA2-7162-000		2	PLAIN WASHERS	
13D	FC2-9948-00P		1	LABEL, INSTRUCTION	
13E	FC2-9947-00P		1	LABEL, JAM CLEARING	
13F	XB4-7400-809		2	SCREW,TAPPING,TRUSS HEAD,M4X8	
13G	FA0-0675-00P		1	PLATE, MAGNET CATCH	
13H	FA0-0671-00P		1	ACTUATOR, DOOR SWITCH	
14	FA0-0308-00P		1	PANEL, LOWER, CASSETTE	
15	FN1-4227-000		1	GLASS, COPYBOARD	
16	FA5-2157-000		1	SPRING, LEAF	
17	FS8-8189-000		1	PLATE, SIZE INDEX, LENGTH	
18	FC1-5404-00P		1	COVER, VR	
19	FA0-0652-00P		1	TRAY, COPY	

COPYRIGHTⓒ2000 CANON INC.

FIGURE & KEY NO.	PART NUMBER	RANK	QTY	DESCRIPTION	SERIAL NUMBER / REMARKS
100 - 20	FA0-0304-00P		1	PANEL, LOWER, LEFT	
501	XB3-2400-809		AR	SCREW,TAPPING,TRUSS HEAD,M4X8	
502	XB4-6200-507		AR	SCREW,TAPPING,PAN HEAD,M2X5	
503	XB4-7400-809		AR	SCREW,TAPPING,TRUSS HEAD,M4X8	

COPYRIGHTⓒ2000 CANON INC.

FIGURE 101

MACHINE FRONT PLATE

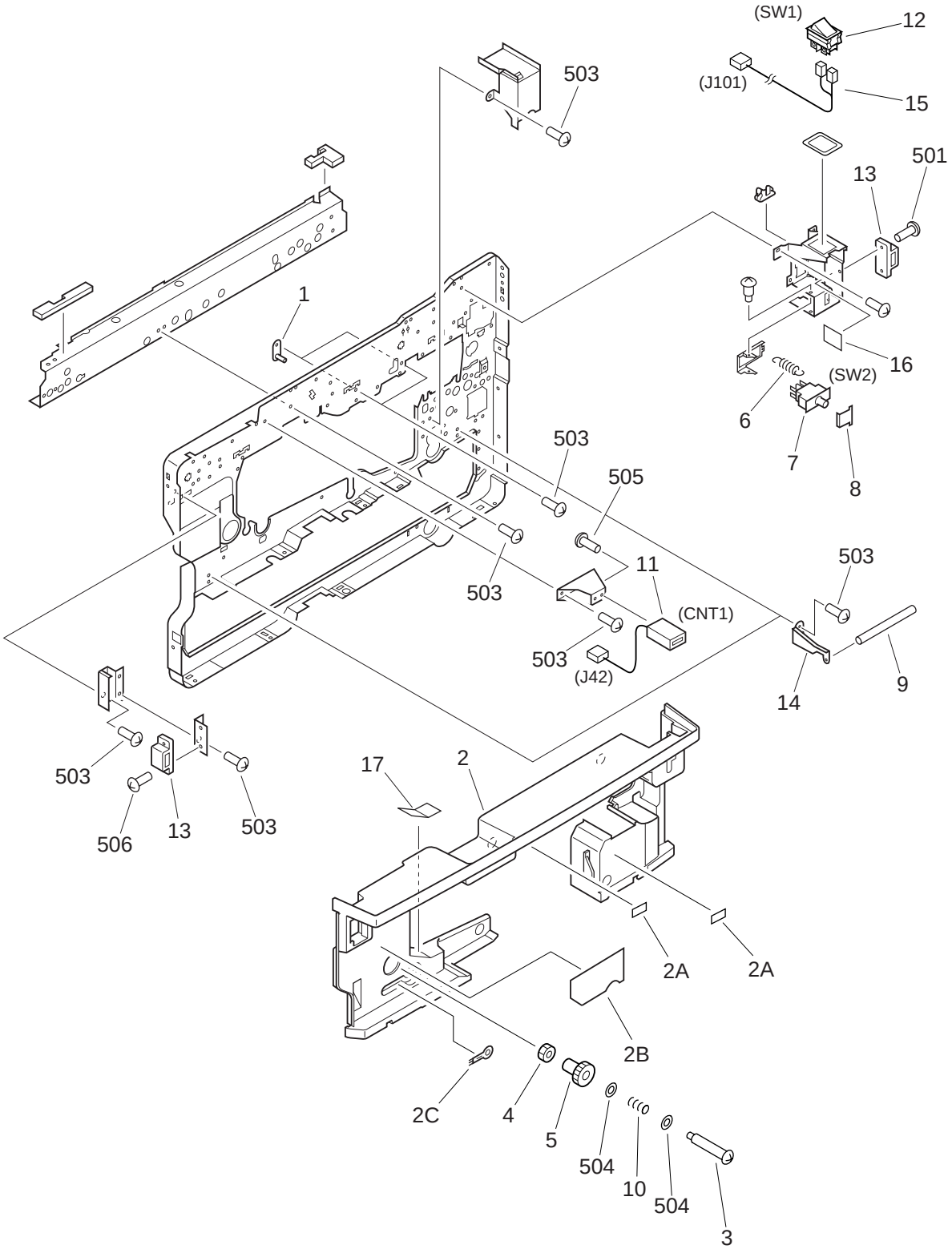

COPYRIGHT©2000 CANON INC.
CANON NP6320 REV.0 JAN. 2000 PRINTED IN JAPAN [IMPRIME AU JAPON]

FIGURE & KEY NO.	PART NUMBER	RANK	QTY	DESCRIPTION	SERIAL NUMBER / REMARKS
101 -	NPN		RF	MACHINE FRONT PLATE	
1	FF1-9403-040		3	PIN, MOUNTING	
2	FG0-1235-00P		1	COVER, INNER	
2A	FC2-9950-00P		2	LABEL, "WARNING, HIGH VOLTAGE"	
2B	FC2-9946-00P		1	LABEL, JAM CLEARING	
2C	FB1-0733-000		1	BRUSH, CLEANING	
3	FS1-9255-000		1	SCREW,STEPPED,M4	
4	FA9-1780-000		1	NUT	
5	FA0-0649-00P		1	KNOB	
6	FS4-2037-00P		1	SPRING, TENSION	
7	WC2-0137-000		1	SWITCH, PUSHBUTTON	SW2
8	FA5-2048-020		1	PLATE, MICROSWITCH	
9	FA9-1785-000		2	PIN HINGE, FRONT PANEL	
10	FS2-2784-000		1	SPRING, COMPRESSION	
11	WP1-0019-000		1	COUNTER	CNT1 J42
12	FH7-6303-00P		1	SWITCH, ON/OFF	SW1
13	XZ9-0251-000		2	CATCH, MAGNET	
14	FA0-0285-00P		2	HINGE, RIGHT	
15	FH0-0177-00P		1	MICROSWITCH CABLE 2	J101
16	FS9-0173-00P		1	LABEL, ON/OFF	
17	FS9-0172-00P		1	LABEL, CAUTION	
501	XB6-7300-809		2	SCREW,TP,M3X8	
502	XD2-1100-502		1	RING,E	
503	XB1-2400-609		AR	SCREW,MACH.,TRUSS HEAD,M4X6	
504	XD1-1106-723		2	SHIM	
505	XB1-2300-609		1	SCREW,MACH.,TRUSS HEAD,M3X6	
506	XB6-7300-609		2	SCREW,TP,M3X6	

COPYRIGHTⓒ2000 CANON INC.

FIGURE 102 INTERNAL COMPONENTS 1

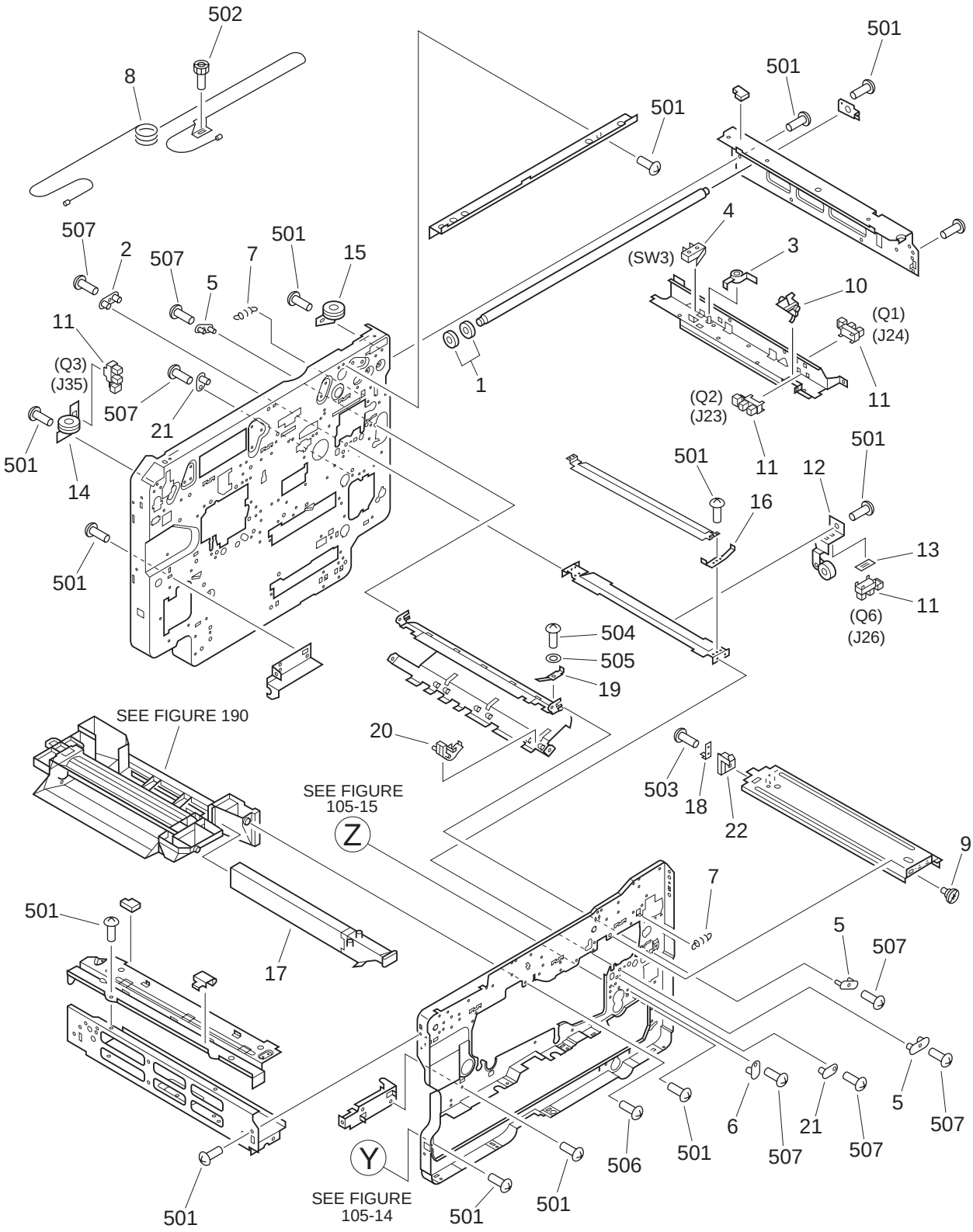

COPYRIGHT©2000 CANON INC.
CANON NP6320 REV.0 JAN. 2000 PRINTED IN JAPAN [IMPRIME AU JAPON]

FIGURE & KEY NO.	PART NUMBER	RANK	QTY	DESCRIPTION	SERIAL NUMBER / REMARKS
102 -	NPN		RF	INTERNAL COMPONENTS 1	
1	FA3-8493-000		2	RING, FELT	
2	FA5-2163-000		1	PIN, GUIDE, 2	
3	FC1-0720-00P		1	LEVER, MANUAL GUIDE SENSING	
4	WC4-0081-000		1	MICROSWITCH	SW3
5	FA5-2126-000		3	PIN, MOUNTING	
6	FA1-9546-000		1	PIN, POSITIONING	
7	FS2-2768-000		2	SPRING, TENSION	
8	FF0-0041-00P		1	CABLE, SCANNER DRIVE	
9	FS1-9169-000		2	SCREW,STEPPED,M3	
10	FC1-0717-00P		1	LEVER, SENSOR	
11	FH0-0055-00P		4	PHOTO-INTERRUPTER	Q1,2,3,6 J24,23,35,26
12	FF0-0051-00P		1	PAPER SENSOR UNIT	
13	FH0-0058-00P		1	SHEET	
14	FF2-5596-00P		1	PULLEY	
15	FF2-6704-00P		1	PULLEY UNIT	
16	FC1-3564-00P		1	SPRING, LEAF	
17	FF2-5595-00P		1	FILTER, OZONE	
18	FA5-1802-000		1	BIAS, SOCKET, FASTON	
19	FC1-0988-00P		1	SPRING, LEAF	
20	FA0-0155-00P		3	PAPER GUIDE	
21	FA4-1149-000		3	PIN, PLATE	
22	FF1-9412-000		1	HOLDER, ELECTRODE	
501	XB1-2400-609		AR	SCREW,MACH.,TRUSS HEAD,M4X6	
502	XB7-1040-069		1	SCREW,ALLEN HEAD,M4X6	
503	XB3-2300-809		1	SCREW,TAPPING,TRUSS HEAD,M3X8	
504	XB1-2300-409		1	SCREW,MACH.,TRUSS HEAD,M3X4	
505	XD1-2100-305		1	SHIM	
506	XB3-2400-809		AR	SCREW,TAPPING,TRUSS HEAD,M4X8	
507	XB6-7300-609		AR	SCREW,TP,M3X6	

COPYRIGHTⓒ2000 CANON INC.

FIGURE 103

INTERNAL COMPONENTS 2

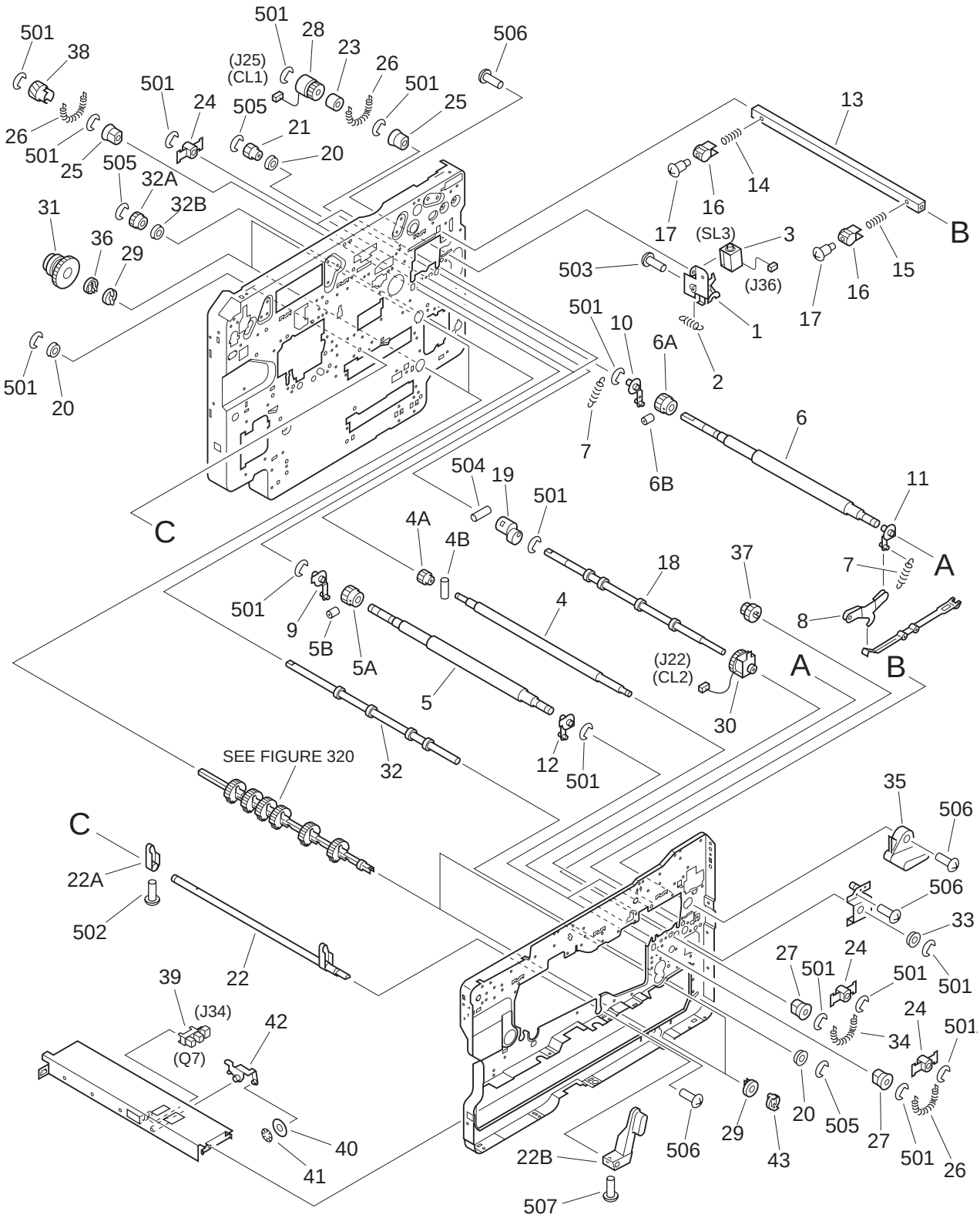

COPYRIGHT©2000 CANON INC.
CANON NP6320 REV.0 JAN. 2000 PRINTED IN JAPAN [IMPRIME AU JAPON]

FIGURE & KEY NO.	PART NUMBER	RANK	QTY	DESCRIPTION	SERIAL NUMBER / REMARKS
103 -	NPN		RF	INTERNAL COMPONENTS 2	
1	FF2-7418-00P		1	LEVER UNIT	
2	FC1-5364-00P		1	SPRING, TENSION	
3	FH0-0096-00P		1	SOLENOID	SL3 J36
4	FG0-1069-00P		2	ROLLER, PAPER FEED	
4A	FS2-0122-000		1	GEAR, 26T	
4B	XD3-1160-122		1	PIN,SPRING	
5	FG0-0243-00P		1	ROLLER, REGISTRATION LOWER	
5A	96-0093-000		1	GEAR, 32T	
5B	XD3-1160-142		1	PIN,SPRING	
6	FG0-0242-00P		1	ROLLER, REGISTRATION, UPPER	
6A	96-0093-000		1	GEAR, 32T	
6B	XD3-1160-142		1	PIN,SPRING	
7	FC1-5402-00P		2	SPRING, TENSION	
8	FC1-0993-00P		1	LINK	
9	FC1-0779-00P		1	CAM	
10	FC1-0681-00P		1	CAM, REAR	
11	FC1-0680-00P		1	CAM, FRONT	
12	FC1-0679-00P		1	CAM	
13	FC1-0713-00P		1	SHAFT	
14	FS4-2039-00P		1	SPRING, COMPRESSION	
15	FS4-2660-00P		1	SPRING, COMPRESSION	
16	FC1-0712-00P		2	CAM	
17	FS2-9374-00P		2	SCREW, STEPPED, M4	
18	FA0-0253-00P		1	ROLLER, PAPER FEED	
19	FF2-5581-00P		1	CLUTCH, SPRING	
20	FS1-1462-000		3	BUSHING	
21	FS4-0281-00P		1	GEAR, 32T/16T	
22	FG0-1208-00P		1	LEVER, RELEASE	
22A	FA5-1912-000		2	CAM, FEEDER ASSEMBLY RELEASE	

COPYRIGHTⓒ2000 CANON INC.

FIGURE & KEY NO.	PART NUMBER	RANK	QTY	DESCRIPTION	SERIAL NUMBER / REMARKS
103 - 22B	FA0-0650-00P		1	LEVER, RELEASE	
23	FA5-2090-000		1	SPACER, CLUTCH	
24	FS1-1595-000		4	BUSHING	
25	FS1-1402-000		2	BUSHING	
26	FS2-2783-000		3	SPRING, TENSION	
27	FA1-0056-000		2	BUSHING	
28	FH7-5272-000		1	CLUTCH, ELECTROMAGNETIC	CL1, J25
29	FS1-1411-000		4	BUSHING	
30	FH7-5353-010		1	CLUTCH, EM	CL2, J22
31	FA0-0287-00P		2	CLUTCH, MECHANICAL	
32	FA0-0255-00P		1	ROLLER, DELIVERY	
32A	FS2-0825-000		1	GEAR, 23T	
32B	FS1-1462-000		1	BUSHING	
33	FC1-0739-00P		1	BUSHING	
34	FA0-0085-00P		1	SPRING, TENSION	
35	FC2-9926-00P		1	HANDLE, DEV.	
36	FS1-1431-000		4	BUSHING	
37	FS4-0030-00P		1	GEAR, 20T/26T	
38	FS4-0285-00P		1	GEAR, 32T	
39	FH0-0055-00P		1	PHOTO-INTERRUPTER	Q7 J34
40	FA5-1848-000		1	DISK, PAPER DETECTION	
41	XA9-0135-000		1	NUT, PUSH	
42	FA0-0286-00P		1	LEVER, SENSOR	
501	XD2-1100-642		AR	RING,E	
502	XB6-7400-809		2	SCREW,TP,M4X8	
503	XB1-2300-309		2	SCREW,MACH.,TRUSS HEAD,M3X3	
504	XD3-2200-141		1	PIN,DOWEL	
505	XD2-1100-502		4	RING,E	
506	XB1-2400-609		AR	SCREW,MACH.,TRUSS HEAD,M4X6	
507	XB1-2400-806		1	SCREW,MACH.,TRUSS HEAD,M4X8	

COPYRIGHTⓒ2000 CANON INC.

FIGURE 104

MACHINE REAR PLATE (1/2)

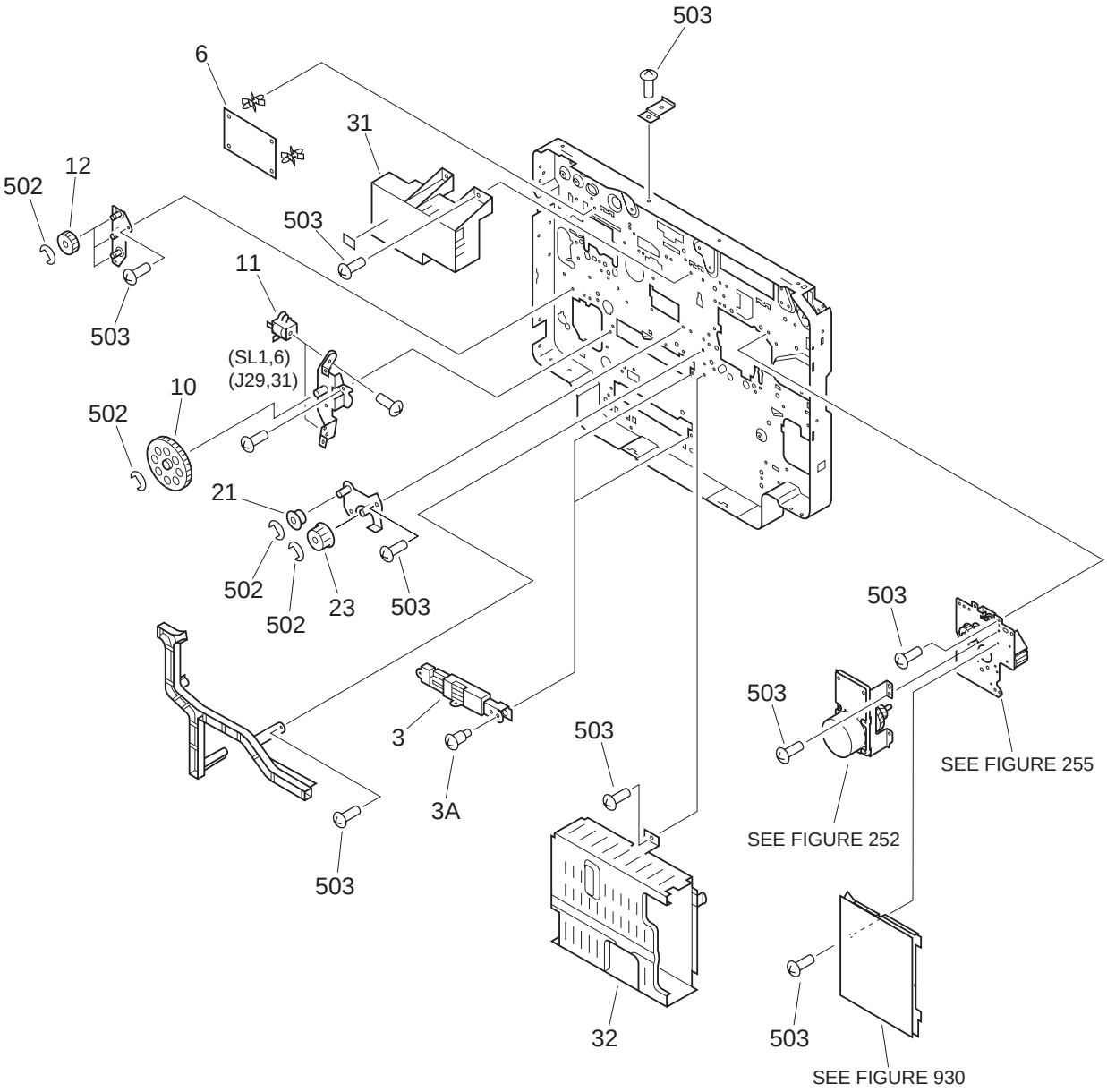

COPYRIGHTⓒ2000 CANON INC.
CANON NP6320 REV.0 JAN. 2000 PRINTED IN JAPAN [IMPRIME AU JAPON]

FIGURE 104

MACHINE REAR PLATE (2/2)

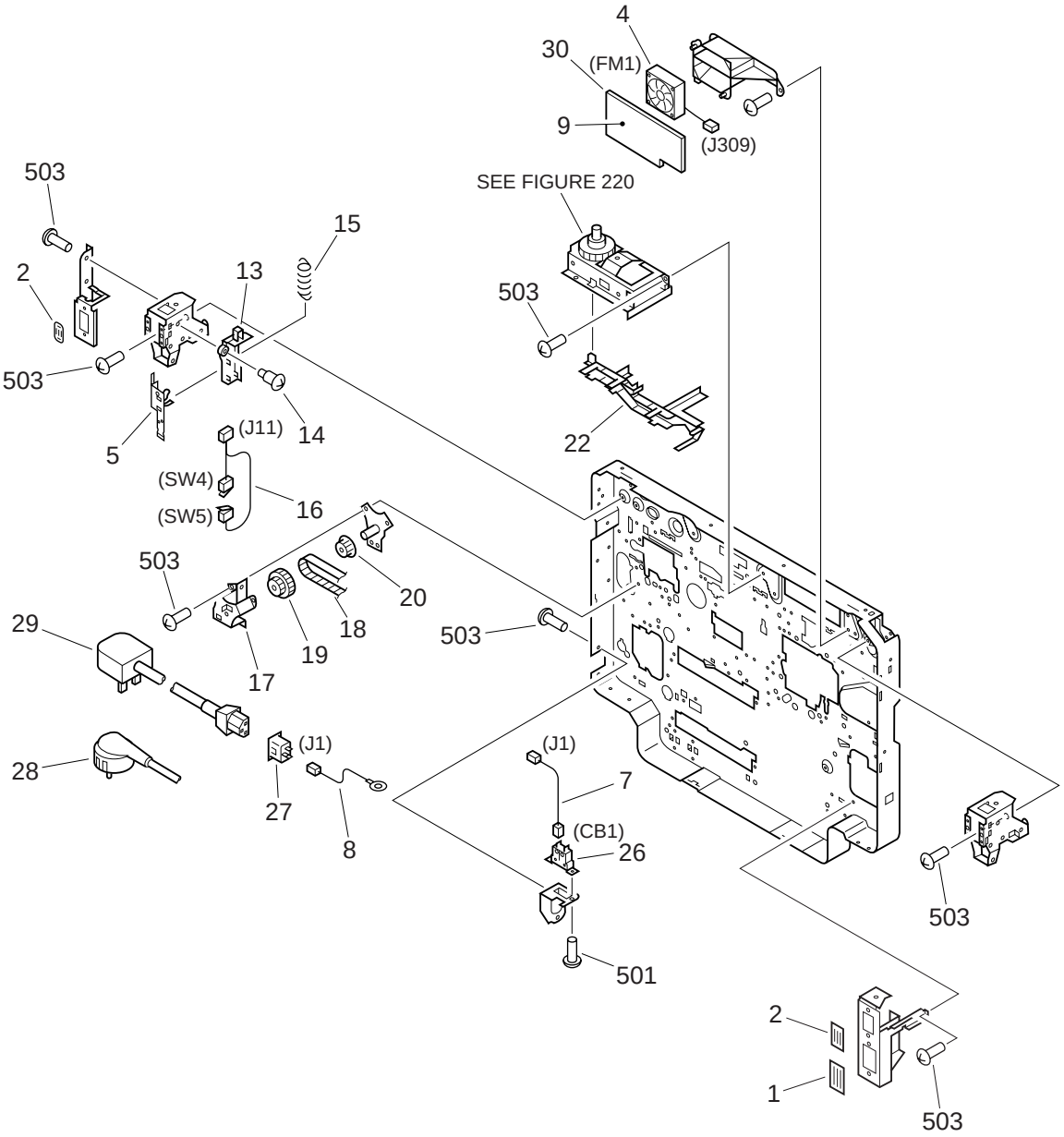

FIGURE & KEY NO.	PART NUMBER	RANK	QTY	DESCRIPTION	SERIAL NUMBER / REMARKS
104 -	NPN		RF	MACHINE REAR PLATE	
1	FA0-0310-00P		1	COVER, CONNECTOR, 1	
2	FA0-0311-00P		2	COVER, CONNECTOR, 2	
3	FF2-6703-00P		2	PAPER SIZE SENSOR UNIT	CST1,2
3A	FS2-9373-00P		2	SCREW	
4	FH0-0093-00P		1	FAN	FM1, J309
5	FA6-5521-020		1	PLATE, SWITCH	
6	FG3-0345-00P		1	LAMP REGULATOR	
7	FH0-0140-00P		1	INLET BREAK HARNESS	J1
8	FH0-0187-00P		1	WIRE, GROUNDING	
9	FA0-0339-00P		1	FILTER, DUST-PROOF	
10	FS4-0284-01P		1	GEAR, 72T	
11	FH0-0136-00P		2	SOLENOID	SL1,6 J29,31
12	FS4-0282-01P		3	GEAR, 27T	
13	FF0-0094-00P		1	LEVER, SENSING	
14	FS1-9004-000		1	SCREW,STEPPED,M4	
15	FS3-2794-000		1	SPRING, TENSION	
16	FF2-3901-00P		1	CABLE, MICROSWITCH	SW4,5, J11
17	FA0-0301-00P		1	COVER, GEAR	
18	FA0-0263-00P		1	BELT	
19	FS4-0286-00P		1	GEAR, 40T/60T	
20	FS2-3710-00P		1	PULLEY, 30T	
21	FS2-3709-00P		1	PULLEY	
22	FA0-0298-00P		1	COVER	
23	FS2-3710-00P		1	PULLEY, 30T	
26	WD3-0125-000		1	BREAKER, CIRCUIT	CB1
27	FH0-0137-00P		1	SOCKET, 250VAC	220V J1
28	FH0-0138-00P		1	POWER, CORD, 230V	220V P1
29	FH0-0139-00P		1	POWER, CORD, 230V	240V P1
30	FG3-0184-00P		1	CASE, DUST-PROOF FILTER	

COPYRIGHTⓒ2000 CANON INC.

FIGURE & KEY NO.	PART NUMBER	RANK	QTY	DESCRIPTION	SERIAL NUMBER / REMARKS
104 - 31	FG0-1240-00P		1	HV TRANSFORMER PCB ASSEMBLY	
32	FG0-1241-00P		1	DC POWER SUPPLY PCB ASSEMBLY	
33	FH7-5142-000		1	SOLENOID, DC24V	SL5, J310
501	XB1-2300-609		AR	SCREW,MACH.,TRUSS HEAD,M3X6	
502	XD2-1100-642		6	RING,E	
503	XB1-2400-609		AR	SCREW,MACH.,TRUSS HEAD,M4X6	
504	XB5-6400-609		2	SCREW,CT,M4X6	

COPYRIGHTⓒ2000 CANON INC.

FIGURE 105

MACHINE BOTTOM PLATE (1/2)

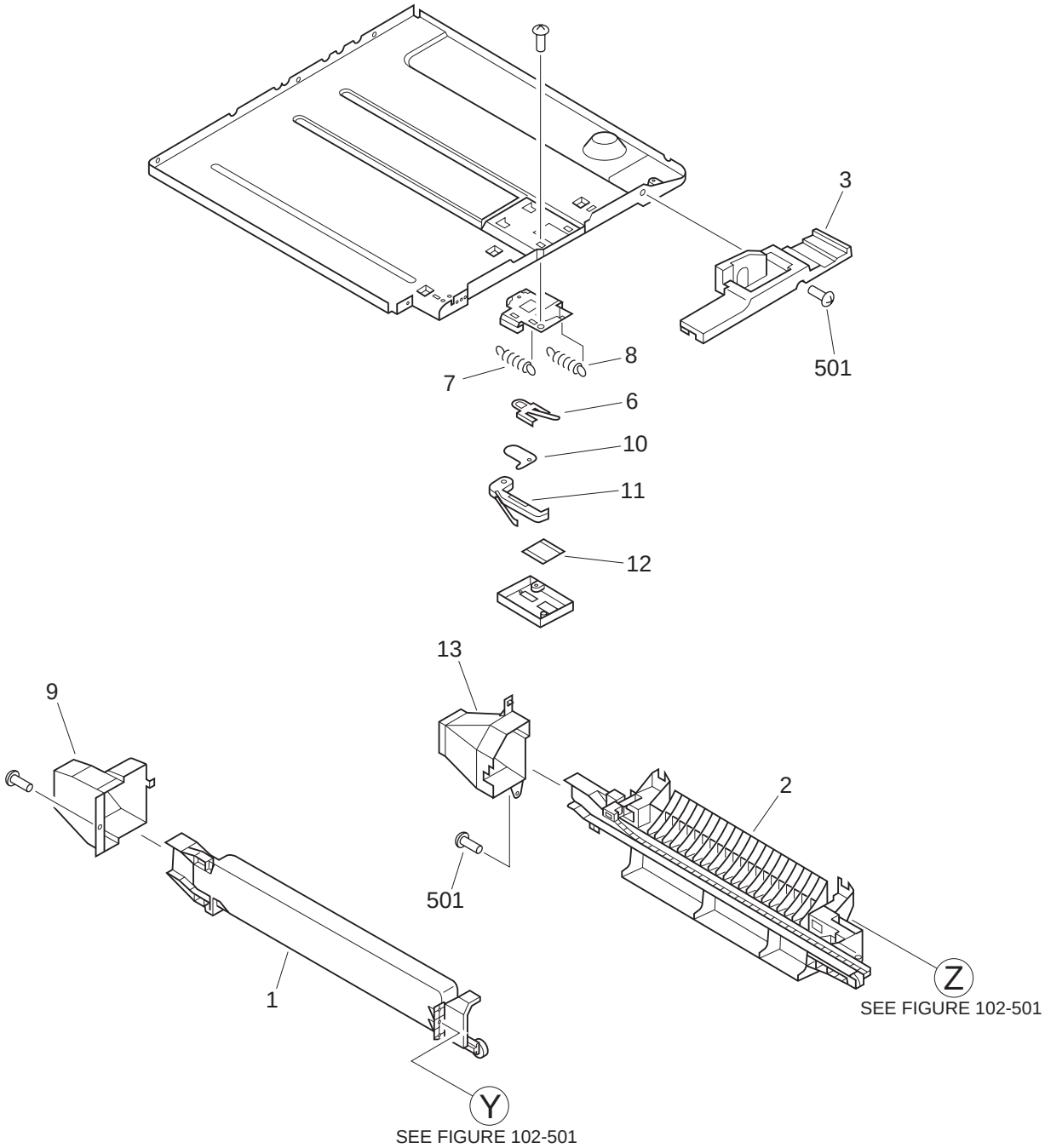

COPYRIGHT©2000 CANON INC.
CANON NP6320 REV.0 JAN. 2000 PRINTED IN JAPAN [IMPRIME AU JAPON]

FIGURE 105

MACHINE BOTTOM PLATE (2/2)

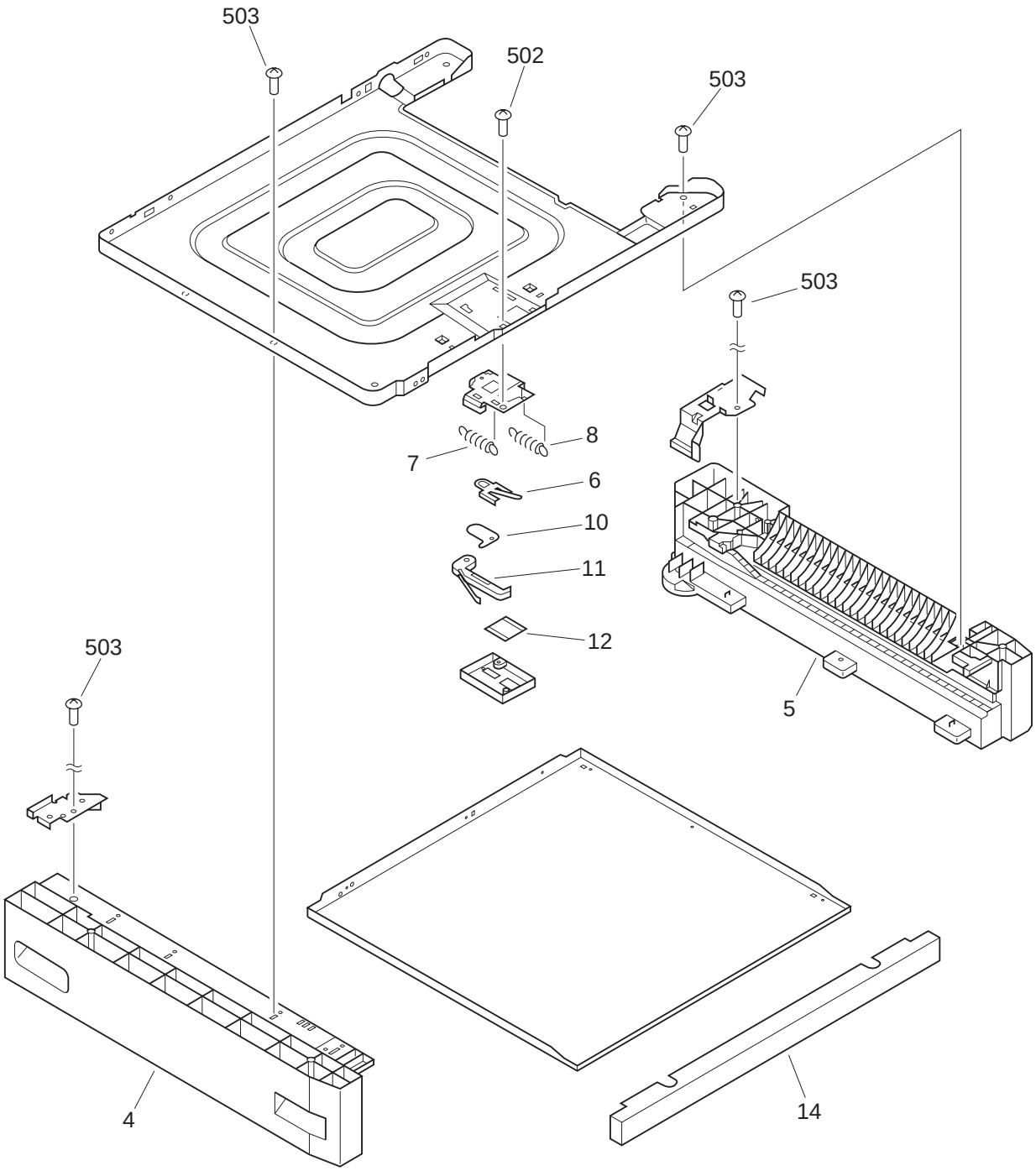

COPYRIGHT©2000 CANON INC.

FIGURE & KEY NO.	PART NUMBER	RANK	QTY	DESCRIPTION	SERIAL NUMBER / REMARKS
105 -	NPN		RF	MACHINE BOTTOM PLATE	
1	FF0-0083-01P		1	GUIDE, CASSETTE, LEFT	
2	FF0-0082-00P		1	GUIDE, CASSETTE, RIGHT	
3	FC1-1015-00P		1	COVER, INNER, 2	
4	FF0-0078-00P		1	FOOT, LEFT	
5	FF0-0079-00P		1	FOOT, RIGHT	
6	FA0-0705-00P		2	SPRING, LEAF	
7	FS4-2035-00P		2	SPRING, TENSION	
8	FS4-2034-00P		2	SPRING, TENSION	
9	FA0-0292-00P		1	DUCT, 1	
10	FC1-9002-00P		2	LEVER, CAM	
11	FC1-0898-00P		2	HOOK	
12	FC1-0899-00P		2	CAM	
13	FA0-0296-00P		1	DUCT, 2	
14	FA0-0309-00P		1	PANEL, LOWER, BOTTOM	
501	XB1-2400-609		AR	SCREW,MACH.,TRUSS HEAD,M4X6	
502	XB1-2300-609		2	SCREW,MACH.,TRUSS HEAD,M3X6	
503	XB3-2400-809		AR	SCREW,TAPPING,TRUSS HEAD,M4X8	

COPYRIGHTⓒ2000 CANON INC.
CANON NP6320 REV.0 JAN. 2000 PRINTED IN JAPAN [IMPRIME AU JAPON]

FIGURE 130 CONTROL PANEL ASSEMBLY

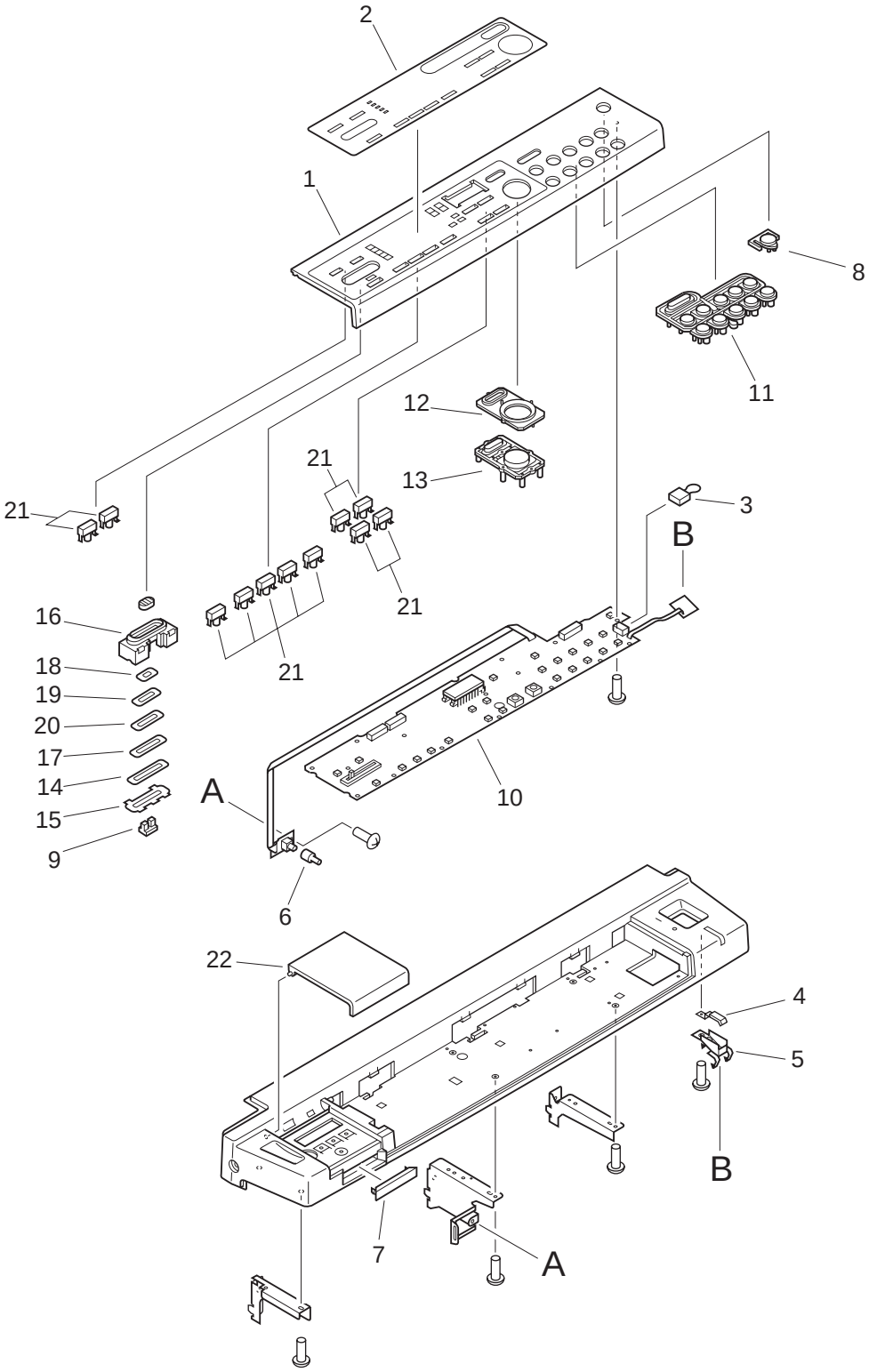

COPYRIGHT©2000 CANON INC.
CANON NP6320 REV.0 JAN. 2000 PRINTED IN JAPAN [IMPRIME AU JAPON]

FIGURE & KEY NO.	PART NUMBER	RANK	QTY	DESCRIPTION	SERIAL NUMBER / REMARKS
130 -	FG0-1243-00P		1	CONTROL PANEL ASSEMBLY	
1	FA0-0628-00P		1	PANEL, OPERATION	
2	FA0-0629-00P		1	PANEL, OPERATION KEY	
3	FG2-9098-00P		1	PLUG, KEYBOARD	
4	FC1-5387-00P		1	GLASS, LED ON/OFF	
5	FC1-5388-00P		1	REFLECTOR, LED ON/OFF	
6	FC1-1010-00P		1	KNOB	
7	FC1-5386-00P		1	COVER	
8	FC1-5400-00P		1	KEY TOP, PREHEAT	
9	FC1-5382-00P		1	ADAPTER, RESISTOR	
10	FG0-1182-00P		1	CONTROL PANEL PCB ASSEMBLY	
11	FA0-0665-00P		1	KEY TOP, NUMERIC	
12	FA0-0666-00P		1	FRAME, KEY TOP	
13	FA0-0667-01P		1	KEY TOP, PRINT/RESET	
14	FC1-5394-00P		1	DUST SHIELD	
15	FC1-5389-00P		1	DUST SHIELD, 1	
16	FA0-0668-00P		1	KNOB, BIAS ADJUSTING	
17	FC1-5390-00P		1	DUST SHIELD, 2	
18	FC1-5393-00P		1	DUST SHIELD, 5	
19	FC1-5392-00P		1	DUST SHIELD, 4	
20	FC1-5391-00P		1	DUST SHIELD, 3	
21	FC1-6396-00P		11	KEYTOP, OPERATION	
22	FC1-0664-00P		1	SLIT, 2	

COPYRIGHT©2000 CANON INC.

FIGURE 160 COPYBOARD COVER ASSEMBLY

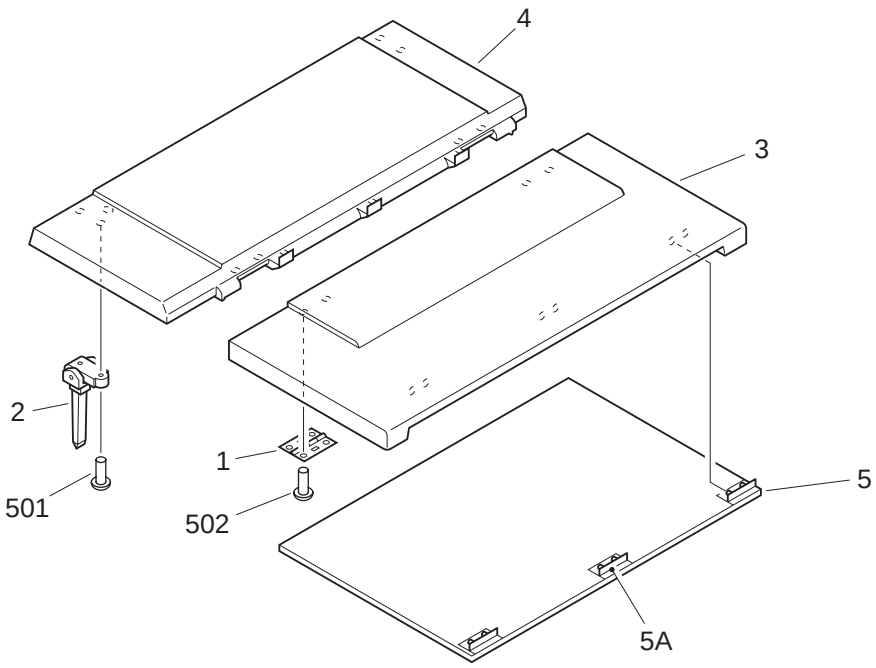

FIGURE & KEY NO.	PART NUMBER	RANK	QTY	DESCRIPTION	SERIAL NUMBER / REMARKS
160 -	FG5-1974-050		1	COPYBOARD COVER ASSEMBLY	
1	FB1-8771-020		1	COVER, COPYBOARD, FRONT	
2	FB1-8772-030		1	COVER, COPYBOARD, REAR	
3	FA5-1185-000		2	PLATE, HINGE	
4	FA6-5650-000		2	HINGE, COPYBOARD COVER	
5	FF2-3941-020		1	COPYBOARD COVER CUSHION ASS'Y	
5A	FA3-9055-000		3	PLATE, CUSHION MOUNTING	
501	XB1-2401-609		4	SCREW,MACH.,TRUSS HEAD,M4X16	
502	XB4-7401-009		8	SCREW,TAPPING,TRUSS HEAD,M4X10	

COPYRIGHT©2000 CANON INC.

FIGURE 190

EXHAUST FAN ASSEMBLY

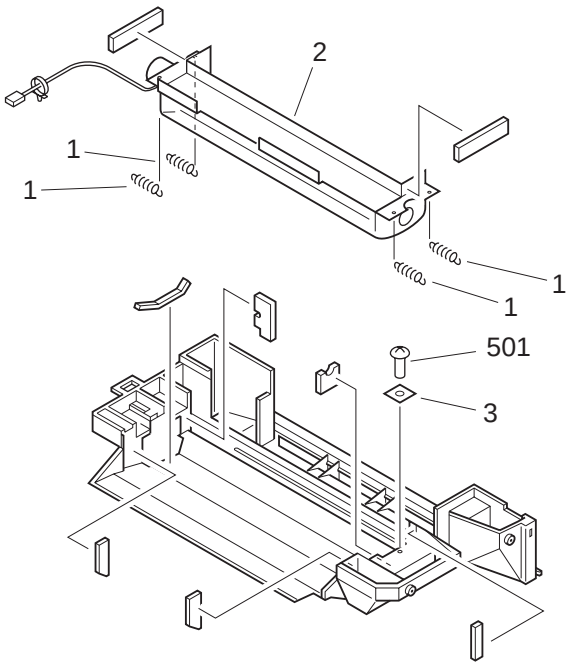

FIGURE & KEY NO.	PART NUMBER	RANK	QTY	DESCRIPTION	SERIAL NUMBER / REMARKS
190 -	FG0-1064-01P		1	EXHAUST FAN ASSEMBLY	
1	FA0-0329-00P		4	SPRING, TENSION	
2	FH0-0133-00P		1	FAN	FM2, J323
3	FC1-5367-00P		1	PLATE	
501	XB4-7300-809		1	SCREW,TAPPING,TRUSS HEAD,M3X8	

COPYRIGHTⓒ2000 CANON INC.

FIGURE 210

LENS MOUNT ASSEMBLY (1/2)

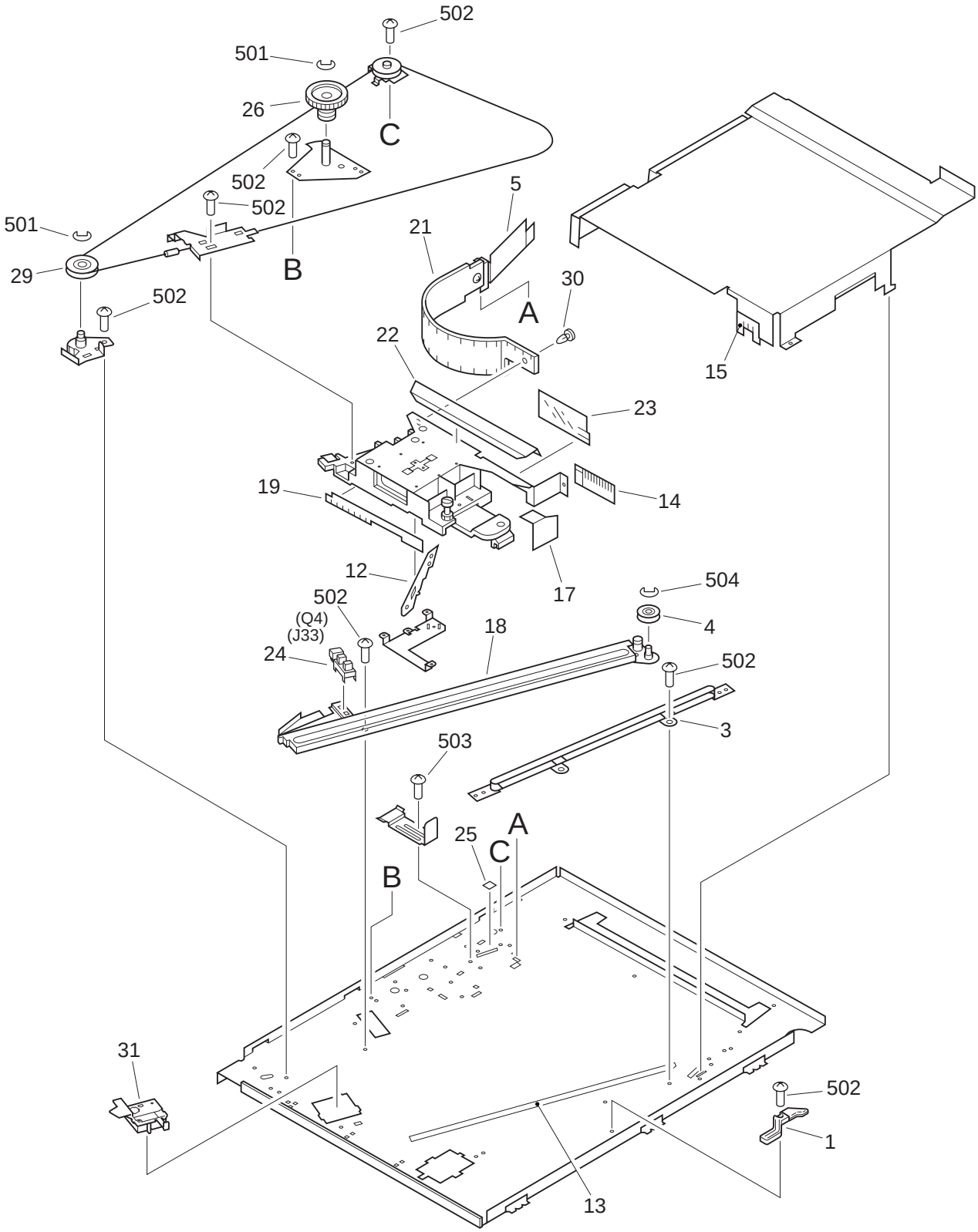

COPYRIGHTⓒ2000 CANON INC.

FIGURE 210 LENS MOUNT ASSEMBLY (2/2)

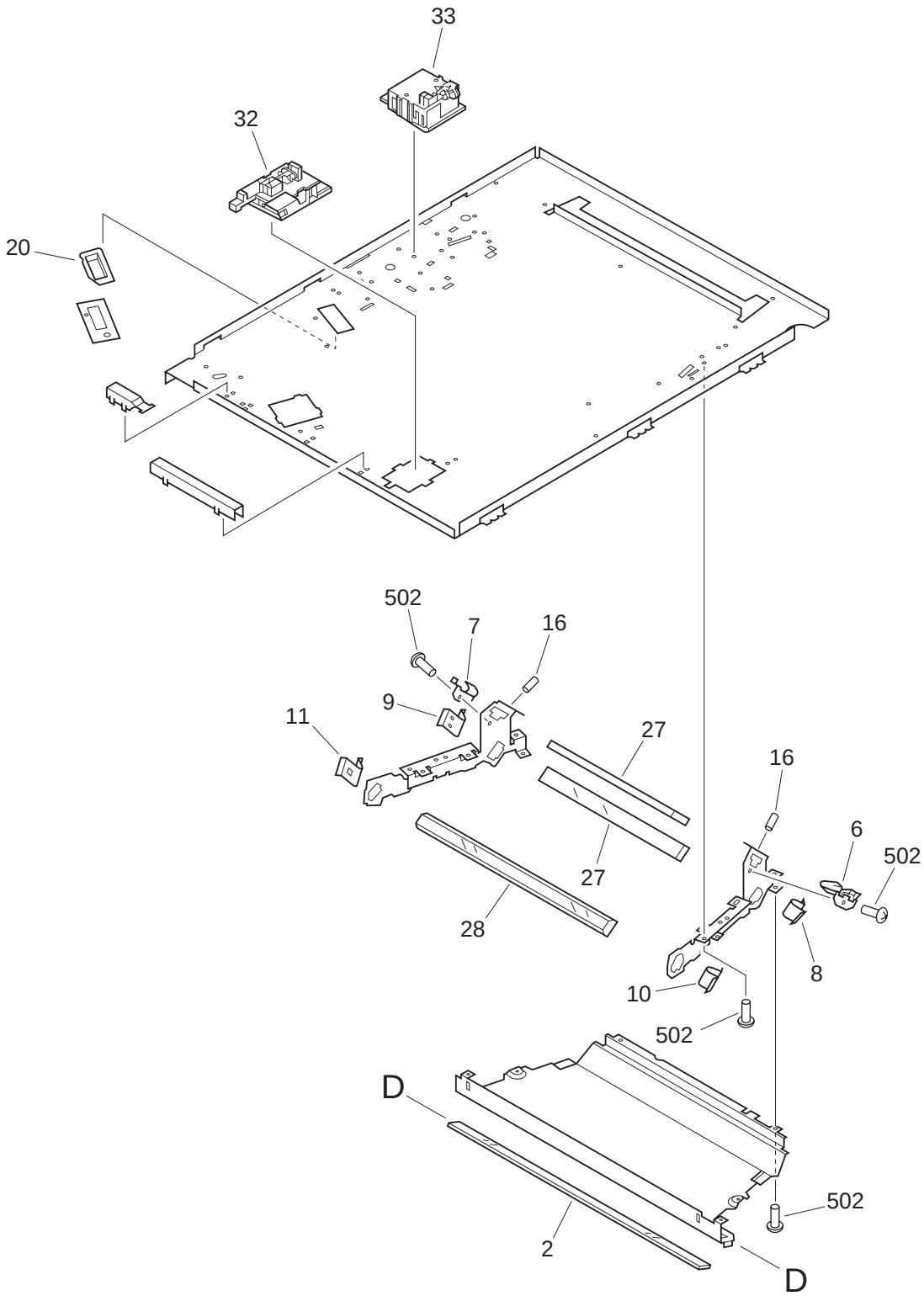

COPYRIGHT©2000 CANON INC.

FIGURE & KEY NO.	PART NUMBER	RANK	QTY	DESCRIPTION	SERIAL NUMBER / REMARKS
210 -	NPN		RF	LENS MOUNT ASSEMBLY	
1	FF3-2888-00P		1	BLOCK, MIRROR CLEANING	
2	FN1-4216-000		1	GLASS, DUSTPROOF	
3	FA5-1580-000		1	GUIDE, CAM	
4	FC1-0638-00P		1	PULLEY	
5	FA5-1605-000		1	SHEET, LIGHT BLOCKING	
6	FA5-1593-000		1	SPRING, LEAF, FRONT	
7	FA5-1594-000		1	SPRING, LEAF, REAR	
8	FA5-1595-000		1	SPRING, LEAF, FRONT	
9	FA5-1596-000		1	SPRING, LEAF, REAR	
10	FA5-1597-000		1	SPRING, LEAF, FRONT	
11	FA5-1598-000		1	SPRING, LEAF, REAR	
12	FC1-0634-00P		1	CAM, BLANK	
13	FA5-1600-000		1	SHEET, SLIDE	
14	FC1-6167-00P		1	COVER, LIGHT	
15	FA5-1611-020		1	SHIELD, LIGHT-BLOCKING	
16	X31-6240-880		3	SETSCREW,M4X8	
17	FA5-1613-000		1	SHIELD, LIGHT-BLOCKING	
18	FF2-5583-00P		1	RAIL, LENS	
19	FA5-1564-020		1	SHEET, LIGHT BLOCKING 1	
20	FC1-5365-00P		1	COVER, SENSOR	
21	FF2-5585-00P		1	CURTAIN, LIGHT BLOCKING	
22	FA5-1568-000		1	SEAL, LIGHT-BLOCKING, 2	
23	FA5-1608-000		1	SHIELD, LIGHT-BLOCKING, 3	
24	FH0-0055-00P		1	PHOTO-INTERRUPTER	Q4 J33
25	FA5-1615-000		1	SHIELD, LIGHT-BLOCKING	
26	FS2-0866-000		1	GEAR, 54T	
27	FN1-4214-000		2	MIRROR 4/5	
28	FN1-4215-000		1	MIRROR 6	
29	FC1-0639-00P		1	PULLEY, GUIDE	

COPYRIGHTⓒ2000 CANON INC.

FIGURE & KEY NO.	PART NUMBER	RANK	QTY	DESCRIPTION	SERIAL NUMBER / REMARKS
210 - 30	FA0-0333-00P		1	CLIP	
31	FG2-1302-000		1	AE SENSOR PCB ASSEMBLY	
32	FG2-1303-000		1	DOCUMENT DETECTION UNIT 1	
33	FG2-1304-000		1	DOCUMENT DETECTION UNIT 2	
501	XD2-1100-642		2	RING,E	
502	XB1-2300-609		16	SCREW,MACH.,TRUSS HEAD,M3X6	
503	XB1-2400-609		5	SCREW,MACH.,TRUSS HEAD,M4X6	
504	XD2-1100-502		1	RING,E	

COPYRIGHTⓒ2000 CANON INC.

FIGURE 220

SCANNER DRIVE ASSEMBLY

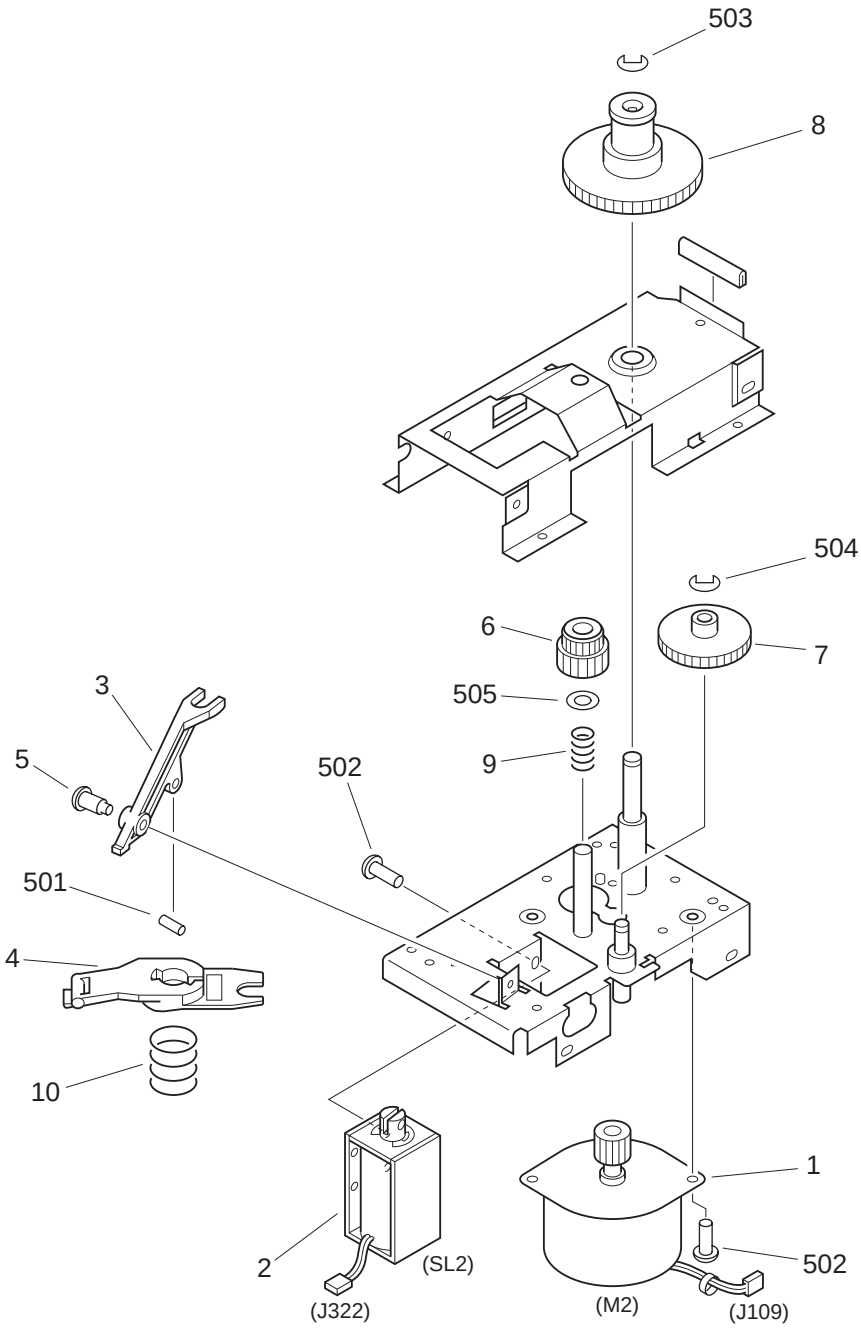

COPYRIGHTⓒ2000 CANON INC.
CANON NP6320 REV.0 JAN. 2000 PRINTED IN JAPAN [IMPRIME AU JAPON]

FIGURE & KEY NO.	PART NUMBER	RANK	QTY	DESCRIPTION	SERIAL NUMBER / REMARKS
220 -	FG0-1078-00P		1	SCANNER DRIVE ASSEMBLY	
1	FH0-0134-00P		1	MOTOR, STEPPING	M2, J109
2	FH0-0141-00P		1	SOLENOID, DC24V	SL2, J322
3	FA5-1656-000		1	ARM, CHANGING	
4	FF2-5601-00P		1	LEVER, BRAKE	
5	FS1-9073-000		1	SCREW,STEPPED,M4	
6	FS2-0867-000		1	GEAR 25T/20T	
7	FS2-0868-000		1	GEAR 48T	
8	FS2-0869-000		1	GEAR 72T	
9	FS2-2766-000		1	SPRING, COMPRESSION	
10	FS2-2767-000		1	SPRING, COMPRESSION	
501	XD3-2300-161		1	PIN,DOWEL	
502	XB1-2300-409		8	SCREW,MACH.,TRUSS HEAD,M3X4	
503	XD2-1100-642		1	RING,E	
504	XD2-1100-502		1	RING,E	
505	XD1-1108-229		1	SHIM	

COPYRIGHTⓒ2000 CANON INC.

FIGURE 250 DRUM DRIVE ASSEMBLY

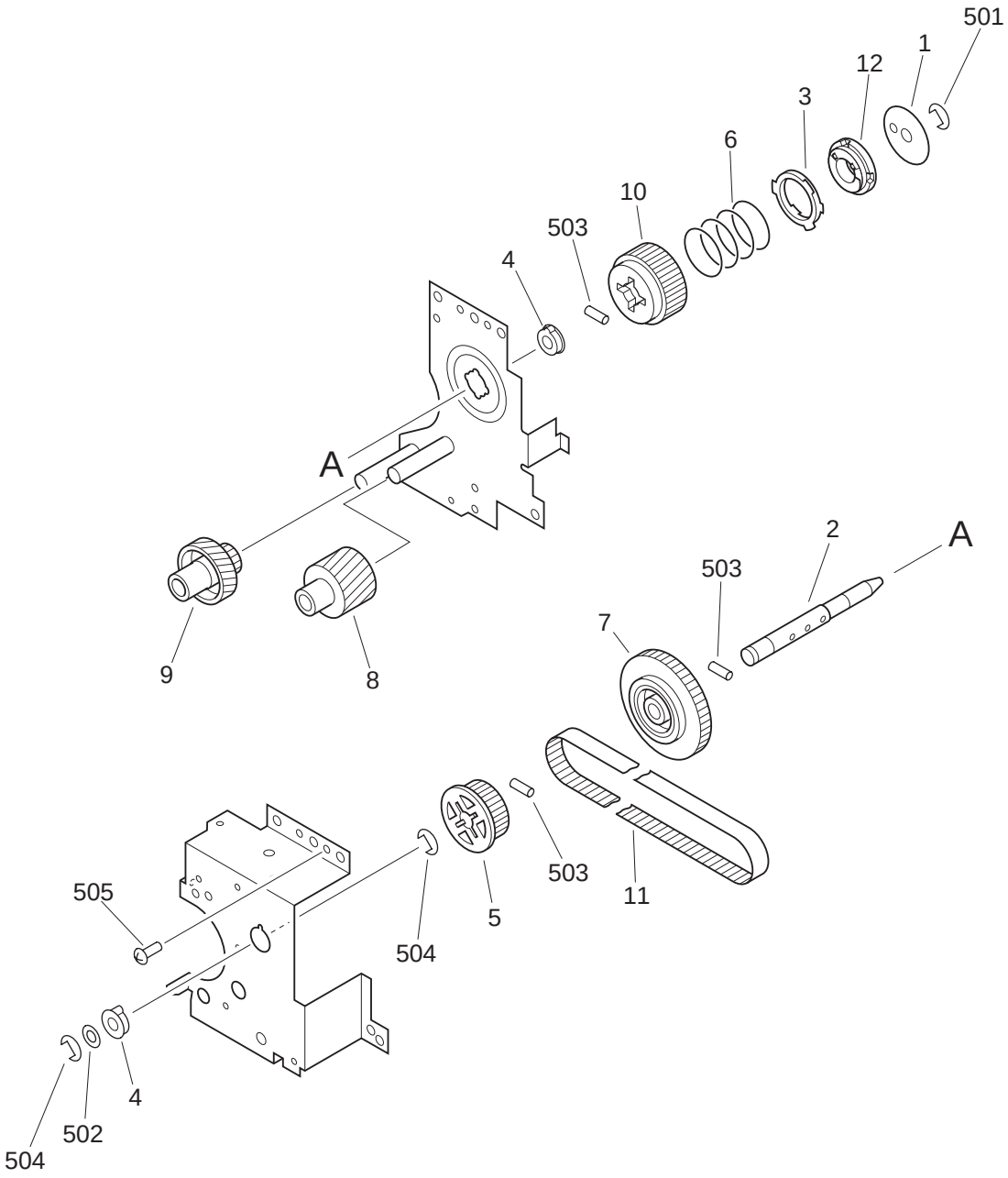

COPYRIGHTⓒ2000 CANON INC.
CANON NP6320 REV.0 JAN. 2000 PRINTED IN JAPAN [IMPRIME AU JAPON]

FIGURE & KEY NO.	PART NUMBER	RANK	QTY	DESCRIPTION	SERIAL NUMBER / REMARKS
250 -	FG0-1074-00P		1	DRUN DRIVE ASSEMBLY	
1	FA5-1988-000		1	PLATE, REINFORCEMENT	
2	FA0-0262-00P		1	SHAFT, DRUM DRIVE	
3	FA5-1984-000		1	RING	
4	FS1-1189-000		2	BUSHING	
5	FS1-3293-000		1	PULLEY, 30T	
6	FS2-2770-000		1	SPRING, COMPRESSION	
7	FS2-0878-000		1	GEAR, 60T	
8	FS1-0036-00P		1	GEAR, 29T	
9	FS4-0283-00P		1	GEAR, 34T	
10	FS2-0881-020		1	GEAR, 40T	
11	XF9-0210-000		1	BELT, TIMING	
12	FF1-9414-020		1	DISK, DRUM DRIVE	
501	XD2-1100-502		1	RING,E	
502	XD1-1108-225		2	SHIM	
503	XD3-2200-161		3	PIN,DOWEL	
504	XD2-1100-642		2	RING,E	
505	XB1-2300-609		AR	SCREW,MACH.,TRUSS HEAD,M3X6	

COPYRIGHTⓒ2000 CANON INC.

FIGURE 252 MAIN MOTOR ASSEMBLY

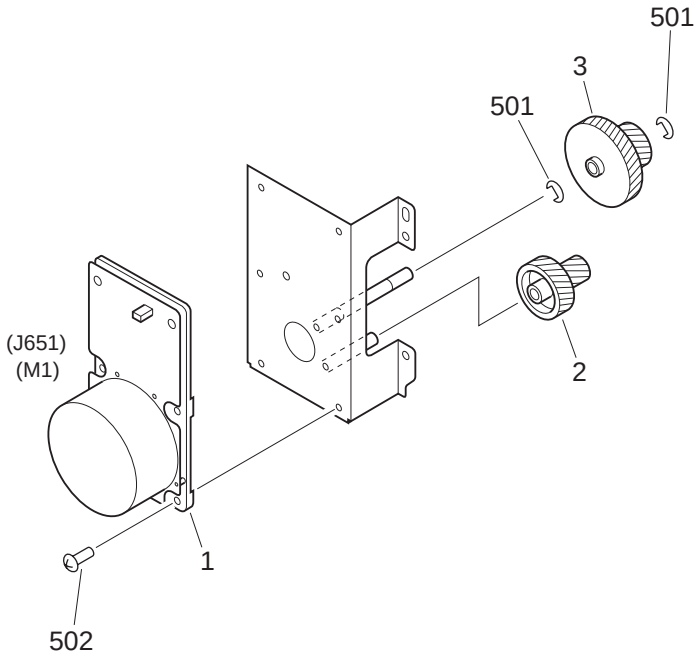

FIGURE & KEY NO.	PART NUMBER	RANK	QTY	DESCRIPTION	SERIAL NUMBER / REMARKS
252 -	FG0-1232-00P		1	MAIN MOTOR ASSEMBLY	
1	FH6-1705-00P		1	MOTOR, DC24V	M1 J651
2	FS4-0597-00P		1	GEAR, 43T/21T	
3	FS4-0596-00P		1	GEAR, 60T/15T	
501	XD2-1100-502		2	RING,E	
502	XB1-2300-609		4	SCREW,MACH.,TRUSS HEAD,M3X6	

COPYRIGHT©2000 CANON INC.

FIGURE 255 MAIN DRIVE ASSEMBLY

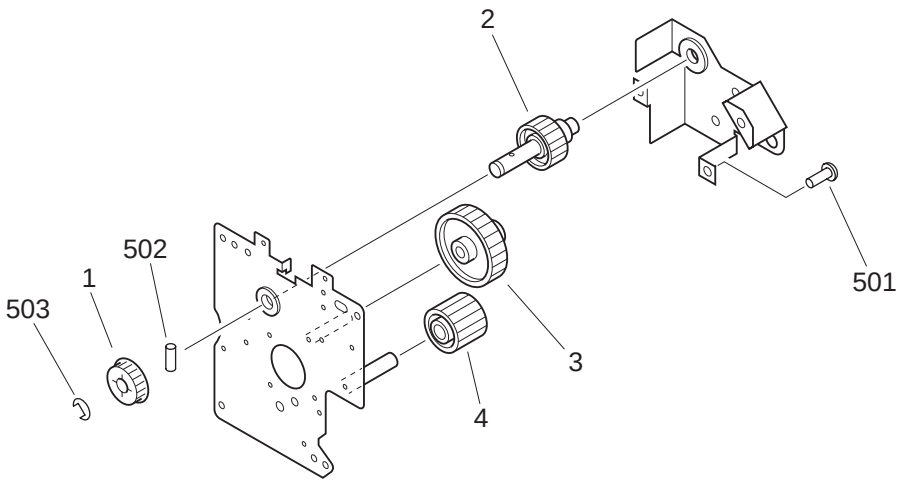

FIGURE & KEY NO.	PART NUMBER	RANK	QTY	DESCRIPTION	SERIAL NUMBER / REMARKS
255 -	FG0-1233-00P		1	MAIN DRIVE ASSEMBLY	
1	FS1-3293-000		1	PULLEY, 30T	
2	FA0-0709-00P		1	GEAR, 25T	
3	FS4-0561-00P		1	GEAR, 47T	
4	FS4-0562-00P		1	GEAR, 25T	
501	XB6-7400-609		3	SCREW,TP,M4X6	
502	XD3-2200-161		1	PIN,DOWEL	
503	XD2-1100-642		1	RING,E	

COPYRIGHT©2000 CANON INC.

FIGURE 300 CASSETTE

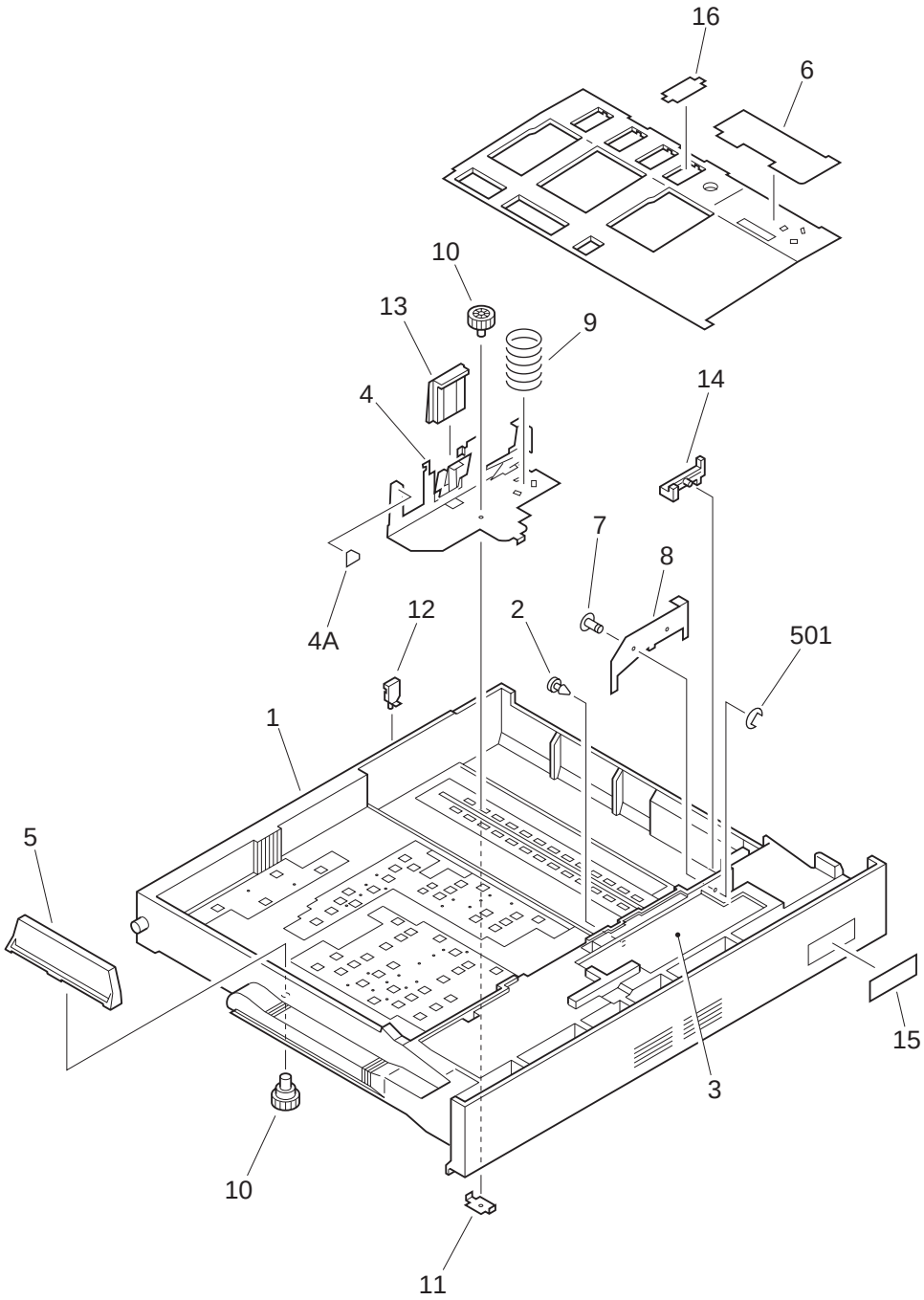

COPYRIGHTⓒ2000 CANON INC.
CANON NP6320 REV.0 JAN. 2000 PRINTED IN JAPAN [IMPRIME AU JAPON]

FIGURE & KEY NO.	PART NUMBER	RANK	QTY	DESCRIPTION	SERIAL NUMBER / REMARKS
300 -	NPN		RF	CASSETTE	A3/A4/A4R/A5R
1	FA0-0315-00P	N	1	BODY, CASSETTE	
2	FA9-1781-000		1	RUBBER, STOP	
3	FS9-0171-00P		1	LABEL, CASSETTE	
4	FF2-5622-00P		1	PLATE, HOLD-DOWN TAB, REAR	
4A	FS4-8120-000		1	LABEL, "PAPER LIMIT"	
5	FC1-0916-00P		1	PLATE, SIZE, REAR	A3/A4/A5R
	FC1-0916-00P		2	PLATE, SIZE, REAR	A4R
6	FC1-0913-00P		1	PLATE, FRICTION	
7	FA9-1779-000		1	PIN	
8	FA0-0163-00P		1	PLATE, HOLD-DOWN TAB, FRONT	
9	FS2-2785-000		2	SPRING, COMPRESSION	A3/A4 BLUE
	FS2-2786-000		2	SPRING, COMPRESSION	A4R YELLOW
	FS2-2787-000		2	SPRING, COMPRESSION	A5R WHITE
10	FC1-0917-00P		2	SCREW, M4	
11	FC1-0918-00P		1	PLATE, NUT	
12	FA5-2231-030		3	BLOCK, SIZE	A3
	FA5-2231-030		2	BLOCK, SIZE	A4/A4R
13	FF2-5620-00P		1	PLATE, PAPER CONTACT	
14	FC1-0915-00P		1	LEVER, LINK	
15	FS8-8916-00P		1	LABEL, SIZE	A4
	FS9-0174-00P		1	LABEL, SIZE	A4R
16	FF1-9430-000		4	PLATE, BLANKING	A3/A4/A4R
501	XD2-1100-402		1	RING,E	

COPYRIGHTⓒ2000 CANON INC.

FIGURE 315 CASSETTE TRAY ASSEMBLY

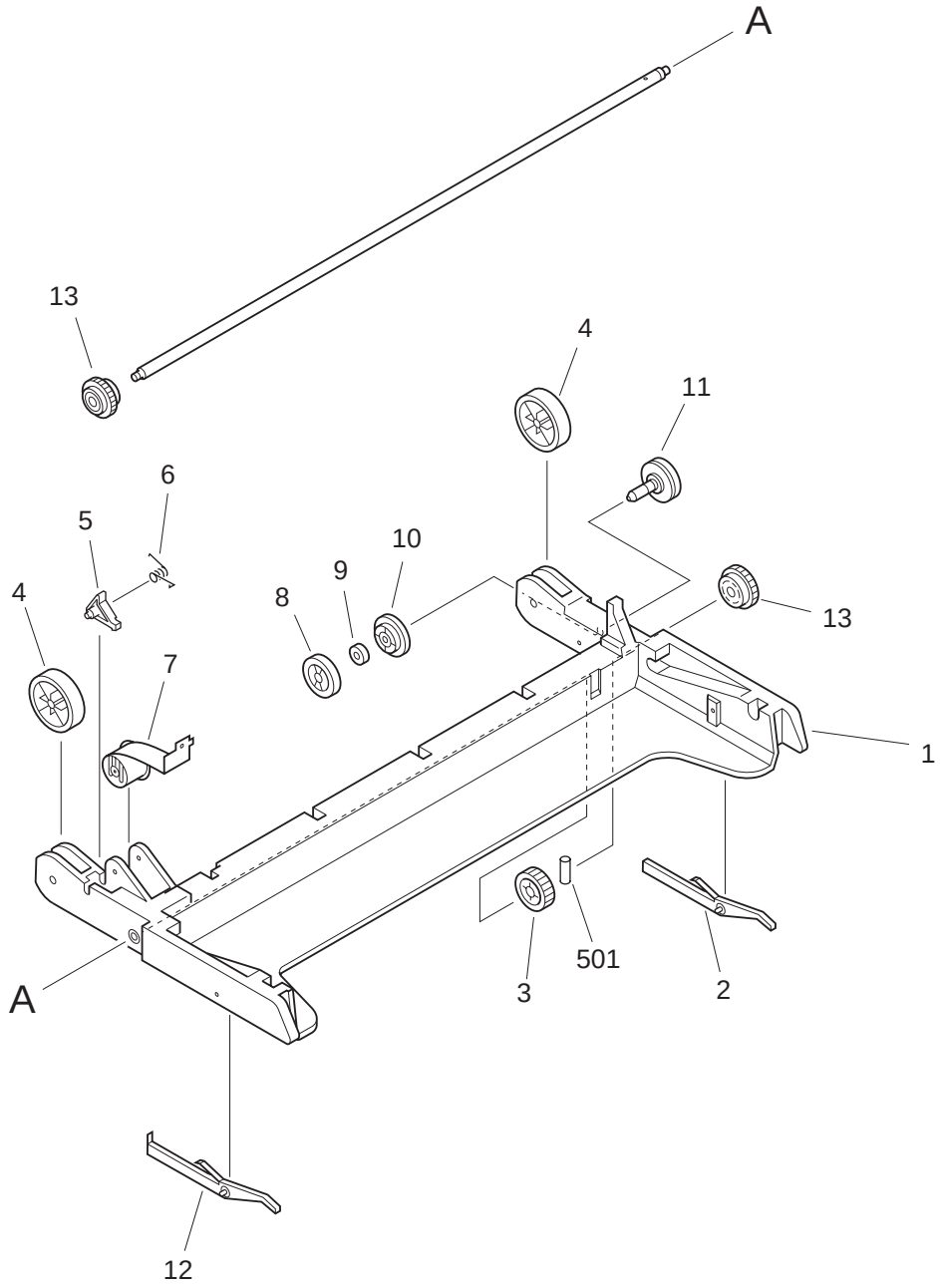

COPYRIGHTⓒ2000 CANON INC.
CANON NP6320 REV.0 JAN. 2000 PRINTED IN JAPAN [IMPRIME AU JAPON]

FIGURE & KEY NO.	PART NUMBER	RANK	QTY	DESCRIPTION	SERIAL NUMBER / REMARKS
315 -	FG2-2989-02P		1	CASSETTE TRAY ASSEMBLY	
1	FC1-0780-01P		1	TRAY, CASSETTE	
2	FC1-0788-01P		1	LEVER, STOP, RIGHT	
3	FC1-0790-01P		1	GEAR, 28T	
4	FC1-0782-00P		2	PULLEY	
5	FC1-0789-01P		1	LEVER, STOPPER	
6	FC1-0787-00P		1	SPRING, TORSION	
7	FF2-5623-00P		1	DRUM, SPRING	
8	FC1-0792-00P		1	GEAR, 28T	
9	FC1-5405-00P		1	SILENCER	
10	FC1-0791-00P		1	DISK, BRAKE, DRIVE	
11	FC1-0794-00P		1	CLUTCH, BRAKE	
12	FA0-0169-00P		1	LEVER, STOP, LEFT	
13	FC1-0781-01P		2	GEAR, 18T	
501	XD3-1160-122		1	PIN,SPRING	
502	XD3-2200-142		2	PIN,DOWEL	

COPYRIGHTⓒ2000 CANON INC.

FIGURE 320

PAPER PICK-UP SHAFT ASSEMBLY

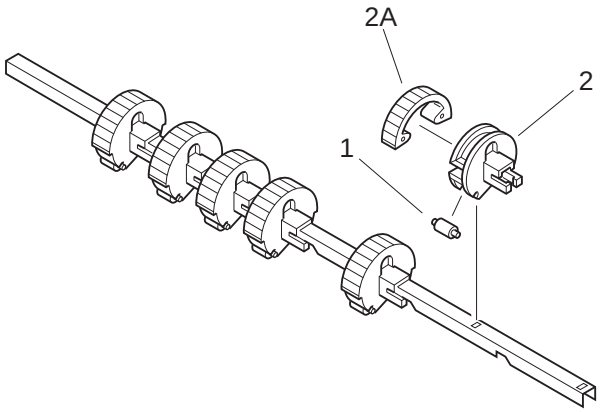

FIGURE & KEY NO.	PART NUMBER	RANK	QTY	DESCRIPTION	SERIAL NUMBER / REMARKS
320 -	FG0-1067-00P		2	PAPER PICK-UP SHAFT ASSEMBLY	
1	FA2-8227-000		6	ROLLER, PRESSURE	
2	FG0-0072-00P		6	PICK-UP ROLLER	
2A	FA0-0241-00P		1	PICK-UP ROLLER	

COPYRIGHT©2000 CANON INC.

FIGURE 325 MULTI FEED TRAY ASSEMBLY

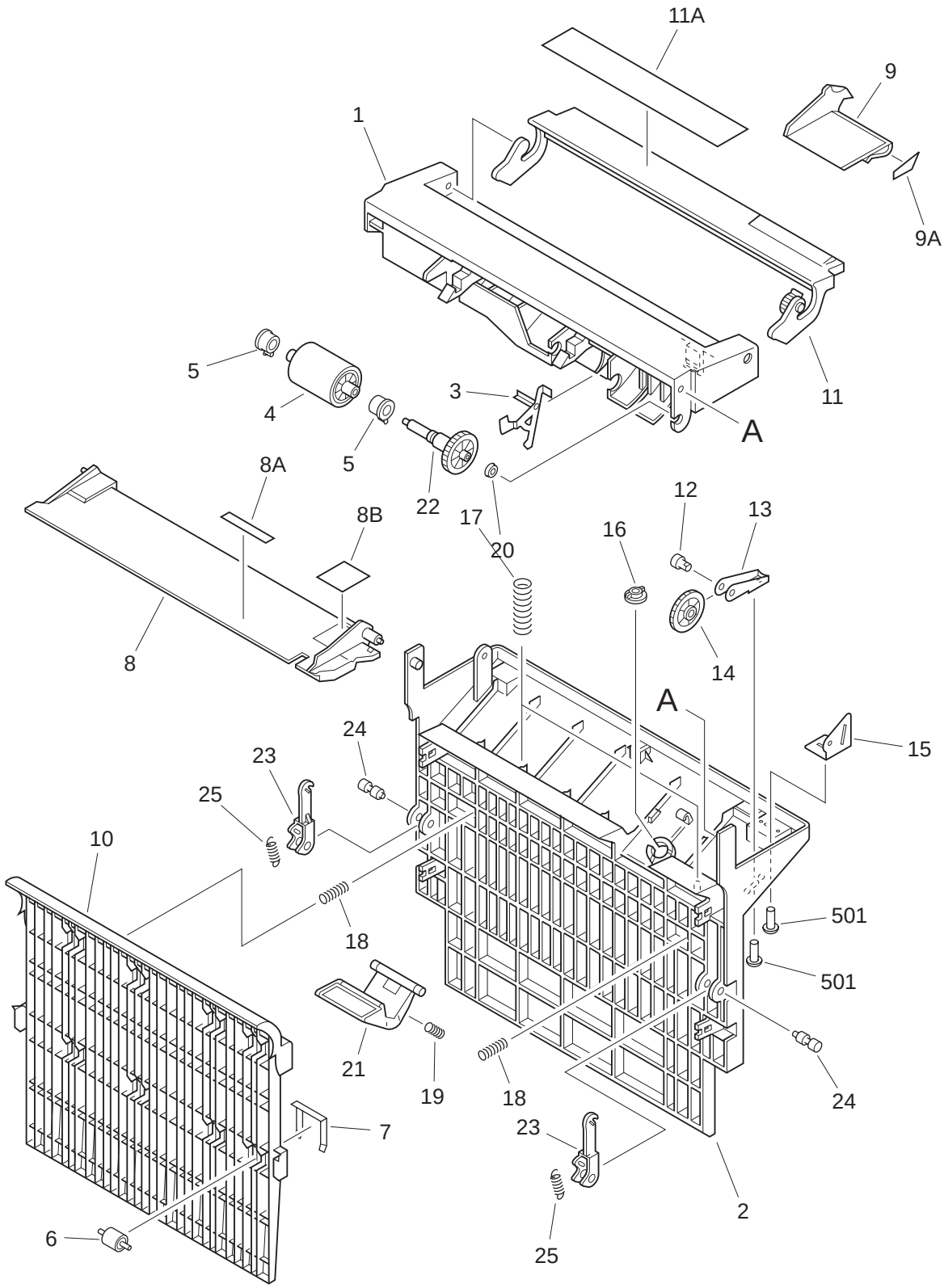

COPYRIGHT©2000 CANON INC.
CANON NP6320 REV.0 JAN. 2000 PRINTED IN JAPAN [IMPRIME AU JAPON]

FIGURE & KEY NO.	PART NUMBER	RANK	QTY	DESCRIPTION	SERIAL NUMBER / REMARKS
325 -	FG0-1183-00P		1	MULTI FEED TRAY ASSEMBLY	
1	FF0-0199-00P		1	HANDLE	
2	FA0-0269-00P		1	COVER, MULTI, LOWER	
3	FC1-0740-00P		1	LEVER, PAPER SENSING	
4	FC1-0741-00P		1	ROLLER, FEEDER	
5	FC1-0770-00P		2	BUSHING	
6	FC1-0772-00P		8	ROLLER	
7	FA0-0273-00P		8	SPRING, LEAF	
8	FF2-5576-02P		1	TRAY	
8A	FC1-0771-00P		1	SHEET, TRAY	
8B	FS9-0170-00P		1	LABEL, MANUAL FEED	
9	FF0-0197-00P		1	GUIDE, PAPER	
9A	FA0-0654-00P		1	LABEL	
10	FA0-0270-01P		1	GUIDE	
11	FF0-0198-00P		1	COVER	
11A	FA0-0679-00P		1	LABEL, PAPER SUPPLY	
12	FC1-0769-00P		1	PIN	
13	FC1-5407-00P		1	MOUNT, GEAR	
14	FC1-0764-00P		1	GEAR, 32T	
15	FC1-0755-00P		1	PLATE, 1	
16	FC1-0754-00P		1	CUSHION	
17	FS4-2032-00P		2	SPRING, COMPRESSION	
18	FS4-2031-00P		2	SPRING, COMPRESSION	
19	FS4-2033-00P		1	SPRING, COMPRESSION	
20	FC1-0739-00P		1	BUSHING	
21	FC1-0736-00P		1	FEEDER PAD	
22	FC1-0765-00P		1	GEAR, 34T	
23	FA0-0271-00P		2	HOOK, HOLDING	
24	FA0-0272-00P		2	PIN, SUPPORT	
25	FS2-2768-000		2	SPRING, TENSION	

COPYRIGHT©2000 CANON INC.

FIGURE & KEY NO.	PART NUMBER	RANK	QTY	DESCRIPTION	SERIAL NUMBER / REMARKS
325 - 501	XB1-2400-609		2	SCREW,MACH.,TRUSS HEAD,M4X6	

COPYRIGHTⓒ2000 CANON INC.
CANON NP6320 REV.0 JAN. 2000 PRINTED IN JAPAN [IMPRIME AU JAPON]

FIGURE 350 FEEDER ASSEMBLY

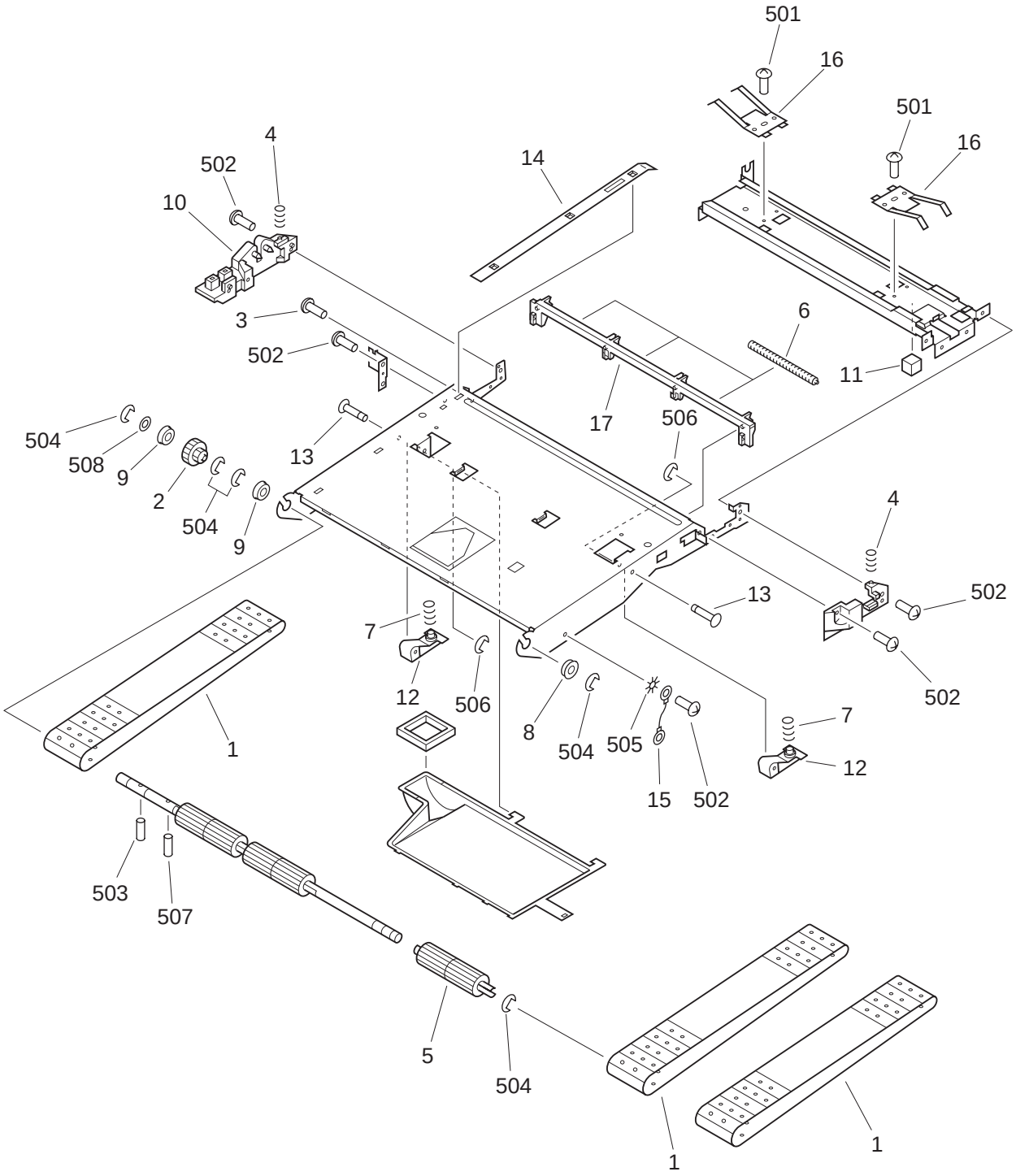

COPYRIGHT©2000 CANON INC.
CANON NP6320 REV.0 JAN. 2000 PRINTED IN JAPAN [IMPRIME AU JAPON]

FIGURE & KEY NO.	PART NUMBER	RANK	QTY	DESCRIPTION	SERIAL NUMBER / REMARKS
350 -	FG3-0380-00P		1	FEEDER ASSEMBLY	
1	FA0-0702-00P		3	BELT, FEEDER	
2	FS2-0887-000		1	GEAR, 20T	
3	XA9-0192-000		1	SCREW, W/TOOTHED WASHER, M4X6	
4	FS2-2782-000		2	SPRING, COMPRESSION	
5	FA0-0247-00P		3	PULLEY, DRIVE	
6	FA0-0246-00P		3	PULLEY	
7	FS2-2773-000		2	SPRING, COMPRESSION	
8	FS1-1189-000		1	BUSHING	
9	FS1-1202-000		2	BUSHING	
10	FH2-9039-030		1	CONNECTOR, TRANSFER CORONA	
11	FA0-0277-00P		1	CUSHION	
12	FA5-1903-000		2	ARM, SPRING	
13	FA5-1904-000		2	ROD, ARM	
14	FA0-0248-00P		1	GUIDE, PAPER	
15	FF2-0666-000		1	CABLE, GROUNDING	
16	FA5-1907-000		2	SPRING, LEAF	
17	FA0-0252-00P		1	GUIDE, PAPER FEED	
501	XB1-2300-409		2	SCREW,MACH.,TRUSS HEAD,M3X4	
502	XB1-2400-609		9	SCREW,MACH.,TRUSS HEAD,M4X6	
503	XD3-2200-122		1	PIN,DOWEL	
504	XD2-1100-642		5	RING,E	
505	XD1-4200-402		1	WASHER,TOOTHED LOCK	
506	XD2-1100-502		2	RING,E	
507	XD3-2200-182		1	PIN,DOWEL	
508	XD1-1108-225		2	SHIM	

COPYRIGHTⓒ2000 CANON INC.

FIGURE 351

TRANSFER GUIDE ASSEMBLY

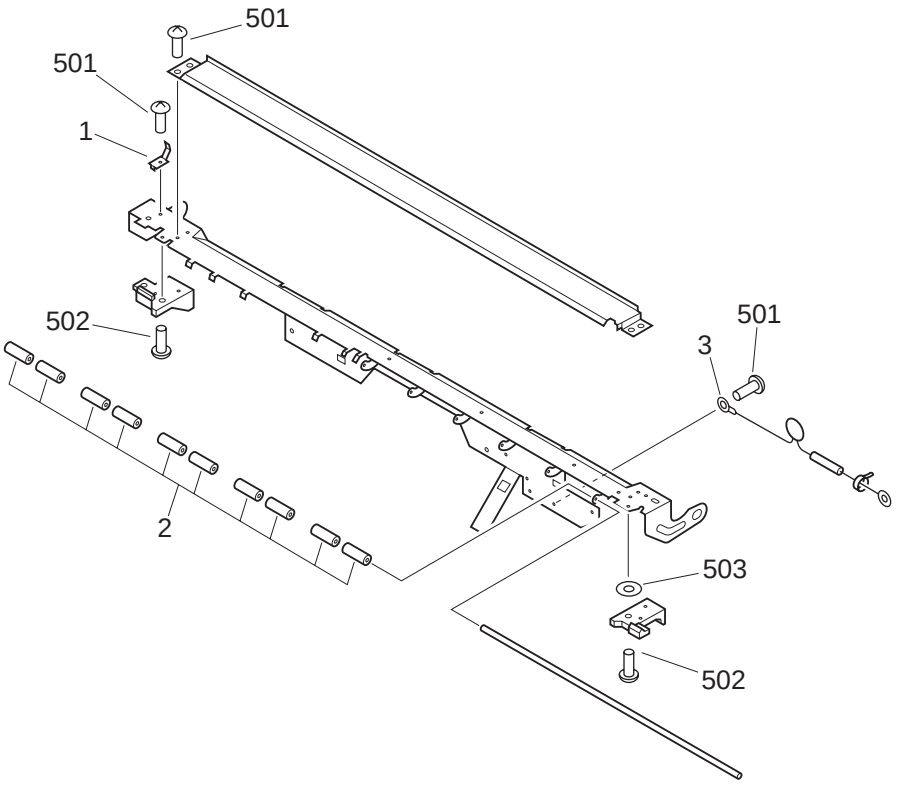

FIGURE & KEY NO.	PART NUMBER	RANK	QTY	DESCRIPTION	SERIAL NUMBER / REMARKS
351 -	FG2-3019-00P		1	TRANSFER GUIDE ASSEMBLY	
1	FC1-0685-00P		1	SPRING, LEAF	
2	FA4-5594-000		10	ROLLER	
3	FF2-0658-000		1	VARISTOR, 560V	
501	XB1-2300-409		4	SCREW,MACH.,TRUSS HEAD,M3X4	
502	XB1-2300-609		2	SCREW,MACH.,TRUSS HEAD,M3X6	
503	XD1-2100-305	N	1	WASHER,PLAIN	

COPYRIGHT©2000 CANON INC.

FIGURE 400

MIRROR ASSEMBLY 1

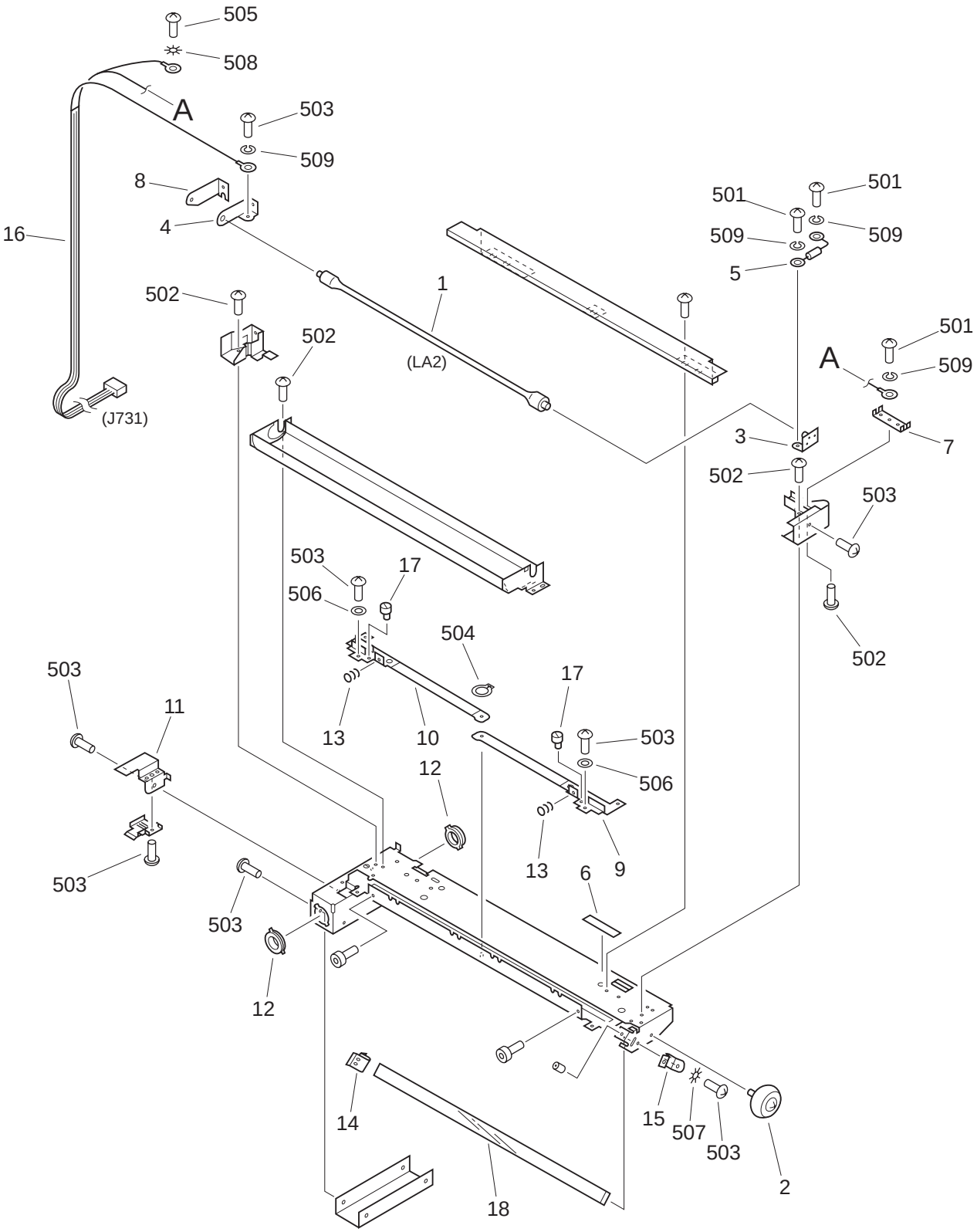

COPYRIGHT©2000 CANON INC.
CANON NP6320 REV.0 JAN. 2000 PRINTED IN JAPAN [IMPRIME AU JAPON]

FIGURE & KEY NO.	PART NUMBER	RANK	QTY	DESCRIPTION	SERIAL NUMBER / REMARKS
400 -	FG3-0356-00P		1	MIRROR ASSEMBLY 1	
1	FH7-3114-000		1	HALOGEN LAMP, 175V 330W	LA2
2	XG9-0089-000		1	ROLLER, GUIDE	
3	FF1-9385-000		1	TERMINAL, LAMP, FRONT	
4	FF1-9386-000		1	TERMINAL, LAMP, REAR	
5	FF1-9387-020		1	FUSE, THERMAL, 103Cß	
6	FS4-8107-000		1	LABEL, THERMAL FUSE, 103ßC	
7	FA5-1628-000		1	TERMINAL, FUSE	
8	FA5-1630-000		1	SPRING, LEAF, TERMINAL	
9	FF2-1573-000		1	PLATE, SLIT (A)	
10	FF2-1574-000		1	PLATE, SLIT (B)	
11	FA5-1633-030		1	PLATE, LIGHT-BLOCKING	
12	FC1-3568-00P		2	BUSHING	
13	FS2-2788-000		2	SPRING, COMPRESSION	
14	FA5-1636-000		1	SPRING, LEAF, REAR	
15	FA5-1637-000		1	SPRING, LEAF, FRONT	
16	FG3-0454-00P		1	CABLE, BLANK EXPOSURE LAMP	J731
17	FA5-1650-000		2	SCREW, ADJUSTING	
18	FN1-4419-00P		1	MIRROR 1	
501	XB1-2300-409		5	SCREW,MACH.,TRUSS HEAD,M3X4	
502	XB1-2300-309		2	SCREW,MACH.,TRUSS HEAD,M3X3	
503	XB1-2300-609		14	SCREW,MACH.,TRUSS HEAD,M3X6	
504	XD2-2100-302		1	RING,GRIP	
505	XB1-2400-609		1	SCREW,MACH.,TRUSS HEAD,M4X6	
506	XD1-2100-309		2	WASHER,PLAIN	
507	XD1-4200-302		1	WASHER,TOOTHED LOCK	
508	XD1-4200-402		1	WASHER,TOOTHED LOCK	
509	XD1-3100-309		4	WASHER,SPRING	
510	XB7-1030-069		2	SCREW,ALLEN HEAD,M3X6	

COPYRIGHTⓒ2000 CANON INC.

FIGURE 401

MIRROR ASSEMBLY 2

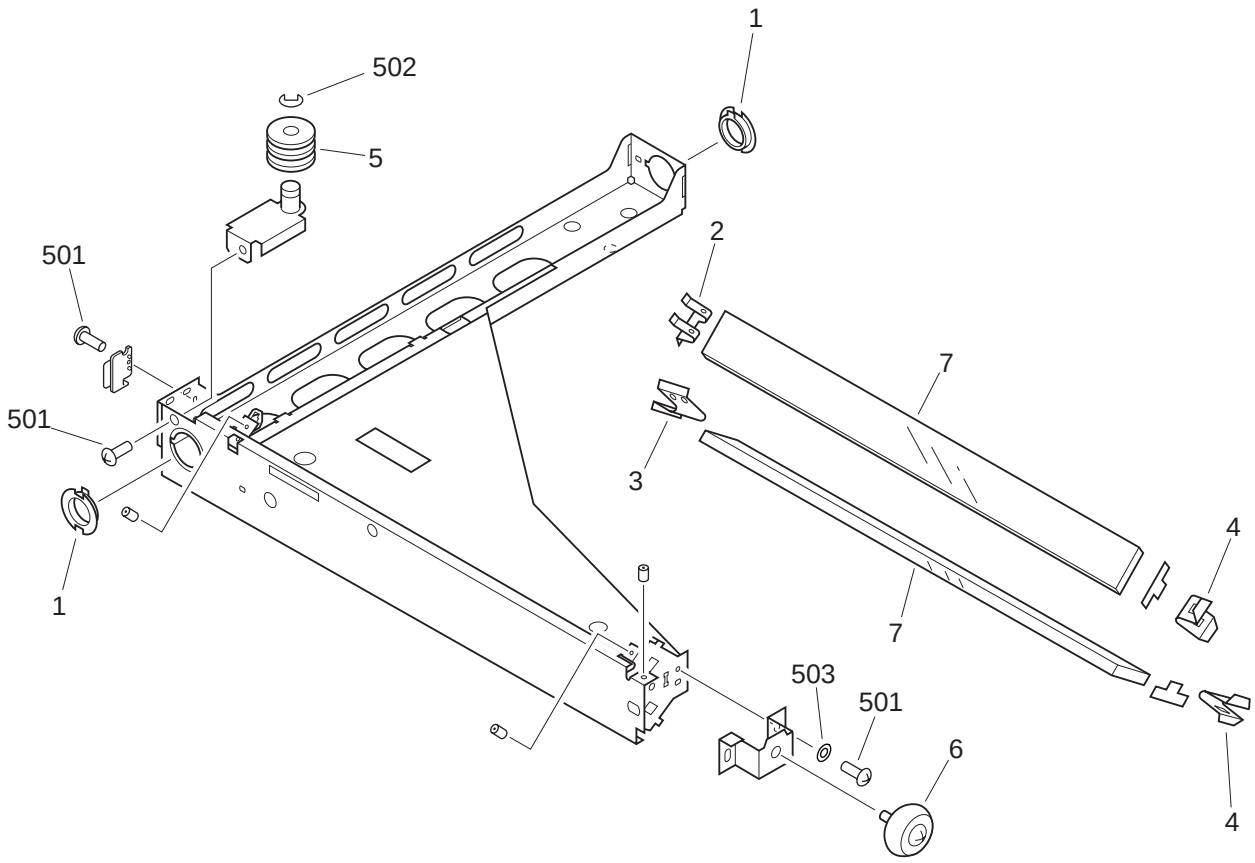

COPYRIGHTⓒ2000 CANON INC.
CANON NP6320 REV.0 JAN. 2000 PRINTED IN JAPAN [IMPRIME AU JAPON]

FIGURE & KEY NO.	PART NUMBER	RANK	QTY	DESCRIPTION	SERIAL NUMBER / REMARKS
401 -	FG0-1237-00P		1	MIRROR ASSEMBLY 2	
1	FC1-3569-00P		2	BUSHING	
2	FA5-1642-000		1	SPRING, LEAF, 2 REAR	
3	FA5-1643-000		1	SPRING, LEAF, 3 REAR	
4	FA5-1644-000		2	SPRING, LEAF, 2/3 FRONT	
5	FA5-1646-000		1	PULLEY	
6	XG9-0089-000		1	ROLLER, GUIDE	
7	FN1-4213-000		2	MIRROR 2/3	
501	XB1-2300-609		4	SCREW,MACH.,TRUSS HEAD,M3X6	
502	XD2-1100-642		1	RING,E	
503	XD1-2100-309		2	WASHER,PLAIN	

COPYRIGHTⓒ2000 CANON INC.

FIGURE 450

BLANK EXPOSURE LAMP ASSEMBLY

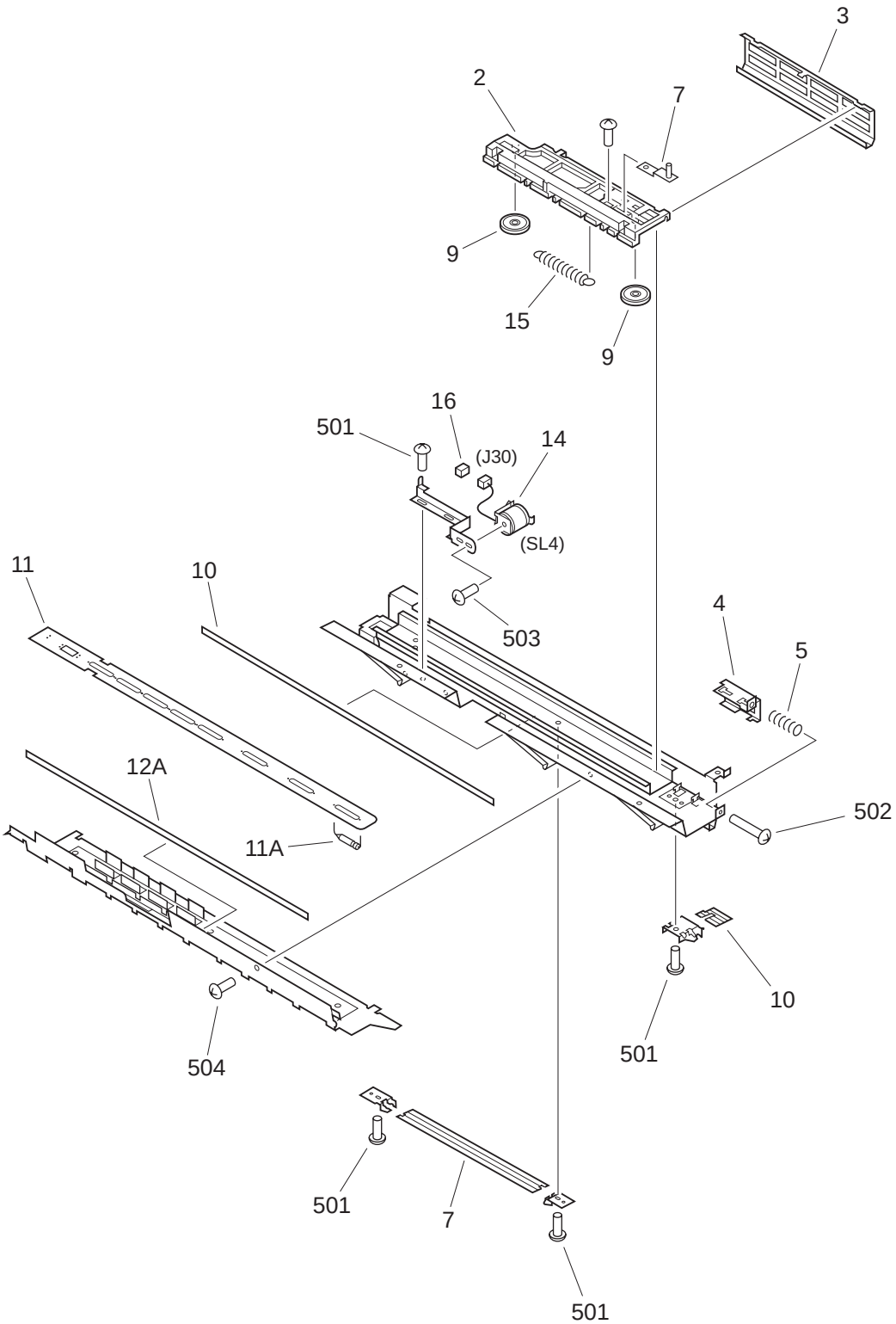

COPYRIGHT©2000 CANON INC.
CANON NP6320 REV.0 JAN. 2000 PRINTED IN JAPAN [IMPRIME AU JAPON]

FIGURE & KEY NO.	PART NUMBER	RANK	QTY	DESCRIPTION	SERIAL NUMBER / REMARKS
450 -	FG0-1063-00P		1	BLANK EXPOSURE LAMP ASSEMBLY	
1	FF2-5589-01P		1	MOUNT, BLANK	
2	FF2-5592-01P		1	SLIT, 1	
3	FC1-0664-00P		1	SLIT, 2	
4	FC1-0666-00P		1	ADJUSTING SLIT	
5	FS2-2765-000		1	SPRING, COMPRESSION	
6	FC1-0661-00P		2	SUPPORT, REFLECTOR, R	
7	FC1-0659-00P		1	REFLECTOR, R	
8	FC1-0662-00P		1	SUPPORT, REFLECTOR, L	
9	FC1-0660-00P		1	SUPPORT, REFLECTOR, F	
10	FC1-0658-00P		1	REFLECTOR, F	
11	FG2-4048-00P		1	PRE-CON. EXPOSURE PCB ASSEMBLY	
11A	FH7-3116-000		8	LAMP, 6V200WA	
12	FF0-0069-00P		1	BLANK HOLDER	
12A	FA5-1729-000		1	FILTER, ND	
13	FC1-0650-00P		1	MOUNT, SOLENOID	
14	FH0-0051-00P		1	SOLENOID	SL4 J30
15	FS4-2030-00P		1	SPRING, TENSION	
16	FH0-0054-00P		1	CONNECTOR, 2P	
501	XB1-2300-409		6	SCREW,MACH.,TRUSS HEAD,M3X4	
502	XB1-2302-009		1	SCREW,MACH.,TRUSS HEAD,M3X20	
503	XB6-7300-509		1	SCREW,TP,M3X5	
504	XB6-7300-609		1	SCREW,TP,M3X6	

COPYRIGHTⓒ2000 CANON INC.

FIGURE 550 PRIMARY CORONA ASSEMBLY

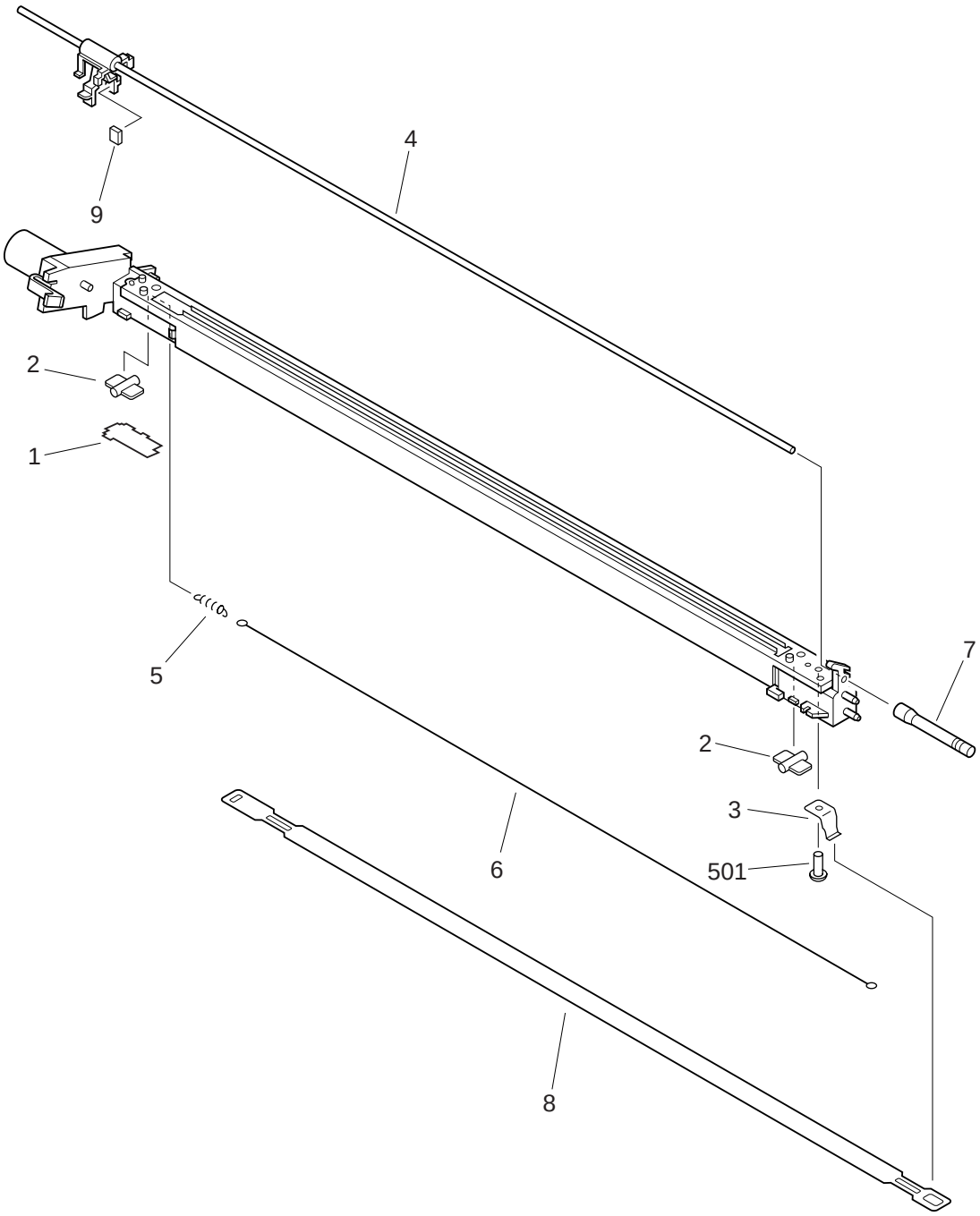

COPYRIGHTⓒ2000 CANON INC.
CANON NP6320 REV.0 JAN. 2000 PRINTED IN JAPAN [IMPRIME AU JAPON]

FIGURE & KEY NO.	PART NUMBER	RANK	QTY	DESCRIPTION	SERIAL NUMBER / REMARKS
550 -	FG3-0365-00P		1	PRIMARY CORONA ASSEMBLY	
1	FA5-1715-000		1	COVER, WIRE TERMINATION	
2	FC2-9871-00P		2	SPACER, GRID	
3	FC2-9872-00P		1	SPRING, LEAF	
4	FF3-3703-00P		1	ROD, WIRE CLEANING	
5	FS2-2763-000		1	SPRING, TENSION	
6	FY3-0040-000		AR	WIRE, CORONA, 0.06MM (20M)	
7	FC2-9927-00P		1	HANDLE	
8	FC2-9864-00P		1	GRID	
9	FC2-9866-00P		2	SPONGE, WIRE CLEANING	
501	XB2-7300-606		1	SCREW,W/WASHER,M3X6	

COPYRIGHTⓒ2000 CANON INC.

FIGURE 560

TRANSFER CORONA ASSEMBLY

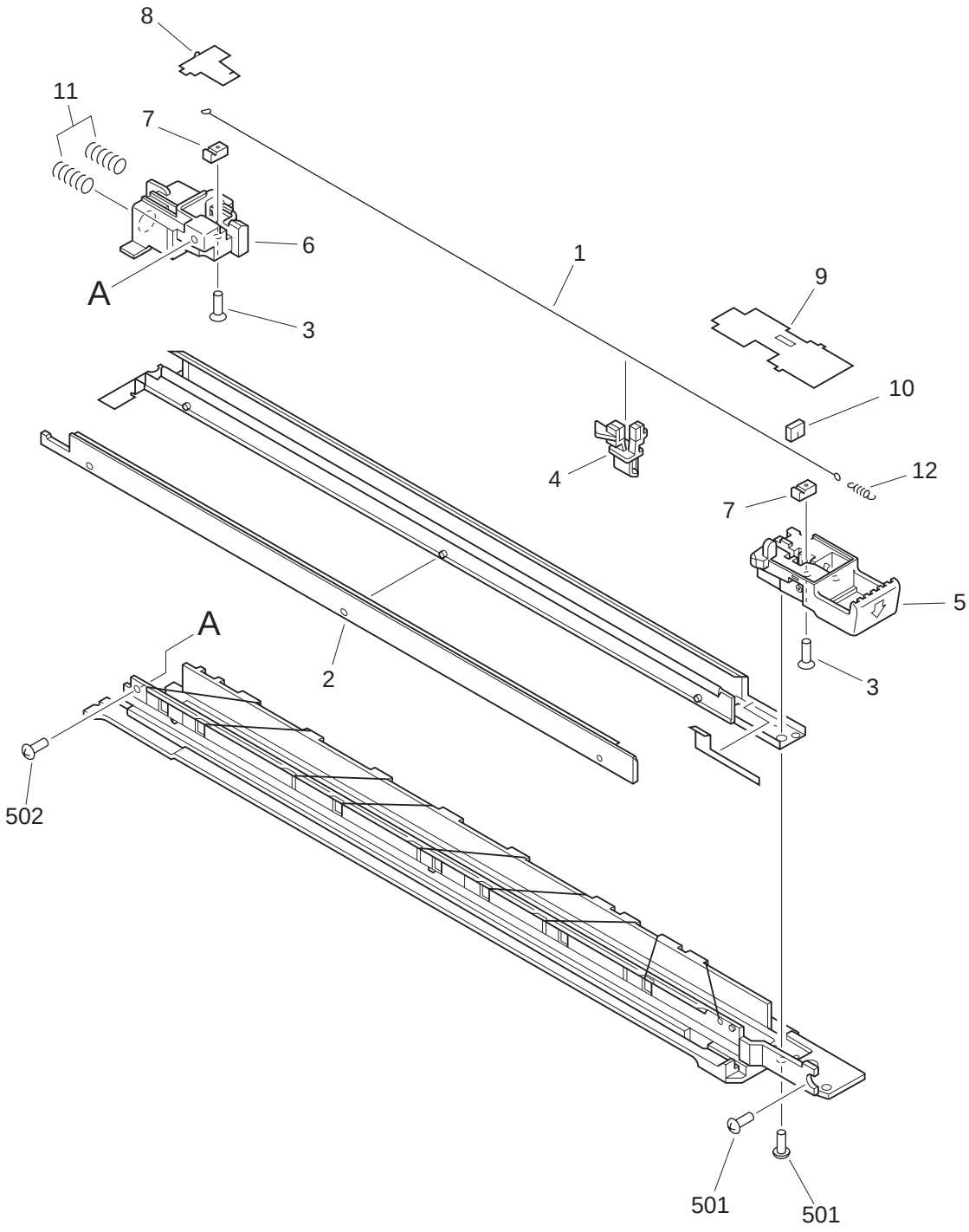

COPYRIGHTⓒ2000 CANON INC.
CANON NP6320 REV.0 JAN. 2000 PRINTED IN JAPAN [IMPRIME AU JAPON]

FIGURE & KEY NO.	PART NUMBER	RANK	QTY	DESCRIPTION	SERIAL NUMBER / REMARKS
560 -	FG3-0370-00P		1	TRANSFER CORONA ASSEMBLY	
1	FY3-0040-000		AR	WIRE, CORONA, 0.06MM (20M)	
2	FF1-9438-070		1	PLATE, STATIC CHARGE ELIM'R	
3	XA9-0159-000		2	SCREW,FT,C.S HEAD,M3X12	
4	FF1-9440-030		1	CLEANING UNIT	
5	FF3-3707-00P		1	WIRE TERMINATION, FRONT	
6	FA5-1862-000		1	WIRE TERMINATION, REAR	
7	FA5-1873-000		2	GUIDE, CORONA WIRE	
8	FA5-1874-020		1	COVER, WIRE TERMINATION, REAR	
9	FA5-1875-020		1	COVER, WIRE TERMINATION, FRONT	
10	FA5-1878-000		1	DAMPER, RUBBER	
11	FS2-2781-000		2	SPRING, COMPRESSION	
12	97-5527-000		1	SPRING, TENSION	
501	XB6-7300-609		3	SCREW,TP,M3X6	
502	XB1-2300-609		1	SCREW,MACH.,TRUSS HEAD,M3X6	

COPYRIGHTⓒ2000 CANON INC.

FIGURE 640 DEVELOPING ASSEMBLY

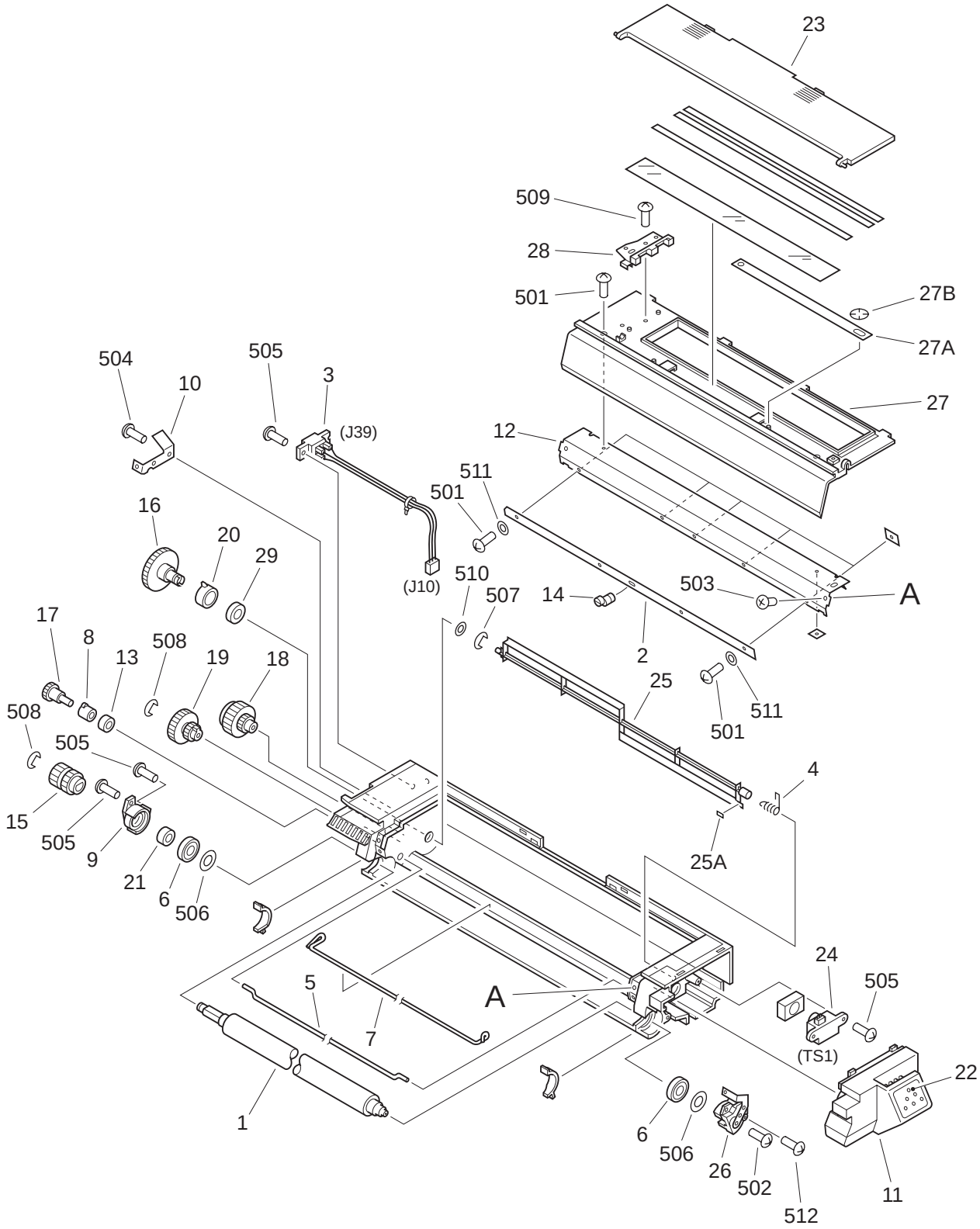

COPYRIGHT©2000 CANON INC.
CANON NP6320 REV.0 JAN. 2000 PRINTED IN JAPAN [IMPRIME AU JAPON]

FIGURE & KEY NO.	PART NUMBER	RANK	QTY	DESCRIPTION	SERIAL NUMBER / REMARKS
640 -	FG3-0351-00P		1	DEVELOPING ASSEMBLY	
1	FC1-7194-000		1	CYLINDER, DEVELOPING	
2	FC2-9898-00P		1	BLADE	
3	FF9-0967-000		1	TONER SENSOR CABLE	J10,39
4	FS4-2186-000		1	SPRING, TORSION	
5	FC1-7200-040		1	ROD, STIRRING 2	
6	FC2-9473-00P		2	ROLLER	
7	FC2-9939-00P		1	ROD, STIRRING, AUXILIARY	
8	FS1-1598-000		1	BUSHING	
9	FA6-5301-000		1	HOLDER, SLEEVE, REAR	
10	FA5-1773-000		1	TERMINAL	
11	FC2-9925-00P		1	HANDLE	
12	FF3-3714-00P		1	MOUNT, BLADE	
13	FA5-1780-000		1	SEAL 2	
14	FA5-1762-000		1	BOSS	
15	FS2-0870-000		1	GEAR, 19T	
16	FS4-0565-00P		1	GEAR, 45T	
17	FS2-0872-020		1	GEAR, 14T	
18	FS2-0873-000		1	GEAR, 17T	
19	FS2-0874-000		1	GEAR, 30T	
20	FS1-1594-000		1	BUSHING	
21	XG9-0172-000		1	BEARING, BALL	
22	FS4-8106-000		1	LABEL, TONER	
23	FF1-9409-000		1	LID, DEVELOPING	
24	FF1-9410-000		1	SENSOR, TONER	TS1
25	FF3-3711-00P		1	ROD, STIRRING	
25A	FC2-9937-00P		1	SCRAPER	
26	FF2-3933-000		1	HOLDER, SLEEVE, FRONT	
27	FF1-9408-000		1	COVER, DEVELOPING	
27A	FA5-1777-000		1	STRAP, LIFTING	

COPYRIGHTⓒ2000 CANON INC.

FIGURE & KEY NO.	PART NUMBER	RANK	QTY	DESCRIPTION	SERIAL NUMBER / REMARKS
640 - 27B	XD2-2300-402		2	RING,TOOTHED LOCK	
28	FA5-1787-000		1	STOP, CARTRIDGE	
29	FA5-1779-000		1	SEAL 1	
501	XB1-2300-403		6	SCREW,MACH.,TRUSS HEAD,M3X4	
502	XB1-2300-603		1	SCREW,MACH.,TRUSS HEAD,M3X6	
503	XB1-2300-609		2	SCREW,MACH.,TRUSS HEAD,M3X6	
504	XB4-7300-809		2	SCREW,TAPPING,TRUSS HEAD,M3X8	
505	XB4-7301-009		8	SCREW,TAPPING,TRUSS HEAD,M3X10	
506	XD1-1108-212		4	SHIM	
507	XD2-1100-642		1	RING,E	
508	XD2-1100-502		2	RING,E	
509	XB4-7400-809		2	SCREW,TAPPING,TRUSS HEAD,M4X8	
510	XD1-1109-721		1	SHIM	
511	XD1-1103-135		4	SHIM	
512	XB6-7301-009		8	SCREW,TP,M3X10	

COPYRIGHTⓒ2000 CANON INC.
CANON NP6320 REV.0 JAN. 2000 PRINTED IN JAPAN [IMPRIME AU JAPON]

FIGURE 810

FIXING ASSEMBLY (1/2)

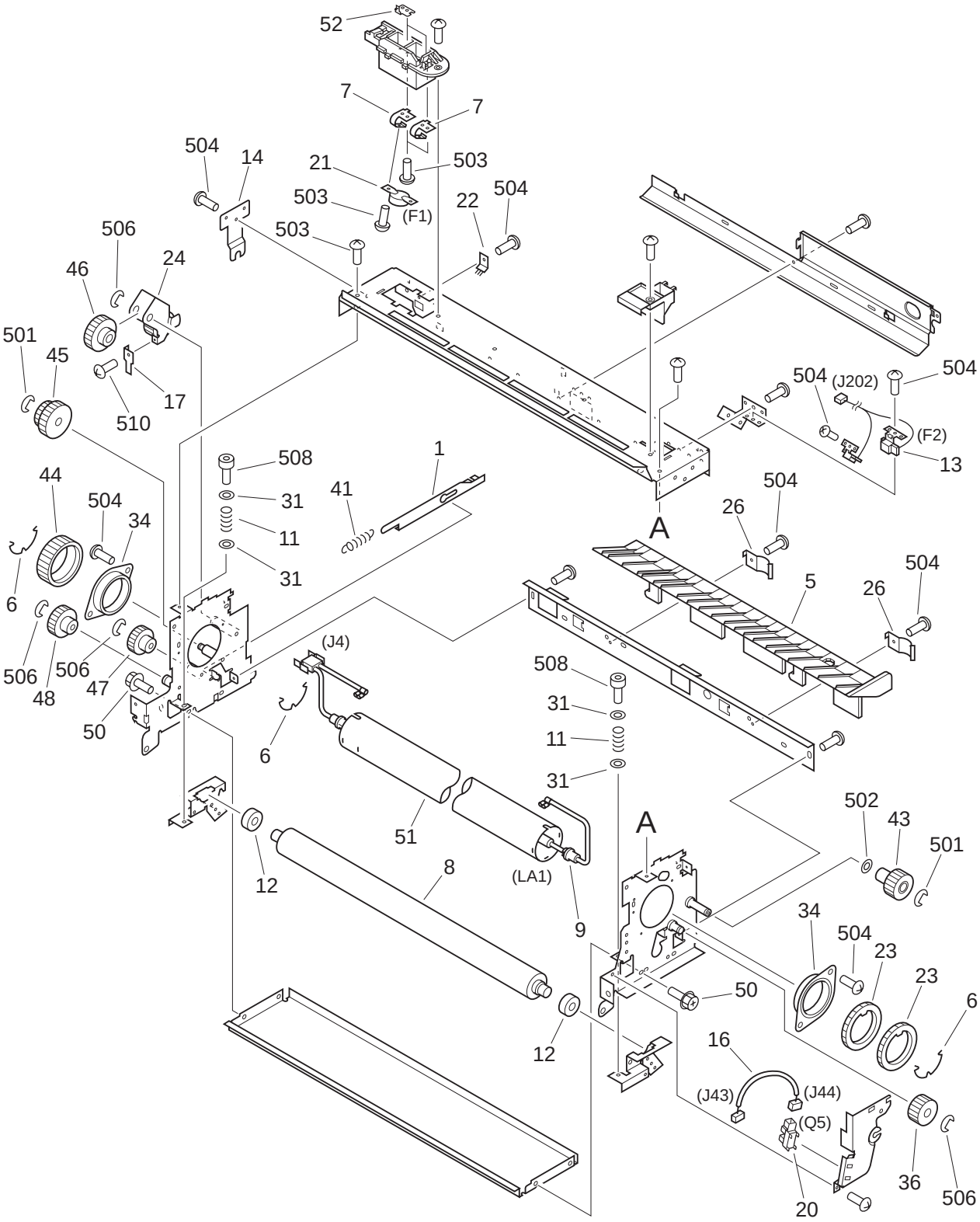

COPYRIGHTⓒ2000 CANON INC.
CANON NP6320 REV.0 JAN. 2000 PRINTED IN JAPAN [IMPRIME AU JAPON]

FIGURE 810

FIXING ASSEMBLY (2/2)

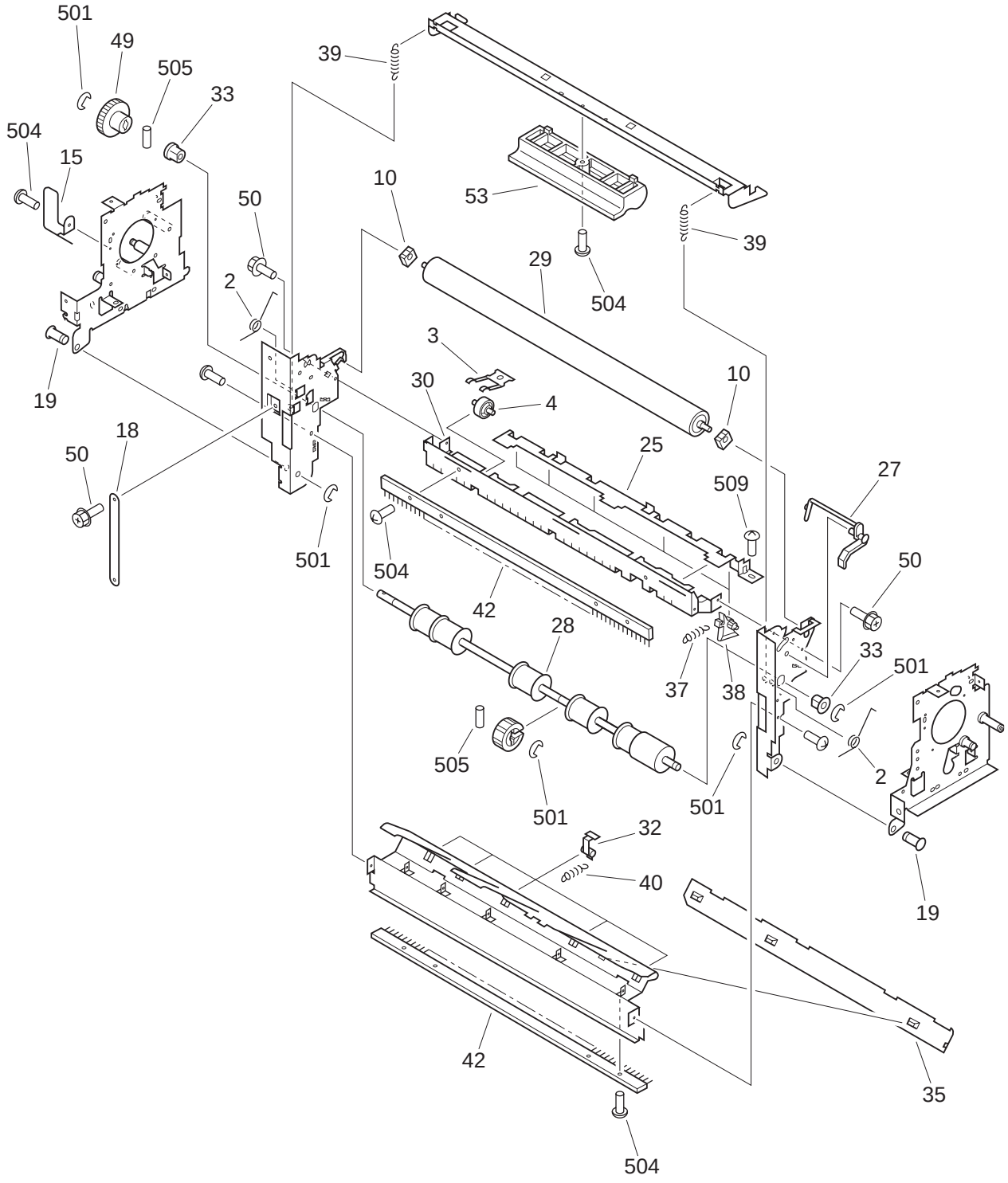

COPYRIGHT©2000 CANON INC.

FIGURE & KEY NO.	PART NUMBER	RANK	QTY	DESCRIPTION	SERIAL NUMBER / REMARKS
810 -	FG0-1239-00P		1	FIXING ASSEMBLY	
1	FA5-1936-000		1	PLATE	
2	FS4-2564-00P		2	SPRING, TORSION	
3	FA6-5393-000		4	SUPPORT, ROLLER	
4	FB1-0303-000		4	ROLLER, DELIVERY, UPPER	
5	FA5-1922-000		1	GUIDE, PAPER	
6	FC2-9767-00P		3	RING, RETAINING	
7	FC2-9773-00P		2	SPRING, LEAF	
8	FC2-8962-00P		1	ROLLER, LOWER	
9	FH7-4634-00P		1	LAMP, HEATER	LA1 J4
10	FA0-0704-00P		2	BUSHING	
11	FS4-2287-00P		2	SPRING, COMPRESSION	
12	XG9-0287-000		2	BEARING, BALL	
13	FF3-2855-00P		1	THERMISTOR UNIT	F2 J202
14	FA5-1932-000		1	PLATE, HEATER SUPPORT, REAR	
15	FA5-1973-000		1	GEAR COVER, REAR	
16	FH0-0132-00P		1	CABLE, DELIVERY SENSOR	J43,44
17	FA5-1938-020		1	SPRING, LEAF	
18	FA0-0321-00P		1	STRAP, DOOR	
19	FS3-5210-00P		2	PIN, DOOR SUPPORT	
20	FH7-7087-020		1	PHOTO-INTERRUPTER	Q5 J44
21	FH7-7083-000		1	THERMOSWITCH	F1
22	FA5-1943-000		1	ELIMINATOR, STATIC CHARGE	
23	FA5-1944-000		2	GEAR, 40T	
24	FF1-9448-020		1	GEAR UNIT	
25	FA0-0224-00P		1	PLATE, ROLLER HOLDER	
26	FA5-1947-000		2	SPRING, LEAF	
27	FA0-0227-00P		1	LEVER, SENSING	
28	FF0-0068-00P		1	ROLLER, DELIVERY	
29	FA0-0711-00P		1	ROLLER, OIL	

COPYRIGHTⓒ2000 CANON INC.

FIGURE & KEY NO.	PART NUMBER	RANK	QTY	DESCRIPTION	SERIAL NUMBER / REMARKS
810 - 30	FA0-0223-00P		1	GUIDE, UPPER	
31	FA2-9078-000		4	WASHER, SPRING	
32	FA2-9037-000		5	CLAW, SEPARATION, LOWER	
33	FS1-1205-000		2	BUSHING	
34	FS1-1240-000		2	BUSHING	
35	FA0-0222-00P		1	PLATE, HOLDER, CLAW	
36	FS1-0884-000		1	GEAR, 22T	
37	FS3-2780-000		5	SPRING, TENSION	
38	FB1-0301-000		5	CLAW, SEPARATION, UPPER	
39	FS2-2564-000		2	SPRING, TENSION	
40	FS2-2778-000		5	SPRING, TENSION	
41	FS2-2774-000		1	SPRING, TENSION	
42	FA5-1969-000		2	ELIMINATOR, STATIC CHARGE	
43	FS2-0893-000		1	GEAR, 24T	
44	FS2-0888-020		1	GEAR, 40T	
45	FS2-0891-020		1	GEAR, 30T/20T	
46	FS2-0890-020		1	GEAR, 29T	
47	FS2-0892-000		1	GEAR, 18T	
48	FS2-0894-000		1	GEAR, 23T	
49	FA0-0703-00P		1	GEAR, 26T	
50	XA9-0626-000		30	SCREW,RS,M3X6	
51	FC2-9961-00P		1	ROLLER, UPPER	
52	FC2-9772-00P		2	CONTACT	
53	FA0-0651-00P		1	HANDLE	
501	XD2-1100-502		AR	RING,E	
502	XD1-1108-221		2	SHIM	
503	XB6-6300-603		4	SCREW,W/WASHER,M3X6	
504	XB6-7300-609		8	SCREW,TP,M3X6	
505	XD3-2200-102		2	PIN,DOWEL	
506	XD2-1100-642		5	RING,E	

COPYRIGHT©2000 CANON INC.

FIGURE & KEY NO.	PART NUMBER	RANK	QTY	DESCRIPTION	SERIAL NUMBER / REMARKS
810 - 507	XB1-2300-309		3	SCREW,MACH.,TRUSS HEAD,M3X3	
508	XB7-1040-259		2	SCREW,ALLEN HEAD,M4X25	
509	XB1-2300-409		2	SCREW,MACH.,TRUSS HEAD,M3X4	
510	XB1-2300-609		2	SCREW,MACH.,TRUSS HEAD,M3X6	
511	XB1-2300-509		2	SCREW,MACH.,TRUSS HEAD,M3X5	

COPYRIGHTⓒ2000 CANON INC.

FIGURE 930

DC CONTROLLER PCB ASSEMBLY

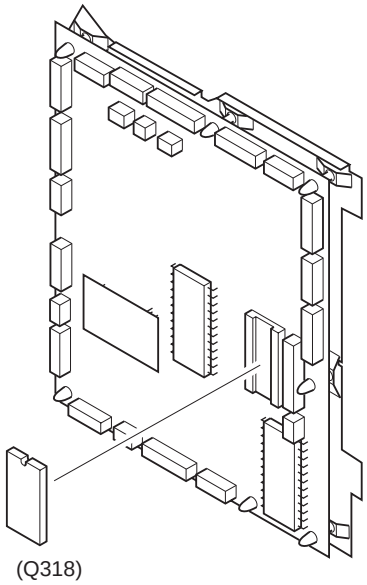

(Q318)

FIGURE & KEY NO.	PART NUMBER	RANK	QTY	DESCRIPTION	SERIAL NUMBER / REMARKS
930 -	FG0-1245-00P		1	DC CONTROLLER PCB ASSEMBLY	
1	FG0-1248-00P		1	IC, M27C256-15F1, EP-ROM	Q318

COPYRIGHTⓒ2000 CANON INC.

FIGURE B

LIST OF CONNECTORS (1/2)

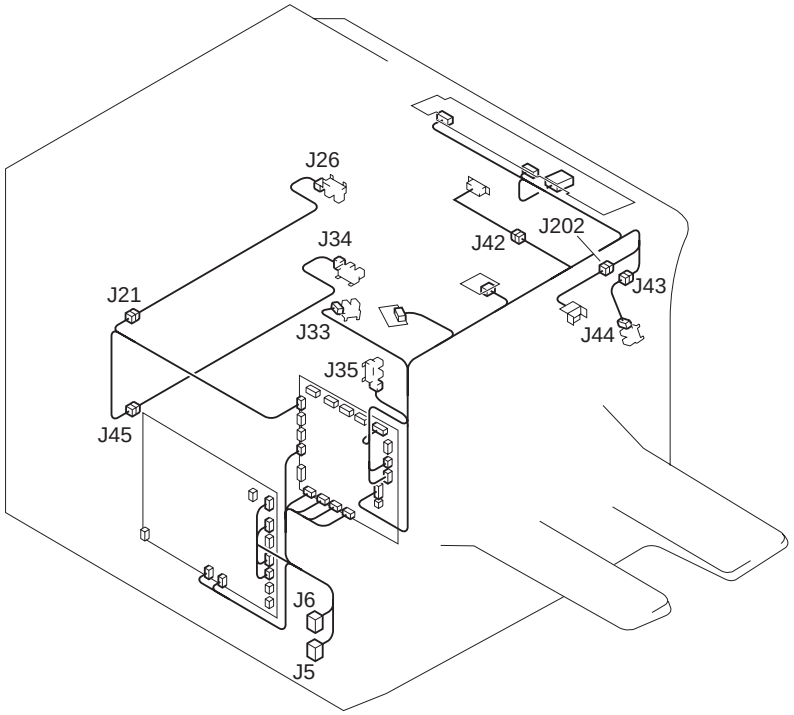

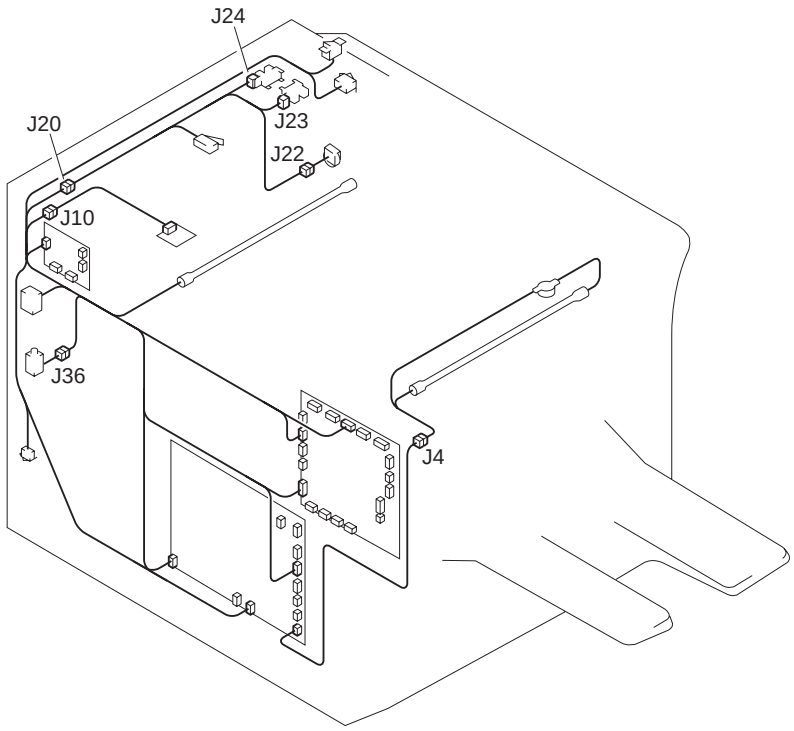

COPYRIGHT©2000 CANON INC.
CANON NP6320 REV.0 JAN. 2000 PRINTED IN JAPAN [IMPRIME AU JAPON]

FIGURE B

LIST OF CONNECTORS (2/2)

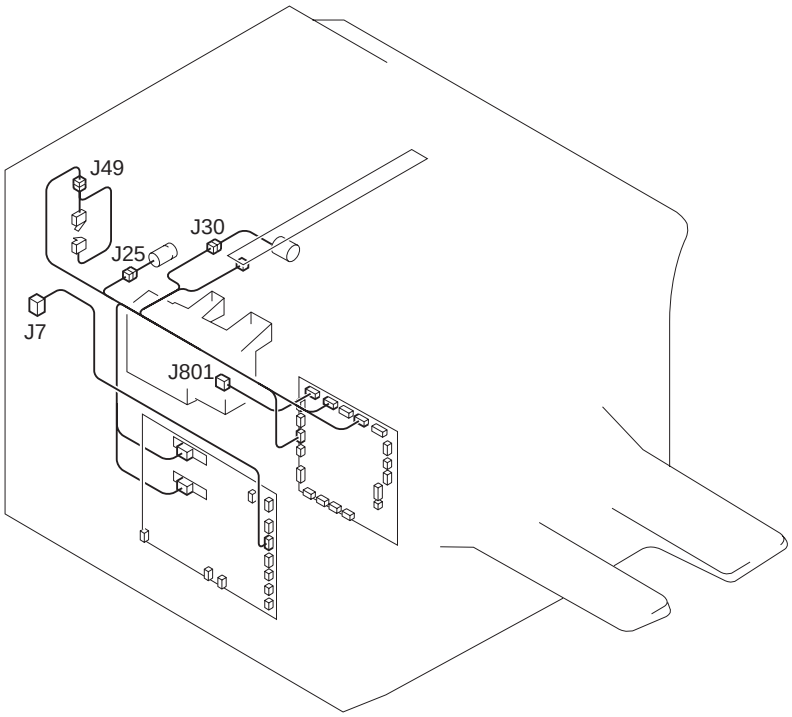

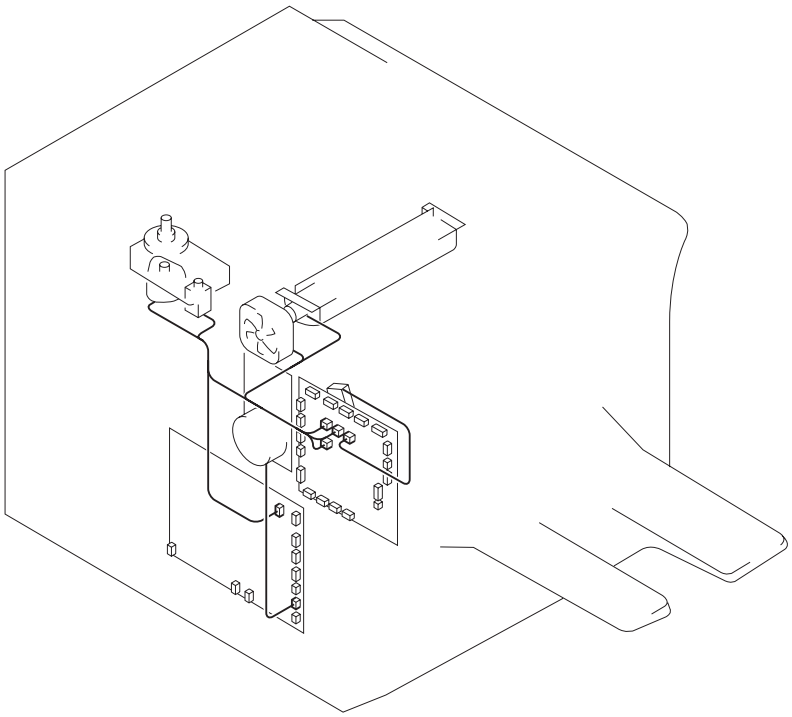

COPYRIGHT©2000 CANON INC.

FIGURE & KEY NO.	PART NUMBER	RANK	QTY	DESCRIPTION	SERIAL NUMBER / REMARKS
B -	NPN		RF	LIST OF CONNECTORS	
J5	------			TO PAPER DECK	
	FH0-0164-00P		1	PAPER DECK CABLE	
J6	------			TO SORTER	
	FH0-0173-00P		1	SORTER CABLE	
J7	------			TO ADF	
	FH0-0160-00P		1	ADF CABLE	
J 10	NPN			DC CABLE	
J 20	FF0-0054-00P		1	MULTI FEED CABLE	
	NPN			DC CABLE	
J 21	FH0-0171-00P		1	CASSETTE CABLE 2	
	NPN			DC CABLE	
J 22	FF0-0054-00P		1	MULTI FEED CABLE	
J 23	FF0-0054-00P		1	MULTI FEED CABLE	
	NPN			REGISTRATION SENSOR	Q2
J 24	FF0-0054-00P		1	MULTI FEED CABLE	
	NPN			MULTI FEED PAPER SENSOR	Q1
J 25	NPN			DC CABLE	
	NPN		RF	REGISTRATION CLUTCH	CL1
J 26	NPN			CASSETTE PAPER SENSOR 1	Q6
J 27	FF0-0054-00P		1	MULTI FEED CABLE	
J 28	NPN			DC CABLE	
J 29	NPN			DC CABLE	
	NPN		RF	CASSETTE FEED SOLENOID 1	SL1
J 30	NPN		RF	SIZE CHANGE SOLENOID	SL4
	NPN			DC CABLE	
J 31	NPN			DC CABLE	
	NPN		RF	CASSETTE FEED SOLENOID 2	SL6
J 32	NPN			DC CABLE	
J 33	FH0-0168-00P		1	DC CABLE 5	

COPYRIGHTⓒ2000 CANON INC.
CANON NP6320 REV.0 JAN. 2000 PRINTED IN JAPAN [IMPRIME AU JAPON]

FIGURE & KEY NO.	PART NUMBER	RANK	QTY	DESCRIPTION	SERIAL NUMBER / REMARKS
B - J 33	NPN			LENS HOME POSITION SENSOR	Q4
J 34	NPN			CASSETTE PAPER SENSOR 2	Q7
J 35	FH0-0168-00P		1	DC CABLE 5	
	NPN			SCANNER HOME POSITION SENSOR	Q3
J 36	NPN		RF	MULTI FEED PAPER SOLENOID	SL3
	NPN			DC CABLE	
J 37	FH0-0168-00P		1	DC CABLE 5	
	PCB			DOCUMENT SIZE SENSOR	
J 39	FF9-0967-000		1	TONER SENSOR CABLE	
	NPN			DC CABLE	
J 41	FG0-1250-00P		1	DC CABLE 4	
	NPN			THERMISTOR	
J 42	FG0-1250-00P		1	DC CABLE 4	
	NPN			COUNTER	CNT1
J 43	FG0-1250-00P		1	DC CABLE 4	
	FH0-0132-00P		1	CABLE, DELIVERY SENSOR	
J 44	FH0-0132-00P		1	CABLE, DELIVERY SENSOR	
	NPN			DELIVERY SENSOR	Q5
J 45	FH0-0171-00P		1	CASSETTE CABLE 2	
	NPN			DC CABLE	
J 49	FF2-3901-00P		1	CABLE, MICROSWITCH	
	NPN			DC CABLE	
J103	FG0-1093-00P		1	DC CONT.-POWER SUPPLY CABLE	
J107	FH0-0164-00P		1	PAPER DECK CABLE	
J108	FG0-1093-00P		1	DC CONT.-POWER SUPPLY CABLE	
J109	NPN			SCANNER MOTOR	M2
	PCB			POWER SUPPLY	
J110	FG0-1093-00P		1	DC CONT.-POWER SUPPLY CABLE	
J111	FH0-0173-00P		1	SORTER CABLE	
J112	FH0-0160-00P		1	ADF CABLE	

COPYRIGHT©2000 CANON INC.

FIGURE & KEY NO.	PART NUMBER	RANK	QTY	DESCRIPTION	SERIAL NUMBER / REMARKS
B - J203	NPN			DC CABLE	
	PCB			LAMP REGULATOR	
J301	PCB			DC CONTROLLER	
J302	FH0-0160-00P		1	ADF CABLE	
	PCB			DC CONTROLLER	
J303	PCB			DC CONTROLLER	
J304	NPN			DC CABLE	
	PCB			DC CONTROLLER	
J305	NPN			DC CABLE	
	PCB			DC CONTROLLER	
J306	NPN			DC CABLE	
	PCB			DC CONTROLLER	
J307	PCB			DC CONTROLLER	
J308	NPN			DC CABLE	
	PCB			DC CONTROLLER	
J309	PCB			DC CONTROLLER	
J311	NPN			DC CABLE	
	PCB			DC CONTROLLER	
J312	NPN			DC CABLE	
	PCB			DC CONTROLLER	
J313	FG0-1250-00P		1	DC CABLE 4	
	PCB			DC CONTROLLER	
J314	FG0-1251-00P		1	CONTROL PANEL CABLE	
	PCB			DC CONTROLLER	
J315	FG0-1251-00P		1	CONTROL PANEL CABLE	
	PCB			DC CONTROLLER	
J316	FG0-1251-00P		1	CONTROL PANEL CABLE	
	PCB			DC CONTROLLER	
J317	PCB			DC CONTROLLER	
J318	FG0-1250-00P		1	DC CABLE 4	

COPYRIGHTⓒ2000 CANON INC.

FIGURE & KEY NO.	PART NUMBER	RANK	QTY	DESCRIPTION	SERIAL NUMBER / REMARKS
B - J318	PCB			DC CONTROLLER	
J319	FH0-0164-00P		1	PAPER DECK CABLE	
	PCB			DC CONTROLLER	
J320	FH0-0164-00P		1	PAPER DECK CABLE	
	PCB			DC CONTROLLER	
J321	FH0-0173-00P		1	SORTER CABLE	
	PCB			DC CONTROLLER	
J322	NPN			SWITCH SOLENOID	SL2
	PCB			DC CONTROLLER	
J323	PCB			DC CONTROLLER	
J324	NPN			DC CABLE	
	PCB			DC CONTROLLER	
J501	FG0-1251-00P		1	CONTROL PANEL CABLE	
	PCB			CONTROL PANEL	
J502	FG0-1251-00P		1	CONTROL PANEL CABLE	
	PCB			CONTROL PANEL	
J503	FG0-1251-00P		1	CONTROL PANEL CABLE	
	PCB			CONTROL PANEL	
J651	NPN		RF	MAIN MOTOR	M1
	NPN			DC CABLE	
J701	FH0-0168-00P		1	DC CABLE 5	
	PCB			AE SENSOR	
J731	NPN			BLANK EXPOSURE LAMP	LA2
	NPN			DC CABLE	

COPYRIGHTⓒ2000 CANON INC.

PAPER DECK PEDESTAL-J1.

〔 220/240V 50Hz F23 - 0442 ZAN00001 - 〕

COPYRIGHTⓒ2000 CANON INC.
CANON NP6320 REV.0 JAN. 2000 PRINTED IN JAPAN [IMPRIME AU JAPON]

CONTENTS

RA. ASSEMBLY LOCATION DIAGRAM

R10. EXTERNAL COVERS, PANELS, ETC.
R11. INTERNAL COMPONENTS 1
R12. INTERNAL COMPONENTS 2
R13. INTERNAL COMPONENTS 3

R20. LIFTER ASSEMBLY

RB. LIST OF CONNECTORS

D2. NUMERICAL INDEX

COPYRIGHTⓒ2000 CANON INC.
CANON NP6320 REV.0 JAN. 2000 PRINTED IN JAPAN [IMPRIME AU JAPON]

FIGURE RA ASSEMBLY LOCATION DIAGRAM

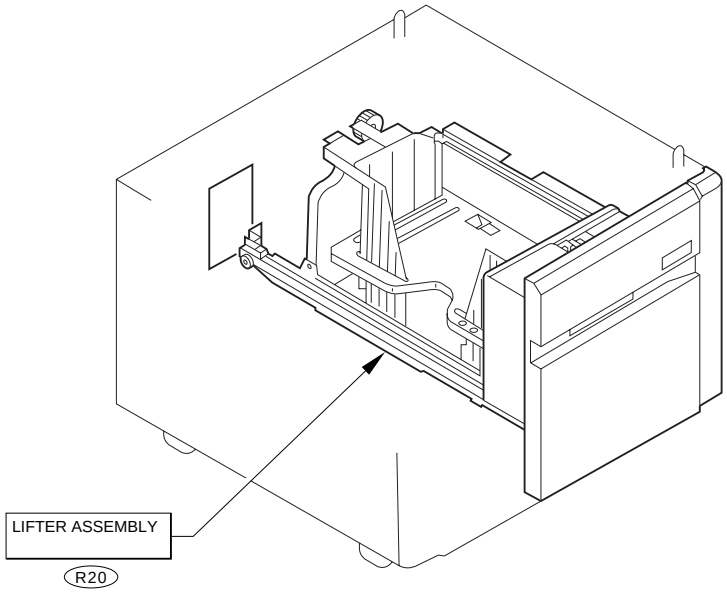

COPYRIGHT©2000 CANON INC.

FIGURE R10

EXTERNAL COVERS, PANELS, ETC.

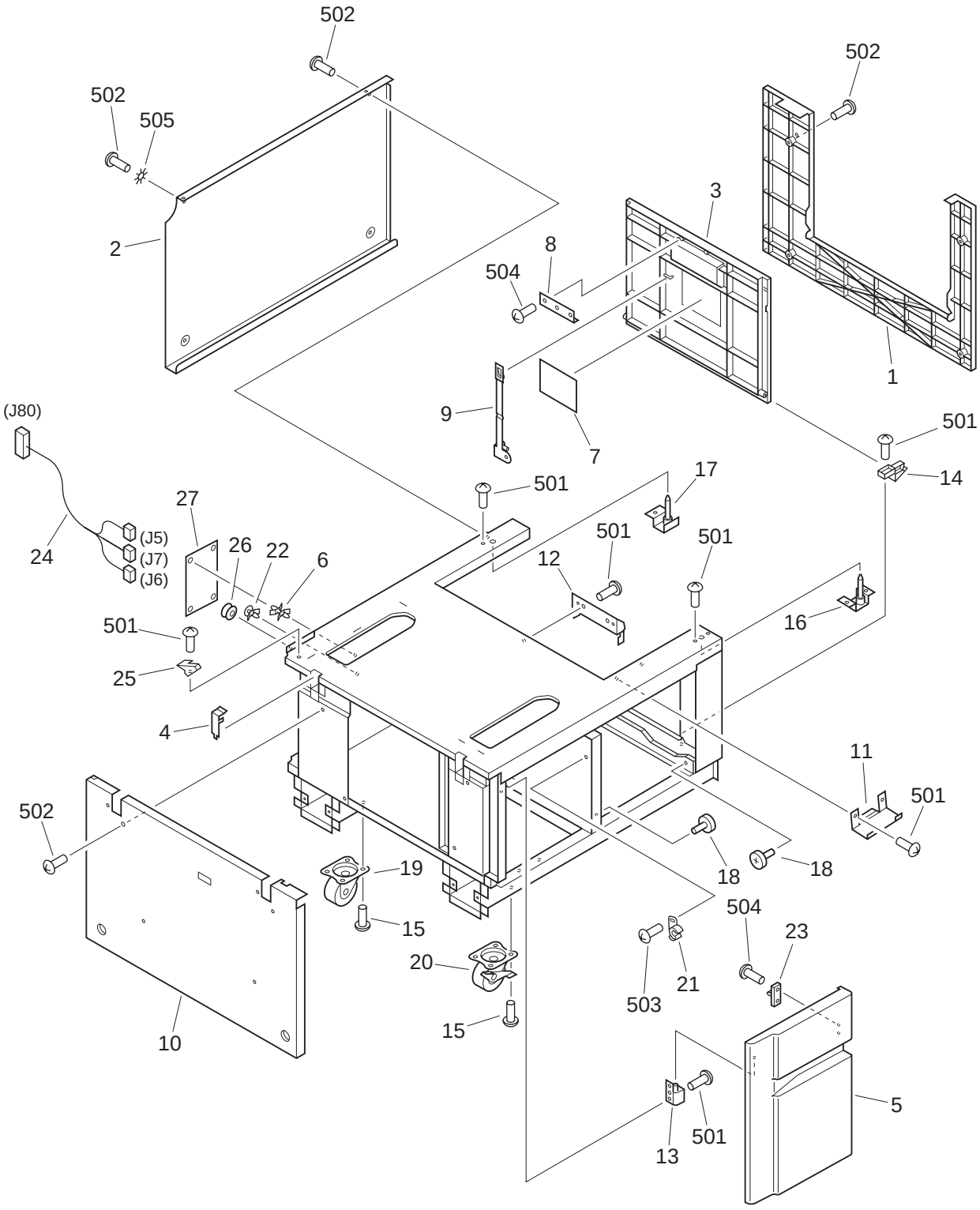

COPYRIGHTⓒ2000 CANON INC.
CANON NP6320 REV.0 JAN. 2000 PRINTED IN JAPAN [IMPRIME AU JAPON]

FIGURE & KEY NO.	PART NUMBER	RANK	QTY	DESCRIPTION	SERIAL NUMBER / REMARKS
R10 -	NPN		RF	EXTERNAL COVERS, PANELS, ETC.	
1	FA6-6324-000		1	PANEL, RIGHT	
2	FA6-6326-000		1	PANEL, REAR	
3	FA6-6328-000		1	DOOR, RIGHT	
4	FA6-6526-000		2	CAP	
5	FC1-9834-000		1	DOOR, LEFT	
6	VT2-0001-006		4	SUPPORT, PCB	
7	FS8-8191-000		1	LABEL, JAM-CLEARING	
8	FA6-6545-000		1	PLATE, MAGNET CATCH	
9	FA6-5453-020		1	TAPE, DOOR	
10	FA6-8581-000		1	COVER, LEFT	
11	FA6-8590-000		1	PLATE, LOCK	
12	FA6-8591-000		1	PLATE, POSITIONING	
13	FA6-8592-000		2	HINGE, LEFT DOOR	
14	FA6-8598-000		2	HINGE, RIGHT DOOR	
15	FE9-0077-000		8	SCREW, W/WASHER	
16	FF2-4151-000		1	PLATE, SPINDLE, 1	
17	FF2-4152-000		1	PLATE, SPINDLE, 2	
18	XG9-0224-000		2	BEARING	
19	XZ9-0162-000		2	CASTER	
20	FE9-0085-000		2	CASTER, STOPPER	
21	XZ9-0241-000		1	LATCH, ROLLER-ACTION (CATCH)	
22	VT2-0002-006		2	SPACER, SUPPORT	
23	XZ9-0332-000		1	LATCH, ROLLER-ACTION, (STRIKE)	
24	FG2-1534-000		1	AC-DC CABLE	
25	FA6-6352-000		1	SPRING, LEAF	
26	X62-6825-000		1	BUSHING, STRAIN RELIEF	
27	FG2-1531-000		1	DECK CONTROLLER PCB ASSEMBLY	
501	XB5-6400-806		AR	SCREW,CT,M4X8	
502	XB1-2400-606		12	SCREW,MACH.,TRUSS HEAD,M4X6	

COPYRIGHTⓒ2000 CANON INC.

FIGURE & KEY NO.	PART NUMBER	RANK	QTY	DESCRIPTION	SERIAL NUMBER / REMARKS
R10 - 503	XB4-7300-809		2	SCREW,TAPPING,TRUSS HEAD,M3X8	
504	XB6-7400-609		13	SCREW,TP,M4X6	
505	XD1-4200-402		2	WASHER,TOOTHED LOCK	

COPYRIGHTⓒ2000 CANON INC.
CANON NP6320 REV.0 JAN. 2000 PRINTED IN JAPAN [IMPRIME AU JAPON]

FIGURE R11

INTERNAL COMPONENTS 1

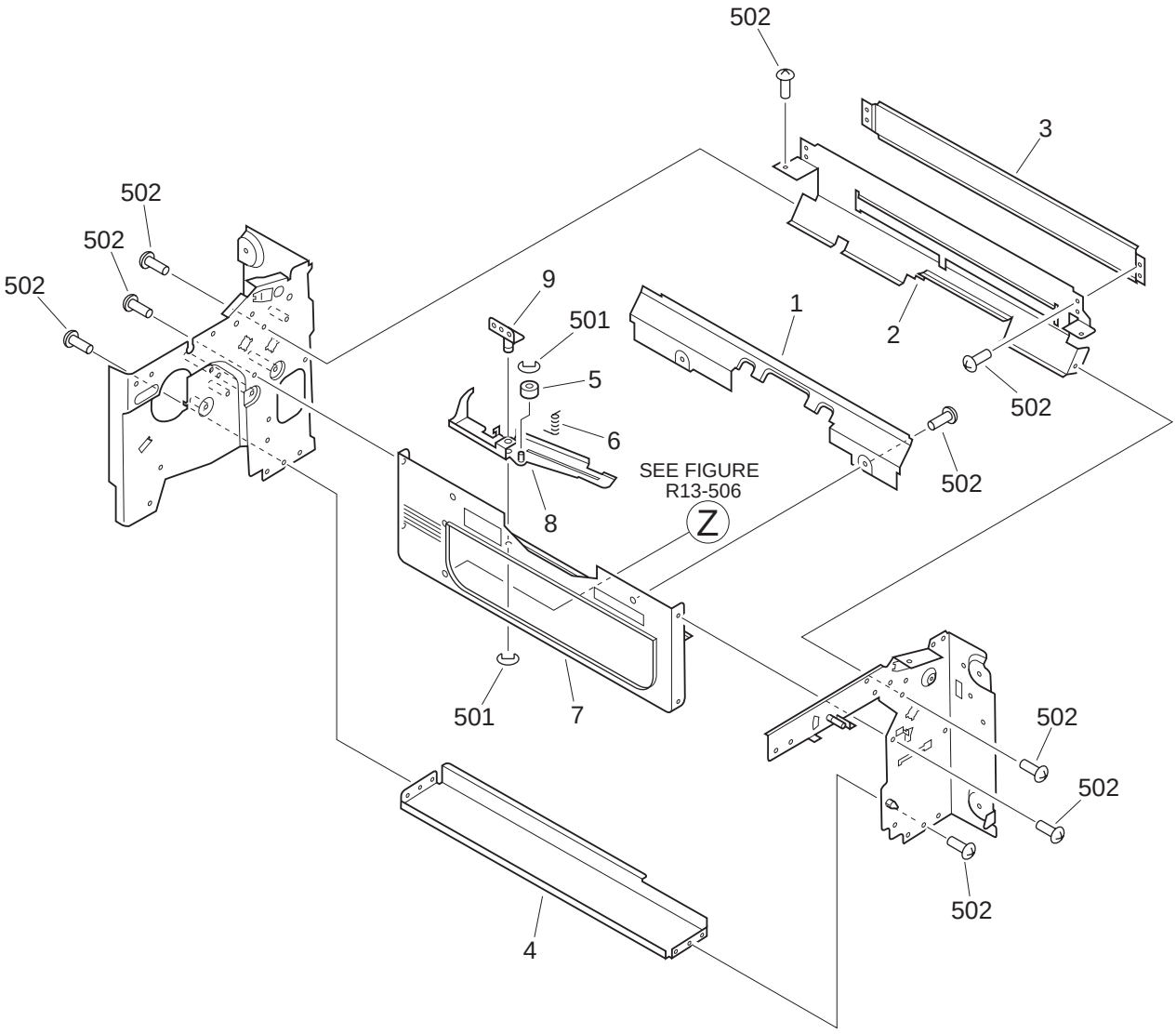

COPYRIGHTⓒ2000 CANON INC.
CANON NP6320 REV.0 JAN. 2000 PRINTED IN JAPAN [IMPRIME AU JAPON]

FIGURE & KEY NO.	PART NUMBER	RANK	QTY	DESCRIPTION	SERIAL NUMBER / REMARKS
R11 -	NPN		RF	INTERNAL COMPONENTS 1	
1	FA5-8418-030		1	GUIDE, PAPER FEED, LOWER	
2	FA6-6339-000		1	GUIDE, LEFT	
3	FA6-6340-000		1	GUIDE, RIGHT	
4	FA6-6343-000	N	1	PLATE, BOTTOM	
5	FA5-8442-000		1	ROLLER, CAM	
6	FA6-8595-000		1	SPRING, TORSION	
7	FA5-8420-000	N	1	PLATE	
8	FF2-4843-000		1	LEVER, CAM	
9	FF2-4153-000		1	SUPPORT, LEVER	
501	XD2-1100-502		AR	RING,E	
502	XB6-7400-609		AR	SCREW,TP,M4X6	

COPYRIGHTⓒ2000 CANON INC.

FIGURE R12

INTERNAL COMPONENTS 2

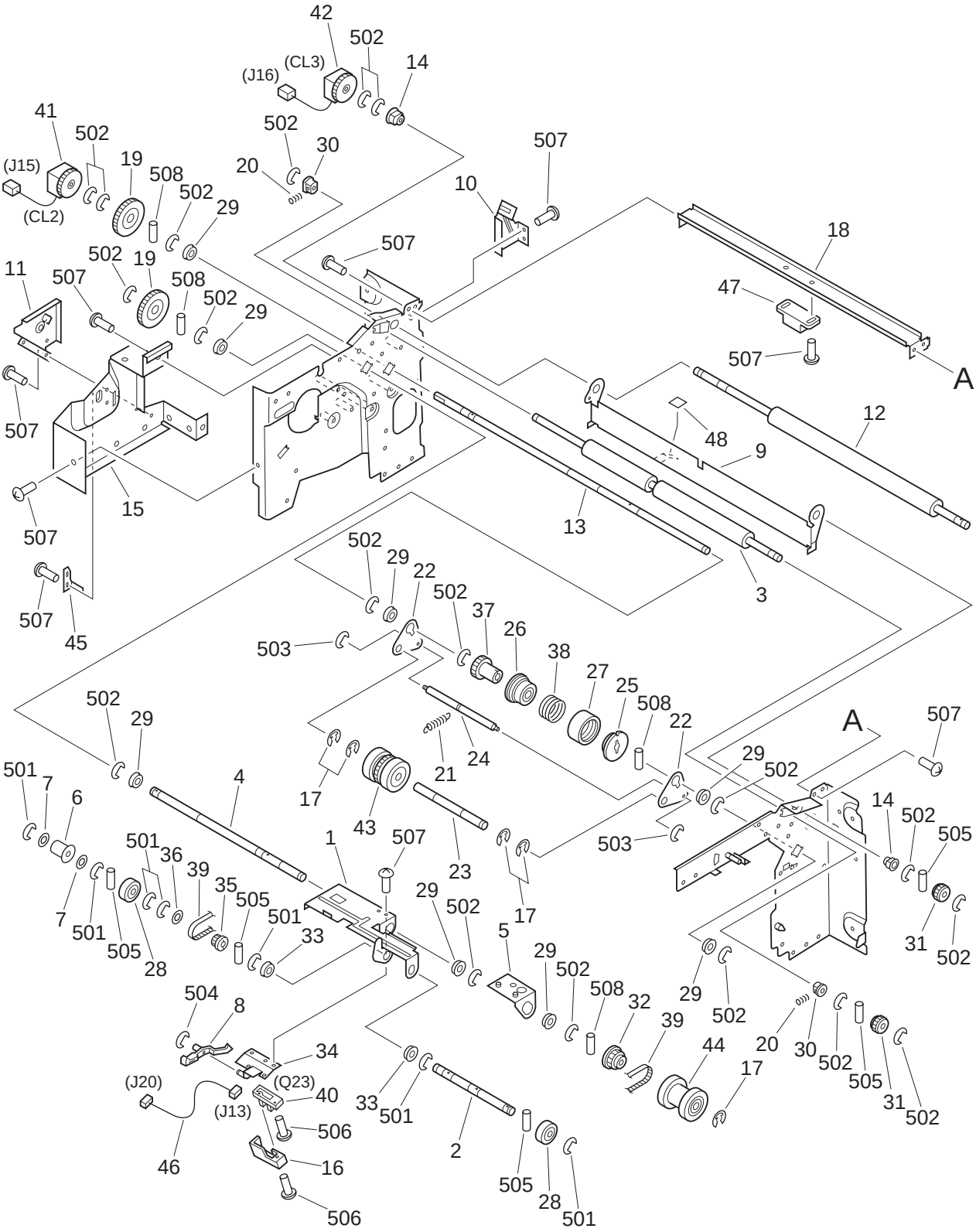

COPYRIGHT©2000 CANON INC.
CANON NP6320 REV.0 JAN. 2000 PRINTED IN JAPAN [IMPRIME AU JAPON]

FIGURE & KEY NO.	PART NUMBER	RANK	QTY	DESCRIPTION	SERIAL NUMBER / REMARKS
R12 -	NPN		RF	INTERNAL COMPONENTS 2	
1	FA5-8400-000		1	SUPPORT, PICK-UP ROLLER	
2	FA5-8401-000		1	ROD, PICK-UP ROLLER	
3	FA5-8409-000		1	ROLLER, SHAFT	
4	FA5-8410-000		1	ROD, FEED ROLLER	
5	FA5-8411-000		1	HOLDER, FEED ROLLER	
6	FA5-8412-000		1	BUSHING	
7	FA5-8413-000		2	WASHER	
8	FA5-8414-000		1	ARM, PAPER SENSING	
9	FA6-6338-000		1	GUIDE	
10	FA6-6345-020		1	PLATE, CLUTCH STOP	
11	FA5-8432-000		1	PLATE, CLUTCH STOP, LOWER	
12	FA5-8434-000		1	ROLLER, DRIVE	
13	FA5-8435-000		1	ROD, TORQUE LIMITTER	
14	FA5-8439-000		2	BUSHING	
15	FA5-8447-000		1	PLATE, CABLE	
16	FA5-8449-000		1	COVER, SENSOR	
17	FA4-1159-000		6	RETAINING RING	
18	FA6-8593-000	N	1	PLATE, UPPER	
19	FS3-0456-000		2	GEAR, 40T	
20	FS3-2400-000		2	SPRING, COMPRESSION	
21	FS3-2401-000		1	SPRING, TENSION	
22	FA5-3436-000		2	SUPPORT, SEPARATION ROLLER	
23	FA5-3444-000		1	SHAFT, ROLLER, SEPARATION	
24	FA5-3446-000		1	SHAFT, PRESSURE	
25	FA5-3452-000		1	DRUM, CLUTCH, IN-PUT	
26	FA5-3453-000		1	DRUM, CLUTCH, OUT-PUT	
27	FA5-3454-000		1	COVER, DRUM, CLUTCH	
28	FF9-1113-030		2	ROLLER, PICK-UP, SILVER	
29	FS1-1202-000		8	BUSHING	

COPYRIGHTⓒ2000 CANON INC.

FIGURE & KEY NO.	PART NUMBER	RANK	QTY	DESCRIPTION	SERIAL NUMBER / REMARKS
R12 - 30	FS1-1500-000		2	BUSHING	
31	FS2-0448-000		2	GEAR, 32T	
32	FS2-3008-000		1	PULLEY, 32T	
33	FS1-1206-000		2	BUSHING	
34	FF2-1830-000		1	PLATE, SENSOR	
35	FS2-3009-000		1	PULLEY, 20T	
36	FS2-6020-000		1	FLANGE	
37	FS3-0079-000		1	GEAR, 21T	
38	FS3-2033-000		1	SPRING, CLUTCH	
39	XF9-0266-000		1	BELT, TIMING	
40	FH7-7038-000		1	PHOTO-INTERRUPTER	
41	FH7-5242-000		1	CLUTCH, PAPER PICK-UP	
42	FH7-5251-000		1	CLUTCH, REGISTRATION ROLLER	
43	FL9-0010-020		1	ROLLER, SEPARATION	
44	FL9-0009-030		1	ROLLER, PAPER FEED	
45	FA5-8450-000		1	PLATE, ADJUSTING	
46	FF2-4853-000		1	CABLE	
47	XZ9-0240-000		1	CATCH, MAGNET	
48	FA6-6335-000		1	LABEL	
501	XD2-1100-502		AR	RING,E	
502	XD2-1100-642		AR	RING,E	
503	XD2-1100-402		2	RING,E	
504	XD2-1100-242		2	RING,E	
505	XD3-2200-102		5	PIN,DOWEL	
506	XB1-2301-009		AR	SCREW,MACH.,TRUSS HEAD,M3X10	
507	XB6-7400-609		AR	SCREW,TP,M4X6	
508	XD3-2200-122		AR	PIN,DOWEL	

COPYRIGHTⓒ2000 CANON INC.

FIGURE R13

INTERNAL COMPONENTS 3

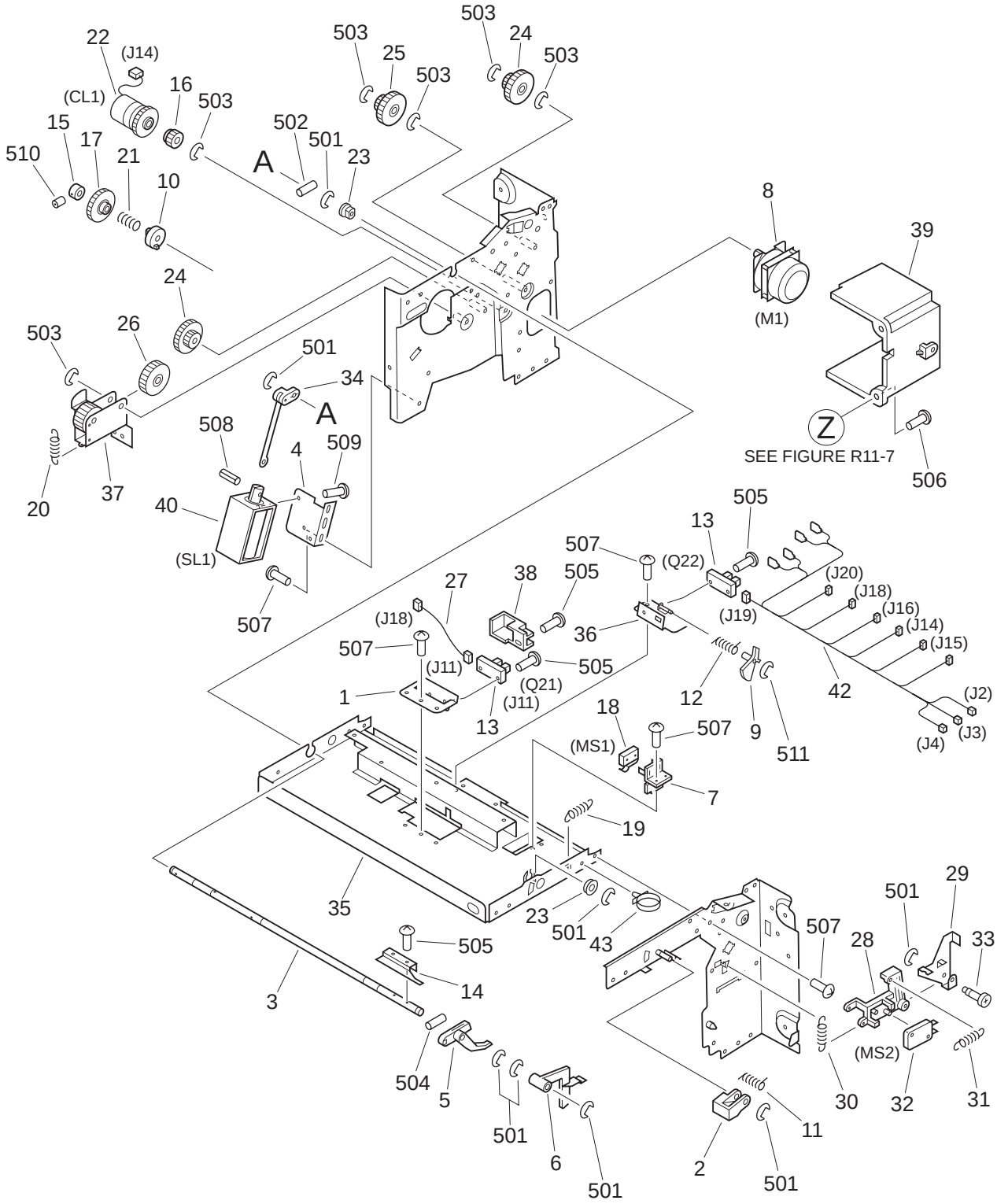

COPYRIGHT©2000 CANON INC.
CANON NP6320 REV.0 JAN. 2000 PRINTED IN JAPAN [IMPRIME AU JAPON]

FIGURE & KEY NO.	PART NUMBER	RANK	QTY	DESCRIPTION	SERIAL NUMBER / REMARKS
R13 -	NPN		RF	INTERNAL COMPONENTS 3	
1	FA5-8399-000		1	MOUNT, SENSOR	
2	FA5-8404-000		1	ARM, RELEASE	
3	FA5-8405-000		1	SHAFT, PICK-UP ROLLER RELEASE	
4	FA5-8407-000		1	MOUNT, SOLENOID	
5	FA5-8408-000		1	ARM, RELEASE	
6	FA5-8416-000		1	ARM, SENSING	
7	FA5-8417-000		1	HOLDER, SENSOR	
8	FH7-1747-000		1	MOTOR	220V/240V
9	FA5-8429-000		1	FLAG	
10	FA5-8436-000		1	COLLAR	
11	FA5-8437-000		1	SPRING, TORSION	
12	FA5-8438-000		1	SPRING, TORSION	
13	FH7-7038-000		2	PHOTO-INTERRUPTER	
14	FA5-8448-000		1	PLATE, PICK-UP ROLLER RELEASIN	
15	FA1-1895-000		1	COLLAR	
16	FS3-0452-000		1	GEAR, 16T	
17	FS3-0453-000		1	GEAR, 40T ONE-WAY	
18	WC4-0145-000		1	MICROSWITCH	
19	FS3-2402-000		1	SPRING, TENSION	
20	FS3-2403-000		1	SPRING, TENSION	
21	FS3-2404-000		1	SPRING, ONE-WAY	
22	FH7-5227-000		1	CLUTCH, ELECTROMAGNETIC	
23	FS1-1206-000		2	BUSHING	
24	FS3-0645-000		2	GEAR, 20T/40T	
25	FS3-0972-000		1	GEAR, 30T/45T	
26	FS3-0570-000		1	GEAR, 40T	
27	FF2-4851-000		1	CABLE	
28	FA6-6336-000		1	ARM, SWITCH	
29	FA6-6337-000		1	LEVER, SWITCH	

COPYRIGHTⓒ2000 CANON INC.

FIGURE & KEY NO.	PART NUMBER	RANK	QTY	DESCRIPTION	SERIAL NUMBER / REMARKS
R13 - 30	FS3-2899-000		1	SPRING, TENSION	
31	FS3-2900-000		1	SPRING, TENSION	
32	WC4-0240-000		1	SWITCH, DOOR	
33	FS2-9327-000		1	SCREW, STEPPED, M4	
34	FF2-1834-000		1	LINK, SOLENOID	
35	FF2-1835-000		1	PLATE, UPPER	
36	FF2-4148-000		1	SUPPORT, SENSOR	
37	FF2-1832-000		1	GEAR UNIT, 30T	
38	FA5-8449-000		1	COVER, SENSOR	
39	FA6-8597-000		1	COVER, MOTOR	
40	FH7-5240-000		1	SOLENOID, DC 24V	
41	WT2-5041-000		9	TIE, CABLE	
42	FG2-1533-000		1	CABLE, DC	J2,3,4,14,15,16,17 J18,19,20
43	WT2-0262-000		6	CLIP, CABLE	
501	XD2-1100-502		AR	RING,E	
502	XD3-2200-142		5	PIN,DOWEL	
503	XD2-1100-642		AR	RING,E	
504	XD3-2200-162		1	PIN,DOWEL	
505	XB1-2301-009		AR	SCREW,MACH.,TRUSS HEAD,M3X10	
506	XB1-2400-606		2	SCREW,MACH.,TRUSS HEAD,M4X6	
507	XB6-7400-609		AR	SCREW,TP,M4X6	
508	XD3-1300-102		1	PIN,SPRING	
509	XB1-2300-609		2	SCREW,MACH.,TRUSS HEAD,M3X6	
510	XB6-2400-608		1	SETSCREW,M4X6	
511	XD2-1100-242		1	RING,E	

COPYRIGHTⓒ2000 CANON INC.
CANON NP6320 REV.0 JAN. 2000 PRINTED IN JAPAN [IMPRIME AU JAPON]

FIGURE R20

LIFTER ASSEMBLY (1/2)

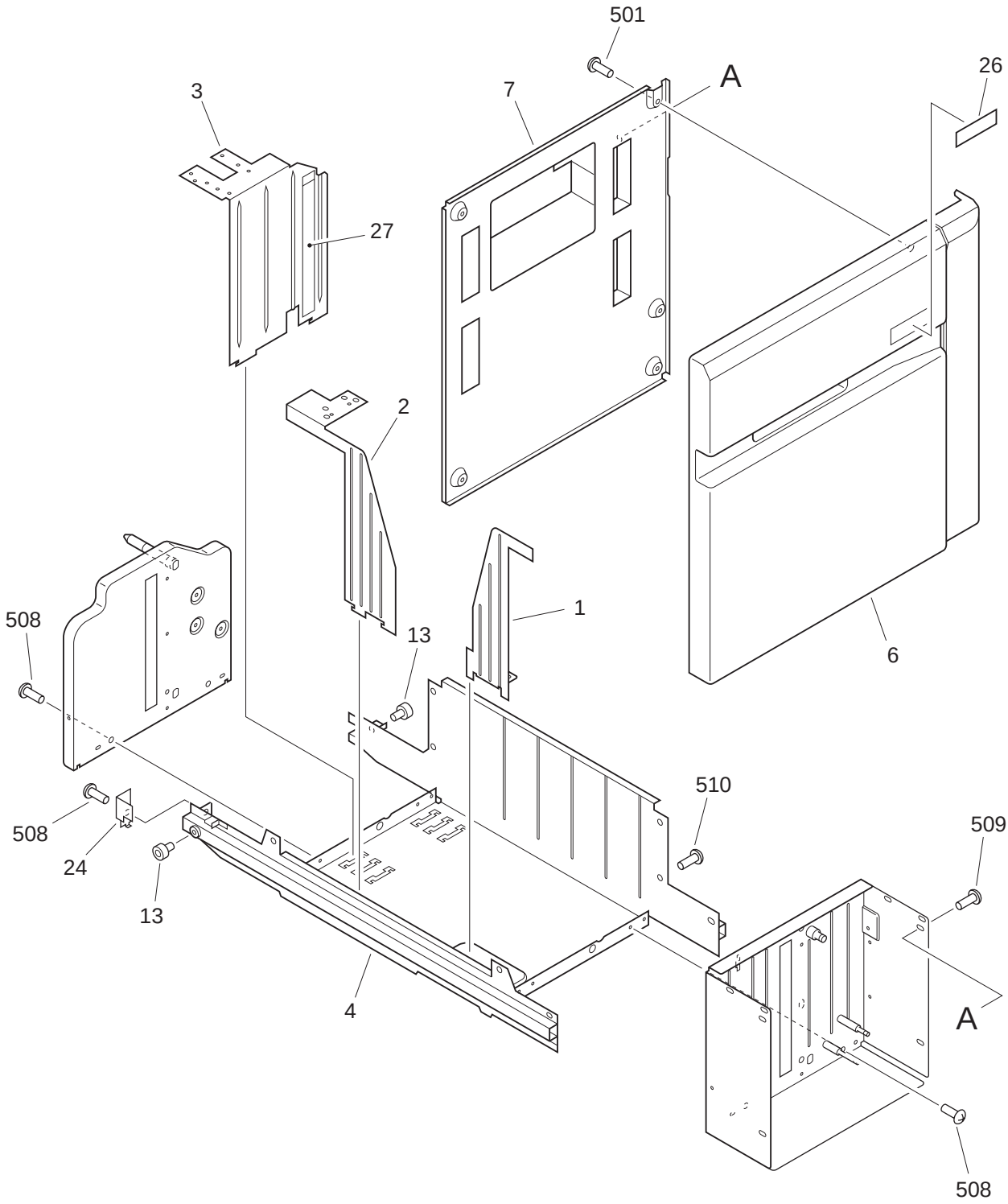

COPYRIGHTⓒ2000 CANON INC.
CANON NP6320 REV.0 JAN. 2000 PRINTED IN JAPAN [IMPRIME AU JAPON]

FIGURE R20

LIFTER ASSEMBLY (2/2)

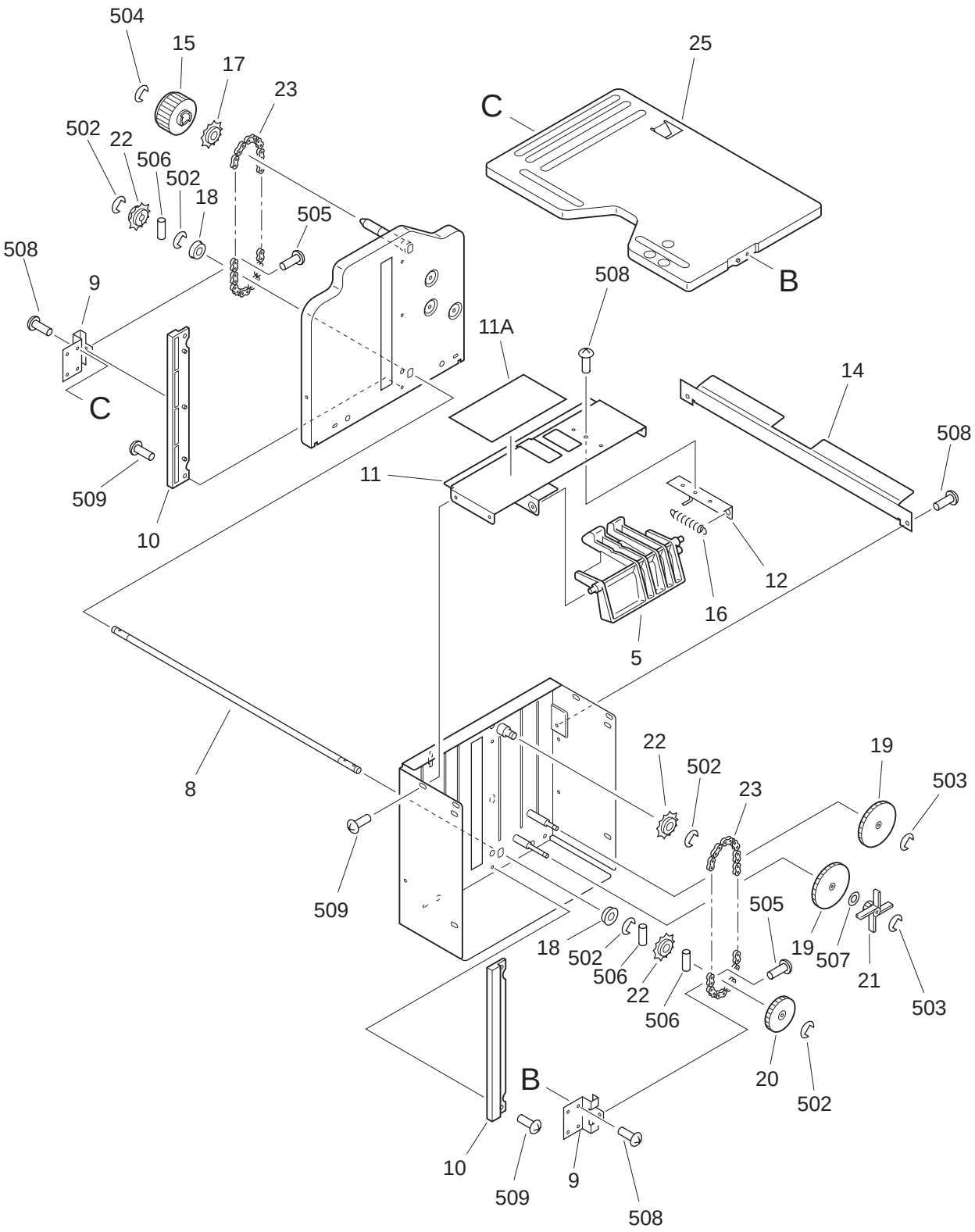

COPYRIGHT©2000 CANON INC.

FIGURE & KEY NO.	PART NUMBER	RANK	QTY	DESCRIPTION	SERIAL NUMBER / REMARKS
R20 -	NPN		RF	LIFTER ASSEMBLY	
1	FA5-8460-000		1	PLATE, PAPER END POSN. FRONT	
2	FA5-8461-000		1	PLATE, PAPER END POSN. REAR	
3	FA5-8462-000		1	PLATE, WIDTH ADJUSTMENT	
4	FA6-6351-000	N	1	PLATE, BOTTOM	
5	FA5-8464-020		1	LEVER	
6	FC1-9835-000		1	DOOR, FRONT	
7	FA6-6350-000	N	1	FRAME, COVER	
8	FA5-8468-000		1	ROD, LIFTER	
9	FA5-8469-000		2	GUIDE, LIFTER	
10	FA5-8470-000		2	RAIL, LIFTER	
11	FL9-0046-000		1	PLATE, HANDLE	
11A	FS9-8099-000		1	LABEL	
12	FA5-8473-000		1	PLATE, HANDLE, RIGHT	
13	XG9-0224-000		2	BEARNG	
14	FA5-8478-000		1	GUIDE	
15	FS3-0455-000		1	GEAR, 40T	
16	FS3-2406-000		1	SPRING, TENSION	
17	FS2-3182-000		1	SPROCKET, 14T	
18	FS1-1206-000		2	BUSHING	
19	FS2-0429-000		2	GEAR, 17T/83T	
20	FS2-0430-000		1	GEAR, 60T	
21	FS2-0431-000		1	GEAR, 17T	
22	FS1-3171-030		3	SPROCKET, 14T	
23	XF1-1106-601		2	CHAIN, ROLLER	
24	FA5-8499-000		1	PLATE, STOP	
25	FA5-8465-000		1	PLATE, PAPER LIFTING	
26	FS8-8448-000		1	LABEL, CASSETTE SIZE	
27	FS9-8106-000		1	LABEL	
501	XB4-7400-809		4	SCREW,TAPPING,TRUSS HEAD,M4X8	

COPYRIGHTⓒ2000 CANON INC.
CANON NP6320 REV.0 JAN. 2000 PRINTED IN JAPAN [IMPRIME AU JAPON]

FIGURE & KEY NO.	PART NUMBER	RANK	QTY	DESCRIPTION	SERIAL NUMBER / REMARKS
R20 - 502	XD2-1100-502		5	RING,E	
503	XD2-1100-322		2	RING,E	
504	XD2-1100-642		1	RING,E	
505	XB1-2301-009		2	SCREW,MACH.,TRUSS HEAD,M3X10	
506	XD3-2200-142		3	PIN,DOWEL	
507	XD1-1104-122		1	SHIM	
508	XB6-7400-609		16	SCREW,TP,M4X6	
509	XB1-2400-809		11	SCREW,MACH.,TRUSS HEAD,M4X8	
510	XB1-2400-609		6	SCREW,MACH.,TRUSS HEAD,M4X6	

COPYRIGHTⓒ2000 CANON INC.

FIGURE RB

LIST OF CONNECTORS

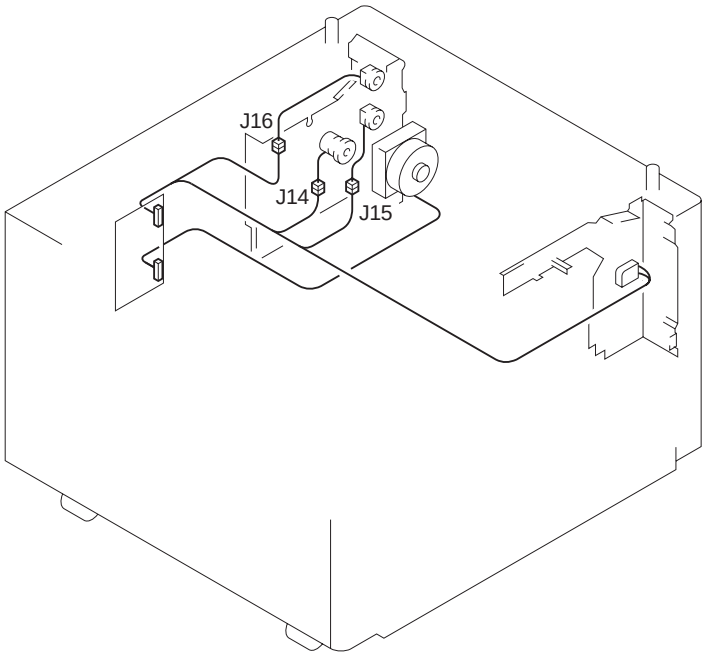

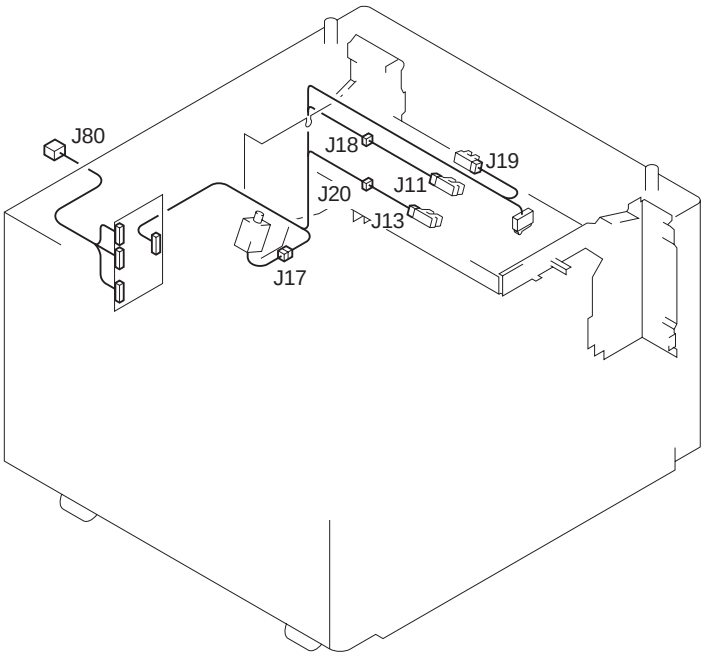

COPYRIGHT©2000 CANON INC.
CANON NP6320 REV.0 JAN. 2000 PRINTED IN JAPAN [IMPRIME AU JAPON]

FIGURE & KEY NO.	PART NUMBER	RANK	QTY	DESCRIPTION	SERIAL NUMBER / REMARKS
R B -	NPN		RF	LIST OF CONNECTORS	
J2	PCB			DECK CONTROLLER	
	VS1-0842-009		1	CONNECTOR, 9P, FEMALE	
J3	PCB			DECK CONTROLLER	
	VS1-0192-004		1	CONNECTOR, 4P, FEMALE	
J4	PCB			DECK CONTROLLER	
	VS1-0842-008		1	CONNECTOR, 8P, FEMALE	
J5	PCB			DECK CONTROLLER	
	VS3-0046-003		1	CONNECTOR, 3P, FEMALE	
J6	PCB			DECK CONTROLLER	
	VS1-0842-010		1	CONNECTOR, 10P, FEMALE	
J7	PCB			DECK CONTROLLER	
	VS1-0842-007		1	CONNECTOR, 7P, FEMALE	
J 11	NPN			PHOTO-INTERRUPTER	Q21
	VS1-0192-003		1	CONNECTOR, 3P, FEMALE	
J 13	NPN			PHOTO-INTERRUPTER	Q23
	VS1-0192-004		1	CONNECTOR, 4P, FEMALE	
J 14	NPN			CLUTCH	CL1
	VS1-0192-003		1	CONNECTOR, 3P, FEMALE	
J 15	NPN			CLUTCH	CL2
	VS1-0192-002		1	CONNECTOR, 2P, FEMALE	
J 16	NPN			CLUTCH	CL3
	VS1-0192-003		1	CONNECTOR, 3P, FEMALE	
J 17	NPN			SOLENOID	SL1
	VS1-0192-002		1	CONNECTOR, 2P, FEMALE	
J 18	VS1-0842-003		2	CONNECTOR, 3P, FEMALE	
	VS1-5057-003		1	CONNECTOR, SNAP TIGHT	
J 19	VS1-0842-003		2	CONNECTOR, 3P, FEMALE	
	VS1-5057-003		1	CONNECTOR, SNAP TIGHT	
J 20	VS1-0842-004		2	CONNECTOR, 4P, FEMALE	

COPYRIGHT©2000 CANON INC.

FIGURE & KEY NO.	PART NUMBER	RANK	QTY	DESCRIPTION	SERIAL NUMBER / REMARKS
R B - J 20	VS1-5057-004		1	CONNECTOR, SNAP TIGHT	
J 80	------			TO COPIER	
	FH2-5822-000		17	SOCKET CONTACT, 22-26AWG	
	FH2-5826-000		3	SOCKET CONTACT, 16-20AWG	
	FH2-5828-000		1	HOUSING, CONNECTOR	
	FH2-5830-000		1	CLAMP KIT, CABLE	

COPYRIGHTⓒ2000 CANON INC.
CANON NP6320 REV.0 JAN. 2000 PRINTED IN JAPAN [IMPRIME AU JAPON]

D1 NUMERICAL INDEX

PART NUMBER	FIGURE & KEY NO.
96 - 0093 - 000	103 - 5A
	103 - 6A
97 - 5527 - 000	560 - 12
FA0 - 0085 - 00P	103 - 34
FA0 - 0155 - 00P	102 - 20
FA0 - 0163 - 00P	300 - 8
FA0 - 0169 - 00P	315 - 12
FA0 - 0222 - 00P	810 - 35
FA0 - 0223 - 00P	810 - 30
FA0 - 0224 - 00P	810 - 25
FA0 - 0227 - 00P	810 - 27
FA0 - 0241 - 00P	320 - 2A
FA0 - 0246 - 00P	350 - 6
FA0 - 0247 - 00P	350 - 5
FA0 - 0248 - 00P	350 - 14
FA0 - 0252 - 00P	350 - 17
FA0 - 0253 - 00P	103 - 18
FA0 - 0255 - 00P	103 - 32
FA0 - 0262 - 00P	250 - 2
FA0 - 0263 - 00P	104 - 18
FA0 - 0269 - 00P	325 - 2
FA0 - 0270 - 01P	325 - 10
FA0 - 0271 - 00P	325 - 23
FA0 - 0272 - 00P	325 - 24
FA0 - 0273 - 00P	325 - 7
FA0 - 0277 - 00P	350 - 11
FA0 - 0285 - 00P	101 - 14
FA0 - 0286 - 00P	103 - 42
FA0 - 0287 - 00P	103 - 31
FA0 - 0292 - 00P	105 - 9
FA0 - 0296 - 00P	105 - 13
FA0 - 0298 - 00P	104 - 22
FA0 - 0301 - 00P	104 - 17
FA0 - 0303 - 00P	100 - 2
FA0 - 0304 - 00P	100 - 20
FA0 - 0305 - 01P	100 - 5
FA0 - 0306 - 00P	100 - 8
FA0 - 0307 - 01P	100 - 4
FA0 - 0308 - 00P	100 - 14
FA0 - 0309 - 00P	105 - 14
FA0 - 0310 - 00P	104 - 1
FA0 - 0311 - 00P	104 - 2
FA0 - 0315 - 00P	300 - 1
FA0 - 0321 - 00P	810 - 18
FA0 - 0329 - 00P	190 - 1
FA0 - 0333 - 00P	210 - 30
FA0 - 0339 - 00P	104 - 9
FA0 - 0628 - 00P	130 - 1
FA0 - 0629 - 00P	130 - 2
FA0 - 0649 - 00P	101 - 5
FA0 - 0650 - 00P	103 - 22B
FA0 - 0651 - 00P	810 - 53
FA0 - 0652 - 00P	100 - 19
FA0 - 0654 - 00P	325 - 9A
FA0 - 0657 - 00P	100 - 7
FA0 - 0665 - 00P	130 - 11
FA0 - 0666 - 00P	130 - 12
FA0 - 0667 - 01P	130 - 13
FA0 - 0668 - 00P	130 - 16
FA0 - 0671 - 00P	100 - 13H
FA0 - 0675 - 00P	100 - 13G
FA0 - 0679 - 00P	325 - 11A
FA0 - 0702 - 00P	350 - 1
FA0 - 0703 - 00P	810 - 49
FA0 - 0704 - 00P	810 - 10
FA0 - 0705 - 00P	105 - 6
FA0 - 0709 - 00P	255 - 2
FA0 - 0711 - 00P	810 - 29
FA1 - 0056 - 000	103 - 27
FA1 - 9546 - 000	102 - 6
FA2 - 7162 - 000	100 - 3
	100 - 13C
FA2 - 8227 - 000	320 - 1
FA2 - 9037 - 000	810 - 32
FA2 - 9078 - 000	810 - 31
FA3 - 8493 - 000	102 - 1
FA3 - 9055 - 000	160 - 5A
FA4 - 1149 - 000	102 - 21
FA4 - 5594 - 000	351 - 2
FA5 - 1185 - 000	160 - 3
FA5 - 1564 - 020	210 - 19
FA5 - 1568 - 000	210 - 22
FA5 - 1580 - 000	210 - 3
FA5 - 1593 - 000	210 - 6
FA5 - 1594 - 000	210 - 7
FA5 - 1595 - 000	210 - 8
FA5 - 1596 - 000	210 - 9
FA5 - 1597 - 000	210 - 10
FA5 - 1598 - 000	210 - 11
FA5 - 1600 - 000	210 - 13
FA5 - 1605 - 000	210 - 5
FA5 - 1608 - 000	210 - 23
FA5 - 1611 - 020	210 - 15
FA5 - 1613 - 000	210 - 17
FA5 - 1615 - 000	210 - 25
FA5 - 1628 - 000	400 - 7
FA5 - 1630 - 000	400 - 8
FA5 - 1633 - 030	400 - 11
FA5 - 1636 - 000	400 - 14
FA5 - 1637 - 000	400 - 15
FA5 - 1642 - 000	401 - 2
FA5 - 1643 - 000	401 - 3
FA5 - 1644 - 000	401 - 4
FA5 - 1646 - 000	401 - 5
FA5 - 1650 - 000	400 - 17
FA5 - 1656 - 000	220 - 3
FA5 - 1715 - 000	550 - 1
FA5 - 1729 - 000	450 - 12A
FA5 - 1762 - 000	640 - 14
FA5 - 1773 - 000	640 - 10
FA5 - 1777 - 000	640 - 27A
FA5 - 1779 - 000	640 - 29
FA5 - 1780 - 000	640 - 13
FA5 - 1787 - 000	640 - 28
FA5 - 1802 - 000	102 - 18
FA5 - 1848 - 000	103 - 40
FA5 - 1862 - 000	560 - 6
FA5 - 1873 - 000	560 - 7
FA5 - 1874 - 020	560 - 8
FA5 - 1875 - 020	560 - 9
FA5 - 1878 - 000	560 - 10
FA5 - 1903 - 000	350 - 12
FA5 - 1904 - 000	350 - 13
FA5 - 1907 - 000	350 - 16
FA5 - 1912 - 000	103 - 22A
FA5 - 1922 - 000	810 - 5
FA5 - 1932 - 000	810 - 14
FA5 - 1936 - 000	810 - 1
FA5 - 1938 - 020	810 - 17
FA5 - 1943 - 000	810 - 22
FA5 - 1944 - 000	810 - 23
FA5 - 1947 - 000	810 - 26
FA5 - 1969 - 000	810 - 42
FA5 - 1973 - 000	810 - 15
FA5 - 1984 - 000	250 - 3
FA5 - 1988 - 000	250 - 1
FA5 - 2048 - 020	101 - 8
FA5 - 2090 - 000	103 - 23
FA5 - 2121 - 000	100 - 13B
FA5 - 2126 - 000	102 - 5
FA5 - 2157 - 000	100 - 16
FA5 - 2163 - 000	102 - 2
FA5 - 2164 - 000	100 - 9B
FA5 - 2231 - 030	300 - 12
FA6 - 5301 - 000	640 - 9
FA6 - 5393 - 000	810 - 3
FA6 - 5521 - 020	104 - 5
FA6 - 5625 - 000	100 - 10
FA6 - 5650 - 000	160 - 4
FA6 - 6843 - 000	020 - 6
FA9 - 1499 - 000	100 - 9A
FA9 - 1779 - 000	300 - 7
FA9 - 1780 - 000	101 - 4
FA9 - 1781 - 000	300 - 2
FA9 - 1785 - 000	101 - 9
FB1 - 0301 - 000	810 - 38
FB1 - 0303 - 000	810 - 4
FB1 - 0733 - 000	101 - 2C
FB1 - 8771 - 020	160 - 1
FB1 - 8772 - 030	160 - 2
FC1 - 0634 - 00P	210 - 12
FC1 - 0638 - 00P	210 - 4
FC1 - 0639 - 00P	210 - 29
FC1 - 0650 - 00P	450 - 13
FC1 - 0658 - 00P	450 - 10
FC1 - 0659 - 00P	450 - 7
FC1 - 0660 - 00P	450 - 9
FC1 - 0661 - 00P	450 - 6
FC1 - 0662 - 00P	450 - 8
FC1 - 0664 - 00P	130 - 22
FC1 - 0664 - 00P	450 - 3
FC1 - 0666 - 00P	450 - 4
FC1 - 0679 - 00P	103 - 12
FC1 - 0680 - 00P	103 - 11
FC1 - 0681 - 00P	103 - 10
FC1 - 0685 - 00P	351 - 1
FC1 - 0712 - 00P	103 - 16
FC1 - 0713 - 00P	103 - 13
FC1 - 0717 - 00P	102 - 10
FC1 - 0720 - 00P	102 - 3
FC1 - 0736 - 00P	325 - 21
FC1 - 0739 - 00P	103 - 33
FC1 - 0739 - 00P	325 - 20
FC1 - 0740 - 00P	325 - 3
FC1 - 0741 - 00P	325 - 4
FC1 - 0754 - 00P	325 - 16
FC1 - 0755 - 00P	325 - 15
FC1 - 0764 - 00P	325 - 14
FC1 - 0765 - 00P	325 - 22
FC1 - 0769 - 00P	325 - 12
FC1 - 0770 - 00P	325 - 5
FC1 - 0771 - 00P	325 - 8A
FC1 - 0772 - 00P	325 - 6
FC1 - 0779 - 00P	103 - 9
FC1 - 0780 - 01P	315 - 1
FC1 - 0781 - 01P	315 - 13
FC1 - 0782 - 00P	315 - 4
FC1 - 0787 - 00P	315 - 6
FC1 - 0788 - 01P	315 - 2
FC1 - 0789 - 01P	315 - 5
FC1 - 0790 - 01P	315 - 3
FC1 - 0791 - 00P	315 - 10
FC1 - 0792 - 00P	315 - 8
FC1 - 0794 - 00P	315 - 11
FC1 - 0898 - 00P	105 - 11
FC1 - 0899 - 00P	105 - 12
FC1 - 0913 - 00P	300 - 6
FC1 - 0915 - 00P	300 - 14
FC1 - 0916 - 00P	300 - 5
FC1 - 0917 - 00P	300 - 10
FC1 - 0918 - 00P	300 - 11
FC1 - 0988 - 00P	102 - 19
FC1 - 0993 - 00P	103 - 8
FC1 - 1010 - 00P	130 - 6
FC1 - 1015 - 00P	105 - 3
FC1 - 1724 - 000	020 - 9
FC1 - 1726 - 000	020 - 5
FC1 - 1759 - 020	020 - 1
FC1 - 1760 - 000	020 - 2
FC1 - 1762 - 030	020 - 3
FC1 - 1763 - 000	020 - 4
FC1 - 3564 - 00P	102 - 16
FC1 - 3568 - 00P	400 - 12
FC1 - 3569 - 00P	401 - 1
FC1 - 5361 - 00P	100 - 1
FC1 - 5364 - 00P	103 - 2
FC1 - 5365 - 00P	210 - 20
FC1 - 5367 - 00P	190 - 3
FC1 - 5382 - 00P	130 - 9
FC1 - 5386 - 00P	130 - 7
FC1 - 5387 - 00P	130 - 4
FC1 - 5388 - 00P	130 - 5
FC1 - 5389 - 00P	130 - 15
FC1 - 5390 - 00P	130 - 17
FC1 - 5391 - 00P	130 - 20
FC1 - 5392 - 00P	130 - 19
FC1 - 5393 - 00P	130 - 18
FC1 - 5394 - 00P	130 - 14
FC1 - 5400 - 00P	130 - 8
FC1 - 5402 - 00P	103 - 7
FC1 - 5404 - 00P	100 - 18
FC1 - 5405 - 00P	315 - 9
FC1 - 5407 - 00P	325 - 13
FC1 - 6167 - 00P	210 - 14
FC1 - 6396 - 00P	130 - 21
FC1 - 7194 - 000	640 - 1
FC1 - 7200 - 040	640 - 5
FC1 - 9002 - 00P	105 - 10
FC2 - 8962 - 00P	810 - 8
FC2 - 9473 - 00P	640 - 6
FC2 - 9767 - 00P	810 - 6
FC2 - 9772 - 00P	810 - 52
FC2 - 9773 - 00P	810 - 7
FC2 - 9864 - 00P	550 - 8
FC2 - 9866 - 00P	550 - 9

COPYRIGHT©2000 CANON INC.
CANON NP6320 REV.0 JAN. 2000 PRINTED IN JAPAN [IMPRIME AU JAPON]

PART NUMBER	FIGURE & KEY NO.
FC2 - 9871 - 00P	550 - 2
FC2 - 9872 - 00P	550 - 3
FC2 - 9898 - 00P	640 - 2
FC2 - 9925 - 00P	640 - 11
FC2 - 9926 - 00P	103 - 35
FC2 - 9927 - 00P	550 - 7
FC2 - 9937 - 00P	640 - 25A
FC2 - 9939 - 00P	640 - 7
FC2 - 9946 - 00P	101 - 2B
FC2 - 9947 - 00P	100 - 13E
FC2 - 9948 - 00P	100 - 13D
FC2 - 9950 - 00P	101 - 2A
FC2 - 9961 - 00P	810 - 51
FF0 - 0041 - 00P	102 - 8
FF0 - 0051 - 00P	102 - 12
FF0 - 0054 - 00P	B - J 20
	B - J 22
	B - J 23
	B - J 24
	B - J 27
FF0 - 0066 - 01P	100 - 6
FF0 - 0068 - 00P	810 - 28
FF0 - 0069 - 00P	450 - 12
FF0 - 0078 - 00P	105 - 4
FF0 - 0079 - 00P	105 - 5
FF0 - 0082 - 00P	105 - 2
FF0 - 0083 - 01P	105 - 1
FF0 - 0094 - 00P	104 - 13
FF0 - 0197 - 00P	325 - 9
FF0 - 0198 - 00P	325 - 11
FF0 - 0199 - 00P	325 - 1
FF1 - 9385 - 000	400 - 3
FF1 - 9386 - 000	400 - 4
FF1 - 9387 - 020	400 - 5
FF1 - 9403 - 040	101 - 1
FF1 - 9408 - 000	640 - 27
FF1 - 9409 - 000	640 - 23
FF1 - 9410 - 000	640 - 24
FF1 - 9412 - 000	102 - 22
FF1 - 9414 - 020	250 - 12
FF1 - 9430 - 000	300 - 16
FF1 - 9438 - 070	560 - 2
FF1 - 9440 - 030	560 - 4
FF1 - 9448 - 020	810 - 24
FF2 - 0012 - 030	100 - 9
FF2 - 0658 - 000	351 - 3
FF2 - 0666 - 000	350 - 15
FF2 - 1573 - 000	400 - 9
FF2 - 1574 - 000	400 - 10
FF2 - 3901 - 00P	B - J 49
	104 - 16
FF2 - 3933 - 000	640 - 26
FF2 - 3941 - 020	160 - 5
FF2 - 5576 - 02P	325 - 8
FF2 - 5581 - 00P	103 - 19
FF2 - 5583 - 00P	210 - 18
FF2 - 5585 - 00P	210 - 21
FF2 - 5589 - 01P	450 - 1
FF2 - 5592 - 01P	450 - 2
FF2 - 5595 - 00P	102 - 17
FF2 - 5596 - 00P	102 - 14
FF2 - 5601 - 00P	220 - 4
FF2 - 5620 - 00P	300 - 13
FF2 - 5622 - 00P	300 - 4
FF2 - 5623 - 00P	315 - 7
FF2 - 6703 - 00P	104 - 3
FF2 - 6704 - 00P	102 - 15
FF2 - 7418 - 00P	103 - 1
FF3 - 2855 - 00P	810 - 13
FF3 - 2888 - 00P	210 - 1
FF3 - 3703 - 00P	550 - 4
FF3 - 3707 - 00P	560 - 5
FF3 - 3711 - 00P	640 - 25
FF3 - 3714 - 00P	640 - 12
FF9 - 0967 - 000	B - J 39
	640 - 3
FG0 - 0072 - 00P	320 - 2
FG0 - 0242 - 00P	103 - 6
FG0 - 0243 - 00P	103 - 5
FG0 - 1063 - 00P	450 -
FG0 - 1064 - 01P	190 -
FG0 - 1067 - 00P	320 -
FG0 - 1069 - 00P	103 - 4
FG0 - 1074 - 00P	250 -
FG0 - 1078 - 00P	220 -

PART NUMBER	FIGURE & KEY NO.
FG0 - 1093 - 00P	B - J103
	B - J108
	B - J110
FG0 - 1182 - 00P	130 - 10
FG0 - 1183 - 00P	325 -
FG0 - 1208 - 00P	103 - 22
FG0 - 1232 - 00P	252 -
FG0 - 1233 - 00P	255 -
FG0 - 1235 - 00P	101 - 2
FG0 - 1237 - 00P	401 -
FG0 - 1239 - 00P	810 -
FG0 - 1240 - 00P	104 - 31
FG0 - 1241 - 00P	104 - 32
FG0 - 1243 - 00P	130 -
FG0 - 1245 - 00P	930 -
FG0 - 1248 - 00P	930 - 1
FG0 - 1250 - 00P	B - J 41
	B - J 42
	B - J 43
	B - J313
	B - J318
FG0 - 1251 - 00P	B - J314
	B - J315
	B - J316
	B - J501
	B - J502
	B - J503
FG0 - 1254 - 00P	100 - 13
FG2 - 1302 - 000	210 - 31
FG2 - 1303 - 000	210 - 32
FG2 - 1304 - 000	210 - 33
FG2 - 2989 - 02P	315 -
FG2 - 3019 - 00P	351 -
FG2 - 4048 - 00P	450 - 11
FG2 - 9098 - 00P	130 - 3
FG3 - 0184 - 00P	104 - 30
FG3 - 0345 - 00P	104 - 6
FG3 - 0351 - 00P	640 -
FG3 - 0356 - 00P	400 -
FG3 - 0365 - 00P	550 -
FG3 - 0370 - 00P	560 -
FG3 - 0380 - 00P	350 -
FG3 - 0454 - 00P	400 - 16
FG5 - 1974 - 050	160 -
FH0 - 0051 - 00P	450 - 14
FH0 - 0054 - 00P	450 - 16
FH0 - 0055 - 00P	102 - 11
	103 - 39
	210 - 24
FH0 - 0058 - 00P	102 - 13
FH0 - 0093 - 00P	104 - 4
FH0 - 0096 - 00P	103 - 3
FH0 - 0132 - 00P	B - J 43
	B - J 44
	810 - 16
FH0 - 0133 - 00P	190 - 2
FH0 - 0134 - 00P	220 - 1
FH0 - 0136 - 00P	104 - 11
FH0 - 0137 - 00P	104 - 27
FH0 - 0138 - 00P	104 - 28
FH0 - 0139 - 00P	104 - 29
FH0 - 0140 - 00P	104 - 7
FH0 - 0141 - 00P	220 - 2
FH0 - 0160 - 00P	B - J 7
	B - J112
	B - J302
FH0 - 0164 - 00P	B - J 5
	B - J107
	B - J319
	B - J320
FH0 - 0168 - 00P	B - J 33
	B - J 35
	B - J 37
	B - J701
FH0 - 0171 - 00P	B - J 21
	B - J 45
FH0 - 0173 - 00P	B - J 6
	B - J111
	B - J321
FH0 - 0177 - 00P	101 - 15
FH0 - 0187 - 00P	104 - 8
FH2 - 9039 - 030	350 - 10
FH6 - 1705 - 00P	252 - 1
FH7 - 3114 - 000	400 - 1
FH7 - 3116 - 000	450 - 11A

PART NUMBER	FIGURE & KEY NO.
FH7 - 4634 - 00P	810 - 9
FH7 - 5142 - 000	104 - 33
FH7 - 5272 - 000	103 - 28
FH7 - 5353 - 010	103 - 30
FH7 - 6303 - 00P	101 - 12
FH7 - 7083 - 000	810 - 21
FH7 - 7087 - 020	810 - 20
FN1 - 4213 - 000	401 - 7
FN1 - 4214 - 000	210 - 27
FN1 - 4215 - 000	210 - 28
FN1 - 4216 - 000	210 - 2
FN1 - 4227 - 000	100 - 15
FN1 - 4419 - 00P	400 - 18
FS1 - 0036 - 00P	250 - 8
FS1 - 0884 - 000	810 - 36
FS1 - 1189 - 000	250 - 4
	350 - 8
FS1 - 1202 - 000	350 - 9
FS1 - 1205 - 000	810 - 33
FS1 - 1240 - 000	810 - 34
FS1 - 1402 - 000	103 - 25
FS1 - 1411 - 000	103 - 29
FS1 - 1431 - 000	103 - 36
FS1 - 1462 - 000	103 - 20
	103 - 32B
FS1 - 1594 - 000	640 - 20
FS1 - 1595 - 000	103 - 24
FS1 - 1598 - 000	640 - 8
FS1 - 3293 - 000	250 - 5
	255 - 1
FS1 - 9003 - 000	100 - 12
FS1 - 9004 - 000	104 - 14
FS1 - 9073 - 000	220 - 5
FS1 - 9169 - 000	102 - 9
FS1 - 9255 - 000	101 - 3
FS2 - 0122 - 000	103 - 4A
FS2 - 0825 - 000	103 - 32A
FS2 - 0866 - 000	210 - 26
FS2 - 0867 - 000	220 - 6
FS2 - 0868 - 000	220 - 7
FS2 - 0869 - 000	220 - 8
FS2 - 0870 - 000	640 - 15
FS2 - 0872 - 020	640 - 17
FS2 - 0873 - 000	640 - 18
FS2 - 0874 - 000	640 - 19
FS2 - 0878 - 000	250 - 7
FS2 - 0881 - 020	250 - 10
FS2 - 0887 - 000	350 - 2
FS2 - 0888 - 020	810 - 44
FS2 - 0890 - 020	810 - 46
FS2 - 0891 - 020	810 - 45
FS2 - 0892 - 000	810 - 47
FS2 - 0893 - 000	810 - 43
FS2 - 0894 - 000	810 - 48
FS2 - 2564 - 000	810 - 39
FS2 - 2763 - 000	550 - 5
FS2 - 2765 - 000	450 - 5
FS2 - 2766 - 000	220 - 9
FS2 - 2767 - 000	220 - 10
FS2 - 2768 - 000	102 - 7
	325 - 25
FS2 - 2770 - 000	250 - 6
FS2 - 2773 - 000	350 - 7
FS2 - 2774 - 000	810 - 41
FS2 - 2778 - 000	810 - 40
FS2 - 2781 - 000	560 - 11
FS2 - 2782 - 000	350 - 4
FS2 - 2783 - 000	103 - 26
FS2 - 2784 - 000	101 - 10
FS2 - 2785 - 000	300 - 9
FS2 - 2786 - 000	300 - 9
FS2 - 2787 - 000	300 - 9
FS2 - 2788 - 000	400 - 13
FS2 - 3709 - 00P	104 - 21
FS2 - 3710 - 00P	104 - 20
	104 - 23
FS2 - 9373 - 00P	104 - 3A
FS2 - 9374 - 00P	103 - 17
FS3 - 2780 - 000	810 - 37
FS3 - 2794 - 000	104 - 15
FS3 - 5210 - 00P	810 - 19
FS4 - 0030 - 00P	103 - 37
FS4 - 0281 - 00P	103 - 21
FS4 - 0282 - 01P	104 - 12
FS4 - 0283 - 00P	250 - 9

COPYRIGHTⓒ2000 CANON INC.
CANON NP6320 REV.0 JAN. 2000 PRINTED IN JAPAN [IMPRIME AU JAPON]

PART NUMBER	FIGURE & KEY NO.
FS4 - 0284 - 01P	104 - 10
FS4 - 0285 - 00P	103 - 38
FS4 - 0286 - 00P	104 - 19
FS4 - 0561 - 00P	255 - 3
FS4 - 0562 - 00P	255 - 4
FS4 - 0565 - 00P	640 - 16
FS4 - 0596 - 00P	252 - 3
FS4 - 0597 - 00P	252 - 2
FS4 - 2030 - 00P	450 - 15
FS4 - 2031 - 00P	325 - 18
FS4 - 2032 - 00P	325 - 17
FS4 - 2033 - 00P	325 - 19
FS4 - 2034 - 00P	105 - 8
FS4 - 2035 - 00P	105 - 7
FS4 - 2037 - 00P	101 - 6
FS4 - 2039 - 00P	103 - 14
FS4 - 2186 - 000	640 - 4
FS4 - 2287 - 00P	810 - 11
FS4 - 2564 - 00P	810 - 2
FS4 - 2660 - 00P	103 - 15
FS4 - 8106 - 000	640 - 22
FS4 - 8107 - 000	400 - 6
FS4 - 8120 - 000	300 - 4A
FS8 - 8185 - 000	100 - 11
FS8 - 8189 - 000	100 - 17
FS8 - 8545 - 000	020 - 10
FS8 - 8546 - 000	020 - 11
FS8 - 8916 - 00P	300 - 15
FS9 - 0168 - 00P	100 - 13A
FS9 - 0170 - 00P	325 - 8B
FS9 - 0171 - 00P	300 - 3
FS9 - 0172 - 00P	101 - 17
FS9 - 0173 - 00P	101 - 16
FS9 - 0174 - 00P	300 - 15
FY3 - 0040 - 000	550 - 6
	560 - 1
PCB	B - J 37
	B - J109
	B - J203
	B - J301
	B - J302
	B - J303
	B - J304
	B - J305
	B - J306
	B - J307
	B - J308
	B - J309
	B - J311
	B - J312
	B - J313
	B - J314
	B - J315
	B - J316
	B - J317
	B - J318
	B - J319
	B - J320
	B - J321
	B - J322
	B - J323
	B - J324
	B - J501
	B - J502
	B - J503
	B - J701
WC2 - 0137 - 000	101 - 7
WC4 - 0081 - 000	102 - 4
WD3 - 0125 - 000	104 - 26
WP1 - 0019 - 000	101 - 11
X31 - 6240 - 880	210 - 16
XA9 - 0135 - 000	103 - 41
XA9 - 0159 - 000	560 - 3
XA9 - 0192 - 000	350 - 3
XA9 - 0265 - 000	020 - 7
XA9 - 0626 - 000	810 - 50
XB1 - 2300 - 309	103 - 503
	400 - 502
	810 - 507
XB1 - 2300 - 403	640 - 501
XB1 - 2300 - 409	102 - 504
	220 - 502
	350 - 501
	351 - 501
	400 - 501
XB1 - 2300 - 409	450 - 501
	810 - 509
XB1 - 2300 - 509	810 - 511
XB1 - 2300 - 603	640 - 502
XB1 - 2300 - 609	101 - 505
	104 - 501
	105 - 502
	210 - 502
	250 - 505
	252 - 502
	351 - 502
	400 - 503
	401 - 501
	560 - 502
	640 - 503
	810 - 510
XB1 - 2302 - 009	450 - 502
XB1 - 2400 - 606	020 - 505
XB1 - 2400 - 609	020 - 506
	101 - 503
	102 - 501
	103 - 506
	104 - 503
	105 - 501
	210 - 503
	325 - 501
	350 - 502
	400 - 505
XB1 - 2400 - 806	103 - 507
XB1 - 2401 - 206	020 - 501
XB1 - 2401 - 609	160 - 501
XB1 - 2402 - 009	020 - 504
XB2 - 7300 - 606	550 - 501
XB3 - 2300 - 809	102 - 503
XB3 - 2301 - 006	020 - 503
XB3 - 2400 - 809	100 - 501
	102 - 506
	105 - 503
XB4 - 6200 - 507	100 - 502
XB4 - 7300 - 809	190 - 501
	640 - 504
XB4 - 7301 - 009	640 - 505
XB4 - 7400 - 809	100 - 13F
	100 - 503
	640 - 509
XB4 - 7401 - 009	160 - 502
XB5 - 6400 - 609	104 - 504
XB6 - 6300 - 603	810 - 503
XB6 - 7300 - 509	450 - 503
XB6 - 7300 - 609	101 - 506
	102 - 507
	450 - 504
	560 - 501
	810 - 504
XB6 - 7300 - 809	101 - 501
XB6 - 7301 - 009	640 - 512
XB6 - 7400 - 609	255 - 501
XB6 - 7400 - 809	103 - 502
XB7 - 1030 - 069	400 - 510
XB7 - 1040 - 069	102 - 502
XB7 - 1040 - 259	810 - 508
XD1 - 1103 - 135	640 - 511
XD1 - 1106 - 723	101 - 504
XD1 - 1108 - 212	640 - 506
XD1 - 1108 - 221	810 - 502
XD1 - 1108 - 225	250 - 502
	350 - 508
XD1 - 1108 - 229	220 - 505
XD1 - 1109 - 721	640 - 510
XD1 - 2100 - 305	102 - 505
	351 - 503
XD1 - 2100 - 309	400 - 506
	401 - 503
XD1 - 3100 - 309	400 - 509
XD1 - 4200 - 302	400 - 507
XD1 - 4200 - 402	020 - 502
	350 - 505
	400 - 508
XD2 - 1100 - 402	300 - 501
XD2 - 1100 - 502	101 - 502
	103 - 505
	210 - 504
	220 - 504
	250 - 501
	252 - 501
XD2 - 1100 - 502	350 - 506
	640 - 508
	810 - 501
XD2 - 1100 - 642	103 - 501
	104 - 502
	210 - 501
	220 - 503
	250 - 504
	255 - 503
	350 - 504
	401 - 502
	640 - 507
	810 - 506
XD2 - 2100 - 302	400 - 504
XD2 - 2300 - 402	640 - 27B
XD3 - 1160 - 122	103 - 4B
	315 - 501
XD3 - 1160 - 142	103 - 5B
	103 - 6B
XD3 - 2200 - 102	810 - 505
XD3 - 2200 - 122	350 - 503
XD3 - 2200 - 141	103 - 504
XD3 - 2200 - 142	315 - 502
XD3 - 2200 - 161	250 - 503
	255 - 502
XD3 - 2200 - 182	350 - 507
XD3 - 2300 - 161	220 - 501
XF9 - 0210 - 000	250 - 11
XG9 - 0089 - 000	400 - 2
	401 - 6
XG9 - 0172 - 000	640 - 21
XG9 - 0287 - 000	810 - 12
XZ9 - 0251 - 000	101 - 13
XZ9 - 0324 - 000	020 - 8

COPYRIGHT©2000 CANON INC.

D2 NUMERICAL INDEX (PAPER DECK PEDESTAL-J1)

PART NUMBER	FIGURE & KEY NO.
FA1 - 1895 - 000	R13 - 15
FA4 - 1159 - 000	R12 - 17
FA5 - 3436 - 000	R12 - 22
FA5 - 3444 - 000	R12 - 23
FA5 - 3446 - 000	R12 - 24
FA5 - 3452 - 000	R12 - 25
FA5 - 3453 - 000	R12 - 26
FA5 - 3454 - 000	R12 - 27
FA5 - 8399 - 000	R13 - 1
FA5 - 8400 - 000	R12 - 1
FA5 - 8401 - 000	R12 - 2
FA5 - 8404 - 000	R13 - 2
FA5 - 8405 - 000	R13 - 3
FA5 - 8407 - 000	R13 - 4
FA5 - 8408 - 000	R13 - 5
FA5 - 8409 - 000	R12 - 3
FA5 - 8410 - 000	R12 - 4
FA5 - 8411 - 000	R12 - 5
FA5 - 8412 - 000	R12 - 6
FA5 - 8413 - 000	R12 - 7
FA5 - 8414 - 000	R12 - 8
FA5 - 8416 - 000	R13 - 6
FA5 - 8417 - 000	R13 - 7
FA5 - 8418 - 030	R11 - 1
FA5 - 8420 - 000	R11 - 7
FA5 - 8429 - 000	R13 - 9
FA5 - 8432 - 000	R12 - 11
FA5 - 8434 - 000	R12 - 12
FA5 - 8435 - 000	R12 - 13
FA5 - 8436 - 000	R13 - 10
FA5 - 8437 - 000	R13 - 11
FA5 - 8438 - 000	R13 - 12
FA5 - 8439 - 000	R12 - 14
FA5 - 8442 - 000	R11 - 5
FA5 - 8447 - 000	R12 - 15
FA5 - 8448 - 000	R13 - 14
FA5 - 8449 - 000	R12 - 16
	R13 - 38
FA5 - 8450 - 000	R12 - 45
FA5 - 8460 - 000	R20 - 1
FA5 - 8461 - 000	R20 - 2
FA5 - 8462 - 000	R20 - 3
FA5 - 8464 - 020	R20 - 5
FA5 - 8465 - 000	R20 - 25
FA5 - 8468 - 000	R20 - 8
FA5 - 8469 - 000	R20 - 9
FA5 - 8470 - 000	R20 - 10
FA5 - 8473 - 000	R20 - 12
FA5 - 8478 - 000	R20 - 14
FA5 - 8499 - 000	R20 - 24
FA6 - 5453 - 020	R10 - 9
FA6 - 6324 - 000	R10 - 1
FA6 - 6326 - 000	R10 - 2
FA6 - 6328 - 000	R10 - 3
FA6 - 6335 - 000	R12 - 48
FA6 - 6336 - 000	R13 - 28
FA6 - 6337 - 000	R13 - 29
FA6 - 6338 - 000	R12 - 9
FA6 - 6339 - 000	R11 - 2
FA6 - 6340 - 000	R11 - 3
FA6 - 6343 - 000	R11 - 4
FA6 - 6345 - 020	R12 - 10
FA6 - 6350 - 000	R20 - 7
FA6 - 6351 - 000	R20 - 4
FA6 - 6352 - 000	R10 - 25
FA6 - 6526 - 000	R10 - 4
FA6 - 6545 - 000	R10 - 8
FA6 - 8581 - 000	R10 - 10
FA6 - 8590 - 000	R10 - 11
FA6 - 8591 - 000	R10 - 12
FA6 - 8592 - 000	R10 - 13
FA6 - 8593 - 000	R12 - 18
FA6 - 8595 - 000	R11 - 6
FA6 - 8597 - 000	R13 - 39
FA6 - 8598 - 000	R10 - 14
FC1 - 9834 - 000	R10 - 5
FC1 - 9835 - 000	R20 - 6
FE9 - 0077 - 000	R10 - 15
FE9 - 0085 - 000	R10 - 20
FF2 - 1830 - 000	R12 - 34
FF2 - 1832 - 000	R13 - 37
FF2 - 1834 - 000	R13 - 34
FF2 - 1835 - 000	R13 - 35
FF2 - 4148 - 000	R13 - 36
FF2 - 4151 - 000	R10 - 16
FF2 - 4152 - 000	R10 - 17
FF2 - 4153 - 000	R11 - 9
FF2 - 4843 - 000	R11 - 8
FF2 - 4851 - 000	R13 - 27
FF2 - 4853 - 000	R12 - 46
FF9 - 1113 - 030	R12 - 28
FG2 - 1531 - 000	R10 - 27
FG2 - 1533 - 000	R13 - 42
FG2 - 1534 - 000	R10 - 24
FH2 - 5822 - 000	R B - J 80
FH2 - 5826 - 000	R B - J 80
FH2 - 5828 - 000	R B - J 80
FH2 - 5830 - 000	R B - J 80
FH7 - 1747 - 000	R13 - 8
FH7 - 5227 - 000	R13 - 22
FH7 - 5240 - 000	R13 - 40
FH7 - 5242 - 000	R12 - 41
FH7 - 5251 - 000	R12 - 42
FH7 - 7038 - 000	R12 - 40
	R13 - 13
FL9 - 0009 - 030	R12 - 44
FL9 - 0010 - 020	R12 - 43
FL9 - 0046 - 000	R20 - 11
FS1 - 1202 - 000	R12 - 29
FS1 - 1206 - 000	R12 - 33
	R13 - 23
	R20 - 18
FS1 - 1500 - 000	R12 - 30
FS1 - 3171 - 030	R20 - 22
FS2 - 0429 - 000	R20 - 19
FS2 - 0430 - 000	R20 - 20
FS2 - 0431 - 000	R20 - 21
FS2 - 0448 - 000	R12 - 31
FS2 - 3008 - 000	R12 - 32
FS2 - 3009 - 000	R12 - 35
FS2 - 3182 - 000	R20 - 17
FS2 - 6020 - 000	R12 - 36
FS2 - 9327 - 000	R13 - 33
FS3 - 0079 - 000	R12 - 37
FS3 - 0452 - 000	R13 - 16
FS3 - 0453 - 000	R13 - 17
FS3 - 0455 - 000	R20 - 15
FS3 - 0456 - 000	R12 - 19
FS3 - 0570 - 000	R13 - 26
FS3 - 0645 - 000	R13 - 24
FS3 - 0972 - 000	R13 - 25
FS3 - 2033 - 000	R12 - 38
FS3 - 2400 - 000	R12 - 20
FS3 - 2401 - 000	R12 - 21
FS3 - 2402 - 000	R13 - 19
FS3 - 2403 - 000	R13 - 20
FS3 - 2404 - 000	R13 - 21
FS3 - 2406 - 000	R20 - 16
FS3 - 2899 - 000	R13 - 30
FS3 - 2900 - 000	R13 - 31
FS8 - 8191 - 000	R10 - 7
FS8 - 8448 - 000	R20 - 26
FS9 - 8099 - 000	R20 - 11A
FS9 - 8106 - 000	R20 - 27
PCB	R B - J 2
	R B - J 3
	R B - J 4
	R B - J 5
	R B - J 6
	R B - J 7
VS1 - 0192 - 002	R B - J 15
	R B - J 17
VS1 - 0192 - 003	R B - J 11
	R B - J 14
	R B - J 16
VS1 - 0192 - 004	R B - J 3
	R B - J 13
VS1 - 0842 - 003	R B - J 18
	R B - J 19
VS1 - 0842 - 004	R B - J 20
VS1 - 0842 - 007	R B - J 7
VS1 - 0842 - 008	R B - J 4
VS1 - 0842 - 009	R B - J 2
VS1 - 0842 - 010	R B - J 6
VS1 - 5057 - 003	R B - J 18
	R B - J 19
VS1 - 5057 - 004	R B - J 20
VS3 - 0046 - 003	R B - J 5
VT2 - 0001 - 006	R10 - 6
VT2 - 0002 - 006	R10 - 22
WC4 - 0145 - 000	R13 - 18
WC4 - 0240 - 000	R13 - 32
WT2 - 0262 - 000	R13 - 43
WT2 - 5041 - 000	R13 - 41
X62 - 6825 - 000	R10 - 26
XB1 - 2300 - 609	R13 - 509
XB1 - 2301 - 009	R12 - 506
	R13 - 505
	R20 - 505
XB1 - 2400 - 606	R10 - 502
	R13 - 506
XB1 - 2400 - 609	R20 - 510
XB1 - 2400 - 809	R20 - 509
XB4 - 7300 - 809	R10 - 503
XB4 - 7400 - 809	R20 - 501
XB5 - 6400 - 806	R10 - 501
XB6 - 2400 - 608	R13 - 510
XB6 - 7400 - 609	R10 - 504
	R11 - 502
	R12 - 507
	R13 - 507
	R20 - 508
XD1 - 1104 - 122	R20 - 507
XD1 - 4200 - 402	R10 - 505
XD2 - 1100 - 242	R12 - 504
	R13 - 511
XD2 - 1100 - 322	R20 - 503
XD2 - 1100 - 402	R12 - 503
XD2 - 1100 - 502	R11 - 501
	R12 - 501
	R13 - 501
	R20 - 502
XD2 - 1100 - 642	R12 - 502
	R13 - 503
	R20 - 504
XD3 - 1300 - 102	R13 - 508
XD3 - 2200 - 102	R12 - 505
XD3 - 2200 - 122	R12 - 508
XD3 - 2200 - 142	R13 - 502
	R20 - 506
XD3 - 2200 - 162	R13 - 504
XF1 - 1106 - 601	R20 - 23
XF9 - 0266 - 000	R12 - 39
XG9 - 0224 - 000	R10 - 18
	R20 - 13
XZ9 - 0162 - 000	R10 - 19
XZ9 - 0240 - 000	R12 - 47
XZ9 - 0241 - 000	R10 - 21
XZ9 - 0332 - 000	R10 - 23

COPYRIGHTⓒ2000 CANON INC.
CANON NP6320 REV.0 JAN. 2000 PRINTED IN JAPAN [IMPRIME AU JAPON]

Prepared by
OFFICE IMAGING PRODUCTS TECHNICAL SUPPORT
DIV.
CANON INC.
Printed in Japan

REVISION 0 [JAN. 2000]

5-1, Hakusan 7-chome, Toride-city, Ibaraki 302-8501,
Japan

Canon

PRINTED IN JAPAN [IMPRIME AU JAPON]

CANON INC. JAPON]