NP6320

SERVICE MANUAL

REVISION 0

Canon

DEC. 1999

FY8-13GF-000

COPYRIGHT © 1999 CANON INC.

CANON NP6320 REV.0 DEC. 1999 PRINTED IN JAPAN (IMPRIME AU JAPON)

IMPORTANT

THIS DOCUMENTATION IS PUBLISHED BY CANON INC., JAPAN, TO SERVE AS A SOURCE OF REFERENCE FOR WORK IN THE FIELD.
SPECIFICATIONS AND OTHER INFORMATION CONTAINED HEREIN MAY VARY SLIGHTLY FROM ACTUAL MACHINE VALUES OR THOSE FOUND IN ADVERTISING AND OTHER PRINTED MATTER.

ANY QUESTIONS REGARDING INFORMATION CONTAINED HEREIN SHOULD BE DIRECTED TO THE COPIER SERVICE DEPARTMENT OF THE SALES COMPANY.
THIS DOCUMENTATION IS INTENDED FOR ALL SALES AREAS, AND MAY CONTAIN INFORMATION NOT APPLICABLE TO CERTAIN AREAS.

COPYRIGHT © 1999 CANON INC.

Printed in Japan
Imprimé au Japon

Use of this manual should be strictly supervised to avoid disclosure of confidential information.

Prepared by

OFFICE IMAGING PRODUCTS TECHNICAL SUPPORT DIVISION
OFFICE IMAGING PRODUCTS QUALITY ASSURANCE CENTER

CANON INC.

5-1, Hakusan 7-chome, Toride-shi, Ibaraki 302-8501 Japan

INTRODUCTION

This Service Manual contains basic data and figures for the NP6320 needed to service the machine in the field.

Chapter 1 *General Description* introduces the copier's features and specifications, shows how to operate the copier, and explains how copies are made.
Chapter 2 *Basic Operation* provides outlines of the copier's various operational workings.
Chapter 3 *Exposure System* discusses the principles of operation used for the copier's lens drive unit and scanner drive unit. It also explains the timing at which these drive units are operated, and shows how they may be disassembled/assembled and adjusted.
Chapter 4 *Image Formation System* discusses the principles of how images are formed. It also explains the timing at which the various units involved in image formation are operated, and shows how they may be disassembled/assembled and adjusted.
Chapter 5 *Pick-Up/Feeding System* explains the principles used from when copy paper is picked up to when a copy is delivered in view of the functions of electrical and mechanical units ahd in relation to their timing of operation. It also shows how these units may be disassembled/assembled and adjusted.
Chapter 6 *Fixing System* explains the principles used to fuse toner images to tranfer media in view of the functions of electrical and mechanical units and in relation to their timing of operation. It also shows how these units may be disassembled/assembled and adjusted.
Chapter 7 *Externals/Auxiliary Mechanisms* shows the copier's external parts, and explains the principles used for the copier's various control mechanisms in view of the functions of electrical and mechanical units and in relation to their timing of operation. It also shows how these units may be disassembled/assembled and adjusted.
Chapter 8 *Installation* introduces requirements for the site of installation, and shows how the copier may be installed using step-by-step instructions.
Chapter 9 *Maintenance and Servicing* provides tables of periodically replaced parts and consumables/durables and scheduled servicing charts.
Chapter 10 *Troubleshooting* provides tables of maintenance/inspection, standards/adjustments, and problems identification (image fault/malfunction).

Appendix contains diagrams showing electrical parts arrangement, tables of signals, tables of special tools, tables of solvents/oils, and a general timing chart.

The descriptions in this Service Manual are subject to change without notice for product improvement or other purposes, and major changes will be communicated in the from of Service Information bulletins.

All service persons are expected to have a good understanding of the contents of this Service Manual and all relevant Service Information bulletins and be able to identify and isolate faults in the machine.

COPYRIGHT © 1999 CANON INC.

System Configuration

The NP6320 is designed to accommodate the following for fully automated copy work:

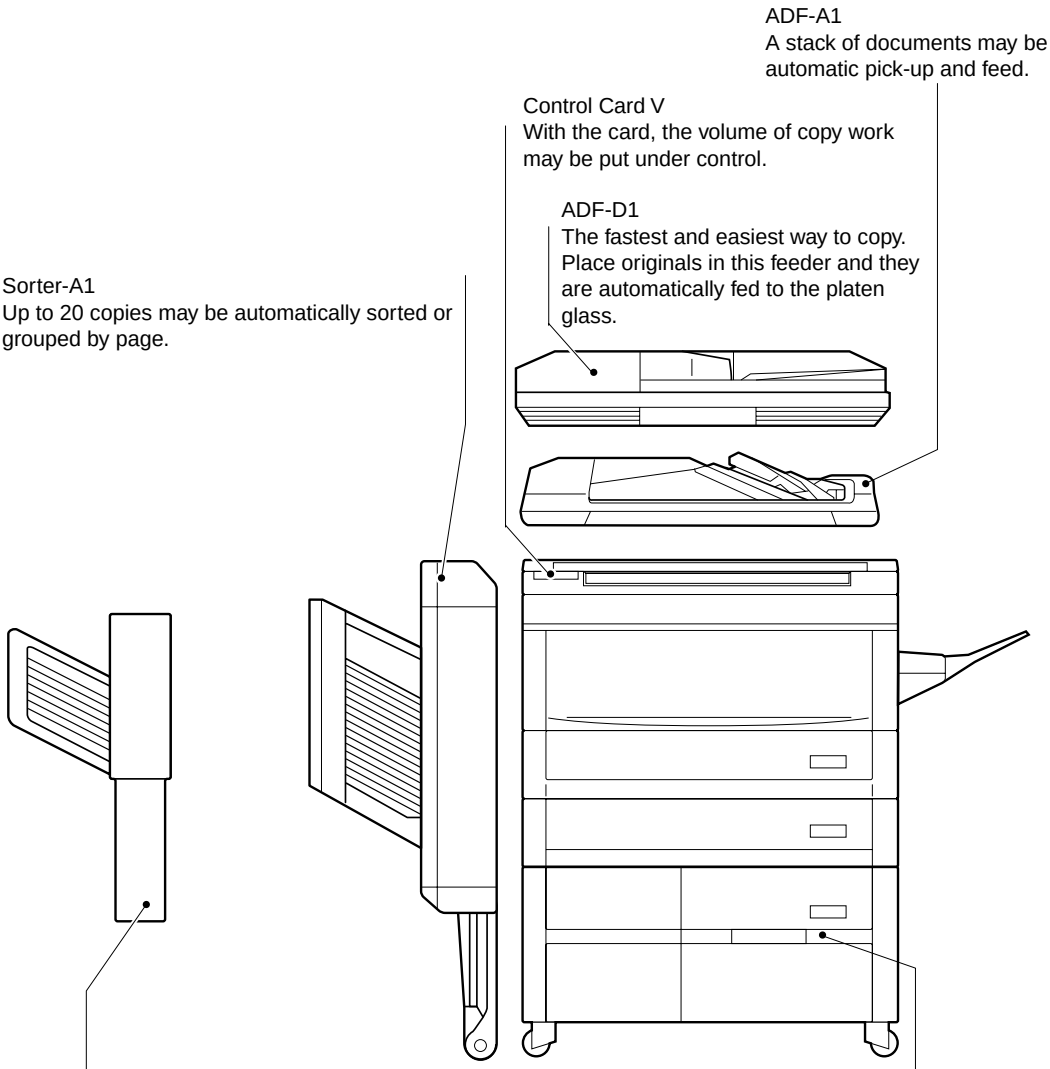

COPYRIGHT © 1999 CANON INC.
CANON NP6320 REV.0 DEC. 1999 PRINTED IN JAPAN (IMPRIME AU JAPON)

CONTENTS

CHAPTER 1 GENERAL DESCRIPTION

I. FEATURES 1-1
II. SPECIFICATIONS 1-2
A. Type 1-2
B. Construction 1-2
C. Performance 1-3
D. Others 1-3
III. NAMES OF PARTS 1-5
A. External View 1-5
B. Cross Section 1-6
IV. OPERATION 1-7
A. Control Panel 1-7
B. Setting the Auto Shut-Off Time 1-9
C. Daily Inspection to Be Performed by the User 1-9
V. IMAGE FORMATION PROCESS 1-11
A. Outline 1-11

CHAPTER 2 BASIC OPERATION

I. BASIC OPERATION 2-1
A. Functions 2-1
B. Outline of Electric Circuitry ... 2-2
C. Inputs to the DC Controller ... 2-4
D. DC Controller Outputs 2-7
E. Basic Sequence of Operations (Direct, continuous copying, 2 sheets) 2-10

CHAPTER 3 EXPOSURE SYSTEM

I. BASIC OPERATION 3-1
A. Changing the Reproduction Ratio 3-1
II. LENS DRIVE SYSTEM 3-2
A. Outline 3-2
B. Basic Lens Drive System Operation (change of reproduction ratio) 3-4
III. SCANNER DRIVE SYSTEM 3-5
A. Outline 3-5
B. Relation Between Scanner Sensor and Signals 3-6
C. Basic Scanner Operation 3-7
D. Scanner Motor Drive System Operation 3-8
E. Scanner Movement for Two-Page Separation Mode (copy count 2) 3-10
F. Document Size Identification 3-11
IV. DISASSEMBLY AND ASSEMBLY 3-14
A. Lens Drive Assembly 3-14
B. Scanner Drive Assembly 3-16

COPYRIGHT © 1999 CANON INC.
CANON NP6320 REV.0 DEC. 1999 PRINTED IN JAPAN (IMPRIME AU JAPON)

CHAPTER 4 IMAGE FORMATION SYSTEM

I. IMAGE FORMATION SYSTEM ...4-1
A. Outline ...4-1
B. Basic Operation of Image Formation System ...4-2
II. CONTROLLING THE SCANNING LAMP ...4-3
A. Outline ...4-3
B. Mechanism ...4-4
III. PRIMARY/TRANSFER CORONA CURRENT AND GRID BIAS VOLTAGE CONTROL SYSTEM ..4-5
A. Outline ...4-5
B. Switching Primary/Transfer Corona Current ON/OFF ...4-5
C. Maintaining Primary/Transfer Corona Current Constant ...4-6
D. Controlling Grid Bias Voltage 4-7
IV. CONTROLLING THE DEVELOPING BIAS ...4-8
A. Outline ...4-8
B. Operation ...4-9
C. Developing Bias Operation ... 4-11
V. DOCUMENT DENSITY MEASUREMENT SYSTEM ... 4-12
A. Outline ... 4-12
B. Operation ... 4-12
C. Reading the Output of the AE Sensor ... 4-13
VI. DEVELOPING ASSEMBLY/ DRUM CLAENER ... 4-14
A. Outlines ... 4-14
B. Remaining Toner Sensor ... 4-14
C. Torque Limiter ... 4-14
VII. BLANKING ... 4-15
A. Outline ... 4-15
B. Movement of the Blank Exposure Mechanism ... 4-16
VIII. DISASSEMBLY AND ASSEMBLY ... 4-18
A. Exposure Assembly ... 4-18
B. Blank Assembly ... 4-20
C. CORONA SYSTEM ... 4-21
D. Development System ... 4-24

CHAPTER 5 PICK-UP/FEEDING SYSTEM

I. PAPER TRANSPORT SYSTEM ...5-1
A. Paper Pick-up Assembly and Feeder ...5-1
B. Pick-up and Feeder Operation ...5-3
C. Identifying the Cassette Size ...5-4
D. Pick-Up from the Multifeeder ...5-5
II. JAM DETECTION ...5-7
A. Pick-up Assembly Delay Jam ...5-8
B. Delivery Assembly Stationary Jam ...5-9
C. Delivery Assembly Delay Jam ...5-9
III. FEEDER SYSTEM ... 5-10
A. Pick-up Assembly ... 5-10
B. Feeder Assembly ... 5-17
C. Main Motor Assembly ... 5-21

COPYRIGHT © 1999 CANON INC.
CANON NP6320 REV.0 DEC. 1999 PRINTED IN JAPAN (IMPRIME AU JAPON)

CHAPTER 6 FIXING SYSTEM

I. BASIC OPERATIONS 6-1
A. Outline 6-1
B. Operation of the Fixing Assembly Temperature Control System 6-3
II. DISASSEMBLY AND ASSEMBLY 6-4
A. Fixing Assembly 6-4

CHAPTER 7 EXTERNALS/AUXILIARY MECHANISMS

I. POWER SUPPLY 7-1
A. AC Power/DC Power Supply 7-1
II. DISASSEMBLY AND ASSEMBLY 7-3
A. External Covers 7-3
B. Control Panel 7-6
C. Copyboard Cover 7-7
D. Fans 7-7
E. PCBs 7-10

CHAPTER 8 INSTALLATION

I. LOCATION 8-1
II. UNPACKING AND INSTALLING THE COPIER 8-2
A. Unpacking 8-2
B. Mounting the Drum 8-5
C. Checking the Operation 8-6
D. Adding Toner 8-7
E. Checking the Image 8-8
III. SETTING THE CASSETTE SIZE 8-9
A. Modifying the Cassette Size 8-9
B. Replacing the Cassette Spring 8-14
C. Removing the Pick-up Roller 8-16
IV. RELOCATING THE COPIER 8-17
V. INSTALLING THE CONTROL CARD-V 8-18

CHAPTER 9 MAINTENANCE AND SERVICING

I. PERIODICALLY REPLACED PARTS 9-1
II. DURABLE PARTS 9-2
III. BASIC PROCEDURE FOR PERIODIC SERVICING 9-3
IV. PERIODIC SERVICING SCHEDULE 9-4

COPYRIGHT © 1999 CANON INC.
CANON NP6320 REV.0 DEC. 1999 PRINTED IN JAPAN (IMPRIME AU JAPON)

CHAPTER 10 TROUBLESHOOTING

I. MAINTENANCE AND INSPECTION 10-1
  A. Basic Image Adjustment Procedure 10-1
  B. Periodic Maintenance Check Points 10-2
II. STANDARDS AND ADJUSTMENTS 10-3
  A. Mechanical 10-3
  B. Electrical 10-17
III. IMAGE TROUBLE-SHOOTING 10-22
  A. Initial Check 10-22
  B. Samples of Image Faults . 10-26
  C. Troubleshooting of Image Faults 10-27
IV. OPERATION TROUBLE-SHOOTING 10-39
  A. Troubleshooting of Malfunction 10-39
V. TROUBLESHOOTING THE FEEDING PROBLEMS 10-56
  A. Paper Jams 10-56
VI. INCORRECT PAPER FEED OPERATION 10-60
VII. FUNCTION AND ARRANGE-MENT OF THE ELECTRICAL PARTS 10-62
  A. Sensors, Fuses and Lamps 10-62
  B. Clutches, Solenoids, Fans, Motors and Heaters 10-63
  C. Switches, Circuit Breakers, Counters, Etc. 10-64
  D. PCBs 10-65
VIII. SERVICE MODE 10-66
  A. Outline 10-66
  B. Using the Service Mode ... 10-66
  C. Guide to Service Mode 10-67
IX. SELF DIAGNOSIS 10-70
  A. Self-Diagnosis 10-70

APPENDIX

A. GENERAL TIMING CHART A-1
B. LIST OF SIGNALS/ COMMANDS A-3
C. GENERAL CURCUIT DIAGRAM A-5
D. LIST OF SPECIAL TOOLS A-7
E. LIST OF SOLVENTS AND MATERIALS A-8

COPYRIGHT © 1999 CANON INC.
CANON NP6320 REV.0 DEC. 1999 PRINTED IN JAPAN (IMPRIME AU JAPON)

CHAPTER 1

GENERAL DESCRIPTION

I. FEATURES 1-1
II. SPECIFICATIONS 1-2
A. Type 1-2
B. Construction 1-2
C. Performance 1-3
D. Others 1-3
III. NAMES OF PARTS 1-5
A. External View 1-5
B. Cross Section 1-6
IV. OPERATION 1-7
A. Control Panel 1-7
B. Setting the Auto Shut-Off Time 1-9
C. Daily Inspection to Be Performed by the User 1-9
V. IMAGE FORMATION PROCESS 1-11
A. Outline 1-11

COPYRIGHT © 1999 CANON INC. CANON NP6320 REV.0 DEC. 1999 PRINTED IN JAPAN (IMPRIME AU JAPON)

I. FEATURES

1. Front-loading.

- The copier is designed to accept cassettes from the front for ease of use (two cassettes holding 250 sheets each).
- The copier is given two cassette holders, thereby eliminating the need for cassette replacement in making copies of different sizes.
- The copier's multifeeder allows feeding multiple postcards.

2. Full line of automatic features.

- The copier has an auto paper selection mechanism as standard, which selects paper of the correct size in response to placement of a document.
- With the auto reproduction ratio selection mechanism, the copier calculates the correct reproduction ratio according to the specified copy size.
- The AE (auto exposure) mechanism ensures crisp reproduction of newspapers and blue-print documents.
- The copier's auto-start feature lets you press the COPY START key during the wait period so that the copier will start making copies as soon as it becomes ready.

3. HQ jumping toner.

- The copier uses Canon's own HQ (high quality) jumping toner for reproduction of clear characters and photos.
- The toner is a single-component type, which provides stable images.
- In addition, a 30mm-dia. high sensitivity OPC drum is used to enable enhanced image reproduction and a compact copier design.

4. Man-machine interface.

- As many as 20 copies (A4, landscape) may be made per minute.
- The zoom mechanism allows reduction down to 50% and enlargement up to 200% of the original image.
- The page separation mode serves to speed up copying bound documents.
- The copier accepts documents as small as a postcard or as large as A3.

5. A variety of options to choose from for full automation.

The copier communicates with its options at a higher speed than ever, resulting in more output per given time*.

** With options, up to 20 copies/min; 1:1 (A4, landscape).*

- ADF-A1/ADF-D1 for automatic document feed.
- Sorter-A1 for automatic sorting and grouping (20 bins).
- MS-A1 for automatic sorting and grouping (10 bins).
- Control Card V (configured as built-in) for copy volume control (up to 200 groups).
- Stapler Sorter for stapling copies sorted in its ten bins.
- Paper Deck Pedestal-J1 for improved paper pick-up capacity.

COPYRIGHT © 1999 CANON INC.
CANON NP6320 REV.0 DEC. 1999 PRINTED IN JAPAN (IMPRIME AU JAPON)

II. SPECIFICATIONS

A. Type

Body	Desktop
Copyboard	Fixed
Light sourse	Halogen lamp (330W)
Lens	Zoom lens
Photosensitive medium	OPC

B. Construction

Copying		Indirect static photocopying
Charging		Corona
Exposure		Slit (moving light source)
Copy density adjustment		Automatic (AE) or Manual
Development		Dry (toner projection)
Pick-up	Automatic	2 cassettes
	Manual	Multifeeder (about 50 sheets of 80g/m^2)
Transfer		Corona
Separation		Curvature and Static eliminator
Cleaning		Blade
Fixing		Heat roller (900 W)

COPYRIGHT © 1999 CANON INC.
CANON NP6320 REV.0 DEC. 1999 PRINTED IN JAPAN (IMPRIME AU JAPON)

C. Performance

Document type			Sheet, Book, 3-D object (2 kg)
Document size (max.)			A3 (297×420 mm)
Reproduction ratio			See Table 1-1; 50% to 200%, zoom.
Wait time			30 sec or less (20°C)
First copy			8 sec or less (AE and non-AE)
Continuous copying			1 to 99 copies
Copy size			A3 (297 × 431.8 mm) max. Postcard (100 × 148 mm) min.
Copy paper	Cassette		Plain paper (64 to 80 g/m^2), Tracing paper*, Colored paper*
	Multifeed tray		Plain paper (64 to 128 g/m^2), Tracing paper* Colored paper*, OHP film*, Postcard, Label*
		Two-sided copy Overlay copy	Plain paper (64 to 128 g/m^2), Colored paper*, Postcard
Cassette			Claws, Front loading: 27 mm deep (about 250 sheets of 80 g/m^2)
Copy tray			99 sheets (80 g/m^2)
Non-image width			2.0 ±1.5 mm (leading edge), 2.5 ±1.5 mm (left/right)
Auto clear mechanism			Provided. (2 min, standard)
Auto shut-off mechanism			Provided. (30 min, standard; may be disabled and changed)
Automatic energy saving mechanism			Provided (15 min, standard; may be disabled)
Auto start			Provided.
Option			Sorter-A1, MS-A1, Paper Deck Pedestal-J1, Control Card V, Stapler Sorter-D3, ADF-A1, ADF-D1

** Of a type recommended by Canon.*

D. Others

Operating environment	Temperature	7.5° to 32.5°C	
	Humidity	5% to 85%	
	Atmospheric pressure	0.6 to 1 atm.	
Power source		Serial No.	
	220-240V/50 Hz	QEPxxxxx (UK)	
	220-240V/50 Hz	UEPxxxxx (AMS)	
Power consumption	Maximum	1.5 kW	
	During copying	0.840 kWH (reference only)	
	At standby	0.158 kWH (reference only)	
Noise	During copying	66 dB or less (Impulse sound power level)	(As prescribed by
	At standby	40 dB or less (Sound power level)	Blue Angel Standards)
Ozone (average over 8 hrs.)		0.01 ppm or less (Blue Angel Standards)	
Dimensions	Width	697 mm	
	Depth	617 mm	
	Height	541 mm	
Weight		58.7 kg (approx.)	
Consumables	Copy paper	Keep wrapped to protect against humidity.	
	Toner	Avoid direct sun, and keep under 40°C, 85%.	

COPYRIGHT © 1999 CANON INC.
CANON NP6320 REV.0 DEC. 1999 PRINTED IN JAPAN (IMPRIME AU JAPON)

Reproduction mode		Paper size	Cassette	Copies/min
DIRECT		A3 (297×420mm)	A3	11
		A4 (210×297mm)	A4	20
		A4R (297×210mm)	A4R	15
		B4 (257×365mm)	(B4)	12
		B5 (182×257mm)	(B5)	21
		A5R (210×149mm)	A5R	20
REDUCE	I	50%		
	II	A3→ A4R	A4R	13
ENLARGE	I	A4R→ A3	A3	11
	II	200%		

COPYRIGHT © 1999 CANON INC.
CANON NP6320 REV.0 DEC. 1999 PRINTED IN JAPAN (IMPRIME AU JAPON)

III. NAMES OF PARTS

A. External View

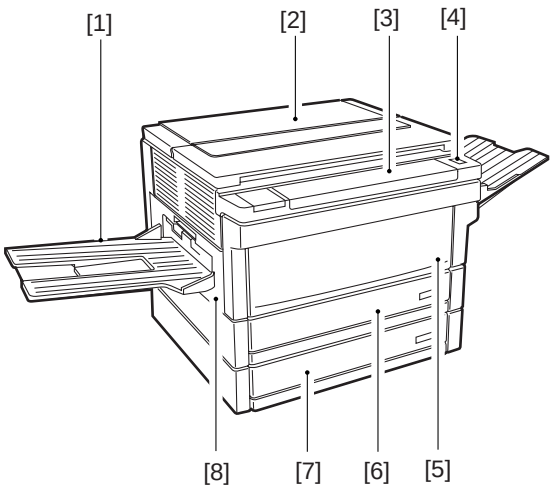

[1] Copy tray
[2] Copyboard cover
[3] Control panel
[4] Power switch
[5] Upper cassette
[6] Lower cassette
[7] Front door
[8] Delivery cover

Figure 1-301

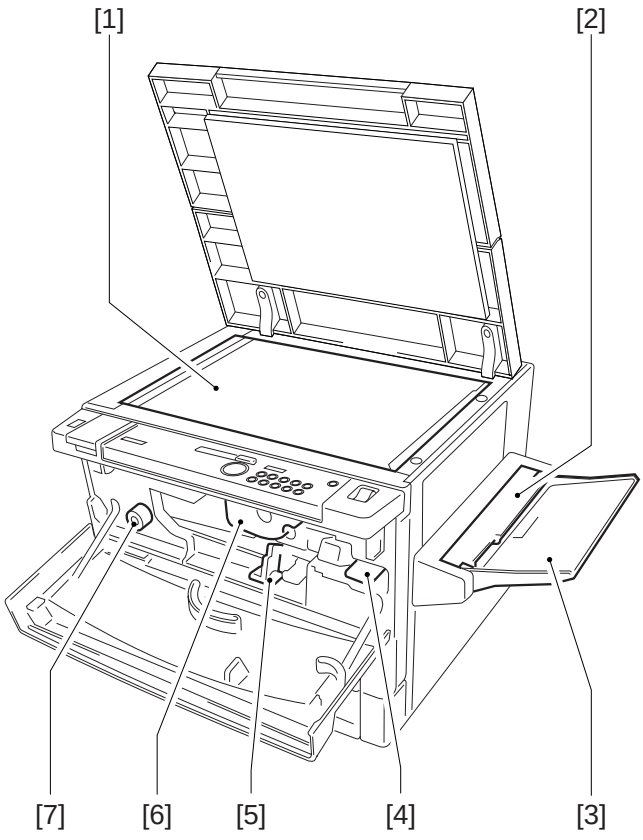

[1] Copyboard glass
[2] Multifeeder cover
[3] Multifeeder tray
[4] Developing assembly release lever
[5] Feeder assembly release lever
[6] Drum unit
[7] Fixing assembly knob

Figure 1-302

COPYRIGHT © 1999 CANON INC.
CANON NP6320 REV.0 DEC. 1999 PRINTED IN JAPAN (IMPRIME AU JAPON)

B. Cross Section

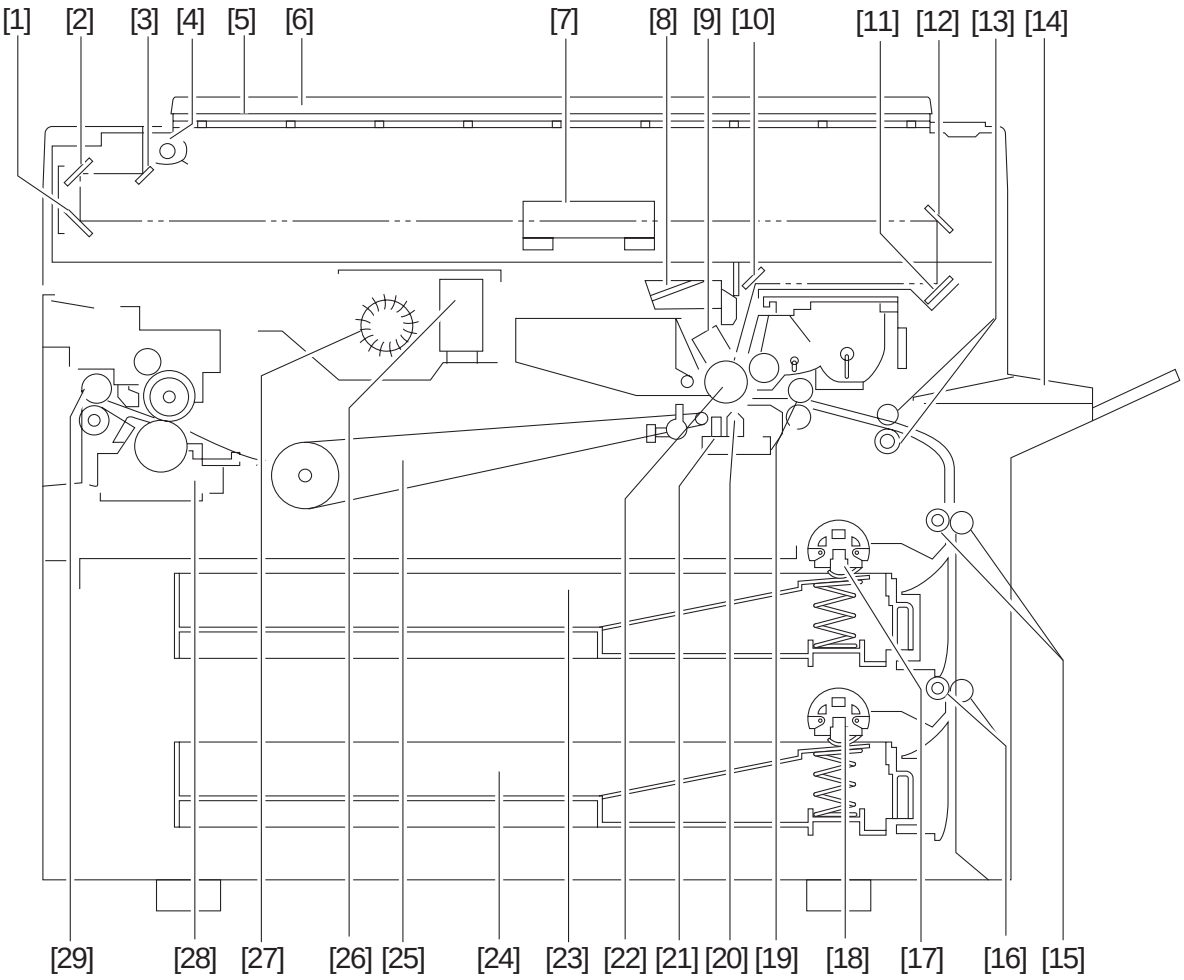

[1] No. 3 mirror
[2] No. 2 mirror
[3] No. 1 mirror
[4] Scanning lamp
[5] Copyboard glass
[6] Copyboard cover
[7] Lens
[8] Pre-exposure lamp
[9] Primary corona unit
[10] No. 6 mirror
[11] No. 5 mirror
[12] No. 4 mirror
[13] Registration roller
[14] Multifeeder tray
[15] Vertical feed roller 1
[16] Vertical feed roller 2
[17] Cassette 1 pick-up roller
[18] Cassette 2 pick-up roller
[19] Feeder roller
[20] Transfer corona unit
[21] Static charge eliminator
[22] Photosensitive drum
[23] Cassette 1
[24] Cassette 2
[25] Feeder unit
[26] Ozone filter
[27] Exhaust fan
[28] Fixing unit
[29] Delivery roller

Figure 1-303

COPYRIGHT © 1999 CANON INC.
CANON NP6320 REV.0 DEC. 1999 PRINTED IN JAPAN (IMPRIME AU JAPON)

COPYRIGHT © 1999 CANON INC.
CANON NP6320 REV.0 DEC. 1999 PRINTED IN JAPAN (IMPRIME AU JAPON)

IV. OPERATION

A. Control Panel

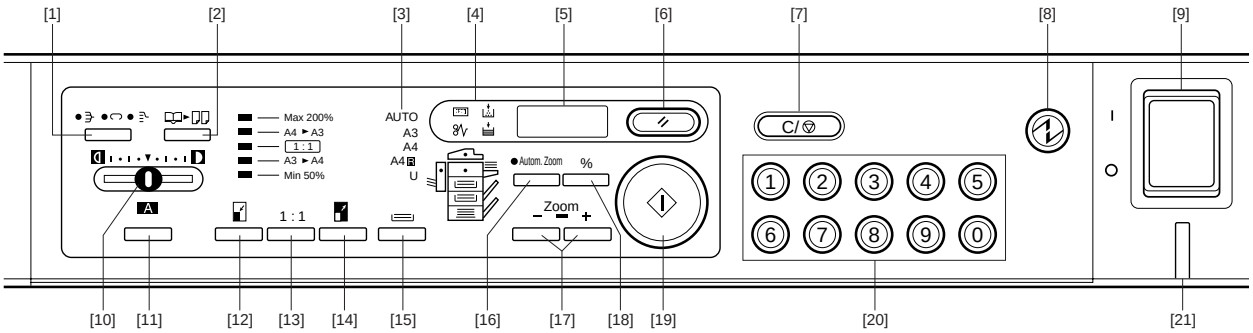

Figure 1-401

No.	Name	Description
[1]	Sorter key	Press to turn the Sort, Group, and Staple-Sort modes on and off. * Effective when a Sorter or Stapler Sorter is attached. • Sort indicator Lights when the Sort mode is on. • Group indicator Lights when the Group mode is on. • Staple-Sort indicator Lights when the Staple-Sort mode is on.
[2]	Two-Page Separation key	Turns the two-page separation mode on and off. Two-Page Separation indicator lights when the two-page separation mode is on.
[3]	Paper Size indicators	Lights to show the selected paper size. AUTO lights when the automatic paper select mode is on.
[4]	Control Card Check indicator	Flashes when the control card is not firmly inserted.
	Toner Out indicator	Flashes when black toner needs to be added.
	Add Paper indicator	Flashes when there is no paper in the selected paper supply, a cassette is not fully inserted, or the optional paper deck is not fully closed.
	Paper Jam indicator	Flashes if there is a paper jam.
	Paper Jam Location indicator	Flashes where there is a paper jam. Lights where inspection is necessary.
	Paper Supply indicator	The selected paper supply lights: either a cassette, the stack bypass, or the optional paper deck.
[5]	Copy Quantity/Copy Ratio display	Displays the number of copies and the copy ratio. If the machine is not functioning properly, the Service Call indicator will be displayed here.
[6]	Reset key	Returns the copy mode to the standard mode.

Table 1-401

COPYRIGHT © 1999 CANON INC.
CANON NP6320 REV.0 DEC. 1999 PRINTED IN JAPAN (IMPRIME AU JAPON)

No.	Name	Description
[7]	Clear/Stop key	Press to change the copy count or to stop the copier before copying is complete.
[8]	Energy Saver key	Press to turn the standby mode on or off. Lights when the Energy Saver mode is on. Flashes orange when the copier has shut off automatically.
[9]	Power switch	-
[10]	Copy Exposure lever	Use to manually adjust the copy exposure.
[11]	AE key	Press to turn the automatic exposure mode on and off. When the mode is on, the copy exposure is adjusted automatically. AE Indicator Lights when the AE mode is on.
[12]	Reduce key	Press to reduce the size of the copies by a fixed ratio.
[13]	Direct Copy key	Press to make copies the same size as the original.
[14]	Enlarge key	Press to enlarge the size of the copies by a fixed ratio.
[15]	Paper Select key	Press to select the automatic paper select mode, a cassette, or the paper deck (option).
[16]	Auto Zoom key	Press to turn the automatic zoom mode on or off.
[17]	Zoom keys	Press to freely input the enlargement/reduction ratio within the 50-200% range, in 1% increments.
[18]	Percent key	Press to display the input enlargement/reduction ratio.
[19]	Start key	Press to start making copies. Start indicator Flashes green when the machine is warming up. Lights green when the machine is ready to copy. Lights red during copying.
[20]	Number keys	Press to input the number of copies to be made.
[21]	Power indicator	-

Table 1-402

COPYRIGHT © 1999 CANON INC. CANON NP6320 REV.0 DEC. 1999 PRINTED IN JAPAN (IMPRIME AU JAPON)

B. Setting the Auto Shut-Off time

If the copier is not used for 30 minutes, the power will turn OFF automatically.
To turn the power back ON, press the Power Switch.
The Auto Shut-Off mode time can be set from 10 minutes to 2 hours.

1 Press the AE key for 5 seconds or more.
2 The default time selection ("A-4") is displayed on the control panel display.
3 Select the desired time setting with the ZOOM or Number key.
4 The selected timer setting ("A-1" thru "A-9") is shown on the control panel display.

Display	A-1	A-2	A-3	A-4	A-5	A-6	A-7	A-8	A-9
Time [min]	10	15	20	30	40	50	60	90	120

Table 1-403

5 Press the SORT key to store the timer settings and exit this mode.
6 Press the RESET key to exit without storing the timer setting.

C. Daily Inspection to Be Performed by the User

Clean the following parts of the copier at least once per week or whenever copies are unclear.

- When cleaning the copier, first turn OFF the power switch and unplug the power plug. Failure to observe these items may result in fire or electrical shock.
- Clean the copier using a firmly wrung-out cloth dampened with a mild cleansing detergent. Do not use alcohol, benzene, paint thnner or other inflammable substances. If inflammable substances come into contact with a high-voltage area inside the copier, this may result in fire or electrical shock.

1. Copyboard Glass

Wipe the copyboard glass with a cloth dampened with water or a mild cleaning agent. Then wipe with a dry cloth.

2. Copyboard Cover

Wipe the white surface on the underside of the copyboard cover with a cloth dampened with water or a mild cleaning agent. Then wipe with a dry cloth.

COPYRIGHT © 1999 CANON INC.
CANON NP6320 REV.0 DEC. 1999 PRINTED IN JAPAN (IMPRIME AU JAPON)

3. Cleaning the Corona Assembly

1) Grip the handles on both sides of the front door, and open the front door.

3-1. Cleaning Using the Corona Assembly Cleaner

1) Grip the tab on the end of the corona assembly cleaner, and slide the corona assembly cleaner out toward you. Then, slide the corona assembly cleaner back into the copier.
   Repeat this motion several times.
   When you finish, slide the corona assembly cleaner back into the copier to its original position.

3-2. Cleaning the Static Eliminator

1) Turn the transport area release lever (green) to the left. Push slightly downward on the end of the static eliminator, and slide it out of the copier.
2) After removing the static eliminator, turn it so that the bottom is facing upward. Slide the gray tab on the bottom of the static eliminator back and forth from one end to the other several times.
3) When you finish, insert the static eliminator back into the copier, and return it to its original position.
4) Return the transport area release lever to its original position. Close the front door.

COPYRIGHT © 1999 CANON INC.
CANON NP6320 REV.0 DEC. 1999 PRINTED IN JAPAN (IMPRIME AU JAPON)

V. IMAGE FORMATION PROCESS

A. Outline

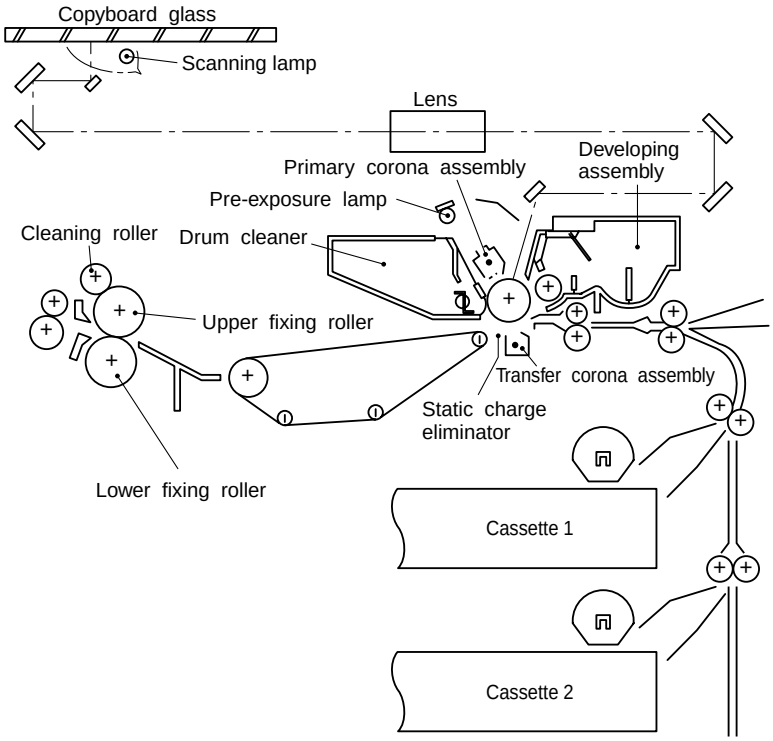

Figure 1-501

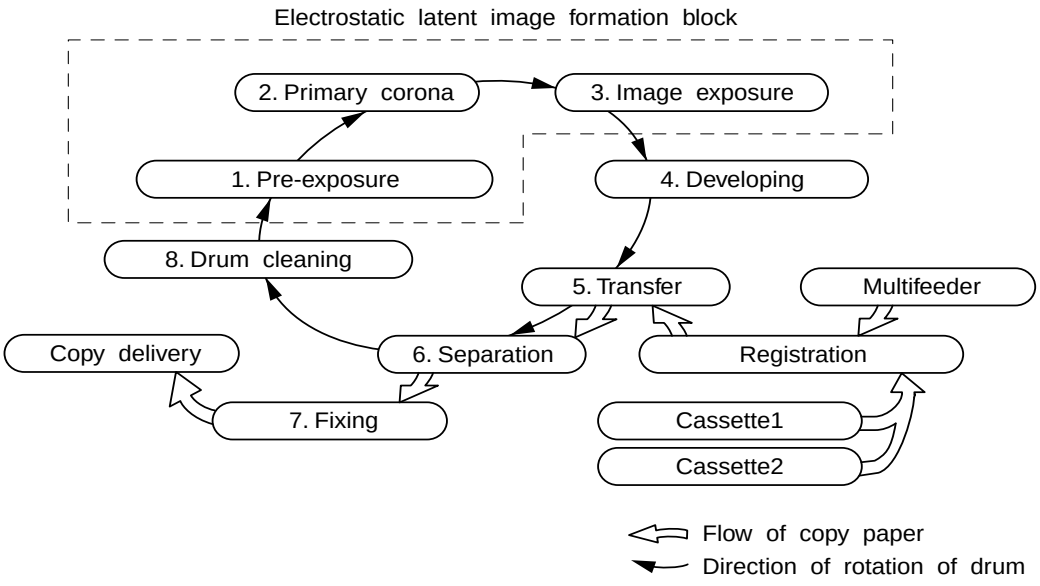

Figure 1-502

COPYRIGHT © 1999 CANON INC.
CANON NP6320 REV.0 DEC. 1999 PRINTED IN JAPAN (IMPRIME AU JAPON)

This copier consists of the units shown in Figure 1-502.
The image forming process is divided into the right steps shown below.
Step 1: Pre-exposure
Step 2: Primary corona (negative DC)
Step 3: Image exposure
Step 4: Developing (positive plus AC)
Step 5: Transfer (negative DC)
Step 6: Separation
Step 7: Fixing
Step 8: Drum cleaning

COPYRIGHT © 1999 CANON INC.
CANON NP6320 REV.0 DEC. 1999 PRINTED IN JAPAN (IMPRIME AU JAPON)

CHAPTER 2

BASIC OPERATION

1. This chapter describes the various functions of the copier, the relationship between the electrical and mechanical systems, and the timing of operations of the various components. In outline diagrams, mechanical drive paths are represented by (▬▪▪▪) and electrical signal paths are indicated by an arrow (⟶) accompanied by a signal name.
2. The signals in digital circuits are identified as "1" for HIGH and "0" for LOW. The voltage for LOW is very close to 0V; the voltage for HIGH depends on the circuit. If a signal name has no bar over it (e.g, PDP), "1" is a "TRUE" signal and will usually cause an action to occur; a "FALSE" signal will normally prevent the operation.

   Microprocessors are used in the copier. The internal operations of the microprocessors cannot be checked by the service person, so no description is given here. Because PCBs are not normally repaired on the customer's premises, operation of circuits is explained using block diagrams rather than detailed circuit diagrams.

   Descriptions of circuits are divided into the following sections: from the sensors to the input section of the main PCBs, and from the output section of the main PCBs to the various loads.

I. BASIC OPERATION 2-1
   A. Functions 2-1
   B. Outline of Electric Circuitry ... 2-2
   C. Inputs to the DC Controller ... 2-4
   D. DC Controller Outputs 2-7
   E. Basic Sequence of Operations (Direct, continuous copying, 2 sheets) 2-10

COPYRIGHT © 1999 CANON INC. CANON NP6320 REV.0 DEC. 1999 PRINTED IN JAPAN (IMPRIME AU JAPON)

I. BASIC OPERATION

A. Functions

The copier can be divided into four functional sections: paper pick-up and feed system, exposure system, image formation system, and control system.

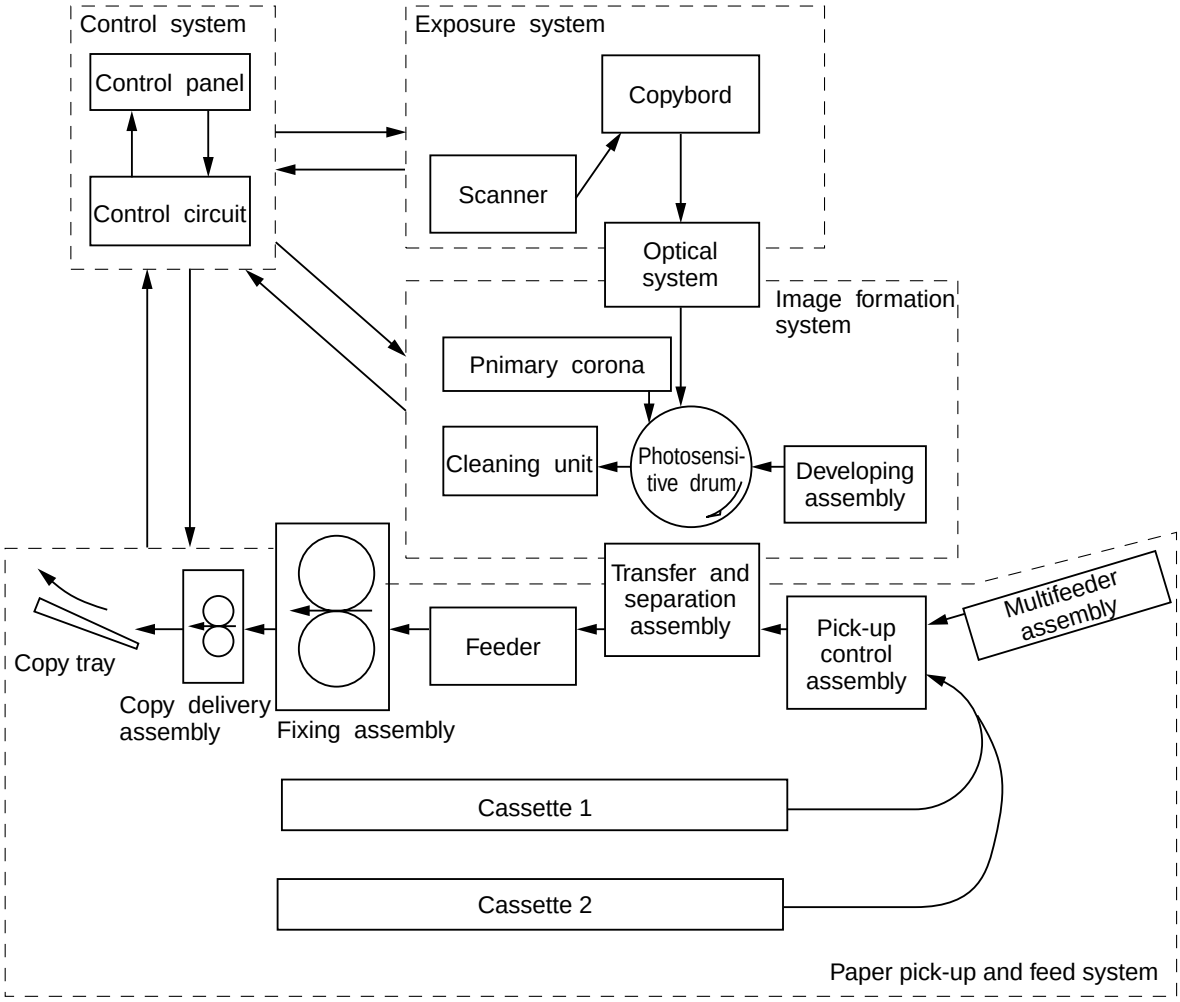

Figure 2-101

COPYRIGHT © 1999 CANON INC. CANON NP6320 REV.0 DEC. 1999 PRINTED IN JAPAN (IMPRIME AU JAPON)

B. Outline of Electric Circuitry

The NP6320's main mechanisms are controlled by the microprocessor, PROM, and EEPROM on the DC controller PCB.

1. Microprocessor (Q303: master)

- controls the copying sequence
- controls the control panel
- controls the main motor/scanner motor
- controls the scanning lamp
- controls the serial communication with the ADF
- reads analog signals

2. PROM (Q318)

- contains sequence programs

3. EEPROM (Q315)

- stores data that can be modified in the service mode (replaces conventional variable resistors and switches)

4. Microprossor (Q305: slave)

- controls the document size identification
- controls the serial communication with the sorter
- controls the fans
- controls the paper deck pedestal

Note:
EEPROM is a type of ROM in which data may be erased or stored newly.
For this reason, the NP6320's RAM and ROM are not backed up by a lithium battery.

Note:
The NP6320 is equipped with an A/D converter and, therefore, its microprocessor can read analog signals.

Note:
The main motor (M2) is a stepping motor that uses the oscillation frequency of the crystal oscillator on the power supply assembly.
The main motor (M1) is a brushless motor.

COPYRIGHT © 1999 CANON INC.
CANON NP6320 REV.0 DEC. 1999 PRINTED IN JAPAN (IMPRIME AU JAPON)

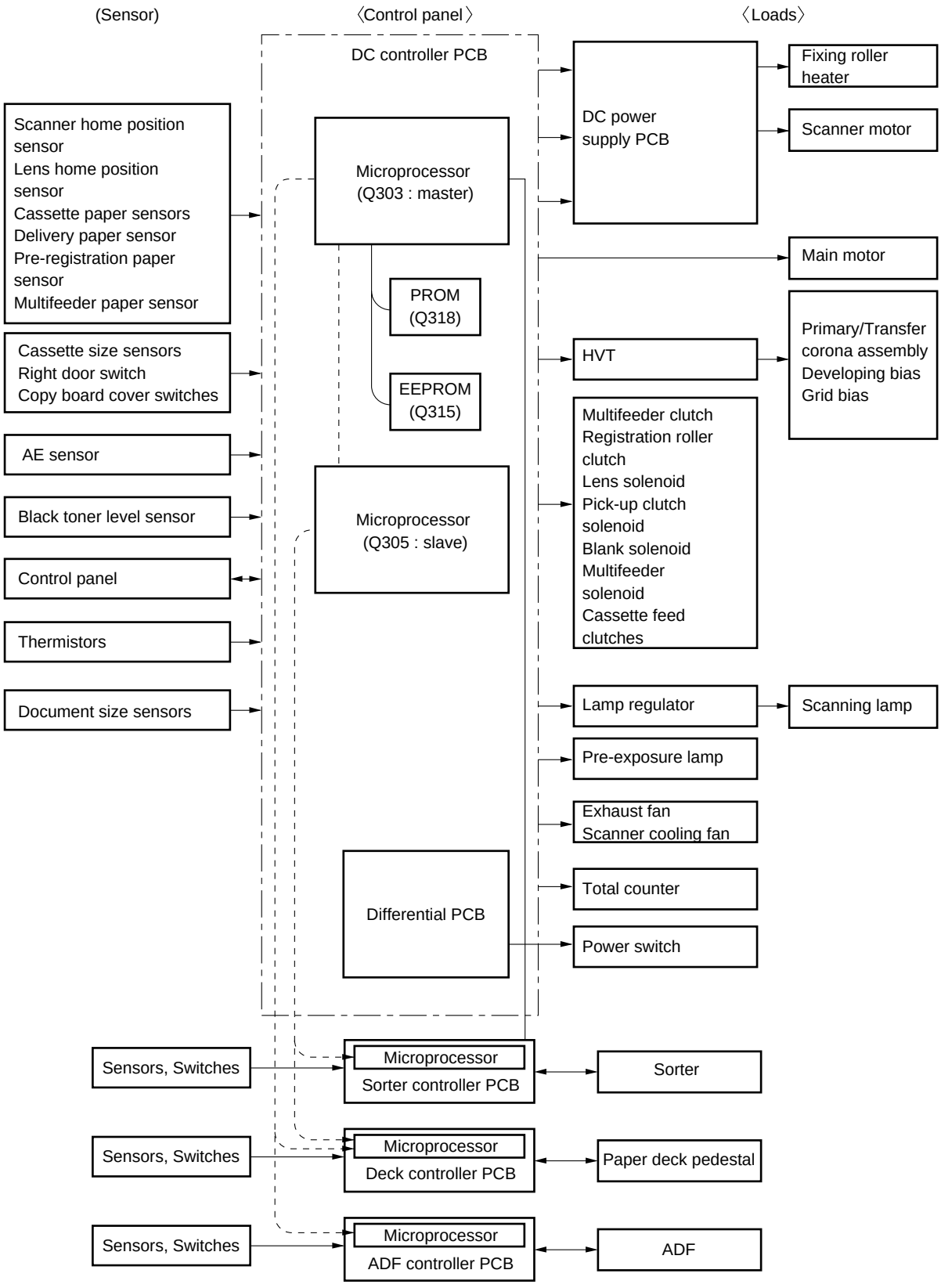

Figure 2-102

COPYRIGHT © 1999 CANON INC.
CANON NP6320 REV.0 DEC. 1999 PRINTED IN JAPAN (IMPRIME AU JAPON)

C. Inputs to the DC Controller

1. Inputs to the DC Controller (1/3)

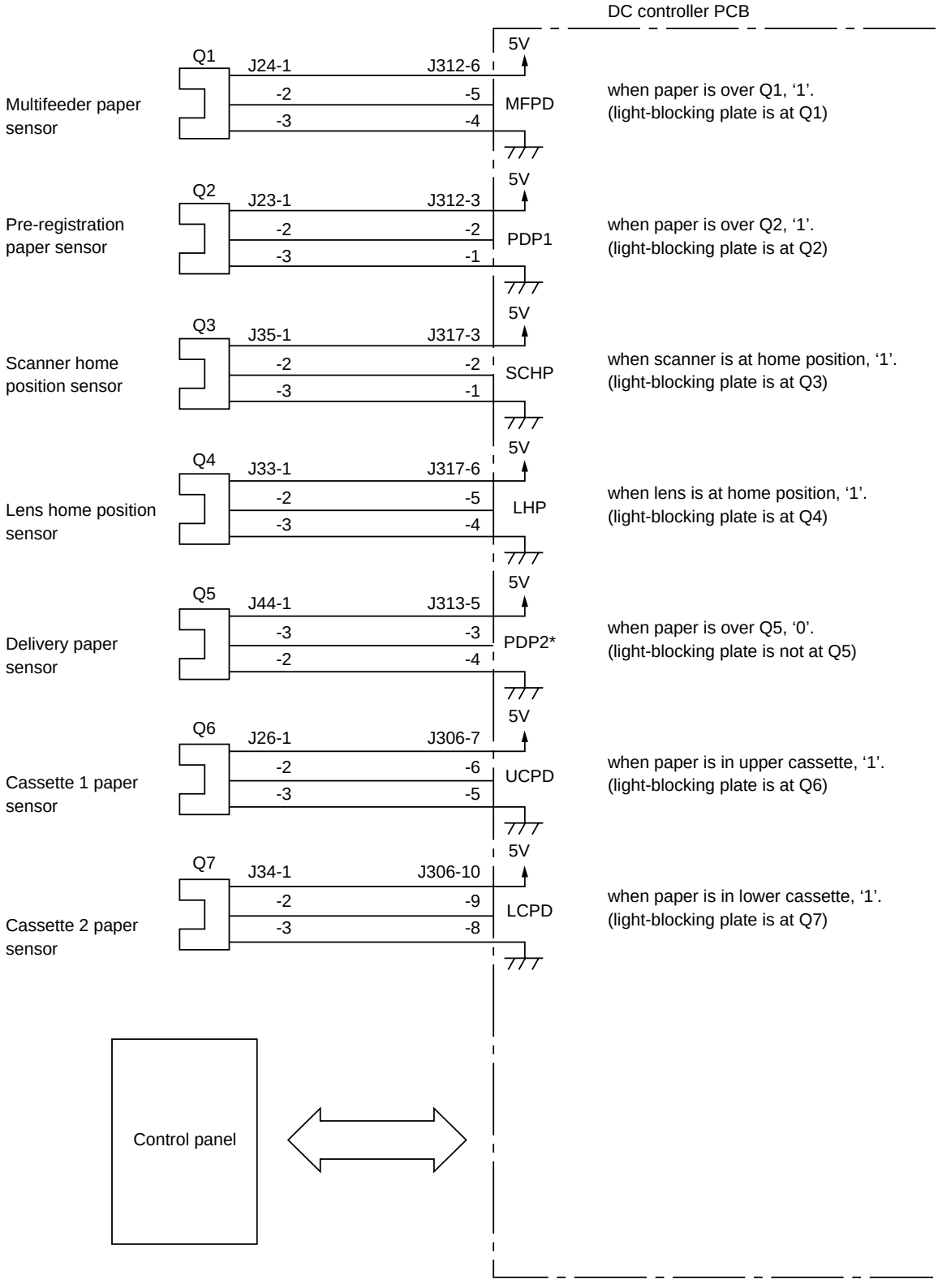

Figure 2-103

COPYRIGHT © 1999 CANON INC.
CANON NP6320 REV.0 DEC. 1999 PRINTED IN JAPAN (IMPRIME AU JAPON)

2. Inputs to the DC Controller (2/3)

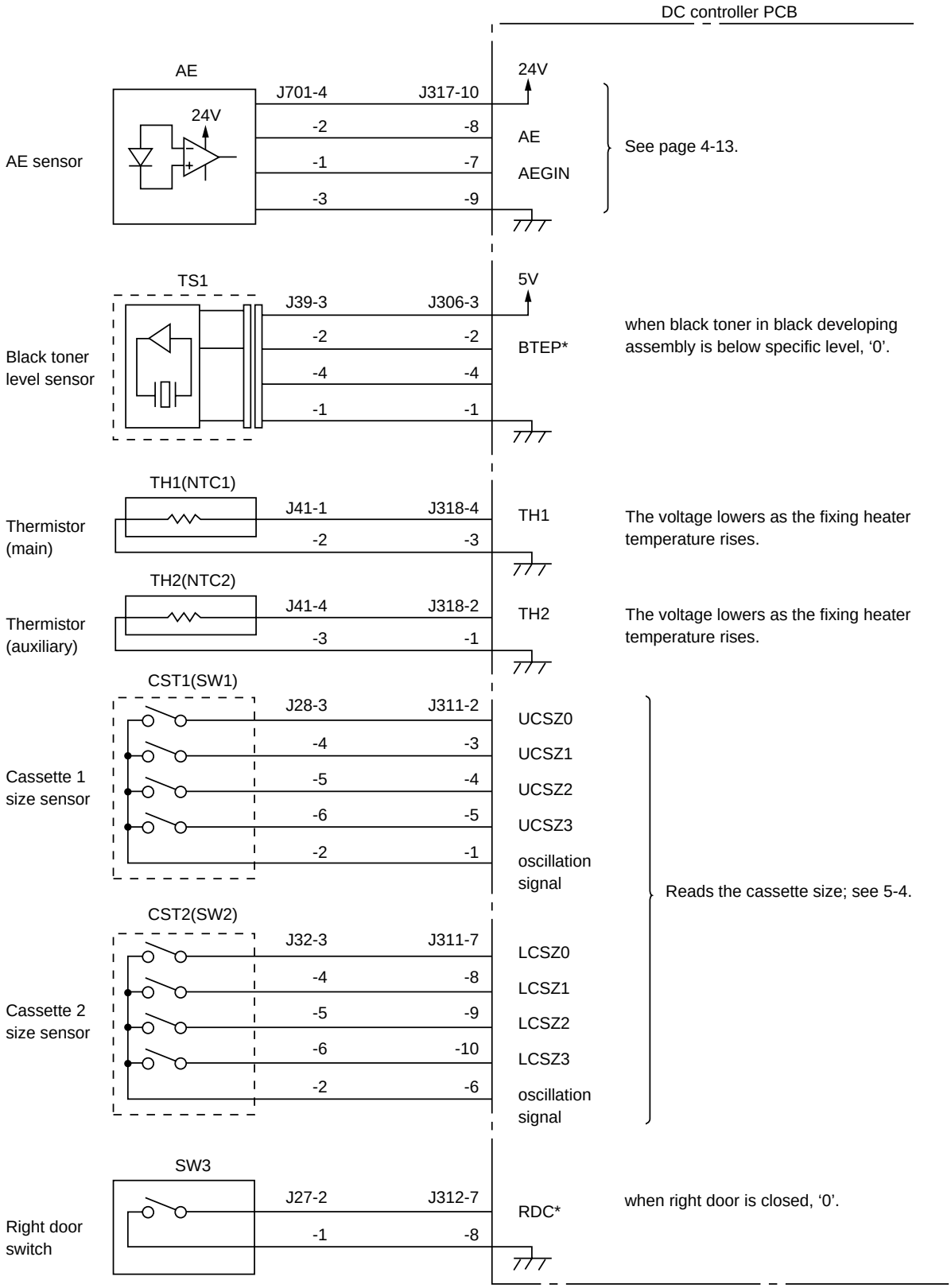

Figure 2-104

COPYRIGHT © 1999 CANON INC.

3. Inputs to the DC Controller (3/3)

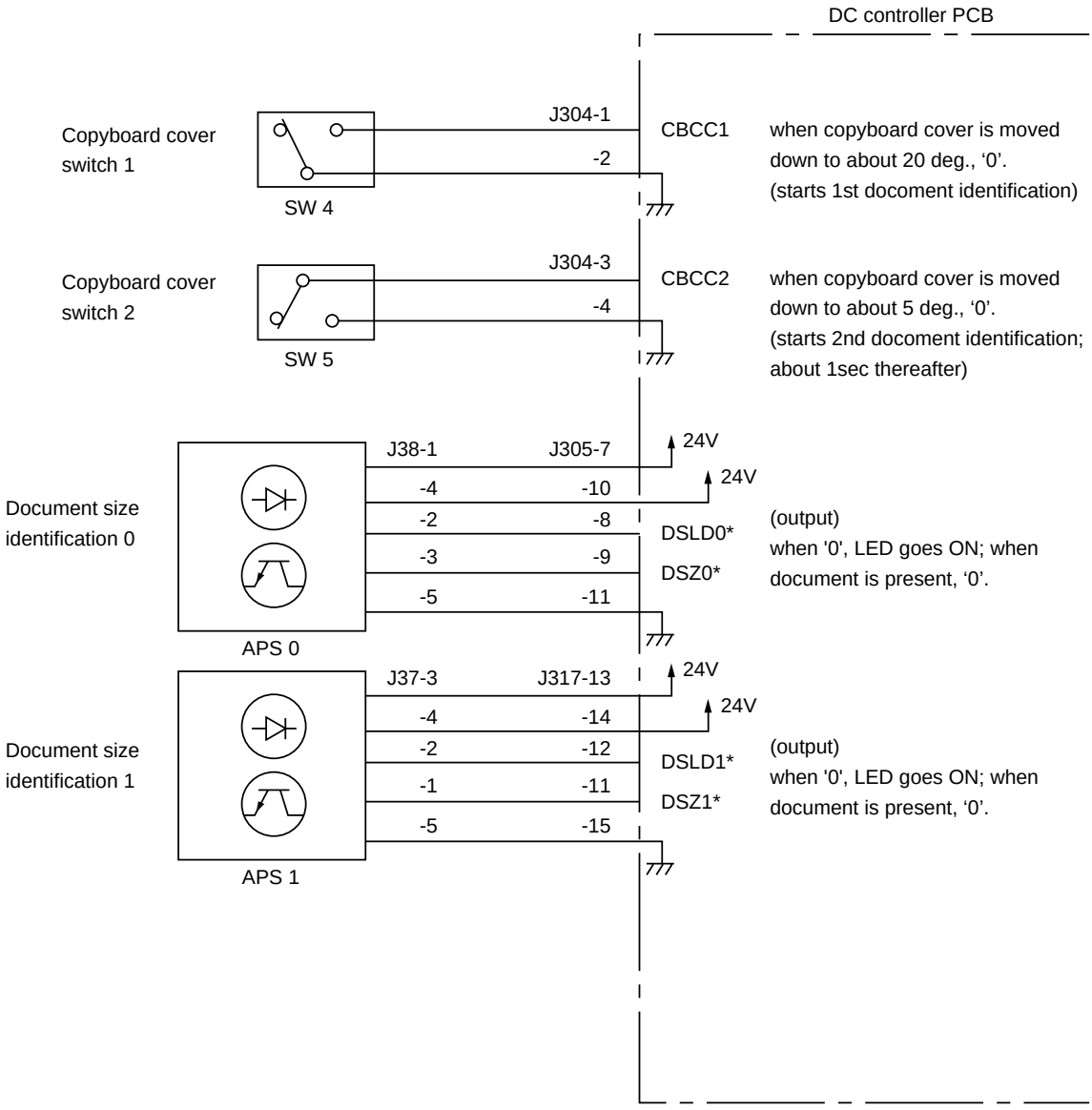

Figure 2-105

COPYRIGHT © 1999 CANON INC.
CANON NP6320 REV.0 DEC. 1999 PRINTED IN JAPAN (IMPRIME AU JAPON)

D. DC Controller Outputs

1. DC Controller Outputs (1/3)

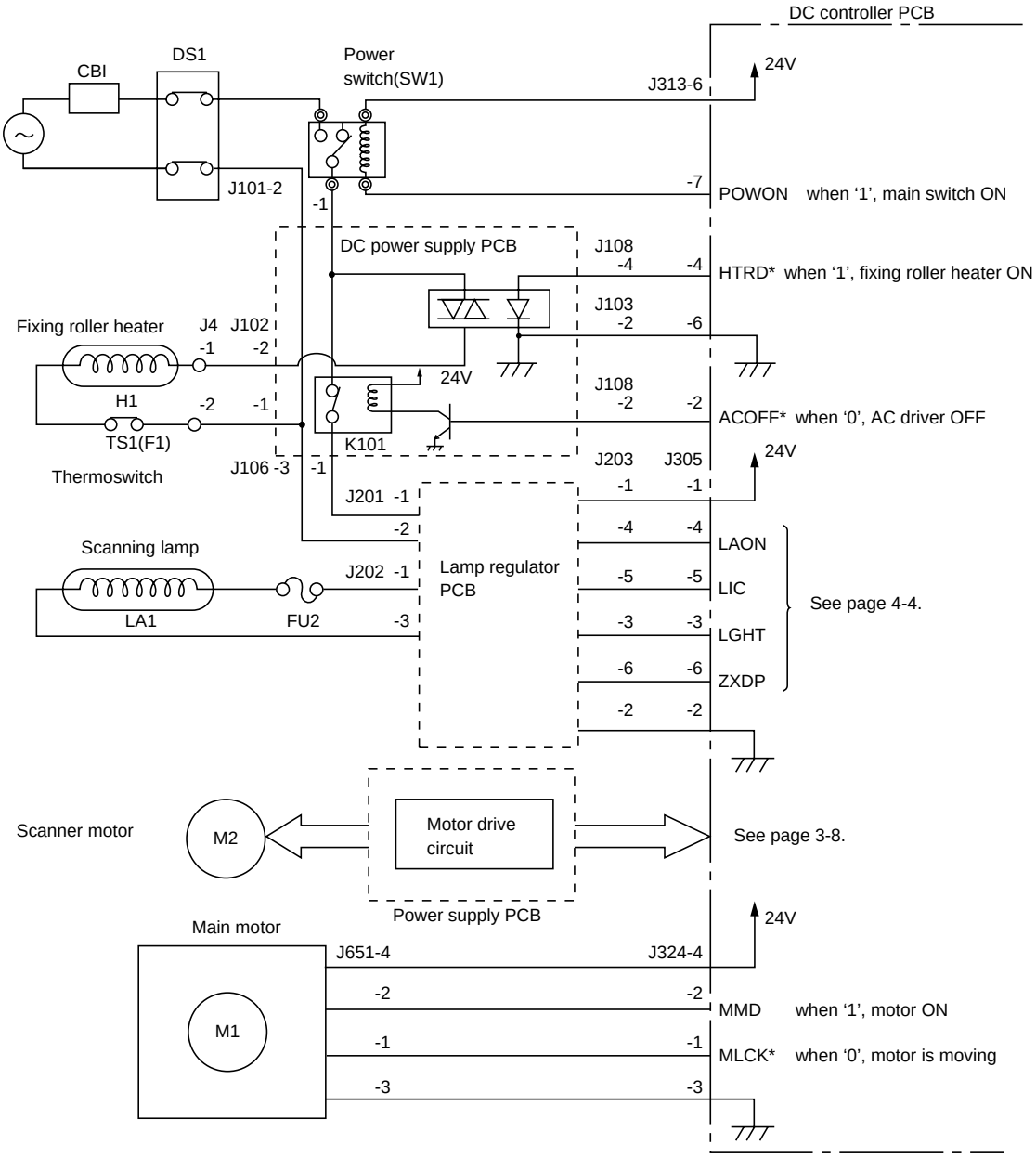

Figure 2-106

2. DC Controller Outputs (2/3)

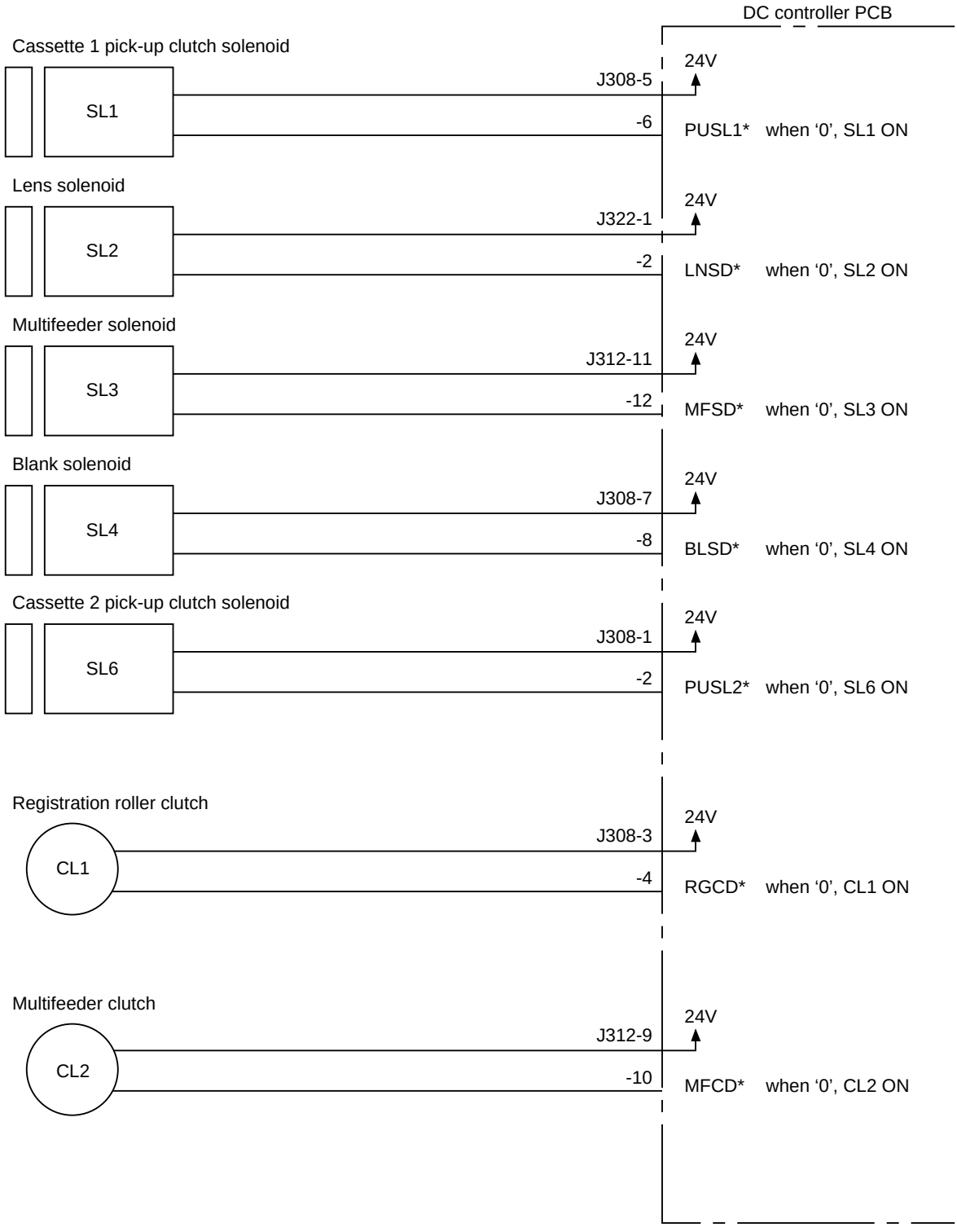

Figure 2-107

COPYRIGHT © 1999 CANON INC.
CANON NP6320 REV.0 DEC. 1999 PRINTED IN JAPAN (IMPRIME AU JAPON)

3. DC Controller Outputs (3/3)

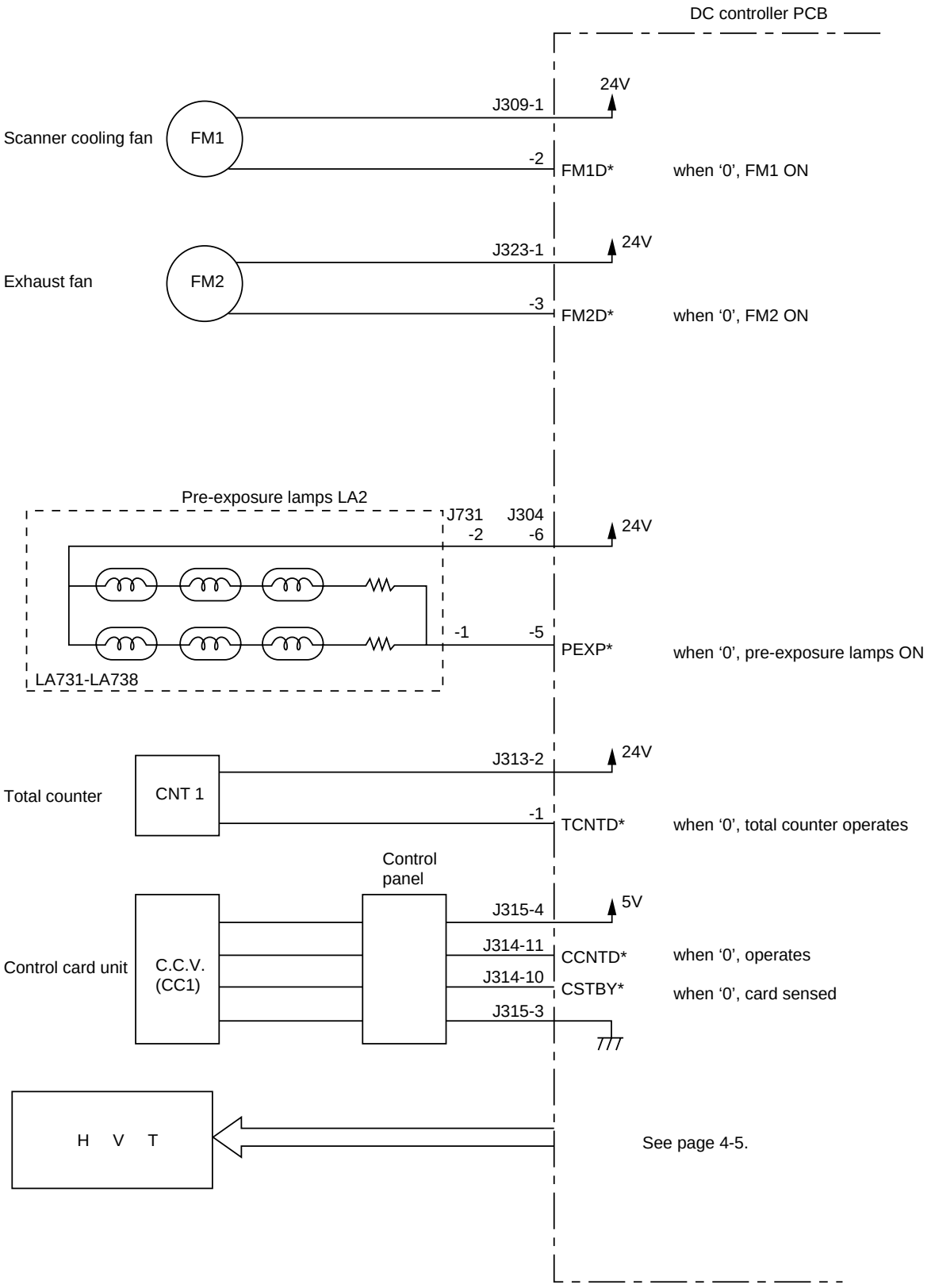

Figure 2-108

COPYRIGHT © 1999 CANON INC. CANON NP6320 REV.0 DEC. 1999 PRINTED IN JAPAN (IMPRIME AU JAPON)

E. Basic Sequence of Operations (Direct, continuous copying, 2 sheets)

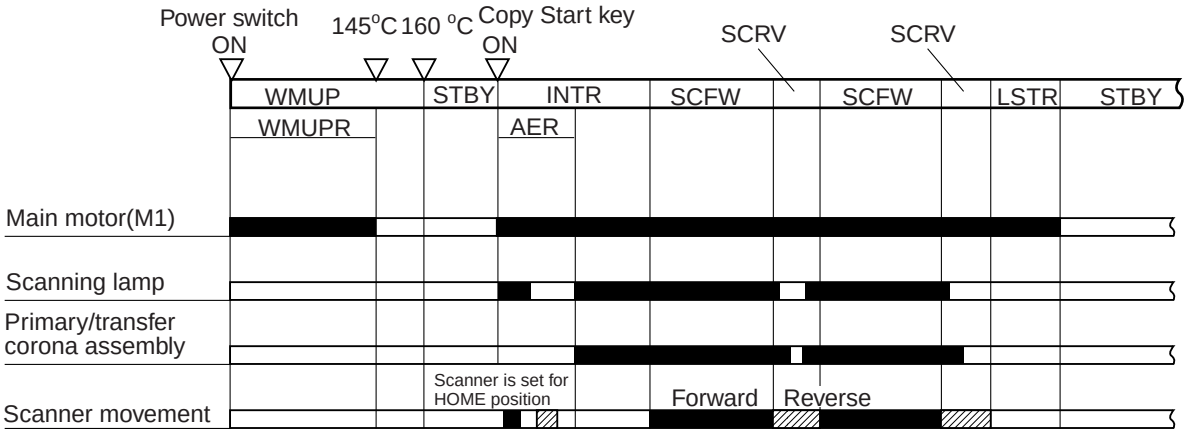

Figure 2-109

Period		Purpose	Remarks
WMUPR (warm-up rotation)	Until the fixing roller temperature reaches 145°C.	Keeps fixing roller temperature uniform.	• After the WMUPR period ends, the READY/WAIT indicator blinks green. • Even when the fixing roller has warmed up, it rotates for at least 3.5 seconds.
WMUP (warm-up)	From switch on until the fixing roller temperature reaches 160°C. (about 30 seconds at an ambient temperature of 20°C)	Allows time for fixing roller to warm up.	Warm-up time varies with fixing roller temperature at power ON. When the Copy Start key is lighting green.
INTR (initial rotation)	About 2.2 sec after the Copy Start key is pressed.	Stabilizes drum sensitivity to prepare for copying.	

Table 2-101a

COPYRIGHT © 1999 CANON INC.
CANON NP6320 REV.0 DEC. 1999 PRINTED IN JAPAN (IMPRIME AU JAPON)

Period		Purpose	Remarks
AER (AE rotation)	From when the scanner moves forward about 70 mm from the end of the image until it returns to its home position.	Moves the scanner forward about 70 mm from the end of the image and measures the document density.	In the non-AE mode, the scanner does not move forward or in reverse.
SCFW (scanner forward)	When the scanner is moving forward. • Travel distance changes with copy paper size.	The scanning lamp illuminates original, and the reflected optical image is transmitted to the photosensitive drum through mirrors and lens array.	• A registration signal is generated, and copy paper is fed to transfer area. • A paper feed signal is generated to feed the next sheet of copy paper.
SCRV (scanner reverse)	While the scanner is moving in reverse. • The speed of the reverse movement is 2.5 times that of the forward movement.	The scanner is moved back to the home position to prepare for the next copy.	
LSTR (last rotation)	Until the main motor stops after SCRV for the last copy ends.	Ensures discharge of the last copy.	
STBY (stand-by)		Waits until the Copy Start key is pressed.	

Table 2-101b

COPYRIGHT © 1999 CANON INC.

CHAPTER 3

EXPOSURE SYSTEM

1. Disconnect the power cord for safety before disassembly or reassembly work.
2. Group the screws by type (length and diameter) and location.
3. The mounting screws are equipped with washers to protect against static electricity; do not leave them behind when attaching the covers.
4. The mounting screw for the grounding wire is equipped with a washer to ensure electrical continuity; make sure that the washer is attached to the screw when removing/fitting it.
5. If possible, avoid operating the machine with any of its parts removed.
6. Unless otherwise noted, re-assembly is the reverse of disassembly.

I. BASIC OPERATION 3-1
  A. Changing the Reproduction Ratio 3-1
II. LENS DRIVE SYSTEM 3-2
  A. Outline 3-2
  B. Basic Lens Drive System Operation (change of reproduction ratio) 3-4
III. SCANNER DRIVE SYSTEM 3-5
  A. Outline 3-5
  B. Relation Between Scanner Sensor and Signals 3-6
  C. Basic Scanner Operation 3-7
  D. Scanner Motor Drive System Operation 3-8
  E. Scanner Movement for Two-Page Separation Mode (copy count 2) 3-10
  F. Document Size Identification 3-11
IV. DISASSEMBLY AND ASSEMBLY 3-14
  A. Lens Drive Assembly 3-14
  B. Scanner Drive Assembly 3-16

COPYRIGHT © 1999 CANON INC. CANON NP6320 REV.0 DEC. 1999 PRINTED IN JAPAN (IMPRIME AU JAPON)

I. BASIC OPERATION

A. Changing the Reproduction Ratio

The reproduction ratio across the drum is varied by changing the position of the lens. It is moved by the lens drive system. The reproduction ratio around the drum is varied by changing the speed of the scanner. Figure 3-101 shows how the position of the lens is varied to change the reproduction ratio across the drum.

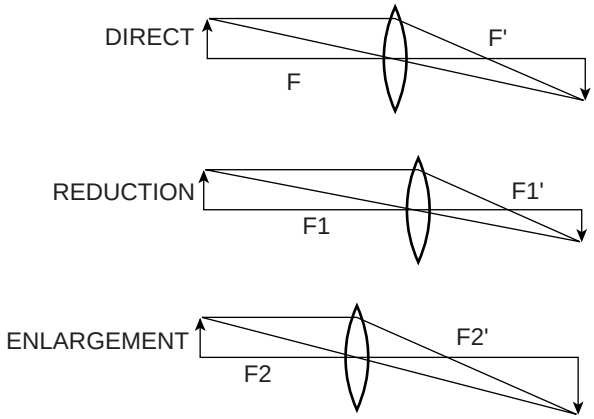

Figure 3-101

The scanner drive system changes the reproduction ratio around the drum by varying the speed at which mirror 1 moves relative to the peripheral speed of the drum. (The scanner is mirror 1 plus the scanning lamp.)

The mirror speed is faster than the drum peripheral speed for reduction and slower for enlargement.

Note:
1. The relative position of the mirrors is not changed to vary the reproduction ratio.
2. For Direct copying, the speed of the mirror is the same as the peripheral speed of the drum.

COPYRIGHT © 1999 CANON INC.
CANON NP6320 REV.0 DEC. 1999 PRINTED IN JAPAN (IMPRIME AU JAPON)

II. LENS DRIVE SYSTEM

A. Outline

The lens is moved by the scanner motor (M2). Normally, the coupling gear is in its upper position, and connects the scanner motor to the scanner drive capstan. To move the lens, the lens solenoid (SL2) goes ON, causing the coupling gear to disengage from the scanner capstan gear and engage with the lens capstan gear. The lens is a "floating element" type. In operation, the relative position of the lens elements (individual lenses) changes, and the focal length changes as a result, but the changes are to optimize lens sharpness for each reproduction ratio, not to make the lens function as a zoom lens. (The lens should not be dismantled.)

When the scanner motor rotates (CW), the lens will be moved to the left (for enlargement) by the capstan and cable.

When the cassette size is changed or when the copier is in the Reduce mode, the blank exposure shutter moves in relation to the distance over which the lens travels, thereby blanking out the width corresponding to the reproduction ratio; see p. 4-16.

The DC controller indicates 'E210' on the control panel in response to an error in the lens drive system.

COPYRIGHT © 1999 CANON INC.
CANON NP6320 REV.0 DEC. 1999 PRINTED IN JAPAN (IMPRIME AU JAPON)

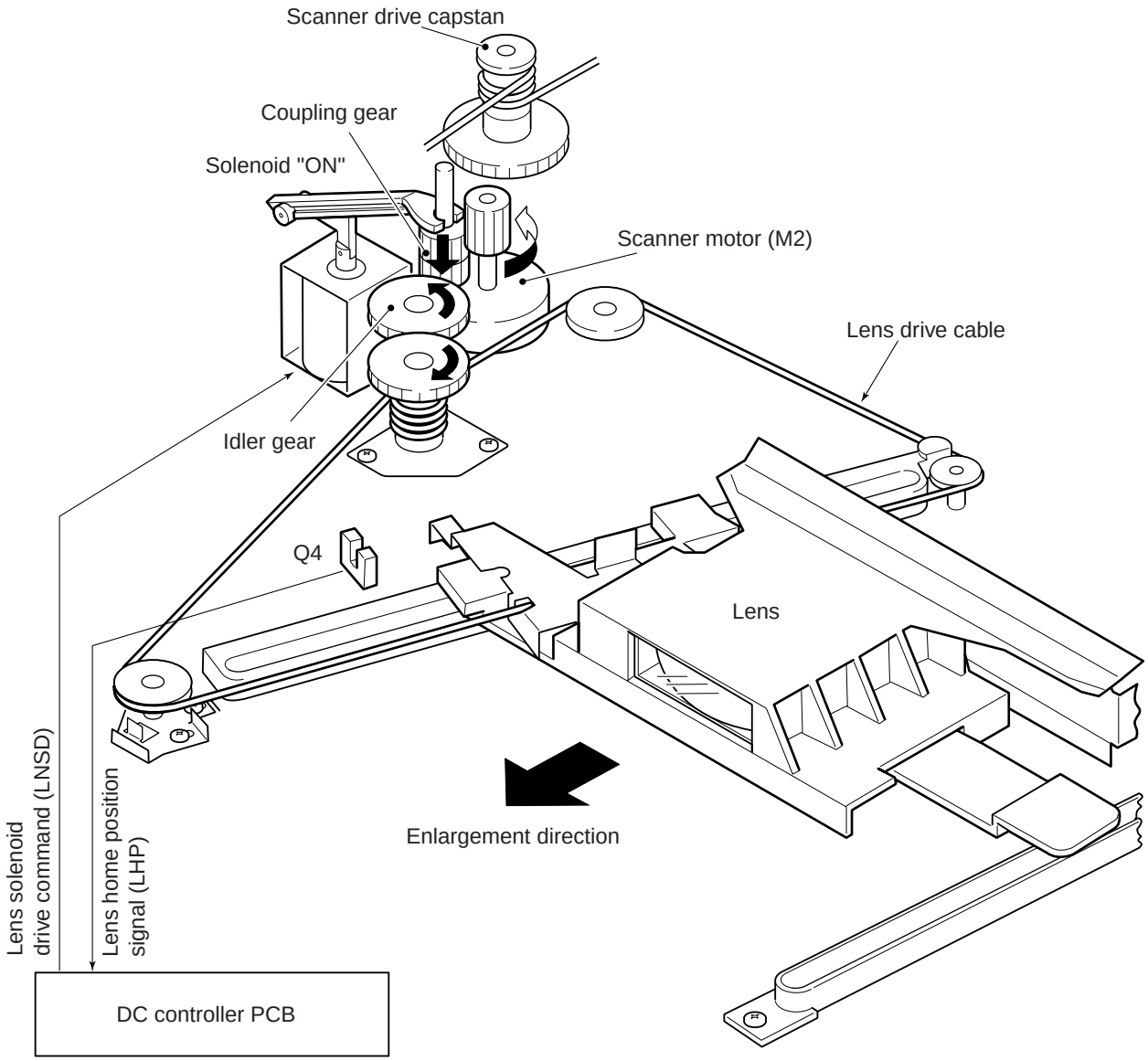

Figure 3-201

COPYRIGHT © 1999 CANON INC.
CANON NP6320 REV.0 DEC. 1999 PRINTED IN JAPAN (IMPRIME AU JAPON)

B. Basic Lens Drive System Operation (change of reproduction ratio)

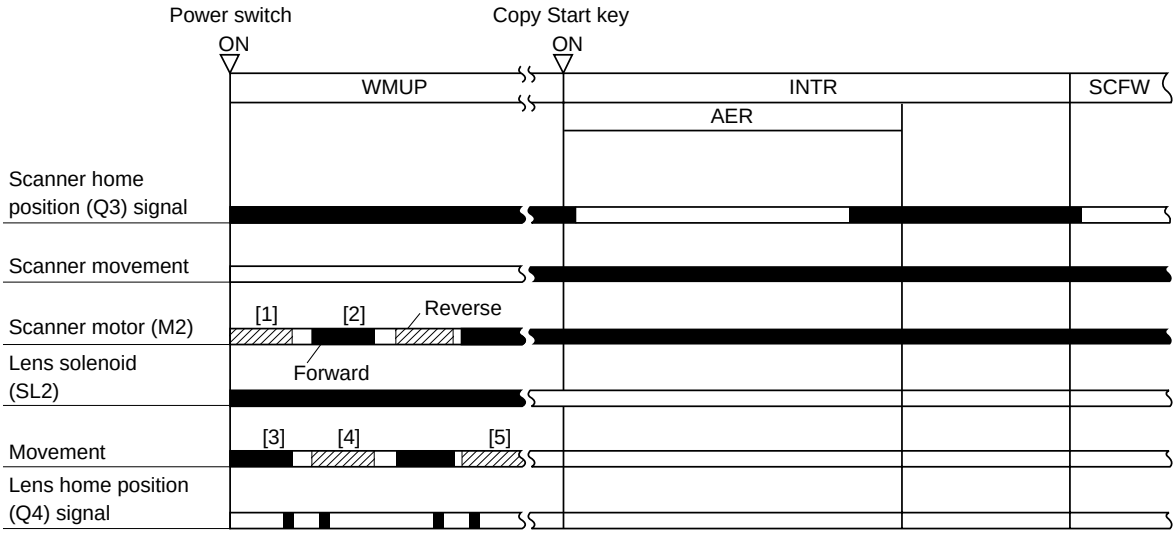

[1] CCW rotation
[2] CW rotation
[3] Enlargement direction
[4] Blanking by cassette size (reduction direction)
[5] Blanking by selected reproduction ratio

Figure 3-202

When the casette size is changed or when the copier is in the zoom mode, the lens first returns to the home position before moving to the position that corresponds to the cassette size and the reproduction ratio.

This operation is executed also when the zoom mode is switched to the Direct mode.

COPYRIGHT © 1999 CANON INC.
CANON NP6320 REV.0 DEC. 1999 PRINTED IN JAPAN (IMPRIME AU JAPON)

III. SCANNER DRIVE SYSTEM

A. Outline

The scanner is driven by the scanner motor (M2). The direction of rotation of the scanner motor determines whether the scanner moves forward or backward. The forward speed of the scanner motor is continuously variable to produce the required reproduction ratio. The reverse speed is fixed regardless of the reproduction ratio (2.5 times the forward speed for DIRECT copying).

The distance that the scanner moves varies to suit the size of copy paper and the reproduction ratio.

The control panel displays 'E202' in response to an error in the scanner motor (M2) or the scanner home position sensor (Q3).

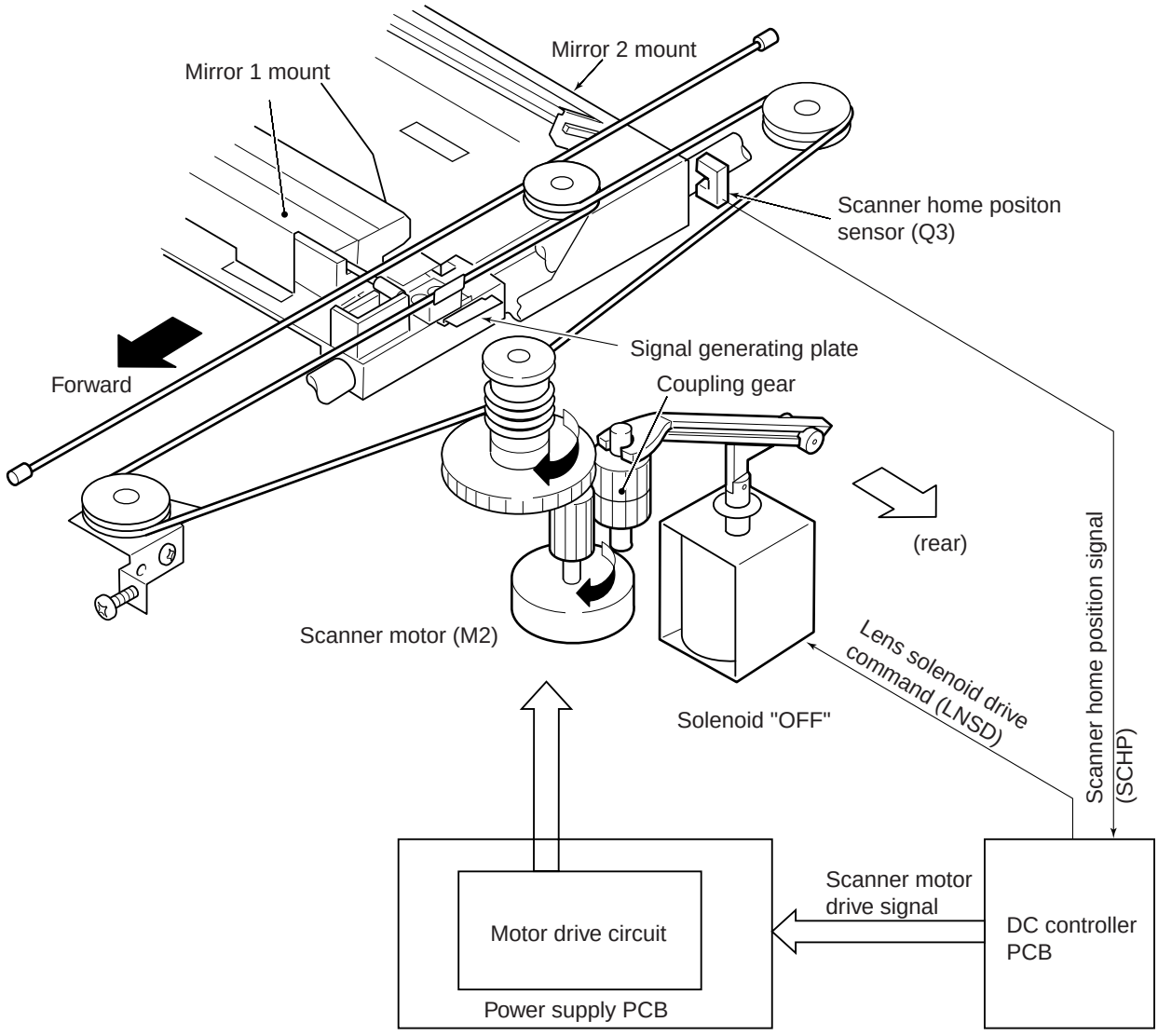

Figure 3-301

COPYRIGHT © 1999 CANON INC. CANON NP6320 REV.0 DEC. 1999 PRINTED IN JAPAN (IMPRIME AU JAPON)

B. Relation Between Scanner Sensor and Signals

Scanner sensor	Signal name	Scanner		Meaning
		Forward	Reverse	
Scanner home position sensor (Q3)	SCHP	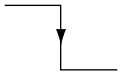		• Grid bias ON
			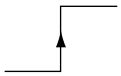	• After 0.1 seconds, scanner stops advancing

Table 3-301

COPYRIGHT © 1999 CANON INC.
CANON NP6320 REV.0 DEC. 1999 PRINTED IN JAPAN (IMPRIME AU JAPON)

C. Basic Scanner Operation

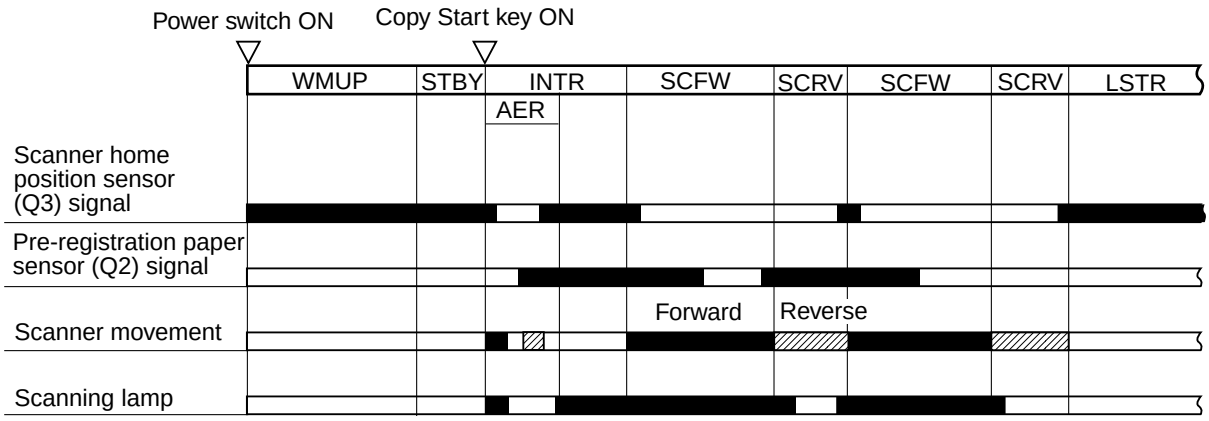

Figure 3-302

COPYRIGHT © 1999 CANON INC.
CANON NP6320 REV.0 DEC. 1999 PRINTED IN JAPAN (IMPRIME AU JAPON)

D. Scanner Motor Drive System Operation

The scanner motor is a 4-phase stepping motor, and rotates CW and CCW depending on the combination of pulses (A, A*, B, B*) to each phase.

a. Clockwise Rotation

The scanner motor driver outputs pulses, and the motor rotates CW. This moves the lens in the direction for reduction, and the scanner moves forward.

For reduction copying, the motor speed increases to move the scanner faster (forward).

b. Counterclockwise Rotation

The scanner motor is driven CCW by pulses of phase relationship opposite of that used to drive it CW. This moves the lens in the direction for enlargement, and moves the scanner in reverse.

c. Mechanism

The motor driver circuit controls the direction and speed of the scanner motor based on the following signals generated by the microprocessor on the DC controller:

- scanner motor drive command (SCMD*)
- scanner forward command (SCFW*)
- scanner speed control command (SCCLK)

	SCMD*	SCFW*
Forward	0	0
Reverse	0	1
Braking	0	*
Still	1	**

* '1' and '0' are reversed from previous states.
** '1' or '0' is maintained.

Table 3-302

The motor driver circuit operates as shown in Table 3-302 based on the combinations of SCMD* and SCFW*.

When the scanner is moving forward, the number of SCCLK pulses is varied according to the reproduction ratio selected; when the scanner is moved in reverse, however, the number remains the same.

E202 is indicated if the scanner does not reach the home position within a specific time after it has started to move.

COPYRIGHT © 1999 CANON INC.
CANON NP6320 REV.0 DEC. 1999 PRINTED IN JAPAN (IMPRIME AU JAPON)

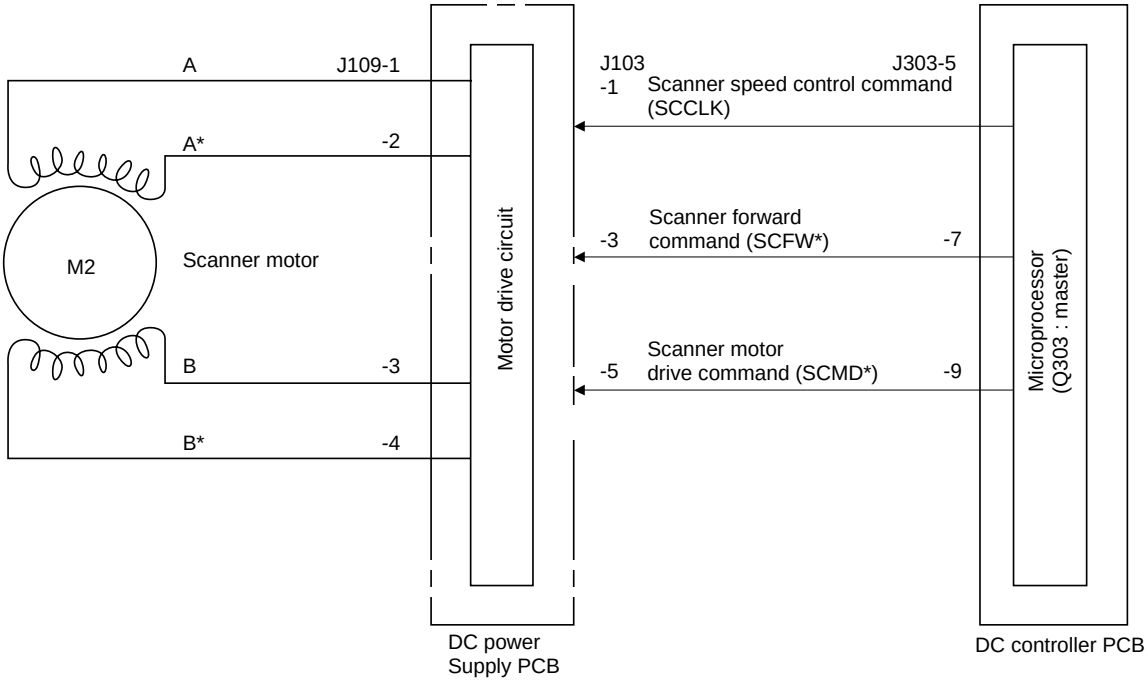

Figure 3-303

COPYRIGHT © 1999 CANON INC.
CANON NP6320 REV.0 DEC. 1999 PRINTED IN JAPAN (IMPRIME AU JAPON)

E. Scanner Movement for Two-Page Separation Mode (copy count 2)

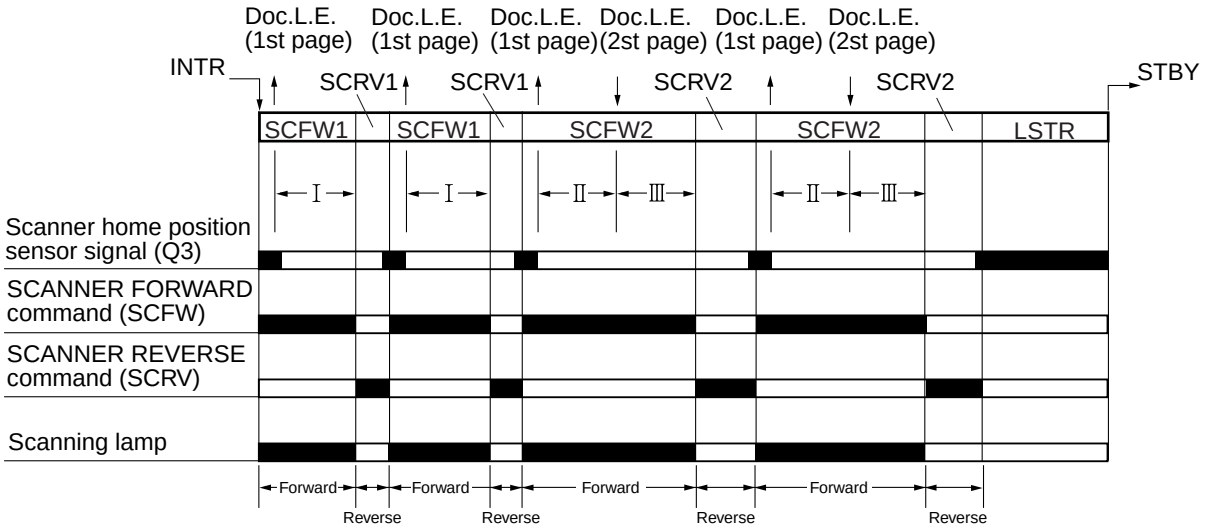

Figure 3-304

The timing of operations, I, II, and III shown in Figure 3-304 is with reference to the leading edge of the first page of the document (fall of Q3 signal).

I: The distance traveled by the scanner from the leading edge of the original is determined by the reproduction ratio and the copy paper size, just as for a normal copy.

II: This is roughly the same as I. If the forward distance traveled by the scanner is greater than 210 mm the DC controller will judge that 210 mm is the leading edge of the original. If the distance that the scanner moves forward is less than 210 mm, the point at which the scanner reverses in I will be the leading edge of the second page of the document.

III: Same as I.

COPYRIGHT © 1999 CANON INC.
CANON NP6320 REV.0 DEC. 1999 PRINTED IN JAPAN (IMPRIME AU JAPON)

F. Document Size Identification

1. Outline

The copier is equipped with auto paper selection and auto reproduction ratio selection mechanisms. These mechanisms call for identification of the document size as described below.

To enable such identification, three circuits are attached under the copyboard glass (Figure 3-305); when the copyboard cover is lowered, the DC controller checks the output of these circuits twice, thereby identifying the document as A3, A4, A4R, or A5R.

The document identification circuit causes its LED to emit light to illuminate the document; the reflected light is then checked by the phototransistor, whose output is sent to the DC controller.

2. Mechanism

The DC controller checks the output of the document identification circuit when the copyboard cover is lowered to about 20°. (SW4 ON) and about 1 second after the over has been lowered to about 5°. (SW5 ON).

The DC controller recognized the presence of a document if the two measurements are identical; conversely, it recognizes the absence of a document if the measurements are different.

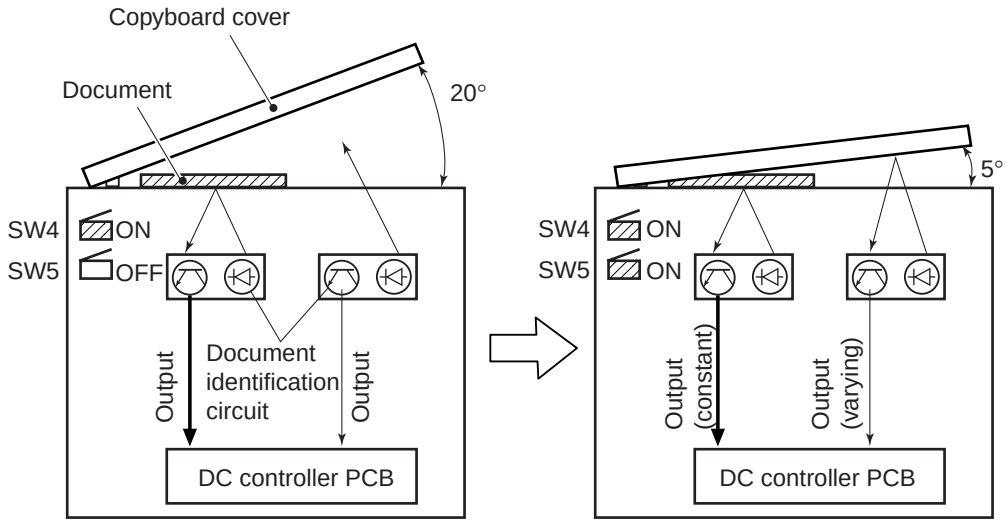

(The thickness of the arrows represents the degree of the level.)

Figure 3-305

When a document is present, the light reflected by the document is checked by the document identification circuit; therefore, the output of the circuit is constant regardless of the angle of the copyboard cover.

When no document is present, the output of the circuit from the first measurement is low or none at all; the output of the circuit from the second measurement, on the other hand, is high because the light is reflected by the document sheet.

If the document is too thick and, therefore, if only SW4 goes ON, the document size is identified based on the current output level.

COPYRIGHT © 1999 CANON INC.
CANON NP6320 REV.0 DEC. 1999 PRINTED IN JAPAN (IMPRIME AU JAPON)

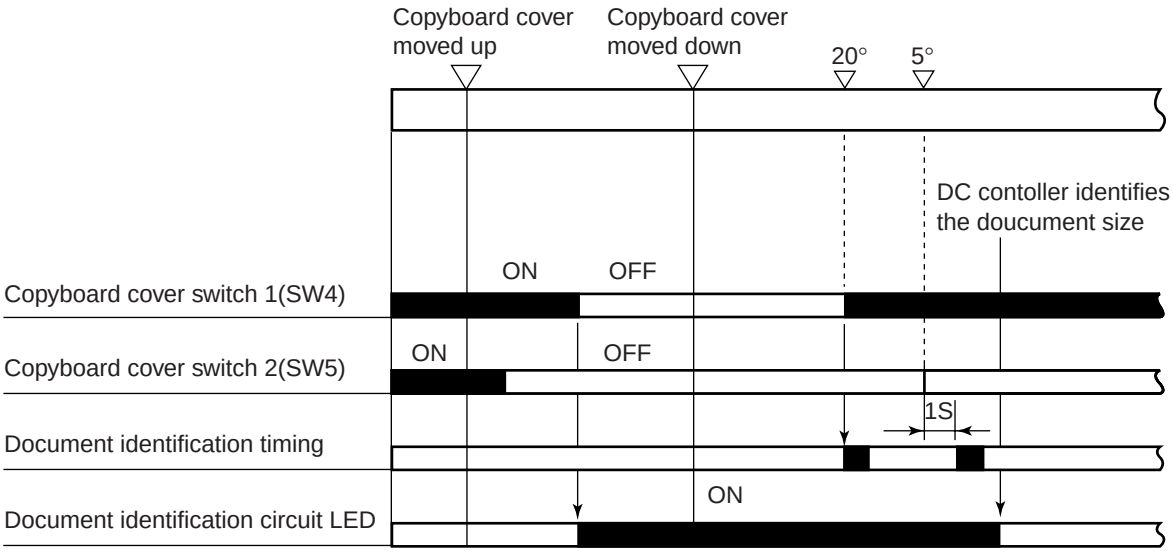

Figure 3-306 Document Identification Timing

COPYRIGHT © 1999 CANON INC.
CANON NP6320 REV.0 DEC. 1999 PRINTED IN JAPAN (IMPRIME AU JAPON)

3. Identification of Document Size

The DC controller identifies the size of documents based on the levels of the output from the document identification circuit; see Table 3-303.

Document Size	Document identification circuit	
	0	1
A3	constant	constant
A4	varying	constant
A4R	constant	varying
A5R	varying	varying

Table 3-303

constant: no change to output of document identification circuit; recognizes presence of document.
varying: change to output of document identification circuit; recognizes absence of document.

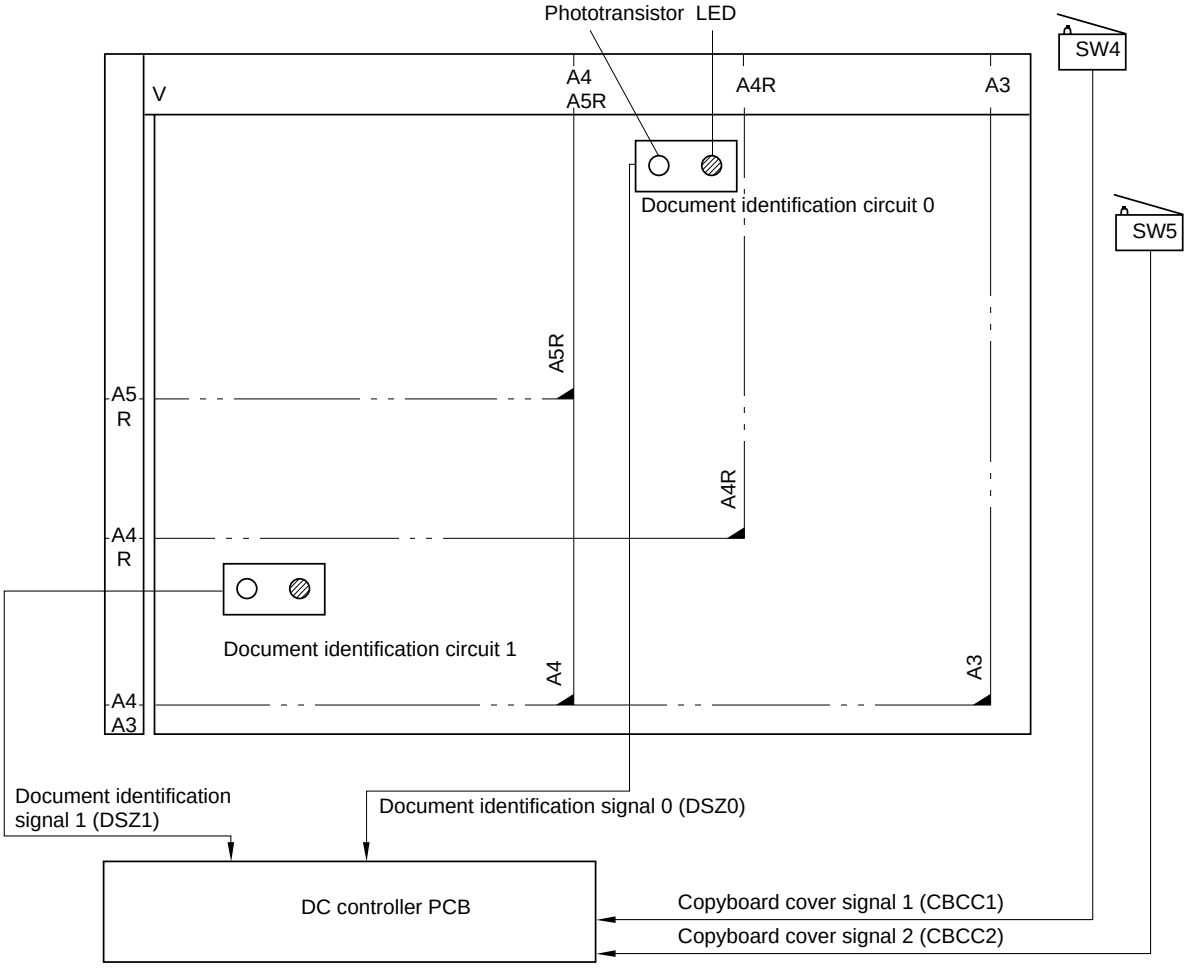

Figure 3-307

COPYRIGHT © 1999 CANON INC. CANON NP6320 REV.0 DEC. 1999 PRINTED IN JAPAN (IMPRIME AU JAPON)

IV. DISASSEMBLY AND ASSEMBLY

A. Lens Drive Assembly

The unit is adjusted at the factory with high precision using special tools. Do not remove parts or loosen screws other than those discussed.

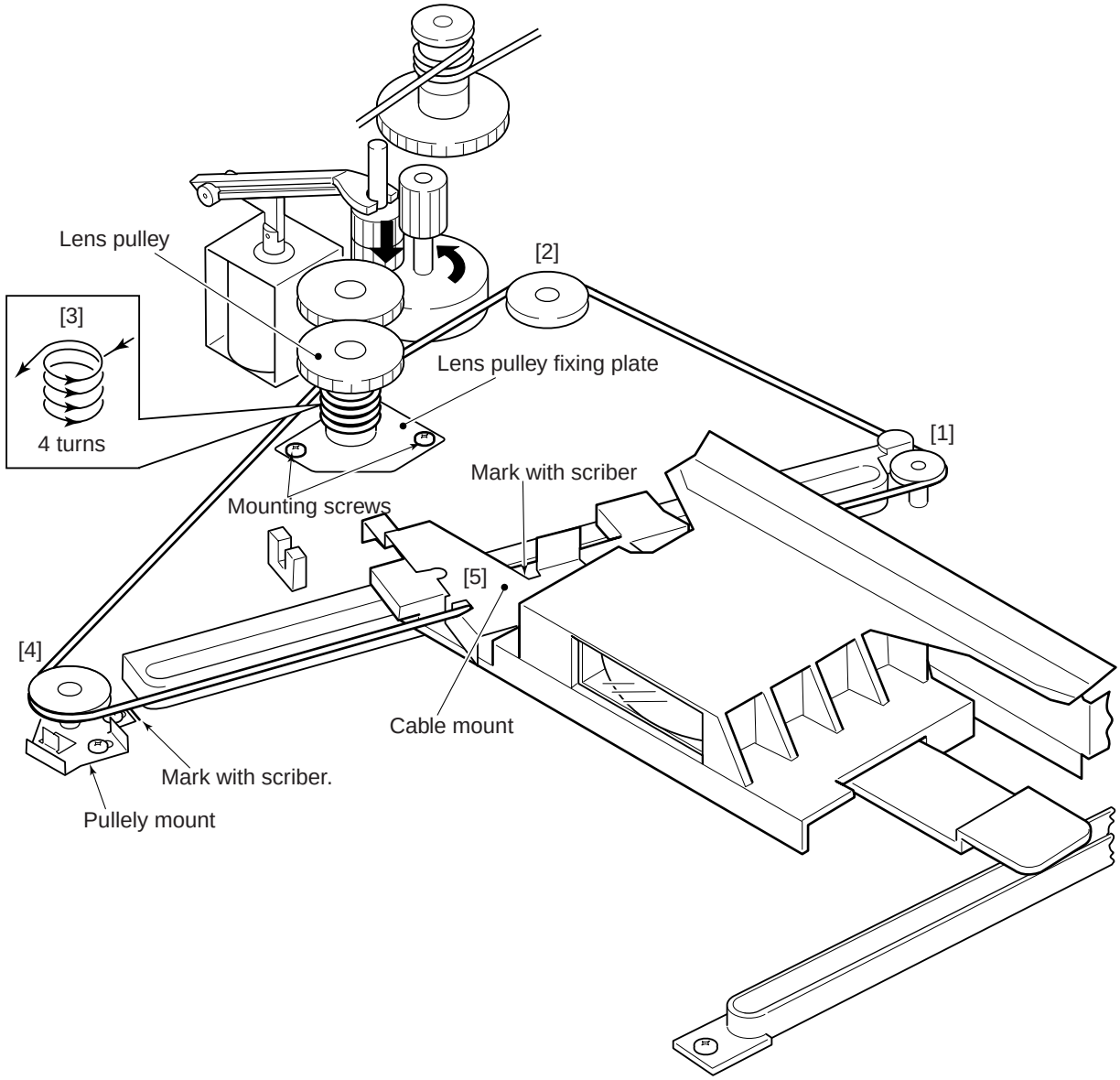

Figure 3-401

COPYRIGHT © 1999 CANON INC.
CANON NP6320 REV.0 DEC. 1999 PRINTED IN JAPAN (IMPRIME AU JAPON)

1. Detaching the Lens Cable

1) Detach the copyboard cover, copyboard glass, lens cover, rear cover, and upper rear cover.
2) Remove the three screws [1] shown in Figure 3-402, and detach the upper frame.

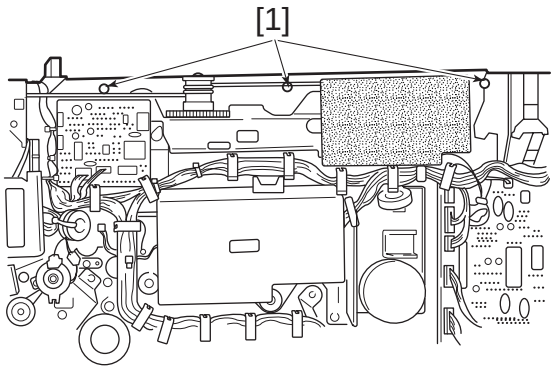

Figure 3-402

3) Mark the position of the pulley mount and the cable mount using a scriber; see Figure 3-401.
4) Remove the two screws [2] that hold the pulley mount [3] in place; see Figure 3-403.

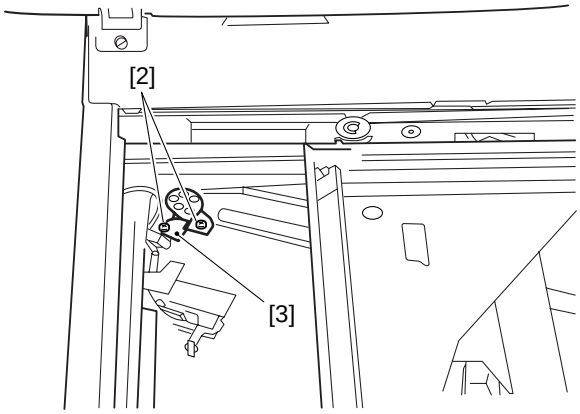

Figure 3-403

5) Detach the cable (cable mount).

2. Routing the Lens Cable

1) Remove the two screws that hold the lens pulley fixing plate in place, and detach the lens pulley; see Figure 3-401.
2) Wind the lens cable around the lens pulley as shown in Figure 3-401; then, fix it using two screws.
3) Shift the pulley mount to the position marked with a scriber, and fix it in place using two screws.

COPYRIGHT © 1999 CANON INC.
CANON NP6320 REV.0 DEC. 1999 PRINTED IN JAPAN (IMPRIME AU JAPON)

B. Scanner Drive Assembly

1. Detaching the Scanner Cable

1) Mark the position of the mount, and loosen screw B (1 pc.), which holds the mount in place.
2) Loosen screw A (1 pc.), and detach the scanner cable.

2. Attaching the Scanner Cable

1) Route the scanner cable as shown in Figure 3-404.
2) Position the fixing plate where a mark has been put using screw A.
3) Tighten screw B.

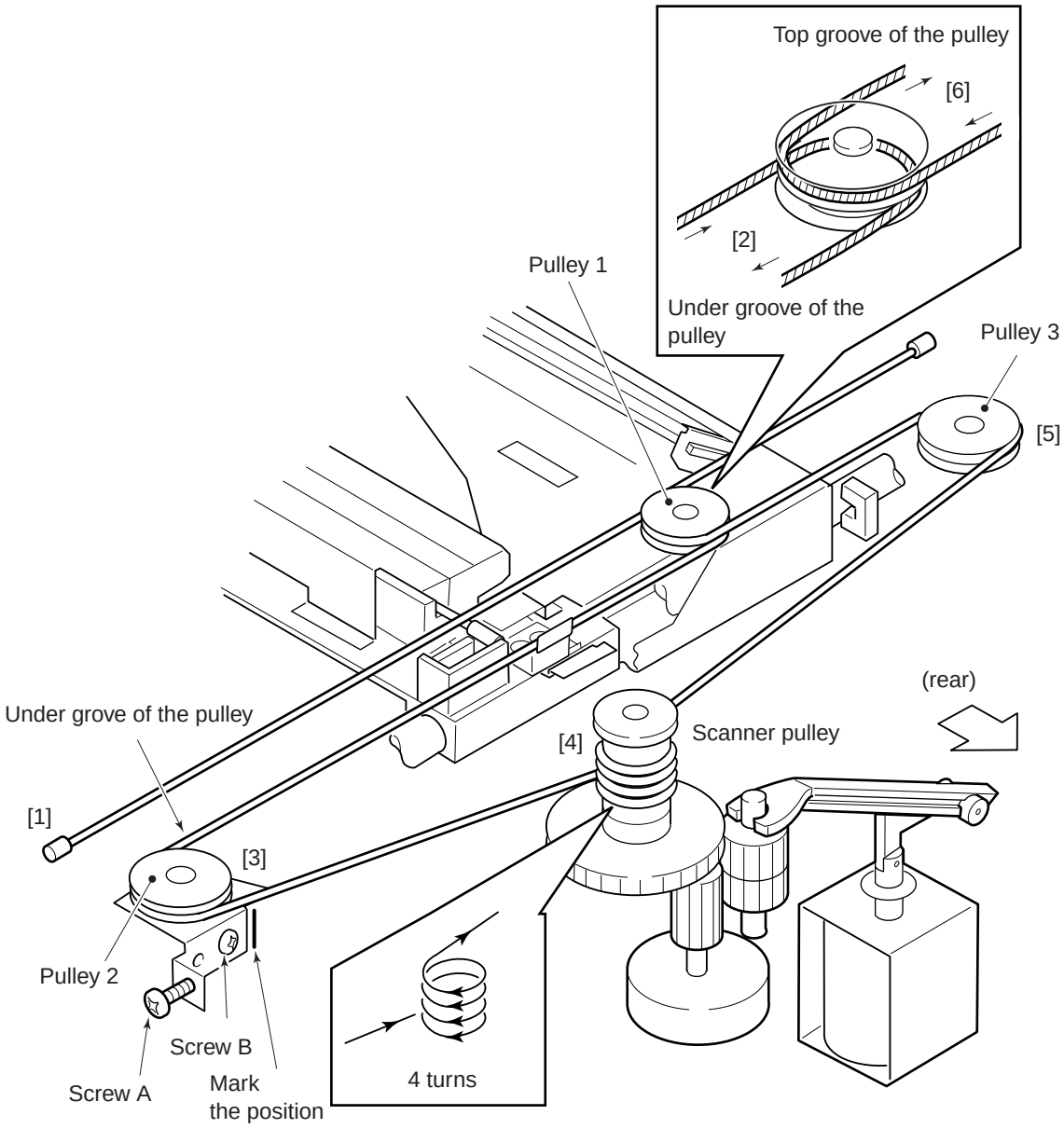

Figure 3-404 Scanner Drive Assembly

COPYRIGHT © 1999 CANON INC.
CANON NP6320 REV.0 DEC. 1999 PRINTED IN JAPAN (IMPRIME AU JAPON)

3. Adjusting the Mirror Position (optical distance between No. 1 and No. 2 mirrors)

Adjust the position of the mirror after attaching the scanner cable.

To adjust, relocate the fixing used for the No. 1 mirror mount; loosen the two screws.

Note:

i. The cable tends to become slack as more and more copies are made, requiring adjustment.
ii. If the horizontal reproduction ratio becomes faulty because of inaccurate optical distance between the No. 1 and No. 2 mirrors, the images on copies will become out of focus.

1) Draw a line 10 mm from both ends of copy paper (A4 or A3) as shown in Figure 3-405.
2) Make a copy of the sheet on which lines have been drawn; call the copy obtained this way *sheet A.*
3) Place a blank sheet of paper on the copyboard, and feed the sheet on which lines were drawn in the manual mode; call the delivered sheet *sheet B.*
   • Sheet B will show contraction by heat.
4) Put the left lines on sheet A and sheet B together, and adjust the position of the No. 1 mirror mount so that x and y in Figure 3-406 are identical.

x=y correct
x>y move the No. 1 mirror mount into the direction of [a]
x<y move the No. 1 mirror mount into the direction of [b]

Note:

If the distance between the No. 1 and No. 2 mirrors is short, the copy image will be enlarged; if long, reduced.

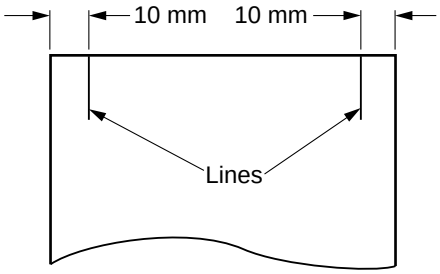

Figure 3-405

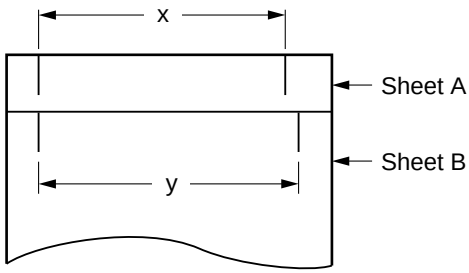

Figure 3-406

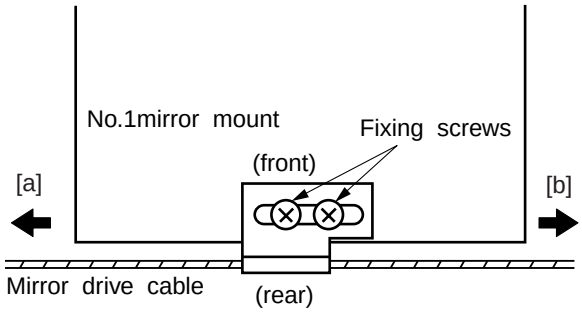

Figure 3-407

COPYRIGHT © 1999 CANON INC.
CANON NP6320 REV.0 DEC. 1999 PRINTED IN JAPAN (IMPRIME AU JAPON)

4. Using the Mirror Cleaning Tool

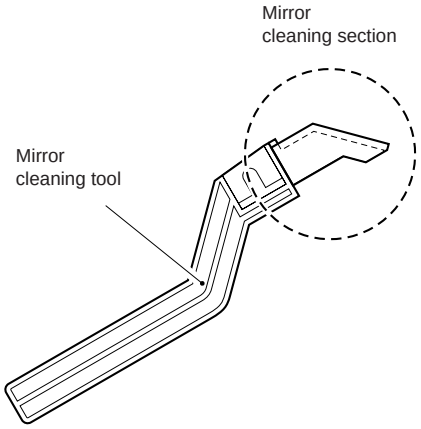

Figure 3-408

5. Cleaning the No. 5 Mirror

1) Detach the copyboard glass and the lens cover; then, loosen the screw, and detach the mirror cleaning tool from the lens mount.
2) Detach the lens cover, and insert the mirror cleaning tool as shown in Figure 3-410.

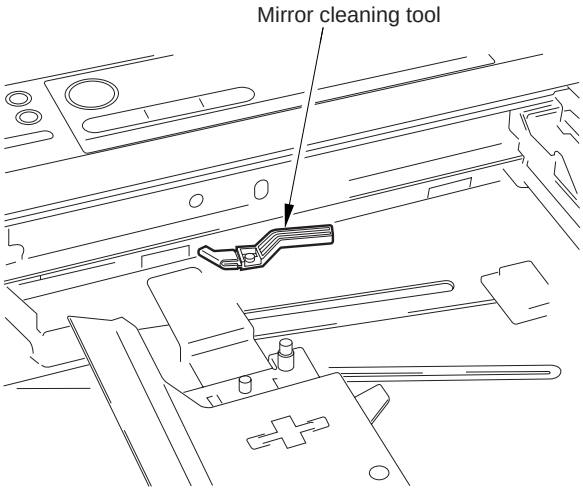

Figure 3-409

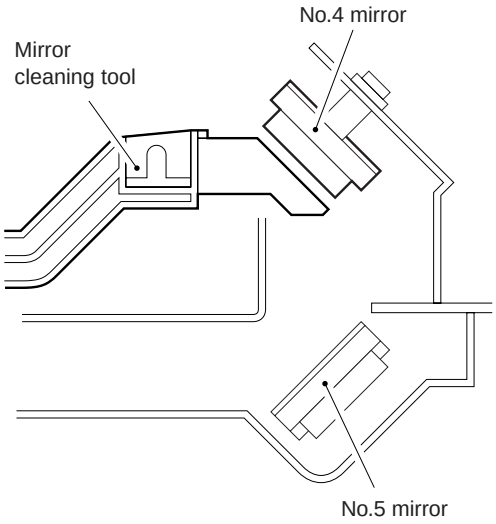

Figure 3-410

COPYRIGHT © 1999 CANON INC.
CANON NP6320 REV.0 DEC. 1999 PRINTED IN JAPAN (IMPRIME AU JAPON)

3) Push the mirror cleaning tool against the No. 5 mirror as shown in Figure 3-411, and clean the lens by sliding it back and forth.

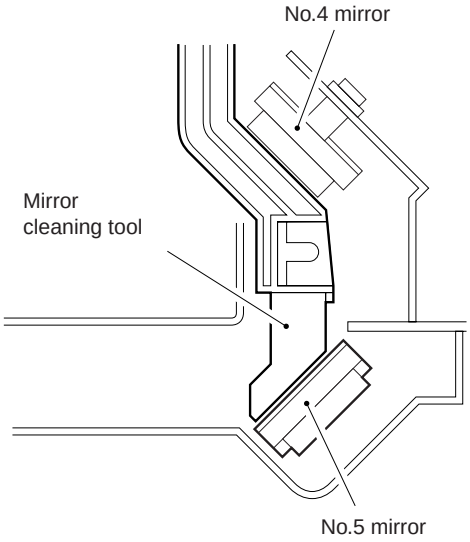

Figure 3-411

6. Cleaning the No. 6 Mirror

1) Detach the drum cartridge, developing assembly, and dustproof glass.
2) Put the mirror cleaning tool against the mirror as shown in Figure 3-412, and clean the lens by sliding it back and forth.

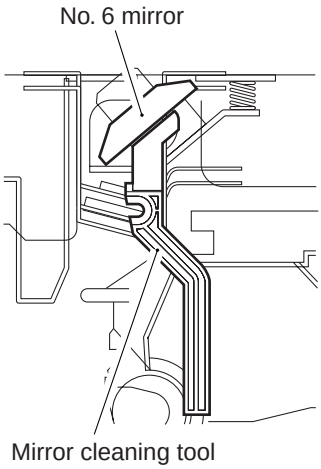

Figure 3-412

7. Lubricating

Clean the scanner rail; then, apply lubricant evenly over it.

COPYRIGHT © 1999 CANON INC.
CANON NP6320 REV.0 DEC. 1999 PRINTED IN JAPAN (IMPRIME AU JAPON)

CHAPTER 4

IMAGE FORMATION SYSTEM

I. IMAGE FORMATION SYSTEM ... 4-1
A. Outline ... 4-1
B. Basic Operation of Image Formation System ... 4-2
II. CONTROLLING THE SCANNING LAMP ... 4-3
A. Outline ... 4-3
B. Mechanism ... 4-4
III. PRIMARY/TRANSFER CORONA CURRENT AND GRID BIAS VOLTAGE CONTROL SYSTEM .. 4-5
A. Outline ... 4-5
B. Switching Primary/Transfer Corona Current ON/OFF ... 4-5
C. Maintaining Primary/Transfer Corona Current Constant ... 4-6
D. Controlling Grid Bias Voltage 4-7
IV. CONTROLLING THE DEVELOPING BIAS ... 4-8
A. Outline ... 4-8
B. Operation ... 4-9
C. Developing Bias Operation ... 4-11
V. DOCUMENT DENSITY MEASUREMENT SYSTEM ... 4-12
A. Outline ... 4-12
B. Operation ... 4-12
C. Reading the Output of the AE Sensor ... 4-13
VI. DEVELOPING ASSEMBLY/ DRUM CLAENER ... 4-14
A. Outlines ... 4-14
B. Remaining Toner Sensor ... 4-14
C. Torque Limiter ... 4-14
VII. BLANKING ... 4-15
A. Outline ... 4-15
B. Movement of the Blank Exposure Mechanism ... 4-16
VIII. DISASSEMBLY AND ASSEMBLY ... 4-18
A. Exposure Assembly ... 4-18
B. Blank Assembly ... 4-20
C. CORONA SYSTEM ... 4-21
D. Development System ... 4-24

COPYRIGHT © 1999 CANON INC. CANON NP6320 REV.0 DEC. 1999 PRINTED IN JAPAN (IMPRIME AU JAPON)

I. IMAGE FORMATION SYSTEM

A. Outline

The basic structure of the image formation system is as shown below.
- Scanning lamp control system
- Primary/transfer corona current and grid bias voltage control system
- Controlling developing bias
- Document density measurement system
- Developing assembly/Drum cleaner
- Blanking

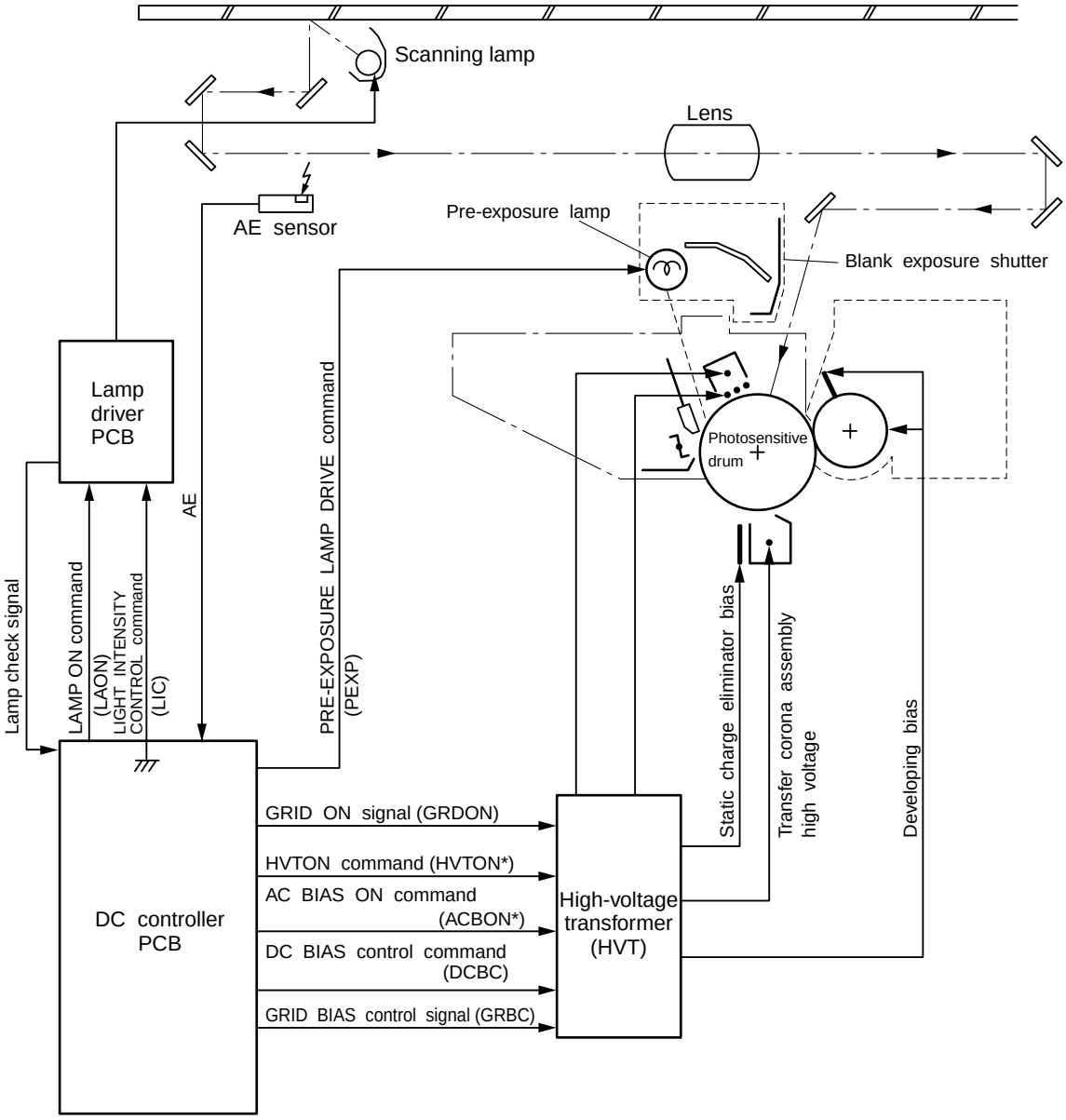

Figure 4-101

COPYRIGHT © 1999 CANON INC. CANON NP6320 REV.0 DEC. 1999 PRINTED IN JAPAN (IMPRIME AU JAPON)

B. Basic Operation of Image Formation System

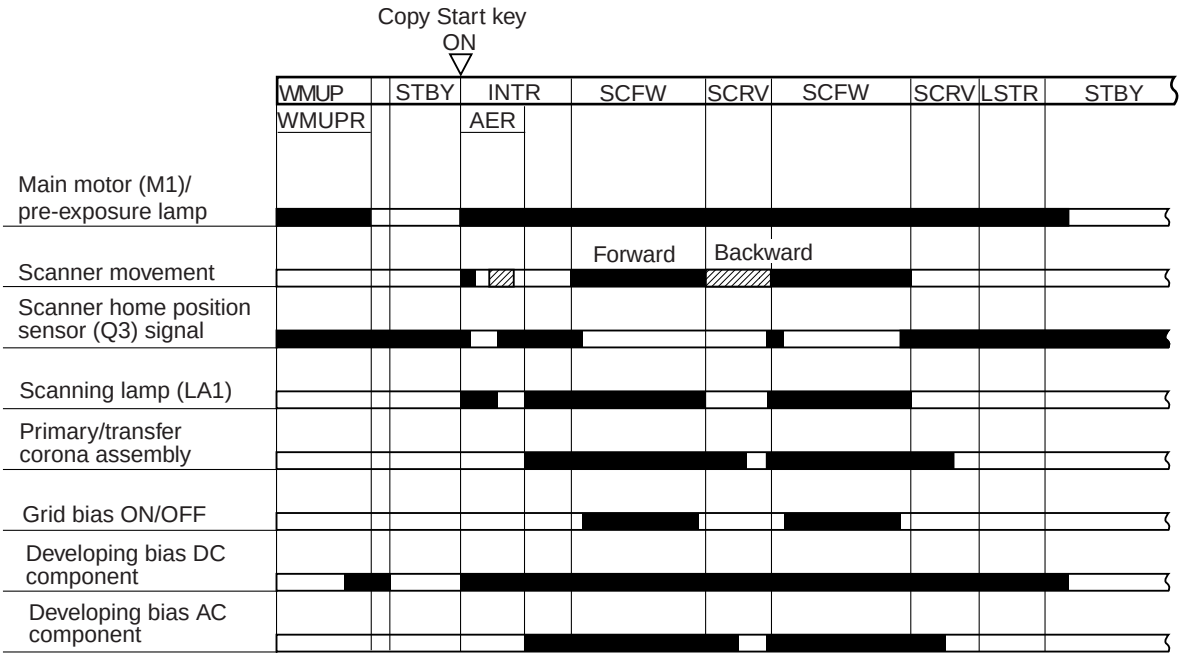

Figure 4-102

COPYRIGHT © 1999 CANON INC.
CANON NP6320 REV.0 DEC. 1999 PRINTED IN JAPAN (IMPRIME AU JAPON)

II. CONTROLLING THE SCANNING LAMP

A. Outline

The scanning lamp (LA1) is controlled by the DC controller PCB and the lamp driver PCB.
- turns the scanning lamp ON and OFF. (DC controller PCB)
- controls the intensity of the scanning lamp. (lamp driver PCB)

COPYRIGHT © 1999 CANON INC.
CANON NP6320 REV.0 DEC. 1999 PRINTED IN JAPAN (IMPRIME AU JAPON)

B. Mechanism

1. Turning the Scanning Lamp ON and OFF

The microprocessor (Q303) on the DC controller PCB controls the lamp driver. The scanning lamp goes ON when the scanning LAMP ON command (LAON) is '1', and it goes OFF when the signal is '0'.

2. Controlling the Intensity of the Scanning Lamp

The intensity of the scanning lamp is controlled by VR202 on the lamp driver PCB.
During AE exposure, however, a voltage (135 V) is applied to the scanning lamp.
The adjustment of the copy density using its development bias; see p. 4-8.

3. Error Protection

The condition of the scanning lamp is monitored using the lamp check signal.

If the lamp check signal is received by the DC controller even when the lamp is off, the error detection circuit generates the AC SHUTOFF signal to force the relay (K101) on the power supply PCB to go OFF, thereby cutting the power supply assembly; also, PW_ON_OFF signal is sent to the main switch. In this case, E220 error is displayed.

4. Zero-Cross Signal

The board generates the zero cross signal that the DC controller uses to control the fixing heater temperature. E261 is indicated on the control panel if an zero cross error is identified.

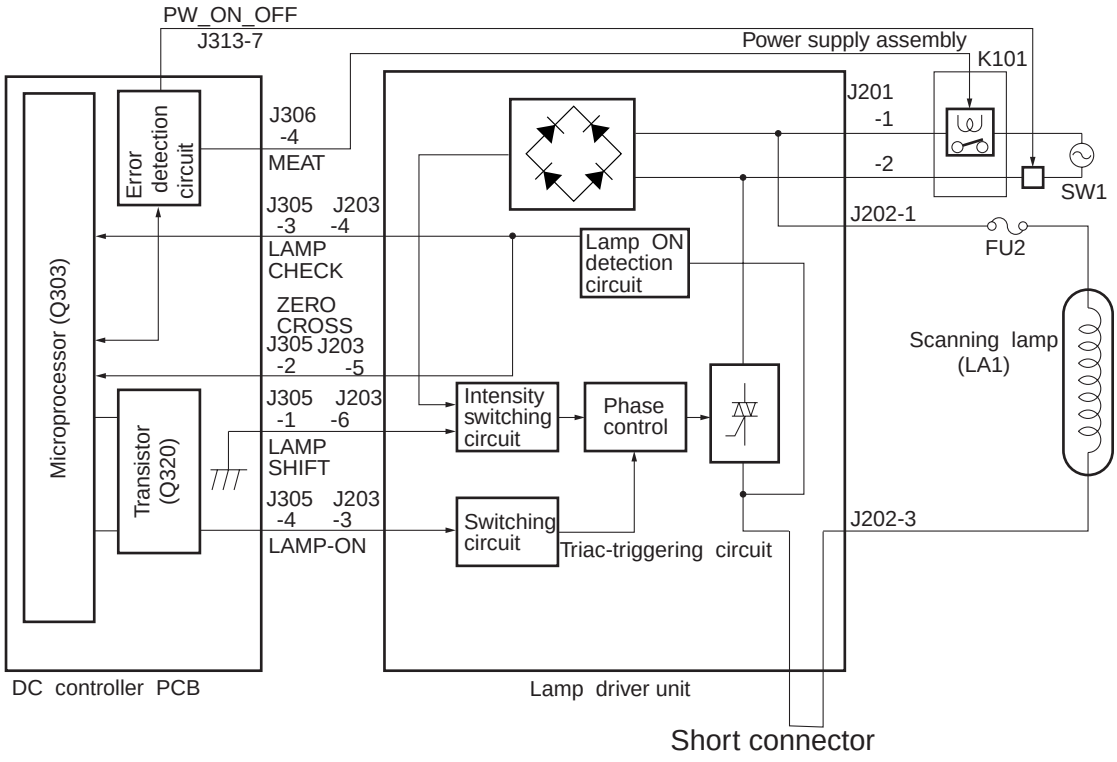

Figure 4-201

COPYRIGHT © 1999 CANON INC.
CANON NP6320 REV.0 DEC. 1999 PRINTED IN JAPAN (IMPRIME AU JAPON)

III. PRIMARY/TRANSFER CORONA CURRENT AND GRID BIAS VOLTAGE CONTROL SYSTEM

A. Outline

The circuit shown in Figure 4-301 controls the primary/transfer coronal current and the bias voltage of the grid of the primary corona. Main functions are as follows.

1. Switching primary/transfer corona current ON/OFF
2. Maintaining primary/transfer corona current constant
3. Switching primary corona grid bias voltage
4. Switching primary corona grid bias ON/OFF

In order to eliminate the effects of changes in atmospheric conditions on the effectiveness of the corona discharge, the current to the primary corona wire is maintained constant.

The primary corona and transfer corona current are switched ON and OFF by the HVT ON command (HVTON*).

The grid bias voltage is switched by the GRID ON signal (GRDON).

B. Switching Primary/Transfer Corona Current ON/OFF

a. When HVTON*=1

└→ Differential amplifier goes OFF.
  └→ Variable pulse width oscillator goes OFF.
    └→ High-voltage transformer goes OFF.

b. When HVTON*=0

└→ Differential amplifier goes ON.
  └→ Variable pulse width oscillator goes ON.
    └→ High-voltage transformer goes ON.

COPYRIGHT © 1999 CANON INC.
CANON NP6320 REV.0 DEC. 1999 PRINTED IN JAPAN (IMPRIME AU JAPON)

C. Maintaining Primary/Transfer Corona Current Constant

If the primary corona current is greater than the correct value due to changes in the environment, the level (analog) of the feedback signal to the differential amplifier circuit will increase and the output from the differential amplifier circuit will fall. As a result, the primary/transfer coronal current will fall. Similarly, if the primary corona current is too low, it will be increased.

If the output side of the high-voltage transformer supplying the primary corona assembly should be overloaded, the current will be limited to a certain maximum.

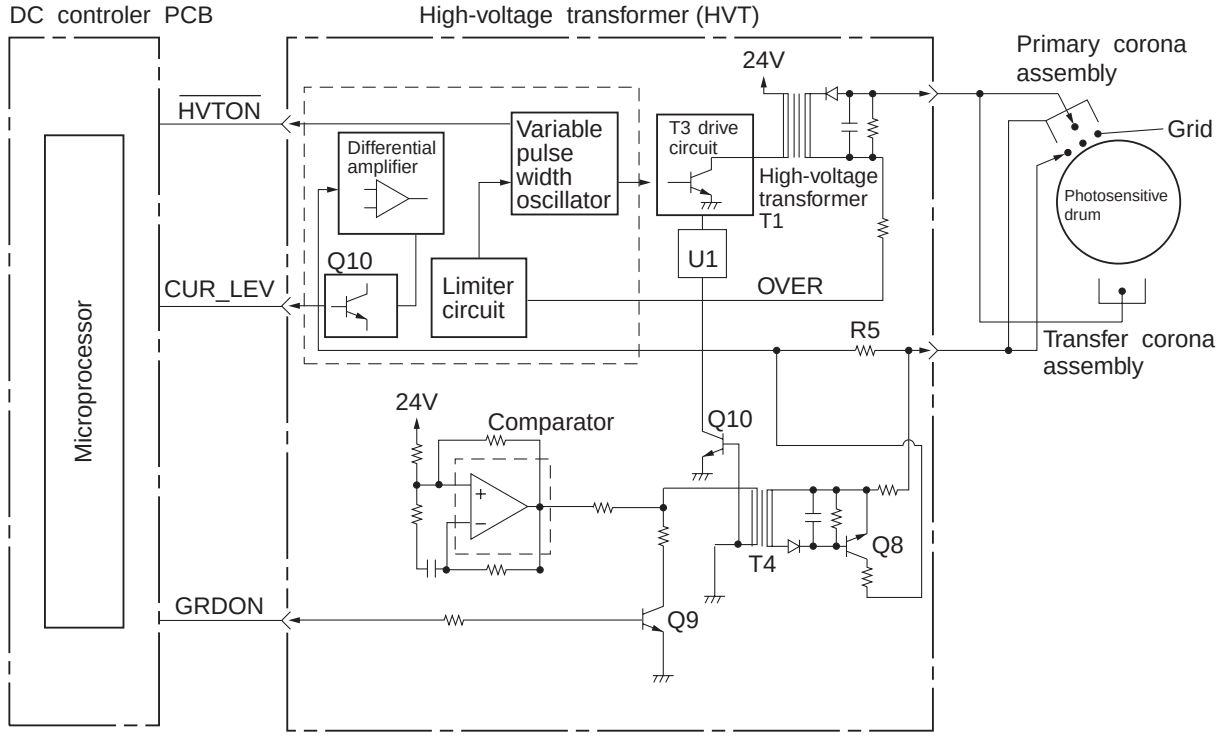

Figure 4-301

COPYRIGHT © 1999 CANON INC.
CANON NP6320 REV.0 DEC. 1999 PRINTED IN JAPAN (IMPRIME AU JAPON)

D. Controlling Grid Bias Voltage

a. During scanning, the DC controller PCB output GRDON* is '1' and CUR-LEV is '0'.
   └→ Q9 goes ON and the comparator output is '0'.
      └→ Q8 goes OFF.
         └→ Current does not flow into transformer T4, and Q10 goes OFF.
            └→ Bias is applied to the grid.
               └→ The surface of the drum is charged.

   The voltage applied to the grid is fixed by the shield current.

b. When scanning is not taking place, the DC controller PCB output GRDON* is '0', and CUR-LEV is '1'.
   Q9 goes OFF and the comparator circuit output is '1'.
   └→ Q8 goes ON, and current flows into T4.
      └→ Bias is not applied to the grid.

Under the above conditions, the surface of the drum is not charged; hence, toner does not adhere to it (blanking).

The timing at which the grid bias is switched may be varied using "C3" or "C6" in the service mode (leading edge non-image width adjustment).

COPYRIGHT © 1999 CANON INC.

IV. CONTROLLING THE DEVELOPING BIAS

A. Outline

The circuit shown in Figure 4-402 controls the developing bias. Its main functions are as follows:

1. Switching AC component of the developing bias ON/OFF.
2. Regulating voltage of the DC component of the developing bias.

The copy density can be controlled by varying the voltage of the developing bias to suit the following variables:

1. Settings of the copy density lever and recalibration dial
2. AE sensor output

The photosensitive drum gradually deteriorates with use, causing the potential (V_L) of light areas of the drum to increase and making the copy density to be incorrect for a given setting of the copy density lever. To compensate for this, a copy density knob, which can be turned to raise the DC bias by exactly the increace in V_L, and thus to produce clear copies again.

COPYRIGHT © 1999 CANON INC.
CANON NP6320 REV.0 DEC. 1999 PRINTED IN JAPAN (IMPRIME AU JAPON)

B. Operation

1. Switching AC Component of the Developing Bias ON/OFF

The square wave generator operates continuously while the copier remains ON.

a) When ACBON*=1

└→ AC bias switch circuit goes OFF.

└→ Output from the square wave generator is cut off.

So AC bias is not supplied to the developing cylinder.

b) When ACBON*=0

└→ The AC bias switch circuit goes ON.

The output of the square wave oscillator goes to the T2 drive circuit. This causes the AC high-voltage transformer to generate a 1300VAC AC bias, which is supplied to the developing cylinder.

Also, the output of the AC high-voltage transformer is rectified and supplied to the static charge eliminator (approx. 3.2 kV).

COPYRIGHT © 1999 CANON INC.
CANON NP6320 REV.0 DEC. 1999 PRINTED IN JAPAN (IMPRIME AU JAPON)

2. Controlling the DC Bias

The differential amplifier of Figure 4-402 operates when DCBC is 16V or below. (The range of DCBC (analog) is 6 to 16V, as set by the copy density cursor or the AE system.)

└→ Differential amplifier goes ON.

└→ Variable pulse-width oscillator goes ON.

└→ DC high-voltage transformer goes ON.

The DC bias is applied to the developing cylinder.

DCBC	6V to 16V
DC component of developing bias	–500V to –0V

The copy density knob changes the DC component of the developing bias as shown in Figure 4-401.

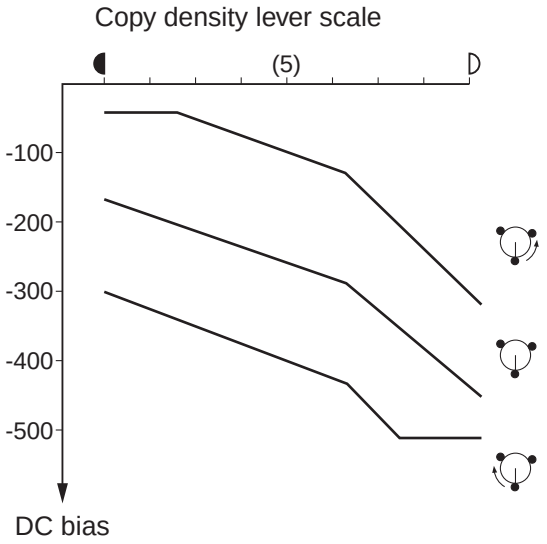

Figure 4-401 Changes in Development Bias (DC component) by Copy Density Knob

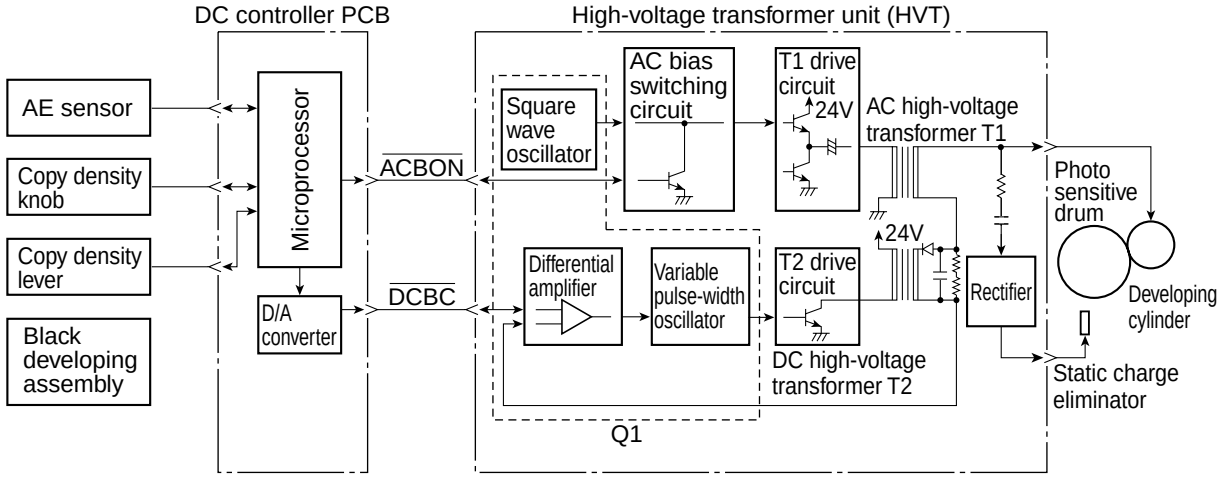

Figure 4-402

COPYRIGHT © 1999 CANON INC.
CANON NP6320 REV.0 DEC. 1999 PRINTED IN JAPAN (IMPRIME AU JAPON)

C. Developing Bias Operation

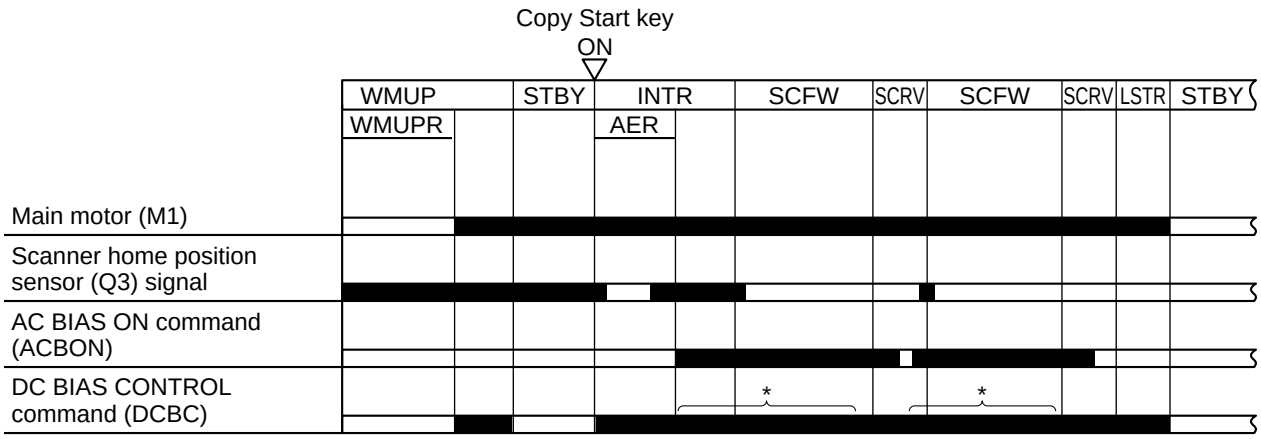

Figure 4-403

* The value of the DC BIAS CONTROL command and the DC bias are determined by (1) the setting of the copy density lever and copy density knob, (2) and the AE sensor output.

COPYRIGHT © 1999 CANON INC.
CANON NP6320 REV.0 DEC. 1999 PRINTED IN JAPAN (IMPRIME AU JAPON)

V. DOCUMENT DENSITY MEASUREMENT SYSTEM

A. Outline

There is an automatic density adjustment (AE) system which adjusts the DC component of the developing bias to suit the density of the original. If the density of the original is more or less uniform, the AE function varies the DC component of the developing bias to suit the density of the original, so that copies of the correct density will be made.

B. Operation

The scanner moves forward approximately 70 mm past the leading edge of the original and stops momentarily. The scanning lamp goes ON for approximately one second, the image density is read by the AE sensor, and the sensor output is interpreted by the DC controller. The DC controller then adjusts the DC component of the developing bias accordingly.

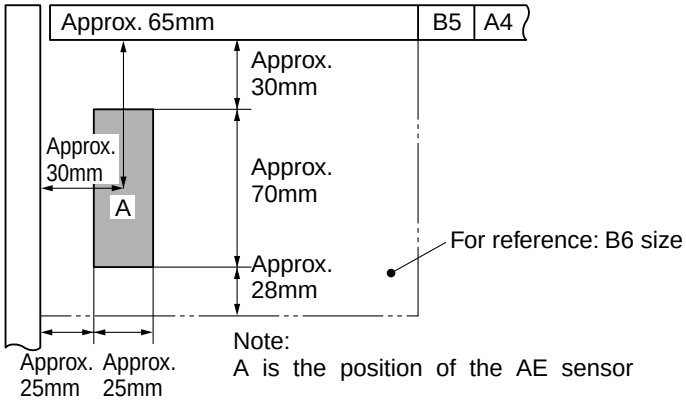

Figure 4-501

COPYRIGHT © 1999 CANON INC.
CANON NP6320 REV.0 DEC. 1999 PRINTED IN JAPAN (IMPRIME AU JAPON)

C. Reading the Output of the AE Sensor

The AE sensor consists of a photodiode (Q702) and an operational amplifier (Q701). If the strength of light striking the photodiode is high, the output voltage (AE) of the amplifier will be small. If the amount of light is small, the output voltage will be large.

The DC controller reads the output at a certain time after the zero-cross signal (ZXDP) is received from the lamp regulator.

The data representing the adjusted AE reference/slope values are written to EEPROM when 'C00' or 'C01' is used in the service mode.

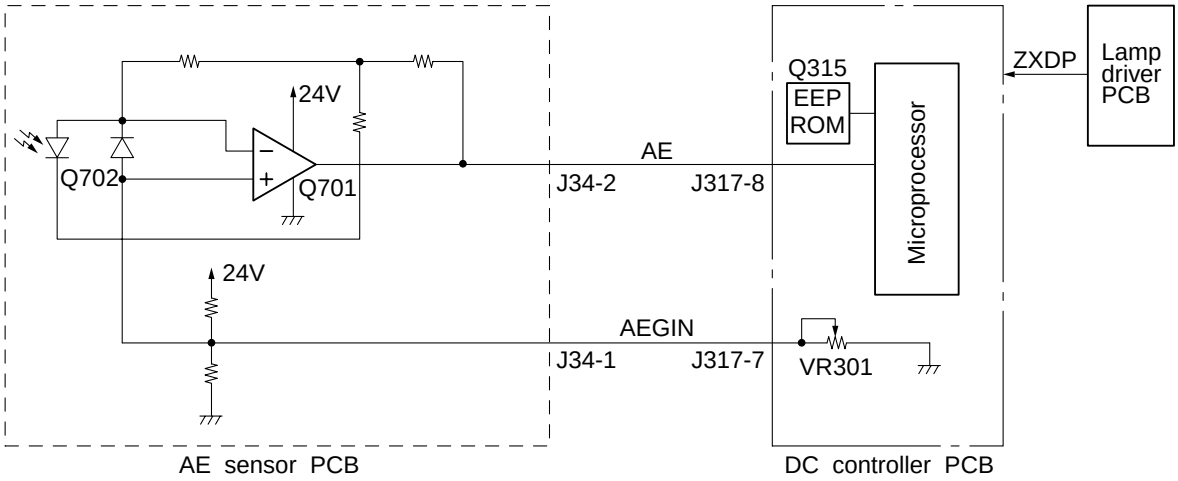

Figure 4-502

COPYRIGHT © 1999 CANON INC.
CANON NP6320 REV.0 DEC. 1999 PRINTED IN JAPAN (IMPRIME AU JAPON)

VI. DEVELOPING ASSEMBLY/DRUM CLAENER

A. Outlines

The paddle inside the drum cleaning unit and also the developing cylinder are rotated by the main motor.

The amount of toner in the developing assembly is sensed by the black toner level sensor (TS1).

When the amount of toner falls below the required quantity, the Add Toner indicator on the control panel will flash.

The toner collected by the cleaning blade is stored in the drum cleaning unit.

The developing assembly is pressed against the drum by the cams that press against the developing assembly rail. (The cams are operated by the developing assembly release lever.)

B. Remaining Toner Sensor

The black developing assembly has a piezoelectric type sensor (TS1) which senses if the toner remaining in the hopper of the developing assembly is above or below the required level.

When the amount of toner in the hopper is sufficient, the sensor output is '1'. When it is below the specified level, the output is '0'.

The DC controller makes checks for 30 seconds during copying, if the TONER EMPTY signal (BTEP) is being outputted. If the signal is outputted continuously for 30 seconds, it is regarded as TONER OUT and the DC controller makes the Add Toner indicator flash.

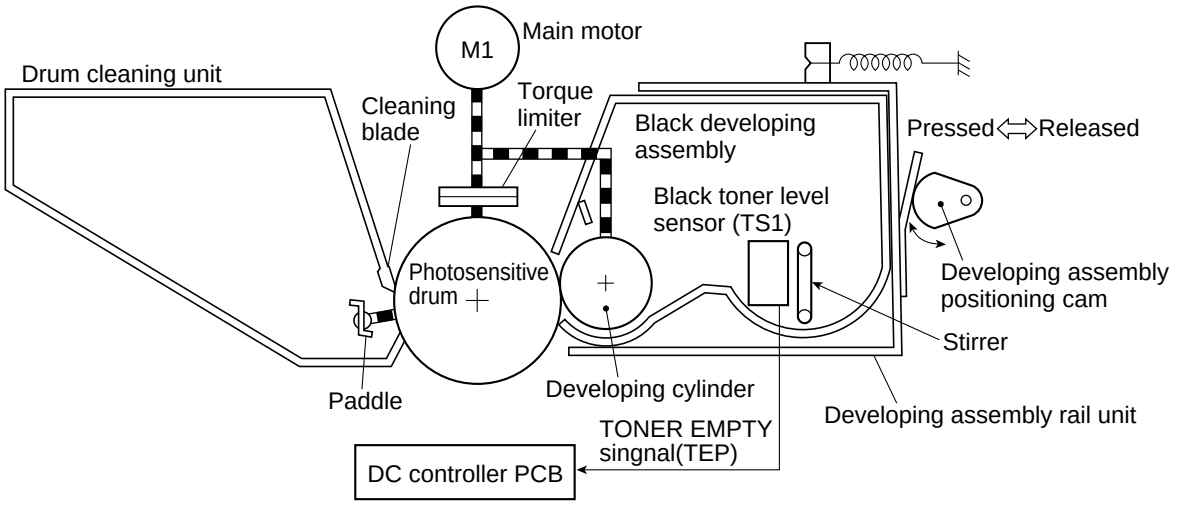

Figure 4-601

C. Torque Limiter

There is a torque limiter in the drive train between the main motor and the drum to stop the drum in response to a jam in the drum cleaner.

COPYRIGHT © 1999 CANON INC.
CANON NP6320 REV.0 DEC. 1999 PRINTED IN JAPAN (IMPRIME AU JAPON)

VII. BLANKING

A. Outline

The area of the drum between the trailing edge of one copy and the leading edge of the next would normally act as an all-black area and attract toner if a preventive measure were not taken. This measure is to switch the primary corona OFF and the primary corona assembly grid wire bias ON. (There is no blank exposure; see p. 4-5.)

When the copy (cassette) size is a non-default size or when the copier is in the Reduce mode, the light from the pre-exposure lamp is directed to the photosensitive drum by way of the reflecting plate to prevent adhesion of toner; the blank exposure shutter is moved to open the exposure slit making use of the movement of the lens.

COPYRIGHT © 1999 CANON INC.
CANON NP6320 REV.0 DEC. 1999 PRINTED IN JAPAN (IMPRIME AU JAPON)

B. Movement of the Blank Exposure Mechanism

1. When the copier is switched ON, the lens first moves in the direction of enlargement and then returns to the home position. Next, the lens moves in the direction of reduction for blank exposure up to a point that corresponds to the cassette size. At the time, the blank solenoid goes ON, and the blank exposure shutter moves in the direction of the arrow by the force of the spring.

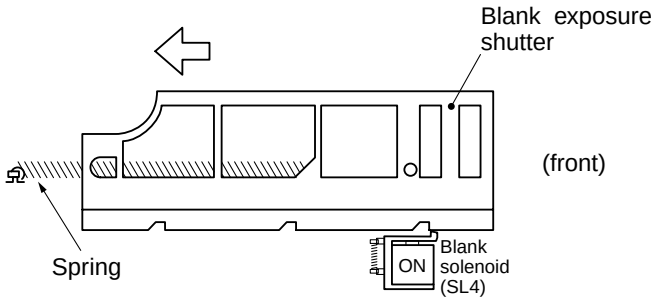

Figure 4-701

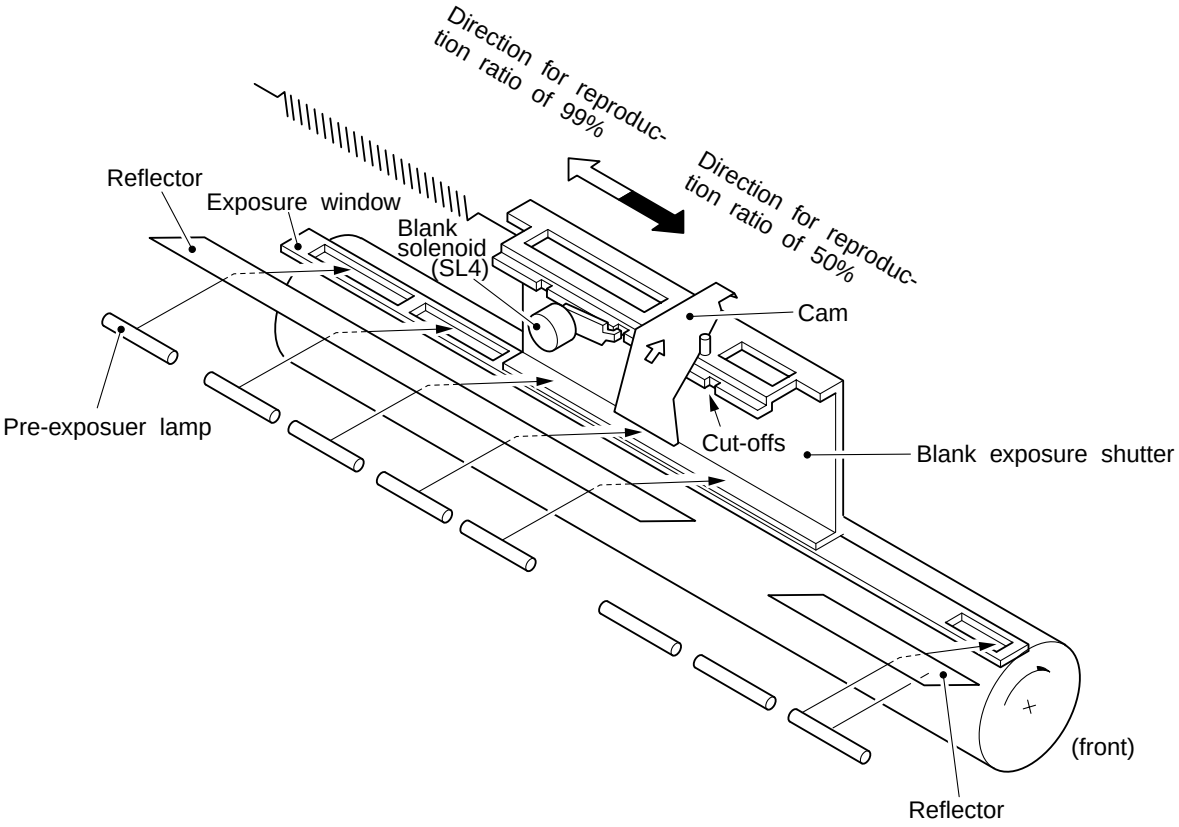

Figure 4-702

COPYRIGHT © 1999 CANON INC.
CANON NP6320 REV.0 DEC. 1999 PRINTED IN JAPAN (IMPRIME AU JAPON)

2. The blank exposure shutter is moved by the cam attached to the bottom of the lens when the lens moves to the blank exposure position, which corresponds to the cassette size.
   The blank solenoid (SL4) goes OFF as soon as the blank exposure shutter has moved to a cut-out to fix the shutter in position; cut-offs are provided for each cassette size. Direct and Enlarge copies are made with the mechanism in this position.

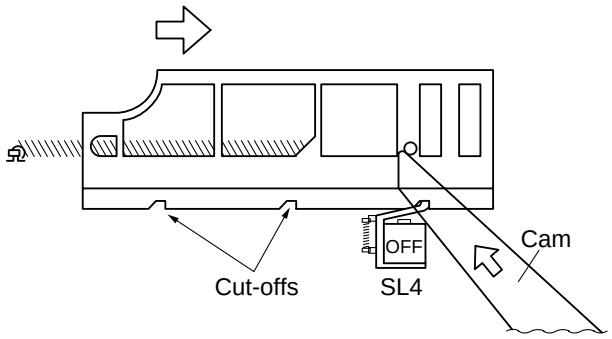

Figure 4-703

3. When the reduce mode is selected, the lens first returns to the home position and then moves to a position that corresponds to the selected reduction ratio. At the time, the blank exposure shutter is moved over a distance corresponding to the selected reduction ratio by the cam attached to the bottom of the lens to execute blank exposure.

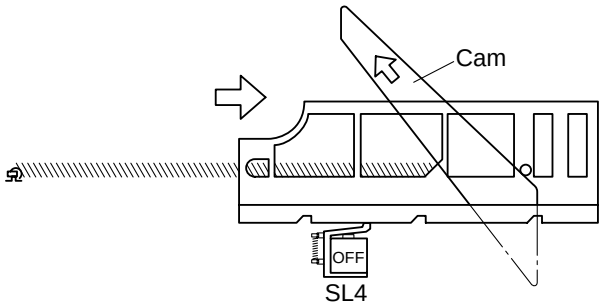

Figure 4-704

COPYRIGHT © 1999 CANON INC. CANON NP6320 REV.0 DEC. 1999 PRINTED IN JAPAN (IMPRIME AU JAPON)

VIII. DISASSEMBLY AND ASSEMBLY

A. Exposure Assembly

1. Detaching the Scanning Lamp

1) Disconnect the power plug.
2) Detach the copyboard glass.
3) Remove the two screws [1], and detach the anti-glare plate [2].

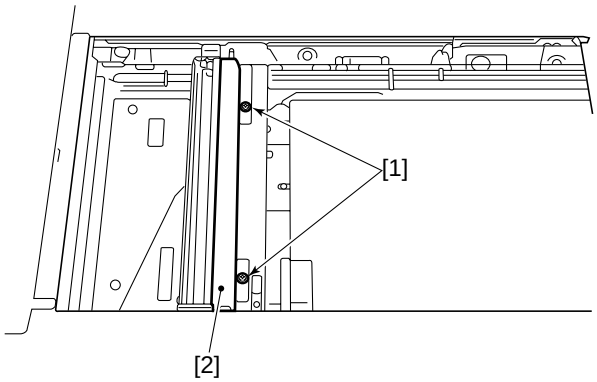

Figure 4-801

4) Push the lamp terminal plate (rear) [3] into the direction of the arrow, and detach the scanning lamp [4].

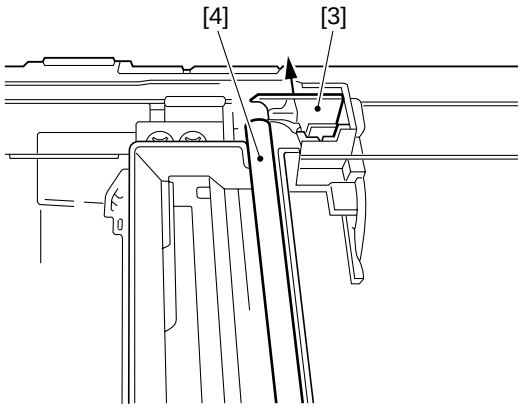

Figure 4-802

Note:
i. Wait until the scanning lamp has cooled before starting the work.
ii. Do not leave fingerprints on the scanning lamp.
iii. Dry wipe the scanning lamp if it is soiled.

COPYRIGHT © 1999 CANON INC.
CANON NP6320 REV.0 DEC. 1999 PRINTED IN JAPAN (IMPRIME AU JAPON)

2. Detaching the Thermal Fuse

1) Detach the control panel and the copyboard glass.
2) Hold the rear of the No. 1 mirror mount [1], and move it to the right until it is positioned as shown in Figure 4-803.

Note:
When moving the No. 1 mirror mount, be sure to hold its right side.

3) Remove the two screws [2], and detach the thermal fuse [3].

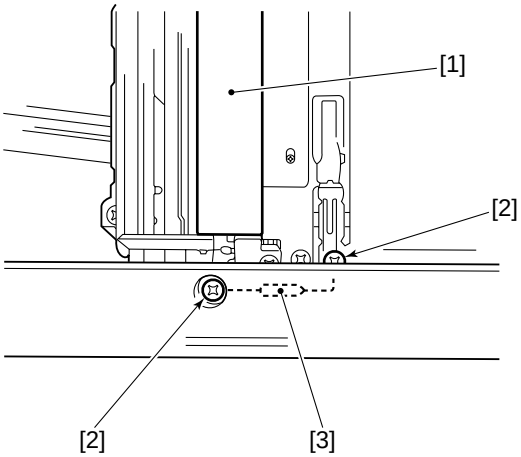

Figure 4-803

COPYRIGHT © 1999 CANON INC.

B. Blank Assembly

1. Detaching the Pre-Exposure PCB

1) Detach the rear cover.
2) Disconnect the connector (J731) from the pre-exposure PCB.
3) Hold the pre-exposure PCB using pliers, and pull it straight out taking care not to damage the PCB.

2. Detaching the Blank Assembly

1) Detach the copyboard glass, lens cover, rear cover, and drum unit; then, detach the developing assembly.
2) Disconnect the connector (J731) [1] from the pre-exposure PCB and the connector (J30) [2] from the blank solenoid.

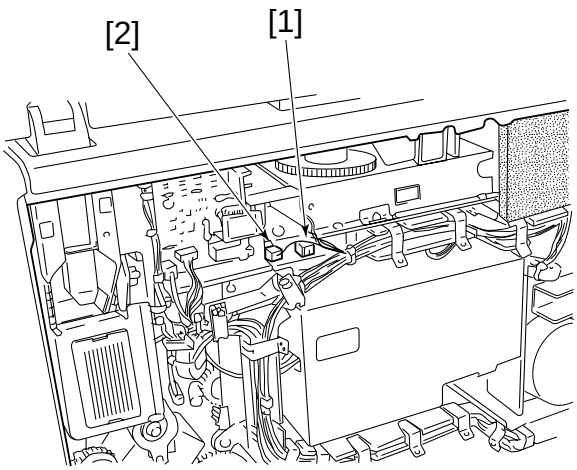

Figure 4-804

3) Hold the blank assembly on its bottom, and remove the four screws [3]; then, pull out the pre-exposure unit to the front.

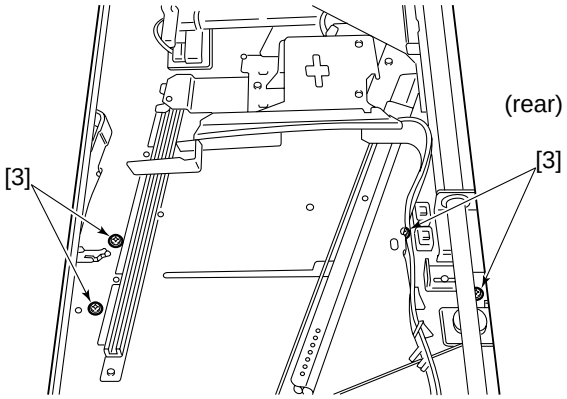

Figure 4-805

COPYRIGHT © 1999 CANON INC.
CANON NP6320 REV.0 DEC. 1999 PRINTED IN JAPAN (IMPRIME AU JAPON)

C. CORONA SYSTEM

1. Drum Unit

a. Detaching the Drum Unit

1) Open the front door.
2) Release the feeder assembly, and remove the screw [1].
3) Turn the developing assembly release lever [2] counterclockwise.
4) Pull out the drum unit [3] to the front carefully.

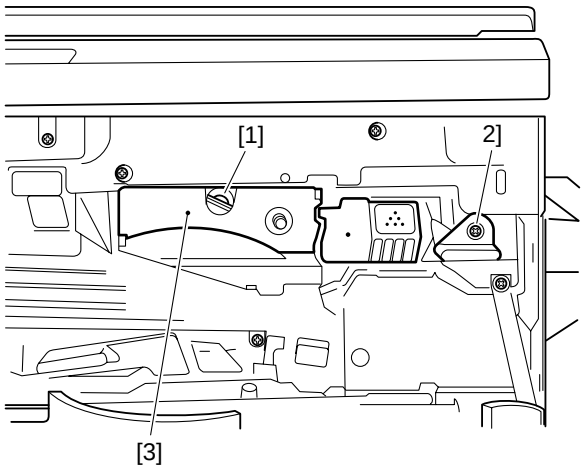

Figure 4-806

Note:
Take care not to damage the drum.

Note:
The photosensitive drum is susceptible to light; exposure to even room light can lead to white spots or black lines on the copies.

As a rule, do not switch the copier ON with the drum unit detached.

Note:
Do not press the Copy Start key.

b. Cleaning

If the photosensitive drum is soiled, clean it using a flannel cloth coated with toner; do not use paper, lint-free or otherwise.

Note:
Do not use solvent or dry wipe the drum; never use drum cleaning powder.

COPYRIGHT © 1999 CANON INC.
CANON NP6320 REV.0 DEC. 1999 PRINTED IN JAPAN (IMPRIME AU JAPON)

2. Primary/Transfer Corona Assembly

a. Outline

The photosensitive drum is surrounded by the primary and transfer corona assemblies.

The primary corona assembly is equipped with a grid plate.

b. Disassembly/Assembly

■ Primary Corona Assembly

1) Detach the drum unit.

Note:
Do not expose the photosensitive drum to strong light; otherwise, white spots or black lines can occur on the copies.

2) Disengage the hook [1], and pull out the primary corona assembly [2] from the drum unit.

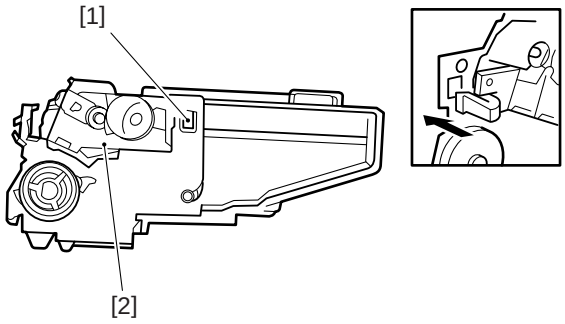

Figure 4-807

■ Transfer Corona Assembly Gut Wire and Static Eliminator

1) Detach the transfer corona assembly from the copier.
2) Remove the two screws [1], and detach the static eliminator, taking care so that the gut wire will not come off.

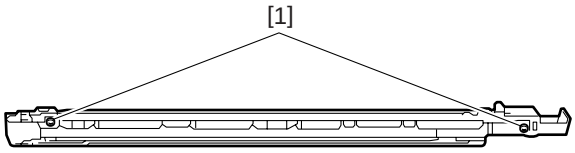

Figure 4-808

3) Detach the static eliminator [2].

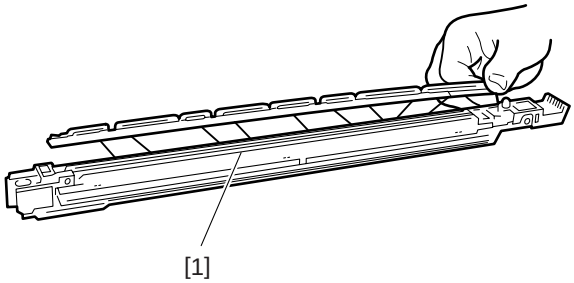

Figure 4-809

COPYRIGHT © 1999 CANON INC.
CANON NP6320 REV.0 DEC. 1999 PRINTED IN JAPAN (IMPRIME AU JAPON)

■ Attaching the Primary/Transfer Corona Assembly Wire

- Primary Corona Assembly

1) Remove the four tension springs [1], and detach the grid plate [2].

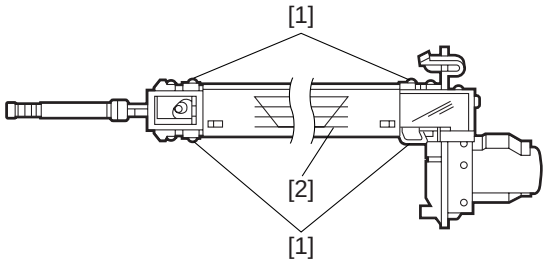

Figure 4-810

- Transfer Corona Assembly

2) Detach the gut wire from the transfer corona assembly; see p. 4-22.
3) Free about 40 mm from the corona wire reel (0.06 mm dia.), and form a loop at its end about 2 mm in diameter.

Note:
Wind the corona wire around a hex key once, and turn the hex key four to five times; then, twist it to form a loop.

4) Cut the twisted end of the corona wire to about 1 mm or less using a nipper.
5) Hook the loop of the corona wire as shown in Figure 4-811, and lead the wire along the V-groove of the height adjusting roll.
   Hook the corona wire tension spring on the corona wire, and twist the spring three to four times as shown.
6) Cut the excess corona wire to about 1 mm or less using a nipper.
7) Pick the end of the corona wire tension spring using tweezers, and hook it on the corona terminal.

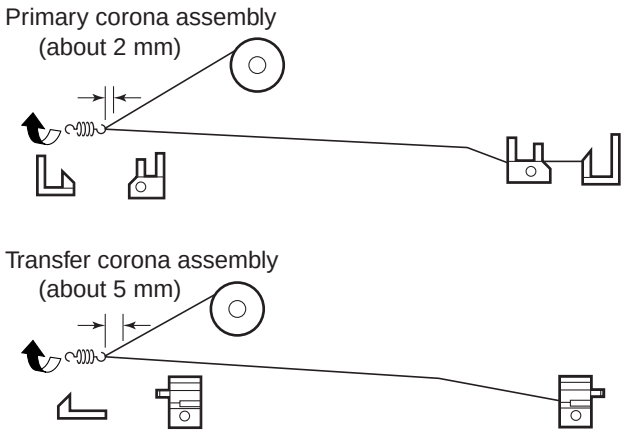

Figure 4-811

Note:
i. Make sure that the corona wire is free of breaks or twists and its gold plating has not peeled.
ii. Make sure that the corona wire is not slack; normal, if the length of the corona wire tension spring is 12 mm.
iii. Make sure that the corona wire is in the V-groove of the height adjusting roll.

COPYRIGHT © 1999 CANON INC.
CANON NP6320 REV.0 DEC. 1999 PRINTED IN JAPAN (IMPRIME AU JAPON)

D. Development System

1. Developing Assembly

a. Construction

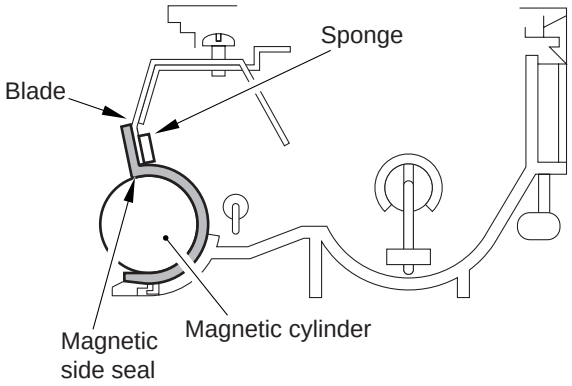

Figure 4-812

b. Detaching the Developing Assembly

1) Turn the developing assembly release lever [1] counterclockwise.
2) Slide out the developing assembly [2] carefully.
3) Hold the grip on the developing assembly, and take the assembly out of the copier.

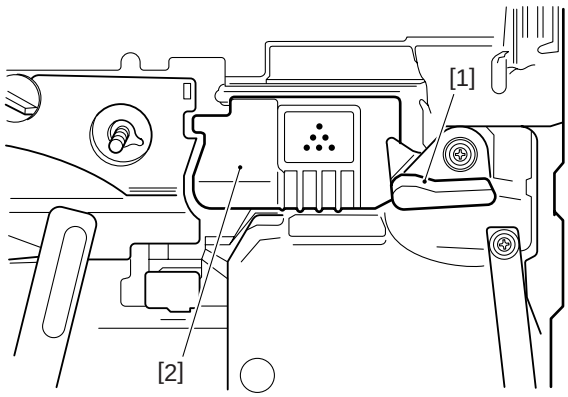

Figure 4-813

COPYRIGHT © 1999 CANON INC.
CANON NP6320 REV.0 DEC. 1999 PRINTED IN JAPAN (IMPRIME AU JAPON)

c. Detaching the Blade, Developing Cylinder, and Side Seal

1) Detach the developing assembly from the copier.
2) Remove the two screws [1], and detach the developing assembly upper cover [2].

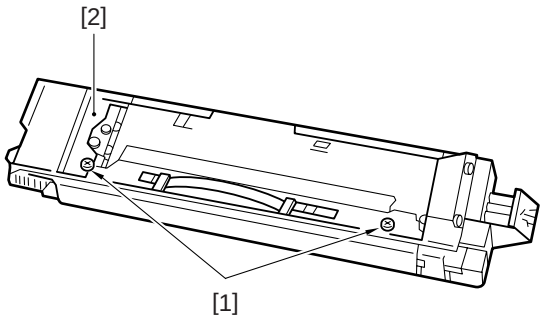

Figure 4-814

3) Place a newspaper on the floor, and pour out the toner from the developing assembly.
4) Remove the two screws [3], and detach the blade mount together with the blade.

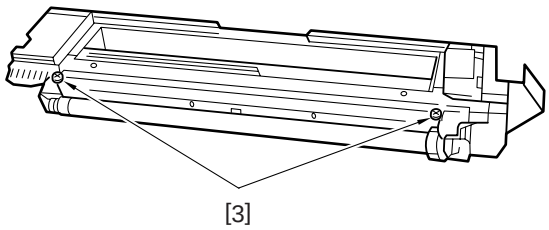

Figure 4-815

COPYRIGHT © 1999 CANON INC. CANON NP6320 REV.0 DEC. 1999 PRINTED IN JAPAN (IMPRIME AU JAPON)

5) Disengage the hook [4] on the bottom, and detach the grip [5].

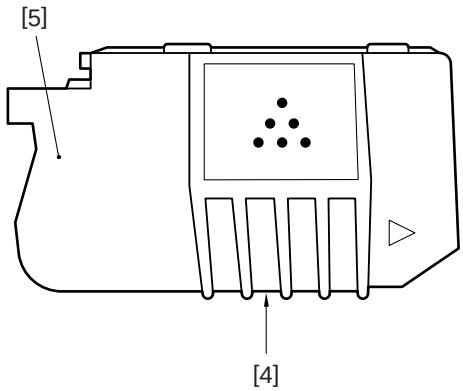

Figure 4-816

6) Remove the three screws [6], and detach the developing cylinder holder [7] (front), ball bearing, and developing roll [8].

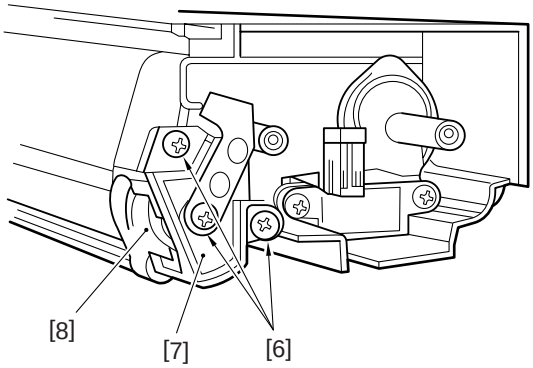

Figure 4-817

7) Remove the two E-rings [9], and remove the two gears [10].

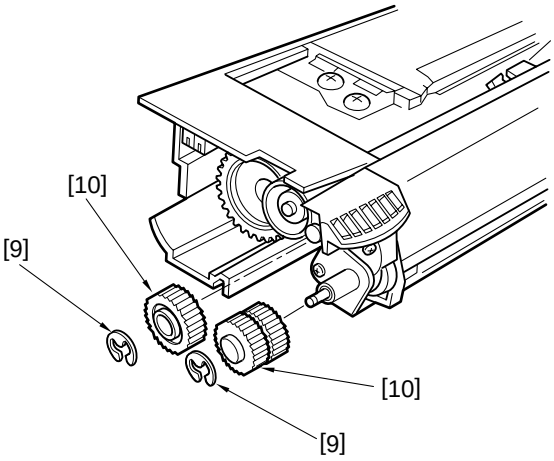

Figure 4-818

COPYRIGHT © 1999 CANON INC.
CANON NP6320 REV.0 DEC. 1999 PRINTED IN JAPAN (IMPRIME AU JAPON)

8) Remove the two screws [11], and detach the developing cylinder holder [12] (rear), ball bearing [13], and developing roll [14].

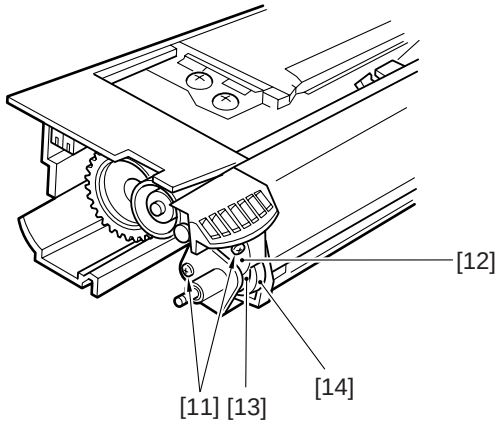

Figure 4-819

9) Detach the developing cylinder [15] and the manetic side seal [16].

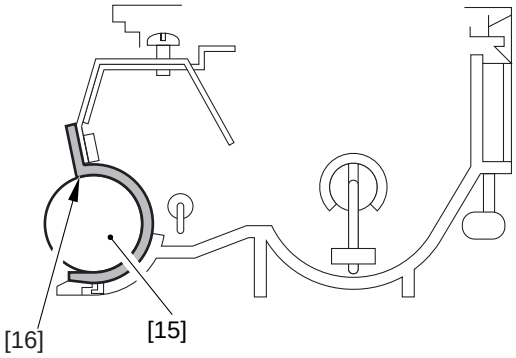

Figure 4-820

COPYRIGHT © 1999 CANON INC.

d. Cleaning the Side Magnetic Seal and the Blade

1) Clean the surface on which the side magnetic seal will be hooked using alcohol.
2) Fix the side magnetic seal at the position shown in Figure 4-821.

Note:
Put the hook of the magnetic side seal on its side on plastic marking so that the magnetic side seal is firmly in the correct position.

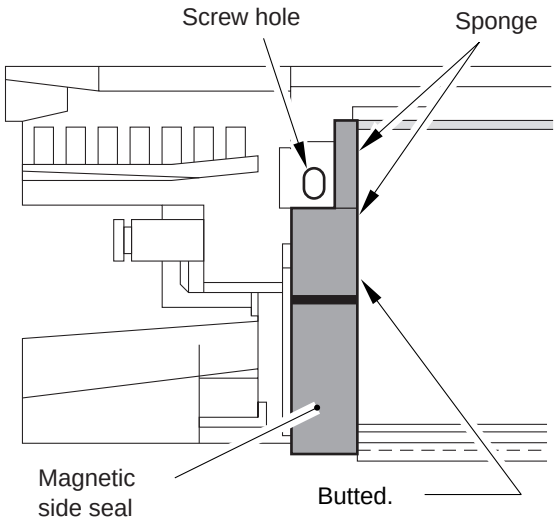

Figure 4-821

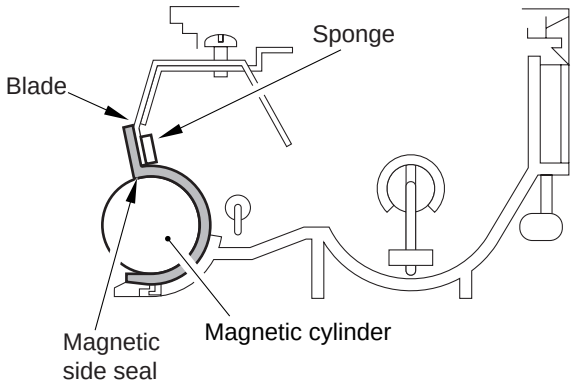

Figure 4-822

COPYRIGHT © 1999 CANON INC.
CANON NP6320 REV.0 DEC. 1999 PRINTED IN JAPAN (IMPRIME AU JAPON)

3) Attach all parts that have been detached except the blade.
Make sure that the gear is assembled with the longer tooth in the groove.

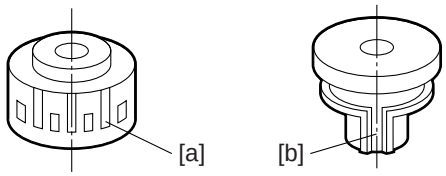

Figure 4-823

4) Force the blade mount against the developing assembly in the direction of the arrow, and tighten the two screws.

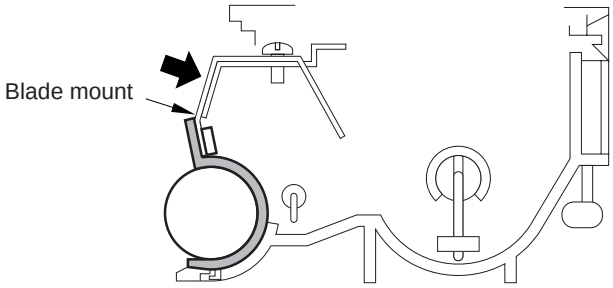

Figure 4-824

5) Loosen the four screws that hold the blade on the blade mount, and tighten them back.

Note:
Do not loosen the screws excessively, or the blade may come off the positioning pin found at the center.

COPYRIGHT © 1999 CANON INC.
CANON NP6320 REV.0 DEC. 1999 PRINTED IN JAPAN (IMPRIME AU JAPON)

CHAPTER 5

PICK-UP/FEEDING SYSTEM

I. PAPER TRANSPORT SYSTEM 5-1
- A. Paper Pick-up Assembly and Feeder 5-1
- B. Pick-up and Feeder Operation 5-3
- C. Identifying the Cassette Size 5-4
- D. Pick-Up from the Multifeeder 5-5

II. JAM DETECTION 5-7
- A. Pick-up Assembly Delay Jam 5-8
- B. Delivery Assembly Stationary Jam 5-9
- C. Delivery Assembly Delay Jam 5-9

III. FEEDER SYSTEM 5-10
- A. Pick-up Assembly 5-10
- B. Feeder Assembly 5-17
- C. Main Motor Assembly 5-21

COPYRIGHT © 1999 CANON INC. CANON NP6320 REV.0 DEC. 1999 PRINTED IN JAPAN (IMPRIME AU JAPON)

I. PAPER TRANSPORT SYSTEM

A. Paper Pick-up Assembly and Feeder

1. Outline

When the pick-up clutch solenoids (SL1, SL6) engage, the main motor (M1) turns the roller, feeding a sheet of copy paper to the registration rollers. The number of rotations of the pick-up roller varies with the length of the copy paper.

The copy paper is fed by the registration rollers so that its leading edge is in line with the leading edge of the toner image on the photosensitive drum. It then passes through the transfer, separation, feed, fixing and delivery stages to the copy tray.

The copy paper is sensed by paper sensors (Q2, Q5). If it does not reach or pass the sensors within the specified period, the DC controller PCB judges that a jam has occurred and causes the Jam indicator on the control panel to flash.

Cassette paper sensors (Q6, Q7) sense whether there is paper in the cassette. If there is not, the CASSETTE PAPER EMPTY signals (UCPD, LCPD) becomes '0', causing the Add Paper indicator on the control panel to go ON.

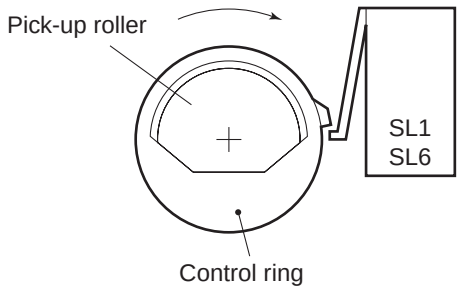

Figure 5-101

COPYRIGHT © 1999 CANON INC.
CANON NP6320 REV.0 DEC. 1999 PRINTED IN JAPAN (IMPRIME AU JAPON)

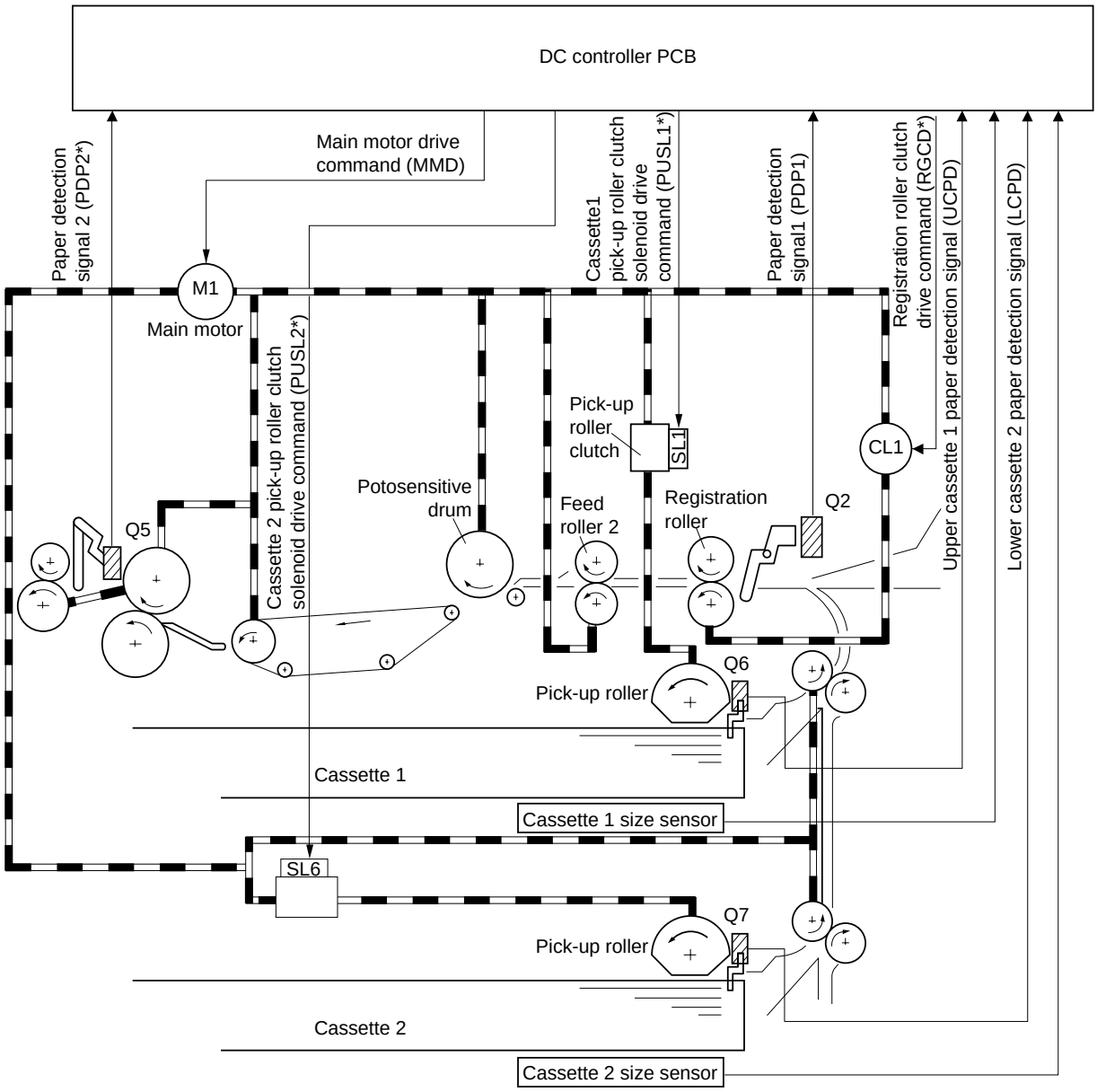

Figure 5-102

COPYRIGHT © 1999 CANON INC.
CANON NP6320 REV.0 DEC. 1999 PRINTED IN JAPAN (IMPRIME AU JAPON)

B. Pick-Up and Feeder Operation

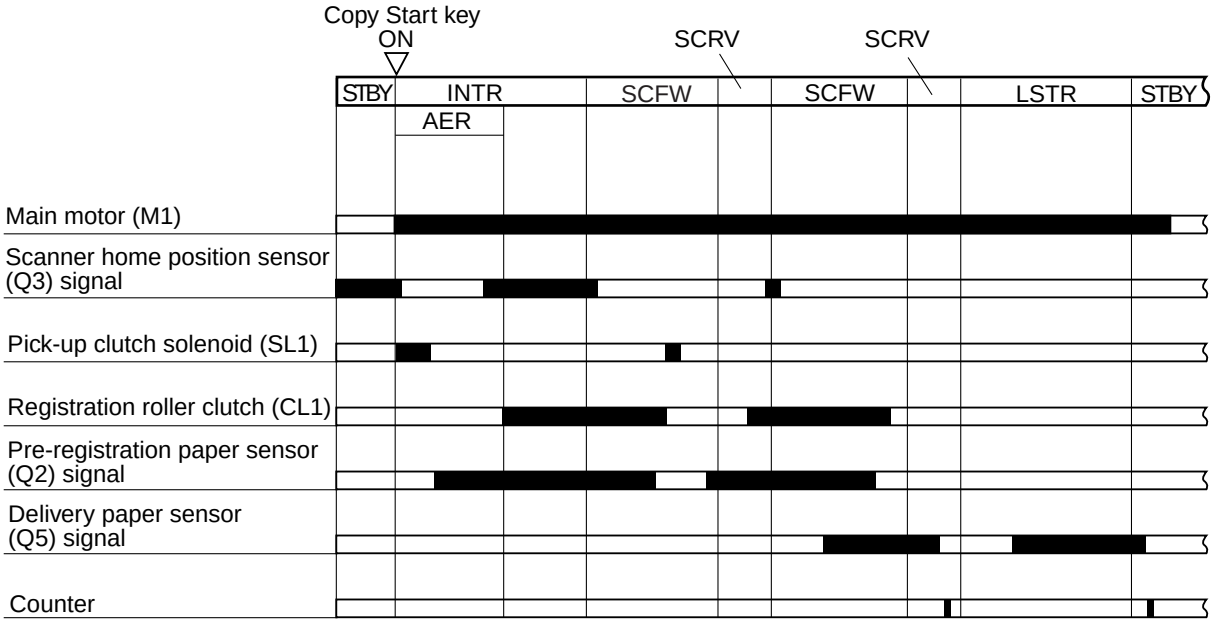

Figure 5-103

COPYRIGHT © 1999 CANON INC.
CANON NP6320 REV.0 DEC. 1999 PRINTED IN JAPAN (IMPRIME AU JAPON)

C. Identifying the Cassette Size

The presence/absence of a cassette in the cassette holder and the size thereof are identified by four switches (CST1 through CST4) provided in each cassette holder. Based on the combinations of the switches which have been actuated, the microprocessor recognizes the presence/absence of a cassette as shown in Table 5-101 and, at the same time, determines where to reverse the scanner and how to control the blank shutter.

Arrangement / Paper size	CST 1 (left)	CST 2	CST 3	CST 4 (right)
No cassette	0	0	0	0
B5 (182×257)	0	0	0	1
U1 (184 to 190 × 265 to 267)	0	0	1	0
A4 (210×297)	0	0	1	1
B5R (257×182)	0	1	0	0
B4 (257×364)	0	1	0	1
A4R (297×210)	0	1	1	0
A3 (297×420)	0	1	1	1
U3 (190 to 203 × 266 to 268)	1	0	0	0
A5R (210×149)	1	0	0	1
U2 (203 to 220 × 267 to 355)	1	0	1	0
Letter 8.5×11 (216×279)	1	0	1	1
STMT 5.5×8.5 (140×216)	1	1	0	0
Legal 8.5x14 (216×356)	1	1	0	1
Letter R 8.5×11 (216×279)	1	1	1	0
Ledger R 11×17 (279×432)	1	1	1	1

0: SW is OFF.
1: SW is ON.

(unit: mm)

Table 5-101

COPYRIGHT © 1999 CANON INC.
CANON NP6320 REV.0 DEC. 1999 PRINTED IN JAPAN (IMPRIME AU JAPON)

D. Pick-Up from the Multifeeder

The multifeeder pick-up roller is driven by the main motor (M1).

When the multifeeder paper sensor (Q1) identifies copy paper and the Copy Start key is pressed, the multifeeder clutch (CL2) goes ON and the pick-up roller starts to rotate to pick up the paper.

When the copy paper reaches the registration roller, the multifeeder clutch (CL2) goes OFF and the pick-up roller stops.

At the same time, the multifeeder solenoid (SL3) goes ON to transmit the drive of the main motor (M1) to the cam mechanism, thereby lowering the multi-feeder holding tray to prevent dirt on the next copy paper in the multifeeder tray.

The multifeeder solenoid (SL3) goes OFF as soon as the first copy paper moves past the pre-registration paper sensor (Q2); at the time, the multifeeder holding tray returns to the normal pick-up position.

Note:

The degree of arching for pick-ups from the multifeeder may be adjusted in the service mode (C04).

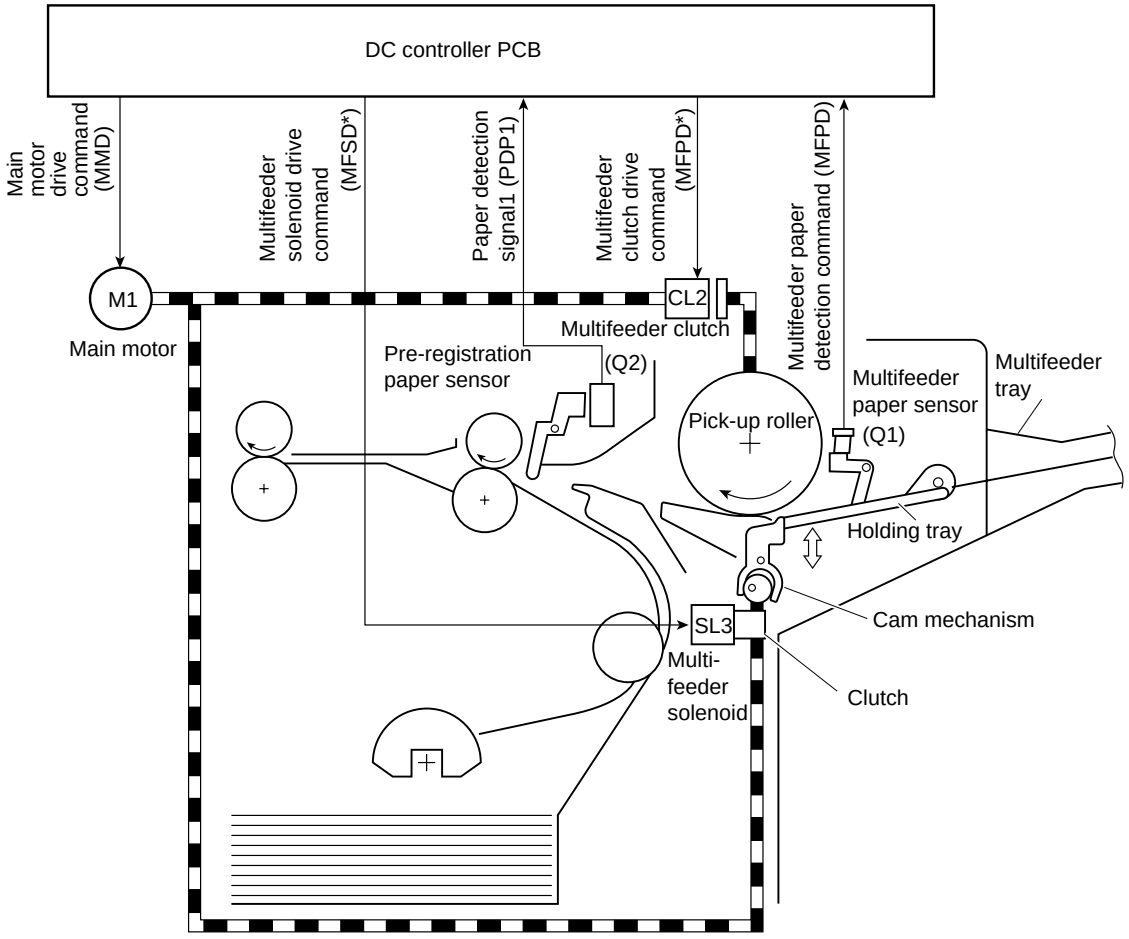

Figure 5-104

<Pick-up>

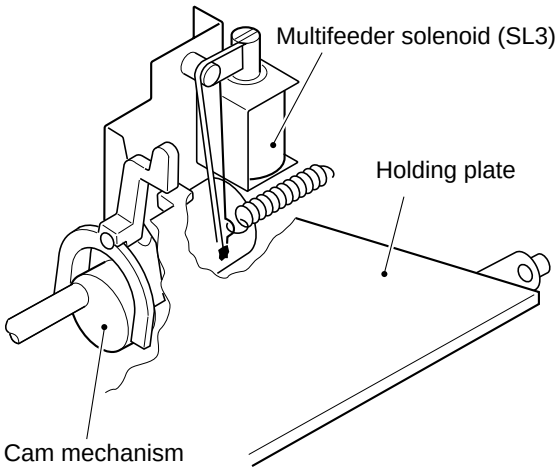

Figure 5-105

<Holding plate>

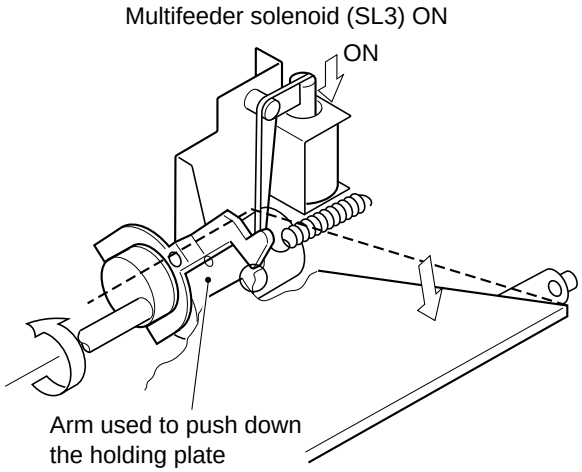

Figure 5-106

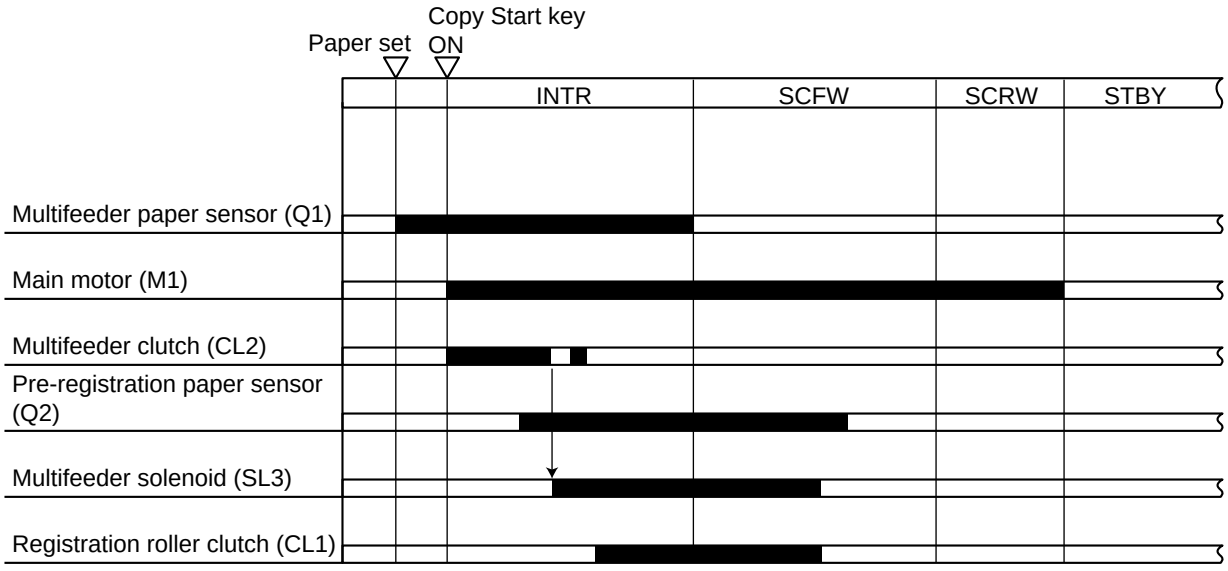

Figure 5-107

COPYRIGHT © 1999 CANON INC.
CANON NP6320 REV.0 DEC. 1999 PRINTED IN JAPAN (IMPRIME AU JAPON)

II. JAM DETECTION

The copier has two sensors to sense whether copy paper is being fed normally.

- Pre-registration paper sensor (Q2)
- Delivery paper sensor (Q5)

Paper jams can be identified by the microprocessor by reading signals from the sensors at predetermined times to check if paper is at or not at a sensor at that time, and thus identify if the paper is moving through the copier correctly.

If a jam occurs, the copier memorizes the number of copies that have not yet been made and also the copier settings. This information is stored in the copier, even if the power is cut off by opening the front door in order to reset the copier.

The microprocessor identifies a jam in any of the following four cases. Also, the microprocessor judges that there is a jam if one of the sensors detects paper when the power is switched ON.

COPYRIGHT © 1999 CANON INC.
CANON NP6320 REV.0 DEC. 1999 PRINTED IN JAPAN (IMPRIME AU JAPON)

A. Pick-up Assembly Delay Jam

If the copy paper does not reach the paper sensor of the pick-up assembly within a specified period after paper pick-up starts, the microprocessor will judge that a pick-up delay jam has occurred, and immediately stop the operation of the copier. Also, the Jam indicator on the control panel will flash and a segment of the Paper Select/Jam indicator will go ON.

1. Multifeeder

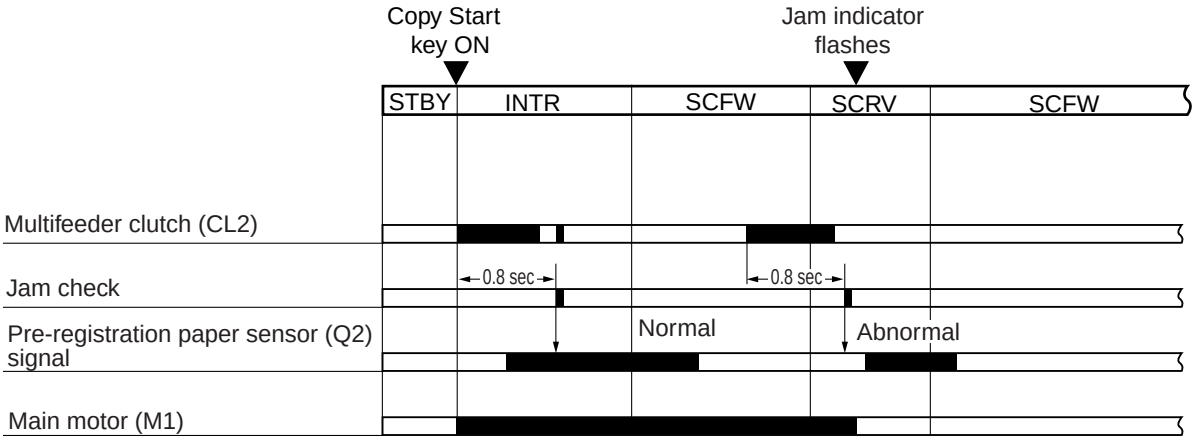

Figure 5-201 (multifeeder pick-up assembly delay jam)

2. Cassettes

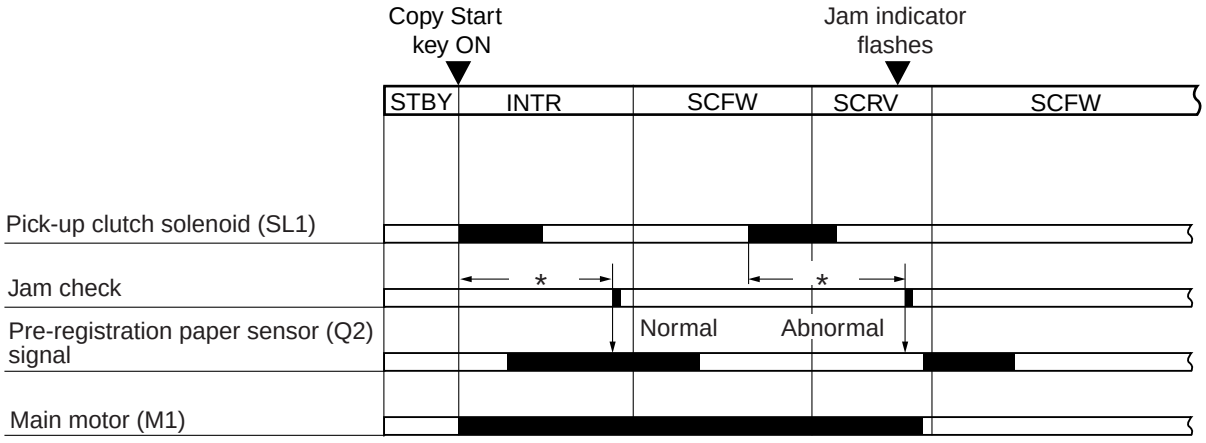

* Upper cassette: 1.8 sec
Lower cassette: 2.7 sec

Figure 5-202 (cassette pick-up assembly delay jam)

COPYRIGHT © 1999 CANON INC.
CANON NP6320 REV.0 DEC. 1999 PRINTED IN JAPAN (IMPRIME AU JAPON)

B. Delivery Assembly Stationary Jam

If the copy does not pass the delivery assembly paper sensor within the specified period after the registration roller clutch (CL1) operates, the microprocessor will judge that a delivery unit stationary jam has occurred, and immediately stop the operation of the copier. Also, the JAM indicator on the control paper will flash and a segment of the Paper Select/Jam indicator will go ON.

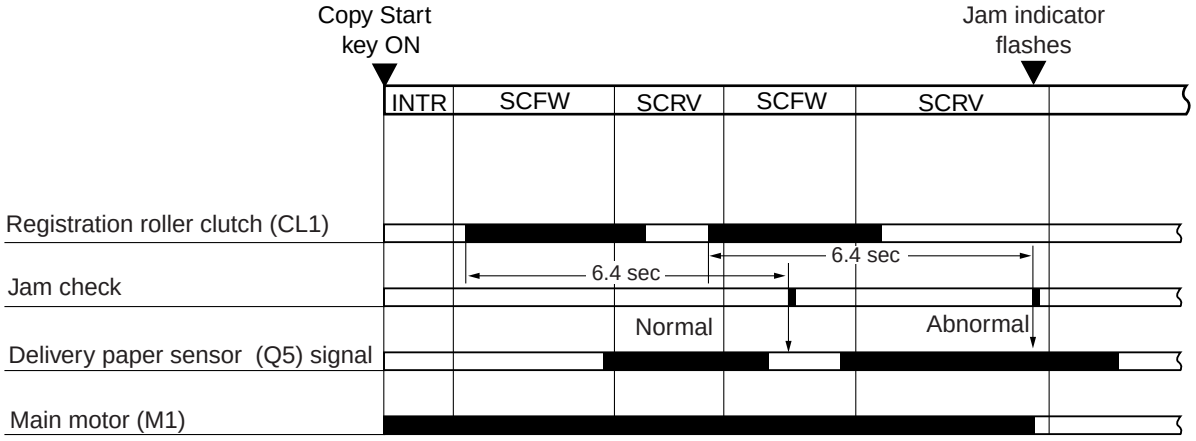

Figure 5-203 (delivery assembly stationary jam, A4 size)

C. Delivery Assembly Delay Jam

If the copy does not reach the delivery assembly paper sensor within the specified period after the registration roller clutch (CL1) has operated, the microprocessor will judge that a delivery assembly delay jam has occurred, and immediately stop the operation of the copier. Also, the Jam indicator on the control panel will flash and a segment of the Paper Select/Jam indicator will go ON.

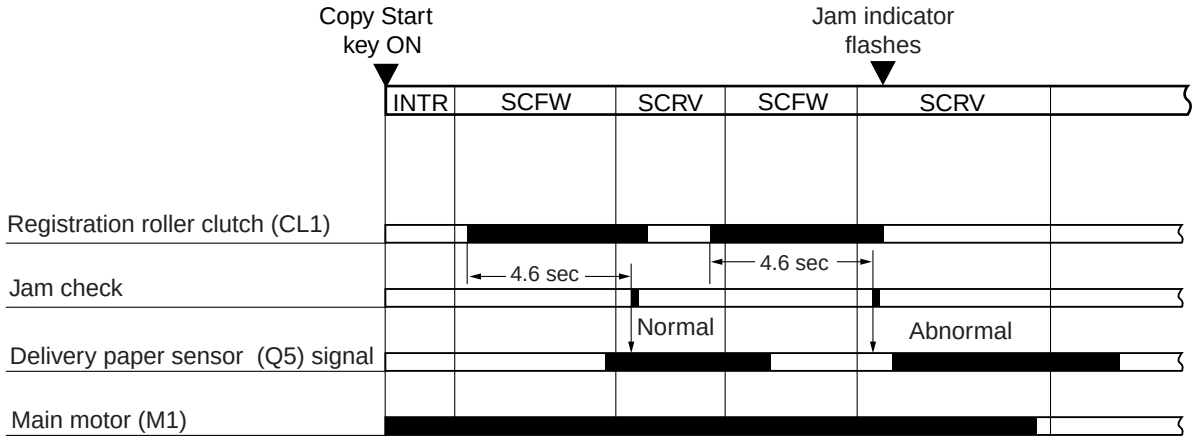

Figure 5-204 (delivery assembly stationary jam, A4 size)

COPYRIGHT © 1999 CANON INC.
CANON NP6320 REV.0 DEC. 1999 PRINTED IN JAPAN (IMPRIME AU JAPON)

III. FEEDER SYSTEM

A. Pick-up Assembly

1. Detaching the Upper and Lower Pick-Up Roller Shaft

1) Detach the rear cover.
2) Remove the four fastons [1], and two screws [2].
3) Detach the solenoid unit [3].

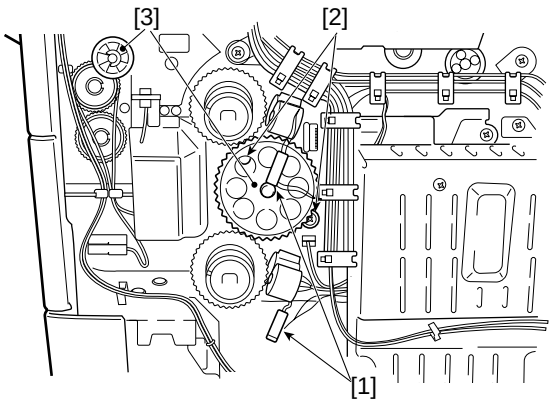

Figure 5-301

4) Detach the control ring [4] from the pick-up roller shaft.

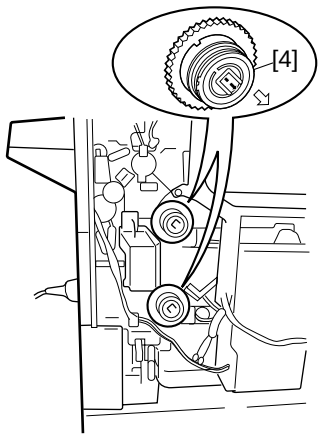

Figure 5-302

COPYRIGHT © 1999 CANON INC.
CANON NP6320 REV.0 DEC. 1999 PRINTED IN JAPAN (IMPRIME AU JAPON)

5) Detach the pick-up roller bushing [5] found at the rear.

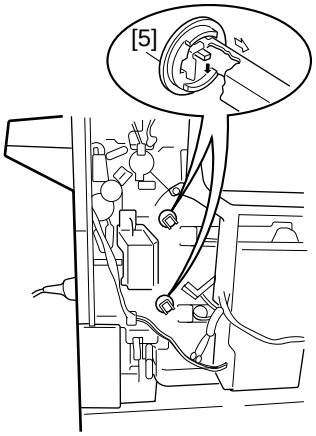

Figure 5-303

6) Detach the cassette.
7) Detach the lower left cover and the right cover; detach the cover [6] (2 screws) as if to lift it. (This applies only when you are detaching the lower pick-up roller shaft.)

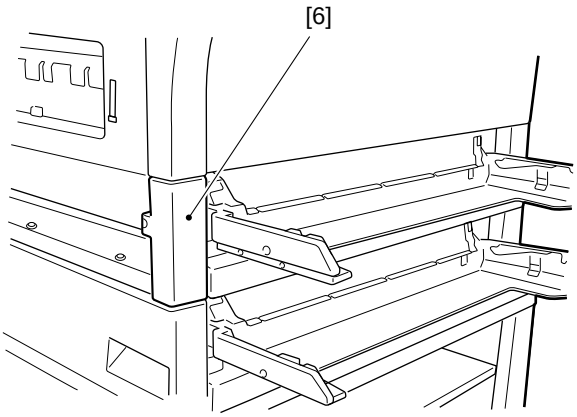

Figure 5-304

COPYRIGHT © 1999 CANON INC. CANON NP6320 REV.0 DEC. 1999 PRINTED IN JAPAN (IMPRIME AU JAPON)

8) Press the two levers [7], and push the cassette support [8] slightly to the rear.
9) In this condition, push down the hook [9] of the cassette support using a screwdriver to detach the cassette support.

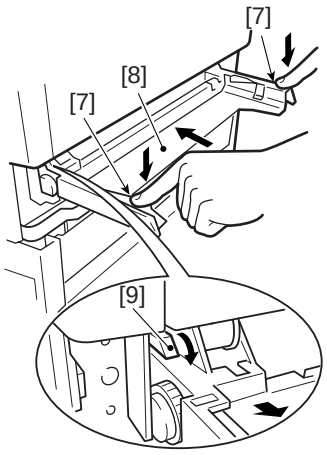

Figure 5-305

10) Remove the screw [10], and move the sensor mount [11] to the edge to facilitate work. (This applies only if you are detaching the lower pick-up roller shaft.)

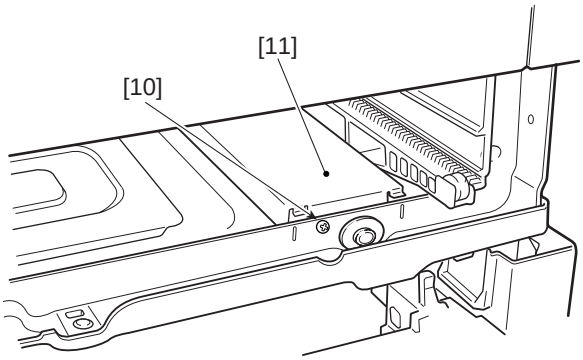

Figure 5-306

11) Detach the pick-up roller bushing [12] found at the front.

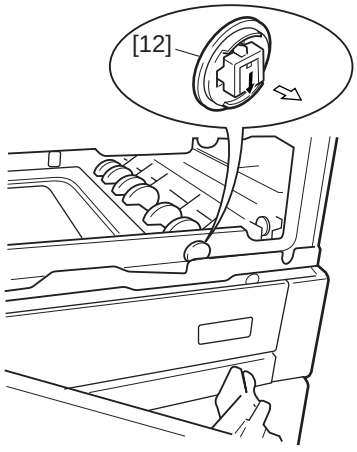

Figure 5-307

COPYRIGHT © 1999 CANON INC.
CANON NP6320 REV.0 DEC. 1999 PRINTED IN JAPAN (IMPRIME AU JAPON)

12) Shift the pick-up roller shaft [13] to the rear, and detach the pick-up roller shaft from the front.

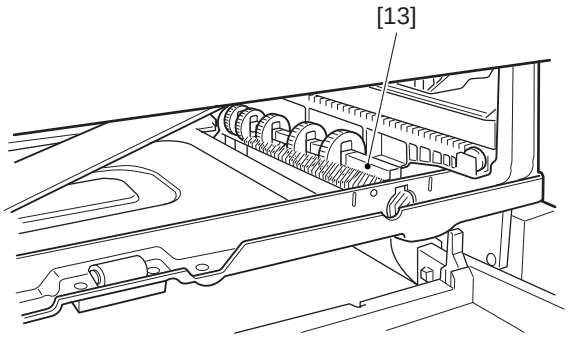

Figure 5-308

COPYRIGHT © 1999 CANON INC.
CANON NP6320 REV.0 DEC. 1999 PRINTED IN JAPAN (IMPRIME AU JAPON)

2. Detaching the Pick-Up Roller

1) Detach the pick-up roller [1] from the pick-up roller shaft [2].

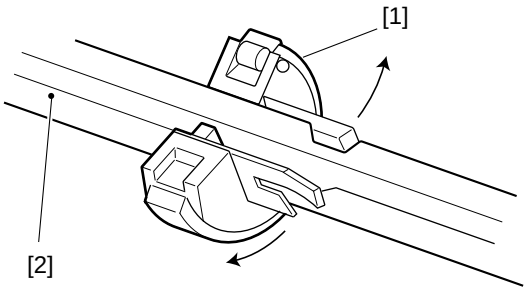

Figure 5-309 (viewed from above)

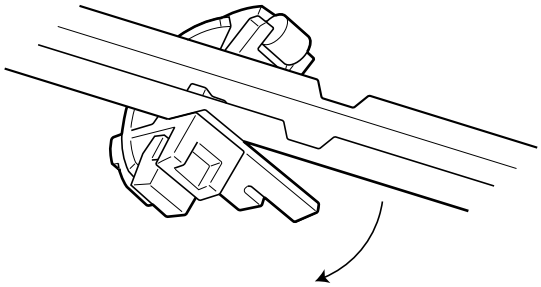

Figure 5-310 (viewed from above)

2) Detach the rubber [3] from the pick-up roller; see Figure 5-311.

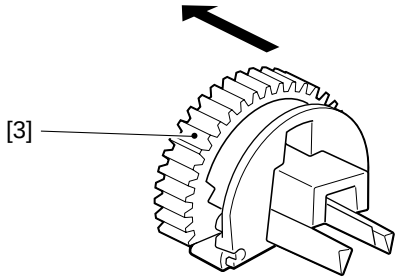

Figure 5-311

COPYRIGHT © 1999 CANON INC.
CANON NP6320 REV.0 DEC. 1999 PRINTED IN JAPAN (IMPRIME AU JAPON)

3. Positioning the Pick-Up Roller

Attach the pick-up roller to the pick-up shaft as shown in Figure 5-312; make sure that the pick-up roller is fitted into the mounting hole.

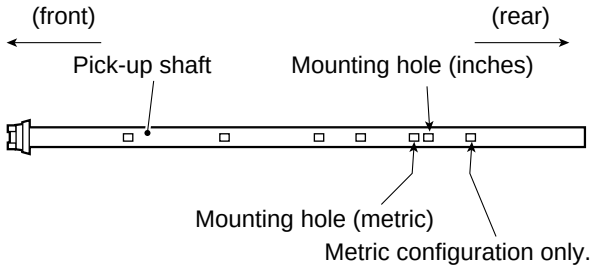

Mounting holes without notation are inch/metric configurations.

Figure 5-312

4. Detaching the Multifeeder Roller

1) Detach the right door; see p. 7-4.
2) Disengage the four hooks [1], and detach the U-turn guide unit [2].

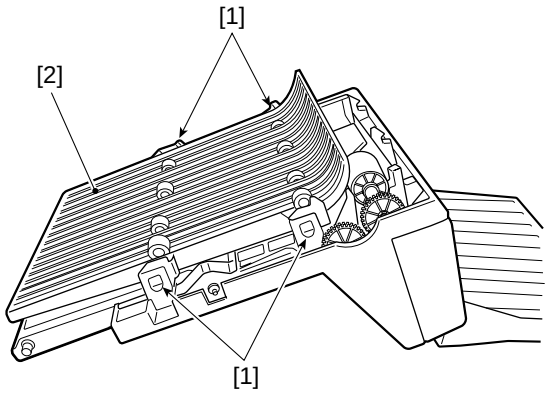

Figure 5-313

3) Push and turn the pad spring support [3] assembly found at the bottom of the right door unit 90°.

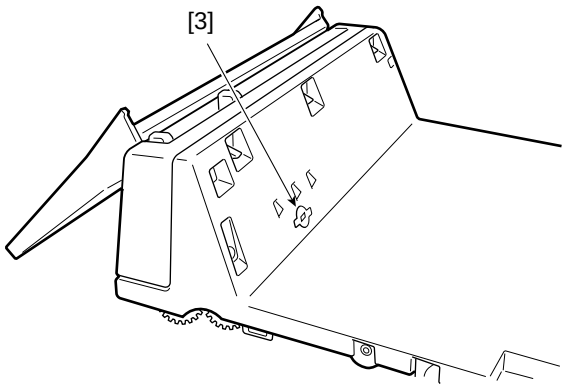

Figure 5-314

COPYRIGHT © 1999 CANON INC.
CANON NP6320 REV.0 DEC. 1999 PRINTED IN JAPAN (IMPRIME AU JAPON)

4) Detach the pad unit [4].

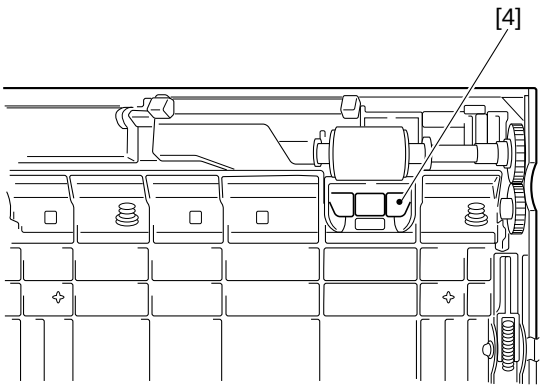

Figure 5-315

5) Pinch the hooks of the two bushings [5] using pliers, and detach the multifeeder roller [6].

Note:
Be sure to replace the pad also whenever the multifeeder roller is replaced.

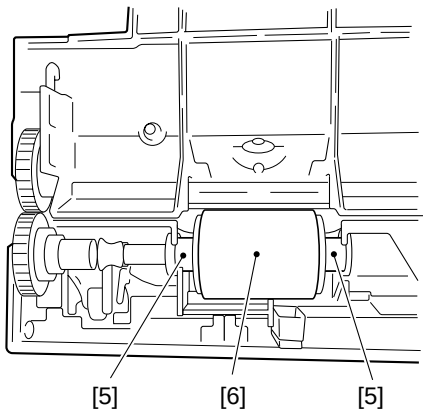

Figure 5-316

COPYRIGHT © 1999 CANON INC.
CANON NP6320 REV.0 DEC. 1999 PRINTED IN JAPAN (IMPRIME AU JAPON)

B. Feeder Assembly

1. Feeder Assembly

Note:
Make sure that the drum unit, transfer corona assembly, and developing assembly have been detached before detaching the feeder assembly.

1) Release the feeder assembly.
2) Detach the main motor assembly; see p.5-21.
3) Remove the E-ring [1], and detach the bushing [2].

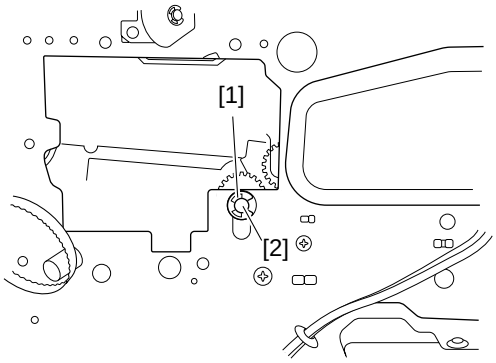

Figure 5-317 (rear)

4) Detach the inside cover, and remove the E-ring [3]; then, detach the bushing [4].
5) Detach the grounding wire (1 screw) [5].

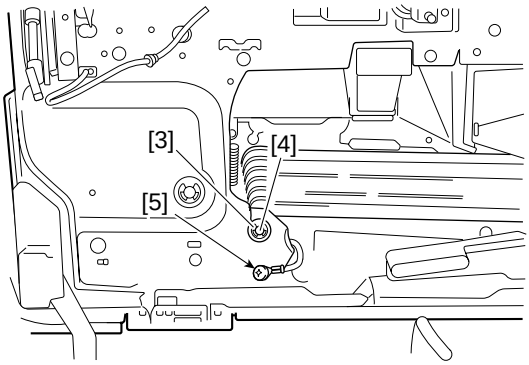

Figure 5-318

COPYRIGHT © 1999 CANON INC.
CANON NP6320 REV.0 DEC. 1999 PRINTED IN JAPAN (IMPRIME AU JAPON)

6) Hold the side of the feeder assembly [6] and pull it out toward the front slowly as if to lift it.

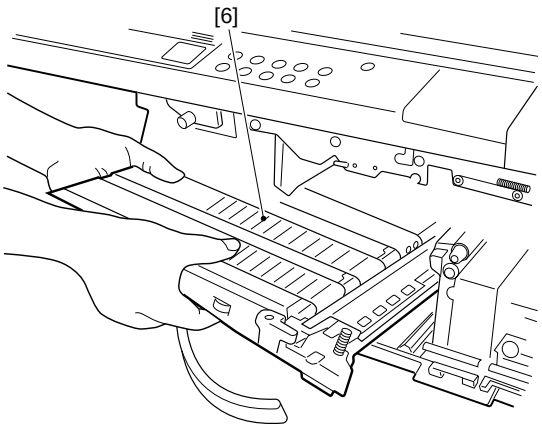

Figure 5-319

COPYRIGHT © 1999 CANON INC.
CANON NP6320 REV.0 DEC. 1999 PRINTED IN JAPAN (IMPRIME AU JAPON)

2. Feeder Belt

1) Detach the feeder assembly.
2) Remove the two screws [1], and detach the rail cover [2] found at the front.

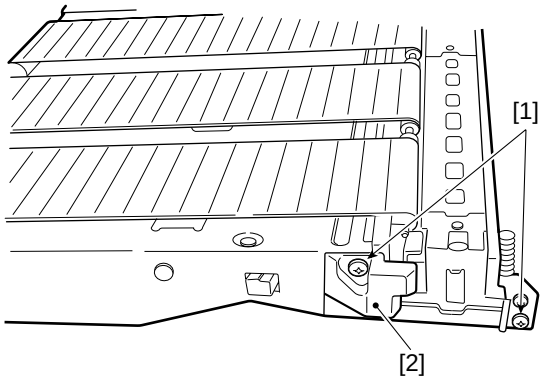

Figure 5-320

3) Remove the two screws [3] found at the front that hold the corona assembly rail [4] in place.

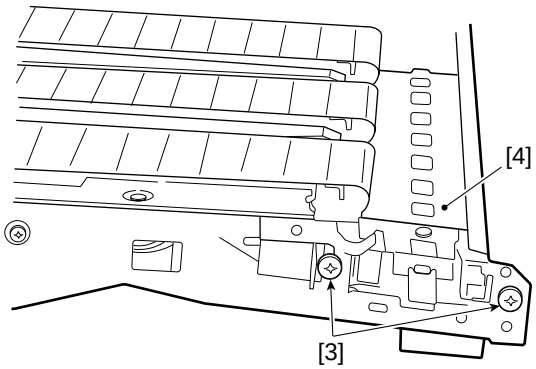

Figure 5-321

4) Remove the three screws [5], and detach the terminal holder [6] found at the rear.

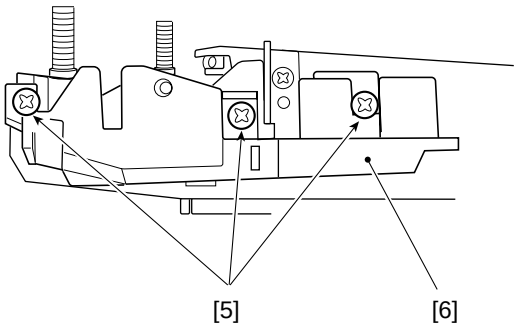

Figure 5-322

COPYRIGHT © 1999 CANON INC.

5) Remove the two screws [7] found at the rear, and detach the corona assembly rail [8].

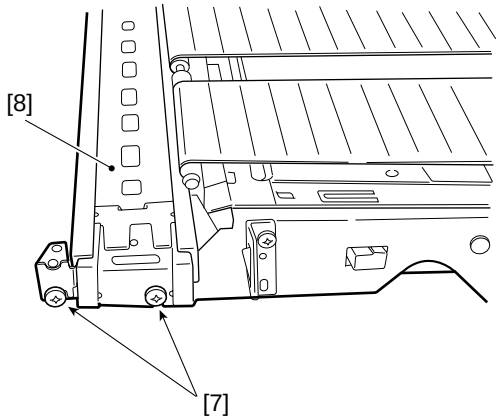

Figure 5-323

6) Detach the feeder belt [9].

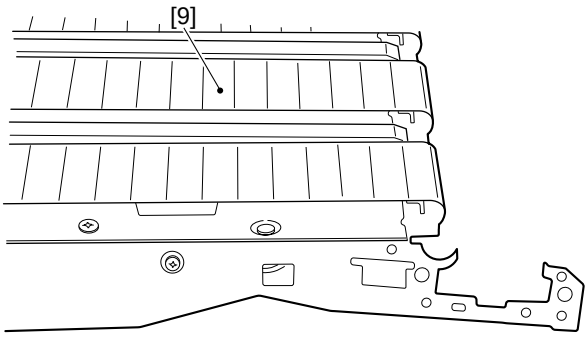

Figure 5-324

COPYRIGHT © 1999 CANON INC.
CANON NP6320 REV.0 DEC. 1999 PRINTED IN JAPAN (IMPRIME AU JAPON)

C. Main Motor Assembly

1. Detaching the Main Motor

1) Remove the rear cover.
2) Disconnect the J651 [1] on the main motor.
3) Remove the four screws [2] and then remove the main motor [3] from the supports.

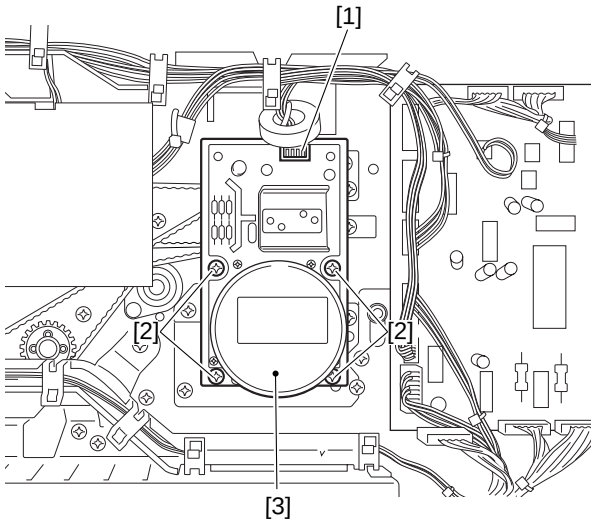

Figure 5-325

2. Removing the Main Motor Mount

1) Remove the rear cover.
2) Disconnect the J651 [1] on the main motor.
3) Remove the three screws [2].
4) Remove the main motor mount [3].

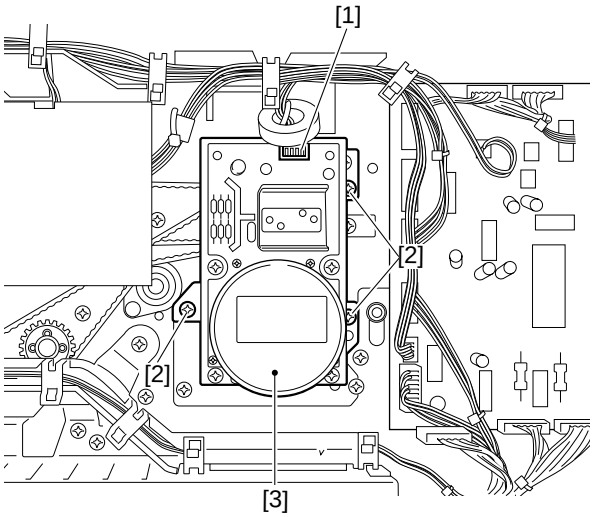

Figure 5-326

COPYRIGHT © 1999 CANON INC.
CANON NP6320 REV.0 DEC. 1999 PRINTED IN JAPAN (IMPRIME AU JAPON)

3. Removing the Main Drive Assembly

1) Remove the main motor mount (see p. 5-21).
2) Remove the DC controller PCB.
3) Remove the fixing assembly.
4) Remove the four screws [1].
5) Remove the main drive assembly [2] with releasing the two timing belts.

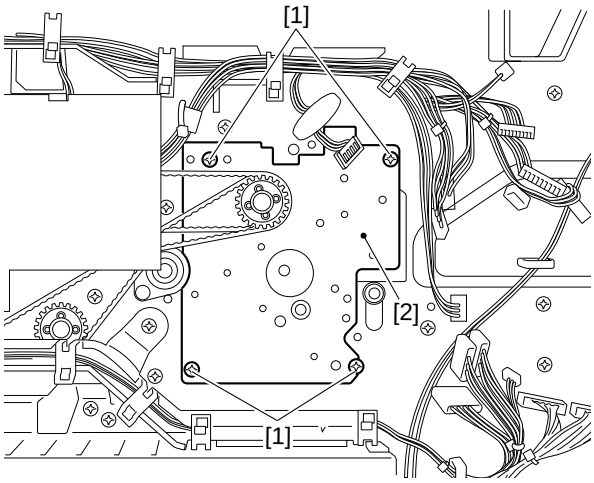

Figure 5-327

4. Mounting the Main Motor

The drive of the main motor is used to drive the drum and execute pick-up operations by way of timing belts.

Adjust the tension of the belt by selecting the mounting hole of the main motor so that when the center of the timing belt is pushed down with a force of 500 g, the distance between the two runs of the belt is between 20 mm and 25 mm.

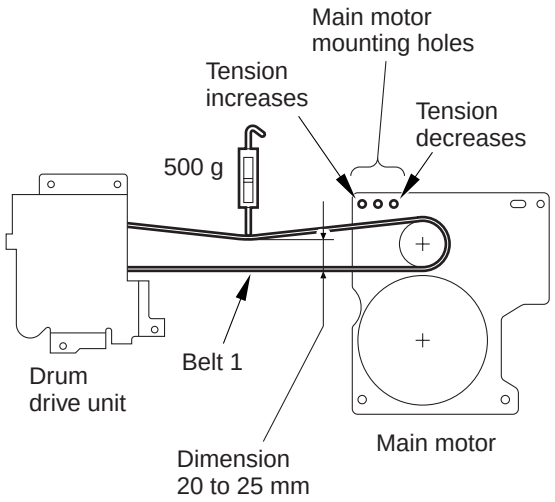

Figure 5-328

COPYRIGHT © 1999 CANON INC.
CANON NP6320 REV.0 DEC. 1999 PRINTED IN JAPAN (IMPRIME AU JAPON)

To adjust the timing belt used to execute pick-up operations, on the other hand, push the pulley support plate with a force of 2.4 kg, and fix it in place when it stops; see Figure 5-329.

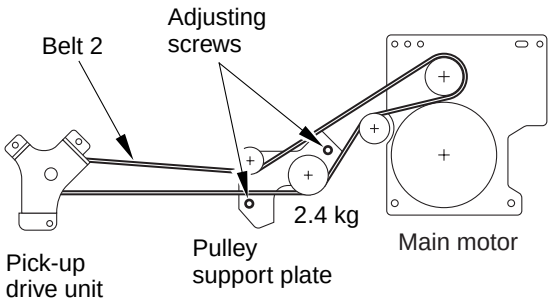

Figure 5-329

CHAPTER 6

FIXING SYSTEM

I. BASIC OPERATIONS 6-1
A. Outline 6-1
B. Operation of the Fixing Assembly Temperature Control System 6-3

II. DISASSEMBLY AND ASSEMBLY 6-4
A. Fixing Assembly 6-4

COPYRIGHT © 1999 CANON INC. CANON NP6320 REV.0 DEC. 1999 PRINTED IN JAPAN (IMPRIME AU JAPON)

I. BASIC OPERATIONS

A. Outline

The upper and lower rollers of the fixing assembly are driven by the main motor (M1).

The upper roller is heated by a single heater (H1: 900W). When the surface temperature of the roller rises, the resistance of the thermistor (TH1) falls, so the voltage of the signal FIXING ROLLER SURFACE TEMPERATURE signal (MAIN-TH) also falls.

Whether the voltage of TH1 (analog) is above or below a certain level at a given time determines if the microprocessor of the DC controller causes the HEATER DRIVE command (HTRD) to go '1' or '0'.

The copier is provided with the following three protection mechanisms:

- The microprocessor monitors the voltage of TH1 and TH2 and indicates 'E000' or 'E001' in response to an error, i.e., ACOFF goes '0' to turn the relay (K101) OFF, thereby cutting the AC power to the fixing heater.
- The fixing roller error detection circuit monitors the voltage of TH1 and, when it drops below 0.9V (equivalent of 215°C), turns HTRD OFF.
- The microprocessor monitors the signal of HTON. When the HTON signal is ON while the HTRD signal is OFF, the microprocessor cuts the AC power.
- The thermal switch (F1) goes OFF when the temperature of its inside rises to 230°C to cut off the power to the fixing heater.
- The differential circuit PCB monitors the voltage difference between TH1 and TH2. When difference is corresponding to 60°C or more, SW-ON-OFF signal is sent to the power switch (SW1), thereby cutting the main power.

Note:

The thermal switch (TS1) cannot be used after its contact has opened: the contact will not return to its normal state at room temperature.

COPYRIGHT © 1999 CANON INC.
CANON NP6320 REV.0 DEC. 1999 PRINTED IN JAPAN (IMPRIME AU JAPON)

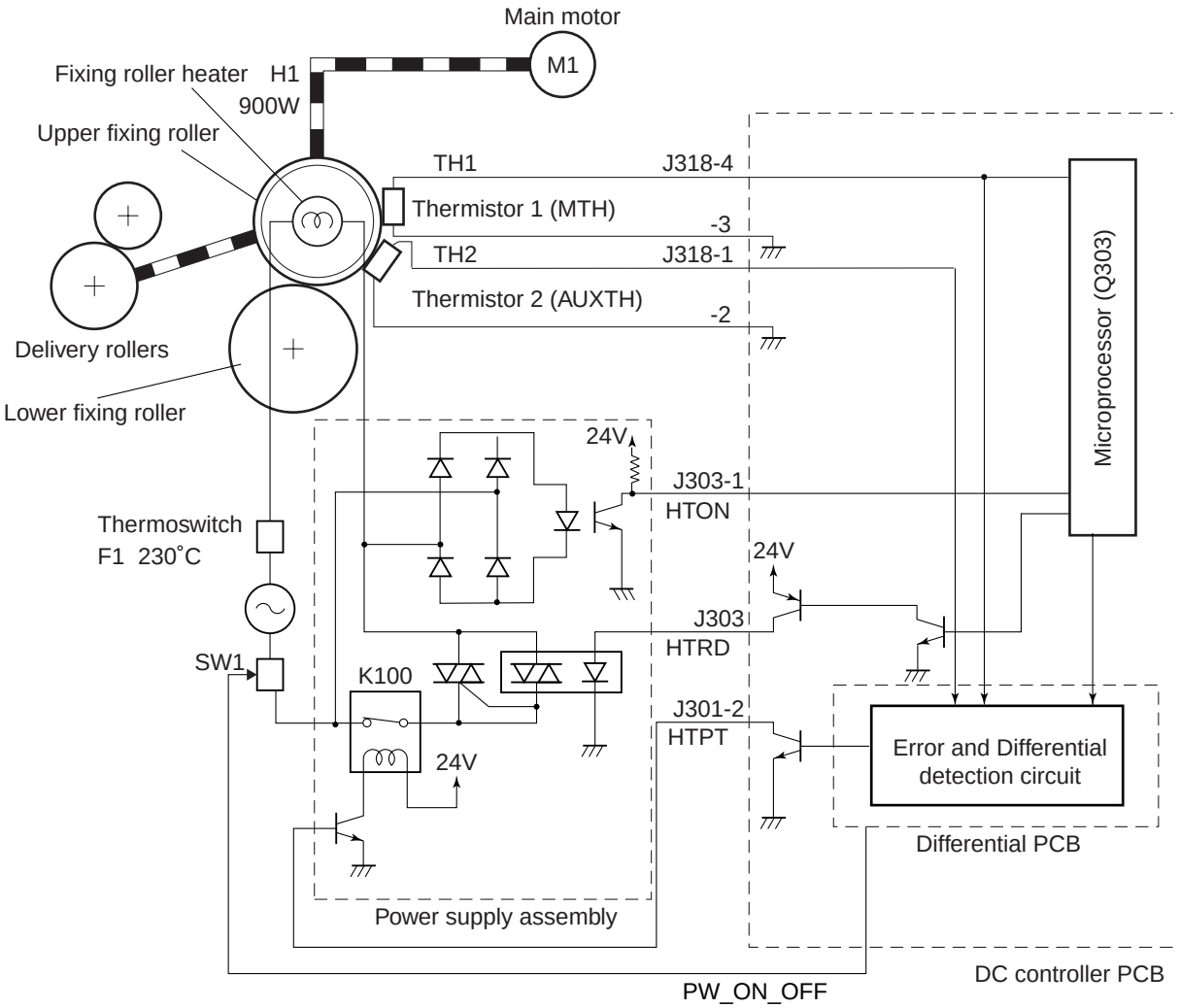

Figure 6-101

COPYRIGHT © 1999 CANON INC.
CANON NP6320 REV.0 DEC. 1999 PRINTED IN JAPAN (IMPRIME AU JAPON)

B. Operation of the Fixing Assembly Temperature Control System

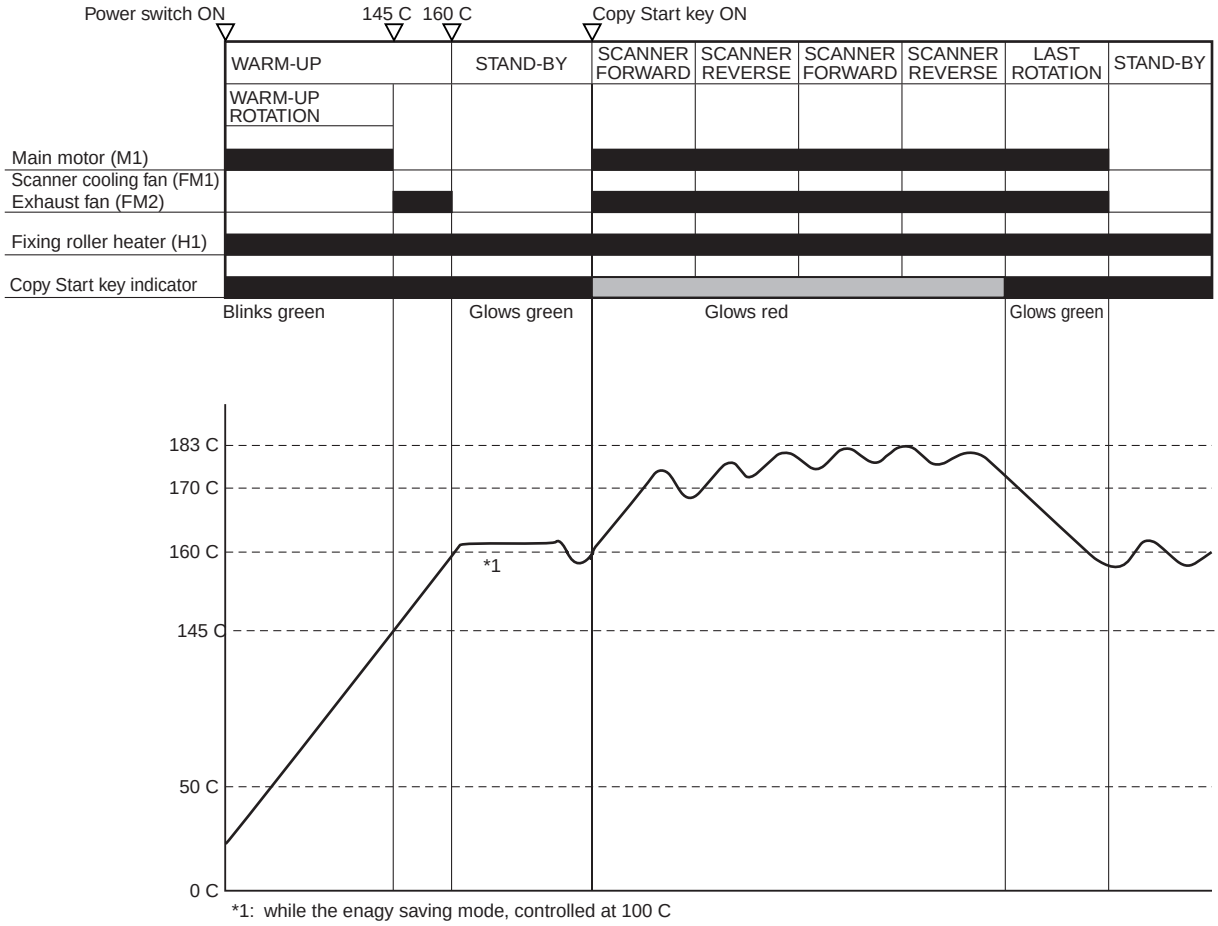

Figure 6-102

Note:

- If the fixing temperature is shifted by service mode C17, the warm-up temperature is shifted according to the fixing temperature.
- For pre-heating, the temperature control is not changed. However, LEDs on the control panel are cut-off.

COPYRIGHT © 1999 CANON INC.

II. DISASSEMBLY AND ASSEMBLY

A. Fixing Assembly

1. Construction

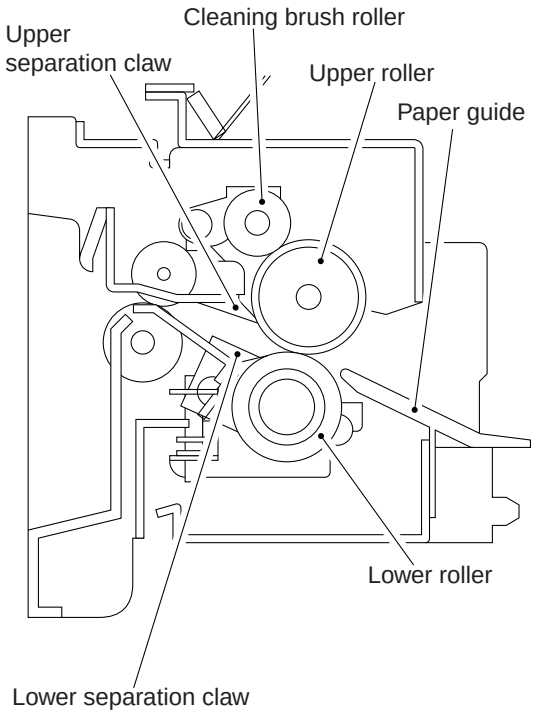

Figure 6-201

2. Detaching the Fixing Assembly

1) Remove the screw [1], and detach the fixing assembly knob [2].

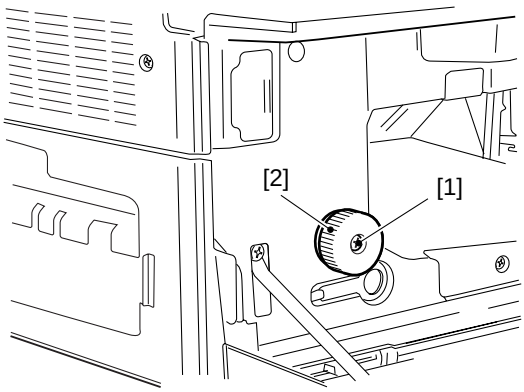

Figure 6-202

COPYRIGHT © 1999 CANON INC.
CANON NP6320 REV.0 DEC. 1999 PRINTED IN JAPAN (IMPRIME AU JAPON)

2) Remove the three screws [3], and detach the VR cover [4] and the left cover [5].

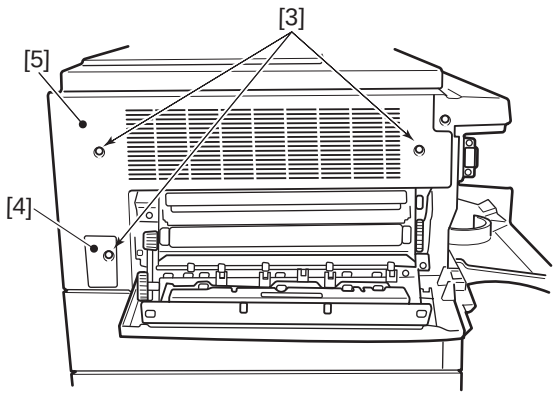

Figure 6-203

3) Disconnect the three connectors [6].

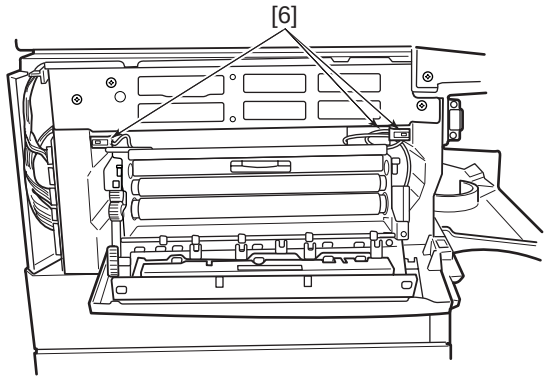

Figure 6-204

4) Remove the two screws [7], and slide out the fixing assembly.

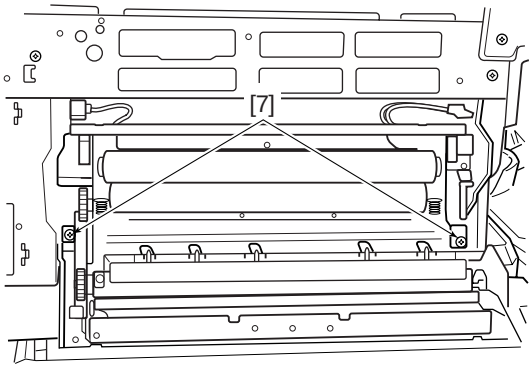

Figure 6-205

COPYRIGHT © 1999 CANON INC. CANON NP6320 REV.0 DEC. 1999 PRINTED IN JAPAN (IMPRIME AU JAPON)

3. Detaching the Upper Fixing Roller, Heater, and Lower Fixing Roller

1) Detach the fixing assembly from the copier.
2) Pull out faston A [4] (see Figure 6-207), and remove the two screws [1]; the heater mount plate (front) [2] can be detached in this condition.

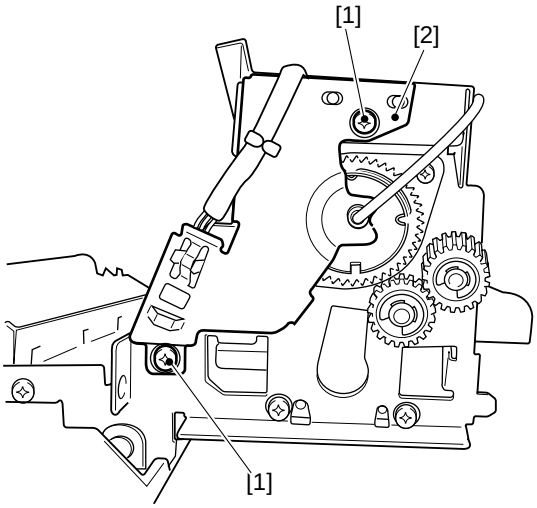

Figure 6-206

3) Pull faston B [5], and remove the mounting screw [1] from the heater mount plate [2] found at the rear; then, pull out the heater mount plate (rear) and the heater [3] carefully.

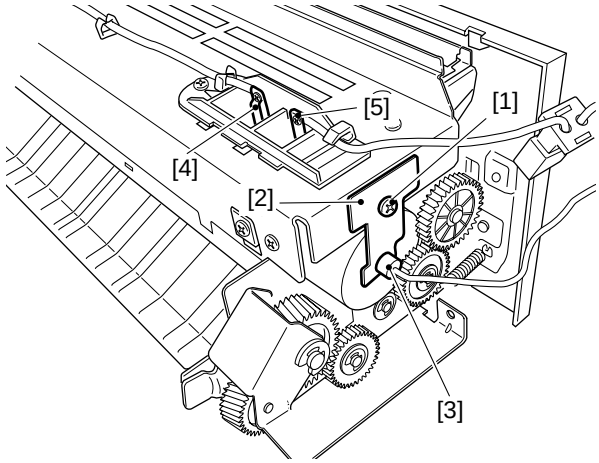

Figure 6-207

COPYRIGHT © 1999 CANON INC.
CANON NP6320 REV.0 DEC. 1999 PRINTED IN JAPAN (IMPRIME AU JAPON)

4) Remove the two screws [1], and detach the thermistor cover [2].

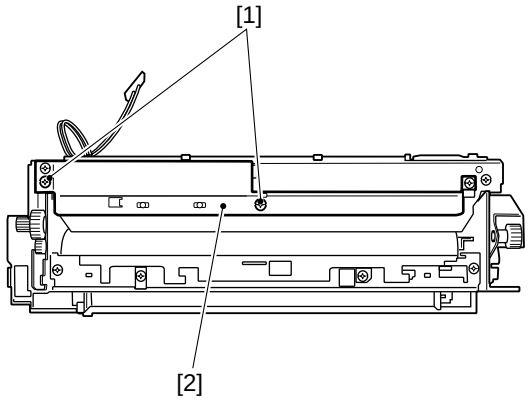

Figure 6-208

5) Remove the screw [1], and detach the thermistor mount [2].
6) Remove the screw, and detach the thermal switch mount [3].

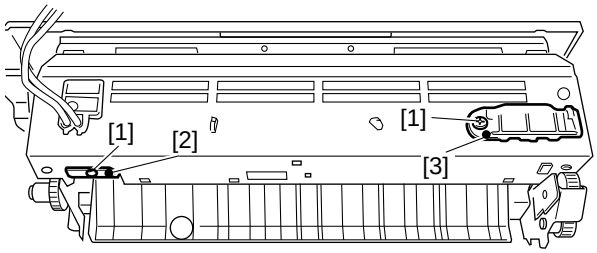

Figure 6-209

7) Remove the C-ring [1] at the rear, and detach the gear [2].

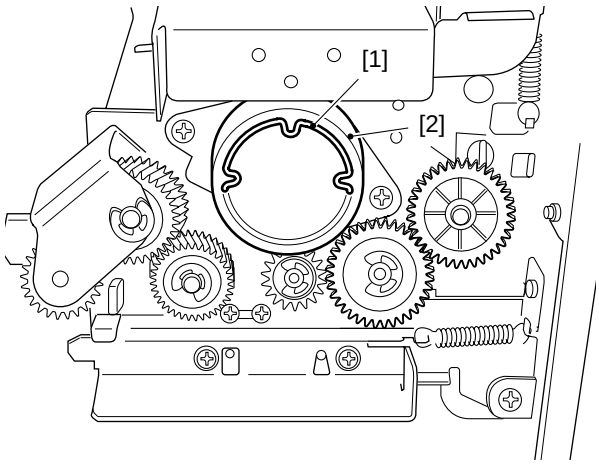

Figure 6-210

COPYRIGHT © 1999 CANON INC. CANON NP6320 REV.0 DEC. 1999 PRINTED IN JAPAN (IMPRIME AU JAPON)

8) Remove the E-ring [1], and detach gear A [2].
9) Remove the C-ring [3], and detach two gears B [4].

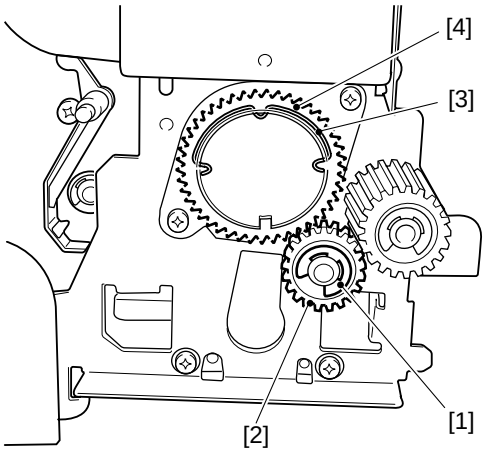

Figure 6-211

10) Remove the two screws [1], and detach the bushing [2].

Note:
The bushing is pushed up from below. If it is difficult to detach, try pushing the upper fixing roller to the bottom to facilitate detachment.

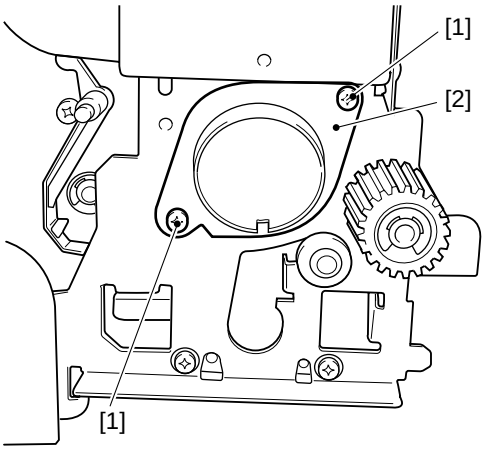

Figure 6-212

11) Push the pressure spring of the lower fixing roller using a screwdriver [1], and detach the upper fixing roller [2].
12) Detach the lower fixing roller [3].

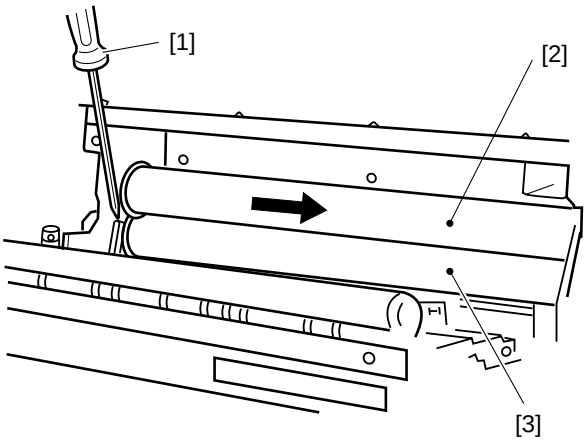

Figure 6-213

COPYRIGHT © 1999 CANON INC.
CANON NP6320 REV.0 DEC. 1999 PRINTED IN JAPAN (IMPRIME AU JAPON)

4. Attaching the Heater and Upper Fixing Roller

Attach the heater and the upper fixing roller as in detaching them but in reverse order while noting the following:

a. Heater

i. Do not touch the surface of the heater.
ii. Make sure that the end showing the manufacturer's name is to the front.

b. Upper Fixing Roller

i. Wrap the roller with copy paper to prevent soiling or scarring its surface.
ii. Make sure that the end with two C-rings is to the rear.
iii. Make sure that the two identical gears are used at the front.

5. Adjusting the Nip Width (tightening the pressure adjusting nut)

If the nip width is not as shown in Figure 6-214, turn the bolt to adjust it.

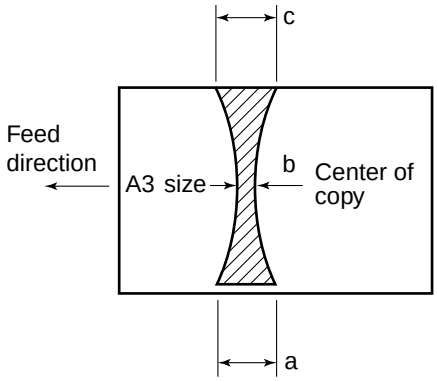

Figure 6-214

Note:
a and c represent points 10 mm from each end.

Dimension	Measure after the upper and lower rollers have heated up.
b	4.0 ±0.5 mm
|a-c|	0.5 mm or less

Table 6-201

COPYRIGHT © 1999 CANON INC.
CANON NP6320 REV.0 DEC. 1999 PRINTED IN JAPAN (IMPRIME AU JAPON)

a. Measuring the Nip Width

If the roller is not heated, wait for 15 min after the Wait indicator has changed to green; then, make 20 copies before taking measurements.

b. Measuring Procedure

1) Open the copyboard cover and make a A3-size solid black copy.
2) Set the solid black copy to the multifeeder.
3) Select service mode C13.
   3-1) Detach the VR cover from the rear of the left cover.
   3-2) Press the service switch (SW300) on the DC controller PCB.
   3-3) Select service mode C13 using 10-key or the zoom key.
4) Press the Sort/Group key.
   - The solid black paper is automatically picked up from the multifeeder.
   - Then the solid black paper is stopped at the fixing roller and, after a specific period, is delivered.
5) Measure the width of the toner portion which has a glossy surface, as shown in Figure 6-214.
6) Press the service switch (SW300) to exit from the service mode.

COPYRIGHT © 1999 CANON INC.
CANON NP6320 REV.0 DEC. 1999 PRINTED IN JAPAN (IMPRIME AU JAPON)

6. Mounting the Thermistors

Make sure that the sensor face of the thermistor is in even contact with the surface of the upper fixing roller.

Note:
The position of the thermistor need not be adjusted; if the contact is not even, make sure that the thermistor spring is not deformed.

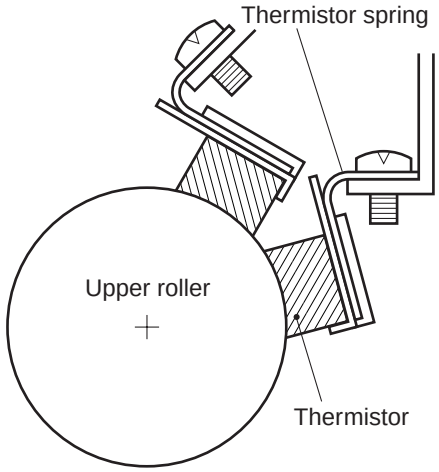

Figure 6-215

7. Attaching the Thermoswitch

Make sure that the sensor face of the thermoswitch is in even contact with the surface of the upper fixing roller.

Note:
The position of the thermoswitch need not be adjusted; if the contact is not even, make sure that the thermoswitch spring is not deformed.

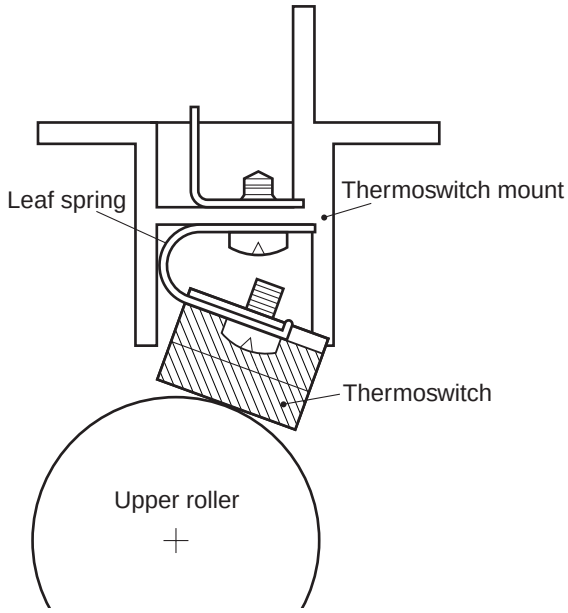

Figure 6-216

COPYRIGHT © 1999 CANON INC.
CANON NP6320 REV.0 DEC. 1999 PRINTED IN JAPAN (IMPRIME AU JAPON)

8. Position of the Paper Guide

The position of the paper guide is adjusted by the paper guide mount. For this reason, the position of the paper guide need not be adjusted.

Note:
If the paper guide mount has been detached, the position of the paper guide must be adjusted. To avoid this, do not loosen the screw on the paper guide: if necessary, mark the position on the fixing assembly mount using a scriber.

Note:
To adjust the position of the paper guide, place the fixing assembly on a desk, and move the paper guide so that the position is as shown Figure 6-217.

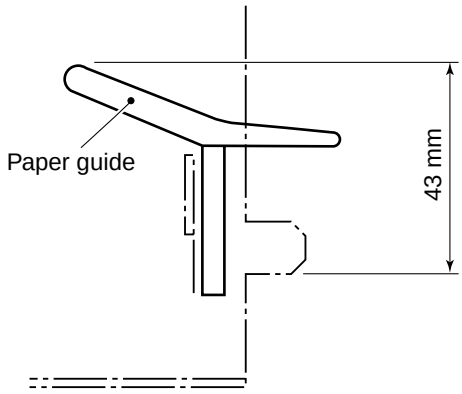

Figure 6-217

9. Detaching the Clearing Brush Roller

1) Open the delivery assembly.
2) Release the spring from the hook [1].
3) Detach the cleaning roller [2].

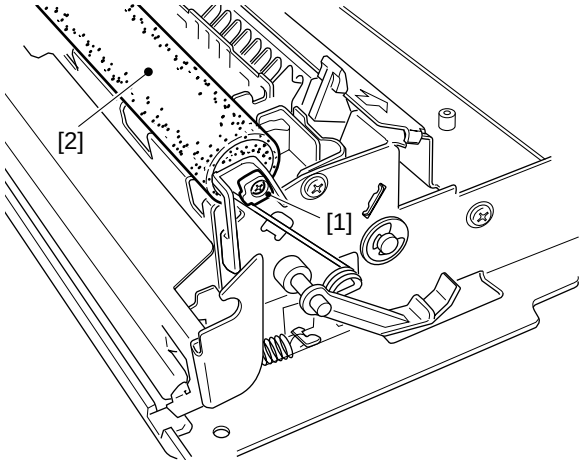

Figure 6-218

COPYRIGHT © 1999 CANON INC.
CANON NP6320 REV.0 DEC. 1999 PRINTED IN JAPAN (IMPRIME AU JAPON)

10. Detaching the Upper Separation Claw

1) Open the delivery assembly.
2) Detach the cleaning roller.
3) Remove the three screws [1], and detach the upper separation claw assembly [2].

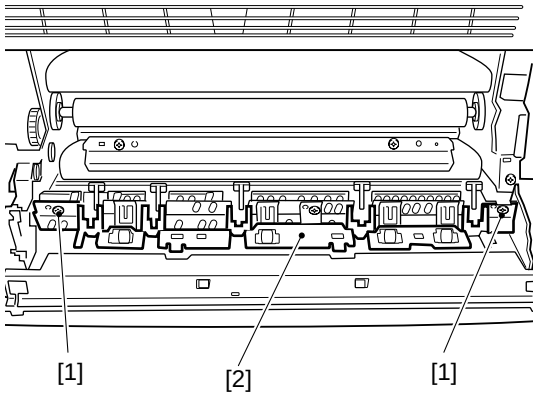

Figure 6-219

4) Remove the spring, and detach the upper separation claw.

COPYRIGHT © 1999 CANON INC.

11. Attaching the Upper Separation Claw

Attach the upper separation claw as detaching it but in reverse order with the following in mind.

a. Make sure that the boss on the upper separation claw is in contact with the mount as shown in Figure 6-220.

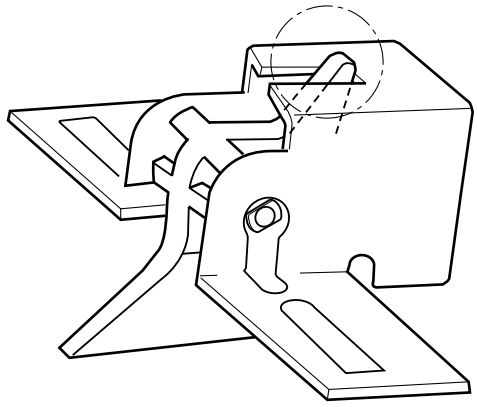

Figure 6-220

b. Make sure that the upper separation claw assembly is fully toward the rear. If a scratch is noted on the upper fixing roller, move the upper separation claw assembly about 4 mm toward the front.

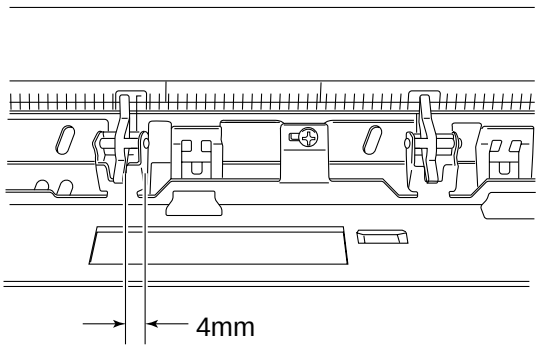

Figure 6-221

COPYRIGHT © 1999 CANON INC.
CANON NP6320 REV.0 DEC. 1999 PRINTED IN JAPAN (IMPRIME AU JAPON)

12. Detaching the Lower Separation Claw

1) Open the delivery unit.
2) Slide the lower separation guide plate [1] to remove.

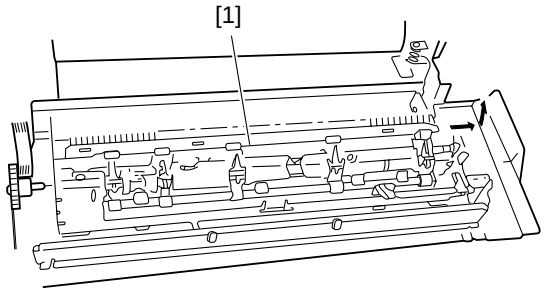

Figure 6-222

3) Remove the spring, and remove the lower separation claw.

COPYRIGHT © 1999 CANON INC.

CHAPTER 7

EXTERNALS/AUXILIARY MECHANISMS

I. POWER SUPPLY 7-1
   A. AC Power/DC Power Supply 7-1
II. DISASSEMBLY AND ASSEMBLY 7-3
   A. External Covers 7-3
   B. Control Panel 7-6
   C. Copyboard Cover 7-7
   D. Fans 7-7
   E. PCBs 7-10

COPYRIGHT © 1999 CANON INC. CANON NP6320 REV.0 DEC. 1999 PRINTED IN JAPAN (IMPRIME AU JAPON)

I. POWER SUPPLY

A. AC Power/DC Power Supply

1. Outline

The power supply PCB is supplied with AC power when the door switch (SW2) and the power switch (SW1) go ON.

On the other hand, the DC power supply supplies the main body with 24 VDC and 5 VDC.

24 VDC is used to drive the main motor (M1), the scanner motor (M2), fans and solenoids as well as high-voltage transformer (HVT); 5 VDC is used by the sensors and ICs on the DC controller PCB.

2. DC Power Supply Circuit

The 24 VDC for the DC power supply is supplied by the switching regulator.

The 5 VDC, on the other hand, is supplied by the DC/DC converter after conversion from 24 VDC.

The DC/DC converter generates the reset signal (RESET) after power-on and until the 5VDC supply stabilizes to reset the microprocessor, thereby preventing malfunction of the micro processor.

3. AC Drive Circuit

The power supply PCB has an AC driver circuit and, based on the signals from the DC controller PCB, controls the SSR and relays on the power supply PCB to drive AC loads.

If the DC controller PCB detects an error, the ACOFF* signal is generated to turn the relay (K101) on the power supply PCB OFF, thereby shutting off the power to the lamp driver, the paper deck pedestal, and the fixing heater.

When the power is shut off, switch the copier OFF, and identify the cause; then, switch the copier OFF.

At the same time, the 'PW-ON-OFF' signal is generated from the DC controller PCB to shut-off the main switch.

Note:

- The tolerances for the DC power supply are as follows:
  +24V ±4%
  + 5 V ±3%
- Repeated short-circuiting and resetting can cause the built-in fuse to blow.

COPYRIGHT © 1999 CANON INC.
CANON NP6320 REV.0 DEC. 1999 PRINTED IN JAPAN (IMPRIME AU JAPON)

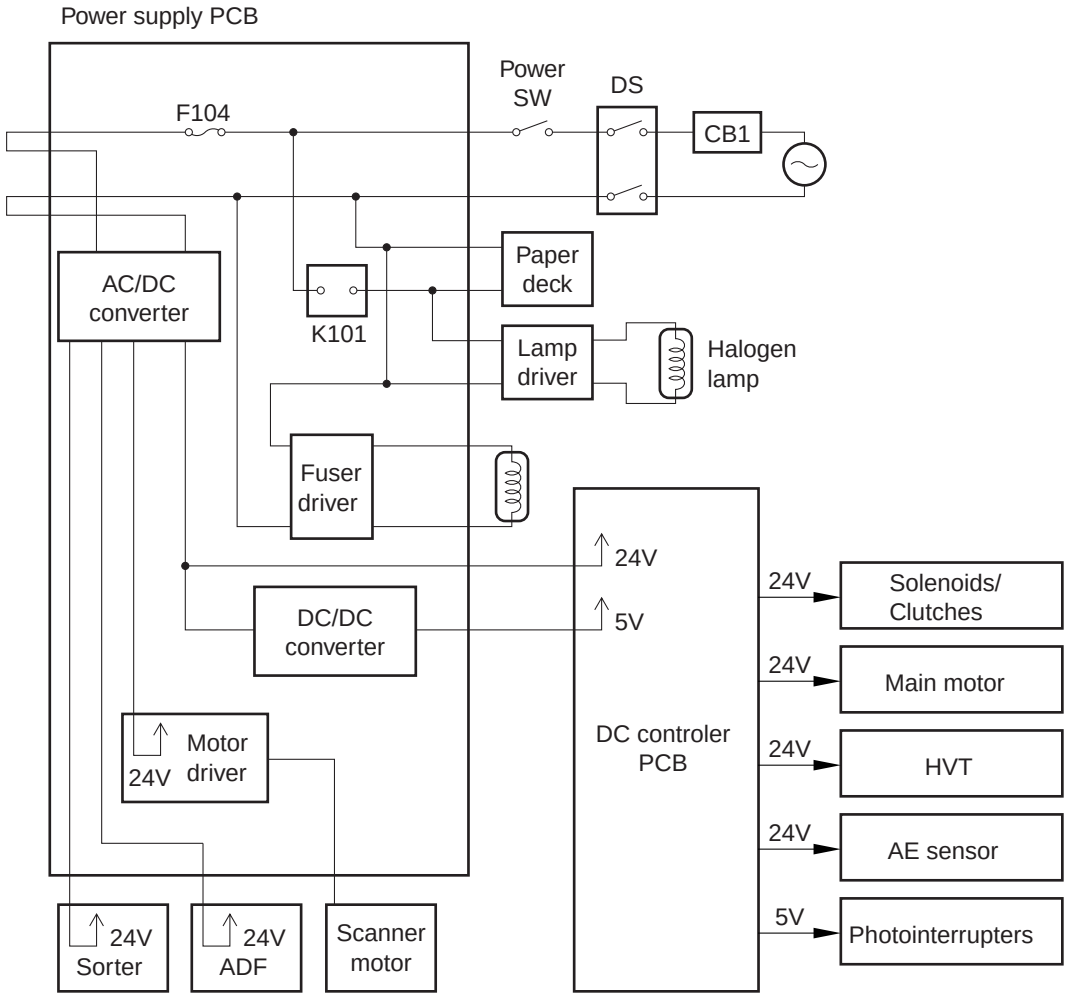

Figure 7-101

COPYRIGHT © 1999 CANON INC.
CANON NP6320 REV.0 DEC. 1999 PRINTED IN JAPAN (IMPRIME AU JAPON)

II. DISASSEMBLY AND ASSEMBLY

A. External Covers

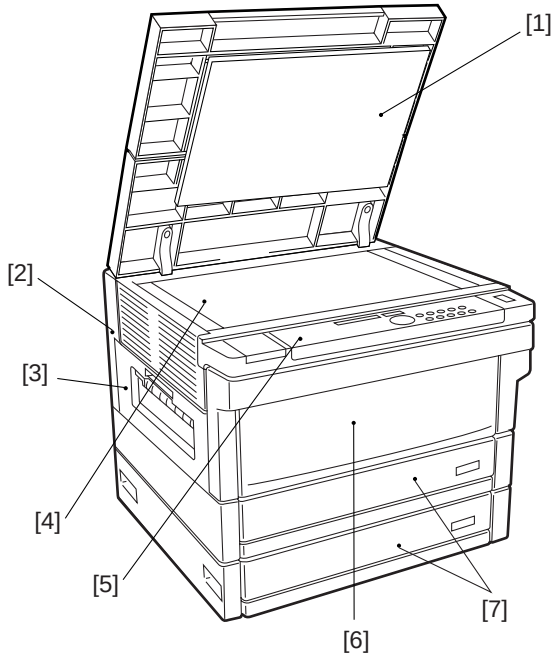

[1] Copyboard cover
[2] Left cover
[3] Delivery cover
[4] Copyboard glass
[5] Control panel
[6] Front door
[7] Cassettes

Figure 7-201

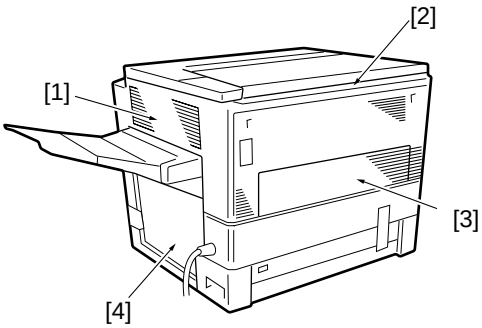

[1] Right cover
[2] Rear upper cover
[3] Rear cover
[4] Right door

Figure 7-202

Detach the covers as necessary when cleaning, checking, or repairing the inside of the machine; covers that can be detached by mere removal of the fixing screws are omitted from the discussions.

Note:

Make sure that the copier's doors are closed before detaching the copyboard glass. Use alcohol when cleaning the glass; do not use solvent, or the white paint along the right edge of the glass may melt.

COPYRIGHT © 1999 CANON INC.
CANON NP6320 REV.0 DEC. 1999 PRINTED IN JAPAN (IMPRIME AU JAPON)

1. Detaching the Inside Cover

1) Remove the two screws [1] that hold the front cover bands in place.
2) Remove the screw, and detach the fixing assembly knob [2].
3) Remove the four mounting screws [3], and detach the inside cover [4].

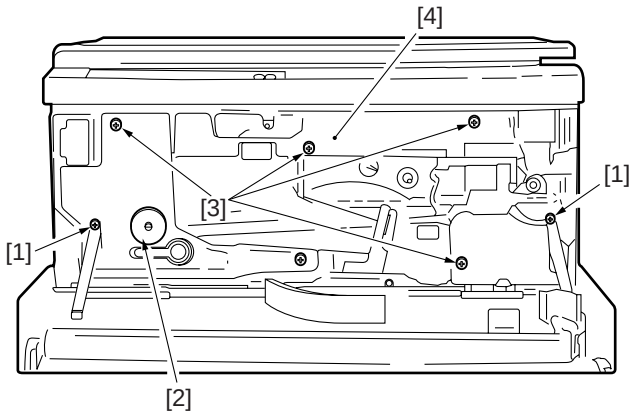

Figure 7-203

2. Detaching the Right Door

1) Open the right door.
2) Disengage the two hooks [1].

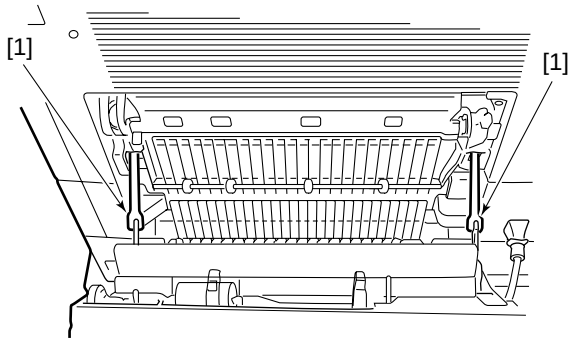

Figure 7-204

3) Detach the right door [3] as if to lift it out of the cut-offs [4].

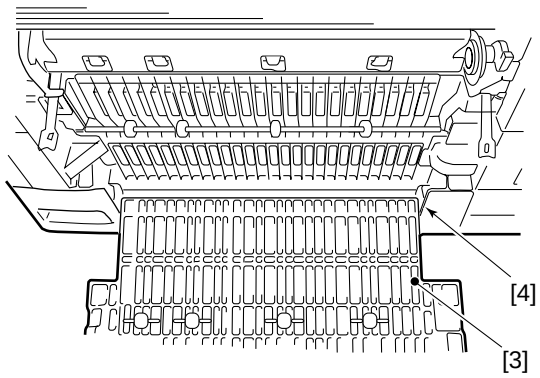

Figure 7-205

COPYRIGHT © 1999 CANON INC.
CANON NP6320 REV.0 DEC. 1999 PRINTED IN JAPAN (IMPRIME AU JAPON)

3. Detaching the Upper Rear Cover

1) Detach the copyboard cover, copyboard glass, and rear cover.
2) Remove the two screws [1].
3) Disengage the hook [2].
4) Detach the upper rear cover [3] as if to lift it.

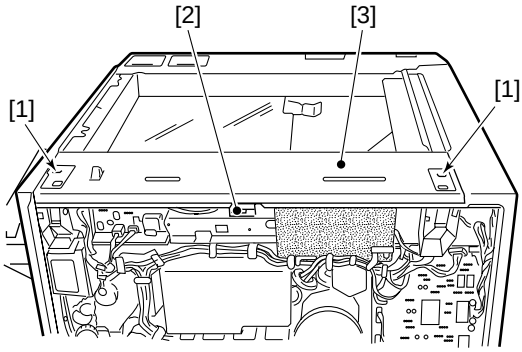

Figure 7-206

COPYRIGHT © 1999 CANON INC.
CANON NP6320 REV.0 DEC. 1999 PRINTED IN JAPAN (IMPRIME AU JAPON)

B. Control Panel

1. Detaching the Control Panel

1) Detach the inside cover.
2) Disconnect two fasteners [1] from the power switch.

Note:
When re-connecting the fasteners, re-connect according to Figure 7-208.

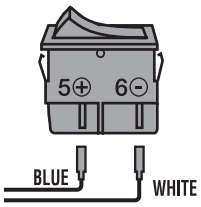

Figure 7-208

3) Remove the five screws [2], and lift the control panel [3] toward the front to detach.

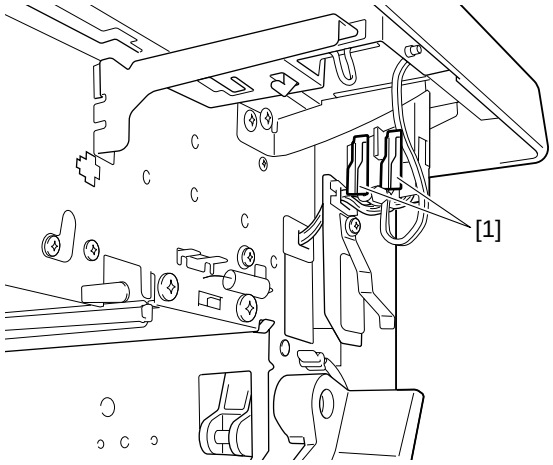

Figure 7-207

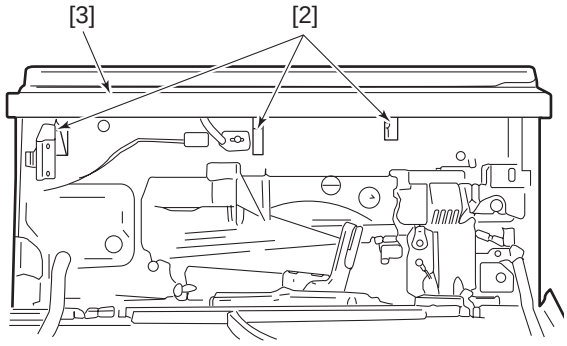

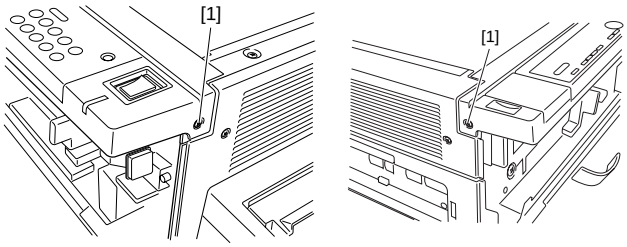

Figure 7-209

4) Lift the control panel [4] to the front, and turn it over.

Note:
Do not force the control panel, or the harness connected to it may snap off.

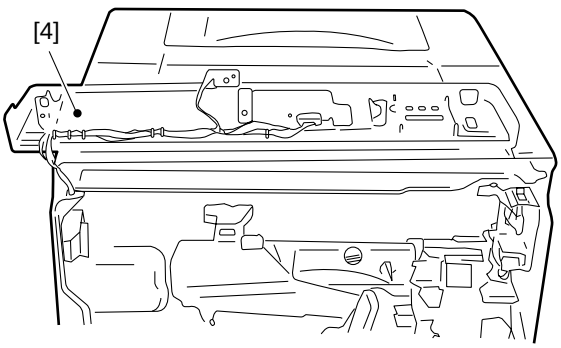

Figure 7-210

COPYRIGHT © 1999 CANON INC.
CANON NP6320 REV.0 DEC. 1999 PRINTED IN JAPAN (IMPRIME AU JAPON)

C. Copyboard Cover

1. Replacing the Copyboard Sheet

The copyboard sheet is attached to the copyboard cover using adhesive tape and can be detached by pulling at its corner.

After replacement, make sure to even out the sheet for even contact.

D. Fans

1. Outline

The NP6320 is equipped with two fans to circulate the air inside the machine, thereby preventing the machine from overheating.

Each fan serves the following function:

Scanner cooling fan (FM1): cools the scanner.

Exhaust fan (FM2): discharges air to the outside.

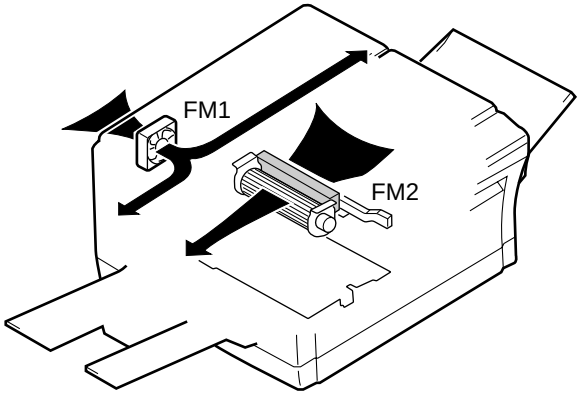

Figure 7-211

2. Scanner Cooling Fan (FM1)

1) Detach the rear cover.
2) Detach the filter case [1] as if to lift it from the bottom.

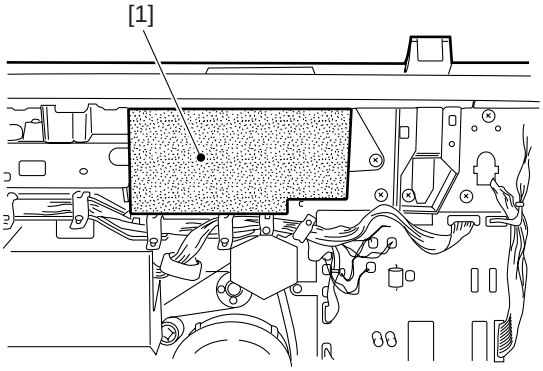

Figure 7-212

COPYRIGHT © 1999 CANON INC.

3) Cut off the harness band as necessary.
4) Disconnect the connector [2] (J309) from the DC controller PCB.
5) Remove the three screws [3], and detach the scanner cooling fan [4].

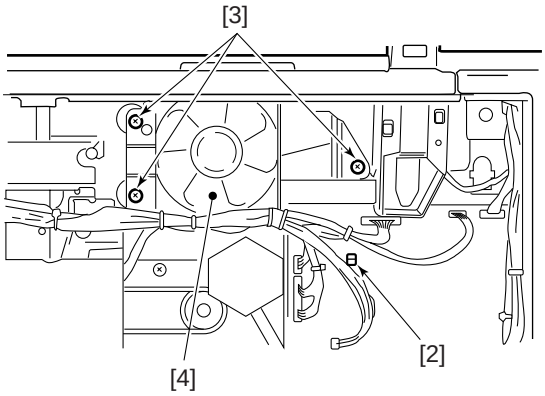

Figure 7-213

COPYRIGHT © 1999 CANON INC.
CANON NP6320 REV.0 DEC. 1999 PRINTED IN JAPAN (IMPRIME AU JAPON)

3. Exhaust Fan (FM2)

1) Open the front door, and detach the drum unit.
2) Detach the rear cover.
3) Disconnect the connector (J323), and remove the two screws from the DC controller PCB; then, shift the DC controller PCB.
4) Remove the two screws [1] from the rear of the exhaust fan.

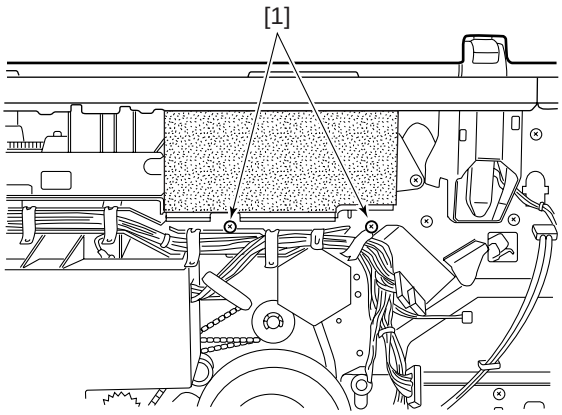

Figure 7-214 (rear view)

5) Detach the ozone filter and the inside cover; then, release the feeder assembly.
6) Hold the exhaust fan assembly [2] on its bottom, and remove the two screws [3]; then, pull the assembly to the front.

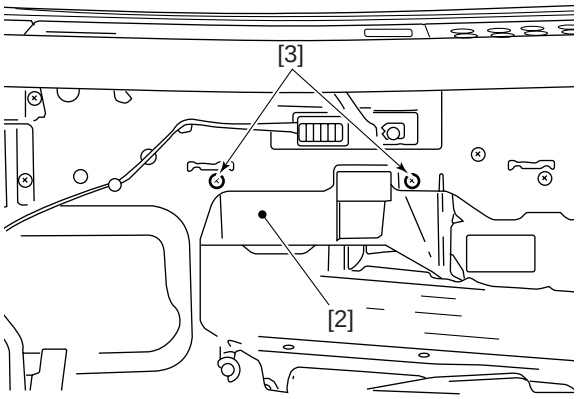

Figure 7-215

COPYRIGHT © 1999 CANON INC.
CANON NP6320 REV.0 DEC. 1999 PRINTED IN JAPAN (IMPRIME AU JAPON)

E. PCBs

1. DC Controller PCB

1. Removing the DC controller PCB

1) Remove the rear cover.
2) Disconnect the all connectors on the DC controller PCB.
3) Remove the two srews [1] and then remove the DC controller PCB [2] with its mount.

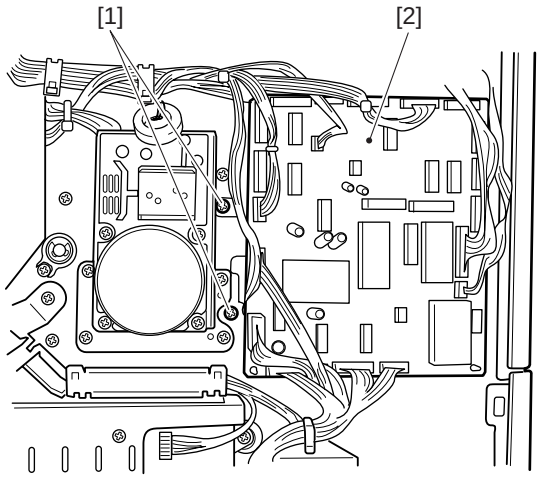

Figure 7-216

2. Power Supply PCB

1. Removing the Power Supply PCB

1) Remove the rear cover.
2) Disconnect all the connectors on the power supply PCB.
3) Remove the two screws [1], and then remove the power supply PCB [2] with its mount.

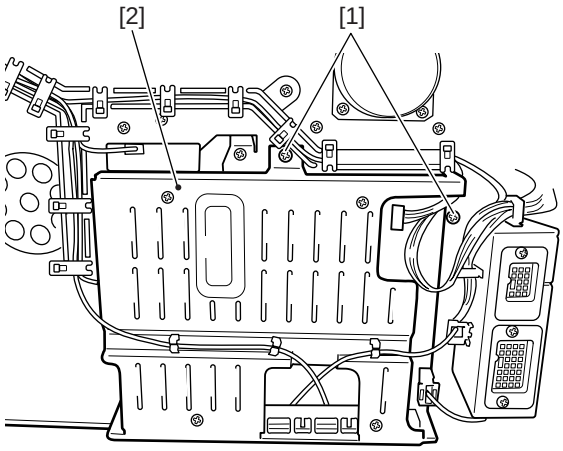

Figure 7-217

Note

J111 and J112 are interchangeable.

COPYRIGHT © 1999 CANON INC.
CANON NP6320 REV.0 DEC. 1999 PRINTED IN JAPAN (IMPRIME AU JAPON)

CHAPTER 8

INSTALLATION

Each copier is carefully adjusted and srictly inspected before it leaves the factory. It is important to install and set up the copier properly in order to maintain its performance at the same high level.

The service person should fully understand the function of the copier, install it properly in a suitable location and carry out the necessary checks before it is used by the user.

I. LOCATION 8-1
II. UNPACKING AND INSTALLING THE COPIER 8-2
  A. Unpacking 8-2
  B. Mounting the Drum 8-5
  C. Checking the Operation 8-6
  D. Adding Toner 8-7
  E. Checking the Image 8-8
III. SETTING THE CASSETTE SIZE 8-9
  A. Modifying the Cassette Size 8-9
  B. Replacing the Cassette Spring 8-14
  C. Removing the Pick-up Roller 8-16
IV. RELOCATING THE COPIER 8-17
V. INSTALLING THE CONTROL CARD-V 8-18

COPYRIGHT © 1999 CANON INC. CANON NP6320 REV.0 DEC. 1999 PRINTED IN JAPAN (IMPRIME AU JAPON)

I. LOCATION

The location of the copier should be chosen based on the following considerations. If possible, make a visit to the user for a study of a site before delivery of the copier.

a. The ambient temperature should be between 15° and 35°C and the humidity, 10% to 80%. Avoid locations near water faucets, humidifiers, water boilers, and refrigerators.
b. Avoid locations near open fire or subject to dust or ammonia fumes, and avoid direct rays of the sun. Provide curtains over the windows if necessary.
c. Choose a well-ventilated place.

Note:
The level of ozone generated by the copier is not likely to harm the health of those around it. The odor, however, may prove to be unpleasant to some individuals.

d. Make sure all feet of the copier will be in contact with the floor.
e. Allow at least 10 cm from any wall to provide access.

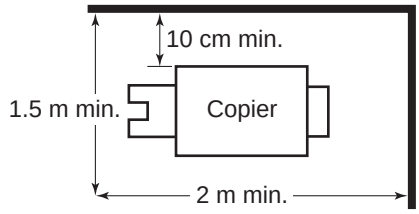

Figure 8-101

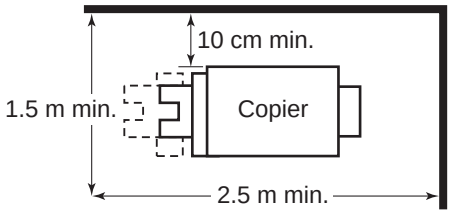

Figure 8-102 (with sorter)

COPYRIGHT © 1999 CANON INC.
CANON NP6320 REV.0 DEC. 1999 PRINTED IN JAPAN (IMPRIME AU JAPON)

II. UNPACKING AND INSTALLING THE COPIER

When a piece of metal is moved from a cold place to a warm place, droplets of water form on its surface. This phenomenon is known as *condensation* and affects the performance of machines. The simplest way to eliminate condensation in the copier, any machines for that matter, is to leave it alone until it warms to room temperature (at least one hour).

A. Unpacking

Step	Work	Remarks
1	Open the coardboard packing case of the copier and take out the box of accessories.	
2	Cut open the widest side of the packing case, avoiding the corner, containing the metal knife.	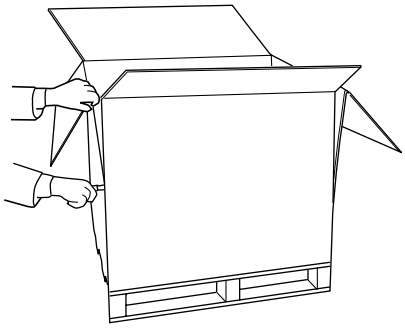
3	Open up the side of the packing case completely, and slide out the copier onto this side. Remove the two polystyrene shells from the copier.	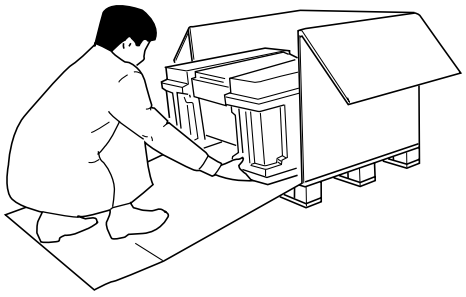 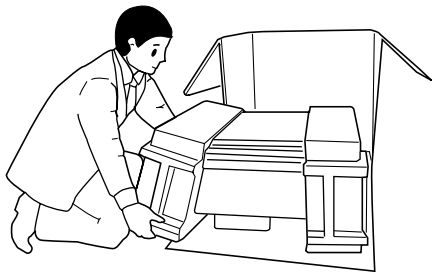

COPYRIGHT © 1999 CANON INC.
CANON NP6320 REV.0 DEC. 1999 PRINTED IN JAPAN (IMPRIME AU JAPON)

Step	Work	Remarks
4	Put your hands in the handle (right and left side of the hole in machine cabinet); then raise the copier and place it on a pedestal or a desk.	
5	Open the cardboard box, and take out the parts and accessories.	Check that the following are available: • Copy tray • OPERATOR'S MANUAL • Drum unit • Multifeeder tray • Cassette
6	Remove the tape that secures the optical unit in place (outside the left cover), and slide the fixing to the right and pull it out.	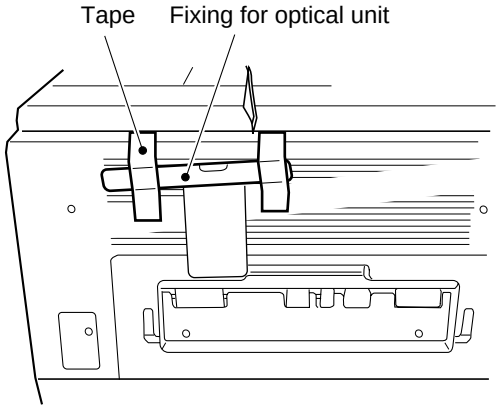
7	Open the front cover, and disengage the developing assembly, and remove it from the copier	Check that the developing cylinder is free of scratches.
8	Remove the cushion blocks from the feeder assembly and fixing assembly.	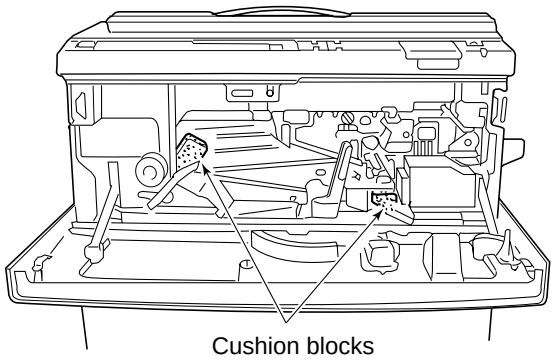
9	Disengage the feeder assembly, remove the knob, and remove the dummy drum. Keep the knob for use later.	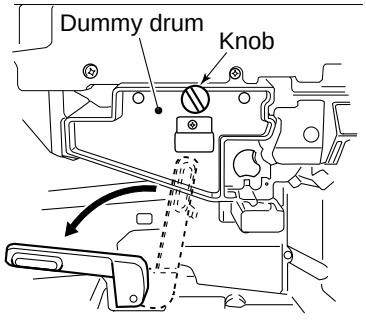

COPYRIGHT © 1999 CANON INC.
CANON NP6320 REV.0 DEC. 1999 PRINTED IN JAPAN (IMPRIME AU JAPON)

Step	Work	Remarks
10	Remove the lens lock screw (w/shipping tag) from between the drum unit rails of the copier.	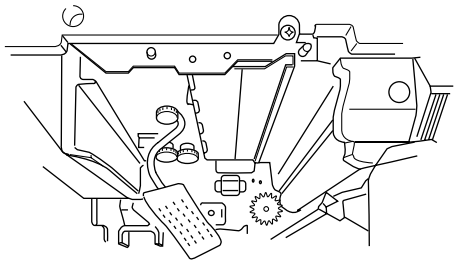
11	Open the delivery cover, and remove the two fixing roller release rolls; then, close the delivery cover.	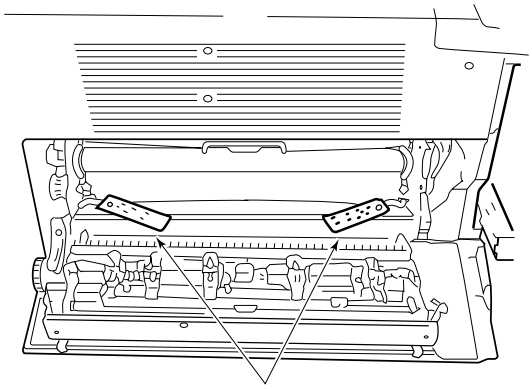
12	Attach the multifeeder tray to the copier.	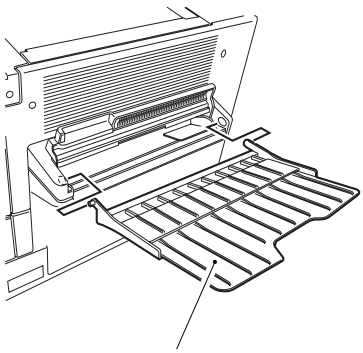
13	Push the cassette and remove the cushion material from the cassette (upper and lower cassettes).	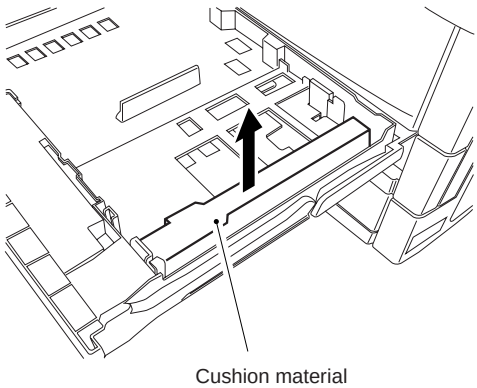

COPYRIGHT © 1999 CANON INC.
CANON NP6320 REV.0 DEC. 1999 PRINTED IN JAPAN (IMPRIME AU JAPON)

B. Mounting the Drum

The photosensitive drum is susceptable to light; if exposed to room light, it can cause white spots or black lines on the copy images. As such, be quick in performing the following work.

Step	Work	Remarks
1	Take out the drum unit from the box, and remove the light-blocking sheet.	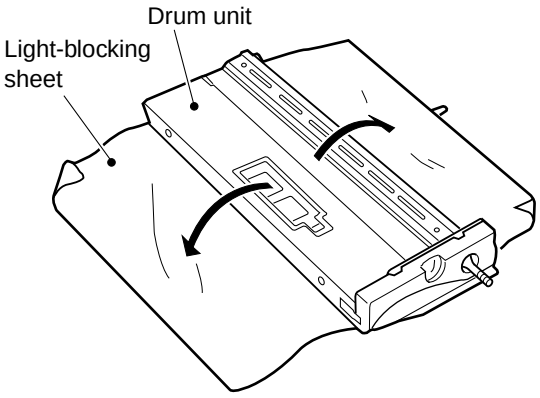 Take care not to damage the drum.
2	Set the drum unit in the copier, and fix it in place using the knob that held the dummy drum.	Slide the drum unit straight along the rails into the copier.
3	Move the grip to clean the corona wire of the drum unit two to three times.	
4	Set the developing assembly in the copier, and engage it.	The front cover may be left open.

COPYRIGHT © 1999 CANON INC.
CANON NP6320 REV.0 DEC. 1999 PRINTED IN JAPAN (IMPRIME AU JAPON)

C. Checking the Operation

Step	Work	Remarks
1	Turn the door switch ON using the door switch actuator.	
2	Connect the power plug, and shift the POWER switch to “ON”.	Check that the Add Paper and Cassette Out indicators go ON and the Wait indicator lights red.
3	Set the cassette size to suit the needs of the user.	See p. 8-9.
4	Put copy paper in the cassette, and set the cassette in the copier.	• Check that the Add Paper indicator goes OFF. • Press the keys, except the Copy Start key, on the control panel, and check that each operation is correct.
5	Set the copy tray on the copier.	
6	Open the copyboard cover, and remove the paper and the protection seal from the document size plate.	
7	Record the reading of the copy counter.	
8	After making any copies of the following: The Copy Start key goes red. [1] making 5 continuous copies on A3 [2] making 8 continuous copies on A4 [3] making 3 single copies on A3 [4] making 4 single copies on A4	Check the following: • No abnormal sound is heard. • The Add Toner indicator starts to flash when the Copy Start key on the control panel turns red at the end of copying for any of the following: [1] making 5 continuous copies on A3 [2] making 8 continuous copies on A4 [3] making 3 single copies on A3 [4] making 4 single copies on A4
9	Check that counter operations properly.	Check that the reading has increased by the number of copies made from the reading recorded in step 8.

COPYRIGHT © 1999 CANON INC.
CANON NP6320 REV.0 DEC. 1999 PRINTED IN JAPAN (IMPRIME AU JAPON)

D. Adding Toner

Step	Work	Remarks
1	Remove the door switch actuator.	
2	Disengage the developing assembly, and slide it until it stops.	
3	Shake the toner cartridge well.	
4	Open the developing assembly lid, and fit the boss on the rear end of the toner cartridge into the hole of the plate on the rear end of the developing assembly; thereafter, pull the toner cartridge to the front somewhat so that it comes into contact with the boss found on the left side of the front.	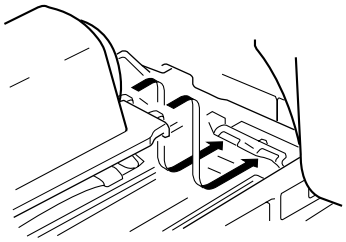
5	Hold the toner cartridge, and pull on the seal to the front until it stops.	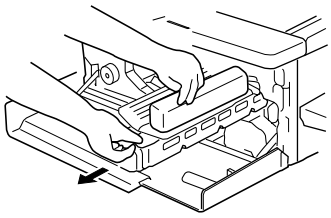
6	Tap lightly on the top of the toner cartridge until all toner has fallen into the developing assembly.	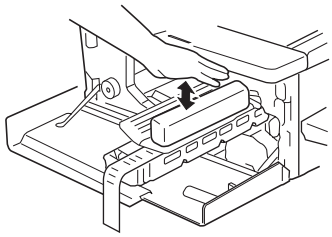
7	Remove the toner cartridge, and keep it in an empty box.	
8	Close the developing assembly lid, and slide the assembly inside until it stops.	
9	Turn the developing assembly lever clockwise to engage it.	
10	Close the front cover.	
11	Set a blank sheet of paper (A3/11"×17") on the copyboard after the Copy Start key goes green, and make six to ten copies.	The operation causes the toner inside the developing assembly to be stirred.

COPYRIGHT © 1999 CANON INC.
CANON NP6320 REV.0 DEC. 1999 PRINTED IN JAPAN (IMPRIME AU JAPON)

E. Checking the Image

Step	Work	Remarks
1	Place the Test Sheet on the copyboard glass, and check the image.	Check that copies are made without a problem and the non-image width along the leading edge is correct; otherwise, make adjustments. Non-image width: 2.0 mm (approx.) for leading edge 2.5 mm (approx.) on left/right side
2	Feed paper from the multifeeder.	Make two-sided and overlay copies, and check that the operation is correct; otherwise, make adjustments.
3	Clean up the area around the copier, and fill out the Service Sheet.	

When all above work is finished, install the options.

■ Points to Note for the Photosensitive Drum After Installation

The photosensitive drum is susceptible to light and, if exposed to light, can cause white spots or black lines on the copy image; take note of the following:

- Limit the removal of jams within five minutes; and
- Keep the drum wrapped in the light-blocking sheet (from drum unit) or fresh copy paper and place it in a dark place whenever it is removed from the copier.

Do not touch the drum; if its surface is soiled, wipe off the dirt using a flannel cloth coated with toner. Do not use paper, lint-free or otherwise, or use a dry cloth or solvent.

COPYRIGHT © 1999 CANON INC.
CANON NP6320 REV.0 DEC. 1999 PRINTED IN JAPAN (IMPRIME AU JAPON)

III. SETTING THE CASSETTE SIZE

The copier's cassette may be modified to suit the desired paper size by modifying the rear stop plate, spring, and face plate.

A. Modifying the Cassette Size

1) Turn over the cassette, and remove the screw that holds the rear stop plate in place.

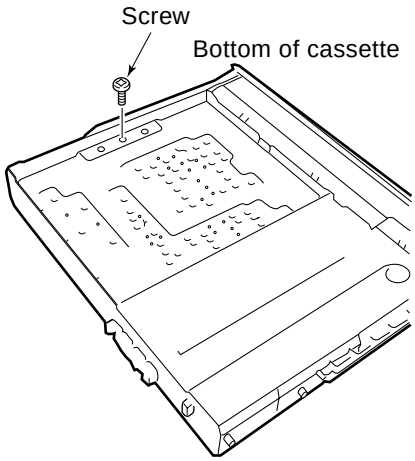

Figure 8-301

2) Change the rear stop plate to suit the desired paper size; note the index on the bottom, and see Table 8-301.

Note:
For the following, use two rear stop plates; note the index on the bottom of the cassette: B4, A4-R, LGL, ARG-R, 11×17, LTR-R.FLS, G.R, FOLIO, G.LGL, AUS. FLS, BLV., ARG.LGL, E., OFC

Copy paper	Size	Rear stop plate
A3	297mm×420mm (11.7"×16.5")	A3
11x17	279.4mm×431.8mm (11"×17")	11×17
A4	210mm×297mm (8.3"×11.7")	A4
Letter	216mm×279mm (8.5"×11.0")	LTR
Government Letter	203mm×267mm (8"×10.5")	G.
Korean	190mm×265mm (7.5"×10.4")	K.
B4	257mm×364mm (10.1"×14.3")	B4
Legal	216mm×356mm (8.5"×14.0")	LGL
B5	182mm×257mm (7.2"×10.1")	B5
Argentine Letter	220mm×280mm (8.7"×11.0")	Arg.
A4-R	297mm×210mm (11.7"×8.3")	A4 R
Letter-R	279mm×216mm 11.0"×8.5")	LTR R
B5R	257mm×182mm (10.1"×7.2")	B5 R
Argentine Legal	220m×340mm (8.7"×13.4")	Arg.LGL
Government Letter-R	267mm×203mm (10.5"×8.0")	G. R
Government Legal	203mm×330mm (8.0"×13.0")	G.LGL
Argentine Letter-R	280mm×220mm (11.0"×8.7")	Arg. R
Foolscap	216mm×330mm (8.5"×13")	FLS
Folio	210mm×330mm (8.1"×13.3")	FOLIO
Australian Foolscap	206mm×337mm (8.1"×13.3")	Aus.FLS
Korean-R	265mm×190mm (10.4"×7.5")	K. R
Officio	216mm×317mm (8.5"×12.5")	OFC
Ecuadorean Officio	220mm×320mm (8.0"×12.6")	E.
Bolivian Officio	216mm×355mm (8.5"×14.0")	BLV

Table 8-301

COPYRIGHT © 1999 CANON INC.
CANON NP6320 REV.0 DEC. 1999 PRINTED IN JAPAN (IMPRIME AU JAPON)

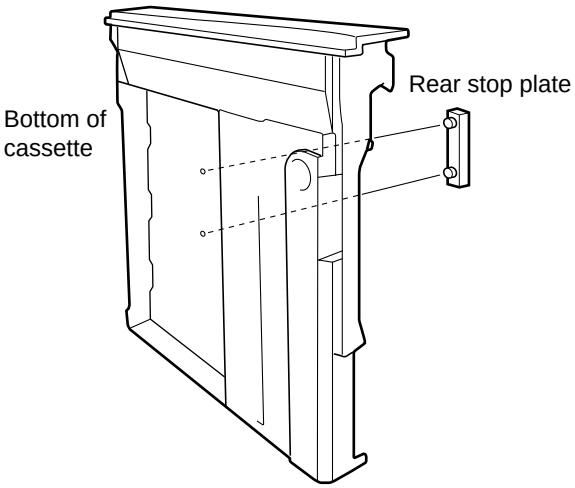

Figure 8-302

3) Fix the stop plate in place using screws.

Note:
See “Replacing the Cassette Spring” when using a different type of spring.

4) Remove the side stop plate each from the two cassettes.

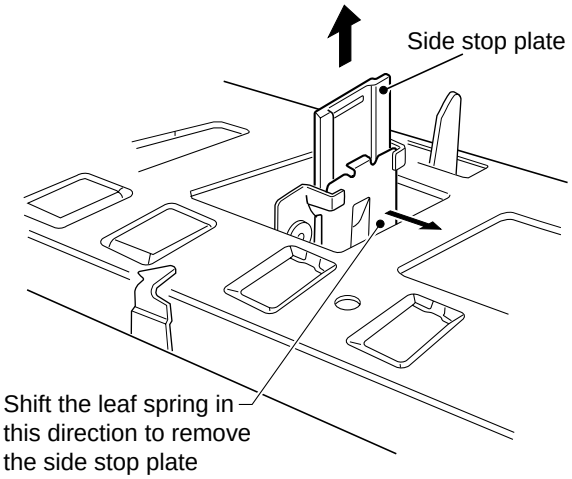

Figure 8-303

5) Remove the screw that holds the paper size plate in place.
6) Slide the paper size plate along the index on the bottom of the cassette to suit the desired paper.

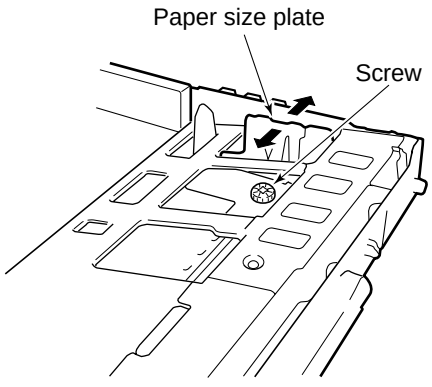

Figure 8-304

COPYRIGHT © 1999 CANON INC.
CANON NP6320 REV.0 DEC. 1999 PRINTED IN JAPAN (IMPRIME AU JAPON)

7) Place about 100 sheets of paper (fresh out of package, of the desired size) in the cassette, and butt them against the front of the cassette.
8) Keep the side stop plate between the stack of sheets and size plate as shown, and mount the size plate using a screw; make sure that the size plate is butted.

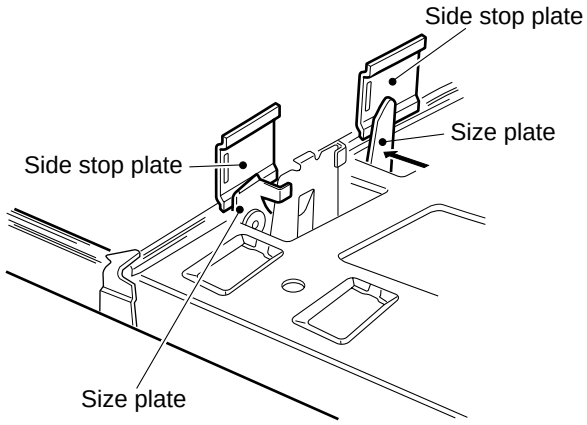

Figure 8-305

9) Fix the side stop plate in its original location.

COPYRIGHT © 1999 CANON INC.

10) Set the cassette size tab.

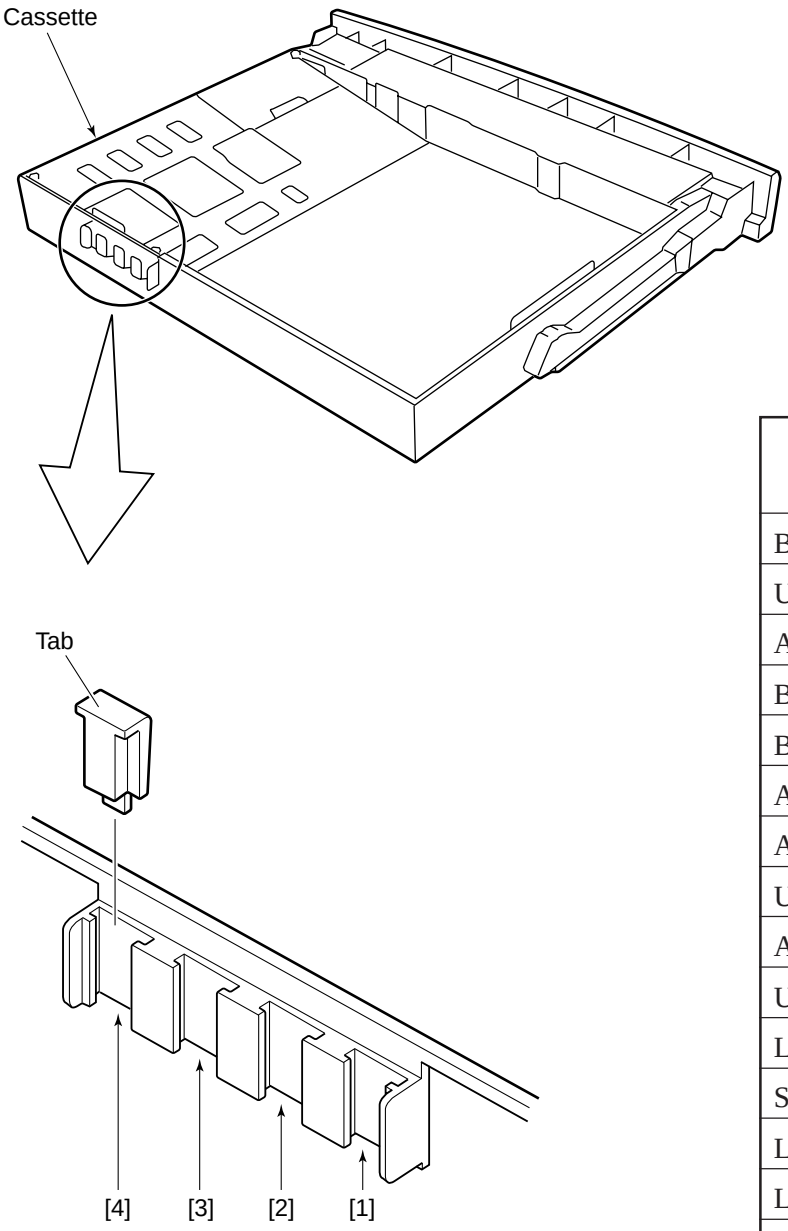

Copy paper size	Tab No.			
	[4]	[3]	[2]	[1]
B5	☐			
U1		☐		
A4	☐	☐		
B5-R			☐	
B4	☐		☐	
A4-R		☐	☐	
A3	☐	☐	☐	
U3				☐
A5-R	☐			☐
U2		☐		☐
LTR	☐	☐		☐
STMT-R			☐	☐
LGL	☐		☐	☐
LTR-R		☐	☐	☐
11 × 17	☐	☐	☐	☐

☐: tab present
U1: Korean-R
U2: Others
U3: Korean, Argentine Letter, Government Letter.

Figure 8-306

COPYRIGHT © 1999 CANON INC.
CANON NP6320 REV.0 DEC. 1999 PRINTED IN JAPAN (IMPRIME AU JAPON)

11) Detach and attach the plate; see Table 8-302.

Copy paper size	Face plate
A3	abcd
11× 17	abcd
A4	abcd
Letter	abcd
Argentine Letter	abcd
Government Letter	abc
Korean	abc
B4	abc
B5	abc
A4-R	ab
Letter-R	ab
Argentine Legal	ab
Goverrntment Letter-R	ab
Government Legal	ab
Argentine Letter-R	ab
Foolscap	ab
Folio	ab
Australian Foolscap	ab
Officio	ab
Ecuadorean Officio	ab
Bolivian Officio	ab
Legal	ab
Korean-R	a
B5R	a

Table 8-302

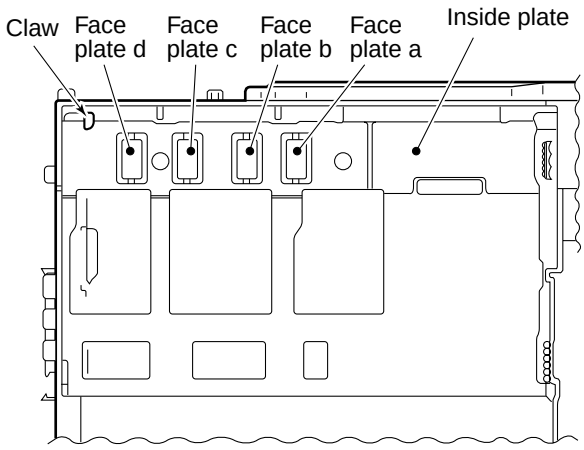

Figure 8-307

12) Attach the size label on the cassette; if the label is not available, write the size on a blank strip of paper.

COPYRIGHT © 1999 CANON INC.

B. Replacing the Cassette Spring

- The copier can be reset for a different size of copies by changing the cassette spring as shown in Table 8-303.

Size of paper	Color of spring
A4/A3/B4 11×17/LTR/I	blue
A4R/B5R/LTR-R LGL/B5/II	yellow
A5R/STMT	white

Table 8-303

I: ARGENTINE LTR
GOVERNMENT LTR
KOREAN
II: ARGENTINE LGL
GOVERNMENT LGL
ARGENTINE LTR-R
GOVERNMENT LTR-R
FOOLSCAP FOLIO
AUSTRALIAN FOOLSCAP
KOREAN-R
ECUADORIAN OFICIO
BOLIVIAN OFICIO

1) Remove the rubber stopper from the inside plate.

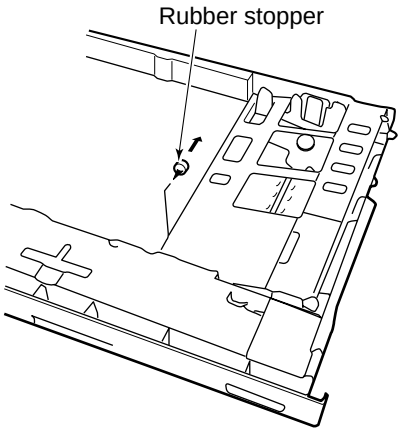

Figure 8-308

COPYRIGHT © 1999 CANON INC.
CANON NP6320 REV.0 DEC. 1999 PRINTED IN JAPAN (IMPRIME AU JAPON)

2) Remove the inside plate and spring.

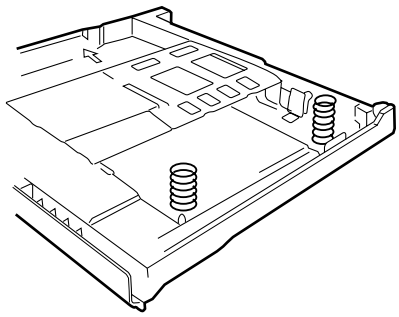

Figure 8-309

3) Change the spring as shown in Table 8-303.
4) Set the inside plate, and attach the rubber stopper.

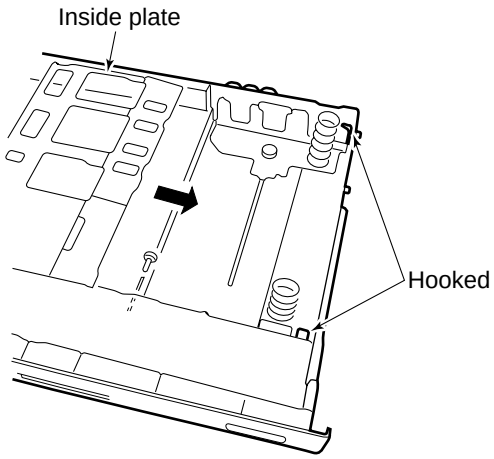

Figure 8-310

Check that the rubber stoppers are correctly attached; further, check that the spring at the rear is correctly set on the fixing behind the inside plate.

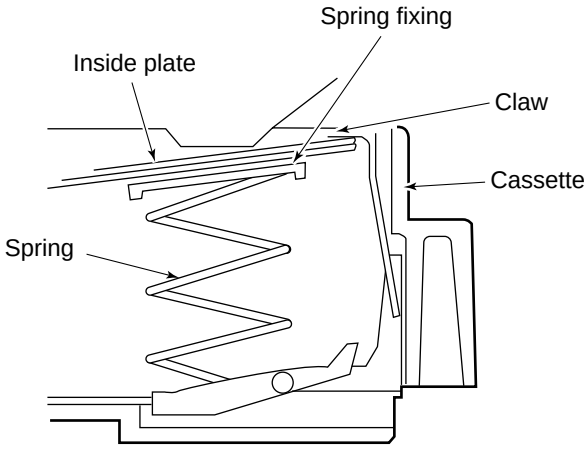

Figure 8-311

COPYRIGHT © 1999 CANON INC. CANON NP6320 REV.0 DEC. 1999 PRINTED IN JAPAN (IMPRIME AU JAPON)

C. Removing the Pick-up Roller

If the cassette is sized to GOVERNMENT LTR, KOREAN, or KOREAN-R, remove the pick-up rollers as shown below (metric rollers).

• GOVERNMENT LTR and KOREAN

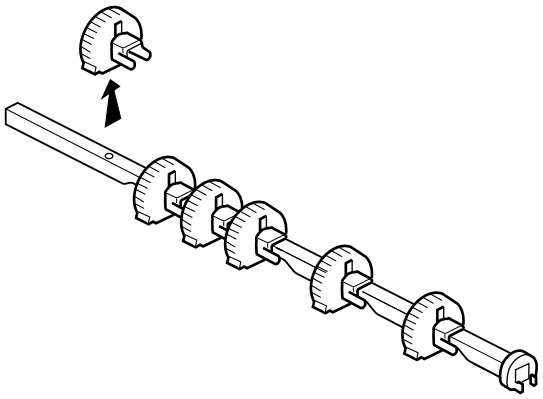

Figure 8-312

• KOREAN-R

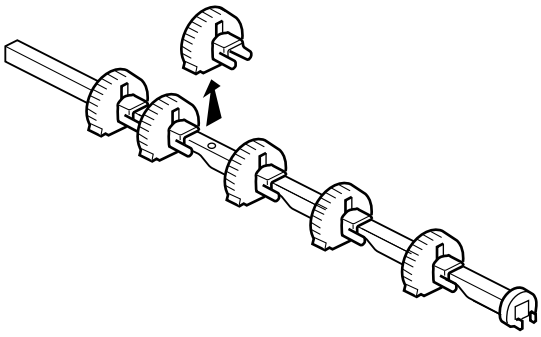

Figure 8-313

COPYRIGHT © 1999 CANON INC.
CANON NP6320 REV.0 DEC. 1999 PRINTED IN JAPAN (IMPRIME AU JAPON)

IV. RELOCATING THE COPIER

Perform the following when relocating the copier by truck or other means of transportation.

Step	Work	Check	Remarks
1	Remove the drum unit.	Put the drum unit in a box for transport.	
2	Fix the scanner and lens in place.		
3	Tape the corona assemblies and feeder assembly release lever in place against vibration.		
4	Tape the front door and delivery assembly.		
5	Place a sheet of A3 or 11"×17" paper on the copyboard glass, and tape the copyboard cover.		

Table 8-401

COPYRIGHT © 1999 CANON INC.
CANON NP6320 REV.0 DEC. 1999 PRINTED IN JAPAN (IMPRIME AU JAPON)

V. INSTALLING THE CONTROL CARD-V

1) Detach the control panel.
2) Remove the slot cover [1] and the screw [2].

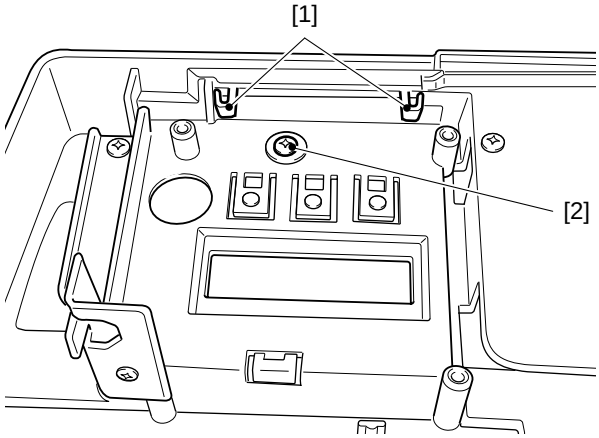

Figure 8-501

3) Set the control card main unit [1] and fix it to the control panel with four screws [2].

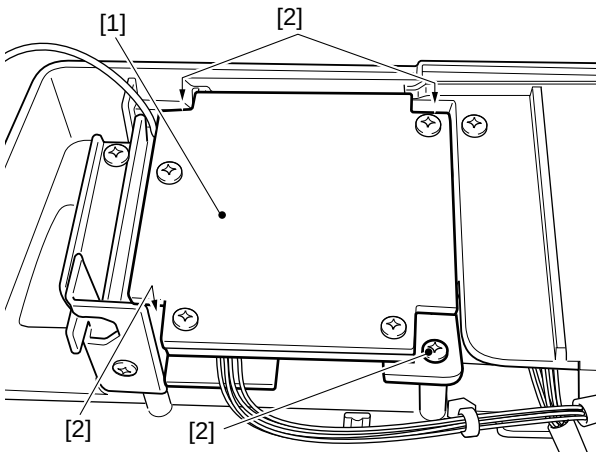

Figure 8-502

COPYRIGHT © 1999 CANON INC.
CANON NP6320 REV.0 DEC. 1999 PRINTED IN JAPAN (IMPRIME AU JAPON)

4) Disconnect the shorting connector [1].

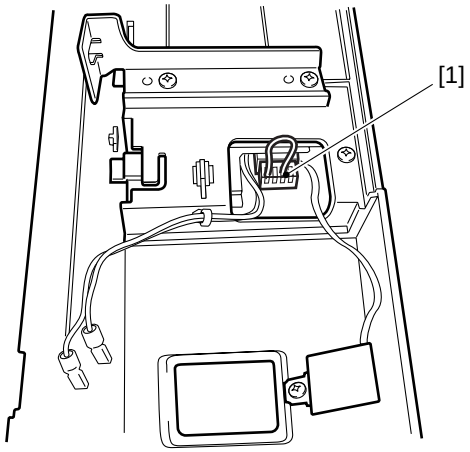

Figure 8-503

5) Connect the relay cable [1] to the control card connector [2] and the control panel PCB connector [3].

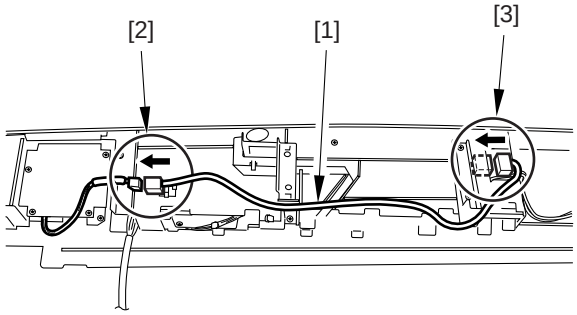

Figure 8-504

6) Route the cable [1] as shown in Figure 8-505.

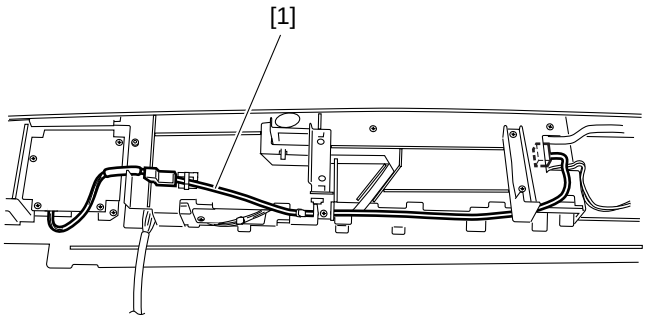

Figure 8-505

COPYRIGHT © 1999 CANON INC. CANON NP6320 REV.0 DEC. 1999 PRINTED IN JAPAN (IMPRIME AU JAPON)

7) Fix the grounding wire [1] to the support plate [2].

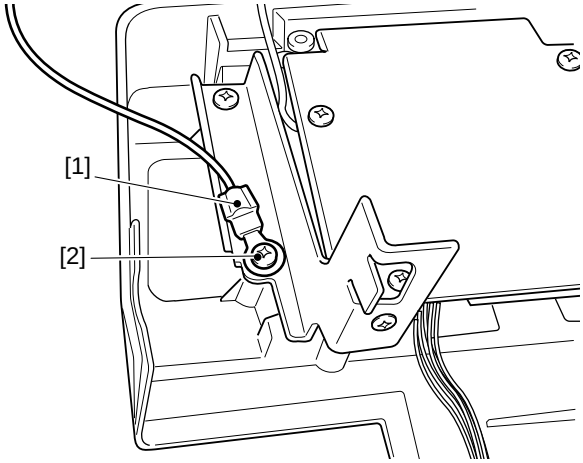

Figure 8-506

8) Attach the control panel sheet [1] to the control panel.

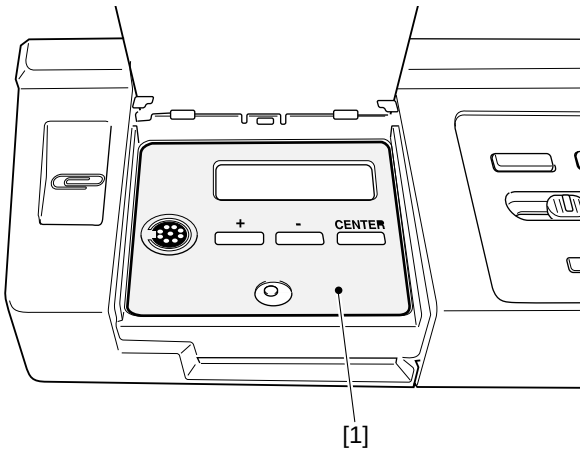

Figure 8-507

9) Attach the control panel to the main body.

COPYRIGHT © 1999 CANON INC.
CANON NP6320 REV.0 DEC. 1999 PRINTED IN JAPAN (IMPRIME AU JAPON)

CHAPTER 9

MAINTENANCE AND SERVICING

I. PERIODICALLY REPLACED PARTS 9-1
II. DURABLE PARTS 9-2
III. BASIC PROCEDURE FOR PERIODIC SERVICING 9-3
IV. PERIODIC SERVICING SCHEDULE 9-4

COPYRIGHT © 1999 CANON INC. CANON NP6320 REV.0 DEC. 1999 PRINTED IN JAPAN (IMPRIME AU JAPON)

I. PERIODICALLY REPLACED PARTS

To maintain the copier at its peak performance, the parts listed in the following chart must be replaced periodically. Although the deterioration of a part may not be visible, it can seriously hamper the performance of the copier if not replaced on schedule.

Parts should be replaced during the regular service visit that is closest to the end of the service life of the part.

as of Dec. 1999

No.	Description	Part No.	Quantity	Replacement	Remarks
1	Ozone filter	FF2-5595-00P	1	60,000	or 1 year
2	Dustproofing filter	FA0-0339-00P	1	60,000	or 1 year
3	Static charge eliminator	FF1-9438-070	1	60,000	
4	Transfer corona wire	FY3-0040-000	AR	60,000	

Table 9-101

Note:
The above values are estimates and are subject to change based on future data.

COPYRIGHT © 1999 CANON INC.
CANON NP6320 REV.0 DEC. 1999 PRINTED IN JAPAN (IMPRIME AU JAPON)

II. DURABLE PARTS

The values shown in the table below indicate the expected average life (number of copies) of parts which may require replacement at least once during the warranty period due to deterioration or damage but which can be simply replaced to restore the performance of the copier.

as of Dec. 1999

No.	Description	Part No.	Quantity	Service life (number of copies)	Remarks
1	Paper pick-up roller (pick-up assembly)	FA0-0241-00P	12	100,000	
2	Multi-feeder roller	FC1-0741-00P	1	100,000	Must be replaced at the same time
3	Pad (multi feeder)	FC1-0736-00P	1	100,000	
4	Scanner drive cable	FF0-0041-00P	1	120,000	
5	Scanning lamp (scanner)	FH7-3114-000	1	100,000	
6	Pre-exposure lamp	FG2-4048-00P	1	200,000	
7	Upper fixing roller (fixing assembly)	FC2-9961-00P	1	200,000	
8	Upper separation claw (fixing assembly)	FB1-0301-000	5	200,000	
9	Lower separation claw (fixing assembly)	FA2-9037-000	5	200,000	
10	Lower fixing roller (fixing assembly)	FC2-8962-00P	1	200,000	
11	Thermistor assembly	FF3-2855-00P	1	100,000	
13	Fixing roller bushing	FS1-1240-000	2	200,000	
14	Developing assembly	FG3-0351-00P	1	300,000	
15	Oil applying roller	FA0-0711-00P	1	60,000	

Table 9-201

Note:
The above values are estimates and are subject to change based on future data.

COPYRIGHT © 1999 CANON INC.
CANON NP6320 REV.0 DEC. 1999 PRINTED IN JAPAN (IMPRIME AU JAPON)

III. BASIC PROCEDURE FOR PERIODIC SERVICING

Note:

i. Perform periodic servicing after every 15,000 copies, as a general rule.
ii. Before making a service call, check the service log and take along any replacement parts that are likely to be needed:

No.	Procedure	Check	Remarks
1	Note the operator's comments.	Condition of copier	
2	Record the counter reading.	Number of poor copies	
3	Make Direct and two-page overlay test copies.	a. Image density b. Soiled background c. Clarity of letters d. Leading edge blank area e. Left and right margins f. Fixing, synchronizing, and soiling of back g. Unusual noise h. Operation of counter	Standard: 2.0±1.5mm (Direct) Standard: 10.0±2.0mm (Direct), front side
4	Clean the corona assemblies.		Dry wipe using lint-free paper; then clean using alcohol.
5	Clean the separation feeder assemblies.		
6	Clean the fixing and delivery assemblies. • Paper guide plate • Separation claws (upper and lower)		Alcohol
7	Perform the periodic servicing appropriate to the number of copies (see page 9-4).		
8	Clean the copyboard cover and the copyboard glass.		
9	Make test copies.		
10	Make sample copies.		
11	Select sample copies to keep for the service record. Clean up around the copier.		
12	Record the final counter value.		
13	Fill in the service sheet and report to the person in charge.		

Table 9-301

COPYRIGHT © 1999 CANON INC.
CANON NP6320 REV.0 DEC. 1999 PRINTED IN JAPAN (IMPRIME AU JAPON)

IV. PERIODIC SERVICING SCHEDULE

Note:
Do not use solvents or oils other than those specified.

Δ: Clean ●: Replace ×: Lubricate □: Adjust ◎: Check

Unit	Description	Periodic servicing				Remarks
		Every 15,000 copies*	Every 30,000 copies	Every 60,000 copies	Every 90,000 copies	
External	Copyboard glass	Δ				Clean with alcohol.
	Ozone filter			●		or 1 year
	Dustproofing filter			●		or 1 year
Scanner drive unit	Scanner rails		×			Clean with alcohol; then apply high-viscosity lubricating oil (TKN-0451).
Feeder	Transfer guide	Δ				Damp cloth
	Feeder belt	Δ				
	Feeder frame	Δ				
Optical path	Scanning lamp reflector		Δ			Clean with a blower brush. If excessively solid, clean with alcohol. Clean mirrors 5 and 6 with the mirror cleaning tool.
	Scanning lamp side reflector		Δ			
	Mirrors 1 to 6		Δ			
	Lens		Δ			
	Dustproofing glass	Δ				
Corona assemblies	Primary corona assembly	Δ				Dry wipe using lint-free paper; then clean using alcohol.
	Primary corona wire	Δ				
	Transfer corona assembly	Δ				
	Transfer corona wire	Δ		●		
	Static charge eliminator	Δ		●		Clean with a brush.
Developing assembly	Developing rollers (front and rear)		Δ			Clean with alcohol.
Fixing assembly	Upper fixing roller	Δ				Clean with cleaning oil.
	Lower fixing roller	Δ				Clean with solvent.
	Paper guide plate	Δ				
	Separation claws (upper and lower)	Δ				
Drum unit	Lower face of drum unit	Δ				
	Coupling pin	Δ				

* Items to be cleaned every 15,000 copies or every 6 months, whichever comes first.

Table 9-401

COPYRIGHT © 1999 CANON INC.
CANON NP6320 REV.0 DEC. 1999 PRINTED IN JAPAN (IMPRIME AU JAPON)

CHAPTER 10

TROUBLESHOOTING

I. MAINTENANCE AND INSPECTION 10-1
  A. Basic Image Adjustment Procedure 10-1
  B. Periodic Maintenance Check Points 10-2
II. STANDARDS AND ADJUSTMENTS 10-3
  A. Mechanical 10-3
  B. Electrical 10-17
III. IMAGE TROUBLE-SHOOTING 10-22
  A. Initial Check 10-22
  B. Samples of Image Faults . 10-26
  C. Troubleshooting of Image Faults 10-27
IV. OPERATION TROUBLE-SHOOTING 10-39
  A. Troubleshooting of Malfunction 10-39
V. TROUBLESHOOTING THE FEEDING PROBLEMS 10-56
  A. Paper Jams 10-56
VI. INCORRECT PAPER FEED OPERATION 10-60
VII. FUNCTION AND ARRANGE-MENT OF THE ELECTRICAL PARTS 10-62
  A. Sensors, Fuses and Lamps 10-62
  B. Clutches, Solenoids, Fans, Motors and Heaters 10-63
  C. Switches, Circuit Breakers, Counters, Etc. 10-64
  D. PCBs 10-65
VIII. SERVICE MODE 10-66
  A. Outline 10-66
  B. Using the Service Mode ... 10-66
  C. Guide to Service Mode 10-67
IX. SELF DIAGNOSIS 10-70
  A. Self-Diagnosis 10-70

COPYRIGHT © 1999 CANON INC. CANON NP6320 REV.0 DEC. 1999 PRINTED IN JAPAN (IMPRIME AU JAPON)

Guide to Troubleshooting Tables

The troubleshooting procedures in this manual are prepared in the form of tables, rather than flow charts. Study the following for an idea of how to consult the tables.

EX. AC power is absent.

Cause/Fault	Step	Checks	YES/NO	Remedies
Power plug	1	Is the power plug connected to the outlet?	NO	Connect the plug.
Covers	2	Are the front door and delivery cover closed property?	NO	Close the door and cover.
Main power	3	Is the specified voltage present at the power outlet?	NO	The problem is not the copier's; advise the user.
	4	Is the specified voltage present between J1-1 and J1-2? (J1 is located near the power supply cord mount.)	YES	Go to step 6.

- To find out the cause (faulty part) of a single problem, see the Cause/Fault column. In the case of "AC power is absent," you will learn that the power plug may not be connected, the covers may not be closed properly, or the main power may be absent.
- To find out checks to make or remedies to provide for a single problem, see the Remedy column as guided by YES/NO to the checks; or, move to the next step as necessary.

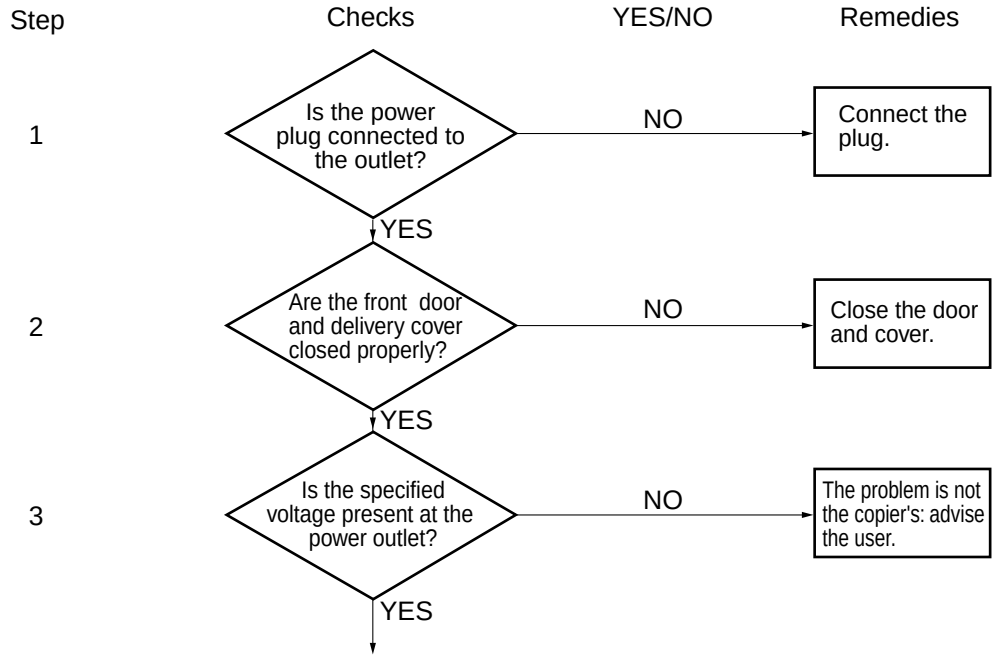

- The instruction "Measure the voltage between J109-1 (+) and J109-2 (-) on the DC controller PCB" asks you to connect the meter's positive probe (+) to J109-1 and negative probe to J109-2 (-).

I. MAINTENANCE AND INSPECTION

A. Basic Image Adjustment Procedure

Image adjustment should be performed using the following settings:

1. Manual (non AE) exposure
2. Density cursor setting : 5
3. Direct reproduction ratio

Adjust the image by the following procedure when the photosensitive drum has been replaced.

Make this adjustment with the upper front panel and front door installed.

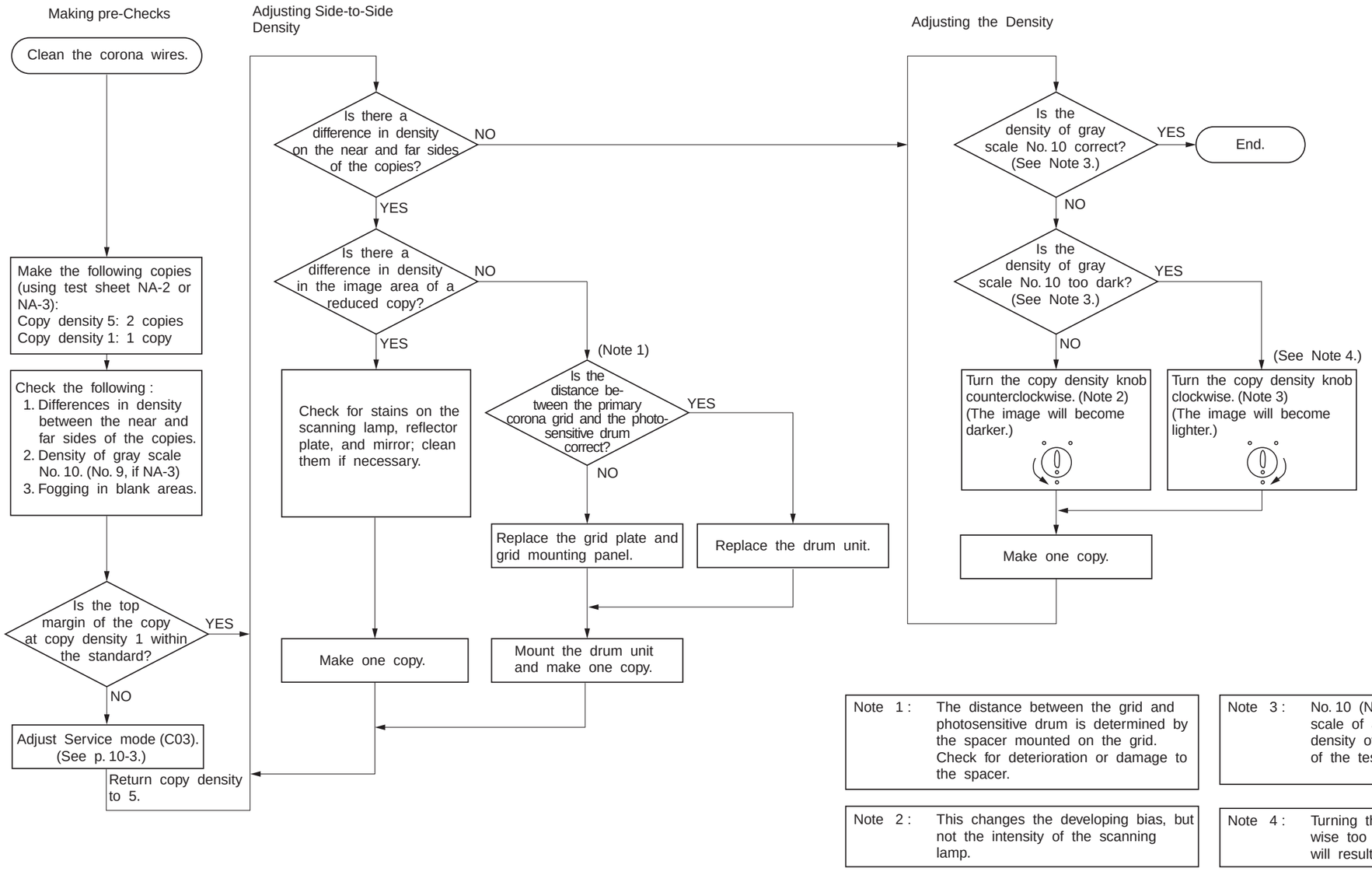

Note 1 : The distance between the grid and photosensitive drum is determined by the spacer mounted on the grid. Check for deterioration or damage to the spacer.

Note 2 : This changes the developing bias, but not the intensity of the scanning lamp.

Note 3 : No. 10 (No. 9, if NA-3) on the gray scale of a copy should have the density of No. 8 on the gray scale of the test sheet.

Note 4 : Turning the copy density knob clockwise too far past the proper position will result in fogging in blank areas.

Figure 10-101

COPYRIGHT © 1999 CANON INC.
CANON NP6320 REV.0 DEC. 1999 PRINTED IN JAPAN (IMPRIME AU JAPON)

B. Periodic Maintenance Check Points

Copyboard/Scanner

Location	Tool/Cleaner	Action/Remarks
Copyboard glass	Alcohol	Cleaning
Reflectors	Blower brush	Cleaning
Mirrors 1, 2 and 3	Blower brush or alcohol and lint-free paper	Clean with a blower brush. If dirt cannot be removed with a blower brush, clean with alcohol.

Optical path

Location	Tool/Cleaner	Action/Remarks
Lens	Blower brush or alcohol and lint-free paper	Clean with a blower brush. If dirt cannot be removed with a blower brush, clean with alcohol.
Dust-proofing glass		
Mirror 4, 5 and 6	Mirror cleaning tool	Cleaning

Corona assemblies

Location	Tool/Cleaner	Action/Remarks
Developing rolls	Alcohol	Cleaning
Primary corona assembly	Alcohol and lint-free paper	Wipe with a dry cloth; then, clean with lint-free paper moistened with alcohol.
Transfer corona assembly		
Static charge ellminator	Blower brush	
Primary corona grid	Blower brush	Cleaning

Fixing assembly and Paper pick-up assembly

Location	Tool/Cleaner	Action/Remarks
Separation claws	MEK	Cleaning
Upper fixing roller, lower fixing roller	Cleaning oil (TKN-0464)	Cleaning
Paper guide plate	MEK	Cleaning

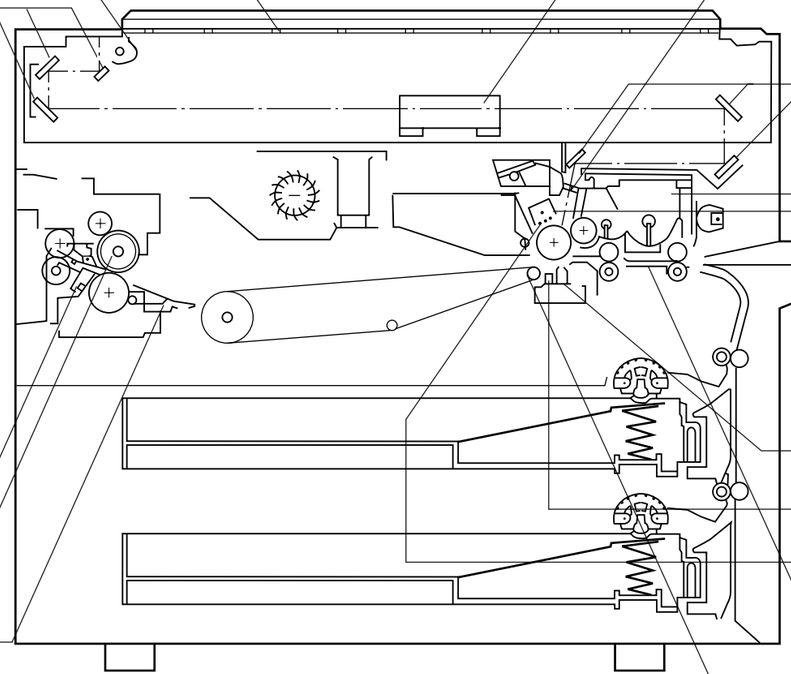

Separation and Transfer assemblies

Location	Tool/Cleaner	Action/Remarks
Transter guide	Damp cloth	Cleaning
Feeder belt, Feeder assembly		

Figure 10-102

COPYRIGHT © 1999 CANON INC. CANON NP6320 REV.0 DEC. 1999 PRINTED IN JAPAN (IMPRIME AU JAPON)

II. STANDARDS AND ADJUSTMENTS

A. Mechanical

1. Leading Edge Non-Reproduced Area

There is a white strip on the bottom of the copyboard glass in the position shown in the figure below. If bias is being applied to the grid of the primary corona while the scanner is passing the white strip, the leading edge of the copy will be reproduced blank. If the leading edge non-image width is outside the standards, adjust the timing at which the grid bias goes from OFF to ON in the service mode (C03).

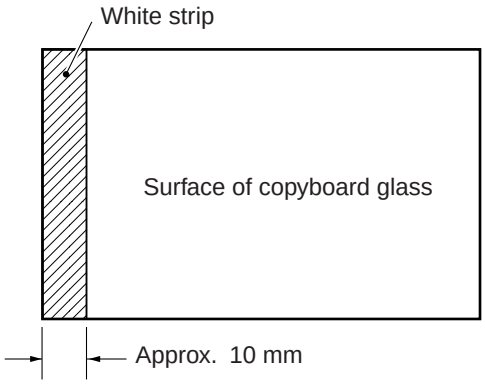

Figure 10-201

The standard leading edge nonreproduced area on a Direct copy of the test sheet is 2.0 ±1.5 mm.

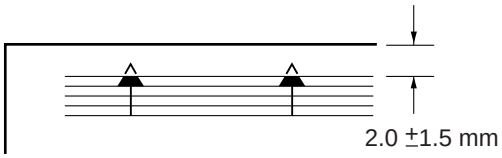

Figure 10-202

A higher setting (C03) increases the leading edge non-image width; in units of 0.25 mm.

COPYRIGHT © 1999 CANON INC.
CANON NP6320 REV.0 DEC. 1999 PRINTED IN JAPAN (IMPRIME AU JAPON)

2. Leading Edge Registration

Make adjustments in the service mode (C02) so that the distance shown is 10.0 ±1.5 mm when the test sheet is copied in Direct.

Note:
Adjust the leading edge non-reproduced area before making this adjustment.

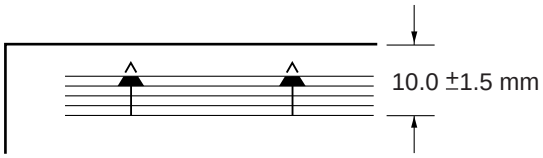

Figure 10-203

A higher setting in the service mode (C02) increases the leading edge margin.

3. Side-to-Side Registration

The standard near side registration on a Direct copy of the test sheet is 10.0 ±2 mm.

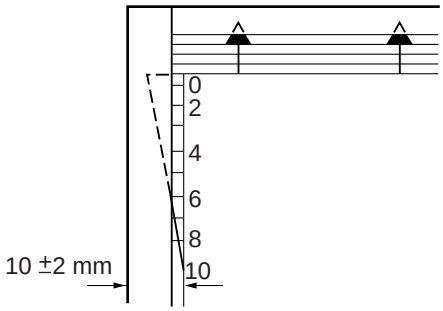

Figure 10-204

Loosen the two screws, and adjust the latch assembly for the cassette found on the back of the bottom plate by sliding it.

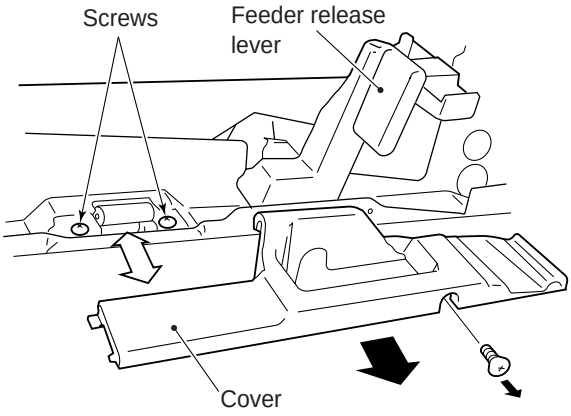

Figure 10-205

COPYRIGHT © 1999 CANON INC.
CANON NP6320 REV.0 DEC. 1999 PRINTED IN JAPAN (IMPRIME AU JAPON)

4. Installing the Lens Drive Cable

This unit has been accurately adjusted at the factory with special gauges. Do not remove parts other than those shown below, nor loosen any other screws.

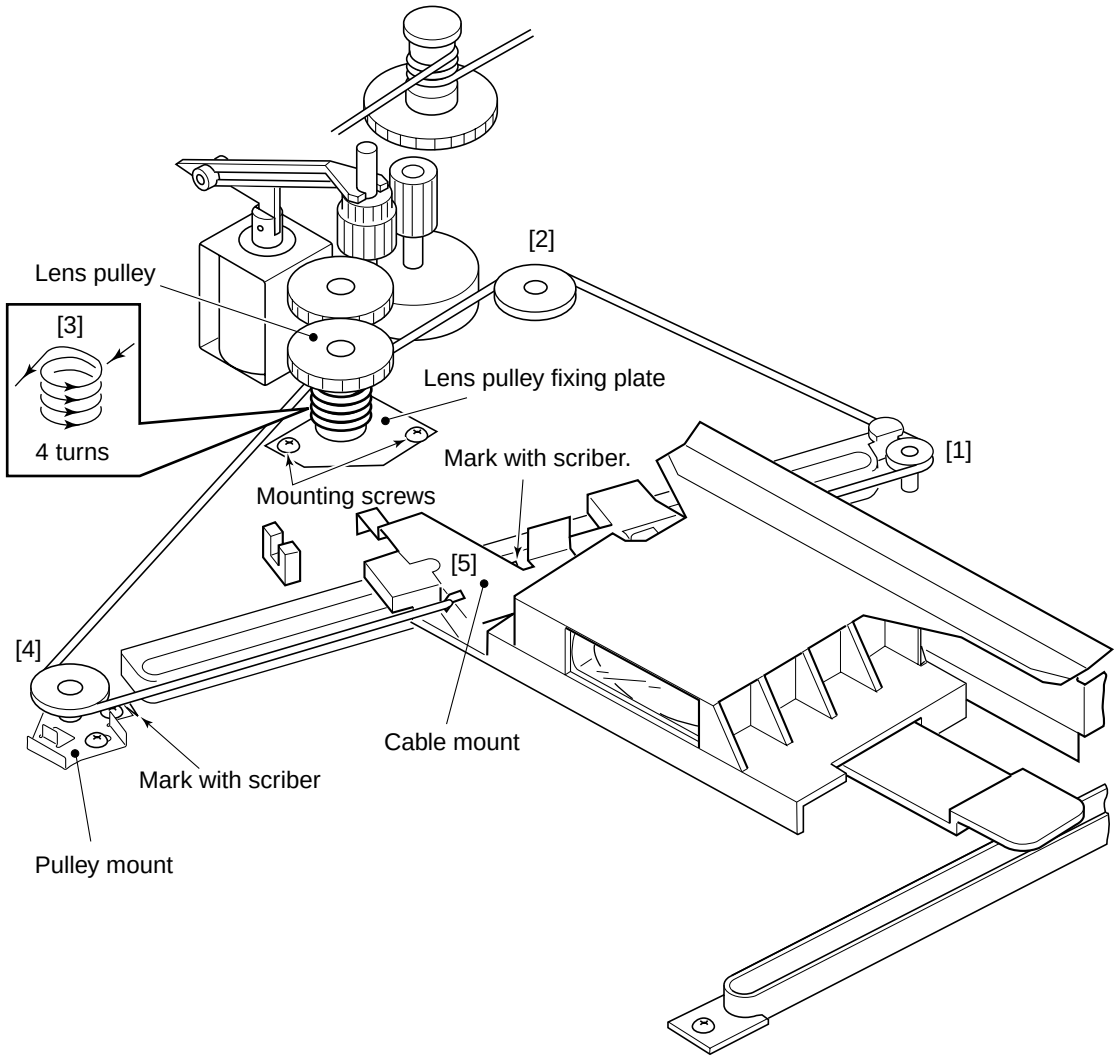

Figure 10-206

a. Removing the Lens Wire

1) Unscrew the three screws; then remove the upper frame.
2) Mark the positions of the pulley fixing base and the wire fixing with a scriber.
3) Unscrew the two screws used to hold the pulley fixing base.
4) Remove the wire.

b. Attaching the Lens Wire

1) Unscrew the two screws used to hold the lens pulley fixing plate, and remove the lens pulley. (See Figure 10-206.)
2) Wind the lens wire around the lens pulley as shown in Figure 10-206, and fix it with the two fixing screws.
3) Shift the pulley fixing base to the position of the scriber mark; then fix it with the two fixing screws.

COPYRIGHT © 1999 CANON INC. CANON NP6320 REV.0 DEC. 1999 PRINTED IN JAPAN (IMPRIME AU JAPON)

5. Installing the Scanner Drive Cable

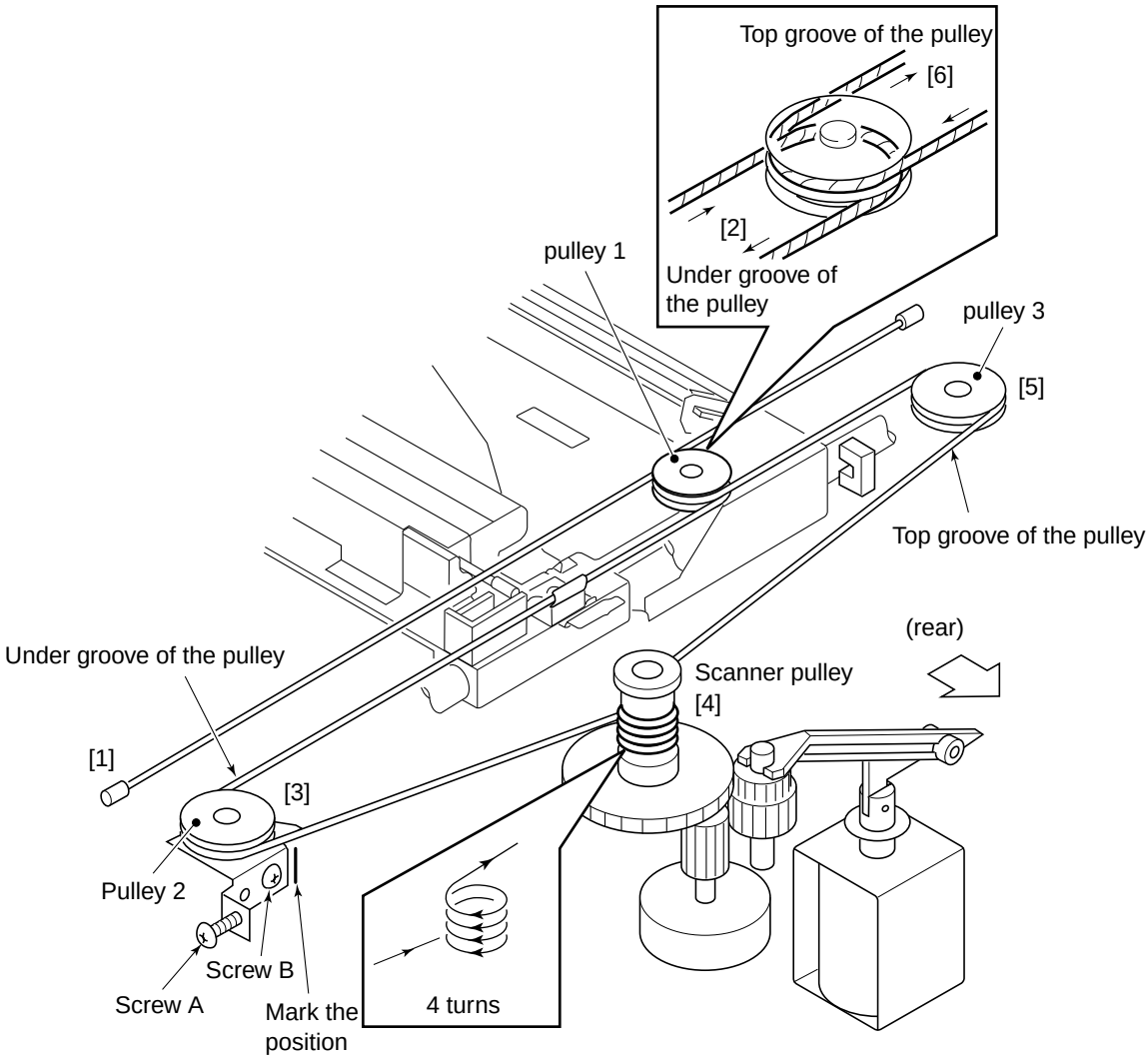

Figure 10-207

COPYRIGHT © 1999 CANON INC.
CANON NP6320 REV.0 DEC. 1999 PRINTED IN JAPAN (IMPRIME AU JAPON)

6. Adjusting the Tension of the Scanner Drive Cable

Move the mirror 1 mount to the home position (start position). As shown in Figure 10-208, pull at point [A] (approximate center) of the free cable with a spring gauge so that the wires touch each other. If the reading on the spring balance is not about 1.0±0.5 kg, turn screw A of Figure 10-207 to achieve this reading.

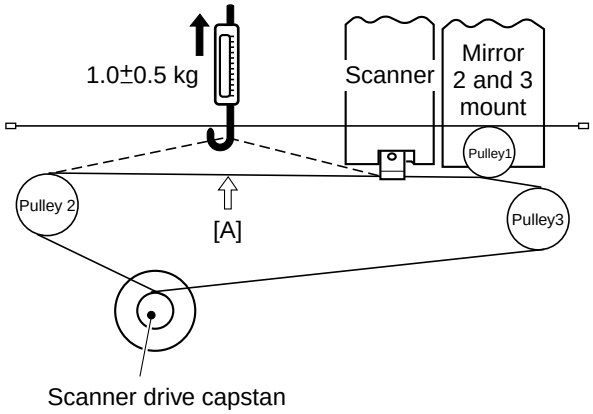

Figure 10-208 Top View

7. Adjusting the Position of the Mirrors (length of optical path between mirrors 1 and 2)

Adjust the tension of the scanner drive cable before making this adjustment. Adjust the position of the scanner (mirror 1) by altering the tension of the scanner drive cable. (Loosen the cap screws.)

Reference:

1. The cable will stretch after a large number of copies have been made, making readjustment necessary.
2. An incorrect distance between mirror 1 and mirror 2 will cause an incorrect side-to-side reproduction ratio and poor focus, resulting in poor sharpness and fuzziness in the copy image.

1) Mark a line 10 mm from each edge of a piece of copy paper (B4), as shown in Figure 10-209.

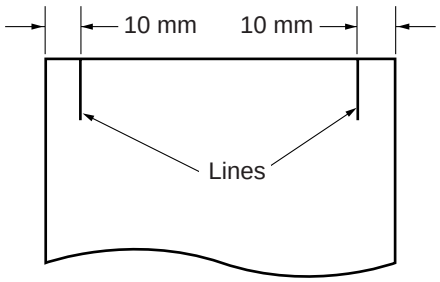

Figure 10-209

2) Make a copy of the paper with the lines marked on it. (A)
3) Place a blank sheet of paper on the copyboard and feed the marked sheet of paper into the copier. (Use manual feed.) (B)
   • Passing the sheet through the copier indicates the amount of shrinkage caused by heat.
4) Align the lines on the left side of the copy sheet (A) and the sheet passed through the copier (B). If the lines on the right are not in line, adjust the position of the scanner so that dimensions x and y are equal.

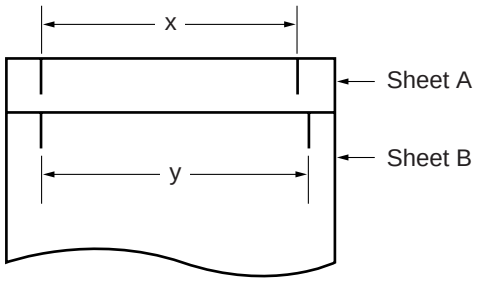

Figure 10-210

x=y Correct
x>y Move the scanner in direction [a] (Figure 10-211).
x<y Move the scanner in direction [b] (Figure 10-211).

COPYRIGHT © 1999 CANON INC.
CANON NP6320 REV.0 DEC. 1999 PRINTED IN JAPAN (IMPRIME AU JAPON)

Reference:

If the distance between the mirrors is short, the image will be enlarged. If the distance is long, the image will be reduced.

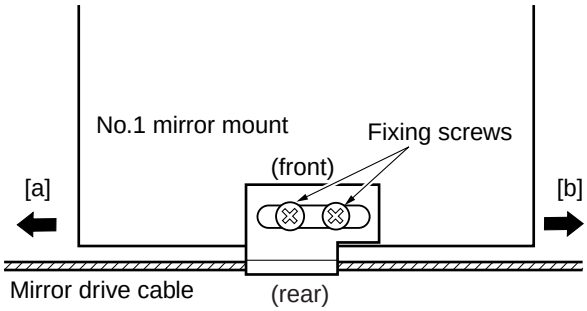

Figure 10-211 Top View

8. Mounting the Main Motor

The drive of the main motor is used to drive the drum and execute pick-up operations by way of timing belts.

Adjust the tension of the belt by selecting the mounting hole of the main motor so that when the center of the timing belt is pushed down with a force of 500 g, the distance between the two runs of the belt is between 20 and 25 mm.

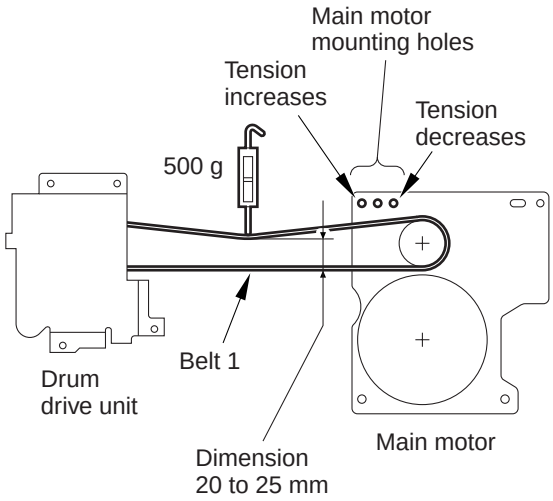

Figure 10-212

To adjust the timing belt used to execute pick-up operations, on the other hand, push the pulley support plate with a force of 2.4 kg, and fix it in place when it stops; see Figure 10-213.

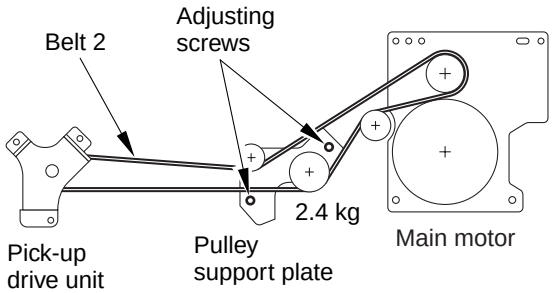

Figure 10-213

COPYRIGHT © 1999 CANON INC.
CANON NP6320 REV.0 DEC. 1999 PRINTED IN JAPAN (IMPRIME AU JAPON)

9. Installation Position of the Transfer Guide

When installing the transfer guide, ensure that the clearance between the transfer assembly roller and the photosensitive drum is about 1.8 ± 0.2 mm, as shown in Figure 10-214.

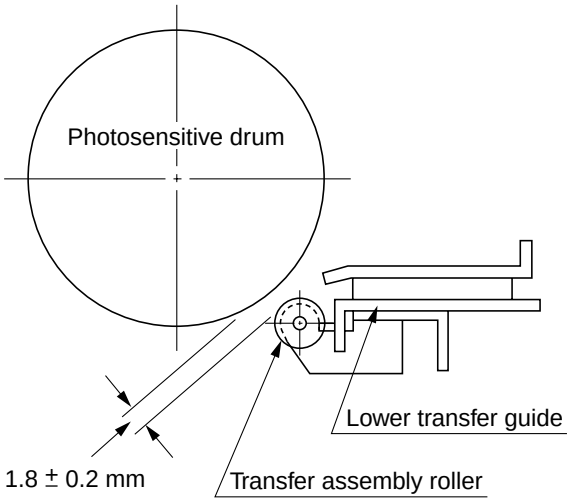

Figure 10-214

10. Installation Position of the Scanner Drive Assembly

Loosen the four screws of the scanner drive assembly; then while pushing the scanner drive assembly against the rear plate (direction of arrow [1]), move it in the direction of the manual feed tray (direction of arrow [2]) so that it touches the pulley base and the lens gear. In this condition, tighten the screws; then, confirm that there is play between the lens gear and the gear of the lens drive capstan.

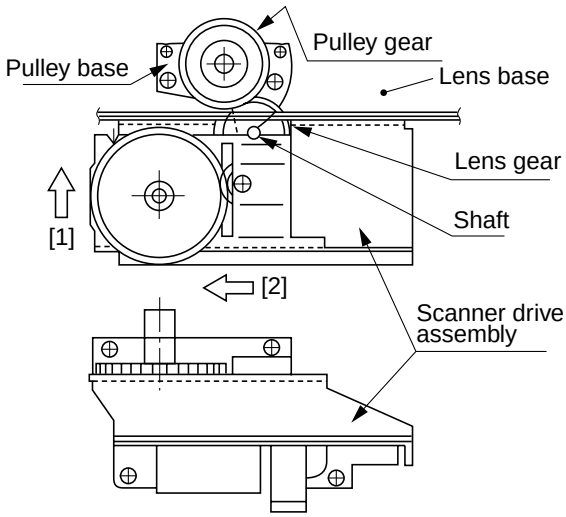

Figure 10-215

COPYRIGHT © 1999 CANON INC.

11. Installing the Corona Wires in the Primary and Transfer Corona Assemblies

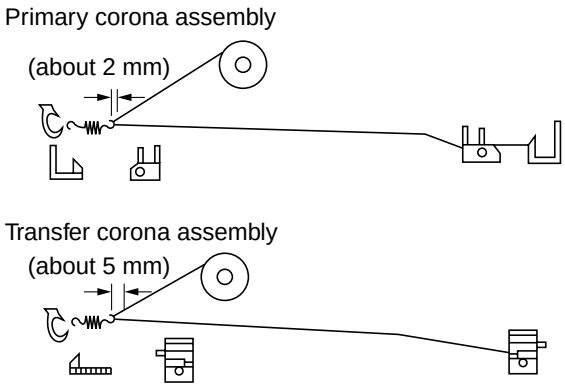

Figure 10-216

- The corona wire must not be bent or twisted, and the gold plating must not be peeling off.
- The corona wire must not be slack. (The length of the corona wire tension spring should be about 12 mm.)
- The corona wire must be in the V groove of the height adjusting piece.

12. Adjusting the Height of the Corona Wires

Corona assembly	Standard position	Allowable range
Primary corona assembly	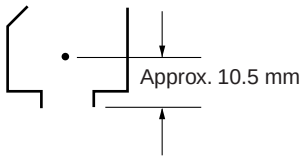	±2 mm
Transfer corona assembly	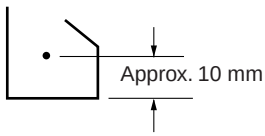	±2 mm

Figure 10-217

Note:

The height (position) of the corona wire of the primary and transfer corona assemblies can be adjusted by turning the screw at the back of the corona wire. Turning the screw once causes the height of the corona wire to change by about 0.7 mm.

COPYRIGHT © 1999 CANON INC.
CANON NP6320 REV.0 DEC. 1999 PRINTED IN JAPAN (IMPRIME AU JAPON)

13. Installation Position of Side Seals

1) Clean the surface on which the side magnetic seal will be hooked using alcohol.
2) Fix the side magnetic seal at the position shown in Figure 10-219.

Note:

Put the hook of the magnetic side seal on its side on the plastic marking so that the magnetic side seals is firmly in the correct position.

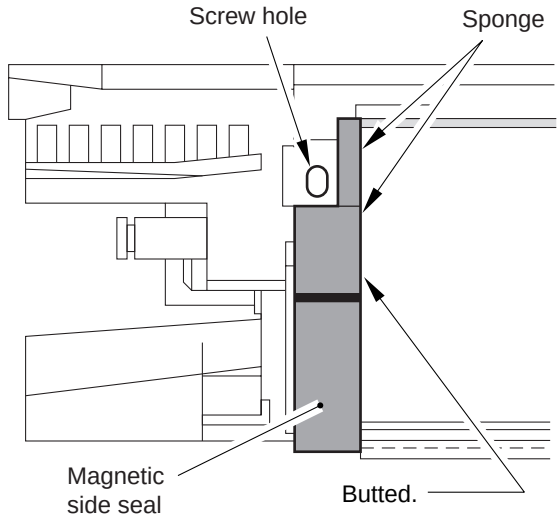

Figure 10-218

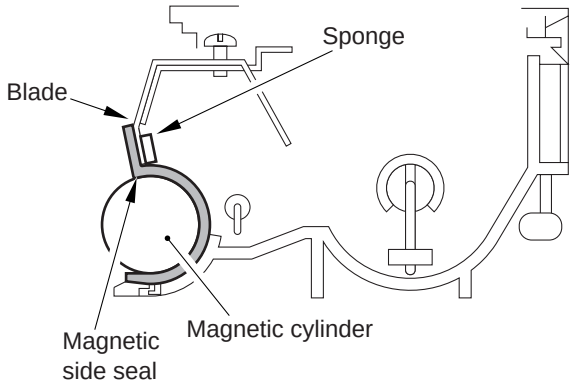

Figure 10-219

COPYRIGHT © 1999 CANON INC.

14. Adjusting the Fixing Assembly Roller Pressure (adjusting the nip width)

The nip width should conform to the dimension shown in Table 10-201. Adjust the nip width with the bolt when it is out of standard.

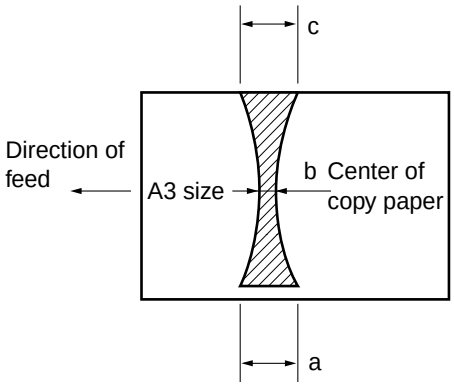

Figure 10-220

Note:
a and c are the dimensions of the 10 mm position at both edges of the copy paper.

Dimension	Measure after the upper and lower rollers have been adequately heated.
b	4.0 ±0.5 mm
|a-c|	0.5 mm or less

Table 10-201

• Measuring the Nip Width
If the rollers are cool, leave the copier ON, keep the Wait indicator ON for 15 minutes; make 20 copies, and then measure the nip width.

Measuring Procedure
1) Open the copyboard cover and make an A3 size solid black copy.
2) Set the solid black copy to the multifeeder.
3) Select the service mode C13.
   3-1) Detach the VR cover from the rear of the left cover.
   3-2) Press the service switch (SW300) on the DC controller PCB.
   3-3) Select the service mode C13 using the 10-key or the zoom key.
4) Press the Sort/Group key.
   • The solid black paper is automatically picked up from the multifeeder.
   • Then the solid black paper is stopped at the fixing roller and, after a specific period, is delivered.
5) Measure the width of the toner portion which has a glossy surface, as shown in Figure 10-220.
6) Press the service switch (SW300) to exit from the service mode.

COPYRIGHT © 1999 CANON INC.
CANON NP6320 REV.0 DEC. 1999 PRINTED IN JAPAN (IMPRIME AU JAPON)

15. Cassette Spring Strength

If the strength of the springs in the cassette that raise the paper-lifting plate is not correct, improper paper pick-up or other problem will result.

If such a problem occurs, check the spring strength with a compression spring scale.

Press the scale at point A shown in Figure 10-221 to push the plate down 3 mm and read the scale. If the indication is outside the range shown in Table 10-202, replace both springs. (The springs cannot be adjusted.)

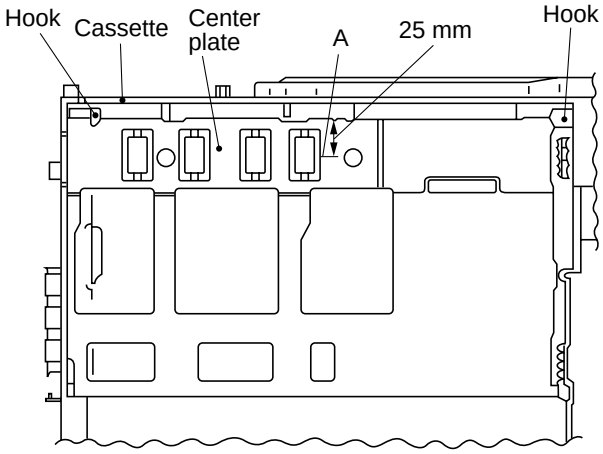

Figure 10-221

Cassette size	Indication on spring scale
A3 and LGR cassette	390 ±30g
A4R and LTR-R cassette	350 ±20g
STMT	330 ±40g

Table 10-202

COPYRIGHT © 1999 CANON INC.

16. Degree of Arching (multifeeder)

Make the following adjustments if the copy paper picked up from the multifeeder moves askew or wrinkles are noted on the leading edge of the copy paper; the adjustments are made by changing the degree of arching of the copy paper between the multifeeder pick-up roller and the registration roller.

1) Set 50 sheets of A4 paper (80 g/m^2) on the multifeeder tray.
2) Press the Paper Select key on the control panel to select the multifeeder.
3) Press the Copy Start key.
4) Check that the leading edge of the copy paper butts against the registration roller and arches; at the time, turn the copier OFF.
5) Measure the distance between [A] (trailing edge of the second sheet) and [B] (trailing edge of the first sheet).

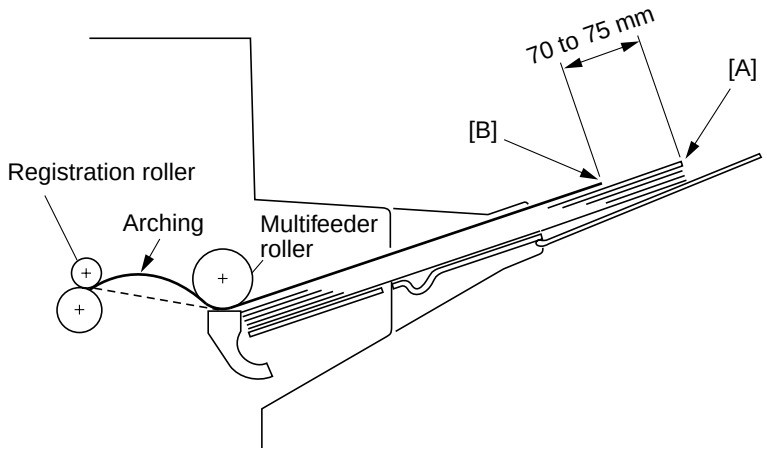

Figure 10-222

6) Turn the copier ON, and select C04 in the service mode.
7) Enter a setting so that the measurement between [A] and [B] (step 5)) is between 70 and 75 mm.

Note:

A higher setting increases the measurement, i.e., the multifeeder clutch OFF timing is delayed (in units of 0.25 mm).

COPYRIGHT © 1999 CANON INC.
CANON NP6320 REV.0 DEC. 1999 PRINTED IN JAPAN (IMPRIME AU JAPON)

B. Electrical

1. List of PCBs/VRs/LEDs/Check Pins

Variable resistors, LEDs and check pins which are used for adjustments in the field are listed below.

VRs and check pins not listed here are used only for factory adjustments which require special tools and measuring instruments, as well as great care and precision. Do not attempt to adjust such parts.

Notes:

1. Leakage current may flow through some LEDs and cause them to glow dimly even though they are supposed to be OFF.
2. VRs which can be adjusted in the field ..... ⊘
   VRs which should not be adjusted in the field..... ⊘

a. DC Controller PCB

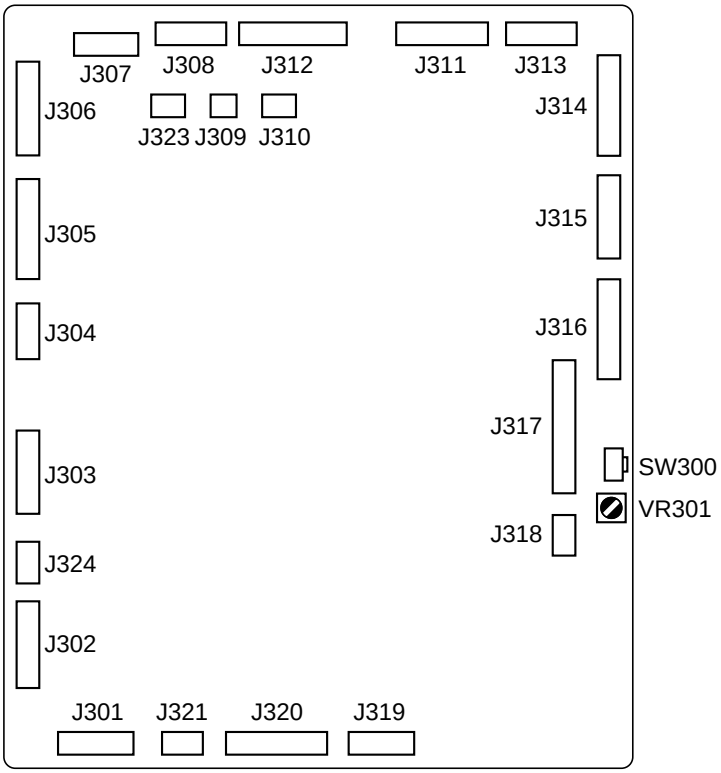

Figure 10-223

VR No	Purpose
VR301	Adjusting AE reference point

Table 10-203

SW No	Purpose
SW300	Press to enter or leave the service mode.

Table 10-204

COPYRIGHT © 1999 CANON INC.

b. Lamp driver PCB

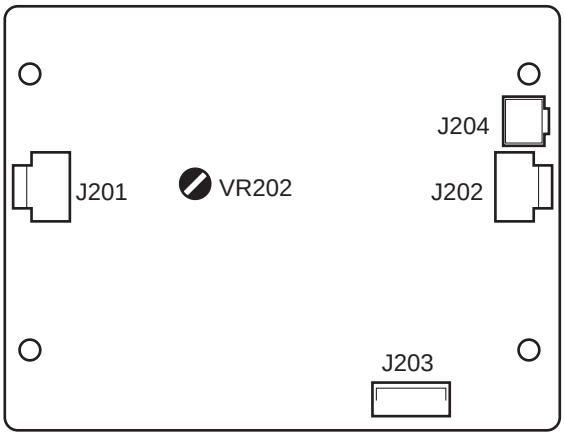

Figure 10-224

VR No	Purpose
VR202	Lamp intensity adjustment

Table 10-205

COPYRIGHT © 1999 CANON INC.
CANON NP6320 REV.0 DEC. 1999 PRINTED IN JAPAN (IMPRIME AU JAPON)

2. AE Adjustment

Make the following adjustments when the AE sensor or the DC controller PCB has been replaced.

1) Remove the VR cover at the back of the left cover.
2) Set the power switch ON.
   • Wait until the wait period has ended.
3) Place an NB-3 or NA-2, NA-3 test sheet on the copyboard, and lower the copyboard cover.
4) Press switch SW300 on the DC controller PCB.
   • 'C00' will appear on the Copy Count/Ratio indicator on the control panel.
   • If 'C00' does not appear, press the "0" number key on the control panel so that 'C00' appears.
5) Press the Sort/Group key on the control panel.
   • The scanner will move forward to the AE measuring position; then, the scanning lamp will go ON. (Note)
6) Adjust VR301 on the DC controller so that "20" appears on the Copy Count/Ratio indicator.

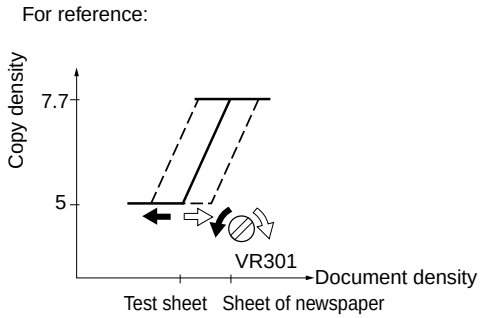

Figure 10-225

7) Press the Sort/Group key.
   • The scanning lamp will go OFF, and the scanner will return to the home position.
8) Remove the test sheet, place a sheet of newspaper on the copyboard, and lower the copyboard cover.
9) Press the Sort/Group key.
   • The copier will perform the same operations as described in step 5).
10) Make a note of the numerical value displayed on the Copy Count/Ratio indicator.
11) Press the Sort/Group key.
   • 'C00' will appear on the Copy Count/Ratio indicator.
12) Press the "1" number key.
   • 'C01' will appear on the Copy Count/Ratio indicator.
13) Enter the value recorded in step 10) using the numeric keypad.

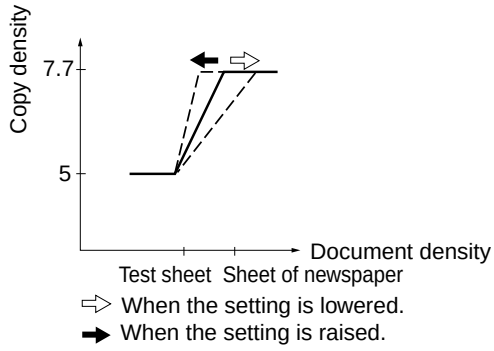

Figure 10-226

COPYRIGHT © 1999 CANON INC.

3. Fixing Assembly Temperature Adjustment

You will perform this adjustment after replacing the fixing assembly.

1) Open the delivery door and record the 3-digit number described on the label [1].

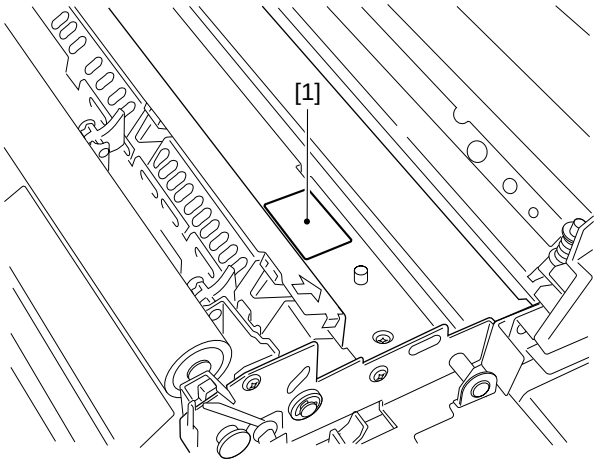

Figure 10-227

2) Detach the VR cover.
3) Press the service SW on the DC controller PCB.
4) Press the keys “1” and then “7”.
5) Press the “Sort/Group” key.
6) Enter the 3-digit recorded in step 1).
7) Press the “Sort/Group” key to store the setting.

If you replace the fixing heater or you have offset fixing or a fixing ability problem, perform the following:

- Offset Fixing

1) Reduce the C17 setting from 5 to 10. Then check the offset. If offset is corrected, record the new setting to the label of the delivery door.

- Fixing Ability Problem

1) Increase the C17 setting from 5 to 10. Then check the fixing ability. If fixing ability is corrected, record the new setting to the label on the delivery door.

4. Adjusting VR 202 on the Lamp Driver PCB

When you replace the scanning lamp or the lamp driver PCB, perform this adjustment.

1) Take some NA-3 copy samples: non-AE, copy density lever in center, the density knob as the previous.
2) Turn the VR so that No. 9 of the gray scale on the copy is the same density as gray scale No. 8 on NA-3.

COPYRIGHT © 1999 CANON INC.
CANON NP6320 REV.0 DEC. 1999 PRINTED IN JAPAN (IMPRIME AU JAPON)

5. Checking Photointerrupters

No.	Q1	Q2	Q3
Purpose	Multifeeder paper sensor (MFPD)	Pre-registration paper sensor (PDP1)	Scanner home position sensor (SCHP)
(+) lead (–) lead	J312-5 J312-4	J312-2 J312-1	J317-2 J317-1
Check: Operation is normal if the meter needle swings to the right	With the copier in STANDBY, raise and lower the arm manually. • Arm raised: voltage approx. 0.6V • Arm lowered: voltage approx. 0V	With the copier in STANDBY, raise and lower the arm manually. • Arm raised: voltage approx. 5V • Arm lowered: voltage approx. 0V	With the copier in STANDBY, move the scanner by hand. • Scanner in HOME position: voltage approx. 5V • Scanner not in HOME position: voltage approx. 0V
No.	Q4	Q5	Q6
Purpose	Lens home position sensor (LHP)	Delivery paper sensor (PDP2*)	Cassette 1 paper sensor (UCPD)
(+) lead (–) lead	J317-5 J317-4	J313-3 J313-4	J306-6 J306-5
Check: Operation is normal if the meter needle swings to the right	With the copier in STANDBY: insert a sheet of copy paper into the Q4 section. • With paper in Q4: voltage approx. 5V • With no paper in the Q4: voltage approx. 0V	Remove the delivery cover with the copier in STANDBY, raise and lower the arm manually. • Arm raised: voltage approx. 0V • Arm lowered: voltage approx. 0.6V	Remove the upper cassette with the copier in STANDBY, move the arm up and down manually. • Arm raised: voltage approx. 0.6V • Arm lowered: voltage approx. 0V
No.	Q7		
Purpose	Cassette 2 paper sensor (LCPD)		
(+) lead (–) lead	J306-9 J306-8		
Check: Operation is normal if the meter needle swings to the right	Remove the lower cassette with the copier in STANDBY, move the arm up and down manually. • Arm raised: voltage approx. 0.6V • Arm lowered: voltage approx. 0V		

COPYRIGHT © 1999 CANON INC.
CANON NP6320 REV.0 DEC. 1999 PRINTED IN JAPAN (IMPRIME AU JAPON)

III. IMAGE TROUBLESHOOTING

A. Initial Check

1. Checking the Installation Environment

a. The line voltage should be within 10% of the voltage on the rating plate.
b. The copier should not be installed in a hot or humid location (such as near a water faucet or humidifier), a cold area, near an open flame, or in a dusty location.
c. Do not install the copier in a location where ammonia gas is generated. (diazo copiers, etc.)
d. Do not install the copier in direct sunlight. If such a location is unavoidable, install curtains or other means to block out sunlight.
e. Install the copier in a well-ventilated location.
f. Install the copier where it can be set level.

2. Check the Original

Determine if the trouble is due to the original or a malfunction of the copier.

a. The copy density lever should normally be set to 4.5 ± 1.5.
b. Check if the original has a background color, such as yellow, which causes poor contrast.
c. Check the density of the original.

Examples:

Originals which are diazo copies or transparent originals ... Copies are likely to be mistakenly judged as being foggy.
Pencil originals ... Copies are likely to be mistakenly judged as having a light image.

3. Check the Copyboard Cover or the Copyboard Glass

If the cover or glass is dirty, clean it with a mild detergent or with alcohol. If there is damage, replace the damaged part.

4. Check Corona Assemblies

a. Check for dirt on the corona assemblies or abnormalities (such as scratches) on the corona wires.
b. Clean the corona wires and shield plates of each corona assembly. (Replace the wires if the dirt cannot be removed.)
c. Ensure that each corona assembly is installed correctly.
d. Make sure that the corona wire tension springs are not rusted.

5. Check the Transfer Feed Guides

If the transfer guides or feed guides are dirty, clean them with a damp cloth.

6. Check the Fixing Assembly

7. Check the Static Charge Eliminator

COPYRIGHT © 1999 CANON INC.
CANON NP6320 REV.0 DEC. 1999 PRINTED IN JAPAN (IMPRIME AU JAPON)

8. Check the Copy Paper

a. Is copy paper recommended by Canon being used?
b. Has the copy paper absorbed moisture? Open a new package of copy paper and make copies; then, compare the copies.

9. Others

When a copier is brought in to a warm room from a warehouse or other cold area in winter, particularly when it is being installed, condensation may form inside the copier and cause various problems.

Examples of problems:

a. The copy image may become light due to condensation in the scanner (lens, mirrors, etc.).
b. The drum may be cold (the electrical resistance of the OPC will be high), causing the contrast to be low.
c. Current leakage from the coronas may occur.
d. Paper may jam or fail to be fed satisfactorily due to condensation on the pick-up and delivery guide plates.
e. The friction of the lower manual feed paper pick-up roller may be reduced, resulting in unsatisfactory paper pick-up.

If condensation occurs in the copier, switch the copier ON and leave it to stand for 10 to 20 minutes.

If a cartridge in its original sealed wrapping is taken from a cold place to a warm place and then immediately unwrapped, condensation may form on it, resulting in image problems. To prevent this, instruct the customer to leave the cartridge sealed in the room for a sufficient period to allow it to reach the temperature of the room (between one and two hours) before unwrapping it.

Note:

When defects such as uneven density (differences in the density on the near and far sides of the copy), lightness or fogging occurs, first make the adjustments outlined in “Basic image Adjustment Procedures.”

COPYRIGHT © 1999 CANON INC.
CANON NP6320 REV.0 DEC. 1999 PRINTED IN JAPAN (IMPRIME AU JAPON)

COPYRIGHT © 1999 CANON INC.
CANON NP6320 REV.0 DEC. 1999 PRINTED IN JAPAN (IMPRIME AU JAPON)

B. Image Fault Samples

Note: The samples are created intentionally. The NA-3 Test Sheet was copied in the direct mode in A3 and printed with a reduction of about 19%; actual images may be somewhat different.

1. The copy is too light (halftone only).

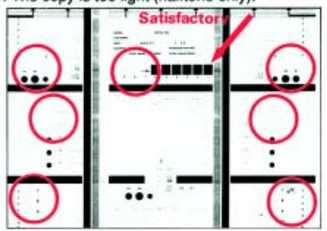

2. The copy is too light (both halftone and solid black).

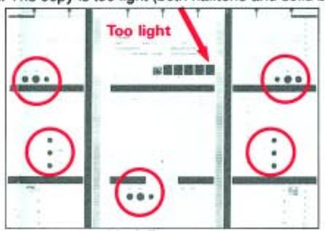

3. The copy is too light (entire copy, appreciably).



4. The copy has uneven density (darker along front).

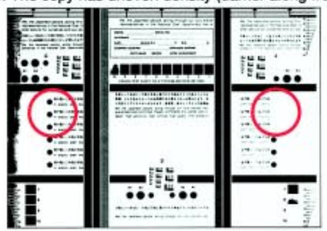

5. The copy has uneven density (lighter along front).

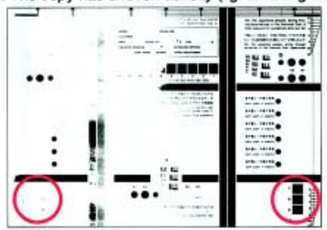

6. The copy is foggy (entire copy).

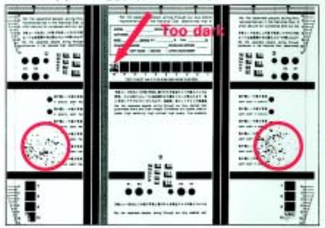

7. The copy is foggy (feeding direction).

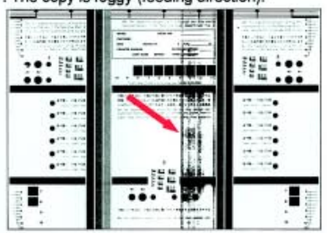

8. The copy has black lines (feeding direction, fuzzy, thick).

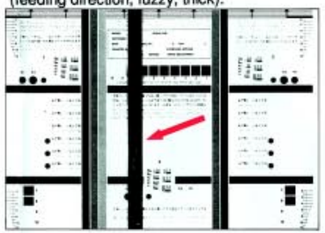

9. The copy has black lines (feeding direction, fine).

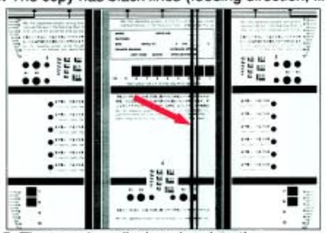

10. The copy has white strips (feeding direction).†

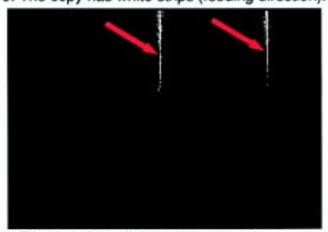

11. The copy has white lines (feeding direction).*

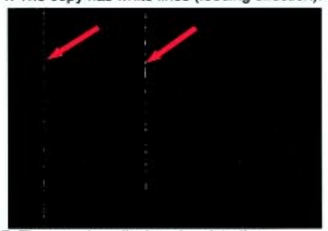

12. The copy has white strips (cross-feeding direction).

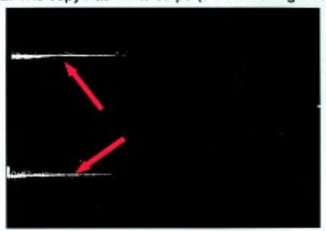

13. The back of the copy is soiled.

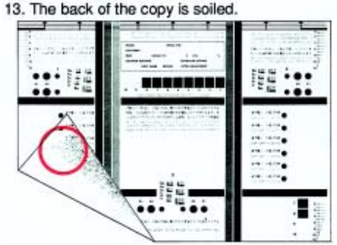

14. The copy has poor fixing.

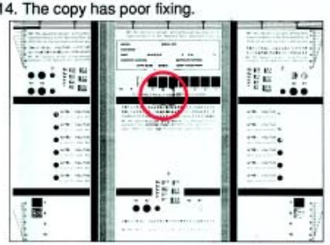

15. The copy has displaced registration (leading edge, extremely excessive margin).

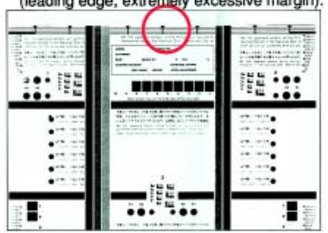

16. The copy has displaced registration (leading edge, excessive margin).

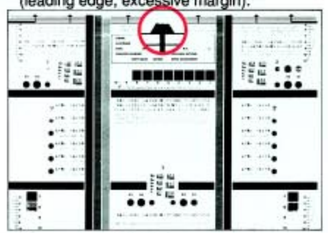

17. The copy has displaced registration (leading edge, no margin).

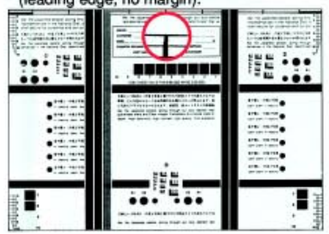

18. The copy has blurred images.

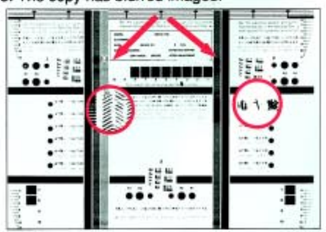

19. The copy is foggy (cross-feeding direction).

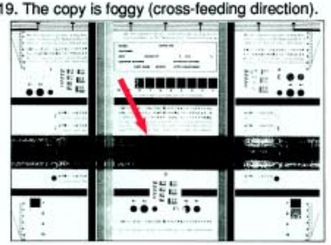

20. The copy has poor sharpness.

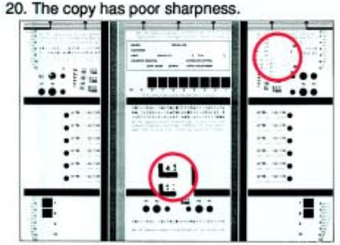

21. The copy is blank.

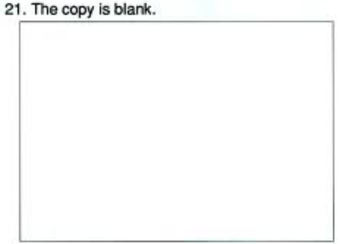

22. The copy is solid black.



* Copies made with the copyboard lifted; faults may also appear on normally made copies.

† Strips may vary in width.

COPYRIGHT © 1999 CANON INC.

CANON NP6320 REV.0 DEC. 1999 PRINTED IN JAPAN (IMPRIME AU JAPON)

C. Troubleshooting of Image Faults

1. Light image (halftone areas only)

Cause	Step	Checks	YES/ NO	Action
	1	Does the image quality improve after the Basic Adjustment Procedure is followed?	YES	End.
AE adjustment	2	Is the image lighter when a copy is made using AE?	YES	Perform AE adjustment.
Black developing assembly	3	Is the image lighter when a copy is made using a black developing assembly?	YES	Check that J39-1 and J39-4 of the black developing assembly are connected by a jumper wire. If they are not, connect them.
Lens, Dustproofing glass	4	Is the image quality improved after the lens, dust proofing glass, and mirror are cleaned?	YES	End.
Photosensitive drum			NO	Replace the drum unit.

COPYRIGHT © 1999 CANON INC.
CANON NP6320 REV.0 DEC. 1999 PRINTED IN JAPAN (IMPRIME AU JAPON)

2. Light image (even in dark areas)

3. Light image (very light overall)

Cause		Step	Checks	YES/NO	Action
		1	Does the image quality improve after the Basic Adjustment Procedure is followed?	YES	End.
		2	Switch the copier OFF during copying and open the front door. Does the toner image on the surface of the photosensitive drum (prior to transfer) appear normal?	NO	Perform step 6 and subsequent steps.
Faulty transfer	Transfer corona assembly	3	Are the corona and grid wires of the transfer corona assembly installed correctly, and is the corona wire height normal?	NO	1. Install the corona wires correctly. 2. Adjust the height of the corona wires. 3. Clean the corona wire. 4. Install the corona assembly securely.
	Copy paper	4	Does the image become darker when fresh copy paper is used?	YES	1. The paper may have absorbed moisture, so instruct the user about the correct method of storing paper. 2. Explain to the user that if paper not recommended by Canon is being used, the image quality may not be as expected.
	• Lower transfer assembly guide plate • Varistor	5	Is the resistance between the metal part of the lower transfer guide and the feeder 0Ω?	YES	1. Check if the lower transfer assembly guide plate is touching the spring of the feeder. 2. Replace the varistor.
	• High-voltage transformer • DC controler PCB			NO	Check the high-voltage transformer and the DC controller PCB.
Developing defect	Developing unit pressure applying mechanism	6	Is the developing roller of the developing assembly pressing against the photosensitive drum?	NO	Check the pressure applying mechanism of the developing assembly.
	Amount of toner in developing assembly	7	Is the surface of the developing cylinder coated uniformly with toner?	NO	If the problem is in the black developing assembly, see sub-section "Add Toner indicator does not go ON."
	Developing bias			YES	Check if the developing bias is being supplied to the developing cylinder.

COPYRIGHT © 1999 CANON INC.
CANON NP6320 REV.0 DEC. 1999 PRINTED IN JAPAN (IMPRIME AU JAPON)

4. Uneven density (front side dark)

5. Uneven density (front side light)

Cause	Step	Checks	YES/ NO	Action
Primary corona wire height	1	Does the image quality improve after the basic adjustment procedure is followed?	YES	End.
Developing assembly	2	Is the spacer roller of the developing assembly pressing against the photosensitive drum?	NO	Check the pressure applying mechanism of the developing assembly.
Dirt on the scanner	3	Does the image improve after the scanning lamp, reflectors, side reflectors, lens and dust-proofing glass are cleaned?	YES	End.
Pre-exposure lamp unit	4	Do the pre-exposure lamps go ON during copying?	NO	1. Replace the pre-exposure lamp unit. 2. Replace the DC controller PCB.
Developing assembly	5	Is the surface of the developing cylinder coated uniformly with toner?	NO	1. Clean the edge of the blade of the developing assembly. 2. If the problem is in the black developing assembly, wipe the surface of the developing cylinder with a dry cloth.
Corona assembly and copy paper			YES	1. Clean all the corona wires once more; then, recheck the position of each corona wire. 2. Try changing the copy paper.

COPYRIGHT © 1999 CANON INC.
CANON NP6320 REV.0 DEC. 1999 PRINTED IN JAPAN (IMPRIME AU JAPON)

6. Fogging (overall)

Cause	Step	Checks	YES/NO	Action
	1	Does the image quality improve after the basic adjustment procedure is followed?	YES	End.
Dirt on the scanner	2	Does the image improve after the scanning lamp, reflectors, mirrors, lens and dust-proofing glass are cleaned?	YES	End.
Pre-exposure lamps	3	Do the pre-exposure lamps go ON during copying?	NO	1.Replace the pre-exposure lamp unit. 2.Replace the DC controller PCB.
DC controller PCB	4	Set the meter to the 30VDC range and measure the voltage between J307-6 (+) and J307-7 (–) of the DC controller PCB. Is the voltage 10V or less during copying and approx. 20V at other times?	NO	Replace the DC controller PCB.
High-voltage transfomer	5	Is the voltage between J307-5 (+) and J307-7 (–) of the DC controller PCB approx. 0.6V during copying and approx. 14V at other times?	YES	1.Replace the high-voltage transformer. 2.Replace the drum unit.
DC controller PCB			NO	Replace the DC controller PCB.

7. Fogging in paper feed direction

8. Dark lines (broad lines in paper feed direction)

Cause	Step	Checks	YES/NO	Action
Primary corona assembly	1	Does the image quality improve after the primary corona wires, grid wires, and corona frame are cleaned?	YES	End.
Scanner	2	Does the image quality improve after the scanning lamp, reflectors, lens mirrors, and dust-proofing glass are cleaned?	YES	End.
Pre-exposure lamps	3	Are the pre-exposure lamps brighter after they are cleaned?	YES	End.
Feed roller			NO	Clean the feed roller below the developing unit.

COPYRIGHT © 1999 CANON INC.
CANON NP6320 REV.0 DEC. 1999 PRINTED IN JAPAN (IMPRIME AU JAPON)

9. Dark lines (thin lines in paper feed direction)

Cause	Step	Checks	YES/ NO	Action
	1	Press the Copy Start key and switch the copier OFF to stop the paper on the feeder. Are there black lines on the copy image before the paper passes through the fixing assembly?	NO	Check from step 3.
Photosensitive drum	2	Are there any scratches or black lines around the circumference of the photosensitive drum? (In the case of black lines on the drum surface, do the black lines on copies disappear when the lines are gently wiped off the drum surface with a piece of flannel?)	YES	Replace the drum unit. (If there are scratches, find out what is causing them before replacing the drum unit.)
Developing system, Exposure system			NO	Check the developing system and exposure system.
Fixing assembly	3	Are there any scratches or black lines around the circumference of the upper fixing roller?	YES	1. Replace the upper fixing roller. 2. Check and clean the separation claws and fixing blade.
			NO	Check for dirt at the inlet of the fixing assembly.

COPYRIGHT © 1999 CANON INC.

10. White strips (in paper feed direction)

11. Narrow white lines (in paper feed direction)

Cause	Step	Checks	YES/ NO	Action
Fixing assembly	1	Press the Copy Start key with the copyboard cover open; then, switch the copier OFF to stop the copy paper on the feeder. Are there any white strips or narrow white lines on the copy image before the paper passes through the fixing assembly?	NO	1. Clean the upper and lower inlet guides of the fixing assembly. 2. Check the upper fixing roller. 3. Check and clean the separation claws.
Primary corona assembly	2	Does the image improve after the corona wires, grid plate and frame of the primary corona assembly are cleaned?	YES	Wipe the corona wires with dry lint-free paper; then, clean them with alcohol. If the dirt will not come off, replace the corona wires.
Developing assembly	3	Is the surface of the developing cylinder coated uniformly with toner?	NO	If the trouble is in the black developing assembly, check the edge of the blade. If there is no toner in the developing assembly, see the subsection "Add Toner indicator does not go ON."
Copy paper	4	Does the image improve when fresh copy paper is used?	YES	The paper may be absorbing moisture, so instruct the user about the correct method of storing paper.
Photosensitive drum	5	Are there any scratches around the circumference of the photosensitive drum?	YES	Replace the drum unit. (Find out the cause of the scratches on the drum.)
Light from outside			NO	Check if outside light is striking the photosensitive drum.
Transfer corona assembly	6	Does the image improve after the corona wires and frame of the transfer corona assembly are cleaned?	YES	End.
Static charge eliminator			NO	Clean the static charge eliminator.

COPYRIGHT © 1999 CANON INC.
CANON NP6320 REV.0 DEC. 1999 PRINTED IN JAPAN (IMPRIME AU JAPON)

12. White strips (in cross feed direction)

Cause	Step	Checks	YES/ NO	Action
Developing assembly	1	Do the white strips occur at intervals of approx. 63mm? (scratches on developing cylinder)	YES	1. Clean the developing cylinder spacer rollers. 2. Clean the surface of the developing cylinder. 3. If there are scratches on the surface of the developing cylinder, replace the cylinder.
Photosensitive drum	2	Do the white strips occur at intervals of approx. 94mm? (scratches on the photosensitive drum)	YES	1. Clean the drum. 2. If the drum is scratched, replace it.
Copy paper	3	Does the image become darker when fresh copy paper is used?	YES	The paper may be absorbing moisture, so instruct the use about the correct method of storing paper.
Scanner rail, Scanner cable	4	Do the white strips occur on the same part of each copy?	YES	1. Check the scanner rail for foreign matter adhering to it. 2. Adjust the tension of the scanner drive cable.
Dirt on the corona wires			NO	Clean each corona assembly (wires and frame).

COPYRIGHT © 1999 CANON INC.
CANON NP6320 REV.0 DEC. 1999 PRINTED IN JAPAN (IMPRIME AU JAPON)

13. Toner marks on back of copy paper

Cause	Step	Checks	YES/NO	Action
	1	Press the Copy Start key, and switch the copier OFF while the copy paper is on the feeder. Are there any toner marks on the back of the copy paper?	NO	Check from step 3.
Developing assembly	2	Do the toner marks occur at intervals of approx. 50mm?	YES	1. Clean the registration rollers and transfer assembly guide. 2. Check if toner is leaking from the developing assembly.
Fixing assembly	3	Are the upper and lower fixing rollers dirty?	YES	1. Clean the upper and lower fixing rollers. 2. Check if the oiling roller is soiled with toner. If the dirt is excessive, replace it.
			NO	Clean the copy delivery rollers, separation claws, and fixing assembly paper guide.

14. Faulty fixing

Cause	Step	Checks	YES/NO	Action
Upper and lower developing rollers	1	Is faulty fixing occurring in the feed direction of the paper?	YES	Check for scratches on the upper and lower fixing rollers.
Fixing roller heater (H1)	2	Does the fixing roller heater (H1) go ON immediately after the copier is switched ON?	NO	Refer to the sub-section "Fixing roller heater does not operate."
Lower fixing roller pressure	3	Is the nip width within the standard?	NO	Adjust the lower fixing roller pressure.
Copy paper			YES	Check if the recommended paper is being used. If the results are satisfactory when the recommended paper is used, instruct the user to use it.

COPYRIGHT © 1999 CANON INC.
CANON NP6320 REV.0 DEC. 1999 PRINTED IN JAPAN (IMPRIME AU JAPON)

15.

16. Faulty leading edge registration

17.

Cause	Step	Checks	YES/NO	Action
Original	1	Is the original set correctly?	NO	Set the original correctly.
Copier paper	2	Is copy paper recommended by Canon being used?	NO	Check if the recommended paper is being used. If the results are satisfactory, recommend that the customer use it.
Pick-up roller	3	Is the pick-up roller soiled by paper dust, etc.?	YES	1. Clean the pick-up roller. 2. Check the total number of sheets picked up by the pick-up roller. If it has reached 90,000, replace the pick-up roller.
Registration adjustment	4	Does the copy improve when registration is adjusted? (leading edge blank area)	YES	End.
Registration rollers, Registration roller clutch	5	Set the meter to the 30VDC range and measure the voltage between J308-3 (+) and J308-4 (–) of the DC controller PCB. Is the voltage 24V or less during copying and approx. 0V at other times?	YES	1. Check the registration rollers for deformation and wear. 2. Check the wiring from the DC controller PCB to the registration roller clutch. If it is normal, replace the registration roller clutch.
DC controller PCB			NO	Replace the DC controller PCB.

COPYRIGHT © 1999 CANON INC.
CANON NP6320 REV.0 DEC. 1999 PRINTED IN JAPAN (IMPRIME AU JAPON)

18. Blurred image

Cause	Step	Checks	YES/ NO	Action
Scanner drive cable	1	Does the cable overlap as it winds around the drive capstan while the scanner is moving? Is the tension of the cable alternately too slack and too tight?	YES	1. Re-tension the cable. 2. Replace the drive cable if it is twisted or frayed.
Scanner system rail	2	Does the scanner move smoothly when it is pushed gently by hand?	NO	Clean the scanner rails with alcohol; then, apply a small quantity of low-viscosity lubricating oil.
Scanner drive system	3	Is the gear of the scanner drive system missing?	YES	Replace the gear.
Photosensitive drum	4	Does the blurring occur at intervals of approx. 95mm?	YES	1. Check the drum drive gear. 2. Check the ends of the drum (where the spacer rollers contact it) for scratches or projections.
Developing gear	5	Does the blurring occur at intervals of approx. 63mm?	YES	Check the developing assembly.
Drum drive system			NO	Check the drum drive unit.

19. Broad dark lines in cross feed direction

Cause	Step	Checks	YES/ NO	Action
	1	Are the dark lines always in the same position when Direct copies are made?	YES	Check from step 4.
Scanning lamp Lamp regulator	2	Does the scanning lamp flicker when the scanner is moving forward?	YES	Check the scanning lamp and lamp regulator.
Black developing unit	3	Is there any difference in the broad dark lines on a black copy compared with on a color copy?	YES	Check the toner coating on the developing cylinder of the developing assembly in which the problem occurs.
Scanner blurring	4	Does the position of the dark lines change on a Reduce copy as compared with a Direct copy?	YES	Check the scanner.
Paper feeder blurring			NO	Check the paper feeder.

COPYRIGHT © 1999 CANON INC.
CANON NP6320 REV.0 DEC. 1999 PRINTED IN JAPAN (IMPRIME AU JAPON)

20. Unsharp (unforcussed) image

Cause	Step	Checks	YES/ NO	Action
Original	1	Is the original lying flat on the glass?	NO	1. Check if the copyboard cover is wrapped. 2. Explain to the user how to place the original on the copyboard.
Copyboard glass	2	Is any oil or other substance adhering to the copyboard glass?	YES	Clean the copyboard glass.
Lens drive assembly	3	Set the power switch OFF and then ON again. Does the lens move smoothly?	NO	Check the lens drive unit.
Mirror position	4	Is the horizontal reproduction ratio within the standard for a Direct copy?	NO	Adjust the distance between the No.1 mirror mount and the mirror 2 mount.
Dirt on the scanner			YES	Clean the scanning lamp, reflectors, mirrors, lens, and dust-proofing glass.

21. Blank image

Cause	Step	Checks	YES/ NO	Action
Drum unit	1	Is the drum unit inserted?	NO	Insert the drum unit.
Developing assembly	2	Is the developing assembly inserted?	NO	Insert the developing assembly.
Drum drive unit	3	Does the photosensitive drum rotate during copying?	NO	1. Check if the photosensitive drum rotates smoothly. 2. Check the drum drive unit.
DC controller PCB	4	Set the meter to the 30VDC range and measure the voltage between J307-1 (+) (GRDON) and J307-7 (–) of the DC controller PCB. Is the voltage approx. 15V when the scanner is advancing and 0V at other times?	NO	Replace the DC controller PCB.
High-voltage transformer (HVT)			YES	Replace the high-voltage transformer (HVT).

COPYRIGHT © 1999 CANON INC.
CANON NP6320 REV.0 DEC. 1999 PRINTED IN JAPAN (IMPRIME AU JAPON)

22. Black image

Cause	Step	Checks	YES/ NO	Action
	1	Does the scanning lamp go ON during copying?	NO	Check according to "Scanning lamp does not go ON."

COPYRIGHT © 1999 CANON INC.
CANON NP6320 REV.0 DEC. 1999 PRINTED IN JAPAN (IMPRIME AU JAPON)

IV. OPERATION TROUBLESHOOTING

A. Troubleshooting of Malfunction

1. “E000” indication

Cause	Step	Checks	YES/ NO	Action
	1	Clear ‘E000’. Open the front cover and the delivery cover, insert the door switch actuator into the door switch unit, and put paper into the delivery sensor unit. Does the fixing heater go ON as soon as the power is turned ON? (Check by the naked eye.)	NO	See “The fixing heater fails to operate.”
Thermistor (TH1)	2	Turn the power OFF, open the delivery cover, and cool the fixing heater. Set the meter to the 12 VDC range, and connect its probes to J318-4 (+; MAIN-TH) and -3 (–) on the DC controller PCB. Close the delivery cover, and turn the power ON; does the voltage lower from 5V gradually?	NO	Check the wiring between the thermistors and the DC controller PCB; if normal, replace the thermistors.
Thermistors (position)	3	Are the thermistors evenly in contact with the upper fixing roller?	NO	Re-mount the thermistors.
Thermistors (dirt)	4	Clean the contact face of the thermistors. Is the probelm corrected?	YES	End.
Thermistors	5	Replace the thermistors. Is the problem corrected?	YES	End.
DC controller PCB			NO	Replace the DC controller PCB.

2. “E001” indication

Cause	Step	Checks	YES/ NO	Action
	1	Cancel the E001 indication. Does the fixing roller heater (H1) go ON immediately after power is switched ON?	NO	Refer to the sub-section "Fixing roller heater does not operate."
Thermistors (TH1/TH2)	2	Does the problem disappear when the thermistors (TH1/TH2) are replaced?	YES	End.
DC controller PCB, DC Power supply PCB			NO	Replace the power supply PCB or the DC controller PCB.

COPYRIGHT © 1999 CANON INC.
CANON NP6320 REV.0 DEC. 1999 PRINTED IN JAPAN (IMPRIME AU JAPON)

3. “E010” indication

Cause	Step	Checks	YES/ NO	Action
Wiring	1	Is the wiring between the main motor and the DC controller PCB correct?	NO	Correct the wiring.
Motor driving mechanism	2	Is the mechanism (the gear and the timing belt) driven by the main motor normal?	NO	Correct the mechanism.
Main motor	3	Replace the main motor. Is the error cleared?	YES	End.
			NO	Replace the DC controller PCB.

4. “E030” indication

Cause	Step	Checks	YES/ NO	Action
	1	Does the total counter operate normally?	NO	Refer to the sub-section "Counter does not operate."
DC controller PCB			YES	Replace the DC controller PCB.

5. “E202” indication

Cause	Step	Checks	YES/ NO	Action
	1	Set the power switch OFF, remove the copyboard glass, and move the scanner fully to the right manually. Switch the power ON. Does the scanner reverse?	NO	Refer to the sub-section "Scanner does not move."
	2	Set the power switch OFF and move the scanner fully to the left manually. Switch the power ON. Does the scanner advance very slightly after the lens moves?	NO	Refer to the sub-section "Scanner does not move."
Scanner home position sensor (Q3)	3	Is the scanner home position sensor (Q3) normal? (See p. 10-19.)	NO	Check the wiring from the DC controller PCB to Q3. If it is normal, replace the scanner home position sensor (Q3).
DC controller PCB			YES	Replace the DC controller PCB.

COPYRIGHT © 1999 CANON INC.
CANON NP6320 REV.0 DEC. 1999 PRINTED IN JAPAN (IMPRIME AU JAPON)

6. “E210” indication

Cause	Step	Checks	YES/NO	Action
	1	Switch the power ON. Does the lens move to the left?	YES	Check from step 2.
			NO	Refer to the sub-section "Lens does not move."
Lens home position sensor (Q4)	2	Is the lens home position sensor (Q4) functioning normally? (See p. 10-19.)	NO	Check the wiring between the DC controller PCB and Q4. If it is normal, replace Q4.
DC controller PCB			YES	Replace the DC controller PCB.

7. “E220” indication

Cause	Step	Checks	YES/NO	Action
Scanning lamp (LA1)	1	Check if the scanning lamp (LA1) does not light when copying.	YES	Refer to the sub-section "Scanning lamp does not light."
DC controller PCB	2	Check if the scanning lamp (LA1) lights when copier is in standby.	YES	Replace the DC controller PCB.
Lamp regulator PCB			NO	Replace the lamp regulator PCB.

8. “E240” indication

Cause	Step	Checks	YES/NO	Action
DC controller PCB	1	Does the problem disappear when the DC controller PCB is replaced?	YES	End.

9. “E261” indication

Cause	Step	Checks	YES/NO	Action
Power supply PCB	1	Does the problem disappear when the power suply PCB is replaced?	YES	End.
DC controller PCB			NO	Replace the DC controller PCB.

COPYRIGHT © 1999 CANON INC.
CANON NP6320 REV.0 DEC. 1999 PRINTED IN JAPAN (IMPRIME AU JAPON)

10. “E400” indication

Cause	Step	Checks	YES/ NO	Action
	1	Does the problem disappear when the power is switched OFF and then ON again?	YES	End. (Check the wiring between the DC controller and the ADF controller.)
Circuit breaker (CB2)	2	Does the problem disappear when circuit beaker CB2 on the ADF controller PCB is pressed?	YES	End. (Be sure to determine why CB2 went OFF.)
	3	Set the meter to the 12VDC range, then connect the (+) lead to J10-3 and the (–) lead to J10-2 of the ADF controller PCB. Is the voltage approx. 5V?	YES	Check from step 6.
3-terminal (5V) power supply	4	Set the meter to the 30VDC range, then connect the (+) lead to J9-1 and the (–) lead to J9-2 of the ADF controller PCB. Is the voltage approx. 24V?	YES	Check the continuity through the circuit breaker (CB2). If it is normal, replace the 3-terminal (5V) power supply.
Power supply PCB	5	Set the meter to the 30VDC range, then connect the (+) lead to J112-1 and the (–) lead to J112-4. Is the voltage approx. 24V?	NO	Replace the power supply PCB.
Wiring			YES	Check the wiring from the AC driver/DC power supply to the ADF controller.
DC controller PCB	6	Does the problem disappear when the DC controller PCB or ADF controller PCB is replaced?	YES	End.
ADF controller PCB			NO	Replace the cable between the DC controller PCB and the ADF controller PCB.

COPYRIGHT © 1999 CANON INC.
CANON NP6320 REV.0 DEC. 1999 PRINTED IN JAPAN (IMPRIME AU JAPON)

11. "E500" indication

Cause	Step	Checks	YES/ NO	Action
Wiring	1	Does the problem disappear when the power is switched OFF and then ON again?	YES	End. (Check the wiring between the DC controller PCB and the sorter controller PCB.)
Circuit breaker (CB1)	2	Does the problem disappear when circuit breaker CB1 on the sorter controller PCB is reset?	YES	End. (Be sure to determined the reason why CB1 tripped.)
Power supply PCB	3	Set the meter to the 30VDC range, then connect the (+) lead to J2-1 and the (–) lead to J2-3 of the sorter PCB. Is the voltage approx. 24V?	NO	Replace the power supply PCB.
Communications cable	4	Set the meter to the x10kΩ range. Is there continuity between the sorter controller PCB and the DC controller PCB?	YES	Check if the cable between the sorter controller PCB and the DC controller PCB is connected correctly. If it is normal, replace the sorter controller PCB.
			NO	Replace the communications cable.
DC controller PCB, Sorter controller PCB	5	Does the problem disappear when the DC controller PCB or the sorter controller PCB is replaced?	YES	End.

12. "E802" indication

Cause	Step	Checks	YES/ NO	Action
Wiring	1	Is the wiring between J313-6 and -7 on the DC controller PCB and the power switch normal?	NO	Correct the wiring.
Power switch (SW1)	2	Check the power switch operation by hand. Is it smooth?	NO	Replace the switch.
DC controller PCB			YES	Replace the DC controller PCB.

Note

You can check the automatic shut-off operation by service mode C20.

COPYRIGHT © 1999 CANON INC.
CANON NP6320 REV.0 DEC. 1999 PRINTED IN JAPAN (IMPRIME AU JAPON)

13. AC power is not supplied

Cause	Step	Checks	YES/ ON	Action
Power plug	1	Is the power cord plugged into the outlet?	NO	Plug it in.
Door switch	2	Are the front door and the copy delivery cover closed completely?	NO	Close the door or the cover.
Line power	3	Is line voltage being supplied to the power outlet?	NO	Explain to the user that the problem is not in the copier.
	4	Is line voltage present between J101-1 and J101-2?	YES	Check from step 6.
Circuit breaker (CB1)	5	Check the continuity between the terminals of the circuit breaker (CB1). Is the resistance 0Ω?	NO	Press the button on the circuit breaker; then, check continuity again. If the resistance is still not 0Ω, replace the circuit breaker (CB1).
Power cord			YES	Check the power cord.
Door switch (DS1)	6	Check the continuity between the terminals of the door switch (DS1). Is the resistance 0Ω when the actuator is pressed, and ∞ when the actuator is released?	NO	Replace the door switch (DS1).
Power switch (SW1)	7	Check the continuity between the terminals 1 and 2 of the power switch (SW1). Is the resistance 0Ω when the switch is “ON” and infinite when “OFF”?	NO	Replace the power switch (SW1).
Wiring			YES	Check the AC power line wiring and connectors.

COPYRIGHT © 1999 CANON INC.
CANON NP6320 REV.0 DEC. 1999 PRINTED IN JAPAN (IMPRIME AU JAPON)

14. DC power is not supplied

<table>
<tr><th>Cause</th><th>Step</th><th>Checks</th><th>YES/ NO</th><th>Action</th></tr>
<tr><td>Overcurrent protection circuit</td><td>1</td><td>Does the problem disappear when the copier is switched OFF and then ON again?</td><td>YES</td><td>End. (Be sure to find out why the protection circuit operated.)</td></tr>
<tr><td>AC power supply</td><td>2</td><td>Is AC line voltage present between terminals J101-1 and J101-2?</td><td>NO</td><td>See sub-section "AC power is not supplied."</td></tr>
<tr><td>Power supply PCB</td><td rowspan="2">3</td><td rowspan="2">Are the following output voltages present at the various connectors on the AC driver/ DC power supply PCB shown below?
<table>
<tr><th>Range to which meter is set</th><th>Position to which (+) lead is connected</th><th>Position to which (–) lead is connected</th><th>Meter indication</th></tr>
<tr><td>50VDC</td><td>J110-1/2</td><td>J110-6</td><td>24V</td></tr>
<tr><td>10VDC</td><td>J110-5</td><td>J110-6</td><td>5V</td></tr>
</table></td><td>NO</td><td>Replace the AC driver/ DC power supply PCB.</td></tr>
<tr><td>DC controller PCB</td><td>YES</td><td>Replace the DC controller PCB.</td></tr>
</table>

COPYRIGHT © 1999 CANON INC.

15. Drum does not rotate

Cause	Step	Checks	YES/ NO	Action
Drum unit	1	Does the drum rotate when it is properly installed?	NO	End.
Torque limiter	2	Is copy paper or other foreign matter jammed between the drum and the cleaning unit?	YES	Remove the foreign matter.
Drive belt	3	Is the drive belt installed correctly?	NO	Install the belt correctly.
Drum drive unit			YES	Remove and check the drum drive unit. Repair or replace the unit.

16. Paper is not picked up from cassette

Cause	Step	Checks	YES/ NO	Action
	1	Does the indicator remain ON?	YES	Refer to the sub-section "Indicator does not go OFF."
Drive belt	2	Is the drive belt installed correctly?	NO	Install the belt correctly.
	3	Is the leading edge of the copy paper reaching the registration rollers?	YES	Refer to the sub-section "Registration rollers do not rotate."
Pick-up rollers	4	Open the right door and press the lever of the right door switch (SW3) by hand. Do the paper pick-up rollers rotate when the Copy Start key is pressed? (visual check)	YES	Check or replace the pick-up rollers.
Spring clutch	5	Does the pick-up clutch solenoid (SL1/ SL6) operate when the Copy Start key is pressed?	YES	Check the position of the solenoid. If it is normal, check the spring clutch and control ring. Replace any necessary parts.
Pick-up clutch solenoid (SL1/ SL6)	6	Switch the copier OFF and disconnect connector J308 on the DC controller PCB. Set the meter to the 1kΩ range, measure the resistance between the the following connectors (attached to solenoid wiring). Is resistance approx. 165Ω.	NO	Check the wiring from the pick-up clutch solenoid (SL1/SL6) to the DC controller PCB. If it is normal, replace SL1 or SL6.
DC controller PCB			YES	Replace the DC controller PCB.

SL 1	J308-5 and J308-6
SL 6	J308-1 and J308-2

COPYRIGHT © 1999 CANON INC.
CANON NP6320 REV.0 DEC. 1999 PRINTED IN JAPAN (IMPRIME AU JAPON)

17. Paper is not picked up from multifeeder

Cause	Step	Checks	YES/ NO	Action
Sensor arm	1	Is the arm of the pre-registration paper sensor (Q2) broken? Does it move smoothly?	NO	Replace the sensor arm.
Pre-registration paper sensor (Q2)	2	Is the pre-registration paper sensor (Q2) functioning normally?	NO	Replace the pre-registration paper sensor (Q2).
Multifeeder clutch (CL2)	3	Disconnect J312 on the DC controller PCB. Set the meter to the 1kΩ range. Connect the leads to J312-9 and J312-10 of part of J312 connected to the wiring. Is the resistance approx. 155Ω?	NO	Check the wiring from J312 to CI2. If it is normal, replace multifeeder clutch (CL2).
	4	Is the leading edge of the copy paper reaching the registration rollers?	YES	Refer to the sub-section "Registration rollers do not turn."
Gears	5	Are all drive gears from the main motor (M1) to the pre-registration rollers normal?	NO	Re-install or replace the gears.
DC controller PCB			YES	Replace the DC controller PCB.

18. Registration rollers do not rotate

Cause	Step	Checks	YES/ NO	Action
Belts and gears	1	Are the belts and gears from the main motor (M1) to the registration roller clutch (CL1) normal?	NO	Re-install or replace any belts or gears.
Registration roller clutch (CL1)	2	Disconnect J308 on the DC controller PCB. Set the meter to the 1kΩ range. Connect the leads to J308-3 and J308-4 of part of J308 connected to the wiring. Is the registance approx. 120Ω?	NO	Check the wiring from J308 to CL1. If it is normal, replace the registration roller clutch (CL1).
DC controller PCB	3	Connect J308 to the DC controller PCB. Set the meter to the 30VDC range. Connect the (+) lead to J308-3 and the (–) lead to J308-4. Press the Copy Start key. Does the voltage change from 0V to about 24V?	NO	Replace the DC controller PCB.
			YES	Do the registration rollers or drive gears interfere with other parts? Remove parts as necessary.

COPYRIGHT © 1999 CANON INC.
CANON NP6320 REV.0 DEC. 1999 PRINTED IN JAPAN (IMPRIME AU JAPON)

19. Scanner does not move

Cause	Step	Checks	YES/ NO	Action
Drive cable	1	Is the scanner drive cable installed correctly?	NO	Install the cable correctly.
Foreign object in the path of the scanner	2	Switch the copier OFF, hold the back of the scanner and move it back and forth. Does it move smoothly?	NO	Check for dirt or foreign matter on the scanner rails or some object that is touching the scanner. If necessary, clean, lubricate, or repair.
Gears	3	Is the scanner pulley engaged with the interruption gear? (See Figure 10-401.)	NO	Check if the spring that lifts the interruption gear, the interruption gear, or the scanner pulley is damaged. Adjust or replace any parts as necessary.
Power supply PCB	4	Set the meter to the 50VDC range. Connect the (+) lead to J110-1 and the (–) lead to J110-6 of the power supply PCB. Is the voltage approx. 24V?	NO	See "DC power is not supplied."
Scanner motor (M2)	5	Does the problem disappear when the scanner motor (M2) is replaced?	YES	End.
DC controller PCB			NO	Replace the DC controller PCB.

COPYRIGHT © 1999 CANON INC.
CANON NP6320 REV.0 DEC. 1999 PRINTED IN JAPAN (IMPRIME AU JAPON)

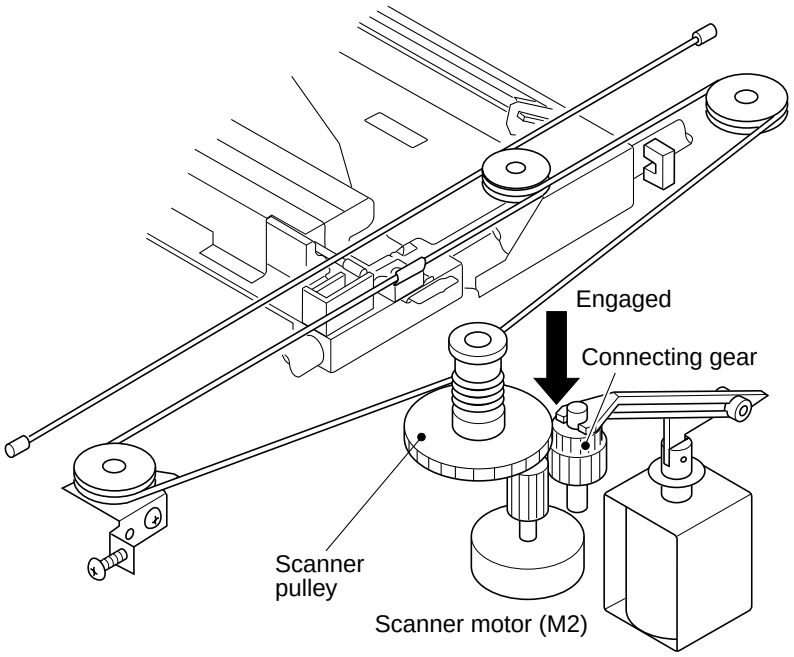

Figure10-401

COPYRIGHT © 1999 CANON INC.

20. Pre-exposure lamp does not light

Cause	Step	Checks	YES/NO	Action
Pre-exposure lamp PCB	1	Disconnect J304 from the DC controller PCB. Set the meter to the 1Ω range. Connect the leads to J304-5 and J304-6 of the part of J304 connected to the wiring. Is the resistance approx. 9Ω?	NO	Replace the pre-exposure lamp PCB.
DC controller PCB			YES	Replace the DC controller PCB.

21. Scanning lamp does not light

Cause	Step	Checks	YES/NO	Action
Lamp	1	Is the lamp installed correctly?	NO	Re-installed the lamp.
Thermal fuse (FU2)	2	Check the continuity of the thermal fuse (FU2). (Connect the leads to both ends of the fuse). Is there continuity?	NO	Replace the thermal fuse (FU2). Note: There may be trouble with the lamp not lighting normally, the fuse being installed in the wrong position, or the cooling fan not operating, so be sure to check operation after replacing the fuse.
Broken lamp filament	3	Disconnect connector J602 (2P) from the lamp regulator. Set the meter to the 1kΩ range. Connect the leads to the lamp terminals. Does the needle move?	NO	Replace the lamp.
DC controller PCB	4	Set the meter to the 50VDC range. Connect the (+) lead to J305-4 and the (–) lead to J305-2; then, press the Copy Start key. Does the voltage change from about 15V to about 0V when the lamp goes ON?	NO	Replace the DC controller PCB.
Lamp driver PCB	5	Does the lamp go ON where the lamp driver PCB is replaced?	YES	End.
Wiring			NO	Check the AC wiring from the power switch to the lamp driver and lamp, and check the DC wiring from the DC controller to the lamp driver.

COPYRIGHT © 1999 CANON INC.
CANON NP6320 REV.0 DEC. 1999 PRINTED IN JAPAN (IMPRIME AU JAPON)

22. Fixing roller heater does not operate

Cause	Step	Check	YES/ NO	Action
	1	Disconnect connector J102 (2P) from the power supply PCB. Set the meter to the 1kΩ range. Connect the leads to J102-1 and J102-2. Does the needle move?	YES	Go to step 3.
Thermoswitch (TS1)	2	Remove the fixing assembly. Connect the leads to both ends of the thermoswitch (TS1). Does the needle move?	NO	Replace the thermoswitch (TS1). Note: There may be trouble with the heater going ON, a faulty thermoswitch installed improperly, so be sure to check after replacing the thermoswitch (TS1). Also be sure to check for damage to the fixing rollers or the separation claws.
Heater (H1)	3	Connect the leads to the heater terminals. Does the needle move?	NO	Check the installation of the heater (H1). If it is normal, replace the heater.
AC line			YES	Check the AC wiring inside the fixing assembly.
DC controller PCB	4	Set the meter to the 10VDC range. Connect the (+) lead to J303-4 and the (–) lead to J303-6. Switch the power ON. Is the voltage approx. 1V?	NO	Replace the DC controller PCB.
Power supply PCB			YES	Replace the power supply PCB.

COPYRIGHT © 1999 CANON INC.

23. Lens does not move

Cause	Step	Checks	YES/ NO	Action
Lens solenoid (SL2)	1	Switch the power OFF and remove the rear cover. Set the power switch ON. Does the lens solenoid (SL2) go ON?	NO	Check the wiring from the DC controller PCB to the lens solenoid (SL2). If it is normal, replace SL2.
Lens drive cable pulley, Rails	2	Switch the power OFF. Move the lens in the enlargement and reduction directions by hand. Does the lens move smoothly?	NO	Check the lens drive cable and capstan, and rails. If necessary clean or re-install the wire.
Power supply PCB	3	See step 4 of "Scanner does not move."		
Scanner motor (M2)	4	See step 5 of "Scanner does not move."		
DC controller PCB				

24. Counter does not operate

Cause	Step	Checks	YES/ NO	Action
Counter	1	Switch the power OFF. Disconnect J313 on the DC controller PCB. Set the meter to the 1kΩ range and connect the leads to J313-1 and J313-2 of the part of J313 connected to the wiring. Does the needle move?	NO	Check the wiring betweeen the DC controller PCB and the counter. If it is normal, replace the counter.
Counter	2	Connect J313 to the DC controller PCB and set the switch ON. Set the meter to the 30VDC range and connect the (+) lead to J313-2 and the (–) lead to J313-1. Press the Copy Start key. Does the voltage change from approx. 0V to approx. 24V?	YES	Replace the counter.
DC controller PCB			NO	Replace the DC controller PCB.

COPYRIGHT © 1999 CANON INC.
CANON NP6320 REV.0 DEC. 1999 PRINTED IN JAPAN (IMPRIME AU JAPON)

25. indicator does not go ON

Cause	Step	Checks	YES/ NO	Action
Cassette size sensor PCB	1	Does the indicator remain OFF when the cassette is removed?	YES	Check the wiring from the DC controller PCB to the cassette size sensor PCB. If it is normal, replace the cassette size sensor PCB.
Multifeeder paper sensor (Q1), Cassette paper sensor (Q6, Q7)	2	Is the multifeeder paper sensor (Q1) or cassette paper sensor (Q6, Q7) performing normally? (See p.10-19.)	NO	Check the wiring from the DC controller PCB to Q1, Q6 or Q7. If it is normal, replace Q1, Q6 or Q7.
Control panel	3	Does the trouble diappear if the control panel is replaced?	YES	End.
DC controller PCB			NO	Replace the DC controller PCB.

26. indicator does not go OFF

Cause	Step	Checks	YES/ NO	Action
Cassette	1	Is the cassette pushed fully into the holder?	NO	Push the cassette fully in.
Multifeeder paper sensor (Q1), Cassette paper sensor (Q6, Q7)	2	Is the multifeeder paper sensor (Q1) or cassette paper sensor (Q6, Q7) functioning normally? (See p.10-19.)	NO	Check the wiring from the DC controller PCB to Q1, Q6 or Q7. If it is normal, replace Q1, Q6 or Q7.
DC controller PCB			YES	Replace the DC controller PCB.

COPYRIGHT © 1999 CANON INC.
CANON NP6320 REV.0 DEC. 1999 PRINTED IN JAPAN (IMPRIME AU JAPON)

27. indicator does not go ON

Cause	Step	Checks	YES/NO	Action
	1	Does the copying operation stop when a jam occurs?	YES	Continue from step 3.
Jam sensor	2	Are the following sensors functioning normally? (See p.10-19.) • Pre-registration paper sensor (Q2) • Delivery paper sensor (Q5)	NO	Replace the jam sensor.
DC controller PCB			YES	Replace the DC controller PCB.
Control panel	3	Does the trouble disappear when the control panel is replaced?	YES	End.
DC controller PCB			NO	Replace the DC contorller PCB.

28. indicator goes ON when paper feeding is normal

Cause	Step	Checks	YES/NO	Action
Jam sensor	1	Are the following sensors functioning normally? (See p. 10-19.) • Pre-registration paper sensor (Q2) • Delivery paper sensor (Q5)	NO	Replace the jam sensor.
DC controller PCB			YES	Replace the DC controller PCB.

29. indicator does not go ON when there is no toner

Cause	Step	Checks	YES/NO	Action
J39 connection	1	Is the connector J39 of the pin inside the upper front cover connected?	NO	Connect J39 securely.
Black toner level sensor (TS1)	2	Set the meter to the 12VDC range. Connect the (+) lead to J306-2 (BTEP*) and the (–) lead to J306-1 (GND) on the DC controller PCB. Is the voltage approx. 0V?	NO	Check the wiring from the DC controller PCB to TS1 and check the movement of the stirring rod inside the black developing assembly. If these are normal, replace the black toner level sensor (TS1).
Control panel	3	Does the problem disappear when the control panel is replaced?	YES	End.
DC controller PCB			NO	Replace the DC controller PCB.

COPYRIGHT © 1999 CANON INC.
CANON NP6320 REV.0 DEC. 1999 PRINTED IN JAPAN (IMPRIME AU JAPON)

30. indicator does not go OFF when there is toner

Cause	Step	Check	YES/ NO	Action
DC controller PCB	1	Does the indicator come back ON when the power switch is set OFF and then ON again?	YES	Replace the DC controller PCB.
DC controller PCB	2	Turn the power OFF, and disconnect J39. Turn the power ON, and press the Copy Start key to make any copies of the following: [1] making 7 continuous copies on A3 [2] making 9 continuous copies on A4 [3] making 5 single copies on A3 [4] making 5 single copies on A4 Press the Copy Start key once again. Does the indicator go red when any copies of the above has been made?	YES	Replace the DC controller PCB.
Stirring rod gear	3	Does the stirring rod inside the black developing assembly operate normally?	NO	Check the stirring rod and gear.
Black toner level sensor			YES	Replace the black toner level sensor (TS1).

COPYRIGHT © 1999 CANON INC.
CANON NP6320 REV.0 DEC. 1999 PRINTED IN JAPAN (IMPRIME AU JAPON)

V. TROUBLESHOOTING THE FEEDING PROBLEMS

A. Paper Jams

The main areas in this copier where jams could occur are as follows:

[1] Paper pick-up area
[2] Separation and feeder area
[3] Fixing and delivery assembly area
[4] Drum cleaner area

Troubleshooting of paper jamming is described here for each of the above areas.

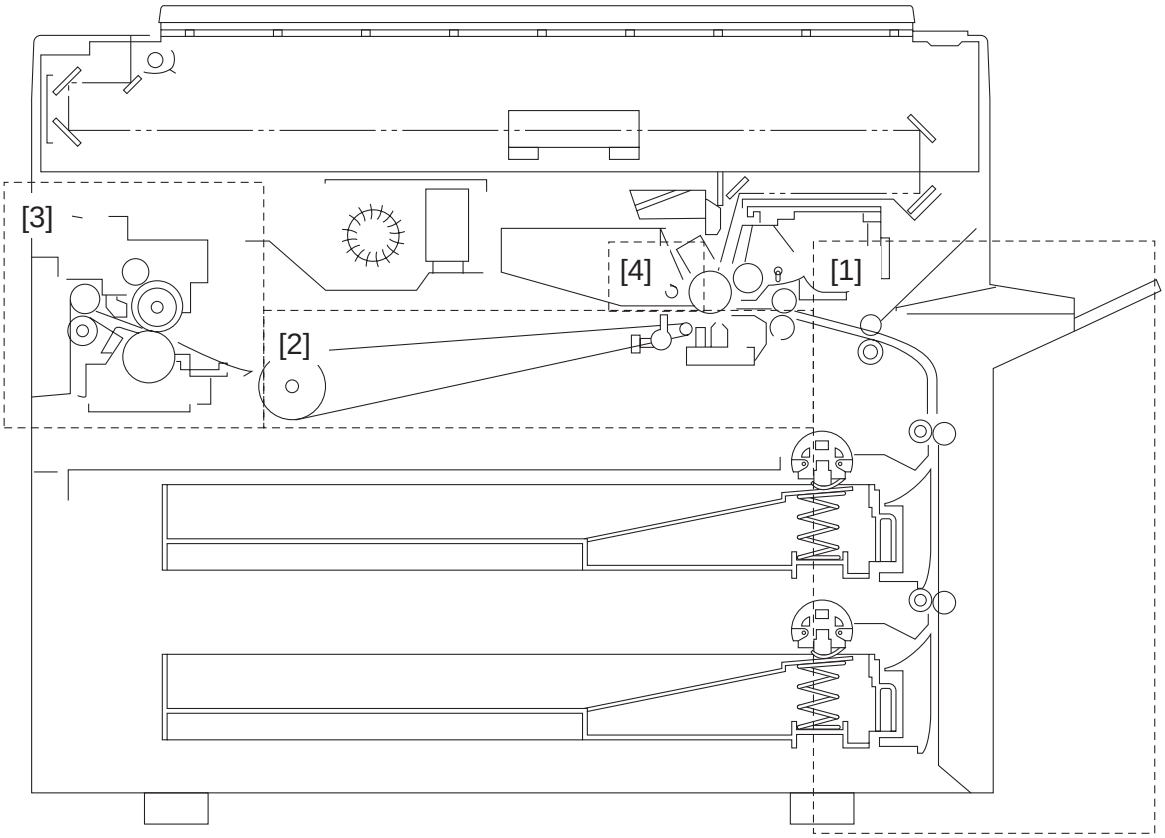

Figure 10-501

COPYRIGHT © 1999 CANON INC.
CANON NP6320 REV.0 DEC. 1999 PRINTED IN JAPAN (IMPRIME AU JAPON)

1. Jamming in the paper pick-up area

Cause	Step	Checks	YES/ NO	Action
Cassette	1	Is the cassette pushed fully into the copier?	NO	Push the cassette fully in.
	2	Does the problem disappear when a different casssette is used?	YES	1. Check the paper hold-down tabs. 2. Check the strength of the paper-lifting springs.
Copy paper	3	Is the copy paper curled or creased?	YES	1. Change the copy paper. 2. Instruct the user about the correct method of storing paper.
	4	Does the problem disappear when paper recommended by Canon is used?	YES	Request the user to use the recommended paper.
DC controller PCB, Pick-up roller clutch	5	Does the pick-up roller rotate during the copying cycle?	NO	Refer to the sub-section "Paper is not picked up."
Pick-up roller	6	Are the pick-up roller shoes deformed or worn?	YES	Replace the pick-up rollers.
Pre-registration paper sensor (Q2)	7	Is the pre-registration paper sensor (Q2) normal? (See p.10-19)	NO	Replace the pre-registration paper sensor (Q2).
Feed roller and paper guide plate			YES	1. Check each feed roller for wear and deformation. 2. Check the paper guide plate for burrs or deformation.

COPYRIGHT © 1999 CANON INC.
CANON NP6320 REV.0 DEC. 1999 PRINTED IN JAPAN (IMPRIME AU JAPON)

2. Jamming in the separation and feeder assembly area

Cause	Step	Checks	YES/ NO	Action
	1	Does the leading edge of the copy paper pass through the registration rollers?	YES	Continue with step 5.
Registration roller clutch (CL1)	2	Does the registration roller clutch (CL1) operate correctly?	NO	Check the registration roller clutch (CL1).
Registration roller	3	Are the registration rollers worn, deformed, or soiled?	YES	If they are soiled, clean them with alcohol. If they are deformed, replace them.
	4	Are the retaining springs at the ends of the registration rollers installed correctly?	NO	Install the springs correctly.
			YES	Check the transfer guide for foreign matter and deformation.
Paper guide wire	5	Is the paper guide wire of the transfer corona assembly installed correctly?	NO	Install the wire correctly.
Feeder belt			YES	Check the feeder belt, roller, and pulleys.

COPYRIGHT © 1999 CANON INC.
CANON NP6320 REV.0 DEC. 1999 PRINTED IN JAPAN (IMPRIME AU JAPON)

3. Jamming in the fixing and paper delivery assembly area

Cause		Step	Checks	YES/NO	Action
Delivery assembly separation claws		1	Are the separation claws worn or deformed?	YES	1. Replace the separation claws. 2. If the separation claws are soiled, clean them with MEK.
Delivery assembly	Upper and lower fixing rollers	2	Is the upper or lower fixing roller deformed or scratched?	YES	Replace the upper and lower fixing rollers (both at the same time).
	Paper guide plate	3	Is toner, etc., adhering to the paper guide?	YES	Clean the paper guide plate with MEK.
		4	Is the height of the paper guide plate correct?	NO	Adjust the height of the paper guide plate.
	Nip width	5	Is the roller pressure (nip width) within the standard?	NO	Adjust the nip width.
Fixing assembly	Delivery paper sensor arm	6	Does the delivery sensor arm move smoothly?	NO	Adjust the arm so that it moves smoothly.
	Delivery paper sensor (Q5)	7	Is the delivery paper sensor functioning correctly? (See p. 10-21.)	NO	Replace the delivery paper sensor (Q5).
	Delivery roller drive assembly	8	Do the delivery rollers rotate smoothly?	NO	Check the delivery roller drive assembly.
Leading edge blank area				YES	Check if there is a leading edge blank area (2.0 +1.5 mm) on the leading edge of the copy paper.

4. Jamming around the drum cleaning unit area

Cause	Step	Checks	YES/NO	Action
Copy paper	1	Does jamming occur when thin paper is used?	YES	Explain to the user that thin paper is likely to jam.
	2	Did a jam occur when a 2-sided or overlay copy was being made?	YES	Instruct the user to remove curling from the copy paper before using it.
Static charge eliminator, High-voltage transformer			NO	Check if voltage is being supplied to the static charge eliminator.

COPYRIGHT © 1999 CANON INC.
CANON NP6320 REV.0 DEC. 1999 PRINTED IN JAPAN (IMPRIME AU JAPON)

VI. INCORRECT PAPER FEED OPERATION

1. Sheets stuck together

Cause	Step	Checks	YES/ NO	Action
Cassette	1	Is the copy paper positioned correctly under the hold-down tabs?	NO	Set the copy paper correctly.
	2	Push the copy paper down in the cassette and release it. Does it rise smoothly?	NO	1. Check the width of the copy paper. 2. Check the position of the side panels of the cassette. 3. Measure the strength of the paper-lifting springs. If they are weak, replace them.
Copy paper	3	Is paper recommended by Canon being used?	NO	Suggest that the user use paper recommended by Canon.
Hold-down tabs			YES	Check if the hold-down tabs are deformed.

COPYRIGHT © 1999 CANON INC.
CANON NP6320 REV.0 DEC. 1999 PRINTED IN JAPAN (IMPRIME AU JAPON)

2. Wrinkles

Cause		Step	Checks	YES/ NO	Action
Pick-up assembly		1	Switch the power OFF while the copy paper is passing along the feeder. Are there any wrinkles in the copy paper at this point? Is the paper skewed?	YES	1. Check the pick-up assembly. 2. Check the registration rollers.
Copy paper		2	Does the problem disappear when new copy paper is used?	YES	The paper may be absorbing moisture. Instruct the user in the correct paper storage method.
		3	Is paper recommended by Canon being used?	NO	Suggest that the user use paper recommended by Canon.
Fixing assembly	Paper guide	4	Is any foreign matter or toner adhering to the paper guide?	YES	Clean the paper guide with MEK.
		5	Is the height of the paper guide correct?	NO	Adjust the height of the paper guide.
	Roller pressure	6	Is the roller pressure (nip width) within the standard?	NO	Adjust the nip width.
	Upper and lower fixing rollers			YES	Replace the upper and lower fixing rollers (both at the same time).

COPYRIGHT © 1999 CANON INC.
CANON NP6320 REV.0 DEC. 1999 PRINTED IN JAPAN (IMPRIME AU JAPON)

VII. FUNCTION AND ARRANGEMENT OF THE ELECTRICAL PARTS

A. Sensors, Fuses and Lamps

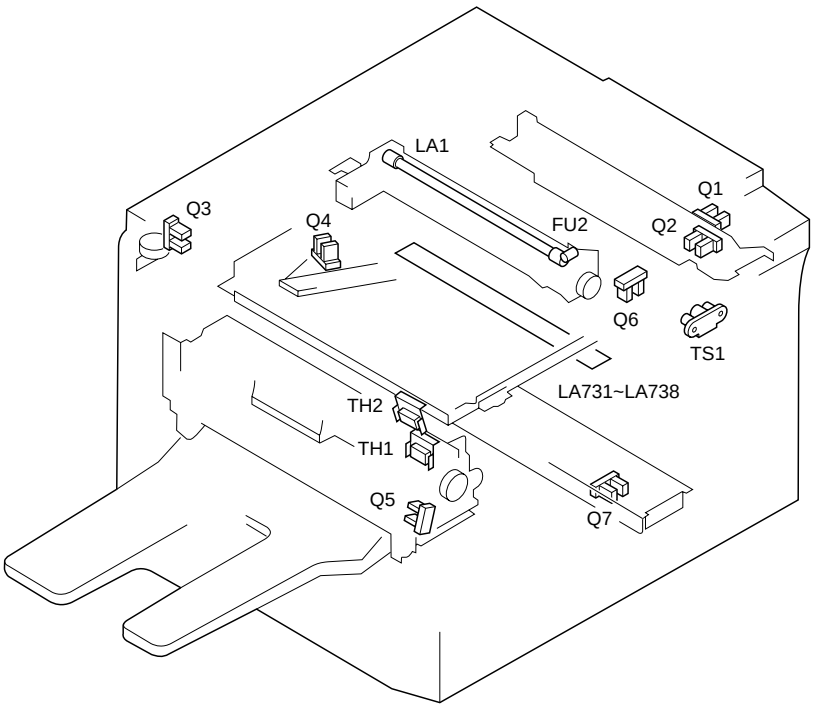

Figure 10-701

Symbol	Name	Code	Function
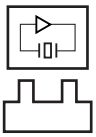	Black toner level sensor	TS1	Senses the toner in the development assembly
	Photointerrupter	Q1	Multifeeder paper sensor
		Q2	Pre-registrarion paper sensor
		Q3	Scanner home position sensor
		Q4	Lens home position sensor
		Q5	Delivery paper sensor
		Q6	Cassette 1 paper sensor
		Q7	Cassette 2 paper sensor
	Thermistor	TH1	Upper fixing roller temperature sensor (main)
		TH2	Upper fixing roller temperature sensor (auxiliary)
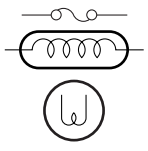	Thermal fuse	FU2	Scanning lamp protection
	Lamp	LA1	Scanning lamp
		LA731	Pre-exposure lamp
		|	|
		LA738	Pre-exposure lamp

COPYRIGHT © 1999 CANON INC.
CANON NP6320 REV.0 DEC. 1999 PRINTED IN JAPAN (IMPRIME AU JAPON)

B. Clutches, Solenoids, Fans, Motors and Heaters

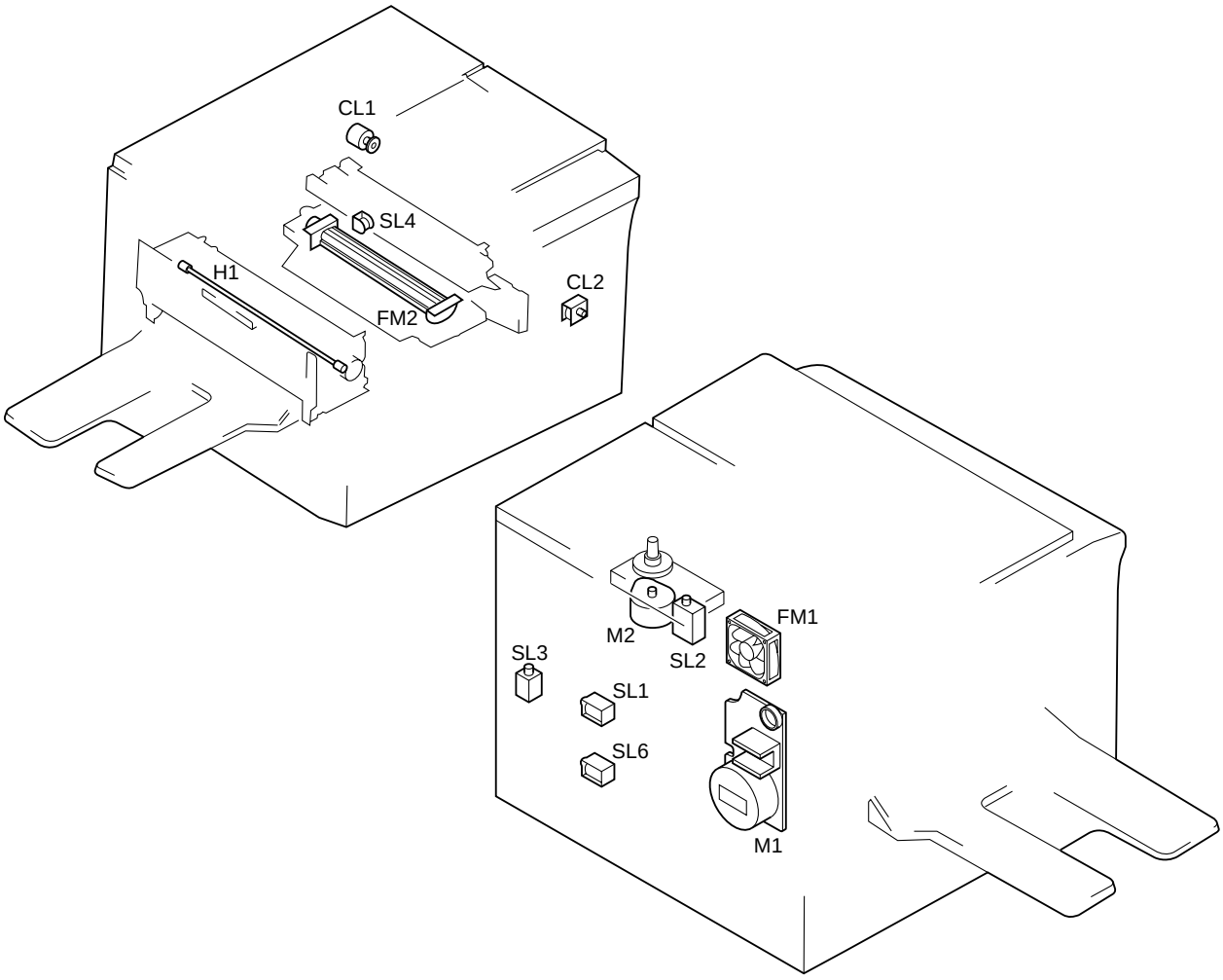

Figure 10-702

Symbol	Name	Code	Function
CL	Clutch	CL1	Registration roller clutch
		CL2	Multifeeder clutch
SL	Solenoid	SL1	Cassette 1 pick-up roller clutch solenoid
		SL2	Lens drive solenoid
		SL3	Multifeeder solenoid
		SL4	Blank solenoid
		SL6	Cassette 2 pick-up roller clutch solenoid
M	Motor	M1	Main motor
		M2	Scanner motor
	Fan unit	FM1	Scanner cooling fan
		FM2	Exhaust fan
	Heater	H1	Fixing roller heater

COPYRIGHT © 1999 CANON INC.

C. Switches, Circuit Breakers, Counters, Etc.

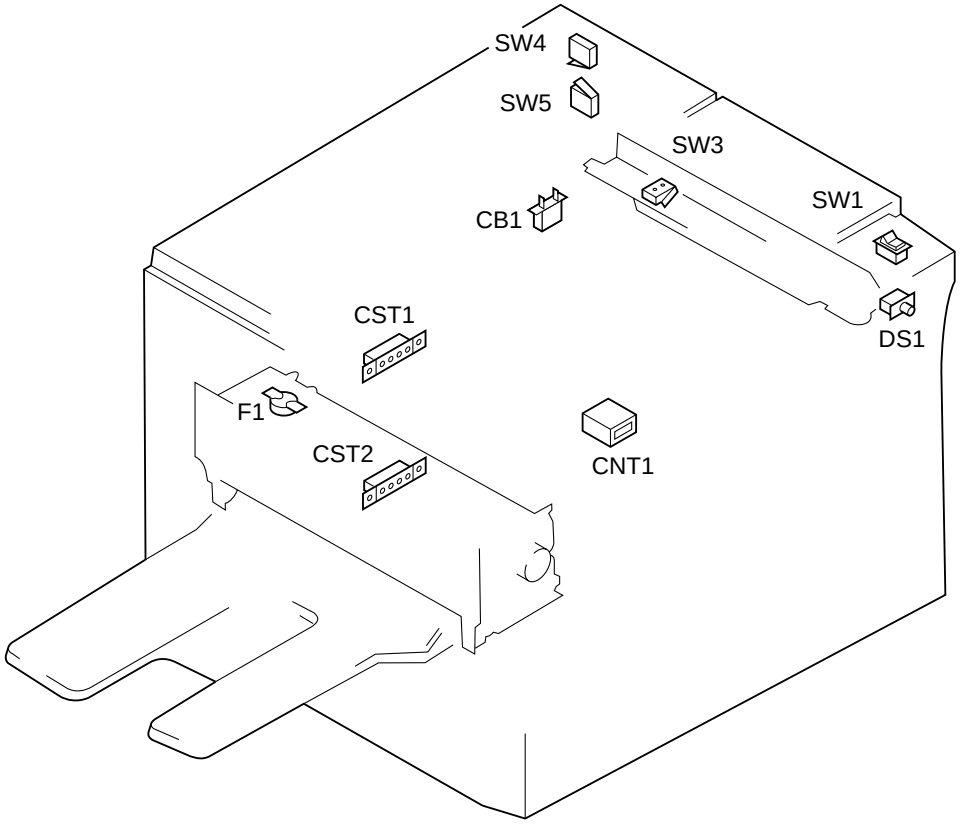

Figure 10-703

Symbol	Name	Code	Function
	Switch	SW1	Power switch
	Microswitch	DS1	Front door switch
		SW3	Right door switch
		SW4	Copyboard cover switch 1
		SW5	Copyboard cover switch 2
		CST1	Cassette 1 size sensor
		CST2	Cassette 2 size sensor
	Thermoswitch	TS1	Fixing assembly protection
CB	Circuit breaker	CB1	AC power line protection
CNT	Counter	CNT1	Total counter

COPYRIGHT © 1999 CANON INC.
CANON NP6320 REV.0 DEC. 1999 PRINTED IN JAPAN (IMPRIME AU JAPON)

D. PCBs

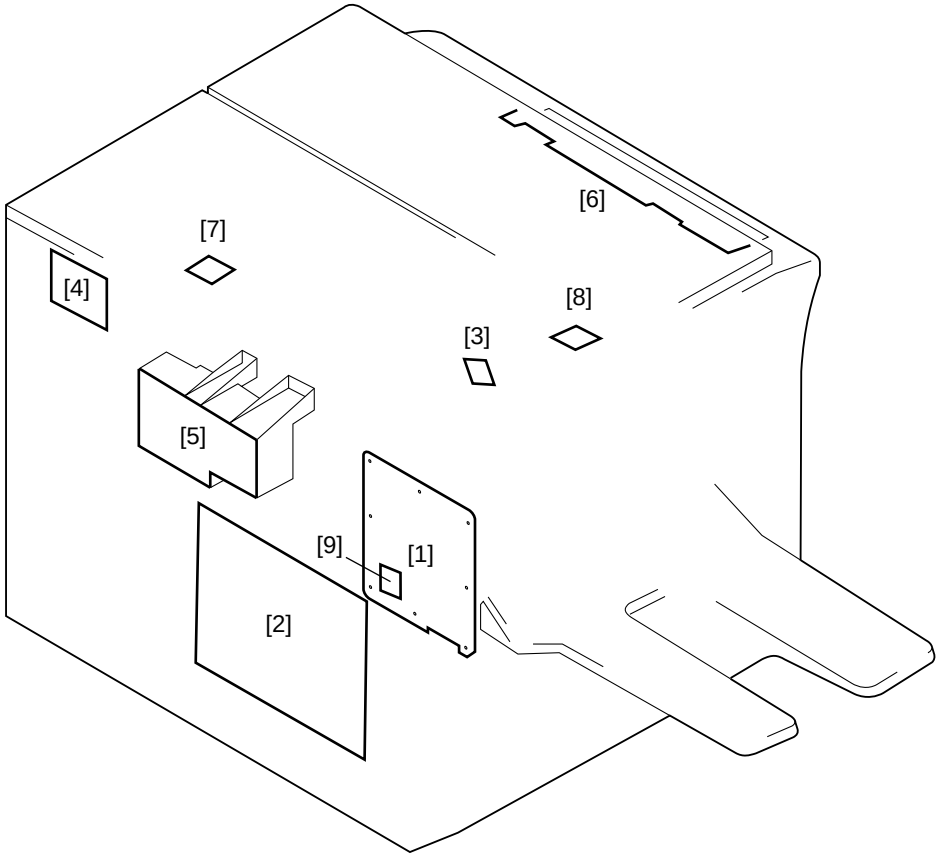

Figure 10-704

Symbol	Name	Function
[1]	DC controller PCB	Controlling operations
[2]	Power supply PCB	Powering the fixing roller heater and supplying DC power to the copier/options
[3]	AE sensor PCB	Measuring the document density
[4]	Lamp driver PCB	Controlling scanning lamp voltage
[5]	High-voltage transformer PCB	Supplying high voltage for primary and transfer assemblies and developing bias
[6]	Control panel PCB	Controls the control panel
[7]	Document identification PCB 0	Document identification
[8]	Document identification PCB 1	Document identification
[9]	Differential PCB	Detects the fixing error

Note

The differential PCB is soldered on the DC controller PCB.

COPYRIGHT © 1999 CANON INC.
CANON NP6320 REV.0 DEC. 1999 PRINTED IN JAPAN (IMPRIME AU JAPON)

VIII. SERVICE MODE

A. Outline

The NP6320's service mode allows the following:
- checking the operation of some switches and LEDs
- changing data in EEPROM.

B. Using the Service Mode

1) Detach the VR cover from the rear of the left cover.
2) Check that the Copy Start key is glowing green.
3) Press the service switch (SW300) on the DC controller PCB.
4) Check that 'C00' is indicated.
5) Enter the No. of the desired service mode using the numeric keypad on the control panel.
   - For example, the display indicates ‘C03’ in response to a press on ‘3’.
6) Press the Sort/Group key.
7) Operate as follows as necessary:

<Mode Nos. C00, C09, C10, C11, C12, C13, C14 and C20>
A press on the Sort/Group key executes the selected mode; a second press stops the execution.

<Mode Nos. C01 through C08 and, C15, C17 and C19>
Change the setting using the numeric keypad, and press the Sort/Group key; the setting will be stored in EEPROM.

<Mode No. C18>
Press the AE key twice, and check ‘CEE’ is indicated on the control panel; then, press the Sort/Group key.

8) Press the service switch (SW300) to leave the service mode.

COPYRIGHT © 1999 CANON INC.
CANON NP6320 REV.0 DEC. 1999 PRINTED IN JAPAN (IMPRIME AU JAPON)

C. Guide to Service Mode

Mode No.	Display	Default / Settings	Remarks
C00	AE sensor output	—	Use it when adjusting the AE reference point/slope; see p.10-18.
C01	AE adjustment	23 / 0 to 50	A higher setting causes copies of newspaper to become lighter; see p.10-18. (unit: 0.1V)
C02	Leading-edge registration adjustment (registration roller ON timing adjustment)	32 / 0 to 63	A higher setting delays the registration roller ON timing. (unit: 0.25 mm)
C03	Leading-edge non-image width adjustment (grid bias switch timing adjustment)	32 / 0 to 63	A higher setting increases the leading edge non-image width. (unit: 0.25 mm)
C04	Degree of arching (multifeeder pick-up; clutch off timing adjustment)	32 / 0 to 63	A higher setting delays the multifeeder clutch OFF timing. (unit: 0.25 mm)
C05	Leading edge registration adjustment (2nd page in page separation; registration roller ON timing adjustment)	32 / 0 to 63	A higher setting advances the registration roller ON timing. (unit: 0.25 mm)
C06	Leading edge non-image width adjustment (2nd page in page separation; grid bias switch timing adjustment)	32 / 0 to 63	A higher setting increases the leading edge non-image width. (unit: 0.25 mm)
C07	Automatic paper selection (APS) mode setting	1 / 0 or 1	Selects/Deselects the APS mode at time of power-on: 1, APS ON; 0, APS OFF.
C08	Auto shut-off mode setting	1 / 0 or 1	Selects/Deselects the auto shut-off mode: 1, Auto shut-off ON; 0, Auto shut-off OFF.
C09	The output voltage of document size sensor 0 is indicated on the control panel.	–	About 6 (0.6V) when the copyboard cover is closed. About 40 (4.0V) when the copyboard cover is open. (unit: 0.1V)
C10	The output voltage of document size sensor 1 is indicated on the control panel.	–	About 6 (0.6V) when the copyboard cover is closed. About 40 (4.0V) when the copyboard cover is open. (unit: 0.1V)

COPYRIGHT © 1999 CANON INC.
CANON NP6320 REV.0 DEC. 1999 PRINTED IN JAPAN (IMPRIME AU JAPON)

Mode No.	Display	Default / Settings	Remarks
C11	Lower cassette size	–	The size of the cassette is indicated in code in response to the output of the activated cassette switch; see Table 10-801.
C12	Upper cassette size		
C13	Nip width check	–	Perform this mode when checking the nip width.
C14	LED ON check (on control panel)	–	
C15	AE mode setting	1 0 or 1	Selects/Deselects the AE mode at time of power-on: 1, AE ON; 0, AE OFF.
C16	For factory adjustment	0 0 to 5	Do not change the setting; i.e., keep it to '0'.
C17	Fixing unit temperature adjustment	170 140 to 190	Set the three digit described on the fixing assembly label.
C18	EEPROM reset	–	Initializes EEPROM on the DC controller PCB.
C19	Automatic energy saving mode on/off	1 1 or 0	To activate the energy saving mode, press "1" and then "Sorter" keys. To inactivate, press "0" and then "Sorter" keys.
C20	Automatic shut-off checking	–	To perform checking, press the "Sorter" key. As a result, the copier shuts off when service mode C08 is "1".

COPYRIGHT © 1999 CANON INC.
CANON NP6320 REV.0 DEC. 1999 PRINTED IN JAPAN (IMPRIME AU JAPON)

Code	Cassette size	Code	Cassette size
0	No cassette	9	U1
1	B5	10	U2
2	U3	11	Letter
3	A4	12	STMT-R
4	B5-R	13	Legal
5	B4	14	Letter-R
6	A4-R	15	11×17
7	A3	16	Multifeed
8	A5-R		

Table 10-801 Cassette Size Codes

COPYRIGHT © 1999 CANON INC.
CANON NP6320 REV.0 DEC. 1999 PRINTED IN JAPAN (IMPRIME AU JAPON)

IX. SELF DIAGNOSIS

A. Self-Diagnosis

The DC controller PCB has a microprocessor that diagnoses the functions of the copier (particularly the sensors) at appropriate intervals. If this microprocessor detects an error, it will display the type of the error on the indicator on the control panel.

The table below shows the various fault codes, their meaning, and the corresponding detection timing.

Example of E000 code indication:

E⇔000 light alternately.

Code displayed	Main cause	Fault criteria
E000	Thermistor (TH1), Fixing heater (H1), Power supply PCB, DC controller PCB or Thermoswitch (TS1).	•If the fixing assembly temperature is lower than 50°C after 15 sec from the power on. (main thermistor) •If the warm-up is not over after 60 sec from when the temperature reached 50°C. (main thermistor) •If the fixing unit temperature drops below 50°C while the copier is in stand by or copying (main thermistor)
E001	Thermistors (TH1/TH2), Fixing heater (H1), Power supply PCB or DC controller PCB.	•If the temperature remains 220°C or higher for 0.1 sec or longer (main thermistor) •If the temperature difference between the main thermistor and the auxiliary thermisor is 50°C or higher. •If the HTON signal is on while HTRD signal is off.
E010	Main motor error: Main motor (M1), DC controller PCB	If the main motor speed feedback signal does not appear after 2 sec from the main motor.
E030	Counter, DC controller PCB	If the break signal is emitted continuously for 0.1 sec or more when the counter is not being driven.

COPYRIGHT © 1999 CANON INC.
CANON NP6320 REV.0 DEC. 1999 PRINTED IN JAPAN (IMPRIME AU JAPON)

Code displayed	Main cause	Fault criteria
E202	Scanner home position sensor (Q3), scanner motor (M2), power supply PCB, or DC controller PCB	1. If the scanner is not at the home position (SCHP = 0) when the Copy Start key is pressed. If the scanner does not return to the home position (SCHP remains 0) within 15 sec (A4 size) after it starts to reverse. 2. If the scanner is in the home position (SCHP = 1) when the Copy Start key is pressed. • If the scanner does not leave the home position (SCHP remains 1) within 1.5 sec after it starts to advance. • If the scanner does not return to the home position (SCHP remains 0) within 1 second after it leaves the home position (SCHP = 0).
E210	Lens home position sensor (Q4), or DC controller PCB	• If the lens does not return to the home position (LHP remains 0) within 2.5 sec. • If LHP remains 1 for at least 4 sec.
E220	Lamp driver PCB or Scanning lamp	• At the lamp ON timing, LAON=1 is not true. • At the lamp OFF timing, LAON=0 is not true.
E240	DC controller PCB	The communication between microprocessor (master) and microprocessor (slave) is interrupted.
E245	DC controller PCB	If the data in EEPROM has been rewritten more than specified.
E261	Power supply PCB or DC controller PCB	If the main frequency is out of the allowed range.
E400	ADF controller PCB, power supply PCB, or DC controller PCB	If ADF remains 0 for 12 sec or longer.
E500	Sorter controller PCB or DC controller PCB	• If the copier does not communicate with the sorter for at least 12 sec. • If the SORTER STANDBY signal does not return within 35 sec after the BCR signal is outputted.
E802	Main switch or DC controller PCB.	The DC controller PCB detects the automatic shut-off mechanism does not work.

COPYRIGHT © 1999 CANON INC.

Note:
After self diagnosis has been executed, the copier may be reset by switching it OFF and then ON unless 'E000' or 'E001' is indicated on the display.

This consideration is made to prevent the user from resetting the copier when the fixing assembly has a serious fault (open thermistor or others) that can damage the assembly.

Reset the copier as follows if 'E000' or 'E001' is indicated:

1) Detach the switch cover (one screw).
2) Shift the main switch (SW1) to ON and continuously hold the main switch down so that the main power does not turn OFF.
3) Press the service switch (SW300) on the DC controller PCB once.
4) Shift the main switch to OFF.
5) Attach the switch cover.

COPYRIGHT © 1999 CANON INC.
CANON NP6320 REV.0 DEC. 1999 PRINTED IN JAPAN (IMPRIME AU JAPON)

APPENDIX

A. GENERAL TIMING CHART A-1
B. LIST OF SIGNALS/ COMMANDS A-3
C. GENERAL CURCUIT DIAGRAM A-5
D. LIST OF SPECIAL TOOLS A-7
E. LIST OF SOLVENTS AND MATERIALS A-8

COPYRIGHT © 1999 CANON INC. CANON NP6320 REV.0 DEC. 1999 PRINTED IN JAPAN (IMPRIME AU JAPON)

A. GENERAL TIMING CHART

(A4, AE, 2 copies, cassette)

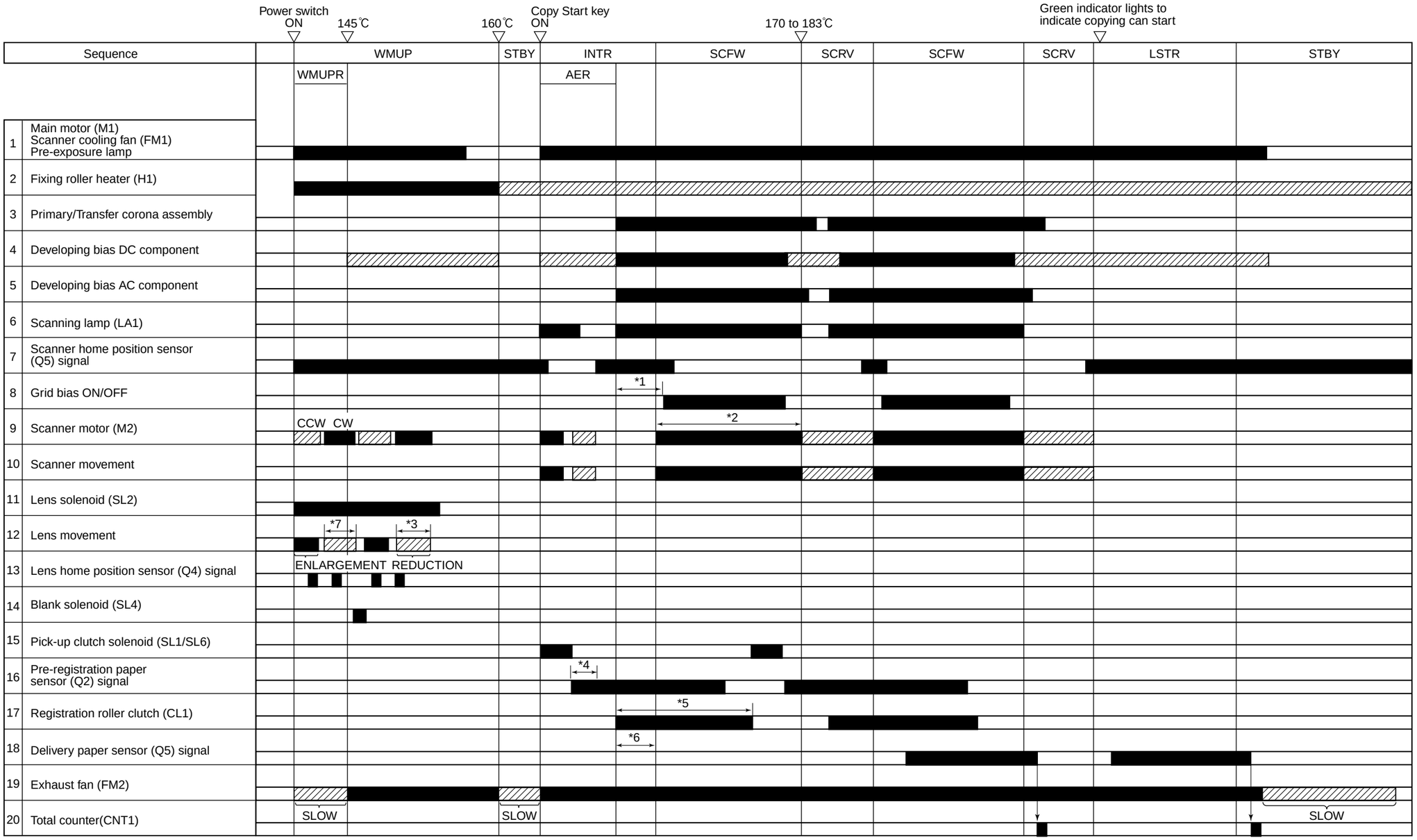

*1 Varies depending on the reproduction ratio and the setting of 'leading edge (C03)' in the service mode.
*2 Varies depending on the cassette size and the selected reproduction ratio.
*3 Varies depending on the reproduction ratio.
*4 Varies depending on the setting of 'arc adjustment (C04)' in the service mode; multifeeder in use.
*5 Varies depending on the cassette size.
*6 Varies depending on the setting of 'leading edge non-image width' in the service mode.
*7 Varies depending on the cassette size.

COPYRIGHT © 1999 CANON INC.
CANON NP6320 REV.0 DEC. 1999 PRINTED IN JAPAN (IMPRIME AU JAPON)

<MULTI FEED>

(A4, 2 copies, multifeeder)



*Varies depending on the setting of 'arc adjustment (C04)' in the service mode; multifeeder in use.

COPYRIGHT © 1999 CANON INC.

CANON NP6320 REV.0 DEC. 1999 PRINTED IN JAPAN (IMPRIME AU JAPON)

B. LIST OF SIGNALS/COMMANDS

1. Signal

ACBON	AC BIAS ON command
ACOFF	AC SHUT-OFF command
AE	AE SENSOR OUTPUT signal (analog)
AEGIN	AE SENSOR GAIN signal
BLSD	BLANK SOLENOID DRIVE command
BTEP	BLACK TONER EMPTY signal
CBCC1	COPYBOARD COVER CLOSED signal 1
CBCC2	COPYBOARD COVER CLOSED signal 2
CCNTD	CONTROL COUNTER DRIVE command
CSTBY	CONTROL CARD STANDBY signal
CSZ0	CASSETTE SIZE signal 0
CSZ1	CASSETTE SIZE signal 1
CSZ2	CASSETTE SIZE signal 2
CSZ3	CASSETTE SIZE signal 3
CSZ4	CASSETTE SIZE signal 4
CTD	CT-UNIT DETECTION signal
DCBC	DC BIAS CONTROL command
DSLD	DOCUMENT SIZE LED DRIVE commad
DSZ	DOCUMENT SIZE DETECTION signal
FM1D	FAN MOTOR 1 DRIVE command
FM2D	FAN MOTOR 2 DRIVE command
GRDON	GRID ON signal
HTRD	HEATER DRIVE command
HVTON	HVTON command
LAON	LAMP ON command
LCPD	LOWER CASSETTE PAPER DETECTION signal
LGHT	LIGHT signal
LHP	LENS HOME POSITION signal
LIC	LIGHT INTENSITY CONTROL command
LNSC	LENS SOLENOID DRIVE command
MFCD	MULTIFEEDER CLUTCH DRIVE command
MFPD	MULTIFEEDER PAPER DETECTION signal
MFSD	MULTIFEEDER SOLENOID DRIVE command
MLCK	MAIN MOTOR LOCK signal
MMD	MAIN MOTOR DRIVE command
PDP1	PAPER DETECTION signal 1 (Q2)
PDP2	PAPER DETECTION signal 2 (Q5)
PEXP	PRE-EXPOSURE LAMP DRIVE command
PUSL1	PICK-UP ROLLER CLUTCH SOLENOID DRIVE command 1
PUSL2	PICK-UP ROLLER CLUTCH SOLENOID DRIVE command 2
RGCD	REGISTRATION ROLLER CLUTCH SOLENOID DRIVE command
RDC	RIGHT DOOR CLOSE signal
SCCLK	SCANNER SPEED CONTROL command
SCHP	SCANNER HOME POSITION signal
SCMD	SCANNER MOTOR DRIVE command
TCNTD	TOTAL COUNTER DRIVE command

COPYRIGHT © 1999 CANON INC.
CANON NP6320 REV.0 DEC. 1999 PRINTED IN JAPAN (IMPRIME AU JAPON)

TEP	TONER EMPTY signal
TH_AUX	AUXILIARY FIXING ROLLER TEMPERATURE signal (analog)
TH_MAIN	MAIN FIXING ROLLER SURFACE TEMPERATURE signal (analog)
UCPD	UPPER CASSETTE PAPER DETECTION signal
ZXDP	ZERO CROSS DETECTION signal

2. Abbreviations

AER	AE ROTATION
INTR	INITIAL ROTATION
LSTR	LAST ROTATION
SCFW	SCANNER FORWARD
SCRV	SCANNER REVERSE
STBY	STANDBY
WMUP	WARM UP
WMUPR	WARM UP ROTATION

COPYRIGHT © 1999 CANON INC.
CANON NP6320 REV.0 DEC. 1999 PRINTED IN JAPAN (IMPRIME AU JAPON)

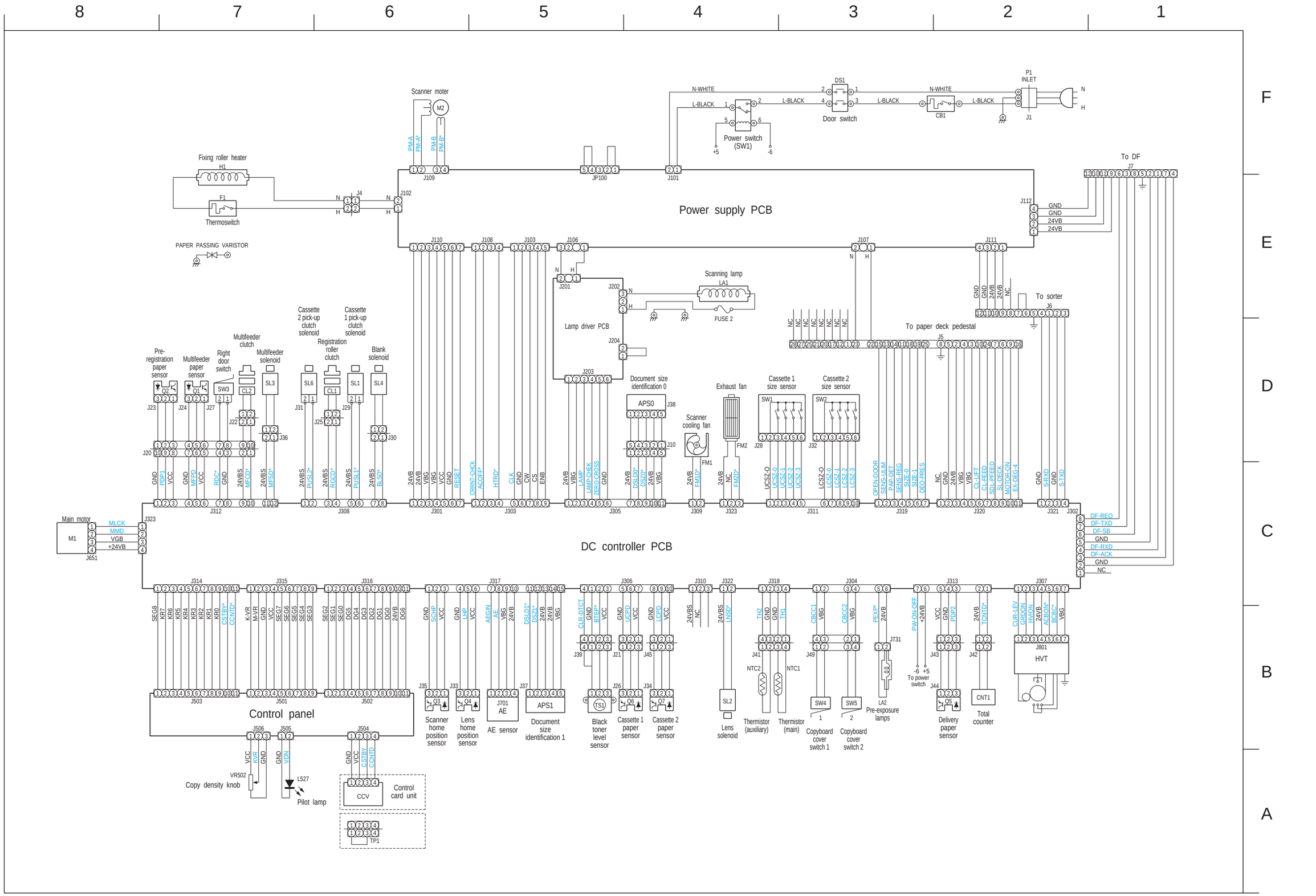

COPYRIGHT © 1999 CANON INC.
CANON NP6320 REV.0 DEC. 1999 PRINTED IN JAPAN (IMPRIME AU JAPON)

D. LIST OF SPECIAL TOOLS

Special tools which are required for servicing this copier (in addition to the standard tools set) are listed below.

No.	Tool name	Tool No.	Shape	Code	Application/remarks
1	Door switch actuator	TKN-0093	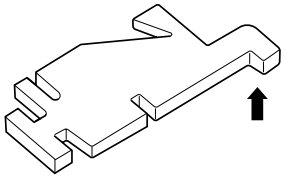	A	
2	Spring scale (compression)	CK-0054	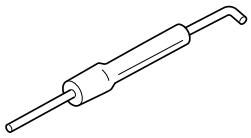	B	· Measuring strength of cassette springs · Adjusting scanner drive cable tension
3	Extension blades for pliers	CK-0426	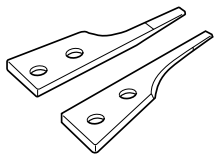	C	For removing grip rings: 4 to 9 mm

Note: Code

A: Each service person should carry one.
B: A group of five service persons should share one.
C: Each workshop should keep one.

COPYRIGHT © 1999 CANON INC.
CANON NP6320 REV.0 DEC. 1999 PRINTED IN JAPAN (IMPRIME AU JAPON)

E. LIST OF SOLVENTS AND MATERIALS

No.	Material name	Use	Chemical formula, mixture ratio, etc.	Source	Remarks
1.	Ethyl alcohol (Ethanol) Isopropyl alcohol (Isopropanol)	Cleaning: copyboard glass, mirror, etc.	$C_2 H_5 OH$ $(CHZ_3)_2 CHOH$	Locally	Flammable. Use in a well-ventilated area. Avoid breathing concentrated vapor.
2.	MEK	Removing toner or oil stains	$CH_3 \cdot CO \cdot C_2 H_5$ Methylethyl ketone	Locally	Flammable. Use in a well-ventilated area and avoid breathing concentrated vapor. Avoid contact with eyes or skin. Do not use for cleaning the drum, plastic molded parts, or corona wires.
3.	Heat-resistant grease	Lubricating the drive mechanisms; e.g., copyboard driving gear, fixing drive gear, fixing ass'y, etc.		CANON	Tool No.: CK-0427 (500g can) (Equivalent grease can be used, but should be able to withstand 200°C for extended periods of time.)
4.	Lubricating oil (low viscosity)	Lubrication points: Scanner rail, etc.	ISO VG 68 oil ESSO Febis K68 MOBIL Vactraoil No. 2 SHELL Tonna oil T68	Locally	Equivalent oil can be used. Tool No.: CK-0451 (100cc)
5.	Lubricating oil (low viscosity)	Lubrication point: one-way clutch in pick-up control assembly	ISO VG 220 oil ESSO Febis K220 MOBIL Vactraoil No. 4	Locally	Equivalent oil can be used. Tool No.: CK-0524 (100cc)

COPYRIGHT © 1999 CANON INC.
CANON NP6320 REV.0 DEC. 1999 PRINTED IN JAPAN (IMPRIME AU JAPON)

PAPER DECK PEDESTAL-J1 SERVICE MANUAL

COPYRIGHT © 1999 CANON INC.
CANON NP6320 REV.0 DEC. 1999 PRINTED IN JAPAN (IMPRIME AU JAPON)

CONTENTS

CHAPTER 1 GENERAL DESCRIPTION

I. SPECIFICATIONS 1-1P
II. CROSS-SECTIONAL VIEW 1-2P

CHAPTER 2 OPERATIONS AND TIMING

I. BASIC CONSTRUCTIONS 2-1P
A. Outline of Electrical Circuitry 2-1P
B. Inputs to and Outputs from Paper Deck Controller 2-2P
C. Outline 2-4P
D. Pick-Up and Feed Operations 2-5P
E. Releasing the Pick-Up and Separation Rollers 2-7P

CHAPTER 3 MECHANICAL SYSTEM

I. PICK-UP AND FEEDER SYSTEMS 3-1P
A. Pick-Up Roller 3-1P
B. Feed Roller 3-3P
C. Separation Roller 3-4P
D. Registration Roller 3-5P
II. DRIVE SYSTEM 3-6P
A. Deck Drive Unit 3-6P
III. ADJUSTING THE REGISTRATION (FRONT, REAR) 3-8P
A. Making Adjustments 3-9P
IV. MODIFYING THE DECK SIZE 3-11P

CHAPTER 4 MAINTENANCE AND SERVICING

I. PARTS TO BE REPLACED PERIODICALLY 4-1P
II. DURABLE PARTS 4-1P
III. PERIODICAL SERVICING CHART 4-1P

APPENDIX

I. ARRANGEMENT AND FUNCTIONS OF ELECTRICAL PARTS A-1P
II. VARIABLE RESISTOR (VR), LED, AND CHECK PIN BY PCB A-3P
III. GENERAL CIRCUIT DIAGRAM A-4P

COPYRIGHT © 1999 CANON INC.
CANON NP6320 REV.0 DEC. 1999 PRINTED IN JAPAN (IMPRIME AU JAPON)

CHAPTER 1

GENERAL DESCRIPTION

I. SPECIFICATIONS 1-1P

II. CROSS-SECTIONAL VIEW 1-2P

COPYRIGHT © 1999 CANON INC.

CANON NP6320 REV.0 DEC. 1999 PRINTED IN JAPAN (IMPRIME AU JAPON)

I. SPECIFICATIONS

Item	Specifications
Pick-up	Clawless
Paper storage	Front loading
Copy paper type	Plain paper (64 to 80 g/m^2)
Copy paper size	A4, LTR
Capacity	115 mm (stacked; approx. 1,000 sheets of 80 g/m^2)
Size switching	Plate and Size switch
Power supply	220/240 VAC; from copier
Dimensions	610 (W) × 577 (D) × 429 (H) mm; 24.0 (W) × 22.7 (D) × 16.9 (H) in.
Weight	28 kg/61.7 lb.

Spectifications are subject to change without notice.

COPYRIGHT © 1999 CANON INC.
CANON NP6320 REV.0 DEC. 1999 PRINTED IN JAPAN (IMPRIME AU JAPON)

II. CROSS-SECTIONAL VIEW

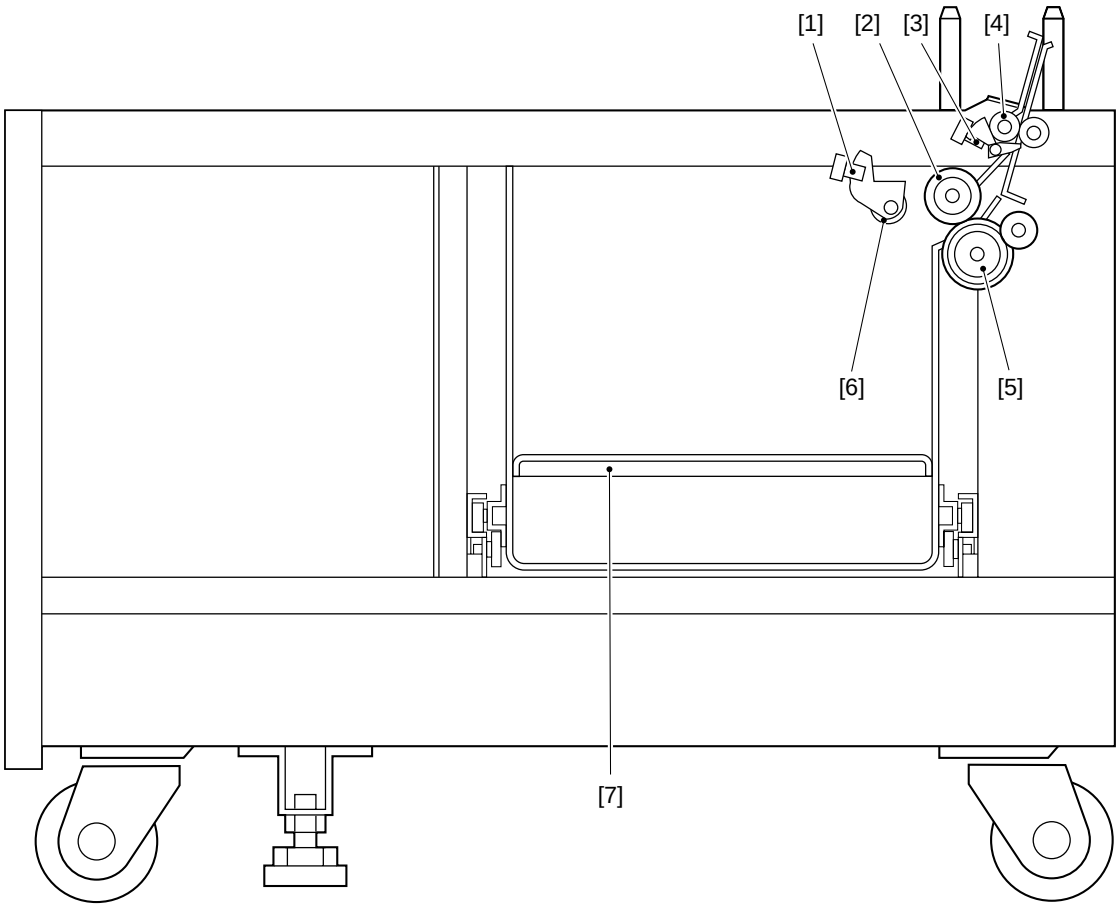

Figure 1-201P

[1] Lifter position sensor
[2] Feeder roller
[3] Deck pre-registration paper sensor
[4] Deck registration roller
[5] Separation roller
[6] Pick-up roller
[7] Lifter

COPYRIGHT © 1999 CANON INC.
CANON NP6320 REV.0 DEC. 1999 PRINTED IN JAPAN (IMPRIME AU JAPON)

CHAPTER 2

OPERATIONS AND TIMING

In outline diagrams, → represents mechanical drive paths, and (▬▪▬) indicates electrical signal paths.

Signals in digital circuits are identified as '1' for High and '0' for Low. The voltage of signals, however, depends on the circuit.

Nearly all operations of the paper deck pedestal are controlled by microprocessors; the internal workings of these processors are not relevant to the service person's work and, therefore, left out of the discussions. By the same token, no repairs are prescribed for the PCBs at the user's premises; for this reason, PCBs are discussed by means of block diagrams rather than circuit diagrams.

For the purpose of explanation, discussions are divided into the following: from sensors to DC controller PCB input ports; from DC controller output ports to loads; and minor control circuits and functions.

I. BASIC CONSTRUCTIONS 2-1P
- A. Outline of Electrical Circuitry 2-1P
- B. Inputs to and Outputs from Paper Deck Controller 2-2P
- C. Outline 2-4P
- D. Pick-Up and Feed Operations 2-5P
- E. Releasing the Pick-Up and Separation Rollers 2-7P

COPYRIGHT © 1999 CANON INC. CANON NP6320 REV.0 DEC. 1999 PRINTED IN JAPAN (IMPRIME AU JAPON)

I. BASIC CONSTRUCTIONS

A. Outline of Electrical Circuitry

The paper deck pedestal is controlled by signals from its host copier and from its own controller.

The copier sends signals as programmed in advance to the controller inside the pedestal.

In response to the signals from the copier and from its own microswitches and sensors, the pedestal's controller generates signals to drive its motor and clutches.

Figure 2-201 is a block diagram showing the relationship among the pedestal's major circuits.

The pedestal is supplied with 24 V, 5 V, and 220/240 VAC by the host copier.

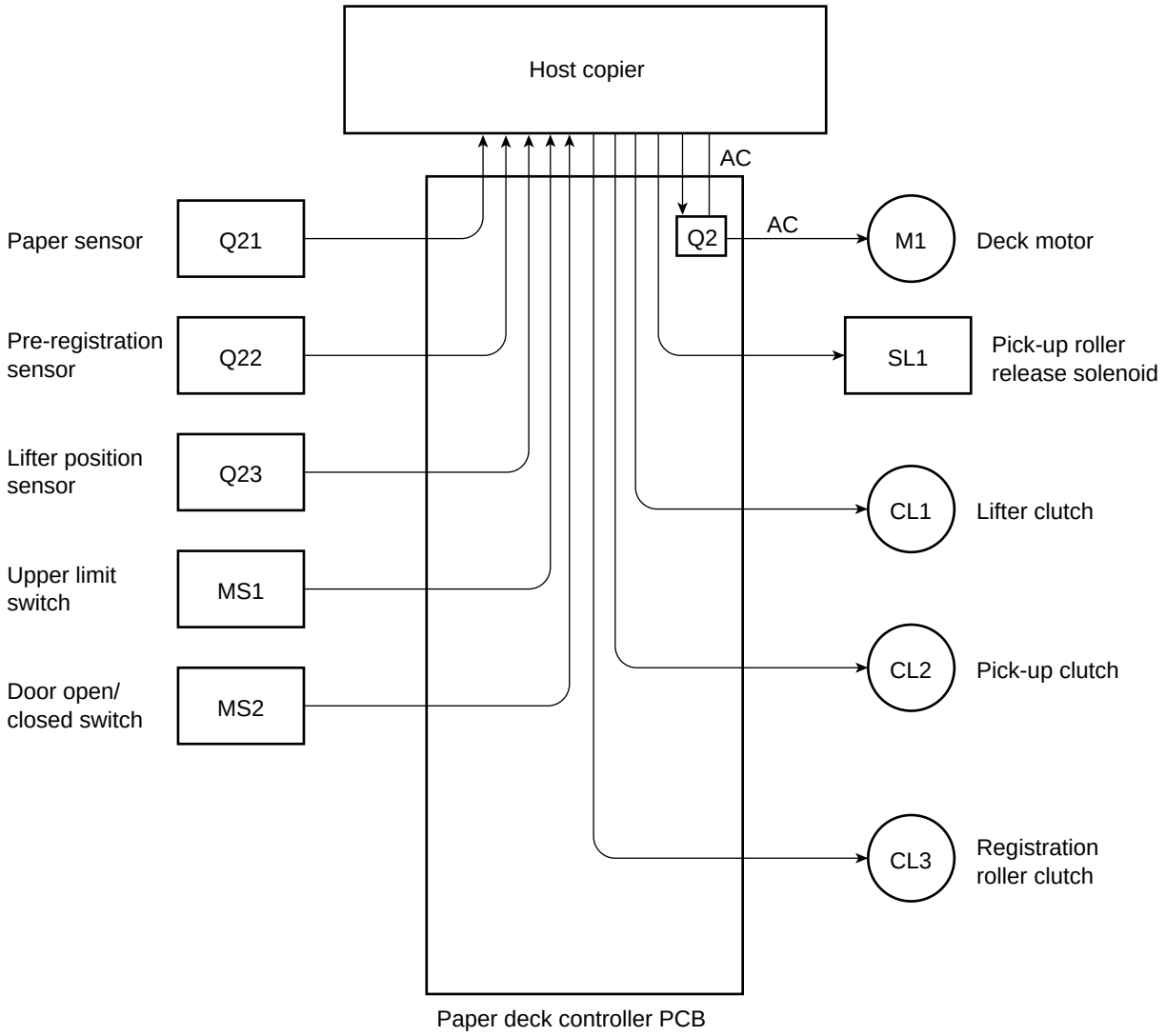

Figure 2-101P

COPYRIGHT © 1999 CANON INC.
CANON NP6320 REV.0 DEC. 1999 PRINTED IN JAPAN (IMPRIME AU JAPON)

B. Inputs to and Outputs from the Paper Deck Controller

1. Inputs to and Outputs from the Paper Deck Controller (1/2)

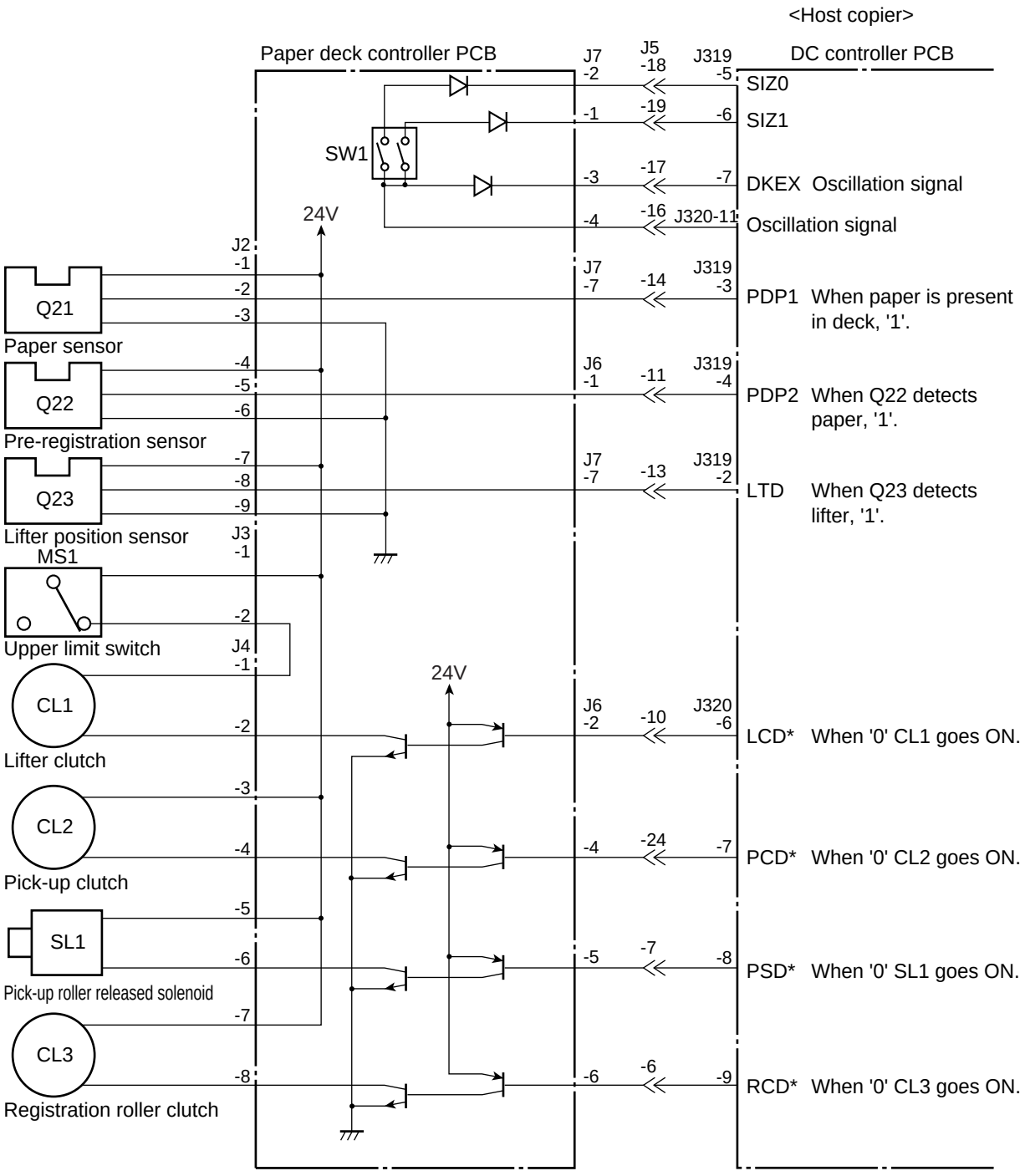

Figure 2-102P

COPYRIGHT © 1999 CANON INC.
CANON NP6320 REV.0 DEC. 1999 PRINTED IN JAPAN (IMPRIME AU JAPON)

2. Inputs to and Outputs from the Paper Deck Controller (2/2)

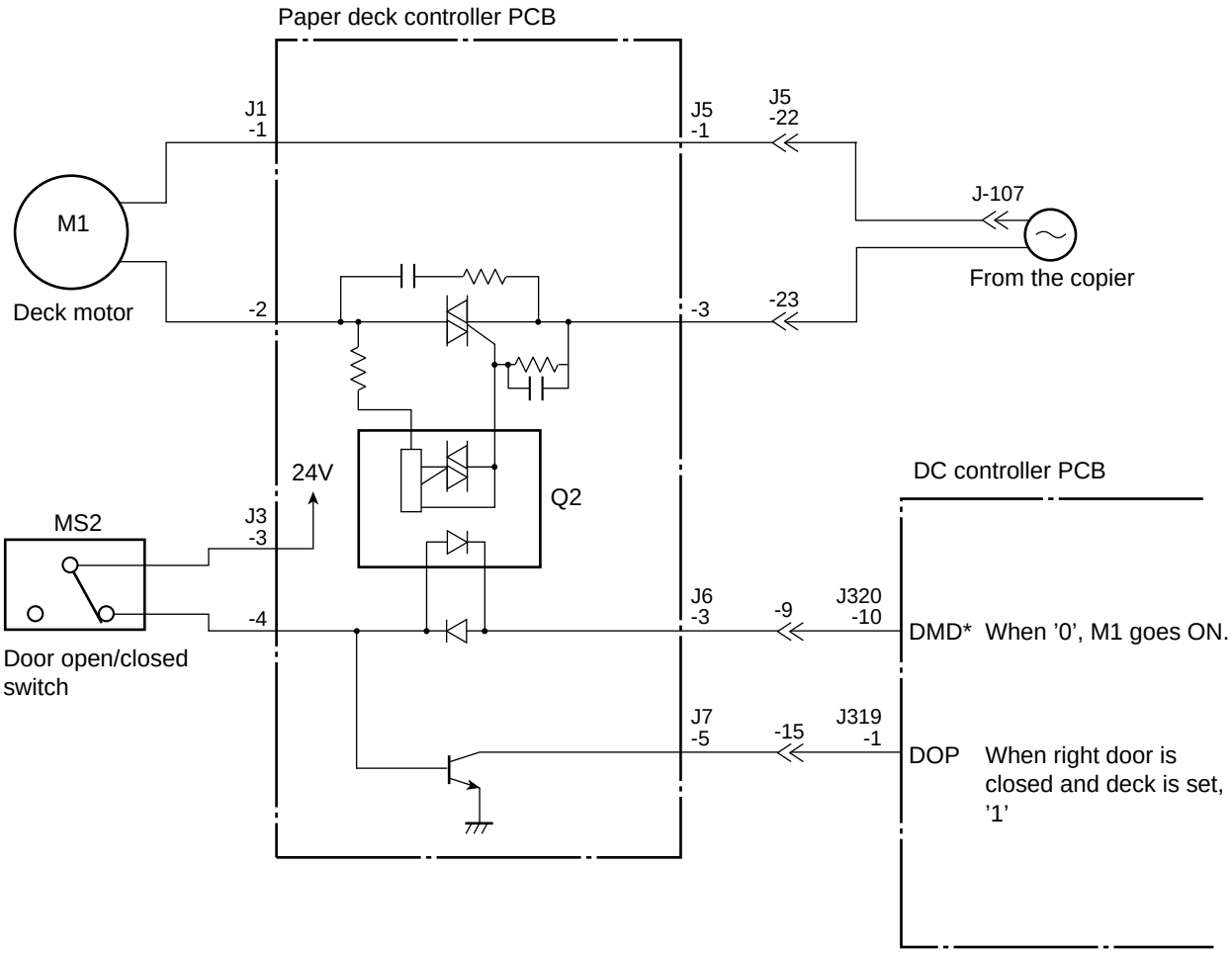

Figure 2-103P

COPYRIGHT © 1999 CANON INC.
CANON NP6320 REV.0 DEC. 1999 PRINTED IN JAPAN (IMPRIME AU JAPON)

C. Outline

The paper deck motor (M1) serves to raise the lifter and drive the pick-up, separation, and registration rollers.

The paper deck motor is controlled by the signals from the copier as well as from sensors and switches by way of the paper deck controller PCB.

The lifter lowers on its own weight when the paper deck is pulled out, releasing the gears.

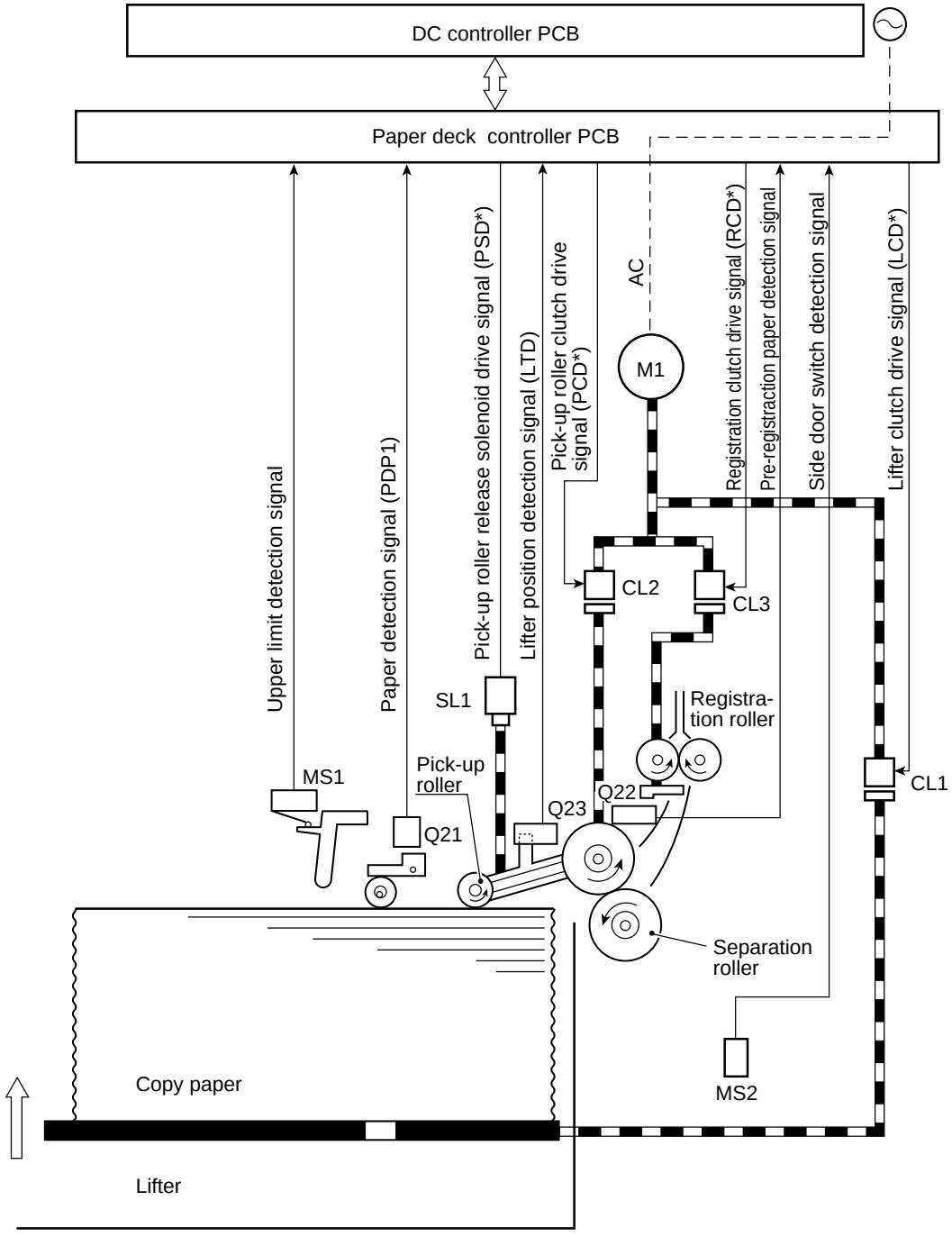

Figure 2-104P

COPYRIGHT © 1999 CANON INC.
CANON NP6320 REV.0 DEC. 1999 PRINTED IN JAPAN (IMPRIME AU JAPON)

D. Pick-Up and Feed Operations

The paper deck picks up and feeds paper in response to signals from the copier.

The paper deck motor (M1) is driven in response to the deck motor drive (DMD*) signal from the copier; drive is then transmitted to the pick-up and registration rollers by way of clutches.

The clutches in turn are under the control of the signals from the copier.

When paper is picked up, the pick up roller is raised by the pick up roller release solenoid (SL1).

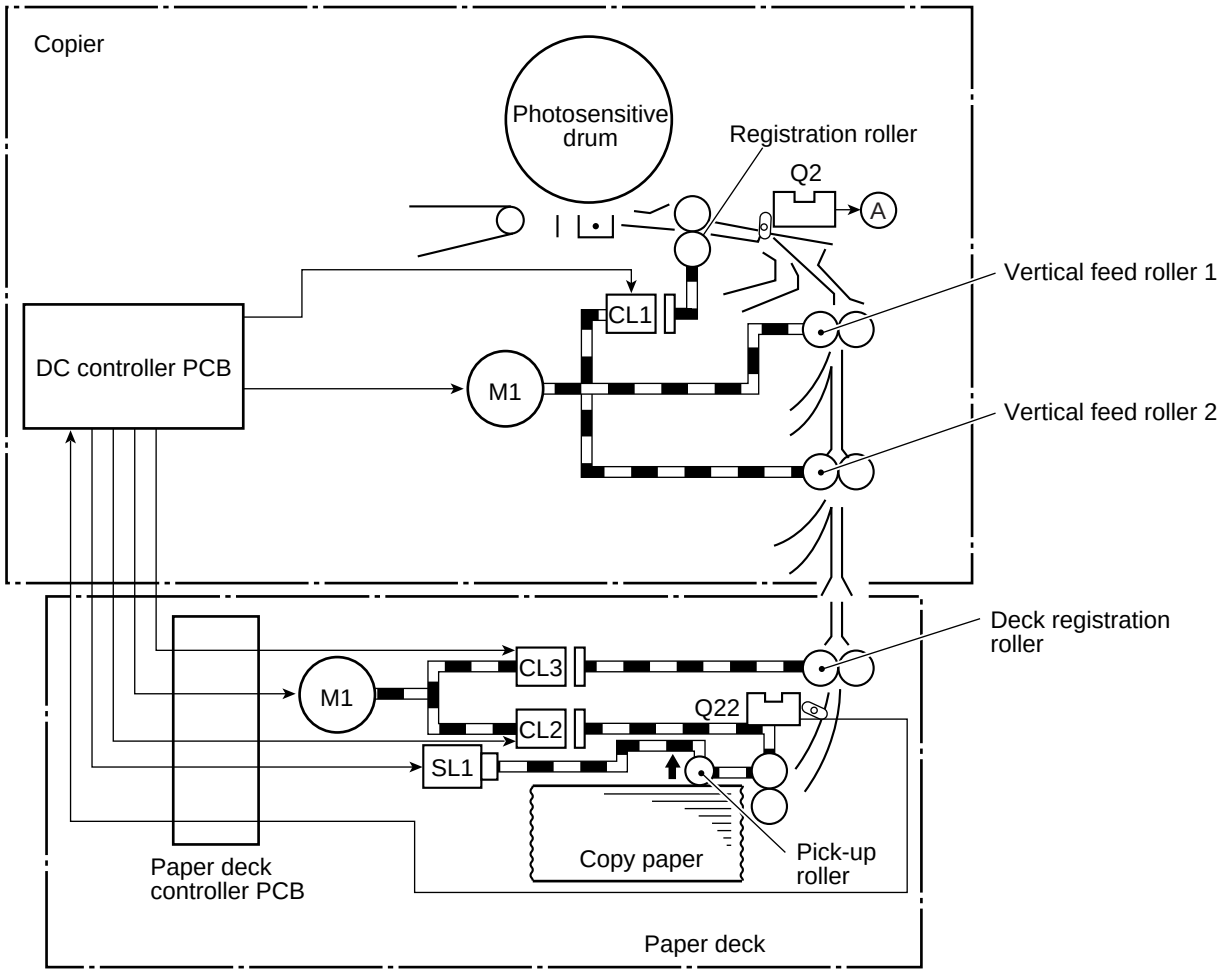

Figure 2-105P

COPYRIGHT © 1999 CANON INC.

1. Sequence of Pick-Up and Feed Operations

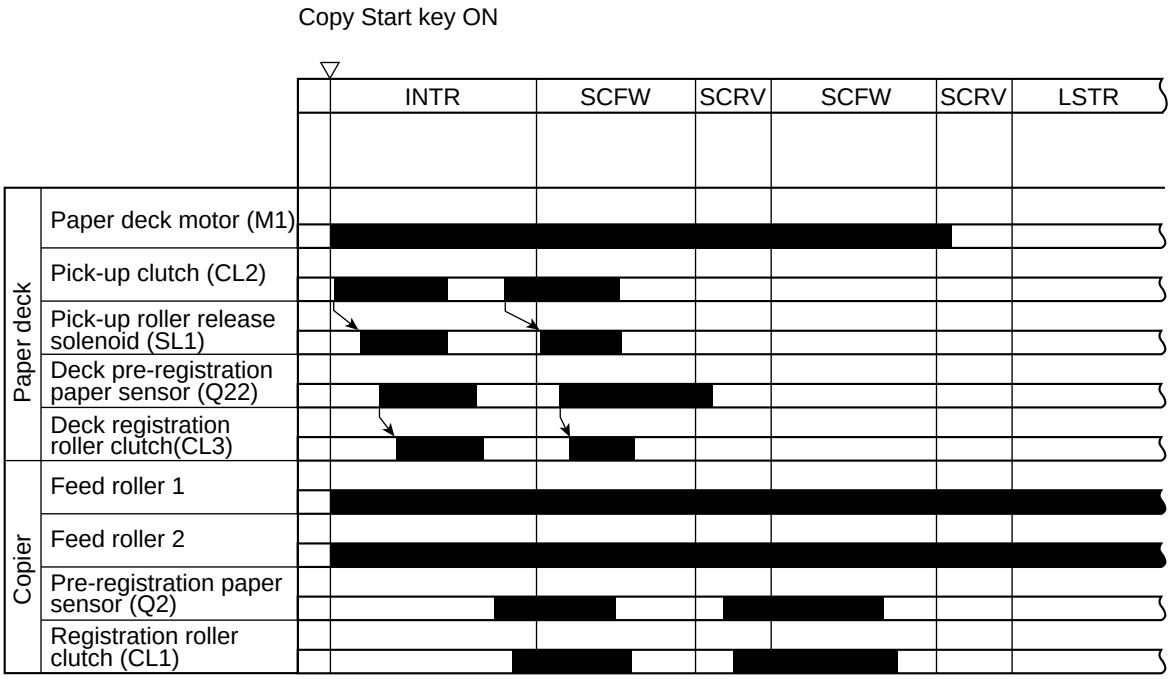

Figure 2-106P

COPYRIGHT © 1999 CANON INC.
CANON NP6320 REV.0 DEC. 1999 PRINTED IN JAPAN (IMPRIME AU JAPON)

E. Releasing the Pick-Up and Separation Rollers

The paper deck is of a front loading type; as such, the deck is pulled out for a supply of paper.

When the deck is pulled out, the pick-up and separation rollers are released; this design facilitates positioning of the deck and clearing of jams.

The pick-up roller is released as soon as the grip of the deck is pulled.

When the latch on the grip comes off the cam on the edge of the roller release shaft, the arm on the roller release shaft rises and the pick-up roller, in turn, is raised.

On the other hand, when the latch on the grip pushes up the cam upon insertion of the deck, the arm lowers and, in turn, the pick-up roller is lowered.

The arm is also used to release the pick-up roller during pick-up operation.

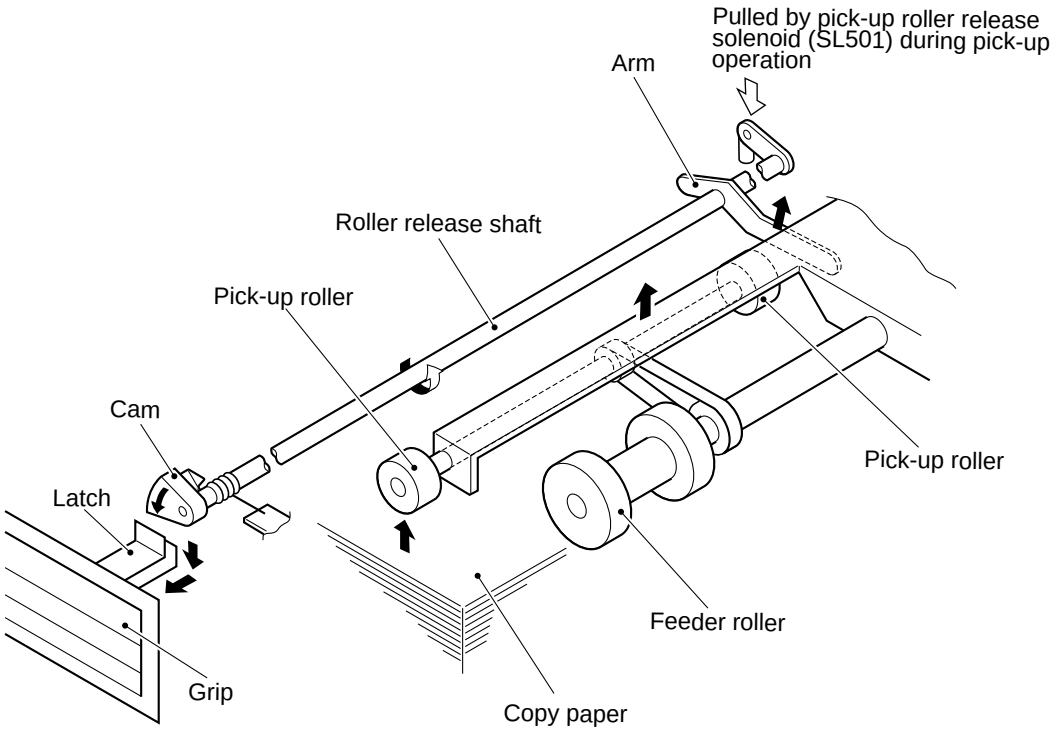

Figure 2-107P

COPYRIGHT © 1999 CANON INC.

The separation roller is released when the cam on the deck side plate comes off the release lever roller.

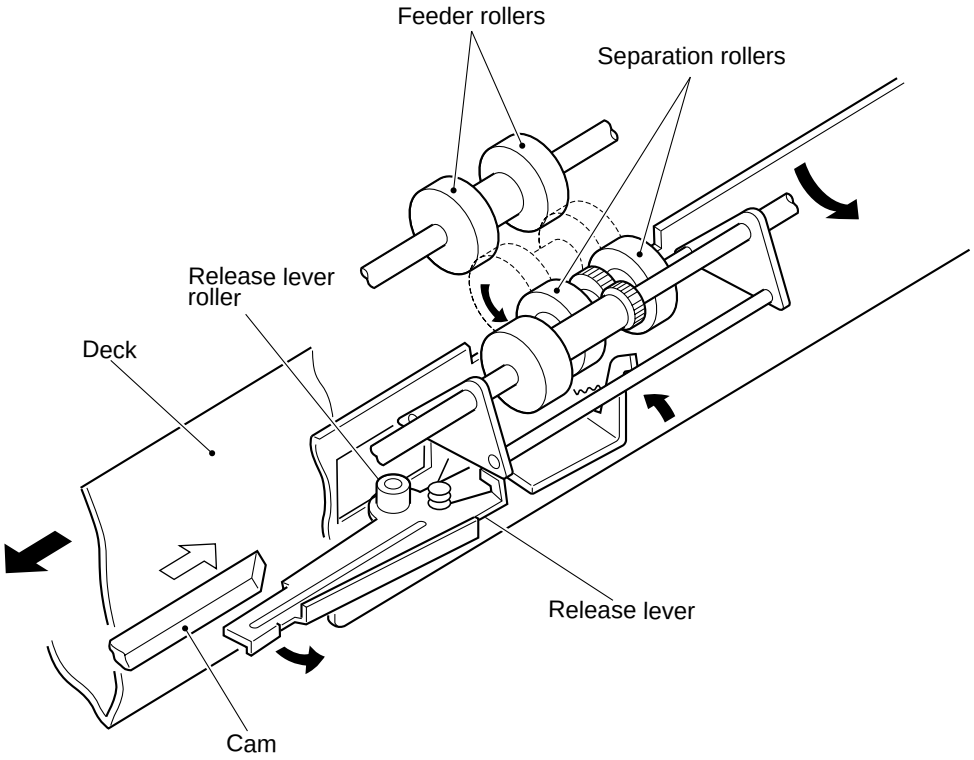

Figure 2-108P

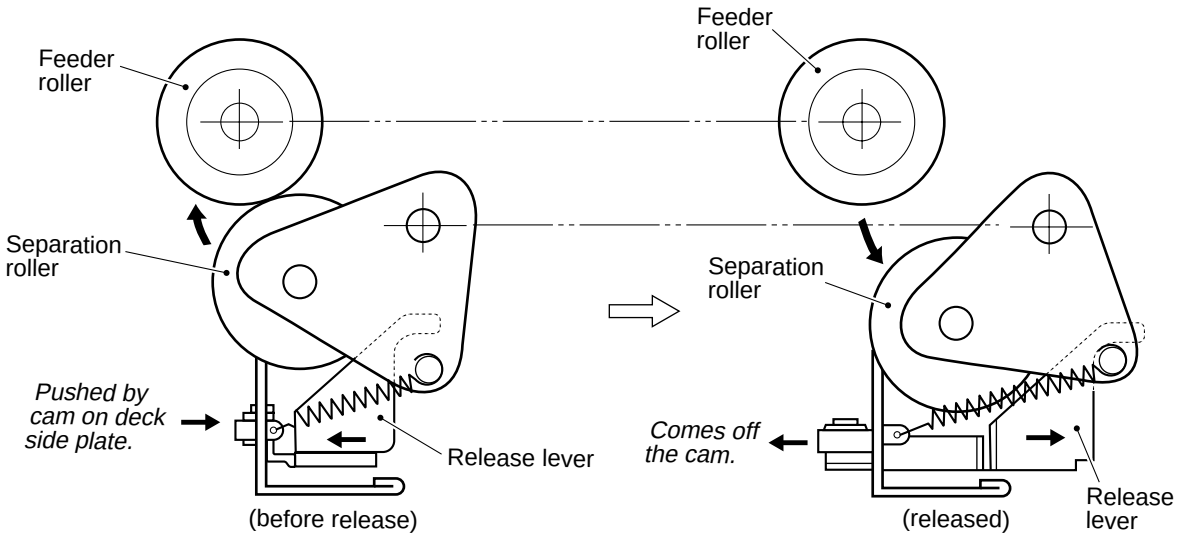

Figure 2-109P

COPYRIGHT © 1999 CANON INC.
CANON NP6320 REV.0 DEC. 1999 PRINTED IN JAPAN (IMPRIME AU JAPON)

CHAPTER 3

MECHANICAL SYSTEM

1. ⚠ CAUTION: Before servicing the machine, disconnect its power cord from the electrical outlet.
2. Assemble the machine as in disassembly work but in reverse order.
3. Make sure screws are identified and grouped by type (length, diameter).
4. As a rule, do not operate the machine with any of its parts removed.

I. PICK-UP AND FEEDER SYSTEMS 3-1P
   A. Pick-Up Roller 3-1P
   B. Feed Roller 3-3P
   C. Separation Roller 3-4P
   D. Registration Roller 3-5P

II. DRIVE SYSTEM 3-6P
   A. Deck Drive Unit 3-6P

III. ADJUSTING THE REGISTRATION (FRONT, REAR) 3-8P
   A. Making Adjustments 3-9P

IV. MODIFYING THE DECK SIZE 3-11P

COPYRIGHT © 1999 CANON INC. CANON NP6320 REV.0 DEC. 1999 PRINTED IN JAPAN (IMPRIME AU JAPON)

I. PICK-UP AND FEEDER SYSTEMS

A. Pick-Up Roller

1) Remove the four screws [1], and detach the rear cover [2] from the pedestal.

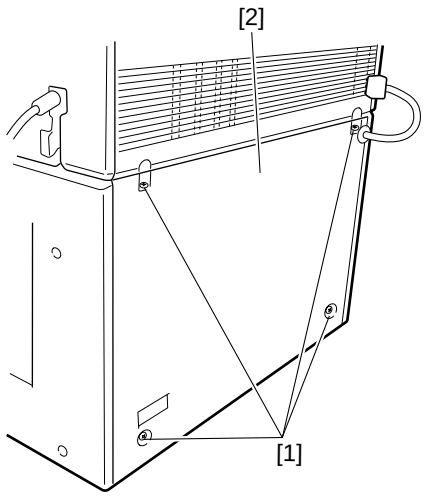

Figure 3-101P

2) Remove the screw [3], and detach the deck stopper plate [4].

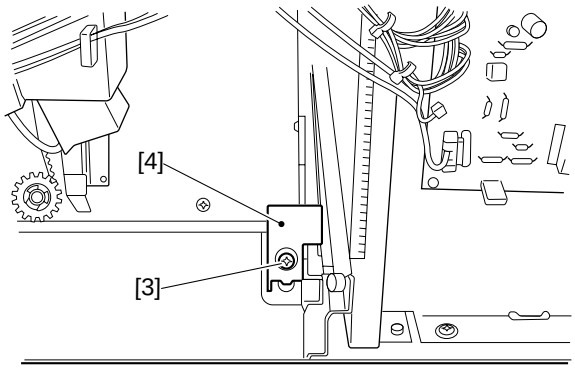

Figure 3-102P

COPYRIGHT © 1999 CANON INC.

3) Detach the deck from the front.
   • Slide it out to the front until it stops; detach it as if to lift it.

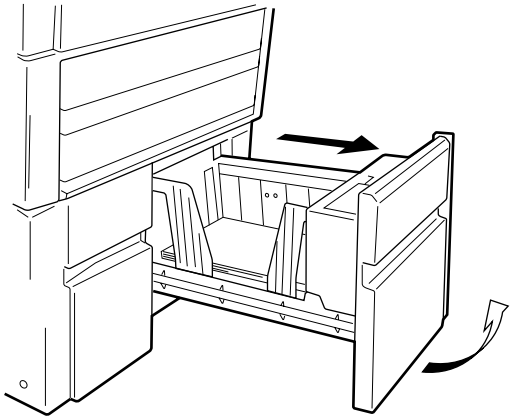

Figure 3-103P

4) Remove the E-ring [5], and detach the pick-up roller (front) [6]; thereafter, pull out the pick-up roller (rear) [7] together with its shaft.

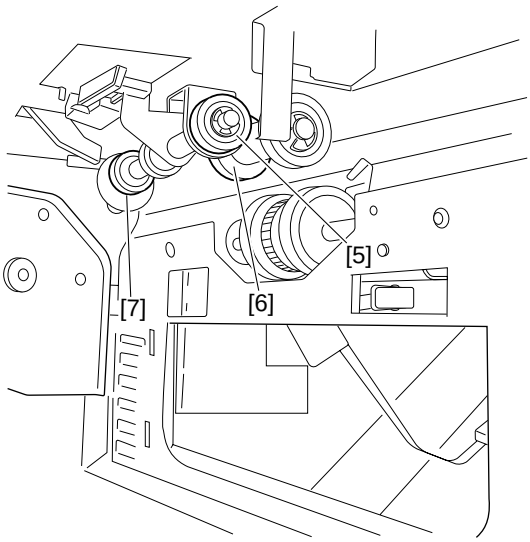

Figure 3-104P

COPYRIGHT © 1999 CANON INC.
CANON NP6320 REV.0 DEC. 1999 PRINTED IN JAPAN (IMPRIME AU JAPON)

B. Feed Roller

1) Detach the deck.
2) Remove the stop ring [1], and detach the feed roller [2].

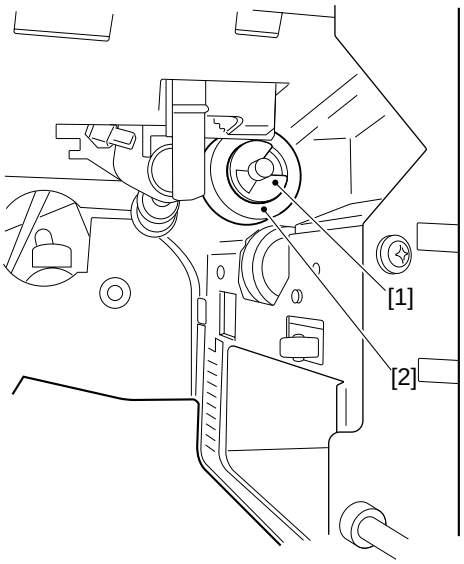

Figure 3-105P

Note:
Take care; the feed roller has its own orientation.

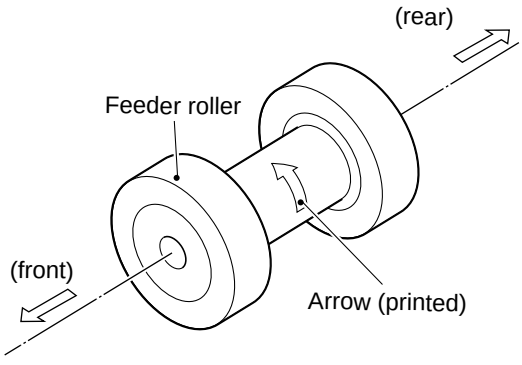

Figure 3-106P

COPYRIGHT © 1999 CANON INC.

C. Separation Roller

1) Slide out the deck.
2) Open the right door of the pedestal.
3) Remove the two stop rings [1], and detach the separation roller.

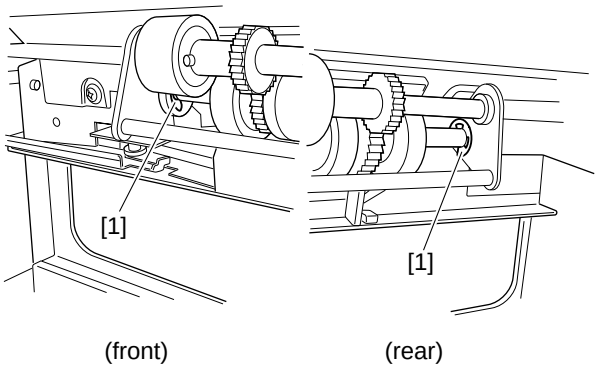

Figure 3-107P

COPYRIGHT © 1999 CANON INC.
CANON NP6320 REV.0 DEC. 1999 PRINTED IN JAPAN (IMPRIME AU JAPON)

D. Registration Roller

1) Detach the deck drive unit; see the discussion on removing the deck drive unit. See p.3-4P.
2) Remove the E-ring [1] at the rear and the spring [2].

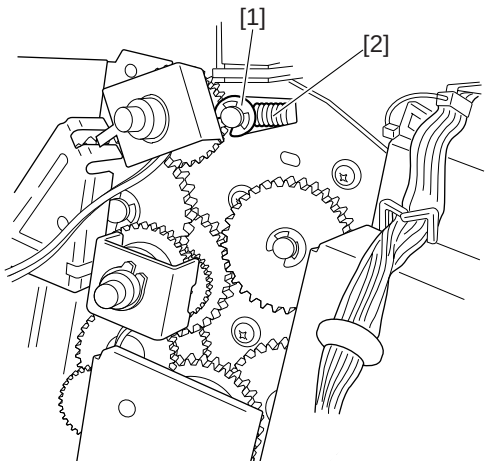

Figure 3-108P

3) Remove the E-ring [3] at the front, and detach the gear [4]; thereafter, detach the registration roller [5].

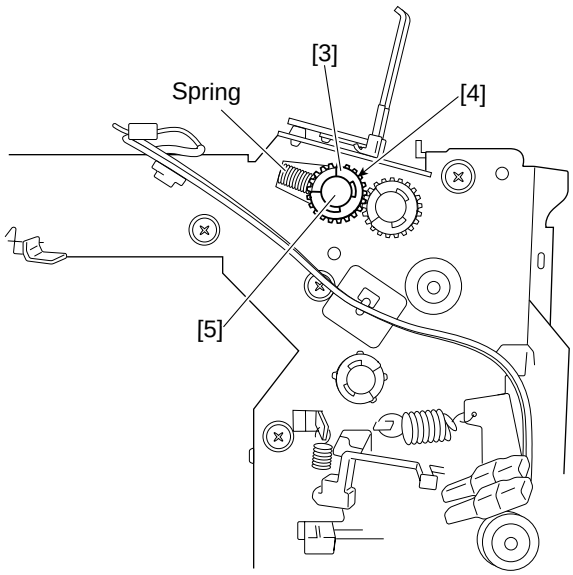

Figure 3-109P

COPYRIGHT © 1999 CANON INC.

II. DRIVE SYSTEM

A. Deck Drive Unit

1) Detach the right cover and right door from the copier.
2) Detach the rear cover from the pedestal.
3) Remove the four connectors (J1, J2, J3, J4) [1] and two fastons [2] from the paper deck PCB.

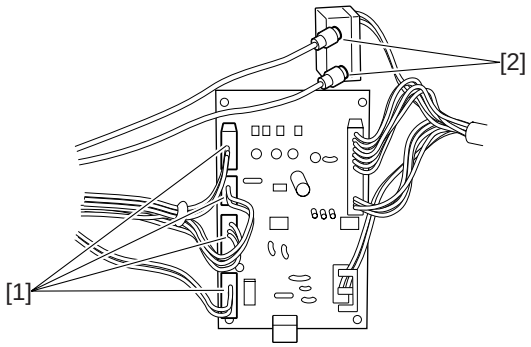

Figure 3-201P

4) Detach the deck stopper plate, and pull out the deck.
5) Remove the four screws [3], and detach the right cover [4] from the pedestal.

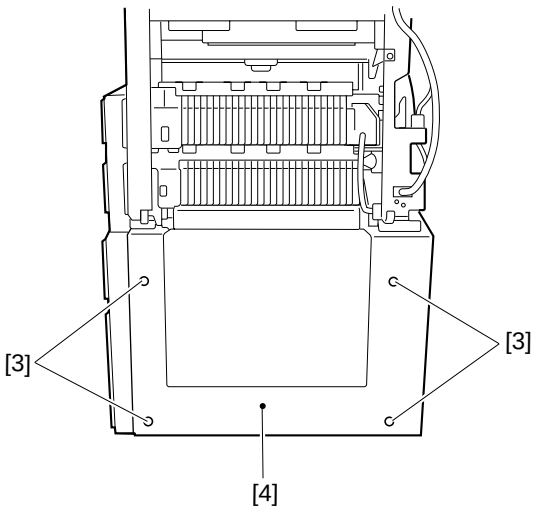

Figure 3-202P

COPYRIGHT © 1999 CANON INC.
CANON NP6320 REV.0 DEC. 1999 PRINTED IN JAPAN (IMPRIME AU JAPON)

6) Detach the strap [5], and remove the right door [6] from the pedestal.

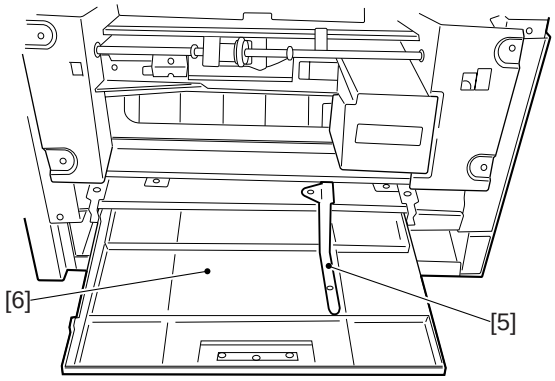

Figure 3-203P

7) Remove the four mounting screws [7], and pull the deck drive unit [8] to the front to detach.

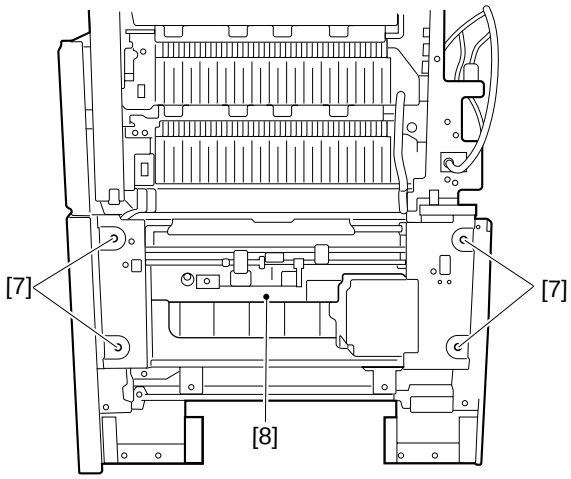

Figure 3-204P

COPYRIGHT © 1999 CANON INC.

III. ADJUSTING THE REGISTRATION (FRONT, REAR)

The registration at the front and rear for the pedestal should be as shown in Figure 3-301P.

If the registration is otherwise, make the following adjustments.

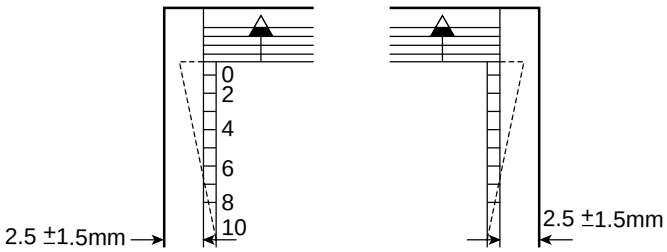

Figure 3-301P

COPYRIGHT © 1999 CANON INC.
CANON NP6320 REV.0 DEC. 1999 PRINTED IN JAPAN (IMPRIME AU JAPON)

A. Making Adjustments

1) Slide out the deck.

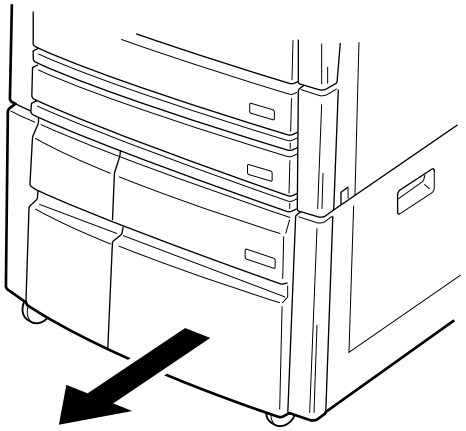

Figure 3-302P

2) Loosen the four mounting screws on the front cover and the four mounting screws on the grip plate.

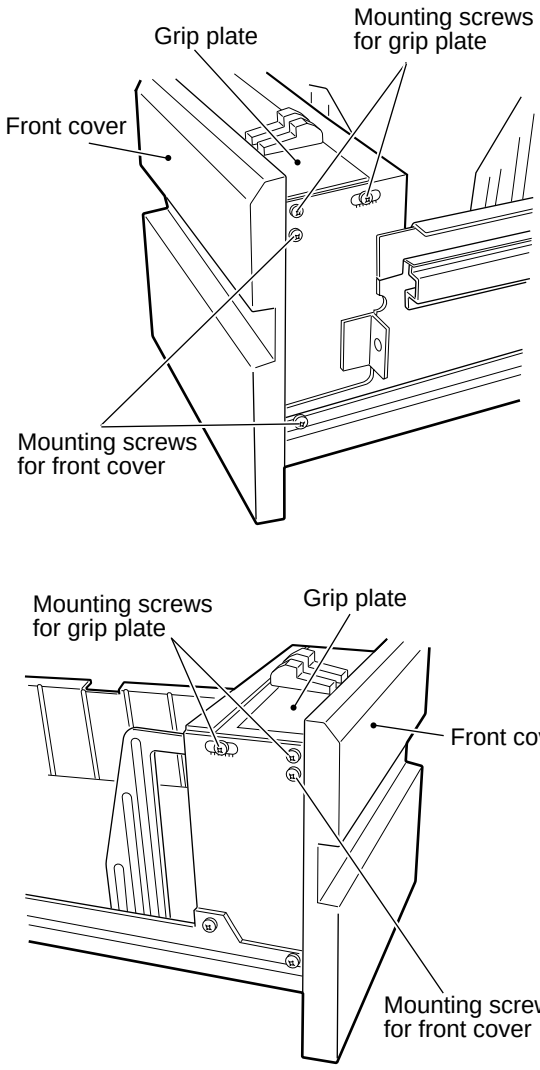

Figure 3-303P

COPYRIGHT © 1999 CANON INC.

3) Slide the grip plate in parallel to the body, and adjust the registration at the front and rear.

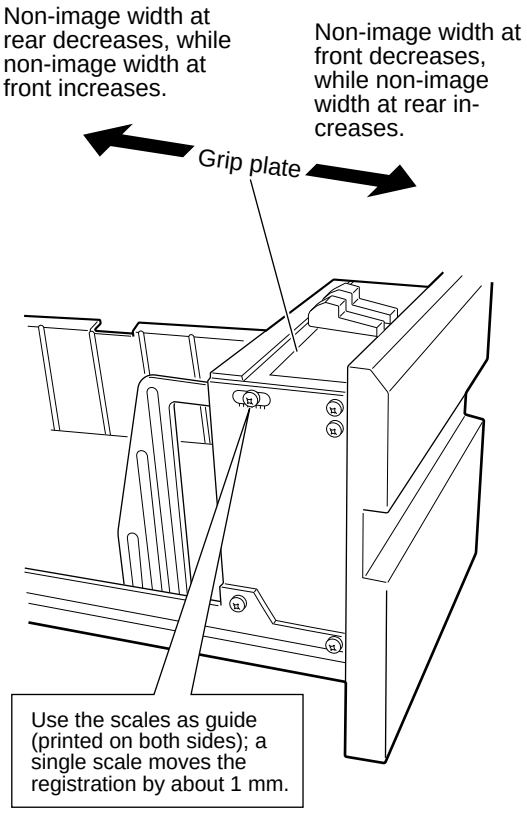

Figure 3-304P

4) Tighten the four mounting screws on the grip plate after adjustment.
5) Set the deck.

Note:
Slide it to the front, without releasing the latch.

6) Make copies using the paper deck.
7) Repeat steps 3) to 6) if the registration is outside the standards.
8) Fix the front cover so that the gap between the front cover and pedestal frame is about 0.5 mm.

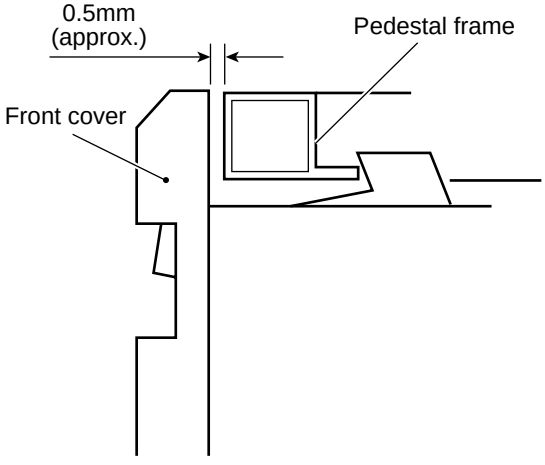

Figure 3-305P

COPYRIGHT © 1999 CANON INC.
CANON NP6320 REV.0 DEC. 1999 PRINTED IN JAPAN (IMPRIME AU JAPON)

IV. MODIFYING THE DECK SIZE

The paper deck can be modified to suit the size of the paper to be used (A4 or LTR) by relocating the three partitions and resetting the DIP switch.

Modifying the Deck Size

1) Detach the rear cover from the pedestal.
2) Detach the stopper plate, and take out the deck.

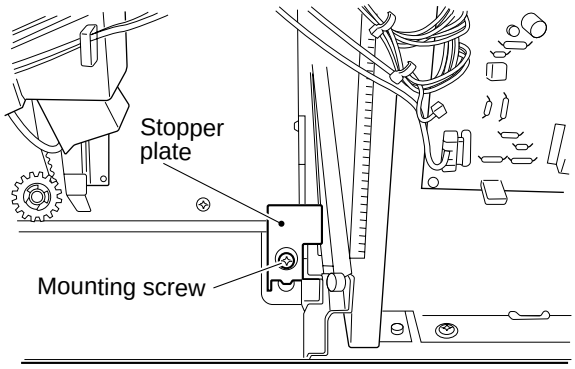

Figure 3-401P

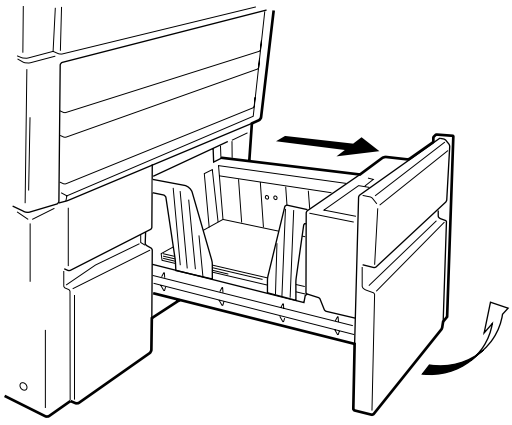

Figure 3-402P

COPYRIGHT © 1999 CANON INC.

3) Detach the three partitions.
4) Fit the partitions into the holes corresponding to the desired size.

■ Use a sheet of the desired size as reference to facilitate the work.

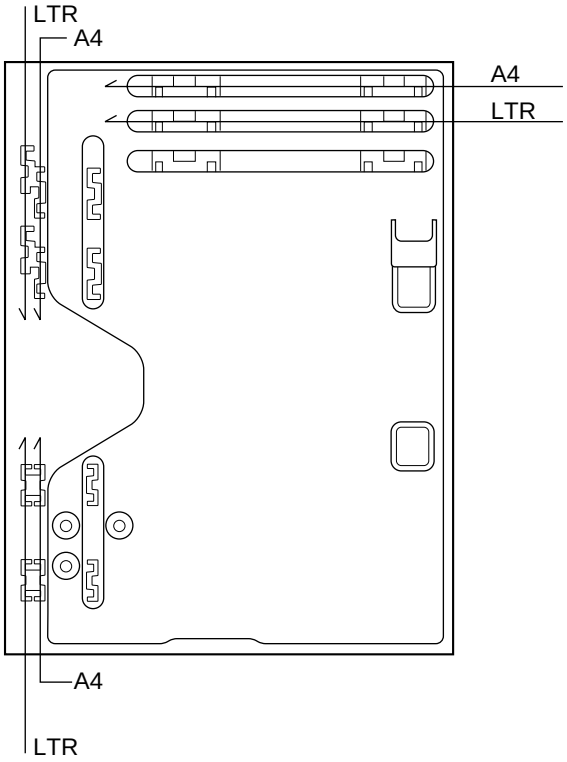

Figure 3-403P

5) Reset the DIP switch on the deck controller PCB.



Figure 3-404P

6) Set the deck, attach the stopper plate, and attach the rear cover.

COPYRIGHT © 1999 CANON INC.
CANON NP6320 REV.0 DEC. 1999 PRINTED IN JAPAN (IMPRIME AU JAPON)

CHAPTER 4

MAINTENANCE AND SERVICING

I. PARTS TO BE REPLACED PERIODICALLY 4-1P
II. DURABLE PARTS 4-1P
III. PERIODICAL SERVICING CHART 4-1P

COPYRIGHT © 1999 CANON INC. CANON NP6320 REV.0 DEC. 1999 PRINTED IN JAPAN (IMPRIME AU JAPON)

I. PARTS TO BE REPLACED PERIODICALLY

There are no parts in the Paper Deck Pedestal which must be replaced periodically.

II. DURABLE PARTS

The table below shows the average life (in terms of estimated number of copies) of parts that may require replacement at least once within the warranty period due to deterioration, wear, or damage.

as of Dec. 1999

No.	Parts name	Parts No.	Q'ty	Life	Remarks
1	Pick-up roller	FF9-1003-050	2	100,000	
2	Feed roller	FL9-0009-000	1	100,000	
3	Retard roller	FL9-0010-020	1	100,000	
4	In-deck registration roller	FA5-8409-000	1	300,000	

Note:
The values in the table are estimates only and may change based on future data.

Table 4-201P

III. PERIODICAL SERVICING CHART

△: Clean ●: Replace ×: Oil □: Adjust ◆: Inspect

Name of unit	Section	Intervals	Remarks
		every 100,000 copies	
	Pick-up roller bushing	×	Apply oil.

Table 4-301P

COPYRIGHT © 1999 CANON INC.
CANON NP6320 REV.0 DEC. 1999 PRINTED IN JAPAN (IMPRIME AU JAPON)

APPENDIX

I. ARRANGEMENT AND FUNCTIONS OF ELECTRICAL PARTS A-1P
II. VARIABLE RESISTOR (VR), LED, AND CHECK PIN BY PCB.....A-3P
III. GENERAL CIRCUIT DIAGRAM A-4P

COPYRIGHT © 1999 CANON INC. CANON NP6320 REV.0 DEC. 1999 PRINTED IN JAPAN (IMPRIME AU JAPON)

I. ARRANGEMENT AND FUNCTIONS OF ELECTRICAL PARTS

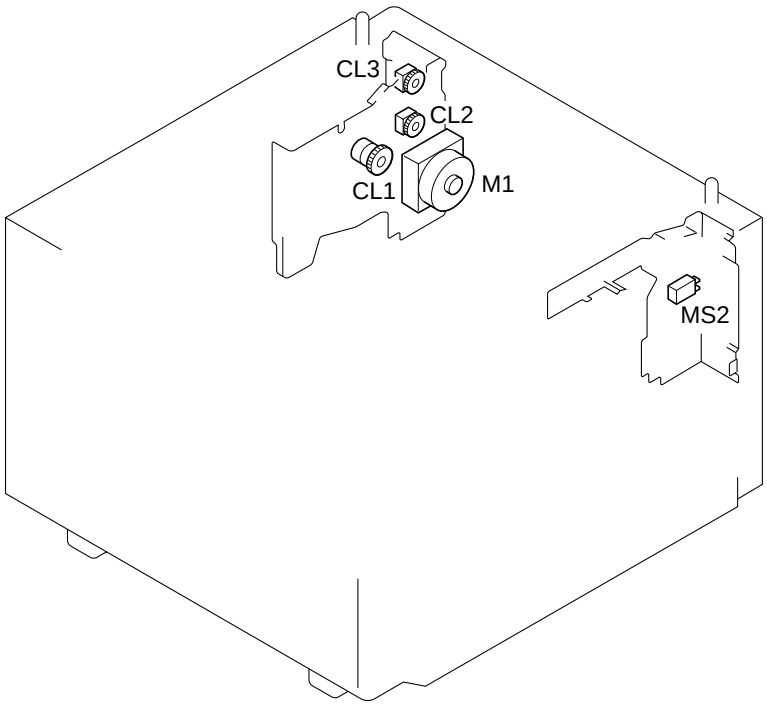

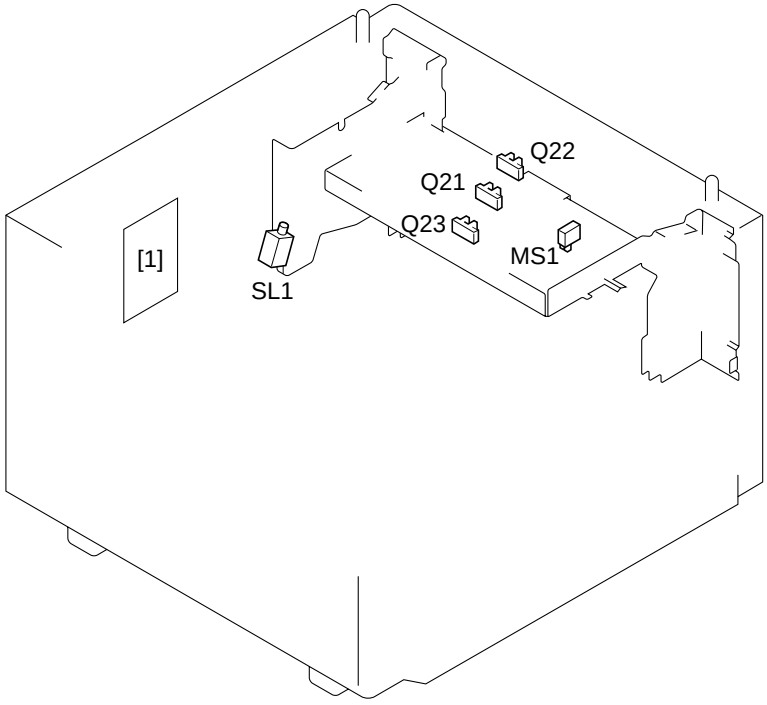

COPYRIGHT © 1999 CANON INC.
CANON NP6320 REV.0 DEC. 1999 PRINTED IN JAPAN (IMPRIME AU JAPON)

Name	Notation	Function
Photointerrupter	Q21	Paper sensor
	Q22	Pre-registration sensor
	Q23	Lifter position sensor
Microswitch	MS1	Upper limit switch
	MS2	Door open/closed switch
Motor	M1	Deck motor
Clutch	CL1	Lifter clutch
	CL2	Pick-up clutch
	CL3	Registation roller clutch
Solenid	SL1	Pick-up roller release solenoid
Deck controller PCB	[1]	Drives each load in the pedestal.

COPYRIGHT © 1999 CANON INC.
CANON NP6320 REV.0 DEC. 1999 PRINTED IN JAPAN (IMPRIME AU JAPON)

II. VARIABLE RESISTOR (VR), LED, AND CHECK PIN BY PCB

Discussion will be limited to the VRs, LEDs, and check pins that can be used in the field.

Those not discussed are for adjustment at the factory only, and adjustments and checks using them call for special tools and instruments as well as high accuracy. Do not touch them in the field.

Note:

1. Some LEDs emit light even when OFF because of leakage current.
2. VRs that may be used in the field ..... ◓
   VRs that may not be used in the field ..... ⊘

1. Deck Controller PCB

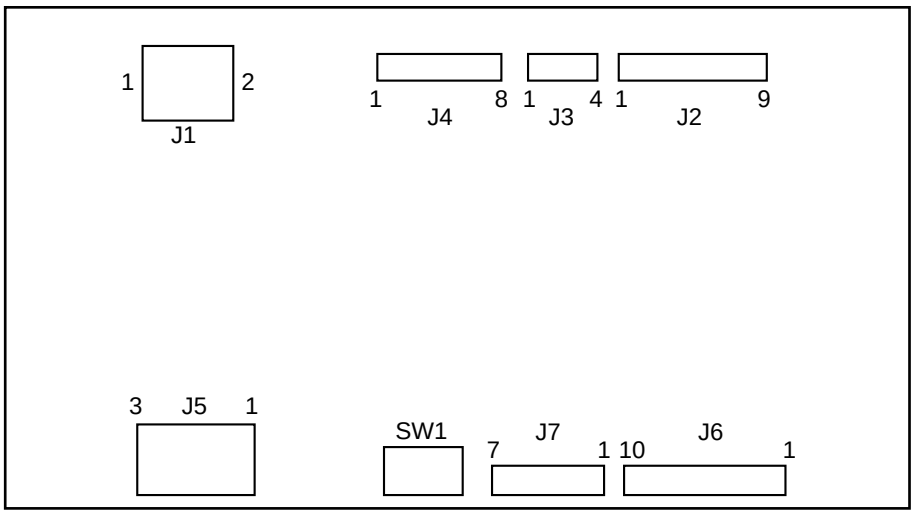

Figure A-201P

	A4	LTR
SW1-1	ON	OFF
SW1-2	ON	OFF

Table A-201P

COPYRIGHT © 1999 CANON INC.
CANON NP6320 REV.0 DEC. 1999 PRINTED IN JAPAN (IMPRIME AU JAPON)

III. GENERAL CIRCUIT DIAGRAM

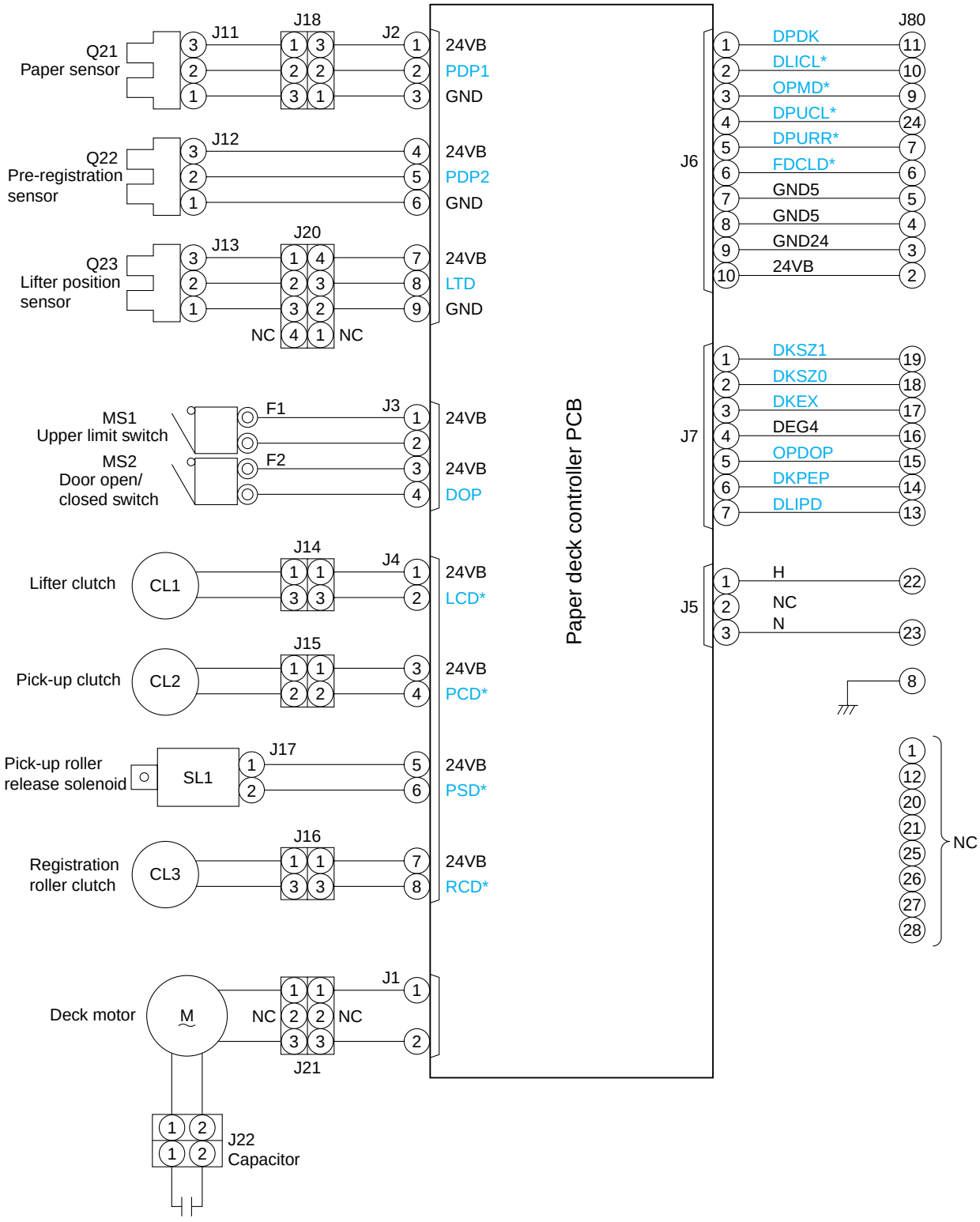

COPYRIGHT © 1999 CANON INC.
CANON NP6320 REV.0 DEC. 1999 PRINTED IN JAPAN (IMPRIME AU JAPON)

Prepared by
Office Imaging Products Technical Support Division
Office Imaging Products Quality Assurance Center
CANON INC.
Printed in Japan

REVISION 0 (DEC. 1999) (18756)

5-1, Hakusan 7-chome, Toride-shi, Ibaraki 302-8501 Japan

COPYRIGHT © 1999 CANON INC. CANON NP6320 REV.0 DEC. 1999 PRINTED IN JAPAN (IMPRIME AU JAPON)

Canon

This pubication is printed on
70% reprocessed paper.

PRINTED IN JAPAN (IMPRIME AU JAPON) 1299AB0.91-1