NP6330

SERVICE MANUAL

REVISION 0

Canon

MAY 1997

FY8-13EZ-000

COPYRIGHT © 1997 CANON INC.

CANON NP6330 REV.0 MAY 1997 PRINTED IN JAPAN (IMPRIME AU JAPON)

IMPORTANT

THIS DOCUMENTATION IS PUBLISHED BY CANON INC., JAPAN, TO SERVE AS A SOURCE OF REFERENCE FOR WORK IN THE FIELD.

SPECIFICATIONS AND OTHER INFORMATION CONTAINED HEREIN MAY VARY SLIGHTLY FROM ACTUAL MACHINE VALUES OR THOSE FOUND IN ADVERTISING AND OTHER PRINTED MATTER.

ANY QUESTIONS REGARDING INFORMATION CONTAINED HEREIN SHOULD BE DIRECTED TO THE COPIER SERVICE DEPARTMENT OF THE SALES COMPANY.

THIS DOCUMENTATION IS INTENDED FOR ALL SALES AREAS, AND MAY CONTAIN INFORMATION NOT APPLICABLE TO CERTAIN AREAS.

COPYRIGHT © 1997 CANON INC.

Printed in Japan
Imprimé au Japon

Use of this manual should be strictly supervised to avoid disclosure of confidential information.

Prepared by

OFFICE IMAGING PRODUCTS TECHNICAL SUPPORT DEPT. 1
OFFICE IMAGING PRODUCTS TECHNICAL SUPPORT DIV.

CANON INC.

5-1, Hakusan 7-chome, Toride-shi, Ibaraki 302, Japan

INTRODUCTION

This Service Manual provides the basic facts and figures about the plain paper copier NP6330 needed for servicing it in the field.

The NP6330 is designed to enable full automation of copying work, and may be configured with various accessories.

(For detailed descriptions of sorters, ADFs, RDFs, and controllers, see their respective Service Manuals.)

This Service Manual covers the NP6330 and the pedestal, and is organized as follows:

Chapter 1 *General Description* introduces the copier's features and specifications, shows how to operate the copier, and explains how copies are made.

Chapter 2 *Operations And Timing* discusses how the functions of the mahine work and provides outlines of electric circuitry and sequence of operations.

Chapter 3 *Exposure System* discusses the principles of operation used for the copier's lens drive unit and scanner drive unit. It also explains the timing at which these drive units are operated, and shows how they may be disassembled/assembled and adjusted.

Chapter 4 *Image Formation System* discusses the principles of how images are formed. It also explains the timing at which the various units involved in image formation are operated, and shows how they may be disassembled/assembled and adjusted.

Chapter 5 *Pick-Up/Feeding System* explains the principles used from when copy paper is picked up to when a copy is delivered in view of the functions of electrical and mechanical units and in relation to their timing of operation. It also shows how these units may be disassembled/assembled and adjusted.

Chapter 6 *Fixing System* explains the principles used to fuse toner images to transfer media in view of the functions of electrical and mechanical units and in relation to their timing of operation. It also shows how these units may be disassembled/assembled and adjusted.

Chapter 7 *Controls And Externals* shows the copier's external parts, and explains the principles used for the copier's various control mechanisms in view of the functions of electrical and mechanical units and in relation to their timing of operation. It also shows how these units may be disassembled/assembled and adjusted.

Chapter 8 *Paper Deck Pedestal* explains the principles of operation of the paper deck pedestal in view of electrical and mechanical units and in relation to their timing of operation. It also shows how the unit may be disassembled/assembled and adjusted.

COPYRIGHT © 1997 CANON INC.

Chapter 9 *Installation* introduces requirements for the site of installation, and shows how the copier may be installed using step-by-step instructions.

Chapter 10 *Maintenance and Inspection* provides tables of periodically replaced parts and consumables/durables and scheduled servicing charts.

Chapter 11 *Troubleshooting* provides tables of maintenance/inspection, standards/adjustments, and problem identification (image fault/malfunction).

Appendix contains a general timing chart and general circuit diagrams.

The following rules apply throughout this Service Manual:

1. Each chapter contains sections explaining the purpose of specific functions and the relationship between electrical and mechanical systems with reference to the timing of operation.

   In the diagrams, ▬▬▬ represents the path of mechanical drive—where a signal name accompanies the symbol ⟶ , the arrow indicates the direction of the electric signal.

   The expression “turn on the power” means flipping on the power switch, closing the front door, and closing the delivery door, which results in supplying the copier with power.

2. In the digital circuits, ‘1’ is used to indicate that the voltage level of a given signal is “High,” while ‘0’ is used to indicate “Low.” (The voltage value, however, differs from circuit to circuit.)

   In practically all cases, the internal mechanisms of a microprocessor cannot be checked in the field. Therefore, the operations of the microprocessors used in the copiers are not discussed: they are explained in terms of from sensors to the input of the DC controller PCB and from the output of the DC controller PCB to the loads.

The descriptions in this Service Manual are subject to change without notice for product improvement or other reasons, and major changes will be communicated in the form of *Service Information* bulletins.

All service persons are expected to have a good understanding of the contents of this Service Manual and all relevant *Service Information* bulletins and be able to identify and isolate faults in the copier.

COPYRIGHT © 1997 CANON INC.
CANON NP6330 REV.0 MAY 1997 PRINTED IN JAPAN (IMPRIME AU JAPON)

System Configuration

The NP6330 may be configured with the following accessory:

ADF-E1
Feeds a stack of originals one by one to the copyboard for copying.

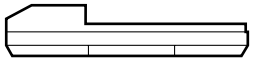

RDF-F1
Feeds a stack of originals one by one to the copyboard for copying. In addition, automatically turns over each two-sided original.



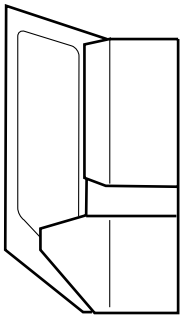

Sorter-E1
Automatically sorts (page collation) and groups up to 20 sets of copies.

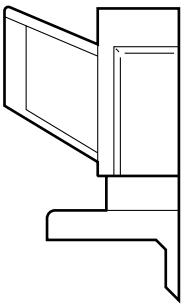

Stapler Sorter-D2/MS-B1
Automatically sorts (page collation) and groups up to 10 sets of copies.
In addition to sorter functions, is equipped with stapler sorter functions which automatically staple sorted copies. (Not applicable to MS-B1.)

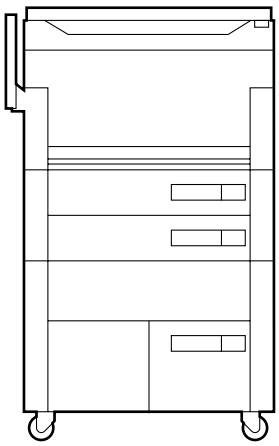

Paper Deck Pedestal-M1
(1 paper deck)
Adds 1500 sheets of paper.

COPYRIGHT © 1997 CANON INC.

CONTENTS

CHAPTER 1 GENERAL DESCRIPTION

I. FEATURES....1-1
II. SPECIFICATIONS....1-2
A. Copier....1-2
1. Type....1-2
2. System....1-2
3. Performance....1-3
B. Paper Deck Pedestal-M1....1-8
III. NAMES OF PARTS....1-9
A. Exterior View....1-9
B. Cross Section....1-11
1. Body Cross Section....1-11
2. Paper Deck Pedestal-M1....1-12
IV. OPERATION....1-13
A. Control Panel (AB/Inch)....1-13
B. Control Panel (Inch)....1-14
C. User Mode....1-17
1. Specifications....1-17
2. Adjustment/Cleaning....1-19
V. ROUTINE MAINTENANCE BY THE USER....1-20
VI. IMAGE FORMATION....1-21
A. Outline....1-21
B. Static Latent Image Formation Block....1-23
C. Pre-Exposure (step 1)....1-23
D. Primary Charging (step 2)....1-24
E. Image Exposure (step 3)....1-24
F. Development (step 4)....1-25
G. Transfer (step 5)....1-26
H. Separation (step 6)....1-27
I. Fixing (step 7)....1-28
J. Drum Cleaning (step 8)....1-28
VII. AUXILIARY PROCESS....1-29
A. Blank Exposure....1-29

CHAPTER 2 OPERATIONS AND TIMING

I. BASIC OPERATION....2-1
A. Functional Construction....2-1
B. Outline of the Electrical Circuitry....2-2
C. Basic Sequence....2-4
1. Basic Sequence of Operation..2-4
D. Controlling the Main Motor....2-6
1. Outline....2-6
2. Operation....2-6
E. Inputs to the DC Controller....2-8
1. Input to the DC Controller (1/5)....2-8
2. Input to the DC Controller (2/5)....2-9
3. Input to the DC Controller (3/5)....2-10
4. Input to the DC Controller (4/5)....2-11
5. Input to the DC Controller (5/5)....2-12
F. Outputs from the DC Controller....2-13
1. Output from the DC Controller (1/5)....2-13
2. Output from the DC Controller (2/5)....2-14
3. Output from the DC Controller (3/5)....2-15
4. Output from the DC Controller (4/5)....2-16
5. Output from the DC Controller (5/5)....2-17
G. Inputs to and Outputs from the Accessories (1/1)....2-18

COPYRIGHT © 1997 CANON INC. CANON NP6330 REV.0 MAY 1997 PRINTED IN JAPAN (IMPRIME AU JAPON)

CHAPTER 3 EXPOSURE SYSTEM

I. BASIC OPERATION.....3-1
A. Varying the Reproduction Ratio.....3-1
II. LENS DRIVE SYSTEM 3-2
A. Movement of the Lens.....3-2
1. Outline 3-2
2. Lens Motor Drive Circuit.....3-4
3. Focusing.....3-5
III. SCANNER DRIVE MECHANISM.....3-6
A. Driving the Scanner.....3-6
1. Outline 3-6
2. Scanning Motor Control Circuit..3-7
3. Relationship between Scanner Sensor and Signals 3-10
4. Sequence of Scanner Movements (Enlarge/Reduce) ..3-10
5. Sequence of Scanner Movements (page separation mode, 2 copies).....3-11
IV. OTHERS.....3-13
A. Controlling the Detection of Original Sizes.....3-13
1. Outline 3-13
2. Operation.....3-15
3. Identifying the Size of Originals ..3-16
4. Identifying the Size of Originals by the Document Feeder.....3-17
V. DISASSEMBLY AND ASSEMBLY.....3-19
A. Scanner Drive Assembly 3-19
1. Removing the Scanner Motor ..3-19
2. Outline of the Scanner Drive Cable.....3-20
3. Removing the Scanner Drive Cable.....3-21
4. Routing the Scanner Cable 3-26
B. Lens Drive Assembly.....3-30
1. Removing the Lens Motor 3-30
2. Attaching the Lens Drive Belt...3-31
3. Removing the Lens hood 3-32

CHAPTER 4 IMAGE FORMATION SYSTEM

I. PROCESSES 4-1
A. Outline 4-1
B. Basic Sequence of Operations (image formation) 4-2
C. Controlling the Scanner Lamp.....4-3
1. Outline 4-3
2. Turning On and Off the Scanning Lamp 4-4
3. Detecting the Activation of the Scanning Lamp 4-4
4. Protection Mechanism.....4-4
D. Controlling the Primary/ Transfer Corona Current and the Grid Bias 4-5
1. Outline 4-5
2. Controlling the Primary/Transfer Corona Current.....4-6
3. Keeping the Primary/Transfer Corona Current at a Specific Level 4-7
4. Turning On and Off the Grid Bias.....4-8
E. Controlling the Static Eliminator Bias/Fixing Roller Bias 4-9
1. Outline 4-9
2. Turning ON/OFF the Static Eliminator Bias/Fixing Bias.....4-10
3. Switching the Output of the Static Eliminating Bias.....4-10
4. Preventing Separation Faults (thin paper picked up from the multifeeder) 4-10
F. Controlling the Developing Bias 4-11
1. Outline 4-11
2. Turning On and Off DC Component of the Developing Bias and Controlling the Voltage Level.....4-12
3. Turning On and Off the AC Component of the Developing Bias 4-13
4. Sequence of Operations (developing bias).....4-13
G. Controlling Blank Exposure 4-14
1. Outline 4-14
2. Operation.....4-15
3. Controlling the Slide Shutters...4-15
H. Mesuring the Density of Originals 4-16
1. Outline 4-16
2. Operation.....4-17
3. AE Adjustment.....4-18
I. Cleaning the Transfer Charging Wire 4-19
1. Outline 4-19
2. Operation.....4-19
II. DEVELOPING ASSEMBLY/ DRUM CLEANER.....4-21

COPYRIGHT © 1997 CANON INC.
CANON NP6330 REV.0 MAY 1997 PRINTED IN JAPAN (IMPRIME AU JAPON)

A. Outline 4-21
B. Detecting the Level of Toner and Controlling the Supply 4-23
C. Stopping the Hopper Motor in Response to a Rotation Error.....4-24
III. DISASSEMBLY AND ASSEMBLY.....4-25
A. Scanning Lamp Assembly.....4-25
1. Removing the Scanning Lamp ...4-25
2. Orientation of the Scanning Lamp 4-26
3. Removing the Thermal Fuse....4-27
B. Blank Exposure Lamp Assembly ..4-28
1. Removing the Blank Exposure Lamp Assembly.....4-28
2. Removing the Blank Exposure Lamp 4-30
3. Removing the Blank Shutter Solenoid 4-31
4. Adjusting the Position of the Blank Shutter Solenoid.....4-32
5. Removing the Blank Shutter Motor 4-33
6. Routing the Blank Shutter Cable 4-33
C. Drum Unit 4-34
1. Removing the Drum Unit.....4-34
2. Cleaning 4-35
D. Charging Assembly 4-36
1. Removing the Primary Charging Assembly 4-36
2. Removing the Transfer Charging Assembly 4-37
3. Stringing the Primary/ Transfer Charging Wire 4-37
4. Stringing the Guide Wire 4-41
5. Adjusting the Height of the Charging Wire 4-41
E. Developing System 4-42
1. Removing the Developing Assembly 4-42
2. Removing the Blade 4-43
3. Removing the Magnetic Seal (developing cylinder) 4-44
4. Installing the Magnetic Seal and the Blade 4-47
5. Installing the Electrode Positioning Plate.....4-48

CHAPTER 5 PICK-UP/FEEDING SYSTEM

I. PICK-UP/FEEDING SYSTEM 5-1
A. Outline 5-1
II. PICK-UP FROM THE CASSETTE 5-3
A. Pick-Up Operation 5-3
1. Outline 5-3
2. Sequence of Pick-Up Operations.....5-5
B. Movement of the Cassette Lifter ...5-6
C. Identifying the Size of Copy Paper 5-8
1. Outline 5-8
2. Identifying the Size of Copy Paper.....5-8
3. Markings on the Width Guide Rail 5-10
4. Paper Size.....5-11
5. Registering Paper Width Basic Values.....5-12
III. PICK-UP FROM THE MULTIFEEDER.....5-13
A. Pick-Up Operation 5-13
1. Outline 5-13
2. Identifying the Size of Paper on the Multifeeder 5-14
3. Sequence of Multifeeder Pick-Up Operation 5-15
IV. CONTROLLING THE REGISTRATION CLUTCH 5-16
V. TWO-SIDED COPYING 5-18
A. Making Two-Sided Copies.....5-18
1. Outline 5-18
2. Operations.....5-19
B. Lower Feeding Assembly 5-20
1. Outline 5-20
2. Set-Back Operation 5-22
3. Sequence of Set-back Operation.....5-26
4. Re-Pick Up 5-27
5. Sequence of Re-Pick-up Operation.....5-29
C. Horizontal Registration 5-30
1. Outline 5-30
2. Operation.....5-31
3. Sequence of Operatiion 5-33
VI. DETECTING JAMS 5-34
A. Outline 5-34
VII. DISASSEMBLY AND ASSEMBLY.....5-45
A. Pick-Up Assembly 5-46
1. Construction 5-46
2. Removing the Pick-Up Assembly.....5-47
3. Removing the Pick-Up Roller ...5-48
4. Points to Note When Installing the Pick-Up Roller 5-49
5. Removing the Feeding Roller...5-49
6. Removing the Separation Roller 5-51

COPYRIGHT © 1997 CANON INC.

7. Adjusting the Pressure of the Separation Roller.....5-53
8. Positioning the Pick-Up Assembly Pick-Up Roller Releasing Solenoid (SL1, SL2).....5-53
9. Releasing the Lifter.....5-54
10. Adjusting the Registration (left/right).....5-55
B. Multifeeder Assembly.....5-56
1. Removing the Multifeeder Assembly.....5-56
2. Removing the Multifeeder Pick-Up Roller/Separation Pad.....5-56
3. Adjusting the Pressure on the Separation Pad.....5-58
4. Adjusting the Left/Right Registration.....5-58
5. Adjusting the Paper Guide Plate Cam (multifeeder assembly)....5-59
6. Routing the Timing Belt (multifeeder assembly).....5-59
C. Registration Roller Assembly.....5-60
1. Removing the Registration Roller.....5-60
D. Feeding Assembly.....5-62
1. Removing the Feeding Assembly.....5-62
2. Removing the Feeding Belt.....5-63
3. Removing the Feeding Fan.....5-67
E. Lower Feeding Assembly.....5-68
1. Removing the Lower Feeding Assembly.....5-68
2. Attaching the Lower Feeding Assembly.....5-70
3. Removing the Set-Back Roller..5-71
4. Removing the Lower Feeder Outlet Roller.....5-72
5. Removing the Lower Feeder Inlet Roller.....5-73

CHAPTER 6 FIXING SYSTEM

I. OPERATION.....6-1
A. Outline.....6-1
II. CONTROLLING THE FIXING TEMPERATURE.....6-2
A. Controlling the Area of Heating (fixing roller).....6-2
B. Controlling the Activation and the Temperature of the Fixing Roller (continuous copying).....6-3
1. Outline.....6-3
2. Controlling Period of Activation.....6-3
3. Controlling the Control Temperature.....6-4
4. Controlling the temperature during Pre-heat mode.....6-4
C. Protection Mechanism.....6-5
D. Driving the Cleaning Belt.....6-7
III. DELIVERY ASSEMBLY.....6-8
A. Outline.....6-8
B. Controlling the Delivery Motor.....6-9
1. Outline.....6-9
2. Operation.....6-10
IV. DISASSEMBLY AND ASSEMBLY.....6-11
A. Fixing Assembly.....6-11
1. Construction.....6-11
2. Removing the Fixing Assembly.....6-12
3. Removing the Fixing Cleaning Belt.....6-15
4. Installing the Fixing Cleaning Belt.....6-16
5. Replacing the oil sheet.....6-17
6. Removing the Fixing Heater.....6-18
7. Removing the Fixing Roller.....6-21
8. Installing the Upper Fixing Roller and the Heater.....6-25
9. Adjusting the Nip (tightening the pressure adjusting nut).....6-27
10. Installing the Thermistor.....6-28
11. Installing the Thermal Switch...6-28
12. Position of the Paper Guide.....6-29
13. Positioning the Cleaning Belt Solenoid.....6-29
B. Delivery Assembly.....6-30
1. Removing the Delivery Assembly.....6-30
2. Removing the Upper Separation Claws.....6-32
3. Removing the Lower Separation Claws.....6-33
4. Removing the Delivery Motor...6-34

COPYRIGHT © 1997 CANON INC.
CANON NP6330 REV.0 MAY 1997 PRINTED IN JAPAN (IMPRIME AU JAPON)

CHAPTER 7 CONTROLS AND EXTERNALS

I. FANS 7-1
II. POWER SUPPLY 7-3
A. Outline of Power Supply.....7-3
B. Protection Mechanisms of the Power Supply Circuit.....7-5
III. ERROR DETECTION CIRCUIT 7-6
A. Outline 7-6
B. Scanning Lamp Error Activation Detection Circuit 7-7
C. Fixing Heater Error Activation Detection Circuit 7-7
1. Detection by an SSR.....7-7
2. Detection by a Thermistor.....7-7
IV. DISASSEMBLY AND ASSEMBLY.....7-8
A. Externals.....7-9
1. Remove the left inside cover....7-11
2. Remove the right inside cover...7-12
B. Control Panel.....7-14
1. Removing the Control Panel 7-14
C. Copyboard Cover 7-15
1. Replacing the Copyboard Cover Sheet 7-15
D. Fans.....7-15
1. Removing the Scanner Cooling Fan 7-15
2. Removing the Exhaust Fan.....7-15
3. Removing the Feeding Fan 7-17
E. Main Motor Assembly.....7-17
1. Removing the Main Motor Assembly.....7-17
F. Mirror Guide Assembly.....7-18
1. Removing the Mirror Guide Plate 7-18
G. Main Drive Assembly.....7-19
1. Removing the Main Drive Assembly.....7-19
2. Attaching the Drive Belt.....7-22
H. Cleaning Belt Drive Assembly.....7-23
1. Removing the Cleaning Belt Drive Assembly 7-23
I. DC Controller PCB 7-24
1. Removing the DC Controller PCB 7-24
2. Points to Note When Handling the DC Controller PCB 7-24
J DC Power Supply PCB 7-25
1. Removing the DC Power Supply PCB 7-25

CHAPTER 8 PAPER DECK PEDESTAL

I. BASIC OPERATION.....8-1
A. Outline of Electrical Circuit 8-1
II. INPUTS TO AND OUTPUTS FROM PEDESTAL CONTROLLER 8-2
A. Outline 8-2
B. Inputs to and Outputs from Pedestal Controller.....8-3
1. Inputs and outputs (1/2) 8-3
2. Inputs and outputs (2/2) 8-4
III. PEDESTAL MOTOR CONTROL CIRCUIT 8-5
A. Outline 8-5
B. Mechanism 8-5
IV. PAPER DECK UNIT 8-6
A. Basic Construction 8-6
B. Pick-Up/Feeding Operation 8-7
1. Mechanism 8-7
2. Sequence of Pick-Up Operations.....8-8
C. Lifter Operation.....8-9
1. Operation.....8-9
2. Lifting Operation 8-10
D. Detecting Paper in the Deck 8-11
1. Identifying the Size of Paper 8-11
2. Identifying the Presence/ Absence of Paper.....8-12
V. DETECTING JAMS 8-13
1. Outline 8-13
VI. DISASSEMBLY AND ASSEMBLY.....8-15
A. Externals.....8-16
1. Paper Deck Pedestal-M1 8-16
2. Detaching the Copier from the Pedestal 8-17
B. Pedestal Motor Drive Assembly 8-19
1. Removing the pedestal motor drive assembly 8-19
C. Paper Deck.....8-20
1. Removing the Paper Deck 8-20
2. Removing the Lifter Wire.....8-21
3. Setting the Deck Size.....8-25
4. Adjusting the Deck Registration..8-27
D. Pick-Up System 8-28
1. Cross Section of Pick-Up Assembly.....8-28
2. Removing the Pick-Up Assembly.....8-29

COPYRIGHT © 1997 CANON INC. CANON NP6330 REV.0 MAY 1997 PRINTED IN JAPAN (IMPRIME AU JAPON)

3. Removing the Pick-Up Roller ...8-30
4. Removing the Feeding Roller...8-31
5. Removing the Separation Roller 8-33
6. Adjusting the Pressure of the Separation Roller.....8-34
7. Position of the Pick-Up Roller Release Solenoid (SL1) 8-34

CHAPTER 9 INSTALLATION

I. SELECTING THE SITE.....9-1
II. UNPACKING AND INSTALLATION....9-2
A. Unpacking and Removing the Metal Fixings 9-2
B. Supplying Toner.....9-6
C. Stirring the Toner 9-8
D. Installing the Drum Unit.....9-10
E. Checking Images and Operations 9-11
III. RELOCATING THE COPIER 9-13

CHAPTER 10 MAINTENANCE AND INSPECTION

I. PERIODICALLY REPLACED PARTS 10-1
A. Periodically Replaced Parts 10-1
II. CONSUMABLES AND DURABLES ...10-2
A. Copier 10-2
B. Paper Deck Pedestal.....10-3
III. SCHEDULED SERVICING.....10-4
IV. PERIODICALLY SERVICED PARTS..10-6
A. Copier 10-6

CHAPTER 11 TROUBLESHOOTING

I. MAINTENANCE AND INSPECTION.....11-3
A. Image Adjustment Basic Procedure 11-3
B. Points to Note for Scheduled Servicing.....11-5
II. STAMDARDS AND ADJUSTMENTS 11-7
A. Adjusting the Images.....11-7
1. Adjusting the Image Leading Edge Margin [3] No. 305 11-7
2. Adjusting the Leading Edge Non-Image Width [3] No. 306 ..11-8
3. Adjusting the Trailing Edge Non-Image Width [3] No. 307 11-9
4. Adjusting the Left-Right Registration 11-10
5. Adjusting the Image Left-Right Margin [3] No. 308.....11-12
6. AE Adjustments.....11-14
7. Adjusting the Developing Bias DC Component [3] No. 302.....11-18
8. Adjusting the Horizontal Registration Paper Edge Sensor Position [3] No. 324 11-19
9. Adjusting the Trailing Edge Margin for Pick-Up from the Multifeeder [3] No. 327.....11-20
10. Adjusting the Book Erasing Width [3] No. 326 11-21
B. Exposure System 11-22
1. Routing the Scanner Drive Cable 11-22
2. Adjusting the Position of the Mirror (optical path length between No. 1 mirror and No. 2/No. 3 mirror) 11-23
3. Adjusting the Tension of the Scanner Cable.....11-25
4. Adjusting the Tension of the Lens Drive Belt.....11-26
5. Cleaning the No.4 Mirror 11-26
6. Cleaning the No.5/No.6 Mirror...11-27
C. Image Formation System 11-29
1. Orientation of the Scanning Lamp 11-29
2. Position of the Blank Shutter Solenoid 11-29

 COPYRIGHT © 1997 CANON INC. CANON NP6330 REV.0 MAY 1997 PRINTED IN JAPAN (IMPRIME AU JAPON)

3. Routing the Blank Shutter Cable 11-30
4. Routing the Charging Wire....11-31
5. Stringing the Guide Wire....11-32
6. Adjusting the Height of the Charging Wire 11-32
7. Position of the Developing Assembly Magnetic Seal....11-33
8. After Replacing the Drum unit..11-33
D. Pick-Up / Feeding System....11-34
1. Orientation of the Pick-Up Roller 11-34
2. Orientation of the Separation Roller 11-34
3. Orientation of the Feeding Roller 11-35
4. Adjusting the Pressure of the Separation Roller....11-35
5. Position of the Pick-Up Roller Solenoid (pick-up assembly; SL1, SL2) 11-36
6. Orientation of the Multifeeder Pick-Up Roller 11-36
7. Position of the Pick-Up Guide Plate Cam (multifeeder assembly) 11-37
8. Routing the Timing Belt (multifeeder assembly) 11-37
9. Adjusting the Pressure of the Separation Pad (multifeeder assembly) 11-38
10. Routing the Drive Belt 11-38
11. Adjusting the Position of the Horizontal Registration Solenoid 11-39
E. Fixing System....11-40
1. Points to Note When Installing the Fixing Heater....11-40
2. Adjusting the Nip (tightening the pressure adjusting nut)....11-41
3. Position of the Fixing Assembly Paper Guide 11-42
4. Position of the Cleaning Belt Solenoid 11-42
F. Electrical System....11-43
1. Registering the Cassette/ Multifeeder Paper Width Basic Setting [4] 11-43
2. Adjusting the Original Stop Position with the DF in Use ([3] No.325) 11-46
3. Checking the Photointerrupters 11-47
III. TROUBLESHOOTING IMAGE FAULTS 11-53
A. Making Initial Checks 11-53
1. Installation Environment....11-53
2. Checking the Originals....11-53
3. Copyboard Cover, Copyboard Glass, and Standard White Plate....11-53
4. Charging Assemblies 11-53
5. Developing Assembly....11-53
6. Paper....11-53
7. Periodically Replaced Parts 11-54
8. Others....11-54
B. Image Fault Samples 11-56
Not available in electronic format
C. Troubleshooting Faulty Images 11-57
1. The copy is too light. (halftone only)....11-57
2. The copy is too light. (solid black also) 11-58
3. The copy is too light. (entire copy, considerably)....11-58
4. The copy has uneven density. (darker at front) 11-59
5. The copy has uneven density. (lighter at front)....11-59
6. The copy is foggy. (entire copy) 11-60
7. The copy has vertical fogging....11-61
8. The copy has black lines. (vertical, blurred, thick)....11-61
9. The copy has black lines. (vertical, thin)....11-62
10. The copy has white spots. (vertical)....11-63
11. The copy has white lines. (vertical)....11-63
12. The copy has white spots. (horizontal) 11-64
13. The back of the copy is soiled ...11-65
14. The copy has faulty fixing 11-66
15. The copy has a displaced leading edge 11-67
16. The copy has a displaced leading edge 11-67
17. The copy has a displaced leading edge 11-67
18. The copy has a blurred image. 11-68
19. The copy has horizontal fogging....11-69
20. The copy has poor sharpness..11-70
21. The copy is blank 11-71
22. The copy is solid black....11-72
IV. TROUBLESHOOTING MALFUNCTIONS 11-73
A. Troubleshooting Malfunctions....11-73
1. E000 11-73
2. E001 11-74
3. E002, 003 11-75
4. E004 11-76
5. E005 11-76
6. E010 11-77
7. E030 11-77
8. E031 11-78

COPYRIGHT © 1997 CANON INC.

9. E051 11-78
10. E053 11-79
11. E060 11-80
12. E202 11-81
13. E203 11-81
14. E204 11-82
15. E210 11-82
16. E220 11-82
17. E224 11-83
18. E240 11-83
19. E710, E711 11-83
20. E712 11-84
21. E716 11-84
22. E800 11-85
23. AC power is absent 11-86
24. DC power is absent 11-87
25. The blank shutter fails to move ..11-89
26. The photosensitive drum fails to rotate 11-89
27. Pick-up fails. (cassette) 11-90
28. The lifter fails to move up. (cassette) 11-91
29. Pick-up fails. (multifeeder) 11-92
30. The scanner fails to move forward/in reverse. 11-93
31. The registration roller fails to rotate 11-94
32. The scanning lamp fails to turn on 11-95
33. The pre-exposure lamp fails to turn on 11-96
34. The hopper motor fails to rotate 11-96
35. The lens fails to move. 11-97
36. The fixing heater fails to operate. 11-98
37. The total copy counter fails to operate 11-99
38. The option counter fails to operate 11-99
39. The Add Paper indicator fails to turn off 11-100
40. The Jam indicator fails to turn off 11-100
41. The Add Toner indicator fails to turn off 11-101

B. Troubleshooting Malfunctions in the Pedestal 11-102
1. E901 11-102
2. Pick-up fails. (pedestal) 11-107
3. The lifter fails to move up. (pedestal) 11-105
4. The Add Paper indicator fails to turn off. (pedestal) 11-106

V. TROUBLESHOOTING FEEDING FAULTS 11-107
A. Copy Paper Jams 11-107
1. Pick-up assembly 11-108
2. Separation/feeding assembly ..11-109
3. Fixing/delivery assembly 11-110
4. Cleaning assembly 11-110
5. Lower feeding assembly 11-111
B. Troubleshooting Feeding Faults ..11-112
1. Double feeding 11-112
2. Wrinkling 11-112

VI. ARRANGEMENT AND FUNCTIONS OF THE ELECTRICAL PARTS 11-113
A. Sensors 11-114
B. Switches, clutches, and solenoids 11-116
C. Heaters, lamps, and motors 11-118
D. PCBs 11-120
E. Paper deck pedestal-M1 11-122
F. Variable Resistors, Light-Emitting Diodes, and Check pins by PCB 11-124
1. DC Controls PCB 11-125
2. HVT 11-126
3. Lamp Regulator PCB 11-126
4. Motor driver 1 PCB 11-127
5. Motor driver 2 PCB 11-127
6. Pedestal controller PCB (Paper deck pedestal) 11-128

VII. SERVICE MODE 11-129
A. Outline 11-129
B. Using Service Mode 11-130
1. Starting Service Mode 11-130
C. Using Adjustment Mode and Optional Setting mode 11-131
D. Control/Display Mode [1] 11-132
E. I/0 Display Mode [2] 11-147
F. Adjustment Mode [3] 11-171
G. Function Mode [4] 11-173
H. Optional Settings Mode [5] 11-175
I. Counter Mode [6] 11-177

VIII. SELF DIAGNOSIS 11-179
A. Copier 11-179
B. Pedestal Self Diagnosis 11-183
C. RDF/ADF Self Diagnosis 11-184
D. Sorter Self Diagnosis 11-185

COPYRIGHT © 1997 CANON INC.
CANON NP6330 REV.0 MAY 1997 PRINTED IN JAPAN (IMPRIME AU JAPON)

APPENDIX

A. GENERAL TIMING CHART A-1
B. SIGNALS AND ABBREVIATIONS A-2
C. GENERAL CIRCUIT DIAGRAM....A-5
Not available
D. PEDESTAL CONTROLLER A-9
Not available
E. SPECIAL TOOLS LIST A-11
F. SOLVENTS AND OILS.....A-12

COPYRIGHT © 1997 CANON INC.

CHAPTER 1

GENERAL DESCRIPTION

This chapter describes the outline of the features, how to operate and copying process of this copier.

I. FEATURES....1-1
II. SPECIFICATIONS....1-2
A. Copier....1-2
B. Paper Deck Pedestal-M1....1-8
III. NAMES OF PARTS....1-9
A. Exterior View....1-9
B. Cross Section....1-11
IV. OPERATION....1-13
A. Control Panel (AB/Inch)....1-13
B. Control Panel (Inch)....1-14
C. User Mode....1-17
V. ROUTINE MAINTENANCE BY THE USER....1-20
VI. IMAGE FORMATION....1-21
A. Outline....1-21
B. Static Latent Image Formation Block....1-23
C. Pre-Exposure (step 1)....1-23
D. Primary Charging (step 2)....1-24
E. Image Exposure (step 3)....1-24
F. Development (step 4)....1-25
G. Transfer (step 5)....1-26
H. Separation (step 6)....1-27
I. Fixing (step 7)....1-28
J. Drum Cleaning (step 8)....1-28
VII. AUXILIARY PROCESS....1-29
A. Blank Exposure....1-29

COPYRIGHT © 1997 CANON INC. CANON NP6330 REV.0 MAY 1997 PRINTED IN JAPAN (IMPRIME AU JAPON)

I. FEATURES

1. Front-loading.
   - Paper is supplied from the front so that it requires less floor space.
   - Although designed as a compact machine, its source of paper may hold as many as 2550 sheets (with the addition of a paper deck pedestal (accessory)).

2. High-quality toner for high-quality images.
   - Its high-quality one-component toner ensures enhanced reproduction of text and photos.
   - Canon's own developing technology (toner projection) ensures stable production of high-quality images.

3. Full line of basic features.
   - It turns out as many as 31 copies (A4) / 30 copies (LTR) per minute.
   - It zooms between 49% and 204%, with nine (AB) / eight (Inch) preset reduction and enlargement reproduction ratios.
   - It accommodates various paper sizes (A3/11" × 17" to postcard) and transfer media (tracing paper, transparency).
   - It automatically recognizes the size of originals, selecting the best copy paper size (auto paper selection) or reproduction ratio (auto ratio selection).
   - It is capable of page separation, image composition, auto duplexing, frame erasing, and margin creation.
   - It possesses a compact duplexing unit designed with a set-back mechanism.

COPYRIGHT © 1997 CANON INC.
CANON NP6330 REV.0 MAY 1997 PRINTED IN JAPAN (IMPRIME AU JAPON)

II. SPECIFICATIONS

A. Copier

1. Type

Body	Desk-top
Copyboard	Fixed
Light source	Halogen lamp (300 W, 120 V; 340 W, 220/240 V)
Lens	Zoom lens
Photosensitive medium	OPC (ϕ30)

2. System

Reproduction		Indirect electrostatic
Charging		Corona
Exposure		Slit (moving scanner)
Copy density adjustment		Automatic (AE) or manual
Development		Dry (toner projection)
Pick-up	Auto	2 cassettes Pedestal (accessory)
	Manual	Multifeeder
Transfer		Corona
Separation		Curvature + static eliminator
Cleaning		Blade
Fixing		Heat roller (main 700 W + sub 600 W for 120V model; main 750 W + sub 640 W for 220/240V model)

COPYRIGHT © 1997 CANON INC.
CANON NP6330 REV.0 MAY 1997 PRINTED IN JAPAN (IMPRIME AU JAPON)

3. Performance

Item			Specifications
Type of original			Sheet, book, 3-D object (2 kg / 4.4lb max.)
Maximum size of original			A3 (297 x 420 mm)/LDG (11” x 17”*1)
Reproduction ratio			Direct, 4R4E or 4R3E (Table 1-201), zoom 48~205%(Display range: 49 to 204%)
Wait time			35 sec or less (at 20°C / 68F room temperature)
First copy			5.75 sec or less (A4, Direct, non-AE, pick-up from cassette 1)
Continuous copying			100 copies max.
Copying speed			See Tables 1-202 and 1-203.
Copy size			Cassette: A3 (11” x 17”*1) to A5 (STMT*1) Manual: A3 (11” x 17”*1) to A6 (postcard)
Type of copy paper	Cassette		Plain paper (64 to 80 g/m^2), tracing paper (SM1), colored paper*2, recycled paper (64 to 80 g/m^2)
	Manual		Plain paper (64 to 80 g/m^2;128 g/m^2*3), tracing paper (SM1, GNT80), colored paper*2, transparency*2*4, postcard*2, label sheet*2, recycled paper (64 to 80 g/m^2)
	Two-sided copying	Auto	Plain paper (64 to 80 g/m^2), colored paper*2, recycled paper (64 to 80 g/m^2)
		Manual	Plain paper (64 to 80 g/m^2; 128 g/m^2*3), colored paper*2, recycled paper (64 to 80 g/m^2)
Pick-up capacity		Cassette	500 sheets (55mm / 2.2”,80g/m^2 plain paper), front loading (no claw)
		Manual	50 sheets (5.5mm / 0.22”,80g/m^2 plain paper)
Copy tray			100 sheets (A3 / 11” × 17”, plain paper)
Non-image width			2.0 ± 1.0 mm / 0.08” ± 0.04” (leading edge), 2.5 ± 1.5 mm / 0.1” ± 0.06” (left/right, trailing edge)
Auto clear			Provided (2 min standard, may be varied between 0 and 9 min in 1-min increments)
Auto power-off			Provided (60 min standard, may be varied between 10 and 120 min in 10-min increments; may be disabled in service mode)
Accessories			ADF-E1 RDF-F1 Paper Deck Pedestal-M1 MS-B1 Sorter-E1 Stapler Sorter-D2

*1 11”x17”=279.4x431.8mm, STMT=139.7x215.9mm
*2 Canon-recommended paper.
*3 Be sure to remove curling.
*4 Be sure to separate sheets before setting on the multifeeder tray.

COPYRIGHT © 1997 CANON INC.
CANON NP6330 REV.0 MAY 1997 PRINTED IN JAPAN (IMPRIME AU JAPON)

Item		Specifications
Operating environment	Temperature	7.5°C / 45.5F to 32.5°C / 90.5F
	Humidity	5% to 85% RH
	Atmospheric pressure	608 hPa to 1013 hPa (0.5 to 1 atm)
Power supply		Serial numbers
	120V 60Hz	NHE XXXXX
	120V 60Hz (Taiwan)	NHF XXXXX
	220/240V 50Hz	PDE XXXXX
	220/240V 50Hz (Australia)	RBN XXXXX
Power consumption	Maximum	1.5 kW or less
	Standby	0.164 kWh (average; reference only)
	Continuous copying	0.834 kWh (average; reference only)
Noise	Copying	71 dB or less
	Standby	50 dB or less
Ozone (avr of 8 hr)		0.05 ppm or less (avr; 0.10 ppm or less max.)
Dimensions	Width	610mm / 24.0”
	Depth	595mm / 23.4”
	Height	585mm / 23.0”
Weight		82.5 kg / 181.5 lb
Consumables	Copy paper	Keep wrapped, and protect against humidity.
	Toner	Avoid direct sunshine, and store at 40°C / 104F, 85% or less.

COPYRIGHT © 1997 CANON INC.
CANON NP6330 REV.0 MAY 1997 PRINTED IN JAPAN (IMPRIME AU JAPON)

Copying ratio		AB	Inch
	Direct	1:1	1:1
	Reduce I	1:0.500	1:0.500
	Reduce II	1:0.707	1:0.647
	Reduce III	1:0.816	1:0.733
	Reduce IV	1:0.865	1:0.786
	Enlarge I	1:1.154	1:1.214
	Enlarge II	1:1.224	1:1.294
	Enlarge III	1:1.414	1:2.000
	Enlarge IV	1:2.000	
	Zoom	49 ~ 204% in 1% increments	

Table 1-201 Preset Ratios

COPYRIGHT © 1997 CANON INC.

• **Pick-Up from Cassette 1**

Copying ratio		Copy size(mm)			Copies
Direct	1:1	A3	(297 × 420)		17
		A4	(210 × 297)		31
		A5	(148 × 210)		31
		B4	(257 × 364)		19
		B5	(182 × 257)		31
		A4R	(297 × 210)		23
		A5R	(210 × 148)		31
		B5R	(257 × 182)		26
Reduce	1:0.500	A3	→	A5R	23
	1:0.707	A3	→	A4R	20
		B4	→	B5R	22
	1:0.816	B4	→	A4R	21
	1:0.865	A3	→	B4	18
		A4	→	B5	27
Enlarge	1:2.000	A5R	→	A3	17
	1:1.414	A4R	→	A3	17
		B5R	→	B4	17
	1:1.224	A4R	→	B4	19
	1:1.154	B4	→	A3	17
		B5	→	A4	22

Table 1-202 Copying Speed (AB)

COPYRIGHT © 1997 CANON INC.
CANON NP6330 REV.0 MAY 1997 PRINTED IN JAPAN (IMPRIME AU JAPON)

• Pick-Up from Cassette 1

Copying ratio		Copy size*1	Copies
Direct	1:1	LTR	30
		11” × 17”	16
		LGL	20
		LTRR	24
		STMT	31
		STMTR	30
Reduce	1:0.786	LGL → LTRR	21
	1:0.733	11” × 17” → LGL	19
		11” × 15” → LTRR	21
	1:0.647	11” × 17” → LTRR	20
	1:0.500	11” × 17” → STMTR	23
Enlarge	1:2.000	STMTR 11” × 17”	17
	1:1.294	LTRR → 11” × 17”	17
	1:1.214	LGL → 11” × 17”	17

*1 11”x17”=279.4x431.8mm, LGL=215.9x355.6mm, LTR=215.9x279.4mm, STMT=139.7X215.9mm

Table 1-203 Copying Speed (Inch)

Specifications subject to change without notice

COPYRIGHT © 1997 CANON INC.
CANON NP6330 REV.0 MAY 1997 PRINTED IN JAPAN (IMPRIME AU JAPON)

B. Paper Deck Pedestal-M1

Item		Specifications
Pick-up		Clawless
Loading		Front loading
Type of copy paper		Plain paper (64 to 80 g/m^2), colored paper*1
Size of stack		A4 (horizontal), B5 (horizontal), LTR*2 (horizontal)
Capacity		162 mm / 6.38” high (stack; one-side; 1500 sheets of 80 g/m^2 paper)
Size switching		By relocating partition plate in increments
Power supply		Not provided (DC power supplied from copier)
Weight		46kg / 101 lb
Dimensions	Width	610mm / 24.0”
	Depth	608mm / 23.9”
	Height	414mm / 16.3”

*1 Canon-recommended paper.
*2 LTR=215.9x279.4mm

Specifications subject to change without notice

COPYRIGHT © 1997 CANON INC.
CANON NP6330 REV.0 MAY 1997 PRINTED IN JAPAN (IMPRIME AU JAPON)

III. NAMES OF PARTS

A. Exterior View

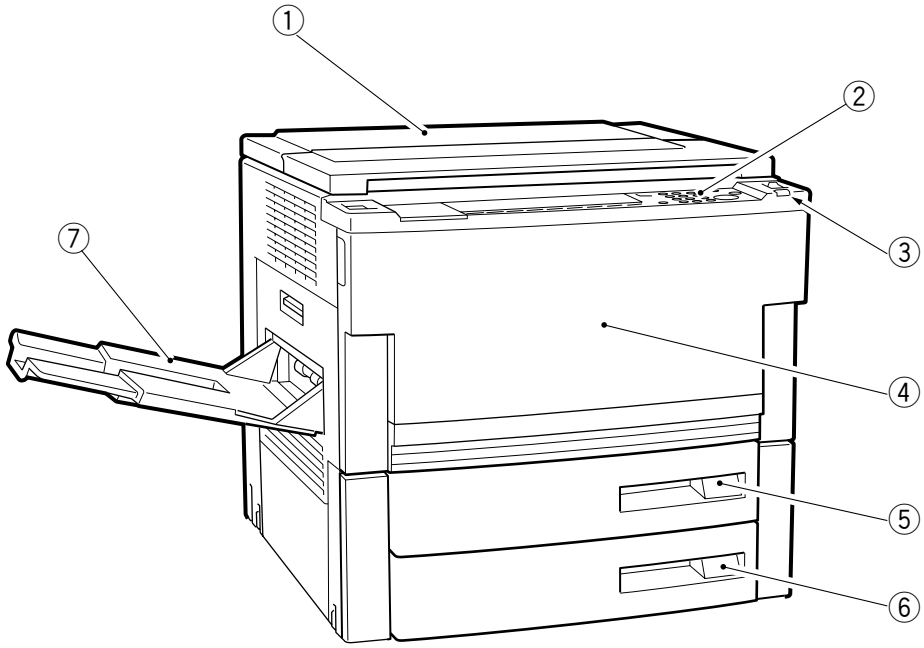

① Copyboard cover
② Control panel
③ Power switch
④ Front door
⑤ Cassette 1
⑥ Cassette 2
⑦ Copy tray

Figure 1-301

COPYRIGHT © 1997 CANON INC.

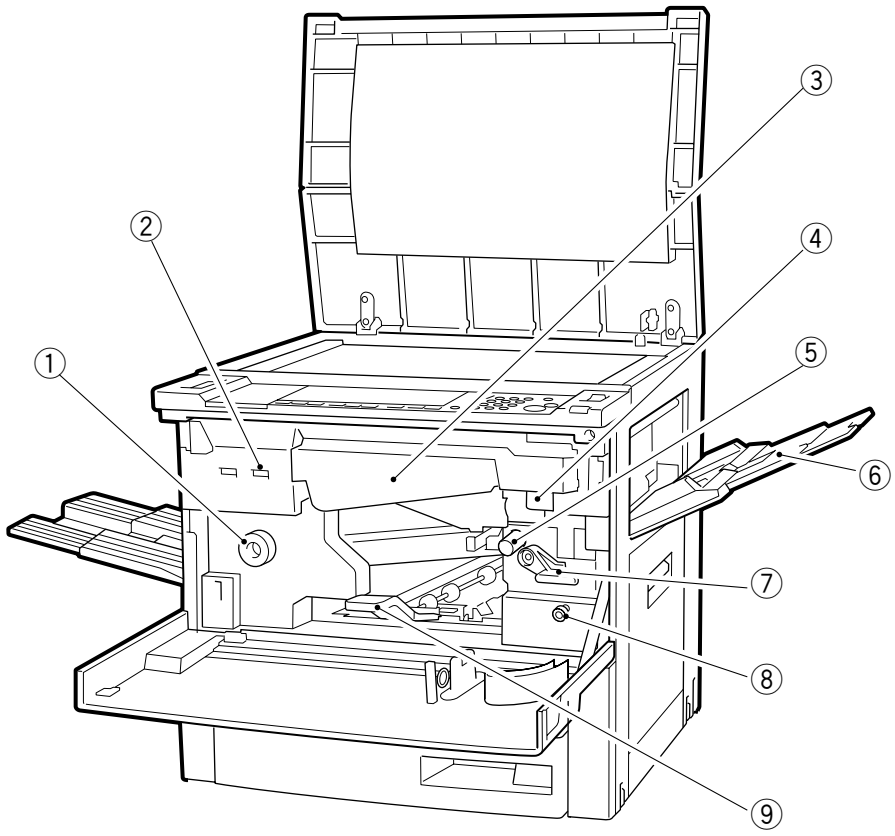

① Fixing assembly knob
② Total counter
③ Hopper
④ Developing assembly releasing lever
⑤ Registration knob
⑥ Multifeeder
⑦ Feeding assembly releasing lever
⑧ Horizontal registration knob
⑨ Lower feeder lever

Figure 1-302

COPYRIGHT © 1997 CANON INC.
CANON NP6330 REV.0 MAY 1997 PRINTED IN JAPAN (IMPRIME AU JAPON)

B. Cross Section

1. Body Cross Section

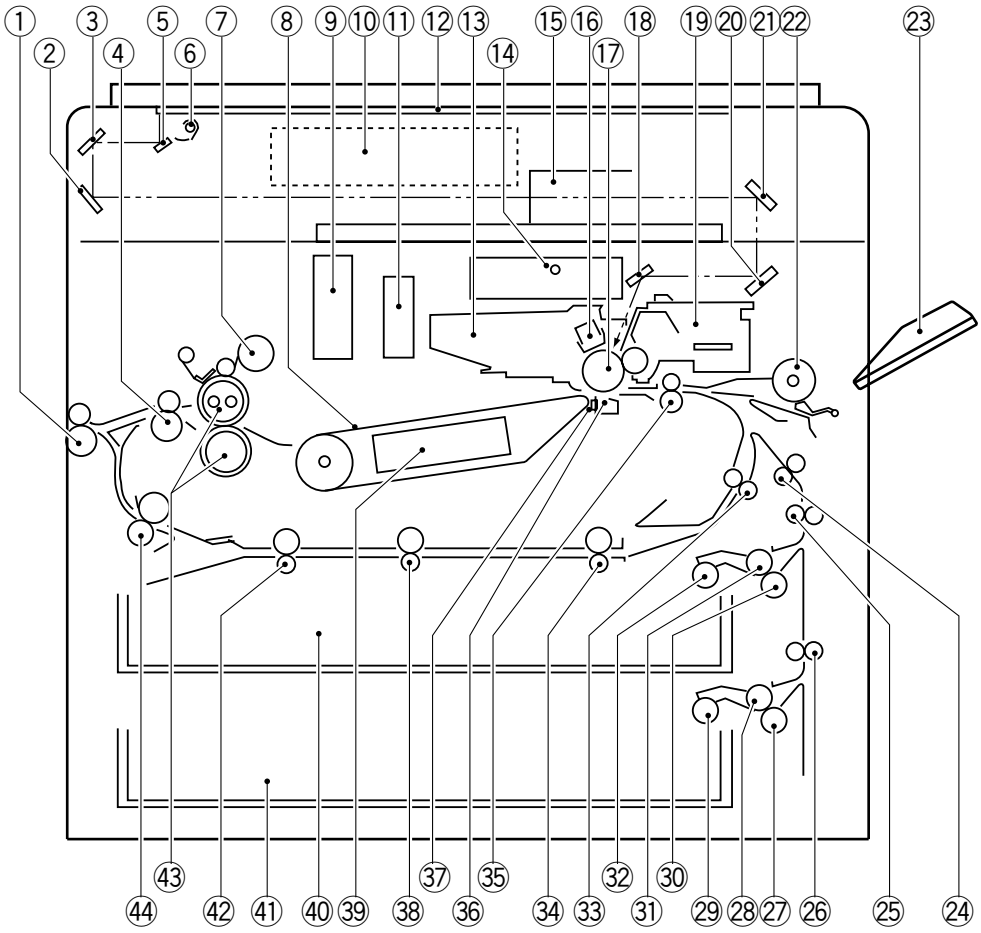

① Delivery roller 2
② No.3 mirror
③ No.2 mirror
④ Delivery roller 1
⑤ No.1 mirror
⑥ Scanning lamp
⑦ Cleaning belt
⑧ Feeding assembly
⑨ Ozon filter
⑩ Scanner cooling fan
⑪ Exhaust fan
⑫ Copyboard glass
⑬ Drum cleaning assembly
⑭ Pre-exposure/Blank exposure lamp
⑮ Lens
⑯ Primary corona wire
⑰ Photosensitive drum
⑱ No.6 mirror
⑲ Developing assembly
⑳ No.5 mirror
㉑ No.4 mirror
㉒ Multifeeder pick-up roller
㉓ Multifeeder tray
㉔ Vertical path roller 0
㉕ Vertical path roller 1
㉖ Vertical path roller 2
㉗ Cassette 2 separation roller
㉘ Cassette 2 feeding roller
㉙ Cassette 2 pick-up roller
㉚ Cassette 1 separation roller
㉛ Cassette 1 feeding roller
㉜ Cassette 1 pick-up roller
㉝ Horizontal registration roller
㉞ Lower feeder outlet roller
㉟ Registration roller
㊱ Transfer corona wire
㊲ Static eliminator
㊳ Set-back roller 2
㊴ Feeding fan
㊵ Cassette 1
㊶ Cassette 2
㊷ Set-back roller 1
㊸ Fixing roller
㊹ Lower feeder inlet roller

Figure 1-303

COPYRIGHT © 1997 CANON INC.

2. Paper Deck Pedestal-M1

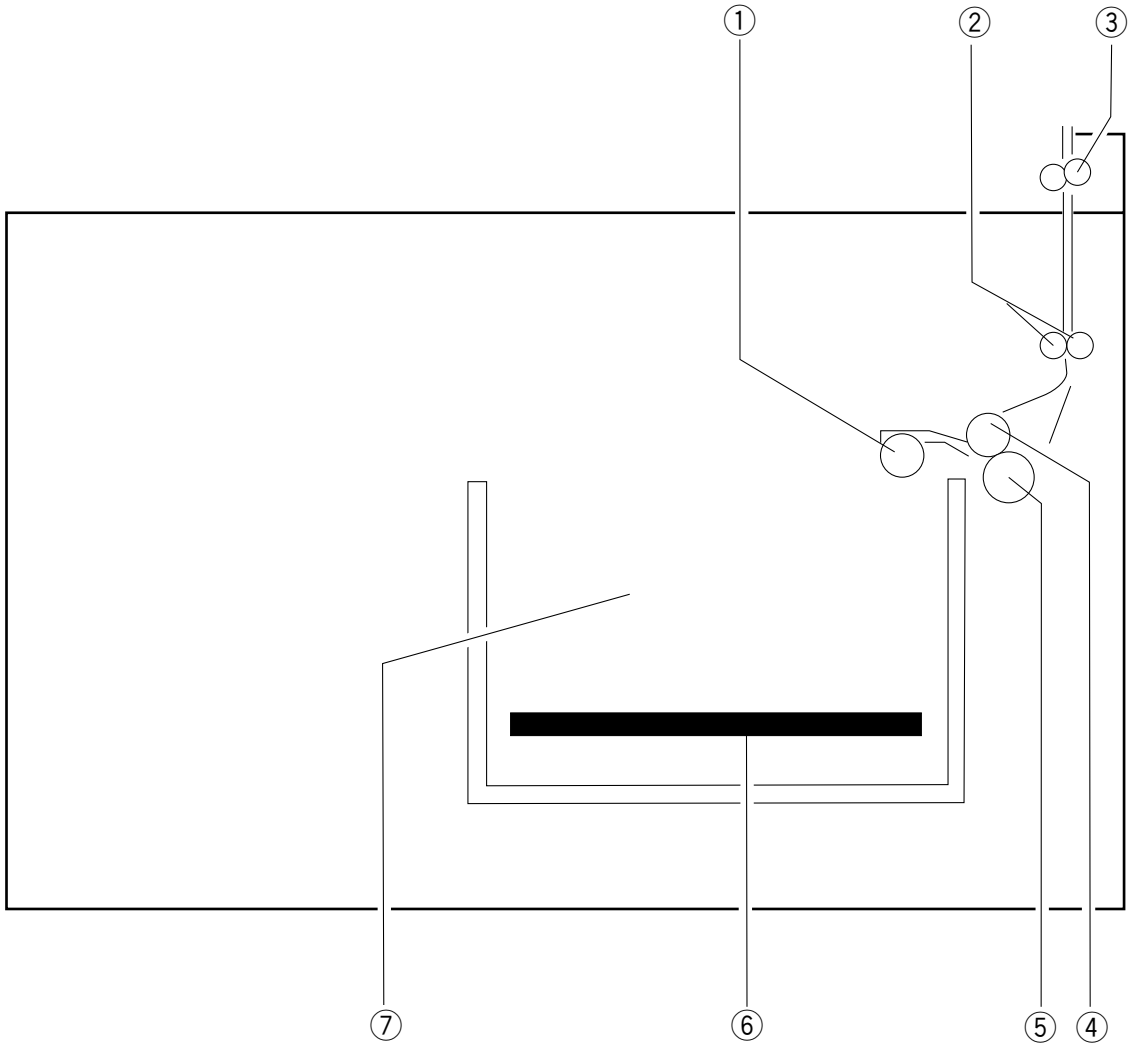

① Deck pick-up roller
② Deck vertical path roller
③ Vertical path roller 3
④ Deck feeding roller
⑤ Deck separation roller
⑥ Lifter
⑦ Deck

Figure 1-304

COPYRIGHT © 1997 CANON INC.
CANON NP6330 REV.0 MAY 1997 PRINTED IN JAPAN (IMPRIME AU JAPON)

IV. OPERATION

A. Control Panel (AB / Inch)

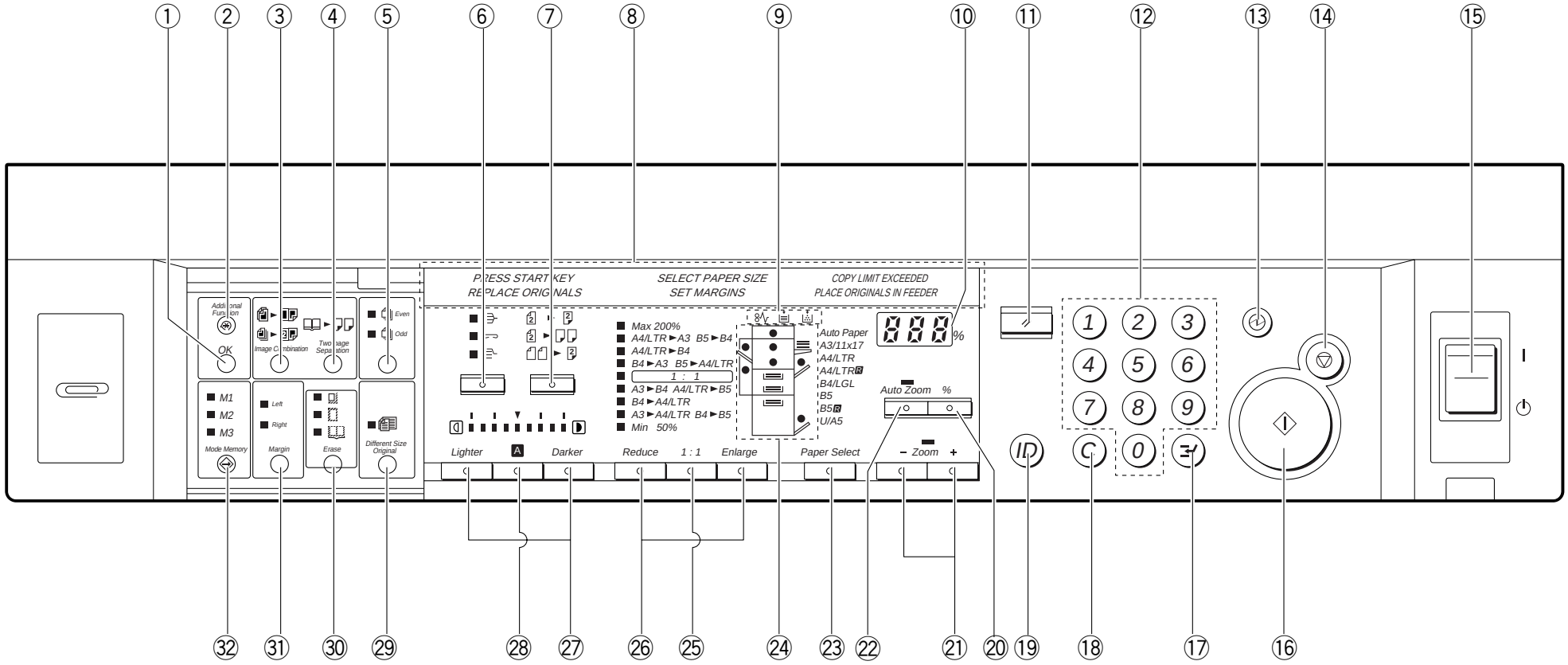

Figure 1-401

COPYRIGHT © 1997 CANON INC.
CANON NP6330 REV.0 MAY 1997 PRINTED IN JAPAN (IMPRIME AU JAPON)

B. Control Panel (Inch)

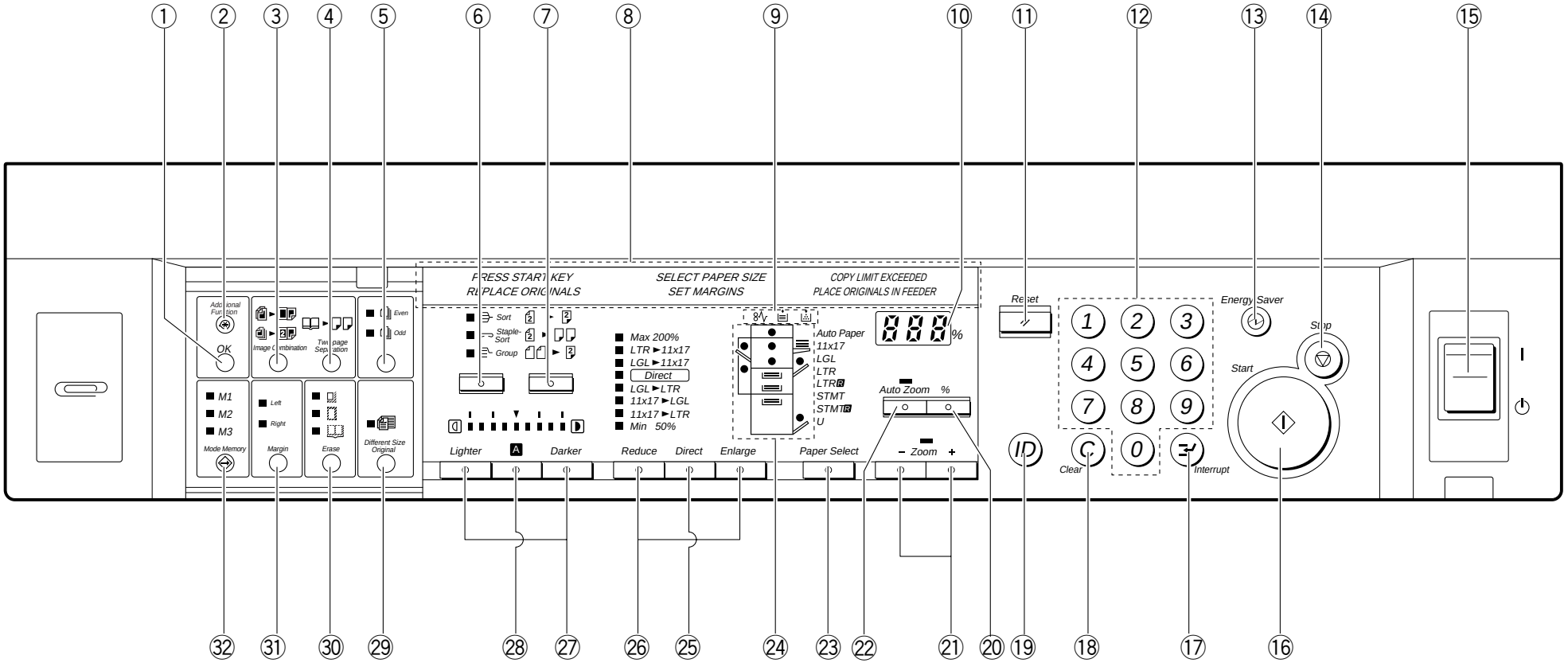

Figure 1-402

COPYRIGHT © 1997 CANON INC. CANON NP6330 REV.0 MAY 1997 PRINTED IN JAPAN (IMPRIME AU JAPON)

No.	Name	Description
1	OK key	Press it to accept selected items and functions when setting modes.
2	User Mode key	Press it to start or end user mode. You can change specifications or standard mode and can set or change adjustment/cleaning settings.
3	Image Compose key	Press it to start/end image composition mode.
4	Page Separate key	Press it to start/end page separation mode.
5	Odd/Even key*1	Press it to specify either an odd or even number of originals.
6	Sorter key*2	Press it to start/end sort, staple sort, or group mode.
7	Two-Sided key*1	Press it to start/end duplexing mode.
8	Image Display key	Lights when originals must be set in the DF*1, a frame/binding margin width must be specified, the originals must be replaced, the Copy Start key must be pressed, the paper size must be selected, or the copy count is in excess.
9	Warning	Lights when a jam has occurred, paper must be supplied, or toner must be supplied.
10	Display	Indicates the selected copy count/reproduction ratio or mode settings.
11	Reset key	Press it to reset to standard copying mode.
12	Keypad	Use it to enter a copy count or mode settings (for numeric input).
13	Pre-Heat key	Press it to start/end pre-heat mode.
14	Stop key	Press it to stop an ongoing copying run.
15	Power key	Press it to turn on/off the power.
16	Start key	Press it to start copying.
17	Interrupt key	Press it to make a copy by interrupting a continuous copying run.
18	Clear key	Press it to clear a copy count or mode settings.
19	ID key	Press it after entering an ID number when storing an ID number.
20	% key	Press it to check the selected reproduction ratio.
21	Zoom key	Press to set a reproduction ratio.
22	Auto Zoom key	Press it to start/end auto reproduction ratio mode.
23	Paper Select key	Press it to select the source of paper.
24	Paper/jam location	Flashes to indicate the location of a jam (cassette/multifeeder tray). It also flashes when an original jams in the DF*1 or when the sorter*2 or the right door must be checked.

COPYRIGHT © 1997 CANON INC.

No.	Name	Description
25	Direct key	Press it to return to Direct (100%).
26	Reduce/Enlarge key	Press it to set a preset reproduction ratio (reduction/enlargement).
27	Copy Density key	Press it to manually adjust the copy density.
28	AE key	Press it to start/end AE (automatic exposure).
29	Mix key*1	Press it to start/end mix mode for a combination of different original sizes.
30	Frame Erase key	Press it to start/end frame erasing mode.
31	Bind Margin key	Press it to start/end binding margin mode.
32	Mode Memory key	Press it to register/recall a copy mode. (As many as any three modes may be stored.)

*1 Available only when an DF is installed.
*2 Available only when a sorter is installed.

COPYRIGHT © 1997 CANON INC.
CANON NP6330 REV.0 MAY 1997 PRINTED IN JAPAN (IMPRIME AU JAPON)

C. User Mode

To start User Mode, press ⊛ key.
To select a mode, press the number (keypad) and the OK key in sequence.
To change the setting, press the Zoom (+) / Zoom (-) key and OK key.

- Press the clear key to clear a setting entered by mistake when making mode settings.

The following modes may freely be made use of by the user:

1. Specifications
2. Adjustment/Cleaning

1. Specifications

Display	Function	Description	Default settings
U01	Changing the auto clear time	Use it to set the auto clear time between 0 and 9 min in 1-min increments. Setting it to 0 min disables the function.	2 min
U02	Changing the auto power-off time	Use it to change the auto power-off time between 10 and 120 min in 10-min increments.	60 min
U03	Setting pre-heat mode	Use it to specify a percentage at which the power consumption is reduced in pre-heat mode. 0%: no power saving -10%: 10% saving. -25%: 25% saving. -50%: 50% saving.	-10%
U04	Turning on or off cassette selection	Use it to turn on or off auto cassette selection (APS)/auto paper change (ACC) for each cassette and multifeeder: ON: Enable APS/ACC. OFF: Disable APS/ACC.	ON (Multifeeder is OFF)
U05	Turning on or off manual paper size registration	Use it to specify whether paper size should be stored at time of setting paper or pressing the Copy Start key for the multifeeder: ON: At time of setting paper.(multifeeder is targeted for selection in the APS/ACC and auto zoom mode.) OFF: At time of pressing Copy Start key.	OFF

COPYRIGHT © 1997 CANON INC.
CANON NP6330 REV.0 MAY 1997 PRINTED IN JAPAN (IMPRIME AU JAPON)

Display	Function	Description	Default settings
U06	Turning on or off auto sorting	Use it to enable or disable automatic sorting for multiple originals: ON: Enable auto sorting. OFF: Disable auto sorting.	ON
U07	Changing default binding margin width	Use it to set the default width for the binding width between 1 and 20 mm in 1-mm increments.	10 mm
U08	Turning on and off back binding margin only	Use it to allow or not allow a back binding margin when making one-sided copies of two-sided originals and two-sided copies of one-sided originals with a binding margin: ON: Allow binding margin on back only. OFF: Allow binding margin.	OFF
U09	Switching between millimeter and inch notations	Use it to select between millimeter and inch notations as the unit of input length: -1: in millimeters -0: in inches	mm
U 10	Setting auto energy saver mode	Use it to set the time for entering to anto energy saver mode. The time can be set between 15 and 90 min in 15-min increments.	15 min
U00	Resetting user mode	Use it to reset user mode settings by selecting “on” and pressing the OK key.	OFF
U98	Storing standard mode	Use it to store the mode to be selected in response to the Reset key by selecting “on” and pressing the OK key.	OFF
U99	Resetting standard mode	Use it to reset the standard mode to default (factory)*1 settings by selecting “on” and pressing the OK key.	OFF

*1 : Factory mode
Density : AE (Automatic Exposure)
Paper selection : Auto Paper Selection
Copy count : 1
Ratio : Direct (100%)
Paper output : Non-sort

COPYRIGHT © 1997 CANON INC.
CANON NP6330 REV.0 MAY 1997 PRINTED IN JAPAN (IMPRIME AU JAPON)

2. Adjustment/Cleaning

Display	Function	Description	Default settings
U21	Correcting density	Use it to correct the density between -8 and +8 when the copy density at F5 is found to be not appropriate.	0
U22	Making zoom fine-adjustment X	Use it to make fine adjustments so that the discrepancy, if any, in size between original and copy (in Direct) is removed. X (enlargement) and Y (reduction) may both be corrected independently between 99% and 101% in 0.2%-increments. (The display indicates ten times the actual setting.)	0
U23	Making zoom fine-adjustment Y		
U24	Cleaning feeder	Use it to clean the pick-up/feeding assembly of the feeder.	—
U25	Cleaning wire	Use it for automatic cleaning of the transfer corona wire.	—

COPYRIGHT © 1997 CANON INC.

V. ROUTINE MAINTENANCE BY THE USER

Instruct the user so that the following parts are cleaned at least once a week:

1) Copyboard Glass
Wipe it with a cloth moistened with water or solution of mild detergent; then, dry wipe it.

2) Copyboard Cover
Wipe it with a cloth moistened with water or solution of mild detergent; then, dry wipe it.

3) Primary Charging Assembly
Slide in and out the charging wire cleaner, thereby cleaning the wire.

4) Static Eliminator
If separation jams occur frequently, clean the static eliminator with the brush that comes with the copier. (Clean only as needed.)

COPYRIGHT © 1997 CANON INC.
CANON NP6330 REV.0 MAY 1997 PRINTED IN JAPAN (IMPRIME AU JAPON)

VI. IMAGE FORMATION

A. Outline

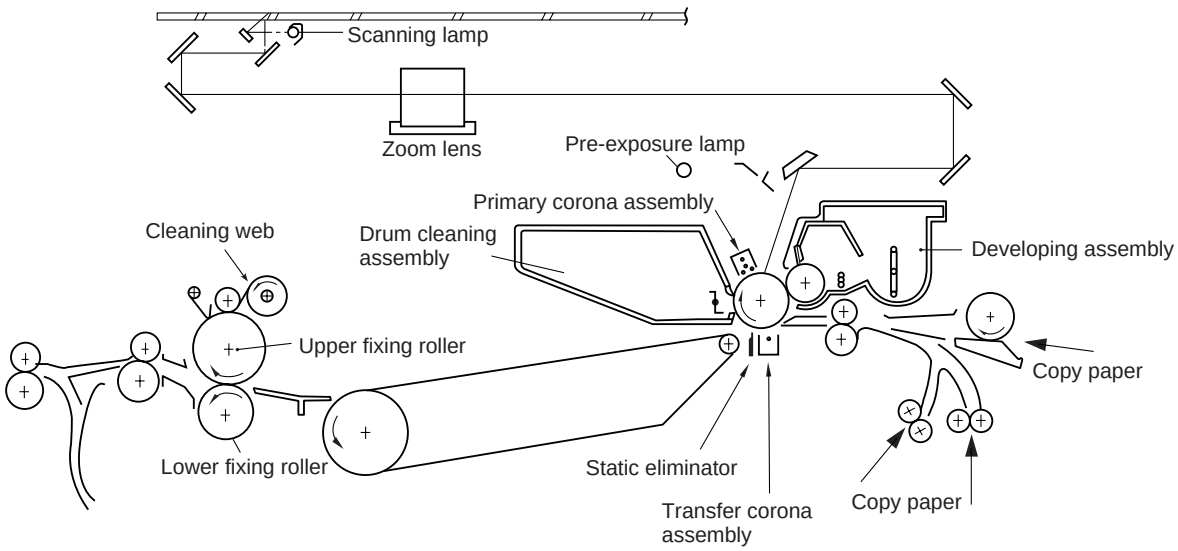

Figure 1-601

The copier's image formation processes consist of the following eight steps:

Step 1	Pre-exposure	Step 5	Transfer
Step 2	Primary charging	Step 6	Separation
Step 3	Image exposure	Step 7	Fixing
Step 4	Development	Step 8	Drum cleaning

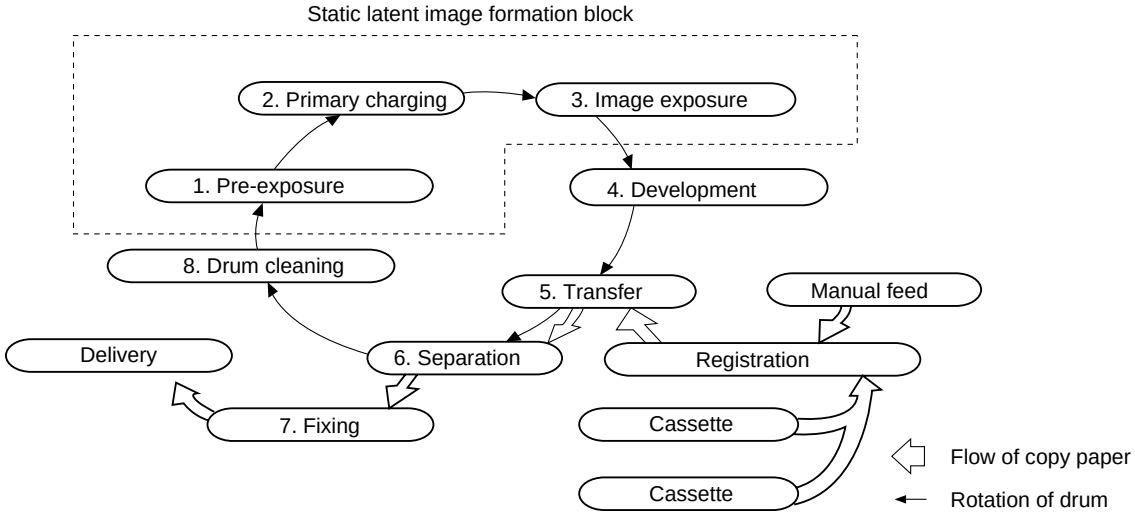

Figure 1-602

Reference:

Steps 1 through 3 are referred to as the latent static image formation block. The photosensitive drum has a layer construction: its outside is a photoconducting layer made of OPC and inside, a conductive aluminum substrate.

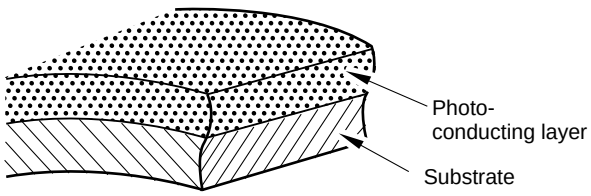

Figure 1-603

COPYRIGHT © 1997 CANON INC.

B. Static Latent Image Formation Block

The static latent image formation block consists of three steps, at the end of which negative charges are left in the areas of the photosensitive drum corresponding to the black areas of an original while removing negative charges from the areas of the photosensitive drum corresponding to the white areas of the original.

The static image formed on the photosensitive drum is not visible to the human eye and, therefore, is called a static latent image.

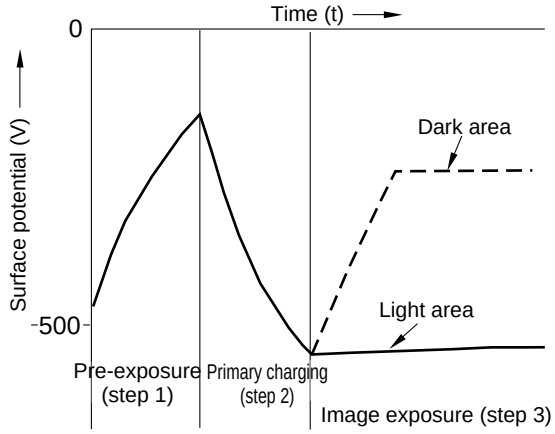

Figure 1-604

C. Pre-Exposure (step 1)

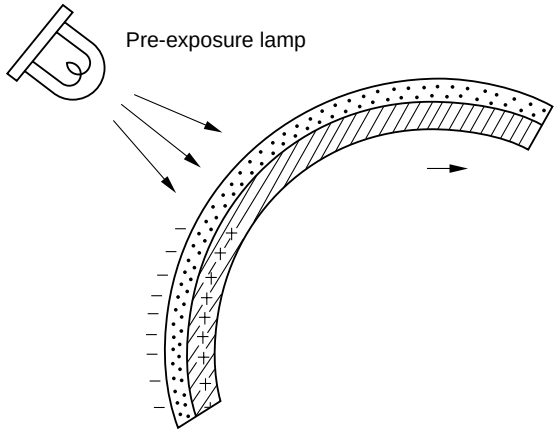

Figure 1-605

In preparation for primary charging, the light from the pre-exposure lamp is shone on the photosensitive drum surface, thereby removing the residual charges from the photosensitive drum surface and, ultimately, preventing uneven copy density.

COPYRIGHT © 1997 CANON INC.

D. Primary Charging (step 2)

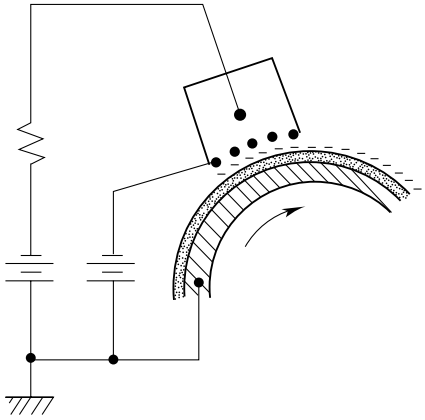

Figure 1-606

The negative corona charging by the primary charging assembly charges the surface of the drum to a uniform negative potential to ensure primary potential.

Grid bias is applied to the grid to make sure that the surface of the drum is uniformly charged.

E. Image Exposure (step 3)

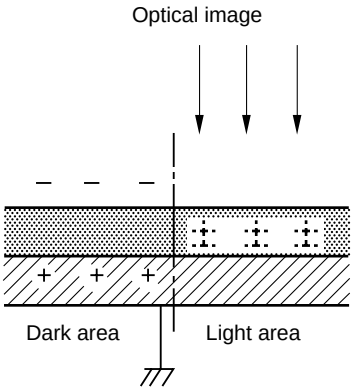

Figure 1-607

The optical image of the original is projected on the photosensitive drum to neutralize the charges in the light areas.

COPYRIGHT © 1997 CANON INC.
CANON NP6330 REV.0 MAY 1997 PRINTED IN JAPAN (IMPRIME AU JAPON)

F. Development (step 4)

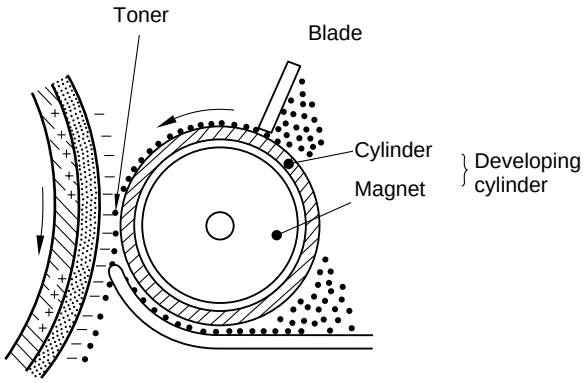

Figure 1-608

As shown in Figure 1-608, the developing assembly consists of a developing cylinder made of a fixed magnet and a cylinder that rotates around it and a magnetic blade.

The copier's developer is a single-component developer made of magnetic resins.

The developer has insulating characteristics and becomes charged to a positive potential by friction against the rotating cylinder.

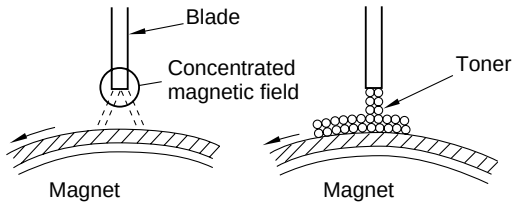

Figure 1-609

A concentrated magnetic field exista at all times from the magnet to the tip of the blade, attracting the developer.

Once inside the concentrated magnetic field, its strong bond to the blade will keep it virtually immobile, causing it to deposit in an even layer on the cylinder.

Both AC bias and DC bias (negative component) are simultaneously applied to the developing cylinder and the blade (developing bias), and the negative component of the developing bias is larger than the positive component.

COPYRIGHT © 1997 CANON INC.

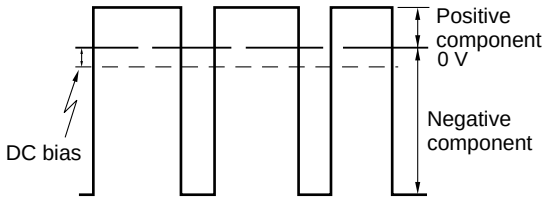

Figure 1-610

During copying, toner is attracted to the photosensitive drum by the work of the drum surface potential and the developing bias (at time of positive component), turning the static latent image into a visible image. Excess toner is drawn back from the photosensitive drum by the work of the drum surface potential and the developing bias (at time of negative component).

AC bias (frequency, in particular) mainly affects gradation, i.e., the lower the frequency, the better the gradation; however, such tends to cause fogging. DC bias mainly affects copy density and fogging; a higher bias, i.e., closer to 0 V, increases image density but tends to cause fogging.

G. Transfer (step 5)

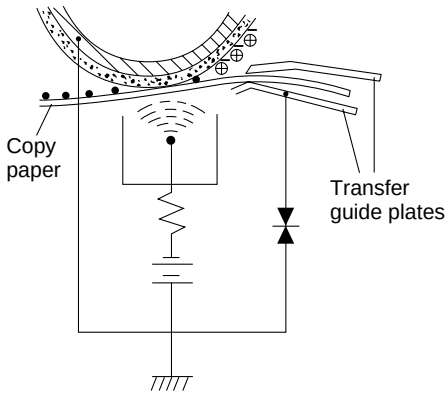

Figure 1-611

A negative corona charge is applied to the back of the copy paper, causing the toner on the drum to move to the copy paper.

The transfer guide and vertical pass upper guide is grounded through a varistor to prevent soiling of the back of the copy paper and to prevent poor transfer.

Reference:

If the transfer guide and the vertical path were grounded, the charges which should be on the back of paper would escape through the paper, causing transfer faults. If they were fully separated, on the other hand, the transfer guide would be charged, ultimately soling the back of the transfer guide with toner.

COPYRIGHT © 1997 CANON INC.
CANON NP6330 REV.0 MAY 1997 PRINTED IN JAPAN (IMPRIME AU JAPON)

H. Separation (step 6)

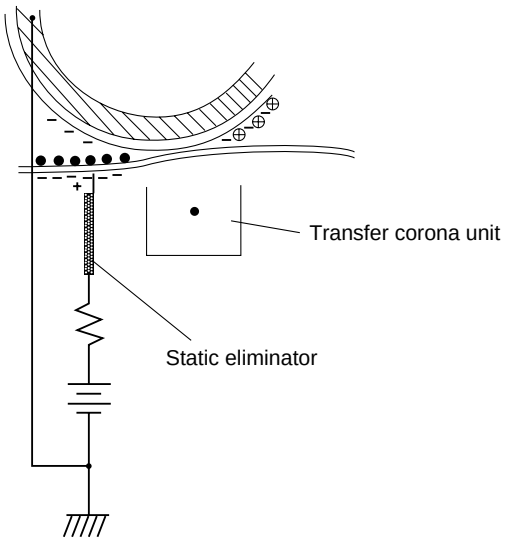

Figure 1-612

The copier takes advantage of the rigidity of copy paper to separate it from the drum (curvature separation).

However, since thin copy paper has little rigidity, it can wrap around the drum without separating. To prevent such a problem, a positive voltage is applied to the separation static eliminator to weaken the static bonds between drum and copy paper, thereby facilitating separation.

Copy paper possesses high resistance once it has moved through the fixing assembly, and shows curling. For this reason, separation faults could occur if the same degree of separation corona charging was used for copying on both first and second sides in automatic two-sided mode. To prevent separation faults, the output of corona charges is made stronger when copying on the second side.

COPYRIGHT © 1997 CANON INC.

I. Fixing (step 7)

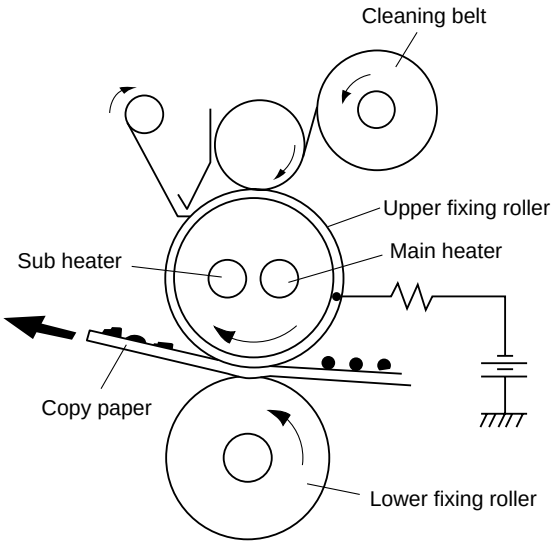

Figure 1-613

After transfer, copy paper is moved between two rollers for fixing of the toner image. The copier's upper roller is heated by two heaters (halogen lamp).

To prevent jams and toner offset, a cleaning belt impregnated with silicone oil is kept in contact with the upper fixing roller, thereby cleaning and, while at the same time, applying silicone oil to the roller by moving the point of contact by a take-up mechanism.

To prevent fixing faults, positive DC bias is applied to the upper fixing roller.

J. Drum Cleaning (step 8)

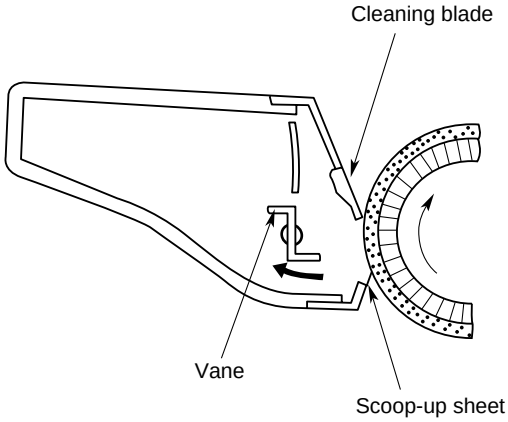

Figure 1-614

In preparation for the next copying run, the cleaning blade scrapes off toner remaining on the drum surface.

Thereafter, the toner is gathered by the scoop-up sheet and collected to the rear by a vane.

COPYRIGHT © 1997 CANON INC.
CANON NP6330 REV.0 MAY 1997 PRINTED IN JAPAN (IMPRIME AU JAPON)

VII. AUXILIARY PROCESS

A. Blank Exposure

Blank exposure is used to eliminate the drum surface potential in the non-image area occurring as a result of the difference, if any, between original and copy or in Reduce mode.

The light from the pre-exposure lamp is reflected by the replacing plate so that it is directed to the photosensitive drum after image exposure.

The non-image area between sheets of copy paper is exposed by light from the pre-exposure lamp which is reflected by a separate reflecting plate.

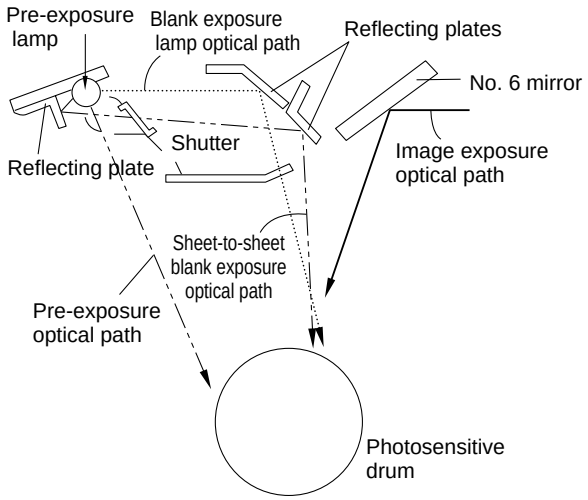

Figure 1-615

COPYRIGHT © 1997 CANON INC.

CHAPTER 2

OPERATIONS AND TIMING

This chapter describes the outline of the basic operation, purposes and roles of this copier, the relationship between the electric system and mechanical system and the operational timing of each component.
The process speed of this copier is about 180mm/sec and it takes about 0.52sec for one rotation of the drum.

I. BASIC OPERATION.....2-1
A. Functional Construction.....2-1
B. Outline of the Electrical Circuitry.....2-2
C. Basic Sequence 2-4
D. Controlling the Main Motor 2-6
E. Inputs to the DC Controller.....2-8
F. Outputs from the DC Controller.....2-13
G. Inputs to and Outputs from the Accessories (1/1).....2-18

COPYRIGHT © 1997 CANON INC. CANON NP6330 REV.0 MAY 1997 PRINTED IN JAPAN (IMPRIME AU JAPON)

I. BASIC OPERATION

A. Functional Construction

The copier can roughly be divided into four functional blocks: i.e., pick-up/feeding system, exposure system, image formation system, and control system.

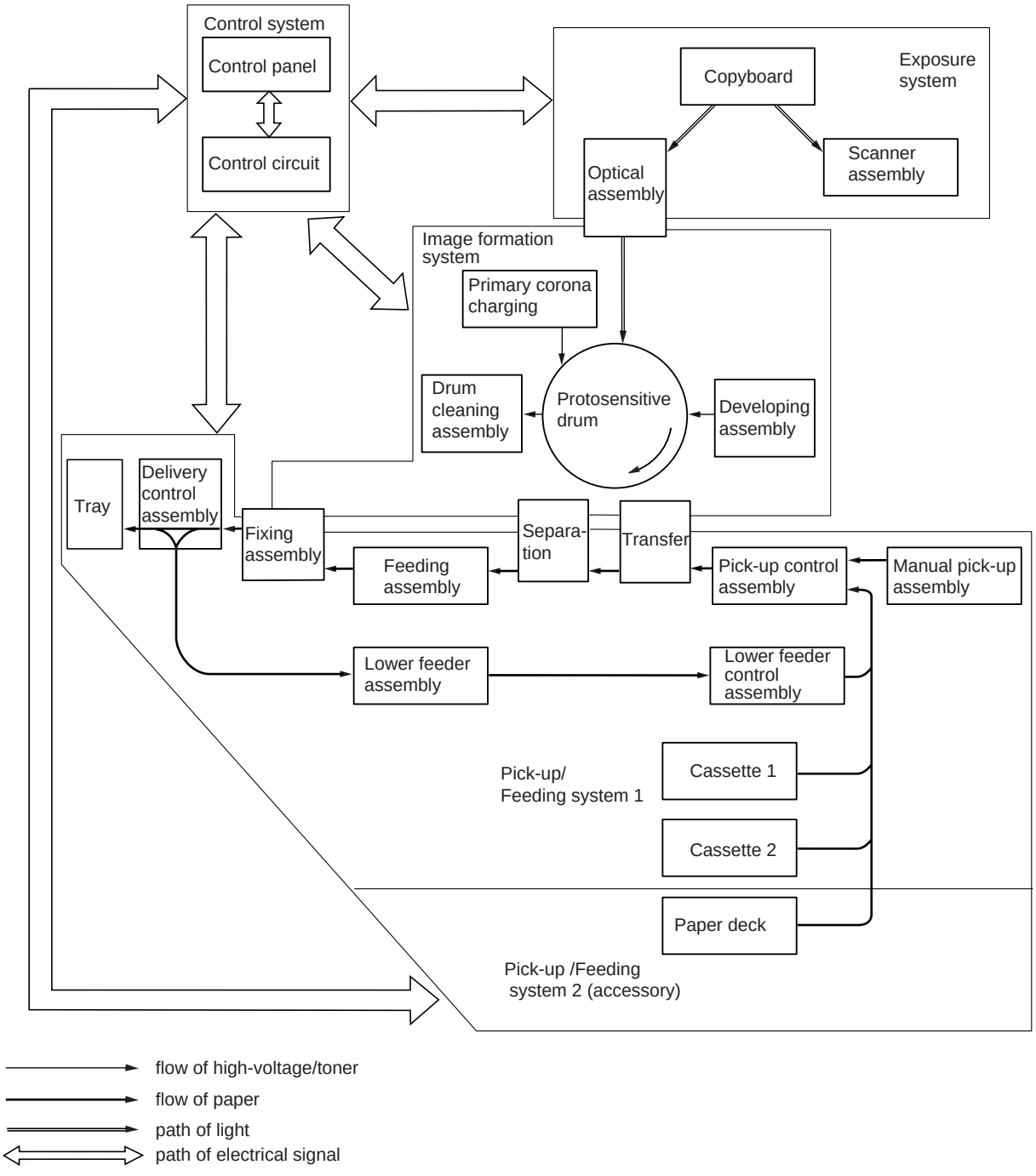

Figure 2-101

COPYRIGHT © 1997 CANON INC. CANON NP6330 REV.0 MAY 1997 PRINTED IN JAPAN (IMPRIME AU JAPON)

B. Outline of the Electrical Circuitry

The copier's major electrical mechanisms are controlled by a CPU (IC116) operating in sync with 16MHz external inputs.

Each principal IC on the DC controller PCB has the functions discussed below; Figure 2-102 is a block diagram showing the relationship among major circuits:

IC116 (master CPU)
- Controlling copying sequence.

IC104 (slave CPU)
- Controlling the control panel.
- Controlling the lower feeder motor, blank shutter motor, and lens motor.

IC115 (gate array)
- Controlling writing to and reading from memory.
- Controlling the fixing heater.
- Controlling the scanning motor.

IC124, IC103 (master ROM, slave ROM)
- Serving as memory for programs.

IC107 (DPRAM)
- Serving as buffer memory between master CPU and slave CPU.

IC109 (I/O port)
- Controlling the high-voltage power supply and lamp regulator.
- Turns on and off each element.

IC117 (IPC)
- Controlling serial communication with the DF, sorter, and pedestal.

IC113 (reset IC)
- Resetting appropriate ICs at power-on or power outage: IC105, IC109, IC115, IC116, IC117

COPYRIGHT © 1997 CANON INC.
CANON NP6330 REV.0 MAY 1997 PRINTED IN JAPAN (IMPRIME AU JAPON)

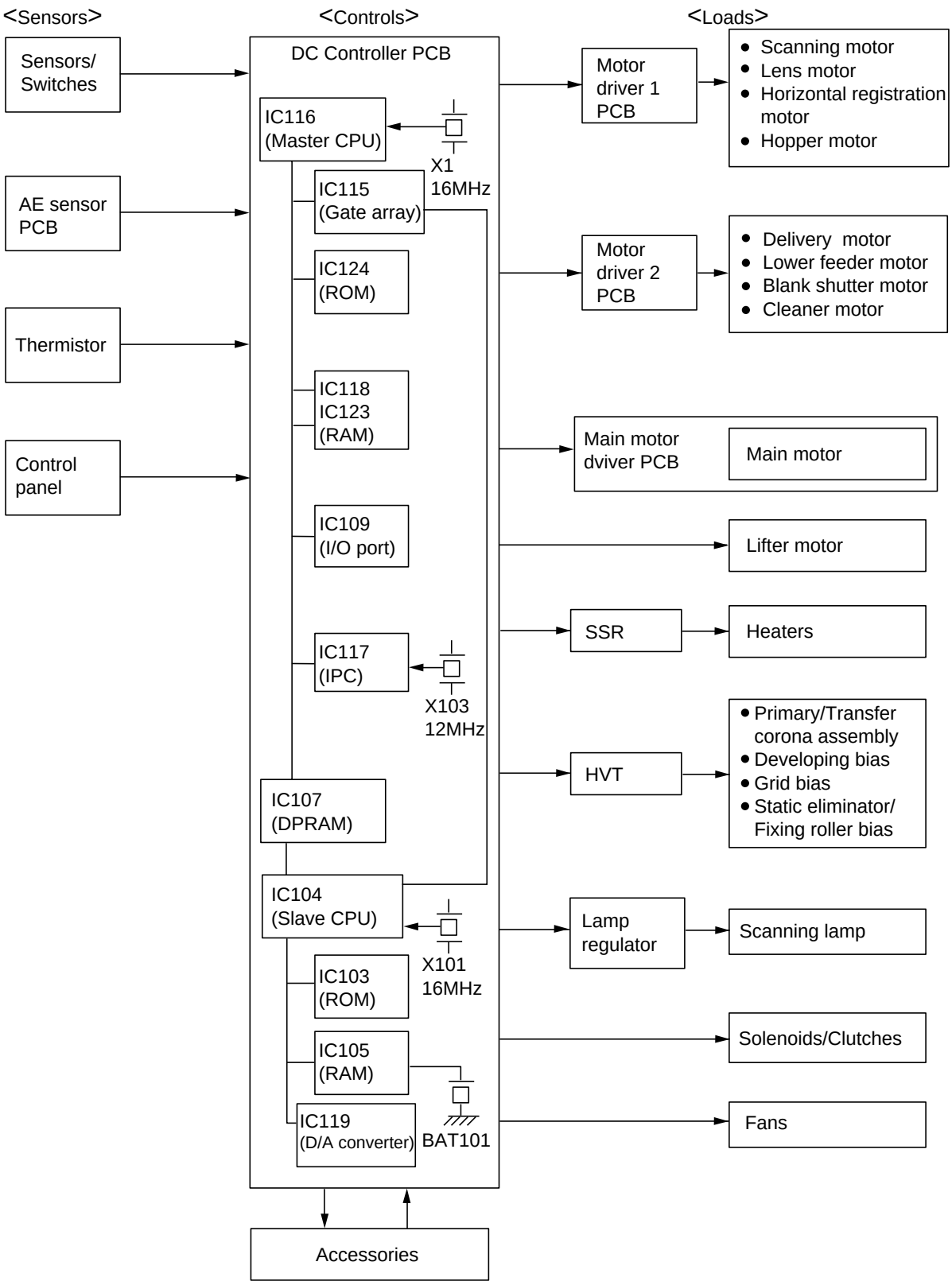

Figure 2-102

COPYRIGHT © 1997 CANON INC.
CANON NP6330 REV.0 MAY 1997 PRINTED IN JAPAN (IMPRIME AU JAPON)

C. Basic Sequence

1. Basic Sequence of Operation

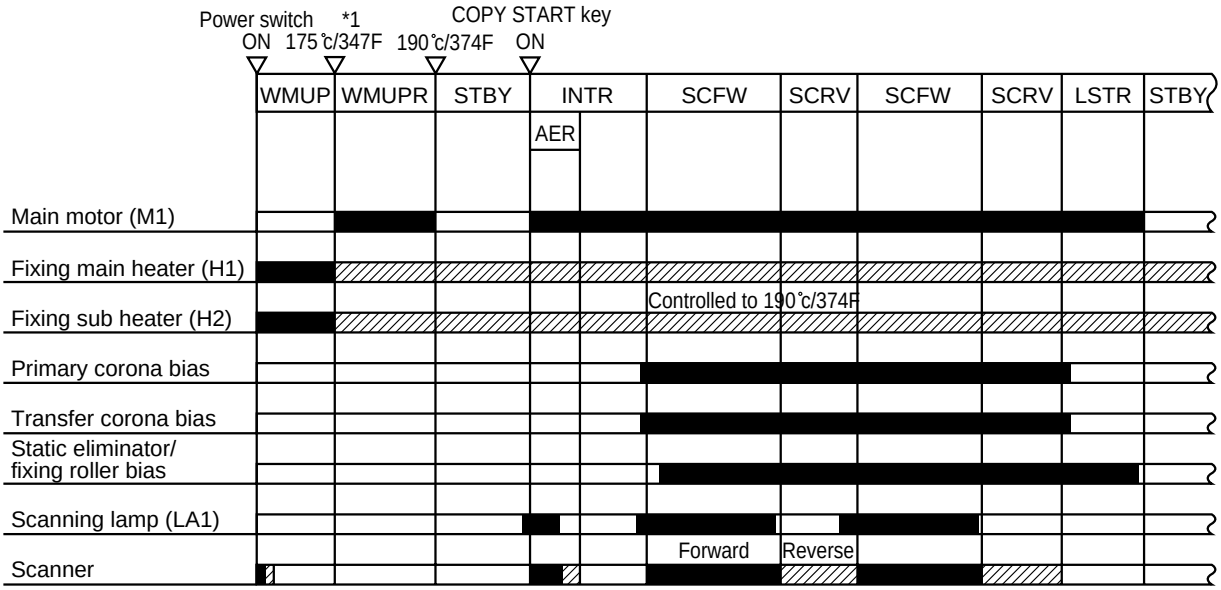

*1: Fixing upper roller surface temperature.

Figure 2-103

COPYRIGHT © 1997 CANON INC.
CANON NP6330 REV.0 MAY 1997 PRINTED IN JAPAN (IMPRIME AU JAPON)

Period		Function	Remarks
WMUP (warm-up)	From when the power switch is turned on to when the temperature of the fixing roller reaches 175°C/347F.	Waits until the fixing roller heats.	The lens moves to Direct position.
WMUPR (warm-up rotation)	From when the temperature of the fixing roller has reached 175°C/347F to when it reaches 190°C/374F (5 sec max.).	Evens out the temperature of the fixing roller.	If auto start is see, copying operation starts when the temperature of the fixing roller reaches 185°C/365F.
INTR (initial rotation)	From when the Copy Start key is pressed to when the scanner starts to move forward.	Stabilizes the sensitivity of the drum in preparation for copying operation.	
AER (AE rotation)	Until the scanner returns to home position after moving to the front/rear by about 70 mm/2.8”.	Measures the density of the original.	In AE mode only.
SCFW (scanner forward)	While the scanner is moving forward. • The distance over which the scanner moves forward varies according to the selected cassette size and reproduction ratio. • The speed at which the scanner moves forward varies according to the selected reproduction ratio.	The scanning lamp illuminates the original, and the reflected light is projected to the photosensitive drum through mirrors and lenses.	The registration signal is generated, and the copy paper is moved to the transfer assembly.
SCRV (scanner reverse)	While the scanner is moving in reverse.	Returns the scanner to home position in preparation for the next copying run.	
LSTR (last rotation)	From the end of SCRV to when the main motor stops.	Cleans the surface of the photosensitive drum to remove charges.	The last copy is fully discharged.
STBY (standby)	From the end of LSTR or WMUPR to when the Copy Start key is pressed or the power switch is turned off.	Waits until the Copy Start key is pressed.	The indications on the control panel return to standard mode 2 min after the end of LSTR.

COPYRIGHT © 1997 CANON INC.
CANON NP6330 REV.0 MAY 1997 PRINTED IN JAPAN (IMPRIME AU JAPON)

D. Controlling the Main Motor

1. Outline

The copier's main motor (M1) is a DC motor with a built-in clock pulse generator. Figure 2-104 is a block diagram showing the circuit used to control the main motor, and the circuit has the following functions:

① Turning on and off the main motor.
② Controlling the speed of the main motor.
③ Checking the rotation of the main motor for an error.

2. Operation

① Turning On and Off the Main Motor

When the main motor drive command (MMD) from the DC controller goes '1', the motor driver generates the drive command to turn on the main motor (M1). When the MMD command goes '0', on the other hand, the drive command stops to turn off the main motor.

② Controlling the Speed of the Main Motor

When the main motor rotates, the hall IC generates pulse signals. The crystal oscillator on the main motor driver PCB is used to generate reference pulses. These two types of signals are sent to the phase control circuit; the phases of the frequencies of the hall IC output pulses and the reference pulses are compared, and the output timing of the drive signal to the main motor is controlled so that the phases match, causing the speed of the motor to remain at a specific value.

③ Checking the Main Motor for an Error

The motor driver keeps the main motor lock signal (MMLOCK) at '0' as long as the main motor is rotating at a specific speed. If a discrepancy occurs in the rotation of the main motor for some reason, the MMLOCK signal goes '1'.

The DC controller identifies a main motor error if the MMLOCK remains '1' for about 2 sec, and stops the main motor and, at the same time, indicates 'E010'.

COPYRIGHT © 1997 CANON INC.
CANON NP6330 REV.0 MAY 1997 PRINTED IN JAPAN (IMPRIME AU JAPON)

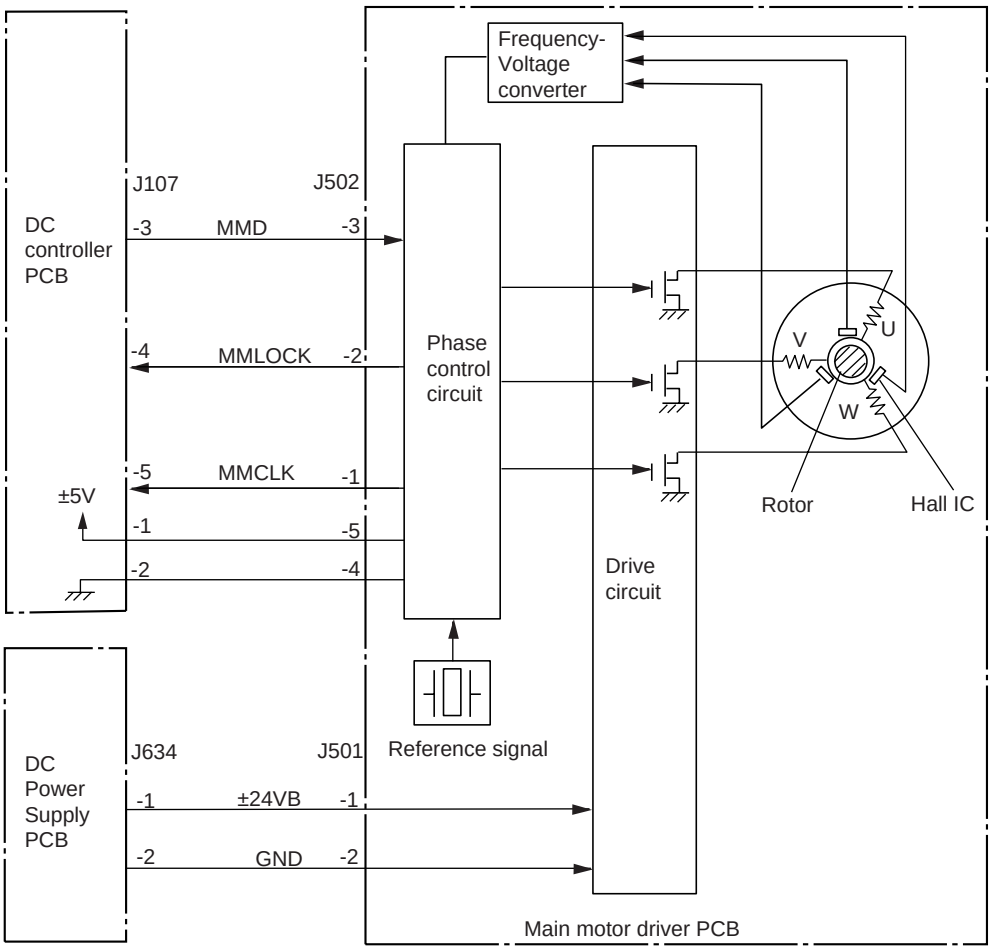

Figure 2-104

COPYRIGHT © 1997 CANON INC.

E. Inputs to the DC Controller

1. Input to the DC Controller (1/5)

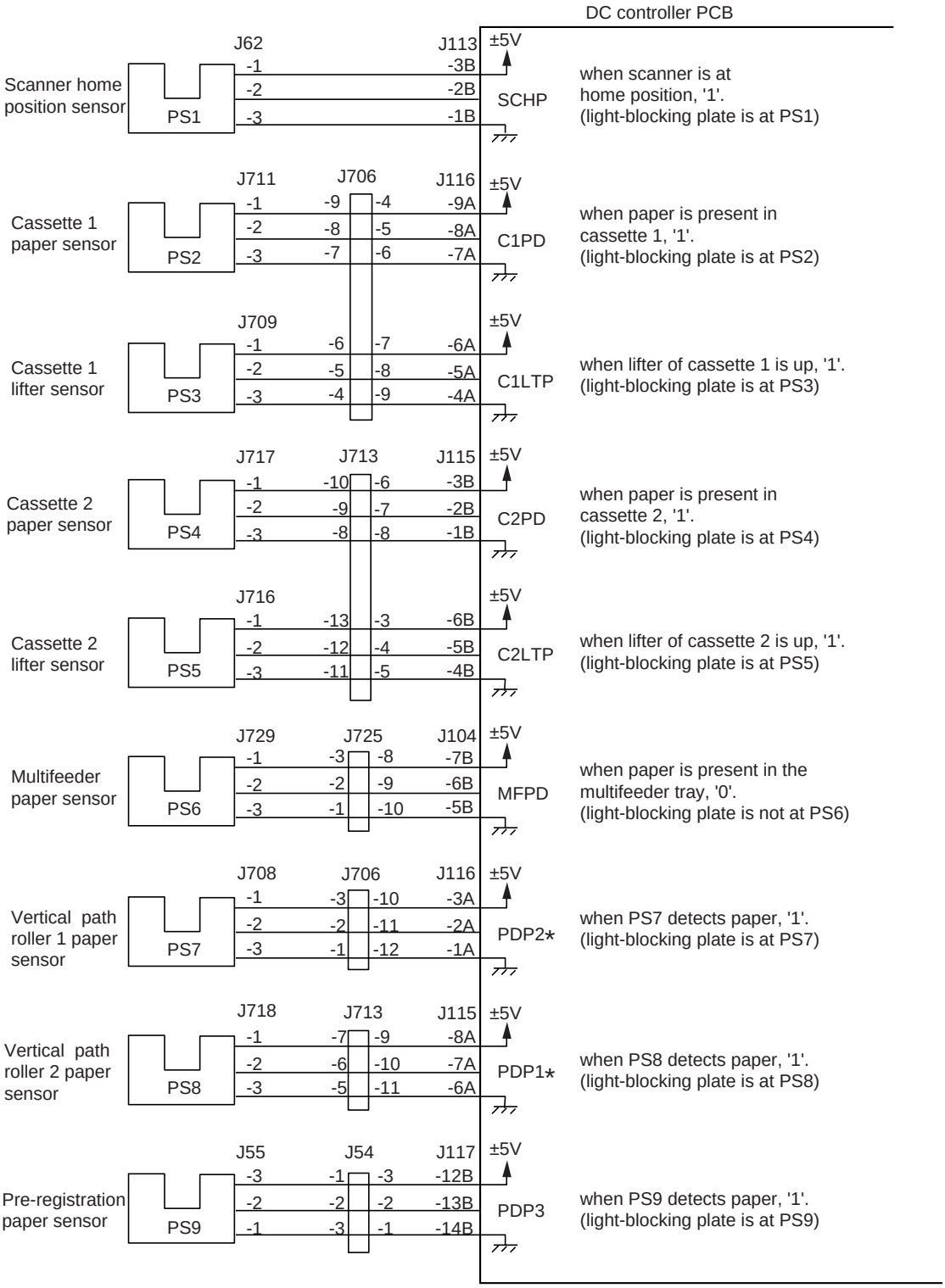

Figure 2-105

COPYRIGHT © 1997 CANON INC.
CANON NP6330 REV.0 MAY 1997 PRINTED IN JAPAN (IMPRIME AU JAPON)

2. Input to the DC Controller (2/5)

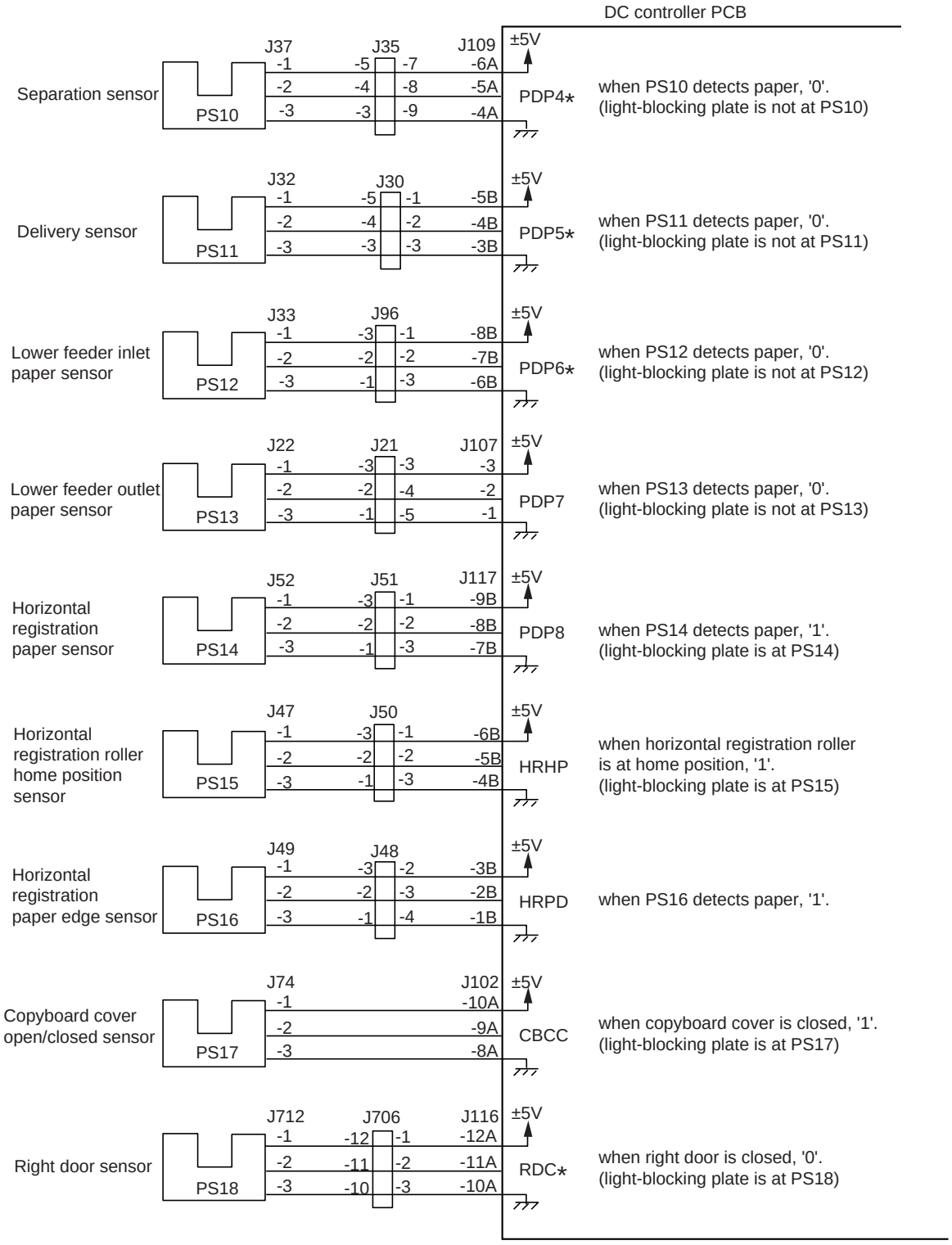

Figure 2-106

COPYRIGHT © 1997 CANON INC.

3. Input to the DC Controller (3/5)

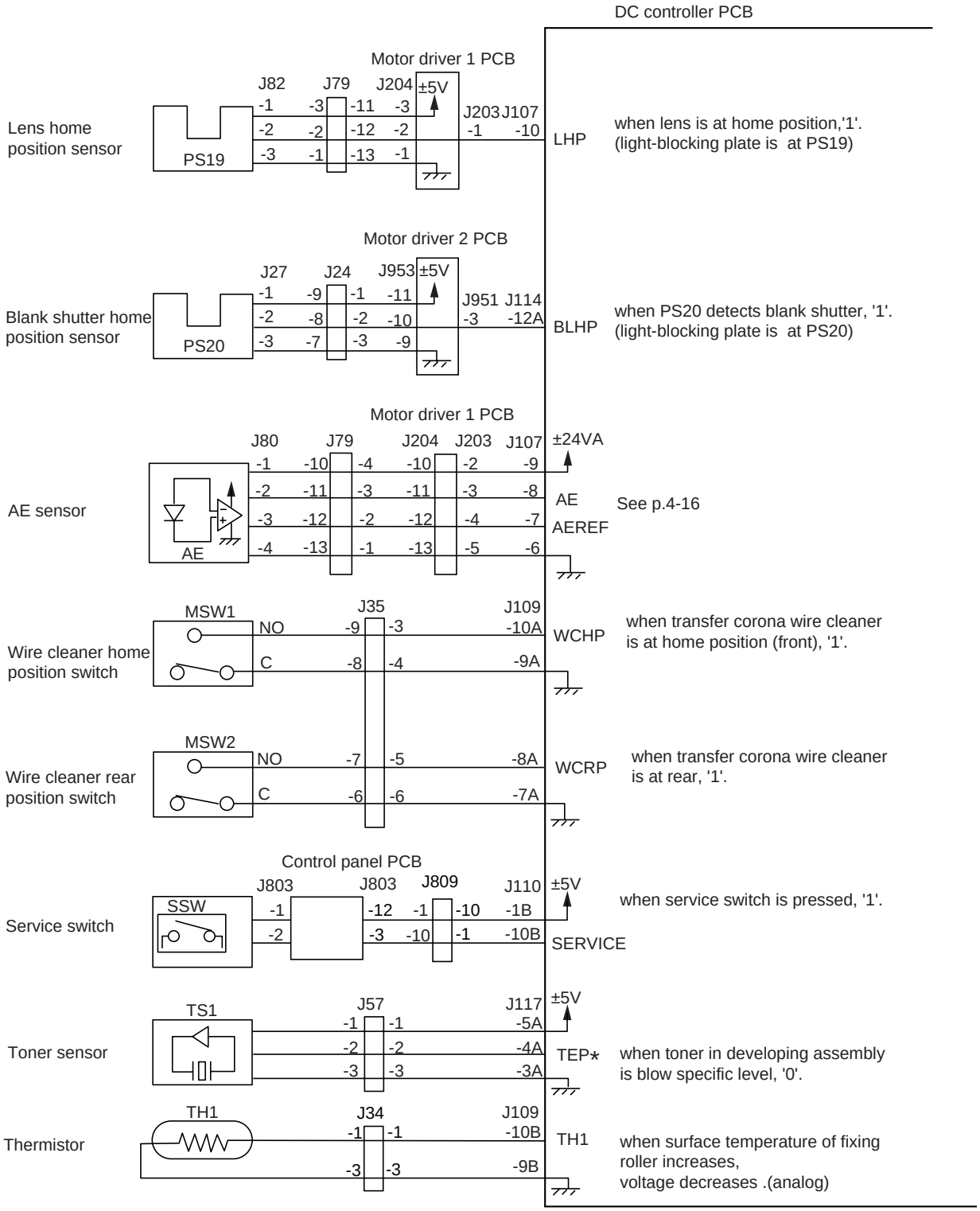

Figure 2-107

COPYRIGHT © 1997 CANON INC.

4. Input to the DC Controller (4/5)

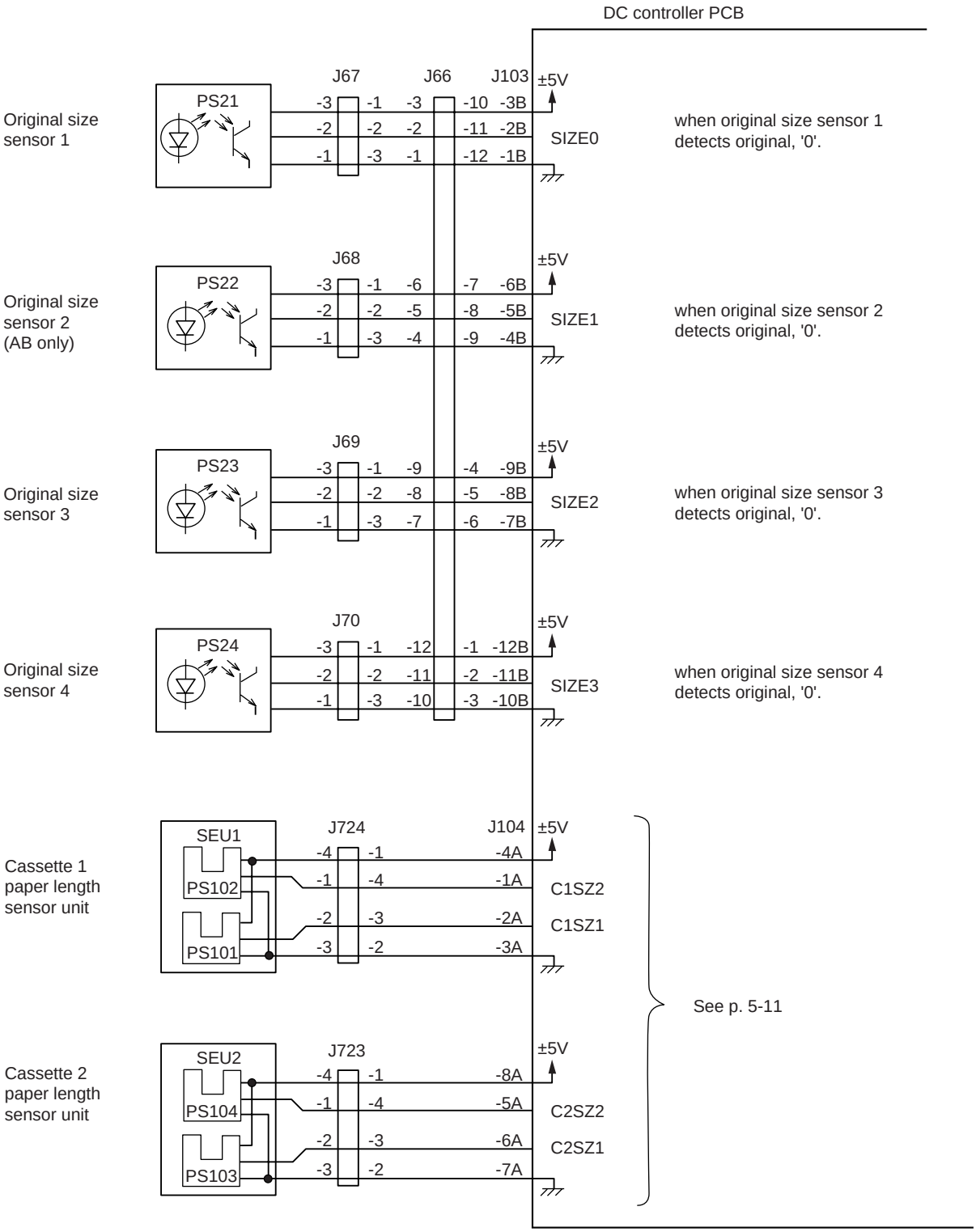

Figure 2-108

5. Input to the DC Controller (5/5)

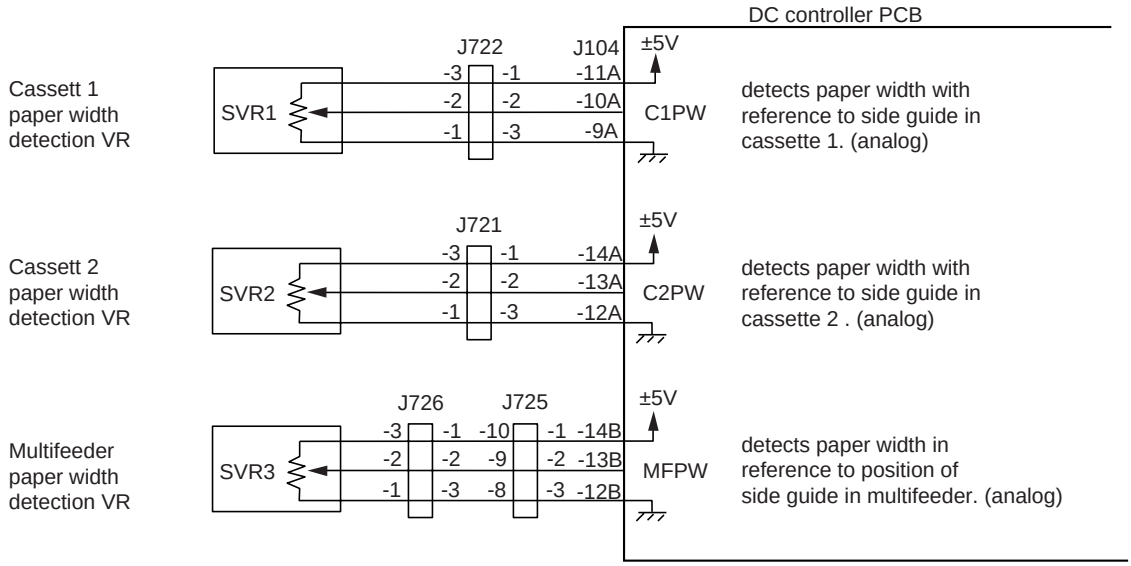

Figure 2-109

COPYRIGHT © 1997 CANON INC.
CANON NP6330 REV.0 MAY 1997 PRINTED IN JAPAN (IMPRIME AU JAPON)

F. Outputs from the DC Controller

1. Output from the DC Controller (1/5)

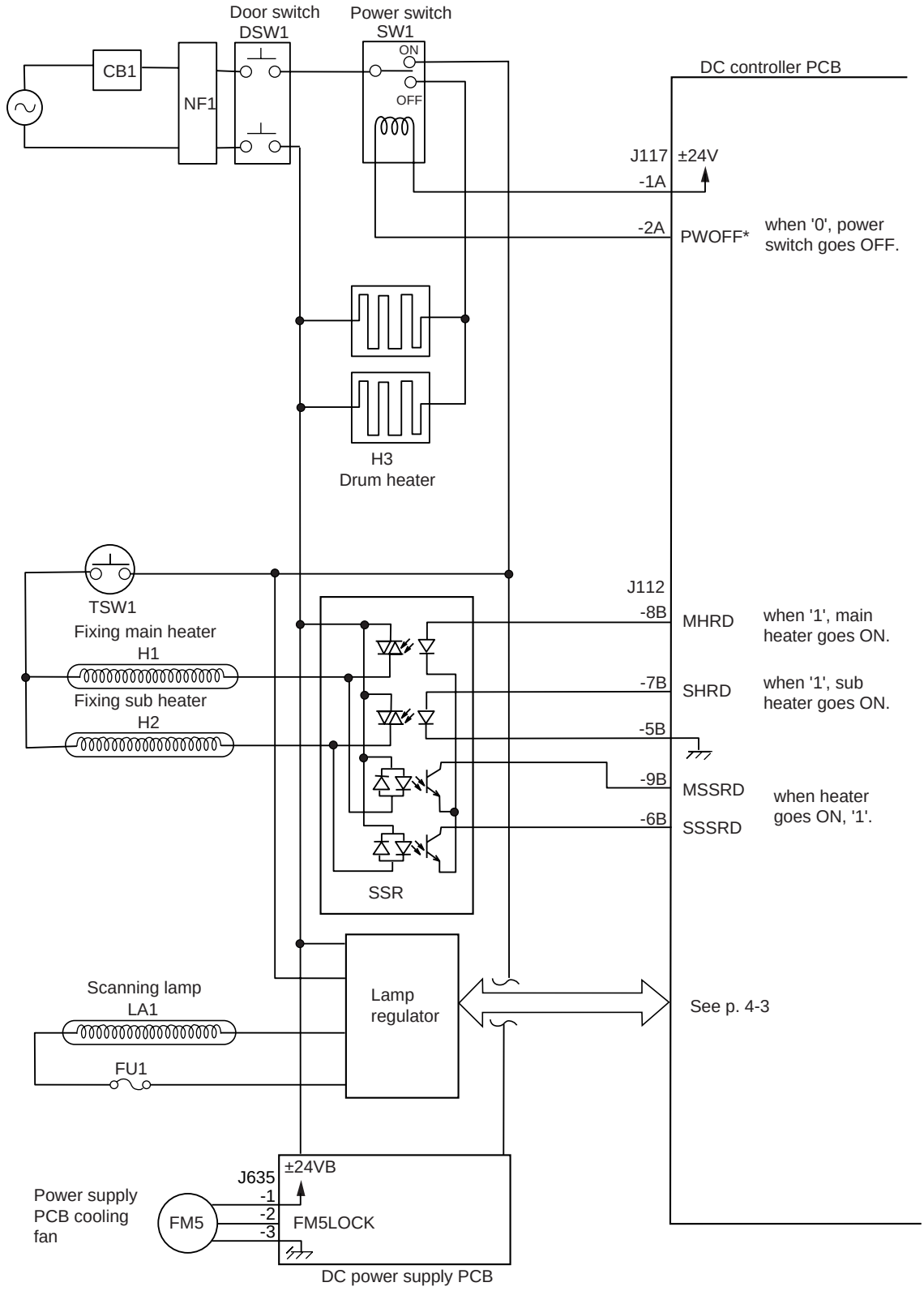

Figure 2-110

COPYRIGHT © 1997 CANON INC.

2. Output from the DC Controller (2/5)

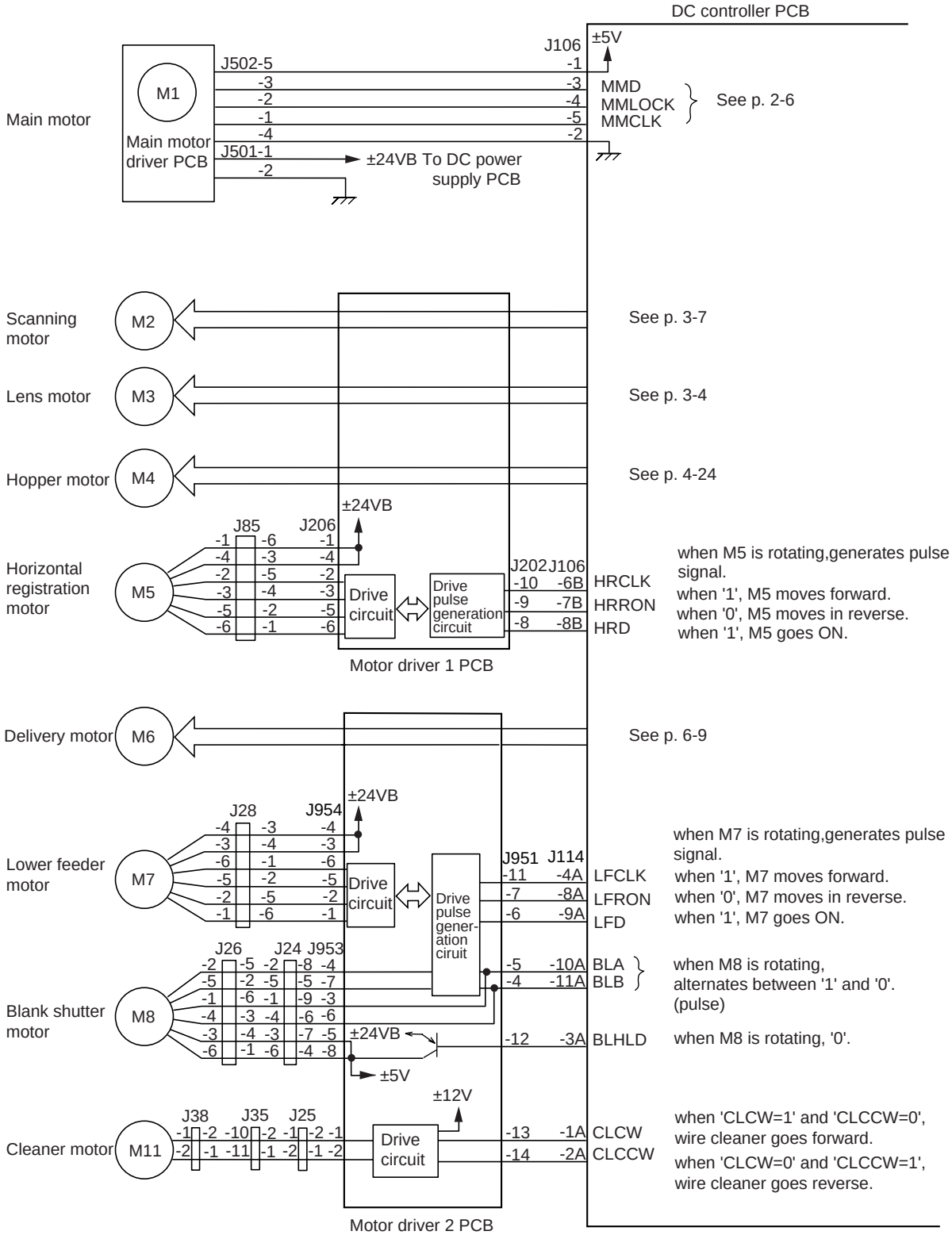

Figure 2-111

COPYRIGHT © 1997 CANON INC.
CANON NP6330 REV.0 MAY 1997 PRINTED IN JAPAN (IMPRIME AU JAPON)

3. Output from the DC Controller (3/5)

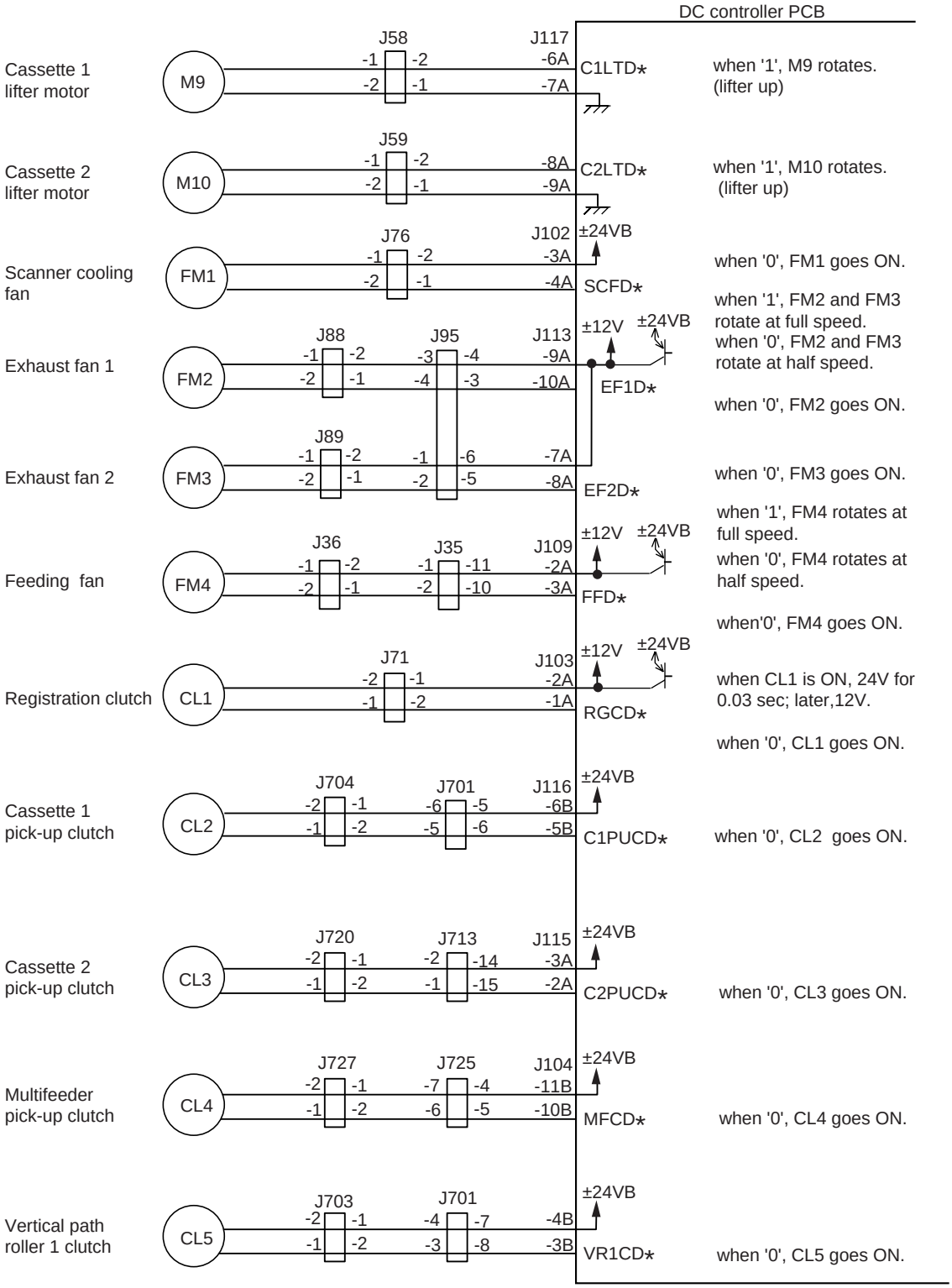

Figure 2-112

COPYRIGHT © 1997 CANON INC.

4. Output from the DC Controller (4/5)

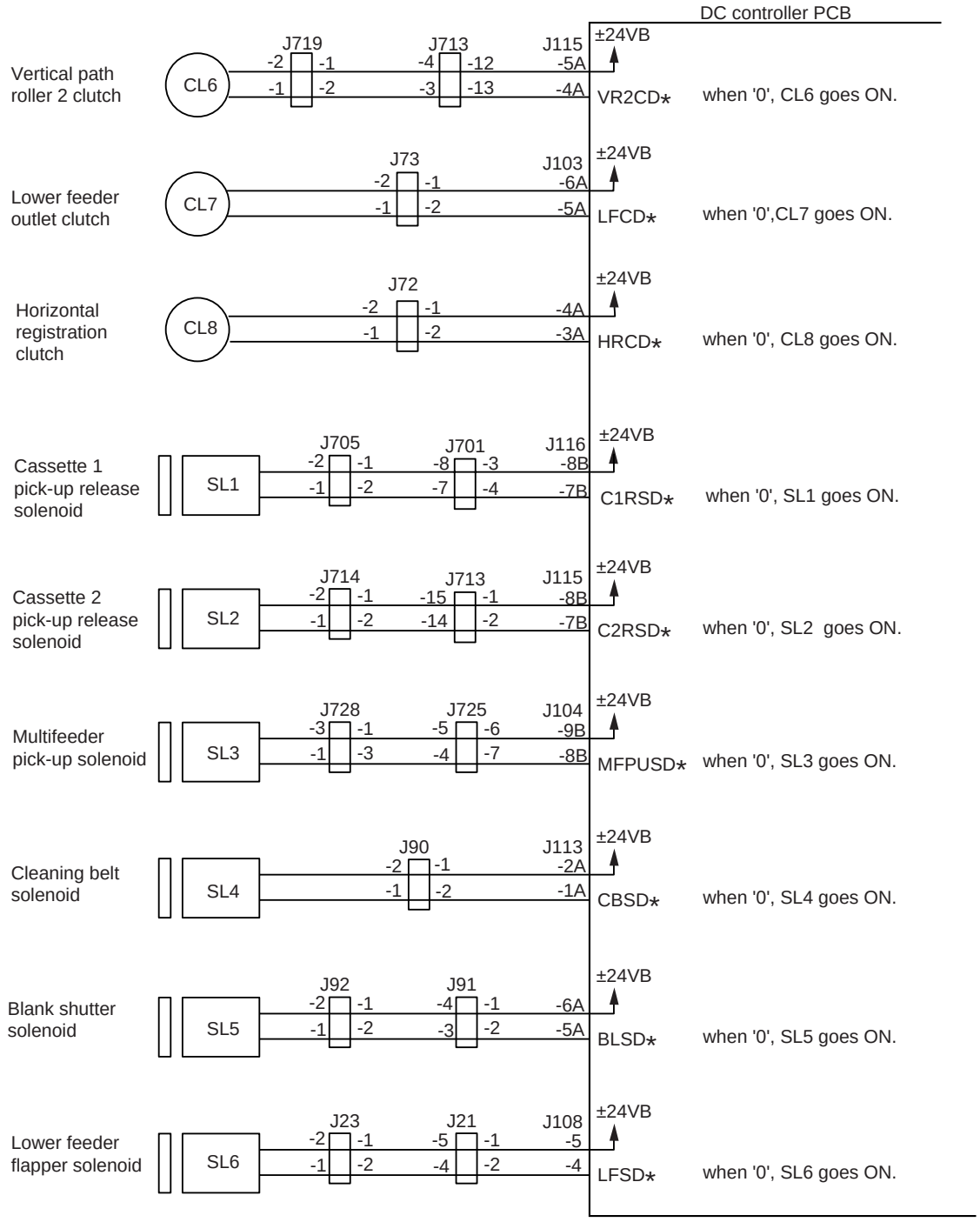

Figure 2-113

COPYRIGHT © 1997 CANON INC.

5. Output from the DC Controller (5/5)

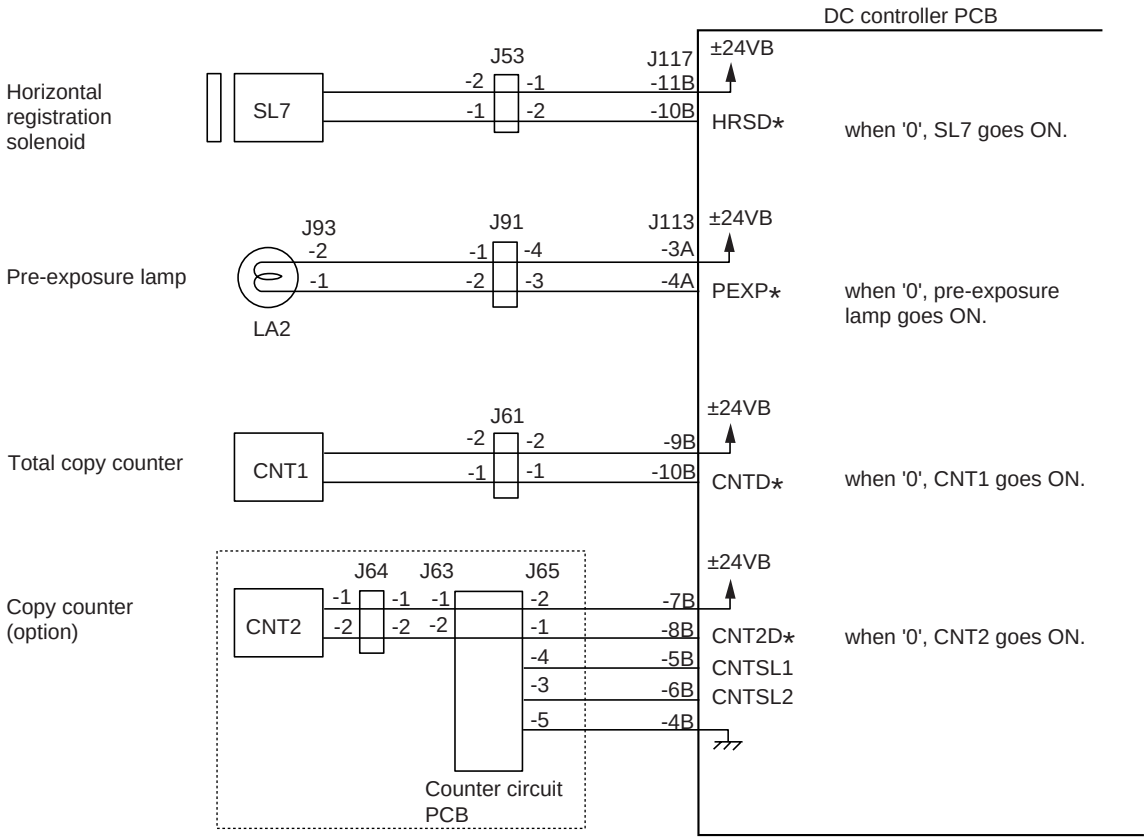

Figure 2-114

G. Inputs to and Outputs from the Accessories (1/1)

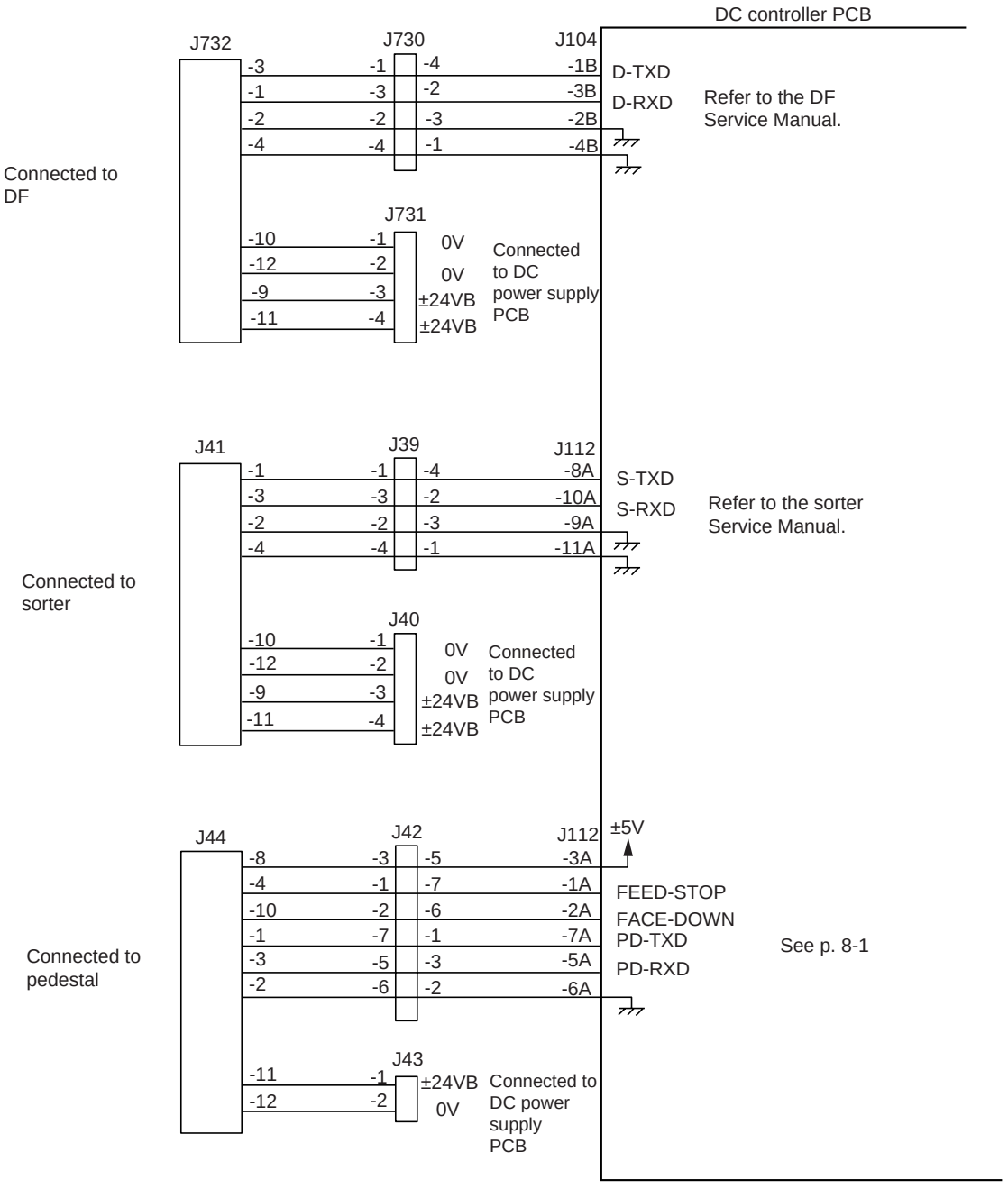

Figure 2-115

COPYRIGHT © 1997 CANON INC.

CHAPTER 3

EXPOSURE SYSTEM

This chapter describes the outline of the purposes, roles and operations of the lens driving, optical system and original detection of this copier, the relationship between the electric system and mechanical system and the operational timing of each component.

I. BASIC OPERATION.....3-1
A. Varying the Reproduction Ratio.....3-1
II. LENS DRIVE SYSTEM 3-2
A. Movement of the Lens.....3-2
III. SCANNER DRIVE MECHANISM.....3-6
A. Driving the Scanner.....3-6
IV. OTHERS.....3-13
A. Controlling the Detection of Original Sizes.....3-13
V. DISASSEMBLY AND ASSEMBLY.....3-19
A. Scanner Drive Assembly.....3-19
B. Lens Drive Assembly.....3-30

COPYRIGHT © 1997 CANON INC. CANON NP6330 REV.0 MAY 1997 PRINTED IN JAPAN (IMPRIME AU JAPON)

I. BASIC OPERATION

A. Varying the Reproduction Ratio

The ratio in the axial direction of the photosensitive drum is varied by the lens drive system, and the ratio in the peripheral direction of the photosensitive drum is varied by the scanner drive system.

The lens drive system uses a zoom lens, and it varies the reproduction ratio in the axial direction of the photosensitive drum by changing the lens position and the focal distance.

The scanner drive system moves the No.1 mirror relatively faster (Reduce) or slower (Enlarge) than the peripheral speed of the photosensitive drum, thereby varying the peripheral reproduction ratio.

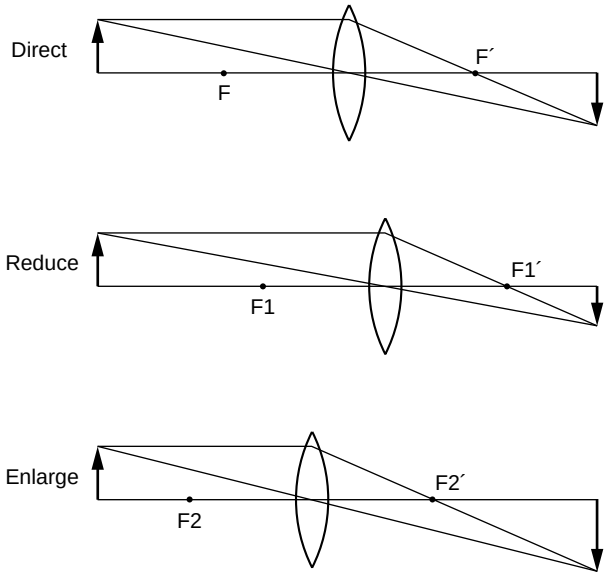

Figure 3-101

COPYRIGHT © 1997 CANON INC.
CANON NP6330 REV.0 MAY 1997 PRINTED IN JAPAN (IMPRIME AU JAPON)

II. LENS DRIVE SYSTEM

A. Movement of the Lens

1. Outline

The lens assembly is driven by the lens motor (M3).

The machine uses center reference, in which copy paper is centered along the feeding path for pick-up and feeding. Figure 3-201 shows the spatial relationship between copy paper and original.

When the power switch is turned on, the lens motor (M3) starts to rotate, moving the lens in the direction of the lens home position sensor (PS19). The lens motor starts to rotate in reverse when the signal plate blocks the lens home position sensor, and stops when the lens is at Direct position.

The microprocessor on the DC controller remembers the Direct position of the lens. When the ratio is changed, drive pulses corresponding in number to the selected ratio will be applied to the lens motor to promptly change the position of the lens.

When moving in Enlarge direction (as from Reduce to Direct), the lens is first moved past the position for the selected ratio; it is then moved back to the appropriate position by rotating the lens motor in reverse, thereby ensuring correct positioning of the lens.

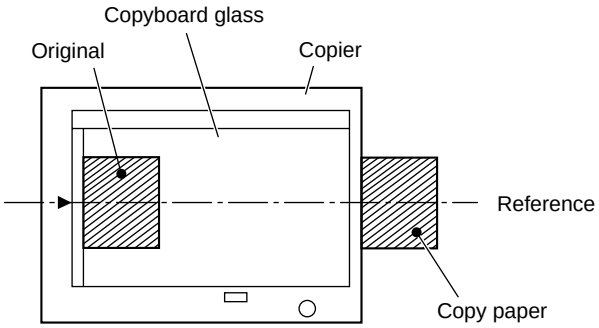

Figure 3-201

COPYRIGHT © 1997 CANON INC.
CANON NP6330 REV.0 MAY 1997 PRINTED IN JAPAN (IMPRIME AU JAPON)

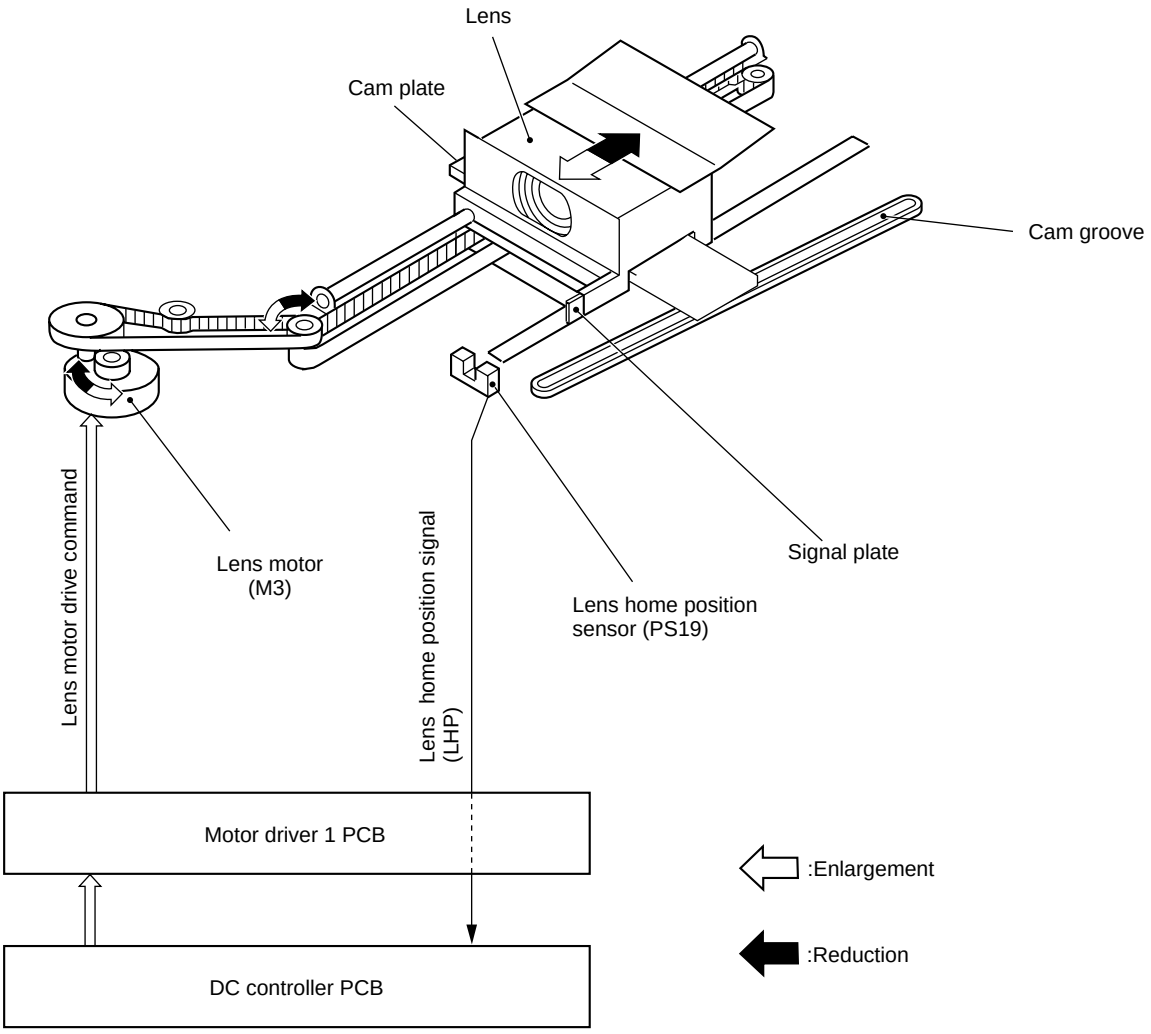
Lens
Cam plate
Cam groove
Lens motor drive command
Lens motor
(M3)
Lens home position signal
(LHP)
Lens home position
sensor (PS19)
Signal plate
Motor driver 1 PCB
DC controller PCB
:Enlargement
:Reduction

Figure 3-202

2. Lens Motor Drive Circuit

Figure 3-203 shows the circuit used to control the lens motor (M3).

The lens motor is a 2-phase stepping motor, and is controlled by the lens motor drive pulse command (LEA, LEB) and the lens motor hold command (LEHLD) generated by the DC controller. The direction of its rotation, on the other hand, is controlled by changing the output timing of the LEA command and the LEB command.

The LEHLD command remains '1' while the lens motor is rotating, applying 24 V to the motor. The LEHLD command remains '0' while the motor is at rest, applying 5 V to the motor by way of applying brakes.

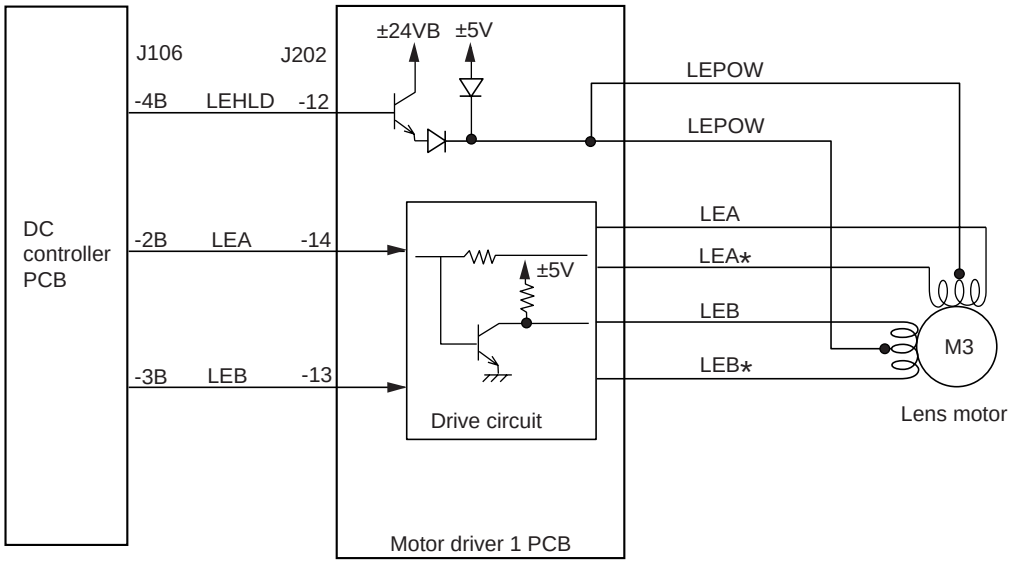

Figure 3-203

COPYRIGHT © 1997 CANON INC.
CANON NP6330 REV.0 MAY 1997 PRINTED IN JAPAN (IMPRIME AU JAPON)

3. Focusing

The copier's zoom lens unit consists of multiple lenses.

The zoom lens focuses on images with the help of the cam plate mount inside the zoom lens unit.

The cam plate moves along the cam groove in the lens stage and focuses on images by varying the distance between multiple lenses.

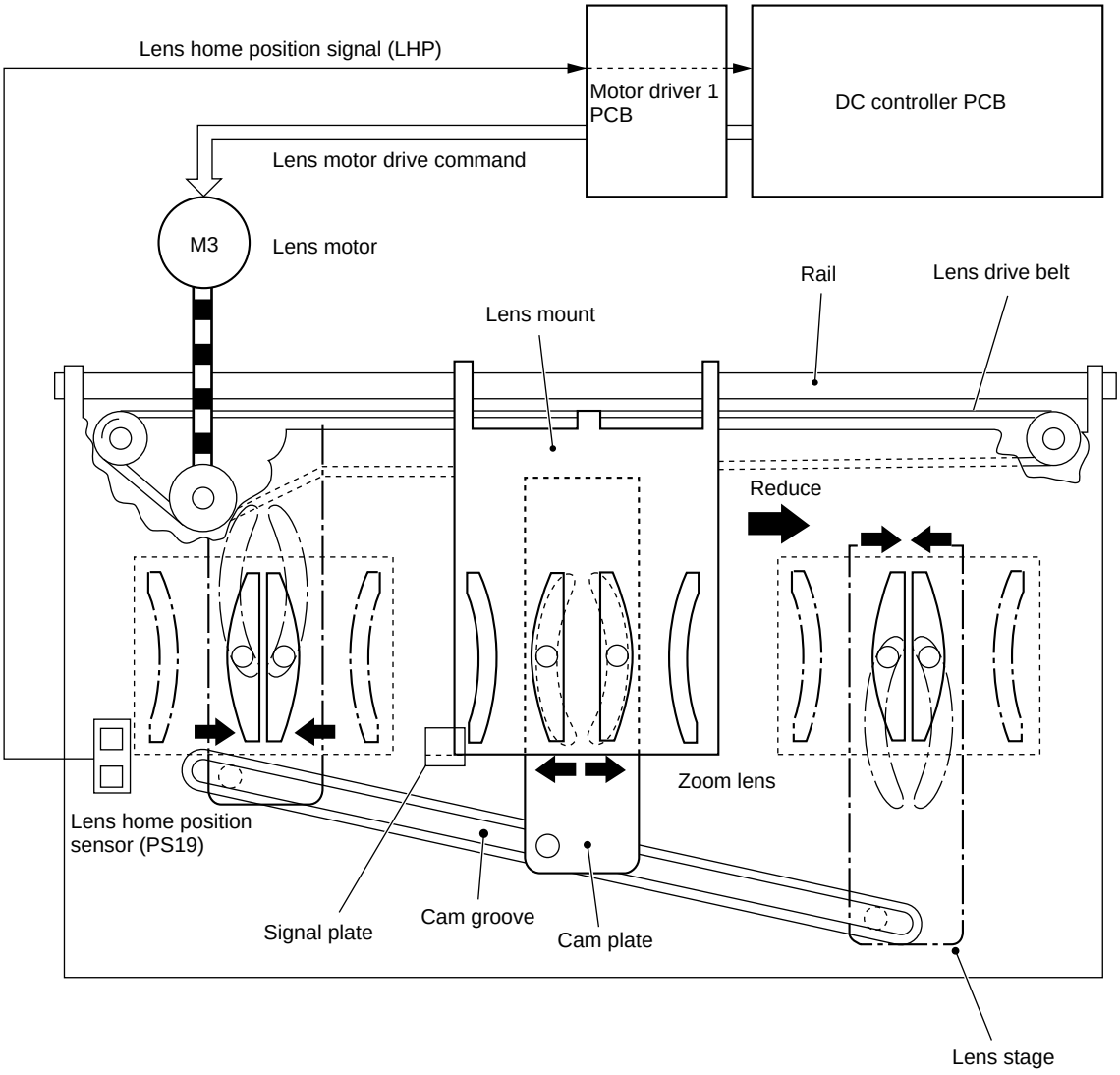

Figure 3-204

III. SCANNER DRIVE MECHANISM

A. Driving the Scanner

1. Outline

The scanner is driven by the scanning motor (M2). The scanning motor changes its direction of rotation to move the scanner forward and in reverse. The speed of rotation when moving the scanner forward varies continuously according to the selected reproduction ratio; however, the speed of rotation when moving the scanner in reverse remains a specific value (about 2.7 times when moving the scanner forward) regardless of the selected reproduction ratio.

The distance over which the scanner travels varies according to the length of copy paper and the reproduction ratio.

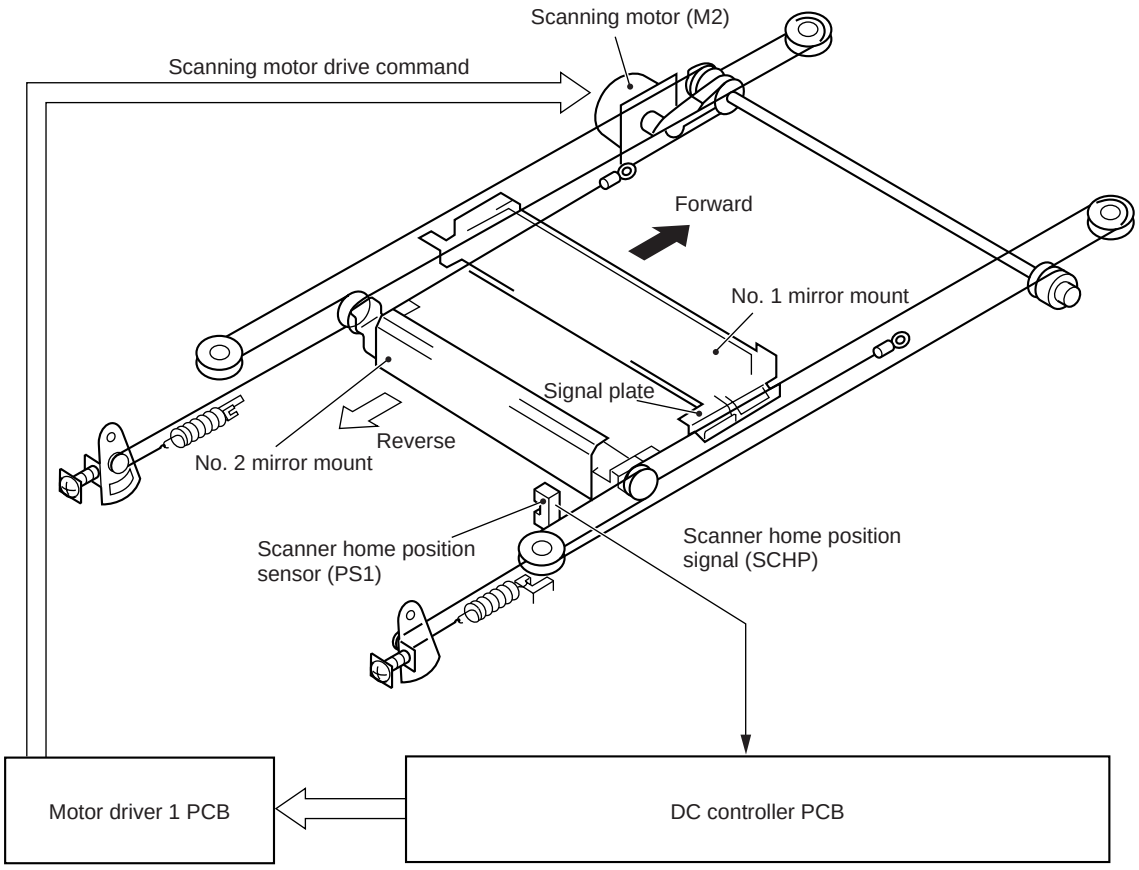

Figure 3-301

COPYRIGHT © 1997 CANON INC.
CANON NP6330 REV.0 MAY 1997 PRINTED IN JAPAN (IMPRIME AU JAPON)

2. Scanning Motor Control Circuit

The scanning motor (M2) is a 4-phase control stepping motor.

Figure 3-302 is a block diagram of the circuit used to control the scanning motor, and the circuit has the following functions:

① Turning on and off the motor.
② Controlling the rotation of the motor.
③ Controlling the speed of the motor.
④ Stabilizing the motor.

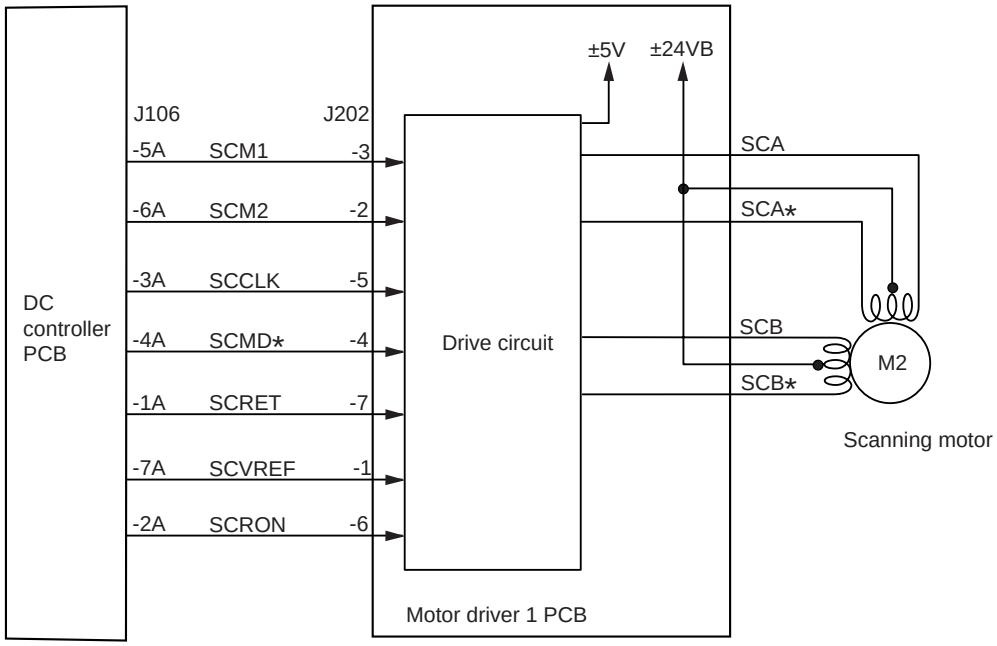

Figure 3-302

COPYRIGHT © 1997 CANON INC.

a. Turning On and Off the Motor

The motor is turned on and off by the scanning motor drive command (SCMD*).

When the SCMD* command goes '1', the drive pulse command (SCA, SCA*, SCB, SCB*) goes off so that the motor will not rotate. When the SCMD* command goes '0', the drive pulse command (SCA, SCA*, SCB, SCB*) goes on to rotate the motor.

b. Controlling the Direction of Rotation of the Motor

The scanning motor rotation command (SCRON) is used to change the order of output of the drive pulse command (SCA, SCA*, SCB, SCB*).

When the SCRON command is '0', the scanner motor (M2) rotates clockwise, thereby moving the scanner forward. When the SCRON command goes '1', on the other hand, the scanner motor (M2) rotates counterclockwise, thereby moving the scanner in reverse.

c. Controlling the Speed of the Motor

The scanning motor clock pulse command (SCCLK) is used to control the speed of the motor. The speed of rotation varies when the cycles of the SCCLK command are varied.

d. Stabilizing the Rotation of the Motor

If variations are noted in the output (amplitude) of the drive pulse signal (SCA, SCA*, SCB, SCB*), the DC controller PCB accordingly varies the output (analog) of the reference voltage command (SCVREF) for control so that the amplitude of the pulse signal remains the same.

COPYRIGHT © 1997 CANON INC.
CANON NP6330 REV.0 MAY 1997 PRINTED IN JAPAN (IMPRIME AU JAPON)

e. Output Timing of Motor Control Signals

The scanning motor (M2) is controlled so that the step angle occurring when it rotates is small by incrementally increasing the current of the drive pulse command (SCA, SCA*, SCB, SCB*) generated by the motor driver 1 PCB (high speed response, low amplitude drive, low noise drive).

Figure 3-303 shows the relationship between the size (current) of the drive pulse signal and the timing.

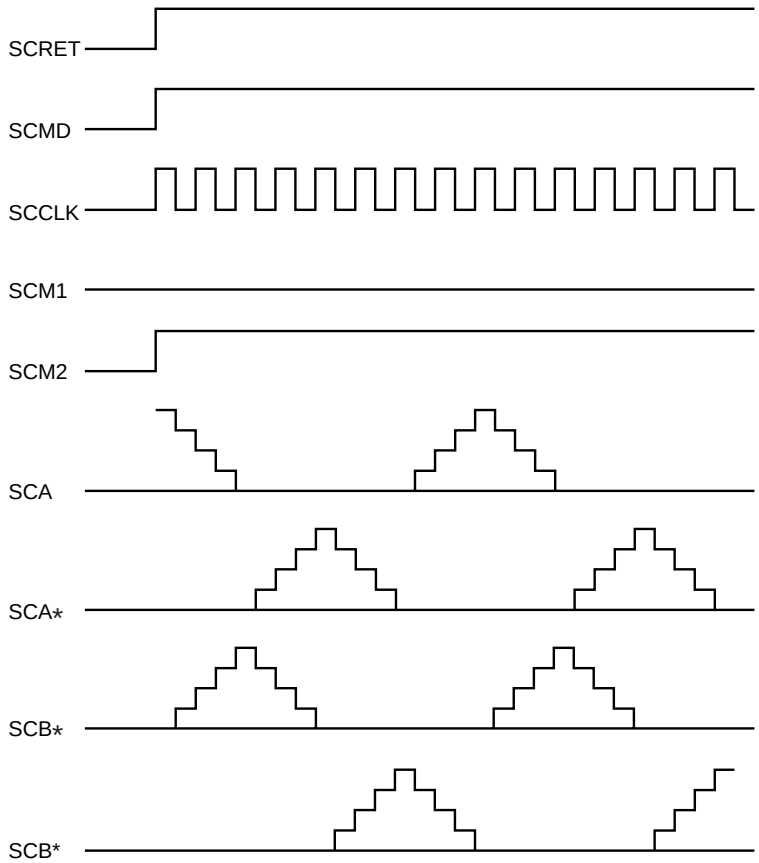

Figure 3-303

COPYRIGHT © 1997 CANON INC.

3. Relationship between Scanner Sensor and Signals

Scanner sensor	Signal	Scanner		Remarks
		Forward	Reverse	
Scanner home position	SCHP	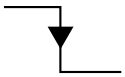		• Registration clutch ON
			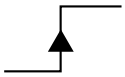	• In 0.1 sec, scanner reverse OFF

Table 3-301

4. Sequence of Scanner Movements (Enlarge/Reduce)

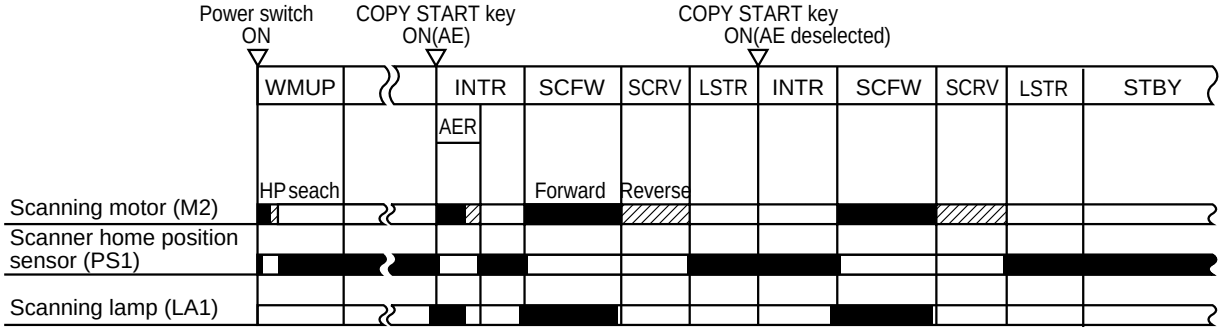

Figure 3-304

COPYRIGHT © 1997 CANON INC.
CANON NP6330 REV.0 MAY 1997 PRINTED IN JAPAN (IMPRIME AU JAPON)

5. Sequence of Scanner Movements (page separation mode, 2 copies)

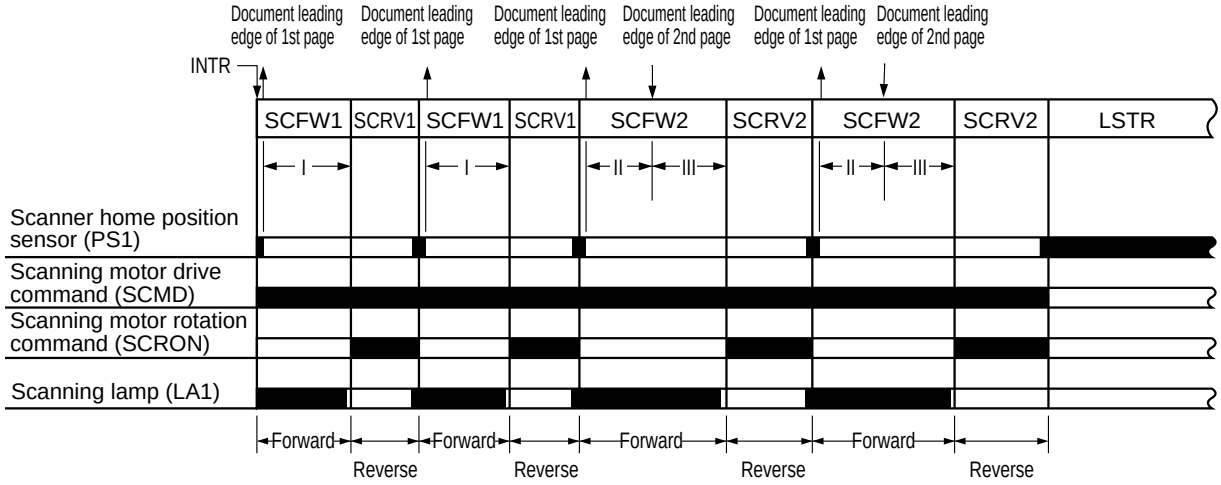

Figure 3-305

For I, II, and III shown in Figure 3-305, control is with reference to the leading edge of the 1st original (falling edge of PS1).

I: The distance from the leading edge of an original over which the scanner moves is determined by the selected reproduction ratio and cassette size as in the case of normal copying.

II: More or less the same as I; however, if the distance over which the scanner travels is longer than 210mm/8.5”, 210mm/8.5” will be used as the leading edge of the 2nd original.
If it is shorter than 210mm/8.5”, the point at which the scanner reverses in I will be used as the leading edge of the 2nd original.

III: The same as I.

COPYRIGHT © 1997 CANON INC.

Reference:

The distance over which the scanner moves (maximum) from the leading edge of an original (10mm/0.4” forward from the falling edge of PS1) is 432mm/17”; further, the distance is limited in relation to the selected reproduction ratio. In the case of 200% enlargement, the scanner may move up to 216mm/8.5”.

Reference:

If more than two modes are selected, the scanner is controlled based on the smallest original size identified.

If any of the following modes is selected, the scanner is controlled based on the original size.

Mode	Original size used as reference
With feeder (RDF/ADF) in use	Original size detected by feeder
Original frame erase mode	Original size set by user

Table 3-302

COPYRIGHT © 1997 CANON INC.
CANON NP6330 REV.0 MAY 1997 PRINTED IN JAPAN (IMPRIME AU JAPON)

IV. OTHERS

A. Controlling the Detection of Original Sizes

1. Outline

The copier is provided with auto paper selection, auto ratio selection, and image composition functions, all requiring identification of the size of originals.

As many as four original sensors for AB configuration and three original sensors for inch configuration are mounted under the copyboard glass; when the copyboard cover is closed, the presence/absence of an original over respective sensors is detected, identifying the size of the original as being A3, A4, B4, or B5 for AB configuration and as being 11” x 17 ” (LDR), LGL, or LTR for inch configuration (default sizes).

Each original sensor consists of a LED and a phototransistor: the light from the LED is detected by the photosensor, whose output is sent to the DC controller.

The size of original from the DF (accessory) is detected by the DF, and the data is sent to the machine, which uses the data for auto paper selection, ratio selection, and image composition while the DF is in use.

COPYRIGHT © 1997 CANON INC.
CANON NP6330 REV.0 MAY 1997 PRINTED IN JAPAN (IMPRIME AU JAPON)

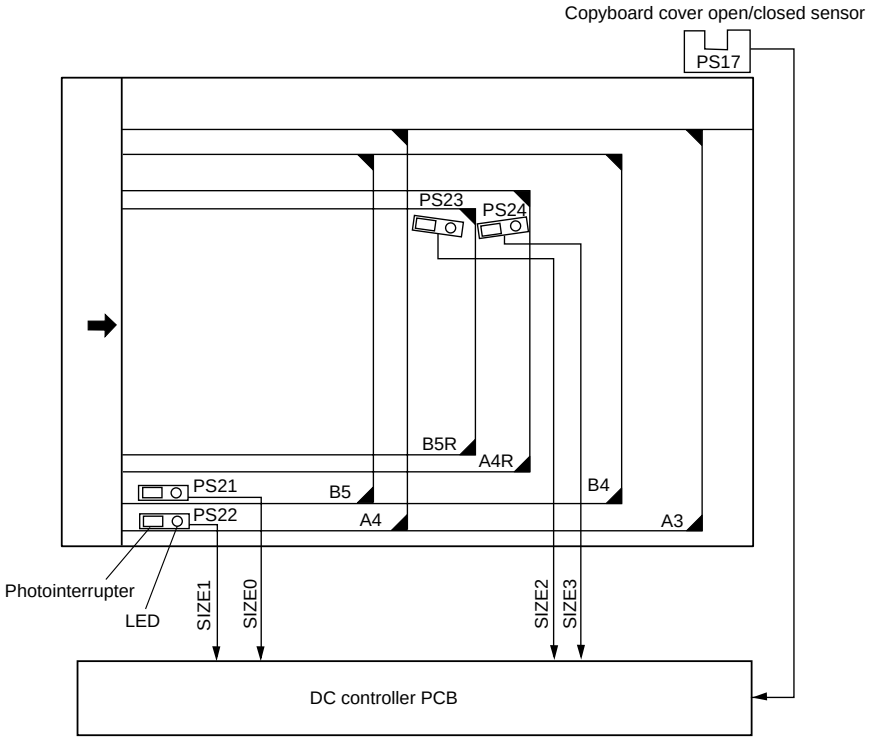

AB - configuration

Figure 3-401

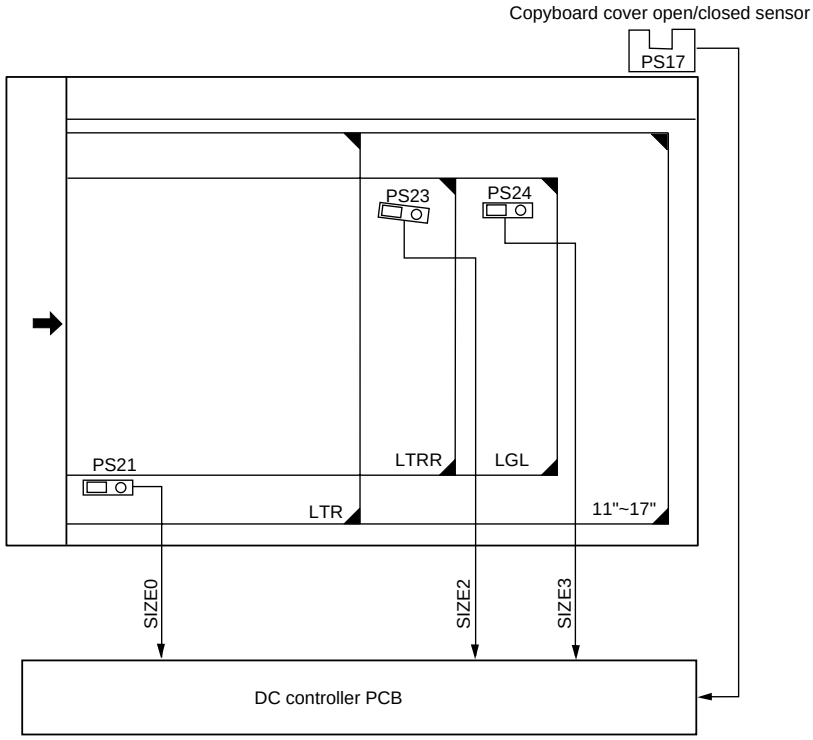

Inch - configuration

Figure 3-402

COPYRIGHT © 1997 CANON INC.
CANON NP6330 REV.0 MAY 1997 PRINTED IN JAPAN (IMPRIME AU JAPON)

2. Operation

When the copyboard cover is brought down to about 30°, the copyboard cover open/closed sensor (PS17) turns ON, i.e., the light-blocking plate blocks PS17.

After PS17 has turned ON, the output level of each size sensor is read for 15 sec or until the Copy Start key is pressed at intervals of about 0.1 sec. If the output level remains the same during the period, the copier assumes the presence of an original at the respective sensors, ultimately identifying the size of the original according to Table 3-401/3-402.

Although this way of identification can detect the size of a black original, the output level of the sensor will not change in the following cases:

a. Black original of A3/11"×17"
b. Book original (the thickness prevents changes in level)

Reference:

a or b can cause wrong detection of the size.

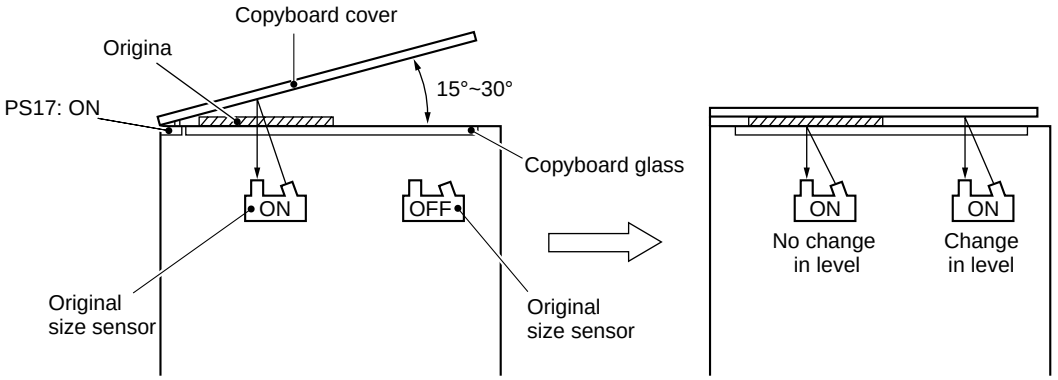

Figure 3-403

COPYRIGHT © 1997 CANON INC. CANON NP6330 REV.0 MAY 1997 PRINTED IN JAPAN (IMPRIME AU JAPON)

3. Identifying the Size of Originals

Based on combinations of the states of the original size sensors, the DC controller circuit identifies the size of each original as shown in Table 3-401 and Table 3-402.

- OFF The output of the sensor when the copyboard cover is brought down to 15° through 30° and the output 15 sec thereafter are the same (detecting an original).
- ON The output of the sensor when the copyboard cover is brought down to 15° through 30° and the level when it is fully closed are different (detecting no original).

Original size	Original size sensor			
	PS21	PS22	PS23	PS24
A3	ON	ON	ON	ON
B4	ON	OFF	ON	ON
A4R	OFF	OFF	ON	ON
A4	ON	ON	OFF	OFF
B5	ON	OFF	OFF	OFF
B5R	OFF	OFF	ON	OFF
NO	OFF	OFF	OFF	OFF

ON: represents the presence of a original
OFF: represents the absence of a original

Table 3-401

Original size	Original size sensor		
	PS21	PS23	PS24
11”×17”	ON	ON	ON
LGL	OFF	ON	ON
LTRR	OFF	ON	OFF
LTR	ON	OFF	OFF
NO	OFF	OFF	OFF

ON: represents the presence of a original
OFF: represents the absence of a original

Table 3-402

COPYRIGHT © 1997 CANON INC.
CANON NP6330 REV.0 MAY 1997 PRINTED IN JAPAN (IMPRIME AU JAPON)

4. Identifying the Size of Originals by the Document Feeder

a. Outline

The document feeder (accessory) identifies the size of an original in response to commands from the copier as follows:

① If the installed cassette is AB-configured, the copier instructs the document feeder to check for AB-configured originals.

② If the installed cassette is Inch-configured, the copier instructs the document feeder to check for Inch-configured originals.

The DF identifies the size of an original as above; however, some part of an image may be missing on copies if the original and the copies are of different sizes.

EX. A4 Original, LTR Copy

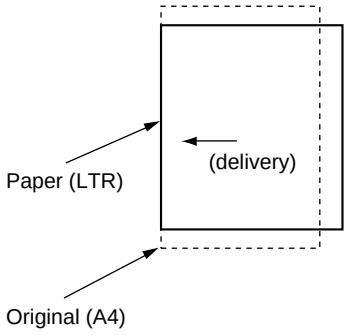

Figure 3-404

- If the original is A4 and the copy is LTR, the bottom of the original will be missing.

EX. A4 original, Enlarge, LTR Copy

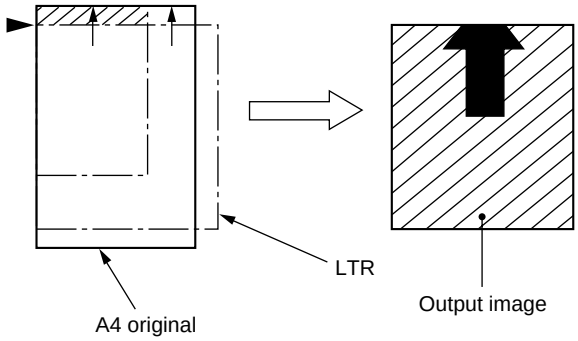

Figure 3-405

- The original will be identified as LTR. Since enlargement will be with reference to the triangle in Figure 3-405 (▶), the shaded area will be missing.

EX. LTR Original, Enlarge, A4 Copy

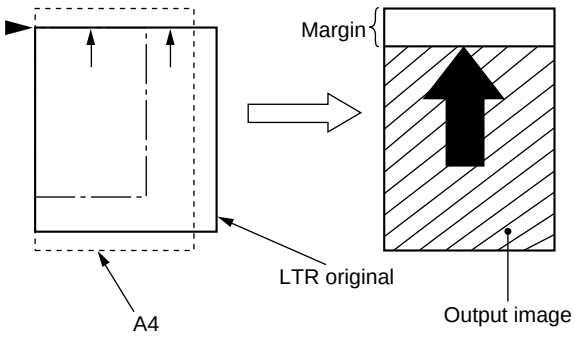

Figure 3-406

- The original will be identified as A4. Since the enlargement will be with reference to the triangle in Figure 3-406 (▶), the margin at the top of the copy will increase.

COPYRIGHT © 1997 CANON INC.
CANON NP6330 REV.0 MAY 1997 PRINTED IN JAPAN (IMPRIME AU JAPON)

V. DISASSEMBLY AND ASSEMBLY

This section explains mechanical characteristics and describes how to disassemble/assemble the copier.

Be sure to observe the following whenever disassembling/assembling the copier:

1. Disconnect the power plug before starting the work.
2. Unless otherwise shown, assemble the parts by reversing the steps given to disassemble them.
3. Identify each screw by type (length, diameter) and location.
4. A washer is used for two of the mounting screws on the rear cover to protect against static electricity; be sure to use the washer when assembling the part.
5. A washer is used for some mounting screws (for grounding wire, varistor) to ensure correct electrical continuity; be sure to use the washer when assembling the part.
6. As a rule, do not operate the copier while any of its parts is removed.
7. Be sure to turn off the front door switch or the power switch before sliding out the fixing assembly.

A. Scanner Drive Assembly

1. Removing the Scanner Motor

1) Remove the rear cover.
2) Disconnect the connector J205 ② from the motor driver 1 PCB ①.

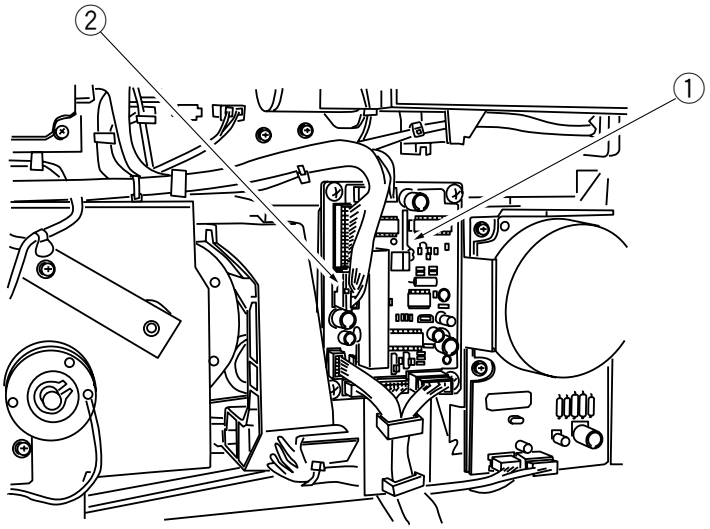

Figure 3-501

COPYRIGHT © 1997 CANON INC.

3) Remove the four screws ③, and remove the scanner motor ④.

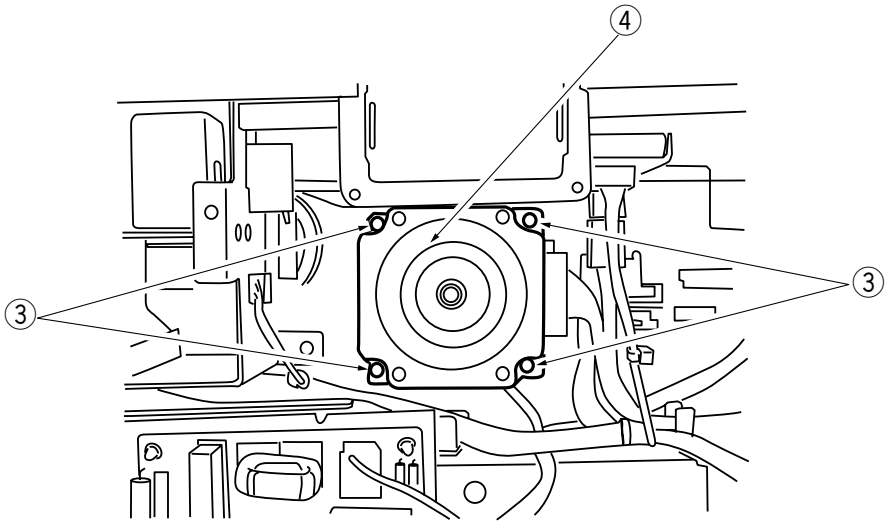

Figure 3-502

2. Outline of the Scanner Drive Cable

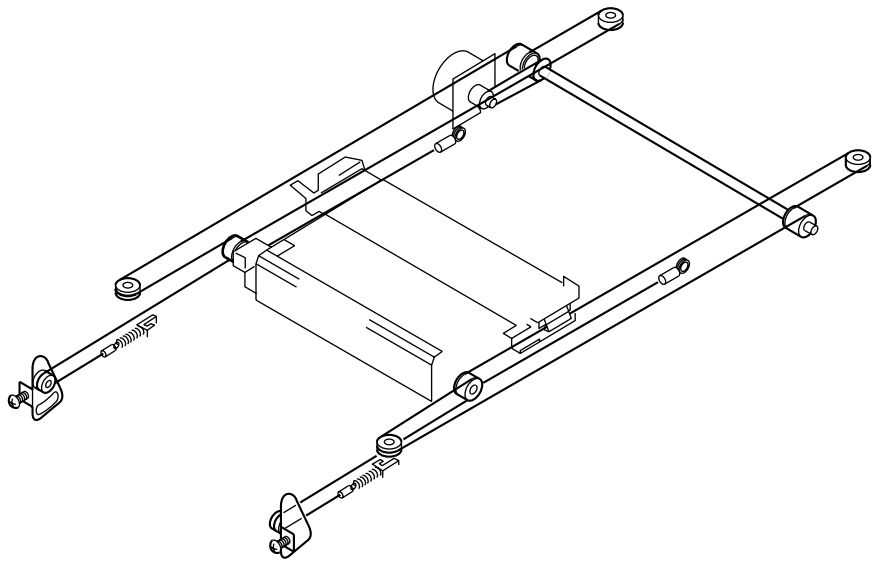

Figure 3-503

COPYRIGHT © 1997 CANON INC.
CANON NP6330 REV.0 MAY 1997 PRINTED IN JAPAN (IMPRIME AU JAPON)

3. Removing the Scanner Drive Cable

1) Remove the copyboard cover, right cover, left cover, upper rear cover, and rear cover.
2) Remove the copyboard glass.
3) Remove the control panel. (See p. 7-14.)
4) Remove the two screws ①, and remove the power switch mount ②.

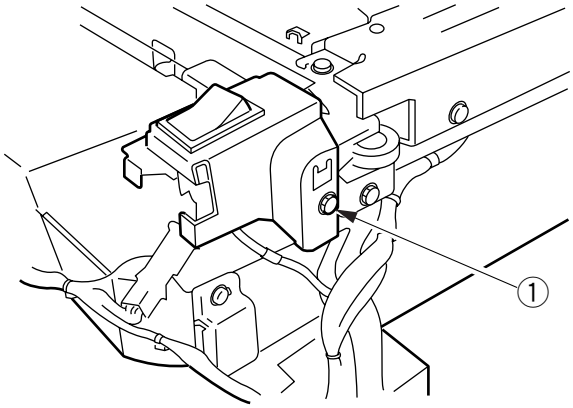

Figure 3-504

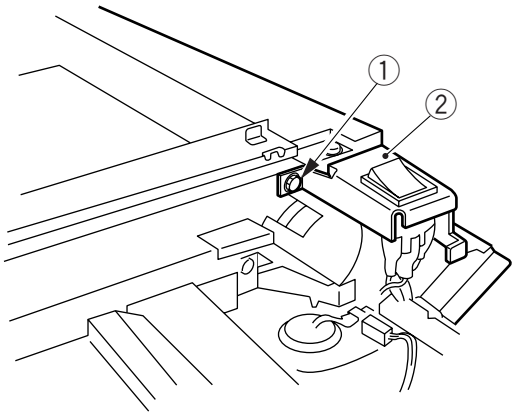

Figure 3-505

COPYRIGHT © 1997 CANON INC. CANON NP6330 REV.0 MAY 1997 PRINTED IN JAPAN (IMPRIME AU JAPON)

5) Remove the screw ③, and remove the pulley cover ④.

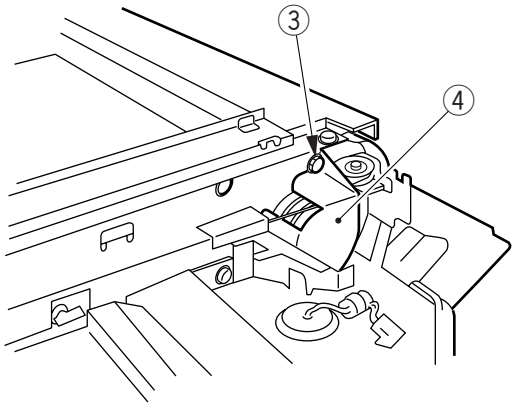

Figure 3-506

6) Remove the four screws ⑤, and remove the upper left stay ⑥.

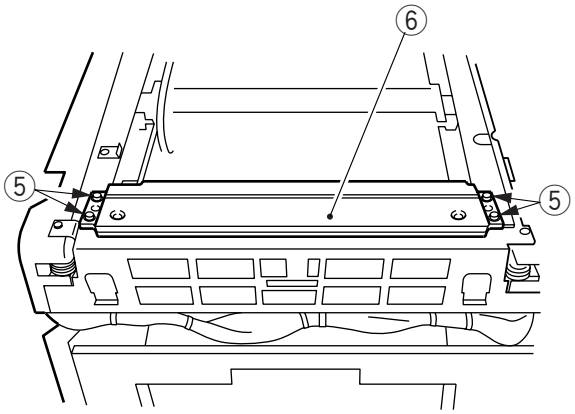

Figure 3-507

7) Remove the scanner cooling fan. (See p. 7-15.)
8) Remove the four screws ⑦, and remove the front glass support ⑧.

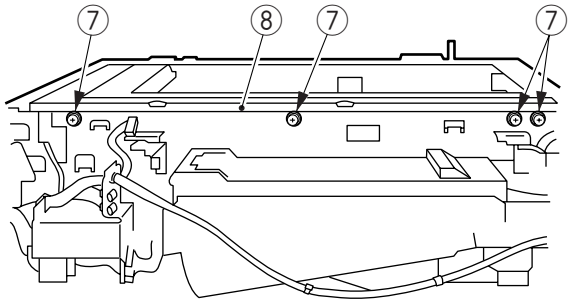

Figure 3-508

COPYRIGHT © 1997 CANON INC.
CANON NP6330 REV.0 MAY 1997 PRINTED IN JAPAN (IMPRIME AU JAPON)

9) Disconnect the connector ⑨, and remove the two screws ⑩; then, remove the copyboard support ⑪.

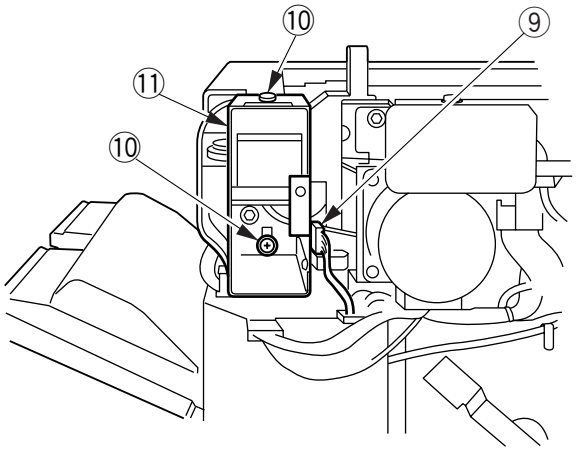

Figure 3-509

10) Remove the three screws ⑫, and remove the rear glass support ⑬.

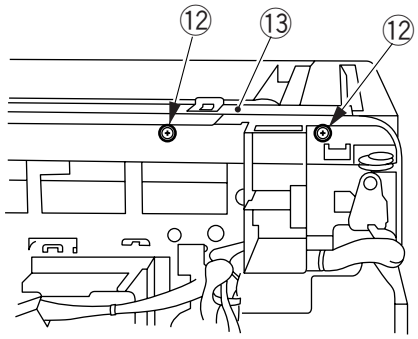

Figure 3-510

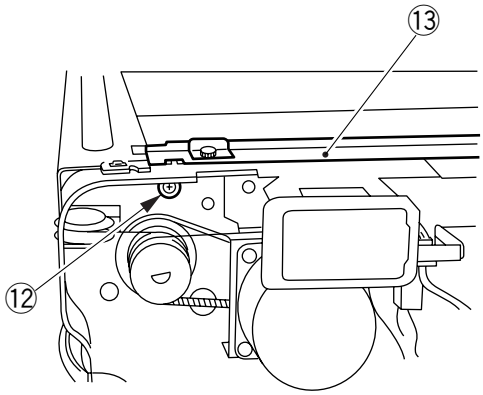

Figure 3-511

COPYRIGHT © 1997 CANON INC.

11) Mark the position of the pulley plate ⑭ with a scriber on the side plate (both front and rear).

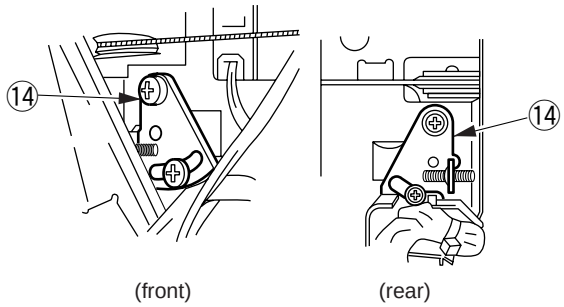

Figure 3-512

12) Move the No. 1 mirror mount in the forward direction, and match the long angle in the side plate and the cable fixing screw ⑮.
Then, remove the cable fixing screw ⑮ (front: 2, rear: 4), and separate the No. 1 mirror mount and the scanner cable (both front and rear).

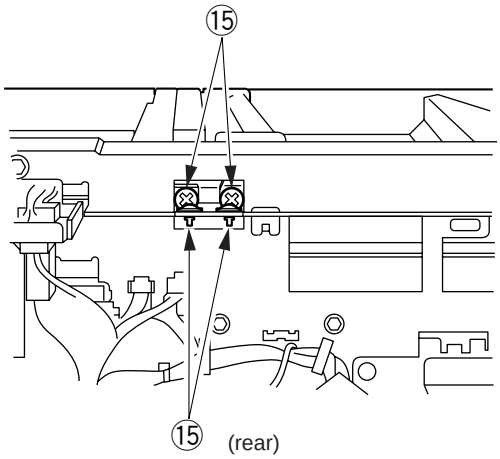

Figure 3-513

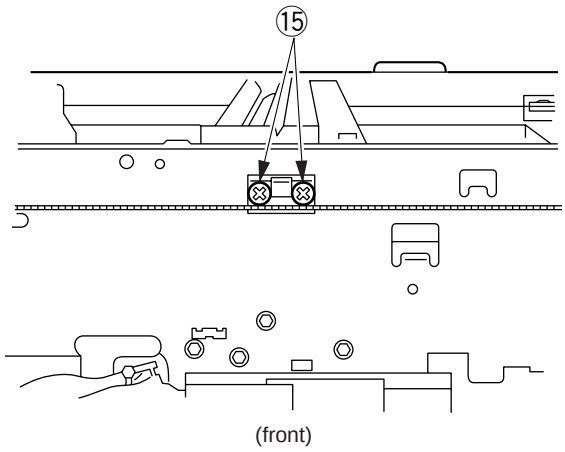

Figure 3-514

COPYRIGHT © 1997 CANON INC.
CANON NP6330 REV.0 MAY 1997 PRINTED IN JAPAN (IMPRIME AU JAPON)

13) Loosen the pulley plate fixing screw ⑯; then, loosen the tension screw ⑰, and loosen the cable wire (both front and rear)
14) Remove the scanner cable ⑱ (both front and rear).

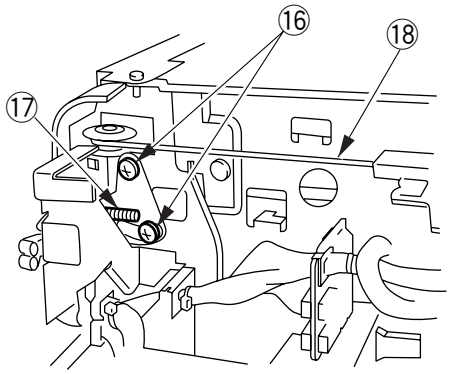

(front)

Figure 3-515

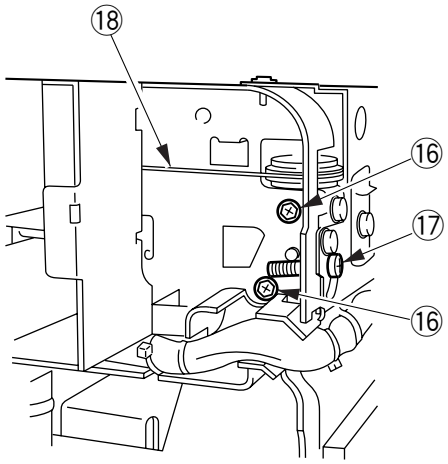

(rear)

Figure 3-516

COPYRIGHT © 1997 CANON INC. CANON NP6330 REV.0 MAY 1997 PRINTED IN JAPAN (IMPRIME AU JAPON)

4. Routing the Scanner Cable

Note:

You will need a mirror positioning tool (FY9-3002-000) to route the scanning cable.

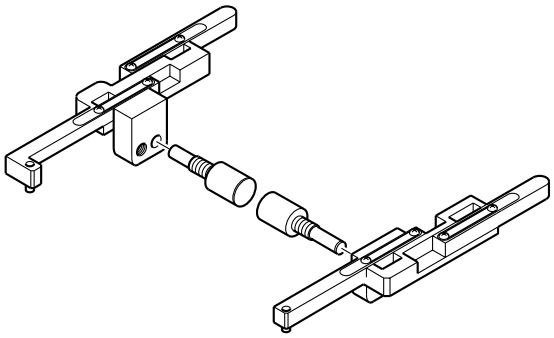

Figure 3-517

The tool is used in common with other models.
To use, loosen the screws, extend the two arms (both front and rear) fully, and tighten the screws.

1) Move the No. 2 mirror mount so that the No. 2 mirror mount pulley shaft ① is in view through the long hole in the side plate.

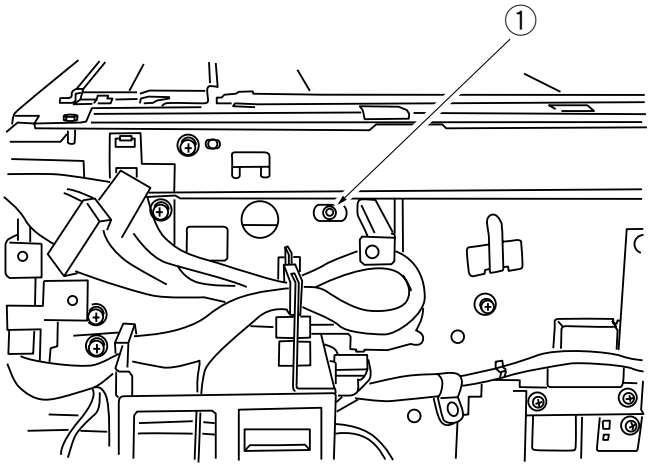

Figure 3-518

COPYRIGHT © 1997 CANON INC.
CANON NP6330 REV.0 MAY 1997 PRINTED IN JAPAN (IMPRIME AU JAPON)

2) Fit the binding screw ② (M4) in the screw hole of the pulley shaft, and fix the No. 2 mirror mount in place on the side plate.

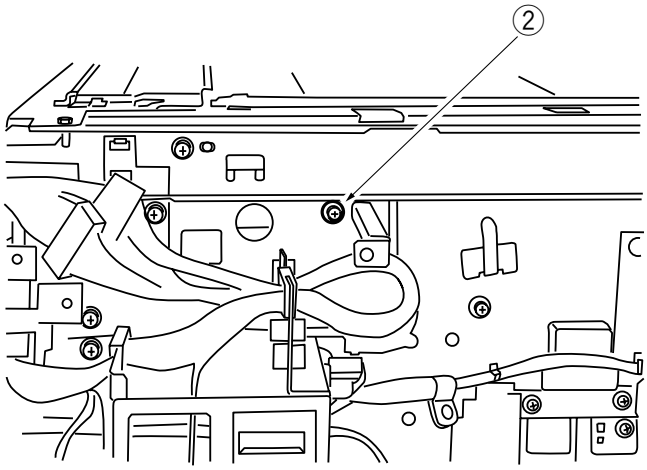

Figure 3-519

3) Engage the scanner cable on the pulley and the hook as shown in the figure.

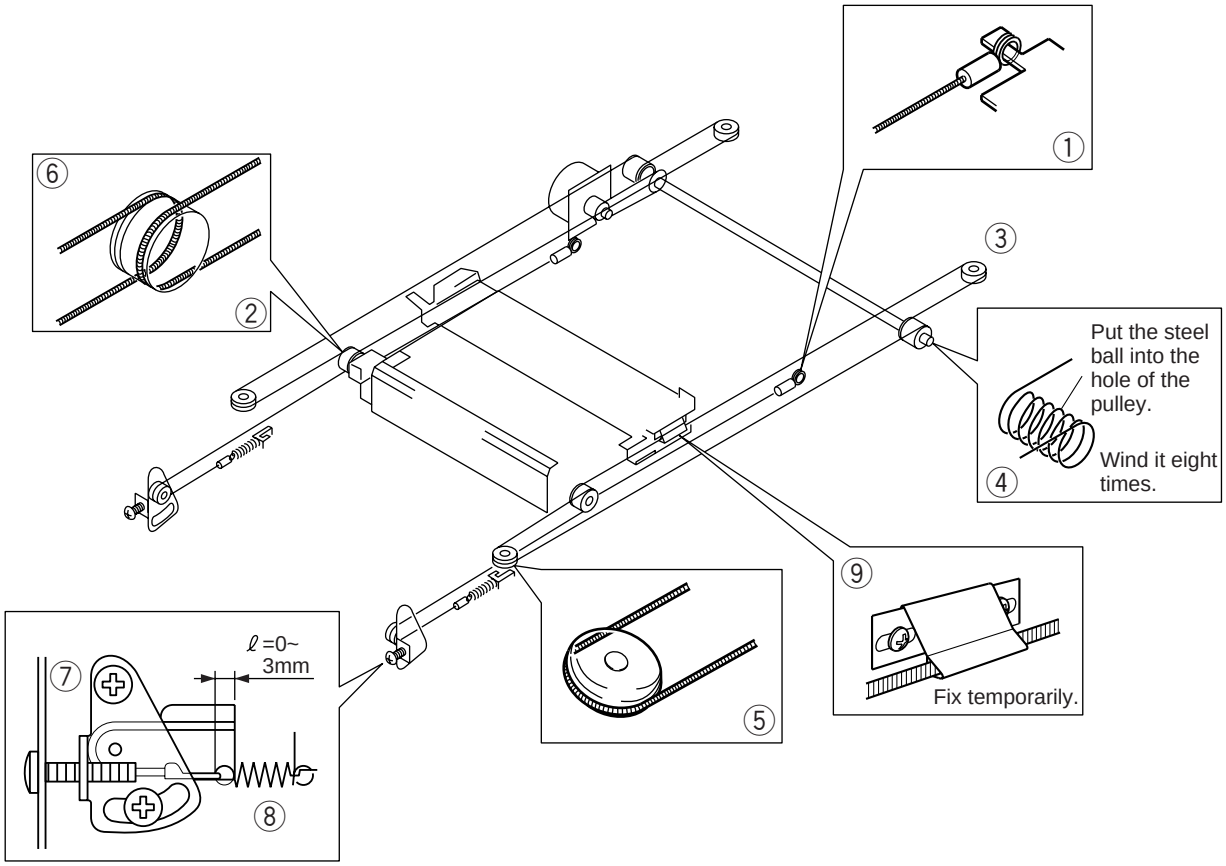

Figure 3-520

4) Remove the screw fitted in step 2).

COPYRIGHT © 1997 CANON INC.

5) Install the mirror positioning tool ③ between the No. 1 mirror mount and No. 2 mirror mount (both font and rear); then, put the tool pin ④ through the mirror positioning tool and the lens mount rail.

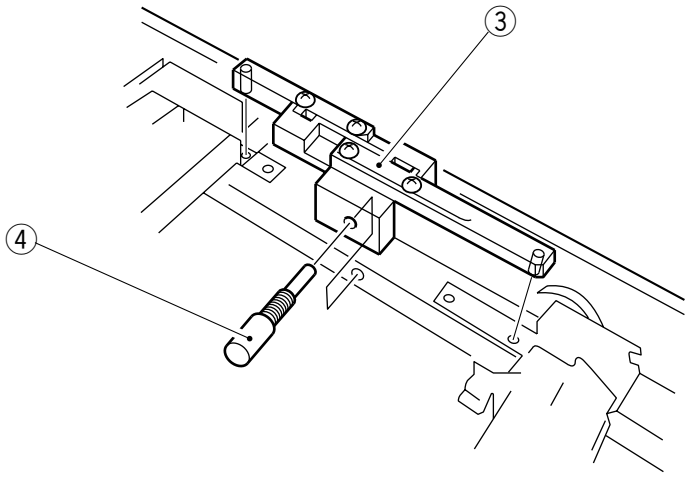

Figure 3-521

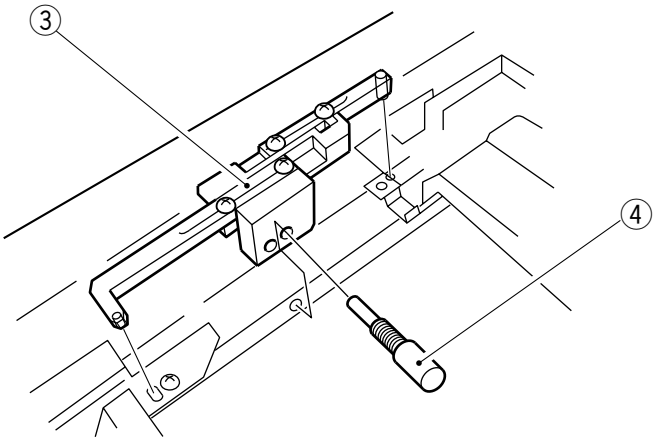

Figure 3-522

COPYRIGHT © 1997 CANON INC.
CANON NP6330 REV.0 MAY 1997 PRINTED IN JAPAN (IMPRIME AU JAPON)

6) Install the scanner cable plate to the No. 1 mirror mount with the cable fixing screw ⑤ (front: 2, rear: 4) through the long hole in the side plate (both front and rear).

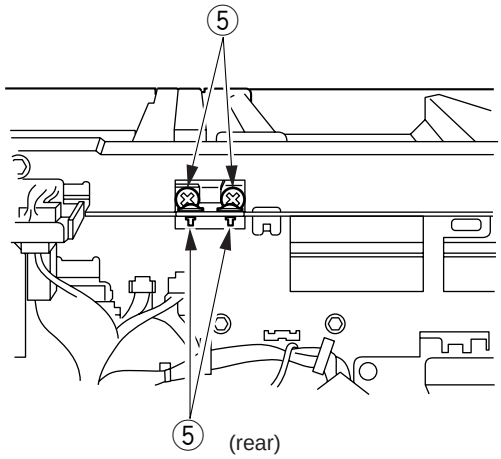

Figure 3-523

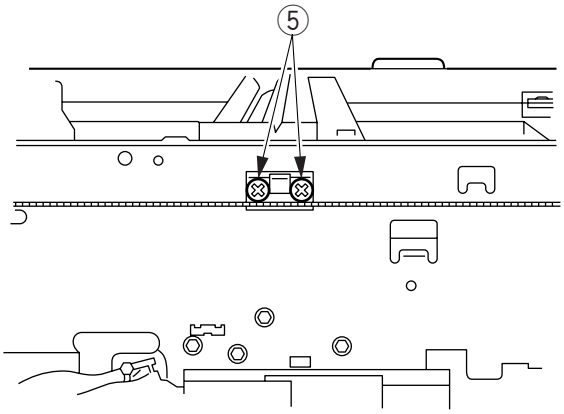

Figure 3-524

Note:

If you cannot remove the tool pin smoothly after the work, check the gap between the No. 2 mirror and the mirror positioning tool; then, tighten the screw on the No. 1 mirror mount as necessary once again.

COPYRIGHT © 1997 CANON INC. CANON NP6330 REV.0 MAY 1997 PRINTED IN JAPAN (IMPRIME AU JAPON)

B. Lens Drive Assembly

1. Removing the Lens Motor

1) Remove the copyboard glass.
2) Move the No. 1 mirror mount to the right end of the scanner rail.

Note:

When moving the No. 1 mirror mount, be sure to hold the middle of the mirror mount.

3) Remove the two screws ①, and disconnect the connector ②; then, remove the lens motor assembly ③.

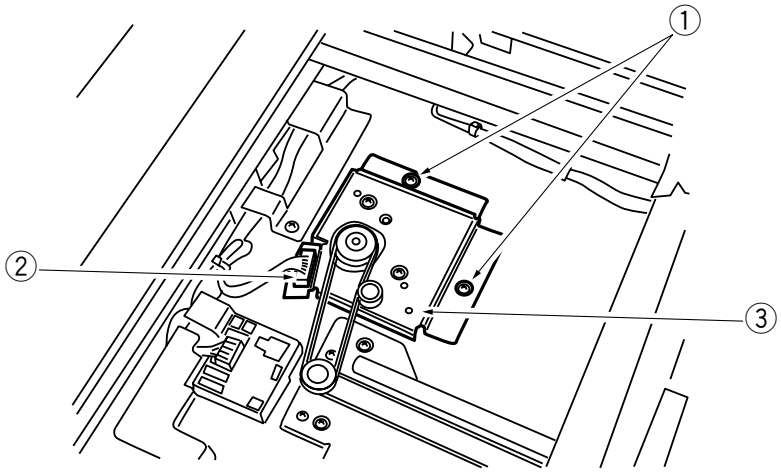

Figure 3-525

4) Remove the two screws ④, and disconnect the connector ⑤; then, remove the lens motor ⑥.

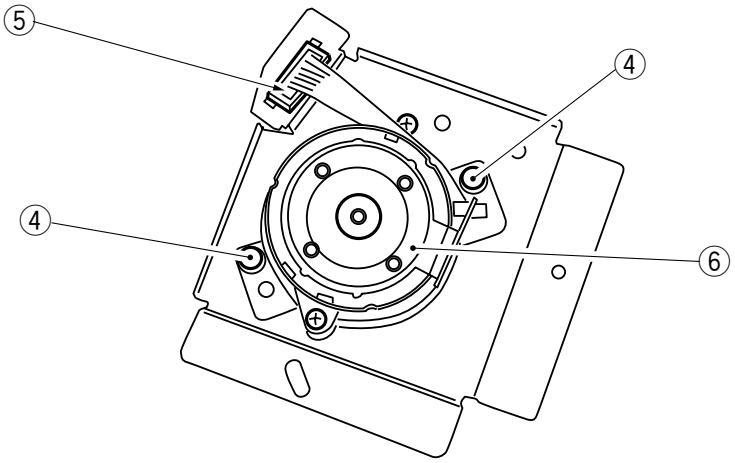

Figure 3-526

COPYRIGHT © 1997 CANON INC.
CANON NP6330 REV.0 MAY 1997 PRINTED IN JAPAN (IMPRIME AU JAPON)

2. Attaching the Lens Drive Belt

Move the lens motor support ① and fit it in place so that the reading of the spring gauge is 1000 ± 50g when motor support ① is pulled with a spring gauge in the direction of the arrow at the point Ⓐ indicated in Figure 3-527.

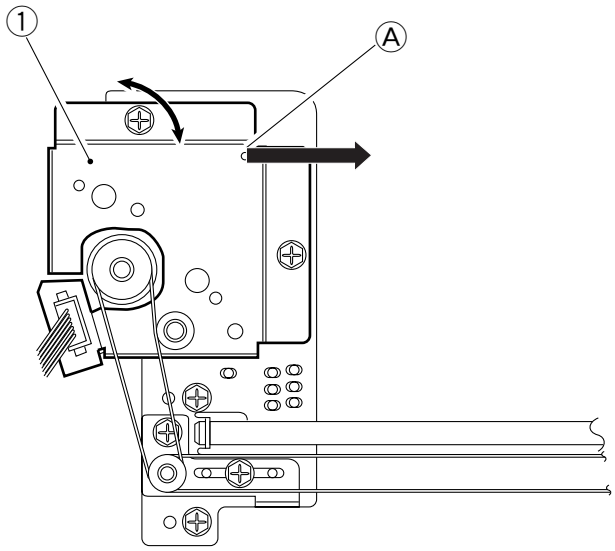

Figure 3-527

COPYRIGHT © 1997 CANON INC.

3. Removing the Lens hood

1) Remove the three screws ①, and disconnect the two connectors ②; then, remove the lens hood ③.

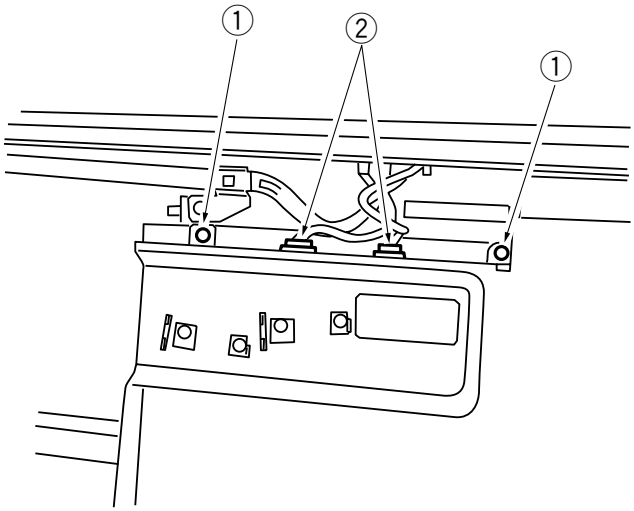

Figure 3-528

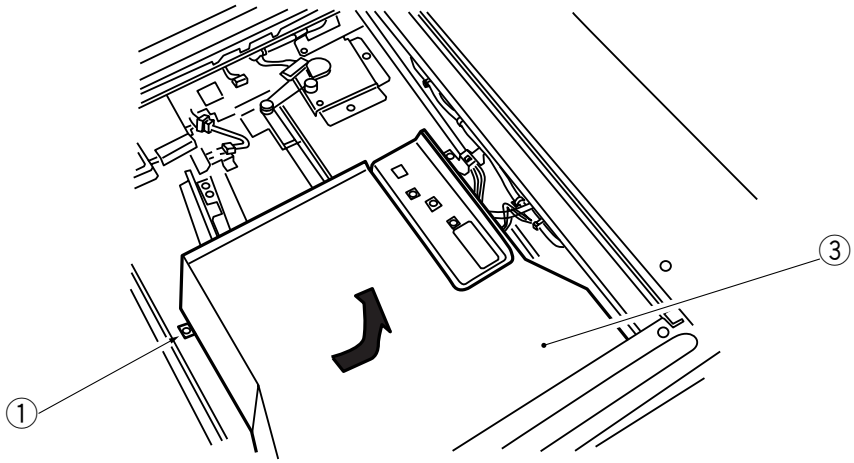

Figure 3-529

COPYRIGHT © 1997 CANON INC.
CANON NP6330 REV.0 MAY 1997 PRINTED IN JAPAN (IMPRIME AU JAPON)

CHAPTER 4

IMAGE FORMATION SYSTEM

This chapter describes the outline of the purposes, roles and operations of image formation process, the relationship between electric system and mechanical system and the operational timing of each component.

I. PROCESSES 4-1
- A. Outline 4-1
- B. Basic Sequence of Operations (image formation) 4-2
- C. Controlling the Scanner Lamp.....4-3
- D. Controlling the Primary/ Transfer Corona Current and the Grid Bias 4-5
- E. Controlling the Static Eliminator Bias/Fixing Roller Bias 4-9
- F. Controlling the Developing Bias 4-11
- G. Controlling Blank Exposure 4-14
- H. Mesuring the Density of Originals 4-16
- I. Cleaning the Transfer Charging Wire 4-19

II. DEVELOPING ASSEMBLY/ DRUM CLEANER.....4-21
- A. Outline 4-21
- B. Detecting the Level of Toner and Controlling the Supply 4-23
- C. Stopping the Hopper Motor in Response to a Rotation Error.....4-24

III. DISASSEMBLY AND ASSEMBLY.....4-25
- A. Scanning Lamp Assembly.....4-25
- B. Blank Exposure Lamp Assembly ..4-28
- C. Drum Unit 4-34
- D. Charging Assembly 4-36
- E. Developing System 4-42

COPYRIGHT © 1997 CANON INC. CANON NP6330 REV.0 MAY 1997 PRINTED IN JAPAN (IMPRIME AU JAPON)

I. PROCESSES

A. Outline

The copier's image formation system basically deals with the following:

- Controlling the scanning lamp.
- Controlling the primary/transfer corona current and the grid bias.
- Controlling the static eliminator/fixing roller bias.
- Controlling the developing bias.
- Controlling the blank exposure lamp.

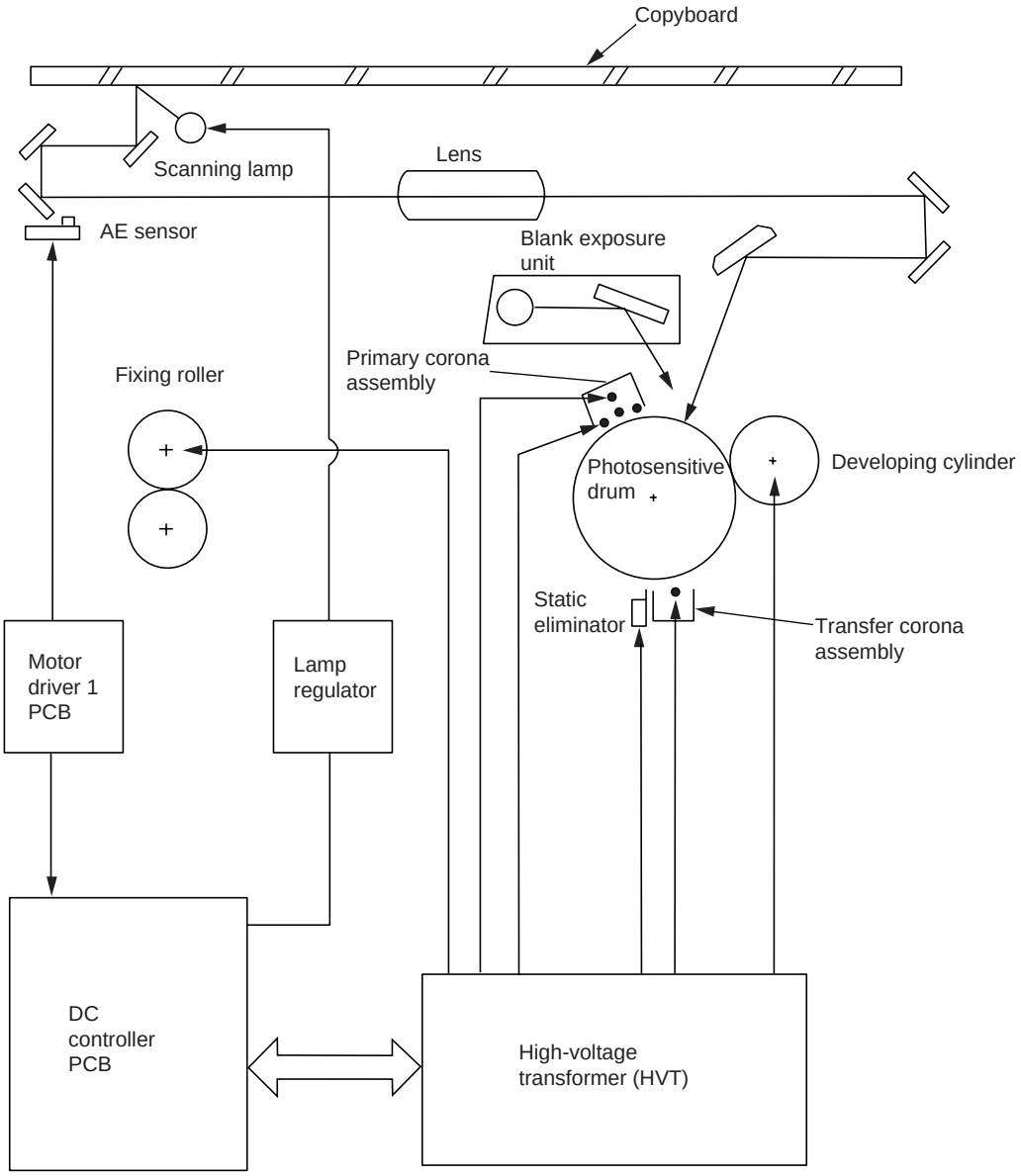

Figure 4-101

COPYRIGHT © 1997 CANON INC.

B. Basic Sequence of Operations (image formation)

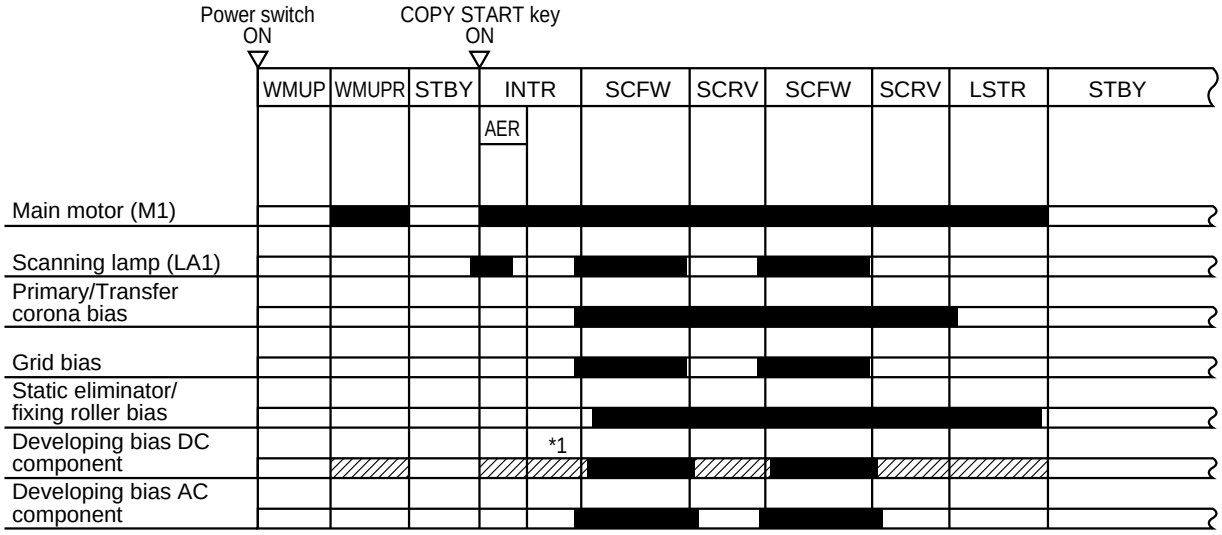

*1: Developing bias DC component output corresponding to back bias.

Figure 4-102

COPYRIGHT © 1997 CANON INC.
CANON NP6330 REV.0 MAY 1997 PRINTED IN JAPAN (IMPRIME AU JAPON)

C. Controlling the Scanner Lamp

1. Outline

Figure 4-103 shows the circuit used to control the intensity of the scanning lamp, and the circuit has the following functions:

① Turning on and off the scanning lamp.
② Detecting the activation of the scanning lamp.

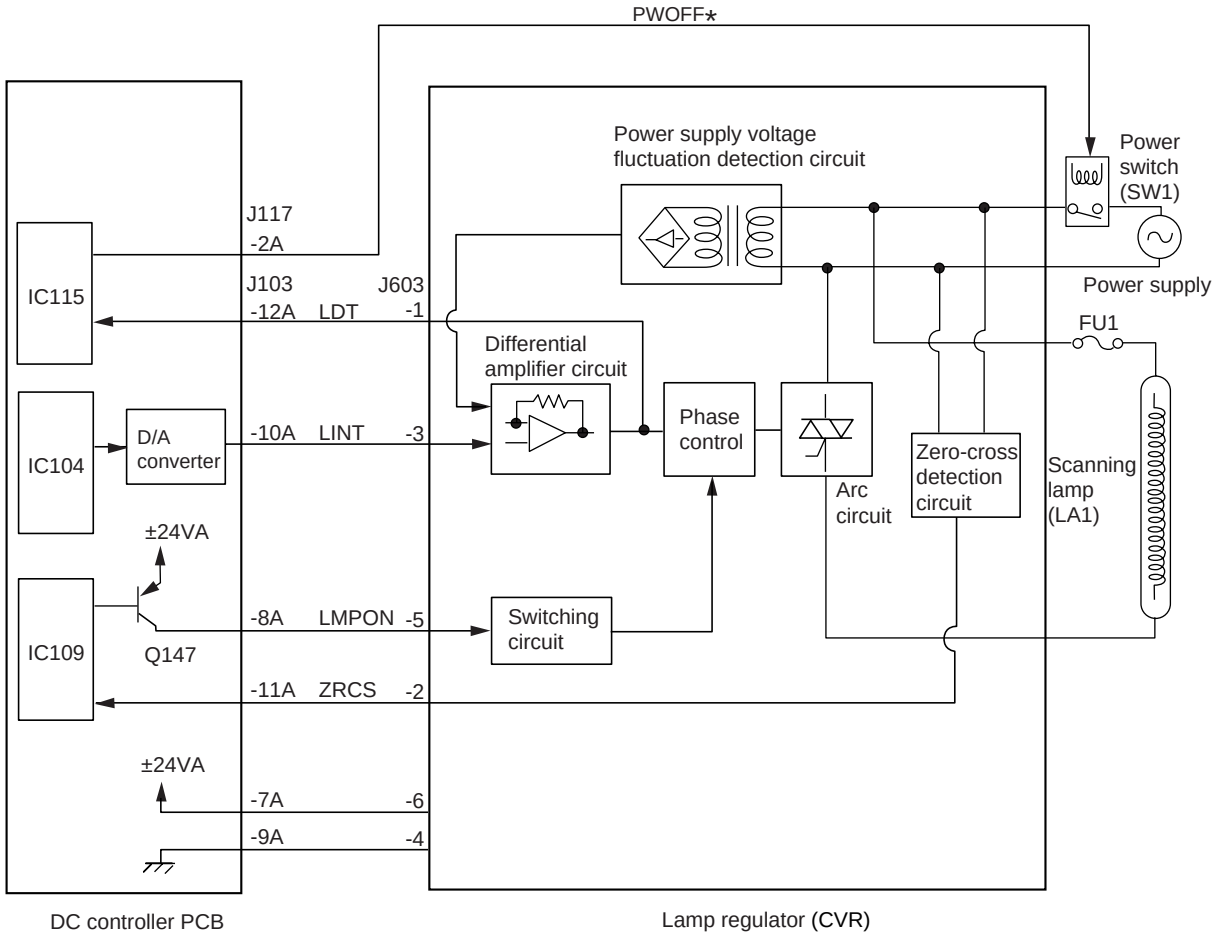

Figure 4-103

2. Turning On and Off the Scanning Lamp

The microprocessor on the DC controller PCB turns on the transistor (Q147) to send the lamp ON command (LMPON) to the lamp regulator.

When the DC controller generates the light intensity signal (LINT), voltage of about 135 to 140 V (220 / 240 V) / 80 to 95 V (120 V) is supplied to the lamp, thereby turning on the scanning lamp.

Reference:

If the density of copies has become excessively low because of deterioration in the sensitivity of the drum, you may make correction by adjusting the setting of '301' in service mode or 'U21' in user mode. (However, the setting in user mode 'U21' is narrower than that of the service mode the range of the adjustment.)

A lower setting will increase the value of the LINT signal (analog) and, as a result, will raise the supply voltage to the lamp, thereby increasing its intensity.

3. Detecting the Activation of the Scanning Lamp

The lamp regulator sends the lamp ON detection signal (LDT) to the DC controller while the scanning lamp is on.

If the LDT signal remains on for 22 sec, the DC controller will identify the condition as an error and, as a result, will generate the power switch OFF signal (PWOFF*) to turn off the power switch and cut off the AC power supply.

4. Protection Mechanism

The machine is equipped with a thermal fuse to prevent malfunction of the scanning lamp.

The thermal fuse (FU1) will melt in response to overheating (about 104°C / 219F or more) because of a short circuit or the like around the scanning lamp, thereby cutting the power supplied to the scanning lamp.

COPYRIGHT © 1997 CANON INC.
CANON NP6330 REV.0 MAY 1997 PRINTED IN JAPAN (IMPRIME AU JAPON)

D. Controlling the Primary/Transfer Corona Current and the Grid Bias

1. Outline

Figure 4-104 shows the circuit used to control the primary/transfer corona current and the grid bias of the primary charging assembly, and the circuit has the following functions:

① Turning on and off the primary/transfer corona current.
② Keeping the primary/transfer corona current to a specific level.
③ Turning on and off the grid bias.

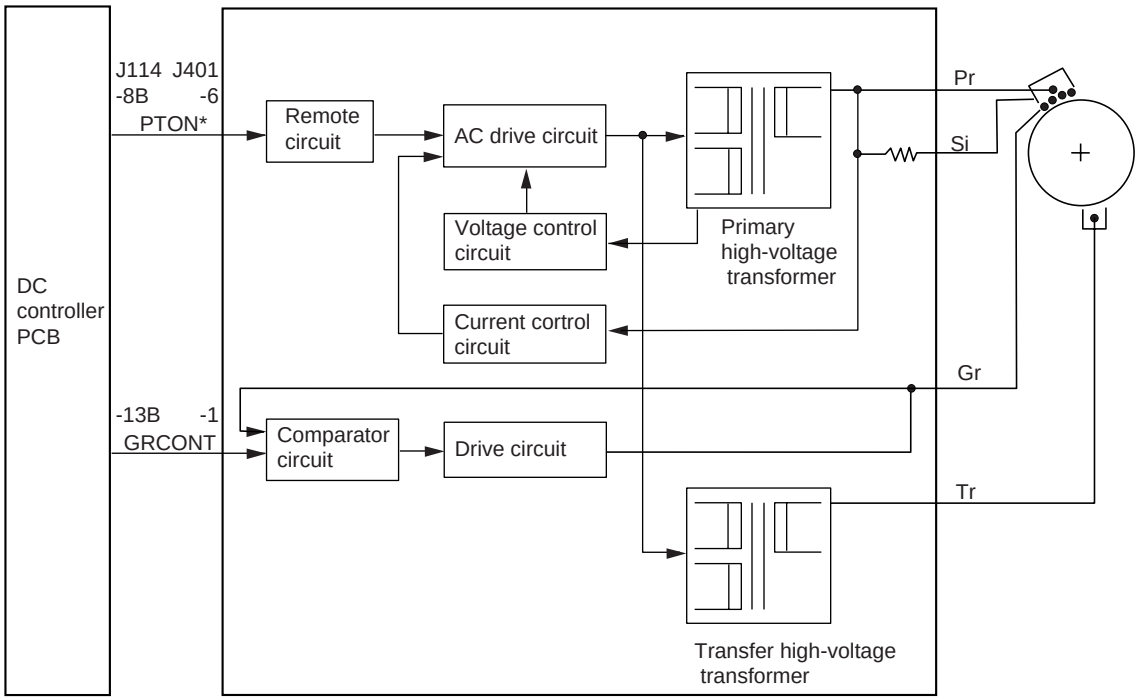

Figure 4-104

2. Controlling the Primary/Transfer Corona Current

The primary/transfer corona current ON signal (PTON) from the DC controller is used to turn on and off the primary/transfer corona current output.

- When the primary/transfer corona current output is on,
  PTON*=0
  →The remote circuit turns on.
  →The AC drive circuit turns on.
  →The primary high-voltage transformer turns on. (primary charging corona current output)
  →The transfer high-voltage transformer turns on. (transfer charging corona current output)
- When the primary/transfer corona current output turns off,
  PTON*=1
  →The remote circuit turns off.
  →The AC drive circuit turns off.
  →The primary high-voltage transformer turns off.
  →The transfer high-voltage transformer turns off.

Reference:

The copier turns on and off the primary and transfer corona currents at the same time. The application voltage, on the other hand, is about -5.7 kV for primary, and about -5.6 kV for transfer.

COPYRIGHT © 1997 CANON INC.
CANON NP6330 REV.0 MAY 1997 PRINTED IN JAPAN (IMPRIME AU JAPON)

3. Keeping the Primary/Transfer Corona Current at a Specific Level

If an excess (or inadequate) corona current flows from the primary charging assembly or the transfer charging assembly because of changes in the environment, the level of the return current to the current control circuit will be higher (lower).

In such cases, the current control circuit controls the primary/transfer drive circuit so that the current on the secondary side of the respective high-voltage transformer will be smaller (larger). At the same time, the return voltage on the secondary side is introduced to the voltage control circuit to control the primary/transfer drive circuit, thereby keeping the primary side voltage constant.

As shown in Figure 4-105, the shielding plate of the primary charging assembly receives the corona current generated by the primary corona wire. The high-voltage power supply PCB (HVT) monitors the level of this current at all times; if it finds it to be different from the standard value (-1.2 kV), the primary/transfer drive circuit starts to control the primary corona current so that the current remains at a specific level at all times.

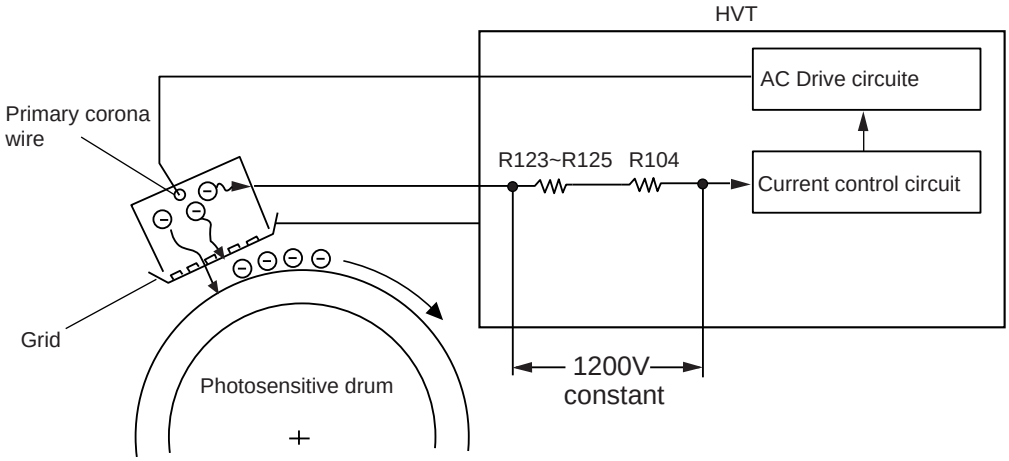

Figure 4-105

4. Turning On and Off the Grid Bias

A voltage is applied to the grid wire while the primary corona current is being generated to ensure even placement of charges on the drum.

The grid bias is controlled by the grid potential control command (GRCONT) generated by the DC controller: a grid bias of about -800 V is applied when the DC controller generates the GRCONT command (analog, about 5 V).

As shown in Figure 4-106, the machine keeps the grid bias at 0 V between sheets of copy paper (A), and exerts control so that charges will not be placed on the drum by sending primary charging corona current through the grid wire (GND).

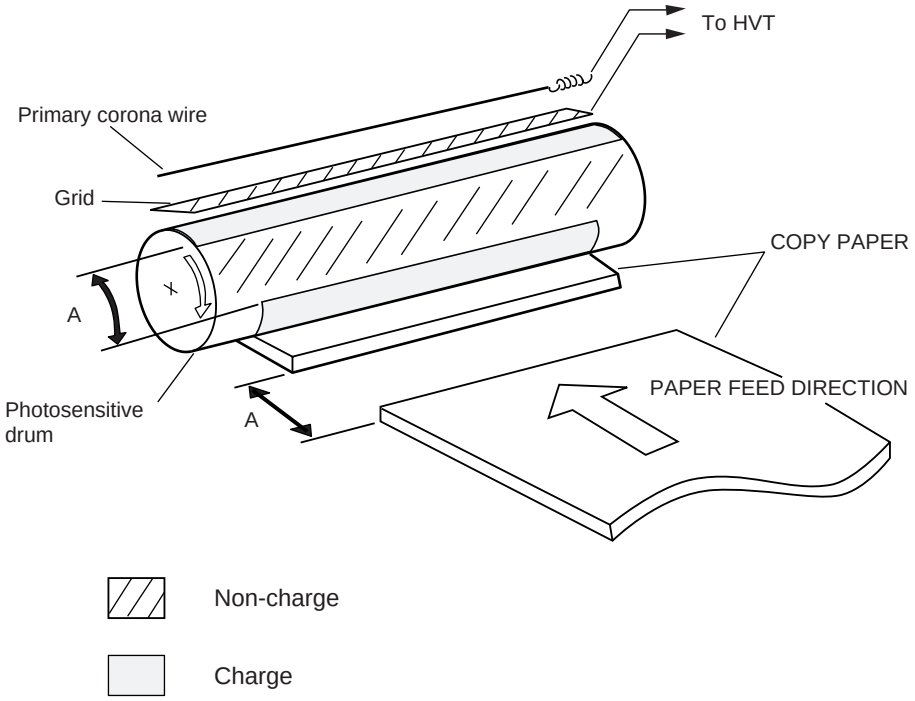

Figure 4-106

COPYRIGHT © 1997 CANON INC.
CANON NP6330 REV.0 MAY 1997 PRINTED IN JAPAN (IMPRIME AU JAPON)

E. Controlling the Static Eliminator Bias/Fixing Roller Bias

1. Outline

Figure 4-107 shows the circuit used to control the static eliminator bias and the fixing roller bias, and the circuit has the following functions :

① Turning on and off the static eliminator bias / fixing bias.
② Switching the output of the static eliminator bias.

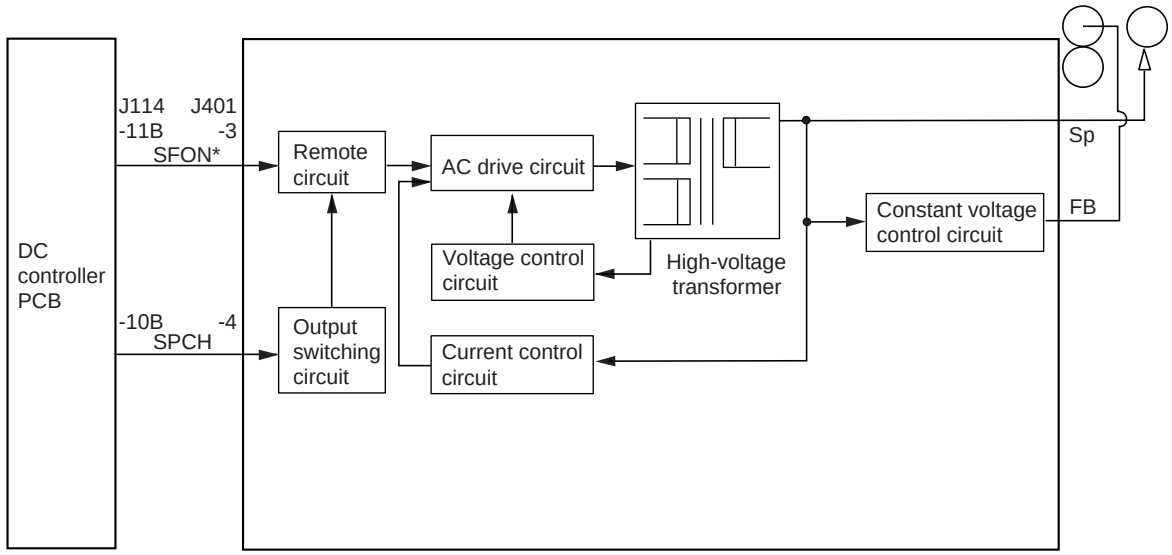

Figure 4-107

2. Turning ON/OFF the Static Eliminator Bias/Fixing Bias

The DC controller generates the static eliminator/fixing roller bias ON command (SFON*) to turn on and off the static eliminator bias and the fixing roller bias.

- When the static eliminator bias/fixing roller bias is on,
  SFON*=0
  →The remote circuit turns on.
  →The AC drive circuit turns on.
  →The high-voltage transformer turns on. (static eliminator bias/fixing roller bias output)

When the high-voltage transformer turns on, a voltage of about 3.0 kV is applied to the static eliminator and a voltage of about 740 V is applied to the upper fixing roller.

- When the static eliminator bias/fixing roller bias is OFF,
  SFON*=1
  →The remote circuit turns off.
  →The AC drive circuit turns off.
  →The high-voltage transformer turns off.

Reference:

The copier uses a conductive upper fixing roller so that residual charges on copy paper flow through the roller when the paper moves through the fixing assembly, causing toner to spread over the image if not remedied.

To prevent such a problem, a positive bias is applied to the fixing roller during copying operation.

3. Switching the Output of the Static Eliminating Bias

Copy paper comes to possess high resistance once it has moved through the fixing assembly. In automatic two-sided mode, therefore, the DC controller PCB generates the static eliminator voltage level switch command (SPCH) to turn on the high-voltage transformer, thereby applying static eliminator bias (about 4.0 kV) to the static eliminator.

Conditions:	application voltage
1st side of one-sided/automatic two-sided copy	about 3.0 kV
2nd side of automatic two-sided copy	about 4.0 kV

4. Preventing Separation Faults (thin paper picked up from the multifeeder)

If separation faults occur when copying on thin paper picked up from the multifeeder, the voltage applied to the static eliminator may be kept at about 4.0 kV at all times so as to facilitate separation of paper from the drum. (Use ‘510’ in service mode; for details, see Chapter 11 “Service Mode.”)

COPYRIGHT © 1997 CANON INC.
CANON NP6330 REV.0 MAY 1997 PRINTED IN JAPAN (IMPRIME AU JAPON)

F. Controlling the Developing Bias

1. Outline

Figure 4-108 shows the circuit used to control the developing bias, and the circuit has the following functions:

① Turning on and off the DC component of the developing bias.
② Controlling the voltage level of the DC component of the developing bias.
③ Turning on and off the AC component of the developing bias.

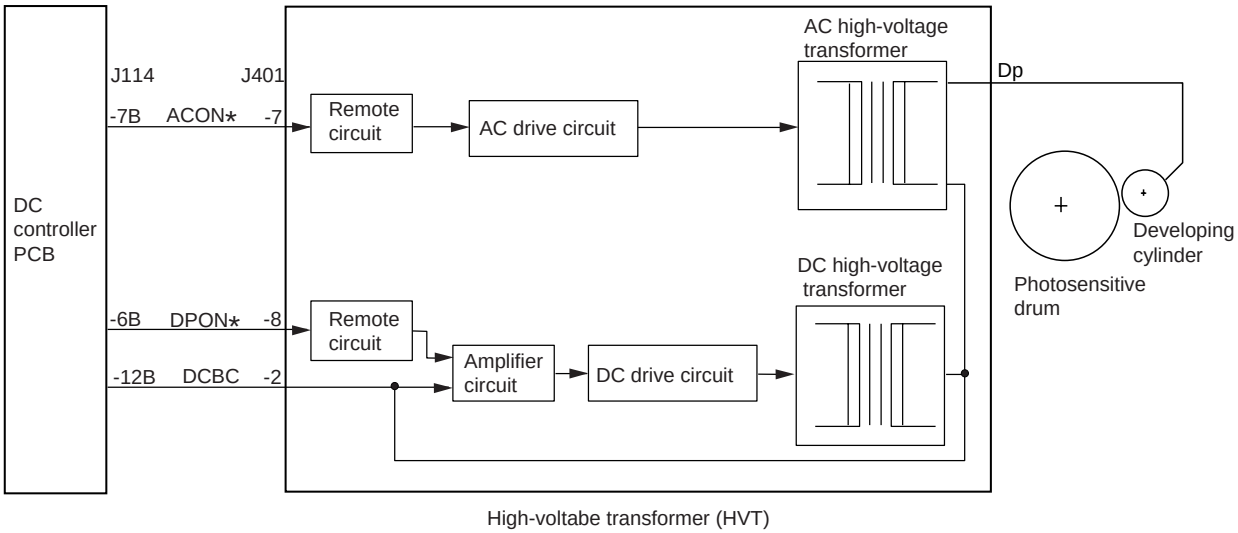

Figure 4-108

2. Turning On and Off DC Component of the Developing Bias and Controlling the Voltage Level

The developing DC bias ON command (DPON*) generated by the DC controller is used to turn on and off the DC component of the developing bias. The level of the voltage is controlled by the DC bias control command (DCBC).

- When the DC component of the developing bias is on,
  DPON*=0
  →The remote circuit turns on.
  →The amplifier circuit turns on.
  →The DC drive circuit turns on.
  →The DC high-voltage transformer turns on. (developing DC bias output)
- When the developing bias DC component is off,
  DPON*=1
  →The remote circuit turns off.
  →The amplifier circuit turns off.
  →The DC drive circuit turns off.
  →The DC high-voltage transformer turns off.

As shown in Figure 4-109, the voltage level of the DC component of the developing bias is controlled by varying the voltage of the DCBC command (analog) generated by the DC controller to suit the setting (output from the AE sensor) of the Copy Density key. The level of the DC voltage generated by the high-voltage power supply varies according to the level of the DCBC command.

With the exception of during copying operation (SCFW), the machine applies a DC bias of about -320 V, thereby preventing undesirable adhesion of toner in areas between sheets of copy paper and fogging in copy images.

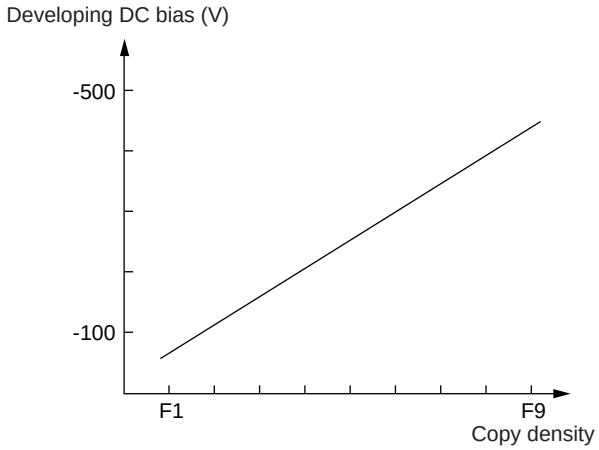

Figure 4-109

COPYRIGHT © 1997 CANON INC.
CANON NP6330 REV.0 MAY 1997 PRINTED IN JAPAN (IMPRIME AU JAPON)

3. Turning On and Off the AC Component of the Developing Bias

The DC component of the developing bias is turned on and off by the developing AC bias ON command (ACON*) generated by the DC controller.

- When the AC component of the developing bas is on,
  ACON*=0
  →The remote circuit turns on.
  →The AC drive circuit turns on.
  →The AC high-voltage transformer turns on. (developing AC bias output)

  When the AC high-voltage transformer is on, a voltage of 1300 Vp-p is applied.
- When the AC component of the developing bias is off,
  ACON*=1
  →The remote circuit turns off.
  →The AC drive circuit turns off.
  →The AC high-voltage transformer turns off.

4. Sequence of Operations (developing bias)

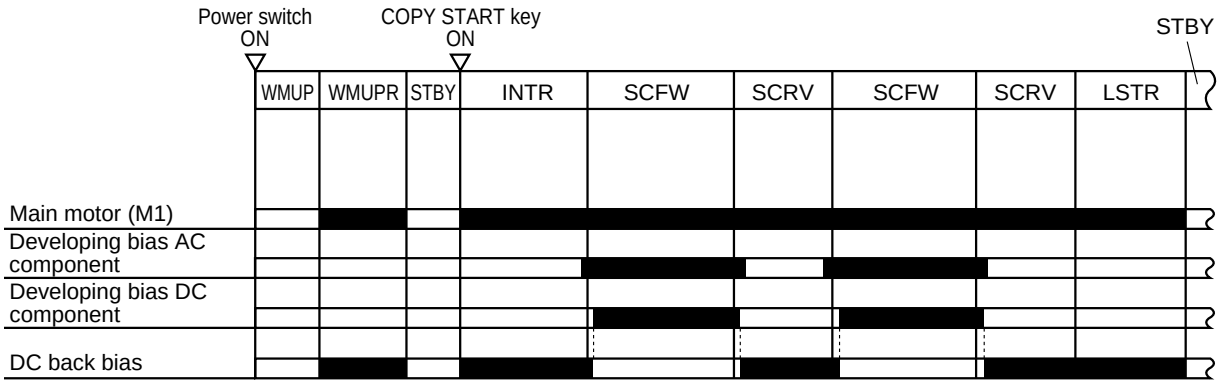

Figure 4-110

Reference:

The copier allows changing of the copy density manually during continuous copying operation.

The copy density is determined as soon as the scanning lamp turns on, and the new density will be effective for the next copy.

COPYRIGHT © 1997 CANON INC.

G. Controlling Blank Exposure

1. Outline

The copier executes blank exposure by shining the light of the pre-exposure lamp against the size blanking reflecting plate and the full blanking reflecting plate. The area of blanking exposure is controlled by one opening/closing shutter and slide shutter.

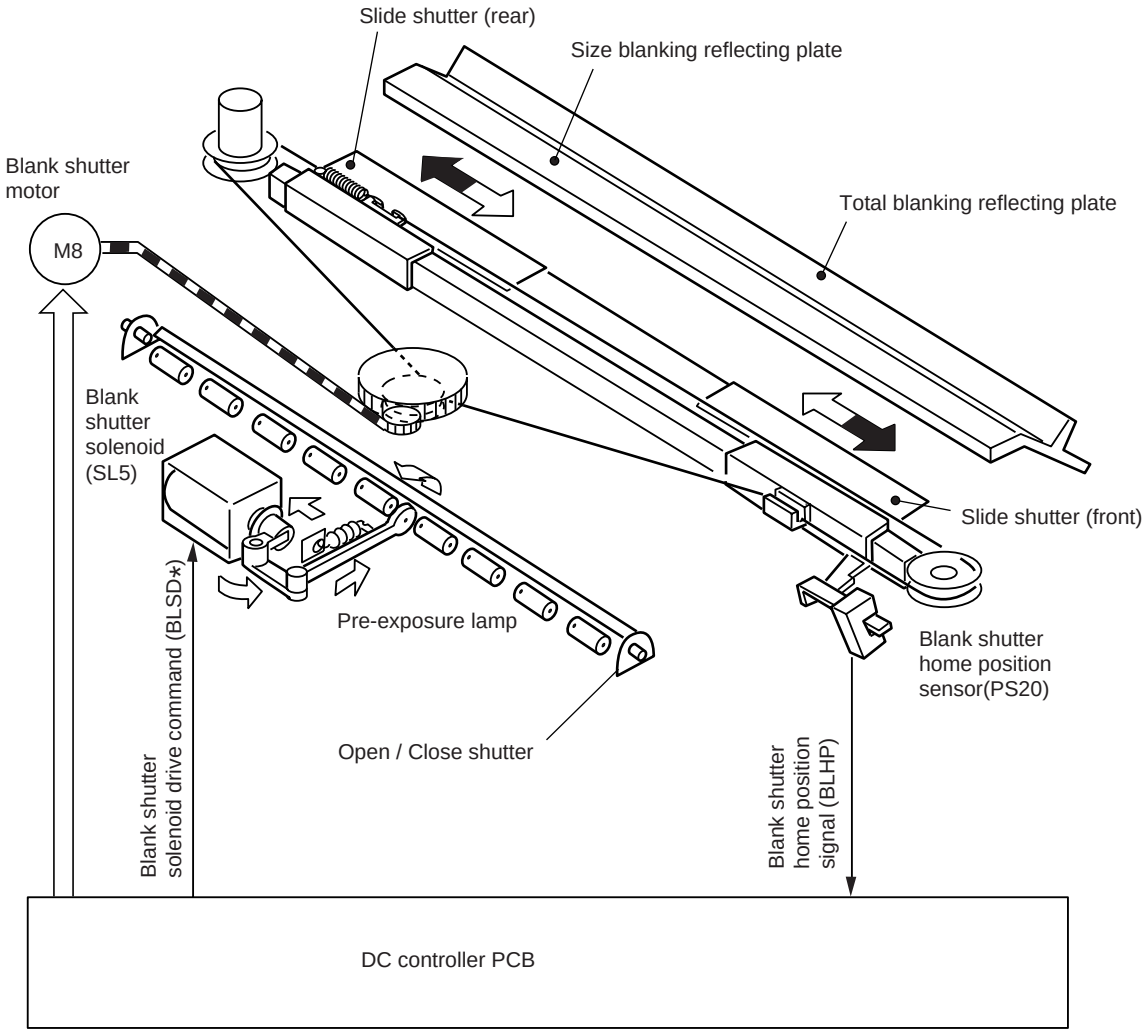

Figure 4-111

COPYRIGHT © 1997 CANON INC.

2. Operation

- Opening/Closing Shutter

The opening/closing shutter is located in the optical path for full blanking, and is opened/closed by a blank shutter solenoid (SL5). A margin is created by opening the opening/closing shutter operated by SL5 in relation to the leading and trailing edges of copy paper.

- Slide Shutter

The two slide shutters are located in the optical path for size blanking, and are positioned by the blank shutter motor (M8).

The blanking shutters serve to create left and right margins by blacking (whiting) out non-image widths (as in reduced copying).

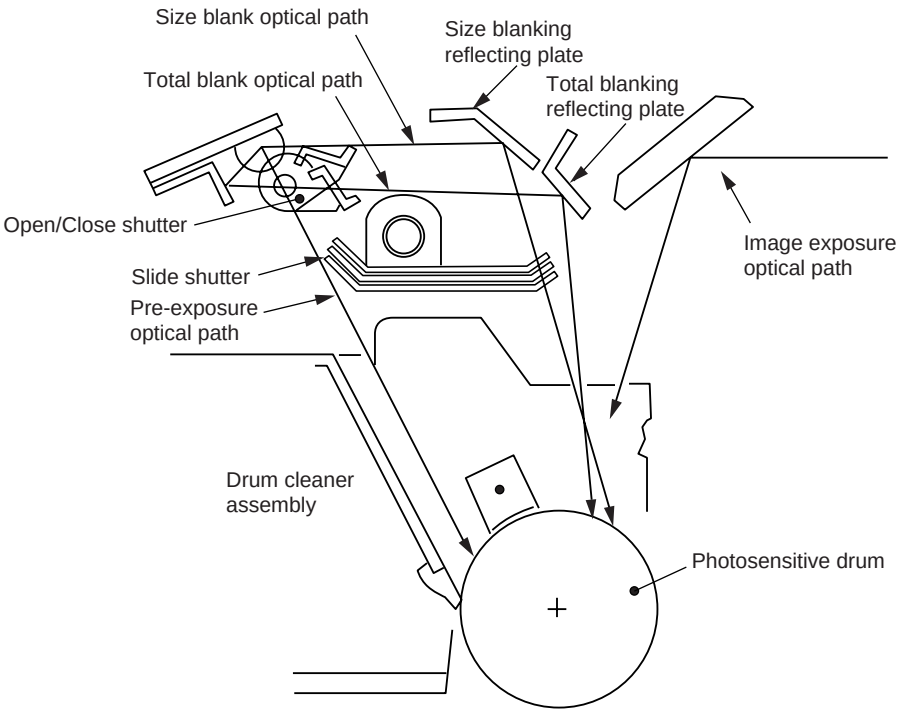

Figure 4-112

3. Controlling the Slide Shutters

The front and rear slide shutters are operated simultaneously by the work of the blank shutter motor (M8).

When the power is on, M8 first rotates the slide shutters to home position; then, M8 starts to rotate to slide the shutters to a specific position in response to the drive pulses sent from the DC controller according to the reproduction ratio, paper size, and copying mode.

COPYRIGHT © 1997 CANON INC.

H. Mesuring the Density of Originals

1. Outline

The copier is equipped with an automatic density adjustment (AE) function used to control the DC component of the developing bias according to the density of originals. The AE function changes the DC component of the developing bias so as to ensure copies free of fogging as long as the original is more or less even in density.

The DC component controlled in AE mode is indicated in the copy density indicator on the control panel.

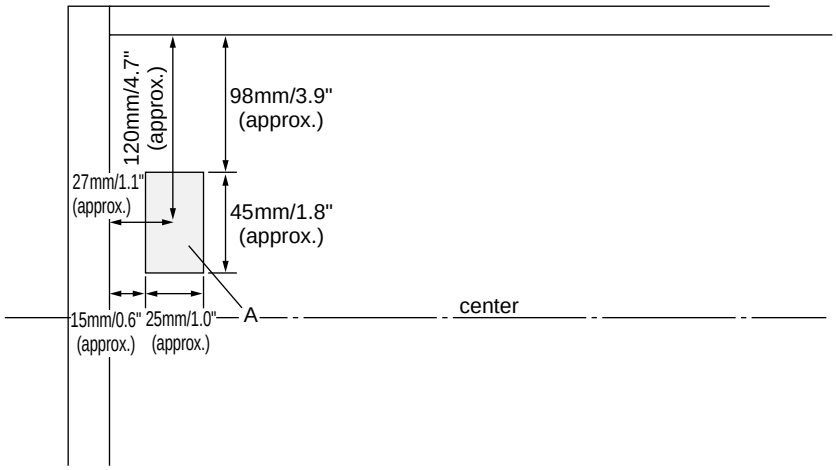

Note: A indicates the position of the sensor

Figure 4-113

COPYRIGHT © 1997 CANON INC.
CANON NP6330 REV.0 MAY 1997 PRINTED IN JAPAN (IMPRIME AU JAPON)

2. Operation

During initial rotation (INTR), the scanner is moved forward by about 70 mm / 2.8", and the scanning lamp (LA1) is tuned on at a specific intensity to illuminate the original. Then, the density of the original is read by the AE sensor, and its output is sent to the DC controller.

Based on the output of the AE sensor, the DC controller controls the DC component of the developing bias.

Figure 4-114 shows a graph showing the changes in the developing bias occurring in relation to various original densities.

The graph is based on a degree of exposure which provides optimum density without fogging when a newspaper and the Test Sheet is copied.

Reference:

During AE control, the copy density varies between F5 and F7.5, possibly preventing an appropriate copy density if the original is considerably dark or light.

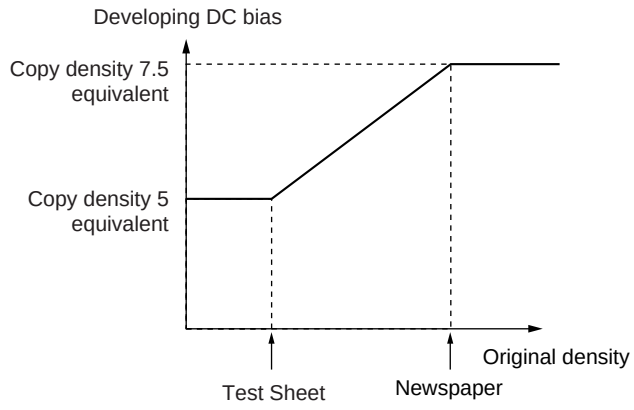

Figure 4-114

COPYRIGHT © 1997 CANON INC.

3. AE Adjustment

The copier provides the following three types of AE adjustment (service mode):

- Auto adjustment (No. 402)
- Scaning lamp ON voltage adjustment during AE exposure (No. 304)
- Development DC bias adjustment for newspaper originals in AE mode (No. 303)

Item	Function	Description	Remarks
402	AE scanning intensity automatic adjustment	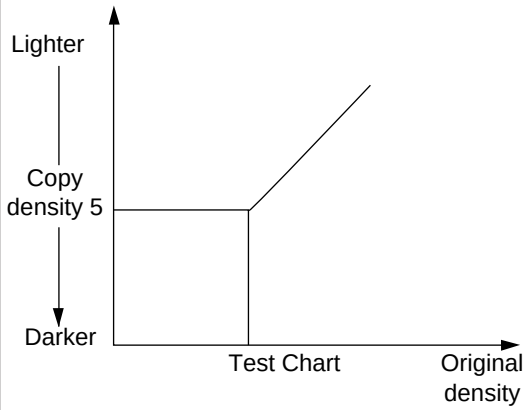	Automatic adjustment occurs so that the original is copied at copy density 5 when '402' is executed. Note: If AE adjustment fails, the density indicator LED on the control panel F5 and F9 flash. If such occurs, make the adjustment once again.
304	AE scanning intensity adjustment	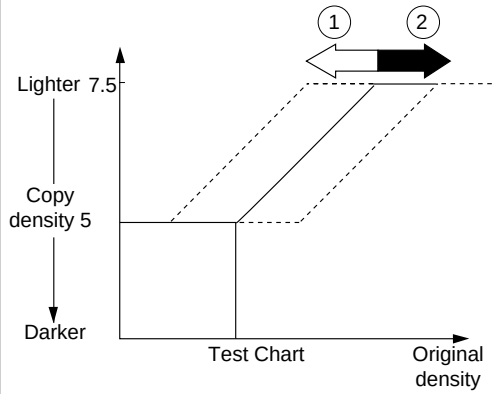	① When the setting is decreased in service mode, the AE copies will be darker. ② If the setting is increased in service mode, the AE copies will be lighter.
303	AE slope	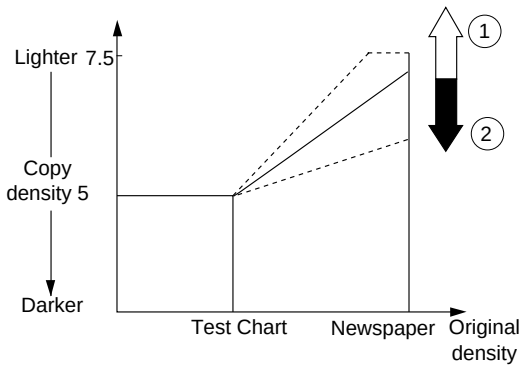	① If the setting is increased in service mode, the newspaper copies will be lighter. ② If the setting is decreased in service mode, the newspaper copies will be darker.

COPYRIGHT © 1997 CANON INC.
CANON NP6330 REV.0 MAY 1997 PRINTED IN JAPAN (IMPRIME AU JAPON)

I. Cleaning the Transfer Charging Wire

1. Outline

The machine is equipped with an automatic cleaning mechanism for the transfer charging wire which turns on under the following conditions:

① At power-on, if the fixing temperature is 100°C or less.
② Last rotation at each cumulative count of 500.
③ When charging wire cleaning (U25) is executed in user mode.

2. Operation

The charging wire is cleaned by moving the wire cleaner back and forth by the cleaner motor (M11).

When the wire cleaner mount turns on the wire cleaner rear position switch (MSW2) located at the rear of the charging assembly, the cleaner motor starts to rotate in reverse until it reaches the wire cleaner home position switch (MSW1) located at the front of the charging assembly. (The wire cleaner makes a single round trip in about 30 sec.)

If the switches are not turned on within a specific period of time, the DC controller will stop the cleaner motor and, at the same time, will indicate ‘E060’.

COPYRIGHT © 1997 CANON INC.
CANON NP6330 REV.0 MAY 1997 PRINTED IN JAPAN (IMPRIME AU JAPON)

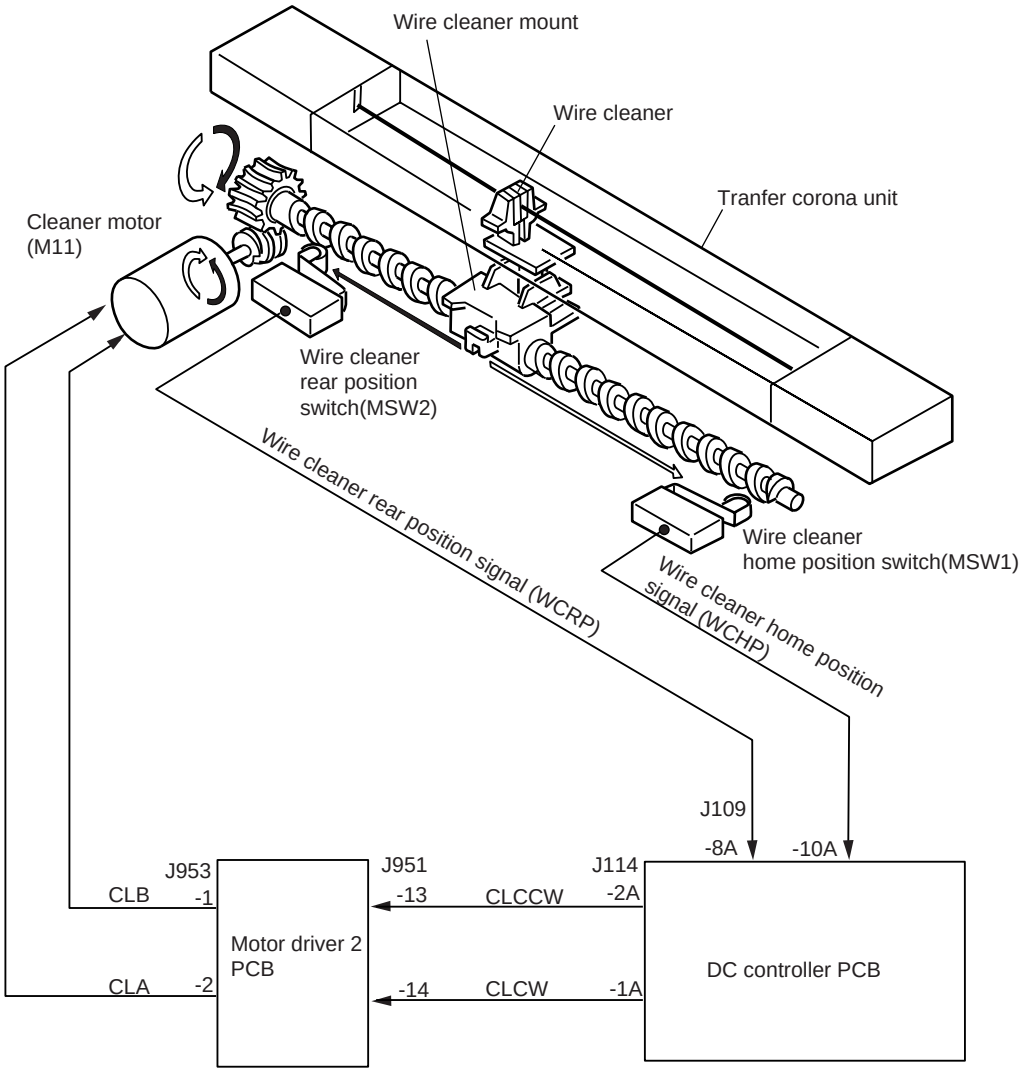

Figure 4-115

COPYRIGHT © 1997 CANON INC.

II. DEVELOPING ASSEMBLY/DRUM CLEANER

A. Outline

The copier is designed in such a way so that its developing assembly is manually locked/released together with its rail when a locking lever is operated.

The developing cylinder, the toner stirring roller inside the developing assembly, and the blade inside the drum cleaner are rotated by the drive of the main motor (M1).

The level of toner remaining inside the developing assembly is monitored by a toner sensor (TS1).

The waste toner gathered by the cleaning blade is collected inside the drum cleaner container.

The copier is equipped with a torque limiter in its photosensitive drum drive assembly. When an excess load is imposed on the photosensitive drum while the photosensitive drum is rotating (as when the case becomes full of waste toner), the drive from the main motor will be cut off to stop the rotation of the photosensitive drum.

Reference:

The copier does not have a mechanism to detect the level of waste toner inside the drum cleaner. As a guide, keep in mind that the waste toner case becomes full when about 60,000 copies (same as drum life) have been made of 6% duty originals.

COPYRIGHT © 1997 CANON INC.
CANON NP6330 REV.0 MAY 1997 PRINTED IN JAPAN (IMPRIME AU JAPON)

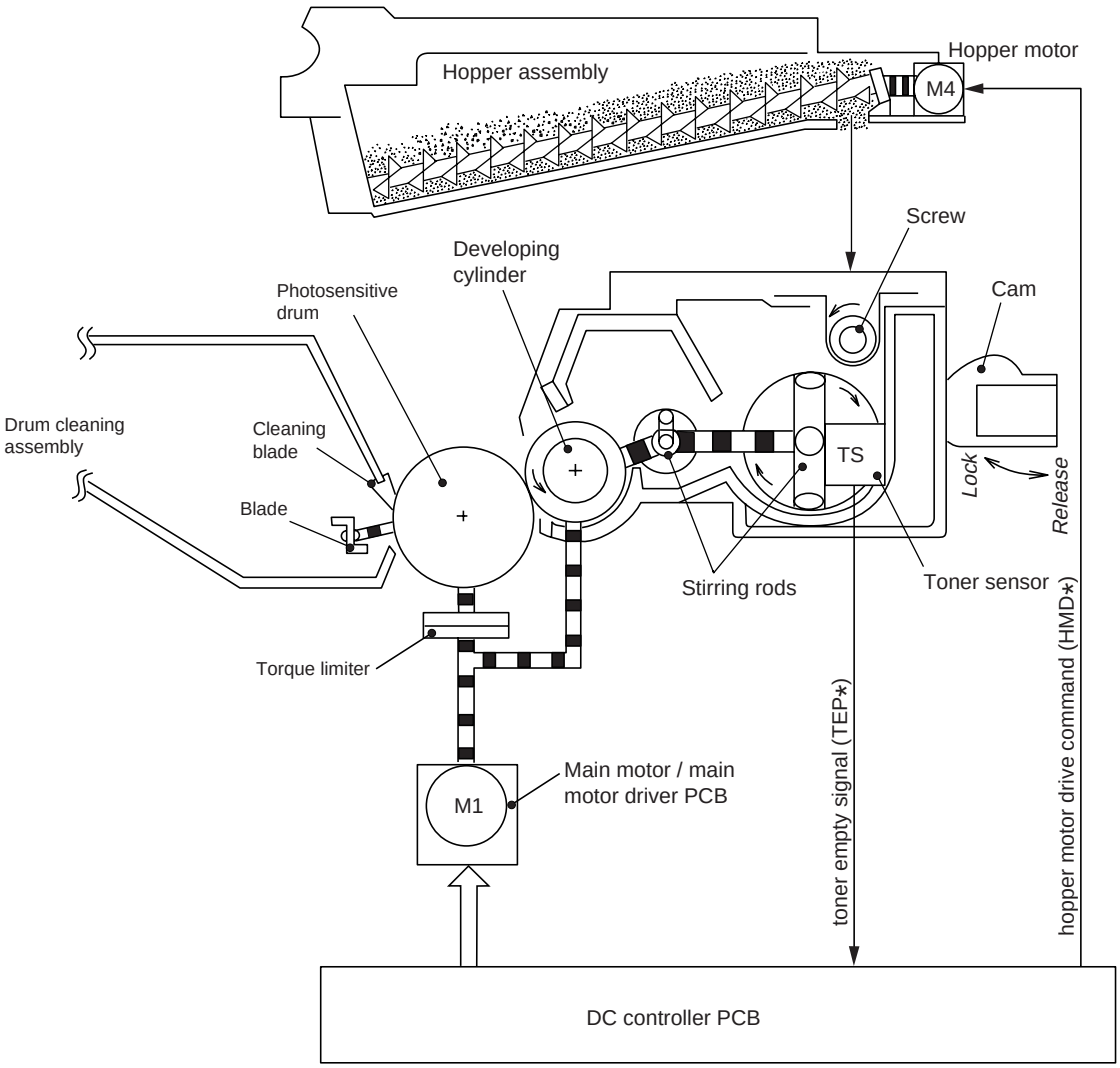

Figure 4-201

COPYRIGHT © 1997 CANON INC.

B. Detecting the Level of Toner and Controlling the Supply

The level of toner inside the developing assembly is monitored by the toner sensor (TS1) of a piezoelectric oscillator type which generates the toner absent signal (TEP*=0) when the level drops below a specific value.

The DC controller turns on the hopper motor (M4) to start toner supply when it has detected TEP*=0 for 1 sec or more continuously.

The hopper motor drive signal (HMD*) is generated so that it is '1' for 1 sec and '0' for 4 sec; this cycle of 5 sec is repeated as necessary.

The hopper motor (M4) is stopped when the toner absent signal (TEP*) goes '1'.

If the toner absent signal (TEP*) does not go 25 sec after the start of toner supply, the DC controller PCB assumes the absence of toner inside the hopper and lights the "Add Toner indicator" after copying operation (max : 100 sheets of paper).

Reference:

The detecting unit of the toner sensor used inside the developing assembly is of a piezoelectric oscillator type; it vibrates at several kHz in the absence of toner with its output '1', and stops vibrating because of the weight of toner in the presence of toner with its output going '1'.

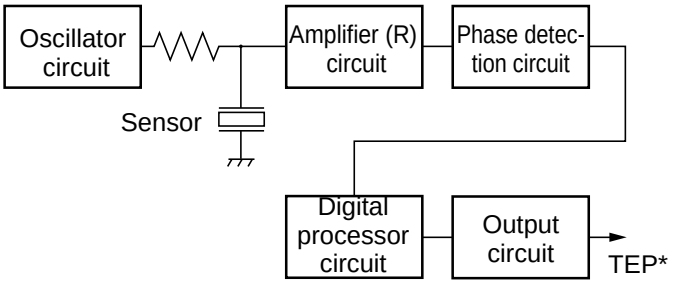

Figure 4-202

COPYRIGHT © 1997 CANON INC.

C. Stopping the Hopper Motor in Response to a Rotation Error

If an excess load is imposed on the hopper motor (M4) and, as a result, variation occurs in its rotation, the level of current entering the comparator circuit lowers and the comparator circuit generates a negative voltage, causing the transistors Tr1 and Tr2 to turn off and stopping the hopper motor.

Since the developing assembly will not be supplied with toner while an error exists in the motor, the “Add Toner indicator” will be indicated.

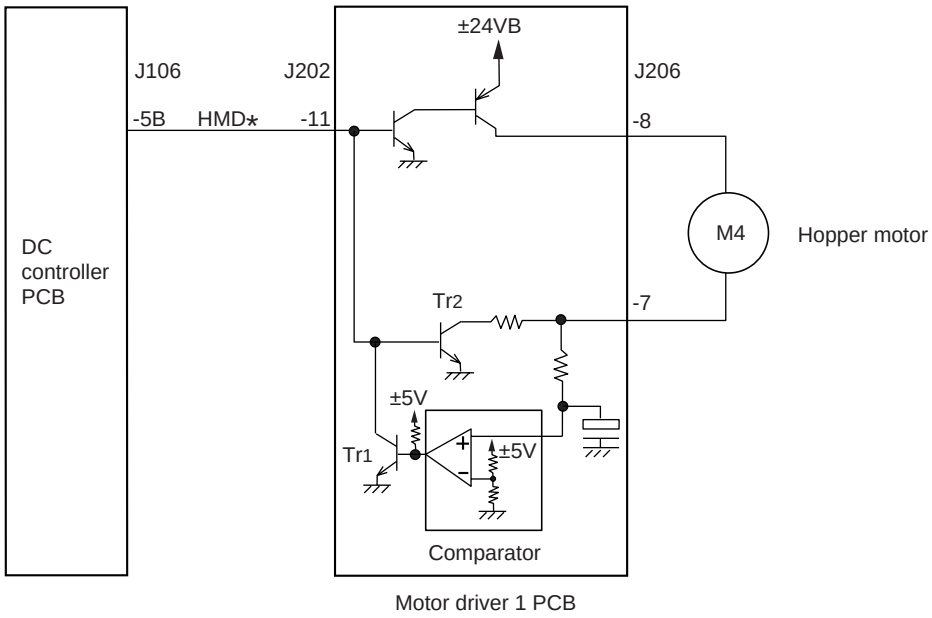

Figure 4-203

COPYRIGHT © 1997 CANON INC.
CANON NP6330 REV.0 MAY 1997 PRINTED IN JAPAN (IMPRIME AU JAPON)

III. DISASSEMBLY AND ASSEMBLY

This section explains mechanical characteristics and describes how to disassemble/assemble the copier.

Be sure to observe the following whenever disassembling/assembling the copier.

1. Disconnect the power plug before starting the work.
2. Unless otherwise shown, assemble the parts by reversing the steps given to disassemble them.
3. Identify each screw by type (length, diameter) and location.
4. A washer is used for two of the mounting screws on the rear cover to protect against static electricity; be sure to use the washer when assembling the part.
5. A washer is used for some mounting screws (for grounding wire, varistor) to ensure correct electrical continuity; be sure to use the washer when assembling the part.
6. As a rule, do not operate the copier while any of its parts is removed.
7. Be sure to turn off the front door switch or the power switch before sliding out the fixing assembly.

A. Scanning Lamp Assembly

1. Removing the Scanning Lamp

1) Disconnect the power plug.
2) Remove the copyboard glass.
3) Remove the screw ①, and remove the reflecting plate ②.

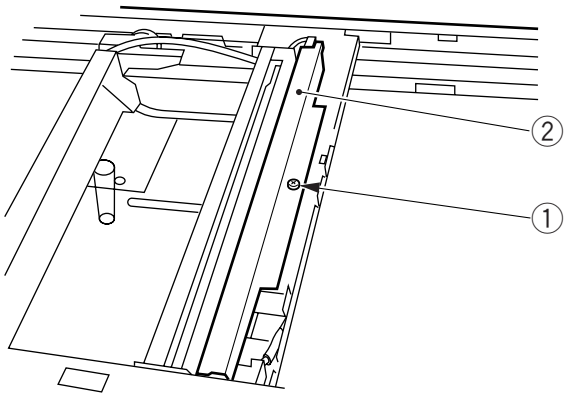

Figure 4-301

COPYRIGHT © 1997 CANON INC. CANON NP6330 REV.0 MAY 1997 PRINTED IN JAPAN (IMPRIME AU JAPON)

4) Turn the flat-blade screwdriver in the direction of arrow ③ to open the electrode plate in the direction of arrow ④, and remove the scanning lamp ⑤.

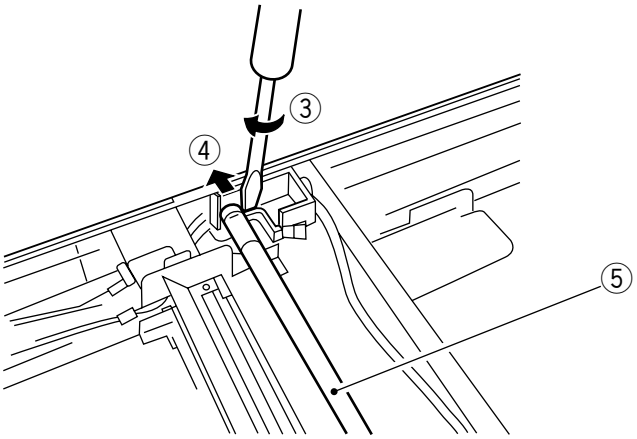

Figure 4-302

Note:

1. If the scanning lamp is hot, wait until it has cooled.
2. Do not leave fingerprints on the scanning lamp.
3. If the surface of the scanning lamp is soiled, dry wipe it.

2. Orientation of the Scanning Lamp

Orient the scanning lamp ① so that the protrusion in its middle points in the direction of the arrow (direction in which the mirror mount moves in reverse); for lengthwise orientation, keep the logo mark facing the front.

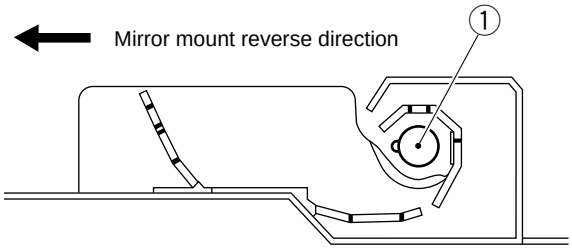

Figure 4-303

Note:

When installing the scanning lamp, avoid touching its surface.

COPYRIGHT © 1997 CANON INC.
CANON NP6330 REV.0 MAY 1997 PRINTED IN JAPAN (IMPRIME AU JAPON)

3. Removing the Thermal Fuse

1) Remove the copyboard glass.
2) Remove the screw ①, and remove the attraction plate ②.

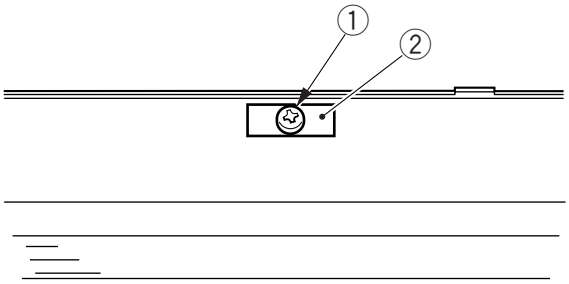

Figure 4-304

3) By pushing the middle of the No. 1 mirror mount ③, move the mirror mount until it is as indicated.

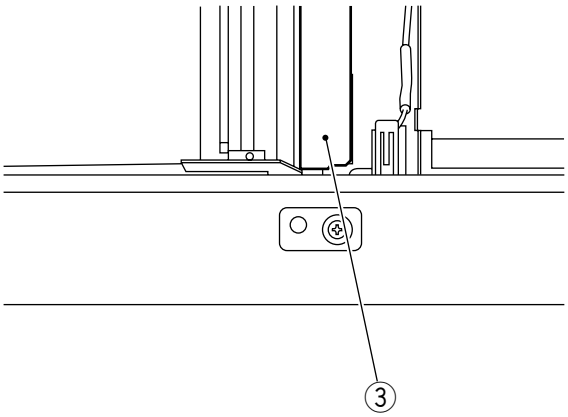

Figure 4-305

Note:

Whenever you must move the No. 1 mirror mount by hand, be sure to hold its middle. Further, do not touch the surface of the lamp and the reflecting cover.

COPYRIGHT © 1997 CANON INC. CANON NP6330 REV.0 MAY 1997 PRINTED IN JAPAN (IMPRIME AU JAPON)

4) Remove the two screws ④, and remove the thermal fuse ⑤.

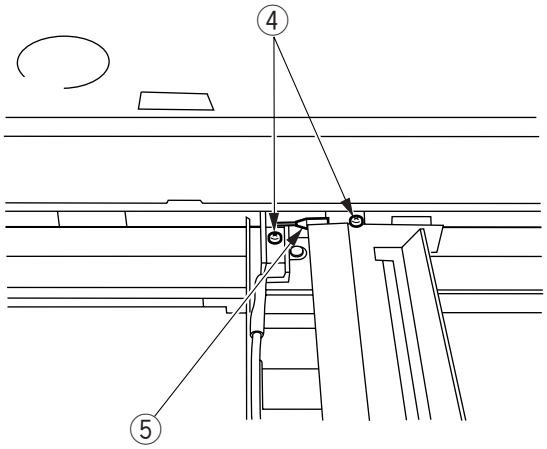

Figure 4-306

B. Blank Exposure Lamp Assembly

1. Removing the Blank Exposure Lamp Assembly

1) Remove the inside left cover.
2) Remove the developing assembly and drum unit.
3) Disconnect the two connectors ①.
4) Remove the three screws ②, and remove the harness retainer ③.

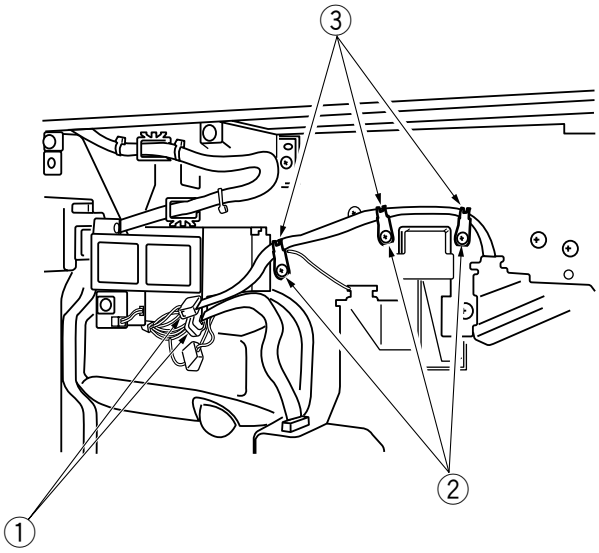

Figure 4-307

COPYRIGHT © 1997 CANON INC.
CANON NP6330 REV.0 MAY 1997 PRINTED IN JAPAN (IMPRIME AU JAPON)

5) Remove the two screws ④.

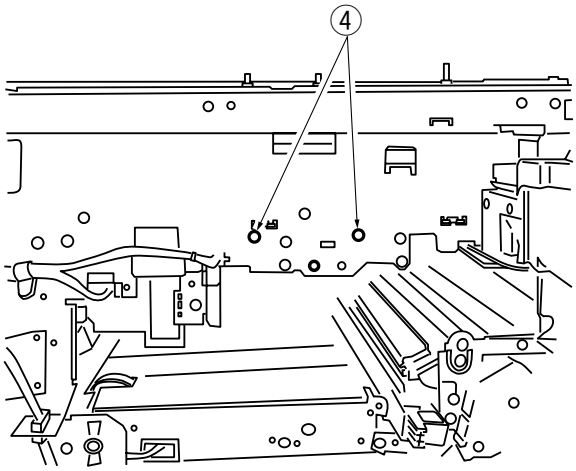

Figure 4-308

6) Pull out the blank exposure lamp assembly ⑤ slowly to the front.

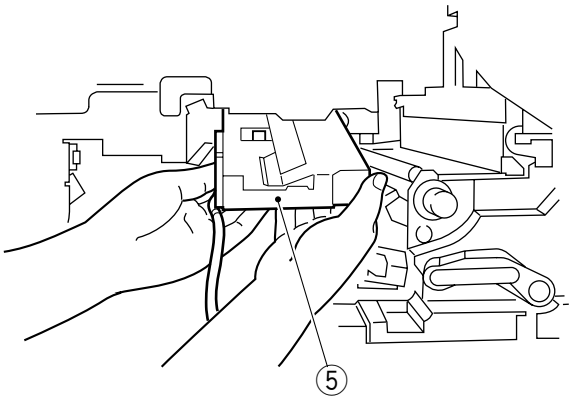

Figure 4-309

COPYRIGHT © 1997 CANON INC. CANON NP6330 REV.0 MAY 1997 PRINTED IN JAPAN (IMPRIME AU JAPON)

2. Removing the Blank Exposure Lamp

1) Remove the blank exposure lamp assembly.
2) Remove the two screws ①, and the connector ②; then, turn over the blank exposure upper plate ③.

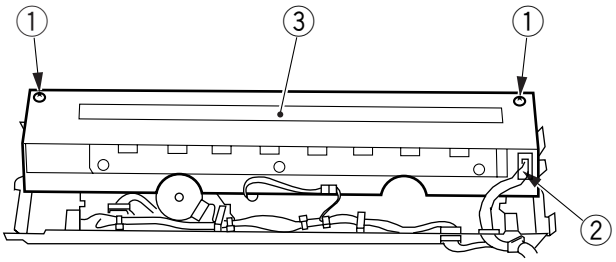

Figure 4-310

3) Disconnect the two connectors ④, and remove the blank exposure assembly upper plate ⑤.

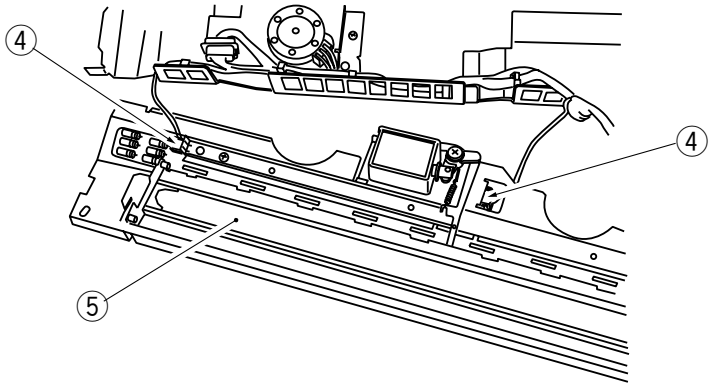

Figure 4-311

4) Remove the three screws ⑥, and remove the blank exposure lamp ⑦.

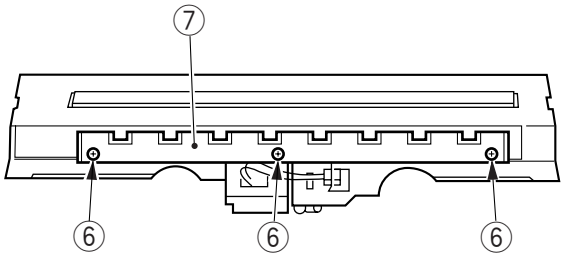

Figure 4-312

COPYRIGHT © 1997 CANON INC.
CANON NP6330 REV.0 MAY 1997 PRINTED IN JAPAN (IMPRIME AU JAPON)

3. Removing the Blank Shutter Solenoid

1) Remove the blank exposure lamp assembly.
2) Remove the blank exposure assembly upper plate. (See 2. “Removing the Blank Exposure Lamp.”)
3) Remove the screw ① and the spring ②; then, detach the link arm ③ from the blank shutter.

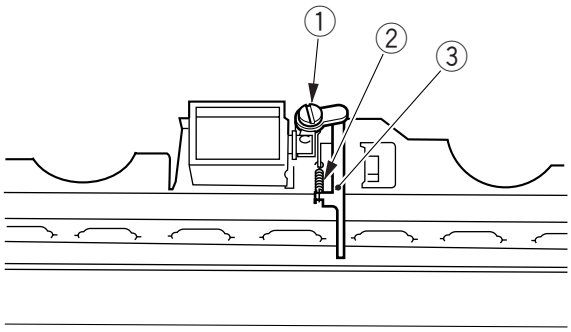

Figure 4-313

4) Remove the two screws ④, and disconnect the connector ⑤; then, remove the blank shutter solenoid ⑥ by lifting it.

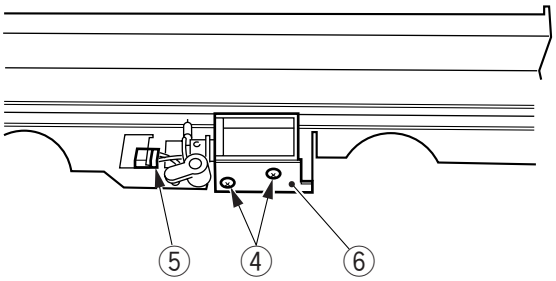

Figure 4-314

COPYRIGHT © 1997 CANON INC. CANON NP6330 REV.0 MAY 1997 PRINTED IN JAPAN (IMPRIME AU JAPON)

4. Adjusting the Position of the Blank Shutter Solenoid

Adjust the position of the solenoid so that section A in the figure is 7.7 ±0.5 mm on both sides when its plunger is moved in the direction of activation. (When taking measurements, take care not to force the shutter with slide calipers.)

After making adjustments, check to make sure that the plunger of the solenoid moves smoothly.

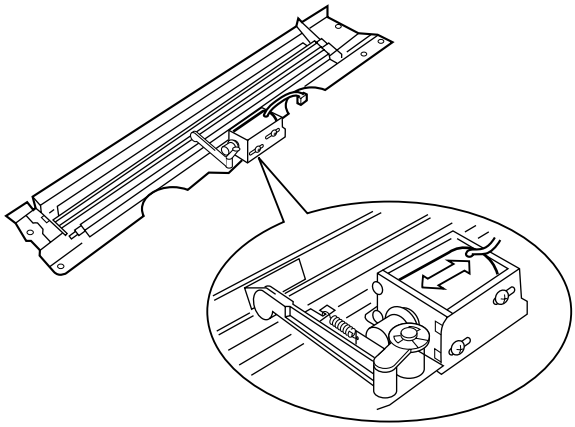

Figure 4-315

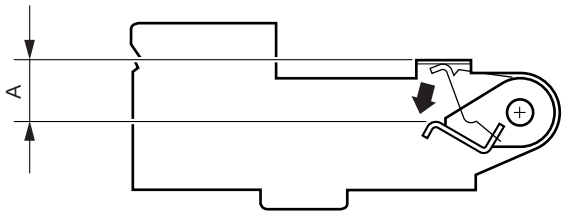

Figure 4-316

COPYRIGHT © 1997 CANON INC.
CANON NP6330 REV.0 MAY 1997 PRINTED IN JAPAN (IMPRIME AU JAPON)

5. Removing the Blank Shutter Motor

1) Remove the blank exposure lamp assembly.
2) Remove the blank exposure assembly upper plate. (See 2. “Removing the Blank Exposure Lamp.”)
3) Remove the two screws ①, and disconnect the connector ②; then, remove the blank shutter motor ③ by moving it in the direction of the arrow.

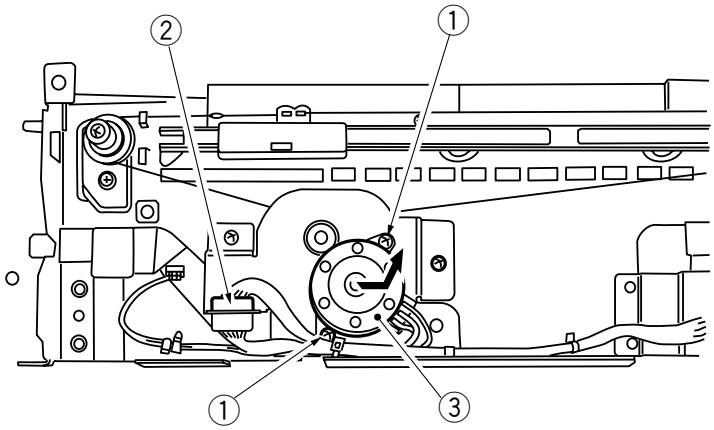

Figure 4-317

6. Routing the Blank Shutter Cable

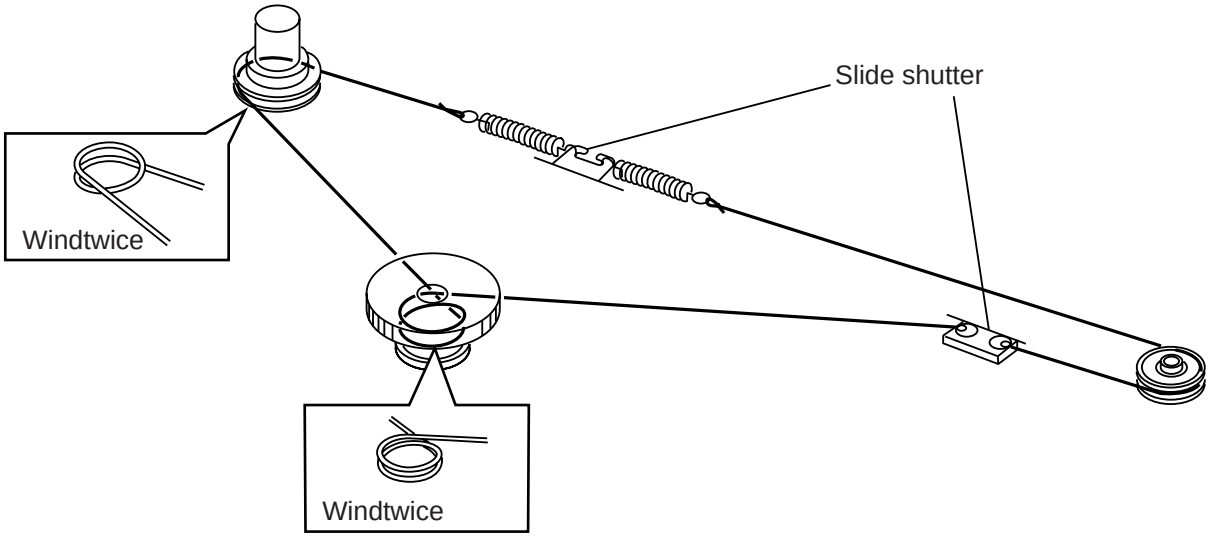

Figure 4-318

C. Drum Unit

1. Removing the Drum Unit

1) Open the front door.
2) Remove the connector cover ①.

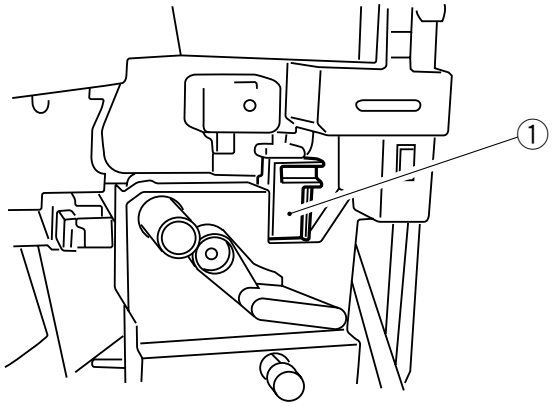

Figure 4-319

3) Turn the developing assembly releasing lever ② counterclockwise to unlock the developing assembly.

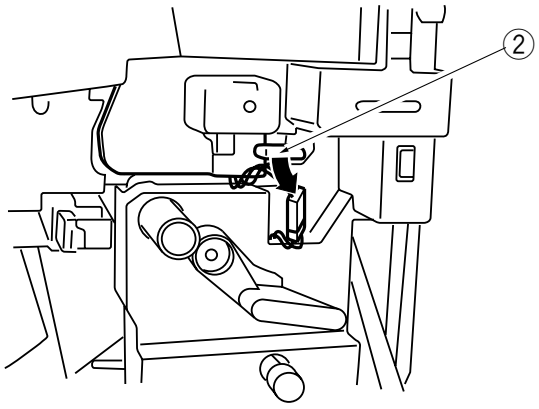

Figure 4-320

COPYRIGHT © 1997 CANON INC.
CANON NP6330 REV.0 MAY 1997 PRINTED IN JAPAN (IMPRIME AU JAPON)

4) Open the hopper, and release the feeding assembly.
5) Remove the mounting screw ③, and slide out the drum unit ④ slowly to the front.

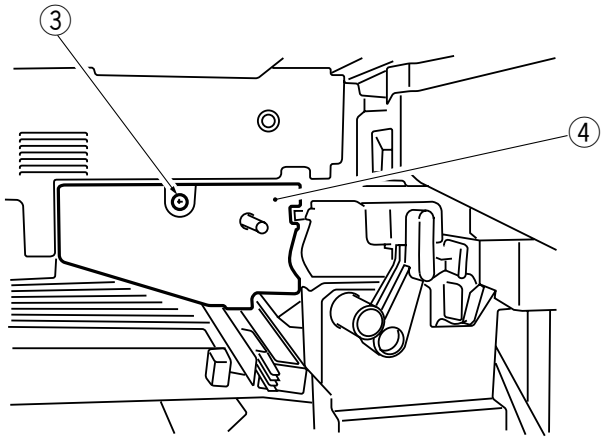

Figure 4-321

Note:

Take care not to damage the photosensitive drum.

Note:

The photosensitive drum is very susceptible to light, and exposure to even room lighting can cause copies with white spots or black bands.
As a rule, do not turn on the power after removing the drum unit; otherwise, the following may occur:

- The registration roller and the transfer guide may interfere with each other; the rotation of the registration roller during WMUPR will damage the roller.

2. Cleaning

If the surface of the photosensitive drum has become soiled, wipe it with a flannel cloth (not paper, lint-free or otherwise) coated with toner.

Note:

Do not dry wipe or clean with solvent.
Do not use drum cleaning powder.

COPYRIGHT © 1997 CANON INC.

D. Charging Assembly

1. Removing the Primary Charging Assembly

1) Remove the drum unit.

Note:

Take care not to expose the drum unit to light after taking it out of the copier. Exposure to light for some time will cause copies with white spots or black bands.

2) Disengage the hook ①, and remove the primary charging assembly ② by pulling it to the front from the drum unit.

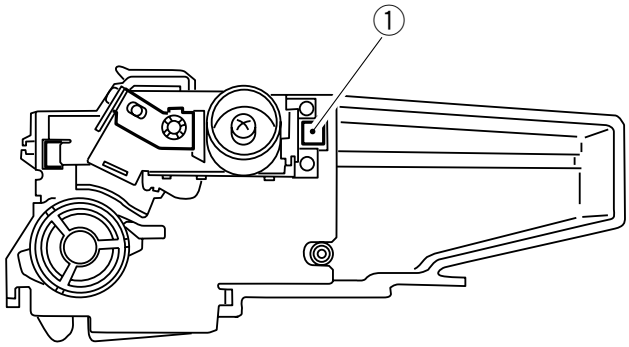

Figure 4-322

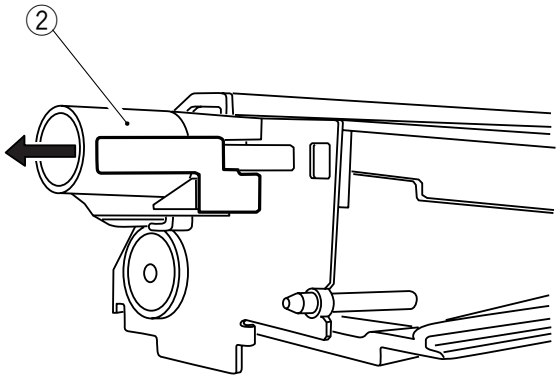

Figure 4-323

COPYRIGHT © 1997 CANON INC.
CANON NP6330 REV.0 MAY 1997 PRINTED IN JAPAN (IMPRIME AU JAPON)

2. Removing the Transfer Charging Assembly

1) Remove the screw ①, and remove the transfer charging assembly cover ②; then, remove the transfer charging assembly ③ by pulling it to the front.

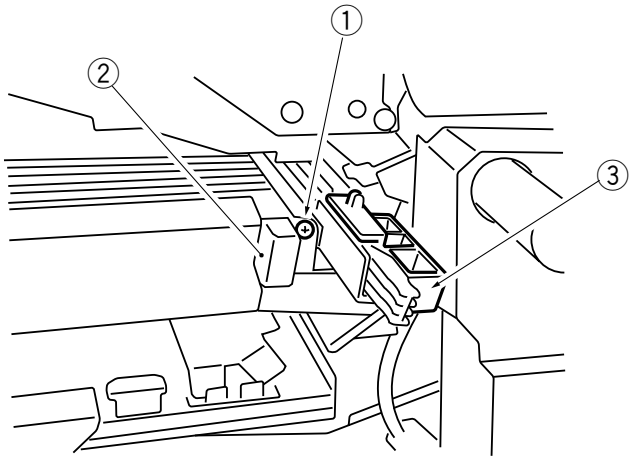

Figure 4-324

3. Stringing the Primary/Transfer Charging Wire

a. Primary Charging Assembly

1) Remove the primary charging assembly.
2) Remove the four tension springs ① (2 at front, 2 at rear), and remove the grid plate ②.
3) Remove the lid ③ (both front and rear).

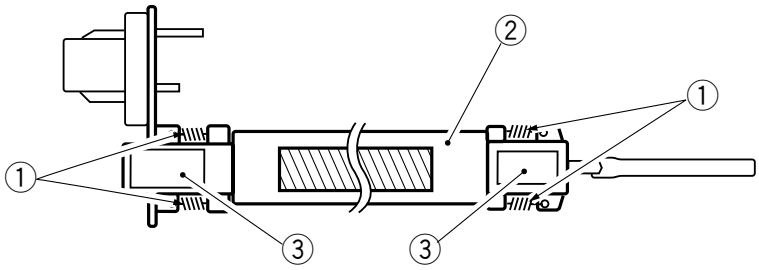

Figure 4-325

4) Go to step 5) under b. “Transfer Charging Assembly.”

COPYRIGHT © 1997 CANON INC.

b. Transfer Charging Assembly

1) Remove the transfer charging assembly.
2) Pull out the static eliminator ①.

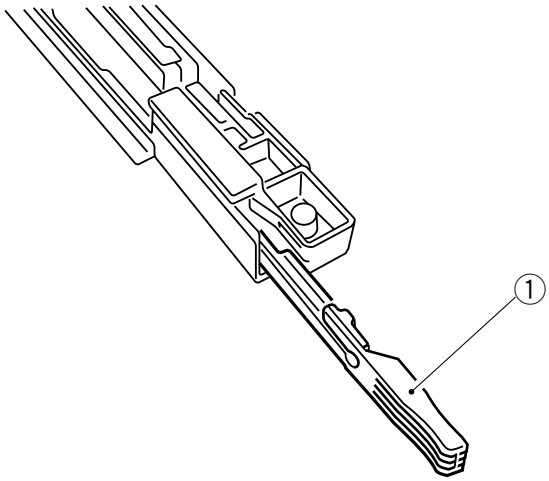

Figure 4-326

3) Disengage the three hooks ②, and remove the guide wire retainer ③ from the charging assembly.

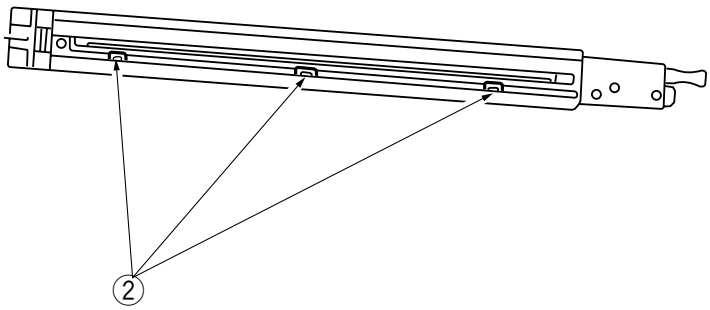

Figure 4-327

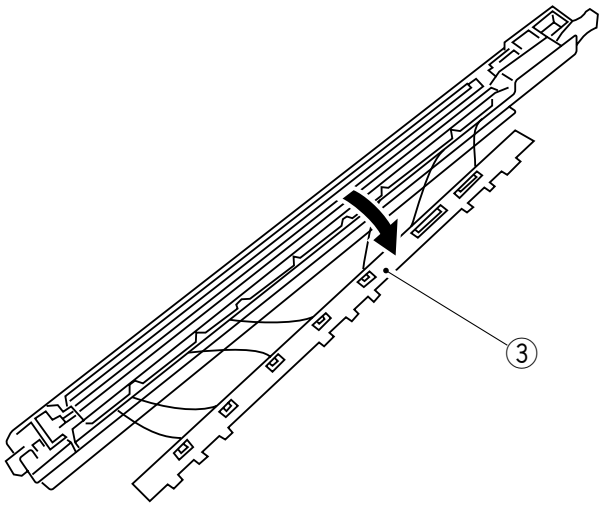

Figure 4-328

COPYRIGHT © 1997 CANON INC.
CANON NP6330 REV.0 MAY 1997 PRINTED IN JAPAN (IMPRIME AU JAPON)

4) Remove the lid ④ (both front and rear).

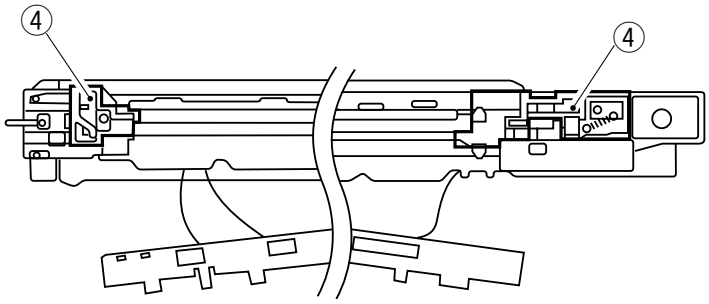

Figure 4-329

5) Free a length of about 40 mm of charging wire from the reel (0.06-mm dia.), and form a loop with a diameter of about 2 mm at the end.

Reference:

To form a loop, wind the charging wire around a hex key once, and twist the hex key four to five times; then, twist the charging wire.

6) Cut the twisted end of the charging wire (excess) to 1 mm or less with a nipper.

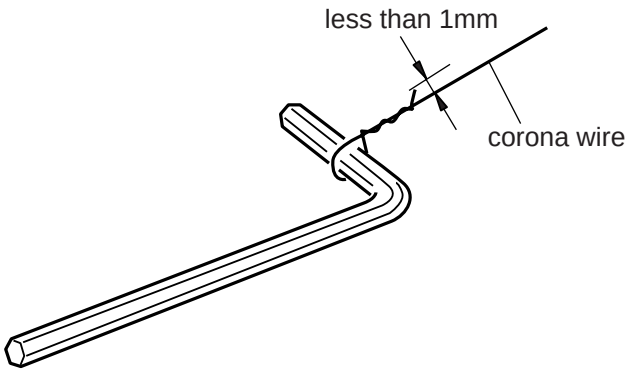

Figure 4-330

COPYRIGHT © 1997 CANON INC. CANON NP6330 REV.0 MAY 1997 PRINTED IN JAPAN (IMPRIME AU JAPON)

7) Install the charging wire as shown in the figure.

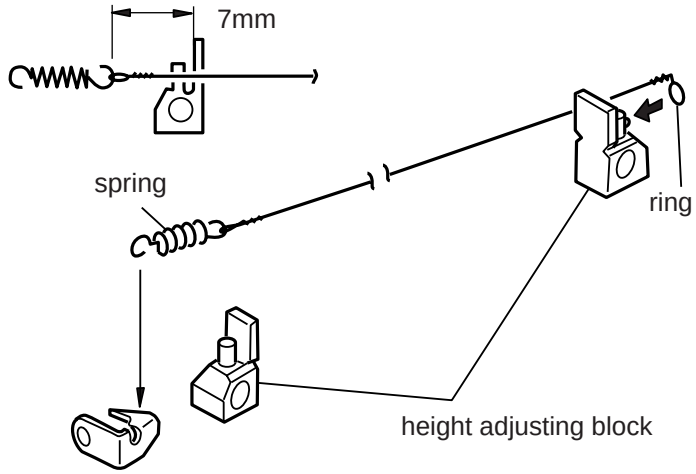

Primary charging wire
Figure 4-331

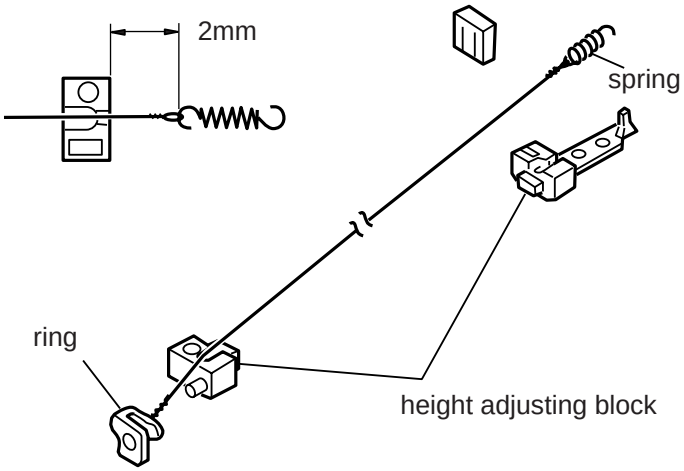

Transfer charging wire
Figure 4-332

Note:

Keep the following in mind:
- Make sure that the charging wire is free of bends or twists and its gold-plating has not peeled.
- Make sure that the charging wire is free of slack.
- Make sure that the charging wire is in the V-groove of the height-adjusting roll.

COPYRIGHT © 1997 CANON INC.
CANON NP6330 REV.0 MAY 1997 PRINTED IN JAPAN (IMPRIME AU JAPON)

4. Stringing the Guide Wire

The guide wire is 0.148 mm in diameter.

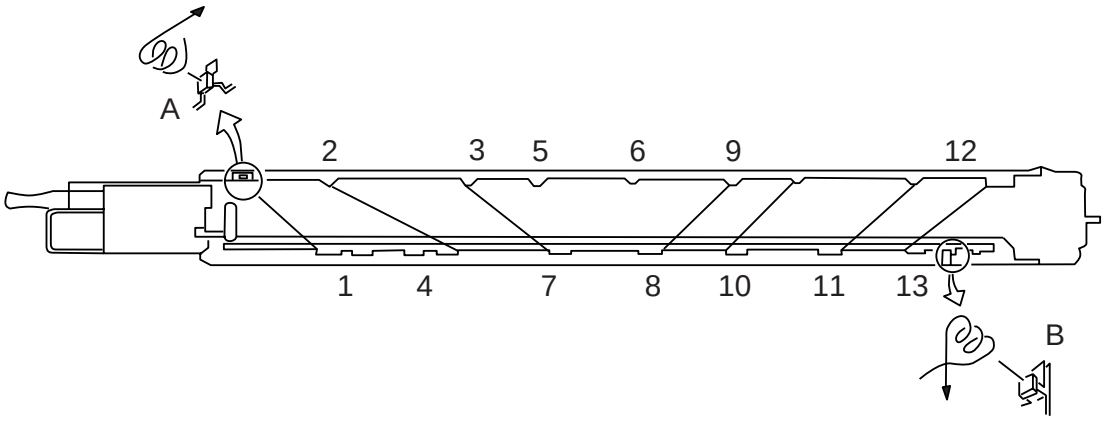

Figure 4-333

5. Adjusting the Height of the Charging Wire

The height of the charging wire may be adjusted by turning the screw located behind the charging assembly. A full single turn of the screw raises or lowers the charging wire by about 0.7 mm.

Corona Unit	Height of Standard Position	
Primary	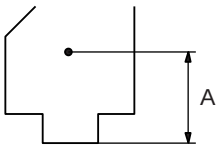	A=10.6 ±0.3 mm
Transfer	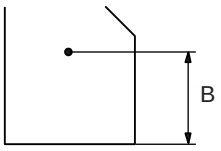	B=9.5 ±0.2 mm

Figure 4-334

COPYRIGHT © 1997 CANON INC.

E. Developing system

1. Removing the Developing Assembly

1) Open the copier front cover.
2) Remove the connector ①.

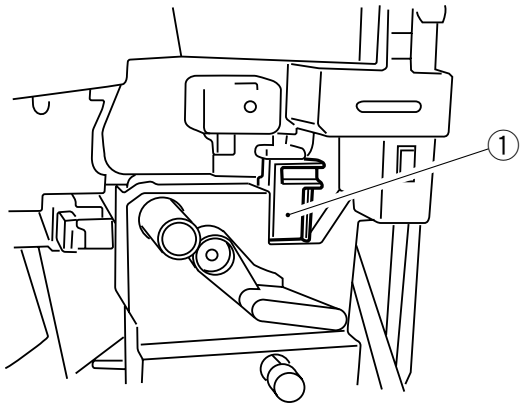

Figure 4-335

3) Remove the connector ②.
4) Turn the developing assembly releasing lever ③ counterclockwise to unlock.
5) Pull out the developing assembly ④ slowly to the front.

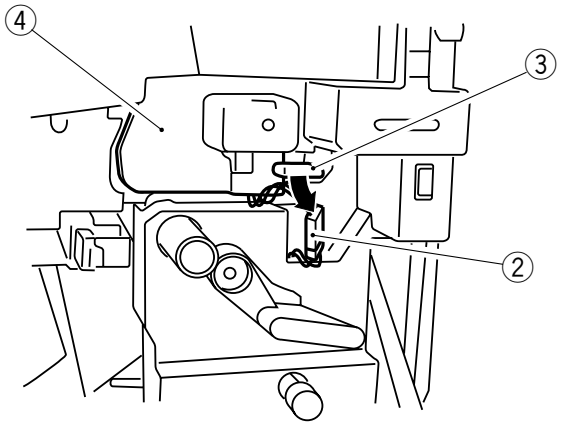

Figure 4-336

COPYRIGHT © 1997 CANON INC.
CANON NP6330 REV.0 MAY 1997 PRINTED IN JAPAN (IMPRIME AU JAPON)

2. Removing the Blade

1) Remove the developing assembly from the copier.
2) Remove the two screws ①, and remove the developing assembly cover ②.

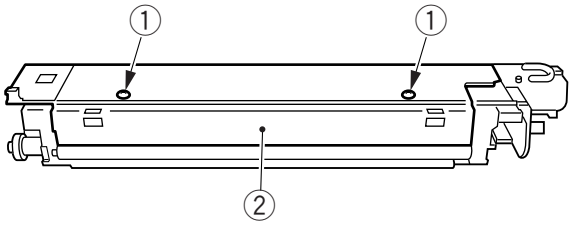

Figure 4-337

3) Place a newspaper on the floor or a desk, and pour out the toner from the developing assembly.
4) Remove the two screws ③, and remove the blade ④ together with the mount.

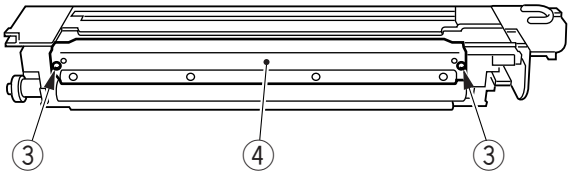

Figure 4-338

Note:

The blade must be mounted with high accuracy. Do not remove it on its own in the field. Rather, remove it together with its mount.

COPYRIGHT © 1997 CANON INC.

3. Removing the Magnetic Seal (developing cylinder)

1) Remove the developing assembly from the copier.
2) Remove the blade

Note:

The blade must be mounted with high accuracy. Do not remove it on its own in the field. Rather, remove it together with its mount.

3) Remove the screw ①, and remove the fromt cover ②.

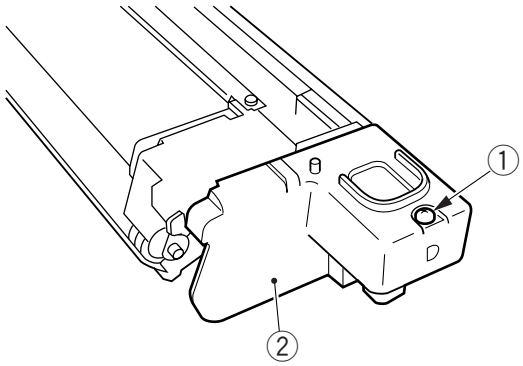

Figure 4-339

4) Remove the screw ③, and remove the electrode positioning plate ④.

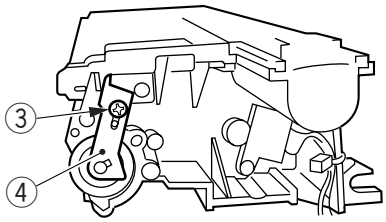

Figure 4-340

COPYRIGHT © 1997 CANON INC.
CANON NP6330 REV.0 MAY 1997 PRINTED IN JAPAN (IMPRIME AU JAPON)

5) Remove the C-ring and the two screws; then, remove the butting roll ⑤ and the roll case ⑥.

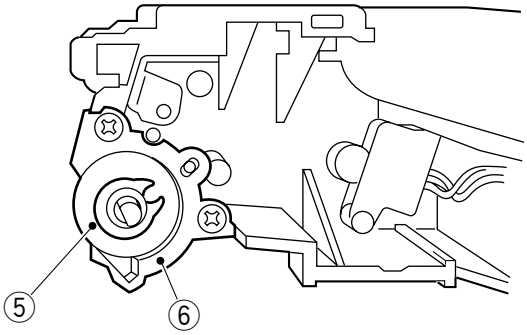

Figure 4-341

6) Remove the two screws ⑦, and remove the gear mount ⑧.

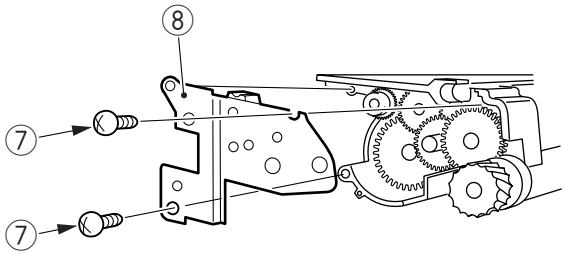

Figure 4-342

7) Remove the two E-rings, and remove the gear ⑨ and the gear ⑩.
Remove the two screws, and remove the butting roll ⑪ and the roll case ⑫.

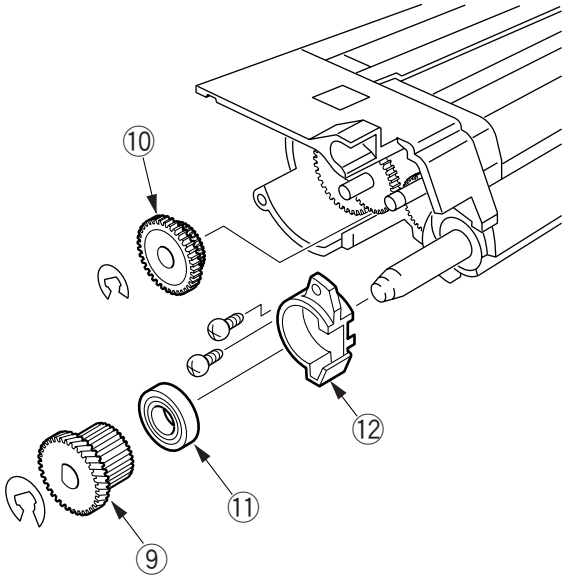

Figure 4-343

COPYRIGHT © 1997 CANON INC.

8) Remove the developing cylinder ⑬.

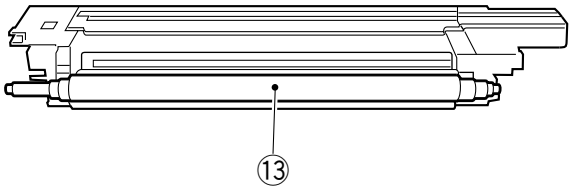

Figure 4-344

9) Remove the magnetic seal ⑭ (both ends).

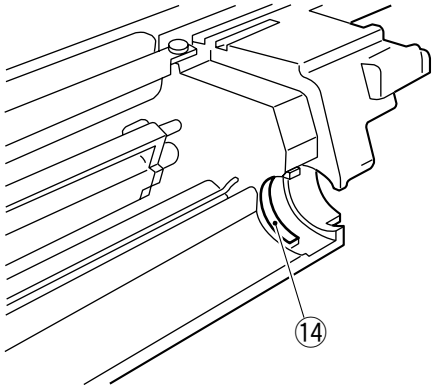

Figure 4-345

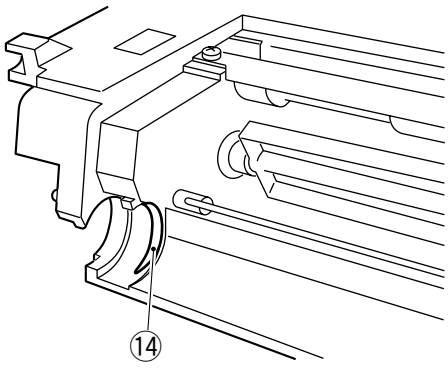

Figure 4-346

COPYRIGHT © 1997 CANON INC.
CANON NP6330 REV.0 MAY 1997 PRINTED IN JAPAN (IMPRIME AU JAPON)

4. Installing the Magnetic Seal and the Blade

1) Clean the contact face on the magnetic seal with alcohol.
2) Attach the magnetic seal as shown. (Pay attention; the magnetic seal is different in shape between front and rear.)
   Check to make sure that the magnetic seal and the case are in contact.

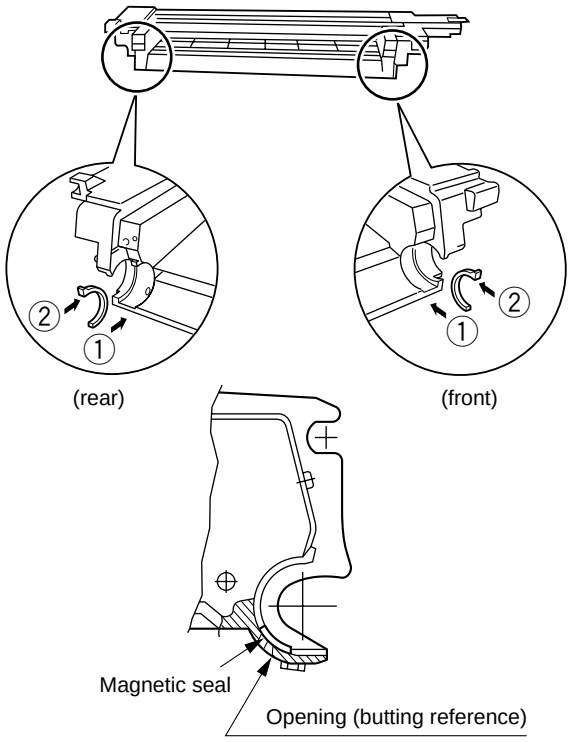

Figure 4-347

3) Install all parts except the blade and the developing assembly cover.

COPYRIGHT © 1997 CANON INC.

4) While butting the blade mount against the developing assembly, fix it in place with two screws.
When installing the blade, place paper ① on the developing cylinder first to protect the cylinder. (Tighten the screw while pushing on section A.)

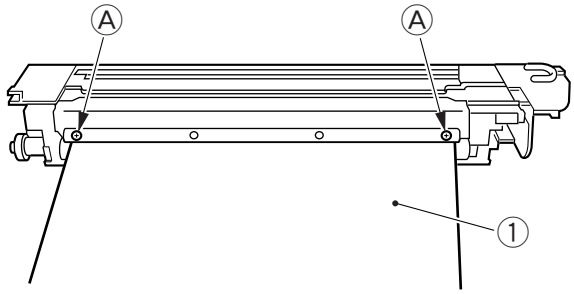

Figure 4-348

Reference:
S-B is adjusted to 230 ±30 µm.

5. Installing the Electrode Positioning Plate
Install the electrode positioning plate while orienting it as shown in Figure 4-349.

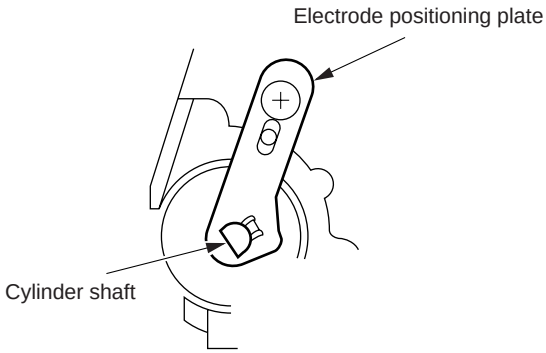

Figure 4-349

COPYRIGHT © 1997 CANON INC.
CANON NP6330 REV.0 MAY 1997 PRINTED IN JAPAN (IMPRIME AU JAPON)

CHAPTER 5

PICK-UP/FEEDING SYSTEM

This chapter describes the outline of the purposes, roles and operations of this copier from feeding and delivering copy papar, the relationship between electric system and mechanical system and the operational timing of each component.

I. PICK-UP/FEEDING SYSTEM 5-1
A. Outline 5-1
II. PICK-UP FROM THE CASSETTE 5-3
A. Pick-Up Operation 5-3
B. Movement of the Cassette Lifter ...5-6
C. Identifying the Size of Copy Paper 5-8
III. PICK-UP FROM THE MULTIFEEDER.....5-13
A. Pick-Up Operation 5-13
IV. CONTROLLING THE REGISTRATION CLUTCH 5-16
V. TWO-SIDED COPYING 5-18
A. Making Two-Sided Copies.....5-18
B. Lower Feeding Assembly 5-20
C. Horizontal Registration 5-30
VI. DETECTING JAMS 5-34
A. Outline 5-34
VII. DISASSEMBLY AND ASSEMBLY.....5-45
A. Pick-Up Assembly 5-46
B. Multifeeder Assembly 5-56
C. Registration Roller Assembly 5-60
D. Feeding Assembly.....5-62
E. Lower Feeding Assembly 5-68

COPYRIGHT © 1997 CANON INC. CANON NP6330 REV.0 MAY 1997 PRINTED IN JAPAN (IMPRIME AU JAPON)

I. PICK-UP/FEEDING SYSTEM

A. Outline

The copier uses center reference, in which copy paper is fed centered along the path of the pick-up/feeding assembly, and its sources of copy paper include two cassettes (top, bottom) and a multifeeder.

Copy paper from the cassette or the multifeeder is controlled so that its leading edge matches with the leading edge of the image on the photosensitive drum by the registration roller; the paper is then sent to the copy tray through the transfer, separation, feeding, and fixing assemblies.

The copier is equipped with a duplexing copying function, in which copy paper leaving the fixing roller is sent to the lower feeding assembly by a paper detecting plate for copying on both sides.

As many as eight sensors (Table 5-101) are used to monitor the movement of copy paper, checking for jams and other errors.

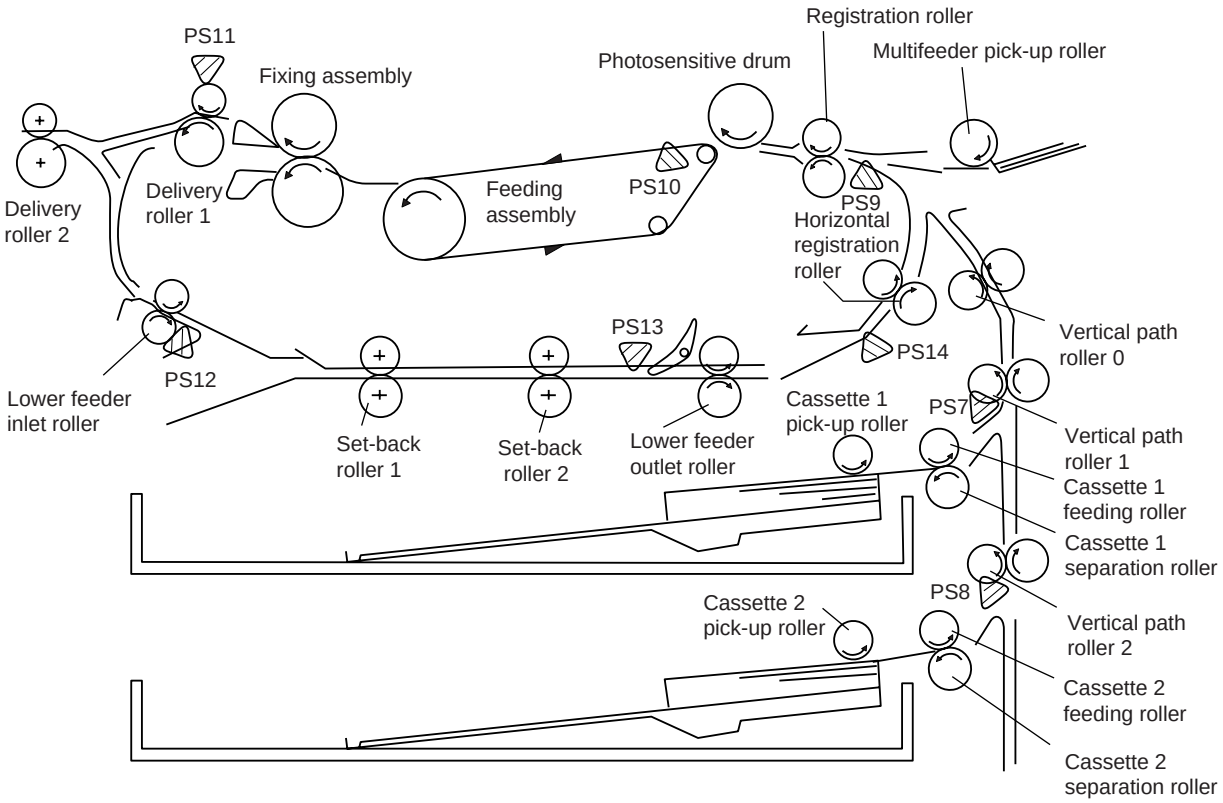

Figure 5-101

COPYRIGHT © 1997 CANON INC.
CANON NP6330 REV.0 MAY 1997 PRINTED IN JAPAN (IMPRIME AU JAPON)

No.	Name
PS7	Vertical path roller 1 paper sensor
PS8	Vertical path roller 2 paper sensor
PS9	Pre-registration paper sensor
PS10	Separation sensor
PS11	Delivery sensor
PS12	Lower feeder inlet paper sensor
PS13	Lower feeder outlet paper sensor
PS14	Horizontal registration paper sensor

Table 5-101

COPYRIGHT © 1997 CANON INC.
CANON NP6330 REV.0 MAY 1997 PRINTED IN JAPAN (IMPRIME AU JAPON)

II. PICK-UP FROM THE CASSETTE

A. Pick-Up Operation

1. Outline

The copy paper inside the cassette is held up by a lifter so that it remains in contact with the pick-up roller.

When the pick-up clutch (CL2 or CL3) turns on, the pick-up roller starts to rotate to feed copy paper. Then, the pick-up roller releasing solenoid (SL1 or SL2) turns on so that the pick-up roller leaves the copy paper.

The feeding roller and the separation roller make sure that only one sheet of copy paper is picked up and sent to the feeding assembly; thereafter, the vertical path roller moves the copy paper as far as the registration roller.

The registration roller controls the copy paper so that its leading edge matches the image on the photosensitive drum.

COPYRIGHT © 1997 CANON INC.
CANON NP6330 REV.0 MAY 1997 PRINTED IN JAPAN (IMPRIME AU JAPON)

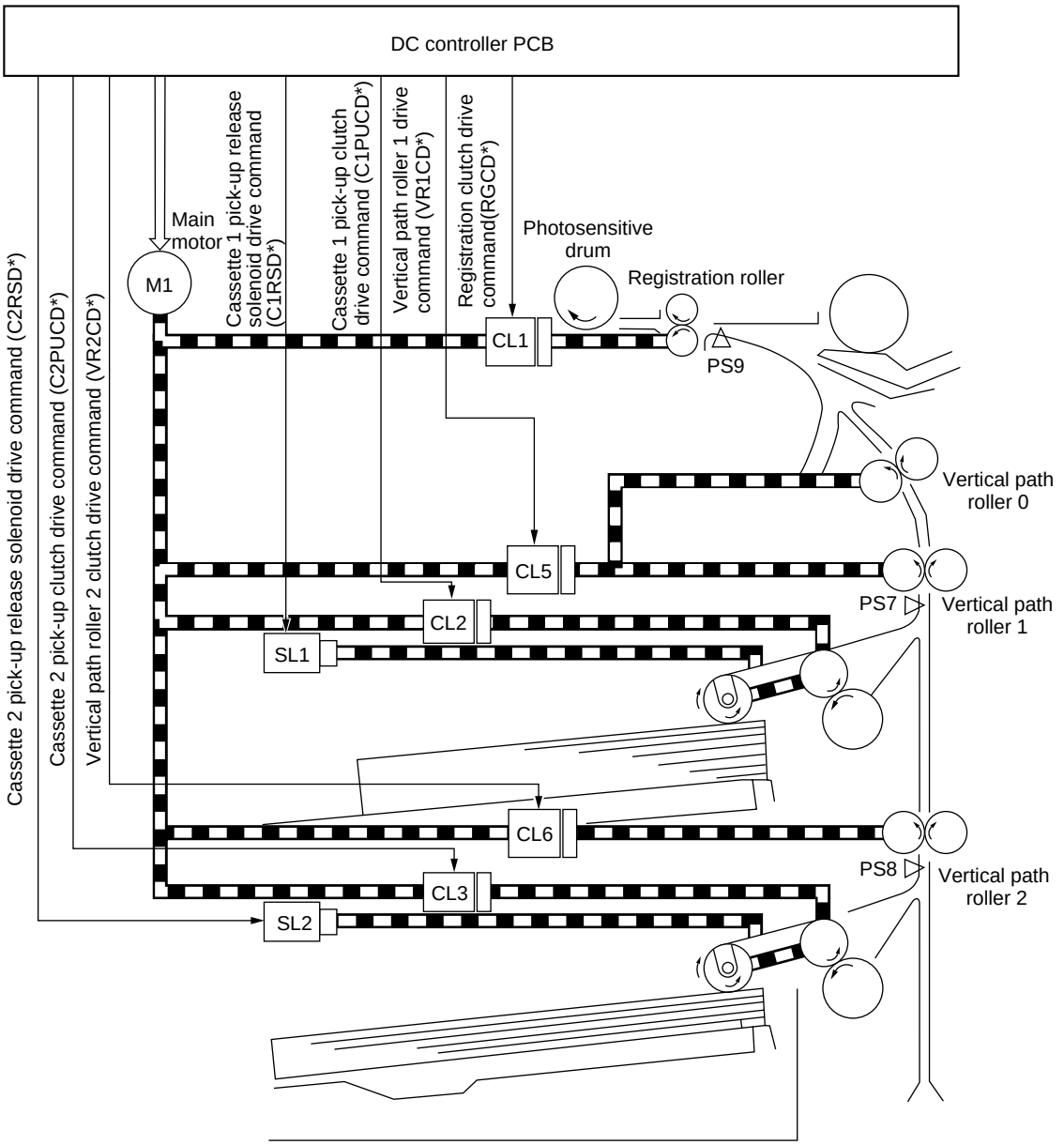

Figure 5-201

COPYRIGHT © 1997 CANON INC.

2. Sequence of Pick-Up Operations

a. Cassette 1, A4, 2 Copies, Continuous

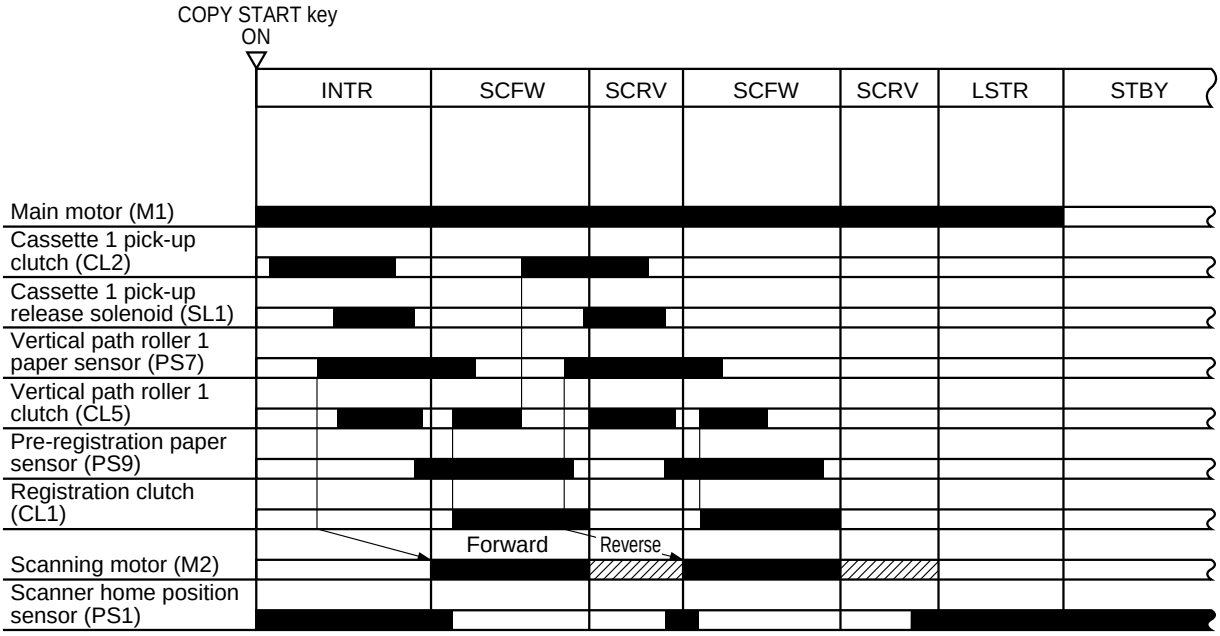

Figure 5-202

b. Cassette 2, A4, 2 Copies, Continuous

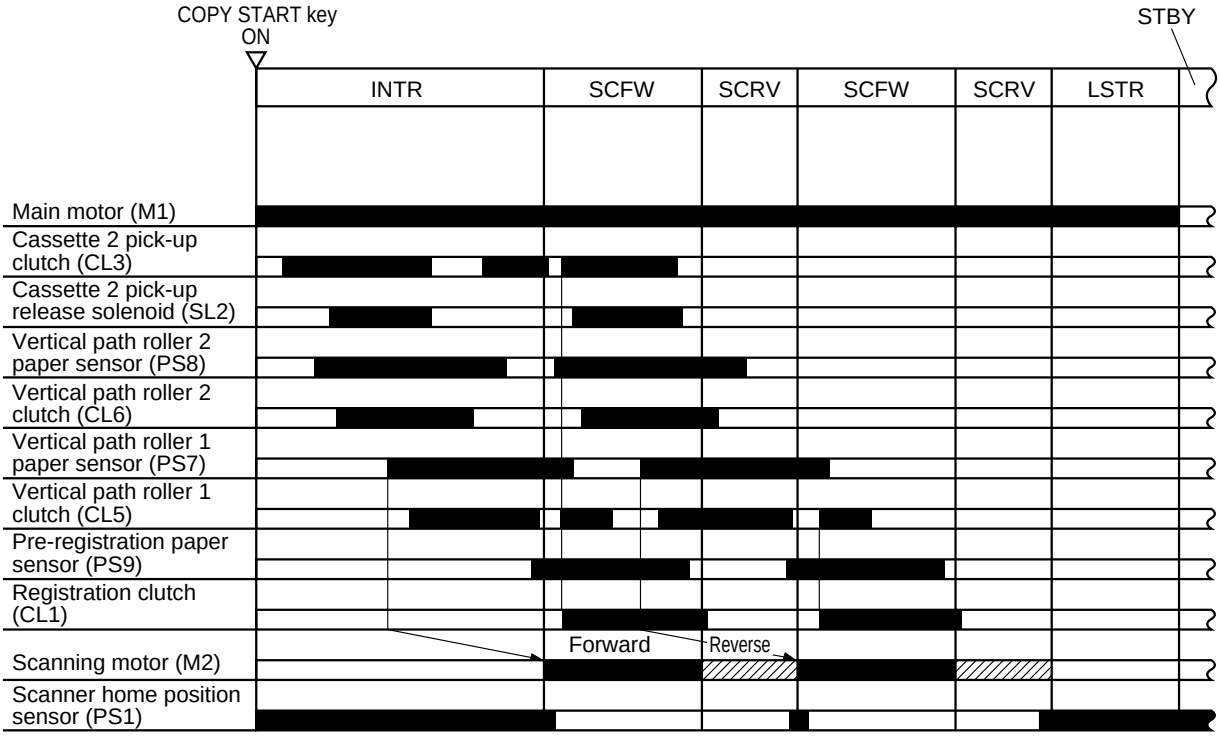

Figure 5-203

COPYRIGHT © 1997 CANON INC.

B. Movement of the Cassette Lifter

When the cassette is pushed inside the copier, the pick-up roller moves down, and the light-blocking plate leaves the lifter position sensor (PS3, PS5), thereby turning on the lifter motor (M9, M10) to move up the lifter. The lifter motor stops where the lifter position sensor (PS3, PS5) can detect the top surface of the stack of copy paper on the lifter.

When the cassette runs out of copy paper and the paper detection roll mounted to the pick-up roller shaft falls and, as a result, the paper detecting lever leaves the paper sensor (PS2, PS4), the “Add Paper indicator” will be lighted on the control panel.

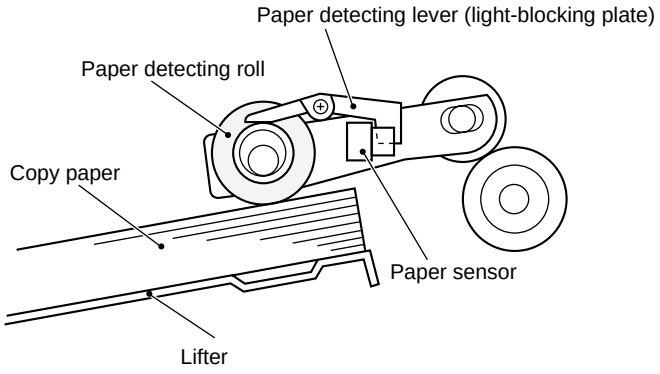

Figure 5-204

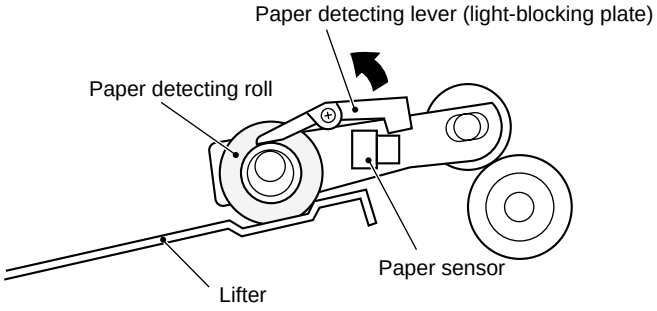

Figure 5-205

COPYRIGHT © 1997 CANON INC.
CANON NP6330 REV.0 MAY 1997 PRINTED IN JAPAN (IMPRIME AU JAPON)

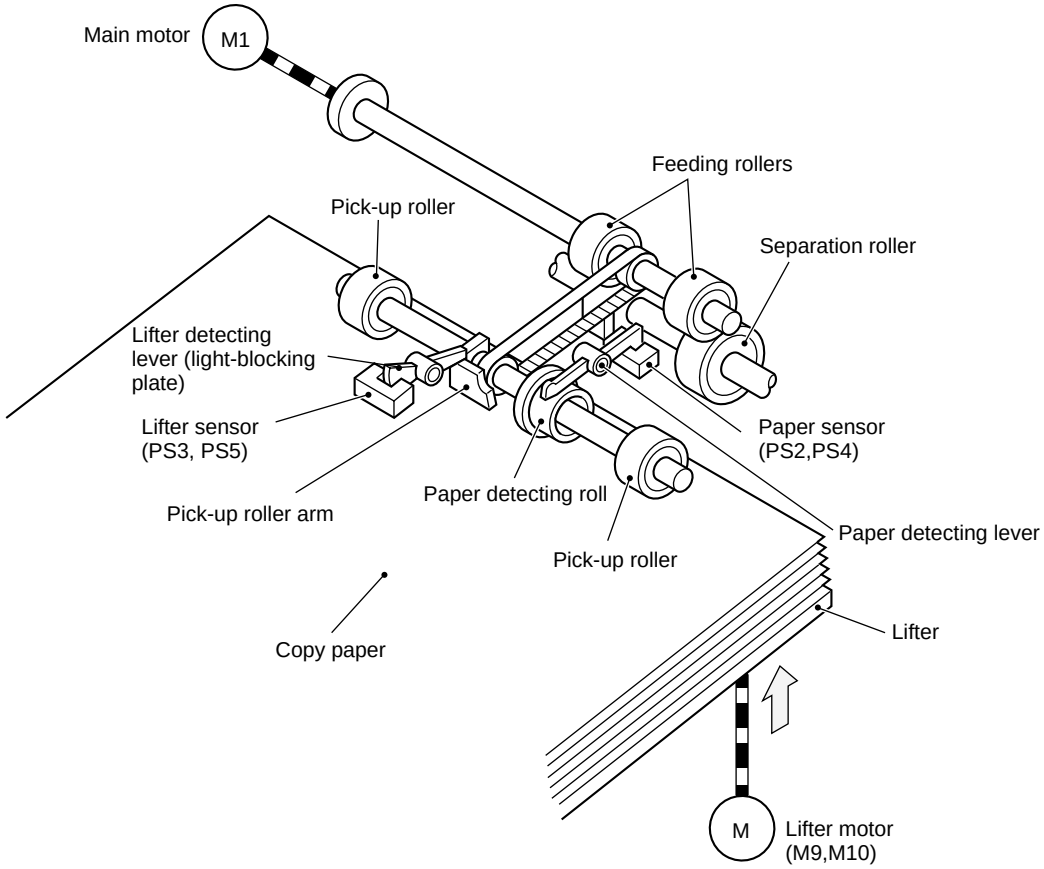

Figure 5-206

COPYRIGHT © 1997 CANON INC.

C. Identifying the Size of Copy Paper

1. Outline

The size of copy paper inside the cassette is identified by the paper size sensors mounted to the rear of the cassette holder.

When the cassette is slid inside the cassette holder, the paper size sensors are activated by the bosses on the cassette, enabling detection of the width and the length of copy paper.

The copier identifies the size of paper based on combinations of paper width and length and, at the same time, determines the point of scanner reversal and the control method for blank exposure.

The bosses used to push the paper size sensors operate in conjunction with the guide plate inside the cassette, and the arrangement is determined by adjusting the guide plate to the size of paper to be used.

2. Identifying the Size of Copy Paper

The copy paper length sensor uses two photointerrupters, and the length of copy paper is identified based on combinations of the outputs from these two photointerrupters.

On the other hand, the copy paper width sensor uses variable resistors, and the paper width is identified in reference to the resistance generated by these resistors.

Figure 5-207 shows the relationship between paper width and outputs of the variable resistors. You must enter the basic values whenever you have replaced the DC controller PCB or any of the sensors to ensure that the relationship remains correct.

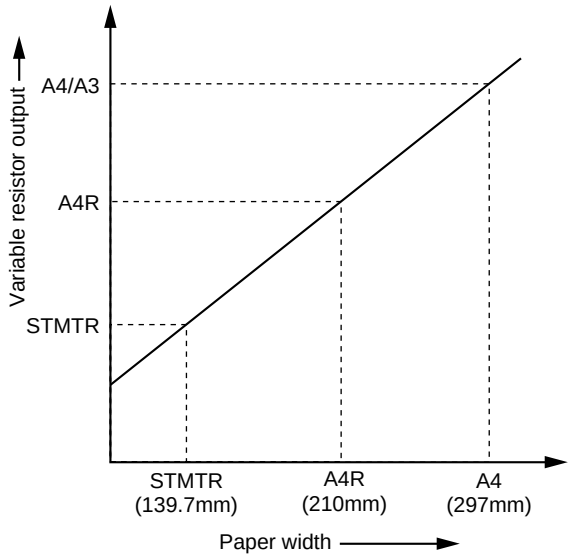

Figure 5-207

COPYRIGHT © 1997 CANON INC.
CANON NP6330 REV.0 MAY 1997 PRINTED IN JAPAN (IMPRIME AU JAPON)

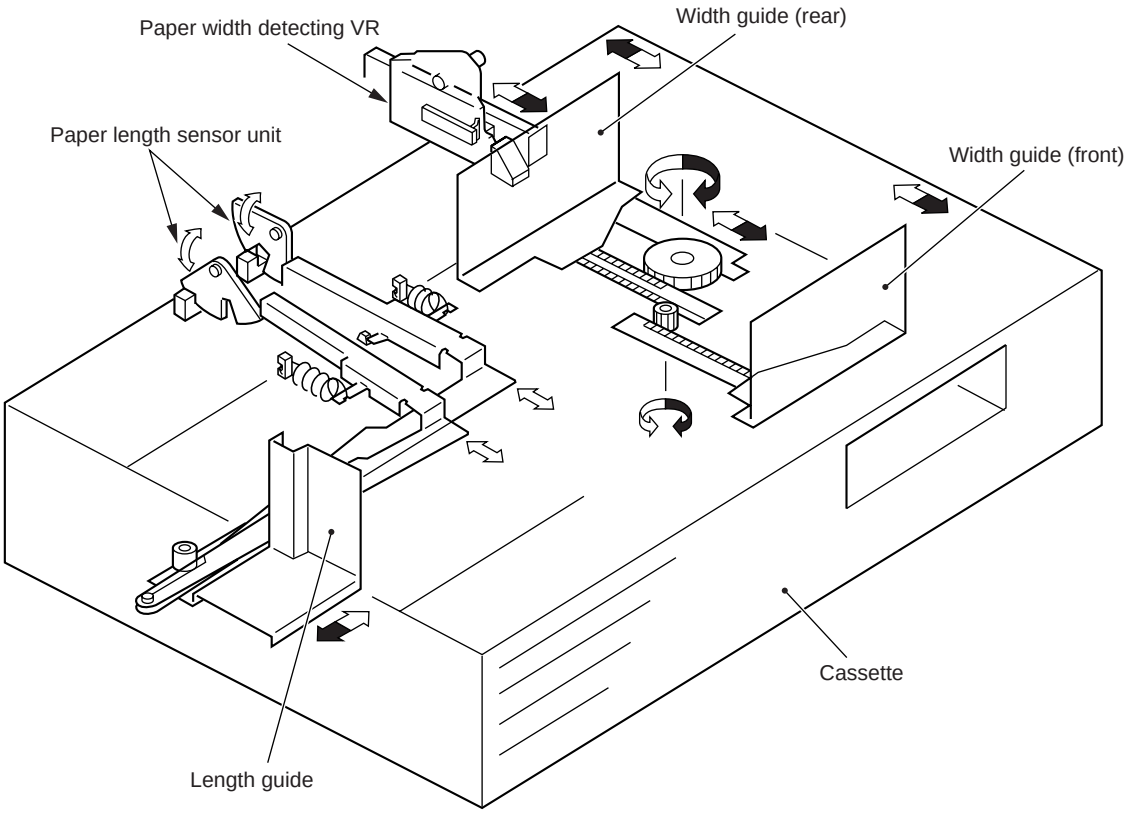

Figure 5-208

COPYRIGHT © 1997 CANON INC.
CANON NP6330 REV.0 MAY 1997 PRINTED IN JAPAN (IMPRIME AU JAPON)

3. Markings on the Width Guide Rail

The width guide rail inside the cassette has paper size holes, marked A through M as shown in Table 5-201.

Use these holes if the user reports skew movement of copy paper to find out if the copy size width is correctly set. (Note that this information is not disclosed to the user.)

Marking	Name	Remarks
A	STMT-R	
B	A5-R	
C	B5-R	
D	KLGL-R	
E	GLTR-R	
F	G-LGL	G3
G	A4-R	
H	LGL/LTR-R	
I	FLSC	G2
J	B4/B5	
K	G-LTR	G1
L	279mm × 432mm (11" × 17") /LTR	G4
M	A3/A4	

(For G1 through G4, see Table 5-203)

Table 5-201

COPYRIGHT © 1997 CANON INC.
CANON NP6330 REV.0 MAY 1997 PRINTED IN JAPAN (IMPRIME AU JAPON)

4. Paper Size

The microprocessor on the DC controller PCB determines the size of copy paper as in Table 5-202 based on the paper width and length inputs.

Paper length sensor	PS102/ PS104	PS101/ PS103	PS102/ PS104	PS101/ PS103	PS102/ PS104	PS101/ PS103	PS102/ PS104	PS101/ PS103
Paper width sensor (slide level) unit: mm / Signal	SZ 2	SZ 1	SZ 2	SZ 1	SZ 2	SZ 1	SZ 2	SZ 1
ON/OFF	0	0	0	1	1	0	1	1
288.5	A4		—		A3		—	
273.7	(G4)		—		279 × 432mm (11" × 17")		—	
261.8	(G1)		—		—		—	
238.0	B5		—		B4		—	
212.9	STMT		LTRR		LGL		(G2)	
206.6	A5		A4R		—		(G3)	
196.6	G-LTRR		—		—			
186.0	K-LGLR		—		—		—	
165.2	B5R		—		—		—	
144.1	A5R		—		—		—	
	STMTR		—		—		—	

Table 5-202

The paper sizes shown in Table 5-203 are selected in respect of the paper sizes determined within each group in service mode.

The asterisk (*) indicates the factory default paper size.

Group	Size	
G1	*	G-LTR K-LGL
G2	*	FOOLSCAP OFFICIO E-OFFI A-LGL A-OFFI
G3	*	G-LGL FOLIO AUS-FLS
G4	*	LTR A-LTR

Table 5-203

COPYRIGHT © 1997 CANON INC.

- Paper Types

Paper	Notation	Size (vertical × horizontal; mm)
A3	A3	(297±1) × (420±1)
A4R	A4R	(210±1) × (297±1)
A4	A4	(297±1) × (210±1)
A5	A5	(210±1) × (148.5±1)
A5R	A5R	(148.5±1) × (210±1)
B4	B4	(257±1) × (364±1)
B5R	B5R	(182±1) × (257±1)
B5	B5	(257±1) × (182±1)
279mm × 432mm (11" × 17")	11 × 17	(279±1) × (432±1)
LETTER-R	LTRR	(216±1) × (297±1)
LETTER	LTR	(297±1) × (216±1)
STATEMENT	STMT	(216±1) × (139.5±1)
STATEMENT R	STMTR	(139.5±1) × (216±1)
LEGAL	LGL	(216±1) × (356±1)
KOREAN LEGAL	K-LGL	(265±1) × (190±1)
KOREAN LEGAL R	K-LGLR	(190±1) × (265±1)
FOOLSCAP	FLSC	(216±1) × (330±1)
AUSTRALIAN FOOLSCAP	A-FLS	(206±1) × (337±1)
OFICIO	OFI	(216±1) × (317±1)
EQUADORAN OFICIO	E-OFI	(220±1) × (320±1)
BOLIVIA OFICIO	B-OFI	(216±1) × (355±1)
ARGENTINE LETTER	A-LTR	(280±1) × (220±1)
ARGENTINE LETTER-R	A-LTRR	(220±1) × (280±1)
GOVERNMENT LETTER	G-LTR	(267±1) × (203±1)
GOVERNMENT LETTER-R	G-LTRR	(203±1) × (267±1)
ARGENTINE LEGAL	A-LGL	(220±1) × (340±1)
GOVERNMENT LEGAL	G-LGL	(203±1) × (330±1)
FOLIO	FOLI	(216±1) × (317±1)
ARGENTINE OFFICIO	A-OFI	(220±1) × (340±1)

Table 5-204

5. Registering Paper Width Basic Values

See the Chapter 11.

COPYRIGHT © 1997 CANON INC.
CANON NP6330 REV.0 MAY 1997 PRINTED IN JAPAN (IMPRIME AU JAPON)

III. PICK-UP FROM THE MULTIFEEDER

A. Pick-Up Operation

1. Outline

The multifeeder is a mechanism which picks up copy paper from the stack placed on it and which is capable of continuous pick-up.

The copy paper on the tray is monitored by the multifeeder paper sensor (PS6).

The copy paper on the tray is butted against the pick-up roller by the paper guide plate. The drive of the main motor (M1) is transmitted to the pick-up roller through a multifeeder pick-up clutch (CL4) to rotate the pick-up roller.

The pick-up roller and the separation pad serve to make sure that only one sheet of copy paper is picked up and sent to the registration roller.

This series of operations is executed for each pick-up operation.

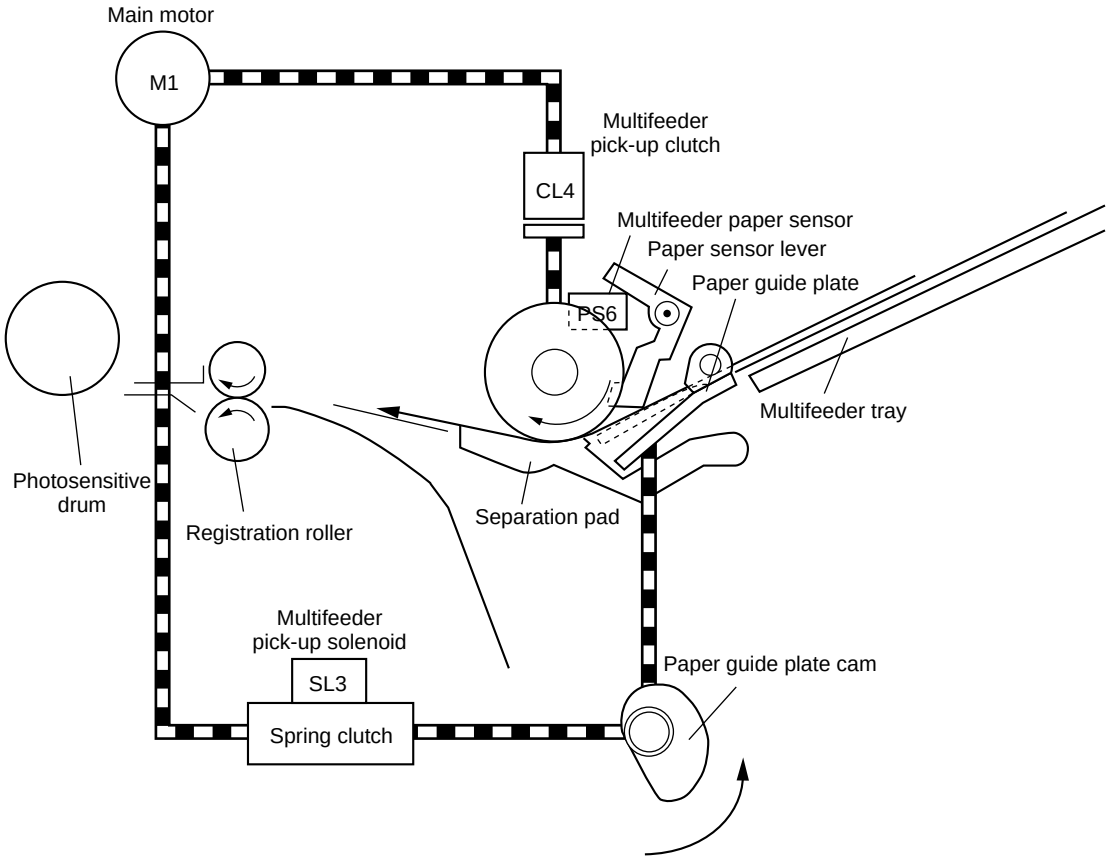

Figure 5-301

COPYRIGHT © 1997 CANON INC. CANON NP6330 REV.0 MAY 1997 PRINTED IN JAPAN (IMPRIME AU JAPON)

2. Identifying the Size of Paper on the Multifeeder

The width of copy paper is identified using a variable resistor which operates in conjunction with the mevement of the slide guide on the multifeeder adjusted by the user to suit the copy paper used.

The width of copy paper detected in this way is used to control blank exposure; further, the length of copy paper when the multifeeder is used is identified in reference to the period during which the pre-registration paper sensor (PS9) remains on.

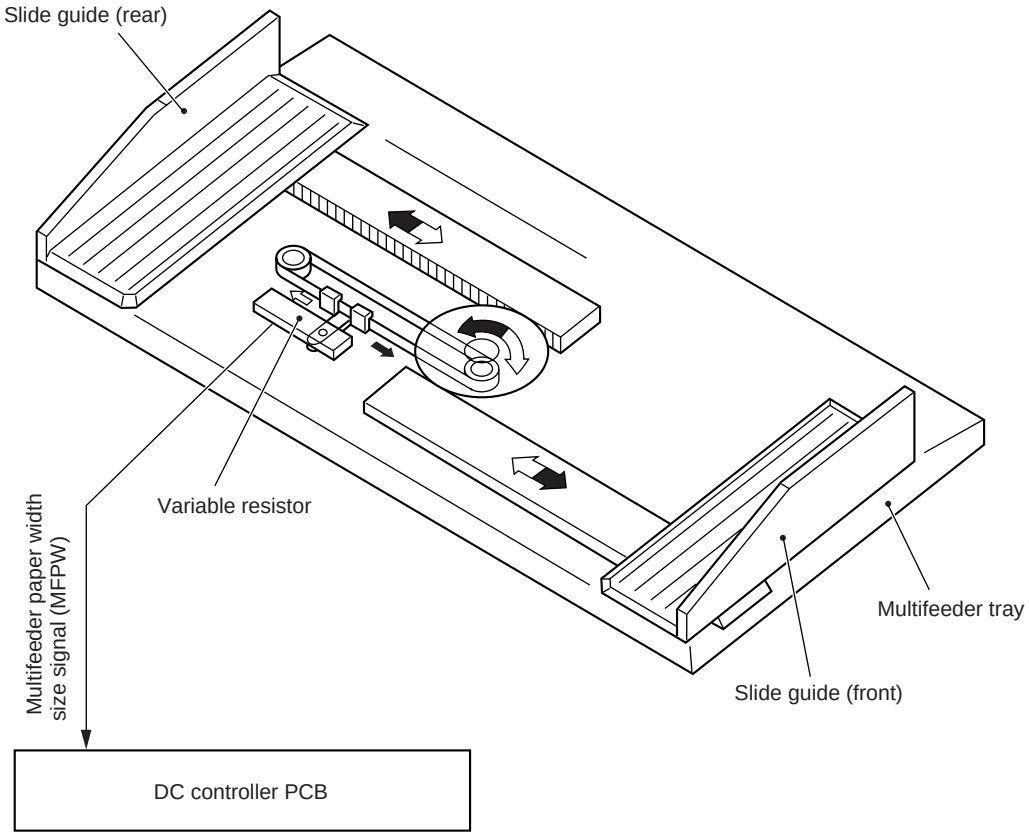

Figure 5-302

COPYRIGHT © 1997 CANON INC.
CANON NP6330 REV.0 MAY 1997 PRINTED IN JAPAN (IMPRIME AU JAPON)

3. Sequence of Multifeeder Pick-Up Operation

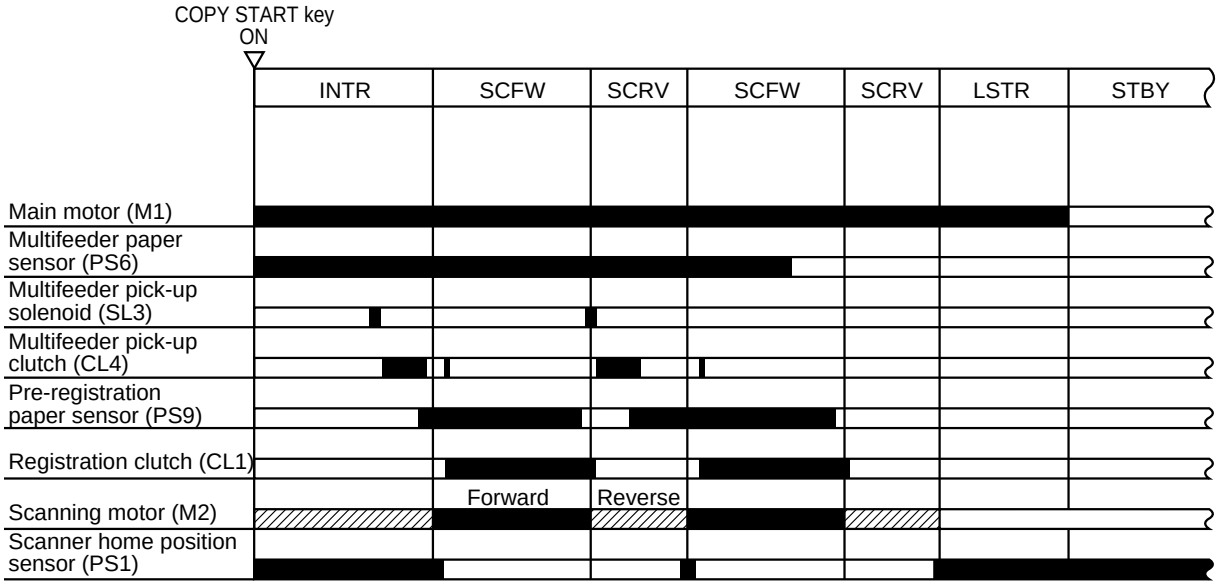

Figure 5-303

COPYRIGHT © 1997 CANON INC.

IV. CONTROLLING THE REGISTRATION CLUTCH

The registration clutch (CL1) controls copy paper so that it matches the image on the drum at a specific position.

Unless binding mode is used, the registration clutch (CL1) controls copy paper so that its leading edge and the leading edge of the image on the drum match.

In binding mode, control will be as shown in Figure 5-401 to create a binding margin on copies.

Selected mode		Copy paper timing	Shift (mm)	Copy paper on copy tray
one-sided original → one-sided copy		B		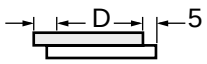
one-sided original ↓ two-sided copy	copying on 1st side	A	May be between 1 and 20 mm; figures assume a shift of 5 mm.	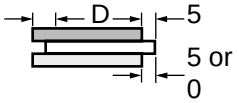
	copying on 2nd side	B		
two-sided original ↓ two-sided copy	copying on 1st side	A		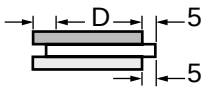
	copying on 2nd side	B		
two-sided original ↓ one-sided copy	copying on 1st side	B		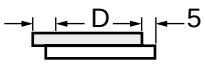
	copying on 2nd side	B		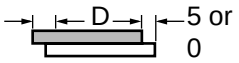
page separation ↓ (one-sided copy)	copying on 1st side(left)	B		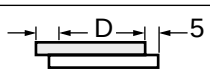
	copying on 2nd side(right)	B		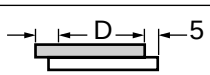
page separation ↓ two-sided copy	copying on 1st side(left)	A		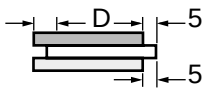
	copying on 2nd side(right)	B		

Copy paper | Image area during copying on 1st side | Image area during copying on 2nd side | D area: erased by blank exposure lamp.

COPYRIGHT © 1997 CANON INC.
CANON NP6330 REV.0 MAY 1997 PRINTED IN JAPAN (IMPRIME AU JAPON)



Figure 5-401

COPYRIGHT © 1997 CANON INC.

V. TWO-SIDED COPYING

A. Making Two-Sided Copies

1. Outline

The delivery motor (M6) starts to move in reverse a specific period of time after copy paper (from the fixing assembly) has moved past the delivery sensor (PS11), thereby moving the copy paper to the lower feeding assembly.

Upon arrival inside the lower feeding assembly, sheets of copy paper are stacked in a staggered pattern.

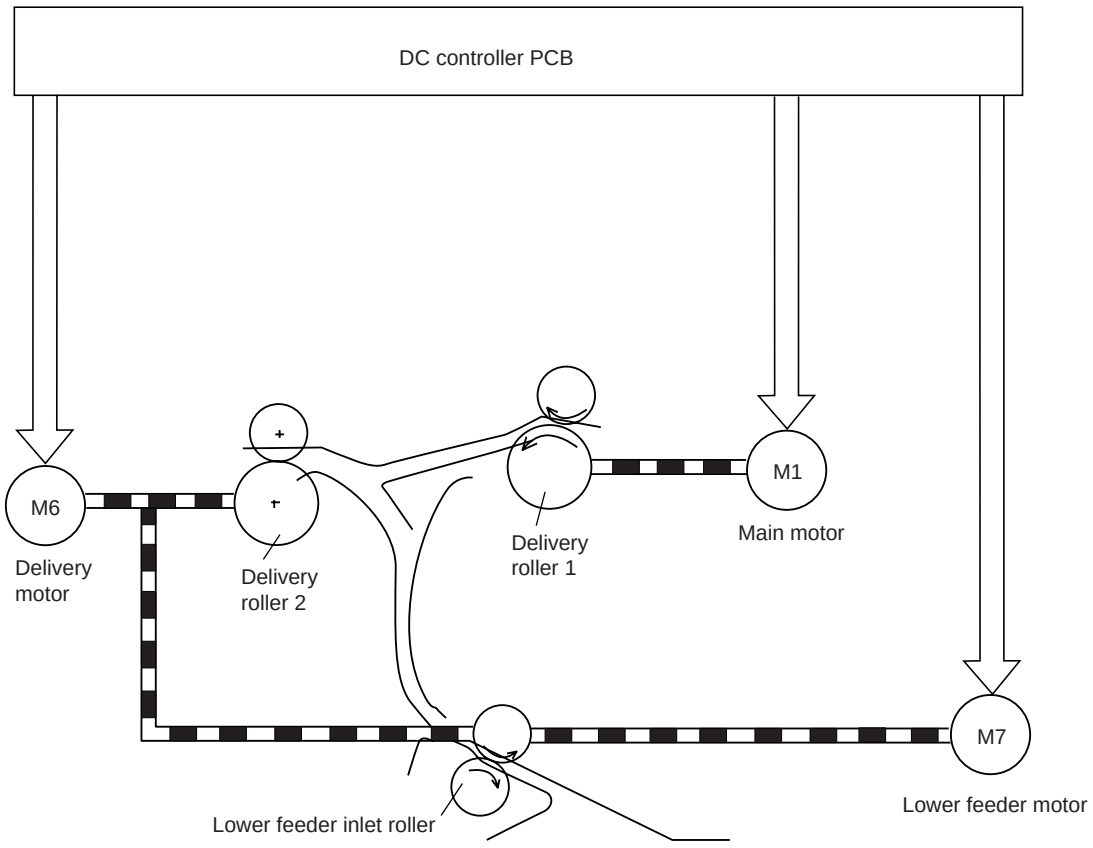

Figure 5-501

COPYRIGHT © 1997 CANON INC.
CANON NP6330 REV.0 MAY 1997 PRINTED IN JAPAN (IMPRIME AU JAPON)

2. Operations

1) After having moved through the fixing assembly, part of the copy paper is moved out of the delivery assembly by the work of the delivery rollers 1 and 2.

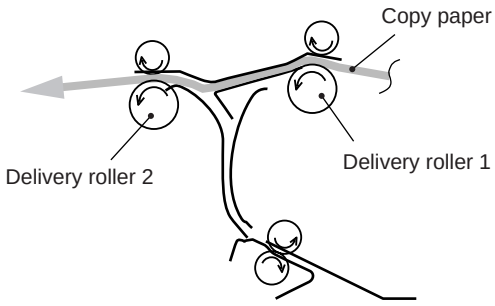

Figure 5-502

2) When the leading edge of the copy paper has moved past section A, the delivery roller 2 starts to rotate in reverse to move part of it to the inside of the copier.

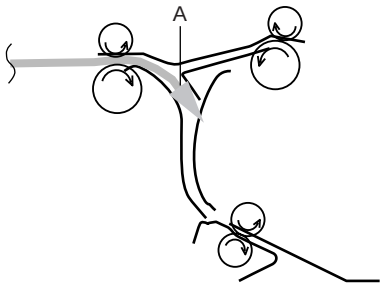

Figure 5-503

3) Once inside the machine, the copy paper is moved to the lower feeding assembly by the work of the delivery roller 2 and the lower feeding inlet roller.

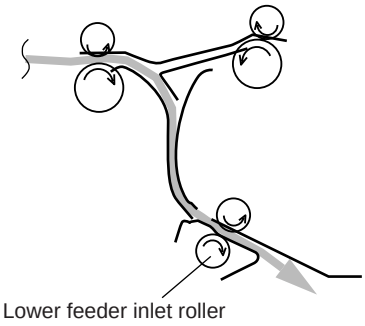

Figure 5-504

COPYRIGHT © 1997 CANON INC.

B. Lower Feeding Assembly

1. Outline

In two-sided copying mode, the copier performs continuous copying using its set-back mechanism and the lower feeder flapper.

The set-back mechanism serves to stack sheets of copy paper in the lower feeding assembly in a staggered pattern, thereby preventing double feeding within a limited space.

The set-back mechanism is used for the following conditions:

(1) Copy Paper Size
A3 (11" x 17") to B5 (STMT)

(2) Number of Sheets (stack)
20 sheets : A4, LTR, G-LTR, K-LGL, B5, A5, STMT
1 sheet : A3, 11" x 17", B4, LGL, B-OFFI, A-OFFI, A-LGL, AUS-FLS, FOOLSCAP, FOLIO, G-LGL, E-OFFI, OFFICIO, A4R, A-LTRR, LTRR, K-LGLR, G-LTRR, B5R, A-LTR, A5R, STMTR

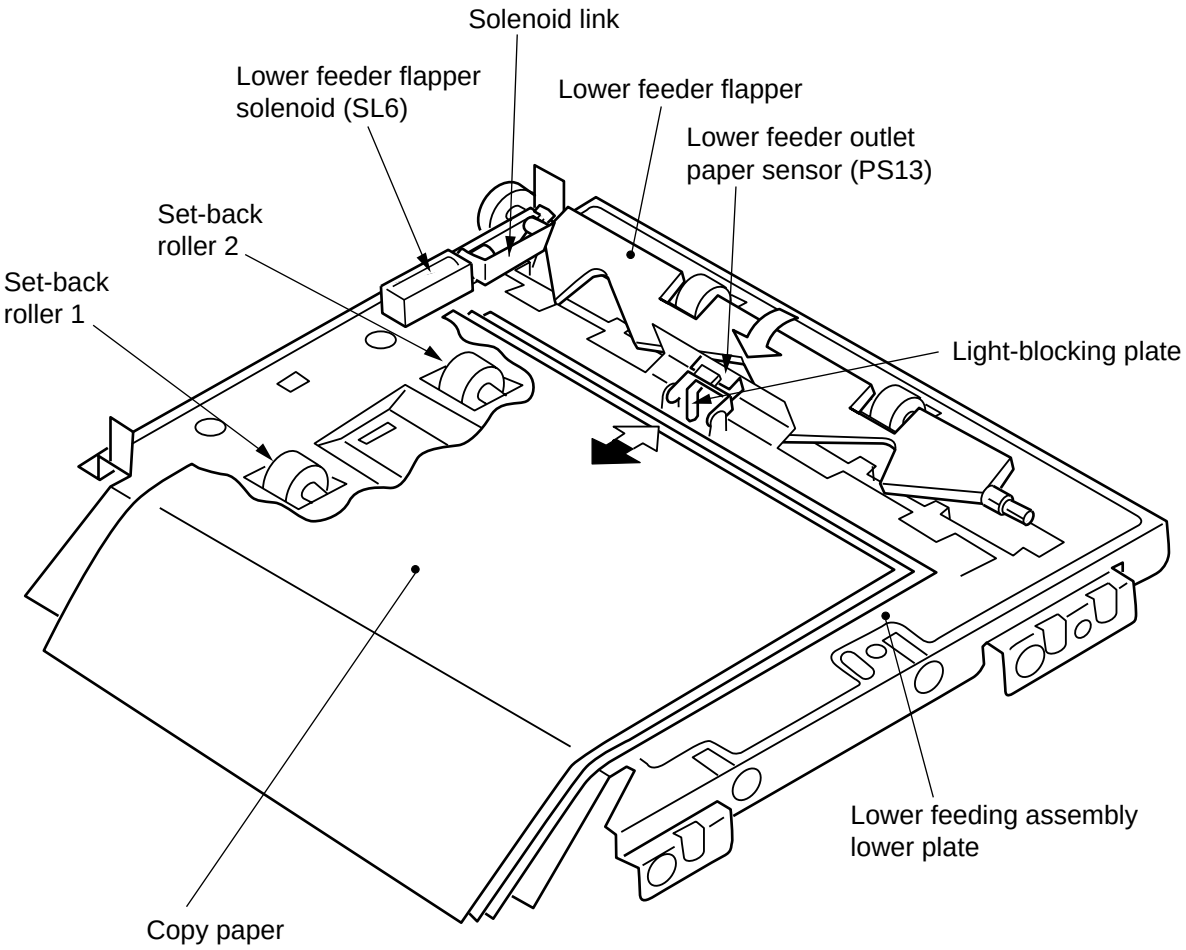

Figure 5-505

COPYRIGHT © 1997 CANON INC.
CANON NP6330 REV.0 MAY 1997 PRINTED IN JAPAN (IMPRIME AU JAPON)

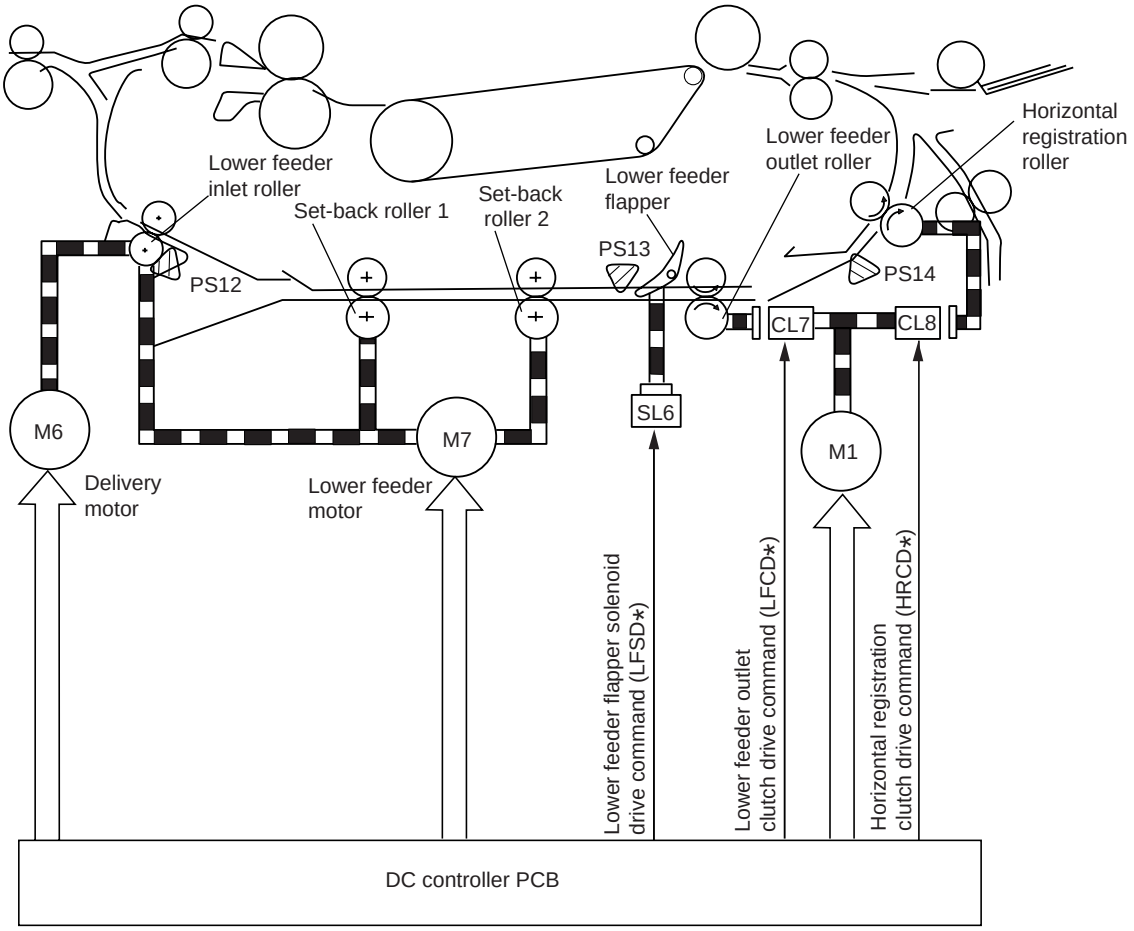
Lower feeder inlet roller
Set-back roller 1
Set-back roller 2
Lower feeder flapper
Lower feeder outlet roller
Horizontal registration roller
PS12
PS13
PS14
CL7
CL8
SL6
M6
M7
M1
Delivery motor
Lower feeder motor
Lower feeder flapper solenoid drive command (LFSD*)
Lower feeder outlet clutch drive command (LFCD*)
Horizontal registration clutch drive command (HRCD*)
DC controller PCB

Figure 5-506

2. Set-Back Operation

1) After copying on the first side, the first copy paper is sent from the delivery assembly to the lower feeding assembly. At that time, the leading edge of the copy paper is made to arch by the set-back roller 1.

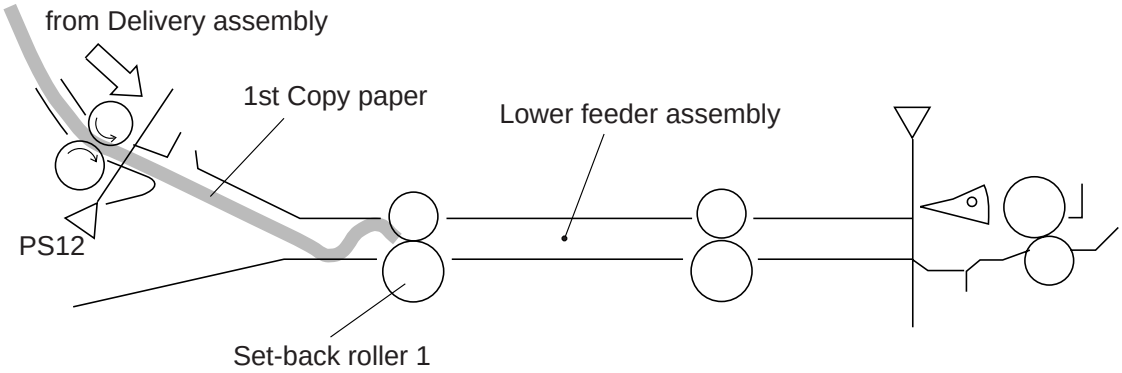

Figure 5-507

2) The lower feeder flapper lowers and, at the same time, the set-back rollers 1 and 2 rotate to move the copy paper forward so that the paper leaves the lower feeder inlet paper sensor (PS12)

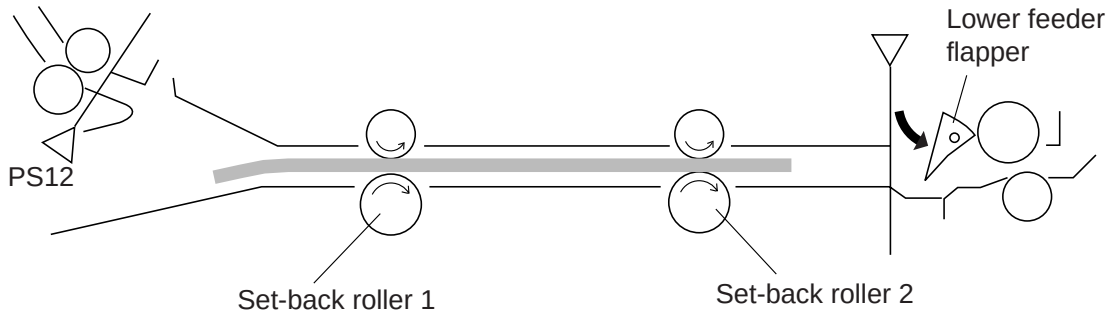

Figure 5-508

Reference:

If a large number of copies are made, its leading edge would reach the lower feeding assembly outlet roller assembly when its trailing edge is moved away from PS12; this problem is solved by changing the path of the paper by lowering the lower feeder flapper.

COPYRIGHT © 1997 CANON INC.
CANON NP6330 REV.0 MAY 1997 PRINTED IN JAPAN (IMPRIME AU JAPON)

3) The set-back rollers 1 and 2 are rotated in reverse. The copy paper is then stopped when the distance between its leading edge and the set-back roller 1 is 8 mm.

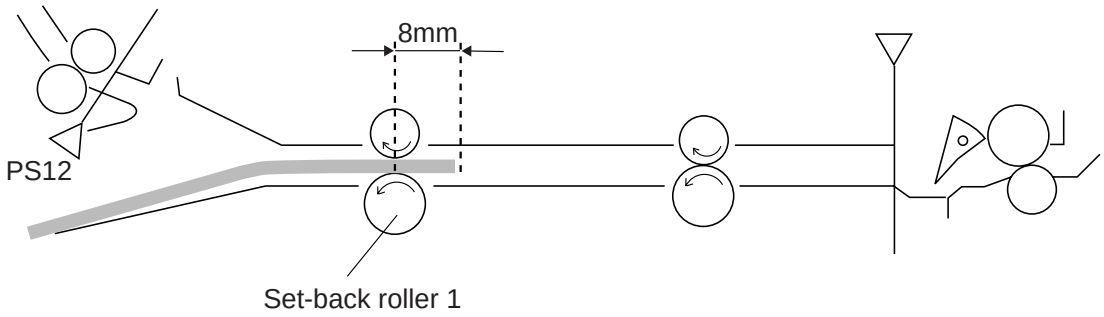

Figure 5-509

4) The second copy paper is moved to the lower feeding assembly.

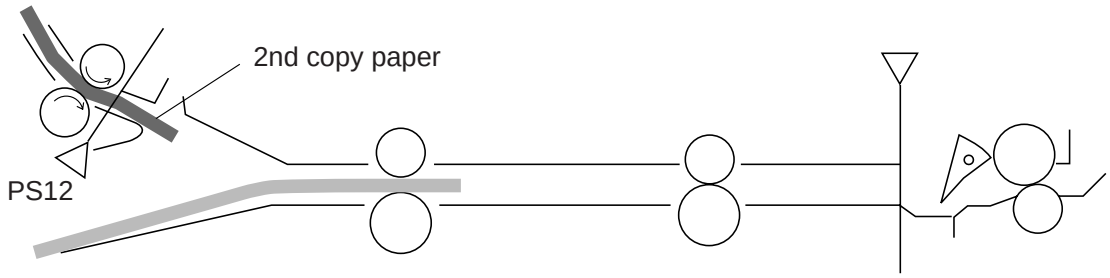

Figure 5-510

5) The leading edge of the second copy paper is made to arch by the set-back roller 1.

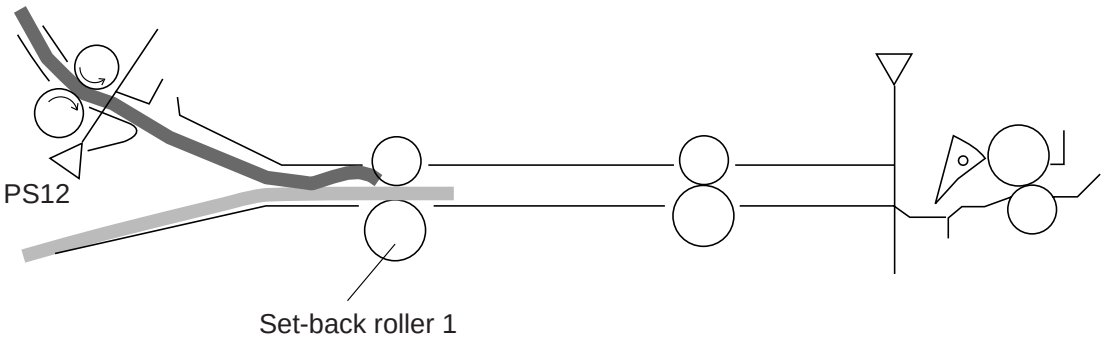

Figure 5-511

COPYRIGHT © 1997 CANON INC.

6) The set-back rollers 1 and 2 rotate to move the first and second copy papers forward. The trailing edge of the second copy paper is then moved away from the lower feeder inlet paper sensor (PS12).

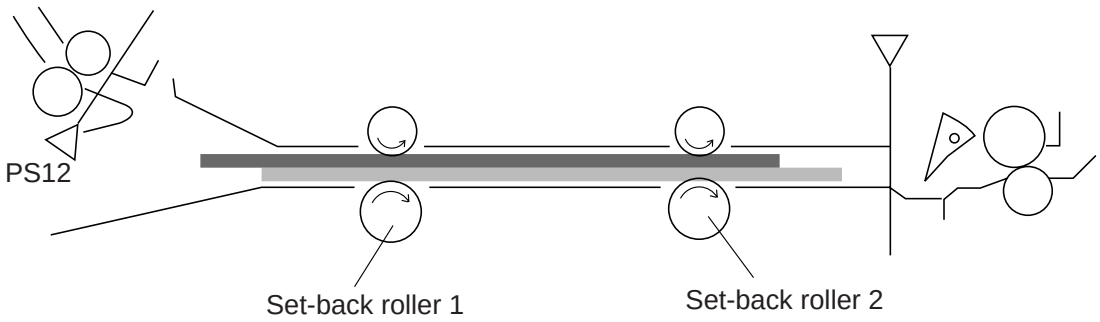

Figure 5-512

7) The set-back rollers 1 and 2 rotate in reverse. The copy paper is then stopped when the distance between its leading edge and the set-back roller 1 is 8 mm.

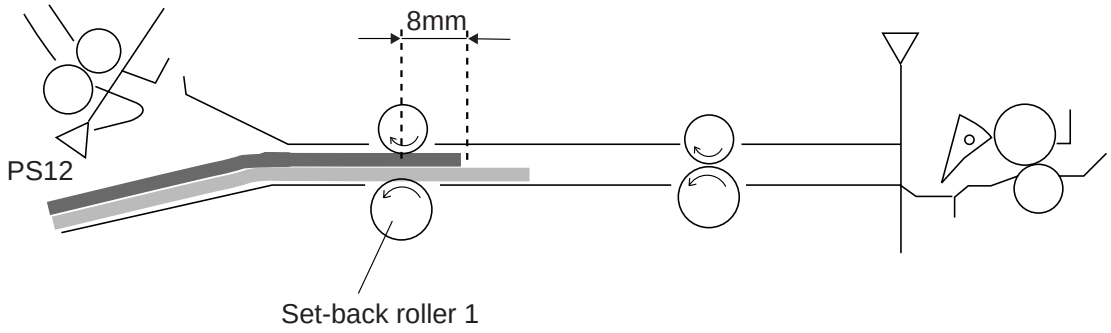

Figure 5-513

COPYRIGHT © 1997 CANON INC.
CANON NP6330 REV.0 MAY 1997 PRINTED IN JAPAN (IMPRIME AU JAPON)

8) Steps 1) through 7) are repeated up to the last copy, and the copies are stacked in the lower feeding assembly in a staggered pattern.
When the last copy has been stacked, the set-back rollers 1 and 2 are rotated, and the first copy is moved forward until it is detected by the lower feeder outlet paper sensor (PS13).

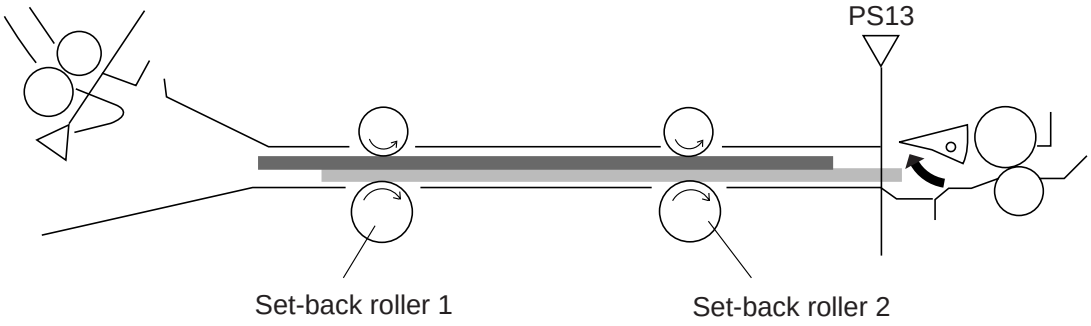

Figure 5-514

9) The set-back rollers 1 and 2 are rotated in reverse (at half speed), and the first copy paper is stopped when it has moved past the lower feeder outlet paper sensor (PS13).

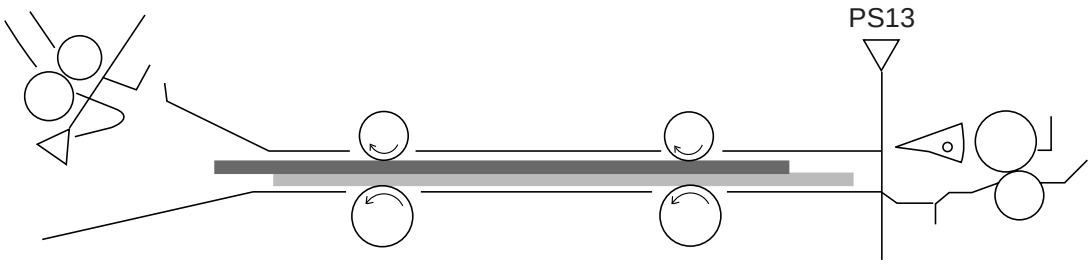

Figure 5-515

Reference:

If only one paper can be feeded on the lower feeding assmbly because of the copy paper seze, the copy paper is feeded the position 5 mm before the lower feeder outlet roller after feeded to the lower feeding assembly.

COPYRIGHT © 1997 CANON INC. CANON NP6330 REV.0 MAY 1997 PRINTED IN JAPAN (IMPRIME AU JAPON)

3. Sequence of Set-back Operation

- A4, 2 Copies, Continuous

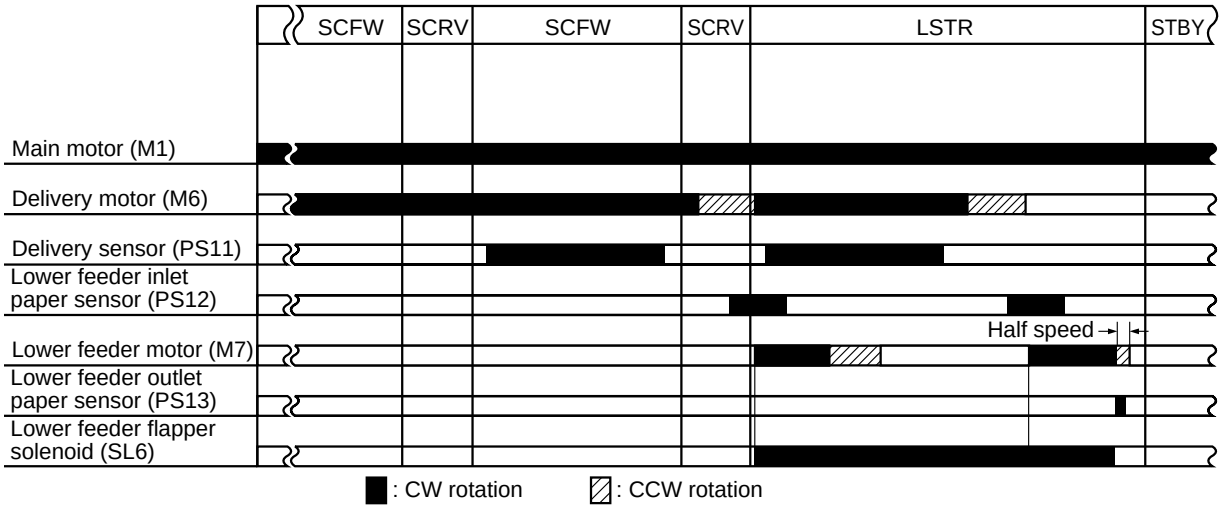

Figure 5-516

COPYRIGHT © 1997 CANON INC.
CANON NP6330 REV.0 MAY 1997 PRINTED IN JAPAN (IMPRIME AU JAPON)

4. Re-Pick Up

1) When the Copy Start key is pressed, the set-back rollers 1 and 2 start to rotate, moving all copy papers inside the lower feeding assembly forward.

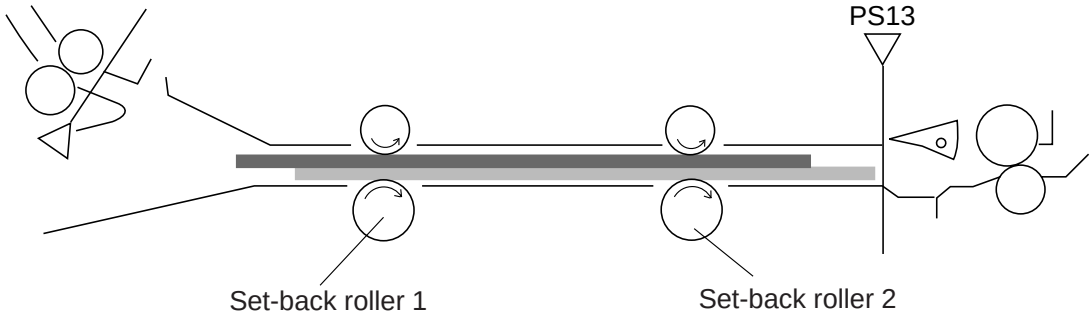

Figure 5-517

2) A specific period after the lower feeder outlet paper sensor (PS13) has detected the first copy paper, the lower feeder flapper is lowered and, at the same time, the lower feeder outlet roller start to rotate.

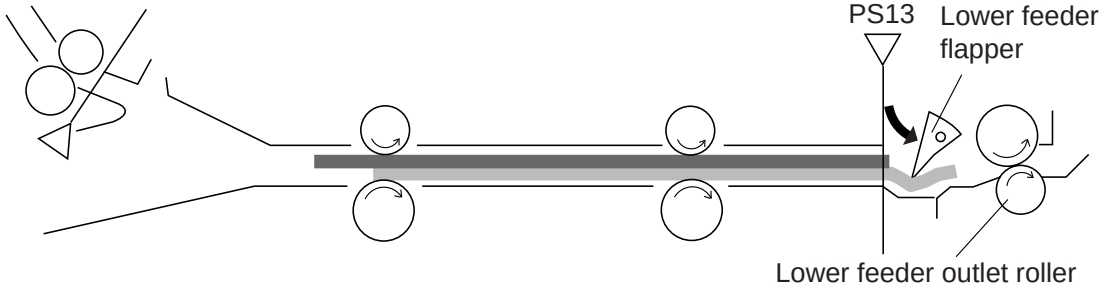

Figure 5-518

3) The set-back rollers 1 and 2 and the lower feeding assembly outlet roller rotate to separate the first copy paper from the subsequent copy papers.

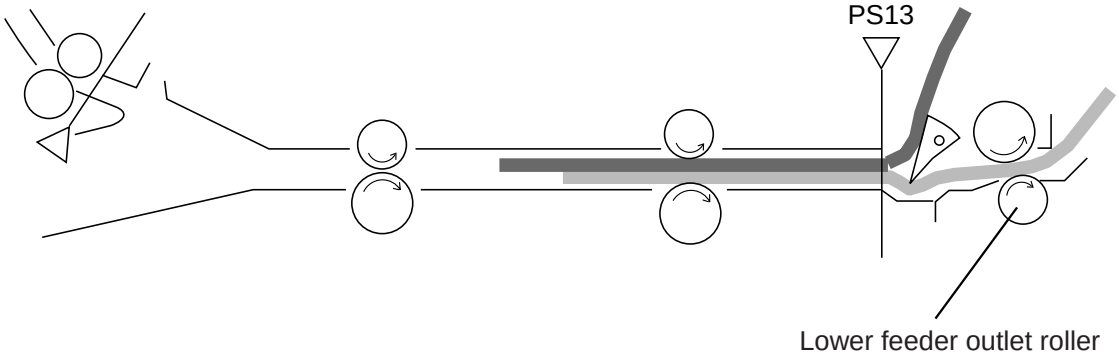

Figure 5-519

COPYRIGHT © 1997 CANON INC.

4) When the first copy paper has moved past the set-back roller 2, the set-back rollers 1 and 2 are rotated in reverse until the second copy paper moves past the lower feeder outlet paper sensor (PS13); at the same time, the lower feeder flapper is raised.

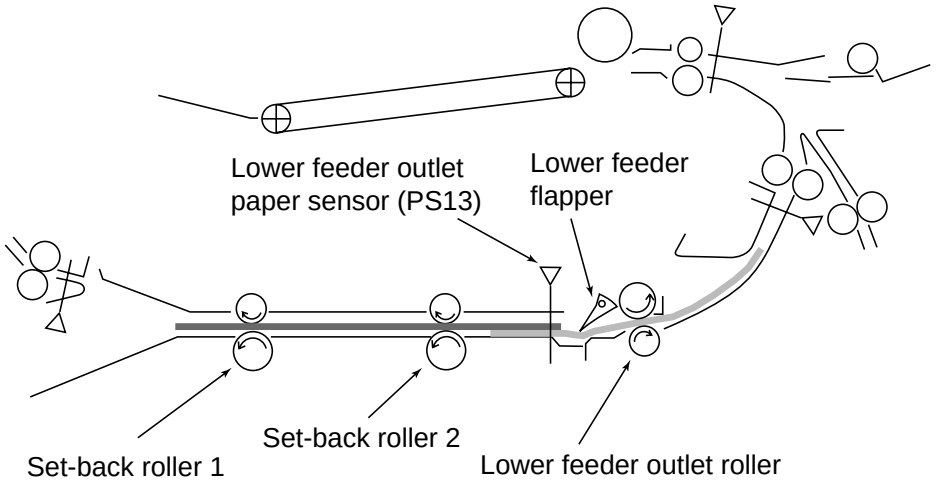

Figure 5-520

5) The re-pick up operation for the second copy paper is started as soon as the first copy paper turns on the pre-registration paper sensor (PS9).

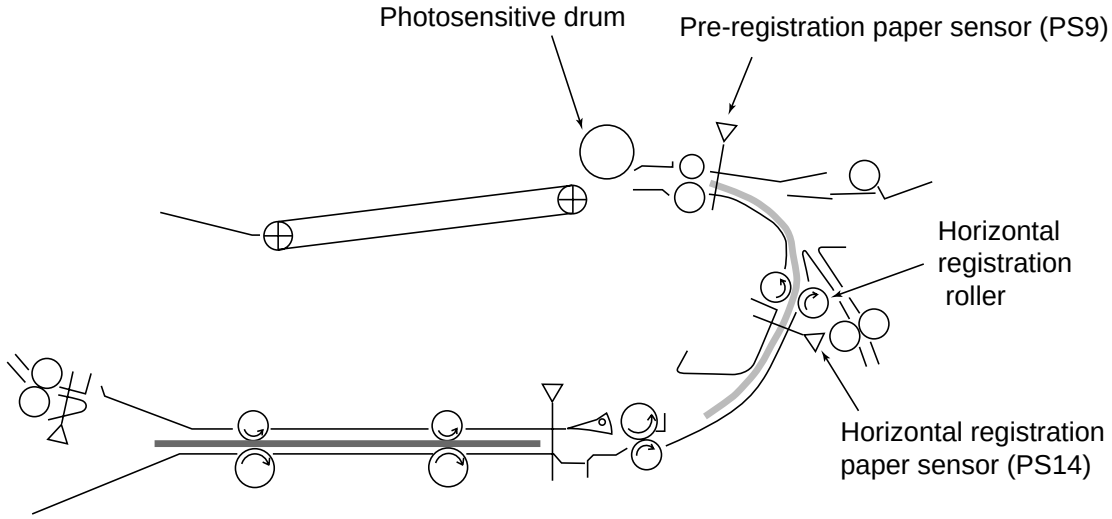

Figure 5-521

COPYRIGHT © 1997 CANON INC.
CANON NP6330 REV.0 MAY 1997 PRINTED IN JAPAN (IMPRIME AU JAPON)

5. Sequence of Re-pick-up Operation

- A4, 2 Copies, Continuous

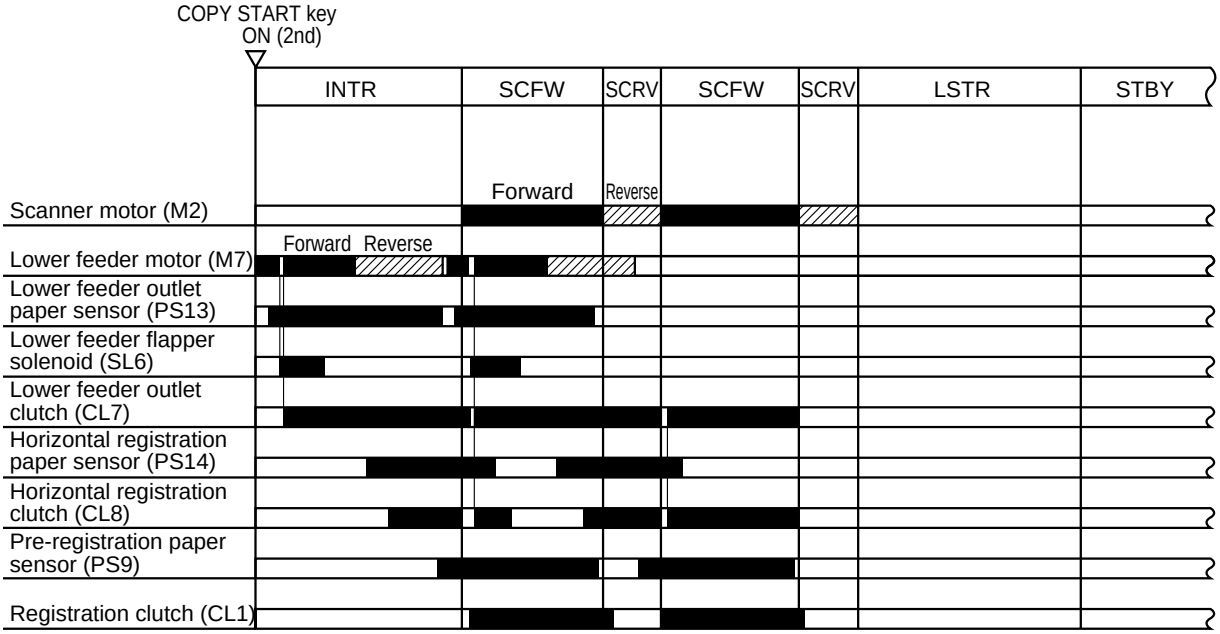

Figure 5-522

COPYRIGHT © 1997 CANON INC.

C. Horizontal Registration

1. Outline

The horizontal registration roller moves copy paper which has been re-picked up from the lower feeding assembly to the front/rear while keeping it centered along its feeding path.

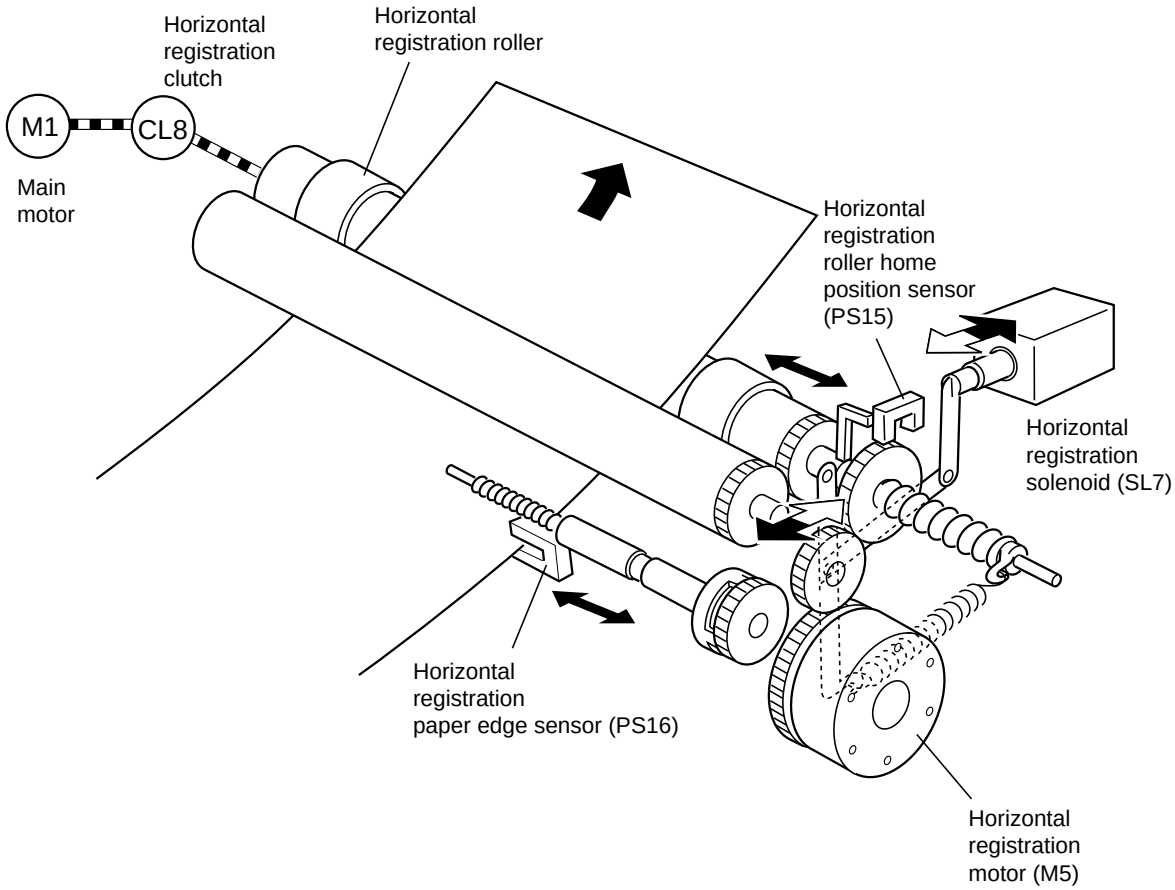

Figure 5-523

COPYRIGHT © 1997 CANON INC.
CANON NP6330 REV.0 MAY 1997 PRINTED IN JAPAN (IMPRIME AU JAPON)

2. Operation

1) When the Copy Start key is pressed for the first side of a two-sided copy (auto mode) the horizontal registration solenoid (SL7) turns on, and the horizontal registration motor (M5) rotates to move the horizontal registration paper edge sensor (PS16) to suit the size of the copy paper used.

Reference:

The horizontal registration paper edge sensor (PS16) moves to the center of the feeding path (i. e. the position that PS16 has detected the light-blocking plate.) when the power switch is turned, and moves to suit the width of paper when two-sided copying starts. It moves from its previous position if a different size paper is used.

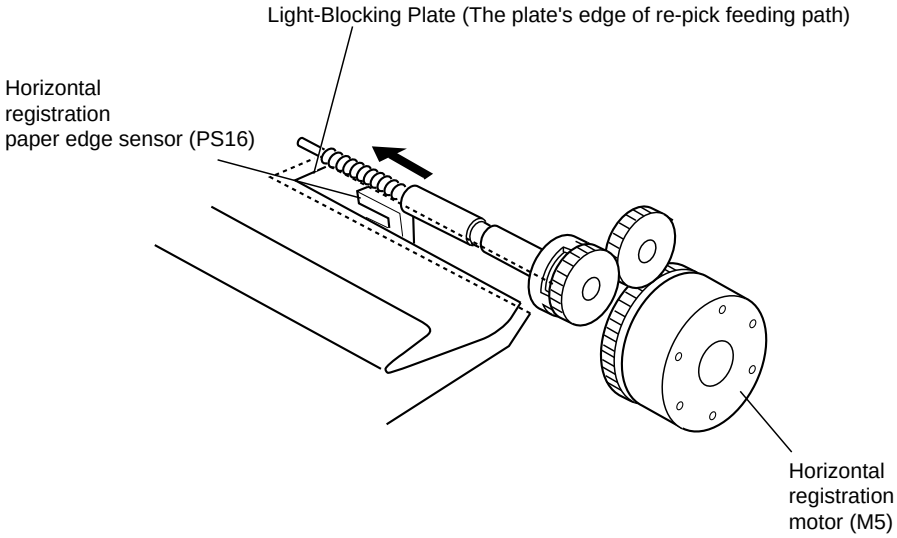

Figure 5-524

2) When the Copy Start key is pressed for the second side copy, the horizontal registration motor (M5) starts to rotate to move the horizontal registration roller to home position. (The home position of the horizontal registration roller is where the actuator has moved past the horizontal registration roller home position sensor PS15.)

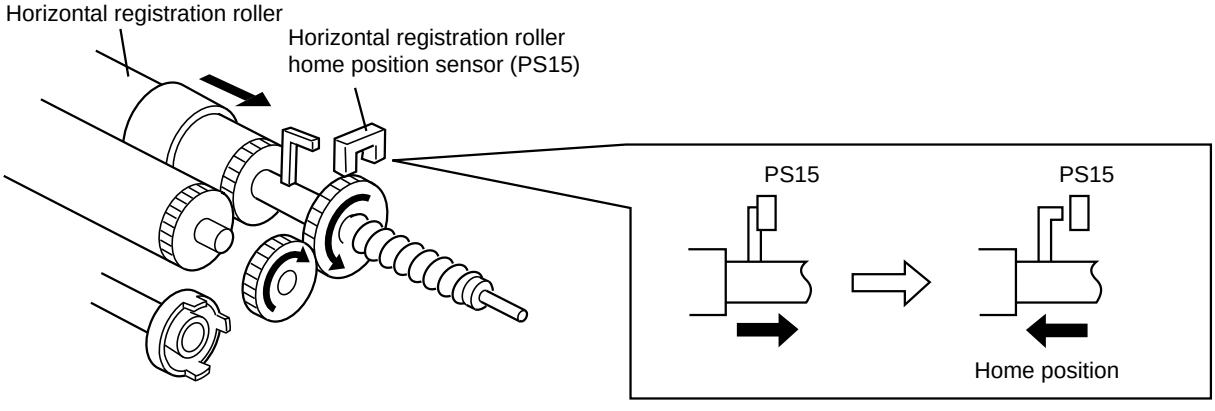

Figure 5-525

COPYRIGHT © 1997 CANON INC.

3) A specific period of time after the horizontal registration paper sensor (PS14) has detected copy paper, the horizontal registration clutch (CL8) turns on to rotate the horizontal registration roller.
4) If the horizontal registration paper edge sensor (PS16) is not detecting copy paper, the horizontal registration motor (M5) is rotated to move the roller until PS16 detects paper. (The horizontal registration roller moves to a point where paper has moved PS16.)

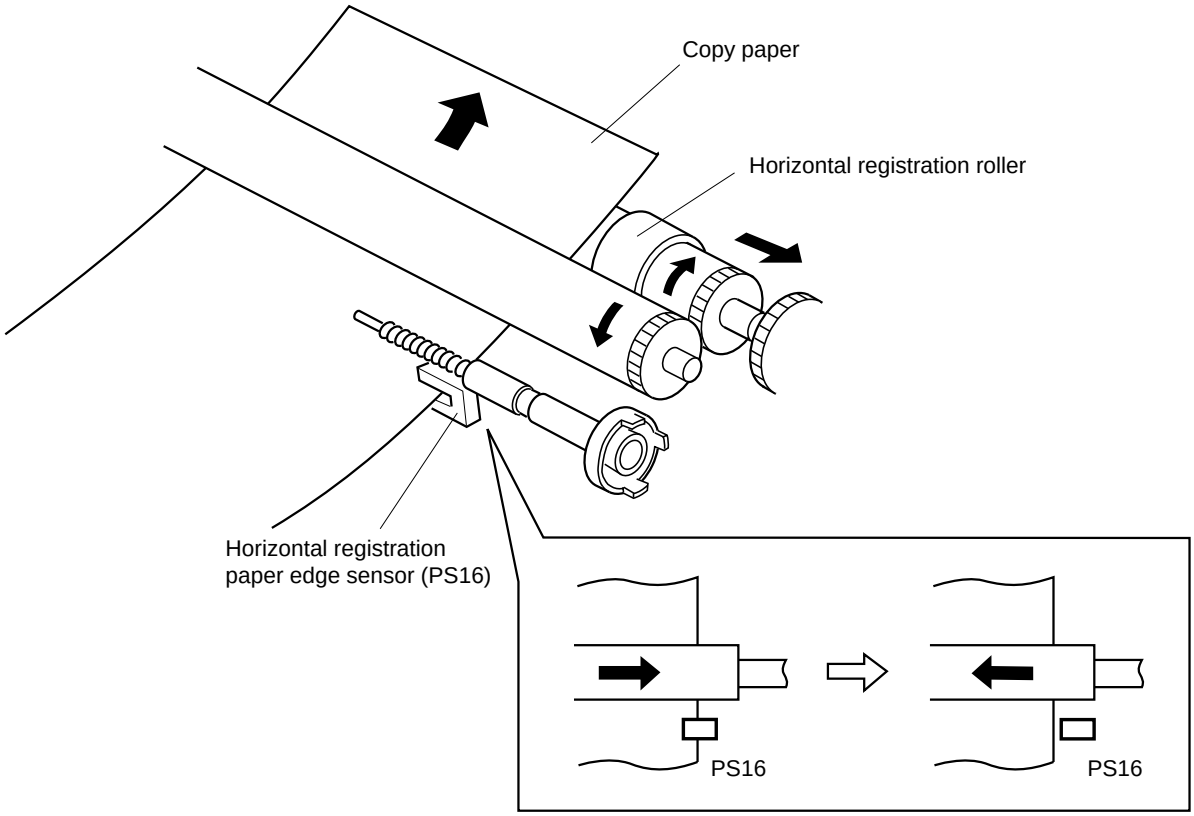

Figure 5-526

5) Steps 1) through 4) are repeated up to the last copy.

COPYRIGHT © 1997 CANON INC.
CANON NP6330 REV.0 MAY 1997 PRINTED IN JAPAN (IMPRIME AU JAPON)

3. Sequence of Operation



Figure 5-527

VI. DETECTING JAMS

A. Outline

The following eight sensors are used to check the movement of copy paper:

- Pre-registration paper sensor (PS9)
- Separation sensor (PS10)
- Delivery sensor (PS11)
- Vertical path roller 1 paper sensor (PS7)
- Vertical path roller 2 paper sensor (PS8)
- Lower feeder inlet paper sensor (PS12)
- Lower feeder outlet paper sensor (PS13)
- Horizontal registration sensor (PS14)

The copier detects a jam in reference to the presence/absence of paper at a specific sensor at such times as programmed in the microprocessor in advance.

The copier is equipped with a mechanism to remember the remaining number of copies to make at time of a jam and the effective copying mode even after the power is turned OFF for jam removal.

The microprocessor possesses the following sequences of jam detection; it assumes the presence of a jam also when any of the sensors detests copy paper at power-on.

When a jam is detected, power to the fixing heater (H1,H2) will be cut off and the copier operation will be stopped immediately; at the same time, the Jam indicator will be flashed on the control panel and the jam location indicator will also be flashed.

When the jam detection mechanism turns ON, the jam in question will not be counted as a copy made.

COPYRIGHT © 1997 CANON INC.
CANON NP6330 REV.0 MAY 1997 PRINTED IN JAPAN (IMPRIME AU JAPON)

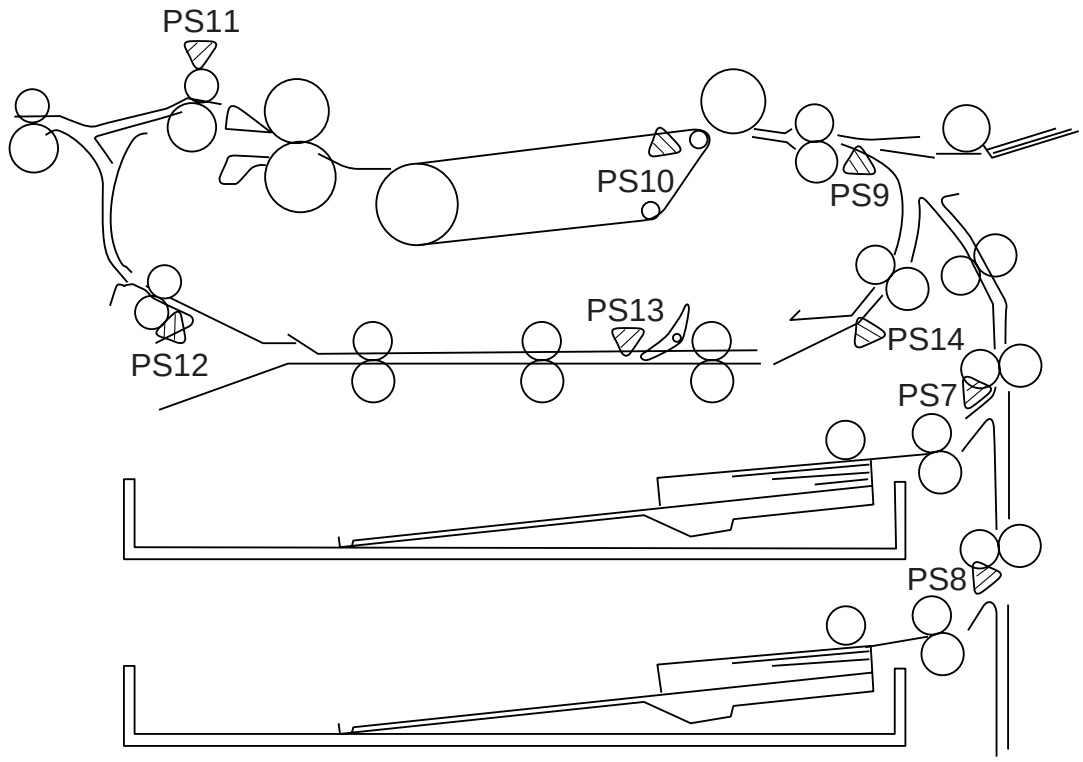

Figure 5-601

COPYRIGHT © 1997 CANON INC.

① Pick-Up Delay Jam (Cassette 1)

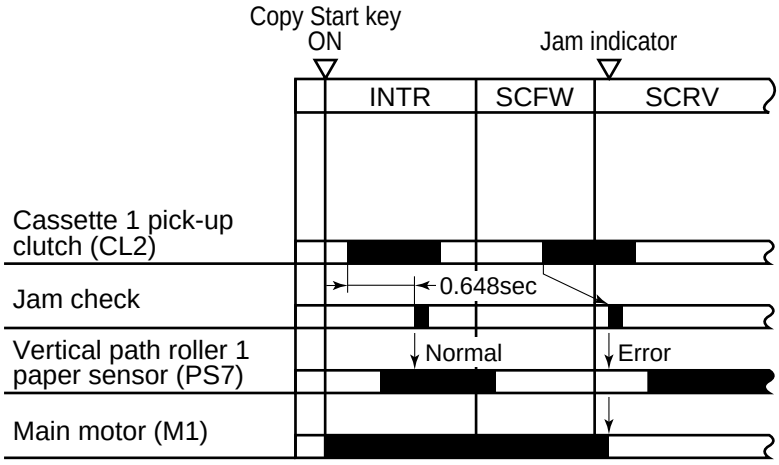

Figure 5-602

② Pick-Up Delay Jam (Cassette 2)

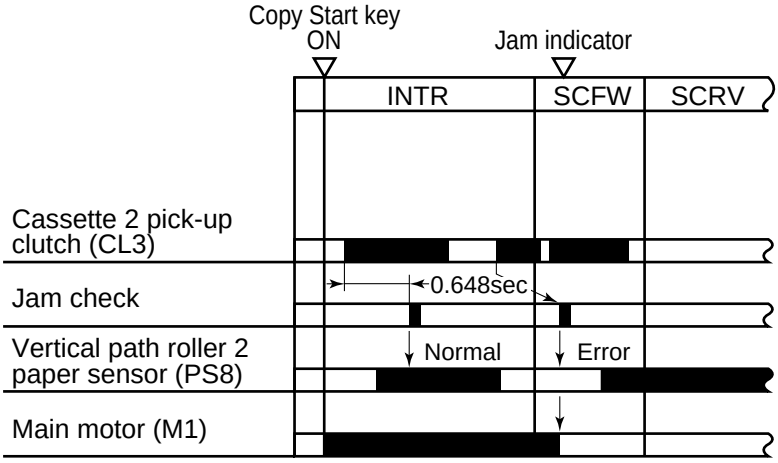

Figure 5-603

COPYRIGHT © 1997 CANON INC.
CANON NP6330 REV.0 MAY 1997 PRINTED IN JAPAN (IMPRIME AU JAPON)

③ Pick-Up Delay Jam (Multifeeder)

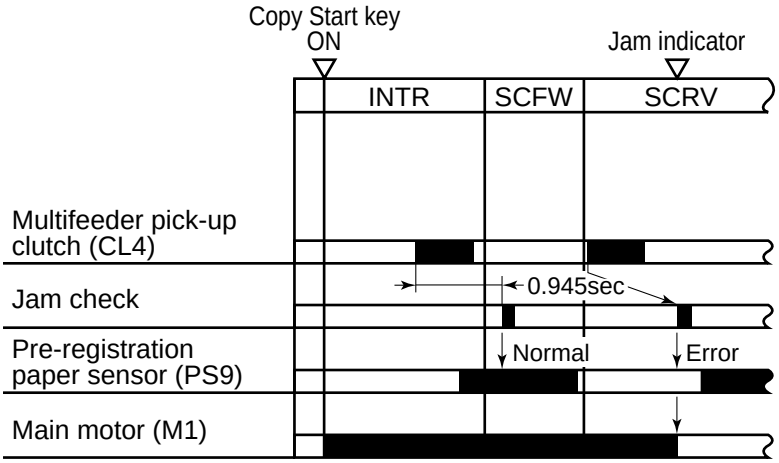

Figure 5-604

④ Pick-Up Stationary Jam

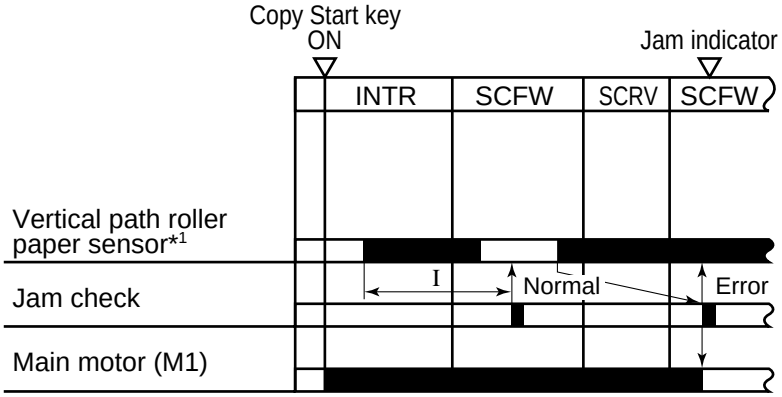

*1: Vertical path roller 1 paper sensor (PS7)
Vertical path roller 2 paper sensor (PS8)

I: Varies according to paper length (EX. A4:1.387sec)

Figure 5-605

COPYRIGHT © 1997 CANON INC.

⑤ Registration Sensor Delay Jam (except for multifeeder pick-up)

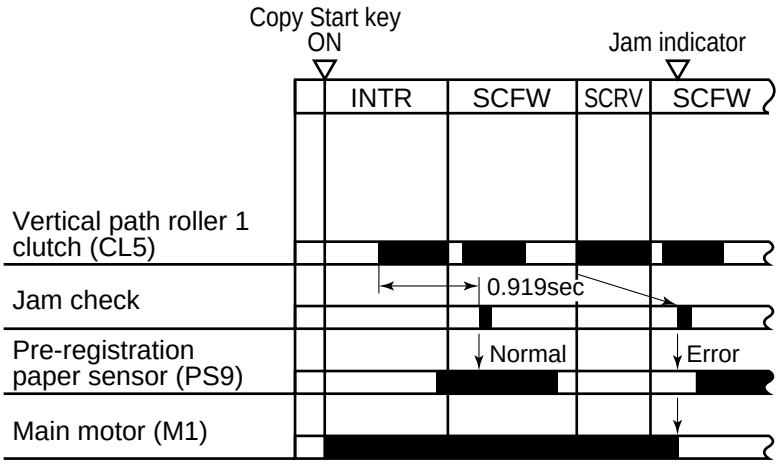

Figure 5-606

⑥ Registration Sensor Stationary Jam

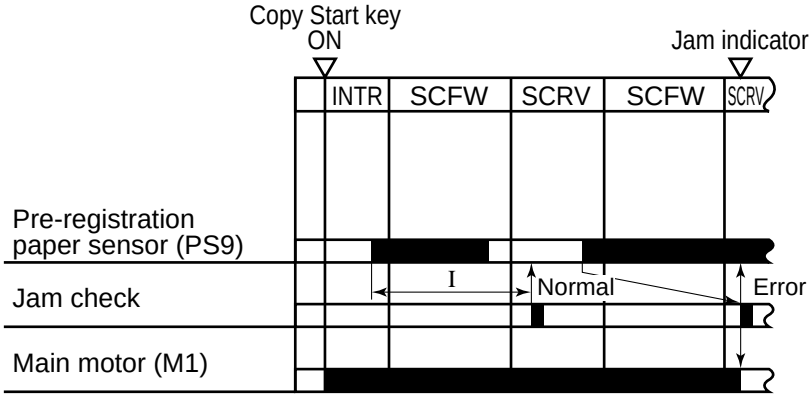

I: Varies according to paper length (EX. A4:1.343sec)

Figure 5-607

COPYRIGHT © 1997 CANON INC.
CANON NP6330 REV.0 MAY 1997 PRINTED IN JAPAN (IMPRIME AU JAPON)

⑦ Separation Sensor Delay Jam

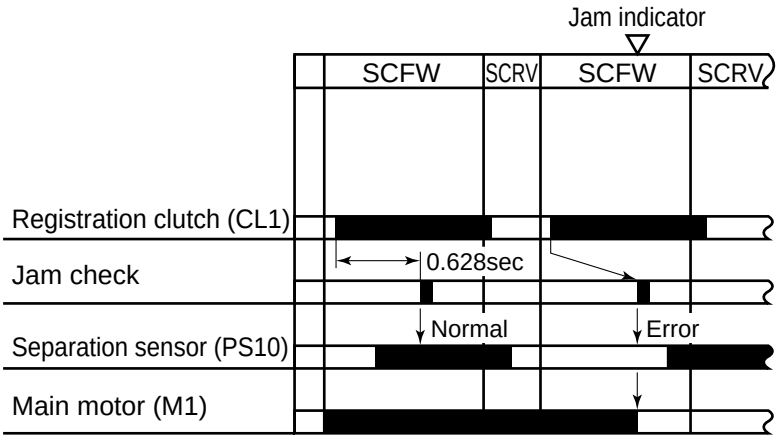

Figure 5-608

⑧ Separation Sensor Stationary Jam

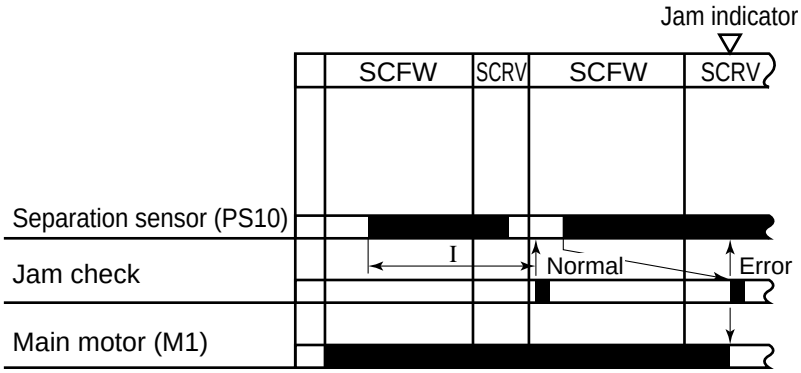

I: Varies according to paper length (EX. A4: 1.593sec)

Figure 5-609

COPYRIGHT © 1997 CANON INC. CANON NP6330 REV.0 MAY 1997 PRINTED IN JAPAN (IMPRIME AU JAPON)

⑨ Delivery Sensor Delay Jam

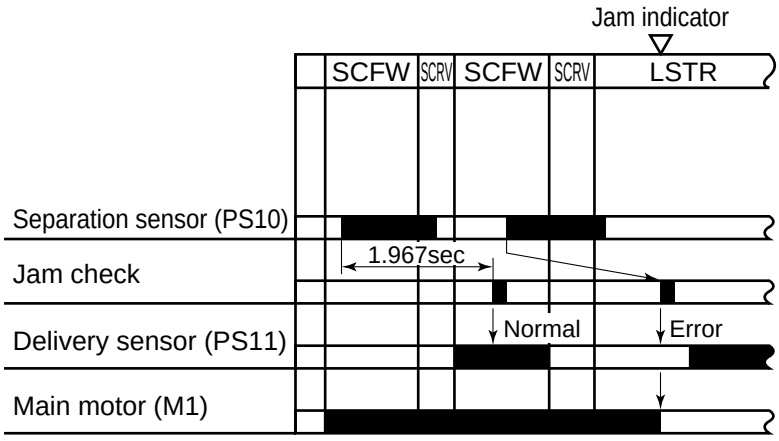

Figure 5-610

⑩ Delivery Sensor Stationary Jam

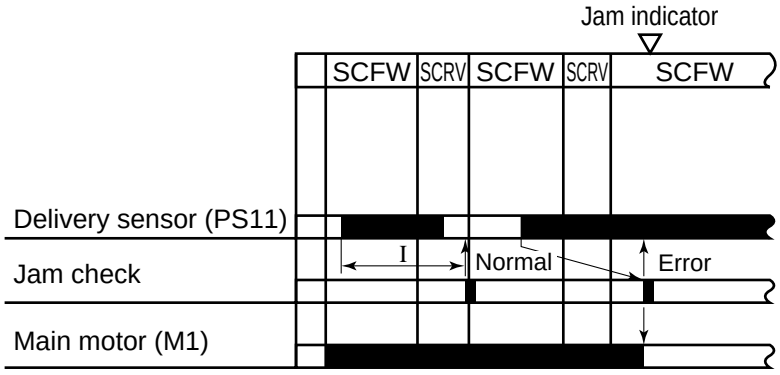

I: Varies according to paper length (EX. A4:1.421sec)

Figure 5-611

COPYRIGHT © 1997 CANON INC.

⑪ Lower Feeder Inlet Paper Sensor Delay Jam

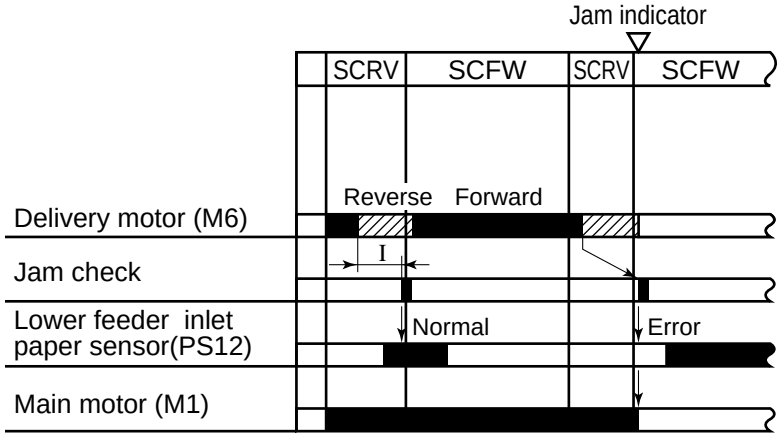

· The copy paper size is set so that the 20 sheets can be feeded on the lower feeding assembly.
I : 0.473sec

· The copy paper size is set so that only one sheet can be feeded on the lower feeding assembly.
I : 0.946sec

Figure 5-612

⑫ Lower Feeder Inlet Paper Sensor Stationary Jam

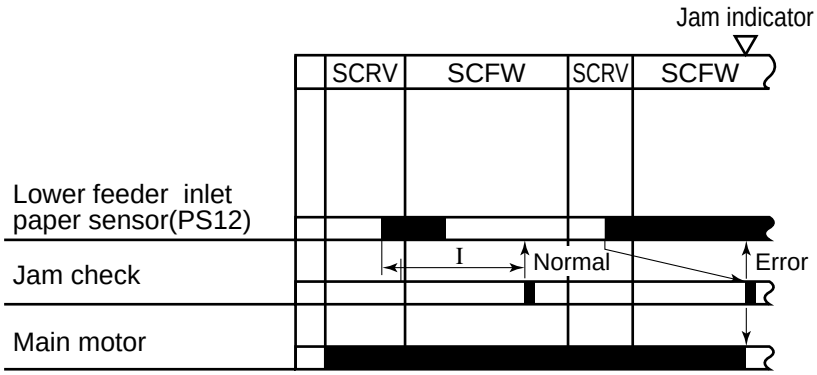

· The copy paper size is set so that the 20 sheets can be feeded on the lower feeding assembly.
I : 1.143sec

· The copy paper size is set so that only one sheet can be feeded on the lower feeding assembly.
I : 2.593sec

Figure 5-613

COPYRIGHT © 1997 CANON INC.

⑬ Lower Feeder Outlet Paper Sensor Delay Jam (1 Sheet)

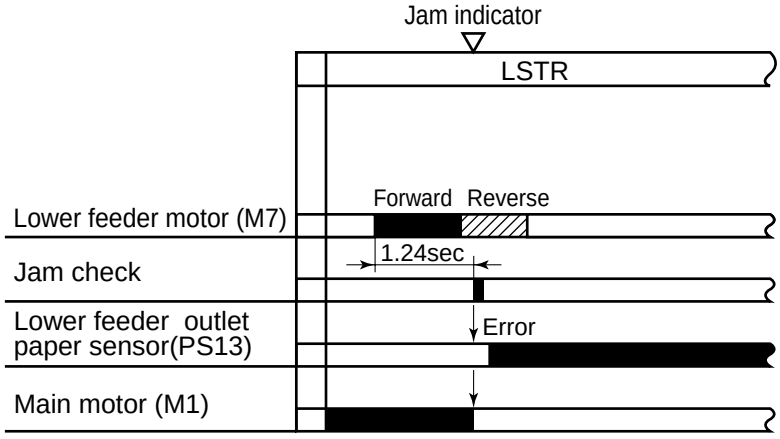

Figure 5-614

⑭ Lower Feeder Outlet Paper Sensor Stationary Jam (20 Sheets)

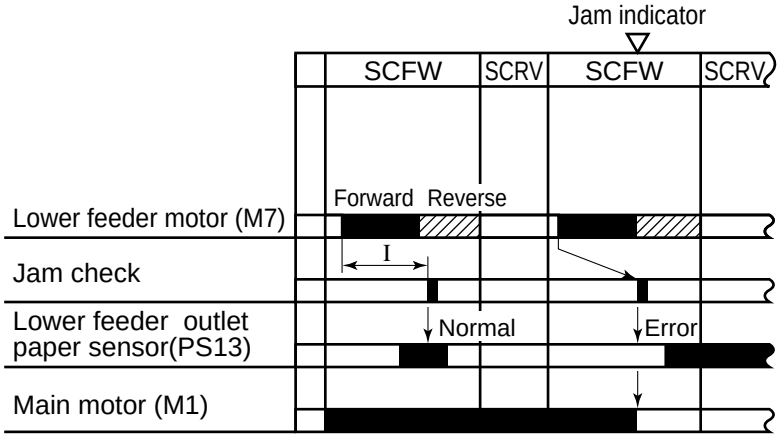

I : Varies according to number of stack sheet

(· 1 sheet of copy paper: 1.218sec
· 5 sheets of copy paper: 1.040sec)

: but not detect a jam when copying more than 5 sheets of copy paper

Figure 5-615

COPYRIGHT © 1997 CANON INC.
CANON NP6330 REV.0 MAY 1997 PRINTED IN JAPAN (IMPRIME AU JAPON)

⑮ Lower Feeder Outlet Paper Sensor Delay Jam (20 Sheets)

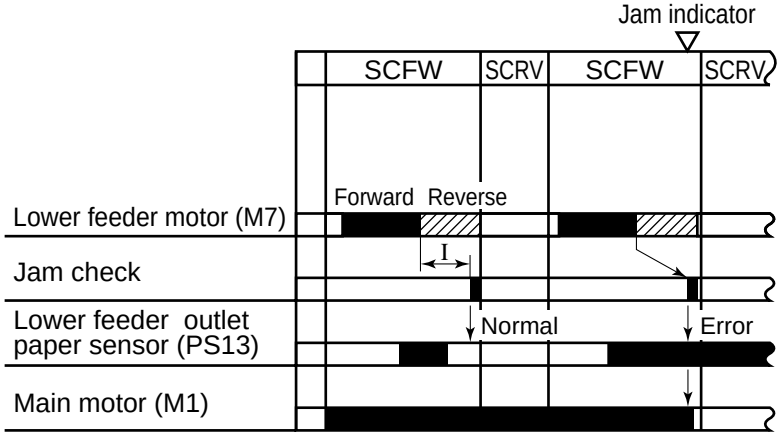

I : Varies according to number of stack sheet

(· 5 sheets of copy paper: 0.444sec
· 10 sheets of copy paper: 0.814sec
· 20 sheets of copy paper: 1.702sec)

Figure 5-616

⑯ Lower Feeder Outlet Paper Sensor Stationary Jam(Re-pick-up)

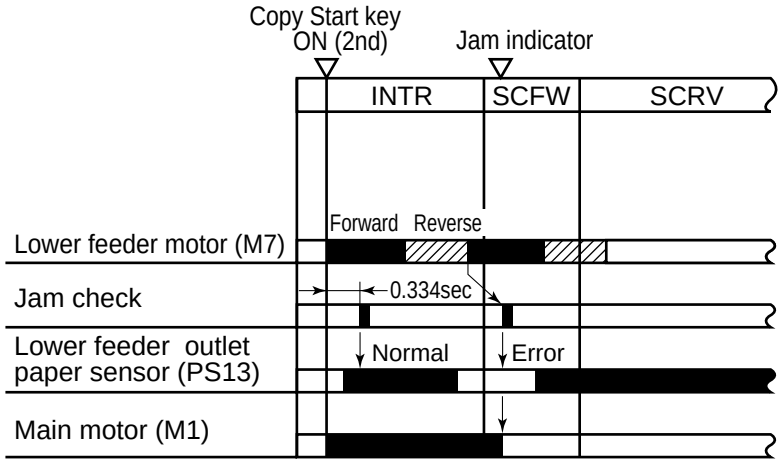

Figure 5-617

COPYRIGHT © 1997 CANON INC.
CANON NP6330 REV.0 MAY 1997 PRINTED IN JAPAN (IMPRIME AU JAPON)

⑰ Horizontal Registration Paper Sensor Delay Jam

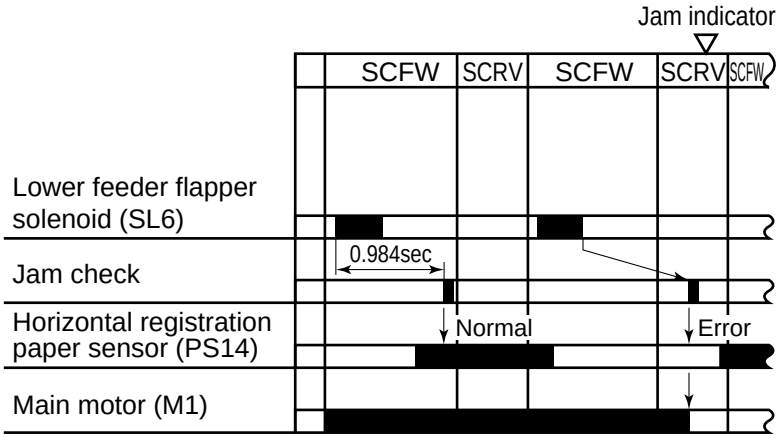

Figure 5-618

⑱ Horizontal Registration Paper Sensor Stationary Jam

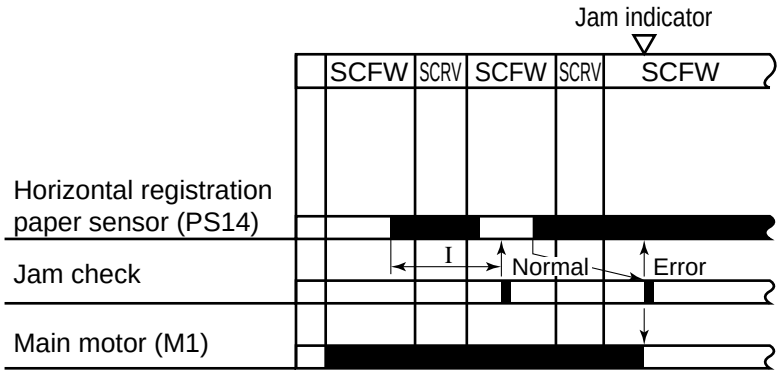

I : Varies according to paper length (EX. A4: 1.33sec)

Figure 5-619

COPYRIGHT © 1997 CANON INC.
CANON NP6330 REV.0 MAY 1997 PRINTED IN JAPAN (IMPRIME AU JAPON)

VII. DISASSEMBLY AND ASSEMBLY

This section explains mechanical characteristics and describes how to disassemble/assemble the copier.

Be sure to observe the following whenever disassembling/assembling the copier:

1. Disconnect the power plug before starting the work.
2. Unless otherwise shown, assemble the parts by reversing the steps given to disassemble them.
3. Identify each screw by type (length, diameter) and location.
4. A washer is used for two of the mounting screws on the rear cover to protect against static electricity; be sure to use the washer when assembling the part.
5. A washer is used for some mounting screws (for grounding wire, varistor) to ensure correct electrical continuity; be sure to use the washer when assembling the part.
6. As a rule, do not operate the copier while any of its parts is removed.
7. Be sure to turn off the front door switch or the power switch before sliding out the fixing assembly.

COPYRIGHT © 1997 CANON INC.
CANON NP6330 REV.0 MAY 1997 PRINTED IN JAPAN (IMPRIME AU JAPON)

A. Pick-Up Assembly

1. Construction

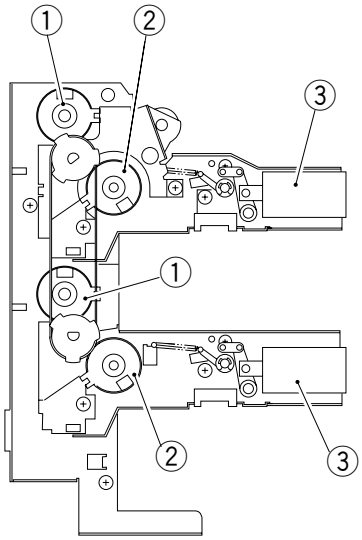

① Vertical path roller clutch
② Pick-up clutch
③ Pick-up release solenoid

Figure 5-701

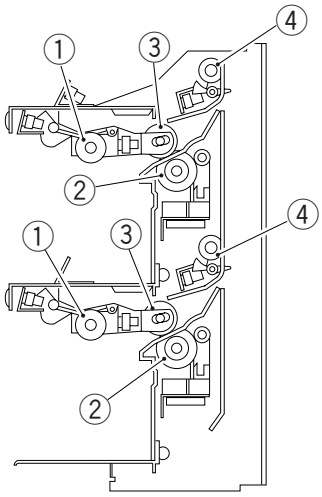

① Pick-up roller
② Separation roller
③ Feeding roller
④ Vertical path roller

Figure 5-702

COPYRIGHT © 1997 CANON INC.
CANON NP6330 REV.0 MAY 1997 PRINTED IN JAPAN (IMPRIME AU JAPON)

2. Removing the Pick-Up Assembly

1) Remove the cassette from the copier.
2) Remove the multifeeder inside cover and the right cover.
3) Remove the front right cover.
4) Disconnect the two connectors ① of the lifter motor.
5) Remove the four screws ②, and remove the cassette lifter motor assembly ③.

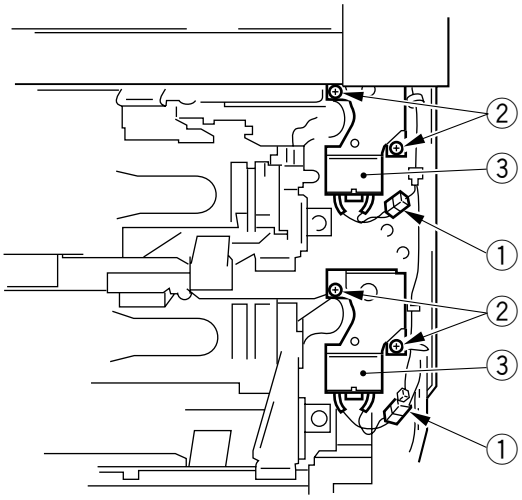

Figure 5-703

6) If a pedestal is used, open the pedestal right door, remove the screw ④ and the leaf spring ⑤, and shift the registration guide ⑥ to the outside.

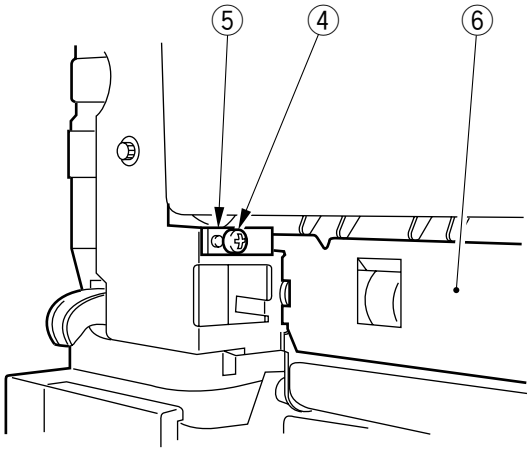

Figure 5-704

COPYRIGHT © 1997 CANON INC. CANON NP6330 REV.0 MAY 1997 PRINTED IN JAPAN (IMPRIME AU JAPON)

7) Disconnect the three connectors ⑦ of the pick-up assembly.
8) Remove the seven screws ⑧, and remove the pick-up assembly ⑨.

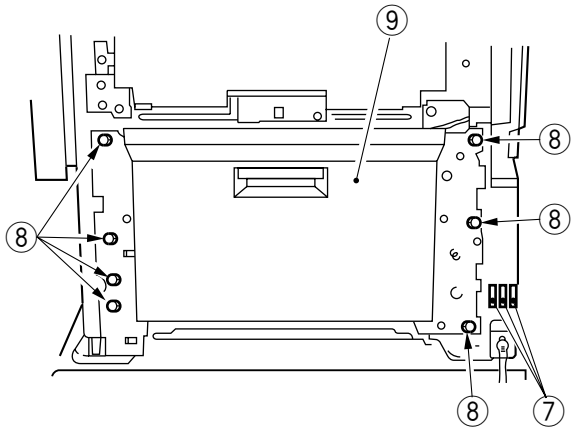

Figure 5-705

Note:

Be sure to hold the pick-up assembly side plates whenever you are installing or removing the pick-up assembly.

3. Removing the Pick-Up Roller

1) Remove the pick-up assembly.
2) Remove the stop ring (plastic) ①, and pull out the pick-up roller ② together with its collar.

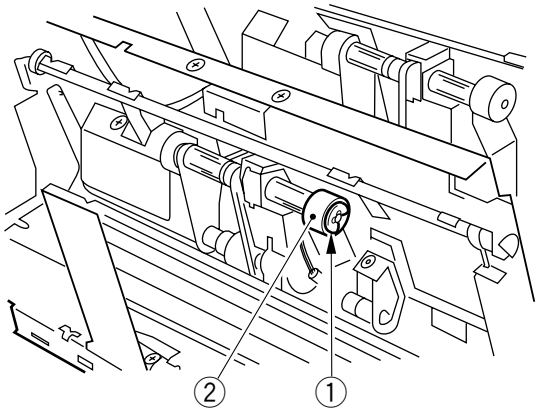

Figure 5-706

COPYRIGHT © 1997 CANON INC.
CANON NP6330 REV.0 MAY 1997 PRINTED IN JAPAN (IMPRIME AU JAPON)

4. Points to Note When Installing the Pick-Up Roller

When installing the pick-up roller ① to the pick-up assembly, be sure that the round marking ② on the rubber portion is toward the front of the copier.

The pick-up rollers are identified by color as follows:
If brass, use it for the front.
If silver, use it for the rear.

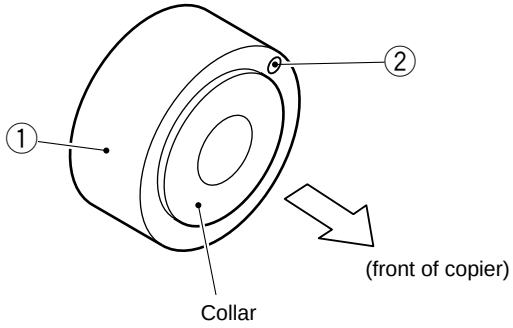

Figure 5-707

Note:

Do not separate the rubber portion of the pick-up roller from the collar.

5. Removing the Feeding Roller

1) Remove the pick-up roller.
2) Remove the pick-up roller from the front and the rear.
3) Remove the screw ①, and remove the pick-up roller arm bushing ② and the pick-up roller arm ③.

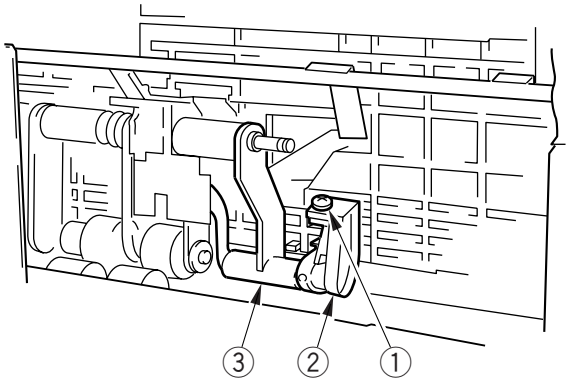

Figure 5-708

COPYRIGHT © 1997 CANON INC. CANON NP6330 REV.0 MAY 1997 PRINTED IN JAPAN (IMPRIME AU JAPON)

4) Disconnect the connector ④ and the stop ring ⑤ of the feeding roller; then, pull out the pick-up roller unit ⑥ and the feeding roller ⑦ at the same time.

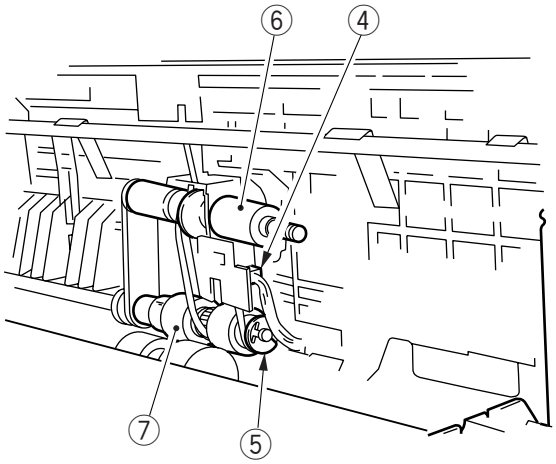

Figure 5-709

Reference:

Whenever installing the feeding roller ① to the pick-up assembly, be sure so that the gear ② attached to the feeding roller is toward the rear of the copier.

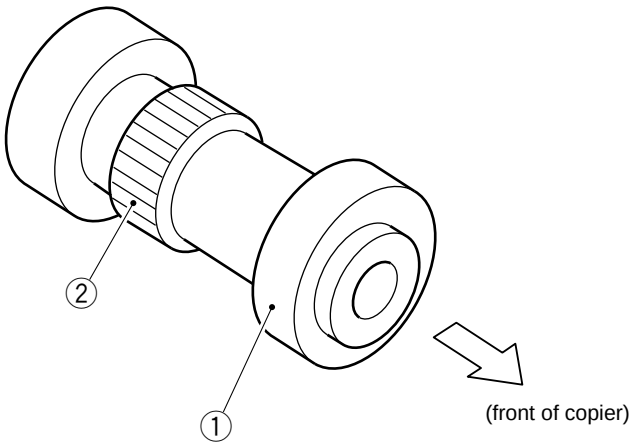

Figure 5-710

COPYRIGHT © 1997 CANON INC.

6. Removing the Separation Roller

1) Remove the pick-up assembly.
2) Remove the right door.
3) Remove the screw ①, and remove the pick-up inlet guide ②.

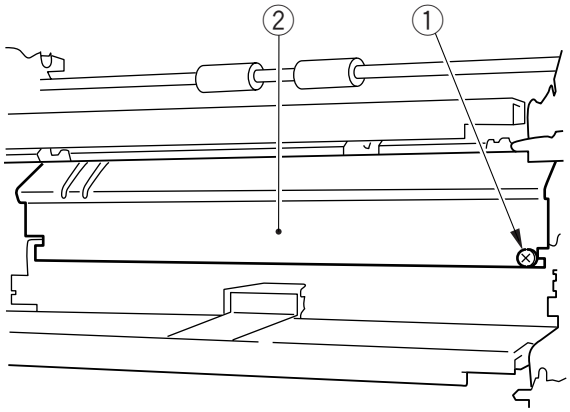

Figure 5-711

4) Free the spring ③ from the hook (one side).
5) Remove the two stop rings ④ (both right and left).

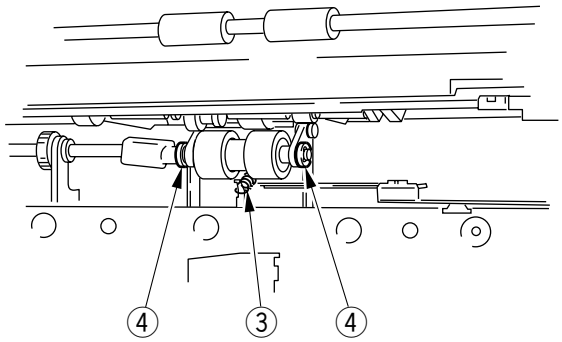

Figure 5-712

6) Remove the two screws ⑤ and the vertical path guide ⑥; then, disconnect the connector ⑦.

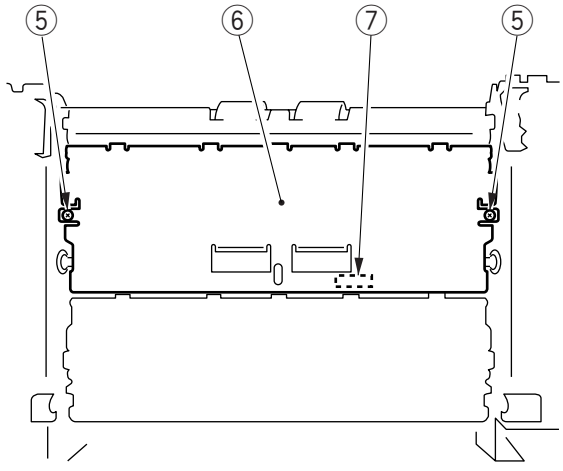

Figure 5-713

COPYRIGHT © 1997 CANON INC.

7) Remove the stop ring ⑧ and the support shaft ⑨.
8) Remove the separation roller unit ⑩.

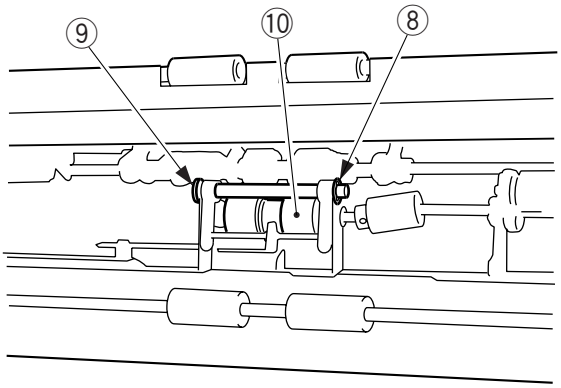

Figure 5-714

9) Pull out the separation roller shaft, and remove the separation roller.

Reference:

Whenever installing the separation roller ① to the pick-up assembly, be sure so that the D-cut will be toward the front of the copier.

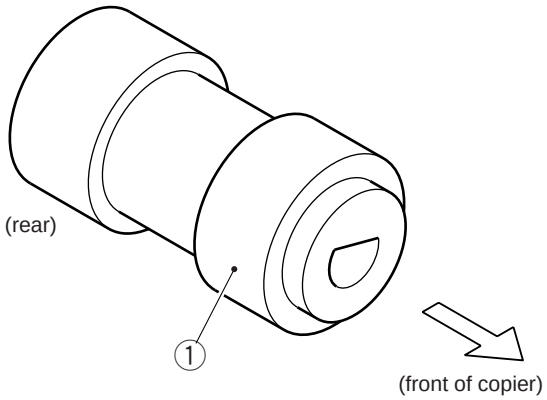

Figure 5-715

COPYRIGHT © 1997 CANON INC.
CANON NP6330 REV.0 MAY 1997 PRINTED IN JAPAN (IMPRIME AU JAPON)

7. Adjusting the Pressure of the Separation Roller

If double feeding or pick-up failure occurs during pick-up, change the position of the pressure spring of the separation roller.

① If double feeding occurs, hook the spring on the side of Ⓐ.
② If pick-up failure occurs, hook the spring on the side of Ⓑ.

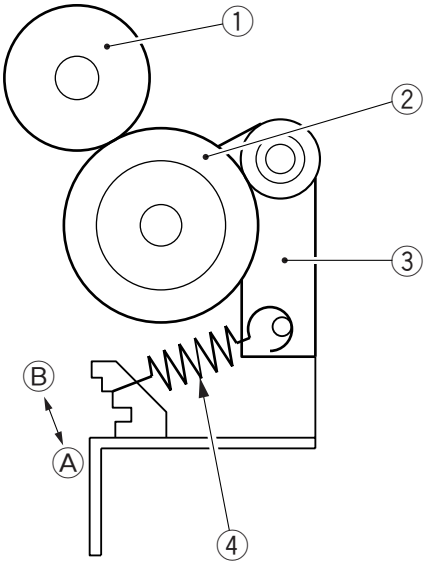

① Feeding roller
② Separation roller
③ Locking lever
④ Pressure spring

Figure 5-716

8. Positioning the Pick-Up Assembly Pick-Up Roller Releasing Solenoid (SL1, SL2)

Install the solenoid so that the pick-up roller arm ① shown in Figure 5-717 butts against the upper stay ② when the plunger of the solenoid is pushed in.

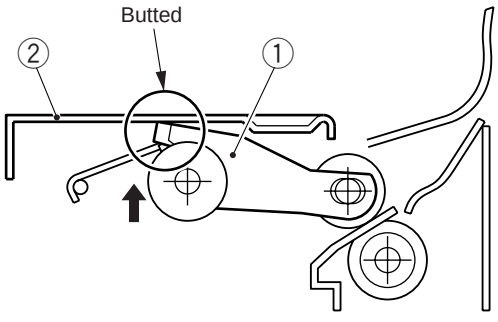

Figure 5-717

COPYRIGHT © 1997 CANON INC.

9. Releasing the Lifter

If the lifter is up, push the lifter releasing arm ① to lower it.

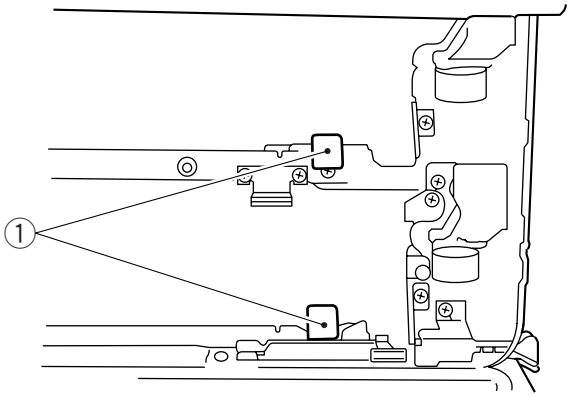

Figure 5-718

COPYRIGHT © 1997 CANON INC.
CANON NP6330 REV.0 MAY 1997 PRINTED IN JAPAN (IMPRIME AU JAPON)

10. Adjusting the Registration (left/right)

1) Loosen the screw ①, and adjust the position of the cassette hook plate ② so that the reading is 0 ±1.5mm.

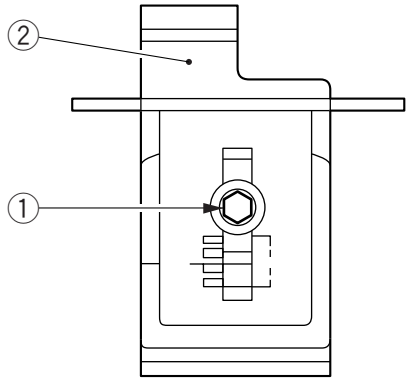

Figure 5-719

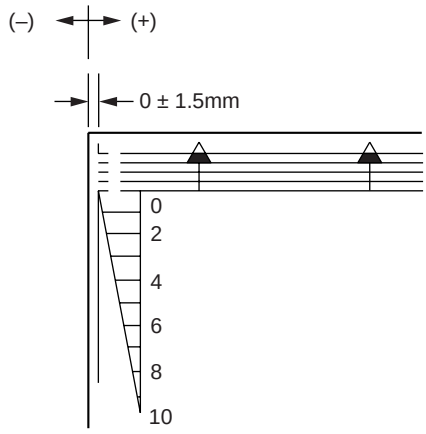

Figure 5-720

2) After adjustment, register the paper width basic value for the cassette you have adjusted. (See Chapter 11)

COPYRIGHT © 1997 CANON INC.

B. Multifeeder Assembly

1. Removing the Multifeeder Assembly

1) Remove the multifeeder inside cover and the right cover.
2) Disconnect the connector ①.
3) Remove the four screws ②, and remove the multifeeder assembly ③.

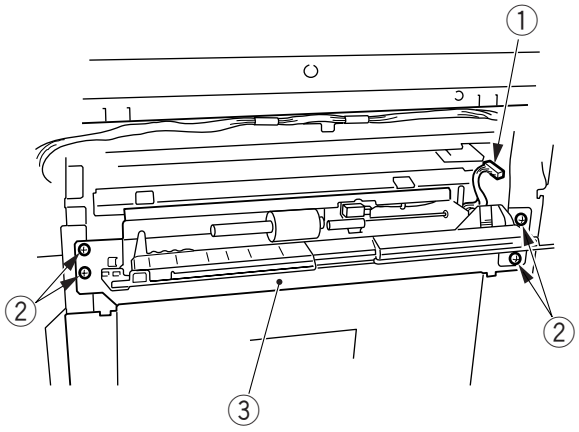

Figure 5-721

2. Removing the Multifeeder Pick-Up Roller/Separation Pad

1) Remove the multifeeder assembly.
2) Remove the stop ring ①.
3) While pushing down the separation pad ②, remove the pick-up roller ③.

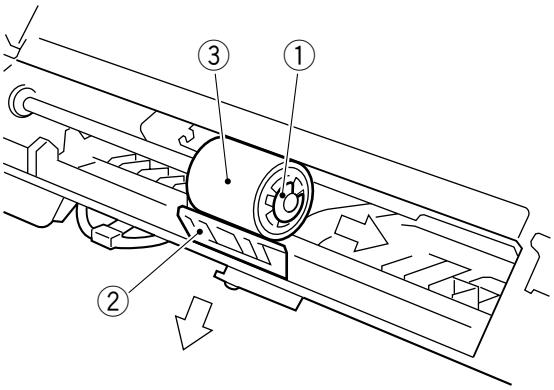

Figure 5-722

COPYRIGHT © 1997 CANON INC.
CANON NP6330 REV.0 MAY 1997 PRINTED IN JAPAN (IMPRIME AU JAPON)

4) Raise the multifeeder tray.
5) Remove the screw ④, and remove the separation pad assembly ⑤.

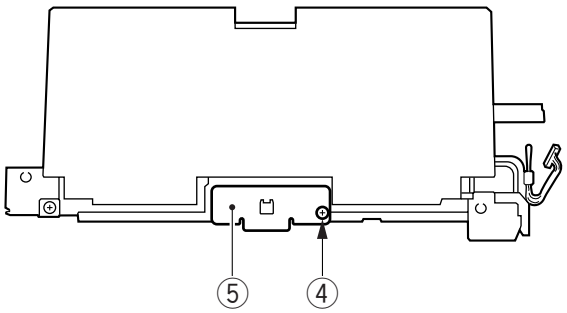

Figure 5-723

Reference:

When installing the multifeeder pick-up roller ①, be sure that the cross on the collar ② is toward the rear.

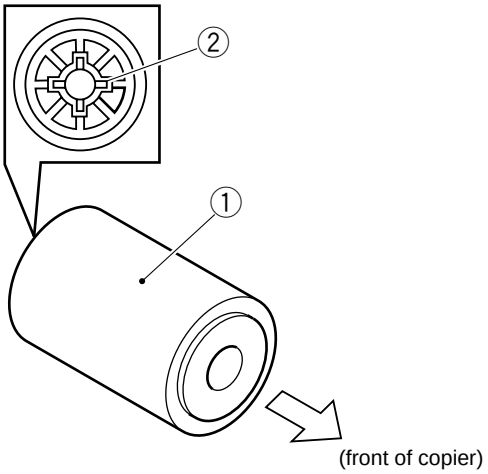

Figure 5-724

COPYRIGHT © 1997 CANON INC.

3. Adjusting the Pressure on the Separation Pad

If double feeding or pick-up failure occurs during pick-up, change the position of the separation pad:

① If double feeding occurs, move the position of the spring holder ① toward Ⓑ.
② If pick-up failure occurs, move the position of the spring holder ① toward Ⓐ.

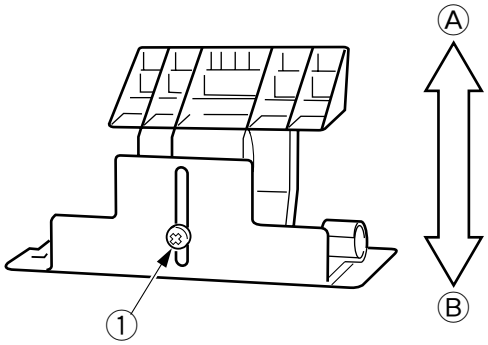

Figure 5-725

4. Adjusting the Left/Right Registration

If the left-right registration is wrong when pick-up occurs in the multifeeder, loosen the screws ①, and adjust the position of the tray.

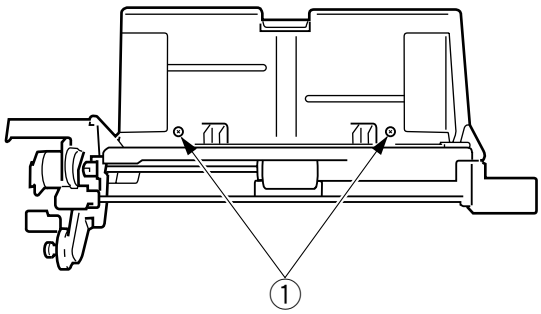

Figure 5-726

COPYRIGHT © 1997 CANON INC.
CANON NP6330 REV.0 MAY 1997 PRINTED IN JAPAN (IMPRIME AU JAPON)

5. Adjusting the Paper Guide Plate Cam (multifeeder assembly)

Adjust the engagement of the 26T gear 1 and the 26T gear 2 so that, when the solenoid plate is in contact with the claw of the control ring, the paper guide plate and the paper guide plate cam are as shown in Figure 5-727.

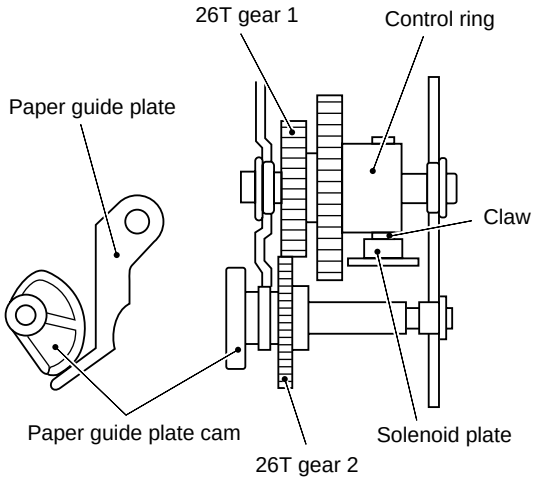

Figure 5-727

6. Routing the Timing Belt (multifeeder assembly)

Butt the rack plate of the multifeeder against section A (open condition).
Move the slide volume in the direction of B, and attach the timing belt on the pulley.

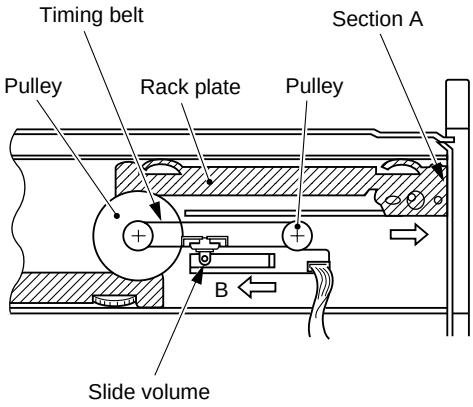

Figure 5-728

COPYRIGHT © 1997 CANON INC.

C. Registration Roller Assembly

1. Removing the Registration Roller

1) Remove the developing assembly and the drum unit.
2) Remove the inside left cover and the inside right cover.
3) Release the feeding assembly.
4) Remove the transfer charging assembly.
5) Remove the main drive assembly. (See p.7-19.)
6) Remove the screw ①, and disconnect the connector ②.

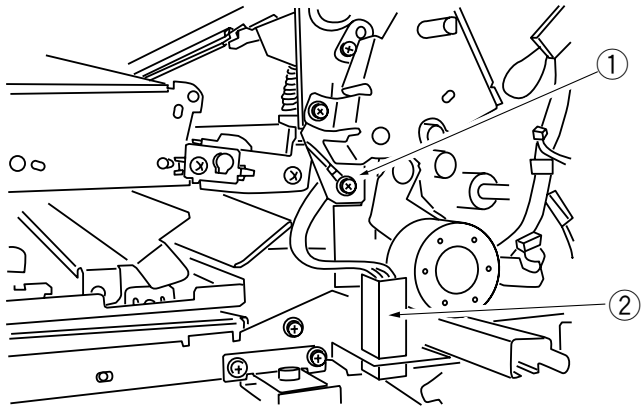

Figure 5-729

7) Remove the screw ③ and the bushing ④; then, remove the transfer guide ⑤.

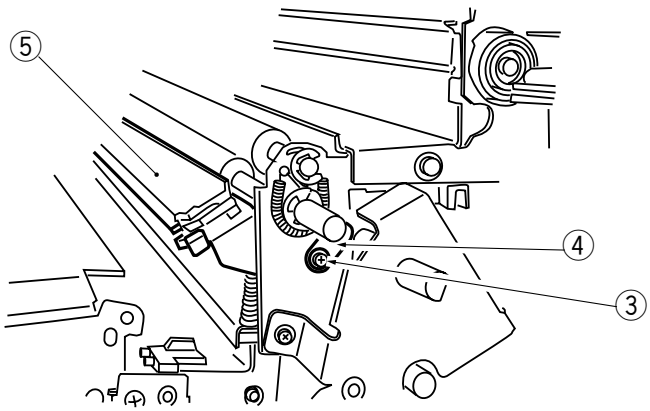

Figure 5-730

COPYRIGHT © 1997 CANON INC.
CANON NP6330 REV.0 MAY 1997 PRINTED IN JAPAN (IMPRIME AU JAPON)

8) Remove the shaft retaining spring ⑥, two E-rings ⑦, and two bushings ⑧ (both front and rear).

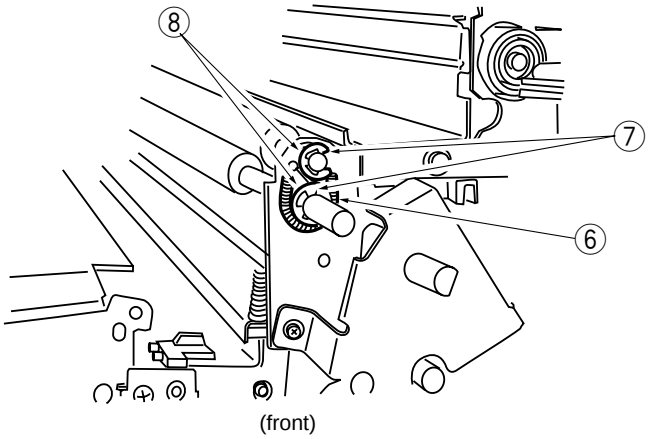

Figure 5-731

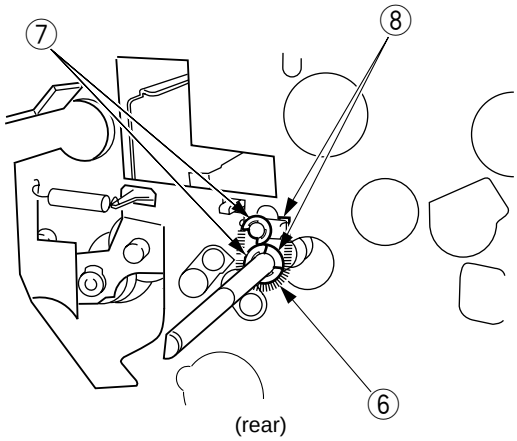

Figure 5-732

9) Remove the registration roller ⑨.

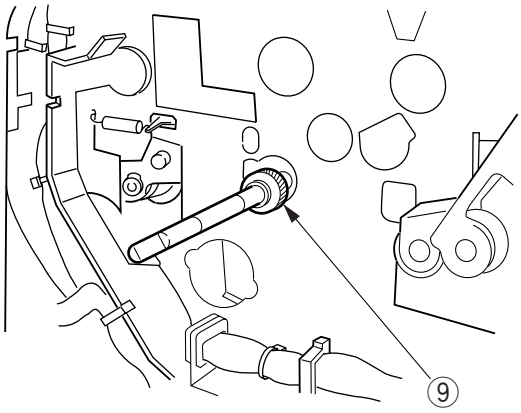

Figure 5-733

COPYRIGHT © 1997 CANON INC. CANON NP6330 REV.0 MAY 1997 PRINTED IN JAPAN (IMPRIME AU JAPON)

D. Feeding Assembly

1. Removing the Feeding Assembly

1) Remove the drum unit and the developing assembly.
2) Remove the fixing assembly.
3) Pull out the pin ①, and remove the lower feeding assembly lever ②.

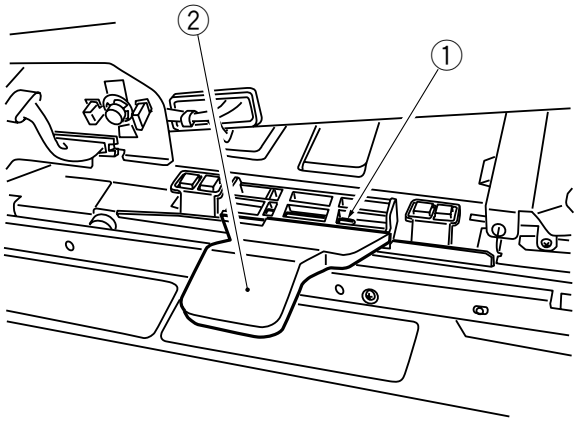

Figure 5-734

4) Remove the screw ③, and disconnect the connector ④.

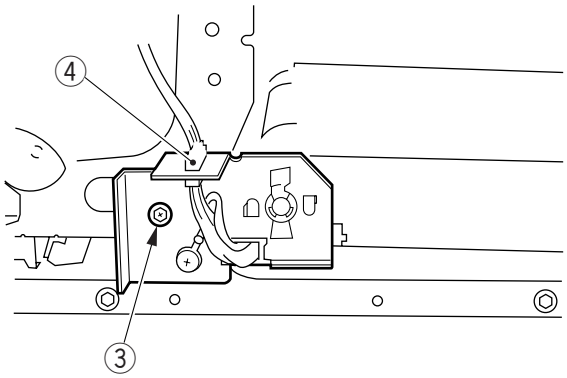

Figure 5-735

COPYRIGHT © 1997 CANON INC.
CANON NP6330 REV.0 MAY 1997 PRINTED IN JAPAN (IMPRIME AU JAPON)

5) While paying attention to the spring at the rear of the feeding assembly, slide out the feeding assembly ⑤ to the front.

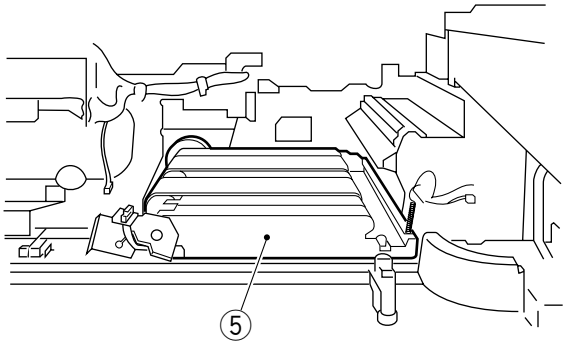

Figure 5-736

2. Removing the Feeding Belt

1) Remove the feeding assembly.
2) Remove the transfer charging assembly.
3) Remove the two screws ①, and remove the support ②, bushing ③, gear ④, and four fastons ⑤.

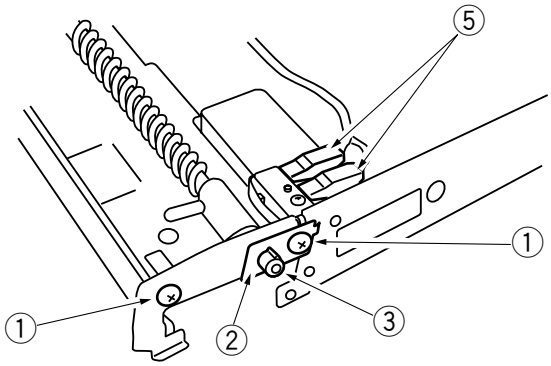

Figure 5-737

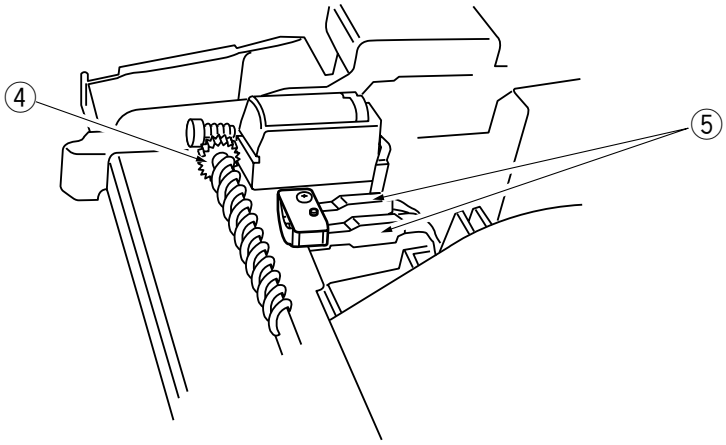

Figure 5-738

COPYRIGHT © 1997 CANON INC.

3) Disconnect the connector ⑥, and disengage the hook ⑦; then, remove the cleaning motor assembly ⑧.

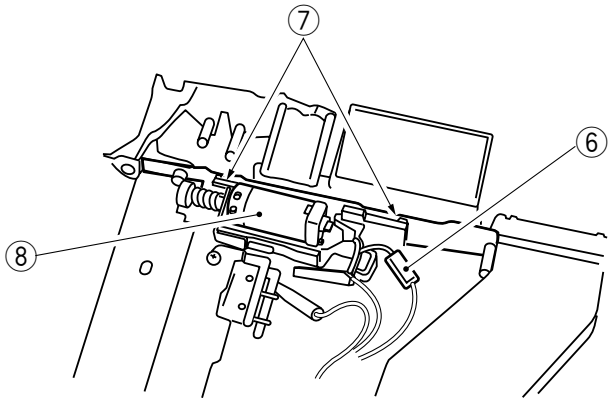

Figure 5-739

4) Remove the three screws ⑨, and remove the electrode mount ⑩.

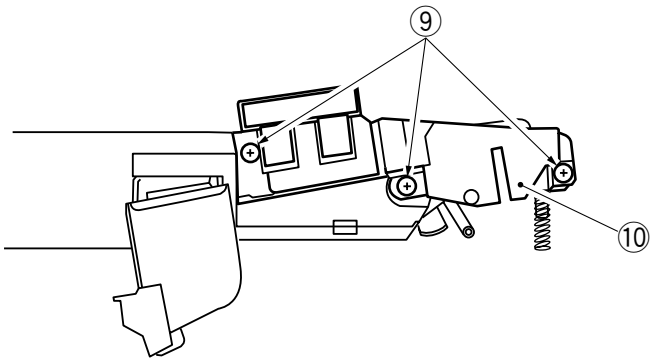

Figure 5-740

COPYRIGHT © 1997 CANON INC.
CANON NP6330 REV.0 MAY 1997 PRINTED IN JAPAN (IMPRIME AU JAPON)

5) Remove the screw ⑪, and remove the corona unit rail ⑫.

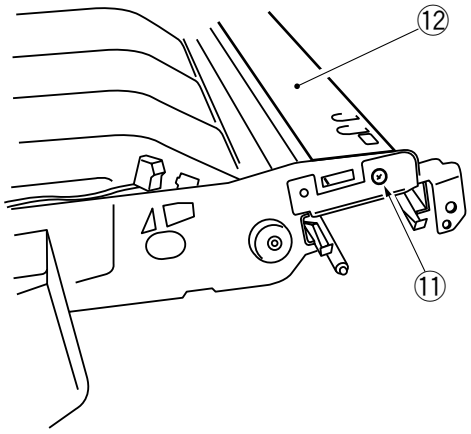

Figure 5-741

6) Disengage the hook ⑬, and remove the air duct ⑭.
7) Remove the E-ring ⑮, and remove the gear ⑯.

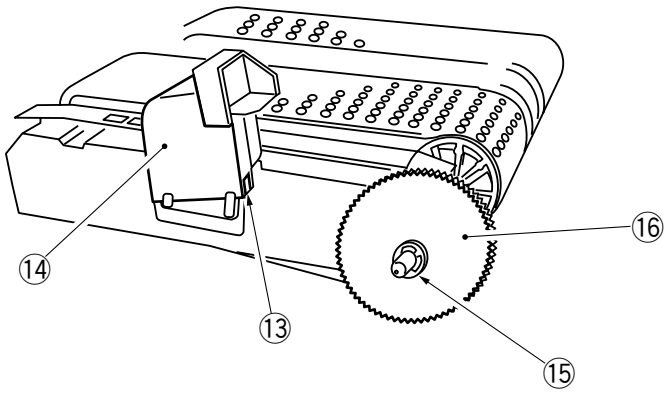

Figure 5-742

COPYRIGHT © 1997 CANON INC. CANON NP6330 REV.0 MAY 1997 PRINTED IN JAPAN (IMPRIME AU JAPON)

8) Remove the four rolls ⑰.

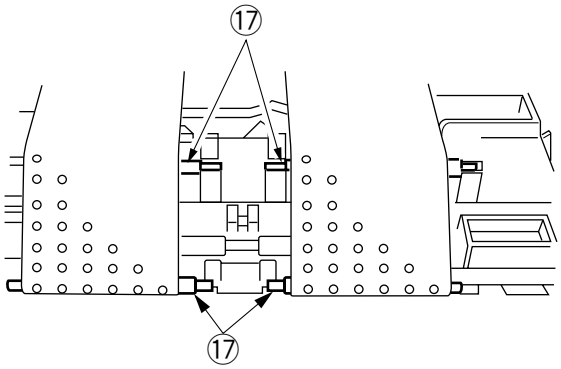

Figure 5-743

9) Remove the feeding belt ⑱.

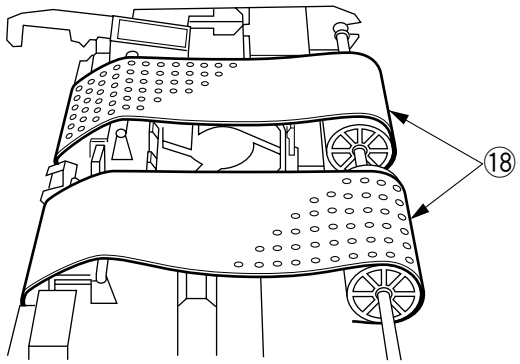

Figure 5-744

COPYRIGHT © 1997 CANON INC.
CANON NP6330 REV.0 MAY 1997 PRINTED IN JAPAN (IMPRIME AU JAPON)

3. Removing the Feeding Fan

1) Remove the feeding belt.
2) Disconnect the connector ①, and disengage the hook ②; then, remove the feeding fan ③.

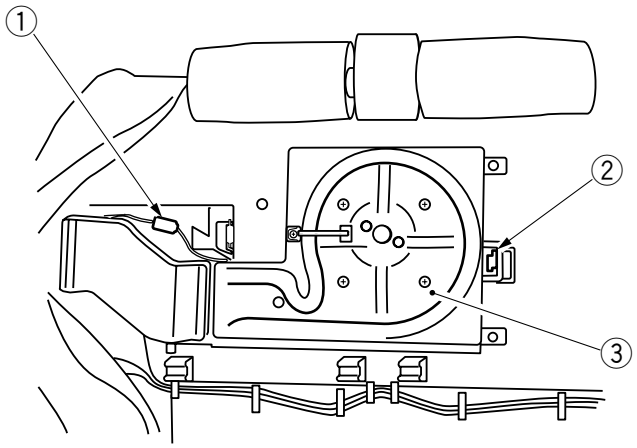

Figure 5-745

COPYRIGHT © 1997 CANON INC.

E. Lower Feeding Assembly

1. Removing the Lower Feeding Assembly

1) Slide out the cassette 1.
2) Remove the inside left cover and the inside right cover.
3) Remove the four connectors ① and remove the four screws ② ; then, remove the horizontal registration motor assembly ③.

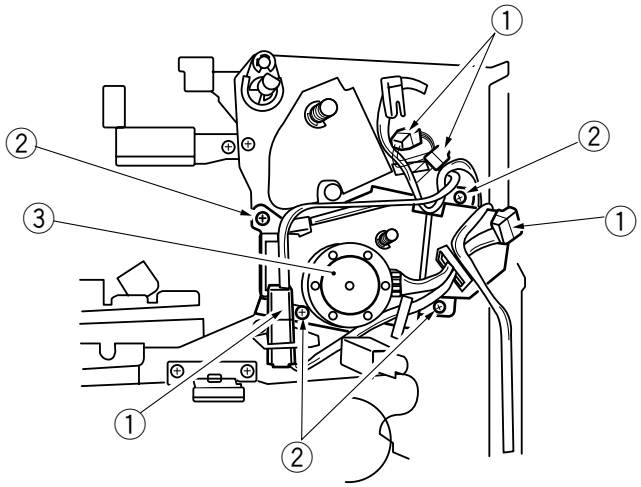

Figure 5-746

4) Disconnect the connector ④

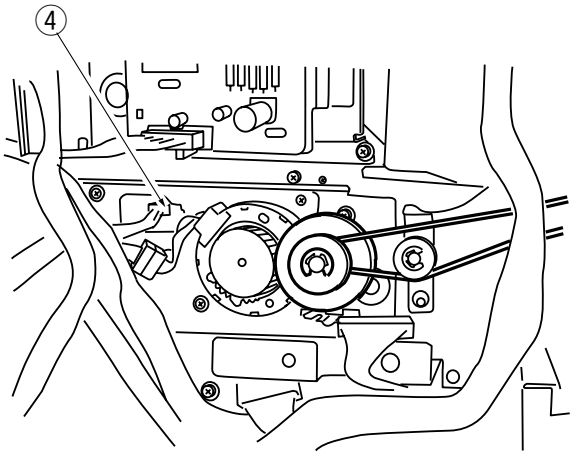

Figure 5-747

COPYRIGHT © 1997 CANON INC.
CANON NP6330 REV.0 MAY 1997 PRINTED IN JAPAN (IMPRIME AU JAPON)

5) Remove the two screws ⑤.

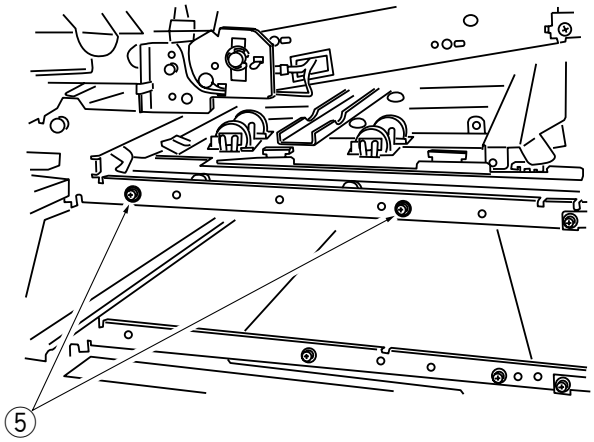

Figure 5-748

6) Remove the lower feeding assembly ⑥.

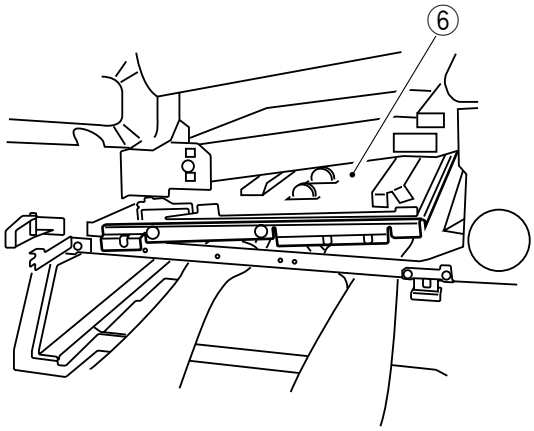

Figure 5-749

COPYRIGHT © 1997 CANON INC. CANON NP6330 REV.0 MAY 1997 PRINTED IN JAPAN (IMPRIME AU JAPON)

2. Attaching the Lower Feeding Assembly

When the lower feeding assembly is attached, follow the instructions below.

1) Make sure that a sheet is on the lower plate of the lower feeding assembly. If there is no sheet on it, fix the sheet on the plate using a screwdriver.

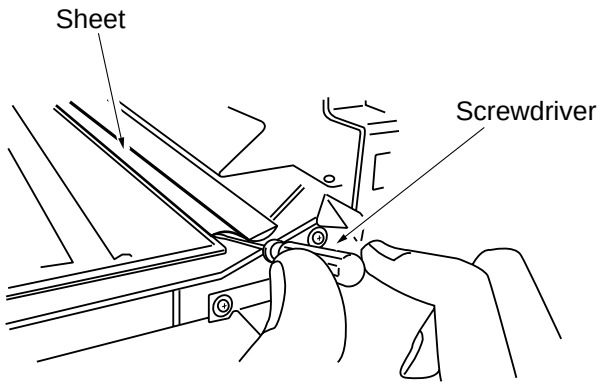

Figure 5-750

2) Make sure that part of the plate of the lower feeding inlet assembly is on the upper plate of the lower feeding assembly.

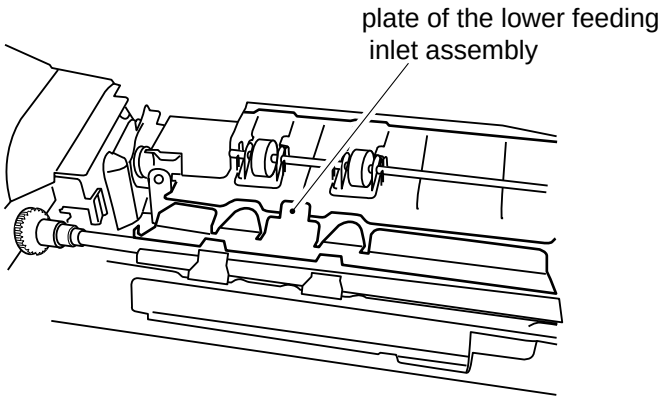

Figure 5-751

COPYRIGHT © 1997 CANON INC.
CANON NP6330 REV.0 MAY 1997 PRINTED IN JAPAN (IMPRIME AU JAPON)

3. Removing the Set-Back Roller

1) Remove the lower feeding assembly.
2) Remove the E-ring ① and the bushing ②.

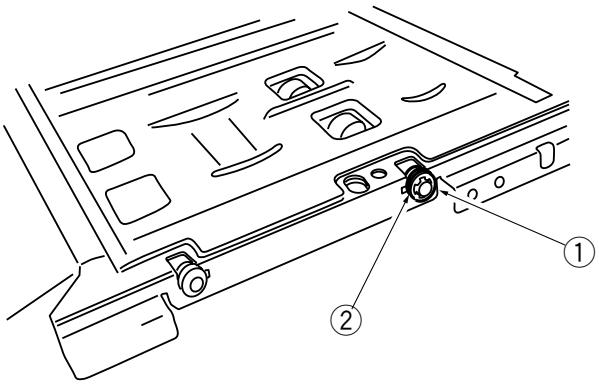

Figure 5-752

3) Remove the gear ③, parallel pin ④, and bushing ⑤; then, remove the set-back roller ⑥.

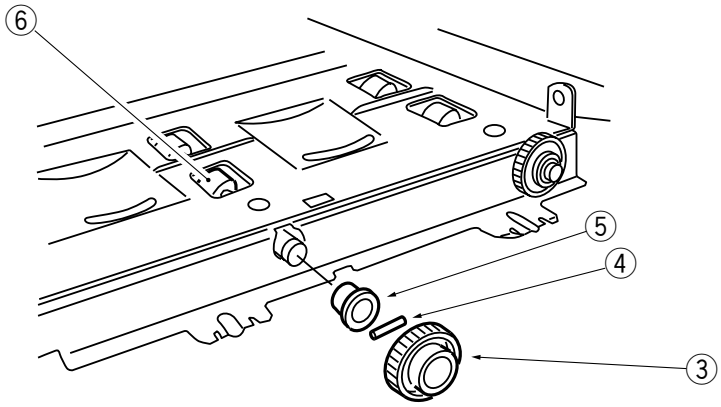

Figure 5-753

COPYRIGHT © 1997 CANON INC. CANON NP6330 REV.0 MAY 1997 PRINTED IN JAPAN (IMPRIME AU JAPON)

4. Removing the Lower Feeder Outlet Roller

1) Remove the lower feeding assembly.
2) Remove the gear ①, parallel pin ②, and bushing ③.

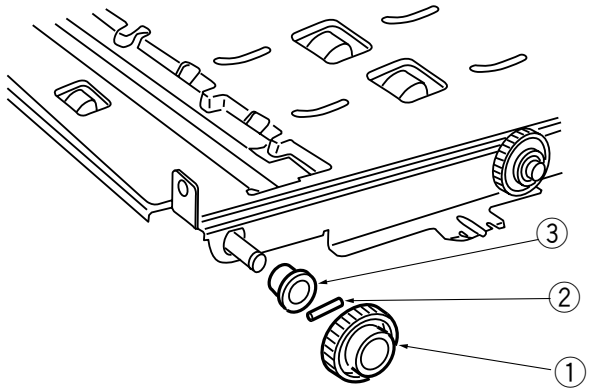

Figure 5-754

3) Remove the bushing ④, and remove the lower feeder outlet roller ⑤.

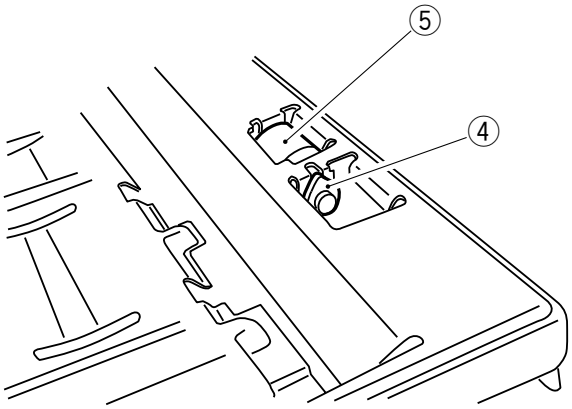

Figure 5-755

COPYRIGHT © 1997 CANON INC.
CANON NP6330 REV.0 MAY 1997 PRINTED IN JAPAN (IMPRIME AU JAPON)

5. Removing the Lower Feeder Inlet Roller

1) Remove the fixing assembly.
2) Remove the E-ring ① and the bushing ② and the spring ③.

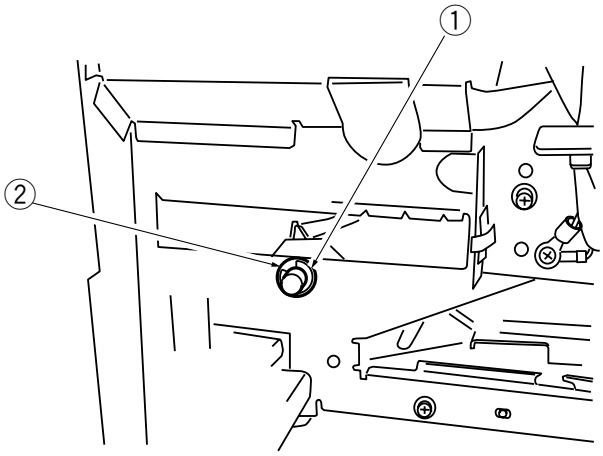

Figure 5-756

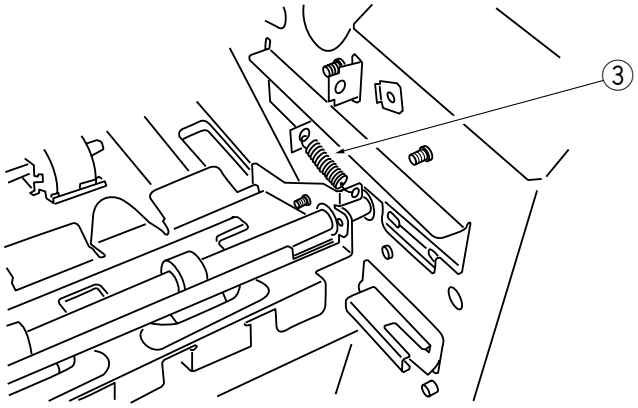

Figure 5-757

COPYRIGHT © 1997 CANON INC. CANON NP6330 REV.0 MAY 1997 PRINTED IN JAPAN (IMPRIME AU JAPON)

3) Disconnect the connector ③, remove the E-ring ④, spacer ⑤, two gears ⑥, and bushing ⑦; then, remove the lower feeder inlet assembly ⑧.

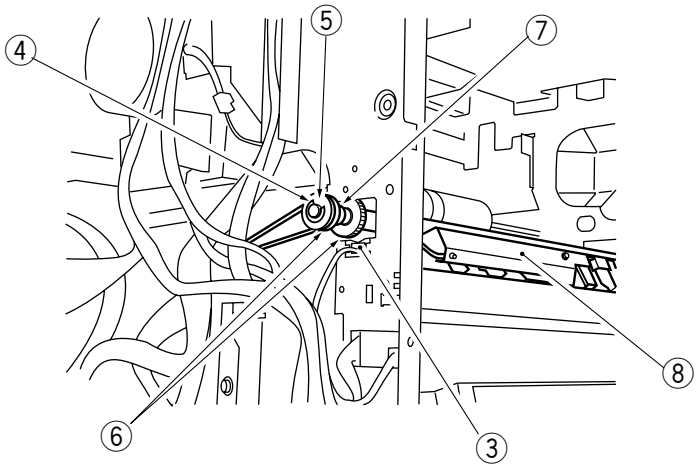

Figure 5-758

4) Remove the bushing ⑨; then, remove the lower feeder inlet roller ⑩.

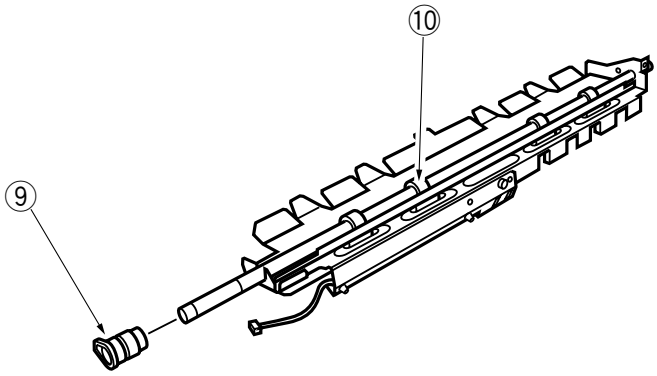

Figure 5-759

COPYRIGHT © 1997 CANON INC.
CANON NP6330 REV.0 MAY 1997 PRINTED IN JAPAN (IMPRIME AU JAPON)

CHAPTER 6

FIXING SYSTEM

This chapter describes the outline of the purposes, roles and operations of fixing toner on a paper, the relationship between electric system and mechanical system and the operational timing of each component.

I. OPERATION.....6-1
A. Outline.....6-1
II. CONTROLLING THE FIXING TEMPERATURE.....6-2
A. Controlling the Area of Heating (fixing roller).....6-2
B. Controlling the Activation and the Temperature of the Fixing Roller (continuous copying).....6-3
C. Protection Mechanism.....6-5
D. Driving the Cleaning Belt.....6-7
III. DELIVERY ASSEMBLY.....6-8
A. Outline.....6-8
B. Controlling the Delivery Motor.....6-9
IV. DISASSEMBLY AND ASSEMBLY.....6-11
A. Fixing Assembly.....6-11
B. Delivery Assembly.....6-30

COPYRIGHT © 1997 CANON INC. CANON NP6330 REV.0 MAY 1997 PRINTED IN JAPAN (IMPRIME AU JAPON)

I. OPERATION

A. Outline

The upper roller, lower roller, and delivery roller 1 are driven by the main motor (M1), and the delivery roller 2 is driven by the delivery motor (M6).

The copier's upper roller is heated by two fixing heaters (H1 : 750 W (220 / 240 V) / 700 W (120 V) ; H2 : 640 W (220 / 240 V) / 600 W (120 V)), and its surface temperature is monitored by a thermistor (TH1).

The DC controller turns on and off the fixing heater drive command (MHRD, SHRD) based on the fixing temperature signal (TH1, analog) from the thermistor.

The control temperature and the area of heating during copying are varied according to the following:

- Copy paper size (width)
- Number of copies (continuous copying)

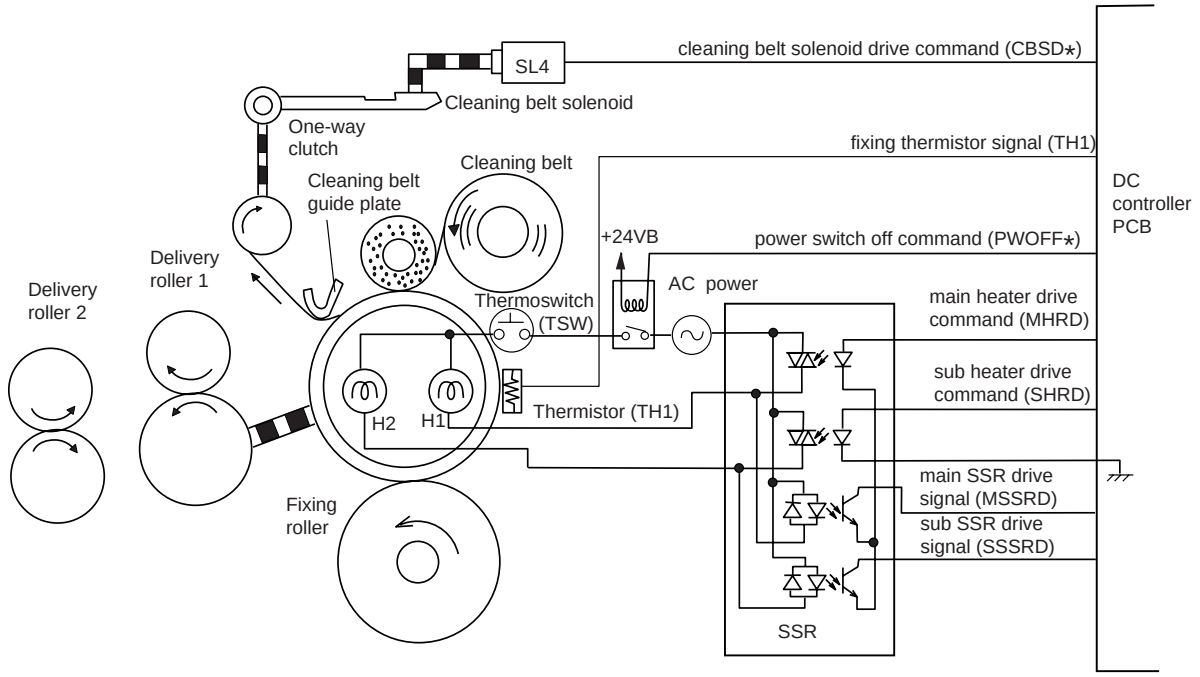

Figure 6-101

COPYRIGHT © 1997 CANON INC. CANON NP6330 REV.0 MAY 1997 PRINTED IN JAPAN (IMPRIME AU JAPON)

II. CONTROLLING THE FIXING TEMPERATURE

A. Controlling the Area of Heating (fixing roller)

The upper fixing roller is heated by two heaters: main heater (H1) and sub heater (H2).

The copier's main and sub heaters are halogen lamps with different thermal distribution characteristics. (Figure 6-201)

The surface temperature of the fixing roller is maintained even by varying the period in which these two heaters are turned ON while at the same time preventing overheating of the ends.

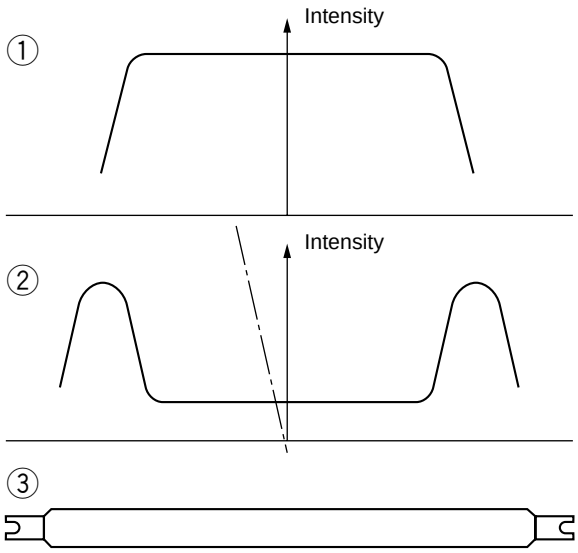

① Main heater (H1) thermal distribution
② Sub heater (H2) thermal distribution
③ Upper fixing roller external view

Figure 6-201

COPYRIGHT © 1997 CANON INC.
CANON NP6330 REV.0 MAY 1997 PRINTED IN JAPAN (IMPRIME AU JAPON)

B. Controlling the Activation and the Temperature of the Fixing Roller (continuous copying)

1. Outline

The copier's upper fixing roller is a special thin-coating roller, and its surface temperature would tend to increase above the target temperature without control; to ensure that it remains at the target temperature, its period of activation and control temperature are controlled.

2. Controlling Period of Activation

The periods of activation for the main heater (H1) and the sub heater (H2) is controlled according to the width of copy paper and the number of copies to be made.

As shown in Table 6-201, the period of activation of the sub heater is increased to heat the area of contact (with copy paper; edge heating) for wide copy paper moving through the fixing assembly.

The period of activation of the sub heater is decreased for narrow copy paper, thereby preventing increase in temperature in areas not coming into contact with paper.

When the multi feeder is used, on the other hand, such control in relation to paper width is only in response to an input of copy size; in the absence of an input, control is based on A3 size (11" x 17").

Paper width		Period of activation	
		Main heater (H1)	Sub heater (H2)
A3, A4, 11" x 17", LTR		ON for 0.3 sec	ON for 0.2 sec
B4		ON for 0.4 sec	ON for 0.1 sec
A4R, LGL, LTRR	Up to 16th copy	ON for 0.4 sec	ON for 0.1 sec
	17th copy and later	ON	OFF
B5R/STMT		ON	OFF

Table 6-201

COPYRIGHT © 1997 CANON INC.
CANON NP6330 REV.0 MAY 1997 PRINTED IN JAPAN (IMPRIME AU JAPON)

3. Controlling the Control Temperature

The control temperature for the fixing roller in continuous copying is lowered in steps according to copy size and the number of copies to make.

The count of copies used for temperature control is increased by 1 for each passage of copy paper over the delivery sensor (PS11), and the control temperature is switched when the count reaches a specific number.

The count is retained for 1 min after the end of copying operation (end of LSTR); if copying operation is resumed during the period, the count is continued and appropriate control is performed. (The count will be cleared, however, if a change is made to the copy paper size or the power is turned off.)

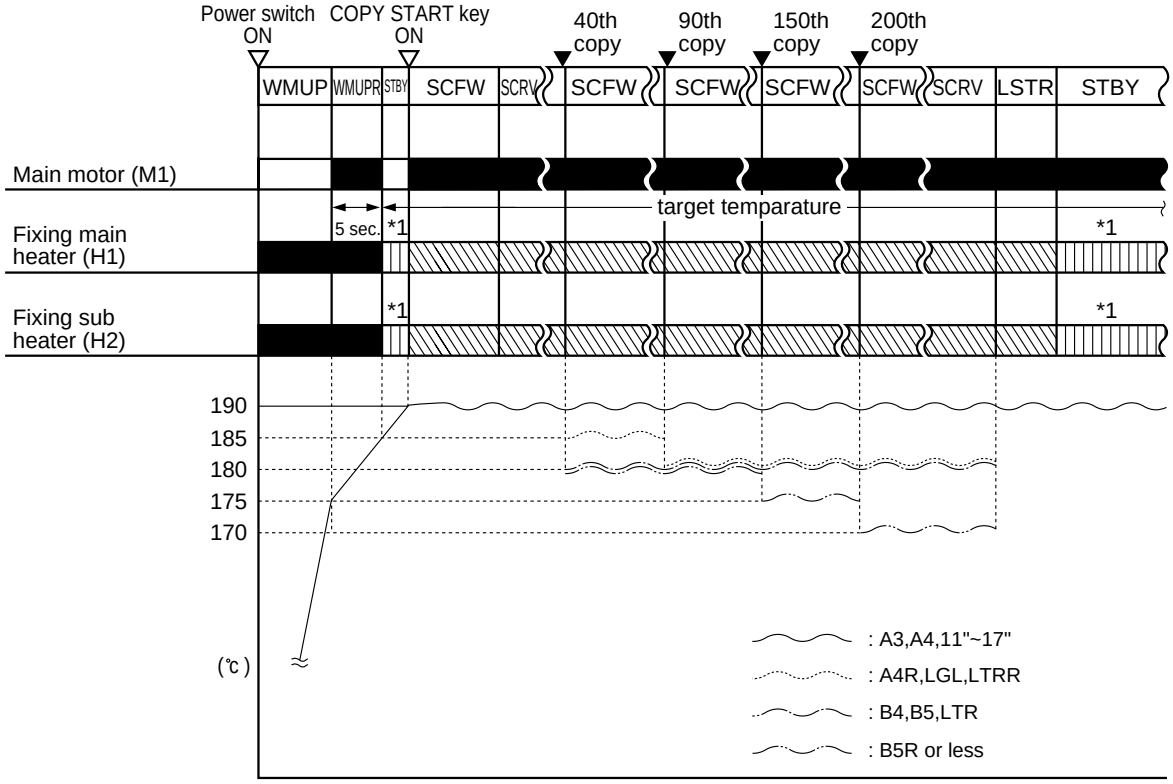

*1: Turns on the main heater for 0.1 sec and the sub heater for 1 sec alternately.

Figure 6-202

4. Controlling the temperature during Pre-heat mode

This copier alters the control temperature for the fixing assembly in the Pre-heat mode according to the setting in the user mode. The following is the control temperature for the fixing assembly for each setting in the user mode.

Saving rate	Control	Recovery (approx.)
-10%	185 ℃/365F	5 sec
-25%	170 ℃/338F	10 sec
-50%	125 ℃/257F	20 sec
None	190 ℃/374F	0

Reference:

In the Auto energy saver mode, the control temperature for the fixing assembly is 145 ℃/293F.

COPYRIGHT © 1997 CANON INC.
CANON NP6330 REV.0 MAY 1997 PRINTED IN JAPAN (IMPRIME AU JAPON)

C. Protection Mechanism

The copier uses the following three to prevent malfunction of its fixing heater:

- Signal from the thermistor
- Signal from the SSR
- Thermal switch

a. Protection with Signal from the Thermistor

The DC controller PCB monitors the voltage of the thermistor (TH1) and indicates a self diagnosis code in response to overheating.

If the temperature of the fixing roller reaches 220°C (detected by the thermistor TH1), 'E001' will be indicated on the control panel and the copying operation will be stopped.

If the temperature of the fixing roller as detected by the thermistor (TH1) exceeds 220°C for some reason, the error auto power-off signal (PWOFF*) is generated to turn off the power switch.

Table 6-202 shows the relation between the surface temperature of fixing roller and the voltage of thermistor. (The voltage is theory value.)

Temperature of the fixing roller (°C)	Voltage of the thermister	Temperature of the fixing roller (°C)	Voltage of the thermister
0	4.98	120	3.23
10	4.97	130	2.87
20	4.95	140	2.51
30	4.92	150	2.16
40	4.87	160	1.84
50	4.80	170	1.56
60	4.70	180	1.30
70	4.56	190	1.09
80	4.39	200	0.91
90	4.16	210	0.75
100	3.89	220	0.63
110	3.58		

Table 6-202

COPYRIGHT © 1997 CANON INC.
CANON NP6330 REV.0 MAY 1997 PRINTED IN JAPAN (IMPRIME AU JAPON)

b. Protection with the Signals from the SSR

If the fixing heater continues to remain on because of a short circuit in the SSR, the DC controller PCB generates the error auto power-off signal (PWOFF*) to turn off the power switch.

The copier's fixing heater drive SSR sends the SSR drive signal (MSSRD, SSSRD) to the DC controller PCB when the SSR is ON; the DC controller PCB also monitors the heater drive command (MHRD, SHRD) and the SSR drive signal (MSSRD, SSSRD) at the same time.

If the main SSR drive signal (MSSRD) is '1' when the main heater drive command (MHRD) is '0', the DC controller PCB will assume the condition as an error in the SSR and will indicate 'E004' on the control panel. In about 2 sec thereafter, it generates the error auto power-off signal (PWOFF*) to turn off the power switch.

c. Protection with a Thermistor

If the internal temperature of the thermal switch (TSW1) exceeds about 208°C, the thermal switch turns OFF to cut off the power to the fixing heater.

If the thermal switch turns OFF, the error auto power-off signal (PWOFF*) will be generated in about 1.5 sec to turn off the power switch.

Reference:

Once its contact opens, the thermal switch (TSW1) will not return to normal even at ambient temperature. It may be used once again by cooling it to 0°C or less.

d. Recovery after Activation of the Protection Mechanism

If the error auto power-off signal (PWOFF*) has been generated, remove the cause, and turn on the power switch to recover.

If 'E000', 'E001', 'E002', 'E003', or'E800' has been indicated, remove the cause, and execute '401' in service mode [4] to recover.

Reference:

When selected in user mode, "auto power-off" will also turn off the power switch when activated. To distinguish from such "auto power-off," this manual refers to the foregoing auto power-off as "error auto power-off."

COPYRIGHT © 1997 CANON INC.
CANON NP6330 REV.0 MAY 1997 PRINTED IN JAPAN (IMPRIME AU JAPON)

D. Driving the Cleaning Belt

The cleaning belt used to clean the upper fixing roller is driven by turning on and off the cleaning belt solenoid (SL4) by causing the cleaning belt solenoid drive command (CBSD*) generated by the DC controller circuit to go '1' and '0'. The cleaning belt is taken up about 0.04mm each time the cleaning belt solenoid is turned ON.

The area of contact between the cleaning belt and the upper fixing roller is increased to improve clearing efficiency by means of a cleaning belt guide plate.

The cleaning belt solenoid (SL4) is turned on as soon as copy paper reaches the separation sensor (PS10); the number of times the solenoid is turned ON, further, varies according to the length of copy paper.

Length of copy paper	Activation (ON/OFF)
Less than 216mm	Once
216mm or more	Twice

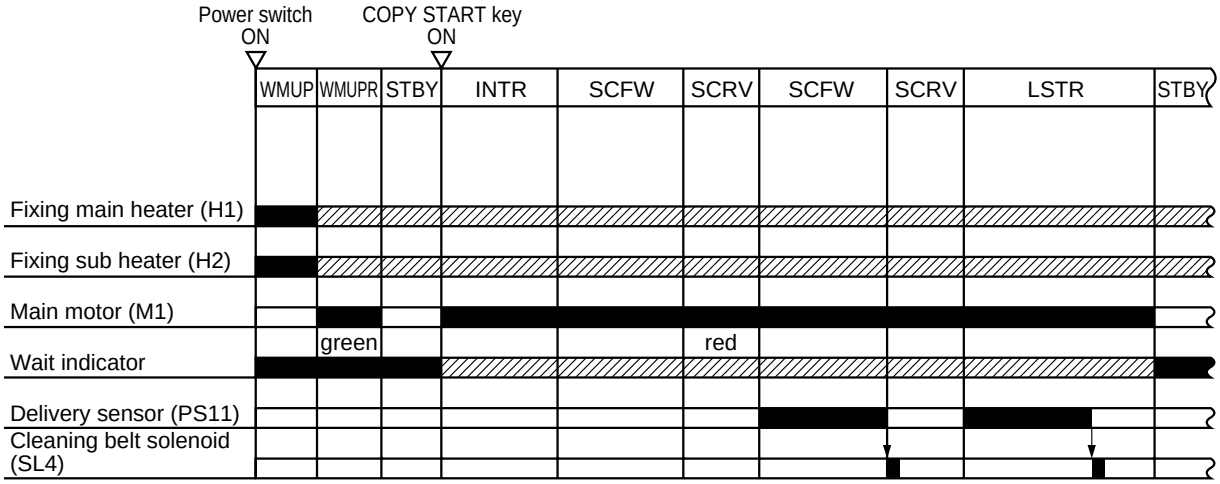

Figure 6-203

The DC controller keeps count of the activation of the cleaning belt solenoid, and issues 'E005' when the count reaches 250,000.

The count can be cleared by resetting the cleaning belt counter ('619' in service mode; for details, see Chapter 11 "Service Mode.")

COPYRIGHT © 1997 CANON INC.

III. DELIVERY ASSEMBLY

A. Outline

The copier performs delivery reversal for automatic duplexing copying.

The delivery roller 2 is driven by the delivery motor (M6). A transparent sheet is attached to the feeding path between the delivery rollers 1 and 2; when the delivery roller 2 rotates in reverse and the paper reverses, its leading edge butts against the sheet, causing the paper to move toward the lower feeding assembly inlet.

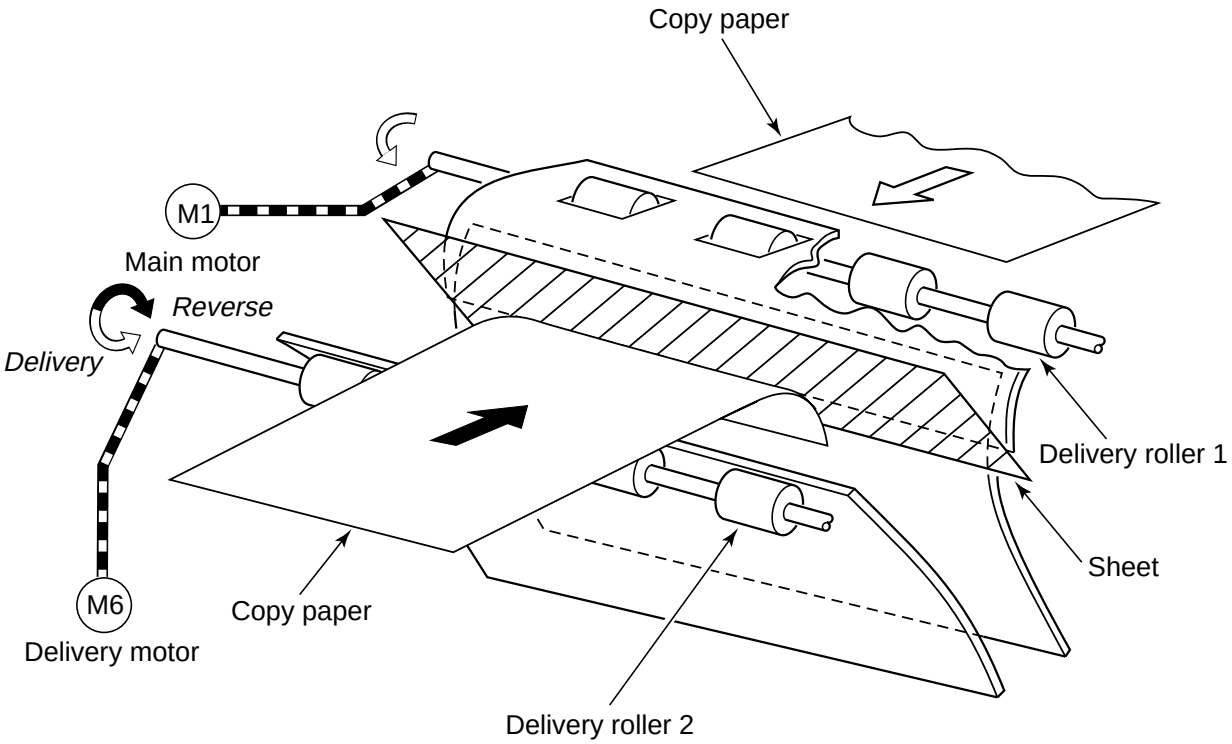

Figure 6-301

COPYRIGHT © 1997 CANON INC.
CANON NP6330 REV.0 MAY 1997 PRINTED IN JAPAN (IMPRIME AU JAPON)

B. Controlling the Delivery Motor

1. Outline

The delivery motor (M6) is a 2-phase stepping motor.

The five types of signals generated by the DC controller are converted into drive pulse commands (DMA, DMA*, DMB, DMB*) by the motor drive circuit and the delivery motor drive circuit on the motor driver 2 PCB, and are used to control the direction and the speed of rotation of the delivery motor.

Figure 6-302 is a block diagram showing the circuit used to control the delivery motor.

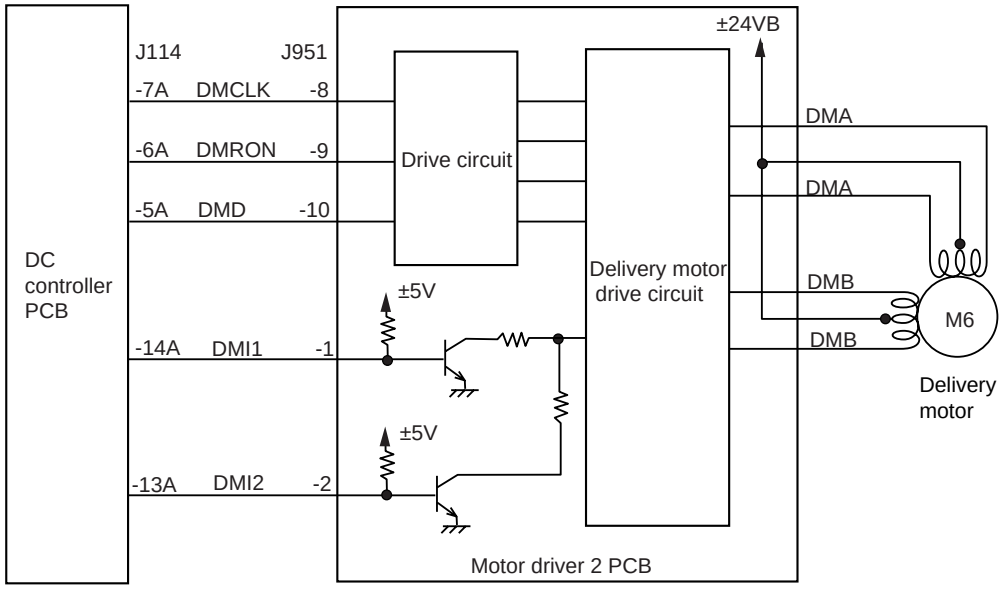

Figure 6-302

2. Operation

a. Turning On and Off the Motor

The delivery motor drive command (DMD) serves to turn on and off the motor.

When the DMD command goes '0', pulse signals (A, A*, B, B*) are sent by the motor drive circuit to the delivery motor drive circuit. In response, the motor drive circuit generates drive pulse commands (DMA, DMA*, DMB, DMB*) to rotate the delivery motor.

b. Controlling the Direction of Rotation of the Motor

The delivery motor rotation command (DMRON) is used to change the order in which drive pulse signals are generated, thereby controlling the direction of rotation.

When the DMRON command is '1', the motor rotates in the direction used to reverse copy paper.

c. Controlling the Speed of Direction of the Motor

The delivery motor clock command (DMCLK) is used to control the speed of rotation of the motor.

The copier controls the rotation of the motor as follows so that the speed of the delivery motor is as follows according to mode of delivery/reversal and the length of copy paper.

For delivery: 180 mm/sec

For reversal: 360 mm/sec (for copy paper 216 mm or less in feeding direction)
180 mm/sec (fro copy paper in excess of 216 mm in feeding direction)

d. Controlling the Drive Torque of the Motor

The drive torque of the motor varies according to the level of the drive current, and the level of the drive current is switched by the delivery motor current control command (DMI1, DMI2).

During delivery, the DC controller sends DMI1 command to the delivery motor drive circuit on the motor controller PCB; during reversal, it sends DMI2 command. The delivery motor drive circuit increases the drive current it generates in response to DMI2 command.

During reversal, the copy paper delivered by the delivery assembly is pulled into the machine and, therefore, a lager load than during delivery is imposed on the delivery motor; for this reason, the drive current is increased to raise the drive torque of the motor.

COPYRIGHT © 1997 CANON INC.
CANON NP6330 REV.0 MAY 1997 PRINTED IN JAPAN (IMPRIME AU JAPON)

IV. DISASSEMBLY AND ASSEMBLY

This section explains mechanical characteristics and describes how to disassemble/assemble the copier.

Be sure to observe the following whenever disassembling/assembling the copier:

1. Disconnect the power plug before starting the work.
2. Unless otherwise shown, assemble the parts by reversing the steps given to disassemble them.
3. Identify each screw by type (length, diameter) and location.
4. A washer is used for two of the mounting screws on the rear cover to protect against static electricity; be sure to use the washer when assembling the part.
5. A washer is used for some mounting screws (for grounding wire, varistor) to ensure correct electrical continuity; be sure to use the washer when assembling the part.
6. As a rule, do not operate the copier while any of its parts is removed.
7. Be sure to turn off the front door switch or the power switch before sliding out the fixing assembly.

A. Fixing Assembly

1. Construction

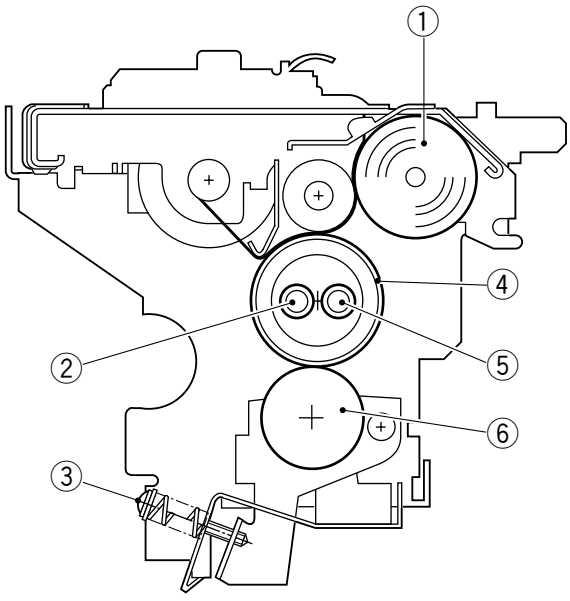

① cleaning belt
② Sub heater
③ Pressure adjusting screw
④ Upper fixing roller
⑤ Main heater
⑥ Lower fixing roller

Figure 6-401

COPYRIGHT © 1997 CANON INC.
CANON NP6330 REV.0 MAY 1997 PRINTED IN JAPAN (IMPRIME AU JAPON)

2. Removing the Fixing Assembly

1) Open the front door, and delivery cover.
2) Remove the screw ①, and remove the fixing assembly knob ②.

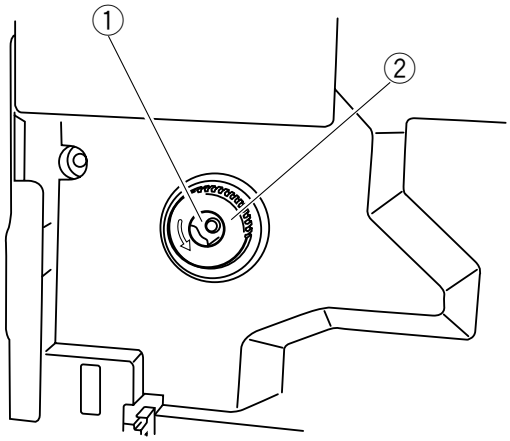

Figure 6-402

3) Open the delivery assembly.
4) Remove the screw ③, and remove the connector cover ④.

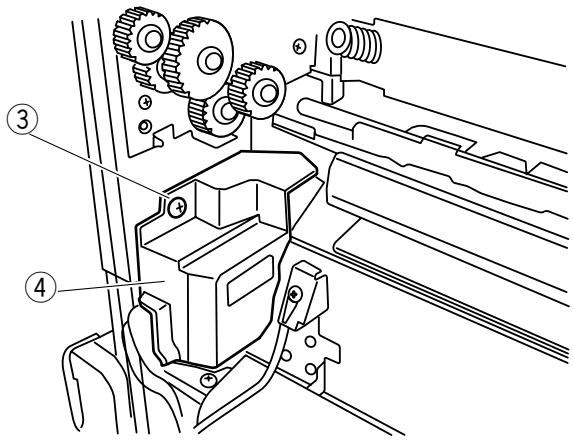

Figure 6-403

COPYRIGHT © 1997 CANON INC.
CANON NP6330 REV.0 MAY 1997 PRINTED IN JAPAN (IMPRIME AU JAPON)

5) Disconnect the three connectors ⑤.
6) Remove the two screws ⑥, and remove the gear unit ⑦.

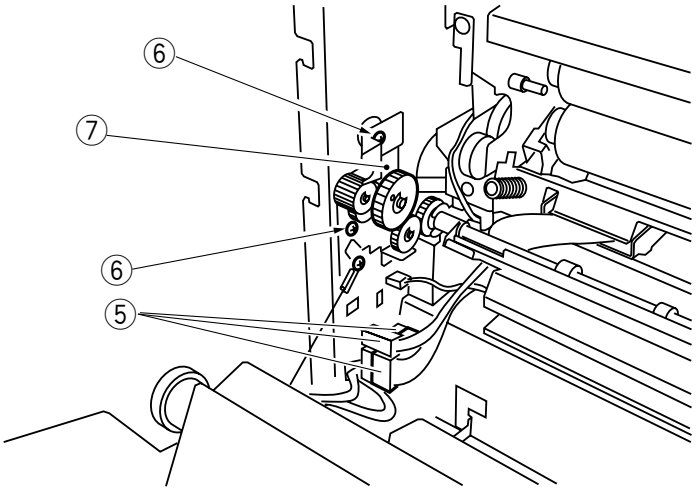

Figure 6-404

COPYRIGHT © 1997 CANON INC. CANON NP6330 REV.0 MAY 1997 PRINTED IN JAPAN (IMPRIME AU JAPON)

8) Remove the two screws ⑧, and remove the fixing assembly ⑨ in the direction of delivery.

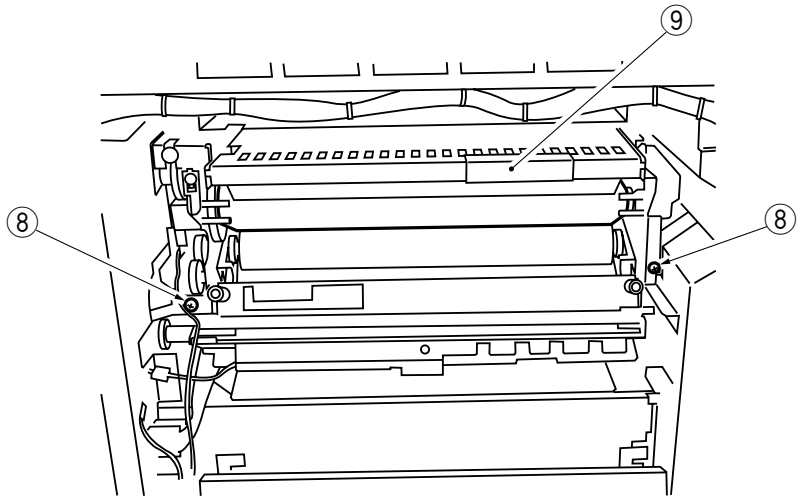

Figure 6-406

Note:

When removing the fixing assembly, take care not to damage the lower feeder inlet roller.

COPYRIGHT © 1997 CANON INC.
CANON NP6330 REV.0 MAY 1997 PRINTED IN JAPAN (IMPRIME AU JAPON)

3. Removing the Fixing Cleaning Belt

1) Remove the fixing assembly from the copier.
2) Remove the two screws ①, and remove the fixing cleaner assembly ②.

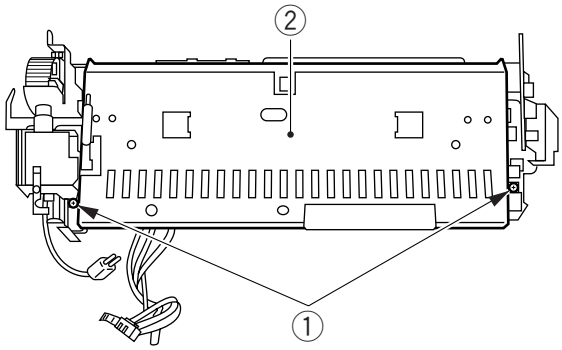

Figure 6-407

3) Insert a flat-blade screwdriver ③ into the stop plate ④; then, release the pressure on the fixing cleaning belt.

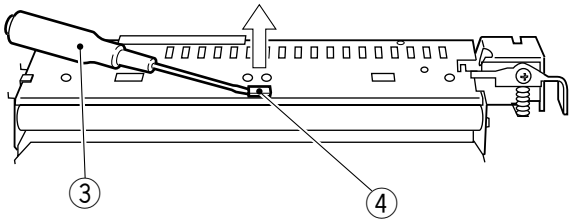

Figure 6-408

4) Turn the cleaning belt setting shaft ⑤ of the fixing cleaner assembly clockwise, and remove the fixing cleaning belt ⑥.

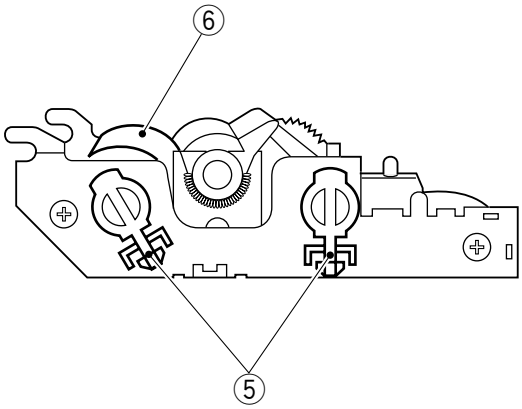

Figure 6-409

COPYRIGHT © 1997 CANON INC. CANON NP6330 REV.0 MAY 1997 PRINTED IN JAPAN (IMPRIME AU JAPON)

4. Installing the Fixing Cleaning Belt

The fixing cleaning belt consists of a feeding shaft, take-up shaft, and cleaning belt constructed as a single entity (service part). Install the fixing cleaning belt by reversing the steps used to remove it with the following in mind:

- Wind the cleaning belt two to three times around the cleaning belt take-up shaft. At this time, check to make sure that the area that will come into contact with the roller is impregnated with oil.

Note:

Check to make sure that the fixing cleaning belt is not wound askew or is free from slack and wrinkling.

- After installing the fixing cleaning belt, insert a flatblade screwdriver in the fixing cleaning belt drive shaft, and turn it counterclockwise until the cleaning belt is free of slack.

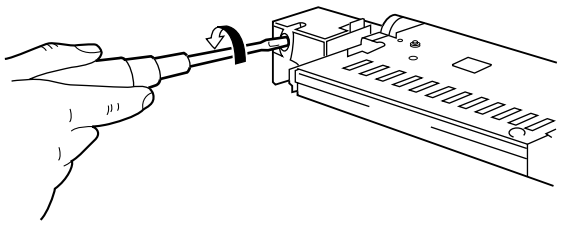

Figure 6-410

Reference:

The fixing cleaner assembly is located above the fixing assembly and is used to clean the surface of the upper roller by keeping the cleaning belt impregnated with silicone oil against the roller. The cleaning belt is 15m long, and is given a marking at a point 2.5m from its end.

Note:

If you have replaced the fixing cleaning belt, be sure to reset the reading of ‘619’ in counter mode (service mode) to ‘0’.

COPYRIGHT © 1997 CANON INC.
CANON NP6330 REV.0 MAY 1997 PRINTED IN JAPAN (IMPRIME AU JAPON)

5. Replacing the oil sheet

When the cleaning belt is repleced, the oil sheet has to be replaced at the same time.

1) Remove the fixing assembly.
2) Replace the oil sheet. (front and rear).

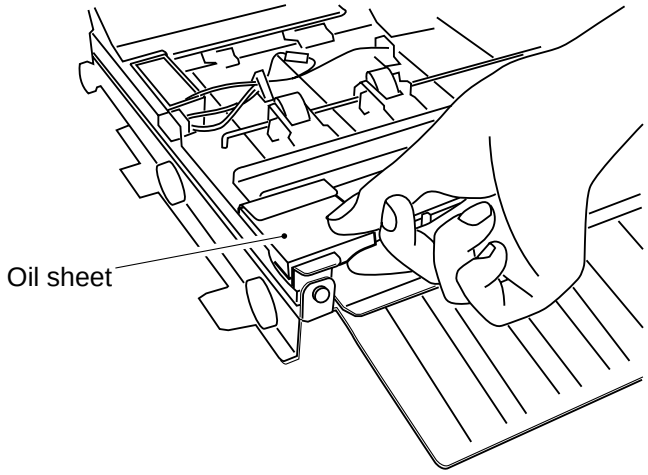

Figure 6-411

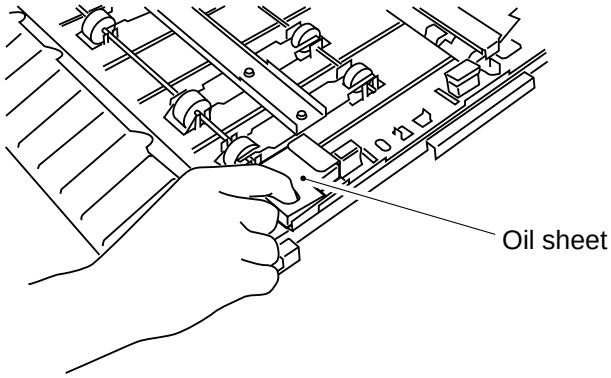

Figure 6-412

COPYRIGHT © 1997 CANON INC.

6. Removing the Fixing Heater

1) Remove the fixing assembly from the copier.
2) Remove the two screws ①, and remove the fixing cleaner assembly ②.

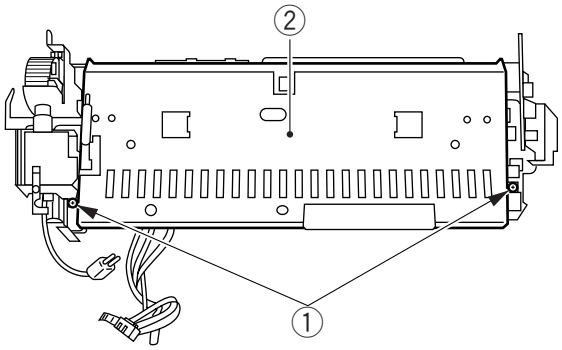

Figure 6-413

3) Remove the cord cover ③ from the thermal switch assembly.

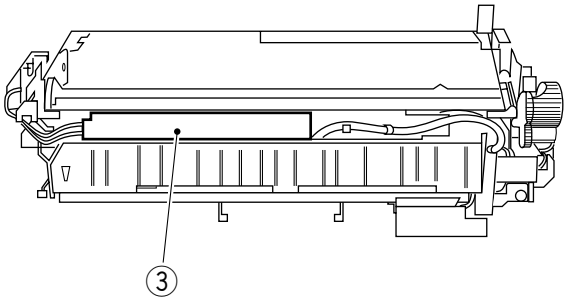

Figure 6-414

4) Pull out the two fastons ④ of the heater (left when viewing the thermal switch).

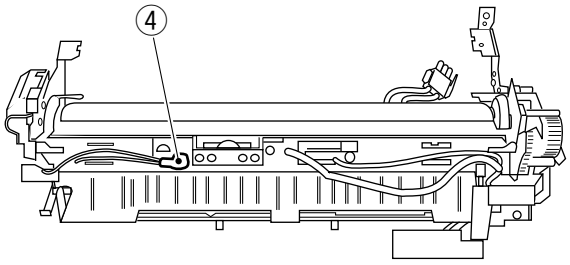

Figure 6-415

COPYRIGHT © 1997 CANON INC.
CANON NP6330 REV.0 MAY 1997 PRINTED IN JAPAN (IMPRIME AU JAPON)

5) Turn over the fixing assembly, and remove the cord cover ⑤ from the base of the fixing assembly.

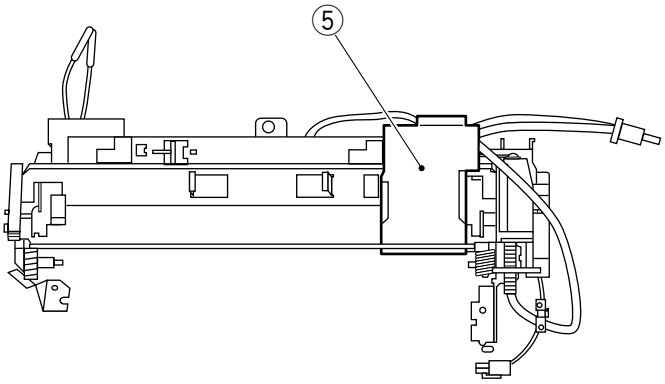

Figure 6-416

6) Pull out the faston ⑥ from the bottom of the fixing assembly.
7) Remove the screw ⑦, and remove the round terminal ⑧.

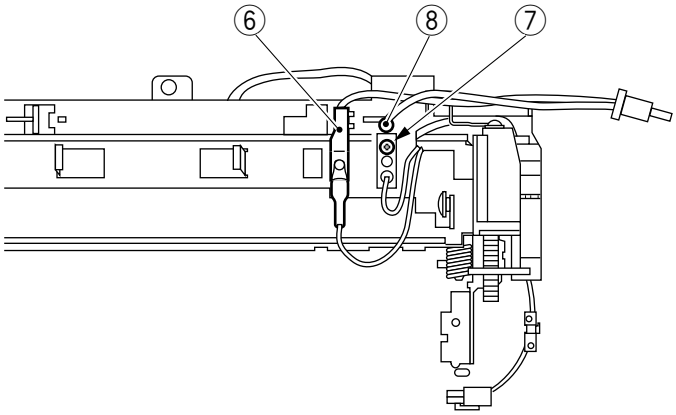

Figure 6-417

8) Remove the screw ⑨, and remove the two cord covers ⑩.

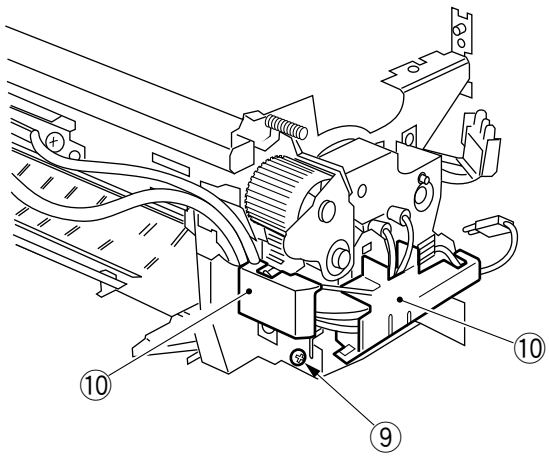

Figure 6-418

COPYRIGHT © 1997 CANON INC. CANON NP6330 REV.0 MAY 1997 PRINTED IN JAPAN (IMPRIME AU JAPON)

9) Remove the screw ⑪, and remove the cord cover ⑫ from the front.

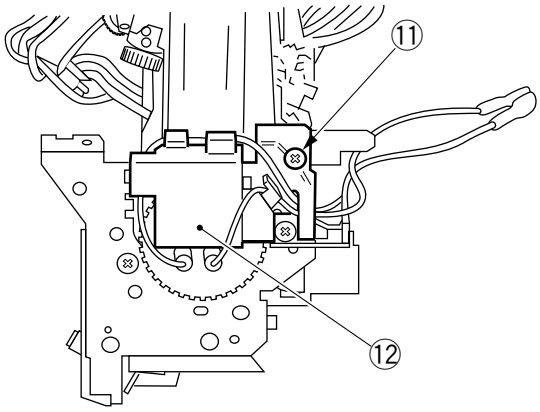

Figure 6-419

10) Remove the screw ⑬, and remove the heater mount (front) ⑭.

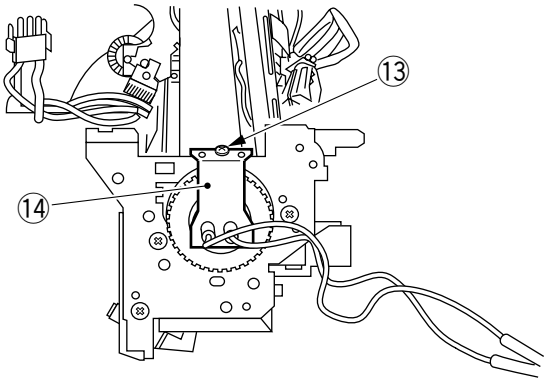

Figure 6-420

11) Remove the two screws ⑮, and remove the plate ⑯ and the heater mount (rear) ⑰.

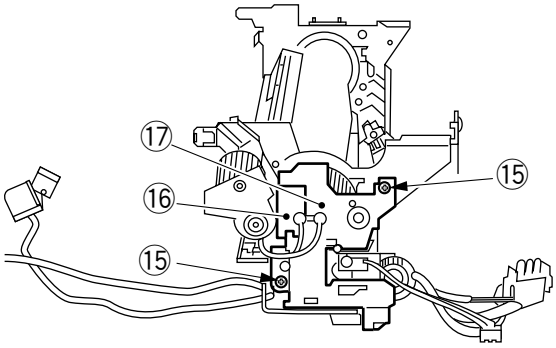

Figure 6-421

COPYRIGHT © 1997 CANON INC.
CANON NP6330 REV.0 MAY 1997 PRINTED IN JAPAN (IMPRIME AU JAPON)

12) Pull out the two fixing heaters ⑱ slowly to the front.

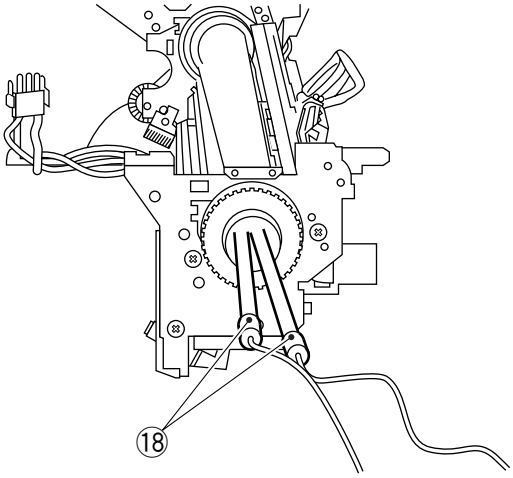

Figure 6-422

7. Removing the Fixing Roller

1) Remove the fixing assembly from the copier.
2) Remove the fixing cleaner assembly.
3) Remove the fixing heater.
4) Remove the screw ①, and remove the thermistor mount ②.
5) Remove the two screws ③, and remove the thermal switch mount ④.
6) Remove the paper guide ⑤ from the fixing assembly.

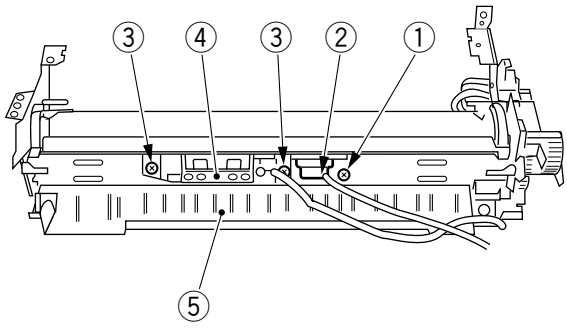

Figure 6-423

COPYRIGHT © 1997 CANON INC.

7) Remove the C-ring ⑥ and the gear ⑦ at the front.

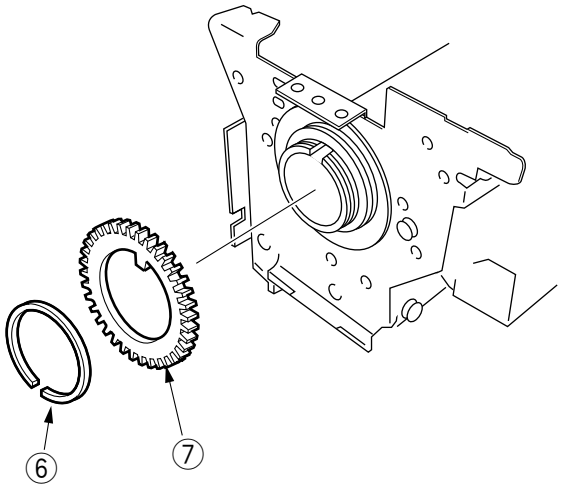

Figure 6-424

8) Remove the C-ring ⑧, varistor ring ⑨, and gear ⑩ at the rear.

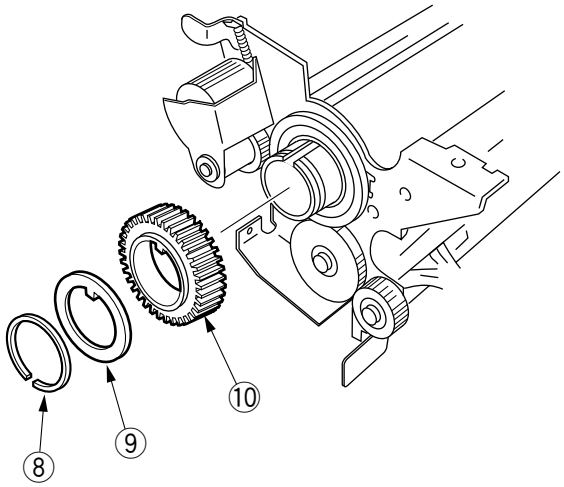

Figure 6-425

COPYRIGHT © 1997 CANON INC.
CANON NP6330 REV.0 MAY 1997 PRINTED IN JAPAN (IMPRIME AU JAPON)

9) Remove the two screws ⑫ from the lower stay ⑪; then, fit them in the screw hole ⑬ (both sides), and release the lower roller.

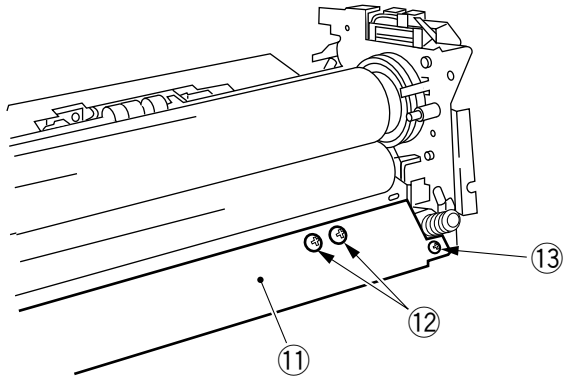

Figure 6-426

10) Remove the screw ⑭.
11) Remove the bearing ⑮ and the insulating bush ⑯.

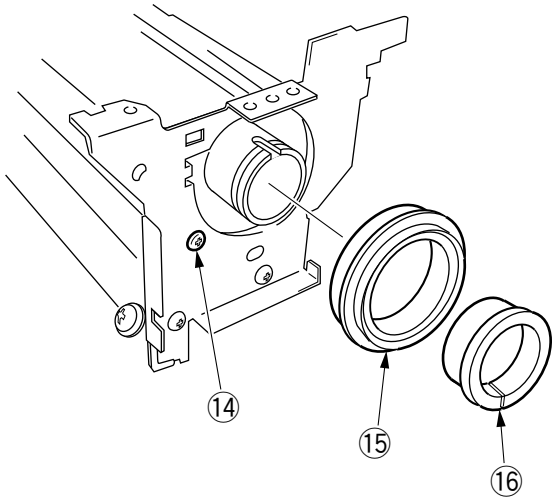

Figure 6-427

COPYRIGHT © 1997 CANON INC. CANON NP6330 REV.0 MAY 1997 PRINTED IN JAPAN (IMPRIME AU JAPON)

12) Pull out the upper fixing roller ⑰ to the front.

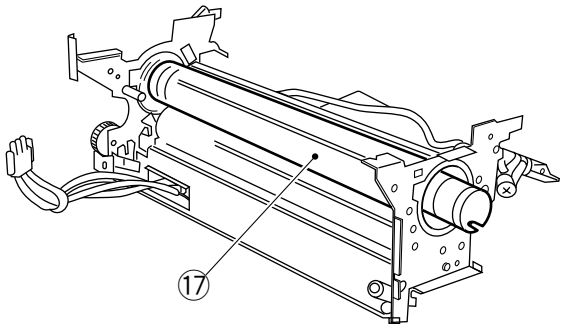

Figure 6-428

13) Lift the lower fixing roller ⑱ together with the bearing.

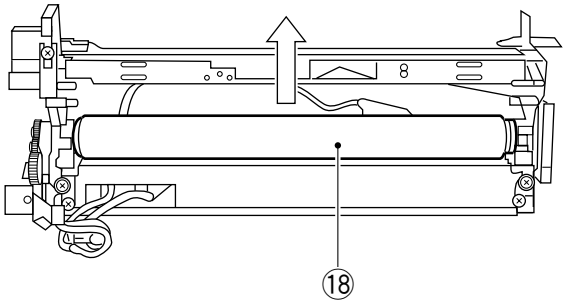

Figure 6-429

COPYRIGHT © 1997 CANON INC.
CANON NP6330 REV.0 MAY 1997 PRINTED IN JAPAN (IMPRIME AU JAPON)

8. Installing the Upper Fixing Roller and the Heater

a. Points to Note When Installing the Upper Fixing Roller.

① If possible, wrap the roller in copy paper to protect its surface against dirt and scratches.

② Orient the insulting bush as shown.

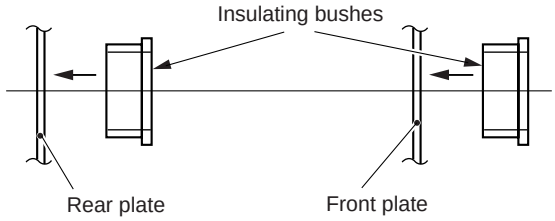

Figure 6-430

③ Orient the upper fixing roller so that its side with the longer bushing Ⓐ is toward the rear.

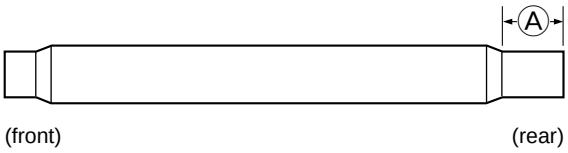

Figure 6-431

COPYRIGHT © 1997 CANON INC. CANON NP6330 REV.0 MAY 1997 PRINTED IN JAPAN (IMPRIME AU JAPON)

b. Points to Note When Installing the Heater
① Do not touch the surface of the heater.
② For the sub heater, one of the terminals of the lead wires ① is a round terminal ②. For the main heater, both sides are fastons.

<Main Heater>

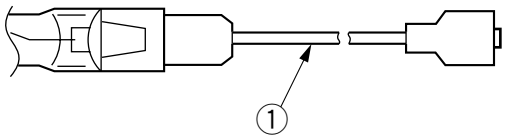

Figure 6-432

The side with the longer lead wire ① is toward the front of the copier.

<Sub Heater>

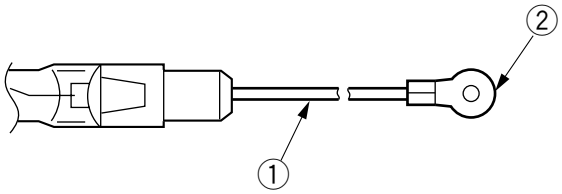

Figure 6-433

The round terminal is toward the rear. The faston is toward the front.

③ Insert the main heater on the right side (pick-up side) and the sub heater on the left side (delivery side) while viewing the fixing assembly from the front of the fixing assembly.

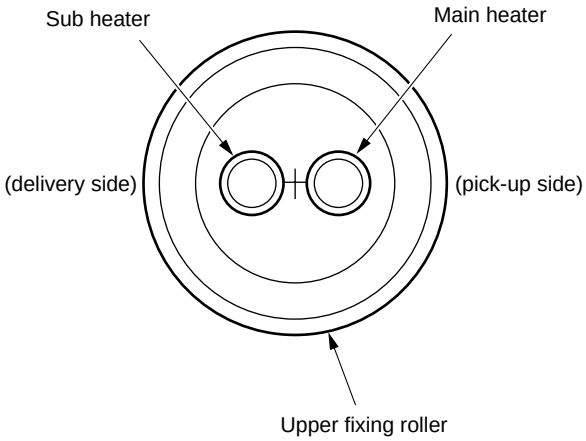

Figure 6-434

COPYRIGHT © 1997 CANON INC.
CANON NP6330 REV.0 MAY 1997 PRINTED IN JAPAN (IMPRIME AU JAPON)

9. Adjusting the Nip (tightening the pressure adjusting nut)

The nip is correct if it is as indicated in Table 6-401; otherwise, adjust it by turning the bolt.

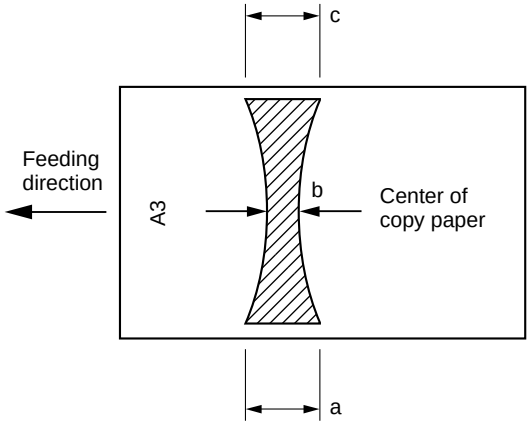

Figure 6-435

Note:

a and c are points 10mm from both edges of copy paper.

Dimension	Measurement	
b	Tracing paper (SM-1); 64/80g paper	5.5 ±0.5mm
|a-c|	0.5mm or less	

Table 6-401

a. Measuring the Nip

Wait for 15 min after the copier ends warmup; then, make 20 copies before taking measurements.

1) Place A3 paper on the multifeeder.
2) Open the copyboard cover.
3) Select '403' in nip measurement mode of service mode [4].
4) Press the OK key.
   The multifeeder picks up the paper, allowing you to take measurements as shown in Figure 6-435. (The paper will then be discharged.)

Reference:

The paper will be stopped between the fixing rollers and then discharged about 10 sec later.

5) Measure the nip.

COPYRIGHT © 1997 CANON INC.

10. Installing the Thermistor

Check to make sure that the detecting face of the thermistor is in even contact with the upper fixing roller.

In addition, make sure that the lead wire from the thermistor is not forced taut.

Reference:

You need not adjust the position of the thermistor. If the contact is not even, suspect deformation of the thermistor spring.

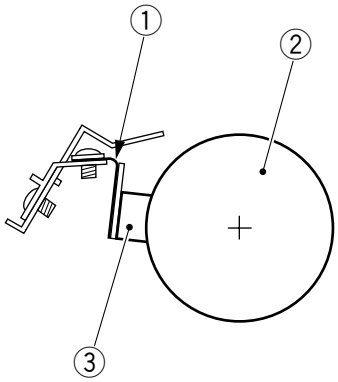

① Thermistor spring
② Upper fixing roller
③ Thermistor

Figure 6-436

11. Installing the Thermal Switch

Check to make sure that the detecting face of the thermal switch is in even contact with the upper fixing roller.

Reference:

You need not adjust the position of the thermal switch. If the contact is not even, suspect deformation of the thermal switch spring.

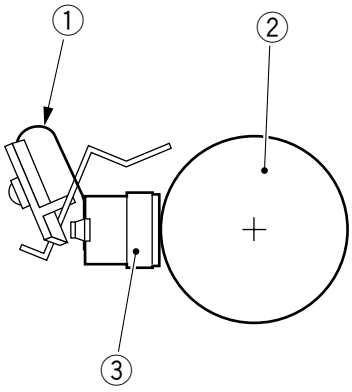

① Thermal switch spring
② Upper fixing roller
③ Thermal switch

Figure 6-437

COPYRIGHT © 1997 CANON INC.
CANON NP6330 REV.0 MAY 1997 PRINTED IN JAPAN (IMPRIME AU JAPON)

12. Position of the Paper Guide

The paper guide is positioned by the paper guide mount.
Therefore, you need not adjust its position when installing the paper guide.

Note:

Do not loosen the screw on the paper guide; you will have to adjust the position of the paper guide if you removed the paper guide. If you loosened the screw for some reason, be sure to adjust the position with reference to the notch on the fixing assembly mount.

13. Positioning the Cleaning Belt Solenoid

Install the solenoid so that the solenoid arm ② butts against a when the plunger ① of the cleaning belt solenoid is pushed by ⓐ finger.

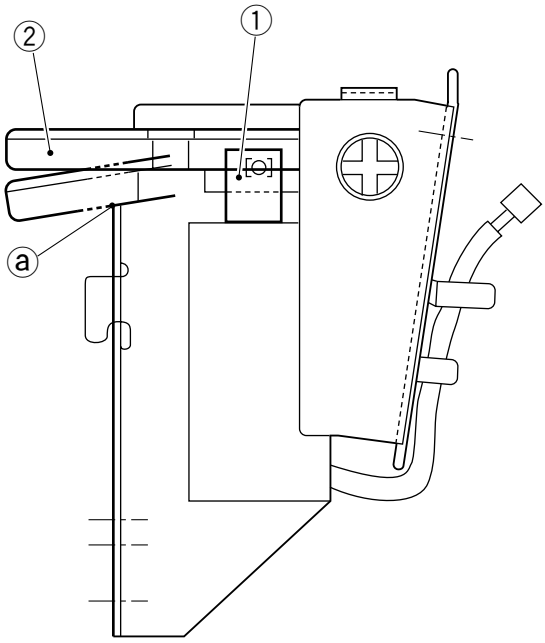

Figure 6-438

COPYRIGHT © 1997 CANON INC. CANON NP6330 REV.0 MAY 1997 PRINTED IN JAPAN (IMPRIME AU JAPON)

B. Delivery Assembly

1. Removing the Delivery Assembly

1) Open the front door.
2) Open the delivery assembly.
3) Remove the screw ①, and remove the connector cover ②.

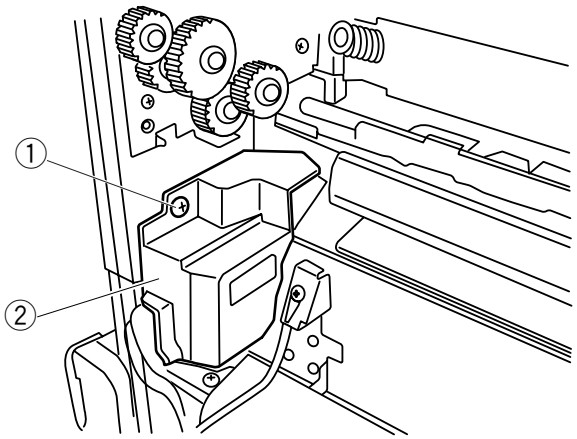

Figure 6-439

COPYRIGHT © 1997 CANON INC.
CANON NP6330 REV.0 MAY 1997 PRINTED IN JAPAN (IMPRIME AU JAPON)

4) Disconnect the two connectors ③, and remove the grounding wire fixing screw ④.
5) Remove the wire ⑤. (front ; hook, rear ; screw)
6) Remove the screw ⑥, and remove the support plate ⑦; then, remove the delivery assembly ⑧.

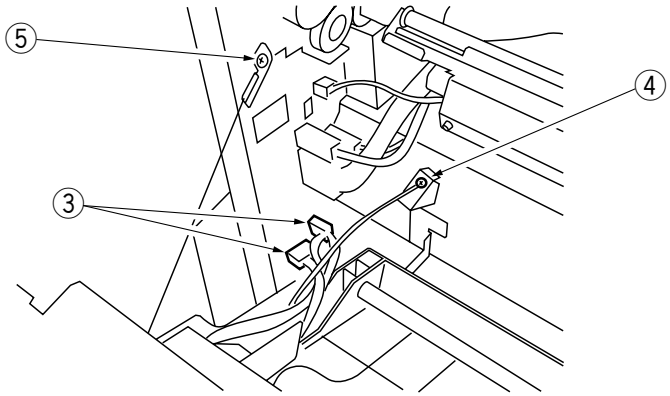

Figure 6-440

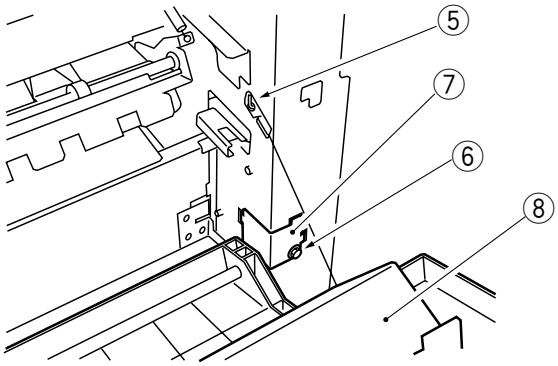

Figure 6-441

Note:

When removing the wire fixing screw (front), be sure to support the delivery assembly.

2. Removing the Upper Separation Claws

1) Open the delivery assembly.
2) Remove the screw ①, and remove the insulating cover ②.

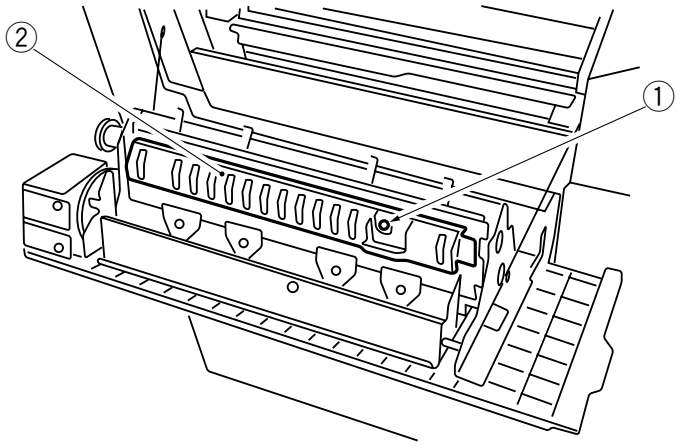

Figure 6-442

3) Remove the two screws ③, and remove the upper separation claw unit ④.

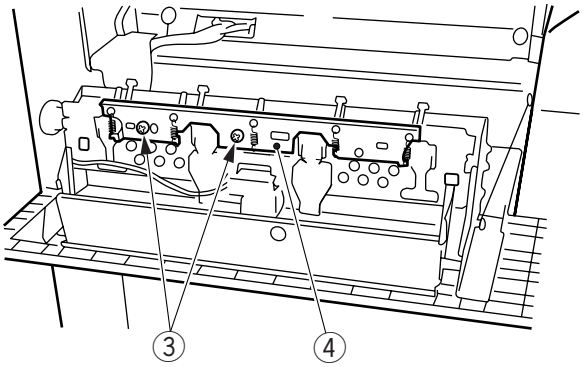

Figure 6-443

4) Remove the spring ⑤, and remove the upper separation claws ⑥.

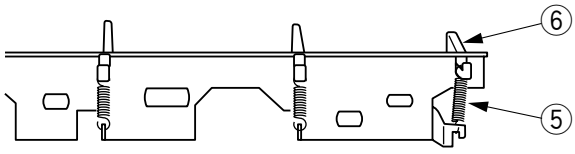

Figure 6-444

Note:

When installing the upper separation claw unit, be sure to do so while forcing it toward the front.

COPYRIGHT © 1997 CANON INC.
CANON NP6330 REV.0 MAY 1997 PRINTED IN JAPAN (IMPRIME AU JAPON)

3. Removing the Lower Separation Claws

1) Open the delivery assembly.
2) Remove the four springs ① of the lower separation claws.
3) Remove the two screws ②, and remove the lower separation claw support plate ③.

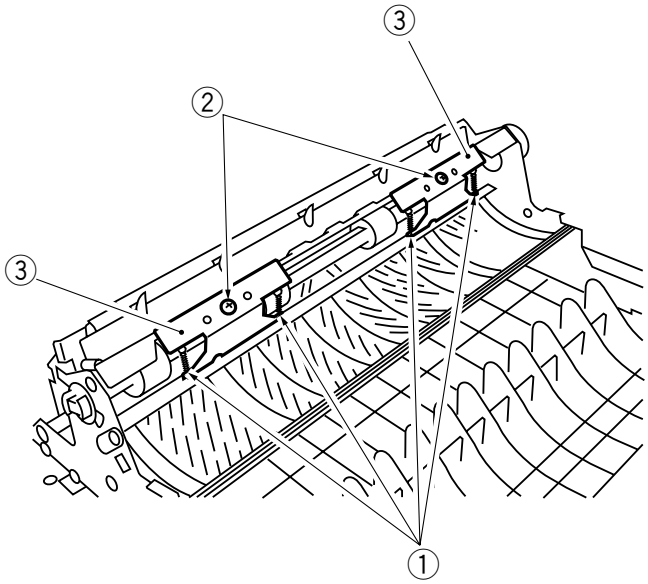

Figure 6-445

4) Remove the four lower separation claws ④.

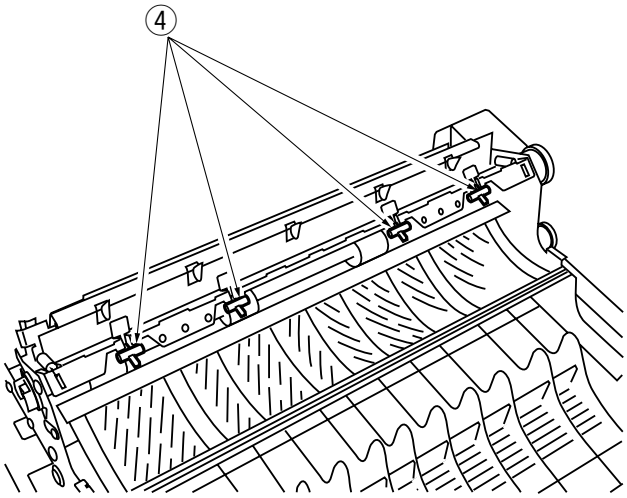

Figure 6-446

COPYRIGHT © 1997 CANON INC. CANON NP6330 REV.0 MAY 1997 PRINTED IN JAPAN (IMPRIME AU JAPON)

4. Removing the Delivery Motor

1) Open the delivery assembly.
2) Remove the screw ① , and remove the connector cover ②.

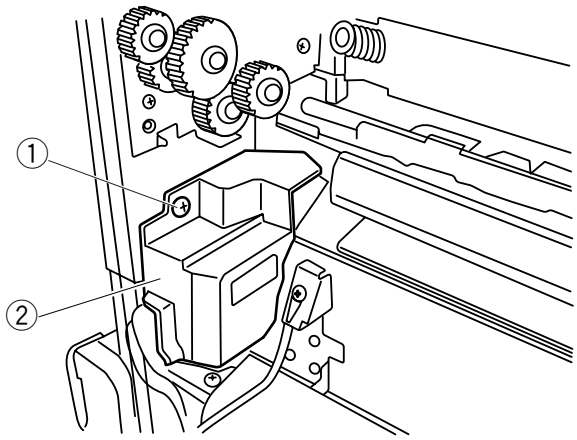

Figure 6-447

3) Disconnect the connector ③.

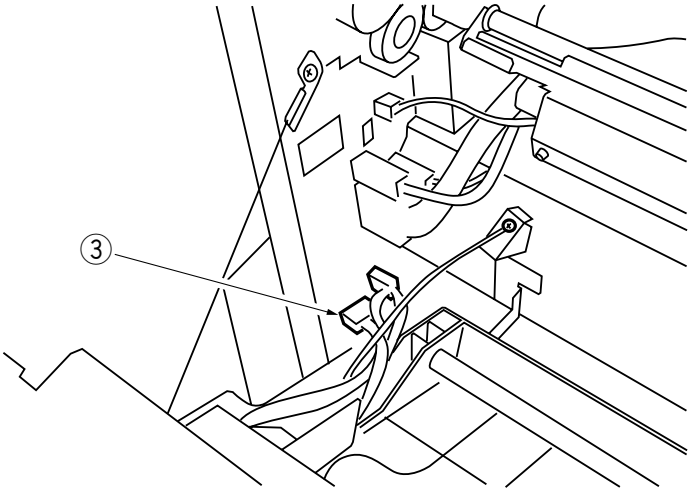

Figure 6-448

COPYRIGHT © 1997 CANON INC.
CANON NP6330 REV.0 MAY 1997 PRINTED IN JAPAN (IMPRIME AU JAPON)

4) Remove the two screws ④, and remove the motor cover ⑤.
5) Remove the two screws ⑥, and remove the harness cover ⑦.

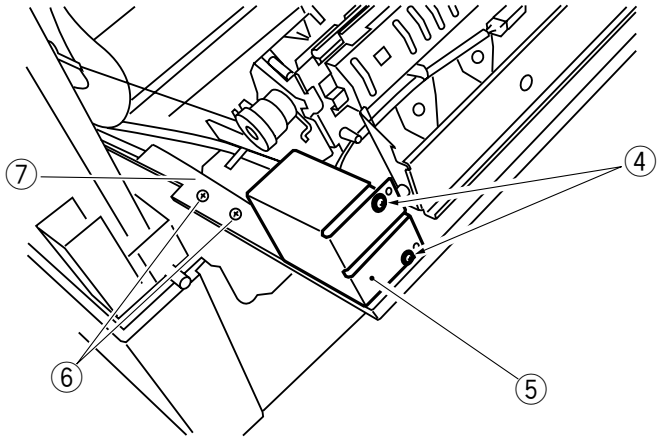

Figure 6-449

6) Remove the two screws ⑧, and remove the delivery motor ⑨.

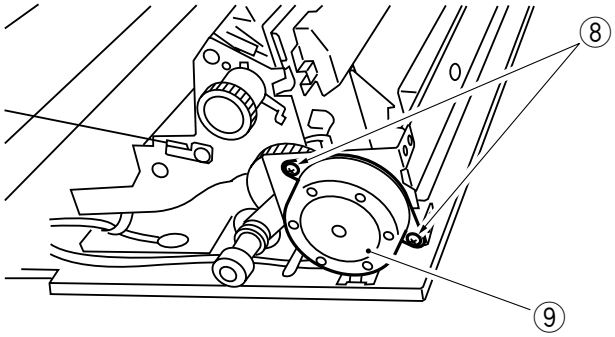

Figure 6-450

COPYRIGHT © 1997 CANON INC. CANON NP6330 REV.0 MAY 1997 PRINTED IN JAPAN (IMPRIME AU JAPON)

CHAPTER 7

CONTROLS AND EXTERNALS

This chapter describes the outline of the purposes, roles and operations of the mechanisms for auxiliary control of this copier, the relationship between the electric system and mechanical system, and the operational timing of each component.

I. FANS 7-1
II. POWER SUPPLY 7-3
A. Outline of Power Supply.....7-3
B. Protection Mechanisms of the Power Supply Circuit 7-5
III. ERROR DETECTION CIRCUIT 7-6
A. Outline 7-6
B. Scanning Lamp Error Activation Detection Circuit 7-7
C. Fixing Heater Error Activation Detection Circuit 7-7
IV. DISASSEMBLY AND ASSEMBLY.....7-8
A. Externals.....7-9
B. Control Panel.....7-14
C. Copyboard Cover 7-15
D. Fans.....7-15
E. Main Motor Assembly.....7-17
F. Mirror Guide Assembly.....7-18
G. Main Drive Assembly.....7-19
H. Cleaning Belt Drive Assembly.....7-23
I. DC Controller PCB 7-24
J DC Power Supply PCB 7-25

COPYRIGHT © 1997 CANON INC. CANON NP6330 REV.0 MAY 1997 PRINTED IN JAPAN (IMPRIME AU JAPON)

I. FANS

As many as five fans are used in the copier. See Table 7-101 for the orientation and the function of each fan and the filters used, and see Figure 7-101 for when each of the fans turn on.

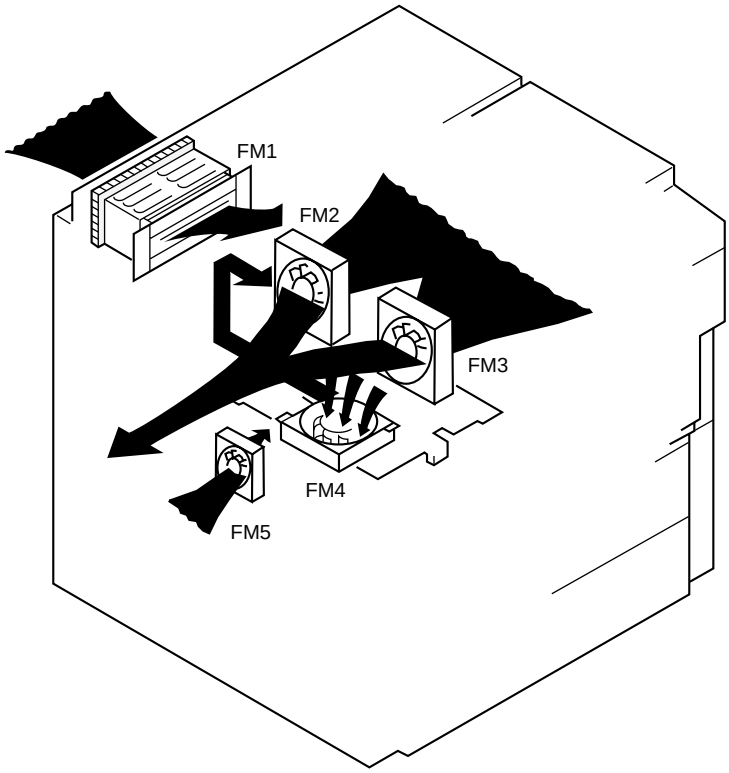

Figure 7-101

No.	Name	Orientation	Filter	Function
FM1	Scanner cooling fan	Blowing	Air	• Cools the scanner.
FM2/ FM3	Exhaust fan 1/ Exhaust fan 2	Blowing	Ozone	• Exhausts ozone generated by charging assemblies through a filter. • Exhausts air drawn by the feeding fan.
FM4	Feeding fan	Drawing		• Keeps copy paper against the feeding belt. • Exhausts ozone generated by charging assemblies to the outside of the copier.
FM5	Power supply PCB cooling fan	Blowing		• Cools the DC power supply PCB

Table 7-101

COPYRIGHT © 1997 CANON INC.
CANON NP6330 REV.0 MAY 1997 PRINTED IN JAPAN (IMPRIME AU JAPON)

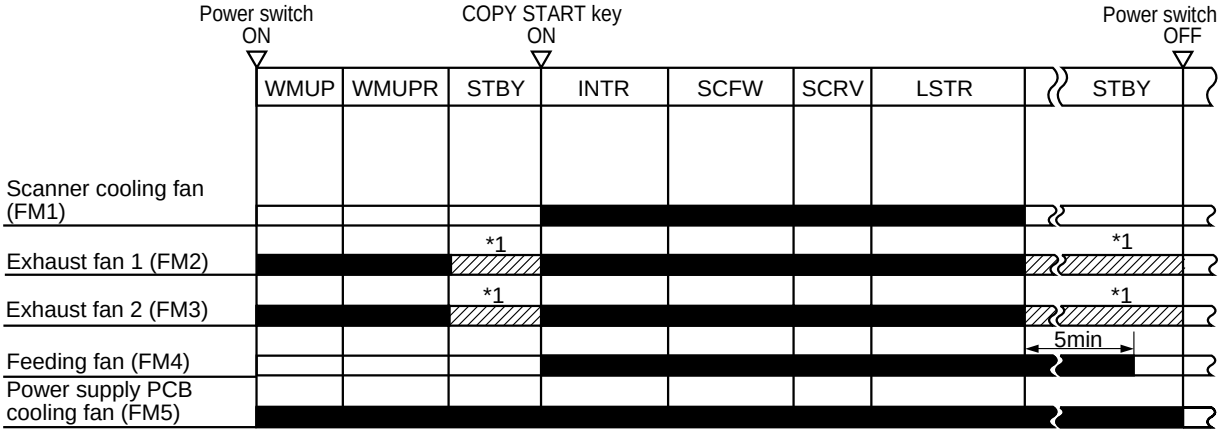

*1: Exhaust fan is rotated at a half speed during stand-by state.

Figure 7-102

COPYRIGHT © 1997 CANON INC.
CANON NP6330 REV.0 MAY 1997 PRINTED IN JAPAN (IMPRIME AU JAPON)

II. POWER SUPPLY

A. Outline of Power Supply

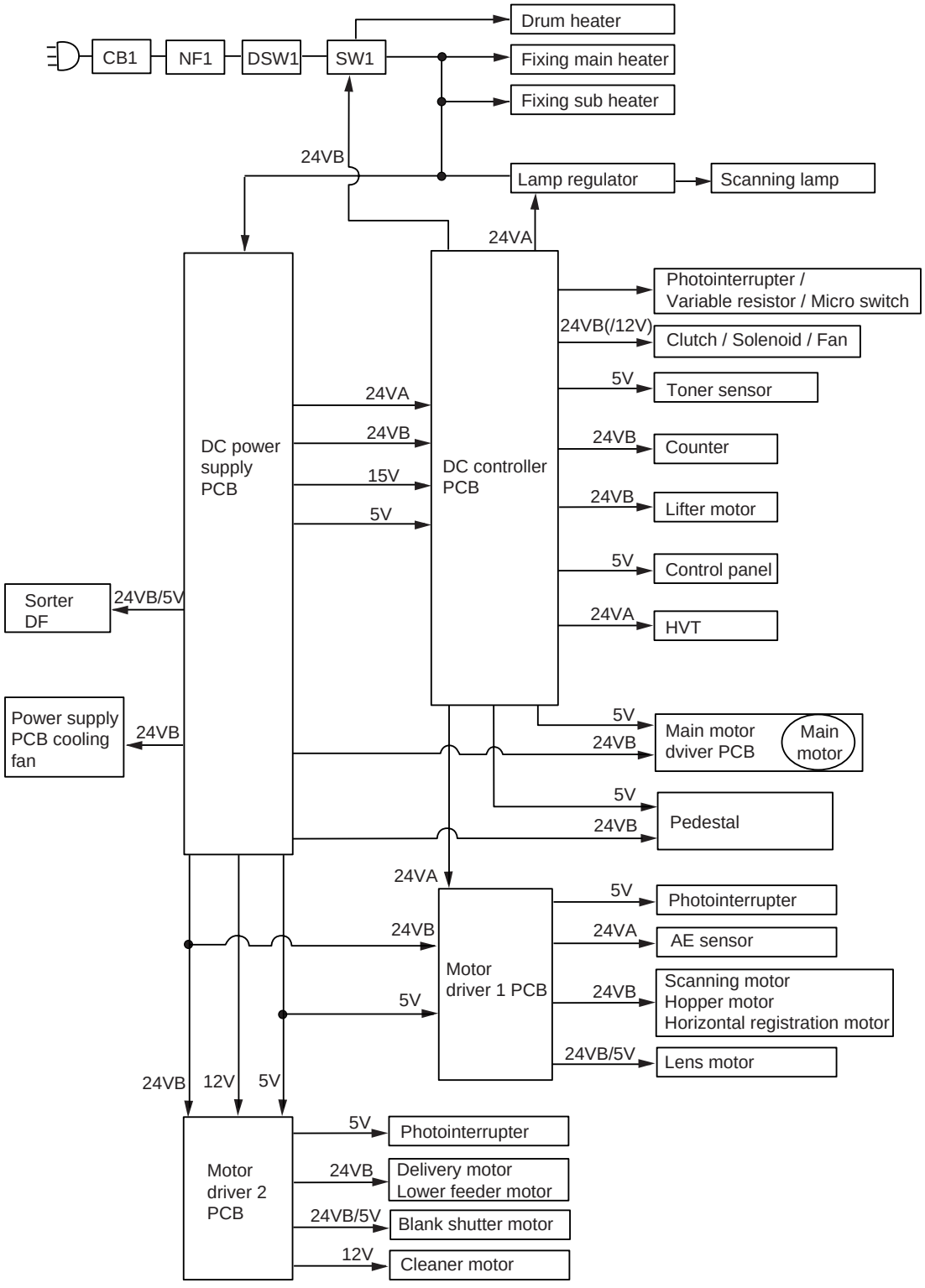

Figure 7-201

COPYRIGHT © 1997 CANON INC.

AC power is supplied to the DC power supply PCB and other loads when the door switch (DSW1) and the power switch (SW1) are turned on.

The DC power supply PCB generates +24 VA, +24 VB, +12 V, and +5 V.

The drum heater is supplied with power when the power switch is turned off.

The DC power supplied to the DC controller is cut off when the copier's power switch is turned off; to back up any data, the RAM on the DC controller PCB is equipped with a lithium battery (BAT101).

Reference:

The tolerances of the DC voltage generated by the DC power supply PCB are as follows:

- +24 VA ±3%
- +24 VB ±10%
- +12 V ±10%
- +5 V ±3%

Caution:

Replace the lithium battery only with the one listed in the Parts Catalog. Use of another battery may present a risk of fire or explosion. The battery may present a fire or chemical burn hazard if mistreated. Do not recharge, disassemble or dispose of it in fire. Keep the battery out of reach of children and discard any used battery promptly.

COPYRIGHT © 1997 CANON INC.
CANON NP6330 REV.0 MAY 1997 PRINTED IN JAPAN (IMPRIME AU JAPON)

B. Protection Mechanisms of the Power Supply Circuit

The DC power supply PCB is equipped with an overcurrent protection circuit and an over voltage protection circuit.

If an error, and as a result a short circuit, occurs in any of the loads, the protection circuits will turn on to cut off the output of power.

The protection circuits can be reset by depriving the DC power supply PCB of AC power for 1 min or more (by disconnecting the power plug). Be sure to remove the cause of activation before turning on the power switch once again.

Note:

Repeated short circuiting and recovering of a load can cause the built-in fuse to melt.

COPYRIGHT © 1997 CANON INC.

III. ERROR DETECTION CIRCUIT

A. Outline

The copier's power switch (SW1) is equipped with a relay which turns on in response to the following to cut off the AC power to the DC power supply PCB:

① Error in the scanning lamp
② Error in the fixing heater

Reference:

The relay will also turn on to turn off the power switch when the copier is not operated for a specific period of time set in user mode.

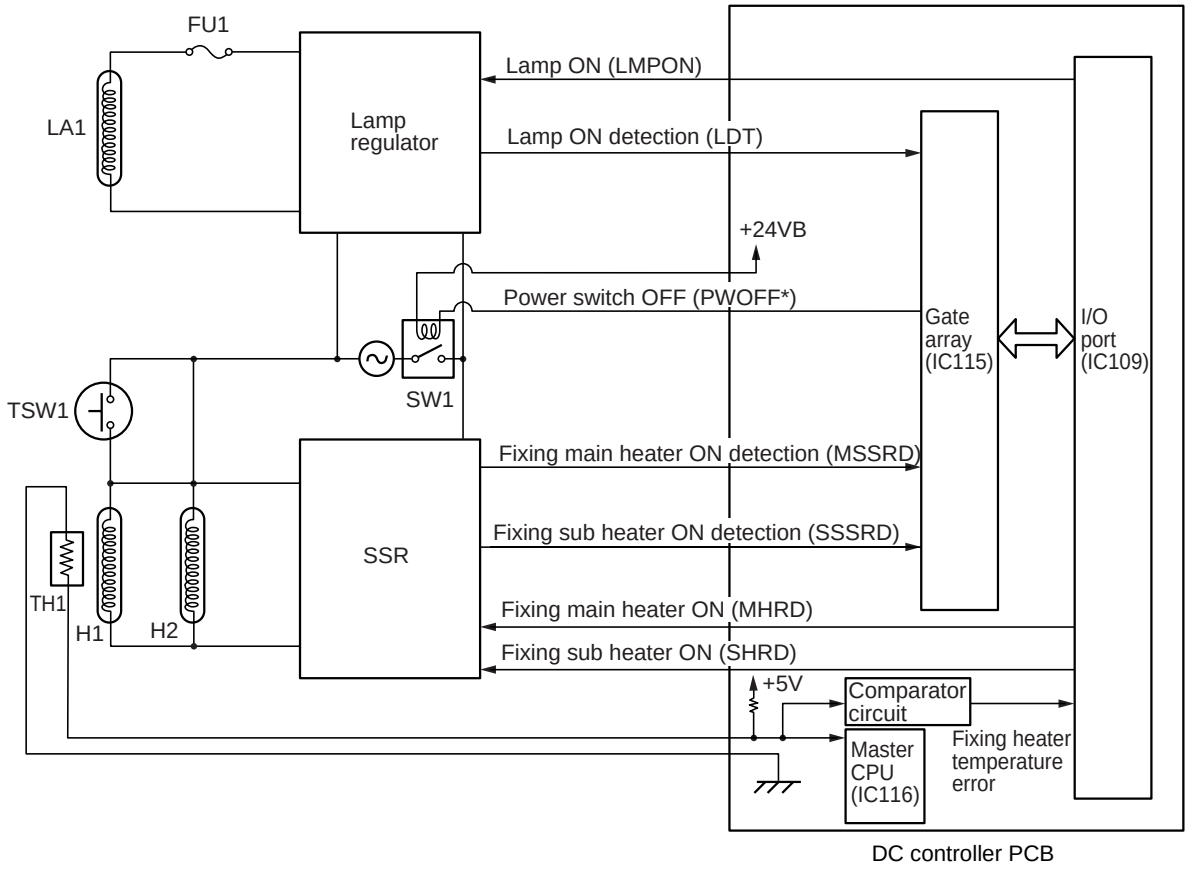

Figure 7-301

COPYRIGHT © 1997 CANON INC.
CANON NP6330 REV.0 MAY 1997 PRINTED IN JAPAN (IMPRIME AU JAPON)

B. Scanning Lamp Error Activation Detection Circuit

The state (activation) of the scanning lamp (LA1) is monitored by the gate array (IC115) on the DC controller PCB.

The lamp regulator sends the lamp ON detection signal (LDT) to the DC controller while the scanning lamp remains on. If the gate array detects the LDT signal for 22 sec continuously, it will identify the condition as an error in the lamp and, as a result, will cause the error auto power-off signal (PWOFF*) to go '0'. In response, the relay inside the power switch (SW1) turns on to turn off the power switch, thereby cutting off the AC power to the DC power supply PCB.

C. Fixing Heater Error Activation Detection Circuit

1. Detection by an SSR

The SSR sends the SSR drive signal (MSSRD, SSSRD) to the DC controller while the fixing heater (H1, H2) remains on.

If the gate array (IC115) on the DC controller PCB detects the MSSRD signal or the SSSRD signal in the absence of the heater drive command (MHRD, SHRD), it will identify the condition as an error in the heater and, as a result, will indicate 'E004' and at the same time will cause the error auto power-off signal (PWOFF*) to go '0'. In response, the relay inside the power switch (SW1) will turn on to turn off the power switch, thereby cutting the AC power to the DC power supply PCB.

2. Detection by a Thermistor

The upper fixing roller is equipped with a thermistor (TH1) used to detect fixing temperature.

If the temperature of the upper fixing roller fails to reach a specific level within a specific period of time or it exceeds 220°C, an error code will be indicated; at the same time, the gate array on the DC controller PCB will turn off the power switch to cut off the AC power to the DC power supply PCB. (See Chapter 11.)

COPYRIGHT © 1997 CANON INC.

IV. DISASSEMBLY AND ASSEMBLY

This section explains machanical characteristics and describes how to disassemble /assemble the copier.

Be sure to observe the following whenever disassembling/assembling the copier:

1. Disconnect the power plug before starting the work.
2. Unless otherwise shown, assemble the parts by reversing the steps given to disassemble them.
3. Identify each screw by type (length, diameter) and location.
4. A washer is used for two of the mounting screws on the rear cover to protect against static electricity; be sure to use the washer when assembling the part.
5. A washer is used for some mounting screws (for grounding wire, varistor) to ensure correct electrical continuity; be sure to use the washer when assembling the part.
6. As a rule, do not operate the copier while any of its parts is removed.
7. Be sure to turn off the front door switch or the power switch before sliding out the fixing assembly.

COPYRIGHT © 1997 CANON INC.
CANON NP6330 REV.0 MAY 1997 PRINTED IN JAPAN (IMPRIME AU JAPON)

A. Externals

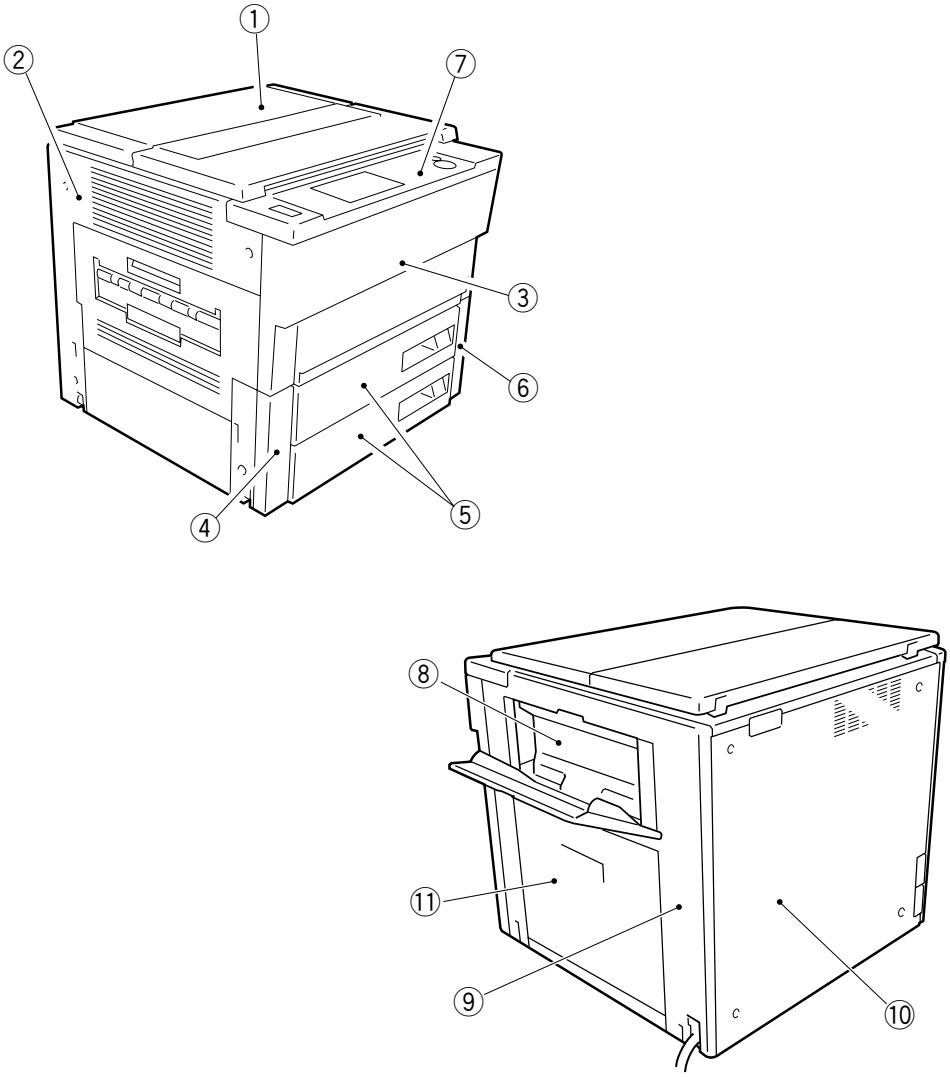

Figure 7-401

① Copyboard cover
② Left cover (3)
③ Front door (1 + pin x 2)
④ Front left cover (2)
⑤ Cassette
⑥ Front right cover (2)
⑦ Control panel
⑧ Multifeeder inside cover (2)
⑨ Right cover (5)
⑩ Rear cover (4)
⑪ Right door (2)

Note:

The number in parentheses indicates the number of mounting screws used. Remove the covers as necessary to clean, inspect, or repair the inside of the copier. Those cover that may be detached by mere removal of the mounting screws used on their own are left out of the discussions.

COPYRIGHT © 1997 CANON INC.

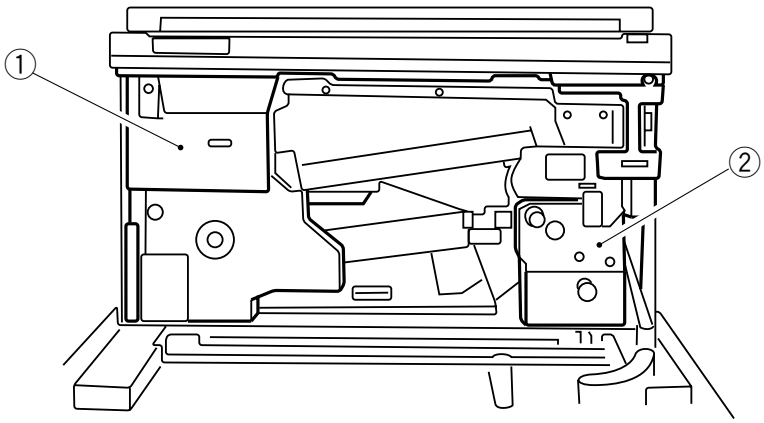

① Left inside cover (4)
② Right inside cover (2)

Figure 7-402

Remove the covers as necessary to clean, inspect, or repair the inside of the copier.

Those covers that may be removed through mere removal of mounting screws on their own are omitted from the discussions.

COPYRIGHT © 1997 CANON INC.
CANON NP6330 REV.0 MAY 1997 PRINTED IN JAPAN (IMPRIME AU JAPON)

1. Remove the left inside cover

1) Open the front door and delivery cover.
2) Remove the screw ① and two pins ② ; then, remove the front door ③.
3) Open the hopper ④.

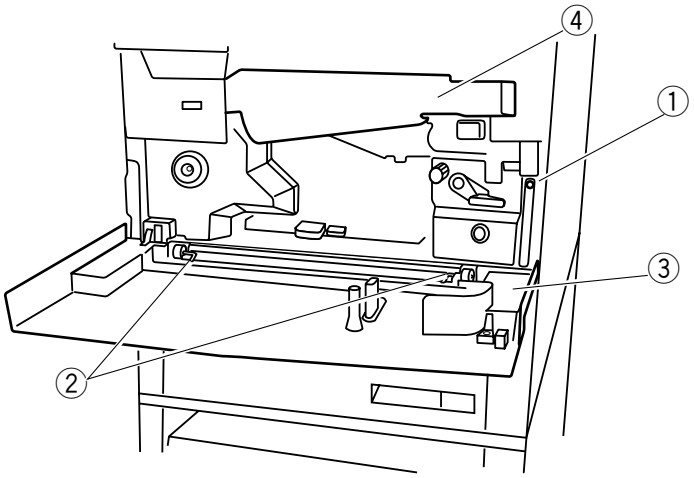

Figure 7-403

4) Remove the screw ⑤, and remove the fixing assembly knob ⑥.
5) Remove the four screws ⑦, and remove the left inside cover ⑧.

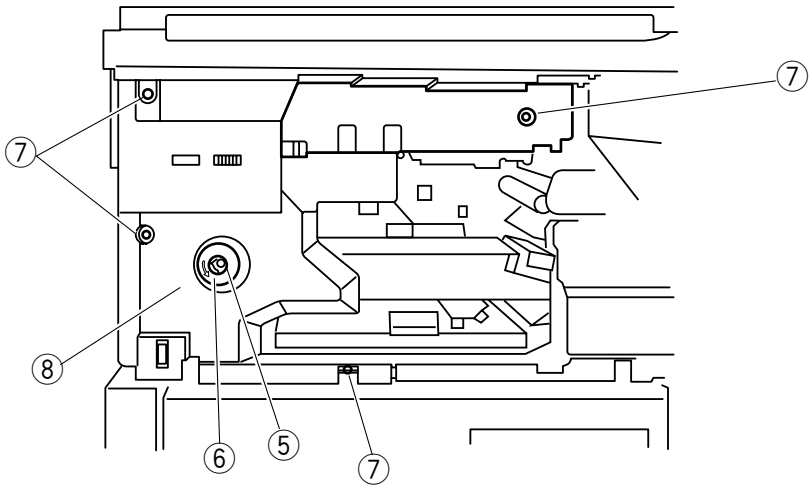

Figure 7-404

COPYRIGHT © 1997 CANON INC.

2. Remove the right inside cover

1) Remove the left inside cover.
2) Remove the connector cover ①.

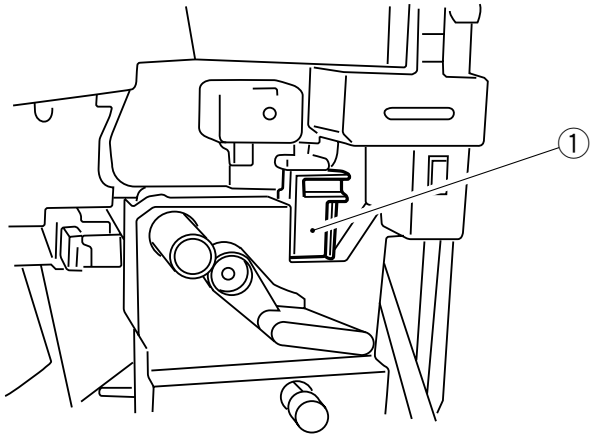

Figure 7-405

3) Turn the feeding assembly releasing lever ② counterclockwise to release the feeding assembly.
4) Disconnect the connector ③.

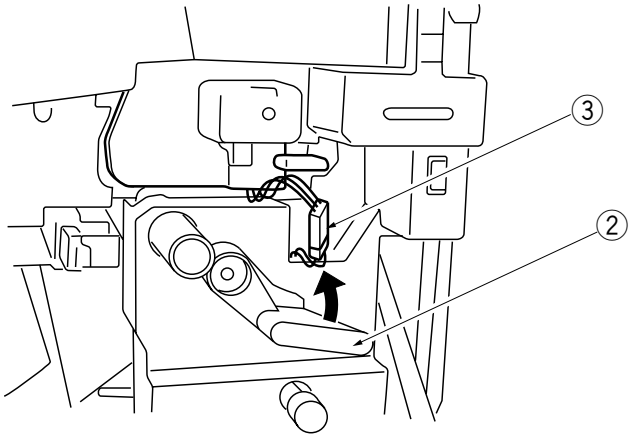

Figure 7-406

COPYRIGHT © 1997 CANON INC.
CANON NP6330 REV.0 MAY 1997 PRINTED IN JAPAN (IMPRIME AU JAPON)

5) Remove the grip ring ④, and remove the feeding assembly releasing lever ⑤.
6) Remove the two knob ⑥.
7) Remove the two screws ⑦, and remove the right inside cover ⑧.

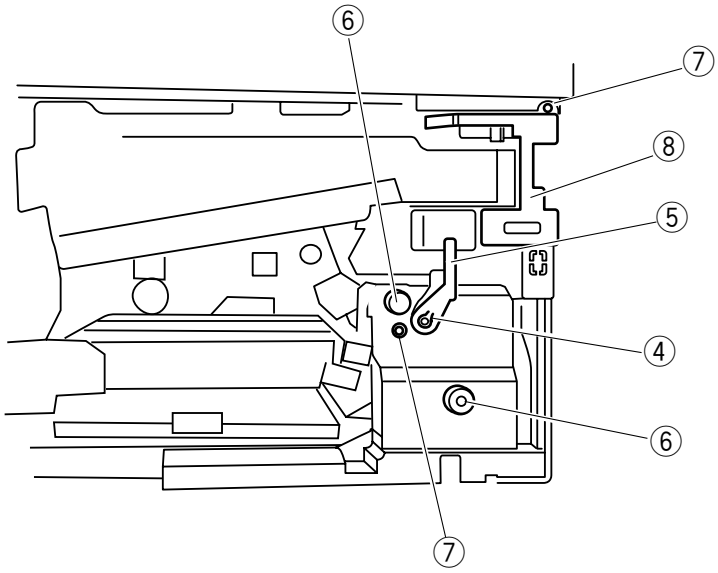

Figure 7-407

COPYRIGHT © 1997 CANON INC.

B. Control Panel

1. Removing the Control Panel

1) Remove the left inside cover and right inside cover.
2) Disconnect the four connectors ①.

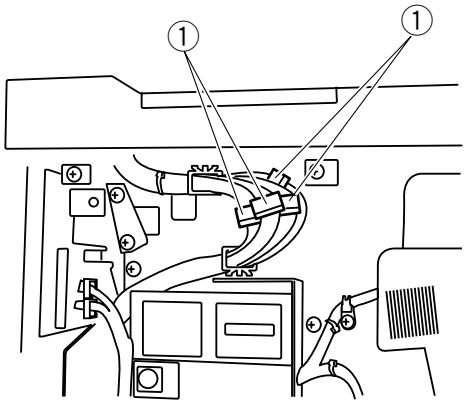

Figure 7-408

3) Remove the four screws ②.

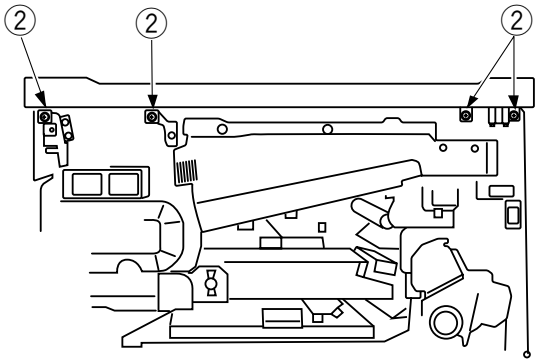

Figure 7-409

4) Remove the magnet plate retaining screw ③, and remove the control panel ④.

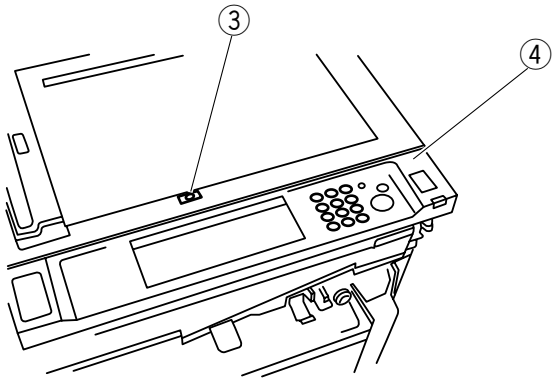

Figure 7-410

COPYRIGHT © 1997 CANON INC.
CANON NP6330 REV.0 MAY 1997 PRINTED IN JAPAN (IMPRIME AU JAPON)

C. Copyboard Cover

1. Replacing the Copyboard Cover Sheet

The copyboard cover sheet is attached to the copyboard cover by means of double-sided tape, allowing you to remove it by simply pulling on its corners.

Be sure to press the entire surface of the sheet after attachment.

D. Fans

1. Removing the Scanner Cooling Fan

1) Remove the rear cover.
2) Disconnect the connector ①.
3) Free the harness ② from the harness retainer.
4) Remove the four screws ③, and remove the scanner cooling fan ④.

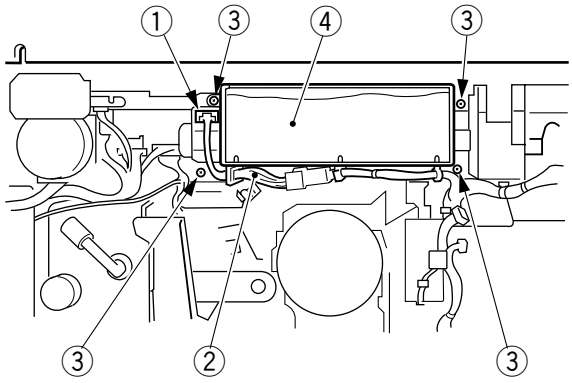

Figure 7-411

2. Removing the Exhaust Fan

1) Remove the drum unit.
2) Remove the left cover and the inside left cover.
3) Remove the screw ①, and disconnect the connector ②; then, put the connector inside the copier.

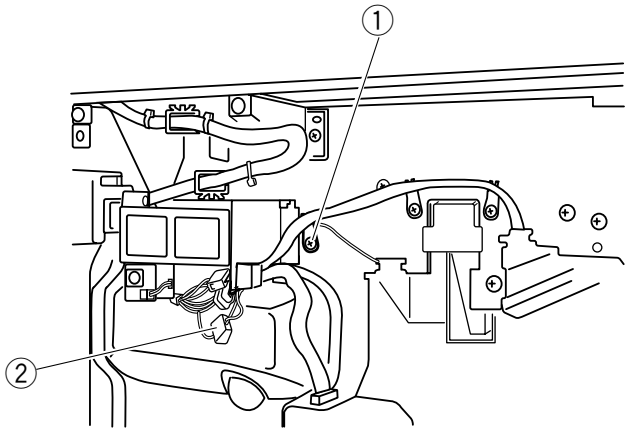

Figure 7-412

COPYRIGHT © 1997 CANON INC.

4) Remove the ozone filter ③.

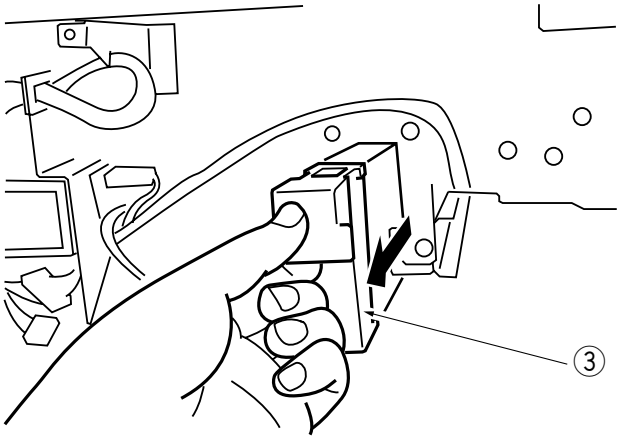

Figure 7-413

5) Remove the fixing assembly.
6) Remove the two screws ④, and remove the fan ⑤ in the direction of delivery together with the duct.

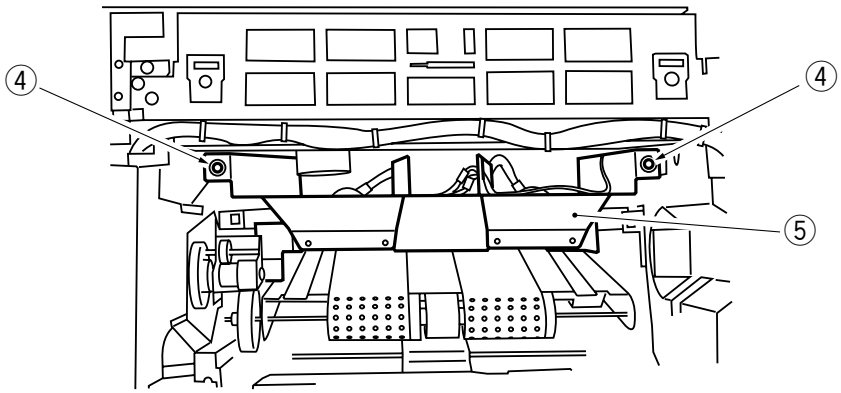

Figure 7-414

COPYRIGHT © 1997 CANON INC.
CANON NP6330 REV.0 MAY 1997 PRINTED IN JAPAN (IMPRIME AU JAPON)

7) Remove the two screws ⑥, and disconnect the connector ⑦; then, remove the exhaust fan ⑧.

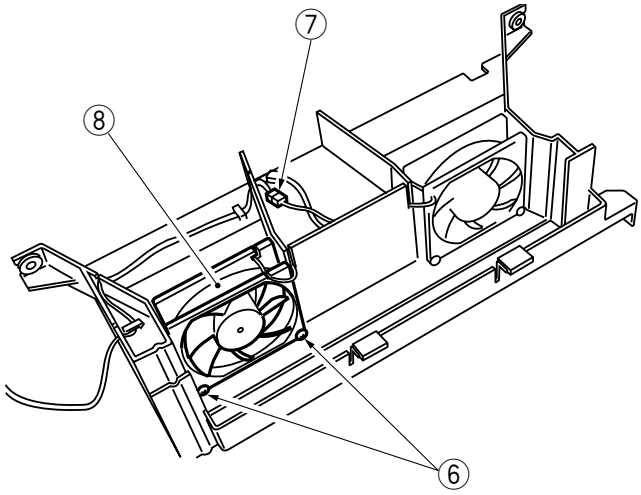

Figure 7-415

3. Removing the Feeding Fan (See p. 5-67)

E. Main Motor Assembly

1. Removing the Main Motor Assembly

1) Remove the rear cover.
2) Remove the four screws ①, and disconnect the two connectors ②; then, remove the main motor assembly ③.

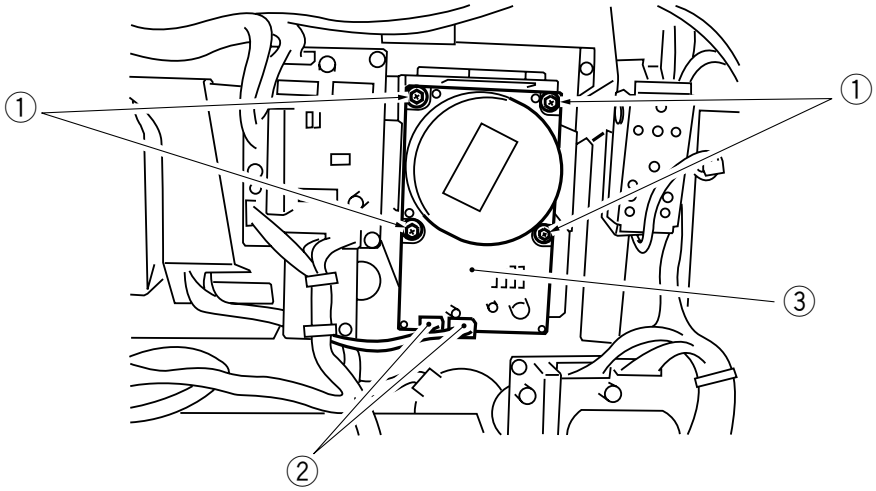

Figure 7-416

COPYRIGHT © 1997 CANON INC.

F. Mirror Guide Assembly

1. Removing the Mirror Guide Plate

1) Remove the copyboard glass.
2) Remove the lens hood.
3) Remove the screw ①, and remove the mirror guide plate ②.

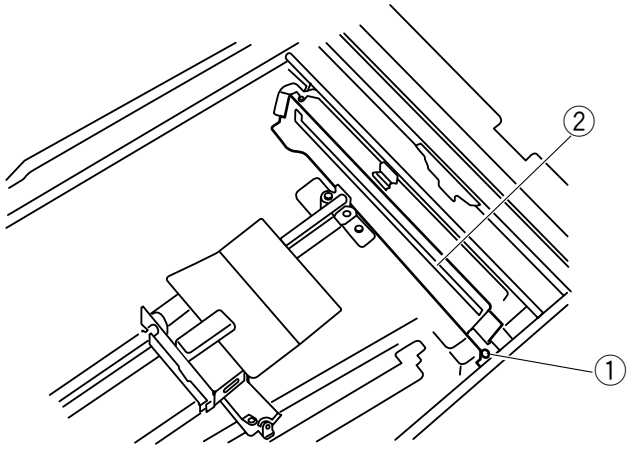

Figure 7-417

COPYRIGHT © 1997 CANON INC.
CANON NP6330 REV.0 MAY 1997 PRINTED IN JAPAN (IMPRIME AU JAPON)

G. Main Drive Assembly

1. Removing the Main Drive Assembly

1) Remove the developing assembly and the drum unit.
2) Remove the rear cover.
3) Remove the screw ①, and disconnect the three connectors ②; then, remove the lamp regulator PCB ③.

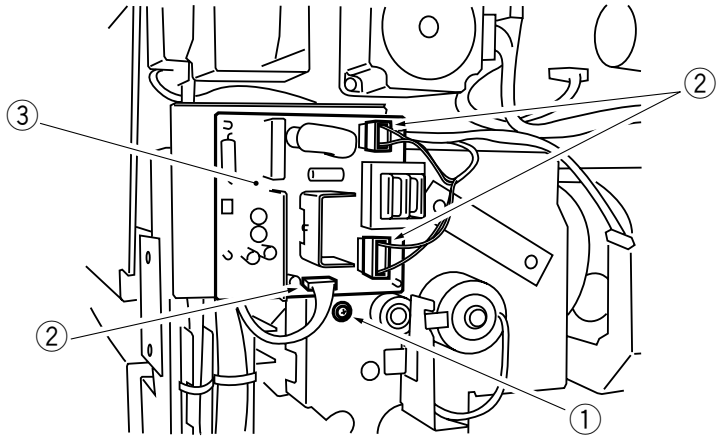

Figure 7-418

4) Remove the faston ④.

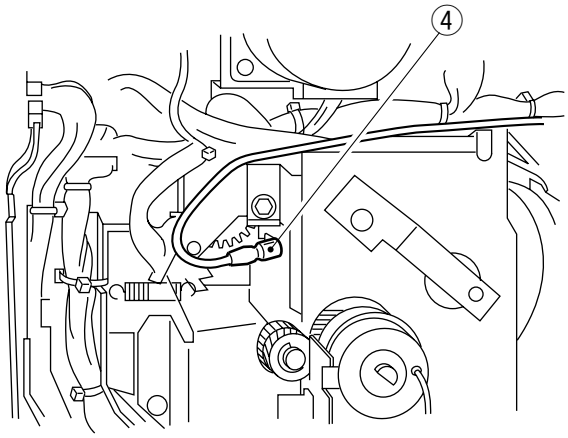

Figure 7-419

COPYRIGHT © 1997 CANON INC.

5) Remove the two screws ⑤, and slide the high-voltage terminal ⑥ upward. (Be sure to release the feeding assembly in advance.)

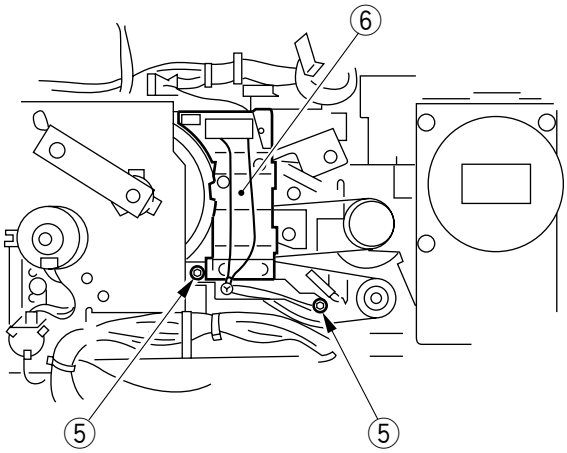

Figure 7-420

6) Remove the two grip rings ⑦, and disconnect the two connectors ⑧; then, remove the registration roller clutch ⑨ and the horizontal registration roller clutch ⑩.

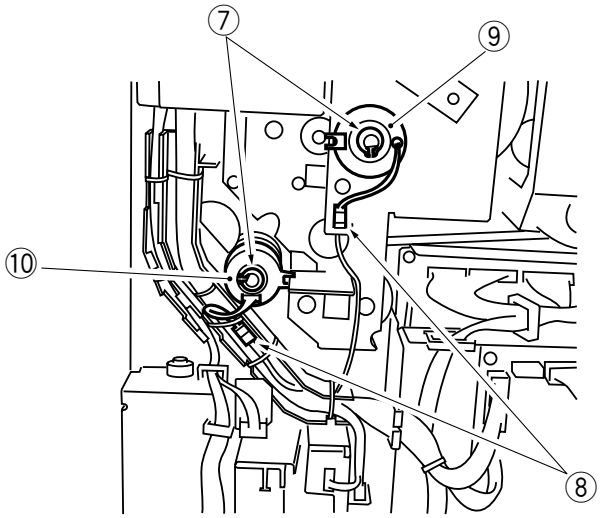

Figure 7-421

COPYRIGHT © 1997 CANON INC.

7) Remove the connector ⑪.

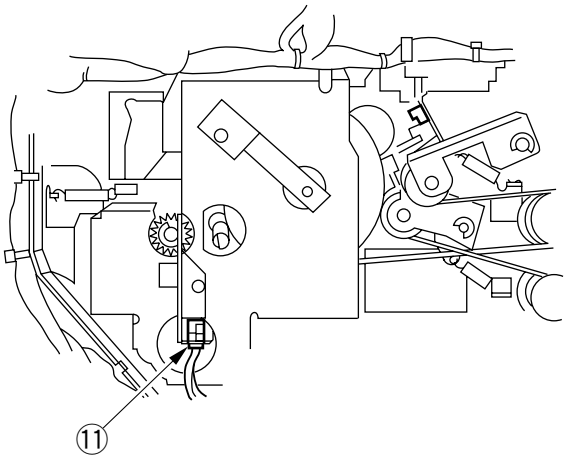

Figure 7-422

8) Remove the six screws ⑫, and detach the timing belt from pulleys A and B (Figure 7-424); then, remove the main drive assembly ⑬.

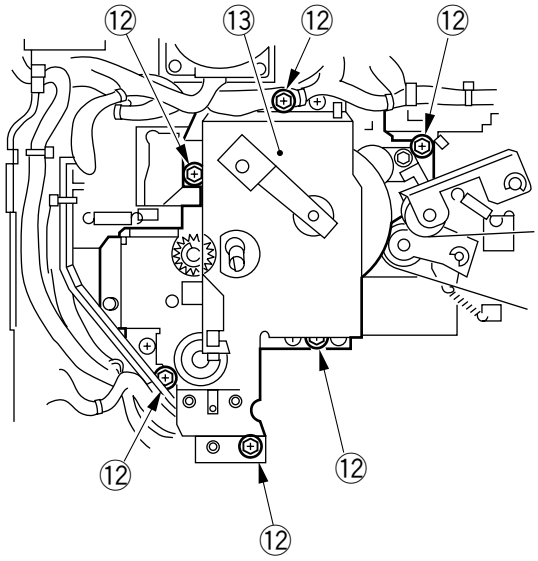

Figure 7-423

COPYRIGHT © 1997 CANON INC.

2. Attaching the Drive Belt

Attach the drive belt on the gears and rollers as shown in the figure.

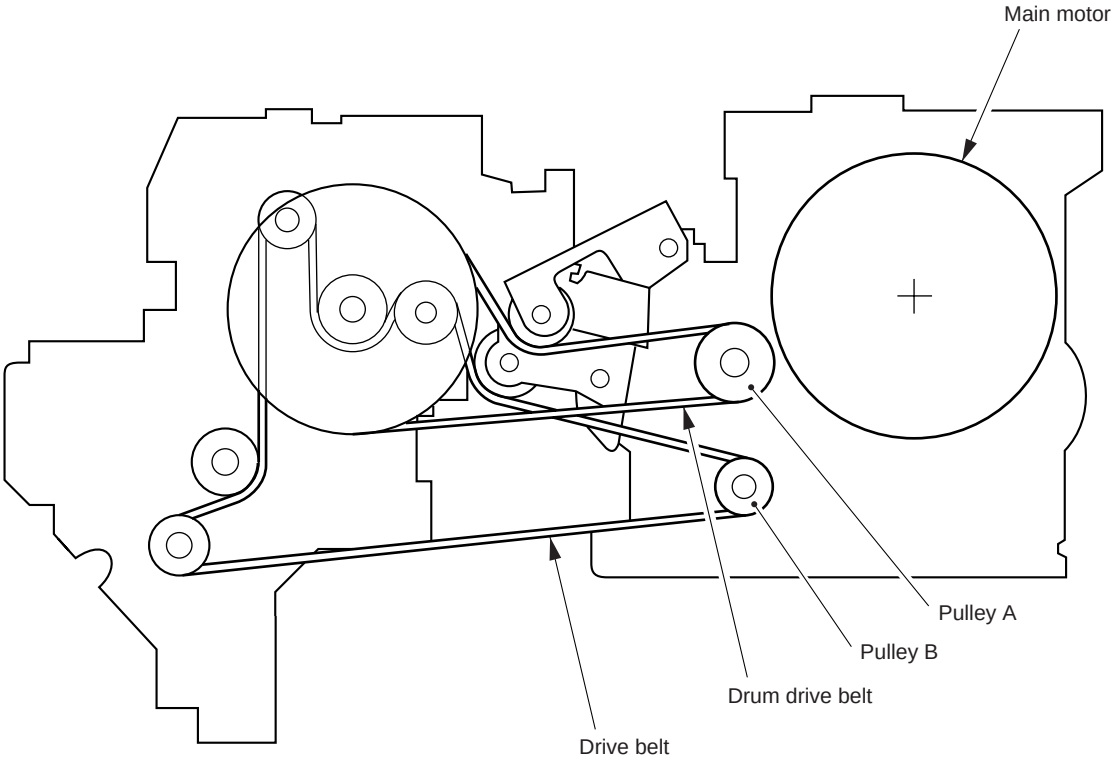

Figure 7-424

COPYRIGHT © 1997 CANON INC.
CANON NP6330 REV.0 MAY 1997 PRINTED IN JAPAN (IMPRIME AU JAPON)

H. Cleaning Belt Drive Assembly

1. Removing the Cleaning Belt Drive Assembly

1) Remove the rear cover.
2) Disconnect the connector ①.
3) Remove the screw ②, and remove the cleaning belt drive assembly ③.

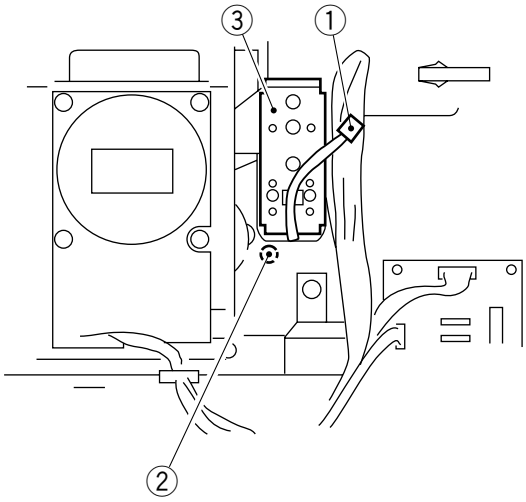

Figure 7-425

COPYRIGHT © 1997 CANON INC.

I. DC Controller PCB

1. Removing the DC Controller PCB

1) Disconnect all connectors from the DC controller PCB.
2) Remove the two screws ①, and remove the DC controller PCB ② together with its mount.

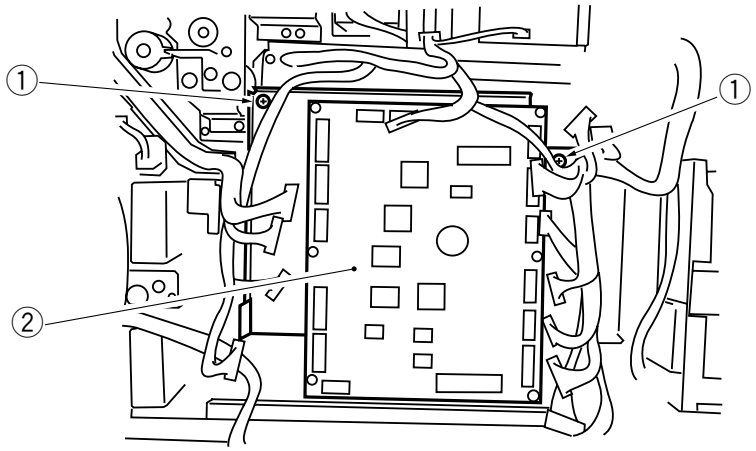

Figure 7-426

Note:

The DC controller PCB is equipped with a battery (BAT101). Keep the following in mind when handling the battery, as shorting its both terminals can lead to overheating.

2. Points to Note When Handling the DC Controller PCB

- When sending the DC controller PCB to the workshop or factory, be sure to put it in a conducting bag without separating it from its mount.
  Use a conducting bag whose one side is transparent, and put the PCB so that its face shows through the transparent side.
- After replacement, be sure to make adjustments and settings in service mode and user mode.
- Enter the settings recorded on the service label attached to the front door.

COPYRIGHT © 1997 CANON INC.

J. DC Power Supply PCB

1. Removing the DC Power Supply PCB

1) Remove the three screws ①, and disconnect the six connectors ②; then, remove the motor driver 1 PCB ③ together with its mount.

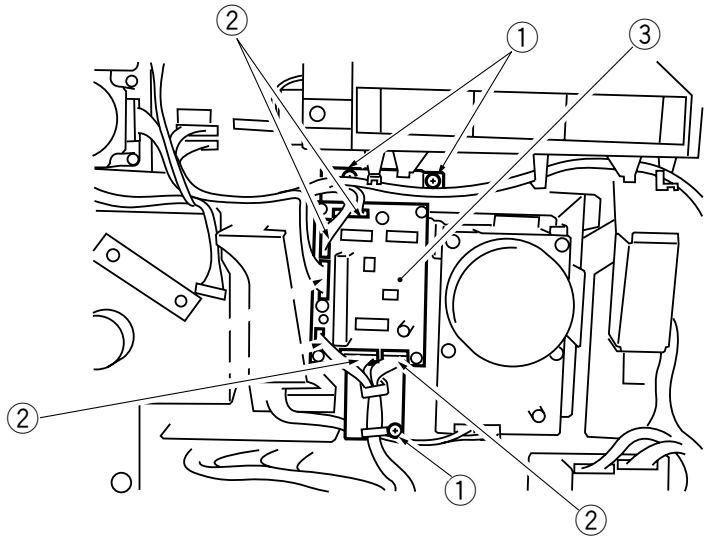

Figure 7-427

2) Disconnect all connectors from the DC power supply PCB.
3) Remove the four screws ④, and remove the DC power supply PCB ⑤.

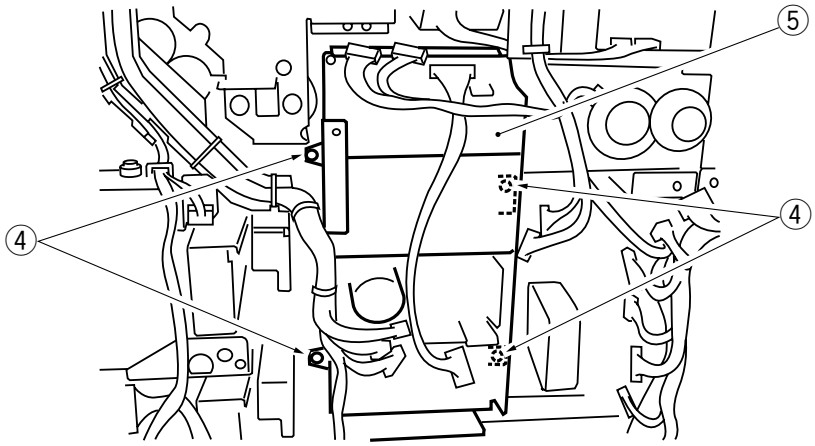

Figure 7-428

COPYRIGHT © 1997 CANON INC.

CHAPTER 8

PAPER DECK PEDESTAL

This chapter describes the outline of the purposes, roles and operations of each mechanism for the paper deck pedestal, the relationship between the electric system and mechanical system, and the operational timing of each component.

I. BASIC OPERATION 8-1
A. Outline of Electrical Circuit 8-1
II. INPUTS TO AND OUTPUTS FROM PEDESTAL CONTROLLER 8-2
A. Outline 8-2
B. Inputs to and Outputs from Pedestal Controller 8-3
III. PEDESTAL MOTOR CONTROL CIRCUIT 8-5
A. Outline 8-5
B. Mechanism 8-5
IV. PAPER DECK UNIT 8-6
A. Basic Construction 8-6
B. Pick-Up/Feeding Operation 8-7
C. Lifter Operation 8-9
D. Detecting Paper in the Deck 8-11
V. DETECTING JAMS 8-13
VI. DISASSEMBLY AND ASSEMBLY 8-15
A. Externals 8-16
B. Pedestal Motor Drive Assembly 8-19
C. Paper Deck 8-20
D. Pick-Up System 8-28

COPYRIGHT © 1997 CANON INC. CANON NP6330 REV.0 MAY 1997 PRINTED IN JAPAN (IMPRIME AU JAPON)

I. BASIC OPERATION

A. Outline of Electrical Circuit

The operation of the pedestal is controlled by the pedestal controller PCB, which functions according to the communication control signal from the copier.

The communication between the machine and the copier is in the form of IPC communication, and is handled by the communication IC on the copier's DC controller PCB and the pedestal controller PCB of the machine.

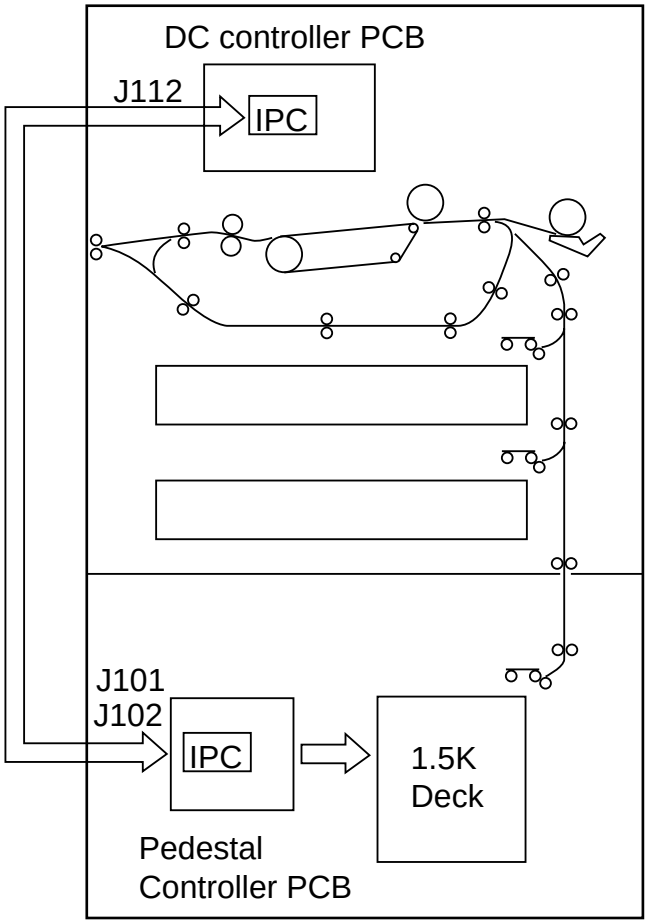

Figure 8-101

COPYRIGHT © 1997 CANON INC.
CANON NP6330 REV.0 MAY 1997 PRINTED IN JAPAN (IMPRIME AU JAPON)

II. INPUTS TO AND OUTPUTS FROM PEDESTAL CONTROLLER

A. Outline

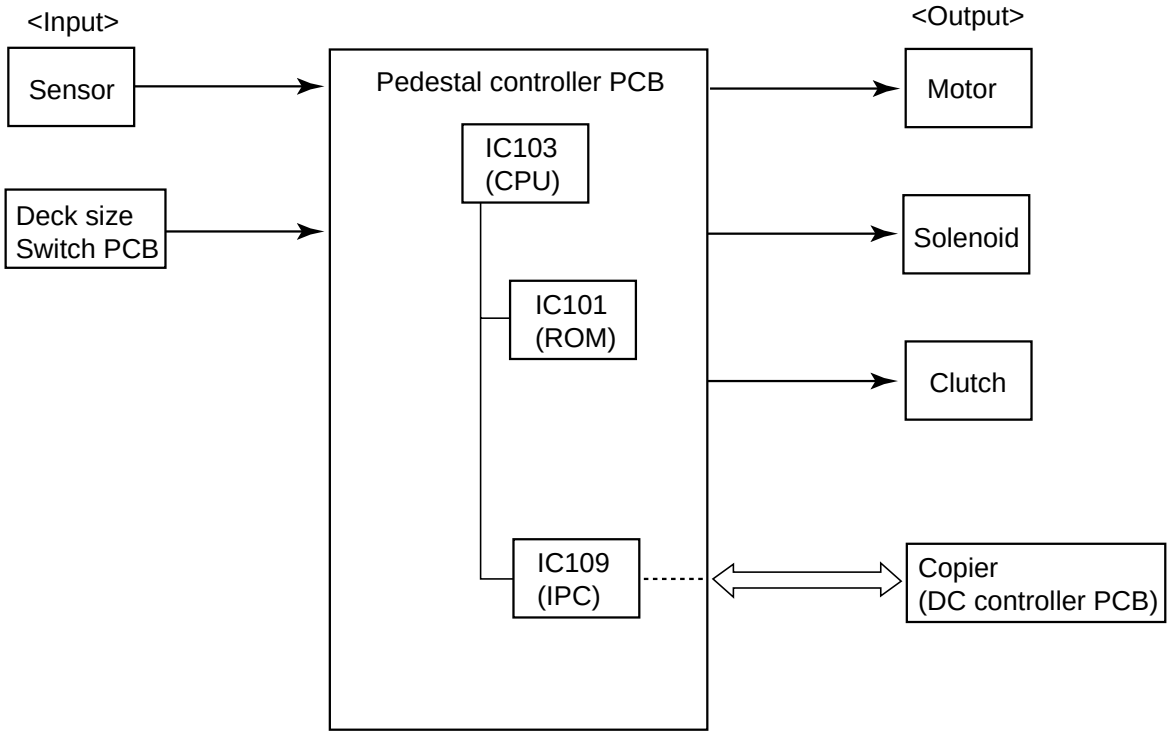

Figure 8-201

COPYRIGHT © 1997 CANON INC.
CANON NP6330 REV.0 MAY 1997 PRINTED IN JAPAN (IMPRIME AU JAPON)

B. Inputs to and Outputs from Pedestal Controller

1. Inputs and outputs (1/2)

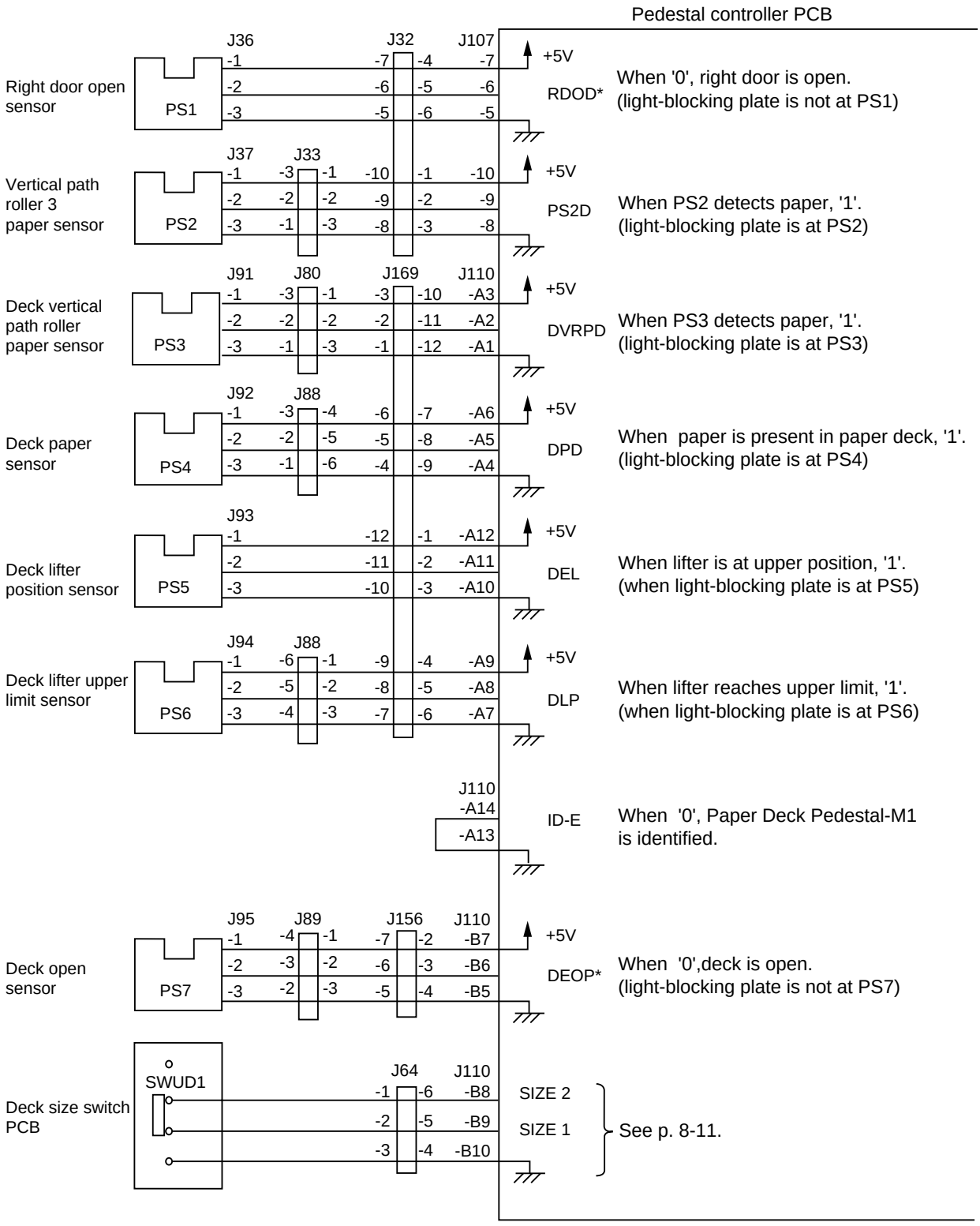

Figure 8-202

COPYRIGHT © 1997 CANON INC.

2. Inputs and outputs (2/2)

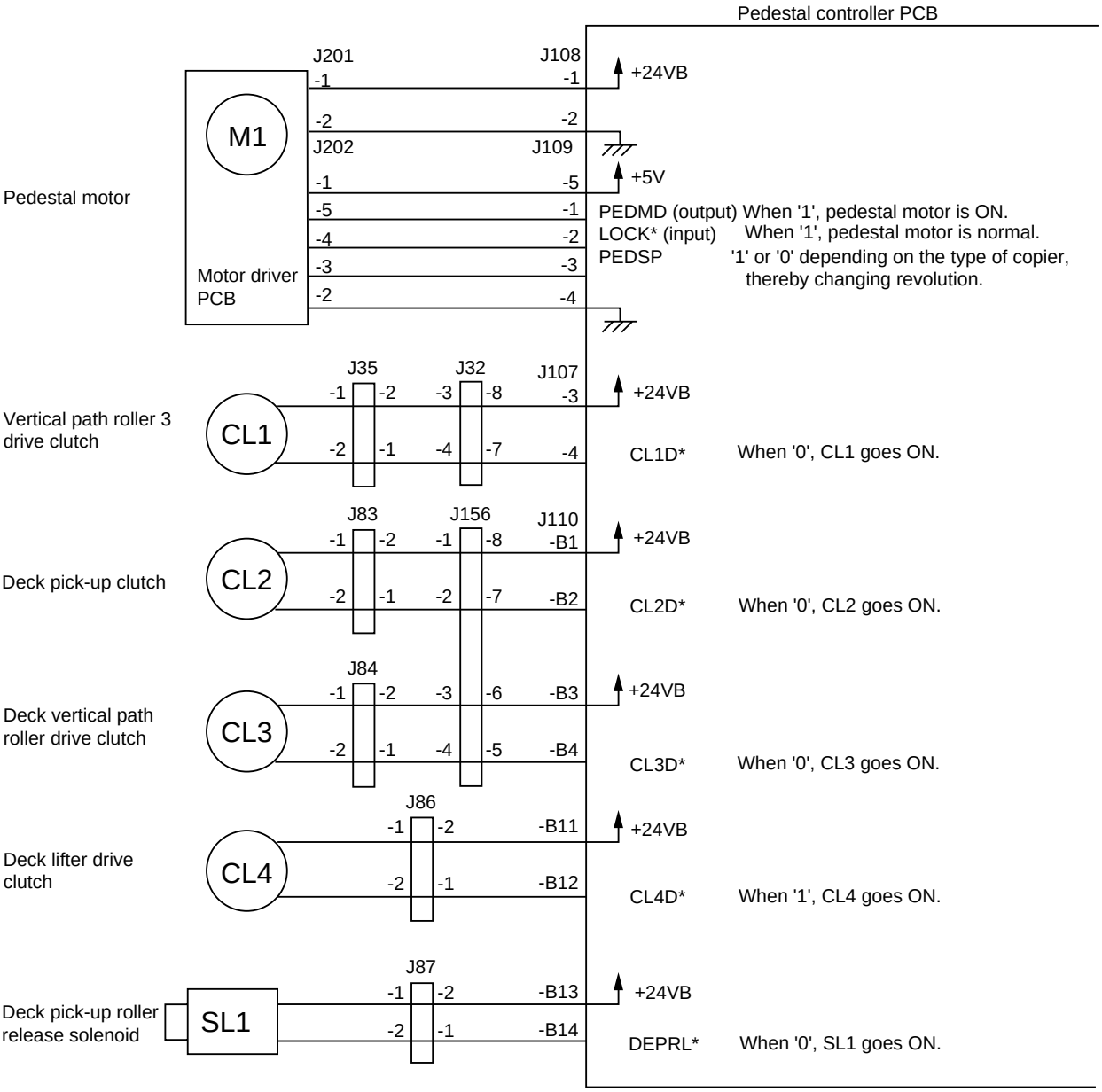

Figure 8-203

COPYRIGHT © 1997 CANON INC.

III. PEDESTAL MOTOR CONTROL CIRCUIT

A. Outline

Figure 8-301 shows the circuit that controls the pedestal motor (M1), and the circuit has the following functions:

① Turns on and off the pedestal motor
② Rotates the pedestal motor at a specific speed

The pedestal motor (M1) is a DC motor equipped with a clock pulse generator. When the motor rotates, clock pulses (MMCLK) corresponding to the revolution of the motor are generated. The speed control circuit maintains the revolution of the motor by matching the phase of the frequency of these pulses and that of the frequency of the reference signal.

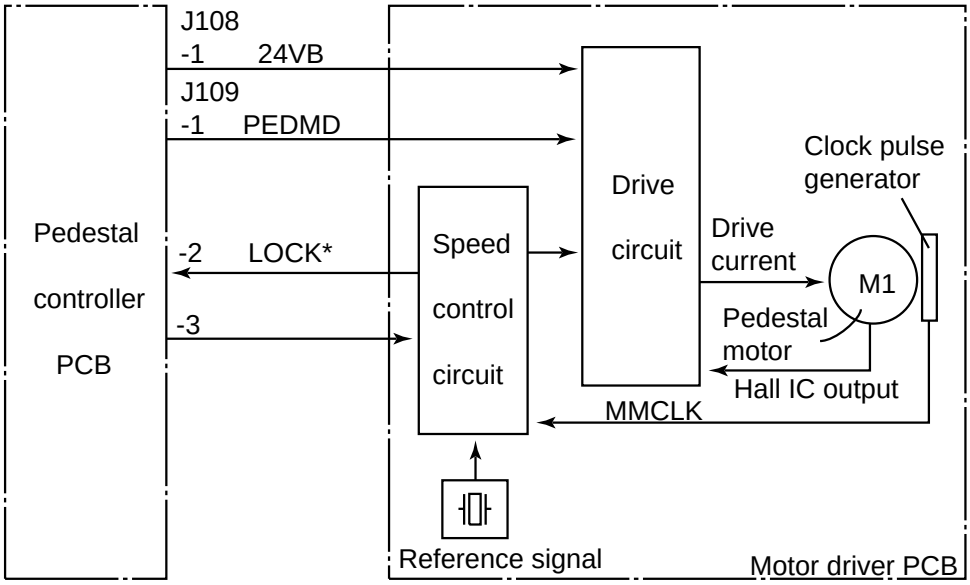

Figure 8-301

B. Mechanism

When the pedestal motor drive signal (PEDMD) from the pedestal controller circuit goes '1', the drive circuit of the motor driver turns on, thereby rotating the pedestal motor at a specific speed.

While the pedestal motor is rotating at a specific speed, the motor driver PCB sends the constant speed state signal (LOCK*=1) to the pedestal controller PCB. The signal goes '0' if the revolution of the motor fluctuates for some reason.

If LOCK*=0, the operation of the machine is stopped, and 'E901' is indicated on the copier's display.

COPYRIGHT © 1997 CANON INC.

IV. PAPER DECK UNIT

A. Basic Construction

The paper deck unit controls the operation of each load according to the signals from the pedestal controller PCB to send paper to the copier.

Each of the loads used to pick-up and feed paper or raise the lifter is driven by the pedestal motor.

If you operated the deck size switch, the size of the paper inside the deck is communicated to the copier through the pedestal controller PCB.

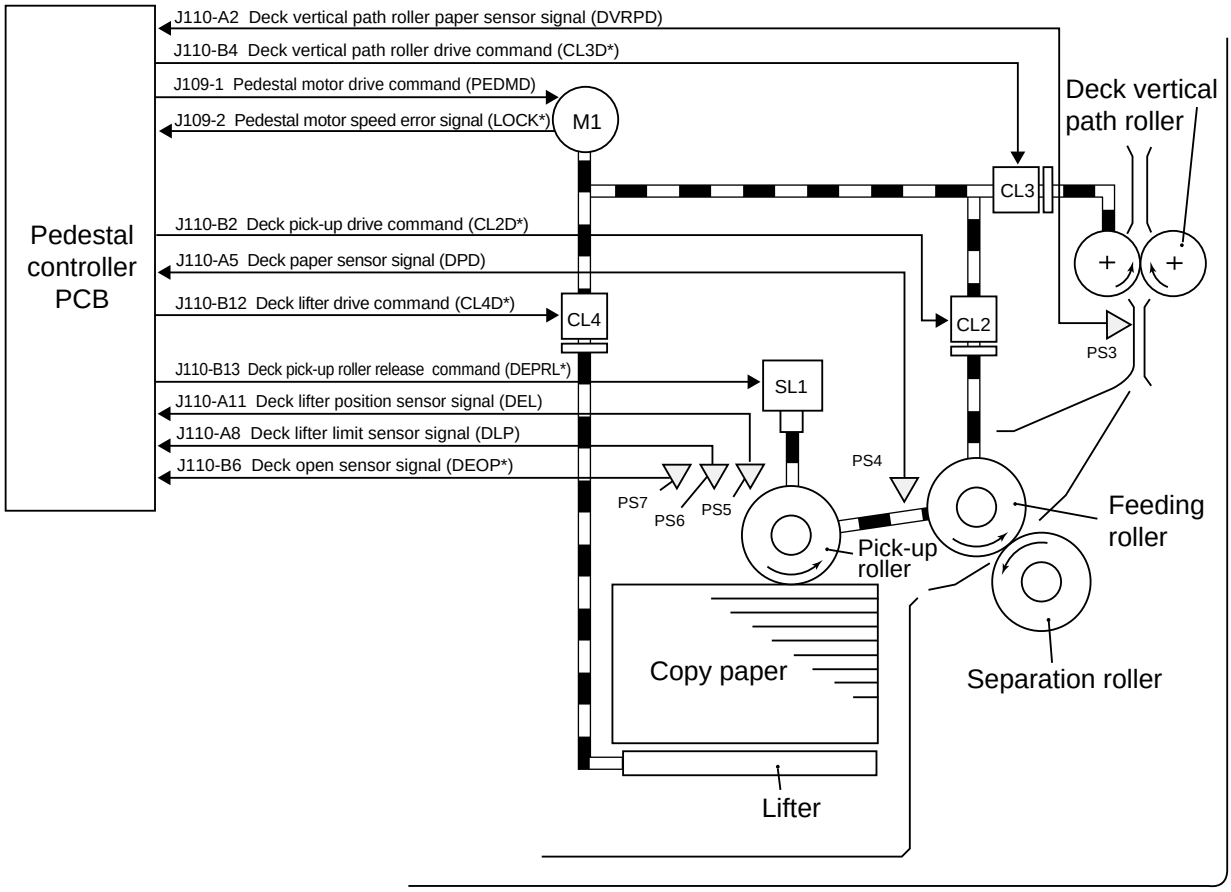

M1 : Pedestal motor
CL2 : Deck pick-up clutch
CL3 : Deck vertical path roller drive clutch
CL4 : Deck lifter drive clutch
SL1 : Deck pick-up roller release solenoid
PS3 : Deck vertical path roller paper sensor
PS4 : Deck paper sensor
PS5 : Deck lifter position sensor
PS6 : Deck lifter upper limit sensor
PS7 : Deck open sensor

Figure 8-401

COPYRIGHT © 1997 CANON INC.
CANON NP6330 REV.0 MAY 1997 PRINTED IN JAPAN (IMPRIME AU JAPON)

B. Pick-Up/Feeding Operation

1. Mechanism

When the copier's COPY START key is pressed, the deck pick-up clutch (CL2) turns on to rotate the deck pick-up roller. The deck pick-up roller leaves the paper when the deck pick-up roller release solenoid (SL1) turns on after feeding the paper.

The feeding roller and the separation roller serve to make sure that no more than one sheet of paper is fed to the feeding path; after leaving both rollers, the paper is moved to the inside of the copier by the vertical path roller.

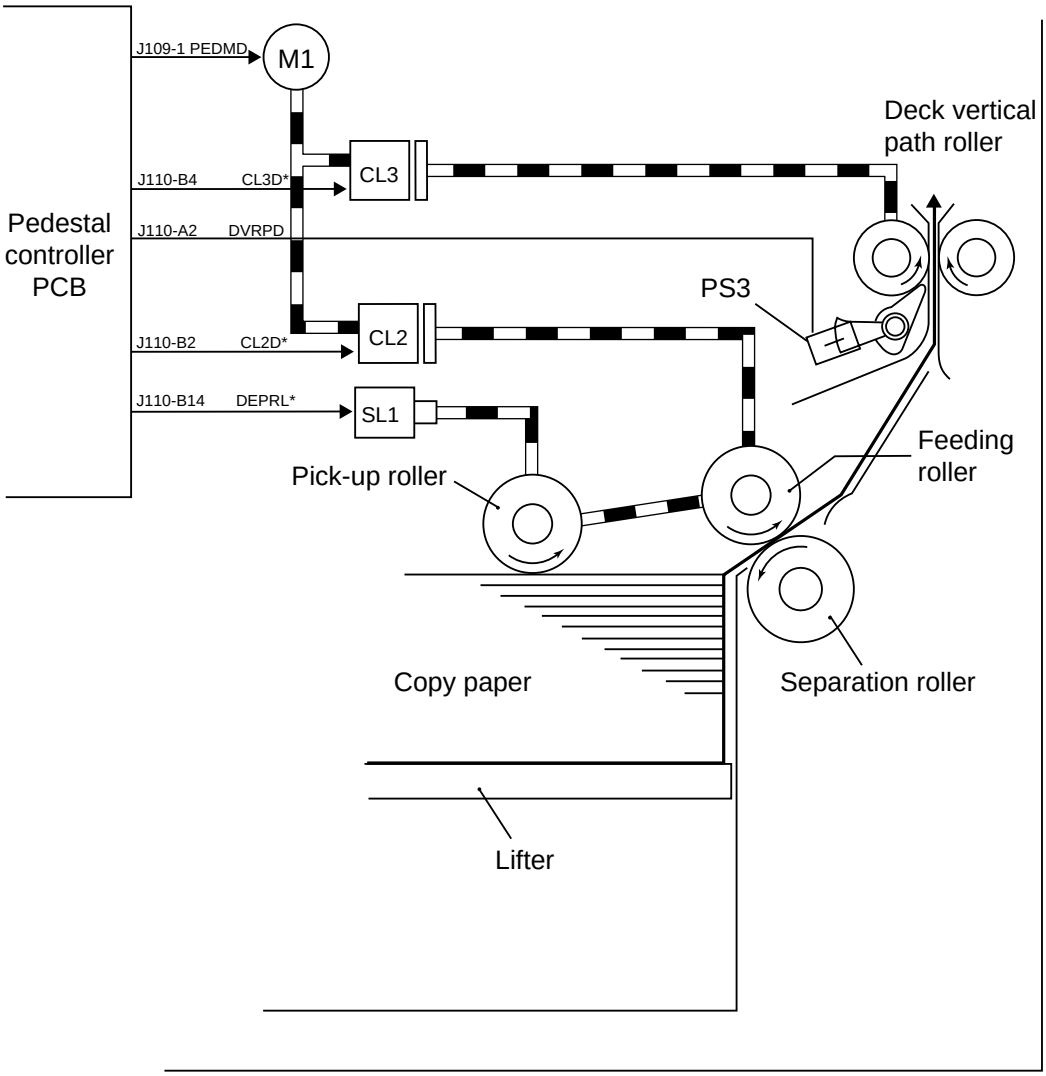

M1 : Pedestal motor
CL2 : Deck pick-up clutch
CL3 : Deck vertical path roller drive clutch
SL1 : Deck pick-up roller release solenoid
PS3 : Deck vertical path roller paper sensor

Figure 8-402

COPYRIGHT © 1997 CANON INC.

2. Sequence of Pick-Up Operations

A4, 2 Copies, Continuous

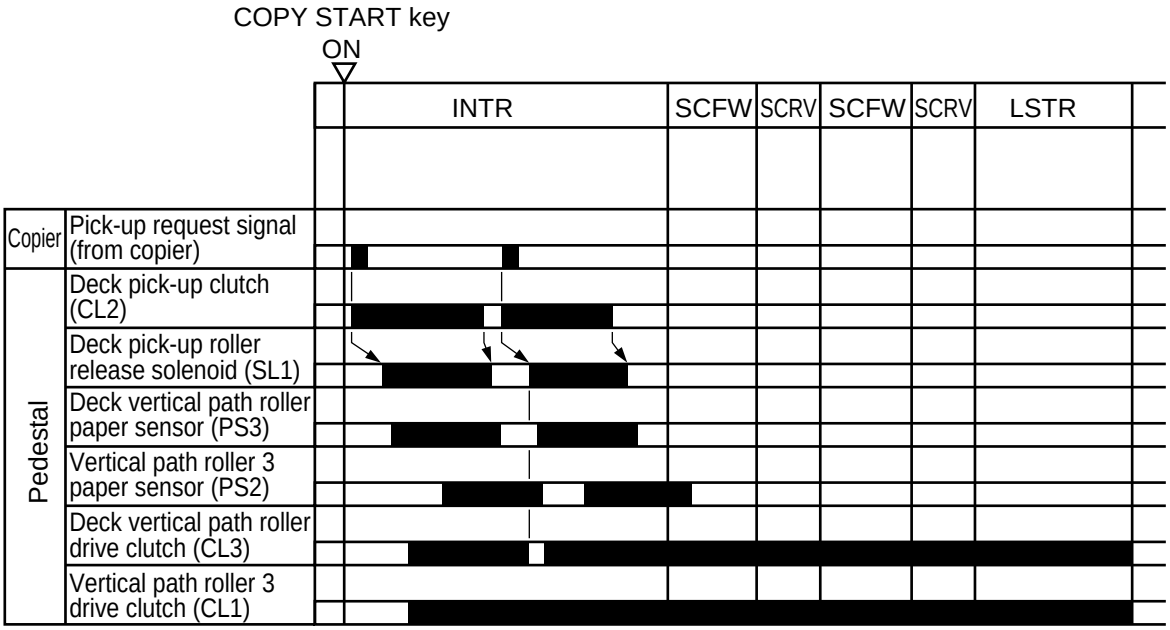

Figure 8-403

COPYRIGHT © 1997 CANON INC.
CANON NP6330 REV.0 MAY 1997 PRINTED IN JAPAN (IMPRIME AU JAPON)

C. Lifter Operation

1. Operation

When the deck is slid inside the pedestal, the pick-up roller lowers and the light-blocking plate leaves the deck lifter position sensor (PS5). The condition causes the lifter drive clutch (CL4) to turn on, and the drive of the pedestal motor (M1) is transmitted to the cable take-up shaft, thereby raising the lifter.

The lifter keeps rising until the deck lifter position sensor (PS5) detects the top sheet of the paper stack placed on the lifter.

The deck lifter upper limit sensor (PS6) serves to stop the lifter in the event that the sensor arm should block the deck lifter position sensor (PS5) for some reason.

When the lifter has reached its upper limit, it is maintained in position by the work of a one-way gear.

When the deck is removed from the pedestal, the take-up gear disengages itself from the one-way gear, thereby allowing the lifter to lower on its own weight.

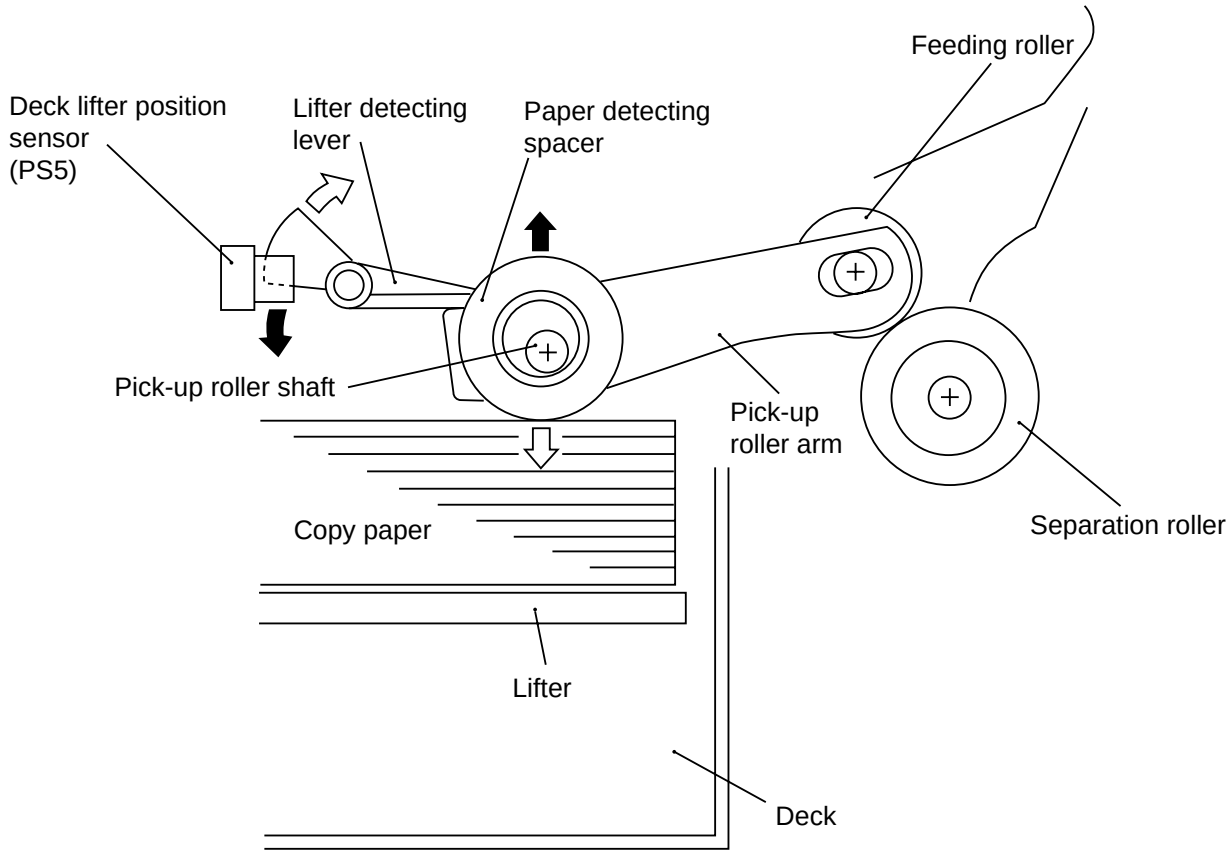

: Pick-up roller up, i.e., the light-blocking plate of the lifter detecting lever lowers to block the lifter position sensor (PS5).

: Pick-up roller down, i.e., the light-blocking plate of the lifter detecting lever rises to leave the lifter position sensor (PS5).

Figure 8-404

COPYRIGHT © 1997 CANON INC.

2. Lifting Operation

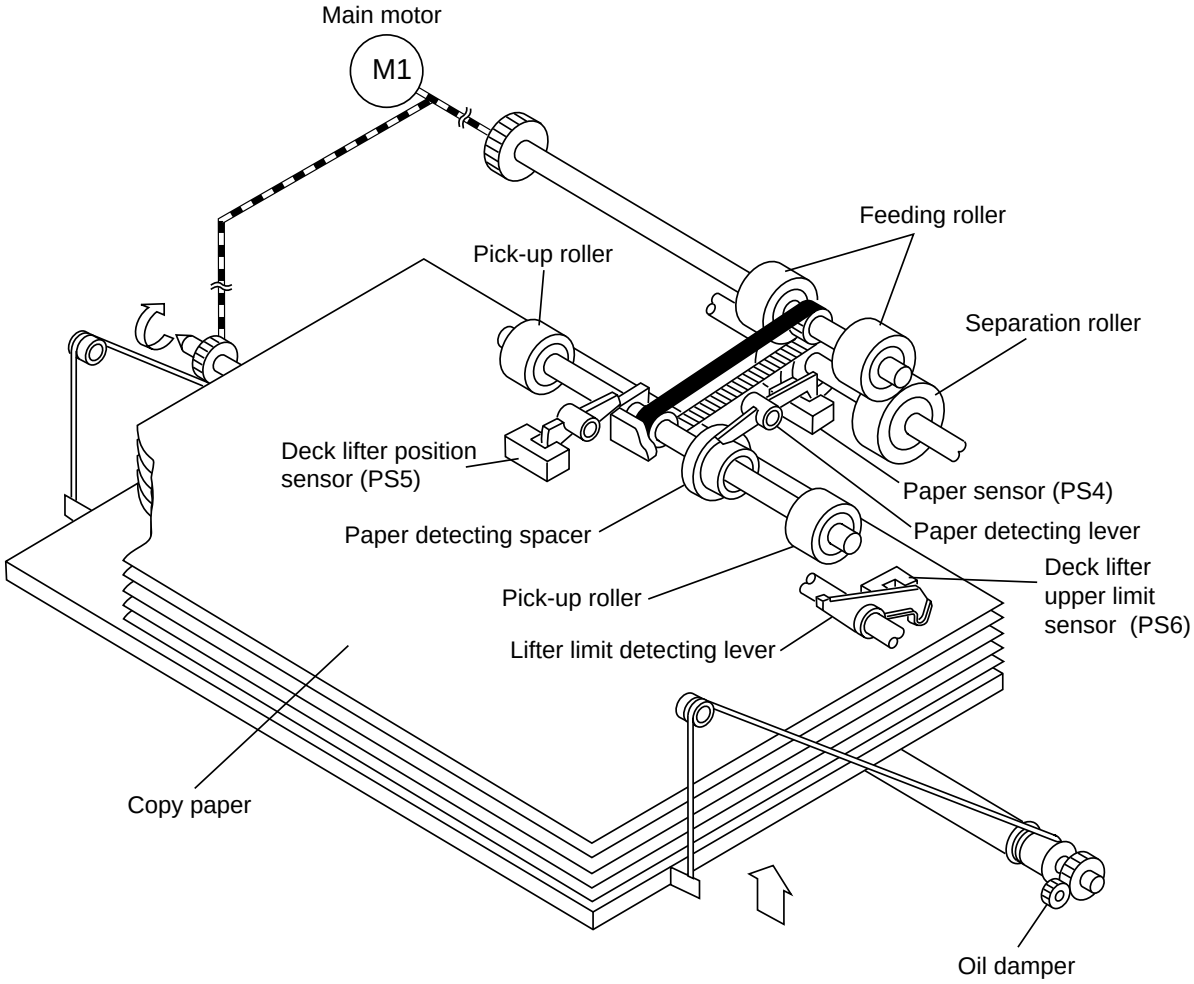

Figure 8-405

COPYRIGHT © 1997 CANON INC.
CANON NP6330 REV.0 MAY 1997 PRINTED IN JAPAN (IMPRIME AU JAPON)

D. Detecting Paper in the Deck

1. Identifying the Size of Paper

You must set the switch (SWUD1) on the deck size switch PCB to suit the size of paper set inside the paper deck.

When you set the switch, the paper size signal (SIZE1 and SIZE2) sent to the pedestal controller PCB changes to '1' or '0'.

Based on the combination of these paper size signals, the pedestal controller PCB identifies the size of the paper inside the paper deck as follows:

Paper size*	SIZE1	SIZE2
B5 	1	1
A4 	0	1
LTR 	1	0

* The configuration of SWUD1 represents when the switch is viewed from the front.

Table 8-401

COPYRIGHT © 1997 CANON INC.

2. Identifying the Presence/Absence of Paper

The presence and absence of copy paper inside the paper deck is identified by the deck paper sensor (PS4).

When the paper deck runs out of paper, the paper detecting spacer attached to the pick-up roller shaft drops.

As a result, the paper detecting lever leaves the deck paper sensor (PS4), causing the pedestal controller PCB to identify the absence of paper.

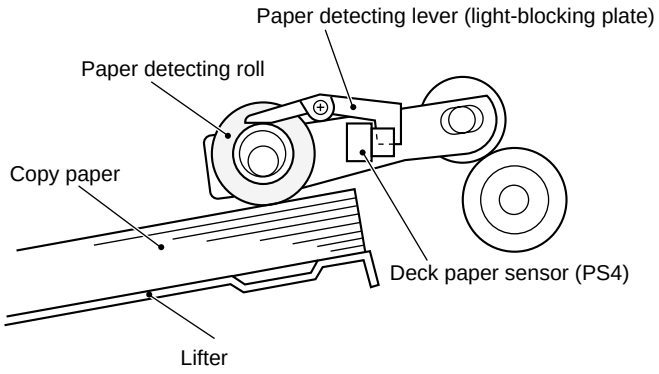

Figure 8-406

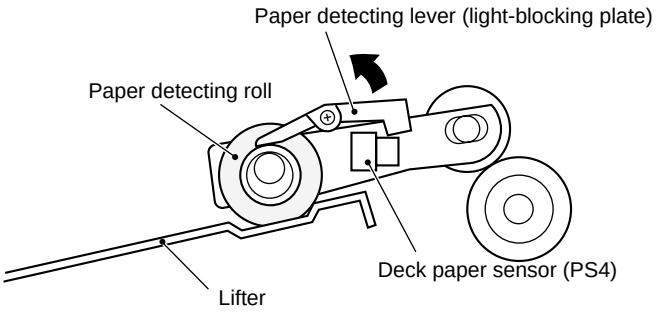

Figure 8-407

COPYRIGHT © 1997 CANON INC.
CANON NP6330 REV.0 MAY 1997 PRINTED IN JAPAN (IMPRIME AU JAPON)

V. DETECTING JAMS

1. Outline

The pedestal is equipped with the following paper sensors to check the presence/absence of copy paper and to make sure that copy paper is moved properly.

- Vertical path roller 3 paper sensor (PS2)
- Deck vertical path roller paper sensor (PS3)

The presence or absence of paper or a jam condition is checked in reference to the presence/absence of paper over each of the sensor at such times as programmed in advance in the pedestal controller PCB.

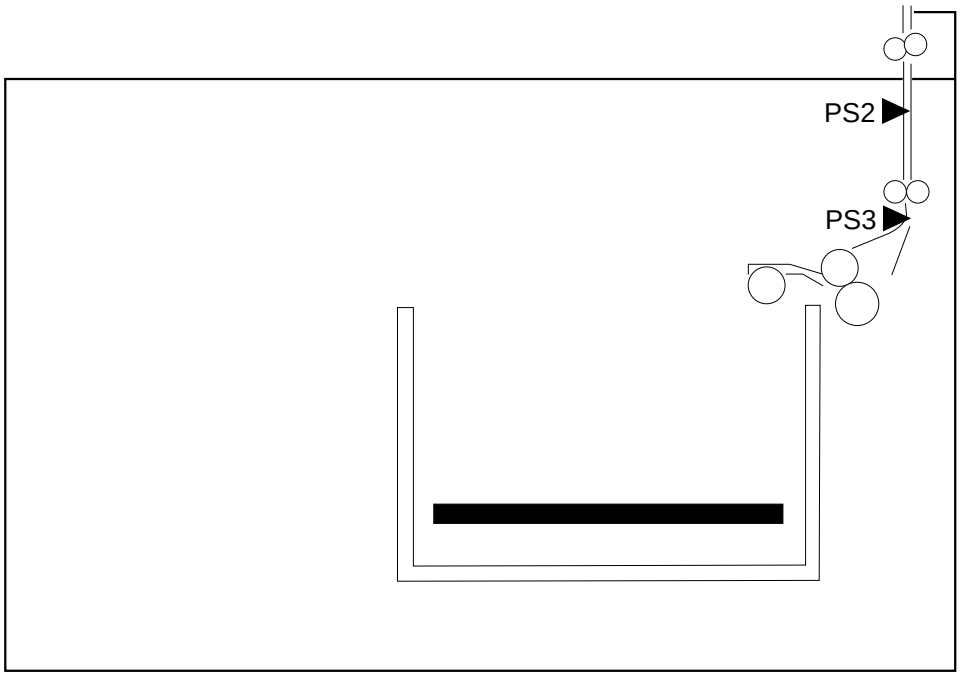

Figure 8-501

COPYRIGHT © 1997 CANON INC.

① Pick-Up Delay Jam

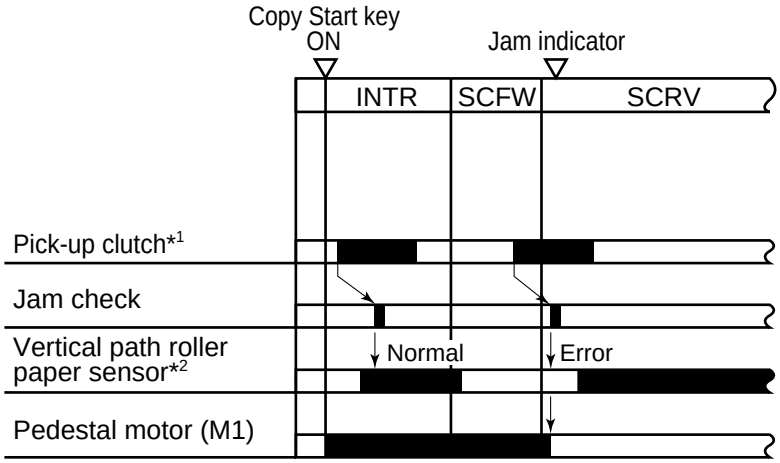

*1: Vertical path roller 3 drive clutch (CL1)
Deck pick-up clutch (CL2)

*2: Vertical path roller 3 paper sensor (PS2)
Deck vertical path roller paper sensor (PS3)

Figure 8-502

② Pick-Up Stationary Jam

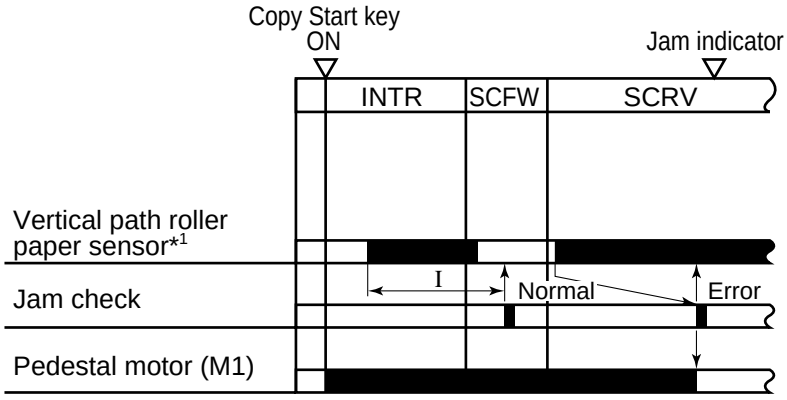

*1: Vertical path roller 3 paper sensor (PS2)
Deck vertical path roller paper sensor (PS3)

I: Varies according to paper length (EX. A4: 1.443sec (PS3))

Figure 8-503

COPYRIGHT © 1997 CANON INC.
CANON NP6330 REV.0 MAY 1997 PRINTED IN JAPAN (IMPRIME AU JAPON)

VI. DISASSEMBLY AND ASSEMBLY

This section explains mechanical characteristics and describes how to disassemble/assemble the pedestal.

Be sure to observe the following whenever disassembling/assembling the pedestal.

1. Disconnect the power plug before starting the work.
2. Unless otherwise shown, assemble the parts by reversing the steps given to disassemble them.
3. Identify each screw by type (length, diameter) and location.
4. A washer is used for two of the mounting screws on the rear cover to protect against static electricity; be sure to use the washer when assembling the part.
5. A washer is used for some mounting screws (for grounding wire, varistor) to ensure correct electrical continuity; be sure to use the washer when assembling the part.
6. As a rule, do not operate the copier while any of its parts is removed.
7. Be sure to turn off the front door switch or the power switch before sliding out the fixing assembly.

COPYRIGHT © 1997 CANON INC.
CANON NP6330 REV.0 MAY 1997 PRINTED IN JAPAN (IMPRIME AU JAPON)

A. Externals

1. Paper Deck Pedestal-M1

The number in parentheses indicates the number of mounting screws.

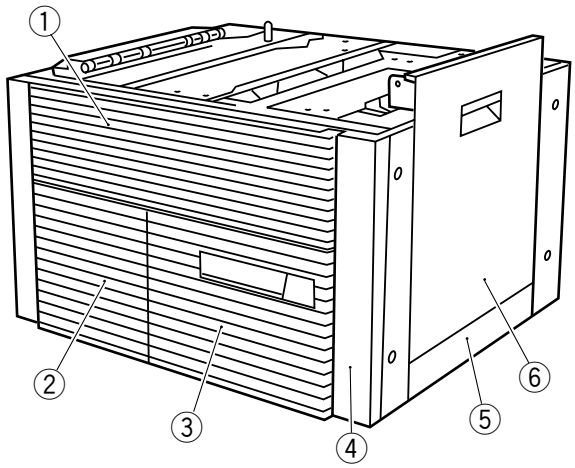

① Upper front cover (4)
② Front left cover (2)
③ Deck front cover (4)
④ Front right cover (2)
⑤ Right cover (4)
⑥ Right door cover (4)

Figure 8-601

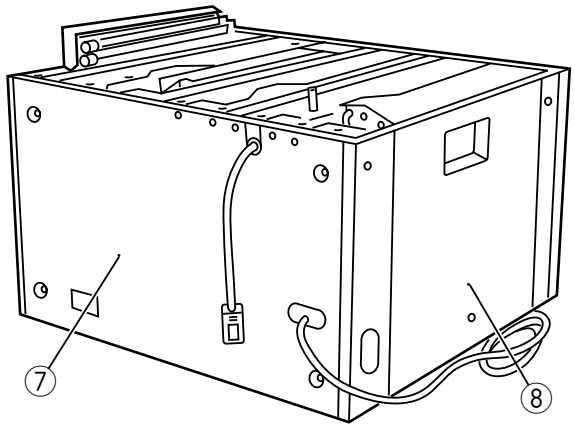

⑦ Rear cover (4)
⑧ Left cover (4)

Figure 8-602

COPYRIGHT © 1997 CANON INC.
CANON NP6330 REV.0 MAY 1997 PRINTED IN JAPAN (IMPRIME AU JAPON)

2. Detaching the Copier from the Pedestal

1) Disconnect the copier's power plug.
2) Disconnect the pedestal's connector ① from the copier.

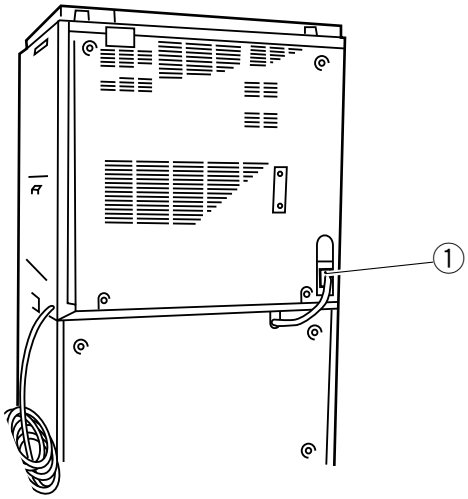

Figure 8-603

3) Open the pedestal's right door.
4) Push in the leaf spring ②, and release the vertical path roller 3 unit ③.

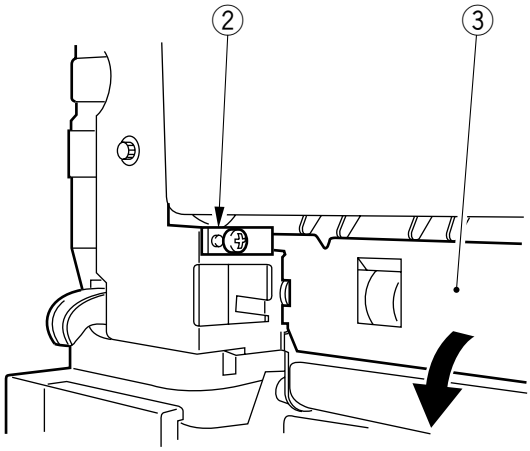

Figure 8-604

COPYRIGHT © 1997 CANON INC. CANON NP6330 REV.0 MAY 1997 PRINTED IN JAPAN (IMPRIME AU JAPON)

5) Hold the copier's four grips, and detach the copier from the pedestal.

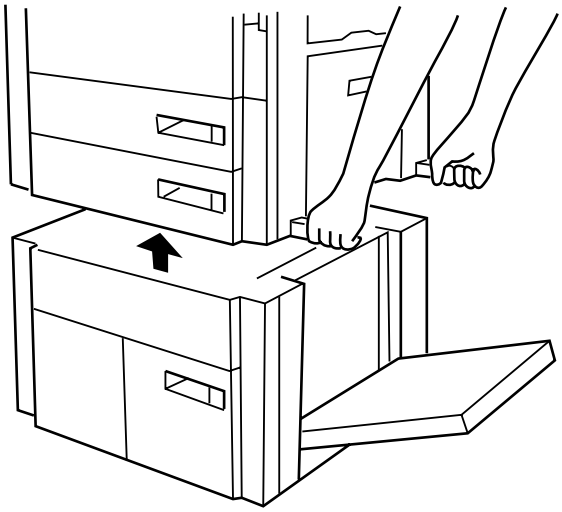

Figure 8-605

COPYRIGHT © 1997 CANON INC.
CANON NP6330 REV.0 MAY 1997 PRINTED IN JAPAN (IMPRIME AU JAPON)

B. Pedestal Motor Drive Assembly

1. Removing the pedestal motor drive assembly

1) Remove the rear cover.
2) Disconnect the two connectors ①.
3) Remove the four screws ②, and remove the pedestal motor drive assembly ③.

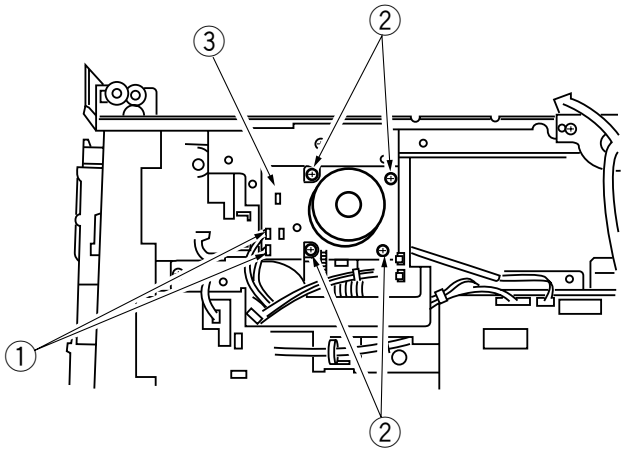

Figure 8-606

COPYRIGHT © 1997 CANON INC.

C. Paper Deck

1. Removing the Paper Deck

1) Remove the front right cover and the front left cover.
2) Remove the mounting screw ①, and remove the stopper plate ② from both left and right.

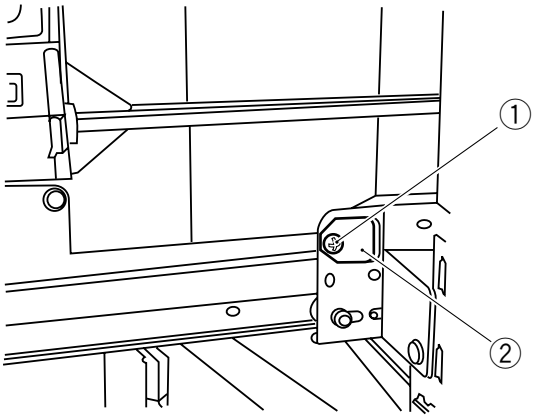

Figure 8-607

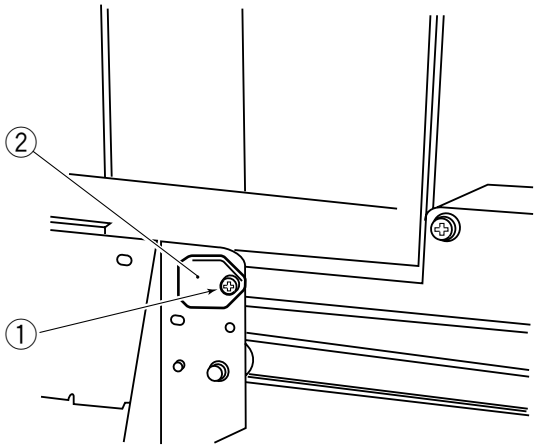

Figure 8-608

3) Slide out the paper deck slowly to the front.

COPYRIGHT © 1997 CANON INC.
CANON NP6330 REV.0 MAY 1997 PRINTED IN JAPAN (IMPRIME AU JAPON)

2. Removing the Lifter Wire

1) Remove the paper deck.
2) Remove the deck front cover.
3) Remove the two screws ① from the inside of the deck, and remove the guide plate ② from both front and rear.

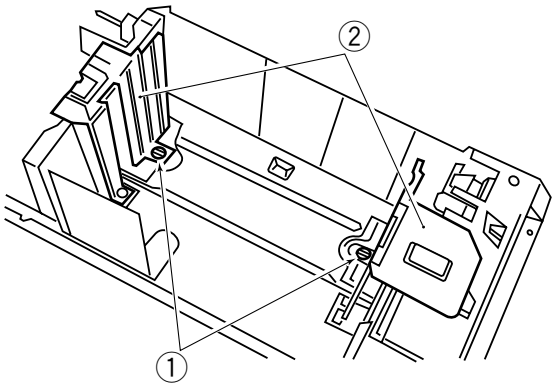

Figure 8-609

4) Mark the position of the latch assembly, and remove the latch assembly by removing the mounting screws ③ on both left and right (4 in total).

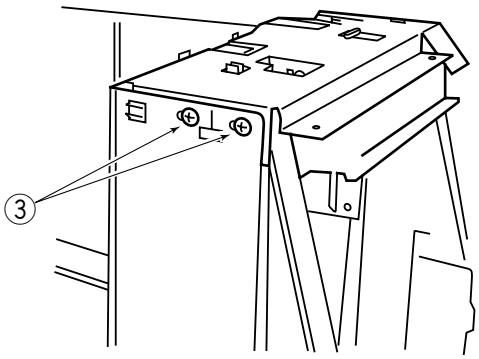

Figure 8-610

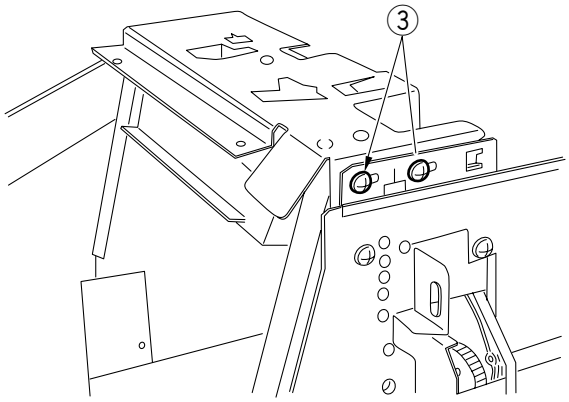

Figure 8-611

COPYRIGHT © 1997 CANON INC. CANON NP6330 REV.0 MAY 1997 PRINTED IN JAPAN (IMPRIME AU JAPON)

5) Remove the mounting screw ④ from the front right, and remove the gear cover ⑤.

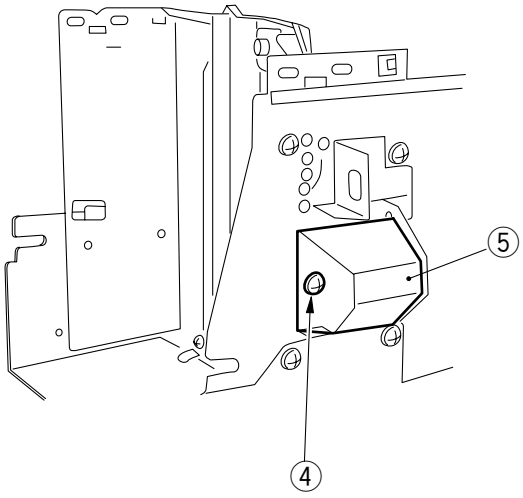

Figure 8-612

6) Remove the mounting screw ⑥ from the front, and remove the oil damper plate ⑦.

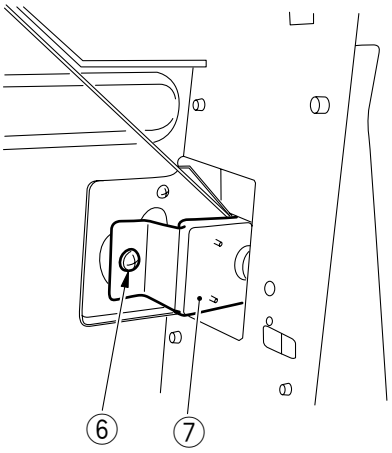

Figure 8-613

COPYRIGHT © 1997 CANON INC.
CANON NP6330 REV.0 MAY 1997 PRINTED IN JAPAN (IMPRIME AU JAPON)

7) Remove the E-ring ⑧ from the lifter drive shaft (rear); then, remove the gear ⑨, two washers, and spring ⑩.

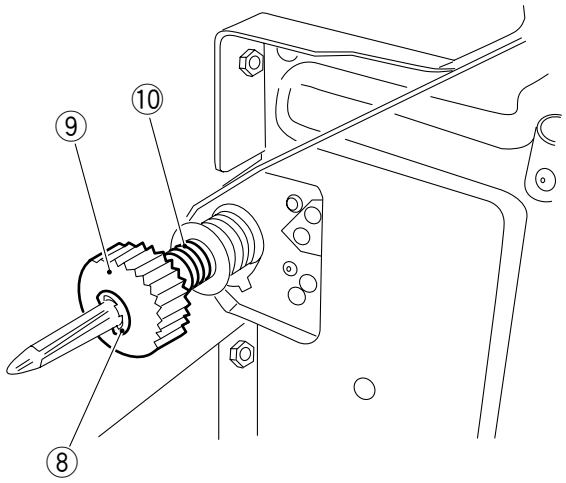

Figure 8-614

8) Remove the E-ring ⑪; then, remove the gear ⑫, parallel pin, and pulley cover (front/ rear in common).

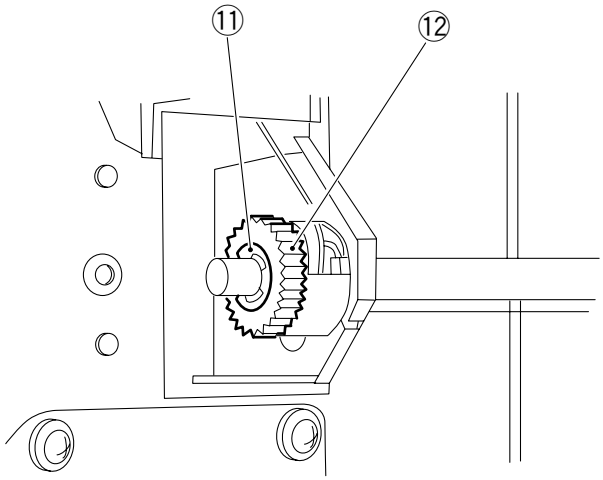

Figure 8-615

9) Remove the end of the wire from the pulley (front/rear in common).

COPYRIGHT © 1997 CANON INC.

10) Remove the fastener ⑬ from the wire relay assembly; then, remove the pulley cover and the wire from the pulley (front/rear in common).

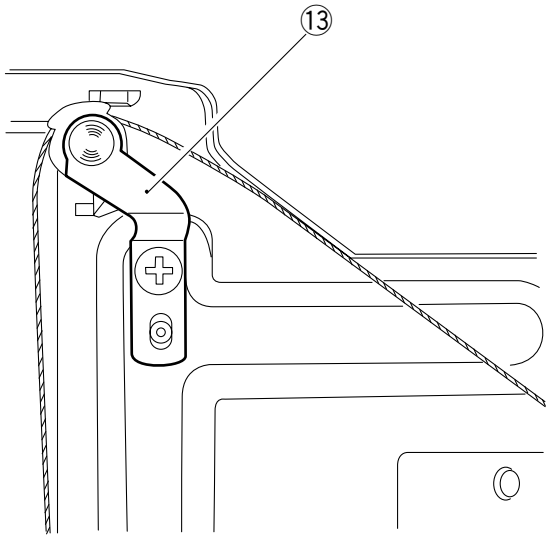

Figure 8-616

11) Remove the mounting screw ⑭, and remove the wire together with the mounting support.

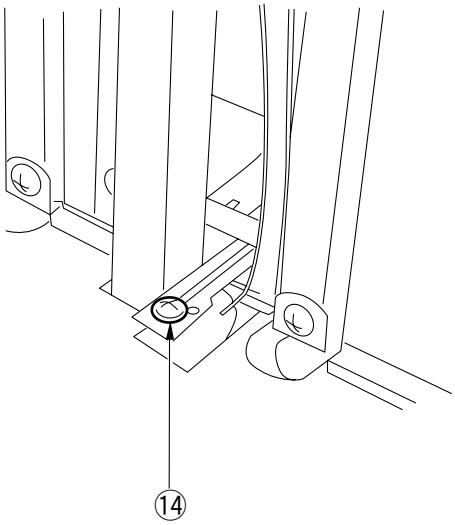

Figure 8-617

COPYRIGHT © 1997 CANON INC.
CANON NP6330 REV.0 MAY 1997 PRINTED IN JAPAN (IMPRIME AU JAPON)

3. Setting the Deck Size

To change the paper deck size, change the position of the guide plate at the front, rear, and rear left.

1) Slide out the deck toward the front until it stops.
2) Remove the mounting screw from the guide plate at the front, rear, and rear left; then, remove the guide plates.

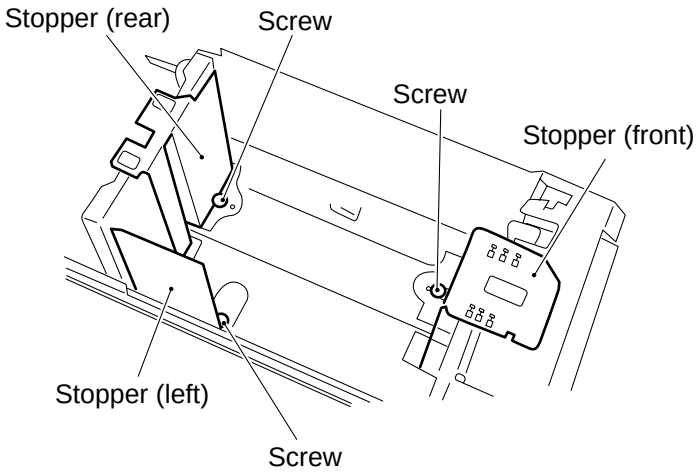

Figure 8-618

3) Fix each guide plate in position referring to the size indexes on the base plate, front side plate, and guide plates.

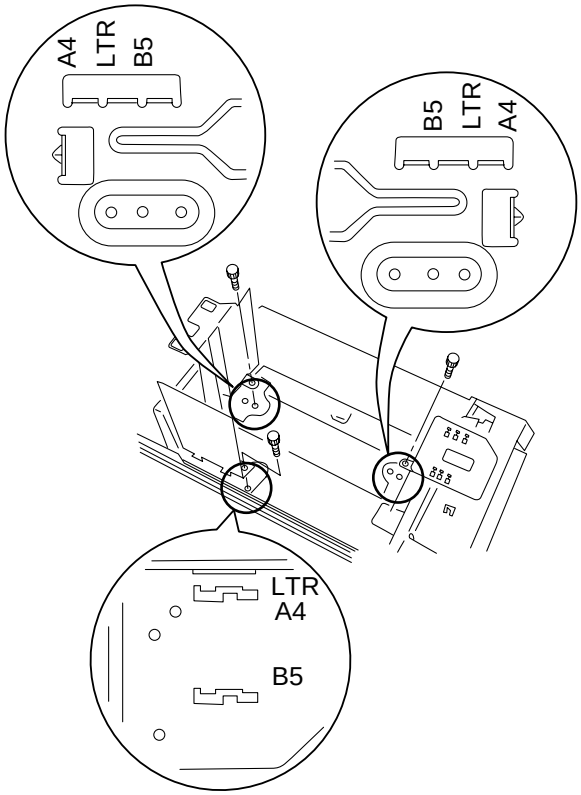

Figure 8-619

COPYRIGHT © 1997 CANON INC.

Note:

Make sure that the front and rear guide plates are attached as follows:
- Perpendicular to the base plate of the deck.
- Parallel to the metal plates at the front and the rear.

4) Place paper in the deck, and slide the deck into the pedestal.
5) Open the right door of the deck.
6) Remove the switch cover.
7) Set the deck size switch ① to reflect the new paper size.

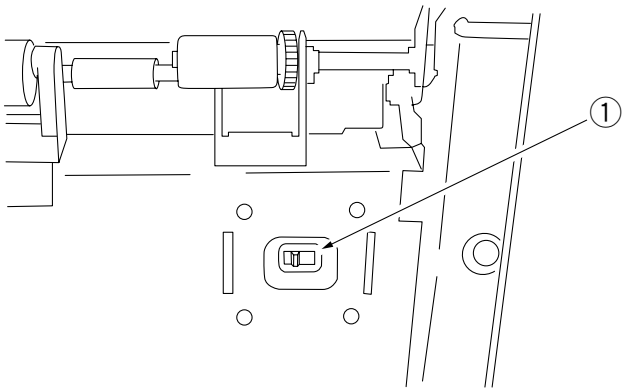

Figure 8-620

8) Install the switch cover.
9) Attach the size seal to the front cover of the deck.
10) Switch on the copier, and check that the new deck size is indicated in the control panel.

COPYRIGHT © 1997 CANON INC.
CANON NP6330 REV.0 MAY 1997 PRINTED IN JAPAN (IMPRIME AU JAPON)

4. Adjusting the Deck Registration

Remove the deck front cover, and loosen the mounting screws on both left and right of the deck (4 in total); then, move the latch assembly to the front and rear until the standards shown in Figure 8-623 are met.

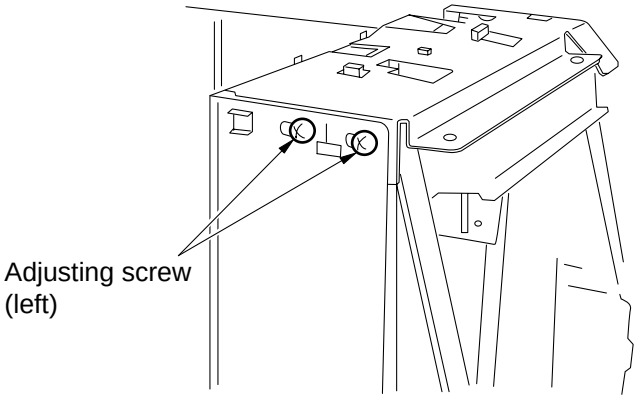

Figure 8-621

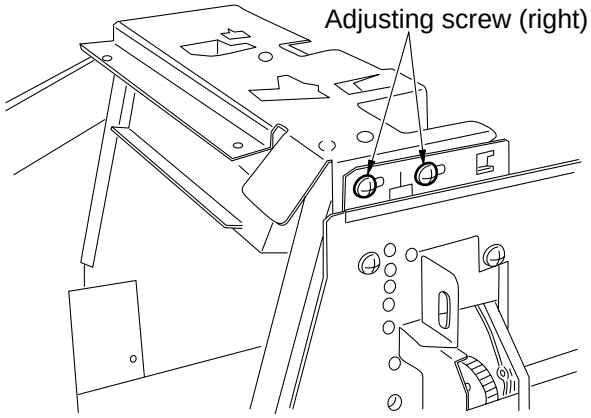

Figure 8-622

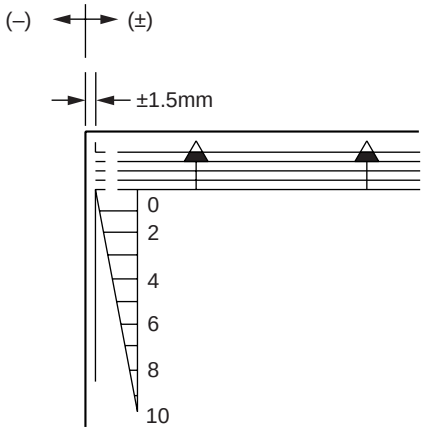

Figure 8-623

COPYRIGHT © 1997 CANON INC.

D. Pick-Up System

1. Cross Section of Pick-Up Assembly

Paper Deck Pedestal-M1

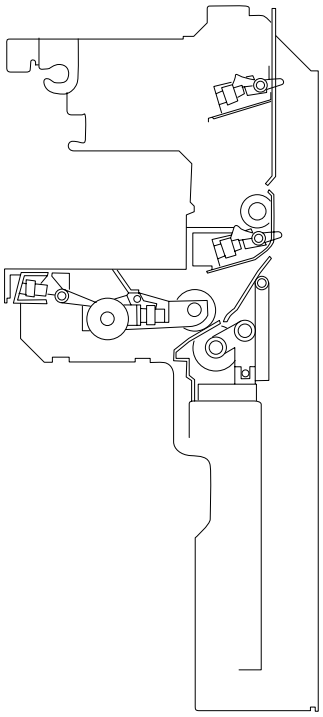

Figure 8-624

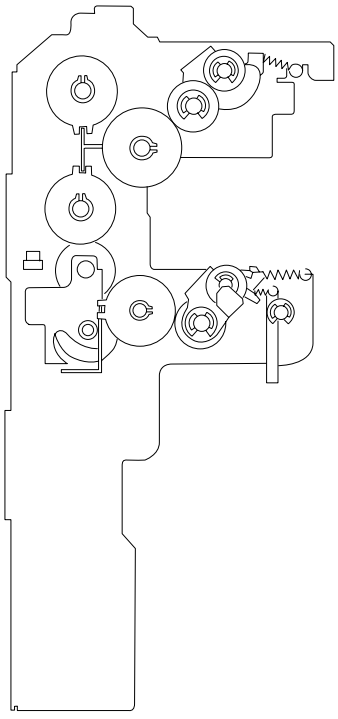

Figure 8-625

COPYRIGHT © 1997 CANON INC.

2. Removing the Pick-Up Assembly

1) Slide out the paper deck.

Note:

- Do not try to remove the pick-up assembly without sliding out the paper deck from the pedestal; the lifter will make the removal of the pick-up assembly impossible.
- Do not slide out the paper deck too far toward the front; doing so would cause the pedestal to tilt to the front when the pick-up assembly is removed

2) Remove the right cover.
3) Push is the leaf spring ①, and release the Vertical path roller 3 unit ②.

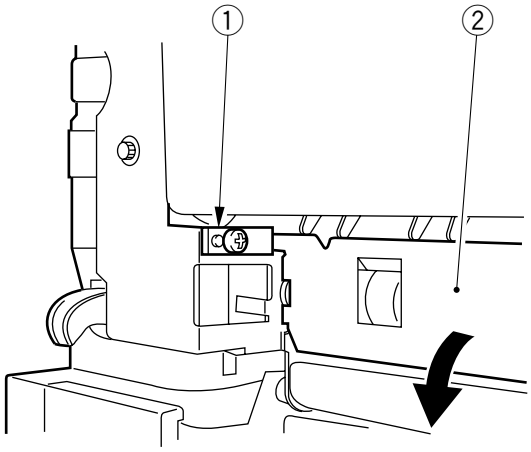

Figure 8-626

4) Remove the screw ③, then remove the stop plate.
5) Disconnect the four connectors ④.

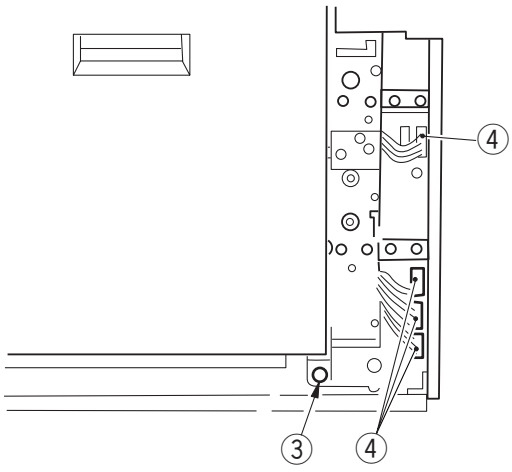

Figure 8-627

COPYRIGHT © 1997 CANON INC.

6) Remove the nine mounting screw ⑤, and remove the pick-up assembly ⑥.

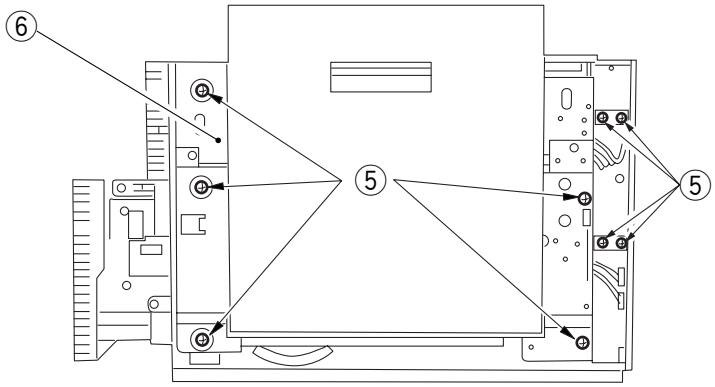

Figure 8-628

3. Removing the Pick-Up Roller

1) Remove the pick-up assembly.
2) Remove the stop ring ①, and remove the pick-up roller ② together with the roller collar.

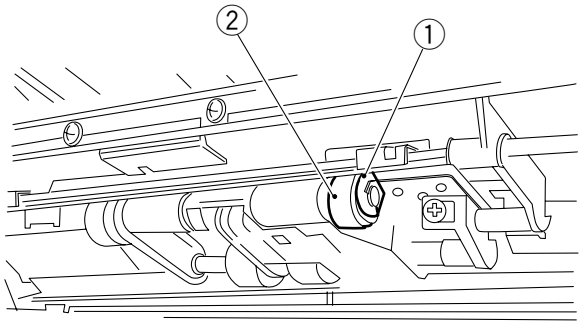

Figure 8-629

■ Points to Note

When attaching the pick-up roller ① to the pick-up assembly, make sure that the round mark ② on its rubber portion is toward the front of the pedestal.

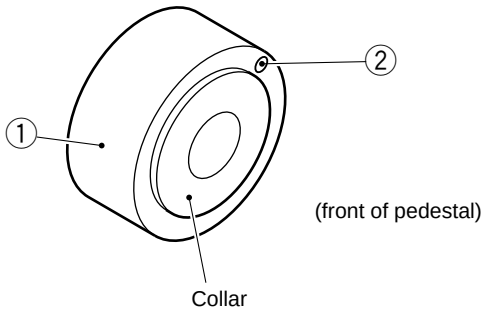

Figure 8-630

a. The collars for the pick-up roller are identified by the color: use the gold collar for the front, and the silver color for the rear.
b. Do not separate the rubber portion of the pick-up roller from the collar.

COPYRIGHT © 1997 CANON INC.
CANON NP6330 REV.0 MAY 1997 PRINTED IN JAPAN (IMPRIME AU JAPON)

4. Removing the Feeding Roller

1) Remove the pick-up roller from the front.
2) Remove the mounting screw ①, and remove the pick-up roller arm bushing ②.

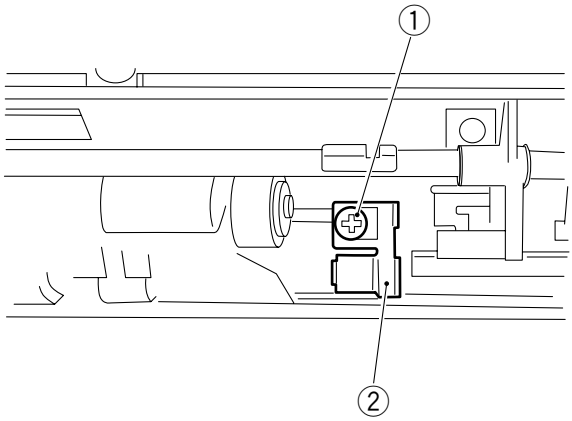

Figure 8-631

3) Remove the pick-up roller arm ③ and the weight ④ from the pick-up roller shaft.

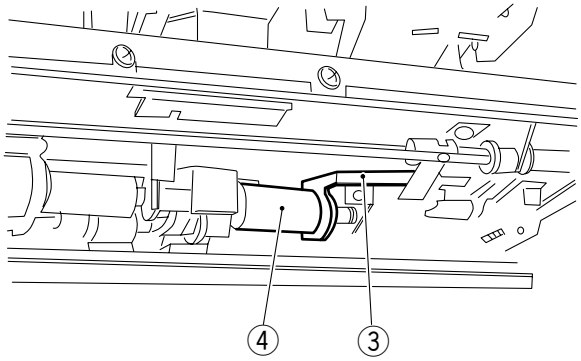

Figure 8-632

4) Remove the stop ring ⑤ for the feeding roller.

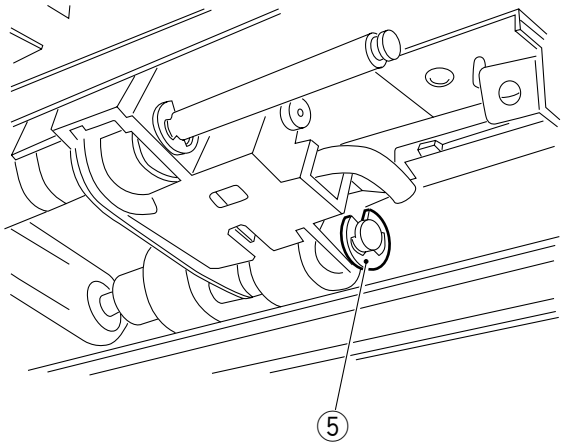

Figure 8-633

COPYRIGHT © 1997 CANON INC.

5) Remove the pick-up roller from the rear, and remove the pick-up roller shaft from the bushing at the rear.
6) Remove the drive belt ⑥ from the feeding roller ⑦, and remove the feeding roller and the roller shaft ⑧.

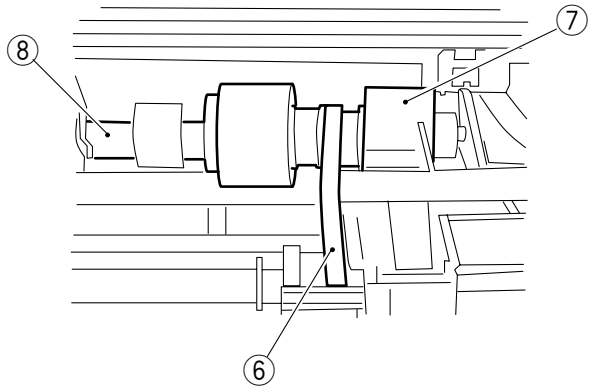

Figure 8-634

■ Points to Note

When attaching the feeding roller ①, make sure that the belt pulley ② attached to the feeding roller is toward the rear of the pedestal.

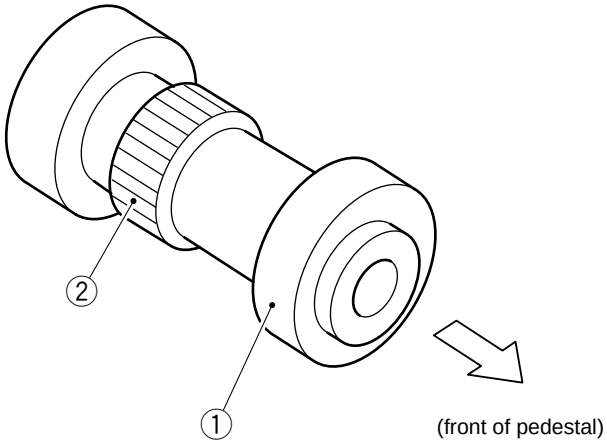

Figure 8-635

COPYRIGHT © 1997 CANON INC.
CANON NP6330 REV.0 MAY 1997 PRINTED IN JAPAN (IMPRIME AU JAPON)

5. Removing the Separation Roller

1) Open the right door, and remove the two mounting screws ① from the separation roller assembly support plate ②; then, remove the separation roller together with the pressure arm.

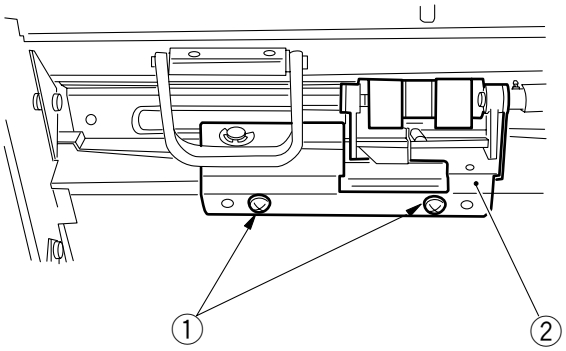

Figure 8-636

2) Remove the stop ring ③, and remove the separation roller ④.

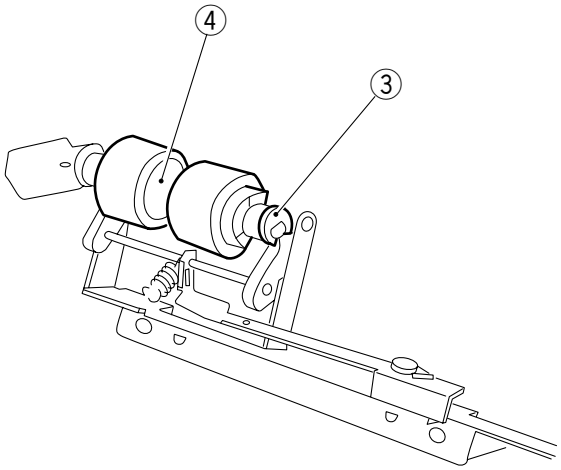

Figure 8-637

■ Points to Note

When attaching the separation roller ①, make sure that the D-cut in the roller collar is toward the front of the pedestal.

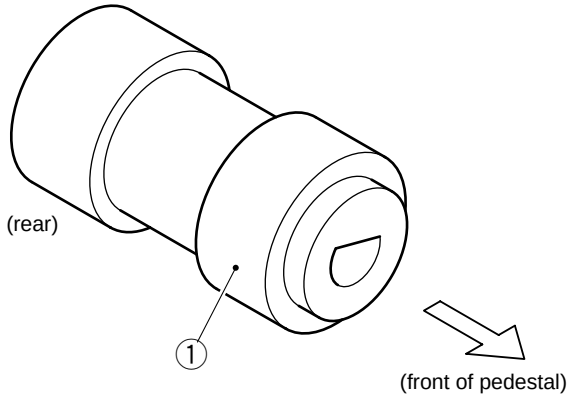

Figure 8-638

COPYRIGHT © 1997 CANON INC.

6. Adjusting the Pressure of the Separation Roller

If double feeding or pick-up failure occurs frequently during pick-up operation, adjust the position of the pressure spring for the separation roller.

① if double feeding is frequent, move the hook of the spring toward Ⓐ.
② if pick-up failure is frequent, move the hook of the spring toward Ⓑ.

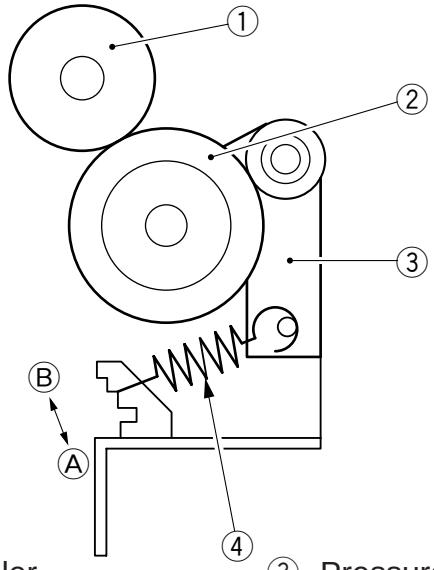

① Feeding roller
② Separation roller
③ Pressure lever
④ Pressure spring

Figure 8-639

7. Position of the Pick-Up Roller Release Solenoid (SL1)

Attach the solenoid so that the pick-up roller arm ① butts against the upper stay ② when the plunger of the solenoid is pushed in.

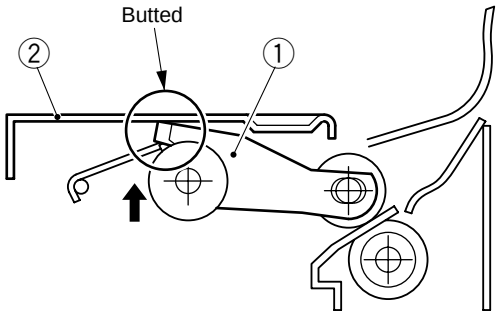

Figure 8-640

COPYRIGHT © 1997 CANON INC.
CANON NP6330 REV.0 MAY 1997 PRINTED IN JAPAN (IMPRIME AU JAPON)

COPYRIGHT © 1997 CANON INC. CANON NP6330 REV.0 MAY 1997 PRINTED IN JAPAN (IMPRIME AU JAPON)

CHAPTER 9

INSTALLATION

This chapter describes how to install this copier.

I. SELECTING THE SITE 9-1
II. UNPACKING AND INSTALLATION 9-2
A. Unpacking and Removing the Metal Fixings 9-2
B. Supplying Toner 9-6
C. Stirring the Toner 9-8
D. Installing the Drum Unit 9-10
E. Checking Images and Operations 9-11
III. RELOCATING THE COPIER 9-13

COPYRIGHT © 1997 CANON INC. CANON NP6330 REV.0 MAY 1997 PRINTED IN JAPAN (IMPRIME AU JAPON)

I. SELECTING THE SITE

Keep the following in mind when selecting the site of installation; if possible, pay a visit to the user's before the delivery of the copier:

1. There must be a power outlet that satisfies the required power ratings and that may be used exclusively for the copier.
2. The temperature must be between 7.5°/45.5F and 32.5°C/90.5F and the humidity, between 5% and 85%. In particular, avoid areas near water faucets, water boilers, humidifiers, and refrigerators.
3. Avoid areas near sources of fire and areas subjected to dust or ammonium gas. Avoid direct rays of the sun; provide curtains as necessary.
4. The level of ozone generated when the copier is in operation will not affect the health of the individuals near it. However, since some may find it unpleasant, be sure that the room is well ventilated.
5. The floor must be flat so that the feet of the copier will remain in contact and the copier will be kept level.
6. The space must be large enough to allow at least 10cm/3.9". from all walls so that the copier may be operated without obstacles.

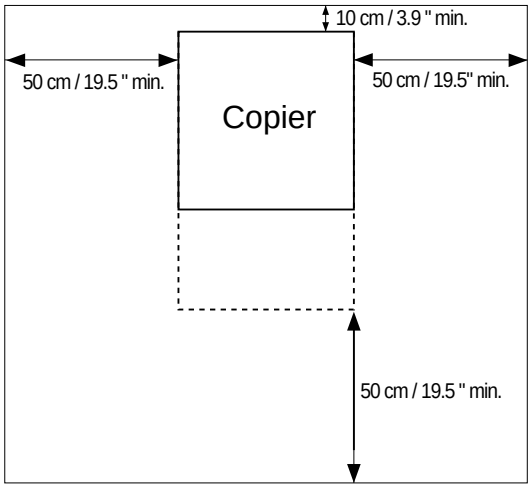

Figure 9-101

7. The site must be well ventilated. If multiple copiers are installed, be sure that the exhaust from other copiers will not flow into the copier.
   Be sure not to install the copier near air inlets used for ventilating the room.

Note:

Generally, silicone gas (vapors of silicone oil from the fixing assembly) emitted by a copier soils corona charging wires, making the life of the wires shorter. This is more conspicuous in a low humidity environment.

COPYRIGHT © 1997 CANON INC.
CANON NP6330 REV.0 MAY 1997 PRINTED IN JAPAN (IMPRIME AU JAPON)

II. UNPACKING AND INSTALLATION

Bringing in a metal object from a cold to warm place can cause droplets of water on its surface. This phenomenon is known as condensation, and copiers subject to condensation can generate blank copies.

If condensation is expected, leave the copier without unpacking it for 1 hour or more, and start the installation work after it has become used to the room temperature.

A. Unpacking and Removing the Metal Fixings

No.	Work	Checks/remarks
1	Unpack the copier, and remove the plastic sheets.	Check to make sure that two cassettes are set inside the copier.
2	Working in a group of three, hold the copier's grips, and place the copier on the pedestal. **Note:** Before placing the copier on the pedestal, check to make sure that the pedestal has been properly installed according to its Installation Procedure. **Note:** When the copier is lifted, always use the handles and don't use the left and right dummy covers.	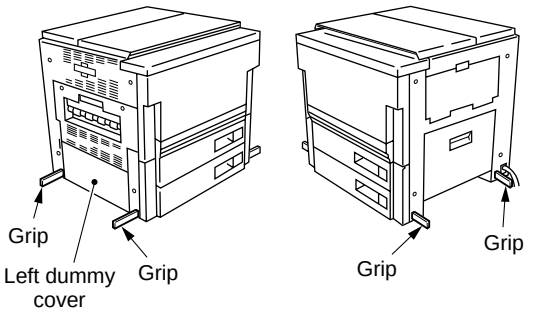 **Note:** If the INCH configuration copier, the copyboard cover isn't attached.
3	Open the cardboard box that comes with the copier, and take out the parts and materials.	Check to make sure that none of the following is missing: • Copy tray • Operator's Manual • Drum unit • Power cord (220 / 240 V only) • Lower right cover • Screw for original tray (2pcs.) • Original tray • Cassette size label (inside the cassette)
4	Remove the external taping, and slide out the cassettes. Remove the cushioning materials from inside the cassettes, and slide in the cassettes.	

COPYRIGHT © 1997 CANON INC.
CANON NP6330 REV.0 MAY 1997 PRINTED IN JAPAN (IMPRIME AU JAPON)

No.	Work	Checks/remarks
5	If you are not installing a paper deck pedestal, install the lower right cover. If you are installing any of the above pedestals, you will not need the lower right cover.	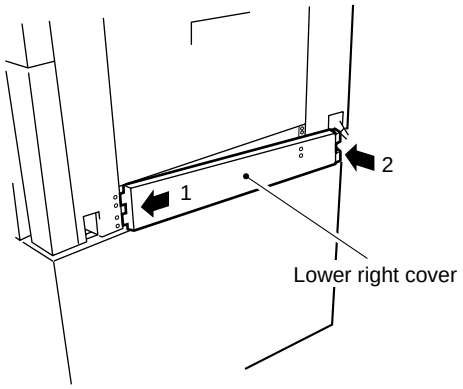
6	Remove the taping from the scanner metal fixing found outside the left cover; then, slide the metal fixing to the right, and pull it to the front to remove. • You may like to store away the metal fixing for possible relocation of the copier in the future.	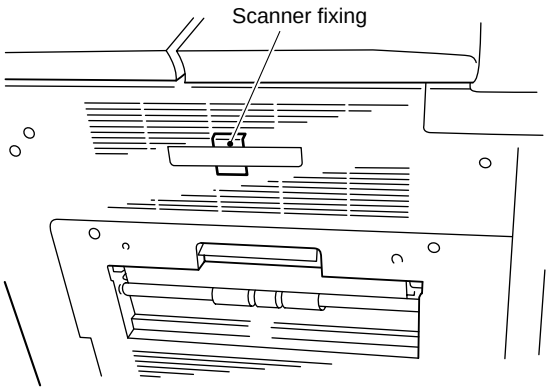
7	Open the copyboard cover, and remove the protection paper.	
8	Peel the protection seal off the control panel.	

COPYRIGHT © 1997 CANON INC. CANON NP6330 REV.0 MAY 1997 PRINTED IN JAPAN (IMPRIME AU JAPON)

<table>
<tr><th>No.</th><th>Work</th><th>Checks/remarks</th></tr>
<tr><td>9</td><td>Open the front cover, and open the delivery assembly.</td><td rowspan="3">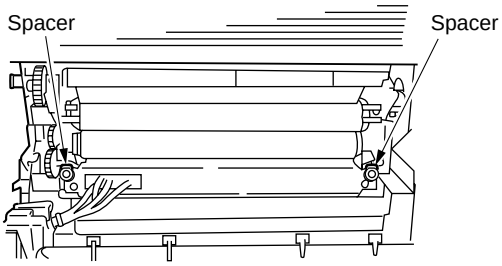

Note:
When removing the spacer, pay attention to the leaf spring of the fixing unit and the separation claw of the delivery assembly.

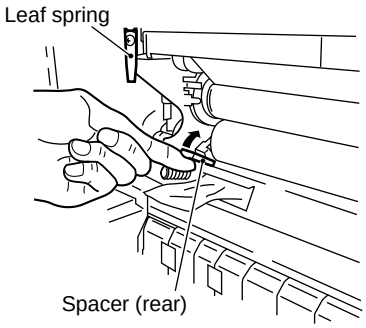
</td></tr>
<tr><td>10</td><td>Push up the spacer (one each at front and rear) of the fixing roller in the direction of the arrow until a click is heard.</td></tr>
<tr><td>11</td><td>Remove the spacer.
• You will not be using the spacer.</td></tr>
<tr><td>12</td><td>Close the delivery assembly.</td><td></td></tr>
</table>

COPYRIGHT © 1997 CANON INC.
CANON NP6330 REV.0 MAY 1997 PRINTED IN JAPAN (IMPRIME AU JAPON)

No.	Work	Checks/remarks
13	Remove the connector cover.	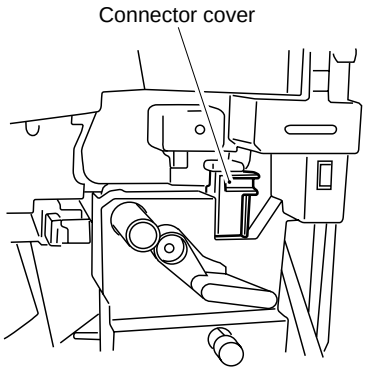
14	Turn the developing assembly releasing lever in the direction of the arrow to unlock the developing assembly. Disconnect the connector, and remove the developing assembly. Check the developing cylinder for scratches and dirt.	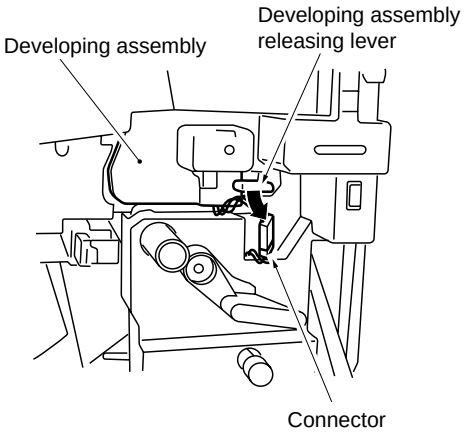
15	Install the developing assembly; then, connect the connector.	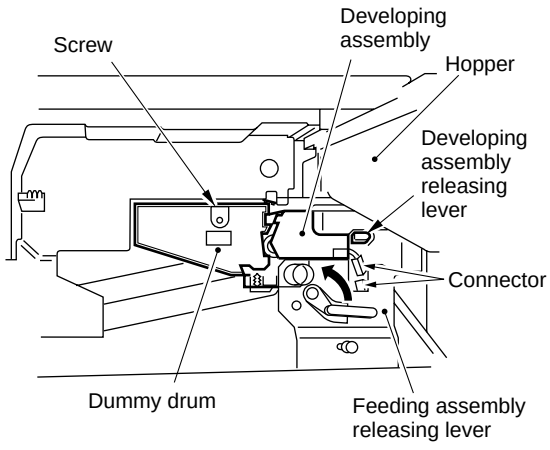
16	Open the hopper to the front, and shift the feeding assembly releasing lever in the direction of the arrow to unlock the developing assembly.	
17	Remove the screw, and slide out the dummy drum to the front. • You will be using the removed screw later when installing the drum unit.	
18	Look the developing assembly in position.	

COPYRIGHT © 1997 CANON INC.

B. Supplying Toner

No.	Work	Checks/remarks
1	Shake the toner cartridge left and right vigorously so that the toner inside it is even.	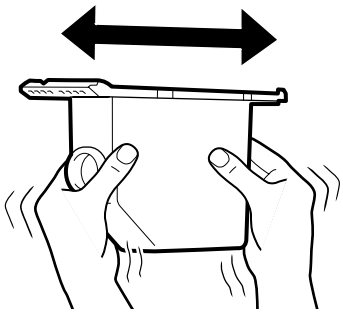
2	Fit the boss of the toner cartridge in the groove found at the rear of the hopper; then, wiggle the cartridge slightly until a click is heard, indicating that the cartridge has settled in position.	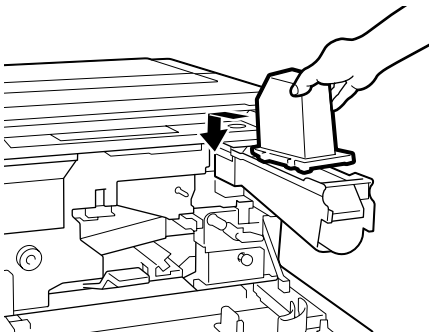
3	While holding lightly down on the cartridge, pull out the black grip of the hopper to the front.	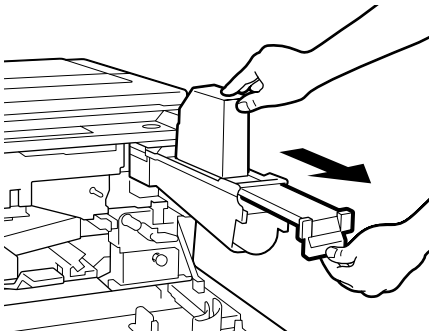
4	While holding the grip of the cartridge, pull the cartridge to the front until it stops.	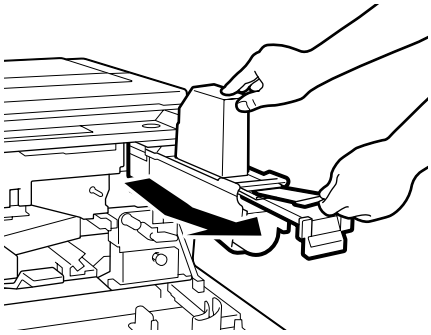

COPYRIGHT © 1997 CANON INC.
CANON NP6330 REV.0 MAY 1997 PRINTED IN JAPAN (IMPRIME AU JAPON)

No.	Work	Checks/remarks
5	Tap lightly on the top of the toner cartridge so that all toner moves to the hopper.	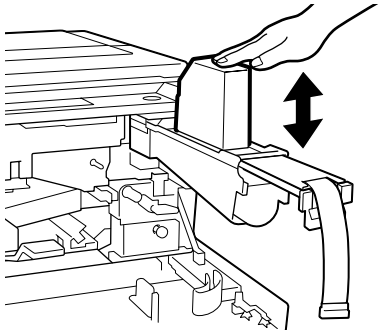
6	Push the grip of the hopper back to the rear, and detach the cartridge.	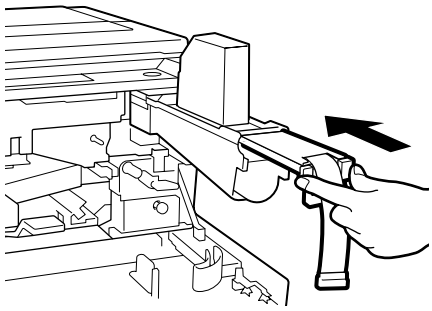 **Reference:** If the grip is returned to the end, this side of the cartridge will be removed from the hopper. 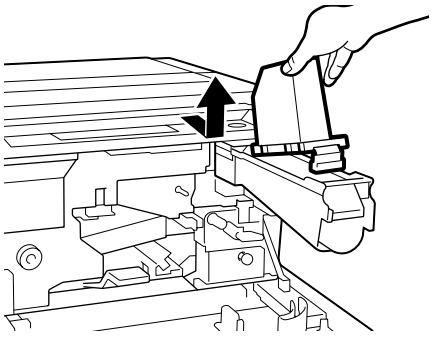
7	Put the hopper back into its initial position.	

COPYRIGHT © 1997 CANON INC.

C. Stirring the Toner

No.	Work	Checks/remarks
1	Connect the power plug.	
2	Using the door switch actuator, turn on the door switch, thereby turning on the power. **Note:** Check to make sure the feeding assembly has been unlocking.	• Check to make sure that the Add Paper indicator has turned on opening and closing the copyboard cover. • Press the keys on the keypad and the Clear key to make sure that the correct copy count is indicated.
3	Check to make sure that the hopper is securely set inside the copier.	**Note:** If the hopper is not securely set inside the copier, the developing assembly will not be supplied with toner correctly, possibly locking the hopper motor.
4	Press the service mode switch (SSW) with a hex key. • The indicator indicates '[1]' Execute 'No. 407' in service mode. • Press the '4' on the keypad, OK key, '0' and '7' on the keypad, and OK key in sequence.	The copier will operate about 6 min, during which the developing assembly is supplied with toner from the hopper. Perform steps 5) and 6) during this period. **Note:** Do not ever turn off the power or remove the door switch actuator while the copier is in operation. 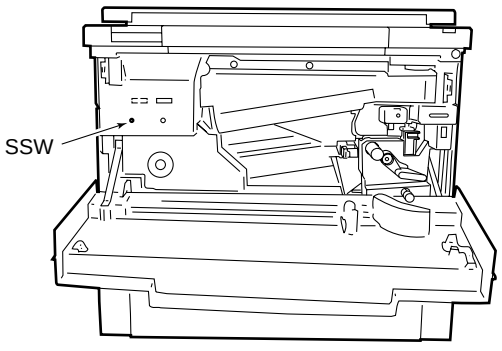

COPYRIGHT © 1997 CANON INC.
CANON NP6330 REV.0 MAY 1997 PRINTED IN JAPAN (IMPRIME AU JAPON)

No.	Work	Checks/remarks
5	Fit the stepped screws as shown, and install the original tray.	• You may install the original tray on either left or right. 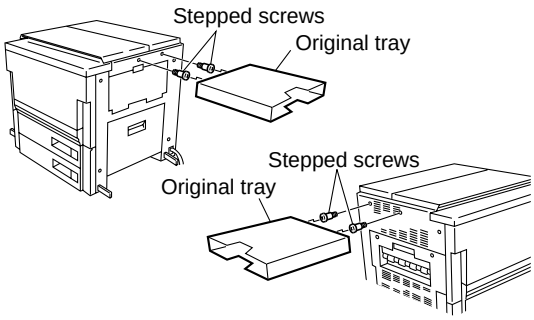
6	Install the copy tray to the delivery assembly.	
7	Pull out the static eliminator, and clean it with the static eliminator cleaning brush. Thereafter, set the static eliminator, and put the cleaning brush back into its original place.	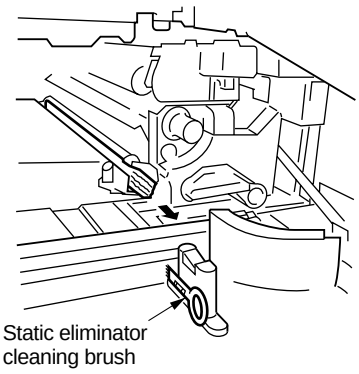
8	Turn off the power switch, and disconnect the power plug.	

COPYRIGHT © 1997 CANON INC.

D. Installing the Drum Unit

The copier's photosensitive drum is highly susceptible to light. Exposure to even room light can cause white spots or black bands on copies. Try to work as quickly as possible.

No.	Work	Checks/remarks
1	Keep the developing assembly unlocked, and open the hopper.	
2	Open the drum unit, and remove the light-blocking sheet.	
3	Set the drum unit in the copier, and fix it in place using the screw removed from the dummy drum.	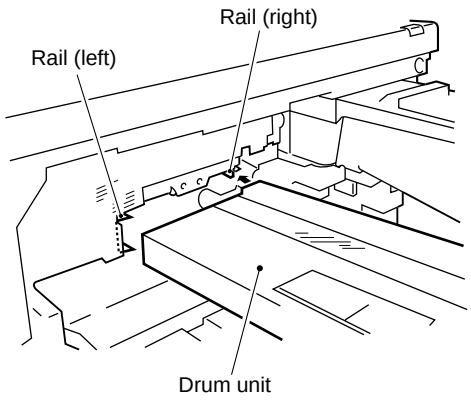 Be sure to slide in the drum straight along the rails in the copier.
4	Fill out the label which comes with the drum unit, and attach the label to the cover of the drum unit.	date / date Datum | counter / compteur Zähler | notes / note Notiz
5	Move the knob of the drum unit back and forth two to three times to clean the primary charging wire.	
6	Put the hopper back into its original position.	
7	Lock the developing assembly in place.	
8	Lock the feeding assembly in place.	
9	Attach the connector cover.	

COPYRIGHT © 1997 CANON INC.
CANON NP6330 REV.0 MAY 1997 PRINTED IN JAPAN (IMPRIME AU JAPON)

E. Checking Images and Operations

No.	Work	Checks/remarks
1	Remove the door switch actuator, and close the front door.	
2	Connect the power plug, and turn on the power switch.	• Check to make sure that the Add Paper indicator turns on, opening and closing the copyboard cover.
3	Switch the cassette size according to the needs of the user. First, switch the size guide plate to suit the paper size. Then, put copy paper inside the cassette, and move the trailing edge guide plate until it comes into contact with the trailing edge of the copy paper.	
4	Remove the cassette size plate from each cassette holder, and attach the appropriate size label to the size plate. Put the size plate back into its initial position.	
5	Set the cassettes in the copier.	• Check to make sure that the paper indicator matches with the size of the cassette. • Press keys other than the Copy Start key on the control panel to make sure that the operation is normal.
6	Set the Test Sheet on the copy board, and make copies; then, check the images.	• Check to make sure that no abnormal noise is heard. • Check the images at each default reproduction ratio. • Check to make sure that as many copies as has been specified have been made.
7	Make two-sided copies.	• Check to make sure that copying operation is normal. • Check to make sure that no abnormal noise is heard.
8	Make copies in manual feed mode.	• Check to make sure that copying operation is normal.
9	Check the external covers for damage and deformation.	
10	Clean the area around the copier.	

COPYRIGHT © 1997 CANON INC.

No.	Work	Checks/remarks
11	Move the copier to the site of installation.	• Check to make sure that the copier is more or less level.
12	Enter the necessary information in the Service Sheet.	

COPYRIGHT © 1997 CANON INC.
CANON NP6330 REV.0 MAY 1997 PRINTED IN JAPAN (IMPRIME AU JAPON)

III. RELOCATING THE COPIER

Perform the steps that follow before relocating the copier by truck or other means of transportation.

Step	Work	Checks	Remarks
1	Move the lens to Direct position.		What is referred to as Direct position is where the lens is when warm-up ends after power-on.
2	Remove the drum unit.	Put the drum unit in a box for transportation.	
3	Fix the scanner in place.		
4	Tape the charging assembly and feeding assembly releasing levers in place to avoid shifting by vibration.		
5	Tape the front door and the delivery assembly in place.		
6	Place A3/11”×17” copy paper on the copyboard glass, and tape the copyboard cover in place.		

COPYRIGHT © 1997 CANON INC.

CHAPTER 10

MAINTENANCE AND INSPECTION

This chapter describes the components useful for maintenance of this copier and the checking methods.

I. PERIODICALLY REPLACED PARTS 10-1
A. Periodically Replaced Parts 10-1
II. CONSUMABLES AND DURABLES ...10-2
A. Copier 10-2
B. Paper Deck Pedestal....10-3
C. Cassette Feeding Unit....10-3
III. SCHEDULED SERVICING....10-4
IV. PERIODICALLY SERVICED PARTS..10-6
A. Copier 10-6

COPYRIGHT © 1997 CANON INC. CANON NP6330 REV.0 MAY 1997 PRINTED IN JAPAN (IMPRIME AU JAPON)

I. PERIODICALLY REPLACED PARTS

Some of the copier's parts must be replaced on a periodical basis to ensure a specific level of performance. Replace them as indicated regardless of the presence/absence of external damage.

(Schedule the replacement so that it coincides with scheduled servicing.)

A. Periodically Replaced Parts

as of May 1997

No.	Parts	Parts No.	Q'ty	Life (copies)	Remarks
1	Ozone filter	FL5-0486-000	1	60,000	Or 1yr.
2	Static eliminator	FF2-3902-000	1	60,000	
3	Transfer corona wire	FY3-0040-000	AR	60,000	
4	Scanner cooling fan filter	FB1-7671-000	1	180,000	Or 1yr.

Note:

The above values are estimates only and are subject to change based on future data.

COPYRIGHT © 1997 CANON INC.
CANON NP6330 REV.0 MAY 1997 PRINTED IN JAPAN (IMPRIME AU JAPON)

II. CONSUMABLES AND DURABLES

Some of the copier's parts may have to be replaced once or more because of deterioration or damage over the period of warranty. Replace them as necessary.

A. Copier

as of May 1997

No.	Parts			Parts No.	Q'ty	Life (copies)	Remarks
1	Pick-up roller (front)			FF5-1221-000	2	240,000	
2	Pick-up roller (rear)			FF5-1220-000	2	240,000	
3	Feeding roller			FB1-7061-000	2	120,000	
4	Separation roller			FB1-7060-000	2	120,000	
5	Fixing cleaning belt			FA3-8908-000	1	200,000	
6	Upper fixing roller			FB1-7956-000	1	200,000	
7	Lower fixing roller			FB1-7957-000	1	200,000	
8	Upper fixing separation claw			FB1-7075-000	5	200,000	
9	Lower fixing separation claw			FA2-9037-000	4	200,000	
10	Insulating bush (fixing assembly)			FB1-6823-000	2	200,000	
11	Fixing heater	Main	120V	FH7-4545-000	1	300,000	
			220/240V	FH7-4536-000			
		Sub	120V	FH7-4547-000	1	300,000	
			220/240V	FH7-4538-000			
12	Scanning lamp		120V	FH7-3320-000	1	100,000	
			220/240V	FH7-3321-000			
13	Pre-exposure lamp			FG5-1788-000	1	200,000	
14	Thermistor			FH7-7429-000	1	300,000	
15	Scanner drive wire (front)			FB1-7090-000	1	500,000	
16	Scanner drive wire (rear)			FB1-7874-000	1	500,000	
17	Developing cylinder			FB1-8119-000	1	300,000	
18	Separation pad			FC1-9022-030	1	120,000	
19	Registration roller			FF5-1009-000	1	300,000	

Note:

The above are estimates only and subject to change to reflect data from the field.

COPYRIGHT © 1997 CANON INC.
CANON NP6330 REV.0 MAY 1997 PRINTED IN JAPAN (IMPRIME AU JAPON)

B. Paper Deck Pedestal

as of MAY 1997

No.	Parts	Parts No.	Q'ty	Life (copies)	Remarks
1	Pick-up roller (front)	FF5-1221-000	1	240,000	
2	Pick-up roller (rear)	FF5-1220-000	1	240,000	
3	Feeding roller	FB1-7061-000	1	120,000	
4	Separation roller	FB1-7060-020	1	120,000	

COPYRIGHT © 1997 CANON INC.

III. SCHEDULED SERVICING

Note:

1. As a rule, perform scheduled servicing every 20,000 copies.
2. Before setting out for a visit, check the service book, and take parts likely to need replacement.

No.	Work	Checks	Remarks
1	Meet the person incharge	Check the general condition.	
2	Record the counter reading	Check fault copies.	
3	Make test copies: Direct, reduce, Enlarge, page separation mode, duplexing mode.	a. Image density b. Soiling of white background c. Clarity of characters d. Leading edge margin e. Left/right margin f. Fixing, registration, soiling on back g. Abnormal noise h. Counter operation	 Standard: 2.0 ±1.0mm (Direct/one-sided, two-sided) Standard: 2.5 ±1.5mm (Direct/one-sided, two-sided)
4	Clean the static eliminator		Use the cleaning brush.
5	Clean the feeding assembly • Transfer guide • Feeding belt • Feeding assembly mount		Use a moist cloth.
6	Clean the fixing/delivery assembly • Upper fixing roller • Lower fixing roller • Separation claw (upper, lower) • Paper guide plate		 Use solvent Use solvent Use cleaning oil Use cleaning oil

COPYRIGHT © 1997 CANON INC.
CANON NP6330 REV.0 MAY 1997 PRINTED IN JAPAN (IMPRIME AU JAPON)

No.	Work	Checks	Remarks
7	Provide scheduled servicing to suit the number of copies made (P.10-7).		
8	Clean the copyboard cover and the copyboard glass.		
9	Make test copies.		
10	Make sample copies.		
11	Put sample copies in order, and clean up the area around the copier.		
12	Record the final counter reading.		
13	Fill out the service sheet and report to the person in charge.		

COPYRIGHT © 1997 CANON INC.
CANON NP6330 REV.0 MAY 1997 PRINTED IN JAPAN (IMPRIME AU JAPON)

IV. PERIODICALLY SERVICED PARTS

A. Copier

△ :Clean ● :Replace X:Oil □ :Adjust ◎ :Inspect

Unit	Part	every 20,000 copies	every 60,000 copies	every 180,000 copies	1yr.	Remarks
Externals	Copyboard glass	△				Use alcohol
	Ozon filter		●		●	Replace every 60,000 copies or 1yr.
Pick-up assembly	Pick-up roller	△				
Scanner drive assembly	Scanner rail		△ / X			Use alcohol
	Scanner drive wire		□			Mirror positioning tool
Feeding assembly	Transfer guide assembly	△				Use a moist cloth.
	Feeding belt	△				
	Feeding assembly mount	△				
Optical path	Scanner reflecting plate	△				Use a blower brush; if dirt persists, use alcohol.
	Scanner side reflecting plate	△				
	No.1 through No.6 mirrors	△				
	Lens	△				
	Dust-proofing glass	△				
	Original size detecting unit	△				
	Scanner cooling fan filter			●	●	Replace every 180,000 copies or 1yr.

COPYRIGHT © 1997 CANON INC.
CANON NP6330 REV.0 MAY 1997 PRINTED IN JAPAN (IMPRIME AU JAPON)

Unit	Parts	every 20,000 copies	every 60,000 copies	every 180,000 copies	1yr.	Remarks
Corona unit	Transfer corona wire		●			
	Static eliminator	△	●			Use the cleaning brush
Fixing assembly	Upper fixing roller	△				Use cleaning oil
	Lower fixing roller	△				
	Separation claw (upper, lower)	△				Use solvent
	Fixing inlet guide	△				

Caution:

Do not use solvents/oil other than those specified.

COPYRIGHT © 1997 CANON INC.
CANON NP6330 REV.0 MAY 1997 PRINTED IN JAPAN (IMPRIME AU JAPON)

CHAPTER 11

TROUBLESHOOTING

This chapter describes the maintenance, checks, standards, adjustment, troubleshooting for image fault, operation fault and feeding fault of this copier, electrical component arrangement, their roles, service mode and self-diagnosis.

I. MAINTENANCE AND INSPECTION....11-3
A. Image Adjustment Basic Procedure 11-3
B. Points to Note for Scheduled Servicing 11-5
II. STANDARDS AND ADJUSTMENTS 11-7
A. Adjusting the Images 11-7
B. Exposure System....11-22
C. Image Formation System....11-29
D. Pick-Up / Feeding System 11-34
E. Fixing System 11-40
F. Electrical System 11-43
III. TROUBLESHOOTING IMAGE FAULTS 11-53
A. Making Initial Checks....11-53
B. Image Fault Samples....11-56
C. Troubleshooting Faulty Images....11-57
IV. TROUBLESHOOTING MALFUNCTIONS 11-73
A. Troubleshooting Malfunctions 11-73
B. Troubleshooting Malfunctions in the Pedestal 11-102
V. TROUBLESHOOTING FEEDING FAULTS 11-107
A. Copy Paper Jams 11-107
B. Troubleshooting Feeding Faults ..11-112
VI. ARRANGEMENT AND FUNCTIONS OF THE ELECTRICAL PARTS....11-113
A. Sensors....11-114
B. Switches, clutches, and solenoids....11-116
C. Heaters, lamps, and motors....11-118
D. PCBs....11-120
E. Paper deck pedestaL-M1....11-122
F. Variable Resistors, Light-Emitting Diodes, and Check pins by PCB .11-124
VII. SERVICE MODE....11-129
A. Outline....11-129
B. Using Service Mode....11-130
C. Using Adjustment Mode and Optional / Setting Mode 11-131
D. Control/Display Mode [1] 11-132
E. I/0 Display Mode [2]....11-147
F. Adjustment Mode [3]....11-171
G. Function Mode [4] 11-173
H. Optional Settings Mode [5] 11-175
I. Counter Mode [6]....11-177
VIII. SELF DIAGNOSIS....11-179
A. Copier 11-179
B. Pedestal Self Diagnosis....11-183
C. RDF/ADF Self Diagnosis 11-184
D. Sorter Self Diagnosis 11-185

COPYRIGHT © 1997 CANON INC. CANON NP6330 REV.0 MAY 1997 PRINTED IN JAPAN (IMPRIME AU JAPON)

Guide to Troubleshooting Tables

The troubleshooting procedures in this manual are prepared in the form of tables, rather than flow charts. Study the following for an idea of how to consult the tables.

EX. AC power is absent.

Cause/Fault	Step	Checks	YES/NO	Remedies
Power plug	1	Is the power plug connected to the outlet?	NO	Connect the plug.
Covers	2	Are the front door and delivery cover closed properly?	NO	Close the door and cover.
Main power	3	Is the specified voltage present at the power outlet?	NO	The problem is not the copier's; advise the user.
	4	Is the specified voltage present between J1-1 and J1-2? (J1 is located near the power supply cord mount.)	YES	Go to step 6.

- To find out the cause (faulty part) of a single problem, see the Cause/Fault column. In the case of "AC power is absent," you will learn that the power plug may not be connected, the covers may not be closed properly, or the main power may be absent.
- To find out checks to make or remedies to provide for a single problem, see the Remedy column as guided by YES/NO to the checks; or, move to the next step as necessary.

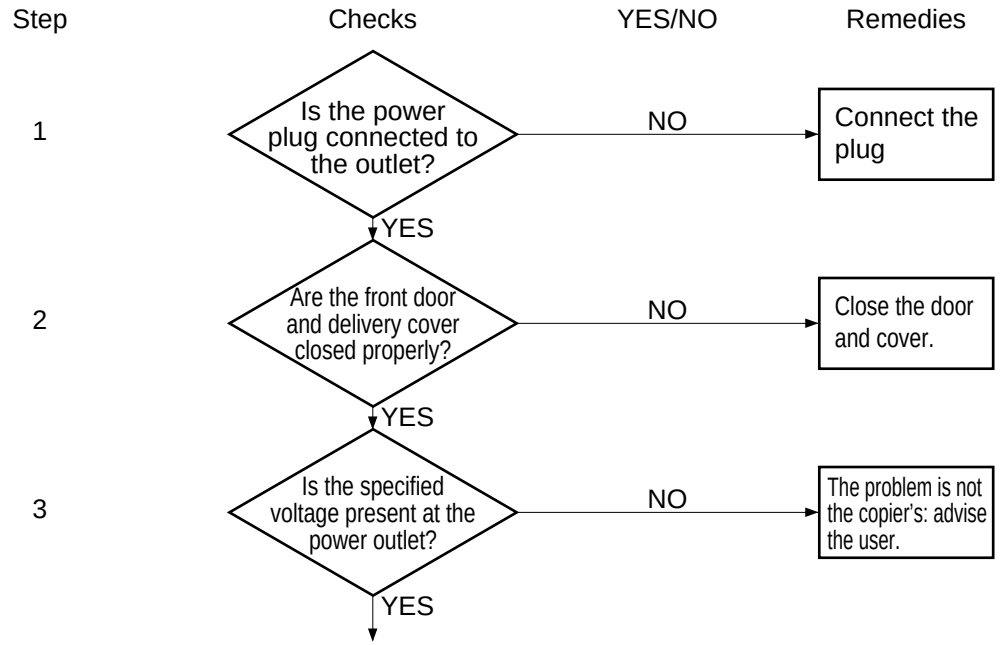

- The instruction "Measure the voltage between J109-1 (+) and J109-2 (–) on the DC controller PCB" asks you to connect the meter's positive probe (+) to J109-1 and negative probe to J109-2 (–).

COPYRIGHT © 1997 CANON INC.
CANON NP6330 REV.0 MAY 1997 PRINTED IN JAPAN (IMPRIME AU JAPON)

COPYRIGHT © 1997 CANON INC. CANON NP6330 REV.0 MAY 1997 PRINTED IN JAPAN (IMPRIME AU JAPON)

I. MAINTENANCE AND INSPECTION

A. Image Adjustment Basic Procedure

non-AE, copy density at 5

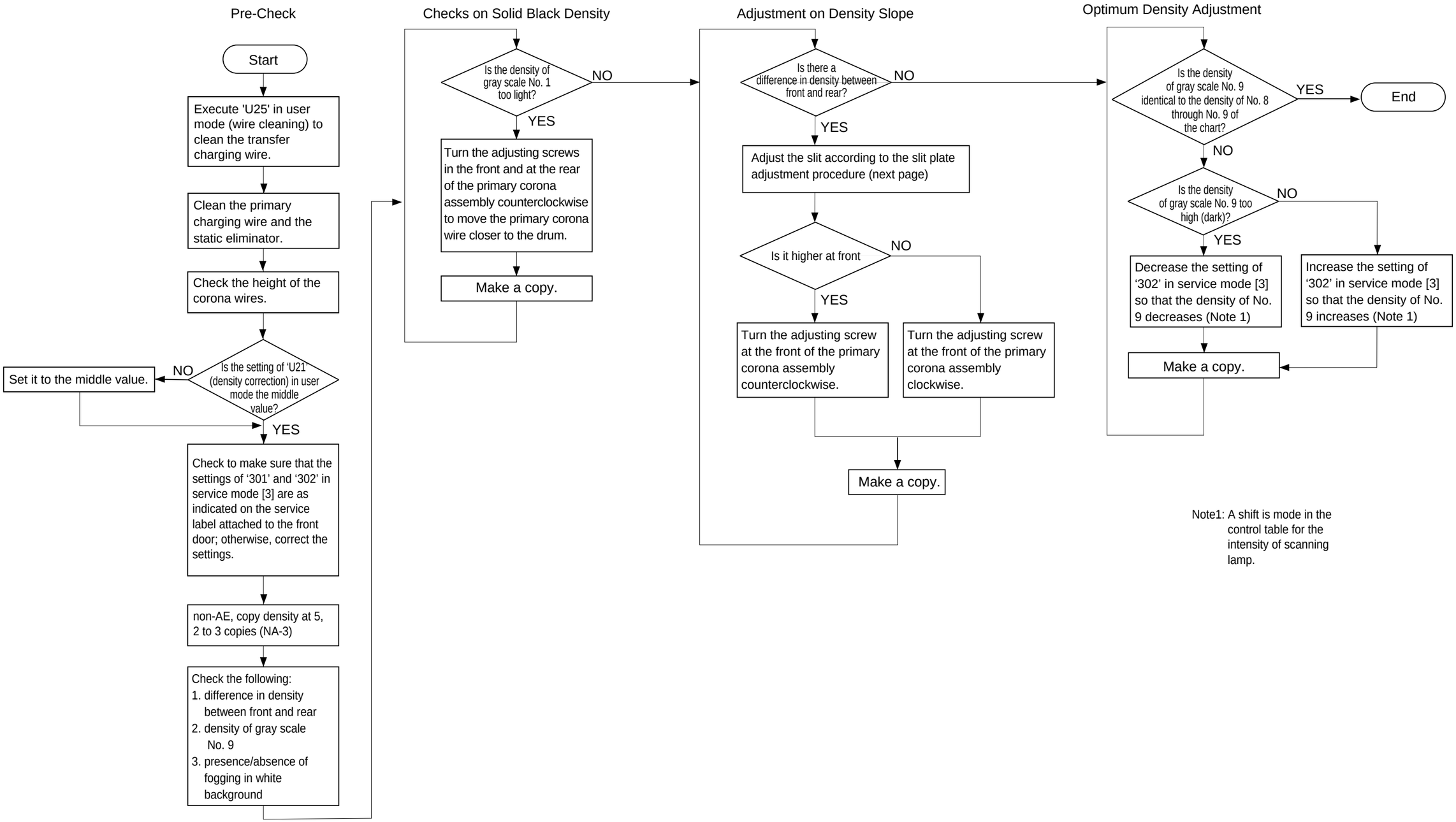

Note1: A shift is mode in the control table for the intensity of scanning lamp.

COPYRIGHT © 1997 CANON INC.
CANON NP6330 REV. 0 MAY 1997 PRINTED IN JAPAN (IMPRIME AU JAPON)

Adjusting the Slit Plate

Note:

- Use only the slit plate at the front.
- If you must replace the drum unit, be sure to put the slit plate back to the white marking.

1) Turn off the power switch, and disconnect the power plug from the power outlet.
2) Remove the copyboard glass, and move the No.1 mirror mount to the center, where work is facilitated.
3) Adjust the slit plate at the front by referring to the table below.

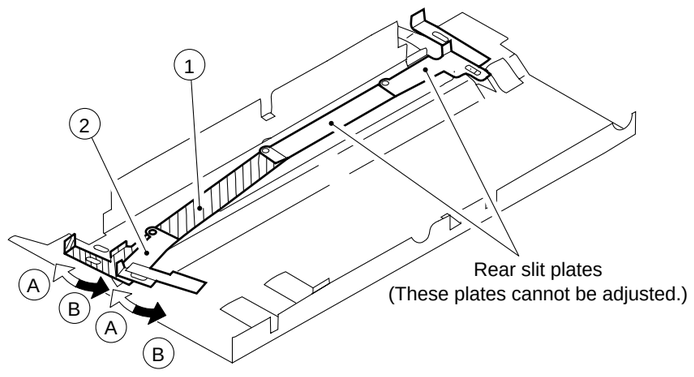

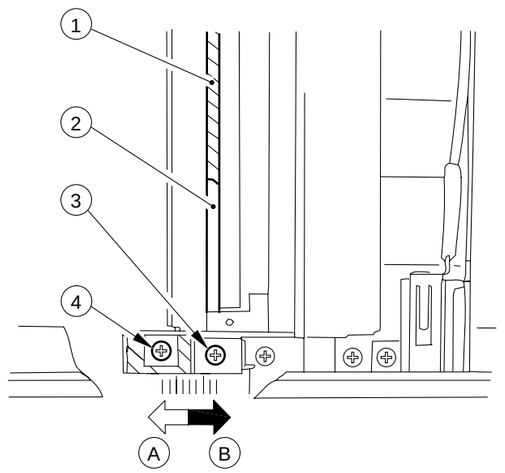

If you adjusted the slit ① by loosening the screw ④, the change will affect the area from the center to the rear end.,

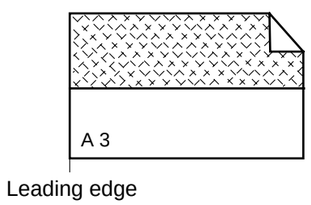

Slit adjustment direction	Image density
Ⓐ	Lighter
Ⓑ	Darker

If you adjusted the slit ② by loosening the screw ③, the change will affect the image end (up to a point about 30 mm from the rear).

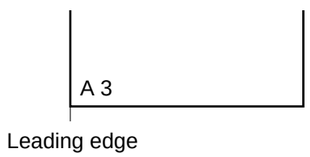

COPYRIGHT © 1997 CANON INC. CANON NP6330 REV. 0 MAY 1997 PRINTED IN JAPAN (IMPRIME AU JAPON)

B. Points to Note for Scheduled Servicing

Copyboard/Scanning system

Part	tool/solvent	work/remarks
Copyboard glass	Alcohol	Cleaning
Original size sensor	Blower blush	Cleaning
Scanning lamp	Lint-free paper	Dry-wiping
Reflecting plate	Blower blush.	If dirt cannot be removed, use lint -free paper.
No.1 to No.4 mirrors		
No.5 to No.6 mirrors	Mirror cleaning tool	Cleaning

Optical path

Part	tool/solvent	work/remarks
Lens	Brower brush	Cleaning
Dust-proofing glass	Brower brush	Cleaning

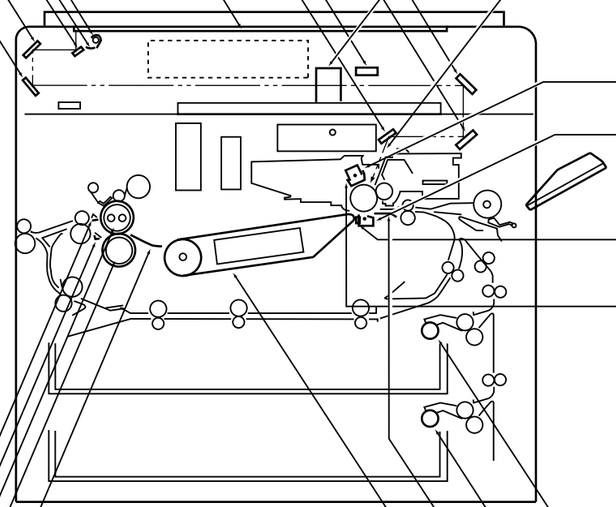

Corona units

Part	tool/solvent	work/remarks
Primary corona unit Transfer corona unit	Alcohol lint-free paper	Dry wipe it, there after, clean it using lint-free paper with alcohol
Static eliminator	Brush	Use a cleaning brush
Primary corona unit grid	Blower brush	Cleaning

Fixing assembly

Part	tool/solvent	work/remarks
Separation claw	Solvent	Cleaning
Upper roller/ Lower roller	Cleaning oil (TKN-0464)	Cleaning
Inlet guide	Solvent	Cleaning

Pick-up/feeding assembly

Part	tool/solvent	work/remarks
Pick-up roller	Moist cloth*	Cleaning
Transfer guide		
Feeding belt		
Feeding assembly mount		

*Make sure the parts are completely dry.

COPYRIGHT © 1997 CANON INC.
CANON NP6330 REV. 0 MAY 1997 PRINTED IN JAPAN (IMPRIME AU JAPON)

COPYRIGHT © 1997 CANON INC.
CANON NP6330 REV. 0 MAY 1997 PRINTED IN JAPAN (IMPRIME AU JAPON)

II. STANDARDS AND ADJUSTMENTS

A. Adjusting the Images

1	Adjusting the Image Leading Edge Margin [3] No. 305

Select [3] No. 305 (leading edge margin adjustment) in service mode, and make adjustments so that the image leading edge margin is 2.5 ±1.5 mm when the Test Sheet is copied in Direct.

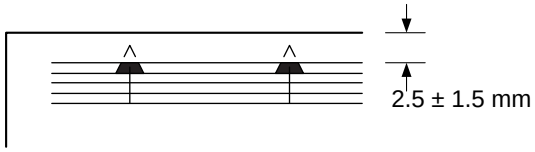

Figure 11-201

Reference:

2nd side of 2-sided copy: 2.5 ±2.0 mm

Making Adjustments

1) Start [3] in service mode, and select No. 305 using the keypad.
   - The display indicates '305'.

2) Press the OK key.
   - The indicator indicates the stored setting.

3) Using the keypad or the Zoom keys, change the setting.
   - The indicator flashes the setting.
   - To enter a negative setting, press the % key.

4) Press the OK key.
   - The new setting is stored.
   - The indicator stops flashing and remains on.
   - A press on the Copy Start key starts copying.

5) To change the settings in succession, repeat steps 3) and 4).

6) Press the Clear key to return to item selection.
   The settings and the image positions have the following relationships:
   - For each '1' in the setting, the margin width changes about 0.4 mm.
   - A higher setting decreases the margin width.

COPYRIGHT © 1997 CANON INC.
CANON NP6330 REV.0 MAY 1997 PRINTED IN JAPAN (IMPRIME AU JAPON)

2	Adjusting the Leading Edge Non-Image Width [3] No. 306

Select [3] No. 306 in service mode (leading edge non-image width adjustment), and make adjustments so that the leading edge non-image width is 2.0 ±1.0 mm when the Test Sheet is copied in Direct.

The copier adjusts the leading edge non-image width in relation to the timing at which the blank shutter is closed.

Be sure to perform the following steps whenever you have replaced the blank shutter solenoid or the blank exposure assembly.

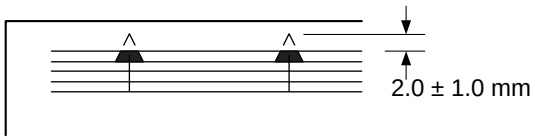

Figure 11-202

Reference:

6 mm or less in Reduce or Enlarge mode (however, 8 mm or less at 50%)

Making Adjustments

1) Start [3] in service mode, and select No. 306 using the keypad.
   - The indicator indicates '306'.

2) Press the OK key.
   - The indicator indicates the stored setting.

3) Using the keypad or the Zoom keys, change the setting.
   - The indicator flashes the setting.
   - To enter a negative setting, press the % key.

4) Press the OK key.
   - The new setting is stored.
   - The indicator stops flashing and remains on.
   - A press on the Copy Start key starts copying.

5) To change the settings in succession, repeat steps 3) and 4).

6) Press the Clear key to return to item selection.
   The settings and the image positions have the following relationships:
   - For each '1' in the setting, the margin width changes about 0.4 mm.
   - A higher setting increases the margin width.

COPYRIGHT © 1997 CANON INC.
CANON NP6330 REV.0 MAY 1997 PRINTED IN JAPAN (IMPRIME AU JAPON)

3	Adjusting the Trailing Edge Non-Image Width [3] No. 307

Select [3] No. 307 in service mode (trailing edge non-image width adjustment), and make adjustments so that the trailing edge non-image width is 2.5 ±1.5 mm when the Test Sheet is copied in Direct.

The copier adjusts the trailing edge non-image width in relation to the timing at which the blank shutter is closed.

Be sure to perform the following steps whenever you have replaced the blank shutter solenoid or the blank exposure assembly.

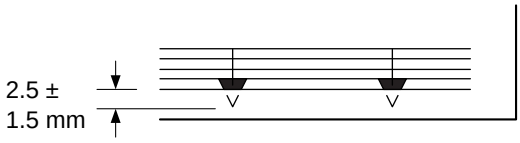

Figure 11-203

Reference:

8 mm or less in Reduce or Enlarge mode

Making Adjustments

1) Select [3] in service mode, and select No. 307 using the keypad.
   - The indicator indicates '307'.

2) Press the OK key.
   - The indicator indicates the stored setting.

3) Change the setting using the keypad or the Zoom keys.
   - The indicator flashes the setting.
   - To enter a negative setting, press the % key.

4) Press the OK key.
   - The new setting is stored.
   - The indicator stops flashing and remains on.
   - A press on the Copy Start key starts copying.

5) To change the settings in succession, repeat steps 3) and 4).

6) Press the Clear key to return to item selection.
   The settings and the image positions have the following relationships:
   - For each '1' in the setting, the margin width changes about 0.4 mm.
   - A higher setting decreases the margin width.

COPYRIGHT © 1997 CANON INC.

4	Adjusting the Left-Right Registration

Make adjustments so that the edges of the copy image and the copy are 0±1.5 mm from each other.

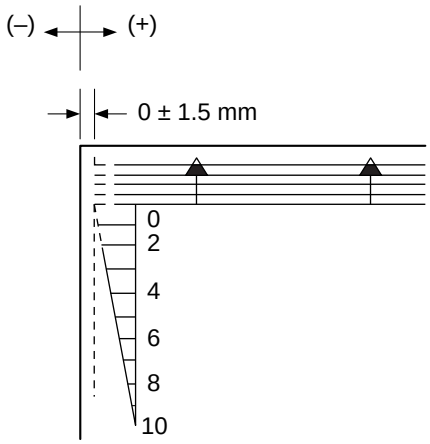

Figure 11-204

Reference:

2nd side of 2-sided copy: 0 ±2.0 mm

a. Pick-Up from the Cassette
Loosen the screw ①, and adjust the position of the cassette hook plate ②.

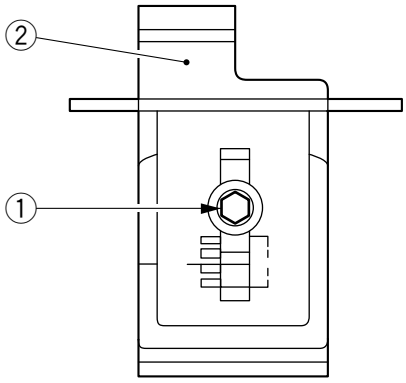

Figure 11-205

COPYRIGHT © 1997 CANON INC.
CANON NP6330 REV.0 MAY 1997 PRINTED IN JAPAN (IMPRIME AU JAPON)

b. Pick-Up from the Multifeeder
Loosen the screw ①, and adjust the position of the tray.

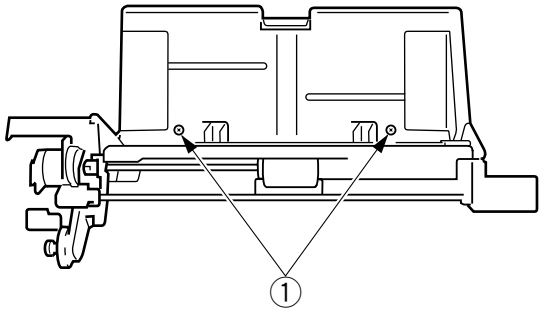

Figure 11-206

c. Pick-Up from the Paper Deck
Remove the deck front cover, and loosen the screw ① (deck left/right); then, adjust the position of the latch assembly in front/rear direction.

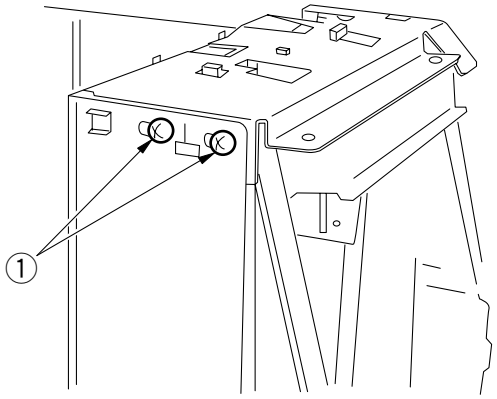

Figure 11-207

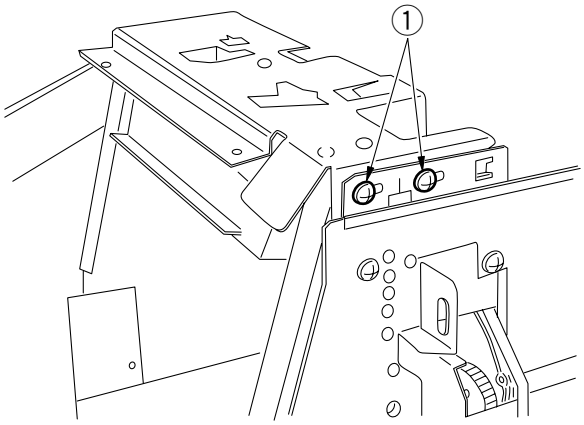

Figure 11-208

COPYRIGHT © 1997 CANON INC.

5	Adjusting the Image Left-Right Margin [3] No. 308

Select [3] No. 308 in service mode (left/right margin adjustment), and make adjustments so that the image left/right margin is 2.5 ±1.5 mm when the Test Sheet is copied in Direct.

Be sure you have adjusted the left/right registration before performing the following steps.

Reference:

2nd side of 2-sided copies: 2.5 ±2.0 mm

Making Adjustments

a. Margin Width

1) Select [3] in service mode, and select No. 308 using the keypad.
   - The indicator indicates '308'.

2) Press the OK key.
   - The indicator indicates the stored setting.

3) Using the keypad or the Zoom keys, change the setting.
   - The indicator flashes the new setting.

4) Press the OK key.
   - The new setting is stored.
   - The indicator stops flashing and remains on.

5) To change the settings in succession, repeat steps 3) and 4).

6) Press the Clear key to return to item selection.
   The settings and the image positions have the following relationships:
   - For each '1' in the setting, the margin width changes about 0.37 mm.
   - A higher setting increases the margin width.

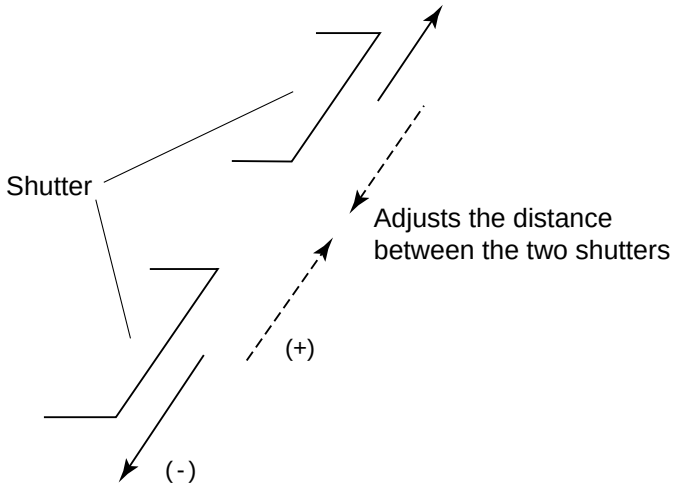

Figure 11-209

COPYRIGHT © 1997 CANON INC.
CANON NP6330 REV.0 MAY 1997 PRINTED IN JAPAN (IMPRIME AU JAPON)

b. Adjusting the Position of the Left/Right Margin
Turn the screw, and make adjustments to suit the standards.

- A clockwise turn moves the margin toward the front.
- A counterclockwise turn moves the margin to the rear.
- A full turn of the screw moves the image by about 1 mm.

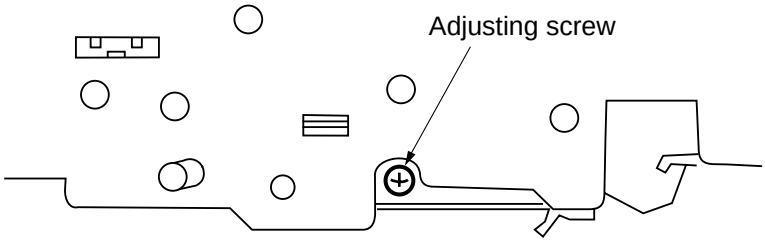

Figure 11-210

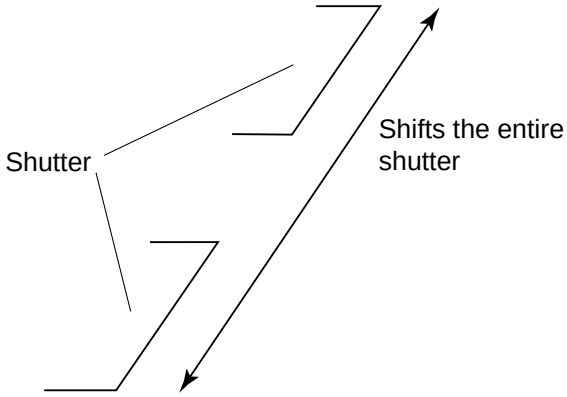

Figure 11-211

Note:

For both a. and b., be sure to try different reproduction ratios after adjustments so that a blank shutter home position search will be executed.

COPYRIGHT © 1997 CANON INC.

6 AE Adjustments

If you have replaced the scanning lamp, AE sensor, or DC controller PCB, you must make the adjustments indicated by O; make the adjustments indicated by Δ as necessary.

First, execute [4] No. 402 in service mode (AE auto adjustment) for automatic adjustments.

If the appropriate adjustments cannot be made after several tries (density indicator LED F5 and F9 flash), or if copies of the Test Sheet made in AE mode are too dark or too light, execute [3] No. 304 in service mode (AE mode scanning lamp activation voltage auto adjustment).

Be sure to follow the numerical sequence of the table.

No.	Item	After replacing AE sensor	After replacing controller PCB
1	402	O	O
2	304	Δ	Δ
3	303	Δ	Δ

Table 11-201

- In No. 402, auto adjustment is not executed for the AE slope, and the standard slope is used. To adjust the slope, execute No. 303.

COPYRIGHT © 1997 CANON INC.
CANON NP6330 REV.0 MAY 1997 PRINTED IN JAPAN (IMPRIME AU JAPON)

- AE Auto Adjustment [4] No. 402

In AE auto adjustment, adjustments are made so that the intensity of the lamp in AE mode matches the AE sensor output of manual copy density 5 in reference to copies of an original (Test Sheet) on the copyboard glass.

Making Adjustments

1) Place the Test sheet (NA-3) on the Copyboard, and close the copyboard cover.

2) Start [4] in service mode, and select No. 402 using the keypad.
   - The indicator indicates '402'.

3) Press the OK key.
   - The scanning lamp turns on, and the scanner moves to the AE position.
   - AE scanning is executed, and the intensity for AE scanning is automatically set.
   - Thereafter, the scanner returns to home position, and the scanning lamp turns off.

4) Press the Reset key.
   - Mode selection mode starts, indicating [4].
   - If necessary, execute No. 304.

Item	Function	Description	Remarks
402	AE scanning intensity automatic adjustment	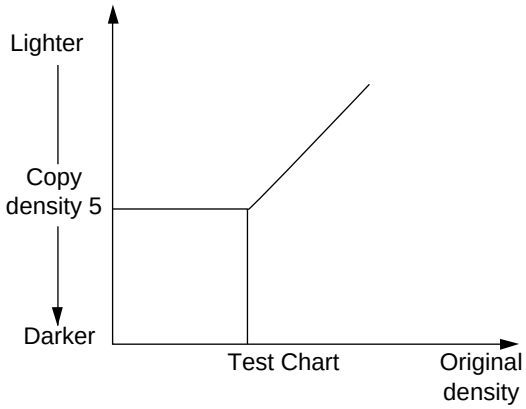	Automatic adjustment occurs so that the original is copied at copy density 5 when '402' is executed. Note: If AE adjustment fails, the density indicator LED on the control panel F5 and F9 flash. If such occurs, make the adjustment once again.

Table 11-202

COPYRIGHT © 1997 CANON INC.

- Scanning Lamp Activation Voltage Auto Adjustment in AE Mode [3] No. 304

Making Adjustment

1) Start [3] in service mode, and select No. 304 using the keypad.
   - The indicator indicates '304'.

2) Press the OK key.
   - The indicator flashes the stored setting.

3) Using the keypad or the Zoom keys, change the settings according to the table below.
   - The indicator flashes the setting.

4) Press the OK key.
   - The new setting is stored.
   - The indicator stops flashing and remains on.
   - A press on the Copy Start key starts copying.

5) Press the key.
   - Item selection mode starts, indicating '304'.
   - If necessary, execute No. 303.

Item	Function	Description	Remarks
304	AE scanning intensity adjustment	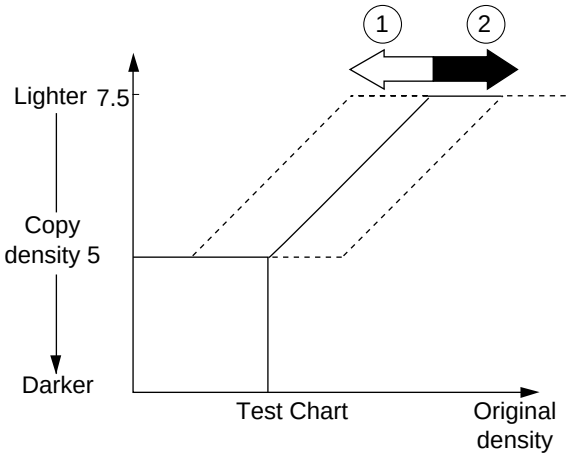	① When the setting is decreased in service mode, the AE copies will be darker. ② If the setting is increased in service mode, the AE copies will be lighter.

Table 11-203

COPYRIGHT © 1997 CANON INC.
CANON NP6330 REV.0 MAY 1997 PRINTED IN JAPAN (IMPRIME AU JAPON)

• Newspaper Original DC Bias Adjustment in AE Mode [3] No. 303
After executing No. 402 and No. 304, make a copy of a newspaper. If the copy is too dark or too light, make the following adjustments:

Making Adjustments

1) Start [3] in service mode, and select No. 303 using the keypad.
   • The indicator indicates '303'.

2) Press the OK key.
   • The indicator flashes the stored setting.

3) Using the keypad or the Zoom keys, change the setting according to the table below.
   • The indicator flashes the setting.

4) Press the OK key.
   • The new setting is stored.
   • The indicator stops flashing, and remains on.
   • Press the Copy Start key to start copying.

5) Press the Reset key twice.
   • These presses end service mode.

Item	Function	Description	Remarks
303	AE slope	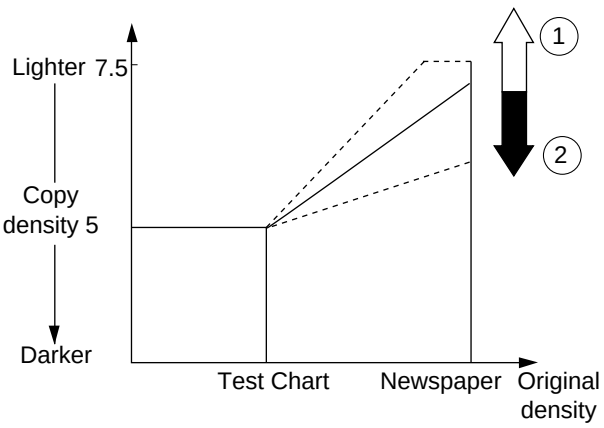	① If the setting is decreased in service mode, the newspaper copies will be lighter. ② If the setting is increased in service mode, the newspaper copies will be darker.

Table 11-204

COPYRIGHT © 1997 CANON INC.

7	Adjusting the Developing Bias DC Component [3] No. 302

Make adjustments according to the Image Adjustment Basic Procedure.

Making Adjustments

1) Start [3] in service mode, and select No. 302 using the keypad.
   - The indicator indicates '302'.

2) Press the OK key.
   - The indicator flashes the stored setting.

3) Using the keypad or the Zoom keys, change the setting.
   - The indicator flashes the setting.
   - To enter a negative setting, press the % key.

4) Press the OK key.
   - The setting is stored.
   - The indicator stops flashing and remains on.

5) Press the Clear key to start copying.
   The settings and the developing bias have the following relationships:
   - For each '1' of the setting, the output of the developing bias DC component changes by about 5 V.
   - A higher setting decreases the developing bias DC component, making the copies darker.
   - A lower setting increases the developing bias DC component, making the copies lighter.

COPYRIGHT © 1997 CANON INC.
CANON NP6330 REV.0 MAY 1997 PRINTED IN JAPAN (IMPRIME AU JAPON)

8	Adjusting the Horizontal Registration Paper Edge Sensor Position [3] No. 324

If a discrepancy is noted between front and rear margins on the second side of a two-sided copy, make the following adjustments:

Making Adjustments

1) Start [3] in service mode, and select No. 324 using the keypad.
   The indicator indicates '324'.

2) Press the OK key.
   - The indicator indicates the stored setting.

3) Using the keypad or the Zoom keys, change the setting.
   - The indicator flashes the setting.
   - To enter a negative setting, press the % key.

4) Press the OK key.
   - The new setting is stored.
   - The indicator stops flashing and remains on.
   - A press on the Copy Start key starts copying.

5) Press the Reset key twice.
   - These presses end service mode.

The settings and the margin have the following relationships:
- For each '1', the non-image width changes by about 0.5 mm.
- A higher setting increases the margin at the front.
- A lower setting decreases the margin at the rear.

Note:

After making adjustments, turn off and then on the power switch to move the horizontal paper end sensor to home position.

COPYRIGHT © 1997 CANON INC.
CANON NP6330 REV.0 MAY 1997 PRINTED IN JAPAN (IMPRIME AU JAPON)

9	Adjusting the Trailing Edge Margin for Pick-Up from the Multifeeder [3] No. 327

Make adjustments so that the trailing edge margin is 2.5 ±1.5 mm when free-size copying is executed using the multifeeder.

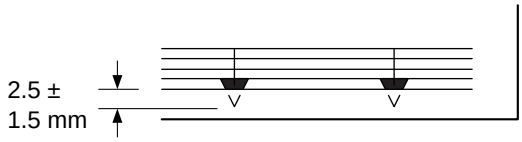

Figure 11-212

Making Adjustments

1) Start [3] in service mode, and select No. 327 using keypad.
   - The indicator indicates '327'.

2) Press the OK key.
   - The indicator indicates the stored setting.

3) Using the keypad or the Zoom keys, change the setting.
   - The indicator flashes the setting.
   - To enter a negative setting, press the % key.

4) Press the OK key.
   - The new setting is stored.
   - The indicator stops flashing and remains on.
   - A press on the Copy Start key starts copying.

5) To change the settings in succession, repeat steps 3) and 4).

6) Press the Clear key to return to item selection.
   The settings and the image position have the following relationship:
   - For each '1', the margin width changes about 0.4 mm.
   - A higher setting decreases the margin width.

COPYRIGHT © 1997 CANON INC.
CANON NP6330 REV.0 MAY 1997 PRINTED IN JAPAN (IMPRIME AU JAPON)

10	Adjusting the Book Erasing Width [3] No. 326

Adjust the width that runs in the middle of an original in book erase mode.
The Length of χ in Figure 11-213 may be changed.
This mode does not allow changing the left/right edge of a book original.

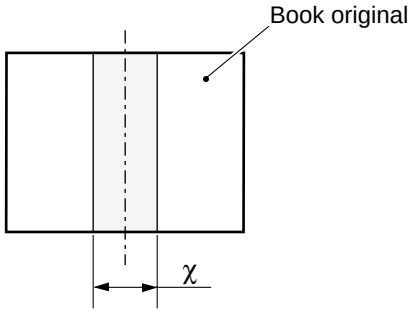

Figure 11-213

Making adjustment

1) Start [3] in service mode, and select No. 326 using the keypad.
   - The indicator indicates '326'.

2) Press the OK key.
   - The indicator indicates the stored setting.

3) Using the keypad or the Zoom keys, change the setting.
   - The indicator flashes the setting.
   - To enter a negative setting, press the % key.

4) Press the OK key.
   - The new setting is stored.
   - The indicator stops flashing and remains on.
   - A press on the Copy Start key starts copying.

5) To change settings in succession, repeat steps 3) and 4).

6) Press the Clear key to return to item selection.
   The settings and the book erasing width have the following relationship.
   - For each '1', the frame erasing width changes by about 1 mm.
   - A higher setting increases the frame erasing width.

COPYRIGHT © 1997 CANON INC. CANON NP6330 REV.0 MAY 1997 PRINTED IN JAPAN (IMPRIME AU JAPON)

B. Exposure System

1	Routing the Scanner Drive Cable

Route the cable in the order indicated; then, adjust the tension of the cable and the position of the mirror.

Note:

Before starting the work, be sure to fix the No. 2 mirror mount temporarily in place to the front and rear side plates.

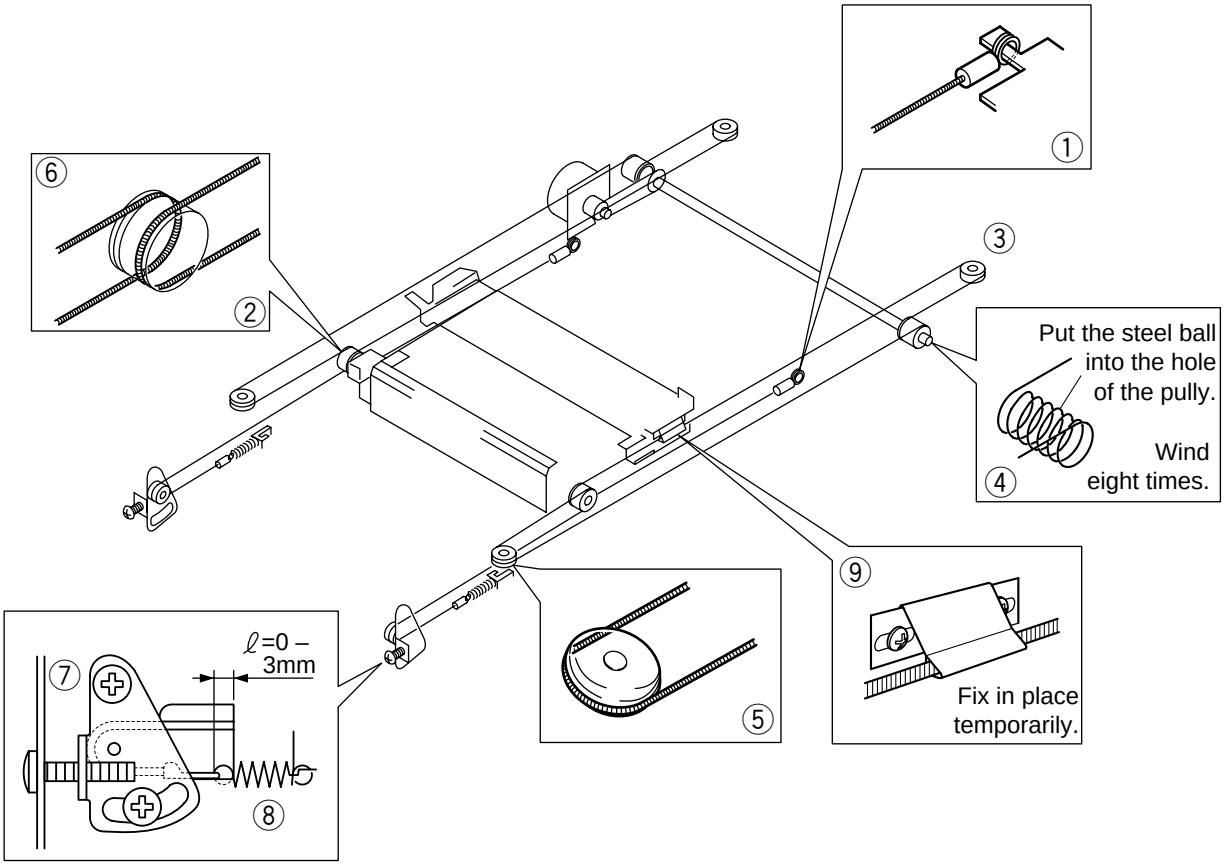

Figure 11-214

COPYRIGHT © 1997 CANON INC.
CANON NP6330 REV.0 MAY 1997 PRINTED IN JAPAN (IMPRIME AU JAPON)

2	**Adjusting the Position of the Mirror (optical path length between No. 1 mirror and No. 2/No. 3 mirror)**

1) Remove the screw used to temporarily fix the No.2 mirror mount in position (both front, rear).

2) Loosen the four screws on the mirror positioning tool (FY9-3002-000), and extend the two arms fully; then, tighten the screws (both front and rear).

Reference:

The mirror positioning tool is used in common with other models. Adjust the length of the arms to suit the copier in advance.

3) Remove the pin from the mirror positioning tool (front and rear).

4) Mount the mirror positioning tool ① to the No.1 mirror mount and the No.2 mirror mount.

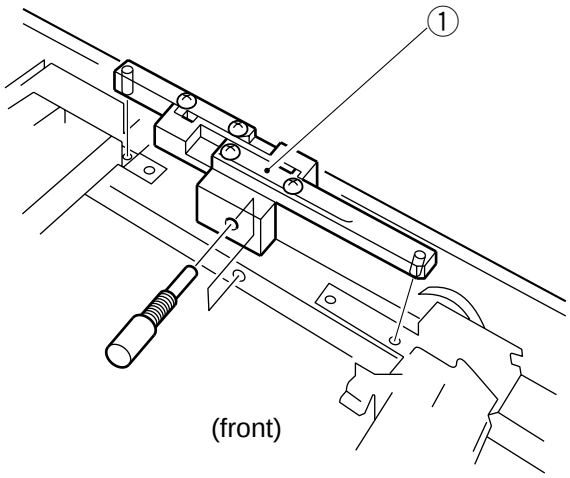

Figure 11-215

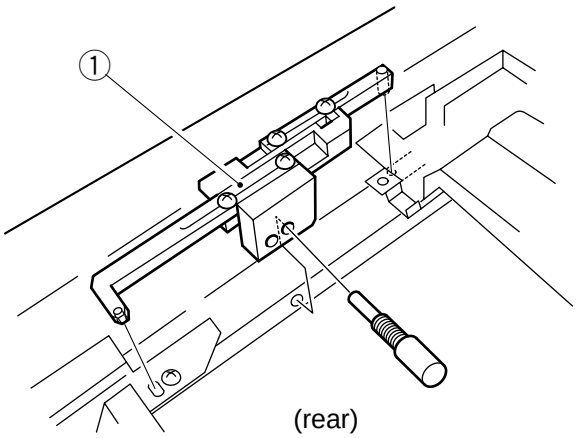

Figure 11-216

COPYRIGHT © 1997 CANON INC.

5) Mount the fixing of the scanner cable to the No.1 mirror mount (both front and rear) with screws ②.

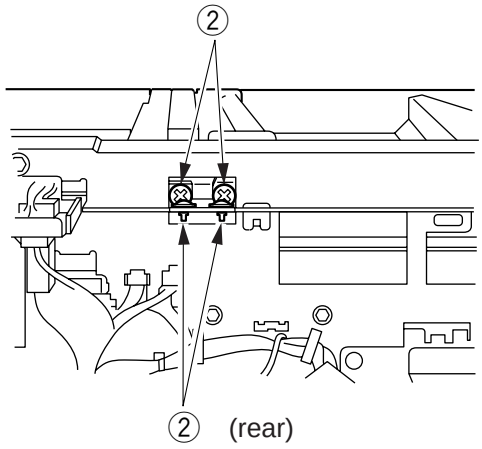

Figure 11-217

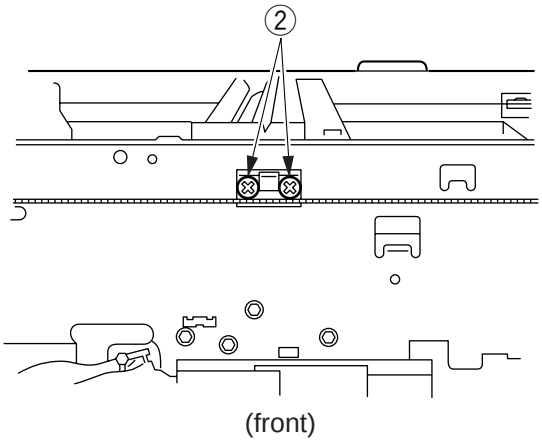

Figure 11-218

COPYRIGHT © 1997 CANON INC.
CANON NP6330 REV.0 MAY 1997 PRINTED IN JAPAN (IMPRIME AU JAPON)

3	Adjusting the Tension of the Scanner Cable

Loosen the binding screw, and align the tensioner plate to the line marked with a scribe in advance.

Or, tighten the binding screw so that the wire spring and the hole in the side plate shown in Figure 11-219 is 0 to 3 mm when viewed from the front.

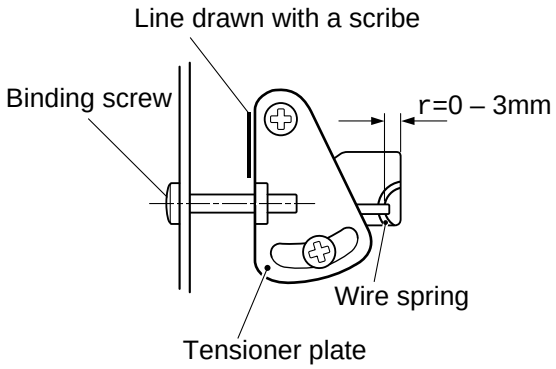

Figure 11-219

4	Adjusting the Tension of the Lens Drive Belt

Move the lens motor support ① and fit it in place so that the reading of the spring gauge is 1000 ± 50g when motor support ① is pulled with a spring gauge in the direction of the arrow at the point Ⓐ indicated in Figure 11-220.

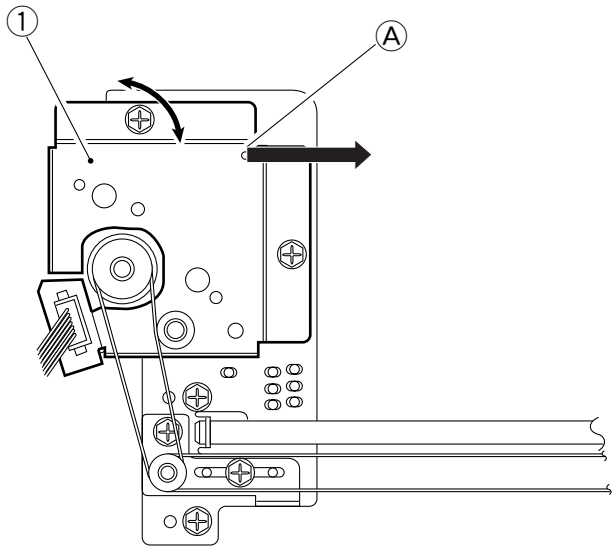

Figure 11-220

5	Cleaning the No.4 Mirror

1) Remove the copyboard glass and the lens hood.
2) Remove the screw ① and the mirror guide plate ②; then, clean the No.4 mirror.

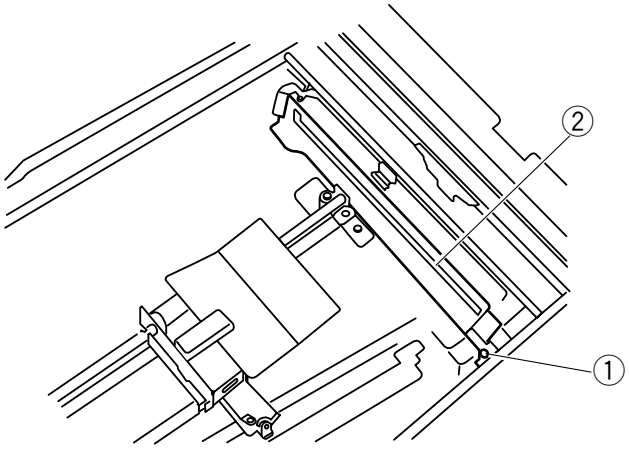

Figure 11-221

COPYRIGHT © 1997 CANON INC.
CANON NP6330 REV.0 MAY 1997 PRINTED IN JAPAN (IMPRIME AU JAPON)

6	Cleaning the No.5/No.6 Mirror

a. Removing the Mirror Cleaning Tool

1) Remove the copyboard glass.
2) Remove the lens hood.
3) Remove the mirror guide plate.
4) Move the lens stage in enlargement direction.
5) Remove the screw ①, and remove the mirror cleaning tool ②.
   Use the tool for cleaning the No.5/No.6 mirror.

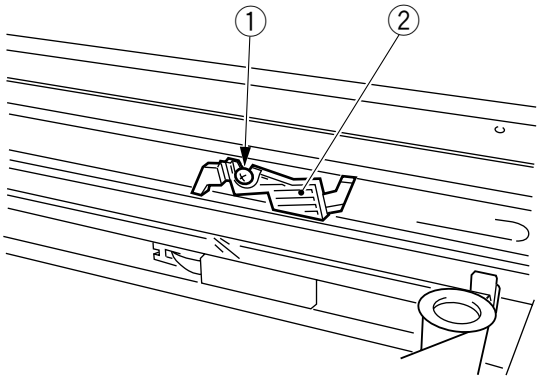

Figure 11-222

b. Cleaning the No.5 Mirror

1) Remove the mirror cleaning tool.
2) As shown, put the mirror cleaning tool ① against the No.5 mirror, and move the tool in the direction of the arrow to clean. (At this time, take care so that the cleaning tool or your fingers will not touch the No.4 mirror.)

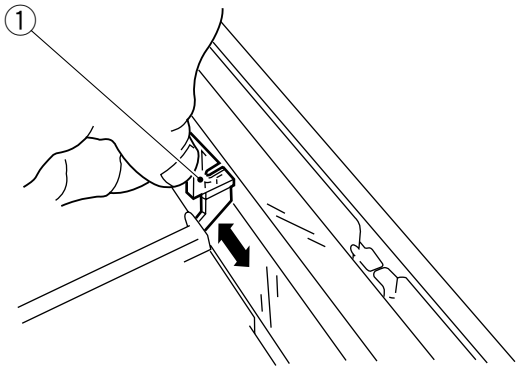

Figure 11-223

COPYRIGHT © 1997 CANON INC.

c. Cleaning the No.6 Mirror

1) Remove the mirror cleaning tool.
2) Open the front door, and remove the developing assembly and the drum unit.
3) Remove the dust-proofing glass.
4) While keeping the mirror cleaning tool ① (sides A and B) against the lens mount, move it in the direction of the arrow to clean.

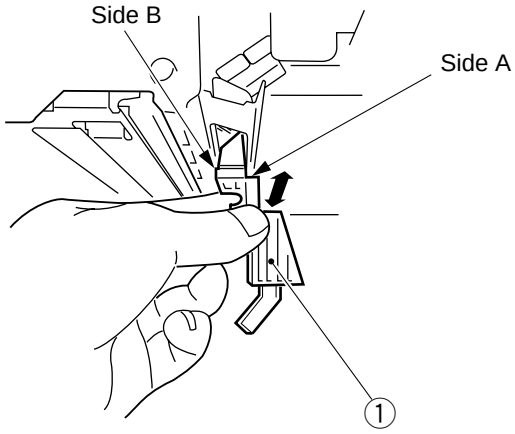

Figure 11-224

d. Installing the Mirror Cleaning Tool

When installing the mirror cleaning tool to the right stay, butt the side C of the tool against the right stay ① and then fix it in place with a screw.

Thereafter, check to make sure that the cleaning tool and the No.1 mirror mount are not interfering with each other.

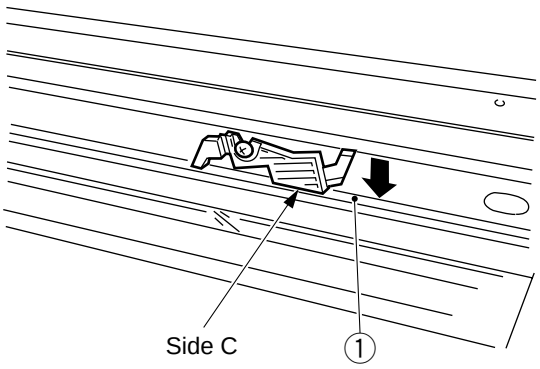

Figure 11-225

COPYRIGHT © 1997 CANON INC.

C. Image Formation System

1	Orientation of the Scanning Lamp

Install the scanning lamp so that the boss at the center (lamp ①) faces in the direction of the arrow (mirror mount reverse direction), and the longer side is positioned so that the logo mark is at the front.

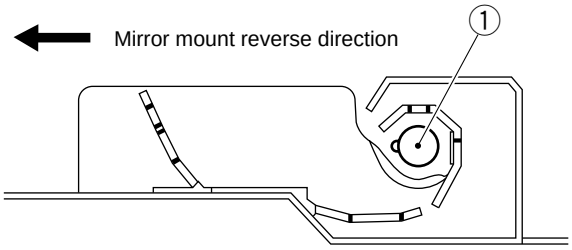

Figure 11-226

Note:

Do not touch the lamp assembly.

2	Position of the Blank Shutter Solenoid

Adjust the position of the solenoid to that A is 7.7 ±0.5 mm on both sides when the solenoid is moved in the direction of activation. When taking measurements, be careful not to force the shutter with calipers or the like.

After making adjustments, check to make sure that the solenoid moves smoothly.

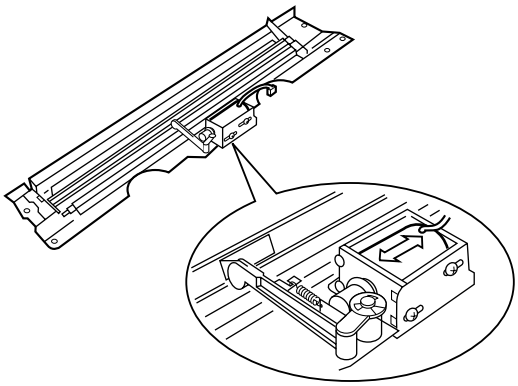

Figure 11-227

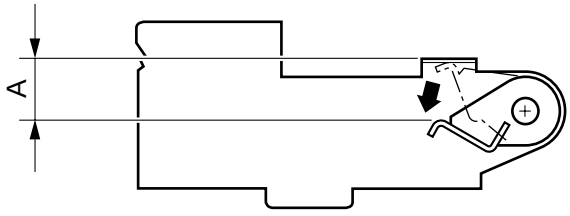

Figure 11-228

COPYRIGHT © 1997 CANON INC.

3	Routing the Blank Shutter Cable

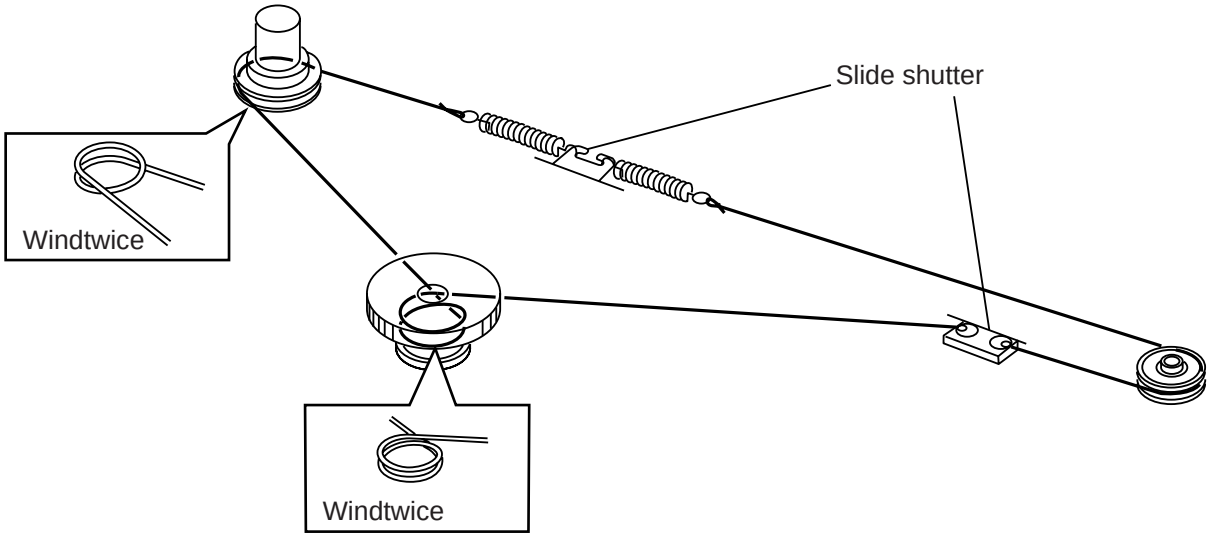

Figure 11-229

COPYRIGHT © 1997 CANON INC.
CANON NP6330 REV.0 MAY 1997 PRINTED IN JAPAN (IMPRIME AU JAPON)

4	Routing the Charging Wire

<Primary charging wire>

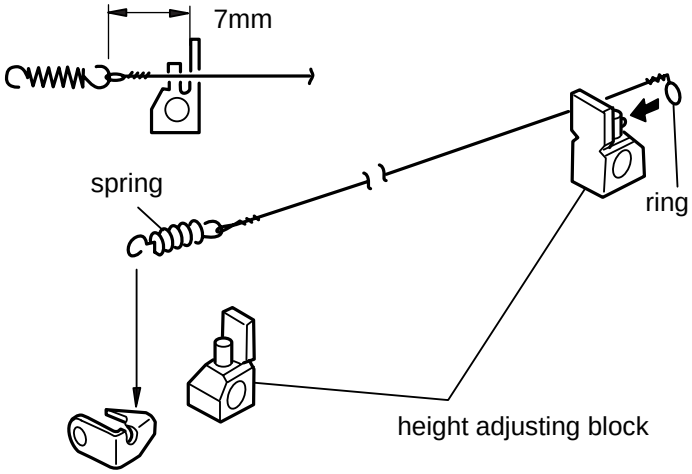

Figure 11-230

<Transfer charging wire>

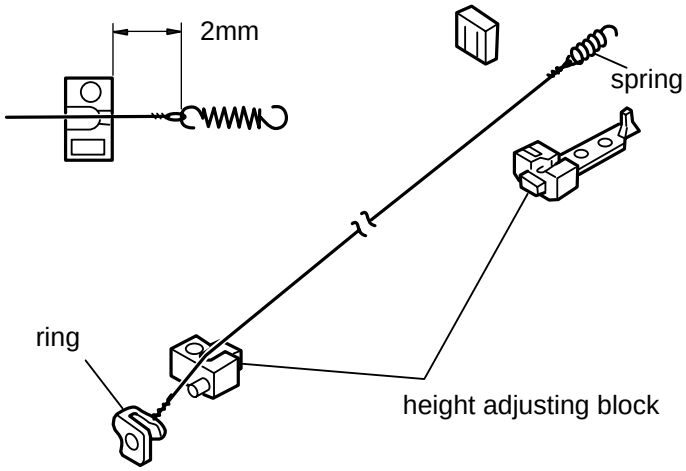

Figure 11-231

Note:

Keep the following in mind:

- Make sure that the charging wire is free of bends or twists and its gold-plating has not peeled.
- Make sure that the charging wire is free of slack.
- Make sure that the charging wire is in the V-groove of the height-adjusting roll.

COPYRIGHT © 1997 CANON INC.

5 Stringing the Guide Wire

The guide wire is 0.148 mm in diameter.
When stringing it, be sure to follow the order indicated in the figure.

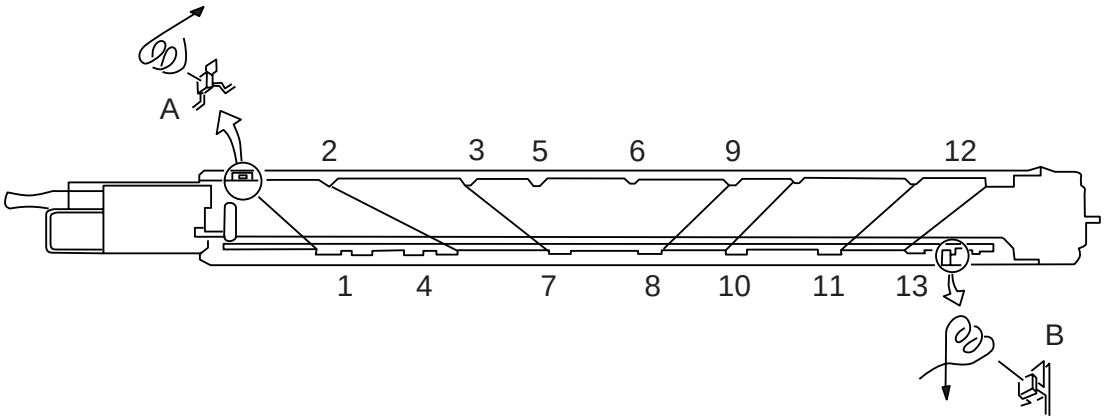

Figure 11-232

6 Adjusting the Height of the Charging Wire

The height of the charging wire may be adjusted by turning the screw located behind the charging assembly. A full single turn of the screw raises or lowers the charging wire by about 0.7 mm.

Corona Unit	Height of Standard Position	
Primary	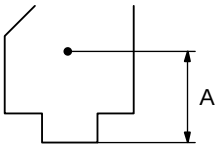	A=10.6 ± 0.3mm
Transter	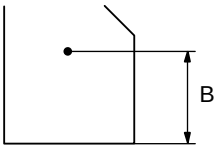	B=9.5 ± 0.2 mm

Figure 11-233

COPYRIGHT © 1997 CANON INC.
CANON NP6330 REV.0 MAY 1997 PRINTED IN JAPAN (IMPRIME AU JAPON)

7 Position of the Developing Assembly Magnetic Seal

Attach the magnetic seal firmly in contact with the opening shown in Figure 11-234.

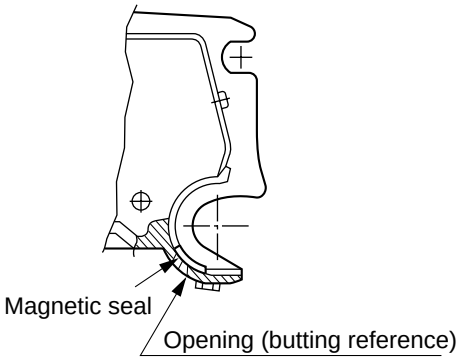

Figure 11-234

Be sure that the correct magnetic seal is used; different seals are used for the front and the rear.

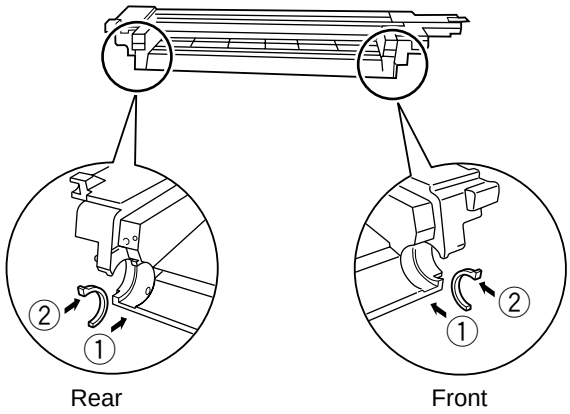

Figure 11-235

8 After Replacing the Drum unit

Whenever you have replaced the drum unit, record the date and the current counter reading on the label which comes with the drum unit, and attach the label to the front over; then, perform the image adjustment basic procedure.

date date Datum	counter compteur Zähler	notes note Notiz

Figure 11-236

COPYRIGHT © 1997 CANON INC.

D. Pick-Up/Feeding System

1	Orientation of the Pick-Up Roller

When installing the pick-up roller ① to the pick-up assembly, be sure that the round marking ② on the rubber portion is toward the front of the copier.

- Use the brass-colored collar at the front.
- Use the silver-colored collar at the rear.

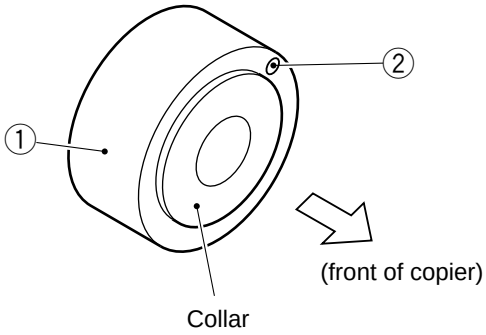

Figure 11-237

2	Orientation of the Separation Roller

When installing the separation roller ① to the pick-up assembly, be sure so that the D-cut is toward the front.

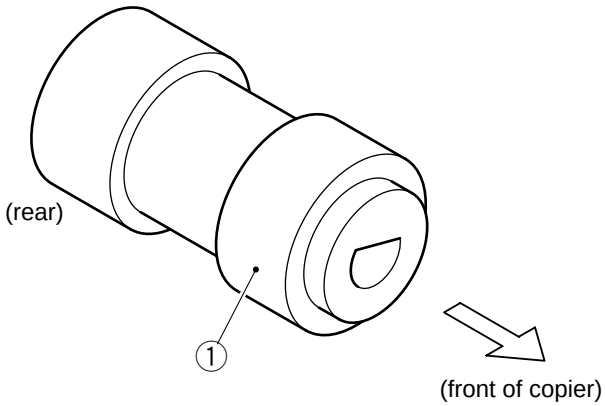

Figure 11-238

COPYRIGHT © 1997 CANON INC.
CANON NP6330 REV.0 MAY 1997 PRINTED IN JAPAN (IMPRIME AU JAPON)

3	Orientation of the Feeding Roller

When installing the feeding roller ① to the pick-up assembly, be sure that the gear ② on the feeding roller is at the rear of the copier.

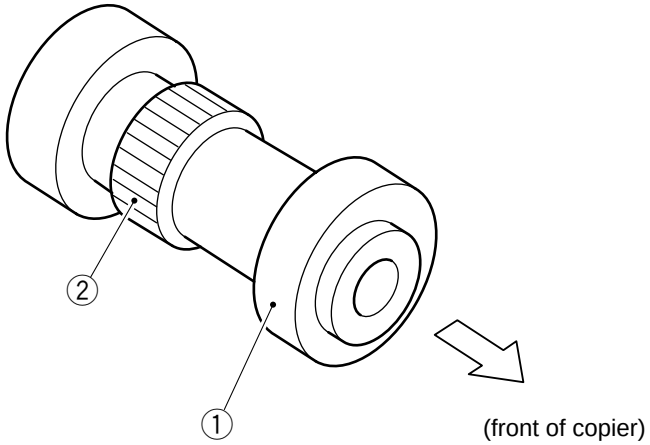

Figure 11-239

4	Adjusting the Pressure of the Separation Roller

If double feeding or pick-up failure occurs during pick-up, adjust the position of the pressure spring of the separation roller:

① If double feeding occurs, move the spring toward Ⓐ.
② If pick-up failure occurs, move the spring toward Ⓑ.

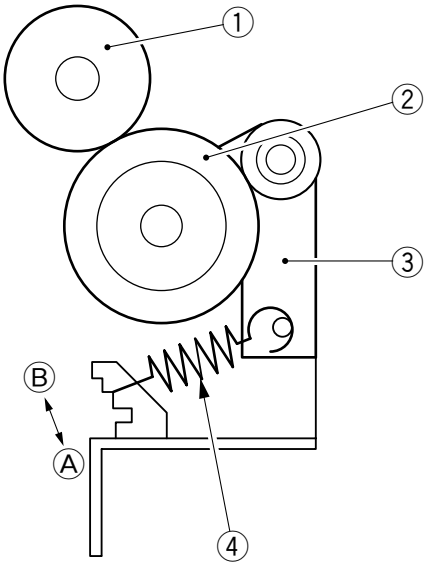

① Feeding roller
② Separation roller
③ Locking lever
④ Pressure spring

Figure 11-240

COPYRIGHT © 1997 CANON INC.

5	Position of the Pick-Up Roller Solenoid (pick-up assembly; SL1, SL2)

Install the solenoid so that the pick-up roller arm ① shown in Figure 11-241 butts against the upper stay ② when the plunger of the solenoid is pushed in.

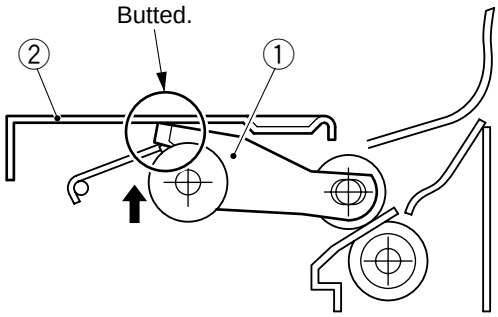

Figure 11-241

6	Orientation of the Multifeeder Pick-Up Roller

When installing the multifeeder pick-up roller ①, be sure that the side whose collar has a crossing ② is toward the rear.

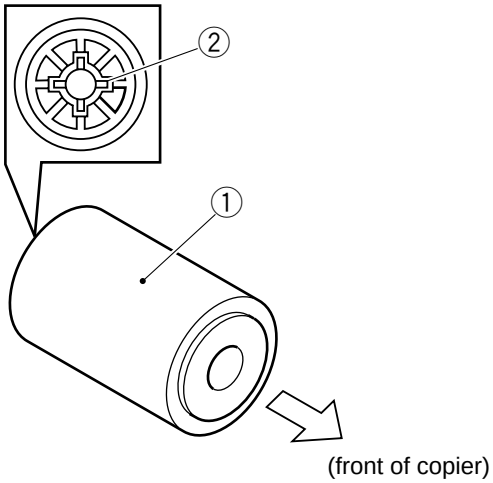

Figure 11-242

COPYRIGHT © 1997 CANON INC.
CANON NP6330 REV.0 MAY 1997 PRINTED IN JAPAN (IMPRIME AU JAPON)

7	Position of the Pick-Up Guide Plate Cam (multifeeder assembly)

Adjust the engagement of the 26T gear 1 and 26T gear 2 so that the paper guide plate and the paper guide plate cam are as shown in Figure 11-243 when the solenoid plate is in contact with the claw of the control ring.

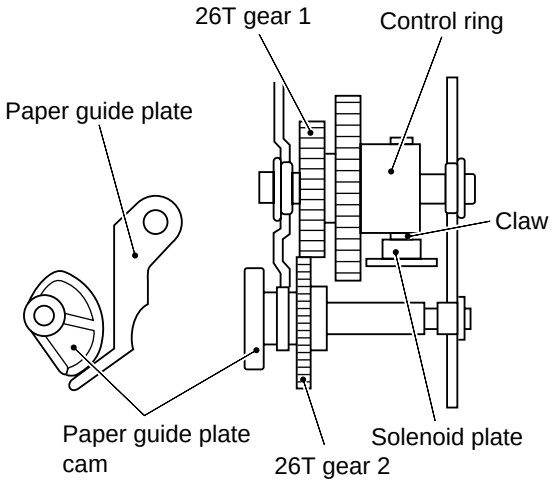

Figure 11-243

8	Routing the Timing Belt (multifeeder assembly)

Butt the rack plate of the multifeeder against section A (open state).
Move the slide volume in the direction of B, and attach the timing belt to the pulley.

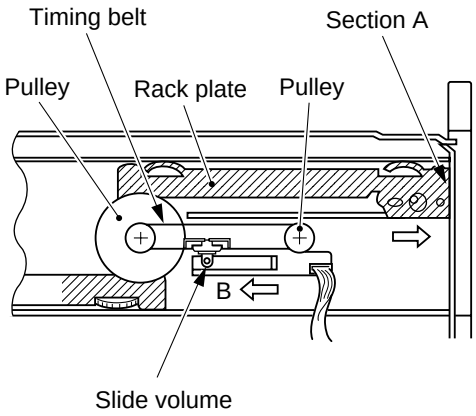

Figure 11-244

COPYRIGHT © 1997 CANON INC.

9	Adjusting the Pressure of the Separation Pad (multifeeder assembly)

If double feeding or pick-up failure occurs during pick-up, adjust the position of the pressure spring ① of the separaiton pad.

① If double feeding occurs, move the spring holder toward Ⓑ.
② If pick-up failure occurs, move the spring holder toward Ⓐ.

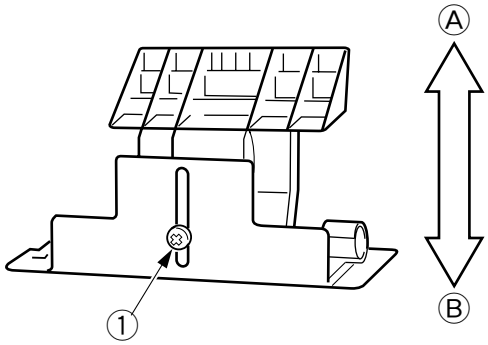

Figure 11-245

10	Routing the Drive Belt

Route the drive belt through the gears and rollers as shown in Figure 11-246.

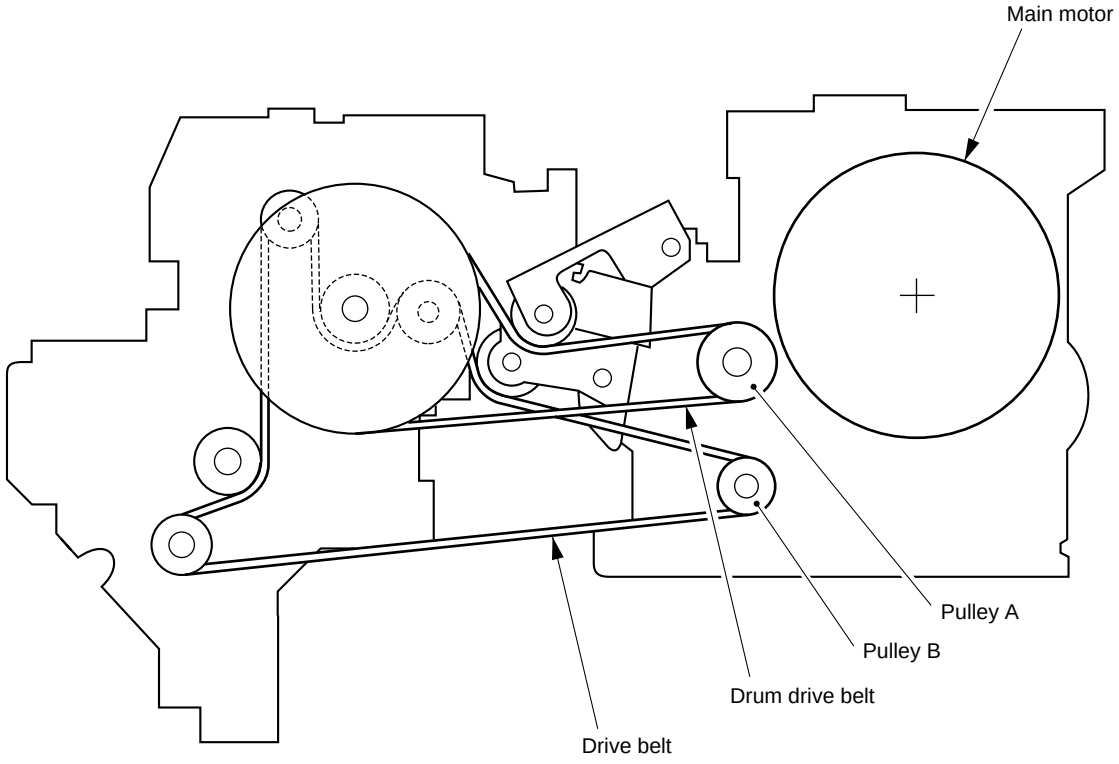

Figure 11-246

COPYRIGHT © 1997 CANON INC.
CANON NP6330 REV.0 MAY 1997 PRINTED IN JAPAN (IMPRIME AU JAPON)

11	Adjusting the Position of the Horizontal Registration Solenoid

Move the position of the solenoid ① so that the link ② butts against the plate ③ when the plunger of the solenoid is pushed in.

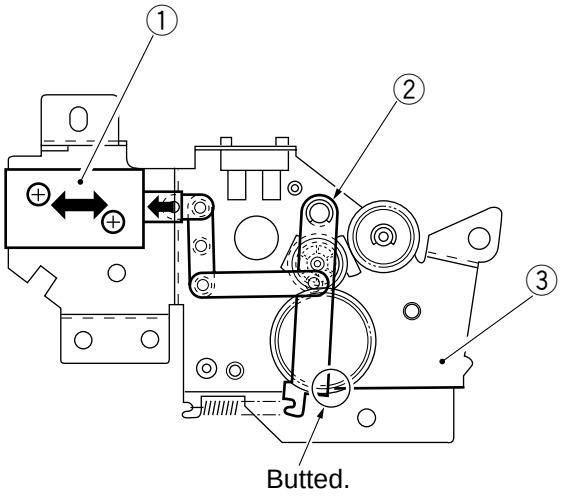

Figure 11-247

COPYRIGHT © 1997 CANON INC.

E. Fixing System

1	Points to Note When Installing the Fixing Heater

a. Do not touch the surface of the heater.
b. One of the terminals (lead wire ①) of the sub heater is a round terminal ②. Both terminals of the main heater are fastons ③.

<Main Heater>
The longer lead wire must be at the front of the copier.

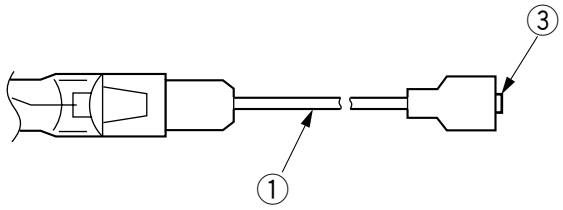

Figure 11-248

<Sub Heater>
The round terminal must be at the rear of the copier. The fastons must be at the front of the copier.

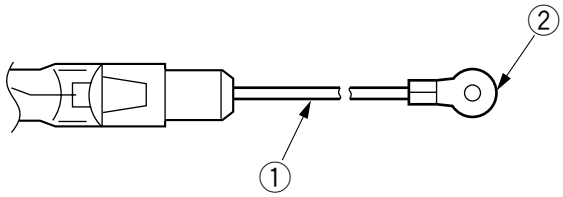

Figure 11-249

c. Insert the main heater to the right side (pick-up side) and the sub heater to the left side (delivery side) when viewing from the front of the fixing assembly.

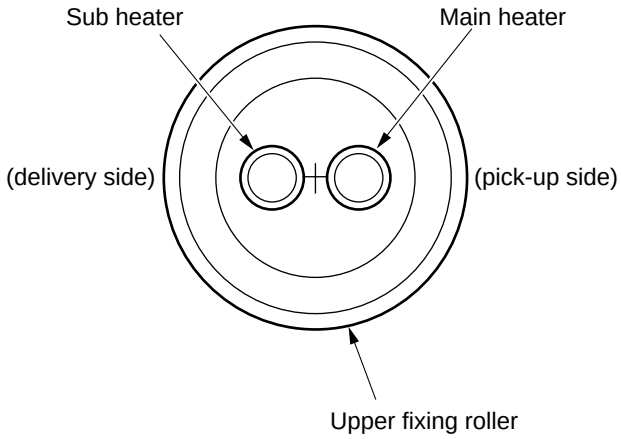

Figure 11-250

COPYRIGHT © 1997 CANON INC.
CANON NP6330 REV.0 MAY 1997 PRINTED IN JAPAN (IMPRIME AU JAPON)

2 Adjusting the Nip (tightening the pressure adjusting nut)

Use the bolt if the nip is not as indicated in Table 11-205.

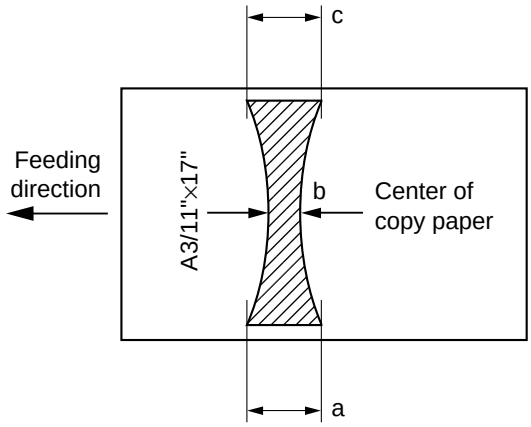

Figure 11-251

Note:

a and c represent points 10 mm from each edge of paper.

Dimension	Measurement	
b	Tracing paper (SM-1); 64/80g paper	5.5 ±0.5mm
|a-c|	0.5mm or less	

Table 11-205

• Measuring the Nip

Make 20 A4/LTR copies 15 min after the end of the copier's warm-up period before measuring the nip.

If the copier is equipped with a sorter, remove the sorter before making adjustments.

Note:

You must make sure that the fixing assembly is sufficiently heated before taking measurements; otherwise, the toner from the areas of the copy where fixing has not occurred will soil the fixing roller, ultimately requiring cleaning.

1) Place A3/11"×17" copy paper on the multifeeder.

2) Open the copyboard cover.

COPYRIGHT © 1997 CANON INC.

3) Start [4], and select No. 403 using the keypad.
   - The indicator indicates '403'.

4) Press the OK key.
   - The indicator indicates 'NIP'.
   - Paper will be picked up from the multifeeder and delivered, enabling measurements as in Figure 11-251.

Reference:

Delivery stops after discharging the paper halfway; it will automatically resume about 10 sec to fully discharge the paper.

5) Measure the nip.

3	Position of the Fixing Assembly Paper Guide

The paper guide is positioned by the paper guide mount, and you need not adjust its position when installing the paper guide.

Note:

Do not loosen the screw on the paper guide plate; otherwise, you will have to adjust the position of the paper guide. If you should have loosened it for some reason, be sure to put the fixing assembly base back to its original position.

4	Position of the Cleaning Belt Solenoid

Install the cleaning belt solenoid so that the solenoid arm ② butts against ⓐ when the plunger ① of the solenoid is pushed by a finger.

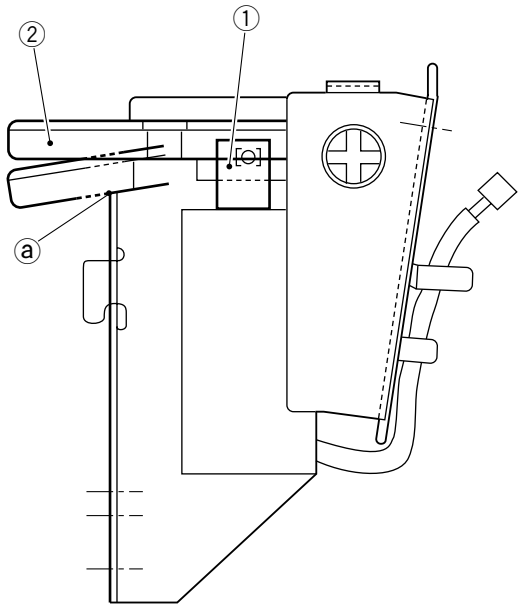

Figure 11-252

COPYRIGHT © 1997 CANON INC.

F. Electrical System

1	Registering the Cassette/Multifeeder Paper Width Basic Setting [4]

Perform the steps for the following:
- If you have replaced the paper width detection VR (including the multifeeder) of the copier.
- If you have adjusted the cassette front/rear registration.

For each of the cassettes 1 and 2, paper width basic setting registration must be executed under both ‘STMTR’ and ‘A4R’; for the multifeeder, registration must be executed under ‘A6R’, ‘A4R’, and ‘A4’.

a. Cassette 1

1) Start [4] in service mode, and select No. 413 using the keypad.
   - The indicator indicates ‘413’.

2) Press the OK key.
   - The indicator indicates ‘S-r’.

3) Slide out the cassette 1, and set the paper width guide plate inside the cassette to ‘STMTR’.

4) Set the cassette to the copier.

5) Press the OK key.
   - The indicator indicates ‘A4r’.

6) Slide out the cassette 1, and set the paper width guide plate inside the cassette to ‘A4R’.

7) Set the cassette to the copier.

8) Press the OK key.
   - The indicator indicates ‘S-r’.

9) Press the Clear key.
   - The indicator indicates ‘413’.

You may make the same adjustment for cassette 2. (No. 414 in service mode [4])

COPYRIGHT © 1997 CANON INC.

b. Multifeeder

1) Start [4] in service mode, and select No. 412 using the keypad.
   - The indicator indicates ‘412’.

2) Press the OK key.
   - The indicator indicates ‘A6’.

3) Set the manual guide plate of the multifeeder to A6R (105 mm).

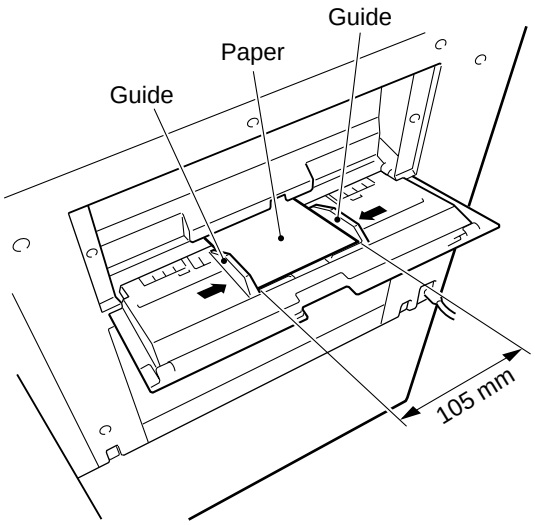

Figure 11-253

4) Press the OK key.
   - The indicator indicates ‘A4r’.

5) Set the manual guide plate to A4R (210 mm).

6) Press the OK key.
   - The indicator indicates ‘A4’.

7) Set the manual guide plate to A4 (297 mm).

8) Press the OK key.
   - The indicator indicates ‘A6’.

9) Press the Reset key twice to end service mode.

COPYRIGHT © 1997 CANON INC.
CANON NP6330 REV.0 MAY 1997 PRINTED IN JAPAN (IMPRIME AU JAPON)

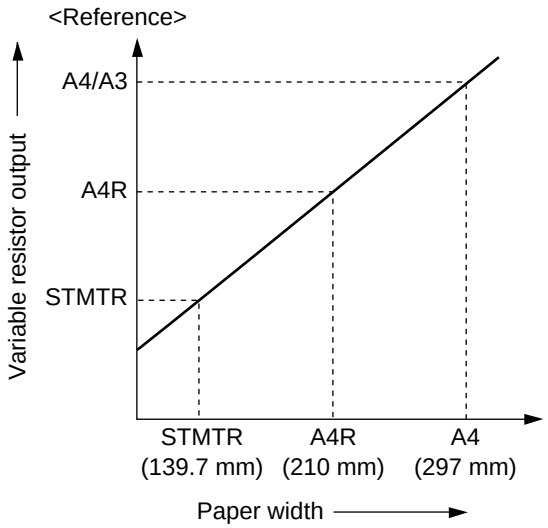

Figure 11-254

COPYRIGHT © 1997 CANON INC.

2	Adjusting the Original Stop Position with the DF in Use [3] No. 325

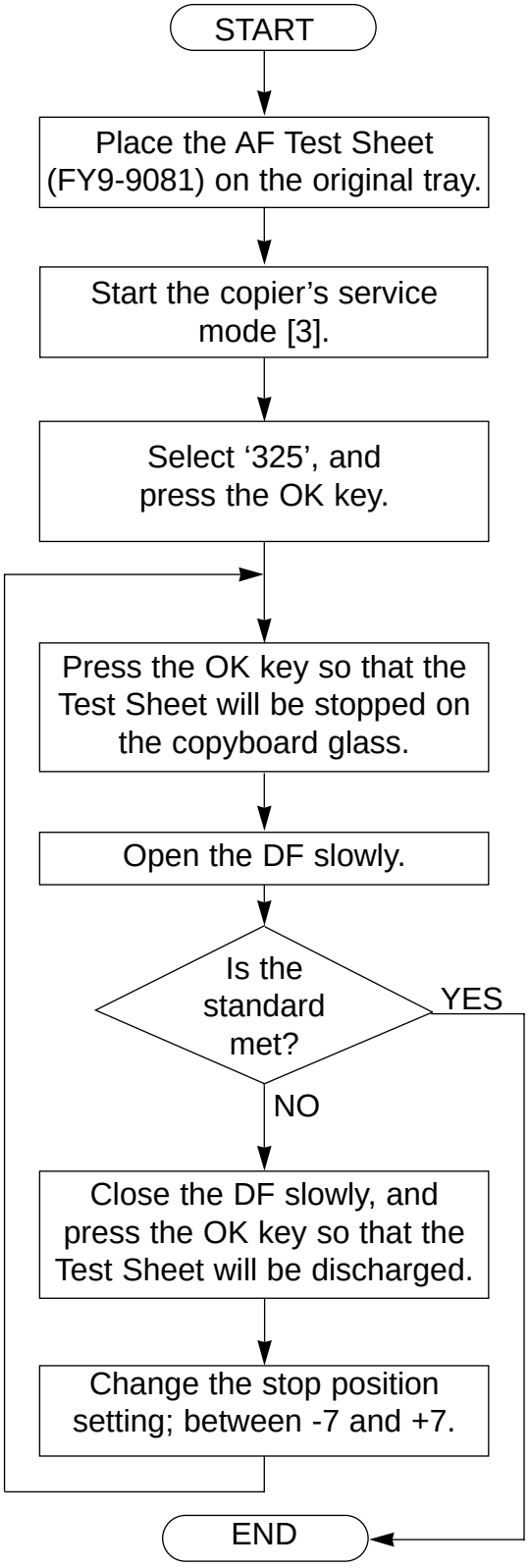

COPYRIGHT © 1997 CANON INC.
CANON NP6330 REV.0 MAY 1997 PRINTED IN JAPAN (IMPRIME AU JAPON)

- A higer setting will move the original stop position to the left. (unit: 0.33 mm)

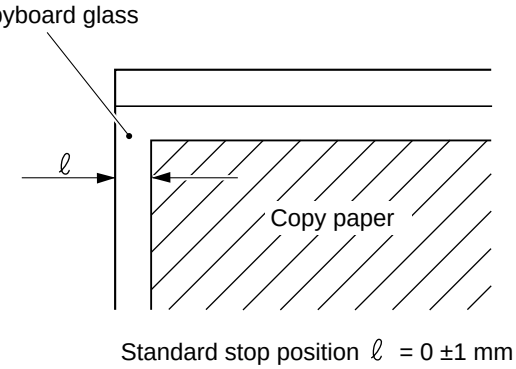

Figure 11-255

3	Checking the Photointerrupters

The copier photointerrupters may be checked using a convertional meter or its service mode.

1. Using a Meter

1) Set the meter range to 30VDC.

2) Connect the -probe of the meter to J101-8 (GND) on the DC controller PCB. (Pedestal controller PCB: J102-8 (GND))

3) Connect the +probe to the terminal indicated on the DC controller PCB (or the pedestal controller PCB).

4) Make checks as indicated.

2. Using Service Mode

1) Open the front door and insert a door switch activator into the door switch.

2) Press the service mode switch (SSW) with a hex key.

3) Press the 2 key on the keypad.
   - The copier indicates '[2]'.

4) Press the OK key.
   - The copier activates I/O display mode, and indicates '201'.

5) Enter a number with the keypad, and press the OK key.
   - The copier checks each photointerrupter; see the indicator on the control panel. (For details, see "VII.SERVICE MODE".)

COPYRIGHT © 1997 CANON INC.

- **Copier**

Name	+ probe / Service mode	Checks		Display indication	Voltage reading on meter
PS1 Scanner home position sensor (SCHP)	J113-2B No.212 1-b	Move the scanner by hand while in standby.	When the scanner is at home position.	0	5V
			When the scanner is not at home position.	1	0V
PS2 Cassette 1 paper sensor (C1PD)	J116-8A No.203 1-c	Move the paper detecting roll by hand while in standby	When the roll is up.	1	5V
			When the roll is down.	0	0V
PS3 Cassette 1 lifter sensor (C1LTP)	J116-5A No.203 1-e	Move the pick-up roller up and down by a finger while in standby.	When the roller is up.	1	5V
			When the roller is down.	0	0V
PS4 Cassette 2 paper sensor (C2PD)	J115-2B No.203 1-d	Move the paper detecting roll by hand while in standby.	When the roll is up.	1	5V
			When the roll is down.	0	0V
PS5 Cassette 2 lifter sensor (C2LTP)	J115-5B No.203 1-f	Move the pick-up roller up and down by a finger while in standby.	When the roller is up.	1	5V
			When the roller is down.	0	0V
PS6 Multifeeder paper sensor (MFPD)	J104-6B No.203 1-b	Place paper in the multifeeder tray while in standby.	When paper is not placed.	1	5V
			When paper is placed.	0	0V
PS7 Vertical path roller 1 paper sensor (PDP2*)	J116-2A No.206 1-a	Move the sensor flag of PS7 by a finger while in standby.	When the flag is moved.	1	5V
			Wen the flag is not moved.	0	0V
PS8 Vertical path roller 2 paper sensor (PDP1*)	J115-7A No.206 1-b	Move the sensor flag of PS8 by a finger while in standby.	When the flag is moved.	1	5V
			When the flag is not moved.	0	0V

COPYRIGHT © 1997 CANON INC.
CANON NP6330 REV.0 MAY 1997 PRINTED IN JAPAN (IMPRIME AU JAPON)

Name	+ probe / Service mode	Checks		Display indication	Voltage reading on meter
PS9 Pre-registration paper sensor (PDP3)	J117-13B No.206 1-c	Place a stack of two to three sheets of paper in the registration front guide assembly.	When paper is inserted.	1	5V
			When paper is not inserted.	0	0V
PS10 Separation sensor (PDP4*)	J109-5A No.206 1-d	Release the feeding assembly, and move the sensor flag of PS10 by a finger.	When the flag is moved.	0	0V
			When the flag is not moved.	1	5V
PS11 Delivery sensor (PDP5*)	J109-4B No.206 1-e	Open the delivery assembly, and feed paper through the deliveryassembly.	When paper is not fed.	1	5V
			When paper is fed.	0	0V
PS12 Lower feeder inlet paper sensor (PDP6*)	J109-7B No.209 1-b	Open the delivery assembly, and feed paper through the lower feeding assembly inlet.	When paper is not fed.	1	5V
			When paper is fed.	0	0V
PS13 Lower feeder outlet paper sensor (PDP7)	J108-2 No.209 1-a	Move the sensor flag of PS13 while in standby.	When the flag is moved.	0	0V
			When the flag is not moved.	1	5V
PS14 Horizontal registration paper sensor (PDP8)	J117-8B No.209 1-c	Put paper into the re-pick up feeding assembly while in standby.	When paper is put.	1	5V
			When paper is not put.	0	0V

COPYRIGHT © 1997 CANON INC.

Name	+ probe / Service mode	Checks		Display indication	Voltage reading on meter
PS15 Horizontal registration roller home position sensor (HRHP)	J117-5B No.209 1-d	Remove the horizontal registration unit assembly, and install J50, J53, and J85. Put paper over PS15.	When paper is present.	1	5V
			When paper is not present.	0	0V
PS16 Horizontal registration paper edge sensor (HRPD)	J117-2B No.209 1-e	Make an A4/LTR two-sided copy. Put copy paper into the re-pick up feeding assembly while in standby. (Slide it toward the front.)	When paper is present.	1	5V
			When paper is not present.	0	0V
PS17 Copyboard cover open/closed sensor (CBCC)	J102-9A No.225 1-f	Open and close the copyboard cover while in standby.	When the copy-board cover is opened.	0	0V
			When the copyboard cover is closed.	1	5V
PS18 Right door sensor (RDC*)	J116-11A No.203 1-a	Open and close the right door while in standby.	When the right door is opened.	1	5V
			When the right door is closed.	0	0V
PS19 Lens home position sensor (LHP)	J107-10 No.225 2-a	Put paper over PS19 while in standby.	When paper is present.	0	5V
			When paper is not present.	1	0V
PS20 Blank shutter home position sensor (BLHP)	J114-12A No.222 1-b	Remove the blank exposure assembly, and remove the blank upper plate. Install J24 and J91. Move the sensor flag while in standby.	When the flag is moved. (The flag is at PS20.)	0	5V
			When the flag is not moved. (The flag is not at PS20.)	1	0V

COPYRIGHT © 1997 CANON INC. CANON NP6330 REV.0 MAY 1997 PRINTED IN JAPAN (IMPRIME AU JAPON)

Name	+ probe / Service mode	Checks		Display indication	Voltage reading on meter
PS101 Cassette 1 paper length sensor 1 (C1SZ1)	J104-2A No.219 1-a	Set the cassette 1 to A4/LTR, and set it to the copier.	When the cassette is present.	0	0V
			When the cassette is not present.	1	5V
PS102 Cassette 1 paper length sensor 2 (C1SZ2)	J104-1A No.219 1-b	Set the cassette 1 to A4/LTR, and set it to the copier.	When the cassette is present.	0	0V
			When the cassette is not present.	1	5V
PS103 Cassette 2 paper length sensor 1 (C2SZ1)	J104-6A No.219 1-c	Set the cassette 2 to A4/LTR, and set it to the copier.	When the cassette is present.	0	0V
			When the cassette is not present.	1	5V
PS104 Cassette 2 paper length sensor 2 (C2SZ2)	J104-5A No.219 1-d	Set the cassette 2 to A4/LTR, and set it to the copier.	When the cassette is present.	0	0V
			When the cassette is not present.	1	5V

COPYRIGHT © 1997 CANON INC.

- **Paper deck pedestal**

Name	+ probe / Service mode	Checks		Display indication	Voltage reading on meter
PS1 Right door open sensor (RDOD*)	J107-6 No.233 1-e	Open the pedestal right door while in standby.	When the right door is opened.	0	0V
			When the right door is closed.	1	5V
PS2 Vertical path roller 3 paper sensor (PS2D)	J107-9 No.232 1-d	Move the sensor flag of PS2 by a finger while in standby.	When the flag is moved.	1	5V
			When the flag is not moved.	0	0V
PS3 Deck vertical path roller paper sensor (DVRPD)	J110-A2 No.232 1-e	Move the sensor flag of PS3 by a finger while in standby.	When the flag is moved.	1	5V
			When the flag is not moved.	0	0V
PS4 Deck paper sensor (DPD)	J110-A5 No.228 1-g	Move the paper detecting roll by a finger while in standby.	When the roll is up.	1	5V
			When the roll is down.	0	0V
PS5 Deck lifter position sensor (DEL)	J110-A11 No.231 1-e	Move the pick-up roller up and down by a finger while in standby.	When the roller is up.	1	5V
			When the roller is down.	0	0V
PS6 Deck lifter upper limit sensor (DLP)	J110-A8 No.231 1-g	Move the sensor flag of PS6 while in standby.	When the flag is moved.	1	5V
			When the flag is not moved.	0	0V
PS7 Deck open sensor (DEOP*)	J110-B6 No.233 1-c	Slide out the deck while in standby.	When the deck is out.	0	0V
			When the deck is slid in.	1	5V

COPYRIGHT © 1997 CANON INC.
CANON NP6330 REV.0 MAY 1997 PRINTED IN JAPAN (IMPRIME AU JAPON)

III. TROUBLESHOOTING IMAGE FAULTS

A. Making Initial Checks

1. Installation Environment

a. Be sure that the power supply provides the rated voltage (±10%; do not disconnect the power plug during the night.)
b. Avoid areas which are subject to high/low temperature/humidity (near a water faucet, water boiler, humidifier) or dust. Avoid areas near sources of fire.
c. Avoid areas subject to ammonium gas.
d. Avoid areas subject to direct rays of the sun; as necessary, provide curtains.
e. Make sure that the site is well ventilated.
f. Make sure that the copier is kept level.
g. Be sure that the copier remains powered throughout the night.
Check the site against the foregoing.

2. Checking the Originals

Find out whether the problem is due to the originals used or the copier.
a. The density correction setting in user mode is best when set to '5 ±1'.
b. Originals with a reddish background tend to have poor contrast; for example, red sheets, slips.
c. Originals which are diazo copies or with transparency tend to produce copies which can be mistaken for "foggy" copies.
Originals which are prepared in light pencil tend to produce copies which can be mistaken for "light" copies.

3. Copyboard Cover, Copyboard Glass, and Standard White Plate

Check the copyboard cover, copyboard glass, and standard white plate for dirt; if dirt is found, clean them with a solution of mild detergent or alcohol; if scratches are found, on the other hand, replace them.

4. Charging Assemblies

a. Check each charging assembly for dirt and fault (scratches, for example).
b. Check to make sure that each charging assembly is properly set.

5. Developing Assembly

a. Check to make sure that the rolls of both ends of the developing assembly are in contact with the drum.
b. Check to make sure that the surface of the developing cylinder is coated with an even film of toner.

6. Paper

a. Check to make sure that the paper is of a type recommended by Canon.
b. Check to make sute that the paper is not moist. (Try using paper fresh out of package.)

COPYRIGHT © 1997 CANON INC.
CANON NP6330 REV.0 MAY 1997 PRINTED IN JAPAN (IMPRIME AU JAPON)

7. Periodically Replaced Parts

Check the parts against the scheduled servicing chart and the periodically replaced parts table. Replace the parts as necessary.

8. Others

Bringing a machine from a cold to warm place (from a warehouse to the site of installation, for example) in winter can cause condensation to occur inside the machine, leading to various problems; for example,

a. Condensation on the scanning system (glass, mirror, lens) can cause light images.
b. Condensation on the charging system can cause leakage.
c. Condensation on the pick-up/feeding guide can cause feeding faults.

If condensation is noted, dry-wipe the part or keep the machine powered for 60 min.

COPYRIGHT © 1997 CANON INC.
CANON NP6330 REV.0 MAY 1997 PRINTED IN JAPAN (IMPRIME AU JAPON)

COPYRIGHT © 1997 CANON INC. CANON NP6330 REV.0 MAY 1997 PRINTED IN JAPAN (IMPRIME AU JAPON)

B. Image Fault Samples

Not available in electronic format.

COPYRIGHT © 1997 CANON INC.
CANON NP6330 REV.0 MAY 1997 PRINTED IN JAPAN (IMPRIME AU JAPON)

C. Troubleshooting Faulty Images

1	The copy is too light. (halftone only)

Cause	Step	Checks	YES/NO	Action
	1	Perform the Image Adjustment Basic Procedure. Is the problem corrected?	YES	End.
AE adjustment	2	Make a copy in AE mode. Is the copy too light?	YES	Execute AE adjustment.
Developing assembly	3	Are the rolls of the developing assembly in firm contact with the drum during copying operation?	NO	Check the developing assembly locking lever.
Developing assembly	4	Is the coating of toner on the developing cylinder even?	NO	Check the developing assembly.
Scanner	5	Clean the standard white plate, mirror, lens, and dust-proofing glass. Is the problem corrected?	YES	End.
Photosensitive drum			NO	Replace the drum unit.
Lamp regulator	6	Replace the lamp regulator. Is the problem corrected?	YES	End.
High-voltage cord, High-voltage power supply PCB, DC controller PCB			NO	1. Check the high-voltage cord for electrical continuity. 2. Check the high-voltage power supply PCB and the DC controller PCB.

COPYRIGHT © 1997 CANON INC.

2	The copy is too light. (solid black also)

3	The copy is too light. (entire copy, considerably)

Cause	Step	Checks	YES/NO	Action
	1	Perform the Image Adjustment Basic Procedure. Is the problem corrected?	YES	End.
	2	Turn off the power switch in the middle of copying, and open the front door. At this time, is the toner image on the surface of the photosensitive drum before transfer more or less normal?	NO	Go to step 6.
Transfer charging assembly	3	Is the transfer charging assembly set securely?	NO	Set the charging assembly securely.
	4	Is the charging wire of the transfer charging assembly hooked properly, and is its height normal?	NO	Re-string the charging wire.
Copy paper	5	Try fresh copy paper. Is the problem corrected?	YES	1. The paper may be moist; advise the user on the correct method of storage. 2. Advise the user that the use of paper not recommended by Canon may not bring about the best results.
Lower transfer guide	6	Set the feeding assembly, and measure the resistance between the lower transfer guide and the base (metal portion) of the transfer charging assembly. Is it 0 Ω?	NO	Check to make sure that the lower transfer guide is not in contact with a metal portion (like the side plate of the feeding assembly).
Developing assembly	7	Is the developing assembly set securely? (Are the rolls of the developing assembly in firm contact with the photosensitive drum?)	NO	Re-set the developing assembly.
	8	Execute idle rotation of the developing assembly in service mode [4]. Is the problem corrected?	YES	End.
Toner level detecting mechanism	9	Is toner present inside the developing assembly?	NO	See “The Add Toner indicator fails to turn off.”

COPYRIGHT © 1997 CANON INC.
CANON NP6330 REV.0 MAY 1997 PRINTED IN JAPAN (IMPRIME AU JAPON)

Cause	Step	Checks	YES/NO	Action
Drum unit	10	Replace the drum unit. Is the problem corrected?	YES	End.
High-voltage cord, high-voltage power supply PCB, DC controller PCB			NO	1. Check the high-voltage cord for electrical continuity. 2. Check the high-voltage power supply PCB and the DC controller PCB

4	**The copy has uneven density. (darker at front)**
5	**The copy has uneven density. (lighter at front)**

Cause	Step	Checks	YES/NO	Action
Scanner	1	Clean the scanning lamp, reflecting plate, side reflecting plate, mirror, lens, and dust-proofing glass. Is the problem corrected?	YES	End.
	2	Perform the Image Adjustment Basic Procedure. Is the problem corrected?	YES	End.
Transfer charging assembly	3	Is the transfer charging assembly set securely?	NO	Set the charging assembly securely.
	4	Is the charging wire of the transfer charging assembly hooked properly, and is its height normal?	NO	Re-string the charging wire.
Pre-exposure lamp	5	Is the pre-exposure lamp on during copying operation?	NO	See “The pre-exposure lamp fails to turn on.”
Developing assembly	6	Is the coating of toner on the developing cylinder even?	NO	• Check the edge of the blade of the developing assembly. • Dry wipe the surface of the developing cylinder.
Charging wire, copy paper			YES	• Clean all charging wires once again, and check their position. • Try replacing the copy paper.

COPYRIGHT © 1997 CANON INC.

6 The copy is foggy. (entire copy)

Cause	Step	Checks	YES/NO	Action
	1	Perform the Image Adjustment Basic Procedure. Is the problem corrected?	YES	End.
Scanner	2	Clean the scanning lamp, reflecting plate, side reflecting plate, mirror, lens, and dust-proofing glass. Is the problem corrected?	YES	End.
Pre-exposure lamp	3	Is the pre-exposure lamp on during copying operation?	NO	See “The pre-exposure lamp fails to turn on.”
Developing rolls	4	Are the developing rolls worn?	YES	Replace the developing rolls.
Developing assembly	5	Is the developing cylinder insulated from the copier GND? Turn off the power, and disconnect the connector Dp from the high-voltage power supply PCB; then, check the length between the connector on the developing assembly side and the copier GND for electrical continuity using a meter.	NO	Check the developing cylinder and the area around the developing connector.
Drum unit	6	Replace the drum unit. Is the problem corrected?	YES	End.
Lamp regulator	7	Replace the lamp regulator. Is the problem corrected?	YES	End.
High-voltage cord, high-voltage power supply PCB, DC controller PCB, scanning lamp			NO	1. Check the high-voltage cord for electrical continuity. 2. Check the high-voltage power supply PCB and the DC controller PCB. 3. Replace the scanning lamp.

COPYRIGHT © 1997 CANON INC.
CANON NP6330 REV.0 MAY 1997 PRINTED IN JAPAN (IMPRIME AU JAPON)

7	The copy has vertical fogging.

8	The copy has black lines. (vertical, blurred, thick)

Cause	Step	Checks	YES/NO	Action
	1	Perform the Image Adjustment Basic Procedure. Is the problem corrected?	YES	End.
Scanner	2	Clean the scanning lamp, reflecting plate, side reflecting plate, lens, mirror, and dust-proofing glass. Is the problem corrected?	YES	End.
Pre-exposure lamp	3	Clean the pre-exposure lamp. Is the problem corrected?	YES	End.
Developing assembly	4	Is the coating of toner on the developing cylinder even?	NO	• Check the edge of the blade of the developing assembly. • Dry wipe the surface of the developing cylinder.
Fixing assembly, drum cleaner assembly			YES	Check the fixing assembly and the drum cleaner assembly.

COPYRIGHT © 1997 CANON INC.

9	The copy has black lines. (vertical, thin)

Cause	Step	Checks	YES/NO	Action
	1	Press the Copy Start key, and turn off the power switch while the copy paper is in the feeding assembly. Does the copy image before the paper goes through the fixing assembly have black lines?	YES	Go to step 4.
Lower transfer guide	2	Is the lower transfer guide soiled?	YES	Clean it.
Photosensitive drum	3	Are there scratches or black lines in the peripheral direction of the surface of the photosensitive drum? Remove the black lines off the surface of the photosensitive drum with a dry flannel cloth coated with toner. Is the problem corrected?	YES	If scratches are found on the drum, replace the drum unit. If scratches or black lines are found, be sure to find out the cause.
Developing assembly, exposure system			NO	Check the developing system and the exposure system.
Fixing assembly	4	Are there scratches or black line in the peripheral direction of the surface of the upper fixing roller?	YES	1. Replace the upper roller. 2. Check to find out if the cleaning belt is taken up properly. 3. Check and clean the separation claws.
			NO	Check the fixing assembly inlet for dirt.

COPYRIGHT © 1997 CANON INC.
CANON NP6330 REV.0 MAY 1997 PRINTED IN JAPAN (IMPRIME AU JAPON)

10	The copy has white spots. (vertical)
11	The copy has white lines. (vertical)

Cause	Step	Checks	YES/NO	Action
Fixing assembly	1	Make a copy while keeping the copyboard cover open. Turn off the power switch while the copy paper is moving through the feeding assembly. At this time, does the copy image before the paper goes throughout the fixing assembly have white spots or white lines?	YES	1. Clean the inlet guide of the fixing assembly. 2. Check to find out if the cleaning belt is taken up properly. 3. Check and clean the separation claws.
Primary charging assembly	2	Clean the charging wire, grid, and shielding plate of the primary charging assembly. Is the problem corrected?	YES	Dry wipe the part with lint-free paper; then, clean it with alcohol. If the dirt cannot be removed, replace the charging wire.
Developing assembly	3	Is the coating of toner on the developing cylinder even?	NO	Check the edge of the blade of the developing assembly for paper lint and dust. If there is not toner inside the developing assembly, see “The Add Toner indicator fails to turn off.”
Copy paper	4	Try fresh copy paper. Is the problem corrected?	YES	The copy paper may be moist; advise the user on the correct method of storage.
Photosensitive drum	5	Are there scratches in the peripheral direction of the surface of the photosensitive drum?	YES	Replace the drum unit. (Be sure to find out the cause of the scratches.)
Transfer charging assembly	6	Clean the transfer charging wire. Is the problem corrected?	YES	Dry wipe with lint-free paper; then, clean it with alcohol. If the dirt cannot be removed, replace the charging wire.
Static eliminator	7	Clean the static eliminator. Is the problem corrected?	YES	End.

COPYRIGHT © 1997 CANON INC.

Cause	Step	Checks	YES/NO	Action
Blank exposure assembly	8	Does the blank shutter solenoid operate where white spots or white lines occur in the copy image while the scanner is moving forward?	NO	Check the blank exposure assembly.
Outside light	9	Is the photosensitive drum exposed to light from outside?	YES	Find out the cause of the infiltration of light.

12 The copy has white spots. (horizontal)

Cause	Step	Checks	YES/NO	Action
Developing assembly	1	Is the problem noted at intervals of about 3.3 cm? (scratches on the developing cylinder)	YES	1. Clean the developing rolls. 2. Clean the surface of the developing cylinder. 3. If scratches are found on the surface of the developing cylinder, replace the developing cylinder.
	2	Execute “408” in service mode [4]. Is the problem corrected?	YES	End.
Photosensitive drum	3	Is the problem noted at intervals of about 9.4 cm? (scratches on the photosensitive drum)	YES	1. Clean the drum. 2. If scratches are found on the drum, replace the drum unit. (Be sure to find out the cause of the scratches.)
Copy paper	4	Try fresh copy paper. Is the problem corrected?	YES	The copy paper may be moist; advise the user on the correct method of storage.
Scanner rail, scanner cable	5	Is the problem noted at the same location on all copies?	YES	1. Check the scanner rail for foreign matter. 2. Adjust the tension of the scanner cable.
Charging wire			NO	Clean each charging wire. If the dirt cannot be removed, replace the charging wire.

COPYRIGHT © 1997 CANON INC.
CANON NP6330 REV.0 MAY 1997 PRINTED IN JAPAN (IMPRIME AU JAPON)

13	The back of the copy is soiled.

Cause	Step	Checks	YES/NO	Action
	1	Turn off the power switch while the copy paper is moving through the feeding assembly. At this time, is the back of the copy paper soiled?	YES	Go to step 4.
Developing assembly	2	Is the problem noted at intervals of about 3.3 cm horizontally?	YES	1. Clean the registration roller and the lower transfer guide plate. 2. Check the developing assembly for leakage of toner.
	3	Is the problem noted at intervals of about 1.6 cm horizontally?	YES	1. Clean the manual feed feeding roller. 2. Check the developing assembly for leakage of toner.
Drum cleaner assembly			NO	1. Clean the feeding assembly. 2. Check the cleaning assembly for leakage of toner.
Fixing assembly	4	Is the fixing roller (upper, lower) soiled with toner?	YES	1. Check to see if the cleaning belt is taken up properly. 2. Clean the fixing roller (upper, lower). 3. Check the cleaning belt for soiling with toner. If the dirt is excessive, replace the roller. 4. Clean the fixing assembly inlet guide.
Delivery assembly			NO	Clean the delivery roller, separation claws, and fixing assembly paper guide plate.

COPYRIGHT © 1997 CANON INC.
CANON NP6330 REV.0 MAY 1997 PRINTED IN JAPAN (IMPRIME AU JAPON)

14 The copy has faulty fixing.

Cause	Step	Checks	YES/NO	Action
Fixing roller (upper, lower)	1	Is the problem noted vertically?	YES	Check to find out if there are scratches on the fixing roller (upper, lower).
Fixing heater (H1, H2)	2	Does the fixing heater (H1, H2) turn on immediately after power-on?	NO	See “The fixing heater fails to operate.”
Lower fixing roller pressure	3	Is the nip of the fixing assembly within standard?	NO	Adjust the lower fixing roller pressure.
Copy paper			YES	Try recommended paper; if the results are good, advise the user to use recommended paper.

COPYRIGHT © 1997 CANON INC.
CANON NP6330 REV.0 MAY 1997 PRINTED IN JAPAN (IMPRIME AU JAPON)

15	**The copy has a displaced leading edge.**
16	
17	

Cause	Step	Checks	YES/NO	Action
Original	1	Is the original placed properly?	NO	Place it properly.
Copy paper	2	Is the copy paper of a type recommended by Canon?	NO	Try recommended paper; if the results are good, advise the user to use recommended paper.
Pick-up roller, feeding roller, separation roller	3	Has the pick-up roller, feeding roller, or separation roller of the cassette holder suffering from a displaced leading edge reached its average life?	YES	Check each of the rollers; then, replace any worn roller.
Cassette, paper guide plate			NO	1. Check the placement of copy paper inside the cassette. 2. Check the area around the paper guide for foreign mater.
	4	Is the registration roller rotating normally?	NO	See “The registration roller fails to rotate.”
Leading edge margin	5	Execute leading edge margin adjustment. Is the problem corrected? (See p.11-7)	YES	End.
	6	Is the problem noted only on the second side of a two-sided copy?	YES	See “Lower feeding assembly.”
Registration roller, feeding guide			NO	• Make checks and clean. (Check each registration roller and the pick-up/feeding guide for wear.)

COPYRIGHT © 1997 CANON INC.
CANON NP6330 REV.0 MAY 1997 PRINTED IN JAPAN (IMPRIME AU JAPON)

18	The copy has a blurred image.

Cause	Step	Checks	YES/NO	Action
Scanner drive cable	1	Is the cable overlapping on the cable pulley while the scanner is moving? Is the cable too slack or taut?	YES	1. Re-route the cable. 2. If the cable is twisted or frayed, replace it.
Scanner rail	2	Is the scanner rail soiled? Is there foreign matter on the scanner rail?	YES	Clean the surface of the scanner rail.
Scanner drive assembly	3	Is any of the teeth of the gear in the scanner drive assembly chipped?	YES	Replace the gear.
Photosensitive drum	4	Is the problem noted at intervals of about 9.4 cm?	YES	1. Check the drum drive gear. 2. Check the edge of the drum (in contact with the developing roll) for scratches and protrusions).
Developing gear	5	Is the problem noted at intervals of about 3.3 cm?	YES	Check the developing assembly.
Drum gear assembly			NO	Check the drum drive assembly.

COPYRIGHT © 1997 CANON INC.
CANON NP6330 REV.0 MAY 1997 PRINTED IN JAPAN (IMPRIME AU JAPON)

19 The copy has horizontal fogging.

Cause	Step	Checks	YES/NO	Action
	1	Is the problem noted at the same location on all copies made in Direct?	YES	Go to step 5.
Scanning lamp, lamp regulator	2	Does the scanning lamp flicker while the scanner is moving forward?	YES	Check the scanning lamp and the lamp regulator.
Developing rolls	3	Are the developing rolls soiled with toner or are the rolls deformed? Or, is the area where the developing rolls come into contact (surface of the photosensitive drum) soiled with toner?	YES	Clean, or replace the developing rolls as necessary.
Developing bias	4	Is the developing bias applied normally?	NO	1. Re-set the developing assembly, and check the wiring. 2. Replace the high-voltage power supply PCB.
Scanning system	5	Make a reduced copy and, compare it against a copy made in Direct. Is the problem noted at different locations?	YES	Check the scanning system
Feeding system			NO	Check the feeding system.

COPYRIGHT © 1997 CANON INC.

20 The copy has poor sharpness.

Cause	Step	Checks	YES/NO	Action
Original	1	Is the original off the copyboard glass?	YES	1. Check the copyboard cover for warping. 2. Advise the user on how to place an original.
Copyboard glass	2	Is the copyboard glass soiled with oil? Is the copyboard glass installed properly?	YES	• Clean the copyboard glass. • Install the copyboard glass.
Lens drive assembly	3	Turn off and then on the power switch. Does the lens move smoothly?	NO	Check the lens drive assembly.
Mirror	4	Is the horizontal reproduction ratio in Direct within specification?	NO	Re-route the scanner drive cable.
Scanner			YES	Clean the scanning lamp, reflecting plate, mirror, lens, and dust-proofing glass.
Transfer charging assembly	5	Is the transfer charging assembly set securely?	NO	Set the charging assembly securely.
	6	Is the charging wire of the transfer charging assembly hooked properly, and is its height normal?	NO	Re-string the charging wire.
Developing assembly	7	Is the developing assembly set securely? (Check to make sure that the rolls of the developing assembly are in firm contact with the photosensitive drum.)	NO	Re-set the developing assembly.
Developing bias	8	Is the developing bias generated normally?	NO	1. Replace the high-voltage power supply PCB. 2. Replace the DC controller PCB.

COPYRIGHT © 1997 CANON INC.
CANON NP6330 REV.0 MAY 1997 PRINTED IN JAPAN (IMPRIME AU JAPON)

21	The copy is blank.

Cause	Step	Checks	YES/NO	Action
Drum unit	1	Is the drum unit set?	NO	Set the drum unit.
Drum drive assembly	2	Is the photosensitive drum rotating during copying operation?	NO	1. Check to see if the photosensitive drum is rotating smoothly. 2. Check the drum drive assembly.
Primary charging assembly	3	Is the primary charging assembly set properly?	NO	Set it properly.
	4	Is the charging wire broken?	YES	Re-route the charging wire.
	5	Is the grid installed properly?	YES	Install it properly.
Blank exposure assembly	6	Does the blank shutter solenoid operate during copying operation?	NO	Check the blank exposure assembly. (Replace the solenoid.)
Developing assembly	7	Is the developing assembly set?	NO	Set the developing assembly.
	8	Is there toner over the toner sensor of the developing assembly?	NO	See “The Add Toner indicator fails to turn off.”
Developing assembly drive assembly	9	Is the developing cylinder rotating during copying?	NO	Check the developing assembly drive assembly.
Transfer charging assembly	10	Is the transfer charging assembly set securely?	NO	Set the charging assembly securely.
	11	Is the charging wire broken?	YES	Replace the charging wire.
High-voltage cord	12	Is there electrical continuity between connectors of the high-voltage cord connected to the developing assembly and each charging assembly?	NO	Replace the high-voltage cord.
High-voltage power supply PCB			YES	Replace the high-voltage power supply PCB.

COPYRIGHT © 1997 CANON INC.

22	The copy is solid black.

Cause	Step	Checks	YES/NO	Action
	1	Is the scanning lamp on during copying operation?	NO	See “The scanning lamp fails to turn on.”
	2	Is the pre-exposure lamp on during copying?	NO	See “The pre-exposure lamp fails to turn on.”
High-voltage power supply PCB	3	Replace the high-voltage power supply PCB. Is the problem corrected?	YES	End.
			NO	Replace the drum unit.

COPYRIGHT © 1997 CANON INC.
CANON NP6330 REV.0 MAY 1997 PRINTED IN JAPAN (IMPRIME AU JAPON)

IV. TROUBLESHOOTING MALFUNCTIONS

A. Troubleshooting Malfunctions

1	E000

Cause	Step	Checks	YES/NO	Action
	1	Reset 'E000' using No.401 in service mode [4]. Open the front door and the delivery assembly to cool the fixing roller. Does the fixing heater turn on when the power switch is turned on once again? (Check by the eye. Be sure to turn off the power switch immediately after the check.)	NO	See "The fixing heater fails to operate."
Thermistor (TH1; connector or open circuit)	2	Open the front door and the delivery assembly to cool the fixing roller. Close the front door and the delivery assembly, and check No.106 in service mode [1]. Has the value changed? (Be sure to turn off the power switch after the check.)	YES	Check the wiring from J109 on the DC controller PCB through the relay connector (J34) to the thermistor; if normal, replace the thermistor.
Thermistor	3	Is the thermistor in even contact with the upper fixing roller?	NO	Re-install it.
Thermistor	4	Clean the contact face of the thermistor. Is the problem corrected?	YES	End.
Operating environment	5	Does the problem occur only when the power is turned on for the first time for the day?	YES	• Advise the user that the operating environment is outside the specifications. • Advise the user not to turn on the power before the room is warm enough.
Thermistor	6	Replace the thermistor. Is the problem corrected?	YES	End.
DC controller PCB			NO	Replace the DC controller PCB.

COPYRIGHT © 1997 CANON INC.
CANON NP6330 REV.0 MAY 1997 PRINTED IN JAPAN (IMPRIME AU JAPON)

2	E001

Cause	Step	Checks	YES/NO	Action
	1	Reset 'E001' using No.401 in service mode [4]. Open the front door and the delivery assembly to cool the fixing roller. Is 'E001' indicated immediately after the power switch is turned on once again?	NO	See "E004."
Thermistor (TH1; short circuit)	2	Turn off the power switch, and disconnect J109 from the DC controlled PCB. Set the meter to the x1KΩ range, and connect its probes to J109-9 and J109-10 on the harness side. Is it about 0Ω? (Be sure to connect J109 after the check.)	YES	Check the wiring from J109 on the DC controller PCB through the relay connector (J34) to the thermistor; if normal, replace the thermistor.
DC controller PCB			NO	Replace the DC controller PCB.

COPYRIGHT © 1997 CANON INC.
CANON NP6330 REV.0 MAY 1997 PRINTED IN JAPAN (IMPRIME AU JAPON)

3	E002, E003

Cause	Step	Checks	YES/NO	Action
	1	Reset 'E002', 'E003' using No.401 in service mode [4]. Does any of the following apply when the power switch is turned on once again? • The fixing heater fails to operate. • E000	YES	See the corresponding section.
Thermistor (TH1; connector or open circuit)	2	Is the wiring from J109 on the DC controller PCB through the relay connector (J34) to the thermistor normal?	NO	Re-install the thermistor.
Thermistor	3	Is the thermistor in even contact with the upper fixing roller?	NO	Re-install it.
Thermistor	4	Clean the contact face of the thermistor. Is the problem corrected?	YES	End.
Operating environment	5	Does the problem occur only when the power is turned on for the first time as in the morning?	YES	• Advise the user that the operating environment is outside the specifications. • Advise the user not to turn on the power before the room is warm enough.
Thermistor	6	Replace the thermistor. Is the problem corrected?	YES	End.
DC controller PCB			NO	Replace the DC controller PCB.

COPYRIGHT © 1997 CANON INC.

4	E004

Cause	Step	Checks	YES/NO	Action
Fixing heater	1	Does the fixing heater turn on immediately after power-on?	NO	See “The fixing heater fails to operate.”
SSR	2	Replace the SSR. Is the problem corrected?	YES	End.
DC controller PCB			NO	Replace the DC controller PCB.

5	E005

Cause	Step	Checks	YES/NO	Action
Cleaning belt	1	Is the cleaning belt of the fixing assembly taken up?	YES	Replace the cleaning belt.
	2	Set No.619 in service mode [6] to ‘0’. Is the problem corrected?	YES	Replace the cleaning belt, and set the count to ‘0’ once again.
DC controller PCB			NO	Replace the DC controller PCB.

COPYRIGHT © 1997 CANON INC.
CANON NP6330 REV.0 MAY 1997 PRINTED IN JAPAN (IMPRIME AU JAPON)

6	E010

Cause	Step	Checks	YES/NO	Action
	1	Does the main motor (M1) rotate until 'E010' turns on?	NO	Go to step 3.
Main motor unit (M1; integrated unit of main motor and main motor driver PCB)	2	Set the meter to the 12VDC range. Does the voltage between J107-3 (+) and J107-2 (-) on the DC controller PCB change from 0 to 5 V between when the Copy Start key is pressed and when 'E010' is indicated?	YES	Check the wiring from the DC controller PCB to the main motor; if normal, replace the main motor unit.
DC controller PCB			NO	Replace the DC controller PCB.
Drive belt	3	Is the drive belt attached properly?	NO	Re-attach it.
DC power supply PCB	4	Set the meter to the 100VDC range, and connect its probes to J633-1 (+) and J633-5 (-) on the DC power supply PCB. Is the voltage between the terminals about 24 V?	NO	Check the wiring J633 on the DC power supply PCB to the main motor unit; if normal, replace the DC power supply PCB.
Main motor unit	5	Replace the main motor unit. Is the problem corrected?	YES	End.
DC controller PCB			NO	Replace the DC controller PCB.

7	E030

Cause	Step	Checks	YES/NO	Action
	1	Does the total counter operate normally?	NO	See "The total counter fails to operate."
DC controller PCB			YES	Replace the DC controller PCB.

COPYRIGHT © 1997 CANON INC.

8	E031

Cause	Step	Checks	YES/NO	Action
	1	Does the option counter operate normally?	NO	See “The option counter fails to operate.”
DC controller PCB			YES	Replace the DC controller PCB.

9	E051

Cause	Step	Checks	YES/NO	Action
	1	Does the horizontal registration motor (M5) rotate until ‘E051’ turns on?	NO	Go to step 3.
Horizontal registration roller home position sensor (PS15)	2	Is the horizontal registration roller home position sensor normal? (See the instructions on how to check photointerrupters.)	NO	Check the wiring from the DC controller to the sensor; if normal, replace the sensor.
Horizontal registration motor (M5)	3	Turn off the power switch, and disconnect the relay connector J85. Set the meter to the ×1kΩ range, and measure the registance between the terminals of the motor shown below. Is it normal?	NO	Replace the horizontal registration motor.
Motor driver 1 PCB	4	Replace the motor driver 1 PCB. Is the problem corrected?	YES	End.
DC controller PCB			NO	Replace the DC controller PCB.

		Registance (Ω)
J85-2	J85-5	80
J85-3	J85-6	80
J85-1	J85-2	40
J85-1	J85-5	40
J85-4	J85-3	40
J85-4	J85-6	40

COPYRIGHT © 1997 CANON INC.
CANON NP6330 REV.0 MAY 1997 PRINTED IN JAPAN (IMPRIME AU JAPON)

10	E053

<table>
<tr><th>Cause</th><th>Step</th><th>Checks</th><th>YES/NO</th><th>Action</th></tr>
<tr><td></td><td>1</td><td>Does the horizontal registration motor (M5) rotate until ‘E053’ turns on?</td><td>NO</td><td>Go to step 4.</td></tr>
<tr><td>Horizontal registration solenoid (SL7)</td><td>2</td><td>Press the Copy Start key in the duplex mode. Does the horizontal registration solenoid turn on?</td><td>NO</td><td>Check the wiring; if nomal, replace the clutch.</td></tr>
<tr><td>Horizontal registration paper edge sensor (PS16)</td><td>3</td><td>Is the horizontal registration paper edge sensor nomal? (See the instructions on how to check photointerrupters.)</td><td>NO</td><td>Check the wiring; if normal, replace the sensor.</td></tr>
<tr><td>Horizontal registration motor (M5)</td><td>4</td><td>Turn off the power switch, and disconnect the relay connector J85. Set the meter to the ×1kΩ range, and measure the registance between the terminals of the motor shown below. Is it nomal?
<table>
<tr><th></th><th></th><th>Registance (Ω)</th></tr>
<tr><td>J85-2</td><td>J85-5</td><td>80</td></tr>
<tr><td>J85-3</td><td>J85-6</td><td>80</td></tr>
<tr><td>J85-1</td><td>J85-2</td><td>40</td></tr>
<tr><td>J85-1</td><td>J85-5</td><td>40</td></tr>
<tr><td>J85-4</td><td>J85-3</td><td>40</td></tr>
<tr><td>J85-4</td><td>J85-6</td><td>40</td></tr>
</table></td><td></td><td>Replace the horizontal registration motor.</td></tr>
<tr><td>Motor driver 1 PCB</td><td rowspan="2">5</td><td rowspan="2">Replace the motor driver 1 PCB. Is the problem corrected?</td><td>YES</td><td>End.</td></tr>
<tr><td>DC controller PCB</td><td>NO</td><td>Replace the DC controller PCB.</td></tr>
</table>

COPYRIGHT © 1997 CANON INC.

11	E060

Cause	Step	Checks	YES/NO	Action
	1	Open the front door and the delivery assembly to cool the fixing roller. Does the wire cleaner operate when the power switch is turned on once again.	YES	Go to step 4.
Cleaner motor (M11)	2	Set the meter to the 30VDC range, and connect its probes to J114-A1 (+) and J114-A2 (-) on the DC controller PCB. Is the voltage between the terminals about 12 V when the power switch is turned on?	NO	Replace the cleaner motor.
Motor driver 2 PCB	3	Replac the motor driver 2 PCB. Is the problem corrected?	YES	End.
DC controller PCB			NO	Replace the DC controller PCB.
Wire cleaner home position sensor (MSW1) Wire cleaner rear position sensor (MSW2)	4	Remove the transfer charging assembly rail from the copier. Connect the probes of the meter to both terminals of each switch, and press the switch; is there electrical continuity?	NO	Replace the faulty switch.
DC controller PCB			YES	Replace the DC controller PCB.

COPYRIGHT © 1997 CANON INC. CANON NP6330 REV.0 MAY 1997 PRINTED IN JAPAN (IMPRIME AU JAPON)

12	E202

Cause	Step	Checks	YES/NO	Action
	1	Is the scanner at home position when 'E202' is indicated?	NO	See "The scanner fails to move forward/in reverse."
Scanner home position sensor (PS1)	2	Is the scanner home position sensor normal? (See the instructions on how to check photointerrupers.)	NO	Check the wiring from the DC controller PCB to the sensor; if normal, replace the sensor.
DC controller PCB			YES	Replace the DC controller PCB.

13	E203

Cause	Step	Checks	YES/NO	Action
	1	Does the scanner move forward from when the Copy Start key is pressed to when 'E202' is indicated?	NO	See "The scanner fails to move forward/in reverse."
Scanner home position sensor (PS1)	2	Is the scanner home position sensor normal? (See the instructions on how to check photointerrupers.)	NO	Check the wiring from the DC controller PCB to the sensor; if normal, replace the sensor.
DC controller PCB			YES	Replace the DC controller PCB.

COPYRIGHT © 1997 CANON INC.
CANON NP6330 REV.0 MAY 1997 PRINTED IN JAPAN (IMPRIME AU JAPON)

14	E204

Cause	Step	Checks	YES/NO	Action
	1	Does the scanner move forward from when the Copy Start key is pressed to when 'E204' is indicated?	NO	See "The scanner fails to move forward/in reverse."
Scanner home position sensor (PS1)	2	Is the scanner home position sensor normal? (See the instructions on how to check photointerrupers.)	NO	Check the wiring from the DC controller PCB to the sensor; if normal, replace the sensor.
DC controller PCB			YES	Replace the DC controller PCB.

15	E210

Cause	Step	Checks	YES/NO	Action
	1	Turn on the power switch. Does the lens move?	NO	See "The lens fails to move."
Lens home position sensor (PS19)	2	Is the lens home position sensor normal? (See the instructions on how to check photointerrupers.)	NO	Check the wiring from J107 on the DC controller PCB to J203 on the motor driver 1 PCB and from the motor driver 1 PCB to the sensor; if normal, replace the sensor.
Motor driver 1 PCB	3	Replace the motor driver 1 PCB. Is the problem corrected?	YES	End.
DC controller PCB			NO	Replace the DC controller PCB.

16	E220

Cause	Step	Checks	YES/NO	Action
	1	Does the scanning lamp turn on?	NO	See "The scanning lamp fails to turn on."
Lamp regulator	2	Replace the lamp regulator. Is the problem corrected?	YES	End.
DC controller PCB			NO	Replace the DC controller PCB.

COPYRIGHT © 1997 CANON INC.
CANON NP6330 REV.0 MAY 1997 PRINTED IN JAPAN (IMPRIME AU JAPON)

17	E224

Cause	Step	Checks	YES/NO	Action
	1	Turn on the power switch. Does the blank shutter (slide shutter) move?	NO	See “The blank shutter fails to move.”
Blank shutter home position sensor (PS20)	2	Is the blank shutter home position sensor normal? (See the instructions on how to check photointerrupers.)	NO	Check the wiring from the DC controller PCB to the sensor; if normal, replace the sensor.
DC controller PCB			YES	Replace the DC controller PCB.

18	E240

Cause	Step	Checks	YES/NO	Action
Malfunction	1	Turn off and on the power switch. Is the problem corrected?	YES	End.
DC controller PCB			NO	Replace the DC controller PCB.

19	E710, E711

Cause	Step	Checks	YES/NO	Action
Malfunction	1	Turn off and on the power switch. Is the problem corrected?	YES	End.
DC controller PCB			NO	Replace the DC controller PCB.

COPYRIGHT © 1997 CANON INC.
CANON NP6330 REV.0 MAY 1997 PRINTED IN JAPAN (IMPRIME AU JAPON)

20	E712

Cause	Step	Checks	YES/NO	Action
Malfunction	1	Turn off and then on the power switch. Is the problem corrected?	YES	End.
Connector	2	Is the lattice connector of the DF connected securely to the connector J732 of the copier?	NO	Re-connect it.
DF controller PCB	3	Replace the DC controller PCB. Is the problem corrected?	YES	End.
DC controller PCB			NO	Replace the DC controller PCB.

21	E716

Cause	Step	Checks	YES/NO	Action
Malfunction	1	Turn off and then on the power switch. Is the problem corrected?	YES	End.
Connector	2	Is the lattice connector of the cassette paper feeding unit connected securely to the connector J44 of the copier?	NO	Re-connect it.
Pedestal controller PCB	3	Replace the pedestal controller PCB. Is the problem corrected?	YES	End.
DC controller PCB			NO	Replace the DC controller PCB.

COPYRIGHT © 1997 CANON INC.
CANON NP6330 REV.0 MAY 1997 PRINTED IN JAPAN (IMPRIME AU JAPON)

22	E800

Cause	Step	Checks	YES/NO	Action
Malfunction	1	Turn off and then on the power switch. Is the problem corrected?	YES	End.
J56	2	Is the relay connector J56 directly under the power switch connected securely?	NO	Re-connect it.
Power switch (SW1)	3	Disconnect the relay connector J56. Set the meter to the x1KΩ range, and measure the resistance between J56-1 and J56-2 on the connector side of the power switch. Is it about 400 Ω?	NO	Replace the power switch.
DC controller PCB			YES	Check the wiring from the DC controller PCB to the power switch for electrical continuity; if normal, replace the DC controller PCB.

COPYRIGHT © 1997 CANON INC.
CANON NP6330 REV.0 MAY 1997 PRINTED IN JAPAN (IMPRIME AU JAPON)

23	AC power is absent.

Cause	Step	Checks	YES/NO	Action
Error code	1	Does an error code turn on when the power switch is turned on, and does the power switch turn off in 20 sec?	YES	See the descriptions for the corresponding error code.
Power plug	2	Is the power plug connected securely?	NO	Connect the power plug.
Covers	3	Are the front door and the delivery cover closed securely?	NO	Close the door or the cover.
Main power supply	4	Is the rated voltage present at the power outlet?	NO	Advise the user that the problem is not of the copier.
Circuit breaker (CB1)	5	Measure the voltage between both terminals of the circuit breaker. Is it 0Ω?	YES	Press the button on the circuit breaker, and check for electrical continuity; if not 0 Ω, replace the circuit breaker.
	6	Is the rated voltage present between J2-1 and J2-2? (J2 is located near the power supply cord mount.)	NO	Go to step 8.
Power cord, Noise filter (NF1)	7	Replace the power cord or the line filter. Is AC power present?	YES	End.
Door switch (DSW1)	8	Remove the door switch, and connect the probes of the meter to the door switch fastons F3 and F5 or F4 and F6. Is the resistance about 0 Ω when the actuator is pressed and ∞ Ω when released?	NO	Replace the door switch.
Power switch (SW1)	9	Connect the probes of the meter to both terminals (fastons) of the power switch (SW1). Is it about 0 Ω when the switch is turned ON and about ∞Ω when OFF?	NO	Replace the power switch.
Wiring			YES	Check the wiring of the AC power line and connectors for poor contact.

COPYRIGHT © 1997 CANON INC.
CANON NP6330 REV.0 MAY 1997 PRINTED IN JAPAN (IMPRIME AU JAPON)

24	DC power is absent.

Cause	Step	Checks	YES/NO	Action
AC power supply	1	Is AC power present between J631-1 and J631-4 and J631-2 and J631-5 on the DC power supply PCB?	NO	See “AC power is absent.”
Fuse	2	Has the fuse on the DC power supply PCB blown?	YES	Remove the cause, and replace the DC power supply PCB.
	3	Turn off the power switch, and disconnect the power plug. Connect the power plug in about 1 min, and turn on the switch. Is DC power present?	YES	End.
DC power suply PCB	4	Turn off the power switch, and disconnect J632, J633, J634, and J635 from the DC power supply PCB. Turn on the power switch, and measure the voltage between the terminals shown in Table 11-401. Is it normal?	NO	Replace the DC power supply PCB.
Wiring, DC load			YES	Turn off the power switch, and connect one of the connectors; then, turn on the power switch. Repeat this for all connectors to find the connector that turns on the protection circuit. Then, check the wiring from that connector to the DC load.

COPYRIGHT © 1997 CANON INC.

Jack No.	Pin No.	Output	Remarks
J632	1 2 3 4 5 6 7 8	24VB 24VA 12V 5V GND GND GND GND	To J101 on DC controller PCB.
J633	1 2 3 4 5 6 7	24VB 12V 5V N.C. GND GND GND	To J952 on motor driver 2 PCB. To J501 on main motor. To DF.
J634	1 2 3 4 5 6	24VB 24VB 5V GND GND GND	To J201 on motor driver 1 PCB. To pedestal. To sorter.
J635	1 2 3	24VB FM5LOCK GND	To power supply PCB cooling fan. (Signal line)

Table 11-401

COPYRIGHT © 1997 CANON INC.
CANON NP6330 REV.0 MAY 1997 PRINTED IN JAPAN (IMPRIME AU JAPON)

25 The blank shutter fails to move.

Cause	Step	Checks	YES/NO	Action
Blank shutter cable	1	Is the blank shutter cable routed properly?	NO	Re-route the blank shutter cable.
Blank shutter motor (M8)	2	Turn off the power switch, and disconnect the relay connector J26. Set the meter to the x1KΩ range, and measure the resistance between the terminals of the motor shown below. Is it normal? J26-4 / J26-5 / 100 J26-1 / J26-2 / 100 J26-6 / J26-5 / 50 J26-6 / J26-4 / 50 J26-3 / J26-2 / 50 J26-3 / J26-1 / 50	NO	Replace the blank shutter motor.
Moor driver 1 PCB	3	Replace the motor driver 1 PCB. Is the problem corrected?	YES	End.
DC controller PCB			NO	Replace the DC controller PCB.

26 The photosensitive drum fails to rotate.

Cause	Step	Checks	YES/NO	Action
	1	Is 'E010' indicated?	YES	See "E010."
Drum unit	2	Re-set the drum unit. Is the problem corrected?	YES	End.
Belt	3	Is the belt for the drive attached properly?	NO	Re-attach the belt.
Main drive assembly			YES	Remove the main drive assembly, and correct or replace any faulty part as necessary.

COPYRIGHT © 1997 CANON INC.

27 Pick-up fails. (cassette)

<table>
<tr><th>Cause</th><th>Step</th><th>Checks</th><th>YES/NO</th><th>Action</th></tr>
<tr><td></td><td>1</td><td>Does the Add Paper indicator remain on?</td><td>YES</td><td>See “The Add Paper indicator fails to turn off.”</td></tr>
<tr><td></td><td>2</td><td>Does the lifter drop when the cassette is slid out, and does the lifter motor rotate when the cassette is slid in?</td><td>NO</td><td>See “The lifter fails to move up.”</td></tr>
<tr><td>Belt</td><td>3</td><td>Is the belt for drive attached properly?</td><td>NO</td><td>Re-attach the belt.</td></tr>
<tr><td>Right door</td><td>4</td><td>Is the right door fully closed?</td><td>NO</td><td>Close the door.</td></tr>
<tr><td>Locking leaf spring</td><td>5</td><td>Is the right door locking the vertical path rollers 1 and 2 in place?</td><td>NO</td><td>Check the locking spring.</td></tr>
<tr><td>Vertical path roller 1 clutch (CL5), vertical path roller 2 clutch (CL6)</td><td>6</td><td>Open the right door, and press the Copy Start key with a screwdriver set in the door switch. Do the vertical path roller 1 (CL5) and 2 (CL6) rotate?</td><td>NO</td><td>Check the wiring; if normal, replace the faulty clutch.</td></tr>
<tr><td></td><td>7</td><td>Is the leading edge of the copy paper as far as the registration roller?</td><td>YES</td><td>See “The registration roller fails to rotate.”</td></tr>
<tr><td>Pick-up assembly</td><td>8</td><td>Open the right door, and press the Copy Start key with a screwdriver set in the door switch. Does the feeding/separation roller rotate?</td><td>YES</td><td>Go to step 10.</td></tr>
<tr><td>Pick-up clutch</td><td rowspan="2">9</td><td rowspan="2">Set the meter to the 100VDC range, and connect the probes of the meter to the following connectors on the DC controller PCB. Does the voltage change from about 0 to 24 V when the Copy Start key is pressed?

<table><tr><th>Cassette</th><th>Clutch</th><th>+</th><th>-</th></tr><tr><td>1</td><td>CL2</td><td>J116-B6</td><td>J116-B5</td></tr><tr><td>2</td><td>CL3</td><td>J115-A3</td><td>J115-A2</td></tr></table></td><td>YES</td><td>Check the wiring; if normal, replace the faulty clutch.</td></tr>
<tr><td>DC controller PCB</td><td>NO</td><td>Replace the DC controller PCB.</td></tr>
<tr><td>Sensor</td><td rowspan="2">10</td><td rowspan="2">Find out which sensor has detected the jam in service mode ([1] No.109). Is the sensor normal?

(See the descriptions on service mode and instructions on how to check photointerrupers.)</td><td>NO</td><td>Check the wiring and the lever; if normal, replace the sensor.</td></tr>
<tr><td>Pick-up assembly</td><td>YES</td><td>Remove the pick-up assembly, and check the springs and gears.</td></tr>
</table>

COPYRIGHT © 1997 CANON INC.
CANON NP6330 REV.0 MAY 1997 PRINTED IN JAPAN (IMPRIME AU JAPON)

28 The lifter fails to move up. (cassette)

<table>
<tr><th>Cause</th><th>Step</th><th>Checks</th><th>YES/NO</th><th>Action</th></tr>
<tr><td>Cassette size detecting units</td><td>1</td><td>Is the cassette size LED on the control panel on?</td><td>NO</td><td>Check the cassette size detecting units.</td></tr>
<tr><td>Gear, lever</td><td>2</td><td>Remove the cassette, and move up the lifter by hand. Does it move smoothly?</td><td>NO</td><td>Remove the pick-up assembly, and check the gear and the lever.</td></tr>
<tr><td>Latch assembly (cassette)</td><td>3</td><td>Does the latch assembly of the grip of the cassette operate normally?</td><td>NO</td><td>Re-install it.</td></tr>
<tr><td>Spring, lever</td><td>4</td><td>Push up the pick-up roller releasing lever by a finger. Does the pick-up roller move down?</td><td>NO</td><td>Remove the pick-up assembly, and check the spring and the lever.</td></tr>
<tr><td>Cassette1 lifter sensor (PS3)
Cassette2 lifter sensor (PS5)</td><td>5</td><td>Is the lifter sensor normal?
(See the in structions on how to check phtointerrupters.)</td><td>NO</td><td>Check the wiring from the DC controller PCB to the sensor; if normal, replace the sensor.</td></tr>
<tr><td>Cassette 1 lifter motor (M9), cassette 2 lifter motor (M10)</td><td rowspan="2">6</td><td rowspan="2">Turn off the power switch, and disconnect the relay connectors J58, J59.
Set the meter to the x100Ω range, and measure the resistance between the following terminals of the motor. Is it about 60Ω?
<table><tr><td>Motor</td><td></td><td></td></tr><tr><td>M9</td><td>J58-1</td><td>J58-2</td></tr><tr><td>M10</td><td>J59-1</td><td>J59-2</td></tr></table></td><td>NO</td><td>Check the wiring from the DC controller PCB to the motor; if normal, replace the motor.</td></tr>
<tr><td>DC controller PCB</td><td>YES</td><td>Replace the DC controller PCB.</td></tr>
</table>

COPYRIGHT © 1997 CANON INC.

29	Pick-up fails. (multifeeder)

Cause	Step	Checks	YES/NO	Action
	1	Does the Add Paper indicator remain on?	YES	See “The Add Paper indicator fails to turn off.”
Multifeeder pick-up clutch (CL4)	2	Select the multifeeder, and press the Copy Start key. Does the multifeeder pick-up roller rotate?	YES	Check the wiring from the DC controller PCB to the clutch; if normal, replace the clutch.
Paper guide plate cam	3	Does the paper guide plate move up when the Copy Start key is pressed?	YES	Check the position of the paper guide plate cam and the separation pad; adjust or replace as necessary.
Multifeeder pick-up; solenoid (SL3)	4	Set the meter to the 100VDC range, and connect the probes of the meter to J104-B9 (+) and J104-B8 (-; MFPUSD*) on the DC controller PCB. Does the voltage change from about 0 to 24 V when the Copy Start key is pressed?	NO	Check the wiring from J104 to the solenoid; if normal, replace the solenoid.
DC controller PCB			YES	Replace the DC controller PCB.

COPYRIGHT © 1997 CANON INC.
CANON NP6330 REV.0 MAY 1997 PRINTED IN JAPAN (IMPRIME AU JAPON)

30 The scanner fails to move forward/in reverse.

<table>
<tr><th>Cause</th><th>Step</th><th>Checks</th><th>YES/NO</th><th>Action</th></tr>
<tr><td>Cable</td><td>1</td><td>Is the cable for the scanner routed properly?</td><td>NO</td><td>Re-route the cable.</td></tr>
<tr><td>Foreign matter</td><td>2</td><td>Is the scanner rail free of dirt, and does the scanner move smoothly when pushed by hand?</td><td>NO</td><td>Check the surface of the scanner rail for dirt and foreign matter and anything which comes into contact with the scanner.</td></tr>
<tr><td>DC power supply</td><td>3</td><td>Set the meter to the 100VDC range, and connect its probes to J634-1 (+) and J634-5 (-) on the DC power supply PCB. Is the reader of the meter about 24 V?</td><td>NO</td><td>See “DC power is absent.”</td></tr>
<tr><td>Scanner motor (M2)</td><td>4</td><td>Turn off the power switch, and disconnect J205 from the motor driver 1 PCB.
Set the meter to the x10Ω range, and measure the resistance between the following terminals on the connector side of the motor. Is it normal?
<table>
<tr><th></th><th></th><th>Resistance (Ω)</th></tr>
<tr><td>J205-1</td><td>J205-2</td><td>9.6</td></tr>
<tr><td>J205-3</td><td>J205-4</td><td>9.6</td></tr>
<tr><td>J205-1</td><td>J205-5</td><td>4.8</td></tr>
<tr><td>J205-2</td><td>J205-5</td><td>4.8</td></tr>
<tr><td>J205-3</td><td>J205-6</td><td>4.8</td></tr>
<tr><td>J205-4</td><td>J205-6</td><td>4.8</td></tr>
</table></td><td>NO</td><td>Replace the scanner motor.</td></tr>
<tr><td>Motor driver 1 PCB</td><td rowspan="2">5</td><td rowspan="2">Replace the motor drive 1 PCB. Is the problem corrected?</td><td>YES</td><td>End.</td></tr>
<tr><td>DC controller PCB</td><td>NO</td><td>Replace the DC controller PCB.</td></tr>
</table>

COPYRIGHT © 1997 CANON INC.

31 The registration roller fails to rotate.

<table>
<tr><th>Cause</th><th>Step</th><th>Checks</th><th>YES/NO</th><th>Action</th></tr>
<tr><td>Belt, gear, coupling</td><td>1</td><td>Is the drive of the main motor transmitted to the registration roller through the belt, gear, and coupling?</td><td>NO</td><td>Re-install the belt, gear, and coupling.</td></tr>
<tr><td>Pre-registration sensor (PS9), horizontal registration paper sensor (PS14)</td><td>2</td><td>Are the pre-registration sensor and the horizontal registration paper sensor normal? (See the instructions on how to check photointerrupters.)</td><td>NO</td><td>Check the wiring from the DC controller to the sensor; if normal, replace the faulty sensor.</td></tr>
<tr><td>Registration clutch (CL1), horizontal registration clutch (CL8)</td><td rowspan="2">3</td><td rowspan="2">Set the meter to the 100VDC range, and connect its probes to the following connectors on the DC controller PCB. Does the voltage change from 0 to about 24 V as soon as the registration roller starts to rotate?
<table><tr><td>Clutch</td><td>+</td><td>-</td></tr><tr><td>CL1</td><td>J103-A2</td><td>J103-A1</td></tr><tr><td>CL8</td><td>J103-A4</td><td>J103-A3</td></tr></table></td><td>YES</td><td>Check the wiring from the DC controller PCB to the clutch; then, replace the clutch.</td></tr>
<tr><td>DC controller PCB</td><td>NO</td><td>Replace the DC controller PCB.</td></tr>
</table>

COPYRIGHT © 1997 CANON INC.
CANON NP6330 REV.0 MAY 1997 PRINTED IN JAPAN (IMPRIME AU JAPON)

32	The scanning lamp fails to turn on.

Cause	Step	Checks	YES/NO	Action
Scanning lamp (LA1)	1	Turn off the power switch, and disconnect the power plug. Is the lamp installed properly?	NO	Re-install the lamp.
Fuse (FU1)	2	Set the meter to the x1KΩ range, and connect its probes to both terminals of the fuse. Does the index of the meter swing?	NO	Replace the fuse. Caution: The lamp may have turned on wrongly, the fuse may have been mounted incorrectly, or the cooling fan may have failed to operate; be sure to find out the cause after replacement.
Lamp	3	Disconnect the connector J4, and connect the probes of the meter to both terminals of the lamp. Is there electrical continuity?	YES	Check the wiring from J4 to the lamp; if normal, replace the lamp.
AC power supply	4	Is there AC power between J601-1 and J601-2 on the lamp regulator?	NO	See “AC power is absent.”
Lamp regulator	5	Replace the lamp regulator. Is the problem corrected?	YES	End.
DC controller PCB			NO	Replace the DC controller PCB.

COPYRIGHT © 1997 CANON INC.

33 The pre-exposure lamp fails to turn on.

Cause	Step	Checks	YES/NO	Action
Pre-exposure lamp (LA2)	1	Replace the pre-exposure lamp. Does it turn on normally?	YES	End.
DC controller PCB			NO	Check the wiring from the DC controller PCB to the pre-exposure lamp; if normal, replace the DC controller PCB.

34 The hopper motor fails to rotate.

Cause	Step	Checks	YES/NO	Action
	1	Execute '409' in service mode [4]. Does the hopper motor rotate?	YES	See "The Add Toner indicator fails to turn off."
Hopper motor (M4)	2	Turn off the power switch, and disconnect J206 from the motor driver. Set the meter to the x1KΩ range, and measure the resistance between J206-7 and J206-8 on the motor side. Is it about 63 Ω?	NO	Check the wiring from J206 to the motor; if normal, replace the hopper motor.
Motor driver 1 PCB	3	Replace the motor driver 1 PCB. Is the problem corrected?	YES	End.
DC controller PCB			NO	Replace the DC controller PCB.

COPYRIGHT © 1997 CANON INC.
CANON NP6330 REV.0 MAY 1997 PRINTED IN JAPAN (IMPRIME AU JAPON)

35	The lens fails to move.

Cause	Step	Checks	YES/NO	Action
Rail	1	Turn off the power switch, and move the pulley of the lens motor by hand. Does the lens move smoothly?	NO	Check the rail for foreign matter and dirt.
Drive belt	2	Is the drive belt attached normally?	NO	Re-attach it.
DC power supply PCB	3	Is a voltage of about 24 V present between J201-1 (+) and J201-2 (-) on the motor driver PCB?	NO	Check the wiring from J201 to the DC power supply; if normal, see “DC power is absent.”
Lens motor (M3)	4	Replace the lens motor. Is the problem corrected?	YES	End.
Motor driver 1 PCB	5	Replace the motor driver 1 PCB. Is the problem corrected?	YES	End.
DC controller PCB			NO	Check the wiring from the DC controller PCB to the motor driver 1 PCB and from the motor driver 1 PCB to the lens motor; if normal, replace the DC controller PCB.

COPYRIGHT © 1997 CANON INC.

36	The fixing heater fails to operate.

Cause	Step	Checks	YES/NO	Action
	1	Turn off the power switch, and open the delivery assembly. Remove the connector cover, and disconnect J3 (3-pin). Set the meter to the x1KΩ range, and measure the resistance between J3-1 and J3-3 (main heater) and between J3-1 and J3-2 (sub heater) on the fixing assembly side. Does the index of the meter swing?	YES	Go to step 5.
Thermal switch (TSW1)	2	Remove the fixing assembly. Connect the probes of the meter to both terminals of the thermal switch. Does the index of the meter swing?	NO	Replace the thermal switch. Caution: The heater may have turned on wrongly, the SSR may be faulty, or the thermal switch may have been mounted wrongly. Be sure to check after replacement. The fixing roller or the separation claws may be damaged; be sure to make a check.
Fixing heater (H1, H2)	3	Connect the probes of the meter to both terminals of the fixing heater (main, sub). Does the index of the meter swing?	NO	Replace the faulty fixing heater.
AC harness			YES	Check the AC harness of the fixing assembly.
DC controller PCB	4	If E000, E001, E002, or E003, clear it in service mode ([4] No.401). Set the meter to the 12VDC range, and measure the voltage between J112-B8 (+; MHRD) and J112-B5 (-) and between J112-B7 (+; SHRD) and J112-B5 (-) on the DC controller PCB. Is it about 5 V when the power switch is turned on?	NO	Replace the DC controller PCB.
SSR	5	Replace the SSR. Is the problem corrected?	YES	End.
Harness			NO	Check the DC harness from the DC controller PCB to the SSR and the AC harness to the heater.

COPYRIGHT © 1997 CANON INC.
CANON NP6330 REV.0 MAY 1997 PRINTED IN JAPAN (IMPRIME AU JAPON)

37 The total copy counter fails to operate.

Cause	Step	Checks	YES/NO	Action
Counter (CNT1)	1	Turn off the power switch, and disconnect the connector J61 of the counter. Set the meter to the x1KΩ range, and measure the resistance between J61-1 and J61-2 on the counter side. Is it about 480Ω?	NO	Check the wiring from the DC controller PCB to the counter; if normal, replace the counter.
DC controller PCB	2	Connect the connector J61, and turn on the power switch. Set the meter to the 30VDC range, and measure the voltage between J113-B9 (+) and J113-B10 (-; CNTD*). Does the voltage change from about 0 to about 24 and then to about 0 V when the Copy Start key is pressed?	YES	Replace the counter.
			NO	Replace the DC controller PCB.

38 The option counter fails to operate.

Cause	Step	Checks	YES/NO	Action
Counter (CNT2)	1	Turn off the power switch, and disconnect the connector J64 of the counter. Set the meter to the x1KΩ range, and measure the resistance between J64-1 and J64-2 on the counter side. Is it about 480Ω?	NO	Check the wiring from the DC controller PCB to the counter; if normal, replace the counter.
Option counter PCB	2	Replace the option counter PCB. Is the problem corrected?	YES	End.
DC controller PCB			NO	Replace the DC controller PCB.

COPYRIGHT © 1997 CANON INC.

39 The Add Paper indicator fails to turn off.

Cause	Step	Checks	YES/NO	Action
Cassette	1	Are the cassettes set properly?	NO	Set the cassettes properly.
	2	Does the lifter move up?	NO	See “The lifter fails to move up.”
Cassette 1 paper sensor (PS2) Cassette 2 paper sensor (PS4)	3	Is the paper sensor normal? (See the instructions on how to check photointerrupers.)	NO	Check the wiring from the DC controller PCB to the sensor; if normal, replace the sensor.
DC controller PCB			YES	Replace the DC controller PCB.

40 The Jam indicator fails to turn off.

Cause	Step	Checks	YES/NO	Action
Jam	1	Find out which sensor has detected the jam in service mode ([1] No.109). Is paper found near the sensor?	YES	Remove the jam.
Sensor	2	Is the sensor identified in step 1 normal? (See the instructions on how to check photointerrupers.)	NO	Check the wiring from the DC controller to the sensor; if normal, replace the sensor.
DC controller PCB			YES	Replace the DC controller PCB.

COPYRIGHT © 1997 CANON INC.
CANON NP6330 REV.0 MAY 1997 PRINTED IN JAPAN (IMPRIME AU JAPON)

41	The Add Toner indicator fails to turn off.

Cause	Step	Checks	YES/N	Action
	1	Is toner present around the toner sensor (TS1) at the front of the developing assembly?	NO	Go to step 3.
Toner sensor (TS1)	2	Replace the toner sensor. Is the problem corrected?	YES	End.
DC controller PCB			NO	Check the wiring from the DC controller PCB to the toner sensor; if normal, replace the DC controller PCB.
Screw, gear, stirring rod	3	Execute ‘409’ in service mode [4]. Is the stirring rod inside the hopper rotating normally while the hopper motor is rotating?	NO	Check the screw, gear, and stirring rod to see if they are installed properly.
			YES	Check the shutter assembly of the toner supply mouth between the hopper and the developing assembly.

COPYRIGHT © 1997 CANON INC.
CANON NP6330 REV.0 MAY 1997 PRINTED IN JAPAN (IMPRIME AU JAPON)

B. Troubleshooting Malfunctions in the Pedestal

1	E901

Cause	Step	Checks	YES/NO	Action
Pedestal motor (M1)	1	Set the meter to the 100VDC range, and measure the voltage between J109-1 (+; PEDMD) and J109-4 (-) on the pedestal controller PCB. Does the voltage change to about 5 V when WMUPR starts after the power switch has been turned on?	YES	Replace the pedestal motor.
Pedestal controller PCB	2	Replace the pedestal controller PCB. Is the problem corrected?	YES	End.
DC controller PCB			NO	Check the wiring from the DC controller PCB to the pedestal controller PCB; if normal, replace the DC controller PCB.

COPYRIGHT © 1997 CANON INC.
CANON NP6330 REV.0 MAY 1997 PRINTED IN JAPAN (IMPRIME AU JAPON)

2 Pick-up fails. (pedestal)

Cause	Step	Checks	YES/NO	Action
	1	Does the Add Paper indicator remain on?	YES	See “The Add Paper indicator fails to turn off.”
Belt	2	Is the belt for drive attached correctly?	NO	Re-attach the belt.
Pedestal right door	3	Is the right door of the pedestal fully closed?	NO	Close the door.
	4	Is the right door of the pedestal locking the deck vertical path roller and the vertical path roller 3 in place?	NO	Check the locking spring.
Vertical path roller 3 drive clutch (CL1) Deck vertical path roller drive clutch (CL3)	5	Open the right door of the pedestal, and press the Copy Start key with a screwdriver set in the door switch. Do the deck vertical path roller (CL3) and the vertical path roller 3 (CL1) rotate?	NO	Check the wiring from the pedestal controller PCB to the clutch; if normal, replace the clutch.
	6	Is the leading edge of the copy paper as far as the registration roller assembly?	NO	See “The registration roller fails to rotate.”
	7	Is the copy paper as far as the vertical path roller assembly?	NO	See “Pick-up fails. (cassette)”
Pick-up assembly	8	Open the right door of the pedestal, and press the Copy Start key with a screwdriver set in the door switch. Does the feeding/separation roller rotate?	YES	Go to step 11.
Deck pick-up clutch (CL2)	9	Set the meter to the 100VDC range, and connect its probes to J110-B1 (+) and J110-B2 (-; CL2D*) on the pedestal controller PCB. Does the voltage change from about 24 to 0 V when the Copy Start key is pressed?	NO	Check the wiring from the pedestal controller PCB to the clutch; if normal, replace the clutch.
Pedestal controller PCB	10	Replace the pedestal controller PCB. Is the problem corrected?	YES	End.
DC controller PCB			NO	Replace the DC controller PCB.

COPYRIGHT © 1997 CANON INC.

Cause	Step	Checks	YES/NO	Action
Sensor	11	Find out which sensor has detected the jam in service mode ([1] No.109). Is the sensor normal? (See the descriptions on service mode and instructions on how to check photointerrupters.)	NO	Check the wiring and the lever; if normal, replace the sensor.
Pick-up assembly			YES	Remove the pick-up assembly, and check the spring and gear.

COPYRIGHT © 1997 CANON INC.
CANON NP6330 REV.0 MAY 1997 PRINTED IN JAPAN (IMPRIME AU JAPON)

3	The lifter fails to move up. (pedestal)

Cause	Step	Checks	YES/N	<None>Action
Deck	1	Is the deck set properly?	NO	Re-set it.
Lifter cable	2	Is the lifter cable routed properly?	NO	Re-route it.
Spring, lever	3	Push down the pick-up roller releasing lever with a finger. Does the pick-up roller move down?	NO	Remove the pick-up assembly, and check the spring and the lever.
Pedestal motor (M1)	4	Does the pedestal motor rotate?	YES	Go to step 7.
Deck open sensor (PS7)	5	Set the meter to the 12VDC range, and connect its probes to J110-B7 (+) and J110-B6 (-; DEOP*) on the pedestal PCB. Does the voltage change from 0 to about 5 V when the deck is set?	NO	Check the wiring from the pedestal controller PCB to the sensor; if normal, replace the sensor.
Pedestal motor (M1)	6	Set the meter to the 100VDC range, and connect its probes to J109-1 (+; PEDMD) and J109-4 (-) on the pedestal controller PCB. Does the voltage change from 0 V to 24 V when the deck is set?	YES	Check the wiring from the pedestal controller PCB to the motor; if normal, replace the motor.
Pedestal controller PCB			NO	Replace the pedestal controller PCB.
Deck lifter position sensor (PS5)	7	Set the meter to the 30VDC range, and connect its probes to J110-A11 (+; DEL) and J110-A10 (-) on the pedestal controller PCB.Is the voltage 0V when the deck is pulled out, and about 5V when the deck is set?	YES	Check the wiring from the pedestal controller PCB to the clutch; if normal, replace the sensor.
Deck lifter drive clutch (CL4)	8	Set the meter to the 30VDC range, and connect its probes to J110-B11 (+) and J110-B12 (-; CL4D) on the pedestal controller PCB. Does the voltage change from 0 V to about 24 V when the deck is set?	YES	Check the wiring from the pedestal controller PCB to the clutch; if normal, replace the clutch.
Pedestal controller PCB	9	Replace the pedestal controller PCB. Is the problem corrected?	YES	End.
DC controller PCB			NO	Replace the DC controller PCB.

COPYRIGHT © 1997 CANON INC.

4	The Add Paper indicator fails to turn off. (pedestal)

Cause	Step	Checks	YES/NO	Action
Deck	1	Is the deck set properly?	NO	Set the deck properly.
	2	Does the lifter move up?	NO	See “The lifter fails to move up.”
Paper sensor	3	Are the following sensors normal? PS4: Deck paper sensor (See the instructions on how to check photointerrupers.)	NO	Check the wiring from the pedestal to the sensor; if normal, replace the faulty sensor.
Pedestal controller PCB			YES	Replace the pedestal controller PCB.

COPYRIGHT © 1997 CANON INC.
CANON NP6330 REV.0 MAY 1997 PRINTED IN JAPAN (IMPRIME AU JAPON)

V. TROUBLESHOOTING FEEDING FAULTS

A. Copy Paper Jams

In the copier, jams tend to occur in any of the following locations:

① Pick-up assembly
② Separation/feeding assembly
③ Fixing/delivery assembly
④ Cleaning assembly
⑤ Lower feeding assembly

The troubleshooting procedures that follow are therefore organized according to location; the location as well as the nature of a jam occurring in the copier may be checked in service mode ([1] No.109).

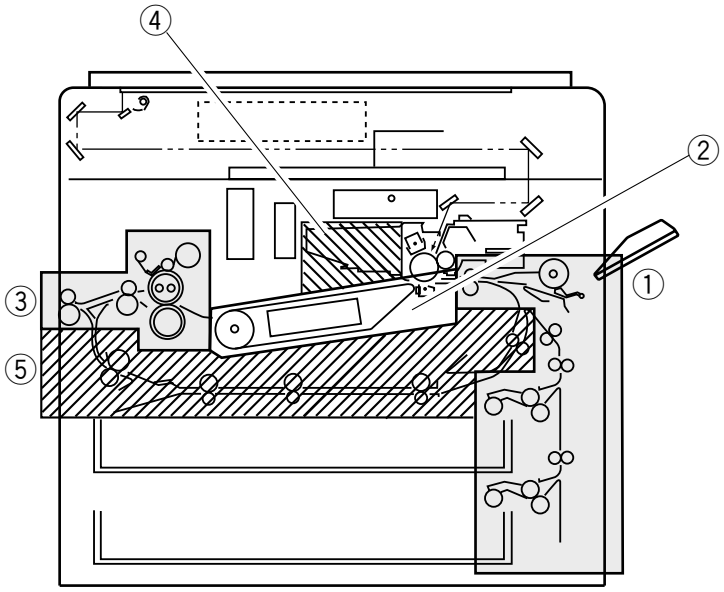

Figure 11-501

COPYRIGHT © 1997 CANON INC.

1 Pick-up assembly

Cause	Step	Checks	YES/NO	Action
	1	Does it occur when the cassette is used?	NO	Go to step 8.
Cassette	2	Is the cassette set properly?	NO	Set it properly.
Copy paper	3	Try a different cassette. Is the problem corrected?	YES	Check the inside of the cassette for foreign matter.
	4	Is the copy paper curled or wavy?	YES	Replace the copy paper; advise the user on the correct method of storage.
	5	Try paper of a type recommended by Canon. Is the problem corrected?	YES	Advise the user to use recommended paper.
DC controller PCB, pick-up clutch	6	Does the pick-up roller of the selected cassette rotate during copying operation?	NO	See “Pick-up fails.”
Pick-up roller	7	Is the pick-up roller deformed or worn?	YES	Replace the pick-up roller.
	8	Try manual copying. Does the main motor start to rotate?	NO	See “Pick up fails.(multifeeder)”
Copy paper	9	Try paper of a type recommended by Canon. Is the problem corrected?	YES	Advise the user to use recommended paper.
Pick-up roller, separation pad, leaf spring			NO	1. Check the pick-up roller for wear and deformation. 2. Check the separation pad. 3. Check the leaf spring.

COPYRIGHT © 1997 CANON INC.
CANON NP6330 REV.0 MAY 1997 PRINTED IN JAPAN (IMPRIME AU JAPON)

2 Separation/feeding assembly

Cause	Step	Checks	YES/NO	Action
Separation roller	1	Is the separation roller of each cassette deformed or worn?	YES	Replace the deformed or worn separation roller.
Feeding roller	2	Is the feeding roller of each cassette deformed or worn?	YES	Replace the deformed or worn feeding roller.
Registration roller drive assembly	3	Does the registration roller operate normally?	NO	See “The registration roller fails to rotate.”
Registration roller, vertical path roller	4	Is the registration roller or the vertical path roller deformed or worn?	YES	Replace the deformed or worn roller.
Transfer charging assembly	5	Is the transfer charging assembly set properly?	NO	Re-set the transfer charging roller.
	6	Are there burrs on the paper guide of the transfer charging assembly?	YES	Remove the burrs.
	7	Is the gut wire of the transfer charging assembly strung properly?	NO	Re-string the gut wire.
Copy paper	8	Try paper of a type recommended by Canon. Is the problem corrected?	YES	Advise the user to use recommended paper.
Feeding belt	9	Are the two feeding belts rotating properly?	NO	Check the belt and the pulley.
Feeding fan			YES	Check to see if the feeding fan is operating.

COPYRIGHT © 1997 CANON INC.

3 Fixing/delivery assembly

Cause		Step	Checks	YES/NO	Action
Separation claws (delivery assembly)		1	Are the separation claws worn or deformed?	YES	1. Replace the separation claws. 2. If dirt is found, clean it with solvent.
Fixing assembly	Upper/lower fixing roller	2	Is the upper/lower fixing roller deformed or scratched?	YES	Replace the roller.
	Paper guide	3	Is the paper guide soiled with toner?	YES	Clean it with solvent.
	Nip	4	Is the lower roller pressure (nip) within standard?	NO	Adjust it.
	Cleaning belt	5	Is the cleaning belt taken up properly?	NO	Check the cleaning assembly/cleaning belt drive assembly.
Delivery assembly	Sheet	6	Is the sheet in the delivery reversing assembly normal?	NO	Re-mount it.
	Delivery lever	7	Does the delivery detecting lever move smoothly?	NO	Make adjustments so that it moves smoothly.
	Delivery sensor (PS11)	8	Is the delivery sensor normal? (See the instructions on how to check photointerrupers.)	NO	Replace the sensor.
	Delivery motor (M6)	9	Is the delivery roller 2 rotating smoothly?	NO	Check the delivery roller 2 drive assembly; if normal, replace the delivery motor.
Leading edge margin				YES	Check the leading edge of the copies for a margin.

4 Cleaning assembly

Cause	Step	Checks	YES/NO	Action
Static eliminator	1	Is the static eliminator set securely?	NO	Set the static eliminator securely.
Copy paper	2	Try paper of a type recommended by Canon. Is the problem corrected?	YES	Advise the user to use recommended paper.
High-voltage transformer, DC power supply PCB			NO	1. Check the high-voltage transformer. 2. Check the DC power supply.

COPYRIGHT © 1997 CANON INC.
CANON NP6330 REV.0 MAY 1997 PRINTED IN JAPAN (IMPRIME AU JAPON)

5 Lower feeding assembly

Cause	Step	Checks	YES/NO	Action
Lower feeder inlet roller	1	Is the lower feeder inlet roller deformed or worn?	YES	Replace the lower feeder inlet roller.
Set-back roller 1/2	2	Is the set-back roller 1/2 deformed or worn?	YES	Replace the set-back roller 1/2.
Lower feeder motor (M7)	3	Are the lower feeder inlet roller and the set-back roller 1/2 rotating smoothly?	NO	Check the lower feeder inlet roller drive assembly and the set-back roller drive assembly; if normal, replace the lower feeder motor.
Lower feeder outlet roller	4	Is the lower feeder outlet roller deformed or worm?	YES	Replace the lower feeder outlet roller.
Lower feeder flapper solenoid (SL6)	5	Is the lower feeder flapper operating during re-pick up?	NO	Check the wiring; if normal, replace the solenoid.
Lower feeder inlet paper sensor (PS12)	6	Is the lower feeder inlet paper sensor normal? (See the instructions on how to check photointerrupters.)	NO	Check the wiring; if normal, replace the sensor.
Lower feeder outlet paper sensor (PS13)	7	Is the lower feeder outlet paper sensor normal? (See the instructions on how to check photointerrupters.)	NO	Check the wiring; if normal, replace the sensor.
Guide plate	8	Is the lower feeder guide plate deformed?	YES	Replace the lower feeding assembly.
DC controller PCB			NO	Replace the DC controller PCB.

COPYRIGHT © 1997 CANON INC.
CANON NP6330 REV.0 MAY 1997 PRINTED IN JAPAN (IMPRIME AU JAPON)

B. Troubleshooting Feeding Faults

1	Double feeding

Cause	Step	Checks	YES/NO	Action
Separation roller	1	Is the separation roller deformed or worn?	YES	Replace the separation roller.
Spring			NO	Replace the spring used to pull the separation roller. Change the hooking position of the spring.

2	Wrinkling

Cause		Step	Checks	YES/NO	Action
Pick-up assembly		1	Turn off the power while copy paper is moving through the feeding assembly. At this time, is the copy paper wrinkled? Or, is it moving askew?	YES	Check the pick-up assembly. Check the registration roller.
Copy paper		2	Try fresh copy paper. Is the problem corrected?	YES	The copy paper may be moist; advise the user on the correct method of storage.
		3	Is the paper of a type recommended by Canon?	NO	Advise the user to use recommended paper.
Fixing assembly	Paper guide	4	Is the paper guide soiled with toner?	YES	Clean it with solvent.
	Lower roller pressure	5	Is the lower roller pressure (nip) within specification?	NO	Make adjustments.
	Upper/lower roller			YES	Try replacing the upper and lower rollers one after the other.

COPYRIGHT © 1997 CANON INC.
CANON NP6330 REV.0 MAY 1997 PRINTED IN JAPAN (IMPRIME AU JAPON)

VI. ARRANGEMENT AND FUNCTIONS OF THE ELECTRICAL PARTS

COPYRIGHT © 1997 CANON INC.
CANON NP6330 REV.0 MAY 1997 PRINTED IN JAPAN (IMPRIME AU JAPON)

A. Sensors

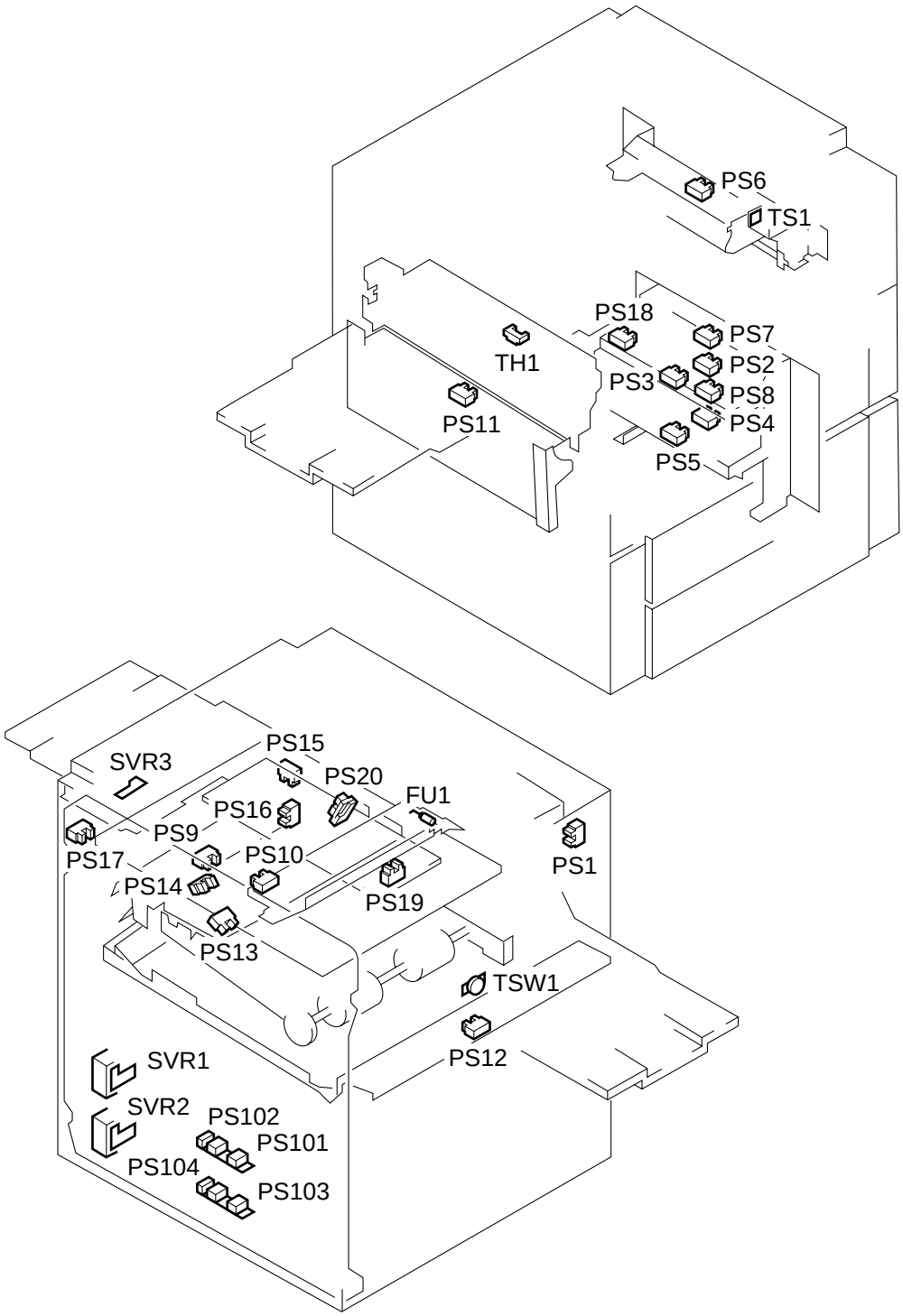

Figure 11-601

COPYRIGHT © 1997 CANON INC.

Symbol	Name	Notation	Function
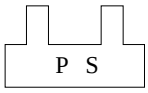	Photointerrupter	PS1	Scanner home position detection
		PS2	Cassette 1 paper detection
		PS3	Cassette 1 lifter detection
		PS4	Cassette 2 paper detection
		PS5	Cassette 2 lifter detection
		PS6	Multifeeder paper detection
		PS7	Vertical path roller 1 paper detection
		PS8	Vertical path roller 2 paper detection
		PS9	Pre-registration paper detection
		PS10	Separation detection
		PS11	Delivery detection
		PS12	Lower feeder inlet paper detection
		PS13	Lower feeder outlet paper detection
		PS14	Horizontal registration paper detection
		PS15	Horizontal registration roller home position detection
		PS16	Horizontal registration paper edge detection
		PS17	Copyboard cover open/closed detection
		PS18	Right door open/closed detection
		PS19	Lens home position detection
		PS20	Blank shutter home position detection
		PS101	Cassette 1 paper length detection 1
		PS102	Cassette 1 paper length detection 2
		PS103	Cassette 2 paper length detection 1
		PS104	Cassette 2 paper length detection 2
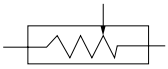	Volume	SVR1	Cassette 1 paper width detection
		SVR2	Cassette 2 paper width detection
		SVR3	Multifeeder paper width detection
	Toner sensor	TS1	Developing assembly toner sensor
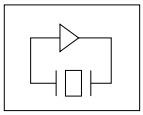	Thermistor	TH1	Fixing roller surface temperature detection
	Thermal fuse	FU1	Scanner overheating detection
	Thermo switch	TSW1	Fixing heater overheating detection

COPYRIGHT © 1997 CANON INC.
CANON NP6330 REV.0 MAY 1997 PRINTED IN JAPAN (IMPRIME AU JAPON)

B. Switches, clutches, and solenoids

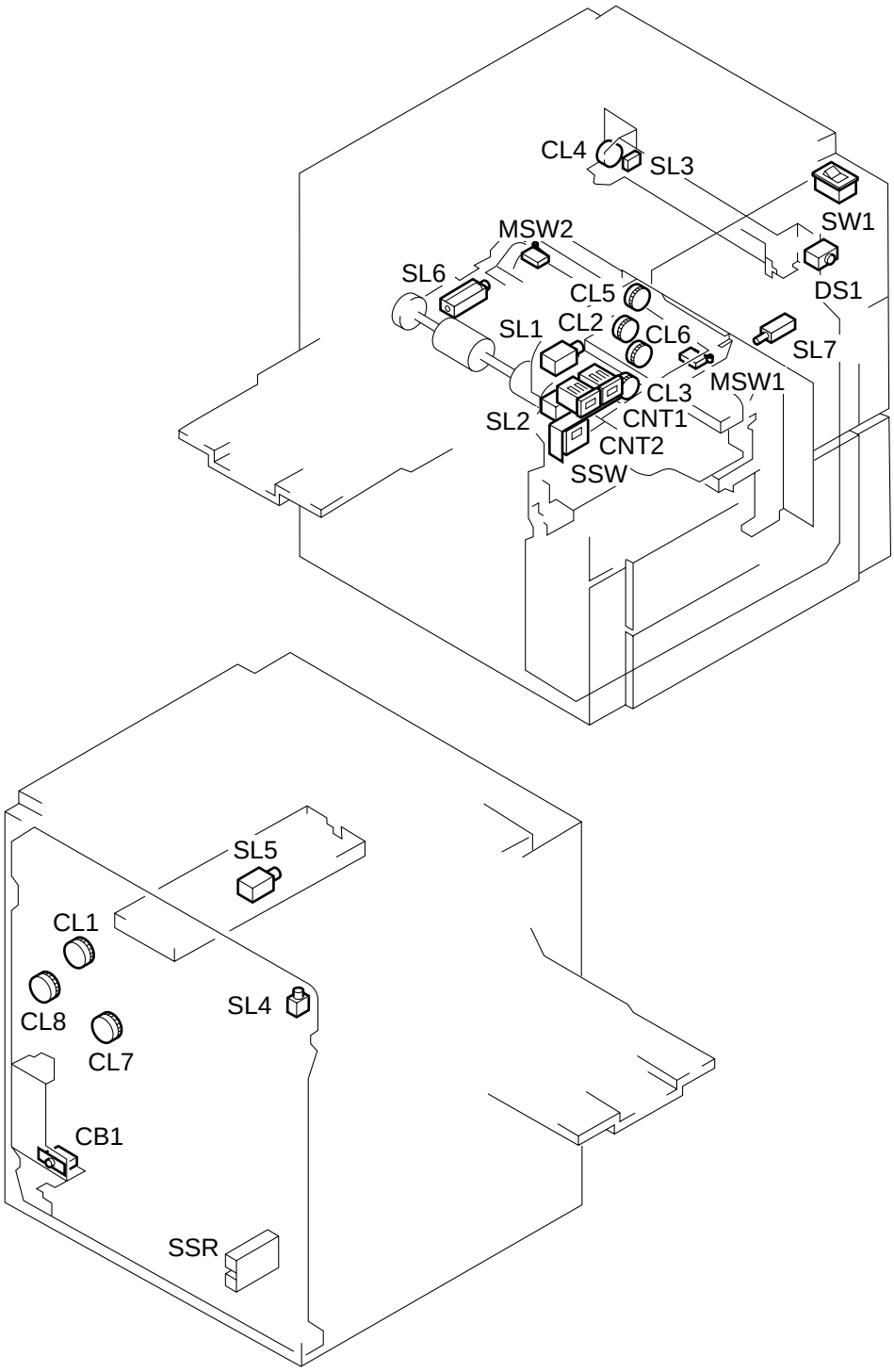

Figure 11-602

COPYRIGHT © 1997 CANON INC.

Symbol	Name	Notation	Function
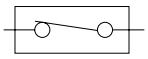	Switch	SW1	Power switch
		MSW1	Wire cleaner home position detection
		MSW2	Wire cleaner rear position detection
		SSW	Service switch
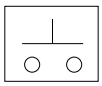	Push switch	DSW1	Door switch
	Circuit breaker	CB1	AC power line overcurrent detection
	Counter	CNT1	Total copy counter
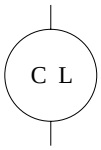	Clutch	CL1	Registration clutch
		CL2	Cassette 1 pick-up clutch
		CL3	Cassette 2 pick-up clutch
		CL4	Multifeeder pick-up clutch
		CL5	Vertical path roller 1 clutch
		CL6	Vertical path roller 2 clutch
		CL7	Lower feeder outlet clutch
		CL8	Horizontal registration clutch
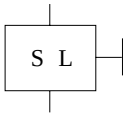	Solenoid	SL1	Cassette 1 pick-up release solenoid
		SL2	Cassette 2 pick-up release solenoid
		SL3	Multifeeder pick-up solenoid
		SL4	Cleaning belt solenoid
		SL5	Blank shutter solenoid
		SL6	Lower feeder flapper solenoid
		SL7	Horizontal registration solenoid
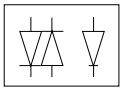	SSR	SSR	Fixing heater drive

COPYRIGHT © 1997 CANON INC.
CANON NP6330 REV.0 MAY 1997 PRINTED IN JAPAN (IMPRIME AU JAPON)

C. Heaters, lamps, and motors

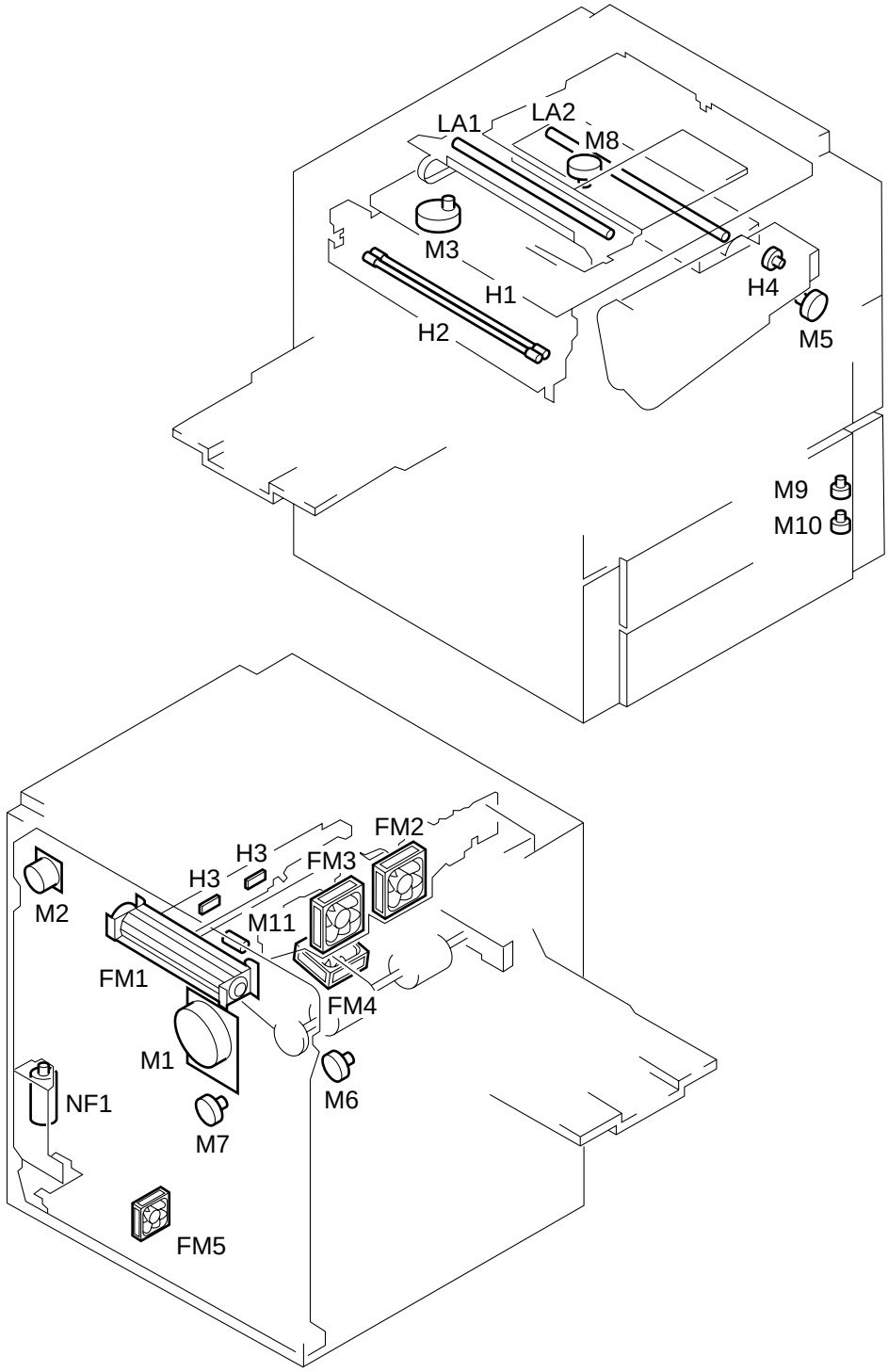

Figure 11-603

COPYRIGHT © 1997 CANON INC.
CANON NP6330 REV.0 MAY 1997 PRINTED IN JAPAN (IMPRIME AU JAPON)

Symbol	Name	Notation	Function
	Lamp	LA1 LA2	Scanning lamp Pre-exposure lamp
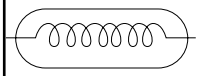	Heater	H1 H2 H3	Fixing main heater Fixing sub heater Drum heater
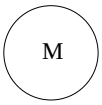	Motor	M1 M2 M3 M4 M5 M6 M7 M8 M9 M10 M11	Main motor Scanning motor Lens motor Hopper motor Horizontal registration motor Delivery motor Lower feeder motor Blank shutter motor Cassette 1 lifter motor Cassette 2 lifter motor Cleaner motor
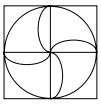	Fan motor	FM1 FM2 FM3 FM4 FM5	Scanner cooling fan Exhaust fan 1 Exhaust fan 2 Feeding fan Power supply PCB cooling fan
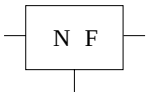	Noise filter	NF1	Noise prevention

COPYRIGHT © 1997 CANON INC. CANON NP6330 REV.0 MAY 1997 PRINTED IN JAPAN (IMPRIME AU JAPON)

D. PCBs

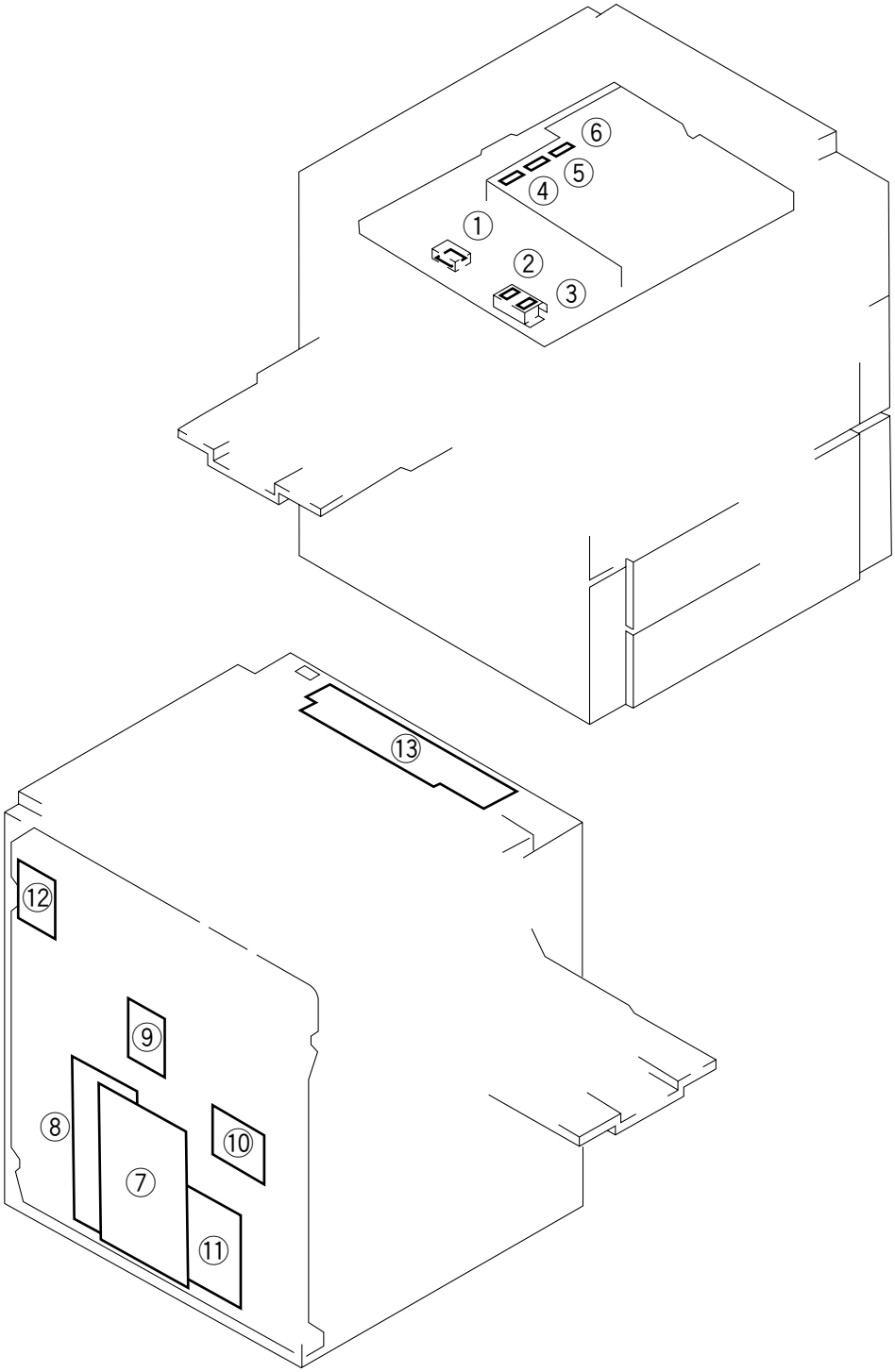

Figure 11-604

COPYRIGHT © 1997 CANON INC.

Ref.	Name	Description
①	AE sensor	Original density detection
②	Original size detection 1	Original size detection 1
③	Original size detection 2	Original size detection 2 (for AB-configuration)
④	Original size detection 3	Original size detection 3
⑤	Original size detection 4	Original size detection 4 (for AB-configuration)
⑥	Original size detection 4	Original size detection 4 (for Inch-configuration)
⑦	DC controller	Sequence control
⑧	DC power supply	DC power supply
⑨	Motor driver 1	Scanning motor, horizontal registration motor, hopper motor, lens motor drive
⑩	Motor driver 2	Delivery motor, lower feeder motor, blank shutter motor, cleaner motor
⑪	HVT	Charging assembly, static eliminator/fixing bias, developing bias high-voltage output
⑫	Lamp regulator	Scanning lamp ON voltage control
⑬	Control panel	Control panel keys, lamp

COPYRIGHT © 1997 CANON INC.
CANON NP6330 REV.0 MAY 1997 PRINTED IN JAPAN (IMPRIME AU JAPON)

E. Paper deck pedestal-M1

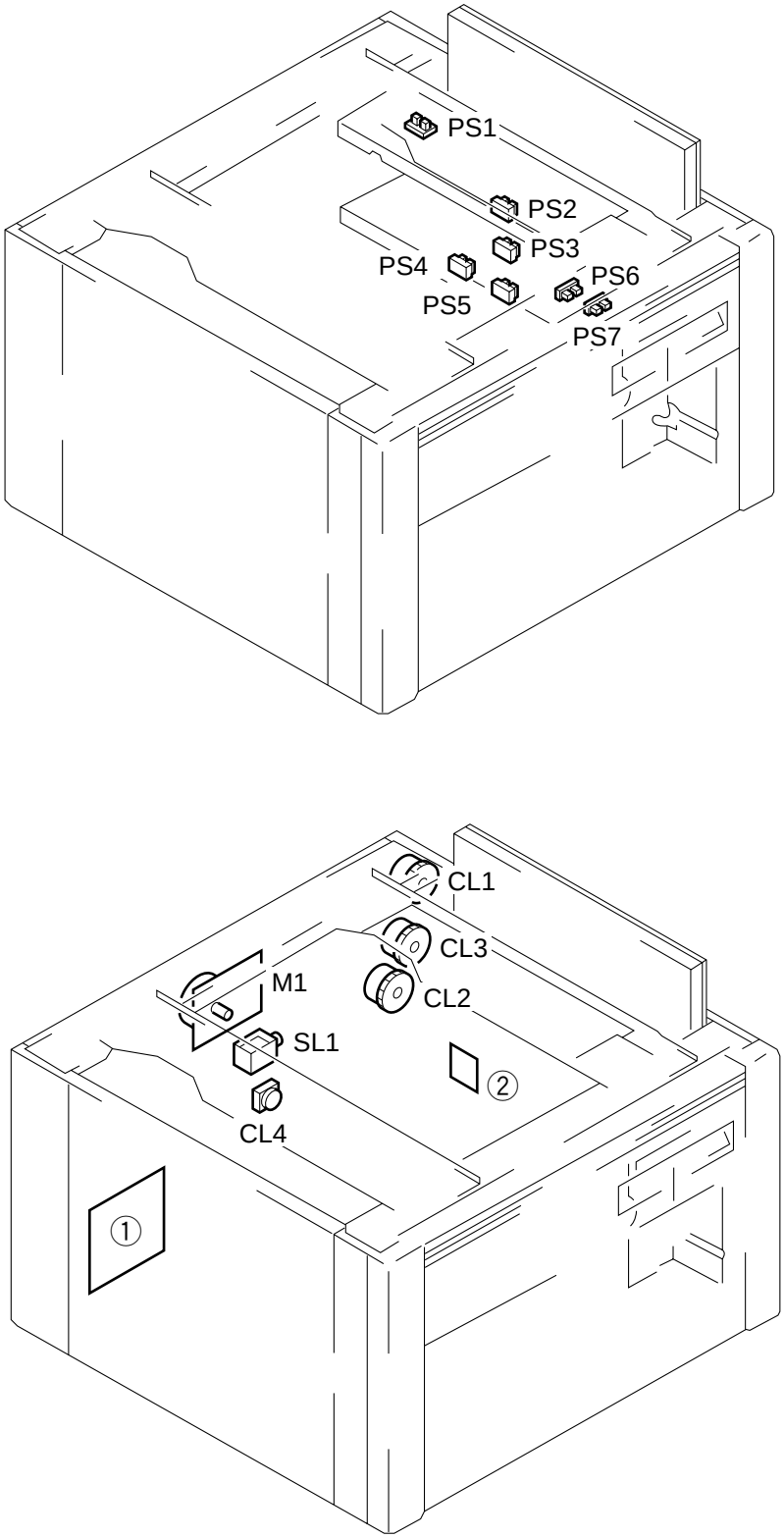

Figure 11-605

COPYRIGHT © 1997 CANON INC.

Symbol	Name	Notation	Function
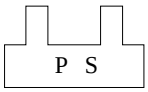	Photointerrupter	PS1	Right door open/closed detection
		PS2	Vertical path roller 3 paper detection
		PS3	Deck vertical path roller paper detection
		PS4	Deck paper detection
		PS5	Deck lifter position detection
		PS6	Deck lifter upper limit detection
		PS7	Deck open/closed detection
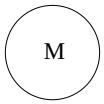	Motor	M1	Pedestal motor
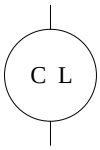	Clutch	CL1	Vertical path roller 3 drive clutch
		CL2	Deck pick-up clutch
		CL3	Deck vertical path roller drive clutch
		CL4	Deck lifter drive clutch
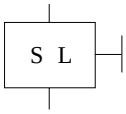	Solenoid	SL1	Deck pick-up roller release solenoid
	Pedestal controller PCB	①	Sequence control
	Size switch PCB	②	Peper size change

COPYRIGHT © 1997 CANON INC.

F. Variable Resistors, Light-Emitting Diodes, and Check Pins by PCB

Of the variable resistors (VR), light-emitting diodes (LED), and check pins found, those that may be used in the field are discussed:

Note:

1. Some LEDs emit dim light because of leak current when OFF; this is a normal condition and should be kept in mind.
2. VRs that may be used in the field . . . . . 
   VRs that must not be used in the field . . . . . 

Note:

Do not use VRs and check pins not given in the list; they are for the factory only and require special instruments and high precision.

COPYRIGHT © 1997 CANON INC.
CANON NP6330 REV.0 MAY 1997 PRINTED IN JAPAN (IMPRIME AU JAPON)

1. DC Controls PCB

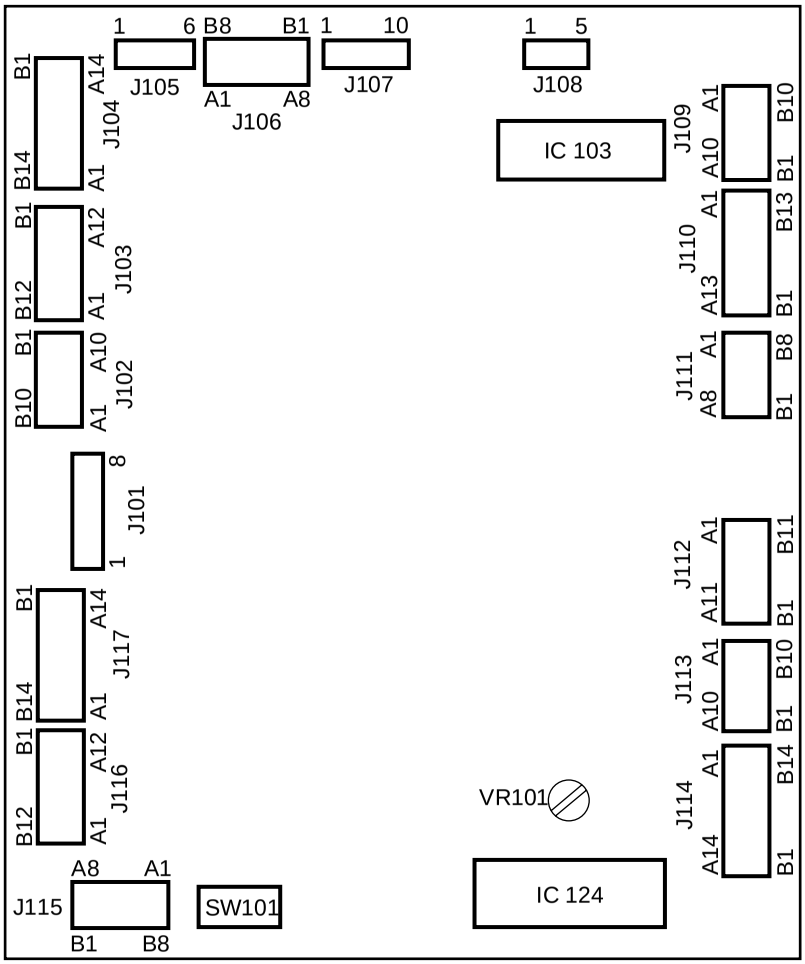

Figure 11-606

	AB-configuration		Inch-configuration		AB/Inch-configuration	
SW101-1	OFF	4R4E	ON	4R3E	ON	4R4E/ 4R3E
SW101-2	OFF		ON		OFF	
SW101-3	OFF					
SW101-4	OFF					

Table 11-601

COPYRIGHT © 1997 CANON INC.

2. HVT

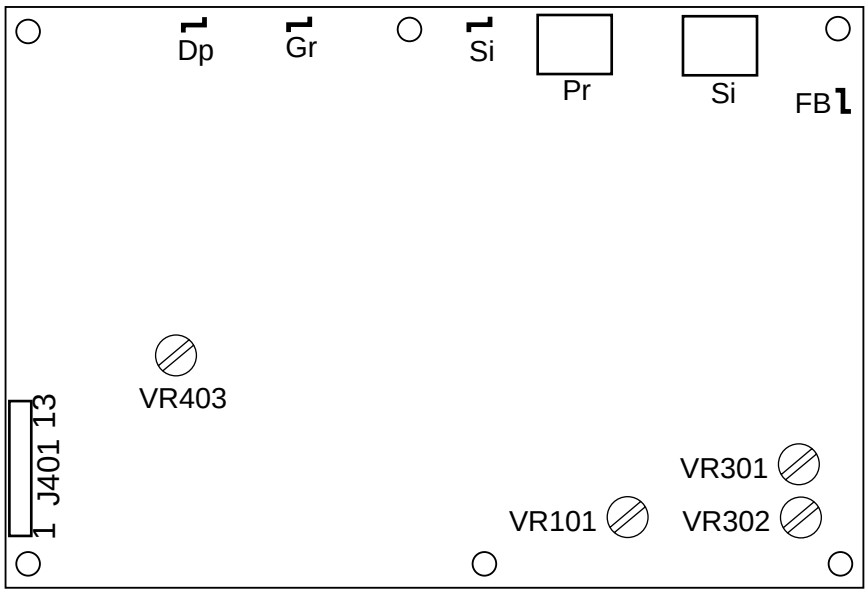

Figure 11-607

3. Lamp Regulator PCB

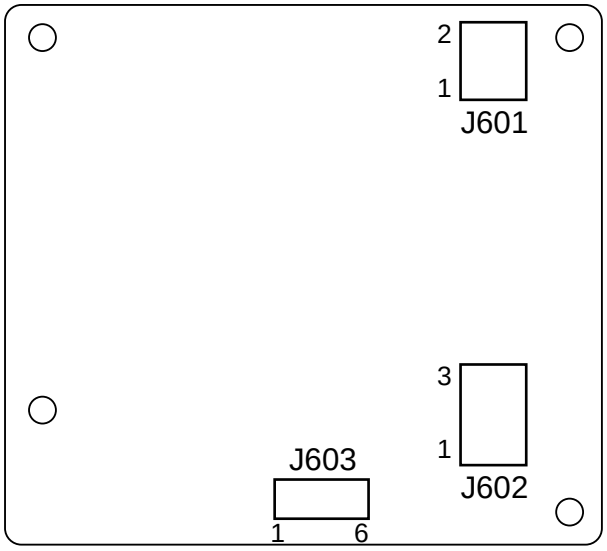

Figure 11-608

COPYRIGHT © 1997 CANON INC.
CANON NP6330 REV.0 MAY 1997 PRINTED IN JAPAN (IMPRIME AU JAPON)

4. Motor driver 1 PCB

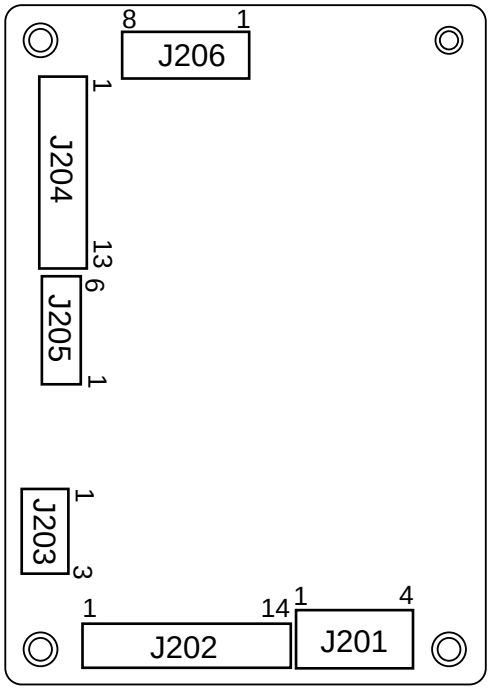

Figure 11-609

5. Motor driver 2 PCB

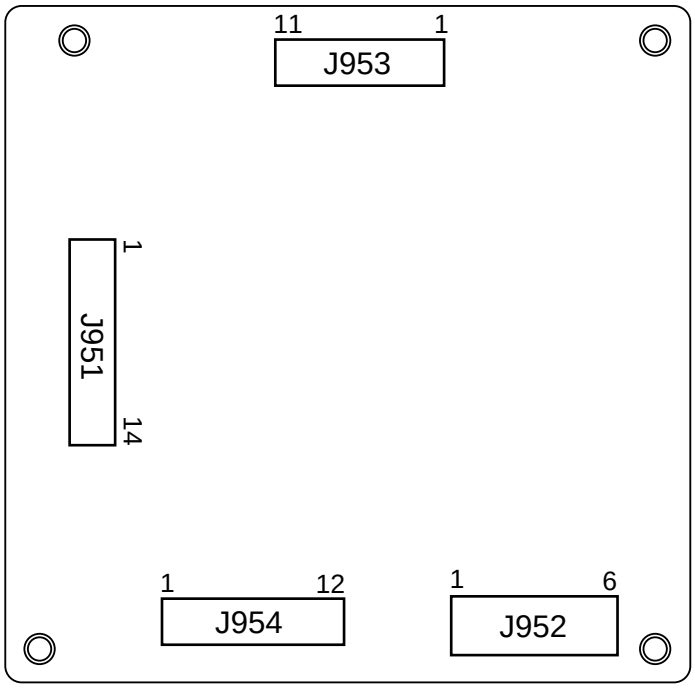

Figure 11-610

COPYRIGHT © 1997 CANON INC.

6. Pedestal controller PCB (Paper deck pedestal)

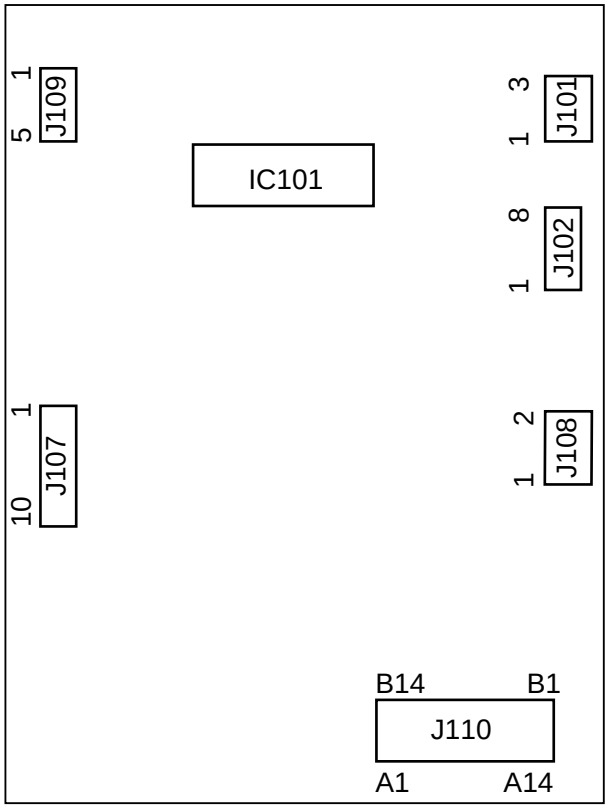

Figure 11-611

COPYRIGHT © 1997 CANON INC.
CANON NP6330 REV.0 MAY 1997 PRINTED IN JAPAN (IMPRIME AU JAPON)

VII. SERVICE MODE

A. Outline

The copier's service mode consists of the following six:

Mode	Description
[1]	Control/display mode
[2]	I/O display mode
[3]	Adjustment mode
[4]	Function mode
[5]	Optional settings mode
[6]	Counter mode

Table 11-701

COPYRIGHT © 1997 CANON INC.
CANON NP6330 REV.0 MAY 1997 PRINTED IN JAPAN (IMPRIME AU JAPON)

B. Using Service Mode

1. Starting Service Mode

1) Open the front door, and insert the door switch actuator into the door switch assembly.
   - To make checks in 'I/O display mode', for example, make the appropriate copying mode settings before starting service mode.

2) Press the service mode switch (SSW) with a hex key.
   - The display indicates '[1]'.
   - A press on the Reset key ends service mode.

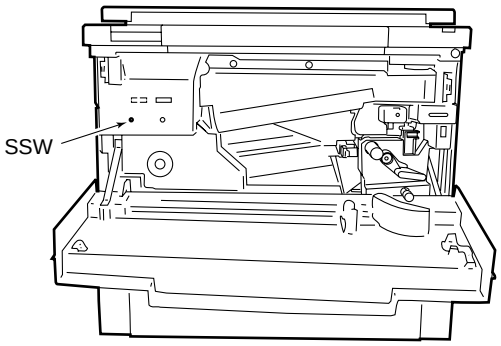

Figure 11-701

3) Enter the number of the mode you want to check or adjust using the keypad (Table 11-701), and press the OK key.
   - The copier starts the selected mode, and the display shows a number; for example, indicating the first item under '301'.

4) Select the appropriate item of the selected service mode using the keypad while the 100s digit is flashing.
   - The display indicates the selected number. (The 100s digit flashes.)
   - A press on the Reset key returns the mode selection screen.

5) Press the OK key.
   - The copier starts the item indicated.
   - A press on the Clear key returns the item selection screen.
   - A press on the Reset key returns the mode selection screen.

6) Make the appropriate checks or adjustments.

7) End service mode.
   - A press on the Reset key returns the mode selection screen.
   - A press on the Reset key while the mode selection screen is being shown ends service mode.
   - The copier does not end service mode even when the power switch is turned off or the power plug is disconnected.

COPYRIGHT © 1997 CANON INC.

C. Using Adjustment Mode and Optional Setting Mode

Adjustment mode and the optional setting mode are used to simulate the operations activated by the conventional variable resistors and switches by storing the settings made on the control panel in the RAM on the DC controller PCB.

Figure 11-702 is the label attached behind the copier's front door.

At the factory, each copier is adjusted, and the adjustment values are recorded on the label.

If you have replaced the DC controller PCB or initialized the RAM, you must enter the values recorded on the label. Further, if you have entered any new values in the field, you must record the values on the label.

		TYP		
301	LIGHT-5			
302	BIAS			
303	AE-SLOP			
304	AE-LIGHT			
305	REGIST			
306	LE-BLANK			
307	TE-BLANK			
308	SD-BLANK			
311	MF-A6R			
312	MF-A4R			
313	MF-A4			
314	C1-STMTR			
315	C1-A4R			
316	C2-STMTR			
317	C2-A4R			
318	C3-STMTR			
319	C3-A4R			
320	C4-STMTR			
321	C4-A4R			
324	SD-REG			
325	DOC-STOP			
326	BOOK-ERA			
327	MF-LNGTH			

Figure 11-702

COPYRIGHT © 1997 CANON INC.

D. Control/Display Mode [1]

To start control/display mode, press '1' (keypad) and the OK key in sequence.
To select an item, press the number (keypad) and the OK key in sequence.
To delete an item, press the Clear key.

- A press on the Copy Start key while the service mode description is being shown starts copying operation.

No.	Description	Remarks
101	Indicates the version of the master ROM (IC116).	ROM parts revision number (See below)
102	Indicates the version of the slave ROM (IC104).	Same as above
103	Indicates the version of the ROM of the DF.	Same as above
104	Indicates the version of the ROM of the sorter.	Same as above
105	Indicates the version of the ROM of the pedestal.	Same as above
106	Indicates the surface temperature of the upper fixing roller (output of thermistor TH1).	unit: °C
107	Indicates the output of the AE sensor.	0 to 255
108	Indicates the activation voltage of the scanning lamp.(220 / 240 V model)	unit: V
109	Indicates the jam history.	See p. 11-133

- **No. 101 ~ 105 ROM Version No. indicator**

Turn on the indicators on the indication section one by one until the ROM version No. is indicated. The hundreds and tens digits indicate the program version. Also the tens units digits indicate the revision No.

Example ; ROM version : 2.01

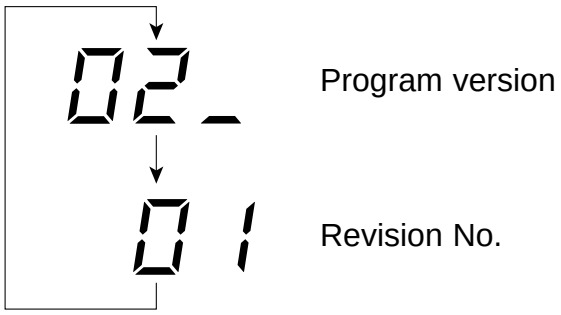

Program version

Revision No.

COPYRIGHT © 1997 CANON INC.
CANON NP6330 REV.0 MAY 1997 PRINTED IN JAPAN (IMPRIME AU JAPON)

No. 109 Displaying the Jam History

The copier retains a history of as many 40 jams (most recent).

1) While the display indicates '109', press the OK key.
   - The display shows the jam history number.
   - The display indicates '-1'.

2) Using the Zoom key (+) / (-), select the jam history number (1 through 40, a higher number means an older jam); then, press the OK key.
   - The display shows jam location.

3) Press the OK key as necessary to find out the jam code, pick-up location, pick-up soft counter, and paper size.

COPYRIGHT © 1997 CANON INC.
CANON NP6330 REV.0 MAY 1997 PRINTED IN JAPAN (IMPRIME AU JAPON)

For example, if the 13th most recent jam was a pre-registration roller delay jam picked up from the copier's cassette 1 (copy paper size of A4, soft count of 63021).

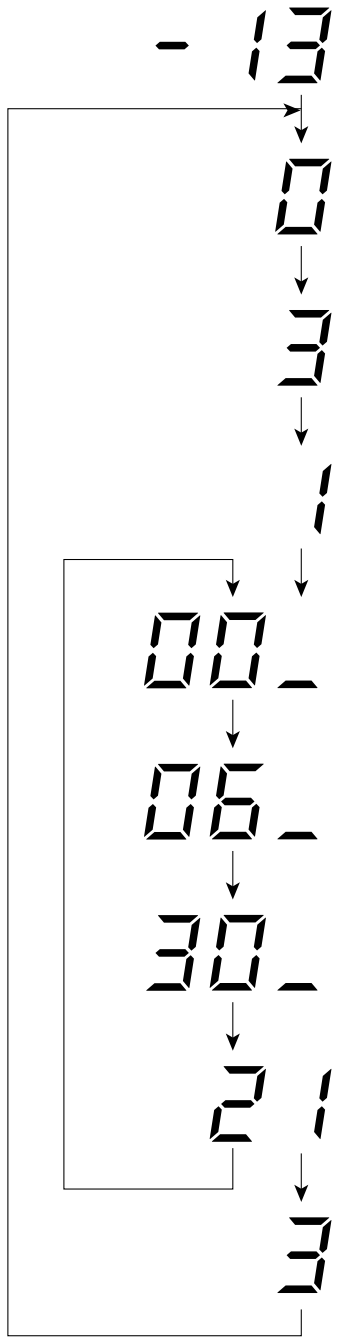

Enter '13' using the keypad.

The display shows jam location. (0: copier)
(Table 11-702)

The display shows the jam code. (3: pre-registration delay jam)
(Table 11-703, 704, 705, 706)

The display show the pick-up location. (1: cassette 1)
(Table 11-707)

The display shows the pick-up soft count by pick-up location.
(up to 8 digits)

- The display changes sequentially at intervals of 700 msec.

The display shows the paper size. (3: A4)
(Table 11-708)

COPYRIGHT © 1997 CANON INC.

- **Jam Location**

0	Copier
1	DF
2	Sorter
3	Pedestal

Table 11-702

- **Details of Copier Jam Code**

Notation	Type of jam	Sensor
1	Vertical path 2 delay jam (Cassette 2 pick-up delay)	PS8
2	Vertical path 1 delay jam (Cassette 1 pick-up delay)	PS7
3	Pre-registration roller delay jam	PS9
4	Separation delay jam	PS10
5	Delivery delay jam	PS11
6	Lower feeder inlet delay jam	PS12
7	Lower feeder outlet delay jam	PS13
8	Horizontal registration delay jam	PS14
9	Vertical path 2 stationary jam (Cassette 2 pick-up stationary)	PS8
10	Vertical path 1 stationary jam (Cassette 1 pick-up stationary)	PS7
11	Pre-registration roller stationary jam	PS9
12	Separation stationary jam	PS10
13	Delivery stationary jam	PS11
14	Lower feeder inlet stationary jam	PS12
15	Lower feeder outlet stationary jam	PS13
16	Horizontal registration stationary jam	PS14

Table 11-703

COPYRIGHT © 1997 CANON INC.
CANON NP6330 REV.0 MAY 1997 PRINTED IN JAPAN (IMPRIME AU JAPON)

- **Details of DF Jam Codes**

Notation	Type of jam	Model
01	Original pulled out during pick-up	RDF/ADF
02	Pick-up sensor delay jam	RDF/ADF
03	Registration sensor delay jam	RDF/ADF
05	Registration sensor stationary jam	ADF
06	Registration sensor double feeding	RDF/ADF
08	Registration sensor error (failing to detect leading edge of original during pick-up)	RDF
09	Registration sensor failure	ADF
08	Reversal sensor delay jam 1	RDF
11	Reversal sensor stationary jam	RDF
12	Reversal sensor delay jam 2	RDF
13	Reversal sensor initial stationary jam	RDF
20	Registration sensor reversal pick-up delay jam	RDF
21	Registration sensor reversal pick-up stationary jam	RDF
23	Delivery sensor delay jam	RDF/ADF
41	Delivery sensor stationary jam	RDF/ADF
42	Open detection	RDF/ADF
81	Pick-up tray or upper cover open detection	RDF/ADF
82	Original sensor error (failing to detect discharged original)	RDF/ADF
84	Sensor detecting an original during pick-up	RDF/ADF
85	Jam unique to test mode	ADF
88	Original detected during pick-up of the 1st original	RDF/ADF
89	Re-circulating lever operating fault during original circulation (2nd circulation or later)	RDF
8A	Feeding fault when feeding originals of different sizes	ADF
8b	Last original trailing edge sensor ON (sensor failing to turn off)	ADF

Table 11-704

- **Details of Sorter Jam Codes**

Notation	Description
03	Paper sensor delay jam
04	Paper sensor stationary jam
05	Paper sensor timing jam
06	Stapler staple jam
07	Sensor detecting paper at power-on
08	Joint switch or cover switch OFF during copying

Table 11-705

COPYRIGHT © 1997 CANON INC.

- **Details of Pedestal Jam Codes**

Notation	Type of jam	Sensor
33	Deck pick-up delay	PS2/PS3
	Deck pick-up timing	

Table 11-706

- **Pick - Up Location**

1	Cassette 1
2	Cassette 2
3	Paper deck
8	Multifeeder assembly

Table 11-707

COPYRIGHT © 1997 CANON INC.

- **Paper size**

Notation	Original size	(unit: mm)
17	A5	148 × 210
1	B5	182 × 257
3	A4	210 × 297
4	B5R	257 × 182
6	A4R	297 × 210
2	FOOLSCAP	330 × 216
5	B4	364 × 257
23	COMPUTER	381 × 279
7	A3	420 × 297
9	STMT	140 × 216
11	LTR	216 × 279
14	LTRR	279 × 216
2	FOOLSCAP	330 × 216
13	LGL	356 × 216
23	COMPUTER	381 × 279
15	11” × 17”	432 × 279

Table 11-708

COPYRIGHT © 1997 CANON INC.
CANON NP6330 REV.0 MAY 1997 PRINTED IN JAPAN (IMPRIME AU JAPON)

No.	Description	Remarks
110	Indicates the results of the copier's self diagnosis.	The display can show as many as three previous error histories. Select, for example, '1 (The indicator indicates '-1', '-2', and '-3' using the zoom (+)/(-) key and then the OK key to find out the codes for the first, second, and third most recent errors.
111	Indicates the results of the DF's self diagnosis.	Same as above.
112	Indicates the results of the sorter's self diagnosis.	Same as above.
113	Indicates the results of the Pedestal's self diagnosis.	Same as above.
114	Indicates the copier's alarm code.	See Table 11-709.
115	Indicates the DF's alarm code.	See Table 11-710.
116	Indicates the sorter's alarm code.	See Table 11-711.
117	Indicates the pedestal's alarm code.	See Table 11-712.
118	Indicates the type of E002.	See Table 11-713.

COPYRIGHT © 1997 CANON INC.

- **Details of Copier Alarm Codes**

Notation	Description
01	Cassette 1 lifter fails to move up.
02	Cassette 2 lifter fails to move up.

Table 11-709

- **Details of DF Alarm Codes**

Notation	Description
01	The re-circulating lever has swung idly.
02	The original end sensor do not detect an original.
03	Separation has failed during original pick-up.
04	The original has moved askew during original pick-up.
05	The original has overridden the paper stopper plate during original pick-up.
11	The number of originals is different after jam removal.
12*	The number of originals is excessive.
13	The original has been pulled out in the middle.

Table 11-710

- **Details of Sorter Alarm Codes**

Notation	Description
01	The stapler has stopped operation.
02	A staple jam has occurred.
05	The number of sheets stacked for stapling is excessive.
06	The number of sheets stacked for stapling is excessive.
07	The sheets are of different sizes. (horizontally)
08	The stapler unit is absent.
09	Stapled paper remains in the bin.
12*	The number of sheets stacked for sorting is excessive.
0A	Staples are absent.

*: Sorter tray alarm code.

Table 11-711

COPYRIGHT © 1997 CANON INC.
CANON NP6330 REV.0 MAY 1997 PRINTED IN JAPAN (IMPRIME AU JAPON)

- **Details of Pedestal Alarm Codes**

Notation	Description
01	The deck lifter fails to move up.

Table 11-712

- **Details of E002 (detection temperature)**

Service mode otation	Description temperature
1	~ 40
2	40 ~ 75
3	75 ~ 100
4	100 ~ 120
5	120 ~ 140
6	140 ~ 160
7	160 ~ 170
8	170 ~ 180
9	180 ~ 185
10	185 ~ 190

Table 11-713

COPYRIGHT © 1997 CANON INC.

No.	Description	Remarks
119	Indicates the output value of the paper width sensor of the multifeeder.	0 to 255
120	Indicates the paper width of the multifeeder.	unit: mm
121	Indicates the output value of the paper width sensor of the cassette 1.	0 to 255
122	Indicates the output value of the paper length sensor of the cassette 1.	0, 1 (The ten digit on the indication section indicates the output value of PS101 / PS103 and the units digit indicates the output value of PS102 / PS104.)
123	Indicates the paper width of the cassette 1.	unit: mm
124	Indicates the output value of the paper width sensor of the cassette 2.	0 to 255
125	Indicates the output value of the paper length sensor of the cassette 2.	Same as above. (No.122)
126	Indicates the paper width of the cassette 2.	unit: mm
127	Not used	—
128	Not used	—
129	Not used	—
130	Not used	—
131	Not used	—
132	Not used	—

COPYRIGHT © 1997 CANON INC.
CANON NP6330 REV.0 MAY 1997 PRINTED IN JAPAN (IMPRIME AU JAPON)

No.	Description	Remarks
133	Indicates the output of the original size sensors 1, 2, 3, and 4.	When the original size sensor detects an original, some LED lamps of the display turn on. (See Figure11-703.)
134	Indicates the keys of the control panel.	(See p.11-148.)
135	Indicates the original size detected by the DF.	A code is indicated to represent the original size detected by the DF. (See Table 11-715, 716.)
136	Indicates the activation voltage of the scanning lamp. (120 V model)	unit : V

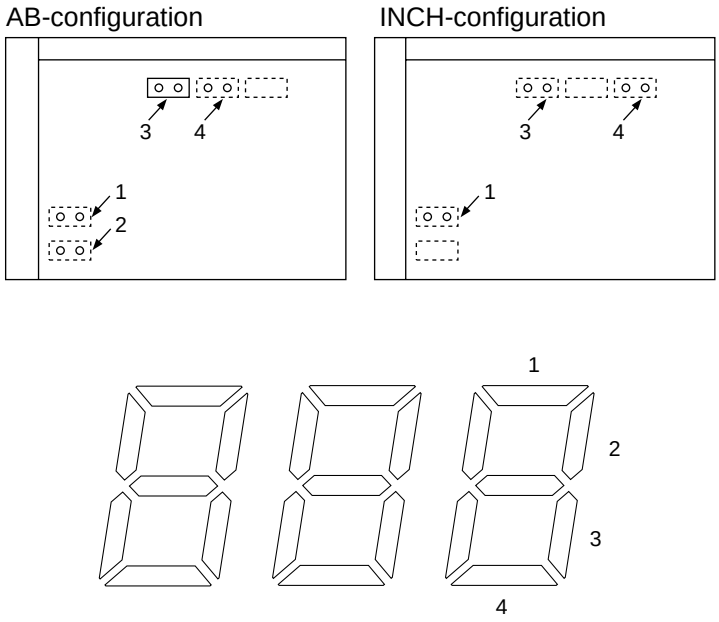

Figure 11-703

- **No. 134 Control panel's key check**

1) Select No. 134, and press the OK key.
   - The indicator indicates '–––'

2) After pressing all the keys on the control panel one by one, press the OK key.
   - When it is confirmed that all the keys have been pressed, the indication will be '000 '.
   - If there is any key which has not confirmed to be pressed, the code provided in the Table 11-714 will be indicated.
     If there are some keys which have not confirmed to be pressed, the code with the smallest number will be indicated.

COPYRIGHT © 1997 CANON INC.
CANON NP6330 REV.0 MAY 1997 PRINTED IN JAPAN (IMPRIME AU JAPON)

Code	Key	Code	Key
001	User mode key	021	Zoom key (+)
002	OK key	022	Zoom key (-)
003	Page Separate key	023	Reset key
004	Image Compose key	024	ID key
005	Odd/Even key	025	Keypad 1
006	Mode Memory key	026	Keypad 2
007	Bind Margin key	027	Keypad 3
008	Frame Erase key	028	Keypad 4
009	Mix key	029	Keypad 5
010	Sorter key	030	Keypad 6
011	Two-Sided key	031	Keypad 7
012	Copy Density key (darker)	032	Keypad 8
013	AE key	033	Keypad 9
014	Copy Density key (lighter)	034	Clear key
015	Reduce key	035	Keypad 0
016	Direct key	036	Interrupt key
017	Enlarge key	037	Pre-Heat key
018	Paper Select key	038	Stop key
019	Auto Zoom key	039	Copy Start key
020	% key		

Table 11-714

COPYRIGHT © 1997 CANON INC.

① Size Detection (AB-configuration feeding direction only, no default)

Notation	Original size	(unit: mm)
17	A5	148 × 210
1	B5	182 × 257
3	A4	210 × 297
4	B5R	257 × 182
6	A4R	297 × 210
2	FOOLSCAP	330 × 216
5	B4	364 × 257
23	COMPUTER	381 × 279
7	A3	420 × 297

Table 11-715

② Size Detection (Inch-configuration feeding direction only, no default)

Notation	Original size	(unit: mm)
9	STMT	140 × 216
11	LTR	216 × 279
14	LTRR	279 × 216
2	FOOLSCAP	330 × 216
13	LGL	356 × 216
23	COMPUTER	381 × 279
15	11” × 17”	432 × 279

Table 11-716

COPYRIGHT © 1997 CANON INC.
CANON NP6330 REV.0 MAY 1997 PRINTED IN JAPAN (IMPRIME AU JAPON)

E. I/O Display Mode [2]

To start I/O display mode, press '2' (keypad) and the OK key in sequence.
To select an item, press the number (keypad) and the OK key in sequence.
To delete an item, press the Clear key.

- A press on the Copy Start key while the service mode description is being shown starts copying operation.

No.	Description	Remarks
201 ∫ 209	PIO input/output port of the DC controller	Some of the LED lamps turn on according to number to represent an 8-bit input/output; see below.
210 ∫ 216	Master CPU input/output of the DC controller	Some of the LED lamps turn on according to number to represent an 8-bit input/output; see below.
217 ∫ 219	IPC input/output port of the DC controller	Some of the LED lamps turn on according to number to represent an 8-bit input/output; see below.
220 ∫ 225	Slave CPU input/output of the DC controller	Some of the LED lamps turn on according to number to represent an 8-bit input/output; see below.
226 ∫ 234	CPU input/output port of the pedestal controller	Some of the LED lamps turn on according to number to represent an 8-bit input/output; see below.
235 ∫ 247	CPU input/output port of the DF controller	Some of the LED lamps turn on according to number to represent an 8-bit input/output; see below.
248 ∫ 260	CPU input/output port of the sorter controller	Some of the LED lamps turn on according to number to represent an 8-bit input/output; see below.

Table 11-717

- LED

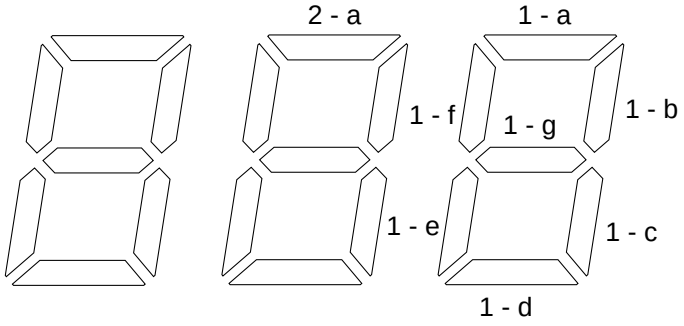

COPYRIGHT © 1997 CANON INC.

- **PIO**

No. (adress)	LED	Description	Signal	Jack	Remarks
201 (PA0) output	1 - a	Scanner cooling fan (FM1) drive signal	SCFD*	J102-A4	1:FM1 ON
	1 - b	Main motor (M1) drive signal	MMD	J106-3	1:M1 ON
	1 - c	Pre-exposure lamp (LA2) drive signal	PEXP*	J113-A4	1:LA2 ON
	1 - d	Blank shutter solenoid (SL5) drive signal	BLSD*	J113-A5	1:SL5 ON
	1 - e	Feedig fan (FM4) drive signal	FFD*	J109-A3	1:FM4 ON
	1 - f	Feeding fan power signal	FFPOW	J109-A2	1:24V 0:12V
	1 - g	—	—	—	—
	2 - a	—	—	—	—
202 (PB0) output	1 - a	Registration clutch (CL1) drive signal	RGCD*	J103-A1	1:CL1 ON
	1 - b	Registration clutch power signal	REG-POW	J103-A2	1:24V 0:12V
	1 - c	Cassette 1 lifter motor (M9) drive signal	C1LTD*	J117-A6	1:M9 ON
	1 - d	Cassette 2 lifter motor (M10) drive signal	C2LTD*	J117-A8	1:M10 ON
	1 - e	Fixing main heater (H1) drive signal	MHRD	J112-B8	1:H1 ON
	1 - f	Fixing sub heater (H2) drive signal	SHRD	J112-B7	1:H2 ON
	1 - g	Cleaning belt solenoid (SL4) drive signal	CBSD*	J113-A1	1:SL4 ON
	2 - a	Hopper motor (M4) drive signal	HMD*	J106-B5	0:M4 ON

COPYRIGHT © 1997 CANON INC.
CANON NP6330 REV.0 MAY 1997 PRINTED IN JAPAN (IMPRIME AU JAPON)

No. (adress)	LED	Description	Signal	Jack	Remarks
203 (PC0) input	1 - a	Right door sensor (PS18) signal	RDC*	J116-A11	0:door closed
	1 - b	Multifeeder paper sensor (PS6) signal	MFPD*	J104-B6	0:paper present
	1 - c	Cassette 1 paper sensor (PS2) signal	C1PD	J116-A8	1:paper present
	1 - d	Cassette 2 paper sensor (PS4) signal	C2PD	J115-B2	1:paper present
	1 - e	Cassette 1 lifter sensor (PS3) signal	C1LTP	J116-A5	1:paper present
	1 - f	Cassette 2 lifter sensor (PS5) signal	C2LTP	J115-B5	1:paper present
	1 - g	—	—	—	—
	2 - a	—	CCDT	J117-A11	—
204 (PA1) output	1 - a	Cassette 1 pick-up release solenoid (SL1) drive signal	C1RSD*	J116-B7	1:SL1 ON
	1 - b	Cassette 2 pick-up release solenoid (SL2) drive signal	C2RSD*	J115-B7	1:SL2 ON
	1 - c	Cassette 1 pick-up clutch (CL2) drive signal	C1PUCD*	J116-B5	1:CL2 ON
	1 - d	Cassette 2 pick-up clutch (CL3) drive signal	C2PUCD*	J115-A2	1:CL3 ON
	1 - e	Vertical path roller 1 clutch (CL5) drive signal	VR1CD*	J116-B3	1:CL5 ON
	1 - f	Vertical path roller 2 clutch (CL6) drive signal	VR2CD*	J115-A4	1:CL6 ON
	1 - g	Multifeeder pick-up solenoid (SL3) drive signal	MFPUSD*	J104-B8	1:SL3 ON
	2 - a	Multifeeder pick-up clutch (CL4) drive signal	MFCD*	J104-B10	1:CL4 ON

COPYRIGHT © 1997 CANON INC.
CANON NP6330 REV.0 MAY 1997 PRINTED IN JAPAN (IMPRIME AU JAPON)

No. (adress)	LED	Description	Signal	Jack	Remarks
205 (PB1) output	1 - a	Signal from master CPU to slave CPU	DPREQ	—	—
	1 - b	—	—	—	—
	1 - c	Lamp ON signal	LMPON	J103-A8	1:Scanning lamp ON
	1 - d	Internal PCB signal	—	—	—
	1 - e	Deliverly motor (M6) rotation signall	DMRON	J114-A6	1:deliver copy paper 0:reverse copy paper
	1 - f	Deliverly motor (M6) drive signal	DMD	J114-A5	0:M6 ON
	1 - g	Total counter (CNT1) signal	CNTD*	J113-B10	1:count up
	2 - a	Option counter (CNT2) signal	CNT2D*	J113-B8	1:count up
206 (PC1) input	1 - a	Vertical path roller 1 paper sensor (PS7) signal	PDP2*	J116-A2	1:paper present
	1 - b	Vertical path roller 2 paper sensor (PS8) signal	PDP1*	J115-A7	1:paper present
	1 - c	Pre-registration paper sensor (PS9) signal	PDP3	J117-B13	1:paper present
	1 - d	Separation sensor (PS10) signal	PDP4*	J109-A5	0:paper present
	1 - e	Delivery sensor (PS11) signal	PDP5*	J109-B4	0:paper present
	1 - f	Scanning lamp (LA1) ON detection signal	LDT	J103-A12	1:during scan-ning lamp on
	1 - g	—	—	—	—
	2 - a	Zero-cross signal	ZRCS	J103-A11	1:Zero-cross

COPYRIGHT © 1997 CANON INC.
CANON NP6330 REV.0 MAY 1997 PRINTED IN JAPAN (IMPRIME AU JAPON)

No. (adress)	LED	Description	Signal	Jack	Remarks
207 (PA2) output	1 - a	Static eliminator / fixing roller bias ON signal	SFON*	J114-B11	1:Sp / FB ON
	1 - b	Developing DC bias ON signal	DPON*	J114-B6	1:Dp (DC bias) ON
	1 - c	Developing AC bias ON signal	ACON*	J114-B7	1:Dp (AC bias) ON
	1 - d	Primary / transfer corona current ON signal	PTON*	J114-B8	1:Pr / Tr ON
	1 - e	—	—	—	—
	1 - f	Static eliminator bias change signal	SPCH	J114-B10	0:3KV 1:4KV
	1 - g	—	—	—	—
	2 - a	Grid bias OFF signal	GRCONT	J114-B14	1:Gr OFF
208 (PB2)	1 - a	Toner level signal	TEP*	J117-A4	0:toner absent
	1 - b	—	—	—	—
	1 - c	Auto power-off signal	PWOFF*	J117-A2	1:Power switch OFF
	1 - d	Main motor lock signal	MMLOCK	J107-4	1:locked
	1 - e	Main heater SSR detection signal	MSSRD	J112-B9	1:ON
	1 - f	Sub heater SSR detection signal	SSSRD	J112-B6	1:ON
	1 - g	Total counter open circuit detection	CNTD*	J113-B10	0:open
	2 - a	Option counter open circuit detection	CNT2D*	J113-B8	0:open

COPYRIGHT © 1997 CANON INC.
CANON NP6330 REV.0 MAY 1997 PRINTED IN JAPAN (IMPRIME AU JAPON)

No. (adress)	LED	Description	Signal	Jack	Remarks
209 (PC2) input	1 - a	Lower feeder outlet paper sensor (PS13) signal	PDP7	J108-2	0:paper present
	1 - b	Lower feeder inlet paper sensor (PS12) signal	PDP6*	J109-B7	0:paper present
	1 - c	Horizontal registration paper sensor (PS14) signal	PDP8	J117-B8	1:paper present
	1 - d	Horizontal registration roller home position sensor (PS15) signal	HRHP	J117-B5	1:at HP
	1 - e	Horizontal registration paper edge sensor (PS16) signal	HRPD	J117-B2	1:paper present
	1 - f	—	—	—	—
	1 - g	Counter select signal	CNTSL1	J113-B5	0:SW ON
	2 - a	Counter select signal	CNTSL2	J113-B6	0:SW ON

COPYRIGHT © 1997 CANON INC.
CANON NP6330 REV.0 MAY 1997 PRINTED IN JAPAN (IMPRIME AU JAPON)

- **Master**

No. (adress)	LED	Description	Signal	Jack	Remarks
210 (P6)	1 - a	—	—	—	—
	1 - b	Delivery motor current control signal 1	DMI1	J114-A14	—
	1 - c	Delivery motor current control signal 2	DMI2	J114-A13	—
	1 - d	—	—	—	—
	1 - e	—	—	—	—
	1 - f	—	—	—	—
	1 - g	—	—	—	—
	2 - a	—	—	—	—
211 (P7)	1 - a	Fixing thermistor (TH1) signal	TH1	J109-B10	analog
	1 - b	—	—	—	—
	1 - c	AE sensor signal	AE	J107-8	analog
	1 - d	—	—	—	—
	1 - e	Cassette 1 paper width detection VR (SVR1) signal	C1PW	J104-A10	analog
	1 - f	Cassette 2 paper width detection VR (SVR2) signal	C2PW	J104-A13	analog
	1 - g	Multifeeder paper width detection VR(SVR3) signal	MFPW	J104-B13	analog
	2 - a	—	—	—	—
212 (P8)	1 - a	Main motor (M1) clock pulse signal	MMCLK	J107-5	—
	1 - b	Scanner home position sensor (PS1) signal	SCHP	J113-B2	0:at HP
	1 - c	—	—	—	—
	1 - d	—	—	—	—
	1 - e	—	—	—	—
	1 - f	—	—	—	—
	1 - g	—	—	—	—
	2 - a	—	—	—	—

COPYRIGHT © 1997 CANON INC.
CANON NP6330 REV.0 MAY 1997 PRINTED IN JAPAN (IMPRIME AU JAPON)

No. (adress)	LED	Description	Signal	Jack	Remarks
213 (P9)	1 - a	Horizontal registration clutch (CL8) drive signal	HRCD*	J103-A3	0:CL8 0N
	1 - b	Lower feeder outlet clutch (CL7) drive signal	LFCD*	J103-A5	0:CL7 0N
	1 - c	Horizontal registration solenoid (SL7) drive signal	HRSD*	J117-B10	0:SL7 0N
	1 - d	Lower feeder flapper solenoid (SL6) drive signal	LFSD*	J108-4	0:SL6 0N
	1 - e	—	—	—	—
	1 - f	Internal PCB signal	—	—	—
	1 - g	—	—	—	—
	2 - a	—	—	—	—
214 (PA)	1 - a	Lower feeder motor (M7) rotation signal	LFRON	J114-A8	0:CCW 1:CW
	1 - b	Lower feeder motor (M7) drive signal	LFD	J114-A9	1:M7 ON
	1 - c	Lower feeder motor (M7) clock signal	LFCLK	J114-A4	—
	1 - d	—	—	—	—
	1 - e	Scanning motor (M2) clock signal	SCCLK	J106-A3	—
	1 - f	Scanning motor (M2) phase return signal	SCRET	J106-A1	—
	1 - g	Delivery motor (M6) clock signal	DMCLK	J114-A7	—
	2 - a	Scanning motor (M2) rotation signal	SCRON	J106-A2	0:CCW 1:CW

COPYRIGHT © 1997 CANON INC.
CANON NP6330 REV.0 MAY 1997 PRINTED IN JAPAN (IMPRIME AU JAPON)

No. (adress)	LED	Description	Signal	Jack	Remarks
215 (PB)	1 - a	Horizontal registration motor (M5) clock signal	HRCLK	J106-B6	—
	1 - b	Horizontal registration motor (M5) rotation signal	HRRON	J106-B7	0:CCW 1:CW
	1 - c	Horizontal registration motor (M5) drive signal	HRD	J106-B8	1:M5 ON
	1 - d	—	—	—	—
	1 - e	Scanning motor (M2) drive signal	SCMD*	J106-A4	0:M2 ON
	1 - f	Excitation mode command 1	SCM1	J106-A5	0:during rotation
	1 - g	Excitation mode command 2	SCM2	J106-A6	1:during rotation
	2 - a	—	—	—	—
216 (PC)	1 - a	—	CCD*	J117-A10	—
	1 - b	—	—	—	—
	1 - c	—	—	—	—
	1 - d	—	—	—	—
	1 - e	—	—	—	—
	1 - f	—	—	—	—
	1 - g	—	—	—	—
	2 - a	—	—	—	—

COPYRIGHT © 1997 CANON INC.
CANON NP6330 REV.0 MAY 1997 PRINTED IN JAPAN (IMPRIME AU JAPON)

- **IPC**

No. (adress)	LED	Description	Signal	Jack	Remarks
217 (PA)	1 - a	Pedestal control signal 0	FEED-STOP	J112-A1	—
	1 - b	Pedestal control signal 1	FACE-DOWN	J112-A2	—
	1 - c	—	—	—	—
	1 - d	—	—	—	—
	1 - e	Cleaner motor (M11) clockwise signal	CLCW	J114-A1	1:forward
	1 - f	Cleaner motor (M11) counter-clockwise signal	CLCCW	J114-A2	1:reverse
	1 - g	Exhaust fan power signal	EF1POW EF2POW	J113-A9 J113-A7	1:high speed 0:low speed
	2 - a	Exhaust fan (FM2, FM3) drive signal	EF1D* EF2D*	J113-A10 J113-A8	0:Fan ON
218 (PB)	1 - a	Wire cleaner home position switch (MSW1) signal	WCHP	J109-A10	0:MSW1 ON
	1 - b	Wire cleaner rear position switch (MSW2) signal	WCRP	J109-A8	0:MSW2 ON
	1 - c	Internal PCB signal	—	—	—
	1 - d	Internal PCB signal	—	—	—
	1 - e	Dip switch (SW101-1) signal 0	—	—	0:SW ON
	1 - f	Dip switch (SW101-2) signal 1	—	—	0:SW ON
	1 - g	Dip switch (SW101-3) signal 2	—	—	0:SW ON
	2 - a	Dip switch (SW101-4) signal 3	—	—	0:SW ON
219 (P0)	1 - a	Cassette 1 paper length sensor unit (SEU1) signal 1	C1SZ1	J104-A2	0:PS101 ON
	1 - b	Cassette 1 paper length sensor unit (SEU1) signal 2	C1SZ2	J104-A1	0:PS102 ON
	1 - c	Cassette 2 paper length sensor unit (SEU2) signal 1	C2SZ1	J104-A6	0:PS103 ON
	1 - d	Cassette 2 paper length sensor unit (SEU2) signal 2	C2SZ2	J104-A5	0:PS104 ON
	1 - e	(For factory)	—	—	—
	1 - f	(For factory)	—	—	—
	1 - g	(For factory)	—	—	—
	2 - a	(For factory)	—	—	—

COPYRIGHT © 1997 CANON INC.

- **Slave**

No. (adress)	LED	Description	Signal	Jack	Remarks
220 (P4)	1 - a	Internal PCB signal	—	—	—
	1 - b	Segment signal	SEG0	J110-A1	—
	1 - c	Segment signal	SEG1	J110-A2	—
	1 - d	Segment signal	SEG2	J110-A3	—
	1 - e	Segment signal	SEG3	J110-A4	—
	1 - f	Segment signal	SEG4	J110-A5	—
	1 - g	Segment signal	SEG5	J110-A6	—
	2 - a	Segment signal	SEG6	J110-A7	—
221 (P6)	1 - a	—	—	—	—
	1 - b	Original size detection ON signal	—	—	1:ON
	1 - c	Internal PCB signal	—	—	—
	1 - d	—	—	—	—
	1 - e	—	—	—	—
	1 - f	—	—	—	—
	1 - g	—	—	—	—
	2 - a	—	—	—	—
222 (P8)	1 - a	—	—	—	—
	1 - b	Blank shutter home position sensor (PS20) signal	BLHP	J114-A12	0:at HP
	1 - c	Original size sensor 1 (PS21) signal	SIZE0	J103-B2	1:Original present
	1 - d	—	—	—	—
	1 - e	—	—	—	—
	1 - f	—	—	—	—
	1 - g	—	—	—	—
	2 - a	—	—	—	—

COPYRIGHT © 1997 CANON INC.

No. (adress)	LED	Description	Signal	Jack	Remarks
223 (P9)	1 - a	—	—	—	—
	1 - b	Original size sensor 2 (PS22) signal	SIZE1	J103-B5	1:Original present
	1 - c	Original size sensor 3 (PS23) signal	SIZE2	J103-B8	1:Original present
	1 - d	Original size sensor 4 (PS24) signal	SIZE3	J103-B11	1:Original present
	1 - e	—	—	—	—
	1 - f	—	—	—	—
	1 - g	—	—	—	—
	2 - a	—	—	—	—
224 (PB)	1 - a	Lens motor (M3) drive pulse signal A	LEA	J106-B2	—
	1 - b	Lens motor (M3) drive pulse signal B	LEB	J106-B3	—
	1 - c	—	—	—	—
	1 - d	—	—	—	—
	1 - e	Blank shutter motor (M8) drive pulse signal A	BLA	J114-A10	—
	1 - f	Blank shutter motor (M8) drive pulse signal B	BLB	J114-A11	—
	1 - g	Internal PCB signal	—	—	—
	2 - a	—	—	—	—
225 (PC)	1 - a	Lens motor (M3) hold signal	LEHLD	J106-B4	1:rotation
	1 - b	Blank shutter motor (M8) hold signal	BLHLD	J114-A3	1:rotation
	1 - c	—	—	—	—
	1 - d	—	—	—	—
	1 - e	—	—	—	—
	1 - f	Copyboard cover open / closed sensor (PS17) signal	CBCC	J102-A9	0:open
	1 - g	—	—	—	—
	2 - a	Lens home position sensor (PS19) signal	LHP	J107-10	0:at HP

COPYRIGHT © 1997 CANON INC.
CANON NP6330 REV.0 MAY 1997 PRINTED IN JAPAN (IMPRIME AU JAPON)

- **PAPER DECK PEDESTAL - M1**

No. (adress)	LED	Description	Signal	Jack	Remarks
226 (P0)	1 - a	—	—	—	—
	1 - b	—	—	—	—
	1 - c	—	—	—	—
	1 - d	—	—	—	—
	1 - e	—	—	—	—
	1 - f	—	—	—	—
	1 - g	—	—	—	—
	2 - a	—	—	—	—
227 (P1)	1 - a	—	—	—	—
	1 - b	Deck pick-up roller release solenoid (SL1) drive signal	DEPRL*	J110-B14	0:SL1 ON
	1 - c	—	—	—	—
	1 - d	Pedestal motor (M1) lock signal	LOCK*	J109-2	1:motor is normal
	1 - e	Deck size signal 1	SIZE1	J110-B9	—
	1 - f	Deck size signal 2	SIZE2	J110-B8	—
	1 - g	—	—	—	—
	2 - a	—	—	—	—
228 (P2)	1 - a	—	—	—	—
	1 - b	Communication signal (with copier)	FEED-STOP	J102-4	—
	1 - c	—	—	—	—
	1 - d	Communication signal (with copier)	FACE-DOWN	J102-6	—
	1 - e	—	—	—	—
	1 - f	—	—	—	—
	1 - g	Deck paper sensor (PS4) signal	DPD	J110-A5	1:paper present
	2 - a	—	—	—	—

COPYRIGHT © 1997 CANON INC.
CANON NP6330 REV.0 MAY 1997 PRINTED IN JAPAN (IMPRIME AU JAPON)

No. (adress)	LED	Description	Signal	Jack	Remarks
229 (P3)	1 - a	—	—	—	—
	1 - b	—	—	—	—
	1 - c	—	—	—	—
	1 - d	—	—	—	—
	1 - e	—	—	—	—
	1 - f	—	—	—	—
	1 - g	Pedestal motor speed control signal	PEDSP	J109-3	—
	2 - a	Pedestal motor (M1) drive signal	PEDMD	J109-1	1:M1 ON
230 (P6)	1 - a	—	—	—	—
	1 - b	Deck lifter clutch (CL4) signal	CL4D*	J110-B12	0:CL4 ON
	1 - c	—	—	—	—
	1 - d	—	—	—	—
	1 - e	—	—	—	—
	1 - f	—	—	—	—
	1 - g	—	—	—	—
	2 - a	—	—	—	—
231 (P7)	1 - a	—	—	—	—
	1 - b	—	—	—	—
	1 - c	—	—	—	—
	1 - d	—	—	—	—
	1 - e	Deck lifter position sensor (PS5) signal	DEL	J110-A11	1:upper position
	1 - f	—	—	—	—
	1 - g	Deck lifter upper limit sensor (PS6) signal	DLP	J110-A8	1:upper limit
	2 - a	—	—	—	—

COPYRIGHT © 1997 CANON INC.
CANON NP6330 REV.0 MAY 1997 PRINTED IN JAPAN (IMPRIME AU JAPON)

No. (adress)	LED	Description	Signal	Jack	Remarks
232 (PA)	1 - a	—	—	—	—
	1 - b	—	—	—	—
	1 - c	—	—	—	—
	1 - d	Vertical path roller 3 paper sensor (PS2) signal	PS2D	J107-9	1:paper present
	1 - e	Deck vertical path roller paper sensor (PS3) signal	DVRPD	J110-A2	1:paper present
	1 - f	—	—	—	—
	1 - g	—	—	—	—
	2 - a	—	—	—	—
233 (PB)	1 - a	—	—	—	—
	1 - b	—	—	—	—
	1 - c	Deck open sensor (PS7) signal	DEOP*	J107-B6	0:open
	1 - d	—	—	—	—
	1 - e	Right door open sensor (PS1) signal	RDOD*	J107-6	0:open
	1 - f	—	—		—
	1 - g	—	—		—
	2 - a	—	—		—
234 (PC)	1 - a	Vertical path roller 3 drive clutch (CL1) drive signal	CL1D*	J107-4	0:CL1 ON
	1 - b	Deck vertical path roller clutch (CL3) drive signal	CL3D*	J110-B4	0:CL3 ON
	1 - c	—	—	—	—
	1 - d	—	—		—
	1 - e	Deck pick-up clutch (CL2) drive signal	CL2D*	J110-B2	0:CL2 ON
	1 - f	—	—	—	—
	1 - g	—	—	—	—
	2 - a	Internal PCB signal	—	—	—

COPYRIGHT © 1997 CANON INC.
CANON NP6330 REV.0 MAY 1997 PRINTED IN JAPAN (IMPRIME AU JAPON)

- **ADF - E1**

No. (adress)	LED	Description	Signal	Jack	Remarks
235 (DF-A)	1 - a	Separation motor (M4) drive signal	SMD*	J4-6	0:M4 ON
	1 - b	Original set indicator LED signal	DSD*	J4-4	0:LED ON
	1 - c	Brake (BK) drive signal	BKD*	J6-2	0:BK ON
	1 - d	Retaining plate solenoid (SL2) drive signal	RTPSLD*	J14-2	0:SL2 ON
	1 - e	Paper sttoper solenoid (SL1) draive signal	STPSLD*	J11-2	0:SL1ON
	1 - f	Delivery motor (M3) rotation signal	DMRD	—	0:counterclock-wise 1:clockwise
	1 - g	Clutch (CL) drive signal	CLD*	J12-2	0:CL ON
	2 - a	—	—	—	—
236 (DF-B)	1 - a	Belt motor (M2) clock signal	BMCLK	—	—
	1 - b	Belt motor (M2) rotation signal	BMRD	—	0:counterclock-wise 1:clockwise
	1 - c	Belt motor (M2) drive signal	BMON	—	1:M2 ON
	1 - d	Delivery motor (M3) clock signal	DMCLK	—	—
	1 - e	Delivery motor (M3) drive signal	DMON	—	1:M3 ON
	1 - f	Pick-up motor (M1) drive signal	PUMD	J9-1	1:M1 ON
	1 - g	Separation sensor (S11) signal	LDD	J4-2	0:original present
	2 - a	—	—	—	—

COPYRIGHT © 1997 CANON INC.
CANON NP6330 REV.0 MAY 1997 PRINTED IN JAPAN (IMPRIME AU JAPON)

No. (adress)	LED	Description	Signal	Jack	Remarks
237 (DF-C)	1 - a	Communication signal	—	—	—
	1 - b	Communication signal	—	—	—
	1 - c	Communication signal	—	—	—
	1 - d	Belt motor clock sensor (S5) signal	BMCLK	J5-13	—
	1 - e	—	—	—	—
	1 - f	Delivery motor clock sensor (S6) signal	DMCLK	J5-10	—
	1 - g	—	—	—	—
	2 - a	—	—	—	—
238 (DF-EA)	1 - a	—	—	—	—
	1 - b	—	—	—	—
	1 - c	DIP SW 3, 4	—	—	—
	1 - d	DIP SW 1, 2	—	—	—
	1 - e	Push switch	—	—	—
	1 - f	Paper unit guide solenoid (SL3) drive signal	JMPSL*	J15-2	0:SL3 ON
	1 - g	LED 1 ON signal (PCB internal signal)	—	—	0:ON
	2 - a	LED 2 ON signal (PCB internal signal)	—	—	0:ON
239 (DF-EB)	1 - a	—	—	—	—
	1 - b	—	—	—	—
	1 - c	—	—	—	—
	1 - d	—	—	—	—
	1 - e	—	—	—	—
	1 - f	—	—	—	—
	1 - g	—	—	—	—
	2 - a	—	—	—	—

COPYRIGHT © 1997 CANON INC.
CANON NP6330 REV.0 MAY 1997 PRINTED IN JAPAN (IMPRIME AU JAPON)

No. (adress)	LED	Description	Signal	Jack	Remarks
240 (AD1)	—	Registration sensor (S2) signal	PDP3	J5-15	in hex notation
241 (AD2)	—	Origianal sensor (S1) signal	DEP	J10-3	
242 (AD3)	—	—	—	—	
243 (AD4)	—	Pick-up sensor (S3) signal	PDP1	J5-4	
244 (AD5)	—	Delivery sensor (S4) signal	PDP2	J5-7	
245 (AD6)	—	—	—	—	
246 (AD7)	—	Open/closed sensor (S8) signal	ADFC	J13-2	
247 (AD8)	—	Top cover sensor (S7) signal	UPCC2	J10-6	

COPYRIGHT © 1997 CANON INC.
CANON NP6330 REV.0 MAY 1997 PRINTED IN JAPAN (IMPRIME AU JAPON)

- **RDF-F1**

No. (adress)	LED	Description	Signal	Jack	Remarks
235 (DF-A)	1 - a	Re-circulating motor drive signal	RMD*	J8-6	1:ON
	1 - b	Original set indicator LED ON signal	DSD*	J8-4	1:ON
	1 - c	Clutch drive signal	CLD*	J13-2	1:ON
	1 - d	Brake drive signal	BKD*	J6-2	1:ON
	1 - e	Stopper plate solenoid drive signal	STPSLD*	J5-4	1:ON
	1 - f	paper deflecting plate solenoid drive signal	DFSLD*	J4-2	1:ON
	1 - g	PCB internal signal	—	—	—
	2 - a	Paper unit guide solenoid drive signal	JMPSL*	J15-2	0:ON
236 (DF-B)	1 - a	—	—	—	—
	1 - b	Belt motor clock pulse	—	TP1-1	—
	1 - c	Belt motor direction switching signal	—	—	—
	1 - d	Belt motor drive signal	—	—	—
	1 - e	Feeding motor drive signal	FMD	TP2-4	—
	1 - f	Feeding motor short brake signal	—	—	—
	1 - g	Pick-up motor drive signal	PUMD	J12-1	1:ON
	2 - a	Paper retaining plate solenoid drive signal	WSLD*	J5-2	0:ON
237 (DF-C)	1 - a	Communication signal	—	—	—
	1 - b	Communication signal	—	—	—
	1 - c	PCB internal signal	—	—	—
	1 - d	Belt motor clock sensor signal	BMCLK	J9-23	—
	1 - e	PCB internal signal	—	—	—
	1 - f	PCB internal signal	—	—	—
	1 - g	PCB internal signal	—	—	—
	2 - a	PCB internal signal	—	—	—

COPYRIGHT © 1997 CANON INC.
CANON NP6330 REV.0 MAY 1997 PRINTED IN JAPAN (IMPRIME AU JAPON)

No. (adress)	LED	Description	Signal	Jack	Remarks
238 (DF-EA)	1 - a	Reversal sensor signal	PDP5	J9-17	1:original present
	1 - b	Pick-up roller sensor signal	PUSP	J9-8	1:roller at HP
	1 - c	Pick-up sensor signal	PDP1	J9-14	1:original present
	1 - d	Delivery sensor signal	PDP2	J9-11	1:original present
	1 - e	Re-circulating sensor signal	LDD	J8-2	0:bar on original
	1 - f	LED 1 ON signal	—	—	—
	1 - g	LED 2 ON signal	—	—	—
	2 - a	—	—	—	—
239 (DF-EB)	1 - a	DIP switch setting	—	—	—
	1 - b	DIP switch setting	—	—	—
	1 - c	DIP switch setting	—	—	—
	1 - d	DIP switch setting	—	—	—
	1 - e	DIP switch setting	—	—	—
	1 - f	DIP switch setting	—	—	—
	1 - g	DIP switch setting	—	—	—
	2 - a	DIP switch setting	—	—	—
240 (AD1)	—	—	—	—	in hex notation
241 (AD2)	—	Registration sensor signal	PDP3	JP-25	
242 (AD3)	—	—	—	—	
243 (AD4)	—	Original sensor signal	DEP1	J5-5	
244 (AD5)	—	Push switch signal	—	—	
245 (AD6)	—	RF switch signal	RFC	J2-6	
246 (AD7)	—	Upper cover sensor signal	UPCC1*	J9-30	
247 (AD8)	—	—	—	—	

COPYRIGHT © 1997 CANON INC.
CANON NP6330 REV.0 MAY 1997 PRINTED IN JAPAN (IMPRIME AU JAPON)

- **Sorter-E1**

No. (adress)	LED	Description	Signal	Jack	Remarks
248 (ST-P6)	1 - a	Serial clock for EEPROM	EESCK	—	—
	1 - b	Serial output data EEPROM	EED1	—	—
	1 - c	Chip select signal for EEPROM	EECS	—	1:ON
	1 - d	Bin shift motor (M2) drive signal	BSMD	—	1:M2 ON
	1 - e	Bin shift motor (M2) PWM signal	BSM	—	—
	1 - f	Bin shift motor (M2) DOWN signal	BMDWN	—	—
	1 - g	Bin shift motor (M2) UP signal	BMUP	—	—
	2 - a	Feeding motor (M1) PWM signal	FEEDPWM	—	—
249 (ST-P7)	1 - a	Delivery sensor (PI1) paper detection signal	PD	—	1:Paper present
	1 - b	Bin lower limit sensor (MS4) signal	BHP	J7-7	0:lower position
	1 - c	Lead cam home position sensor (PI3) signal	LDP	J3-5	1:at HP
	1 - d	Joint sensor (MS1) signal	JNTS	J4-2	0:released
	1 - e	24V DOWN detection signal	—	—	0:24V DOWN
	1 - f	—	—	—	—
	1 - g	EEPROM serial input data	EED0	—	—
	2 - a	EEPROM BUSY signal	EEBSY	—	0:BUSY
250 (ST-EA)	1 - a	Dip switch signal 1	—	—	—
	1 - b	Dip switch signal 2	—	—	—
	1 - c	Dip switch signal 3	—	—	—
	1 - d	Dip switch signal 4	—	—	—
	1 - e	Push switch (SW1) signal	—	—	—
	1 - f	Push switch (SW2) signal	—	—	—
	1 - g	—	—	—	—
	2 - a	—	—	—	—

COPYRIGHT © 1997 CANON INC.
CANON NP6330 REV.0 MAY 1997 PRINTED IN JAPAN (IMPRIME AU JAPON)

No. (adress)	LED	Description	Signal	Jack	Remarks
251 (ST-EB)	1 - a	—	—	—	—
	1 - b	Feeding motor (M1) CW/CCW signal	FMA/FMB	—	0:CW
	1 - c	Feeding motor (M1) current switching signal 1	FMCCC1	—	—
	1 - d	Feeding motor (M1) current switching signal 2	FMCCC2	—	—
	1 - e	LED ON signal	LED	—	0:ON
	1 - f	—	—	—	—
	1 - g	—	—	—	—
	2 - a	—	—	—	—
252 (ST-P4)	1 - a	Bin shift motor (M2) clock signal	—	—	—
	1 - b	PCB internal signal	—	—	—
	1 - c	PCB internal signal	—	—	—
	1 - d	PCB internal signal	—	—	—
	1 - e	PCB internal signal	—	—	—
	1 - f	PCB internal signal	—	—	—
	1 - g	PCB internal signal	—	—	—
	2 - a	PCB intenal signal	—	—	—
253 (AD0)	—	—	—	—	in hex notation
254 (AD1)	—	—	—	—	
255 (AD2)	—	—	—	—	
256 (AD3)	—	—	—	—	
257 (AD4)	—	—	—	—	
258 (AD5)	—	—	—	—	
259 (AD6)	—	—	—	—	
260 (AD7)	—	—	—	—	

COPYRIGHT © 1997 CANON INC.
CANON NP6330 REV.0 MAY 1997 PRINTED IN JAPAN (IMPRIME AU JAPON)

- **Stapler Sorter - D2**

No. (adress)	LED	Description	Signal	Jack	Remarks
248 (ST-A)	1 - a	Staple door open signal	SPLOPN	J3-7	1:open
	1 - b	Joint switch open signal	SOP	J3-5	1:open
	1 - c	Lead cam home position sensor signal	LCHP	J8-3	1:at HP
	1 - d	Stapler slide home position sensor signal	SPLACT	J7-3	0:stapling position
	1 - e	Bin unit lower limit sensor signal	BLL	J9-1	1:lower limit
	1 - f	Guide bar home position sensor	SGBHP	J4-6	1:at HP
	1 - g	Stapler home position sensor signal	SPUHP	J3-3	1:at HP
	2 - a	Stapling home position sensor signal	SPLHP	J11-3	0:at HP
249 (ST-B)	1 - a	Guide bar motor drive signal	B*	—	alternates between 1 and 0 while ON
	1 - b	Guide bar motor drive signal	B	—	
	1 - c	Guide bar motor drive signal	A*	—	
	1 - d	Guide bar motor drive signal	A	—	
	1 - e	Guide bar motor ON signal	—	—	1:ON
	1 - f	Stapler motor normal rotation signal	STMFW*	—	1:motor normal rotation
	1 - g	Stapler motor reverse rotation signal	STMRV*	—	1:motor reverse rotation
	2 - a	Stapler swing motor drive signal	—	—	—
250 (ST-C)	1 - a	Communication signal	—	—	—
	1 - b	Communication signal	—	—	—
	1 - c	Bin shift up signal	—	—	1:up
	1 - d	Bin shift down signal	—	—	1:down
	1 - e	Communication signal	—	—	—
	1 - f	Feeding motor clock pulse	FMCLK	J8-5	—
	1 - g	Communication signal	—	—	—
	2 - a	Feeding motor drive signal	FMD	J6-2	1:ON

COPYRIGHT © 1997 CANON INC.
CANON NP6330 REV.0 MAY 1997 PRINTED IN JAPAN (IMPRIME AU JAPON)

No. (adress)	LED	Description	Signal	Jack	Remarks
251 (ST-E0)	1 - a	—	—	—	—
	1 - b	Staple absent LED ON signal	STEMP*	J7-10	0:staple absent
	1 - c	—	—	—	—
	1 - d	Staple ready indicator signal	SPLOK*	J10-4	0:LED ON
	1 - e	—	—	—	—
	1 - f	—	—	—	—
	1 - g	Stapler safety sensor signal	SPLSFT	J3-1	—
	2 - a	—	—	—	—
252 (ST-E1)	1 - a	Delivery sensor signal	SPD	J10-1	1:paper present
	1 - b	—	—	—	—
	1 - c	Manual staple key signal	MNSPL*	J10-6	0:key is prssed
	1 - d	—	—	—	—
	1 - e	—	—	—	—
	1 - f	—	—	—	—
	1 - g	—	—	—	—
	2 - a	—	—	—	—
253 (AD0)	—	—	—	—	in hex notation
254 (AD1)	—	—	—	—	
255 (AD2)	—	—	—	—	
256 (AD3)	—	Bin paper sensor signal	BPD	J4-4	
257 (AD4)	—	Dip switch signal 4	—	—	
258 (AD5)	—	Dip switch signal 3	—	—	
259 (AD6)	—	Dip switch signal 2	—	—	
260 (AD7)	—	Dip switch signal 1	—	—	

COPYRIGHT © 1997 CANON INC.
CANON NP6330 REV.0 MAY 1997 PRINTED IN JAPAN (IMPRIME AU JAPON)

F. Adjustment Mode [3]

To start adjustment mode, press '3' (keypad) and the OK key in sequence.
To select an item, press the number (keypad) and the OK key in sequence.
To change the setting, press the number (keypad) or the zoom (+)/(-) key and the OK key in sequence.

- Press the % key to enter a negative number.

To delete an item, press the Clear key.

- A press on the Copy Start key while the service mode description is being shown starts copying operation.

No.	Description	Settings	Remarks
301	Scanning lamp intensity adjustment	0~255	A higher setting obtain darker copies.
302	Developing bias DC component adjustment	-25~25	See p. 11-18.
303	AE mode newspaper original DC bias adjustment	0~255	See p. 11-17.
304	AE mode scanning lamp activation voltage automatic adjustment	0~255	See p. 11-16.
305	Leading edge margin adjustment	-127~127	A higher setting delays the timing at which the registration clutch turns on, thereby decreasing the margin. unit: 0.36 mm
306	Leading edge non-image width adjustment	-127~127	A higher setting delays the timing at which the blank shutter solenoid turns on, thereby increasing the non-image width. unit: 0.36 mm
307	Trailing edge non-image width adjustment	-127~127	A higher setting delays the timing at which the blank shutter solenoid turns off, thereby decreasing the trailing edge non-image width. unit: 0.36 mm
308	Left/right margin adjustment	-30~30	A higher setting increases the left/right margin. unit: 0.36 mm
311	Multifeeder paper width detection reference point 1	0~255	Use the keypad.
312	Multifeeder paper width detection reference point 2	0~255	Use the keypad.
313	Multifeeder paper width detection reference point 3	0~255	Use the keypad.

COPYRIGHT © 1997 CANON INC.

No.	Description	Settings	Remarks
314	Cassette 1 paper width detection reference point 1	0~255	Use the keypad.
315	Cassette 1 paper width detection reference point 2	0~255	Use the keypad.
316	Cassette 2 paper width detection reference point 1	0~255	Use the keypad.
317	Cassette 2 paper width detection reference point 2	0~255	Use the keypad.
318	Not used	—	—
319	Not used	—	—
320	Not used	—	—
321	Not used	—	—
324	Horizontal registration paper edge sensor position adjustment	-50~50	A higher setting increases the shift of the horizontal paper edge sensor, thereby increasing the margin at the front. unit: 0.5 mm
325	DF original stop position adjustment	-7~7	A higher setting moves the original stop position to the right unit: 0.33 mm
326	Book frame erasing width adjustment	15~34	A higher setting increases the book frame erasing width. unit: 1 mm
327	Multifeeder pick-up trailing edge margin adjustment (free size pick-up)	-32~32	A higher setting delays the timing at which the blank shutter solenoid turns off, thereby decreasing the trailing edge margin. unit: 0.36 mm

COPYRIGHT © 1997 CANON INC.
CANON NP6330 REV.0 MAY 1997 PRINTED IN JAPAN (IMPRIME AU JAPON)

G. Function Mode [4]

To start function mode, press '4' (keypad) and the OK key in sequence.
To select an item, press the number (keypad).

- To exeute the mode, press the OK key.

Note:

You must make sure that the copier is in standby state before executing any of the items.

No.	Description	Remarks
401	Use it to reset E000, E001, E002, E003, or E800.	To reset an error code, press the OK key. A press on the OK key will initialize the code and turn off the power switch.
402	Use it to execute AE automatic adjustment.	See p. 11-15.
403	Use it to adjust the fixing roller nip.	See p. 11-41.
404	Use it to check the LED lamps on the control panel.	A press on the OK key turn on all LED lamps on the control panel (for 10 sec).
405	Use it to check the activation of the scanning lamp.	A press on the OK key turns on the scanning lamp (for 3 sec).
406	Use it to check the activation of the pre-exposure lamp.	A press on the OK key turns on the pre-exposure lamp (for 3 sec).
407	Use it to supply toner at time of installation.	A press on the OK key starts supplying of toner from the hopper to the developing assembly automatically (for about 6 min): the operation will stop automatically. This mode ignores the signal from the developing toner sensor. If you start the mode by mistake, be sure to turn off the power switch immediately.
408	Use it to cause the developing assembly to rotate idly.	A press on the OK key causes the developing assembly to rotate idly (for about 6 sec).
409	Use it to check the operation of the hopper motor.	A press on the OK key causes the hopper motor to rotate (for 3 sec).

COPYRIGHT © 1997 CANON INC.

No.	Description	Remarks
410	Use it to check the operation of the blank shutter motor.	Place two sheets of A4 copy paper on the multifeeder tray, and open the copyboard cover. Press the OK key so that the blank shutter will shift and two copies will be made. (The margin changes from A6R to A4R.)
411	Use it to initialize the data of the RAM on the DC controller PCB.	Press the OK key and then the user mode key to initialize the RAM.
412	Use it to automatically adjust the multifeeder paper width detection reference point 1, 2, or 3.	See p. 11-44.
413	Use it to automatically adjust the cassette 1 paper width detection reference point 1 or 2.	See p. 11-43.
414	Use it to automatically adjust the cassette 2 paper width detection reference point 1 or 2.	See p. 11-43.
415	Not used	—
416	Not used	—

COPYRIGHT © 1997 CANON INC.
CANON NP6330 REV.0 MAY 1997 PRINTED IN JAPAN (IMPRIME AU JAPON)

H. Optional Settings Mode [5]

To start optional settings mode, press '5' (keypad) and the OK key in sequence.
To select an item, press the number (keypad) and the OK key in sequence.
To change the setting, press the Zoom (+) / (-) key and the OK key.
To delete an item, press the Clear key.

- A press on the Copy Start key while the service mode description is being shown starts copying operation.

No.	Function	Description	Remarks
501	Use it to turn on/off the auto power-off function.	Enable/disable the function as necessary.	on:Enable auto power-off. off:Disable auto power-off.
502	Use it to switch the density notation (9 ⇔17).	Select either 9-level or 17-level notation for the density indicator LED.	0:9 level 1:17 level
503	Use it to turn on/off the size detection function.	Enable or disable the original size detection function as necessary.	on:Enable size detection. off:Disable size detection.
504	Use it to change the upper limit imposed on the copy volume.	Select from 1 to 100 to change the upper limit.	1 to 100 • To change the setting, press the number (key-pad) and the OK key.
505	Use it to select U size paper (G1).	Use it for G1 paper size.	0:G-LTR 1:K-LGL
506	Use it to select U size paper (G2).	Use it for G2 paper size.	0:FOOLSCAP 1:OFFICIO 2:E-OFFICIO 3:A-LGL 4:A-OFFICIO
507	Use it to select U size paper (G3).	Use it for G3 paper size.	0:G-LGL 1:FOLIO 2:AUS FLS
508	Use it to select U size paper (G4).	Use it for G4 paper size.	0:LTR 1:A-LTR
509	Use it to select cleaning belt feeding length.	Use it to switch between standard and doubled length.	0:Standard. 1:Double.
510	Use it to select the static eliminator bias for multifeeder pick-up.	As necessary, make a switch-over so that the voltage applied to the static eliminator when picking up from the multifeeder will always be 4.0 kV.	0:3 kV 1:4 kV

COPYRIGHT © 1997 CANON INC.

No.	Function	Description	Remarks
511	Use it to turn on/off the auto energy saver function.	Enable/disable the function as necessary.	on: Enable auto energy saver function. off: Disable auto energy saver function.
512	Use it to switch the copier's operation mode between AB-configuration and Inch-configuration.*1	You have to select the copier's operation mode when the AB/Inch-configuration is selected using SW101.	-1: AB-configuration -0: Inch-configuration

*1: If the setting is altered using this mode, the settings for standard mode and stored by the copier's automatic memory function are reset, then; the power switch is turned off.

COPYRIGHT © 1997 CANON INC.
CANON NP6330 REV.0 MAY 1997 PRINTED IN JAPAN (IMPRIME AU JAPON)

I. Counter mode [6]

To start counter mode, press '6' (keypad) and the OK key in sequence.
To select an item, press the number (keypad) and the OK key in sequence.

- To initialize the counter, select the appropriate item; then, press the user mode key and the OK key in sequence.

To delete an item, press the Clear key.

- A press on the Copy Start key while the service mode description is being shown starts copying operation.

No.	Description	Remarks
601	Indicates the large-size total copy count.	Incremented upon delivery.
602	Indicates the large-size copy count (from multifeeder).	
603	Indicates the large-size copy count (from cassette 1).	
604	Indicates the large-size copy count (from cassette 2).	
605	Not used	
606	Not used	
607	Indicates the large-size copy count (2nd side pick-up for 2-sided copies).	
608	Indicates the count of large-size original feeding.	Incremented upon original pick-up.
609	Indicates the small-size total copy count.	Incremented upon delivery.
610	Indicates the small-size copy count (from multifeeder).	
611	Indicates the small-size copy count (from cassette 1).	
612	Indicates the small-size copy count (from cassette 2).	
613	Indicates the small-size copy count (from paper deck).	
614	Not used	
615	Indicates the small-size copy count (2nd side pick-up for 2-sided copies).	
616	Indicates the count of small-size original feeding.	Incremented upon original pick-up.
617	Service counter 1	Incremented upon pick-up.
618	Service counter 2	
619	Indicates how many times the cleaning belt solenoid has turned on*.	Incremented upon activation.

* At '250,000', error code E005 will be indicated. E005 will be cleared when the counter ('619') is cleared.

COPYRIGHT © 1997 CANON INC.

- **Counter indicator**

Turn on the indicators on the indication section one by one until the count value is indicated. (up to 8 digits)

The display changes sequentially at intervals of 700 msec.

Example ; count: 751320

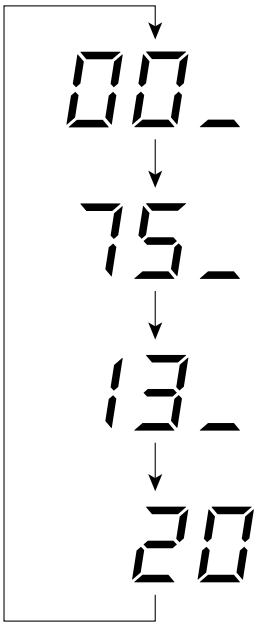

COPYRIGHT © 1997 CANON INC.
CANON NP6330 REV.0 MAY 1997 PRINTED IN JAPAN (IMPRIME AU JAPON)

VIII. SELF DIAGNOSIS

The microprocessor on the copier's DC controller is equipped with a function that checks the condition of the copier (particularly, its sensors). The microprocessor runs a check at such times as programmed and indicates an error code or executes error auto power-off or error shut-off upon detection of an error.

A. Copier

Code	Cause	Description
E000	•Thermistor (TH1; off contact, poor contact, open circuit) •Heater (H1, H2; open circuit) •Thermal switch (TS1; open circuit) •SSR (faulty) •DC controller PCB (faulty)	The temperature of the upper fixing assembly does not reach 40°C within 27 sec after power-on. (Notes 1, 2) When an error associated with 'E000' is detected, the copier turns off the power switch in 2 sec and then turns off all power supplies.
E001	•Thermistor (TH1; short circuit) •SSR (faulty) •DC controller PCB (faulty)	The temperature of the upper fixing assembly exceeds 220°C. (Notes 1, 2) When an error associated with 'E001' is detected, the copier turns off the power switch in 2 sec and then turns off all power supplies.
E002	•Thermistor (TH1; poor contact, open circuit) •Heater (H1, H2; open circuit) •Thermal switch (TS1; open circuit) •SSR (faulty) •DC controller PCB (faulty)	•The temperature does not reach 75°C within 35 sec after reaching 40°C. •The temperature does not reach 100°C within 25 sec after reaching 75°C. •The temperature does not reach 120°C within 20 sec after reaching 100°C. •The temperature does not reach 140°C within 20 sec after reaching 120°C. •The temperature does not reach 160°C within 20 sec after reaching 140°C. •The temperature does not reach 170°C within 15 sec after reaching 160°C. •The temperature does not reach 180°C within 15 sec after reaching 170°C. •The temperature does not reach 185°C within 7 sec after reaching 180°C. •The temperature does not reach 190°C within 7 sec after reaching 185°C. (Notes 1, 2) When an error associated with 'E002' is detected, the copier turns off the power switch in 2 sec and then turns off all power supplies.

COPYRIGHT © 1997 CANON INC.

Code	Cause	Description
E003	•Thermistor (TH1; poor contact, open circuit) •Heater (H1, H2; open circuit) •Thermal switch (TS1; open circuit) •SSR (faulty) •DC controller PCB (faulty)	•The temperature drops to 100°C or less after reaching a specific temperature. (Notes 1, 2) When an error associated with 'E003' is detected, the copier turns off the power switch in 2 sec and then turns off all power supplies.
E004	•SSR (short circuit) •Heater (H1, H2; open circuit) •Thermal switch (TS1; open circuit)	The SSR has turned while the heater (H1, H2) is off when the power switch is turned on. (Note 2)
E005	•Cleaning belt (fixing assembly; taken up) (In the case that the counter value of the service mode No.619 reaches to "250,000".	The take-up length of the cleaning belt inside the fixing assembly exceeds a specific value.
E010	•Main motor (M1; faulty) •Main motor driver PCB (faulty) •DC controller PCB (faulty)	After the main motor drive signal has been generated, two or more clock pulses are not input within 1 sec.
E030	•Counter (open circuit) •DC controller PCB (faulty)	A check is made before the counter is turned on and off. (When the counter is turned on, normal if the counter drive signal is '0'; when the counter is turned off, normal if the counter drive signal is '1'.)
E031	•Option counter (open circuit) •DC controller PCB (faulty)	A check is made before the option counter is turned on and off. (When the option counter is turned on, normal if the option counter drive signal is '0'; when the option counter is turned off, normal if the option counter drive signal is '1'.)
E051	•Horizontal registration roller home position sensor (PS15; faulty) •Horizontal registration motor (M5; faulty) •Motor driver 1 PCB (faulty) •DC controller PCB (faulty)	The horizontal registration roller home position signal (HRHP) is not generated within 2 sec after the copy start key (2 sided) is turned on.

COPYRIGHT © 1997 CANON INC.

Code	Cause	Description
E053	•Horizontal registration paper edge sensor (PS16; faulty) •Horizontal registration motor (M5; faulty) •Motor driver 1 PCB (faulty) •DC controller PCB (faulty)	The horizontal registration paper edge signal (HRPD) is not generated within 10 sec after the power switch is turned on.
E060	•Wire cleaner home position switch (MSW1; faulty) •Wire cleaner rear position switch (MSW2; faulty) •Cleaner motor (M11; faulty) •Motor driver 2 PCB (faulty) •DC controller PCB (faulty)	The other switch is not turned on within 20 sec after the cleaner is passed through the first switch detecting range.
E202	•Scanner home position sensor (PS1; faulty) •Scanning motor (M2; faulty) •Motor driver 1 PCB (faulty) •DC controller PCB (faulty)	•The scanner home position signal (SCHP) does not go '1' within 10 sec after the power switch or the door switch has been turned on. •The scanner took 10 sec or more to make a round trip (SCFW + SCRV).
E203	•Scanner home position sensor (PS1; faulty) •DC controller PCB (faulty)	The scanner home position signal (SCHP) has occurred for 2 pulses or more within 0.5 sec when the scanner motor turned on.
E204	•Scanner home position sensor (PS1; faulty) •Scanning motor (M2; faulty) •Motor driver 1 PCB (faulty) •DC controller PCB (faulty)	The scanner home position signal does not turn off after the scanner has started to move forward.
E210	•Lens home position sensor (PS19; faulty) •Lens drive motor (M3; faulty) •Motor driver 1 PCB (faulty) •DC controller PCB (faulty)	•The lens home position signal (LHP) is not generated within 9 sec after the lens motor starts to rotate when the power switch or the door switch has been turned on. •The lens home position signal (LHP) does to turn off within 1 sec after it has been generated.
E220	•Scanning lamp •Lamp regulator (faulty) •DC controller PCB	The scanning lamp does not turn on within 0.5 sec after the DC controller PCB has generated the scanning lamp ON signal. When an error associated with 'E220' is detected, the copier turns off the power switch in 2 sec and then turns off all power supplies.

COPYRIGHT © 1997 CANON INC.

Code	Cause	Description
E224	•Blank shutter motor (M8; faulty) •Blank shutter home position sensor (PS20; faulty) •Motor driver 2 PCB (faulty) •DC controller PCB (faulty)	•The blank shutter home position signal (BLHP) is not generated within 7 sec after the power switch has been turned on. •The blank shutter home position signal (BLHP) does not turn off within 1 sec after it has been generated.
E240	•DC controller PCB (faulty)	An error has occurred in the communication between the microprocessor master (IC116) and the microprocessor slave (IC104).
E710	•DC controller PCB (faulty)	IC117 on the DC controller PCB cannot be initialized at time of power-on.
E711	•DC controller PCB (faulty)	IC117 on the DC controller PCB has gone out of order at time of power-on.
E712	Feeder •DF control PCB (faulty) •Connector (poor contact)	The communication IC on the DF controller PCB has gone out of order.
E716	Pedestal •Pedestal controller PCB (faulty) •Connector (poor contact)	The communication IC on the pedestal controller PCB has gone out of order. A communication error has occurred.
E800	•Auto power-off function (open circuit) •DC contorller PCB (faulty)	An open circuit in the auto power off circuit has been detected. (Note 1)

Note:

1. When the self diagnosis mechanism has detected an error, you may reset the copier by turning off its switch once.
   This, however, does not apply to ‘E000’,‘E001’,‘E002’,‘E003’ and ‘E800’. To reset these error codes, select No.401 in service mode [4], and press the OK key. This arrangement is adopted to prevent the user from casually resetting the copier when the cause of the error is an open circuit in the thermistor, thereby protecting the rollers inside the fixing assembly against heat damage.
2. If ‘E000’,‘E001’,‘E002’,‘E003’, or ‘E004’ is detected, the copier forces off the power switch in about 2 sec.

COPYRIGHT © 1997 CANON INC.
CANON NP6330 REV.0 MAY 1997 PRINTED IN JAPAN (IMPRIME AU JAPON)

B. Pedestal Self Diagnosis

Code	Cause	Timing
E901	•Pedestal motor (M1; faulty) •Pedestal controller PCB (faulty)	The motor clock signal is not input within 1 sec after pedestal motor drive signal has been generated.

COPYRIGHT © 1997 CANON INC.

C. RDF/ADF Self Diagnosis

Code	Cause	Timing
E400	•Communication (error; data, with copier)	The communication with the copier has been disrupted for 5 sec or more. (Check are made at all times.)
E401	RDF •Pick-up motor (fails to rotate) •Pick-up roller sensor (faulty)	•A flag is attached to the spindle of the pick-up motor, and the rotation of the pick-up motor is monitored in reference to the flag blocking the pick-up roller sensor. Pick-up roller sensor does not turn on/off twice or more within 1 sec.
E402	•Belt motor (fails to rotate) •Belt motor clock sensor (faulty)	The number of belt clock pulses within 200 msec is below a specific value.
E403	RDF •Feeding motor (fails to rotate) •Feeding motor clock sensor (faulty)	The number of feeding motor clock pulses within 200 msec is below a specific value.
E404	ADF •Delivery motor (fails to rotate) •Delivery motor clock sensor (faulty)	The number of delivery motor clock pluses within 200 msec is below a specific value.
E411	•Original detection (faulty) •Registration sensor (faulty) •Original end sensor (faulty)	The sensor output is 2.3 V or more in the absence of paper.

Note:

When the self diagnosis mechanism has detected an error, you can reset the copier by turning off the power switch once.
You may continue to make copies even when the DF is out of order; lift the DF, and place the original on the copyboard.

COPYRIGHT © 1997 CANON INC.
CANON NP6330 REV.0 MAY 1997 PRINTED IN JAPAN (IMPRIME AU JAPON)

D. Sorter Self Diagnosis

Code	Cause	Timing
E500	•CPU or communication IC on sorter controller (faulty)	An error has occurred in the communication between the sorter and the copier.
E510	•Feeder motor (fails to rotate)	The clock signal from the motor remains off for 250 msec.
E530	•Stapler guide bar swing motor (fails to rotate)	The home position sensor does not turn off when 2560 pulses of the motor drive signal have been generated.
E531	•Stapler unit swing motor (fails to rotate)	•The stapler unit swing sensor does not turn off within 500 msec after the motor drive signal has been generated. •The stapler unit swing sensor does not turn on within 1000 msec after it has turned off.
E540	•Bin shift motor (fails to rotate)	•The lead cam home position sensor does not turn off within 2000 msec after the motor drive signal has been generated. •The lead cam home position sensor does not turn on within 2000 msec after it has turned off.
E541	•Bin motor (faulty) •Lead cam drive gear (wrong installation)	The lead cam position sensor does not turn on within 1.0 sec after it has turned off.

■ Resetting the Errors

1. If the copier is in the middle of operation,

① It turns on the “Jam indicator”.
② Turn off and on the power switch removing the jam.
③ The copier runs a self check. It is reset if the result is good. If the result is not good, it enters down state*, indicating ‘E5XX’; on the control panel.

2. If the copier is not operating,

① Jam indicator indicates.
② When the power has been turnd off and then on again, it runs a self check. it is reset if the result is good. If the result is not good, it enters down state*, indicating ‘E5XX’; on the control panel.

• Down State

① It indicates ‘E5XX’.
② When the sorter has been detached**, it is ready for operation unless a mode requiring the sorter is selected.

■ The copier will be reset if the result of a self check after the power has been turned off and then on again is good even in down state. (This is with the sorter connected to the copier.)

* State in which an error code is indicated.
** Turn off the joint sensor. The connector may remain connected.

COPYRIGHT © 1997 CANON INC.

APPENDIX

A. GENERAL TIMING CHART A-1
B. SIGNALS AND ABBREVIATIONS..A-2
C. GENERAL CIRCUIT DIAGRAM....A-5
D. PEDESTAL CONTROLLER A-7
E. SPECIAL TOOLS LIST A-9
F. SOLVENTS AND OILS.....A-10

COPYRIGHT © 1997 CANON INC. CANON NP6330 REV. 0 MAY 1997 PRINTED IN JAPAN (IMPRIME AU JAPON)

A. GENERAL TIMING CHART

• A4, 2 Copies, Continuous

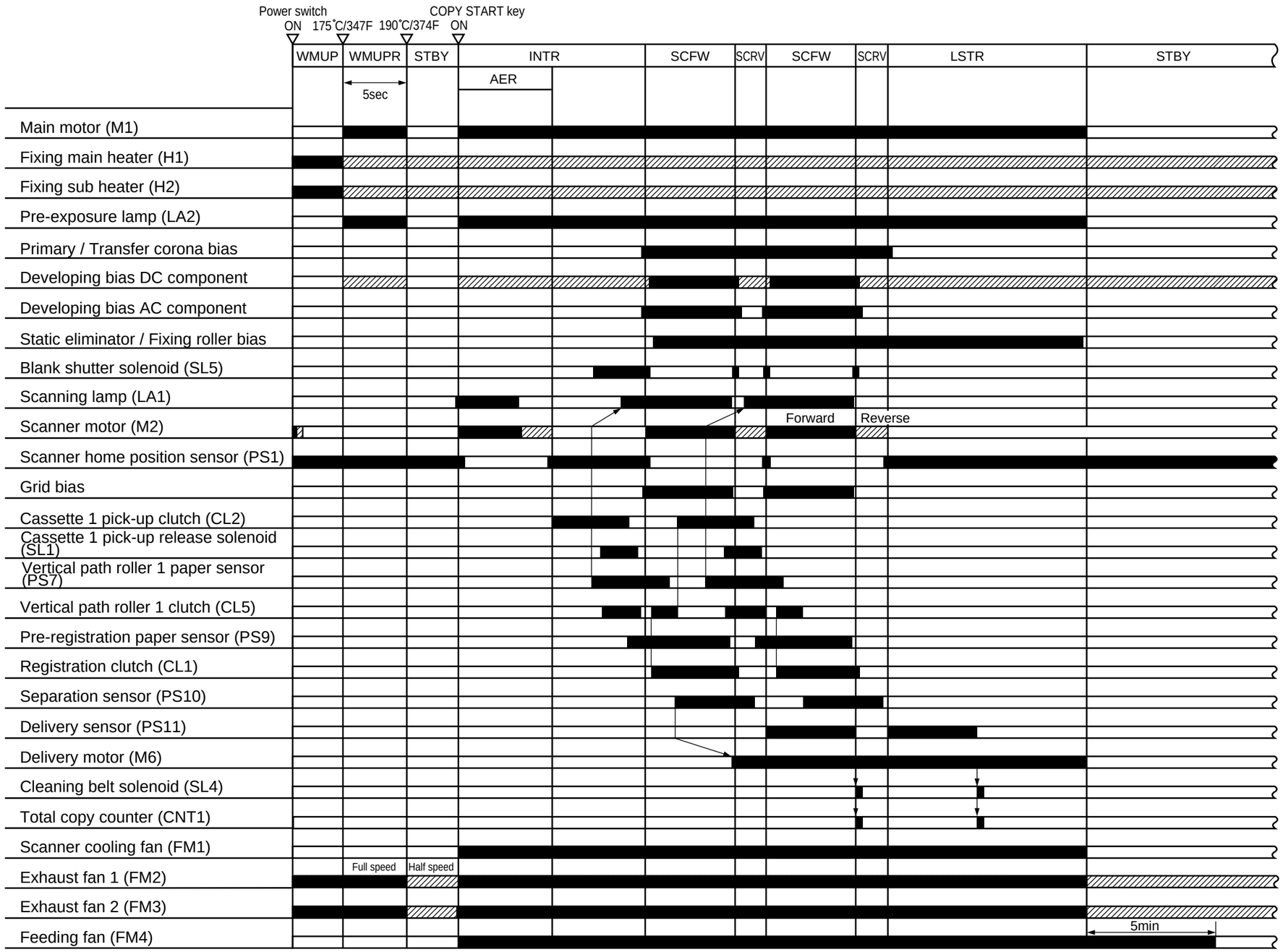

COPYRIGHT © 1997 CANON INC.
CANON NP6330 REV. 0 MAY 1997 PRINTED IN JAPAN (IMPRIME AU JAPON)

B. SIGNALS AND ABBREVIATIONS

What follows below is a list of signals and abbreviations used in the chapters of the manual and circuit diagrams.
The abbreviations within parentheses represent analog signals, which cannot be expressed in terms of ‘1’ or ‘0’.

1. Signals

ACON	DEVELOPING AC BIAS ON command
AE	AE SENSOR OUTPUT signal
AEREF	AE SENSOR REFERENCE signal
BLA	BLANK SHUTTER MOTOR DRIVE PULSE command A
BLB	BLANK SHUTTER MOTOR DRIVE PULSE command B
BLHLD	BLANK SHUTTER MOTOR HOLD command
BLHP	BLANK SHUTTER HOME POSITION signal
BLSD	BLANK SHUTTER SOLENOID DRIVE command
C1LTD	CASSETTE 1 LIFTER MOTOR DRIVE command
C1LTP	CASSETTE 1 LIFTER POSITION signal
C1PD	CASSETTE 1 PAPER DETECTION signal
C1PUCD	CASSETTE 1 PICK-UP CLUTCH DRIVE command
C1PW	CASSETTE 1 PAPER WIDTH SIZE signal
C1RSD	CASSETTE 1 PICK-UP RELEASE SOLENOID DRIVE command
C1SZ1	CASSETTE 1 PAPER LENGTH SIZE signal 1
C1SZ2	CASSETTE 1 PAPER LENGTH SIZE signal 2
C2LTD	CASSETTE 2 LIFTER MOTOR DRIVE command
C2LTP	CASSETTE 2 LIFTER POSITION signal
C2PD	CASSETTE 2 PAPER DETECTION signal
C2PUCD	CASSETTE 2 PICK-UP CLUTCH DRIVE command
C2PW	CASSETTE 2 PAPER WIDTH SIZE signal
C2RSD	CASSETTE 2 PICK-UP RELEASE SOLENOID DRIVE command
C2SZ1	CASSETTE 2 PAPER LENGTH SIZE signal 1
C2SZ2	CASSETTE 2 PAPER LENGTH SIZE signal 2
CBCC	COPY BOARD COVER CLOSED signal
CBSD	CLEANING BELT SOLENOID DRIVE command
CL1D	VERTICAL PATH ROLLER 3 DRIVE CLUTCH DRIVE command
CL2D	DECK PICK-UP CLUTCH DRIVE command
CL3D	DECK VERTICAL PATH ROLLER CLUTCH DRIVE command
CL4D	DECK LIFTER DRIVE CLUTCH DRIVE command
CLA	CLEANER MOTOR DRIVE PULSE command A
CLB	CLEANER MOTOR DRIVE PULSE command B
CLCCW	CLEANER MOTOR COUNTERCLOCKWISE command
CLCW	CLEANER MOTOR CLOCKWISE command
CNT2D	COPY COUNTER DRIVE command 2
CNTD	TOTAL COUNTER DRIVE command 1
CNTSL1	COUNTER SOLENOID 1 DRIVE command
CNTSL2	COUNTER SOLENOID 2 DRIVE command
DCBC	DC BIAS CONTROL command
DEL	DECK LIFTER POSITION signal
DEOP	DECK OPEN DETECTION signal
DEPRL	DECK PICK-UP RELEASE SOLENOID DRIVE command
DLP	DECK LIFTER UPPER LIMIT POSITION signal
DMA	DELIVERY MOTOR DRIVE PULSE command A
DMB	DELIVERY MOTOR DRIVE PULSE command B
DMCLK	DELIVERY MOTOR CLOCK command
DMD	DELIVERY MOTOR DRIVE command
DMI1	DELIVERY MOTOR CURRENT CONTROL command 1
DMI2	DELIVERY MOTOR CURRENT CONTROL command 2
DMRON	DELIVERY MOTOR ROTATION command
DPD	DECK PARER DETECTION signal
DPON	DEVELOPING DC BIAS ON command
DVRPD	DECK VERTICAL PATH ROLLER PARER DETECTION signal
EF1D	EXHAUST FAN 1 DRIVE commnad
EF2D	EXHAUST FAN 2 DRIVE commnad
FFD	FEEDING FAN DRIVE command
FM5LOCK	POWER SUPPLY PCB COOLING FAN LOCK signal
GRCONT	GRID POTENTIAL CONTROL command
HMD	HOPPER MOTOR DRIVE command
HRA	HORIZONTAL REGISTRATION MOTOR DRIVE PULSE command A
HRB	HORIZONTAL REGISTRATION MOTOR DRIVE PULSE command B
HRCD	HORIZONTAL REGISTRATION CLUTCH DRIVE command
HRCLK	HORIZONTAL REGISTRATION MOTOR CLOCK signal
HRD	HORIZONTAL REGISTRATION MOTOR DRIVE command
HRHP	HORIZONTAL REGISTRATION ROLLER HOME POSITION signal
HRPD	HORIZONTAL REGISTRATION PAPER DETECTION signal
HRRON	HORIZONTAL REGISTRATION MOTOR ROTATION command
HRSD	HORIZONTAL REGISTRATION SOLENOID DRIVE command
LDT	LAMP ON DETECTION signal
LEA	LENS MOTOR DRIVE PULSE commnad A
LEB	LENS MOTOR DRIVE PULSE commnad B
LEHLD	LENS MOTOR HOLD command
LFA	LOWER FEEDER MOTOR DRIVE PULSE command A
LFB	LOWER FEEDER MOTOR DRIVE PULSE command B
LFCD	LOWER FEEDER OUTLET CLUTCH DRIVE command
LFCLK	LOWER FEEDER MOTOR CLOCK signal
LFD	LOWER FEEDER MOTOR DRIVE command
LFRON	LOWER FEEDER MOTOR ROTATION comannd
LFSD	LOWER FEEDER FLAPPER SOLENOID DRIVE command
LHP	LENS HOME POSITION signal
LINT	LIGHT INTENSITY signal (analog)
LMPON	LAMP ON command
MFCD	MULTIFEEDER PICK-UP CLUTCH DRIVE command
MFPD	MULTIFEEDER PAPER DETECTION signal
MFPUSD	MULTIFEEDER PICK-UP SOLENOID DRIVE command
MFPW	MULTIFEEDER PAPER WIDTH SIZE signal
MHRD	MAIN HEATER DRIVE command
MMCLK	MAIN MOTOR CLOCK signal
MMD	MAIN MOTOR DRIVE command
MMLOCK	MAIN MOTOR LOCK singal
MSSRD	MAIN SSR DRIVE signal
PDP1	PAPER DETECTION signal 1
PDP2	PAPER DETECTION signal 2
PDP3	PAPER DETECTION signal 3
PDP4	PAPER DETECTION signal 4
PDP5	PAPER DETECTION signal 5

COPYRIGHT © 1997 CANON INC. CANON NP6330 REV. 0 MAY 1997 PRINTED IN JAPAN (IMPRIME AU JAPON)

PDP6	PAPER DETECTION signal 6
PDP7	PAPER DETECTION signal 7
PDP8	PAPER DETECTION signal 8
PEXP	PRE-EXPOSURE LAMP LIGHT command
PS2D	VERTICAL PASS ROLLER 3 PAPER DETECTION signal
PTON	PRIMARY/TRANSFER CORONA CURRENT ON command
PWOFF	POWER SWITCH OFF command
RDC	RIGHT DOOR CLOSED signal
RDOD	RIGHT DOOR OPEN signal
RGCD	REGISTRATION CLUTCH DRIVE command
SCA	SCANNING MOTOR DRIVE PULSE command A
SCB	SCANNING MOTOR DRIVE PULSE command B
SCCLK	SCANNING MOTOR CLOCK PULSE command
SCFD	SCANNER COOLING FAN DRIVE command
SCHP	SCANNER HOME POSITION signal
SCM1	EXCITATION MODE command 1
SCM2	EXCITATION MODE command 2
SCMD	SCANNING MOTOR DRIVE command
SCRET	PHASE RETURN command
SCRON	SCANNING MOTOR ROTATION command
SCVREF	REFERENCE VOLTAGE command
SERVICE	SERVICE MODE SWITCH signal
SFON	STATIC ELIMINATOR/FIXING ROLLER BIAS ON command
SHRD	SUB HERTER DRIVE command
SIZE0	ORIGINAL SIZE DETECTION signal 0
SIZE1	ORIGINAL SIZE DETECTION signal 1
SIZE1	DECK SIZE signal 1 (Pedestal)
SIZE2	ORIGINAL SIZE DETECTION signal 2
SIZE2	DECK SIZE signal 2 (Pedestal)
SIZE3	ORIGINAL SIZE DETECTION signal 3
SPCH	STATIC ELIMINATOR VOLTAGE LEVEL SWITCH command
SSSRD	SUB SSR DRIVE signal
TEP	TONER EMPTY signal
TH1	FIXING THERMISTOR signal
VR1CD	VERTICAL PASS ROLLER 1 CLUTCH DRIVE command
VR2CD	VERTICAL PASS ROLLER 2 CLUTCH DRIVE command
WCHP	CORONA WIRE CLEANER HOME POSITION signal
WCRP	CORONA WIRE CLEANER REAR POSITION signal
ZRCS	ZERO CROSS DETECTION signal

2 Abbreviations

AER	AE (MEASUREMENT) ROTATION
INTR	INITIAL ROTATION
LSTR	LAST ROTATION
SCFW	SCANNER FORWARD
SCRV	SCANNER REVERSE
STBY	STANDBY
WMUP	WARM UP
WMUPR	WARM UP ROTATION

COPYRIGHT © 1997 CANON INC.

A5 Not available
A6 Not available
A7 Not available

COPYRIGHT © 1997 CANON INC. CANON NP6330 REV. 0 MAY 1997 PRINTED IN JAPAN (IMPRIME AU JAPON)

E. SPECIAL TOOLS LIST

No.	Tool name	Tool No.	Shape	Code*	Description
1	Door switch	TKN-0093	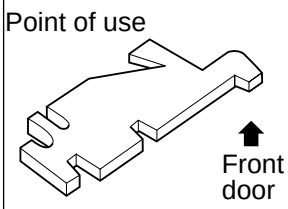	A	
2	Mirror positioning Tool (front, rear)	FY9-3002-000	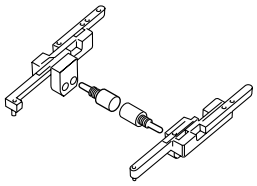	B	Use it to adjust the distance between No.1 and No.2 mirrors
3	Spring gauge	CK-0054	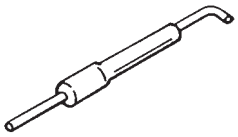	B	• For adjusting lens drive belt; 0 to 1500g
4	Cleaning oil	TKN-0464		A	For cleaning the fixing roller (10 packs/box)

COPYRIGHT © 1997 CANON INC.

F. SOLVENTS AND OILS

No.	Description	Use	Composition	Remarks
1	Ethyl alcohol (Ethanol) Isopropyl alcohol (Isopropanol)	Cleaning: e.g., glass, plastic, rubber parts; external covers	C_2H_5O $(CHZ_3)_2$ CHOH	• Do not bring near fire. • Procure localy. • Isopropyl alcohol may be substituted.
2	MEK	Cleaning: e.g., metal; oil or toner dirt	$CH_3COC_2H_3$ Methlylethyl ketone	• Do not bring near fire. • Procure locally.
3	Heat-resistant grease	Lubricating: fixing drive assemblies	Lithium soap (mineral oil family) Molybdenum bisulfate	• CK-0427 (500 g/can)
4	Lubricating oil	Lubricating: scanner rail, spring clutch	Mineral oil (paraffin family)	• CK-0451 (100 cc)
5	Lubricating oil	Lubricating: pick-up assembly roller bushing (FS2-1005-000)	Mineral oil (paraffin family)	• CK-0524 (100 cc)
6	Lubricating oil	Lubricating: drive and friction parts	Silicone oil	• CK-05512 (20 g)

COPYRIGHT © 1997 CANON INC.
CANON NP6330 REV. 0 MAY 1997 PRINTED IN JAPAN (IMPRIME AU JAPON)

Prepared by

OFFICE IMAGING PRODUCTS TECHNICAL SUPPORT DEPT. 1
OFFICE IMAGING PRODUCTS TECHNICAL SUPPORT DIV.

CANON INC.

Printed in Japan

REVISION 0 (MAY 1997) [30359/10317]

5-1, Hakusan 7-chome, Toride-shi, Ibaraki 302, Japan

Canon

PRINTED IN JAPAN (IMPRIME AU JAPON)

0597S3.02-1

This publication is printed on
70% reprocessed paper.