NP6560/NP6360/ NP6260

SERVICE MANUAL

REVISION 0

Canon

FY8-13F1-000

NOV. 1997

COPYRIGHT © 1997 CANON INC.

CANON NP6560/NP6360/NP6260 REV.0 NOV. 1997 PRINTED IN JAPAN (IMPRIME AU JAPON)

IMPORTANT

THIS DOCUMENTATION IS PUBLISHED BY CANON INC., JAPAN, TO SERVE AS A SOURCE OF REFERENCE FOR WORK IN THE FIELD.

SPECIFICATIONS AND OTHER INFORMATION CONTAINED HEREIN MAY VARY SLIGHTLY FROM ACTUAL MACHINE VALUES OR THOSE FOUND IN ADVERTISING AND OTHER PRINTED MATTER.

ANY QUESTIONS REGARDING INFORMATION CONTAINED HEREIN SHOULD BE DIRECTED TO THE COPIER SERVICE DEPARTMENT OF THE SALES COMPANY.

THIS DOCUMENTATION IS INTENDED FOR ALL SALES AREAS, AND MAY CONTAIN INFORMATION NOT APPLICABLE TO CERTAIN AREAS.

COPYRIGHT © 1997 CANON INC.

Printed in Japan
Imprimé au Japon

Use of this manual should be strictly supervised to avoid disclosure of confidential information.

Prepared by

OFFICE IMAGING PRODUCTS TECHNICAL SUPPORT DEPARTMENT 1
OFFICE IMAGING PRODUCTS TECHNICAL SUPPORT DIVISION

CANON INC.

5-1, Hakusan 7-chome, Toride-shi, Ibaraki 302 Japan

INTRODUCTION

This Service Manual contains basic data and figures on the plain paper copier NP6560/NP6360/NP6260 needed to service the machine in the field.

The NP6560/NP6360/NP6260 is designed to enable full automatic copying work, and comes with the following systems accessories:

1. Stapler Sorter-E2
2. RDF-D1
3. Paper Deck-A1
4. Sorter-G1

This Service Manual covers the copier only, and consists of the following chapters:

Chapter 1 General Description introduces the copier's features and specifications, shows how to operate the copier, and explains how copies are made.

Chapter 2 Basic Operation provides outlines of the copier's various mechanical workings.

Chapter 3 Exposure System discusses the principles of operation used for the copier's lens drive unit and scanner drive unit. It also explains the timing at which these drive units are operated, and shows how they may be disassembled/assembled and adjusted.

Chapter 4 Image Formation System discusses the principles of how images are formed. It also explains the timing at which the various units involved in image formation are operated, and shows how they may be disassembled/assembled and adjusted.

Chapter 5 Pick-Up/Feeding System explains the principles used from when copy paper is picked up to when a copy is delivered in view of the functions of electrical and mechanical units and in relation to their timing of operation. It also shows how these units may be disassembled/assembled and adjusted.

Chapter 6 Fixing System explains the principles used to fuse toner images to transfer media in view of the functions of electrical and mechanical units and in relation to their timing of operation. It also shows how these units may be disassembled/assembled and adjusted.

Chapter 7 Externals/Auxiliary Mechanisms shows the copier's external parts, and explains the principles used for the copier's various control mechanisms in view of the functions of electrical and mechanical units and in relation to their timing of operation. It also shows how these units may be disassembled/assembled and adjusted.

Chapter 8 Paper Deck-A1 explains the principles used from when copy paper is picked up to when a copy is delivered in view of the functions of electrical and mechanical units and in relation to their timing of operation. It also shows how these units may be disassembled/assembled and adjusted.

Chapter 9 Installation introduces requirements for the site of installation, and shows how the copier may be installed using step-by-step instructions.

Chapter 10 Maintenance and Servicing provides tables of periodically replaced parts and consumables/durables and scheduled servicing charts.

COPYRIGHT © 1997 CANON INC.

Chapter 11 Troubleshooting provides tables of maintenance/inspection, standards/adjustments, and problem identification (image fault/malfunction).

Appendix contains a general timing chart and general circuit diagrams.

The following rules apply throughout this Service Manual:

1. Each chapter contains sections explaining the purpose of specific functions and the relationship between electrical and mechanical systems with reference to the timing of operation.

   In the diagrams, ⊐■□■⊏ represents the path of mechanical drive—where a signal name accompanies the symbol ⟶ , the arrow indicates the direction of the electric signal.

   The expression “turn on the power” means flipping on the power switch, closing the front door, and closing the delivery unit door, which results in supplying the machine with power.

2. In the digital circuits, ‘1’ is used to indicate that the voltage level of a given signal is “High,” while ‘0’ is used to indicate “Low.” (The voltage value, however, differs from circuit to circuit.)

   In practically all cases, the internal mechanisms of a microprocessor cannot be checked in the field. Therefore, the operations of the microprocessors used in the machines are not discussed: they are explained in terms of from sensors to the input of the DC controller PCB and from the output of the DC controller PCB to the loads.

The descriptions in this Service Manual are subject to change without notice for product improvement or other purposes, and major changes will be communicated in the form of Service Information bulletins.

All service persons are expected to have a good understanding of the contents of this Service Manual and all relevant Service Information bulletins and be able to identify and isolate faults in the machine.

COPYRIGHT © 1997 CANON INC.
CANON NP6560/NP6360/NP6260 REV.0 NOV. 1997 PRINTED IN JAPAN (IMPRIME AU JAPON)

System Configuration

The NP6560/NP6360/NP6260 is designed to accommodate the following accessories:

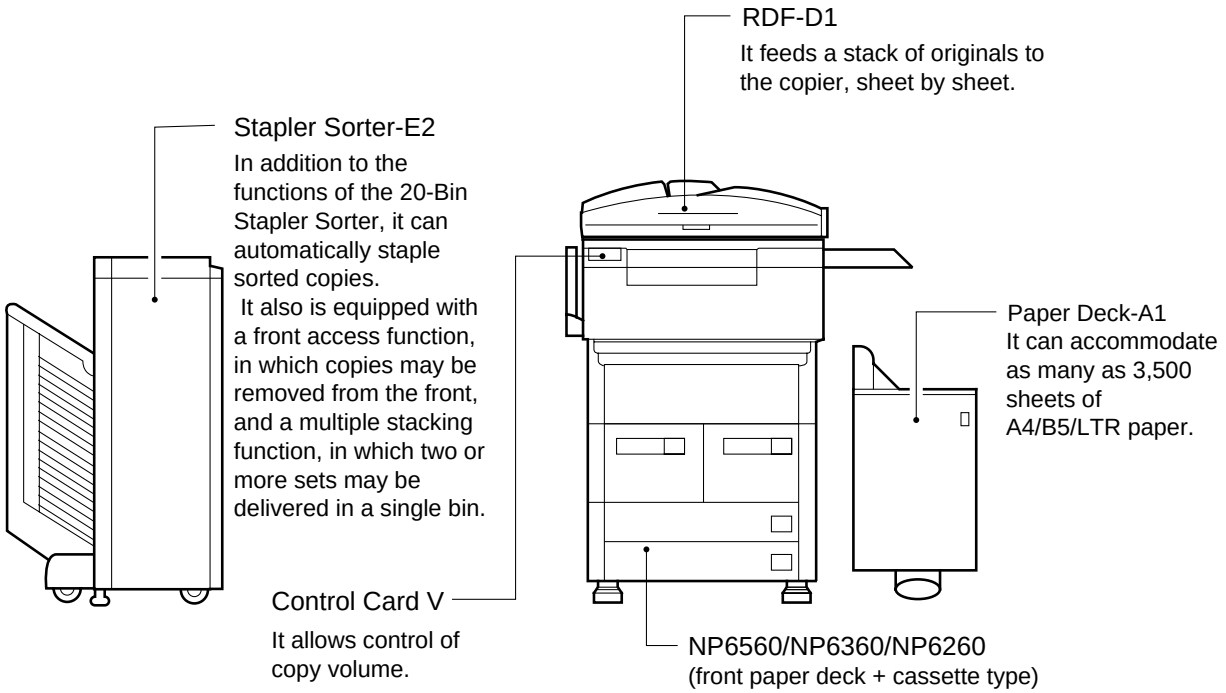

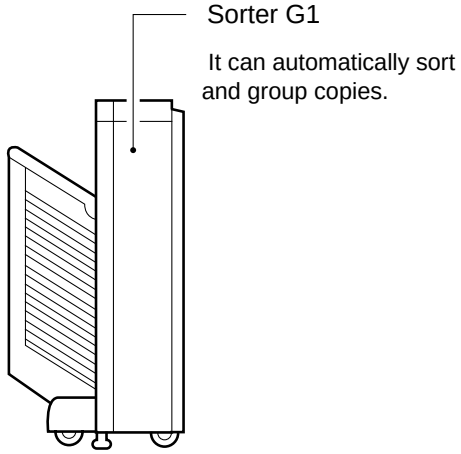

COPYRIGHT © 1997 CANON INC.

 COPYRIGHT © 1997 CANON INC. CANON NP6560/NP6360/NP6260 REV.0 NOV. 1997 PRINTED IN JAPAN (IMPRIME AU JAPON)

CONTENTS

CHAPTER 1 GENERAL DESCRIPTION

I. FEATURES 1-1
II. SPECIFICATIONS 1-2
A. Copier 1-2
1. Type 1-2
2. Mechanisms 1-2
3. Performance 1-3
4. Others 1-6
B. Paper Deck-A1 1-9
III. NAMES OF PARTS 1-10
A. External View 1-10
B. Cross Section 1-12
1. Copier 1-12
IV. OPERATING THE MACHINE 1-13
A. Control Panel 1-13
B. Extended Modes 1-14
C. User Mode 1-15
1. Types of User Modes 1-15
V. ROUTINE MAINTENANCE BY THE USER 1-19
VI. POINTS TO NOTE (BY THE USER) 1-19
VII. IMAGE FORMATION 1-20
A. Outline 1-20

CHAPTER 2 BASIC OPERATION

I. BASIC MECHANISMS 2-1
A. Functional Construction 2-1
B. Outline of the Electrical Circuitry 2-2
C. Basic Sequence of Operations 2-4
1. Basic Sequence of Operations at Power-On 2-4
2. Basic Sequence of Operations 2-6
3. Basic Sequence of Operations in Page Separation Mode 2-8
D. Main Motor (M1) Control Circuitry 2-10
1. Outline 2-10
2. Operation 2-11
3. Detecting an Error 2-11
E. Inputs to the DC Controller 2-12
F. Outputs from the DC Controller 2-20
G. Inputs to and Outputs from Accessories (1/1) 2-31

CHAPTER 3 EXPOSURE SYSTEM

I. OUTLINE OF OPERATION 3-1
A. Varying the Reproduction Ratio 3-1
II. LENS DRIVE SYSTEM 3-2
A. Movement of the Lens 3-2
1. Outline of the Movement 3-2
2. Moving the Lens 3-3
3. Lens Motor Control Circuit 3-3
4. Moving the Lens 3-4
III. SCANNER DRIVE SYSTEM 3-6
A. Scanner Movement 3-6
1. Outline of Movement 3-6
2. Relationship between the Scanner Sensors and the Signals 3-7
3. Controlling the Scanner Motor Brake 3-8
4. Basic Sequence of Operations 3-9
5. Movement of the Scanner in Page Separation Mode 3-10
6. Movement of the Scanner with the RDF in Use (A4, 2 originals, 1 copy) 3-12
7. Movement of the Scanner with the RDF in Use (A4, 2 copies) 3-14
8. Scanner Motor (M3) Control Circuit 3-17
IV. OTHERS 3-20
A. Original Size Detection 3-20
1. Outline of Detection 3-20
2. Operation 3-21
3. Size of Originals 3-22
V. DISASSEMBLY AND ASSEMBLY 3-23
A. Scanner Drive Assembly 3-24

COPYRIGHT © 1997 CANON INC.

1. Removing the Scanner Drive Motor 3-24
2. Routing the Scanner Drive Cable 3-26
3. Orienting the Heat Absorbing Glass 3-26
4. Removing the Scanner Drive Cable 3-27
5. Adjusting the Tension of the Scanner Drive Cable 3-29
6. Positioning the Mirror 3-29
7. Positioning the Scanner Locking Solenoid (SL1)....3-30
B. Lens Drive Assembly....3-31
1. Removing the Lens Y Direction Drive Motor....3-31
2. Removing the Lens Stage Temporarily....3-32
3. Installing the Light-Blocking Belt Mount 3-34
4. Removing the Lens X Direction Drive Motor....3-34
5. Attaching the Lens X Direction Drive Belt....3-35
6. Routing the Light-Blocking Belt 3-35
7. Replacing the Light-Blocking Belt 3-36
8. Removing the Light-Blocking Plate 3-36

CHAPTER 4 IMAGE FORMATION SYSTEM

I. PROCESSES 4-1
A. Controlling the Drum Surface Potential....4-1
1. Outline 4-1
2. Control Method....4-2
3. Potential Measurement Circuit..4-4
B. Controlling the Intensity of the Scanning Lamp 4-6
1. Outline....4-6
2. Operation....4-7
3. Auto Exposure Control 4-7
4. Making Checks....4-10
C. Controlling the Primary/Transfer Corona Current....4-11
1. Outline....4-11
2. Controlling the Primary Corona Current....4-11
3. Controlling the Transfer Corona Current....4-13
D. Controlling the Separation/Pre-Transfer Corona Current....4-15
1. Outline....4-15
2. Turning On and Off the Separation/ Pre-Transfer Corona Current....4-16
3. Separation Corona Current (DC component)....4-17
4. Pre-Transfer Corona Current (DC component)....4-17
5. Controlling the DC Component of the Separation/Pre-Transfer Corona Current....4-18
E. Controlling the Blanking Exposure Lamp (LED) 4-19
1. Outline....4-19
2. Controlling the Activation in Reduce Mode....4-19
3. Controlling the Activation in Direct Mode....4-19
4. Controlling the Activation in Sheet Frame Erase Mode 4-19
5. Controlling the Activation in Original Frame Erase Mode 4-20
6. Controlling the Activation in Book Frame Erase Mode 4-20
7. Controlling the Activation in Hole Image Erase Mode 4-21
8. Controlling the Activation in AE Mode....4-21
F. Drum Heater Circuit....4-22
1. Outline....4-22
2. Idle Rotation of the Photosensitive Drum and the Developing Cylinder 4-24
G. Cleaning the Primary Charging Wire 4-25
1. Outline....4-25
2. Automatic Cleaning Mechanism....4-25
H. Pre-Transfer/Transfer/Separation Charging Wire Automatic Cleaning Mechanism....4-26
II. DRUM CLEANING ASSEMBLY /DEVELOPING ASSEMBLY 4-28
A. Outline 4-28
B. Detecting the Level of Toner and Controlling the Supply Operation ..4-30
C. Controlling the Developing Bias/Roller Electrode....4-32
1. Outline....4-32
2. Control Timing 4-32
3. Developing Bias Control Circuit 4-35
4. Roller Electrode Bias Control Circuit 4-36

 COPYRIGHT © 1997 CANON INC.

D. Detecting the Waste Toner Feeding Screw (locking) 4-38
III. DISASSEMBLY AND ASSEMBLY 4-39
A. Scanning Lamp Assembly 4-40
1. Removing the Scanning Lamp 4-40
2. Removing the Thermal Fuse 4-41
B. Standard White Plate 4-41
C. Pre-Exposure Lamp Unit 4-42
1. Removing the Pre-Exposure Lamp Unit 4-42
D. Blanking Exposure Lamp Assembly 4-43
1. Removing the Blanking Exposure Lamp Assembly 4-43
E. Photosensitive Drum 4-44
1. Removing the Drum Unit 4-44
2. Replacing the Drum Heater 4-46
3. Installing the Photosensitive Drum 4-46
F. Potential Sensor Assembly 4-46
1. Removing the Potential Sensor Assembly 4-46
G. Primary Charging Assembly 4-47
1. Removing the Primary Charging Assembly 4-47
H. Pre-Transfer Charging Assembly 4-47
1. Removing the Pre-Transfer Charging Assembly 4-47
I. Transfer/Separation Charging Assembly 4-48
1. Removing the Transfer/ Separation Charging Assembly 4-48
2. Installing the Transfer/ Separation Charging Assembly 4-49
J. Charging Wire 4-51
1. Outline 4-51
2. Removing the Wire Cleaner of the Primary Charging Assembly 4-51
3. Stringing the Charging Wires 4-51
4. Stringing the Grid Wire of the Primary Charging Assembly 4-53
5. Adjusting the Height of the Charging Wire 4-55
6. Cleaning the Primary Charging Assembly Anti-Stray Sheet 4-56
K. Developing Assembly 4-57
1. Removing the Developing Assembly from the Copier 4-57
2. Removing the Blade Unit 4-58
3. Installing the Blade 4-59
4. Removing the Developing Cylinder and the Magnetic Seal 4-59
5. Cleaning the Developing Assembly Anti-Stray Sheet 4-61
L. Hopper Assembly 4-62
1. Removing the Hopper Assembly from the Copier 4-62
M. Drum Cleaner 4-62
1. Construction 4-62
2. Removing the Cleaning Blade 4-62
3. Installing the Cleaning Blade 4-63
4. Installing the Side Seal 4-64
5. Cleaning the Cleaner Side Scraper 4-65
N. Separation Claw/Separation Claw Drive Assembly 4-66
1. Removing from the Drum Unit 4-66
O. Waste Toner Feeding Assembly 4-66

CHAPTER 5 PICK-UP/FEEDING SYSTEM

I. PICK-UP/FEEDING SYSTEM 5-1
A. Outline 5-1
II. CASSETTE PICK-UP 5-4
A. Pick-Up Operation 5-4
1. Outline 5-5
2. Sequence of Pick-Up Operations 5-5
B. Cassette Lifter Operation 5-6
C. Identifying the Size of Copy Paper in the Cassette (Cassette4 only) 5-8
1. Outline 5-8
2. Identifying the Size of Copy Paper 5-8
3. Markings on the Width Guide Rail 5-10
4. Paper Size 5-11
5. Registering Paper Width Basic Value 5-12
III. FRONT PAPER DECK ASSEMBLY 5-13
A. Outline 5-13
1. Pick-Up Operation 5-14
2. Sequence of Pick-Up Operations 5-15
B. Lifter Operation 5-16
1. Operation 5-16
2. Deck Limit Detection 5-18
C. Detecting the Presence/Absence of Paper in the Deck 5-19
1. Detecting the Presence/ Absence of Paper in the Deck 5-19
2. Detecting the Size of the Deck 5-19
D. High-Speed Pick-Up 5-19
IV. MULTIFEEDER 5-20

COPYRIGHT © 1997 CANON INC.

A. Pick-Up Operation 5-20
B. Identifying the Size of Paper in the Multifeeder.....5-21
C. Sequence of Pick-Up Operations (multifeeder).....5-22
V. CONTROLLING THE REGISTRATION CLUTCH 5-23
VI. MAKING TWO-SIDED/OVERLAY COPIES 5-24
A. Making Two-Sided/Overlay Copies (1st side) 5-24
1. Sequence of Operations (two-sided/overlay copies; 1st side).....5-25
B. Making Two-Sided Copies (2nd side) 5-26
1. Sequence of Operations (two-sided copying; 2nd side)...5-27
C. Making Overlay Copies (2nd side) 5-28
1. Outline 5-28
2. Outline of Operation 5-29
3. Sequence of Operations (overlay copying; 2nd side).....5-31
D. Reversal Delivery 5-32
1. Sequence of Reversal Delivery Operations.....5-33
E. Switching the Paper Size for Two-Sided/Overlay/Reversal Delivery Copies 5-34
1. Movement of the Paper Size Guide.....5-34
2. Movement of the Paper Jogging Plate and the Trailing Edge Guide Plate 5-35
3. Detecting the Presence/ Absence of Copy Paper 5-36
F. Re-Pick Up from the Holding Tray.....5-37
G. Skipping Operation.....5-38
1. Outline.....5-38
2. Outline of Operations 5-39
3. Skipping Operation (odd number of originals) 5-41
4. Skipping Operation (odd number of originals) 5-42
5. Reversal Delivery 5-45
VII. DETECTING JAMS 5-46
A. Outline 5-46
1. Registration Roller Delay Jam..5-49
2. Registration Roller Stationary Jam.....5-49
3. Pick-Up Vertical Path Feeding 0/1 Delay Jam 5-50
4. Pick-Up Vertical Path Feeding 0/1 Stationary Jam 5-50
5. Pick-Up Vertical Path Feeding 2 through 4 Delay Jam 5-51
6. Pick-Up Vertical Path Feeding 2 through 4 Stationary Jam.....5-51
7. Fixing Assembly Outlet Delay Jam.....5-52
8. Fixing Assembly Outlet Stationary Jam 5-52
9. External Delivery Delay Jam 5-53
10. External Delivery Stationary Jam.....5-53
11. Internal Delivery Delay Jam 5-54
12. Internal Delivery Stationary Jam.....5-54
13. Holding Tray Inlet Delay Jam....5-55
14. Holding Tray Inlet Stationary Jam.....5-55
15. Holding Tray Re-Pick Up Delay Jam.....5-56
16. Holding Tray Registration Delay Jam.....5-56
17. Holding Tray Registration Stationary Jam 5-57
18. Holding Tray Feeding 1/2 Delay Jam.....5-57
19. Holding Tray Feeding 1/2 Stationary Jam 5-58
20. Left Deck Pick-Up Delay Jam...5-58
21. Left Deck Pick-Up Stationary Jam.....5-59
22. Fixing Separation Claw Assembly Stationary Jam.....5-59
VIII. DISASSEMBLY AND ASSEMBLY 5-60
A. Multifeeder Assembly 5-61
1. Removing the Multifeeder Assembly.....5-61
2. Removing the Pick-Up Roller ...5-61
3. Installing the Pick-Up Roller 5-62
4. Removing the Separation Roller 5-62
5. Removing the Feeding Roller...5-64
6. Removing the Multifeeder Paper Sensor.....5-64
7. Attaching the Side Guide Timing Belt in the Multifeeder Assembly.....5-66
8. Installing the Feeding Roller of the Multifeeder.....5-67
9. Adjusting the Pressure of the Pick-Up/Feeding Roller of the Multifeeder.....5-67
10. Position of the Pick-Up Roller Releasing Solenoid of the Multifeeder.....5-68
B. Front Paper Deck Assembly.....5-69
1. Removing the Paper Deck Assembly from the Copier.....5-69
2. Removing the Lifter Cable.....5-70
3. Changing the Deck Paper Size..5-74
4. Adjusting the Deck Registration 5-76

 COPYRIGHT © 1997 CANON INC. CANON NP6560/NP6360/NP6260 REV.0 NOV. 1997 PRINTED IN JAPAN (IMPRIME AU JAPON)

C. Right Deck Pick-Up Assembly (cassette holder).....5-77
1. Removing the Pick-Up Assembly from the Copier.....5-77
2. Removing the Pick-Up Roller...5-77
3. Removing the Feeding Roller...5-79
4. Removing the Separation Roller.....5-79
5. Adjusting the Pressure of the Separation Roller.....5-80
6. Orientation of the Separation Roller.....5-81
7. Orientation of the Feeding Roller of the Cassette/Deck Pick-Up Assembly.....5-82
8. Positioning the Pick-Up Roller Releasing Solenoid of the Deck.....5-82
9. Positioning the Pick-Up Roller Releasing Solenoid of the Cassette.....5-83
10. Adjusting the Registration for the Cassette.....5-83
D. Left Deck Pick-Up Assembly.....5-84
1. Removing the Pick-Up Assembly from the Copier.....5-84
2. Removing the Pick-Up Roller...5-84
3. Removing the Feeding Roller...5-86
4. Removing the Separation Roller.....5-86
5. Orientation of the Feeding Roller Assembly of the Left Deck Pick-Up Assembly.....5-87
E. Pick-Up Vertical Path Roller Assembly.....5-87
1. Removing the Pick-Up Vertical Path Roller Assembly.....5-87
F. Registration Feeding Assembly.....5-88
1. Construction.....5-88
2. Removing the Registration Feeding Assembly.....5-88
3. Removing the Registration Roller (upper rubber roller).....5-89
G. Feeding Assembly.....5-90
1. Construction.....5-90
2. Removing the Fixing/Feeding Unit.....5-90
3. Removing the Feeding Belt.....5-91
H. Holding Tray Assembly.....5-94
1. Construction.....5-94
2. Removing the Holding Tray from the Copier.....5-95
3. Removing the Holding Tray Re-Pick Up Assembly.....5-95
4. Removing the Holding Tray Registration Paper Sensor.....5-96
5. Removing the Re-Pick Up Roller.....5-97
6. Removing the Holding Tray Driver PCB.....5-97
7. Removing the Holding Tray Y Motor.....5-98
8. Removing the Y Motor Home Position Sensor.....5-100
9. Removing the Holding Tray Inlet Assembly.....5-100
10. Removing the Feeding Roller/Separation Belt Assembly.....5-102
11. Removing the Feeding Roller...5-103
12. Removing the Separation Belt Assembly.....5-103
13. Adjusting the Pressure of the Separation Roller of the Holding Tray.....5-104
14. Positioning the Holding Tray Paper Deflecting Plate Drive Solenoid.....5-104
15. Removing the Side Guide Plate Assembly.....5-105
16. Removing the Holding Tray X Motor.....5-105
17. Removing the Holding Tray Re-Circulating Motor.....5-105
18. Removing the Holding Tray Paper Jogging Solenoid.....5-106
19. Installing the Holding Tray Paper Jogging Guide Plate Assembly.....5-107
20. Installing the Holding Tray Assembly Side Guide Plate Assembly.....5-107
21. Attaching the Timing Belt of the Holding Tray Assembly Paper Jogging Guide Plate.....5-108
22. Positioning the Holding Tray Paper Jogging Solenoid.....5-108
I. Holding Tray Feeding Assembly....5-109
1. Removing the Holding Tray Feeding Assembly from the Copier.....5-109
2. Removing the Sensor from the Holding Tray Feeding Assembly.....5-110

COPYRIGHT © 1997 CANON INC.

CHAPTER 6 FIXING SYSTEM

I. OUTLINE OF OPERATIONS.....6-1
A. Outline 6-1
B. Fixing Drive Assembly.....6-3
C. Controlling the Fixing Temperature ..6-5
D. Reciprocating Mechanism for the Main Thermistor (TH1) 6-10
E. Reciprocating Mechanism for the Upper Separation Claw 6-11
F. SSR Error Detection Circuit for the Fixing Heater 6-12
G. Locking Operation (fixing/feeding unit).....6-14
H. Error Detection Circuit 6-15
1. Outline 6-15
2. Scanning Lamp Error Activation Detection Circuit 6-15
3. Fixing Heater Error Activation Detection Circuit 6-16
4. Motor Error Rotation Detection Circuit 6-17
II. DISASSEMBLY AND ASSEMBLY 6-18
A. Fixing Assembly 6-19
1. Construction 6-19
2. Locking Mechanism.....6-19
3. Removing the Fixing Cleaning Belt 6-19
4. Installing the Fixing Cleaning Belt 6-21
5. Removing the Upper Fixing Unit 6-22
6. Removing the Fixing Heater.....6-24
7. Installing the Fixing Heater.....6-25
8. Removing the Fixing Upper Roller 6-25
9. Installing the Upper Fixing Roller 6-27
10. Removing the Thermal Switch ..6-27
11. Removing the Main Thermistor (TH1) 6-28
12. Removing the Lower Separation Claw Assembly 6-29
13. Removing the Lower Roller 6-29
14. Removing the Upper Separation Claw 6-30
15. Adjusting the Nip (tightening the pressure adjusting nut).....6-30
16. Adjusting the Fixing Clutch.....6-31
17. Removing the Sub Thermistor (TH2) 6-32
B. Delivery Assembly 6-33
1. Construction 6-33
2. Removing the Delivery Upper Guide (fixing/delivery assembly) 6-33
3. Removing the Fixing/Feeding Assembly Locking Assembly....6-33
4. Removing the External Delivery Roller 6-34
5. Removing the External Delivery Paper Sensor and the Internal Delivery Paper Sensor 6-35
6. Removing the Fixing Assembly Outlet Paper Sensor Assembly 6-35
7. Removing the Internal Delivery Assembly Roller 6-36

CHAPTER 7 EXTERNALS/AUXILIARY MECHANISMS

I. CONTROL PANEL.....7-1
A. Outline 7-1
B. Operation.....7-1
1. Data Communication.....7-1
2. LCD Processing 7-2
3. Automatic Control of LCD Contrast.....7-4
4. Touch Switch Inputs 7-5
II. FANS 7-6
III. POWER SUPPLY 7-9
A. Outline of Power Supply.....7-9
B. Power Supply Circuit 7-10
C. Date/Time Display Power Supply ..7-12
IV. DISASSEMBLY AND ASSEMBLY 7-13
A. External Covers.....7-14
1. Removing the Front Door 7-15
2. Removing the Inside Upper Cover 7-16
3. Removing the Fixing/Feeding Unit Front Cover 7-16
4. Removing the Rear Cover.....7-17
5. Sliding Out the Hopper Assembly.....7-17
6. Removing the Process Unit.....7-18
7. Installing the Process Unit.....7-20
B. Control Panel.....7-21
1. Removing the Control Panel from the Copier 7-21
2. Removing the Control Panel PCB 7-23

COPYRIGHT © 1997 CANON INC.

3. Removing the Touch Panel.....7-24
4. Removing the Control Panel Controller (CPU) PCB 7-25
C. Door Switch Assembly 7-26
1. Removing the Front Door Switch Assembly 7-26
2. Removing the Multifeeder Door Switch Assembly 7-26
3. Installing the Drum Heater Switch.....7-27
D. Fan Unit 7-28
1. Removing the Scanner Cooling Fan 7-28
2. Removing the Exhaust Fan.....7-28
3. Removing the Fixing Heat Exhaust Fan 7-29
4. Removing the Developing Fan 7-29
5. Removing the Cleaner Fan 7-30
6. Removing the Feeding Fan 7-31
7. Removing the Scanner Motor Cooling Fan 7-31
E. Removing the Counter Assembly..7-32
F. Main Motor Assembly.....7-32
1. Removing the Main Motor.....7-32
G. Fixing/Waste Toner Drive Assembly 7-33
1. Construction 7-33
2. Removing the Waste Toner Bottle 7-33
3. Removing the Fixing/Waste Toner Drive Assembly 7-33
H. Main Drive Assembly (drum/developing) 7-35
1. Construction 7-35
2. Removing 7-35
I. Vertical Path Drive Assembly 7-36
1. Construction 7-36
2. Removing 7-36
J. Pick-Up Drive Assembly.....7-38
1. Construction 7-38
2. Removing 7-38
K. Duplexing Drive (1) Assembly.....7-39
1. Construction 7-39
2. Removing 7-39
L. Lifter Drive Assembly.....7-40
1. Construction 7-40
2. Removing 7-40
M. Cassette Pick-Up Drive Assembly 7-41
1. Construction 7-41
2. Removing 7-41
N. Attaching the Drive Belt.....7-43
O. DC Controller PCB 7-44
1. Removing the DC Controller PCB 7-44
2. Points to Note When Replacing the DC Controller PCB 7-44
P. DC Power Supply Assembly.....7-45
1. Removing the DC Power Supply Assembly.....7-45
Q. High-Voltage Transformer Assembly 7-46
1. Remove the High-Voltage Transformer Assembly.....7-46
R. Power Supply Inlet Assembly.....7-47

CHAPTER 8 PAPER DECK-A1

I. SIDE PAPER DECK 8-1
A. Inputs to and Outputs from the Side Deck Driver.....8-1
1. Inputs to the Side Deck Driver (1/2) 8-1
2. Inputs to the Side Deck Driver (2/2) 8-2
3. Outputs from the Side Deck Driver (1/1) 8-3
B. Pick-Up 8-4
1. Outline 8-4
2. Pick-Up Operation 8-4
3. Sequence of Operations (deck pick-up).....8-6
C. Detection of Paper for the Deck 8-7
1. Detecting the Presence/Absence of Paper.....8-7
2. Changing the Paper Size for the Deck 8-7
D. Deck Lifter 8-8
1. Lifter Operation.....8-8
2. Detecting the Level of the Stack in the Deck (compartment).....8-10
E. Opening/Closing the Deck (compartment) 8-11
1. Opening/Closing the Deck.....8-11
2. Sequence of Operations (deck opening/closing) 8-12
F. Controlling the Deck Motor.....8-13
1. Controlling the Deck Main Motor (M101).....8-13
2. Controlling the Deck Lifter Motor (M102).....8-15
II. DETECTING JAMS 8-17
A. Outline 8-17

1. When copy paper is present at any of the sensors at power-on, end of wait-up, or during standby. 8-18
2. Deck Pick-Up/Vertical Path Delay Jam....8-18
3. Deck Pick-Up/Vertical Path Stationary Jam 8-18
III. DISASSEMBLY AND ASSEMBLY 8-19
A. External Covers....8-20
1. Removing the Front Cover 8-20
2. Removing the Vertical Path Cover (rear) 8-23
3. Removing the Right Cover 8-23
4. Removing the Upper Cover....8-24
B. Paper Deck....8-26
1. Removing the Deck from the Copier....8-26
2. Removing the Compartment 8-28
3. Changing the Deck Paper Size....8-30
4. Adjusting the Deck Registration ..8-31
5. Positioning the Roll....8-31
C. Drive System 8-32
1. Removing the Deck Pick-Up Clutch (CL102) 8-32
2. Removing the Deck Vertical Path Clutch (CL101)....8-32
3. Removing the Deck Main Motor (M101)....8-33
4. Removing the Deck Lifter Motor (M102)....8-34
5. Removing the Lifter Cable (deck front) 8-35
6. Removing the Lifter Cable (deck rear) 8-37
7. Routing the Lifter Cable 8-39
D. Feeding System....8-40
1. Removing the Deck Pick-Up Unit 8-40
2. Removing the Deck Pick-Up Roller 8-41
3. Orientation of the Deck Pick-Up Roller 8-41
4. Removing the Deck Feeding Roller 8-42
5. Orientation of the Deck Feeding Roller 8-42
6. Removing the Deck Separation Roller 8-43
7. Adjusting the Deck Separation Roller Pressure....8-44
8. Positioning the Deck Pick-Up Roller Releasing Solenoid (SL101)....8-44
E. Electrical System....8-45
1. Removing the Side Deck Driver PCB 8-45
2. Removing the OPEN Switch PCB 8-45

CHAPTER 9 INSTALLATION

I. SELECTING THE SITE 9-1
II. UNPACKING AND INSTALLING 9-4
A. Unpacking....9-5
B. Installing the Scanner....9-7
C. Installing the Fixing Assembly....9-8
D. Installing the AP Kit and the Charging Assemblies....9-10
E. Installing the Copy Tray 9-16
1. Replacing the Delivery Roller Leaf Spring....9-16
F. Checking the Developing Assembly....9-17
G. Installing the Pick-Up Assembly 9-19
H. Supplying Toner....9-21
I. Connecting the PDF Connector 9-25
J. Image/Operation Checks and User Mode....9-26
K. Image/Operation Checks and User Mode....9-30
III. RELOCATING THE MACHINE 9-31
IV. INSTALLING THE CONTROL CARD V 9-32
V. INSTALLING THE COPY DATA CONTROLLER-A1....9-40
A. Setting the Board....9-40
B. Installing to the Copier 9-44
C. Checking the Operation....9-46
VI. INSTALLING THE REMOTE DIAGNOSTIC DEVICE II....9-56
A. Installation to the Copier 9-56

 COPYRIGHT © 1997 CANON INC.

CHAPTER 10 MAINTENANCE AND INSPECTION

I. PERIODICALLY REPLACED PARTS 10-1
II. CONSUMABLES AND DURABLES.10-2
A. Copier 10-2
B. Paper Deck-A1 10-3
III. SCHEDULED SERVICING TABLE...10-4
IV. SCHEDULED SERVICING CHART .10-6
A. Copier 10-6
B. Paper Deck-A1 10-8

CHAPTER 11 TROUBLESHOOTING

I. MAINTENANCE AND INSPECTION.11-3
A. Image Adjustment Basic Procedure 11-3
B. Points to Note for Scheduled Servicing....11-4
II. STANDARDS/ADJUSTMENTS 11-5
A. Image Adjustment 11-5
1. Adjusting the Image Leading Edge Margin....11-5
2. Adjusting the Image Leading Edge Non-Image Width (registration) 11-5
3. Adjusting the Left/Right Registration (left/right front deck paper deck, cassette) 11-6
3-1. Adjusting the Left/Right Registration (paper deck-A1)..11-7
4. Adjusting the Left/Right Registration (holding tray position; 2nd side of two-sided/overlay copies)....11-8
5. Adjusting the Left/Right Margin 11-8
6. Executing AE Automatic Adjustment 11-9
7. Adjusting the AE Slope 11-10
8. Adjusting the Distance between the Side Guide Plates of the Holding Tray Assembly 11-10
B. Exposure System 11-11
1. Routing the Scanner Drive Cable 11-11
2. Orientation of the Heat Absorbing Glass....11-12
3. Adjusting the Tension of the Scanning Lamp Cable....11-12
4. Adjusting the Position of the Mirror 11-13
5. Cleaning the Mirror (No. 5 mirror)....11-14
6. Routing the Light-Blocking Belt 11-14
7. Routing the Lens X Direction Drive Belt....11-15
8. Adjusting the Position of the Scanner Locking Solenoid (SL1)....11-15
C. Image Formation System 11-16
1. Grid Wire of the Primary Charging Assembly 11-16
2. Adjusting the Height of the Charging Wire 11-18
3. Adjusting the Position of the Blanking Exposure Lamp 11-19
4. Position of the Roller Electrode 11-20
5. Adjusting the Position of the Cleaning Assembly Side Seal 11-20
6. Cleaning the Cleaner Side Scraper....11-21
D. Pick-Up/Feeding System 11-23
1. Orientation of the Cassette/ Front Paper Deck Pick-Up Roller 11-23
2. Orientation of the Cassette/ Front Paper Deck Separation Roller 11-24
3. Orientation of the Feeding Roller (cassette/ front paper deck)....11-24
4. Orientation of the Multifeeder Pick-Up Roller 11-25
4-1. Orientation of the Paper Deck-A1 Pick-Up Roller....11-25
5. Rotation of the Multifeeder Feeding Roller 11-26
5-1. Orientation of the Paper Deck-A1 Feeding Roller 11-26
6. Adjusting the Separation Roller Pressure of the Cassette/Front Paper Deck 11-27
7. Adjusting the Separation Roller Pressure of the Holding Tray....11-28
8. Pick-Up/Feeding Roller of the Multifeeder....11-28

COPYRIGHT © 1997 CANON INC.

9. Adjusting the Position of the Pick-Up Roller Releasing Solenoid (cassette) 11-29
9-1. Adjusting the Position of the Pick-Up Roller Releasing Solenoid (front paper deck)....11-30
9-2. Adjusting the Position of the Pick-Up Roller Releasing Solenoid (paper deck-A1) 11-30
10. Adjusting the Position of the Pick-Up Roller Releasing Solenoid (multifeeder) 11-31
11. Routing the Timing Belt of the Side Guide (multifeeder assembly) 11-32
12. Adjusting the Position of the Solenoid (delivery paper deflecting plate solenoid) 11-32
13. Adjusting the Position of the Holding Tray Paper Deflecting Plate Drive Solenoid.....11-33
14. Adjusting the Position of the Holding Tray Assembly Side Guide Plate 11-33
15. Adjusting the Position of the Holding Tray Paper Jogging Plate 11-34
16. Adjusting the Timing Belt of the Holding Tray Paper Jogging Guide Plate.....11-34
17. Adjusting the Position of the Holding Tray Paper Jogging Plate Solenoid 11-35
18. Drive Belt.....11-35
E. Fixing System.....11-37
1. Points to Note When Installing the Fixing Heater.....11-37
2. Adjusting the Position of the Fixing Assembly Inlet Guide.....11-37
3. Adjusting the Lower Roller Pressure (nip).....11-39
4. Adjusting the Fixing Clutch 11-40
F. Electrical System.....11-41
1. When Replacing the DC Controller PCB 11-41
2. Checking the Surface Potential Control System.....11-41
3. Checking the Potential System 11-45
4. Potential Control System Conversion Table.....11-47
5. Checking the Environment Sensor.....11-52
6. Checking the Photointerrupters.....11-53
7. Registering the Paper Width Basic Value (∗4∗; cassette/ multifeeder).....11-61
III. IMAGE FAULTS 11-62
A. Initial Checks 11-62
1. Checking the Site Environment 11-62
2. Checking the Originals 11-62
3. Checking the Copyboard Cover, Copyboard Glass, and Standard White Plate 11-63
4. Checking the Charging Assemblies 11-63
5. Checking the Developing Assembly.....11-63
6. Checking the Paper.....11-63
7. Checking the Periodically Replaced Parts.....11-63
8. Others.....11-63
B. Sample Image Faults 11-66
C. Troubleshooting Image Faults 11-67
1. The copy is too light (halftone only). 11-67
2. The copy is too light (including solid black). 11-68
3. The copy is too light (entire face). 11-68
4. The copy has an uneven density (darker at front). 11-70
5. The copy has an uneven density (lighter at front). 11-70
6. The copy is foggy. (overall). 11-71
7. The copy has vertical fogging.....11-72
8. The copy has black lines (vertical, fuzzy, thick). 11-72
9. The copy has black lines (vertical, fine).....11-73
10. The copy has white spots (vertical).....11-74
11. The copy has white lines (vertical).....11-74
12. The copy has white spots (horizontal). 11-76
13. The copy has a soiled back. ..11-77
14. The copy has fixing faults.....11-78
15., 16., 17. The copy has displaced leading edge registration.....11-79
18. The copy is blurred and fuzzy. 11-80
19. The copy has horizontal fogging.....11-81
20. The copy has poor sharpness.....11-81
21. The copy is blank. 11-82
22. The copy is solid black. 11-82
IV. TROUBLESHOOTING MALFUNCTIONS 11-83
A. Troubleshooting Malfunctions.....11-83
1. E000 11-83
2. E001 11-84

 COPYRIGHT © 1997 CANON INC.

3. E002 11-85
4. E003 11-85
5. E004 11-85
6. E005 11-86
7. E006 11-86
8. E010 11-86
9. E013 11-87
10. E015 11-88
11. E020 11-89
12. E030 (The total copy counter fails to turn on.) 11-90
13. E031 (The option counter has an open circuit.) 11-90
14. E043 (Paper deck-A1) 11-91
15. E050 11-92
16. E051 11-92
17. E202 (The keys on the control panel are locked.) 11-93
18. E203 11-93
19. E204 (The keys on the control panel are locked.) 11-93
20. E210 (fault in lens X direction drive system) 11-94
21. E212 (fault in lens Y direction drive system) 11-94
22. E213 11-94
23. E214 11-94
24. E240 11-95
25. E243 11-95
26. E710/E711 11-95
27. E712 11-95
28. E713 11-96
29. E800 11-96
30. E802 11-96
31. AC power is absent. 11-97
32. DC power supply is absent. ... 11-98
33. Pick-up fails. (deck pick-up; front paper deck + cassette) .. 11-99
34. The deck lifter fails to move up. (front paper deck + cassette) .. 11-100
35. Pick-up fails. (cassette pick-up) 11-101
36. The lifter fails to move up. (cassette) 11-103
37. Pick-up fails. (multifeeder) 11-104
38. The vertical path roller fails to rotate. 11-105
39. The registration roller fails to rotate. 11-105
40. The scanner fails to move forward 11-106
41. The scanner fails to move in reverse. 11-106
42. The blanking exposure lamp fails to turn on. 11-107
43. The pre-exposure lamp fails to turn on. 11-107
44. The scanning lamp fails to turn on. 11-108
45. The hopper motor (M10) fails to operate. 11-109
46. The hopper motor (M11) fails to operate. 11-110
47. The drum heater fails to operate. 11-110
48. The lens fails to move. 11-111
49. The Add Toner indicator fails to turn on. 11-112
50. The Add Toner indicator fails to turn off. 11-112
51. The Set Control Card message fails to turn off. 11-113
52. The Set Control Card message fails to turn off. 11-113
53. Jams occur at the fixing assembly inlet. 11-113
54. The Add Paper message fails to turn off. 11-113
55. The fixing heater fails to operate. 11-114
56. Pick-up fails. (paper deck-A1) .. 11-115
57. The deck lifter fails to move up. (paper deck-A1) 11-116

V. TROUBLESHOOTING FEEDING PROBLEMS 11-117
A. Copy Paper Jams 11-117
1. Pick-Up Assembly 11-118
2. Separation/Feeding Assembly 11-119
3. Fixing/Delivery Assembly 11-120
4. Fixing/Delivery Assembly (reversed delivery) 11-120
5. Cleaning Assembly 11-121
6. Holding Tray Assembly (two-sided/overlay copying, 1st side) 11-121
7. Holding Tray Assembly (re-pick up) 11-122
8. Holding Tray Assembly (overlay, re-pick up) 11-123
9. Holding Tray Feeding Assembly 11-123
B. Feeding Faults 11-124
1. Double Feeding 11-124
2. Wrinkles 11-124

VI. ARRANGEMENT AND FUNCTIONS OF ELECTRICAL PARTS 11-125
A. Sensors 11-126
B. Switches and Solenoids 11-130
C. Motors and Fans 11-134
D. Clutches 11-136
E. Lamps, Heaters, and Photosensors 11-138
F. PCBs 11-140
G. Paper Deck-A1 11-142
1. Sensors and Switches 11-142
2. Motors, Clutches, Solenoids, and PCBs 11-144

COPYRIGHT © 1997 CANON INC.

H. Variable Resistors (VR), Light-Emitting Diodes (LED), and Check Pins by PCB.....11-146
1. DC Controller PCB.....11-146
2. AC Driver PCB.....11-149
3. DC Power Supply PCB.....11-149
4. Control CPU PCB.....11-150
5. Holding Tray Driver PCB.....11-151
6. Potential Measurement PCB..11-152
7. HVT1 PCB.....11-153
8. HVT2 PCB.....11-154
9. Inverter PCB.....11-154
10. Lamp Regulator PCB.....11-155
11. Counter PCB.....11-155
12. Side Deck Driver (paper deck-A1).....11-156

VII. SERVICE MODE.....11-157
A. Outline.....11-157
B. Using Service Mode.....11-158
C. Using Adjustment Mode and Options Mode.....11-158
D. Display Mode (✻1✻).....11-160
E. I/O Display Mode (✻2✻).....11-177
F. Adjustment Mode (✻3✻).....11-213
G. Function Mode (✻4✻).....11-231
H. Options Mode (✻5✻).....11-242
I. Counter Mode (✻6✻).....11-254

VIII. SELF DIAGNOSIS.....11-260
A. Copier.....11-260
B. RDF-D1.....11-265
C. Sorter.....11-267

APPENDIX

A. GENERAL TIMING CHART I.....A-1
B. SIGNALS AND ABBREVIATIONS...A-3
1. Signals.....A-3
2. Abbreviations.....A-4
C. GENERAL CIRCUIT DIAGRAM....A-5
D. PAPER DECK-A1 GENERAL CIRCUIT DIAGRAM.....A-7
E. SPECIAL TOOLS.....A-9
F. SOLVENTS AND OILS.....A-10

 COPYRIGHT © 1997 CANON INC.

CHAPTER 1

GENERAL DESCRIPTION

This chapter introduces the copier's features and specifications, shows how to operate the copier, and explains how copies are made.

I. FEATURES 1-1
II. SPECIFICATIONS 1-2
A. Copier 1-2
B. Paper Deck-A1 1-9
III. NAMES OF PARTS 1-10
A. External View 1-10
B. Cross Section 1-12
IV. OPERATING THE MACHINE 1-13
A. Control Panel 1-13
B. Extended Modes 1-14
C. User Mode 1-15
V. ROUTINE MAINTENANCE BY THE USER 1-19
VI. POINTS TO NOTE (BY THE USER) ..1-19
VII. IMAGE FORMATION 1-20
A. Outline 1-20

COPYRIGHT © 1997 CANON INC. CANON NP6560/NP6360/NP6260 REV.0 NOV. 1997 PRINTED IN JAPAN (IMPRIME AU JAPON)

I. FEATURES

1. It offers 60-sheet copying (A4, horizontal) and 65-sheet copying (A4, horizontal; 1 original) using the RDF's stream reading.
2. It has a reduced rate of jamming, thanks to new pick-up and feeding mechanisms.
3 It promises to produce high-quality copies for a long time, which is a prerequisite for all high-speed copiers.
   The use of Canon's proprietary A-Si (amorphous silicon) photosensitive drum ensures durability, while its single-component toner projection developing mechanism leads to enhanced image reproduction.
4. It comes with a large-size liquid crystal display for ease of viewing.
5. When fitted with a side paper deck (accessory), it will hold as many as 7,650 sheets.

COPYRIGHT © 1997 CANON INC.

II. SPECIFICATIONS

A. Copier

1. Type

Body	Console
Copyboard	Fixed
Light source	Halogen lamp (80 V, 272 W ; 120 V),(153 V, 290 W ; 230 V)
Lens	Zoom
Photosensitive medium	Amorphous silicon (80 mm dia.)

2. Mechanisms

Copying		Indirect electrostatographic
Charging		Corona
Exposure		Slit (moving light source)
Copy density adjustment		Automatic or manual
Development		Dry (toner projection)
Pick-up	Auto	Front cassette (2) Front paper deck (2)
	Manual	Multifeeder (5.5 mm deep, 50 sheets of 80 g/m^2)
Transfer		Corona
Separation		Corona (static)
Cleaning		Blade
Fixing		Heating roller (600 W + 600 W)

COPYRIGHT © 1997 CANON INC.
CANON NP6560/NP6360/NP6260 REV.0 NOV. 1997 PRINTED IN JAPAN (IMPRIME AU JAPON)

3. Performance

Original type		Sheet, book, 3-D object (2 kg max.)
Maximum original size		A3
Repro-duction ratio	Direct	1:1
	Reduce I	1:0.500
	Reduce II	1:0.707
	Reduce III	1:0.816
	Reduce IV	1:0.865
	Enlarge I	1:2.000
	Enlarge II	1:1.414
	Enlarge III	1:1.224
	Enlarge IV	1:1.154
	Zoom	1:0.490 to 2.040 (1% increments)
Wait time		6 min min. (at 20°C)
First copy		2.8 sec min (A4, non-AE, right deck pick-up)
Continuous copying		999 copies max.
Copying size		One-sided A: A3 (max.), A6 vertical (min.; postcard) Inch: 279.4×431 mm (11"×17", max.) STMT (min.) Two-sided A: A3 (max.), A5 horizontal (min.) Inch: 279.4×431.8 mm (11"×17", max.), STMT horizontal (min.)

COPYRIGHT © 1997 CANON INC.

Copy paper type	Cassette pick-up		• Plain paper (64 to 90 g/m^2) A3, B4, A4, B5, A4R, B5R, 11" × 17", LGL, LTR, LTR-R, A5, A5R, STMT, STMTR, Foolscap, GLTR, GLTR-R, KLGL, K-LGL-R, OFFICIO, E-OFFICIO, A-OFFICIO, B-OFFICIO, A-LTR, ALTR-R, A-LGL • Tracing paper* (SM-1) A3, B4, A4, B5, A4R, B5R • Colored paper (Canon-recommended) B4, A4
	Front paper deck pick-up		• Plain paper (64 to 90 g/m^2) A4, B5, LTR • Colored paper (Canon-recommended) A4
	Multifeeder pick-up		• Plain paper (64 to 90 g/m^2) A3, B4, A4, B5, A4, B5R, 11" × 17", LGL, LTR, LTR-R, STMT-R*, postcard • Tracing paper* (SM-1) A3, B4, A4, B5, A4R, B5R • Transparency (Canon-recommended) A4, LTR • Colored paper* (Canon-recommended) B4, A4 • Label sheet (Canon-recommended) A4, LTR • Thick paper* (91 to 200 g/m^2)
	Two-sided copying	Automatic	• Plain paper* (64 to 90 g/m^2) A3, B4, A4, B5, A4R, B5R, 11" × 17", LGL, LTR, LTR-R, A5, STMT • Colored paper (Canon-recommended) B4, A4
		Multifeeder	• Plain paper* (64 to 90 g/m^2) A3, B4, A4, B5, A4R, B5R, 11" × 17", LGL, LTR, LTR-R, STMT-R, A5, STMT • Colored paper* (Canon-recommended) B4, A4
	Overlay copying	Automatic	• Plain paper* (64 to 90 g/m^2) A3, B4, A4, B5, A4R, B5R, 11" × 17", LGL, LTR, LTR-R, A5, STMT • Color paper* (Canon-recommended) B4, A4
		Multifeeder	Plain paper* (64 to 90 g/m^2) A3, B4, A4, B5, A4R, B5R, 11" × 17", LGL, LTR, LTR-R, STMT-R, A5, STMT • Colored paper* (Canon-recommended) B4, A4

*May be used, but may not feed properly.

COPYRIGHT © 1997 CANON INC.
CANON NP6560/NP6360/NP6260 REV.0 NOV. 1997 PRINTED IN JAPAN (IMPRIME AU JAPON)

Tray	Claw	None
	Cassette	60 mm deep (approx.) (about 550 sheets each of 80 g/m^2 paper)
	Front paper deck	162 mm deep (about 1500 sheets each of 80 g/m^2)
	Copy tray	250 sheets (approx.; A3, of 80 g/m^2)
Non-image width	Leading edge	For Direct, 4.5 ±1.5 mm (for non-default, overlay, two-sided, 4.5 ±1.5 mm)
	Trailing edge	2.0 ±1.5 mm (non-default, overlay, two-sided, 2.0 ±1.5 mm); if with RDF-D1, 2.0 ±1.5 mm
	Left/right (1st side)	2.75 ±2.5 mm; if with RDF-D1, 2.75 ±2.75 mm
	Left/right (2nd side)	2.75 ±2.5 mm; if with RDF-D1, 2.75 ±2.75 mm
Auto clear		Provided (2 min standard; may be varied between 0 and 1 hr in 10-min increments; may be varied between 1 and 2 hr in 1-hr increments)
Auto power-off		Provided (1 hr standard; may be varied between 0 and 1 hr in 10-min increments; may be varied between 1 and 2 hr in 1-hr increments)
Accessory		• Sorter-G1 • Paper Deck-A1 • Stapler Sorter-E2 • Remote Diagnostic Device II • Control Card-V • Copy Data Controller-A1

COPYRIGHT © 1997 CANON INC.

4. Others

Operating environment	Temperature	7.5° to 32.5°C/45.5°C to 90.5°F		
	Humidity	5% to 80% RH		
	Atmospheric pressure	810.6 to 1013.3 hPa (0.8 to 1.0 atm)		
Power supply		NP6560	NP6360	NP6260
	120V (UL) 120V 220/ 240V 220/ 240V (UK) 220/ 240V (CA) 220/ 240V (FRN) 220/ 240V (GER) 220/ 240V (AMS) 220/ 240V (ITA)	NHW XXXXX – – – – – – – –	– NHV XXXXX PES XXXXX – RBX XXXXX – – – –	– – – QBM XXXXX – SAZ XXXXX PDW XXXXX UDB XXXXX TBB XXXXX
Power consumption	Maximum	2.0 kW or less		
	Standby	0.4 kWh (approx.; reference only)		
	Continuous copying	1.4 kWh (approx.; reference only)		
Noise	Copying	78 dB or less (sound power level by ISO)		
	Standby	55 dB or less (sound power level by ISO)		
Ozone		0.05 ppm or less (avr over 8 hr)		
Dimensions	Width	643mm/25.3 in		
	Depth	725mm/28.5 in		
	Height	1169mm/46.0 in		
Weight		210 kg/ 462.8lb (approx.; w/ RDF)		
Consumables	Copy paper	Keep wrapped to protect against humidity.		
	Toner	Avoid direct sunshine; keep at 40°C, 85% or under.		

COPYRIGHT © 1997 CANON INC.

Ratio		Size	Copy paper	Copies/min
Direct		A3(297 × 420mm)	A3	30
		A4(210 × 297mm)	A4	60
		B4(257 × 364mm)	B4	39
		B5(182 × 257mm)	B5	60
		A4R(297 × 210mm)	A4R	46
		B5R(257 × 182mm)	B5R	52
Reduce	I (50%)	A3 → A5R	A5R	57
	II (70%)	A3 → A4R	A4R	46
		B4 → B5R	B5R	52
		A4 → A5	A5	60
	III (81%)	B4 → A4R	A4R	46
	IV (86%)	A3 → B4	B4	39
		A4 → B5	B5	60
Enlarge	I (200%)	A5R → A3	A3	29
	II (141%)	A4R → A3	A3	30
		B5R → B4	B4	38
		A5 → A4	A4	47
	III (122%)	A4R → B4	B4	39
	IV (115%)	B4 → A3	A3	30
		B5 → A4	A4	60

Table 1-201 Copying Speed (copier only)

COPYRIGHT © 1997 CANON INC.

Ratio		Size	Copy paper	Copies/min
Direct		LTR	LTR	60
		11" × 17"	11" × 17"	30
		LGL	LGL	40
		LTRR	LTRR	49
		STMT/STMTR	STMT/STMTR	60
Reduce	I (50%)	11" × 17" → STMTR	STMTR	56
	II (64.7%)	11" × 17" → LTRR	LTRR	48
	III (73.3%)	11" × 15" → LTRR	LTRR	48
Enlarge	I (200%)	STMR → 11" × 17"	11" × 17"	29
	II (129.4%)	LTRR → 11" × 17"	11" × 17"	30
	III (121.4%)	LGL → 11" × 17"	11" × 17"	30

Table 1-202 Copying Speed (copier only)

Specifications subject to change without notice.

COPYRIGHT © 1997 CANON INC.
CANON NP6560/NP6360/NP6260 REV.0 NOV. 1997 PRINTED IN JAPAN (IMPRIME AU JAPON)

B. Paper Deck-A1

Item	Specifications
Pick-up	Clawless (retard)
Paper compartment	Side tray
Copy paper	• Plain paper (64 to 90 g/m^2) A4, B5, LTR • Colored paper (Canon-recommended) A4
Paper volume	385 mm high (stack; about 3,500 sheets of 80 g/m^2 paper)
Serial number	ZHY xxxxx (A/B), ZHZ xxxxx (Inch)
Paper size alteration	By size guide plate (in steps), in service mode (*5*)
Dimensions	329 (W) × 583 (D) × 680 (H) mm/13.0 (W) × 23.0 (D) × 26.8 (H) in
Weight	33.5 kg/73.8 lb
Power supply	DC from copier
Operating environment Temperature Humidity	Same as copier

Specifications subject to change without notice.

COPYRIGHT © 1997 CANON INC.

III. NAMES OF PARTS

A. External View

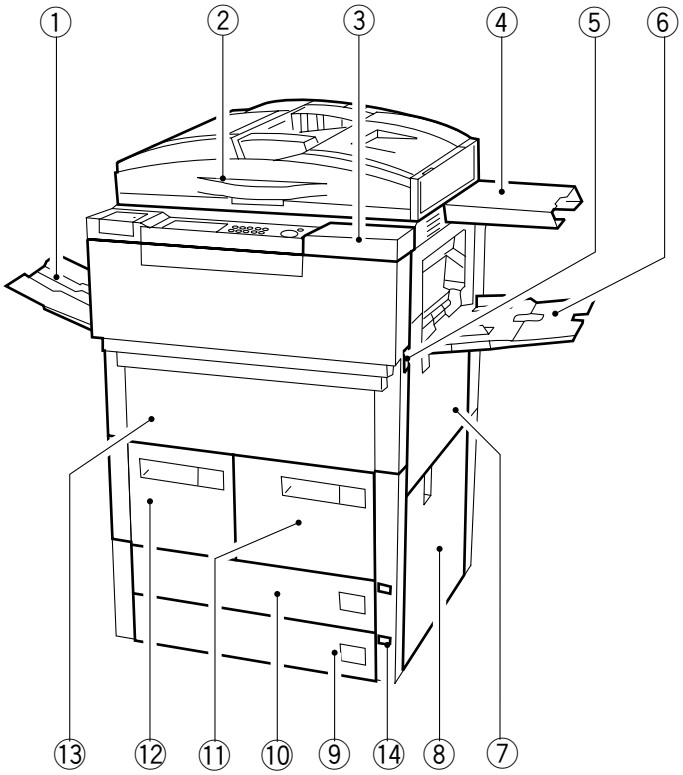

① Copy tray
② RDF
③ Toner supply mouth
④ Original tray/Instructions tray
⑤ Power switch
⑥ Multifeeder
⑦ Upper right door
⑧ Lower right door
⑨ Cassette 4
⑩ Cassette 3
⑪ Right deck
⑫ Left deck
⑬ Front door
⑭ Cassette eject button

Figure 1-301

 COPYRIGHT © 1997 CANON INC.

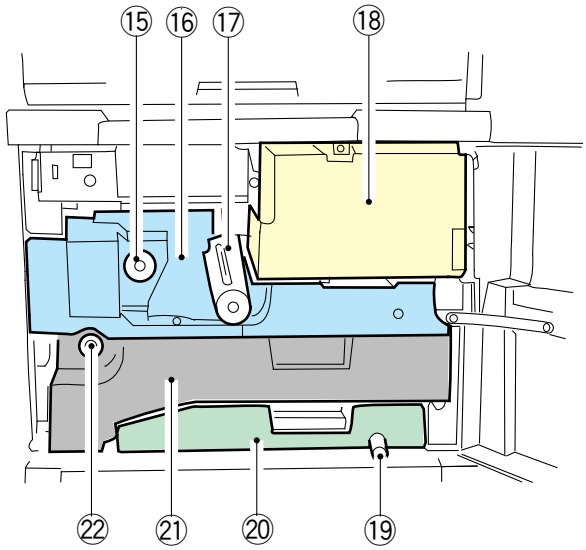

⑮ Fixing assembly knob
⑯ Fixing feeding assembly
⑰ Fixing/feeding assembly lever
⑱ Toner hopper
⑲ Holding tray feeding assembly knob
⑳ Holding tray feeding assembly
㉑ Holding tray assembly
㉒ Holding tray knob

Figure 1-302

COPYRIGHT © 1997 CANON INC.

B. Cross Section

1. Copier

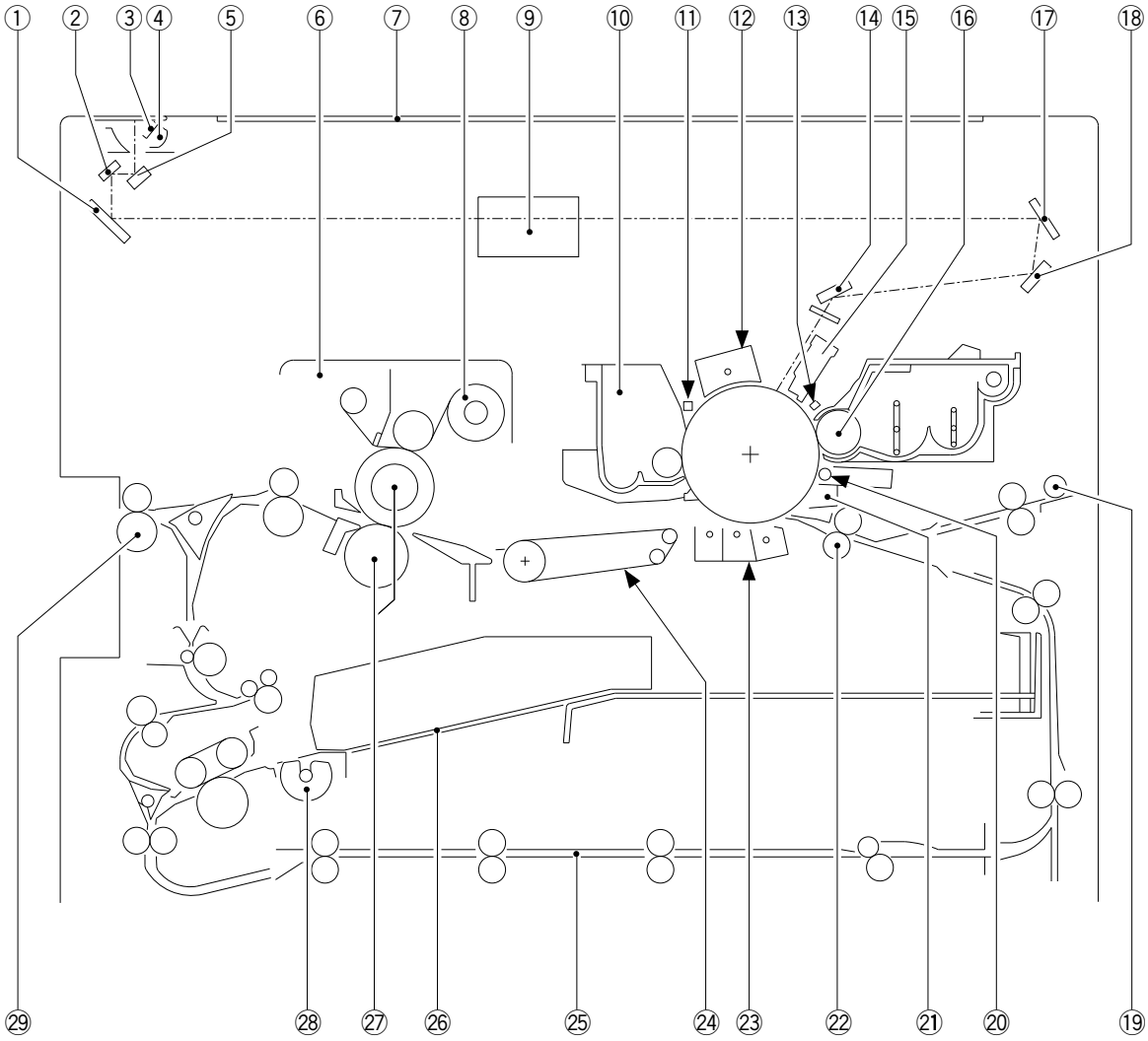

① No. 3 mirror
② No. 2 mirror
③ Heat absorbing glass
④ Scanning lamp
⑤ No. 1 mirror
⑥ Fixing assembly
⑦ Copyboard glass
⑧ Fixing web
⑨ Lens
⑩ Drum cleaning assembly
⑪ Pre-exposure lamp
⑫ Primary charging assembly
⑬ Potential sensor
⑭ No. 6 mirror
⑮ Blanking exposure lamp
⑯ Developing cylinder
⑰ No. 4 mirror
⑱ No. 5 mirror
⑲ Multifeeder pick-up roller
⑳ Roller electrode
㉑ Pre-transfer corona assembly
㉒ Registration roller
㉓ Transfer/separation
㉔ Feeding belt
㉕ Duplexing feeding unit assembly
㉖ Holding tray
㉗ Fixing roller
㉘ Holding tray pick-up (crescent) roller
㉙ Delivery roller

Figure 1-303

 COPYRIGHT © 1997 CANON INC. CANON NP6560/NP6360/NP6260 REV.0 NOV. 1997 PRINTED IN JAPAN (IMPRIME AU JAPON)

IV. OPERATING THE MACHINE

A. Control Panel

① Touch panel display
② Guide key
③ Reset key
④ Numeric keypad
⑤ Display contrast key
⑥ Energy saver (Pre-Heat) key
⑦ Stop key
⑧ Toner supply mouth
⑨ Pilot lamp
⑩ Copy start key
⑪ Clear key
⑫ Interrupt key
⑬ User mode key
⑭ Preference key

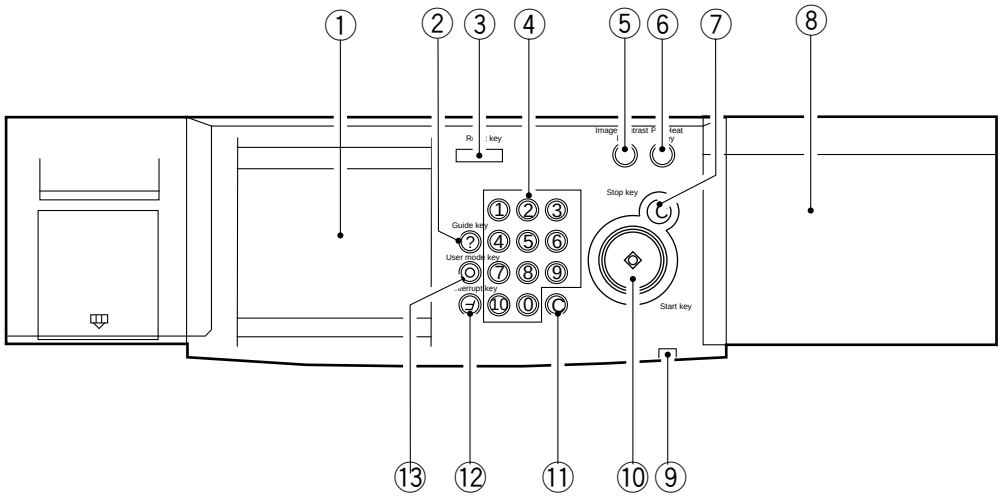

Figure 1-401

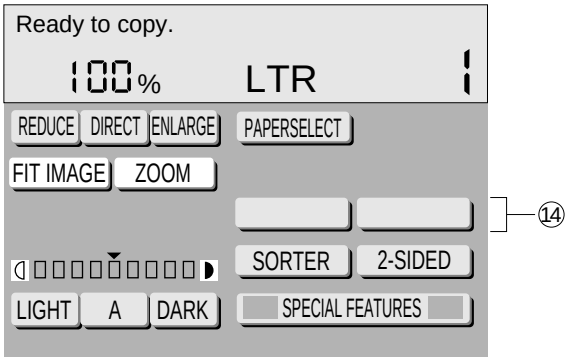

Figure 1-402

COPYRIGHT © 1997 CANON INC.

B. Extended Modes

Mode	Description
Auto Start	Use it while in wait state for automatic start.
Pre-Heat	Use it to turn off the indicators on the control panel except the Power and the Pre-Heat indicators.
Bind	Use it to select right binding, left binding, top binding, or bottom binding.
Frame Erase	Use it to select original frame erasing, sheet frame erasing, hole image erasing, or book frame erasing.
Two-Sided Copy	Use it to select “one-sided original to two-sided copy,” “two-sided original to two-sided copy,” or “two-sided original to one-sided copy.”
Overlay Copy	Use it to make overlay copies.
Auto Paper Select	Use it for automatic selection of copy paper best suited to original size and copy size.
Auto Ratio Select	Use it for automatic selection of reproduction ratio best suited to original size and copy paper size.
Interrupt	Use it to interrupt on-going continuous copying for a different original.
Reduced Image Composition	Use it to select 2-on-1, 4-on-1, 2-on-1 two-sided, or 2-on-1 overlay.
Cover mode	Use it to select cover, back cover, or interleaf (20 sheets or less).
ID	Use it so that copying is possible only in response to a pre-registered ID (1000 max.).

Table 1-401

COPYRIGHT © 1997 CANON INC.

C. User Mode

1. Types of User Modes

The machine provides the following four types of user modes:

a. Settings
b. Adjust/Clean
c. Timer
d. Preference

[1] Settings

Item	Descriptions	Remarks
Auto Sort	Use it to enable or disable auto sort mode in response to multiple originals (count of 2 or more) when the RDF is used.	Default: ON
Sorter Front Access	When the sorter is connected, ON: Enable sorter auto front access. OFF: Disable sorter auto front access.	Default: ON Paper: A4, B5, LTR in horizontal feed
Skip	Use it to enable or disable skip copying to avoid wrong orientation of mirror originals (holes on odd/even-numbered pages). ON: Enable skip copy. OFF: Disable skip copy.	Default: ON
Feeder Manual Feed Auto Start	Use it to enable or disable auto start when the RDF is used for manual feeding (whether copying should start immediately after pulling in an original or after a press on the Copy Start key). ON: Enable auto start. OFF: Disable auto start.	Default: ON
Auto Cassette Change/APS	Use it to enable or disable auto cassette change/APS when the selected cassette runs out of copy paper to a cassette holding same-size paper in continuous copying. ON: Enable auto cassette change/APS. OFF: Disable auto cassette change/APS.	Default: ON
Manual Size Selection	Use it to show or not show the multi feeder size input screen when the multifeeder is selected as the source of paper. ON: Show size input screen. OFF: Do not show size input screen.	Default: OFF

Table 1-402(a)

COPYRIGHT © 1997 CANON INC.

Item	Descriptions	Remarks
Inch Input	Use it to enable or disable inch input when selecting binding width, hole margin width, and zoom program. ON: Enable inch input. OFF: Disable inch input.	Default: OFF
Wait Time Indicator	Use it to show or not show how long the on-going copying takes. ON: Show. OFF: Do not show.	Default: OFF
Buzzer ON/OFF	Use it to specify whether the buzzer should be sounded in response to inputs, warnings, standby, and copying end. ON: Enable the buzzer. OFF: Disable the buzzer.	Default: ON
Just Fit Ratio	Use it to select the reproduction ratio for the just fit function between 90% and 99% in 1% increments.	Default: 93%
Just Fit Center	Use it to enable or disable centering in just fit mode. ON: Enable centering. OFF: Disable centering.	Default: ON
Just Fit Non-Image	Use it to enable or disable non-imaging in just fit mode. ON: Enable non-imaging. OFF: Disable non-imaging.	Default: OFF
Energy saver	Use it to select a power saving rate in energy saver mode. 10%: at 10% 25%: at 25% 50%: at 50% No resetting: no saving (at 0%)	A saving rate is in relation to the machine's total consumption. Default: No resetting.
Initialize Settings	Use it to initialize user mode settings.	
Standard Mode Change	Use it to store the mode to be selected in response to a press on the Reset key (or in auto clear). You may select factory default as post-initialization mode.	Default Copy ratio, 100%; auto paper select, ON; density control, manual; copy count, 1.

Table 1-402(b)

COPYRIGHT © 1997 CANON INC.

[2] Adjust/Clean

Item	Description	Remarks
Wire Clean	Use it to execute automatic cleaning of the primary charging wire, pre-transfer charging wire, transfer charging wire, or separation charging wire.	
Feeder Clean	Place 10 sheets of blank copy paper in the feeder, and press the OK key. The sheets will be fed in 'one-sided to one-sided' copying mode, thereby cleaning the separation belt and the feeding roller.	
Zoom Fine Adjust	Use it to fine adjust the vertical and the horizontal reproduction ratios in 0.2% increments. Width: –1.0% to +1.0% Unit: 0.2%	

Table 1-403

[3] Timer

Item	Description	Remarks
Auto Clear Time	Use it to set the auto clear time between 1 and 9 min in 1-min increments or between 0 and 50 sec in 10-sec increments. Set it to 0 sec to disable the auto clear function.	At time of shipment, set to 2 min.
Auto Energy Saver Time	Use it to set the auto power save time between 10 min and 4 hr in 10-min (within 1 hr) or 1-hr (between 1 hr and 4 hr) increments.	At time of shipment, set to 15 min.
Auto Power-Off Time	Use it to set the auto power-off time between 10 min and 2 hr in 10-min increments (within 1 hr) or in 1-hr increments (1 to 2 hr). You may disable the auto power-off function in service mode.	At time of shipment, set to 1 hr.
Weekly Timer	If 'no' is selected, power will not turn off automatically from Monday through Sunday at specified times. (Be sure that the machine is set to the correct time.)	
Time/Day	Use it to set the time/day of the week for the built-in clock.	Used for the weekly timer.

Table 1-404

COPYRIGHT © 1997 CANON INC.

[4] Preferences

Item	Description	Remarks
User Customize	Use it to assign specific modes to keys on the Standard screen.	2 max.

Table 1-405

COPYRIGHT © 1997 CANON INC.
CANON NP6560/NP6360/NP6260 REV.0 NOV. 1997 PRINTED IN JAPAN (IMPRIME AU JAPON)

V. ROUTINE MAINTENANCE BY THE USER

Advise the user to be sure to clean the following at least once a week:

1. Copyboard Glass
   Wipe it with a moist cloth; then, dry wipe it.
2. RDF Feeding Belt
   Wipe it with a cloth moistened with a solution of mild detergent; then, dry wipe it.

VI. POINTS TO NOTE (BY THE USER)

- Handling the Toner Bottle
  Instruct the user to dispose of any empty toner bottle as nonflammable material.

⚠ Caution:
Do NOT throw the cartridges into fire; it can burst or explode.

COPYRIGHT © 1997 CANON INC.

VII. IMAGE FORMATION

A. Outline

The machine uses an electrophotographic method, and is constructed as shown in Figure 1-601.

In addition to the mechanisms shown, the machine is equipped with an automatic control function to control the potential of the drum surface.

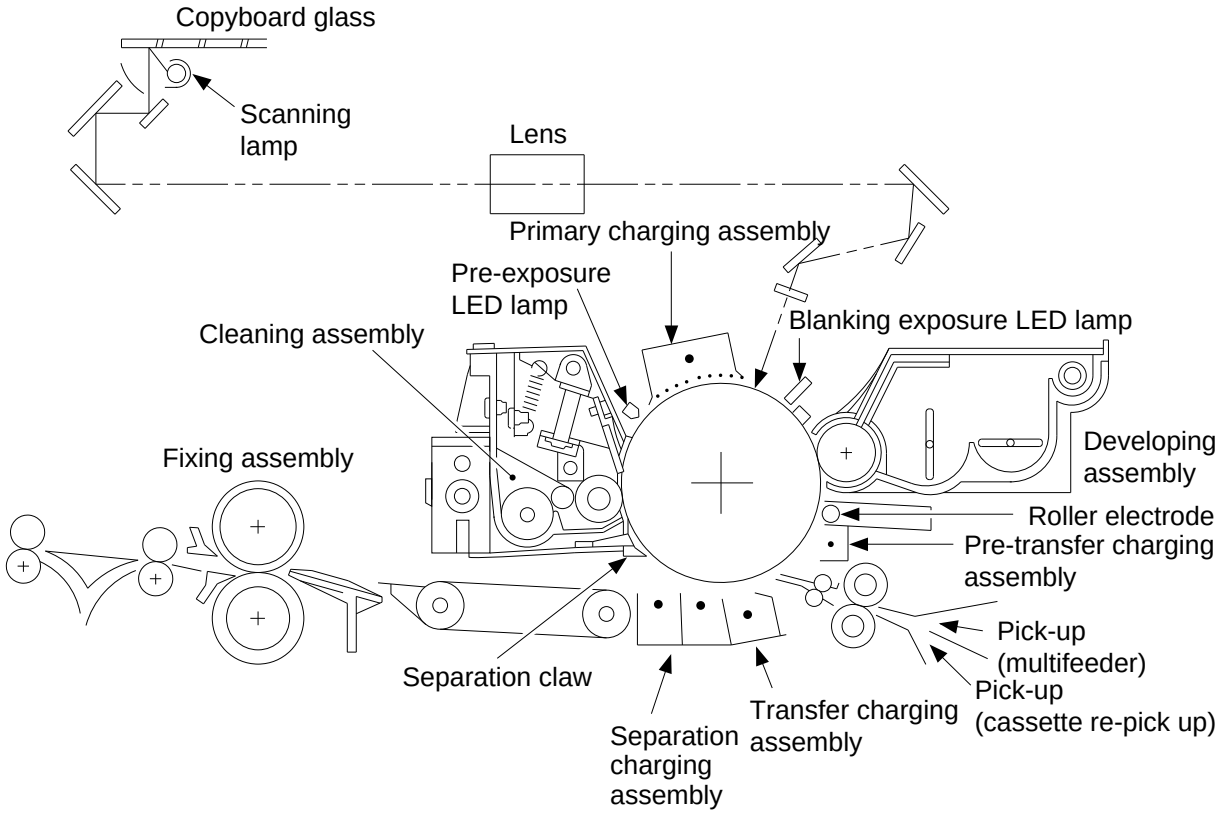

Figure 1-601

 COPYRIGHT © 1997 CANON INC. CANON NP6560/NP6360/NP6260 REV.0 NOV. 1997 PRINTED IN JAPAN (IMPRIME AU JAPON)

The machine forms an image using the following nine steps:
Step 1 Pre-exposure
Step 2 Primary charging (positive DC)
Step 3 Image exposure
Step 4 Development (AC + positive DC)
Step 5 Pre-transfer charging (AC + negative DC)
Step 6 Transfer (positive DC)
Step 7 Separation (AC + positive DC)
Step 8 Fixing
Step 9 Drum cleaning

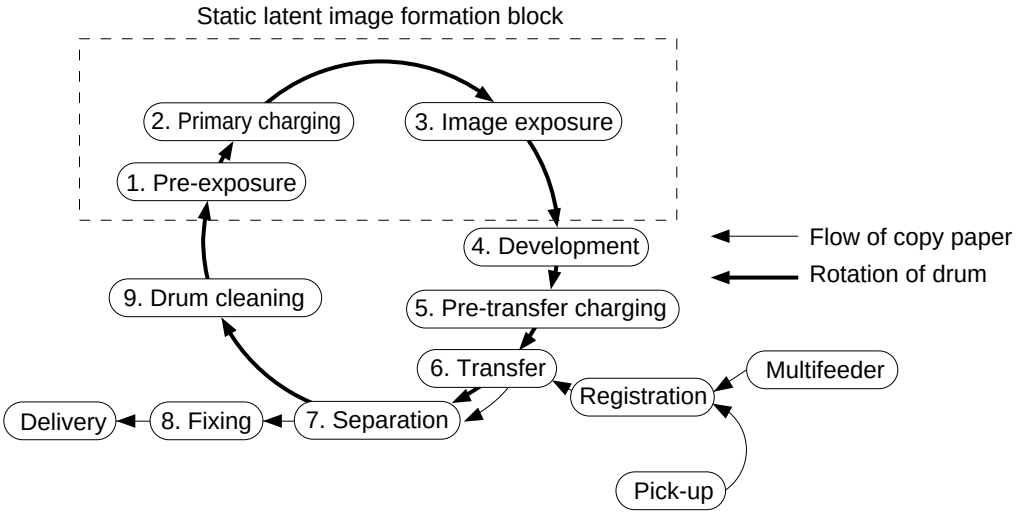

Figure 1-602

 COPYRIGHT © 1997 CANON INC. CANON NP6560/NP6360/NP6260 REV.0 NOV. 1997 PRINTED IN JAPAN (IMPRIME AU JAPON)

CHAPTER 2

BASIC OPERATION

This chapter provides outlines of the copier's various mechanical workings. (Note that a single rotation of the drum takes about 0.66 sec.)

I. BASIC MECHANISMS 2-1
A. Functional Construction.....2-1
B. Outline of the Electrical Circuitry...2-2
C. Basic Sequence of Operations.....2-4
D. Main Motor (M1) Control Circuitry..2-10
E. Inputs to the DC Controller.....2-12
F. Outputs from the DC Controller 2-20
G. Inputs to and Outputs from Accessories (1/1).....2-31

COPYRIGHT © 1997 CANON INC. CANON NP6560/NP6360/NP6260 REV.0 NOV. 1997 PRINTED IN JAPAN (IMPRIME AU JAPON)

I. BASIC MECHANISMS

A. Functional Construction

The machine can be divided into four blocks: pick-up/feeding, exposure, image formation, and control.

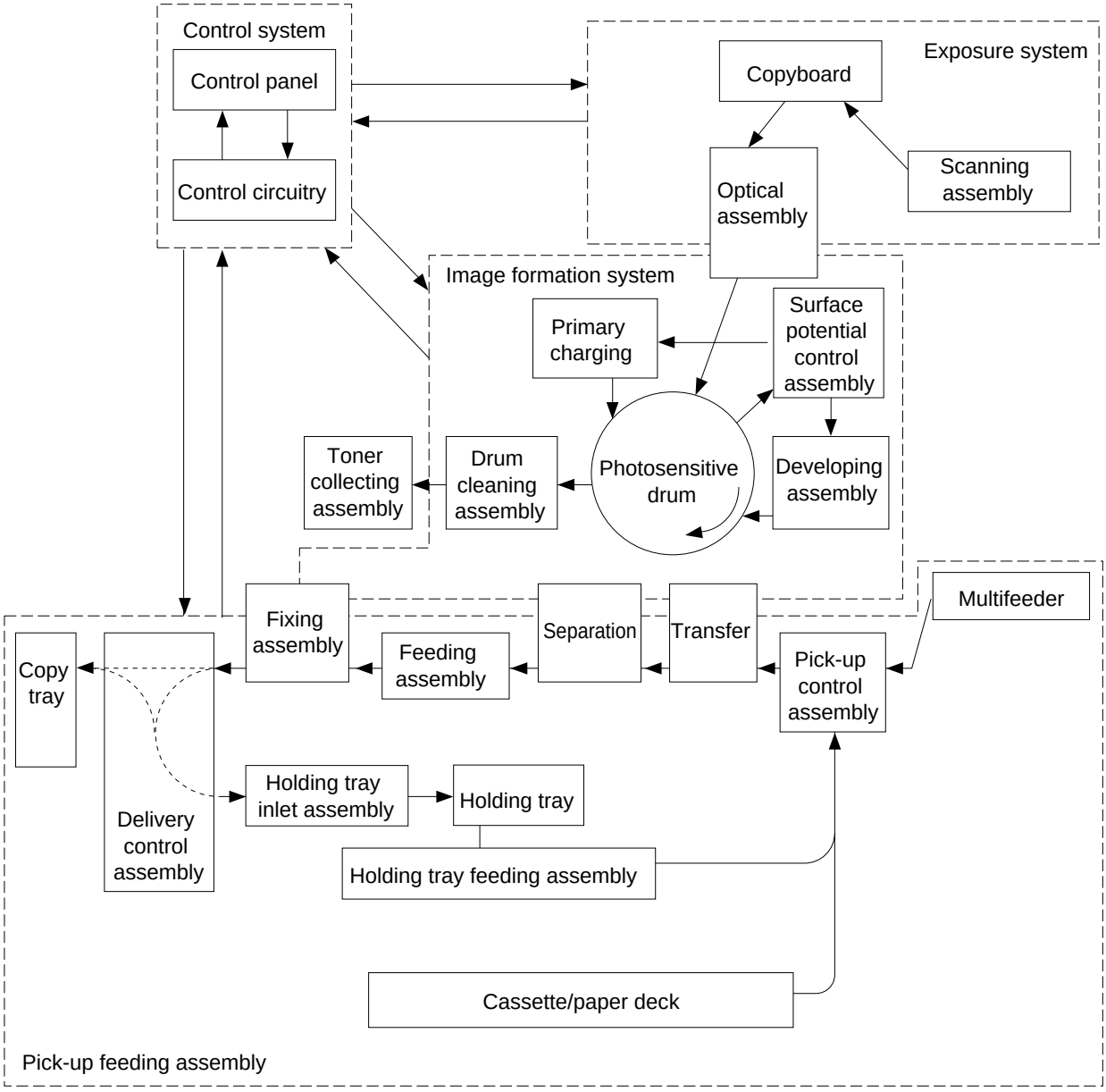

Figure 2-101

COPYRIGHT © 1997 CANON INC.

B. Outline of the Electrical Circuitry

The machine's major electrical mechanisms are controlled by the microprocessor on the DC controller PCB:

- Controlling copying sequence
- Controlling high-voltage
- Controlling scanner drive
- Controlling pick-up/feeding
- Controlling the lens motor (X, Y)
- Controlling the blanking exposure LED
- Controlling the analog signal inputs
  Thermistor signal
  Potential sensor signal
  Ambient temperature signal
  Manual feed size signal

The machine's control panel is equipped with a dedicated CPU (Q937) which controls the keys, LEDs, and LCD on the control panel.

The machine communicates with the RDF and the sorter using the communications IC on its DC controller PCB and the communications IC (IPC) on the controller PCB of each accessory. (IPC communication 2).

Figure 2-102 is a block diagram which shows the relationship between the machine's major circuits.

COPYRIGHT © 1997 CANON INC.
CANON NP6560/NP6360/NP6260 REV.0 NOV. 1997 PRINTED IN JAPAN (IMPRIME AU JAPON)

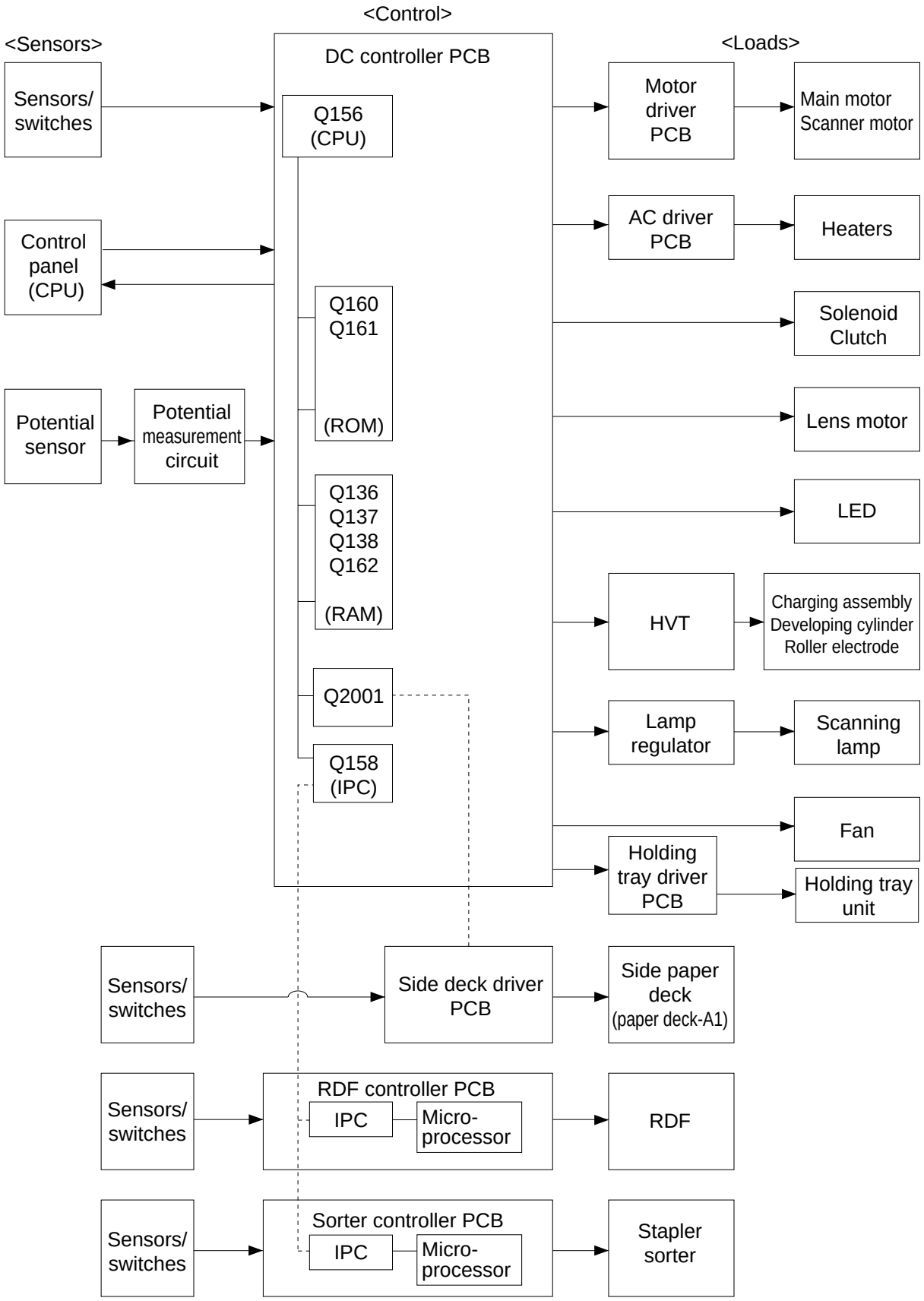

Figure 2-102

COPYRIGHT © 1997 CANON INC.

C. Basic Sequence of Operations

1. Basic Sequence of Operations at Power-On

When the surface temperature of the fixing roller is 75°C or less and, in addition, the ambient temperature is 17°C or more at power-on,

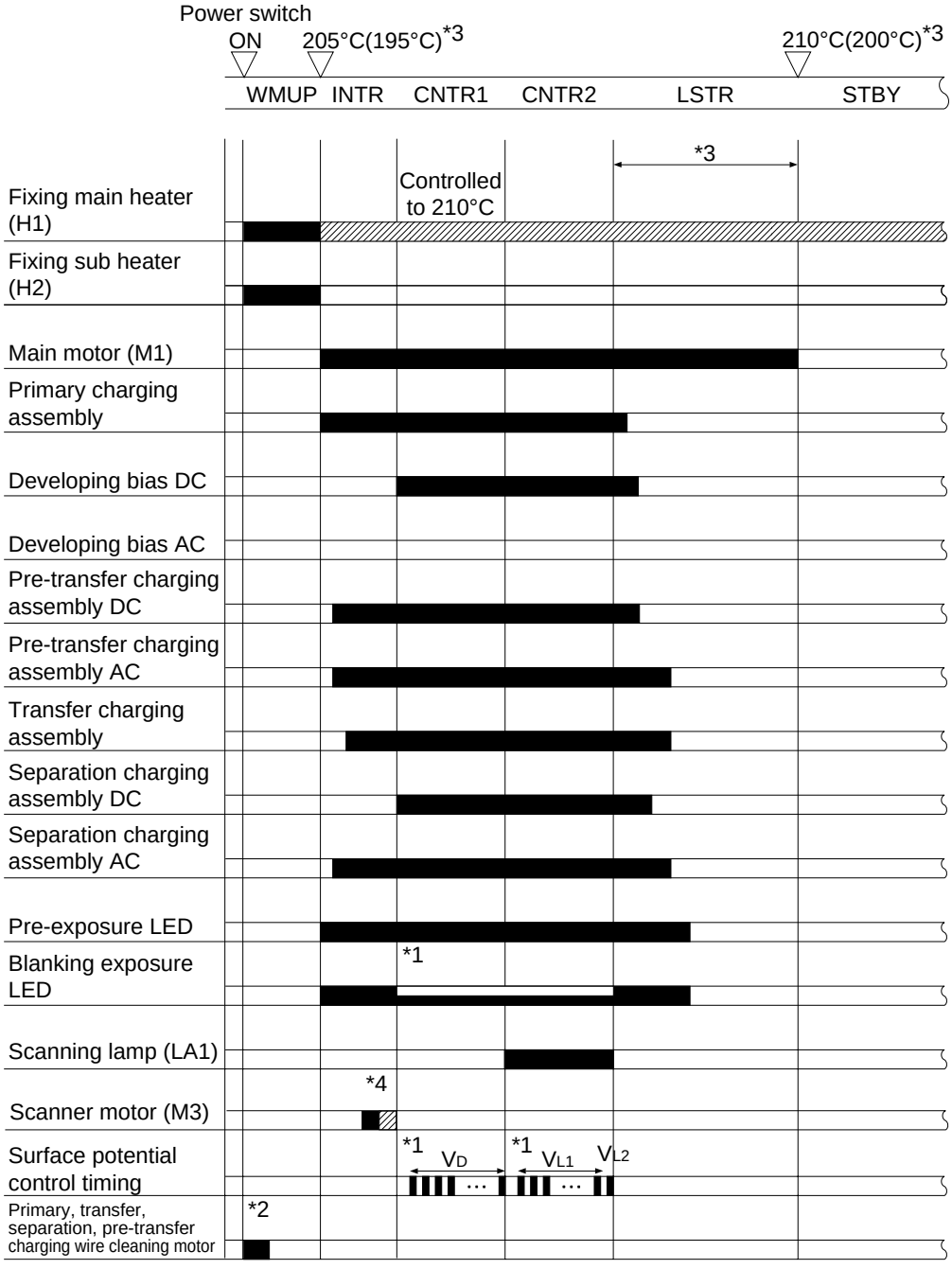

*1 During potential control (CNTR1, CNTR2), V_D and V_{L1} are measured; therefore, blanking exposure lamp LEDs corresponding to the potential sensor are turned OFF.
*2 If the surface temperature of the fixing roller is 100°C or less when the power switch is turned ON, the primary/pre-transfer/transfer/separation charging wire is cleaned. (Cleaning is also executed every 2,000 copies.)
*3 If the surface temperature of the fixing roller is 75°C or more.
*4 ■: Forward, ▨: Reverse.

Figure 2-103

COPYRIGHT © 1997 CANON INC.

Period			Function	Remarks
WAIT (wait)	WMUP (warm up)	From when the power switch is turned on to when the surface temperature of the upper fixing roller reaches 205°C.	• Waits until the fixing assembly warms up.	• If the temperature of the fixing roller is 100°C or less at power-on, the primary/pre-transfer/separation/transfer charging wire is cleaned. • The lens moves to A4 wide (297 mm) Direct position.
	INTR (initial total rotation)	From when WMUP ends until when CNTR1 starts after the surface temperature of the upper fixing roller has reached 205°C.	• Evens out the surface temperature of the fixing roller. • Discharges copy paper, if any.	
	CNTR1 (control rotation 1)	For about 5 sec after the end of INTR.	Measures the drum surface potential VD.	
	CNTR2 (control rotation 2)	For about 5 sec after the end of CNTR1.	Measures the drum surface potential VL.	Determines the value of the developing bias (DC component) for copying according to the measurement of VL2.
	LSTR (last rotation)	While the photosensitive drum makes a single rotation.	Rids the surface of static charges as post-treatment.	
STBY (standby)		From when LSTR ends to when the Copy Start key is pressed or the power switch is turned off.	• Waits for a press on the Copy Start key or an operation key.	• In 2 min after the end of LSTR, the control panel changes to standard mode indication. • If the Copy Start key is pressed (auto start) during a wait period, copying starts at the end of LSTR.

Table 2-101

COPYRIGHT © 1997 CANON INC.

2. Basic Sequence of Operations

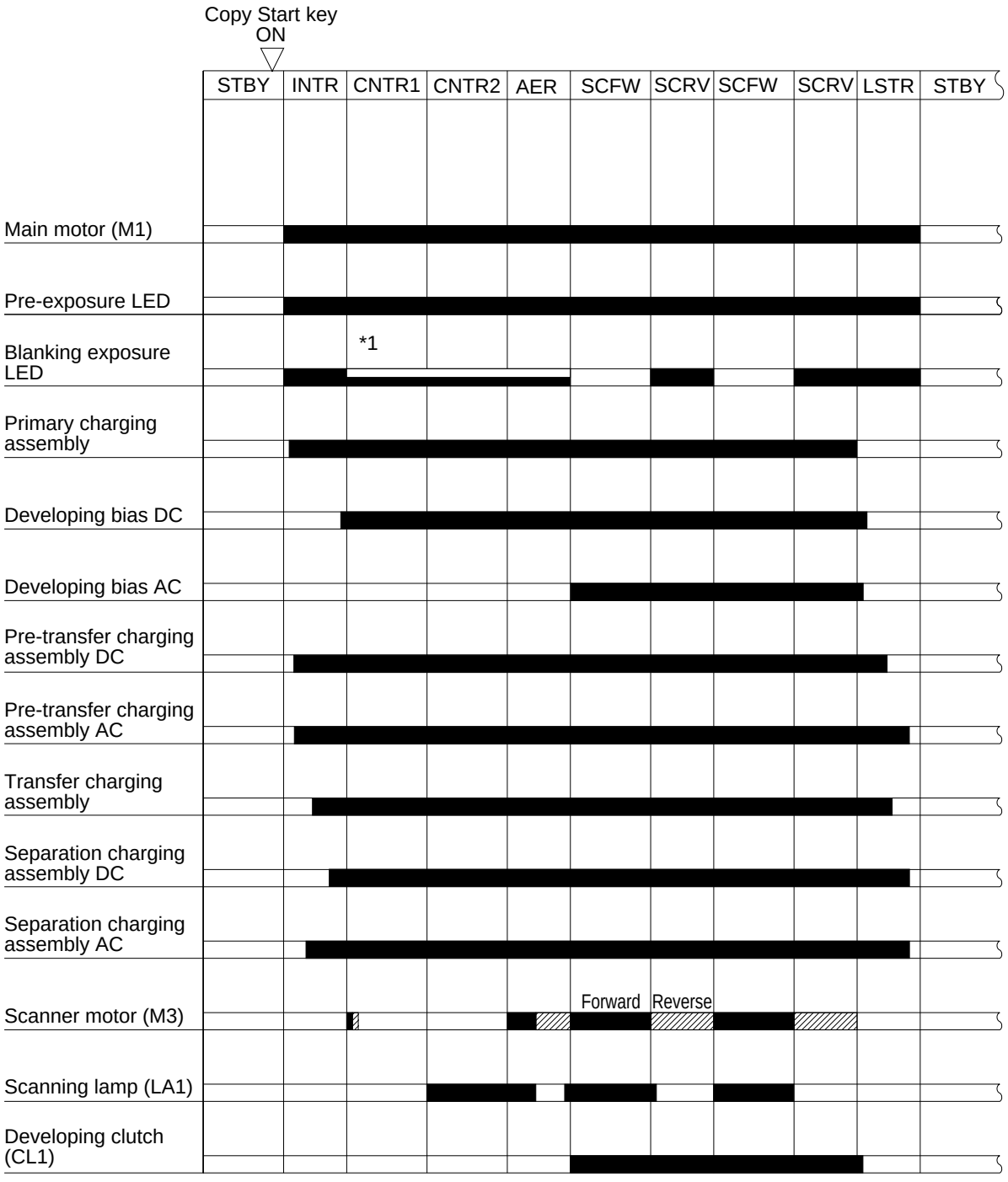

*1 Turns off the blanking exposure LEDs corresponding to the potential sensor for potential measurement (V_D, V_{L1}, V_{L2}).

Figure 2-104

COPYRIGHT © 1997 CANON INC.
CANON NP6560/NP6360/NP6260 REV.0 NOV. 1997 PRINTED IN JAPAN (IMPRIME AU JAPON)

Period		Function	Remarks
INTR (initial rotation)	From when the Copy Start key is pressed to when CNTR1 starts.	Stabilizes the sensitivity of the drum in preparation for copying.	• Executed when moving the lens. If the lens fails to reach a specific position within a specific period of time, INTR is continued until the lens is correctly positioned.
CNTR1 (control rotation 1)	For about 5 sec after the end of INTR.	Controls the drum surface potential VD.	Before executing potential control, the scanner motor is rotated in reverse to return the scanner to home position without fail.
CNTR2 (control rotation 2)	For about 5 sec after the end of CNTR1.	Controls the drum surface potential VL.	Determines the value of the developing bias (DC component) for copying according to the measurement of V_{L2}.
AER (AE rotation)	From when the scanner has moved forward about 120 mm to when it returns to home position.	Measures the density of the original while the scanner is moving in reverse.	• Executed only in AE mode.
SCFW (scanner forward)	While the scanner is moving forward: • The distance the scanner travels forward varies according to copy paper size and ratio. • The speed at which the scanner travels forward varies according to ratio.	The scanning lamp illuminates the original, and the reflected optical image is projected to the photosensitive drum through mirrors and lenses.	• The registration signal is generated to move the copy paper to the transfer assembly. • The pick-up signal is generated to pick-up the second sheet.
SCRV (scanner reverse)	While the scanner is moving in reverse.	• Returns the scanner to home position in preparation for next copying.	
LSTR (last rotation)	From the end of SCRV to when the main motor stops.	Rids the surface of the drum of charges as post treatment.	Discharges the last sheet.

Table 2-102

COPYRIGHT © 1997 CANON INC.

3. Basic Sequence of Operations in Page Separation Mode

When making copies in page separation mode, the original on the left on the copyboard is copied (SCFW1) and then the original on the right (SCFW2).

If the copy count is '2' or higher, the original on the left on the copyboard is copied for as many copies as specified, and then the original on the right for as many copies.

In page separation mode, the copier's AE mode (if ON) is used. The density of the original in such a case is over a distance 120 mm from the leading edge of the original; the originals on both left and right sides on the copyboard are copied based on the resulting measurements.

Reference:

If the conditions for potential control given on p. 4-1 are met, potential control rotation (CNTR1, 2) is executed after INTR.

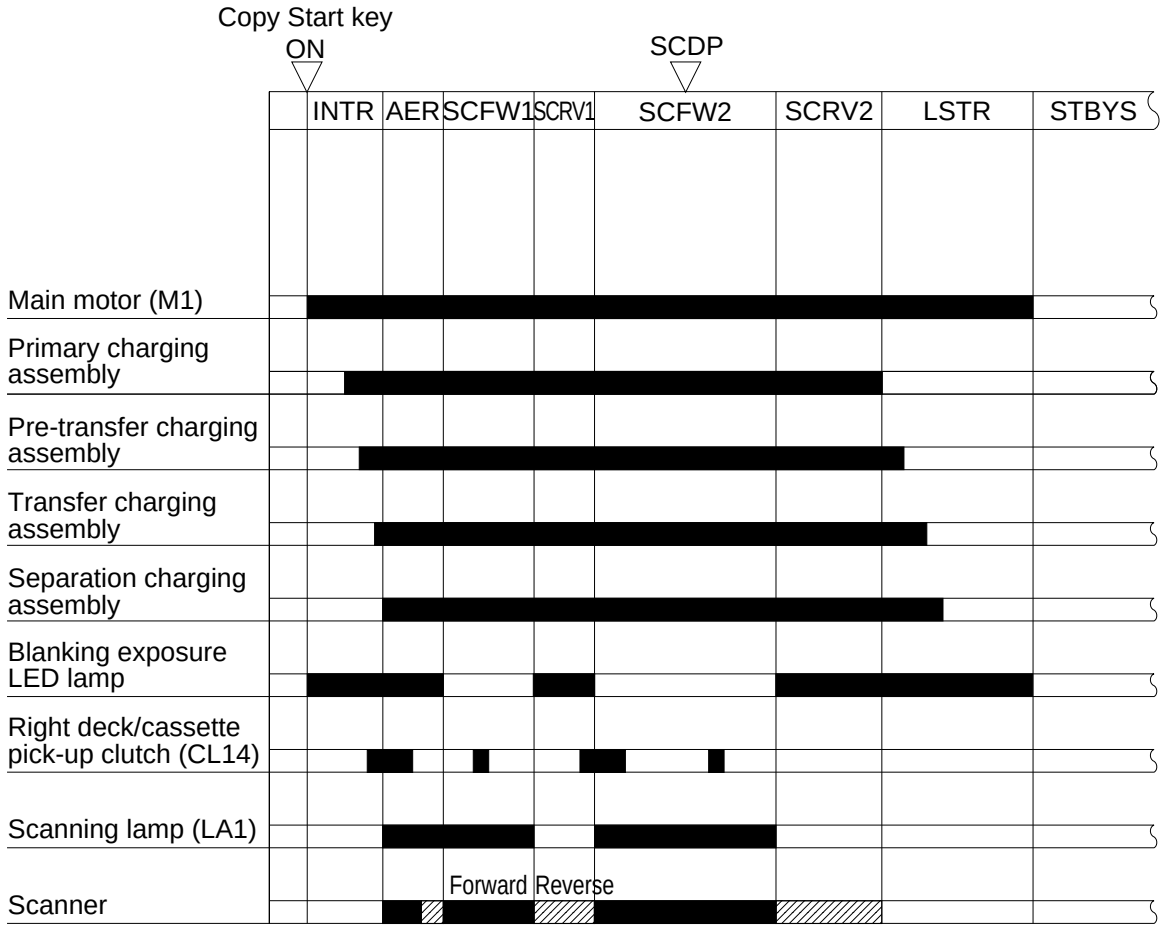

Figure 2-105

COPYRIGHT © 1997 CANON INC.
CANON NP6560/NP6360/NP6260 REV.0 NOV. 1997 PRINTED IN JAPAN (IMPRIME AU JAPON)

Period		Function	Remarks
SCFW1 (scanner forward 1; copying original on left)	While the scanner is moving forward • The distance over which the scanner moves forward varies according to copy paper size and ratio.	Illuminates the original on the left on the copyboard with the scanning lamp, and the reflected optical image is projected on the photosensitive drum through mirrors and lenses.	• The registration signal is generated to move the copy paper to the transfer assembly. • The pick-up signal is generated to pick up the next sheet.
SCRV1 (scanner forward 1)	From when the scanner starts to move in reverse to when the copy paper is delivered.	• Returns the scanner to home position in preparation for the next copy. • Transfers the toner image on the drum to copy paper.	
SCFW2 (scanner forward 2; copying original on right)	While the scanner is moving forward. • The distance over which the scanner travels varies according to copy paper size and ratio.	Illuminates the original on the right on the copyboard with the scanning lamp, and the reflected optical image is projected on the photosensitive drum through mirrors and lenses.	• The registration signal is generated so that the leading edge of the image of the original on the right matches the copy paper with reference to the SCDP signal.
SCRV (scanner reverse 2)	From when the scanner starts to move in reverse to when the developing clutch turns off.	• Returns the scanner to home position in preparation for the next copy. • Transfers the toner image on the drum to copy paper.	

Note: For copy sequences other than the above, see Table 2-102.

Table 2-103

COPYRIGHT © 1997 CANON INC.

D. Main Motor (M1) Control Circuitry

1. Outline

Figure 2-106 is a block diagram showing the main motor control circuitry, which has the following functions:

① Turning off and on the main motor.
② Controlling the main motor to a specific speed.

The main motor is a DC motor equipped with a built-in clock pulse generator which generates clock pulses (MMCLK) when the motor rotates in numbers corresponding to the revolution.

The main motor control PCB uses these clock pulses to ensure that the motor rotates at a specific speed at all times.

These clock pulses are also sent to the DC controller PCB after its frequency is divided to 1/4.

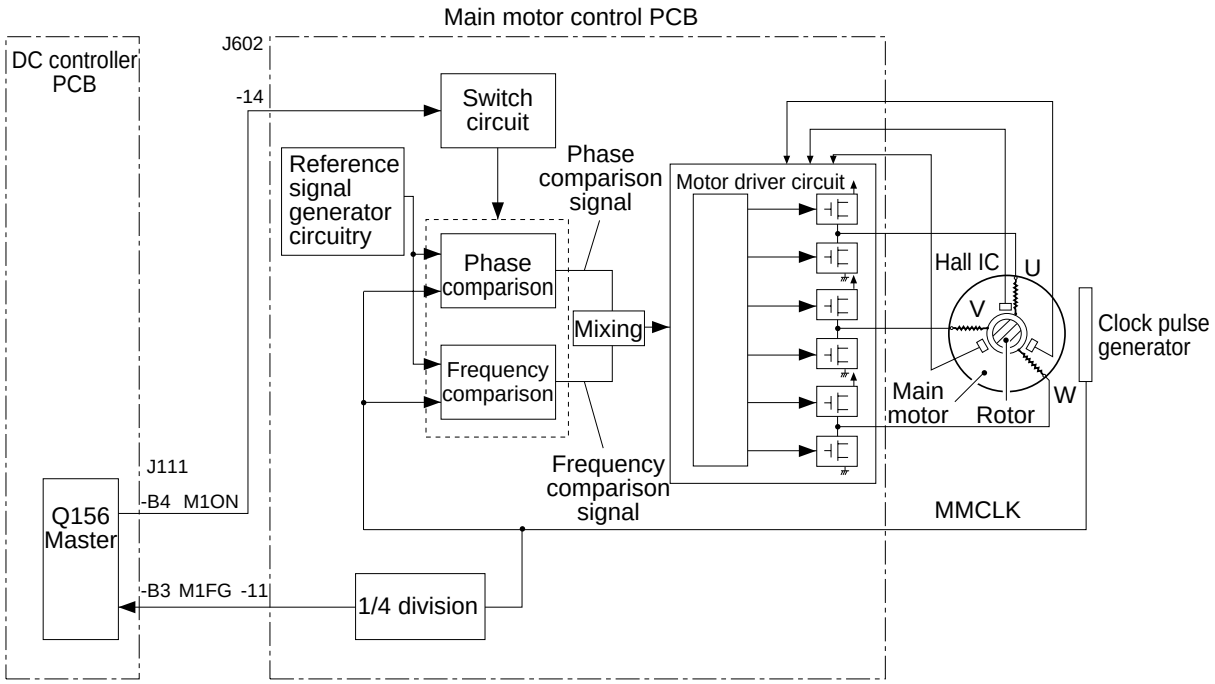

Figure 2-106

COPYRIGHT © 1997 CANON INC.
CANON NP6560/NP6360/NP6260 REV.0 NOV. 1997 PRINTED IN JAPAN (IMPRIME AU JAPON)

2. Operation

a. Turning On and Off

When the main motor drive signal (M1ON) goes '1', the phase comparison circuit and the frequency circuitry shown in Figure 2-106 send control signals.

The control signals from both circuits are combined and sent to the motor drive circuit, turning on the motor drive circuit and rotating the main motor.

When M1ON goes '0', on the other hand, the output of the control signal stops and remains so, keeping the motor stationary.

b. Controlling to a Specific Speed

The rotation of the machine's main motor is controlled to a specific speed.

The reference signal generating circuit on the motor control PCB generates reference pulses which are sent to the phase comparison circuit and the frequency comparison circuit.

The phase comparison circuit generates control signals (phase comparison signals) so that the phase of the clock pulses (MMCLK) from the main motor matches that of the reference signals.

Likewise, the frequency comparison circuit generates control signals (frequency comparison signals) so that the frequency of the clock pulses (MMCLK) from the main motor matches that of the reference pulses.

After both phase comparison signal and frequency comparison signal have been combined, they are sent to the motor drive circuit for control of the power to the main motor, thereby keeping the revolution to a specific number.

3. Detecting an Error

When an excess load is imposed on the motor for some reason, the DC controller PCB will detect a fault in the clock pulses from the main motor and, as a result, will indicate 'E010' and an error message on the control panel.

COPYRIGHT © 1997 CANON INC.

E. Inputs to the DC Controller

Inputs to the DC controller (1/8)

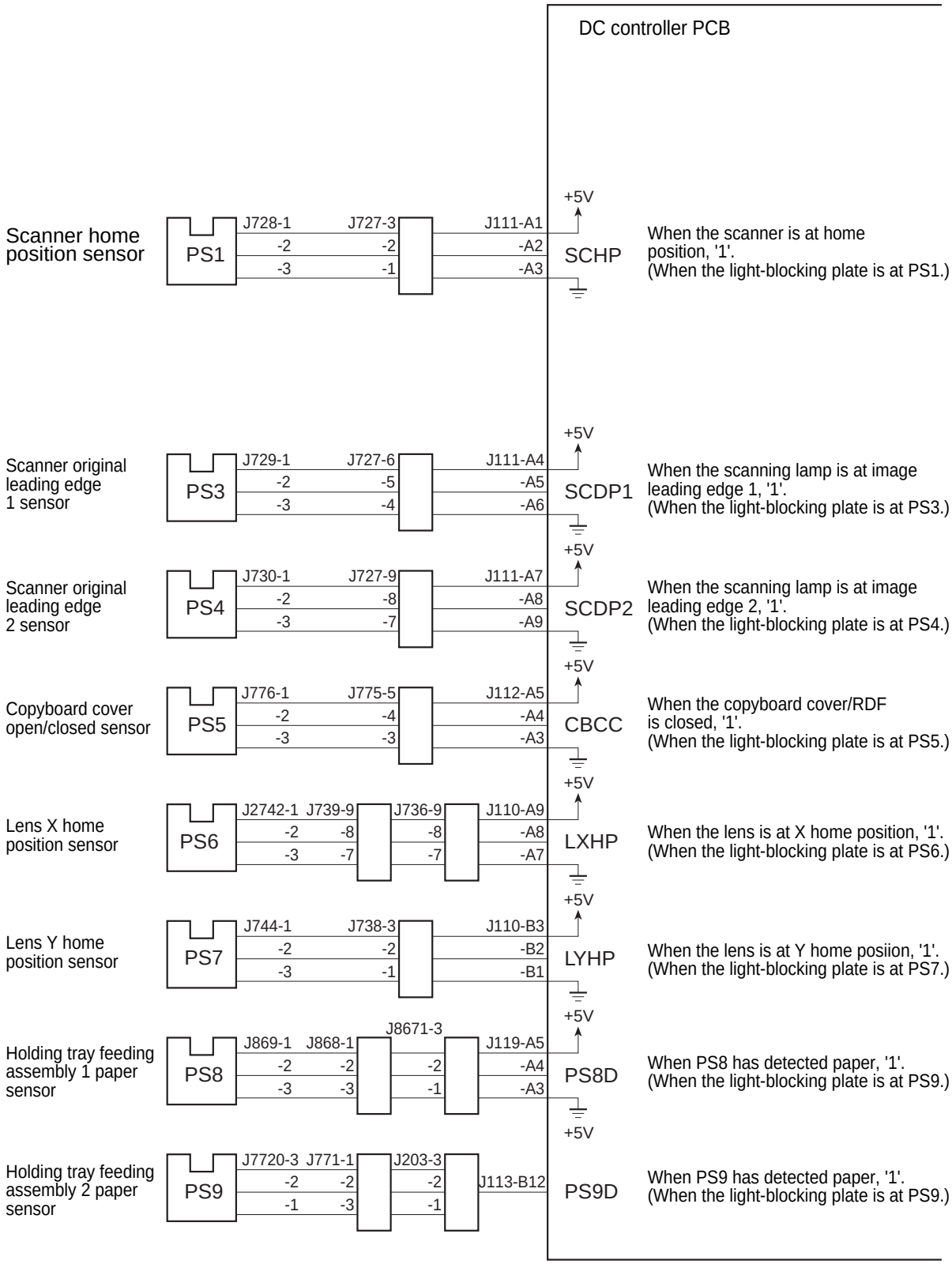

Figure 2-107

 COPYRIGHT © 1997 CANON INC.

Inputs to the DC controller (2/8)

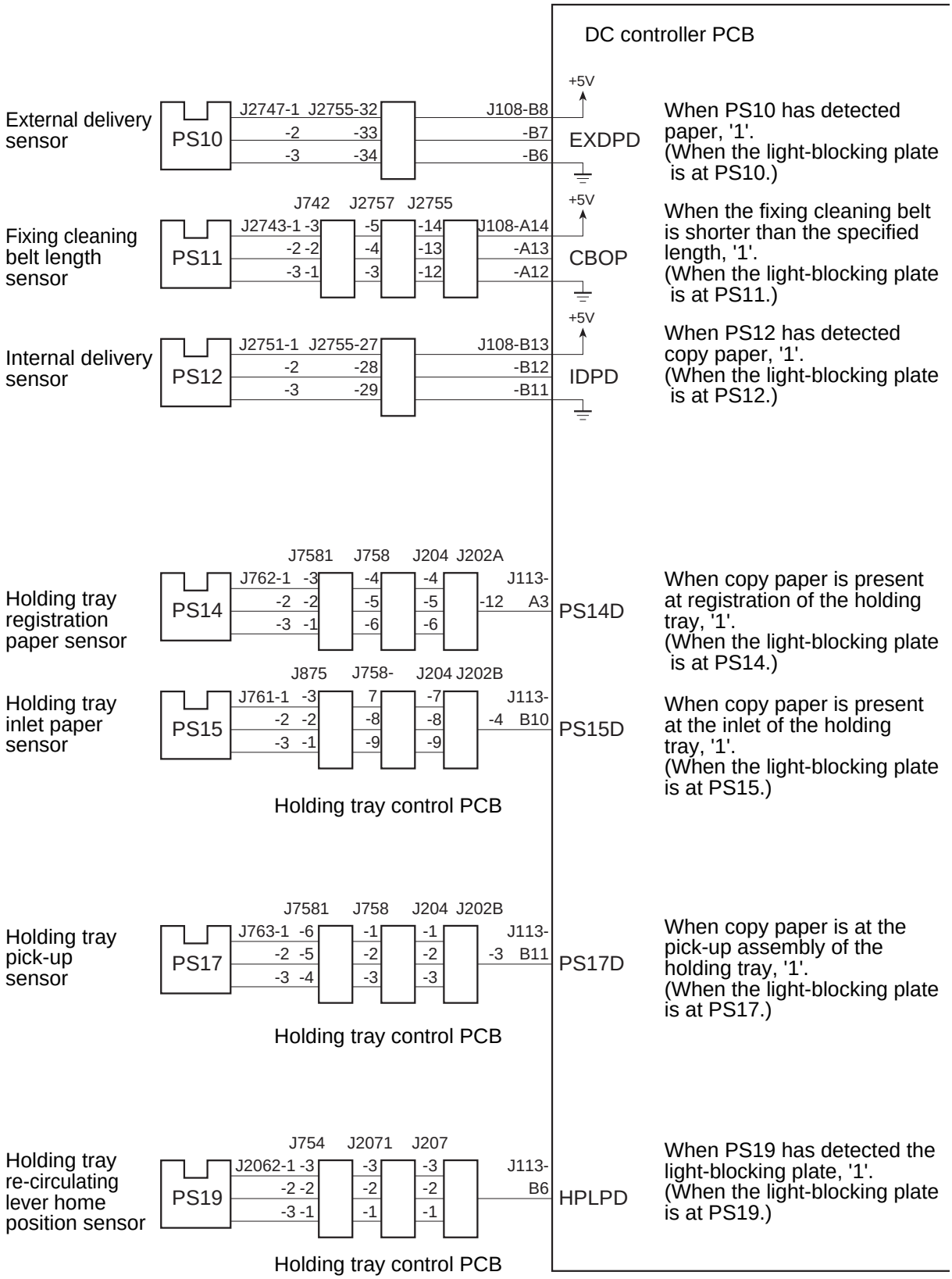

Figure 2-108

Inputs to the DC Controller (3/8)

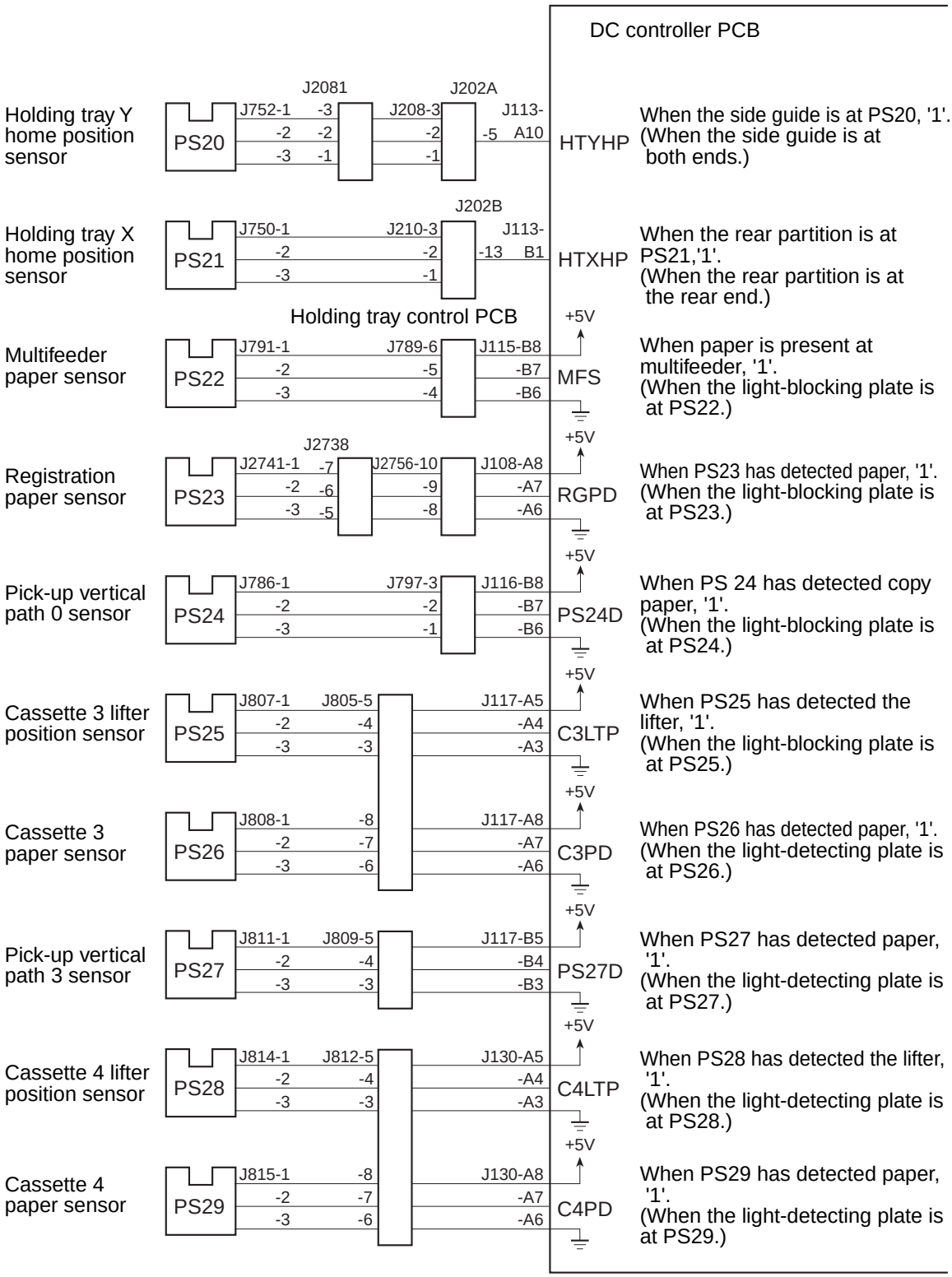

Figure 2-109

COPYRIGHT © 1997 CANON INC.

Inputs to the DC Controller (4/8)

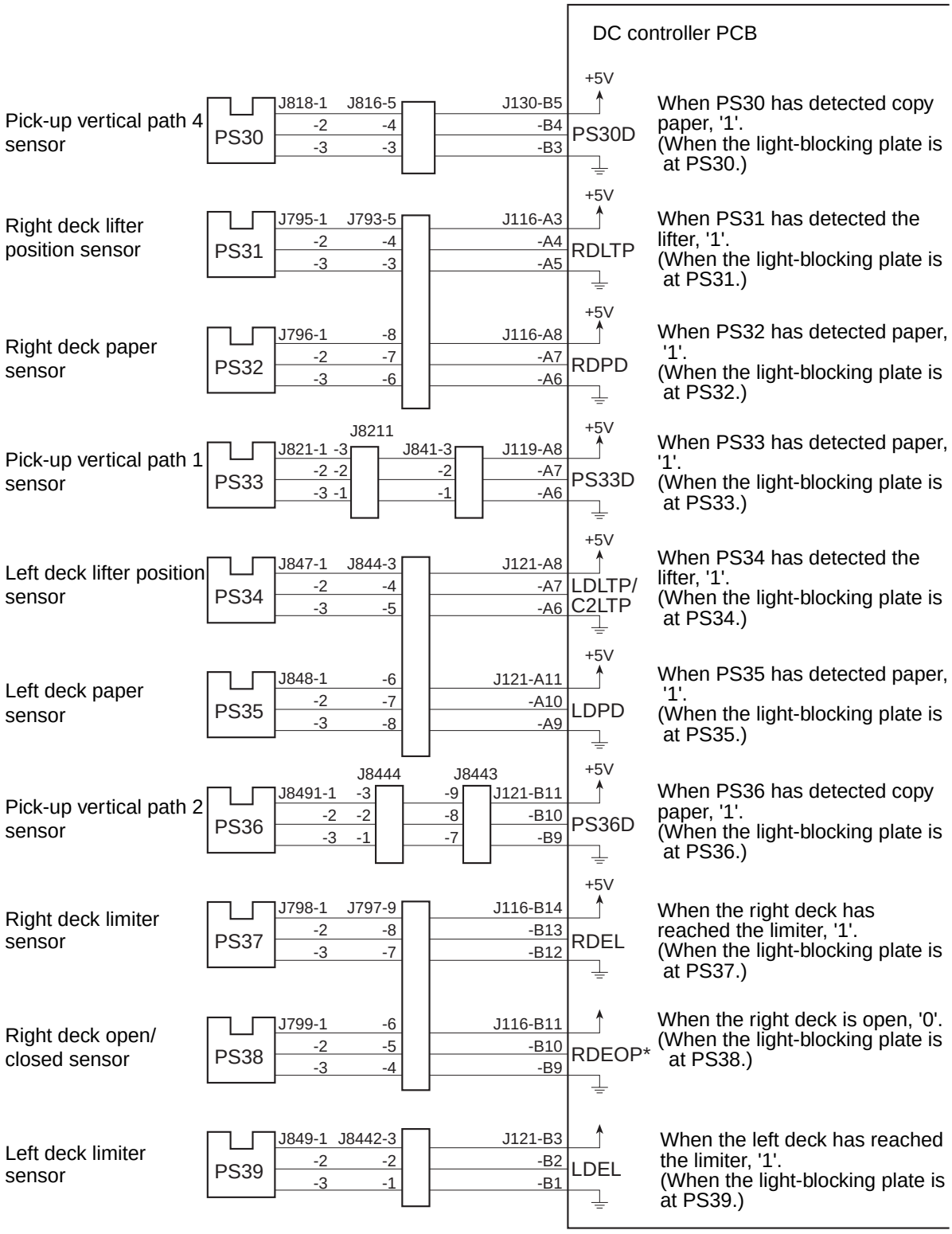

Figure 2-110

COPYRIGHT © 1997 CANON INC.

Inputs to the DC Controller (5/8)

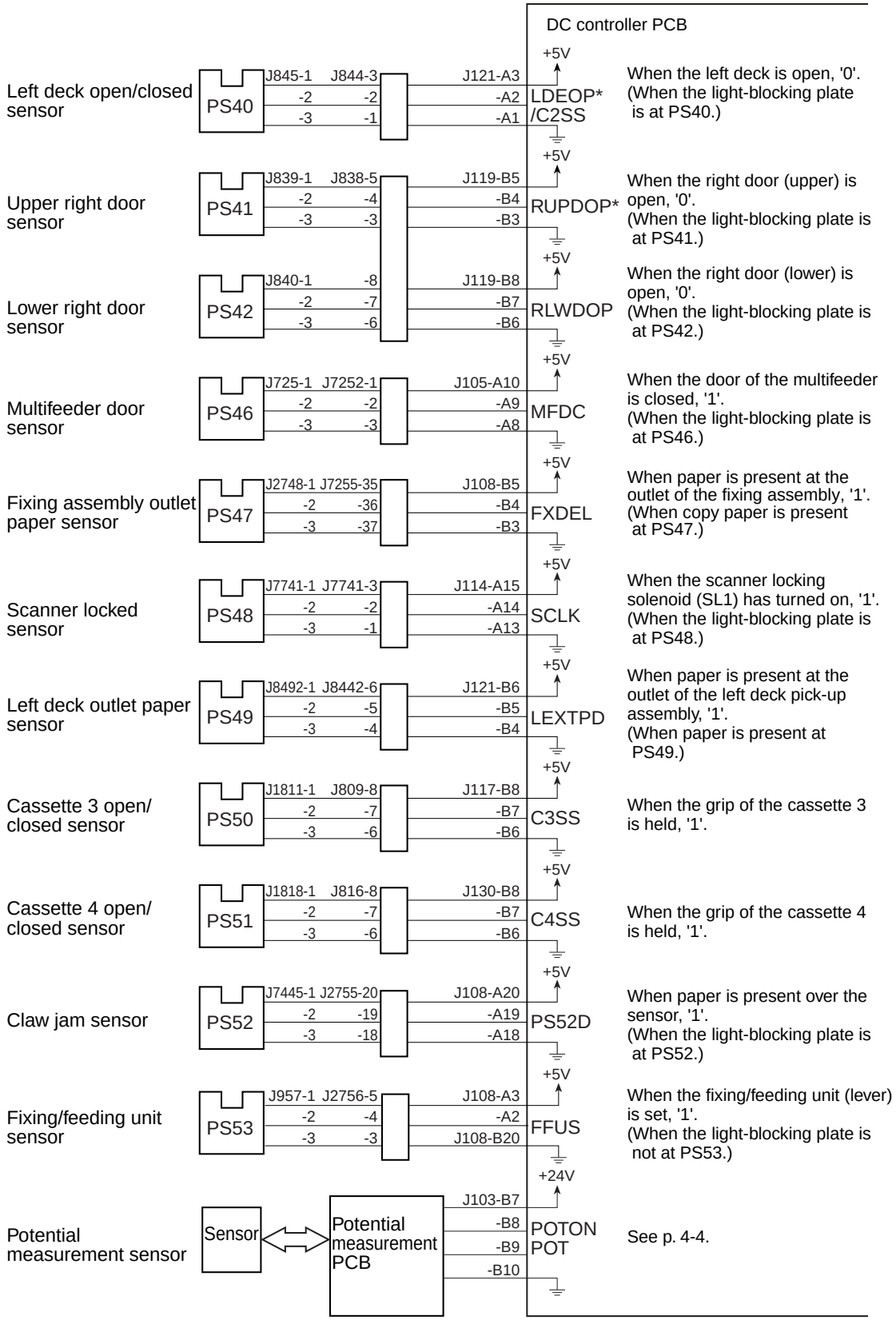

Figure 2-111

COPYRIGHT © 1997 CANON INC.

Inputs to the DC Controller(6/8)

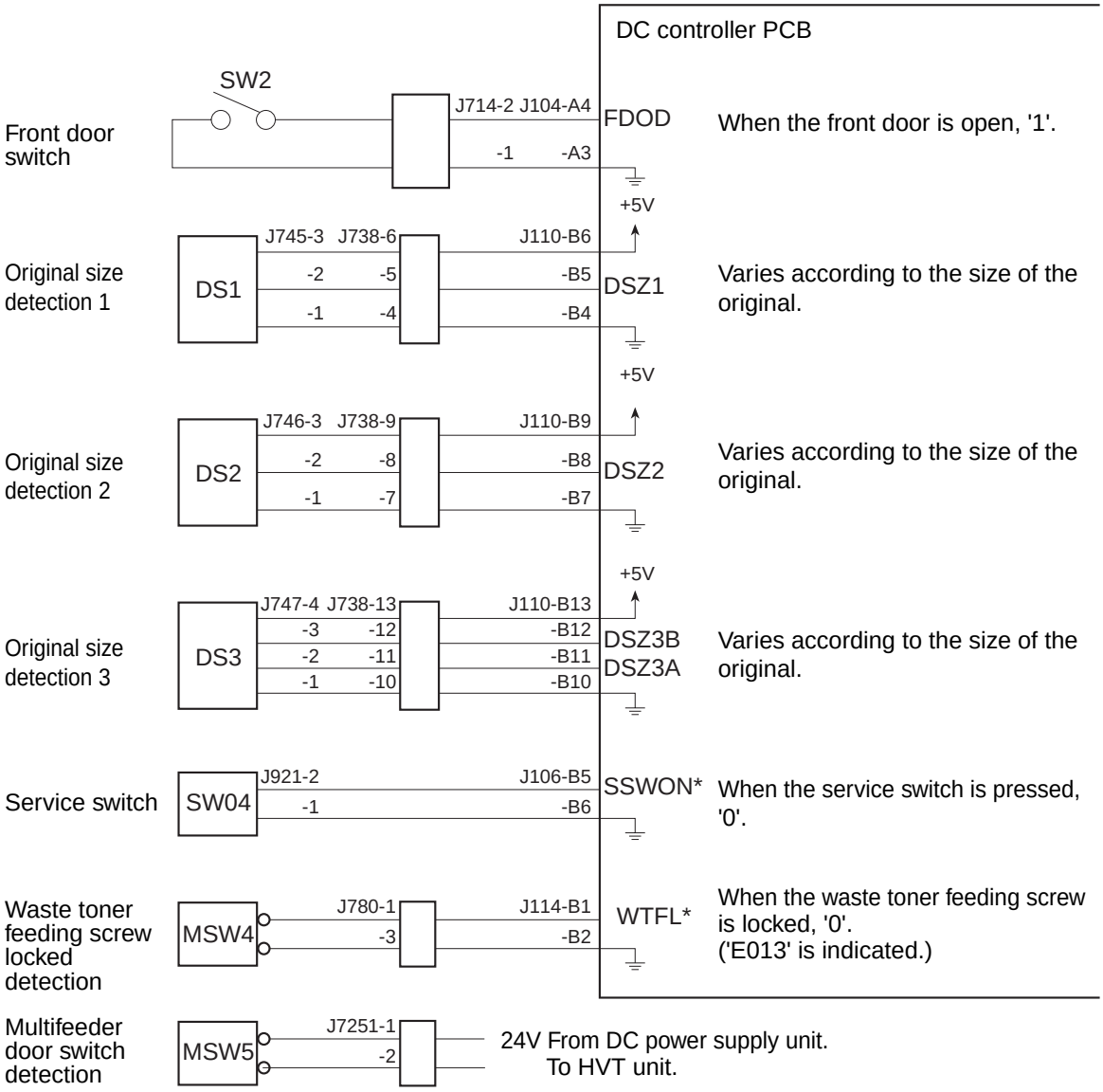

Figure 2-112

Inputs to the DC Controller (7/8)

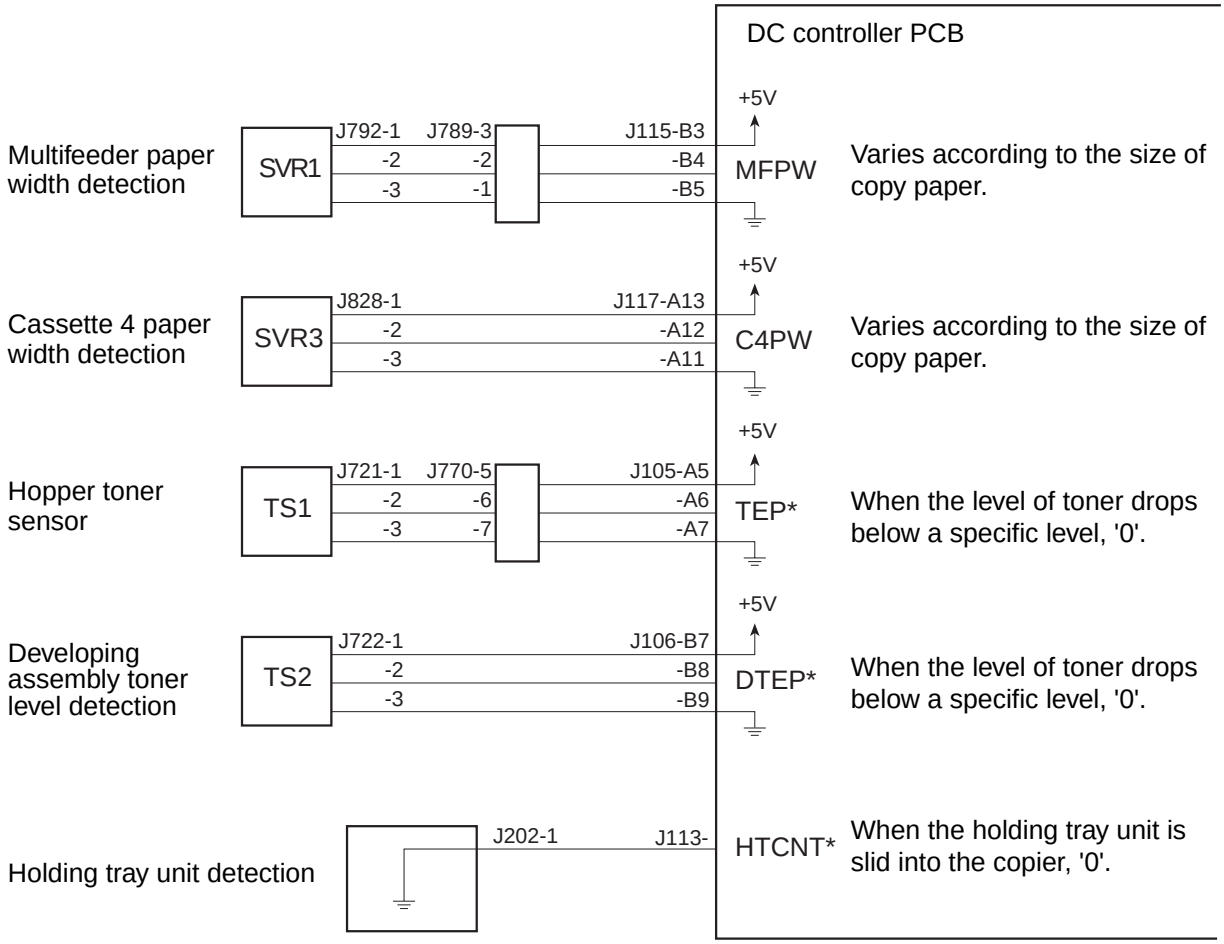

Figure 2-113

COPYRIGHT © 1997 CANON INC.
CANON NP6560/NP6360/NP6260 REV.0 NOV. 1997 PRINTED IN JAPAN (IMPRIME AU JAPON)

Inputs to the DC Controller (8/8)

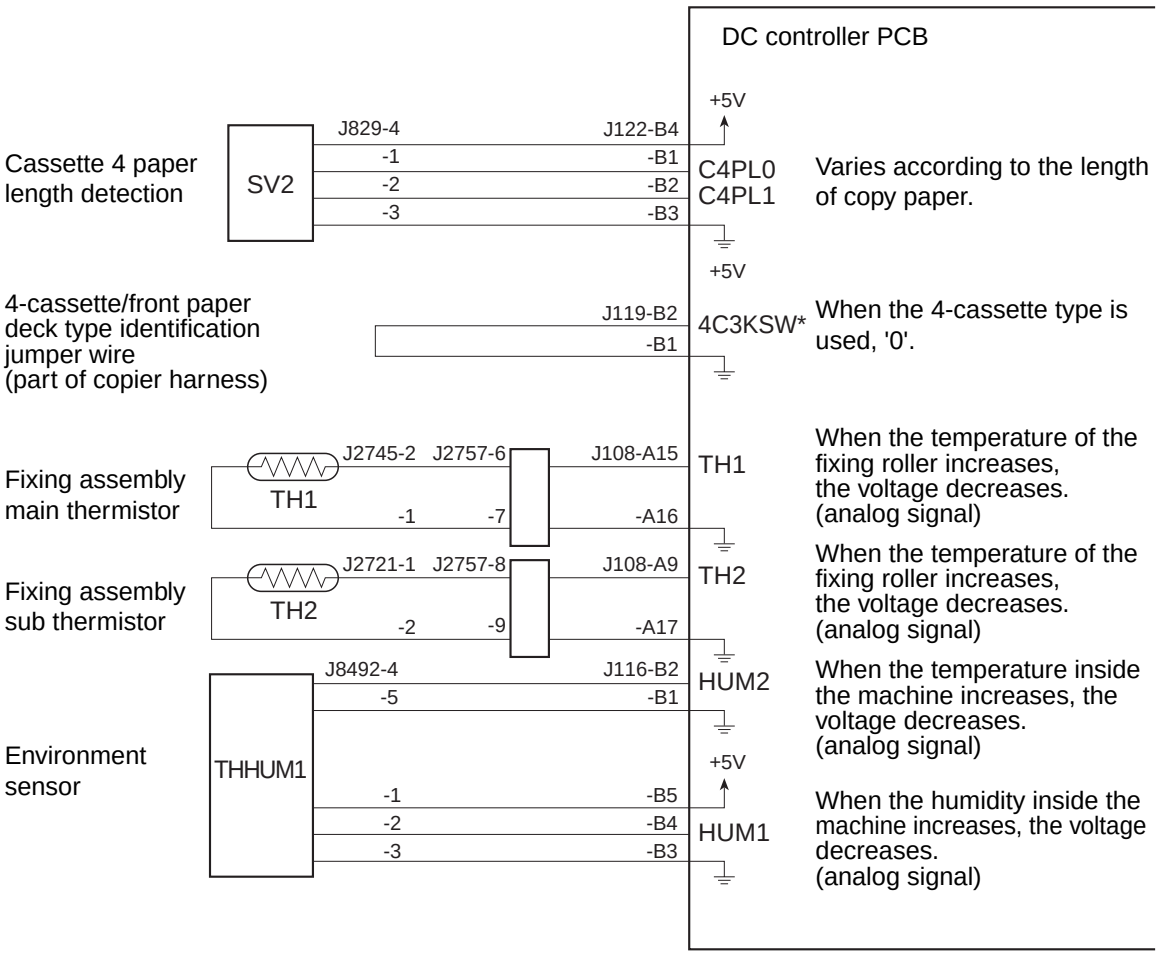

Figure 2-114

COPYRIGHT © 1997 CANON INC.

F. Outputs from the DC Controller

Outputs from the DC Controller (1/11)

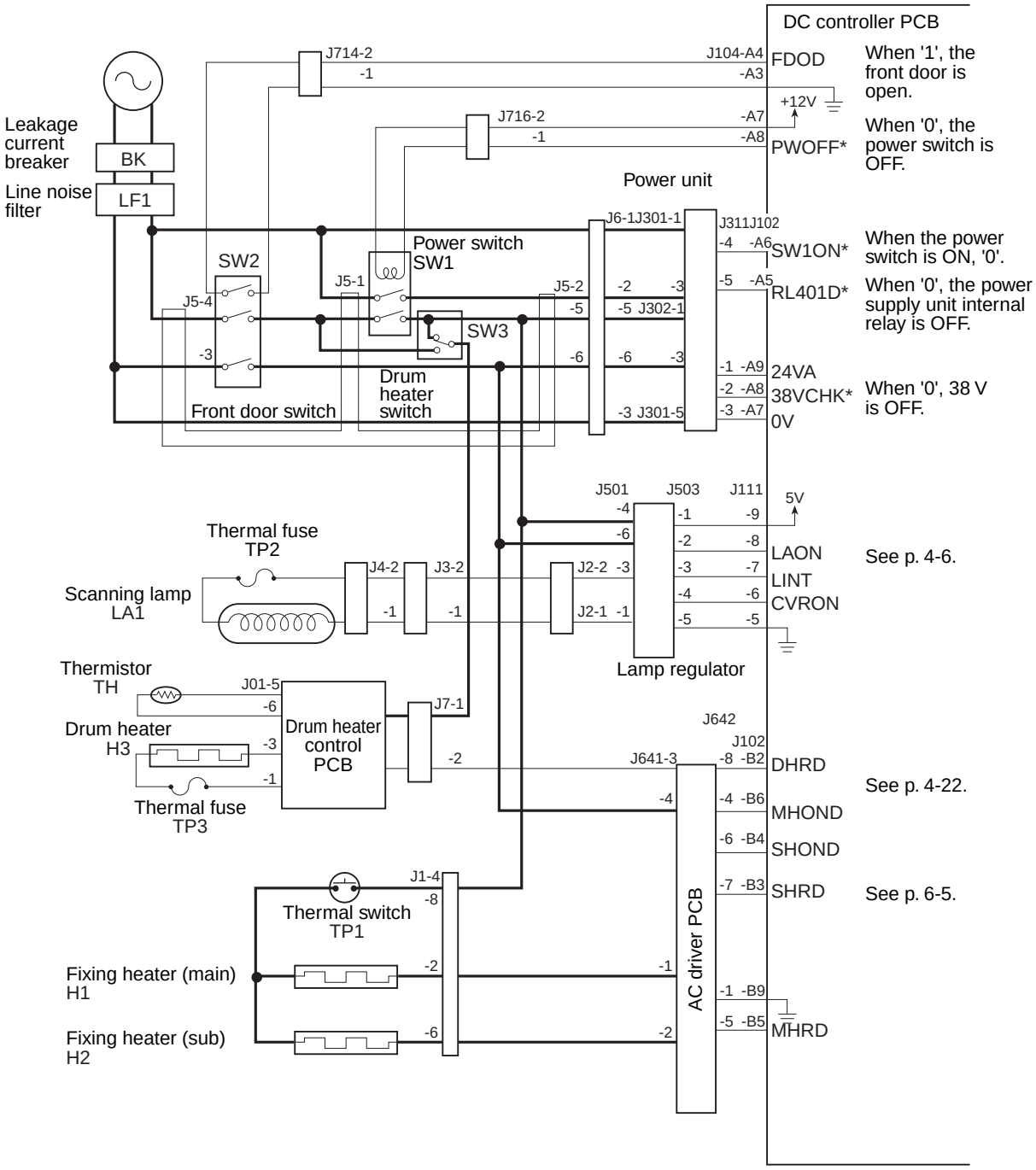

Figure 2-115

COPYRIGHT © 1997 CANON INC.

Outputs from the DC Controller (2/11)

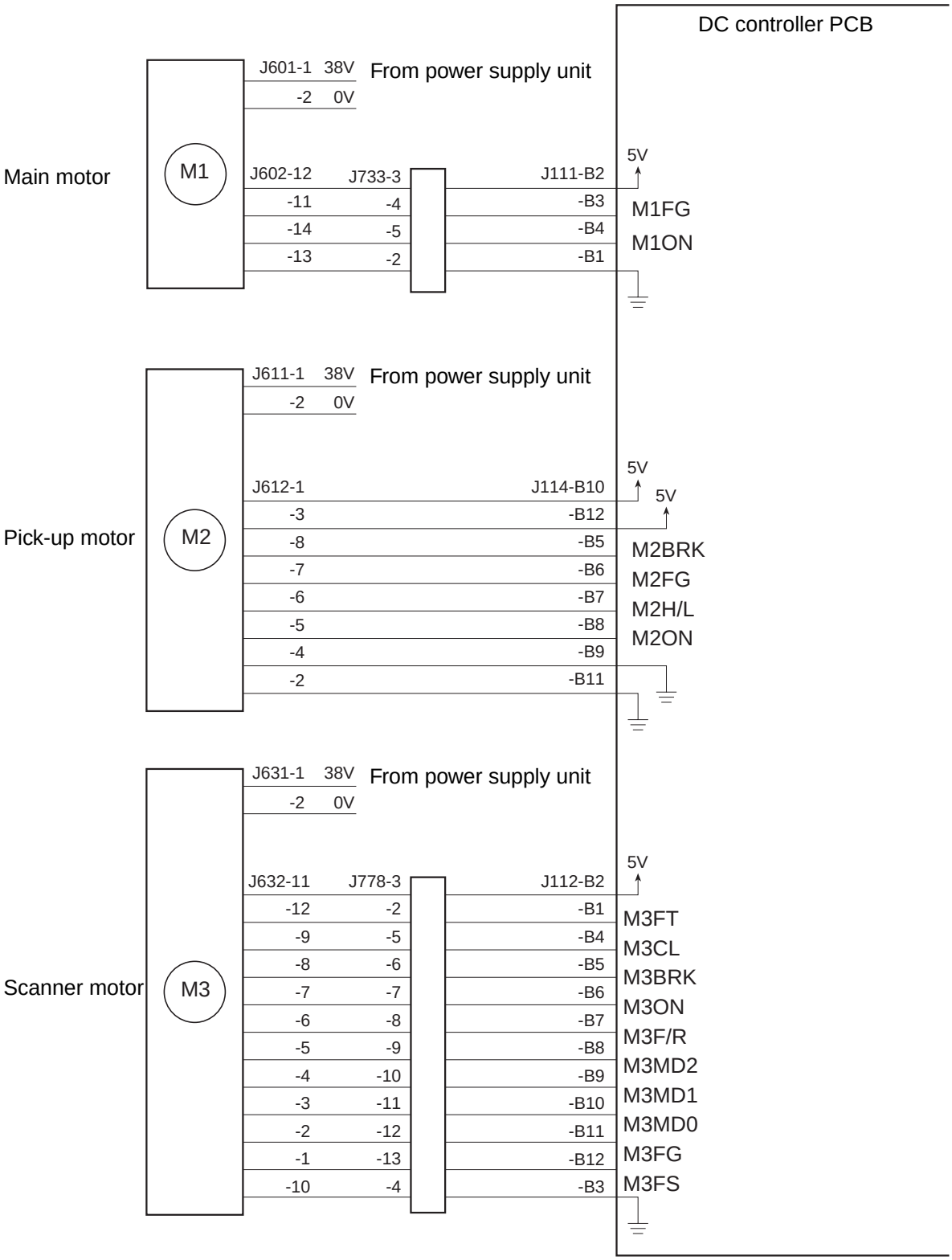

Figure 2-116

COPYRIGHT © 1997 CANON INC.

Outputs from the DC Controller (3/11)

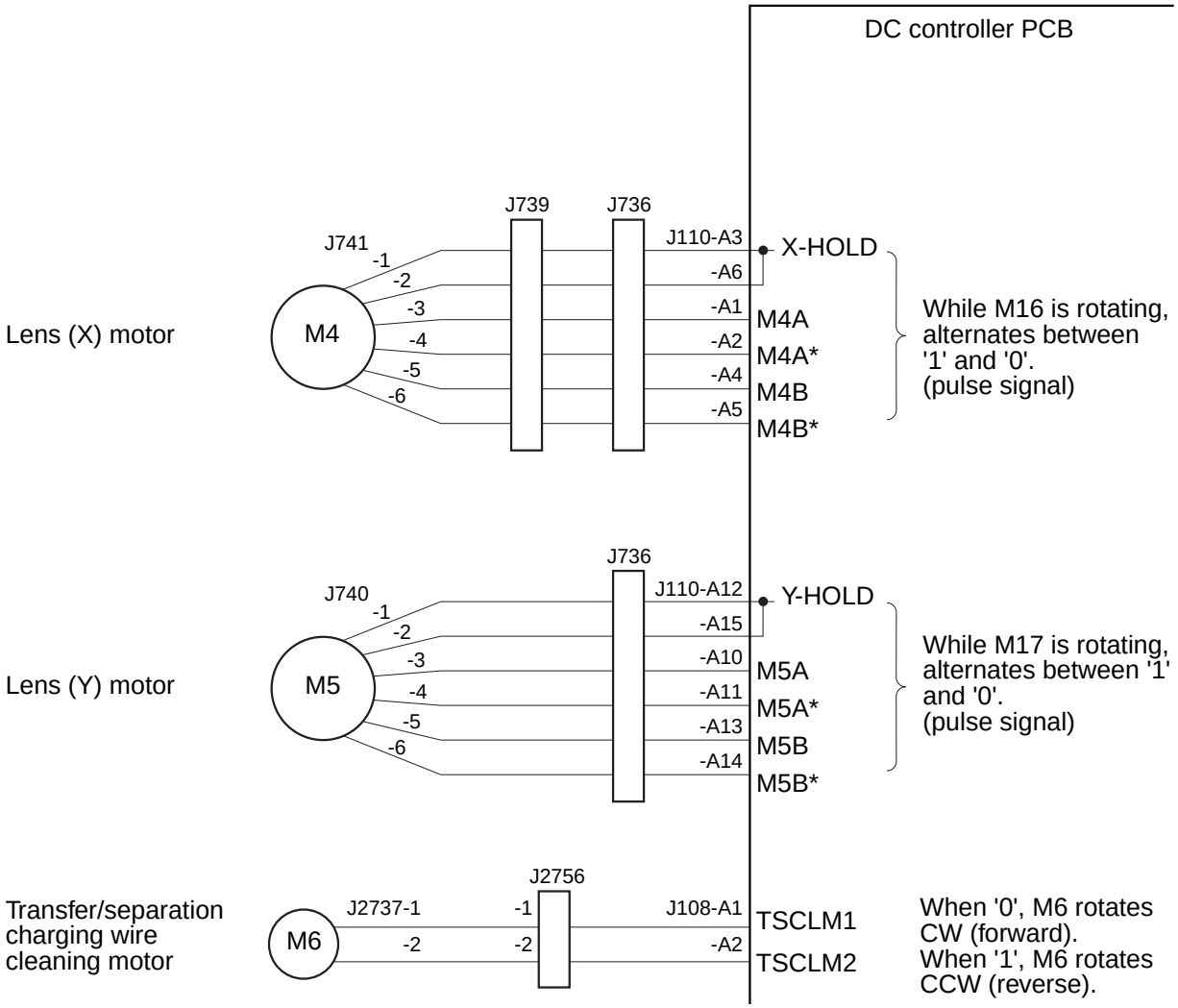

Figure 2-117

 COPYRIGHT © 1997 CANON INC. CANON NP6560/NP6360/NP6260 REV.0 NOV. 1997 PRINTED IN JAPAN (IMPRIME AU JAPON)

Outputs from the DC Controller (4/11)

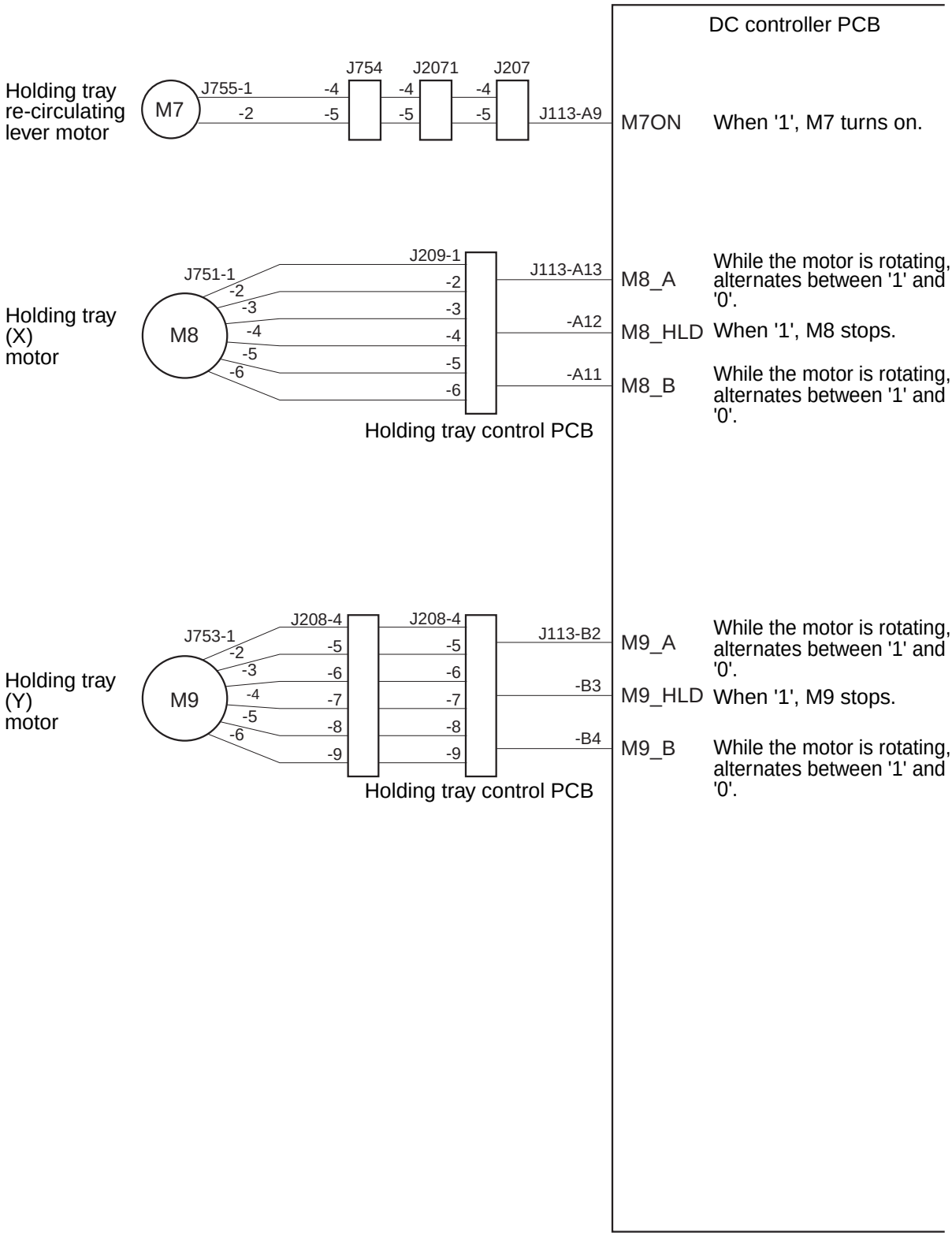

Figure 2-118

Outputs from the DC Controller (5/11)

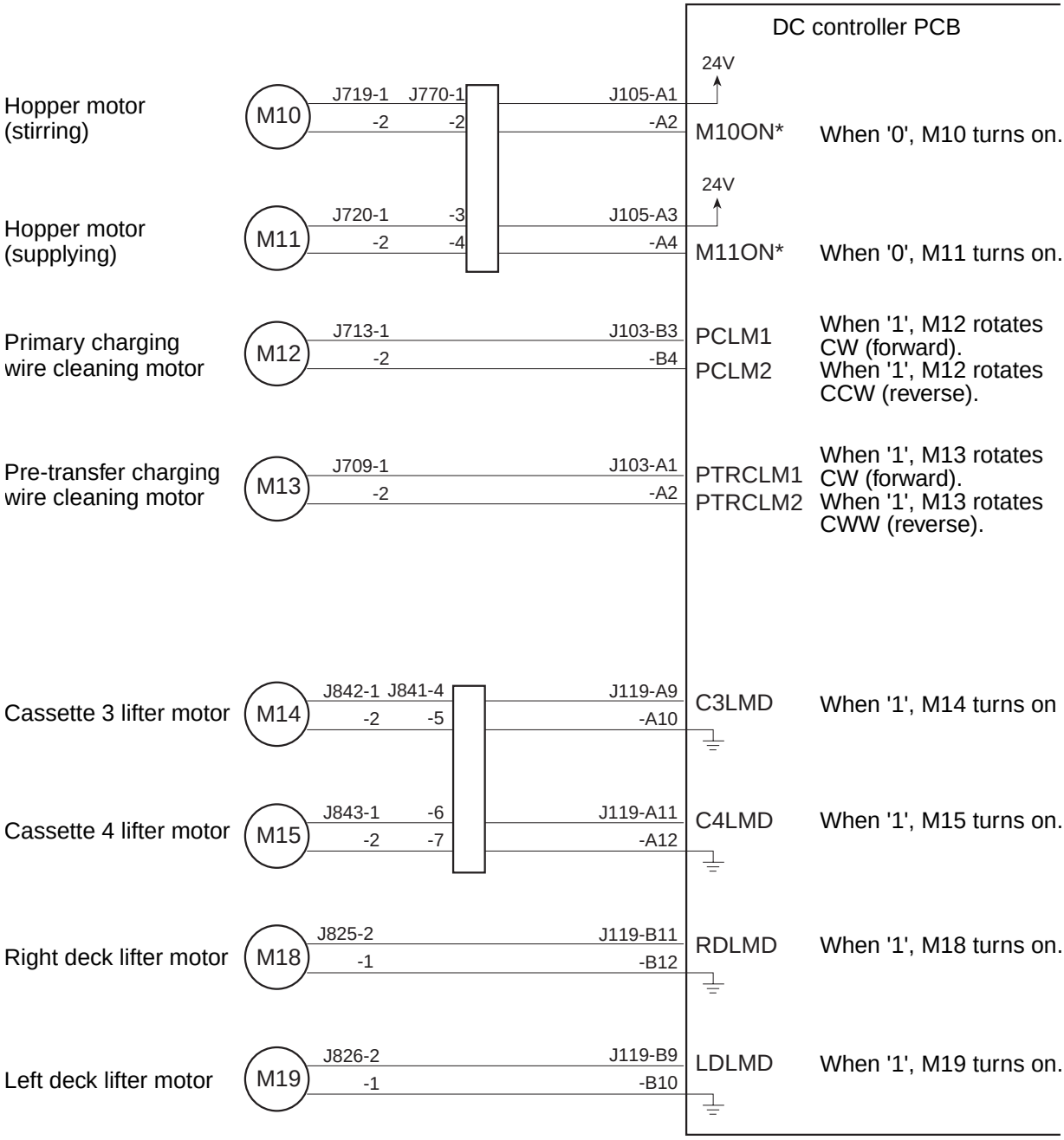

Figure 2-119

COPYRIGHT © 1997 CANON INC.
CANON NP6560/NP6360/NP6260 REV.0 NOV. 1997 PRINTED IN JAPAN (IMPRIME AU JAPON)

Outputs from the DC Controller (6/11)

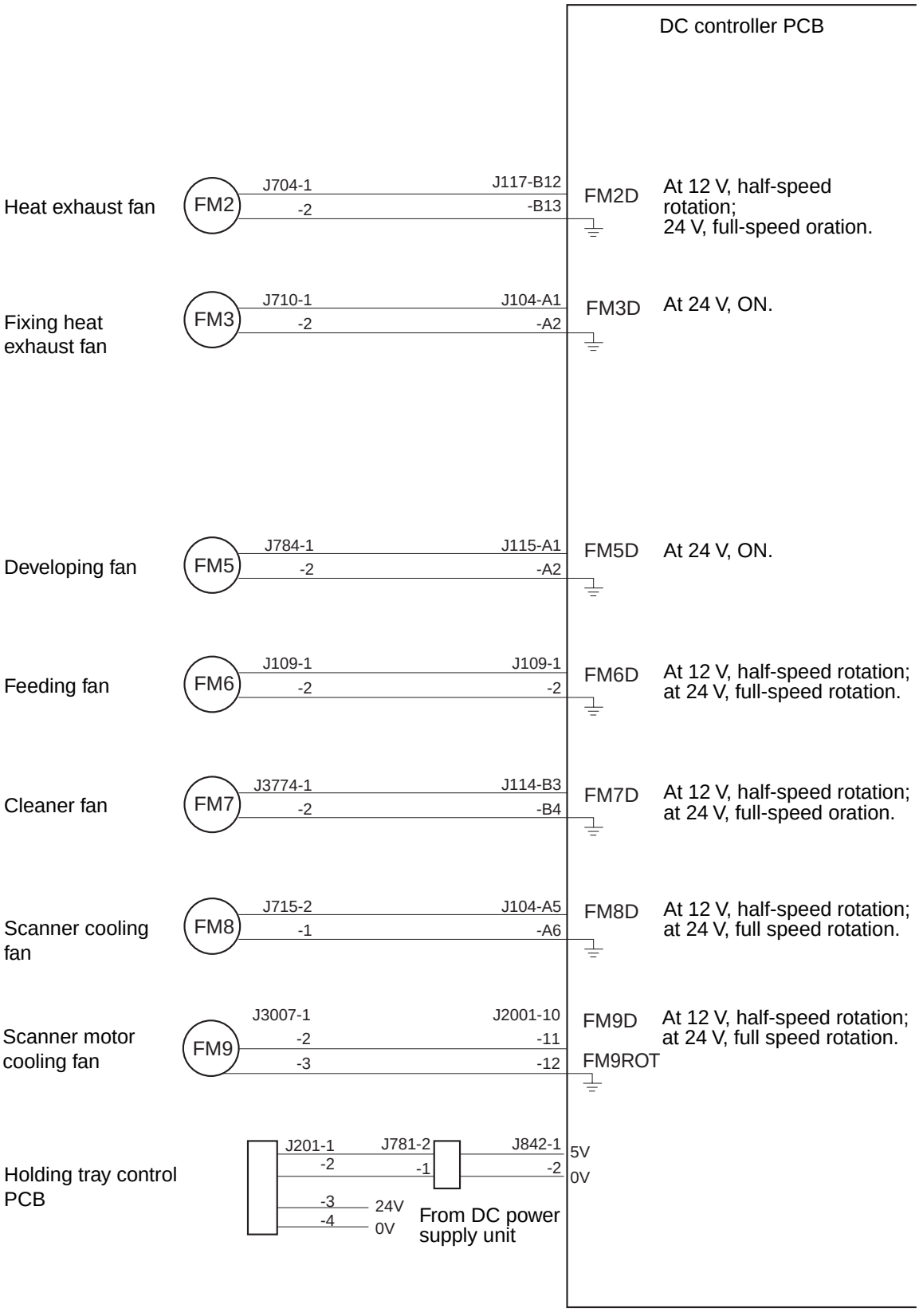

Figure 2-120

COPYRIGHT © 1997 CANON INC.

Outputs from the DC Controller (7/11)

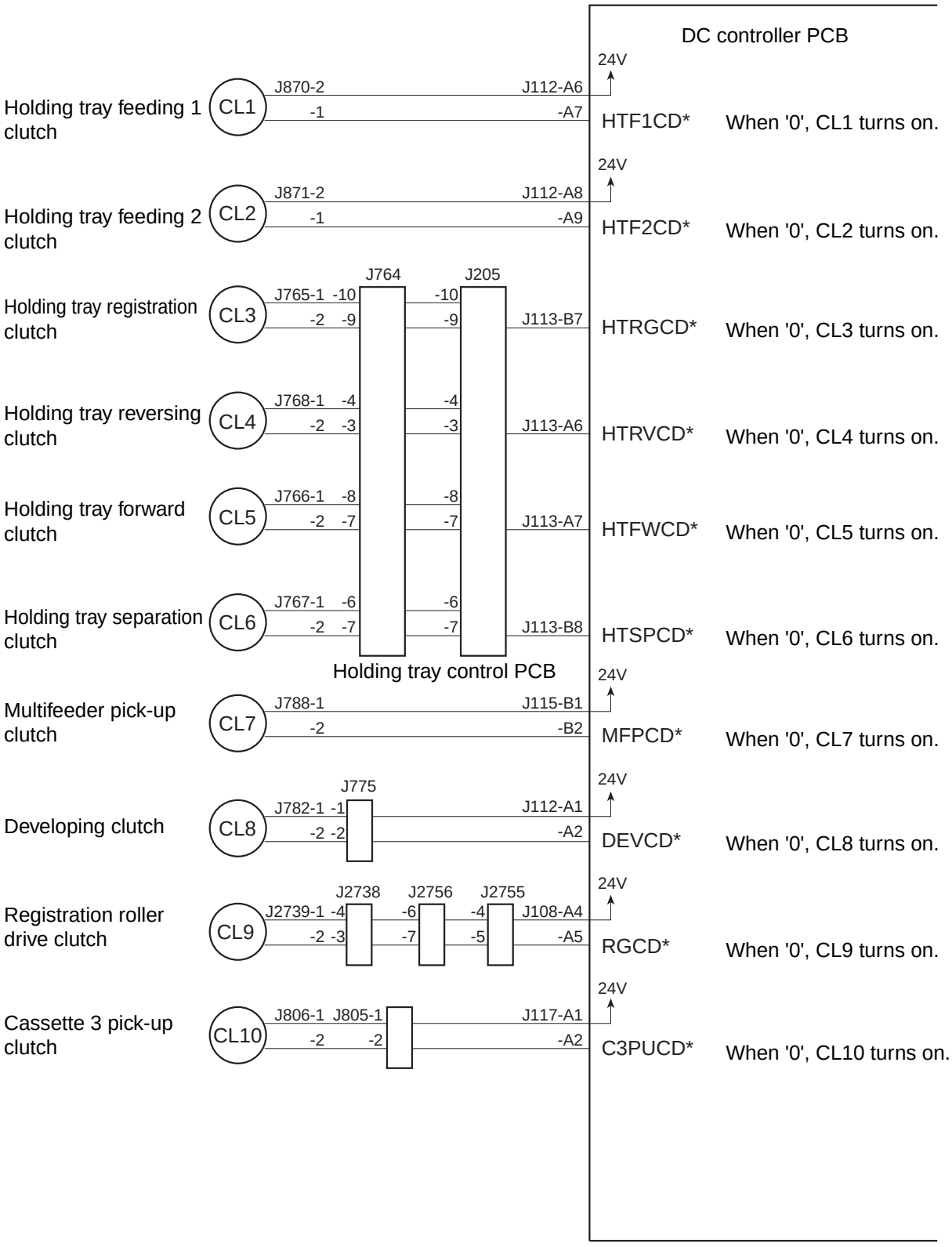

Figure 2-121

COPYRIGHT © 1997 CANON INC.
CANON NP6560/NP6360/NP6260 REV.0 NOV. 1997 PRINTED IN JAPAN (IMPRIME AU JAPON)

Outputs from the DC Controller (8/11)

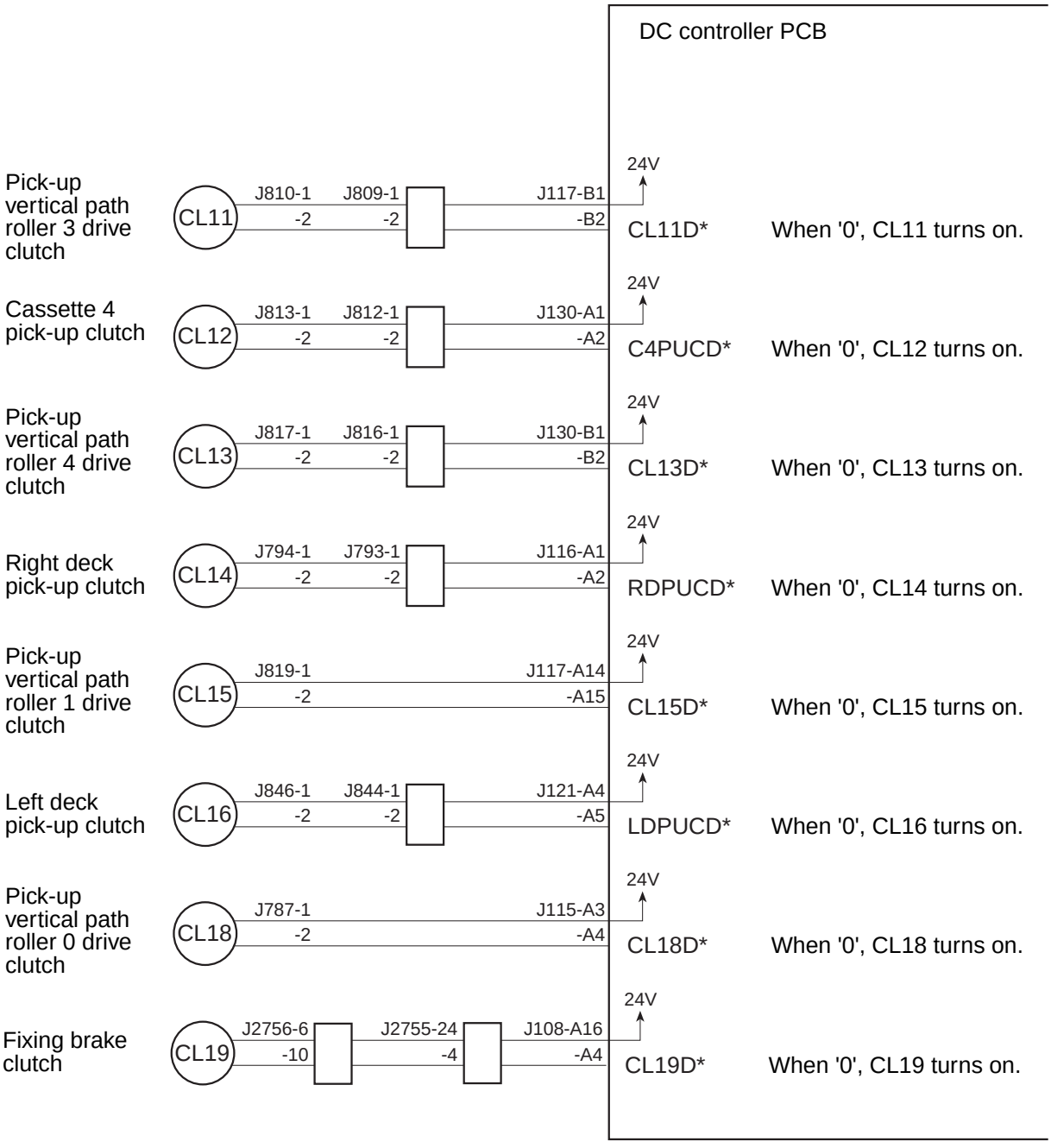

Figure 2-122

Outputs from the DC Controller (9/11)

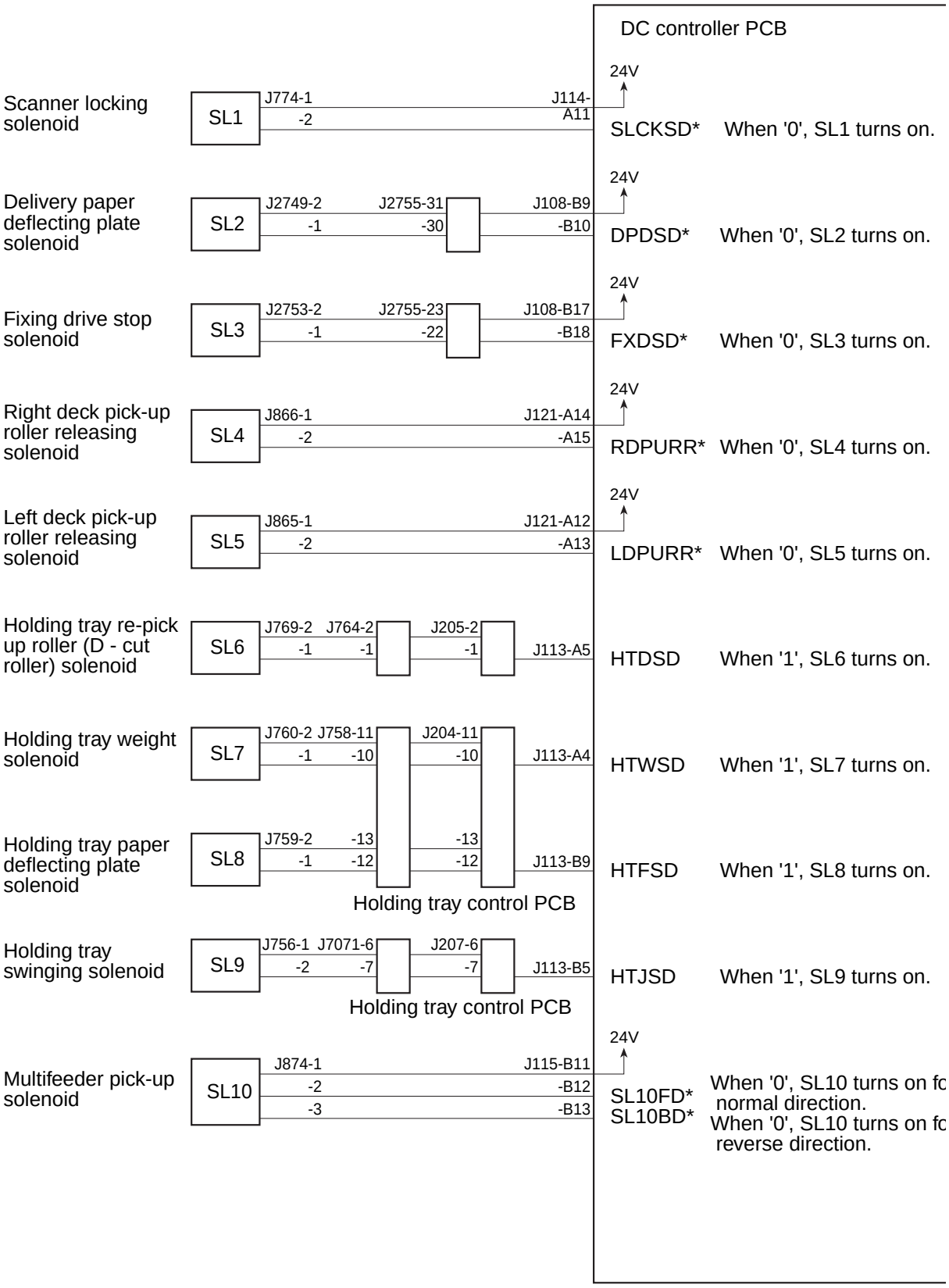

Figure 2-123

COPYRIGHT © 1997 CANON INC.

Outputs from the DC Controller (10/11)

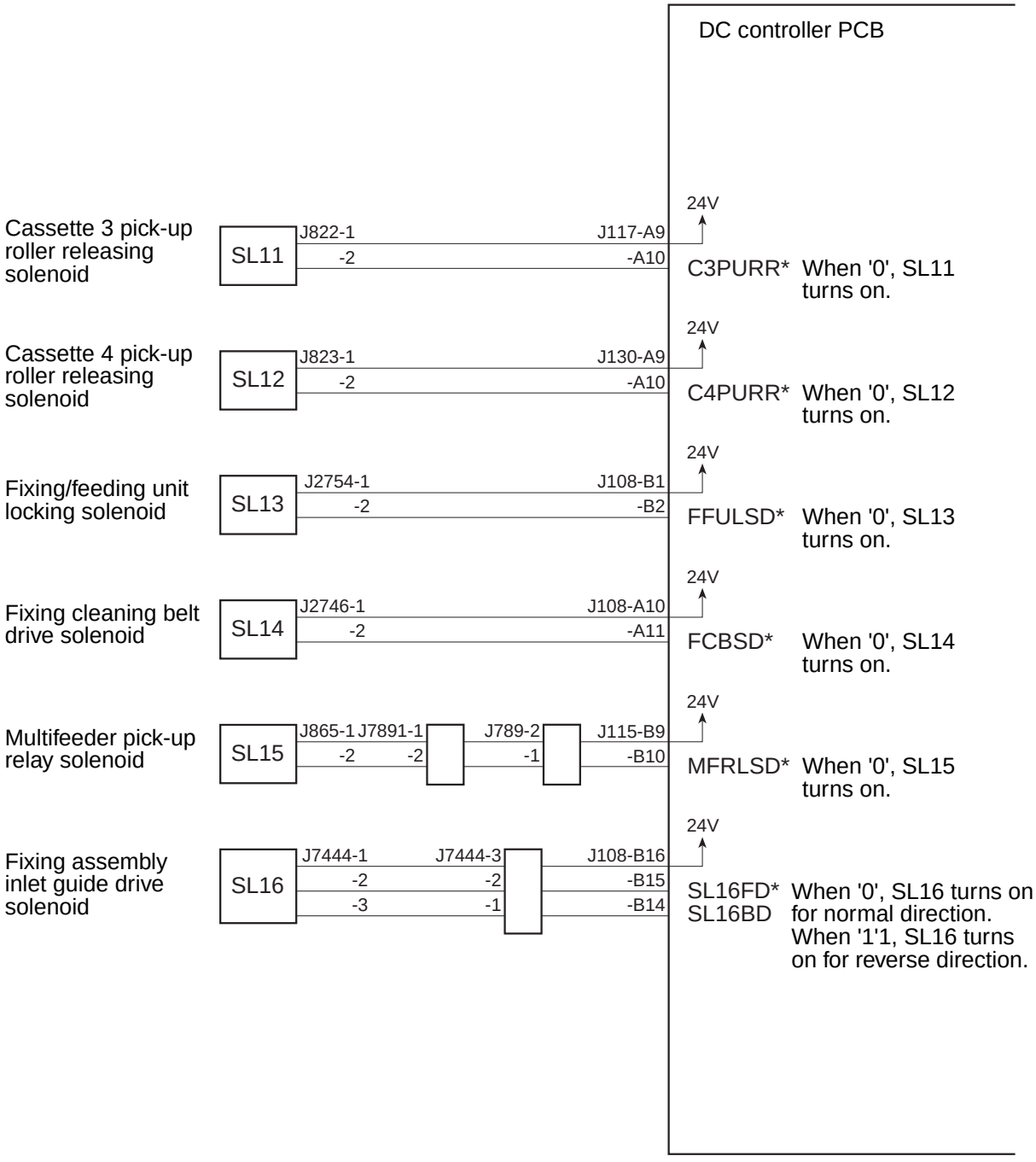

Figure 2-124

COPYRIGHT © 1997 CANON INC.

Outputs from the DC Controller (11/11)

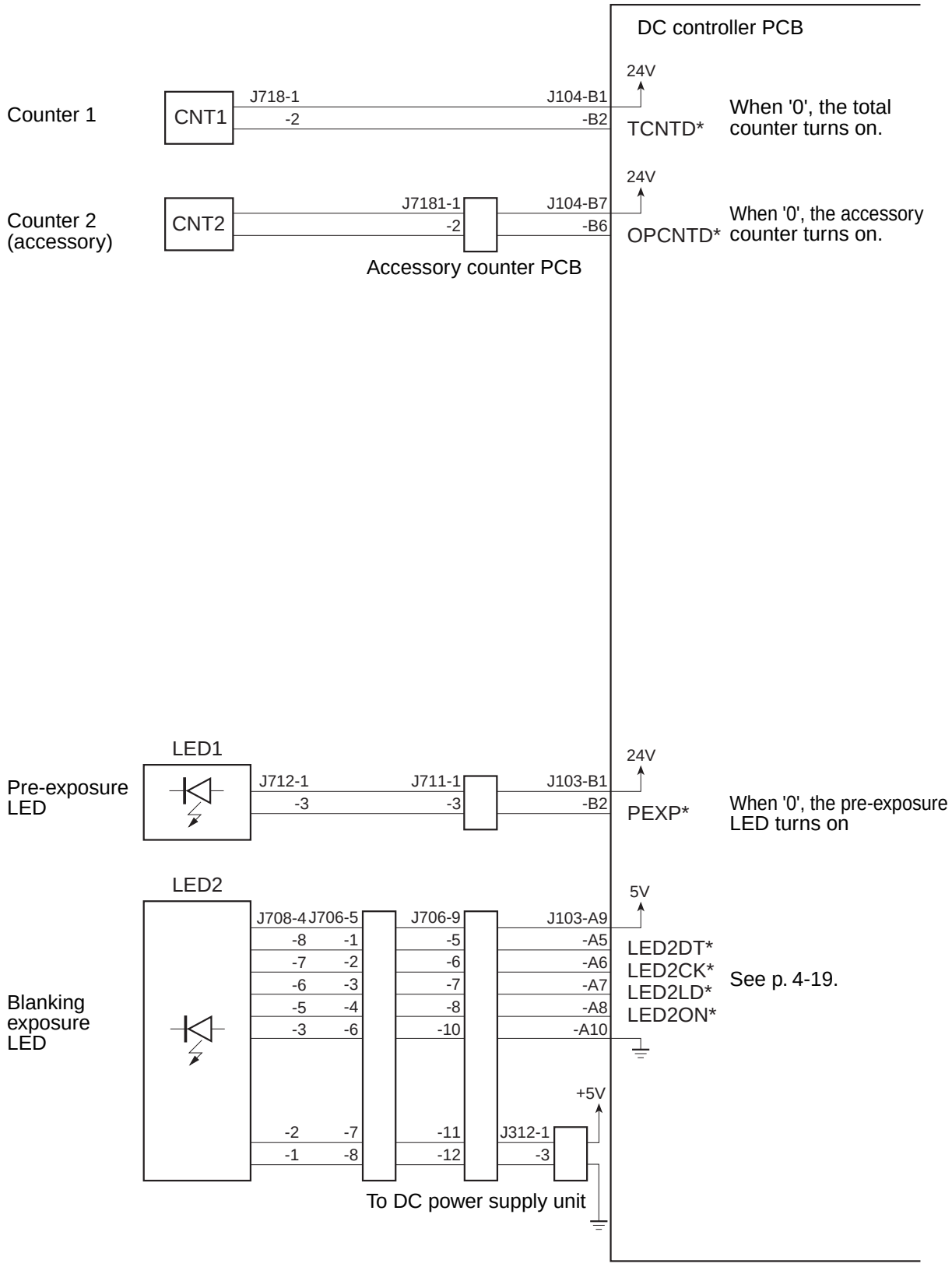

Figure 2-125

COPYRIGHT © 1997 CANON INC.
CANON NP6560/NP6360/NP6260 REV.0 NOV. 1997 PRINTED IN JAPAN (IMPRIME AU JAPON)

G. Inputs to and Outputs from Accessories (1/1)

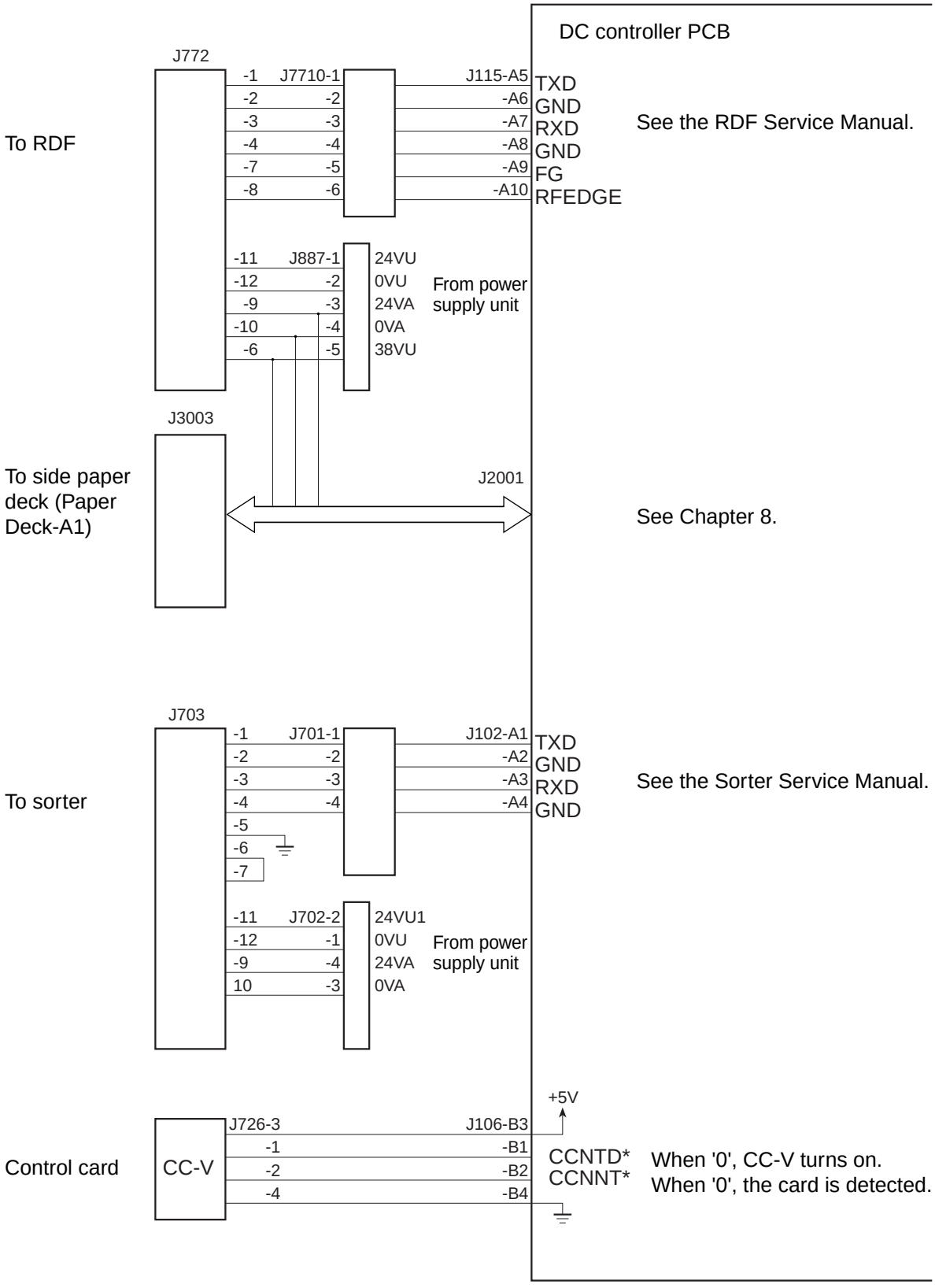

Figure 2-126

COPYRIGHT © 1997 CANON INC.

 COPYRIGHT © 1997 CANON INC. CANON NP6560/NP6360/NP6260 REV.0 NOV. 1997 PRINTED IN JAPAN (IMPRIME AU JAPON)

CHAPTER 3

EXPOSURE SYSTEM

This chapter discusses the principles of operation used for the copier's lens drive unit and scanner drive unit. It also explains the timing at which these drive units are operated, and shows how they may be disassembled/assembled and adjusted.

I. OUTLINE OF OPERATION 3-1
A. Varying the Reproduction Ratio 3-1
II. LENS DRIVE SYSTEM 3-2
A. Movement of the Lens.....3-2
III. SCANNER DRIVE SYSTEM 3-6
A. Scanner Movement 3-6
IV. OTHERS.....3-20
A. Original Size Detection.....3-20
V. DISASSEMBLY AND ASSEMBLY 3-23
A. Scanner Drive Assembly 3-24
B. Lens Drive Assembly.....3-31

COPYRIGHT © 1997 CANON INC.

I. OUTLINE OF OPERATION

A. Varying the Reproduction Ratio

The reproduction ratio in the axial direction of the drum is varied by the lens drive system, while that in the peripheral direction of the drum is varied by the scanner drive system and the main drive system.

The lens drive system uses a zoom lens, which varies the reproduction ratio in the drum axial direction by changing the focal distance and the position of the lens as shown in Figure 3-101.

The scanner drive system varies the reproduction ratio in the peripheral direction of the drum by moving the No. mirror faster (for reduction) or slower (for enlargement).

Reference:

a. The copier will not move the mirror to suit any reproduction.
b. The peripheral speed of the drum is the same as the speed of the movement of the mirror in Direct.

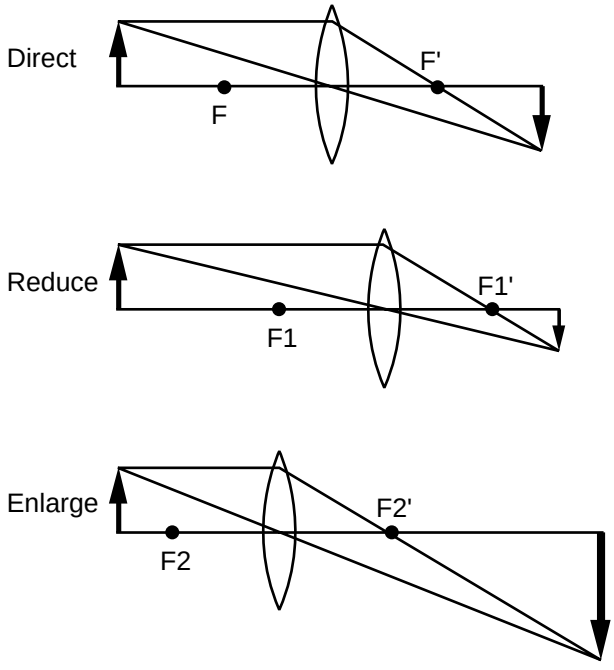

Figure 3-101

COPYRIGHT © 1997 CANON INC.

II. LENS DRIVE SYSTEM

A. Movement of the Lens

1. Outline of the Movement

The copier uses center reference, in which copy paper is picked up and fed in relation to the center of the feeding paths and originals are placed in relation to the rear of the machine (when using the copyboard cover). As such, the lens is moved in Y (vertical) direction even in Direct mode to suit the width of copy paper.

■ Using the Copyboard Cover

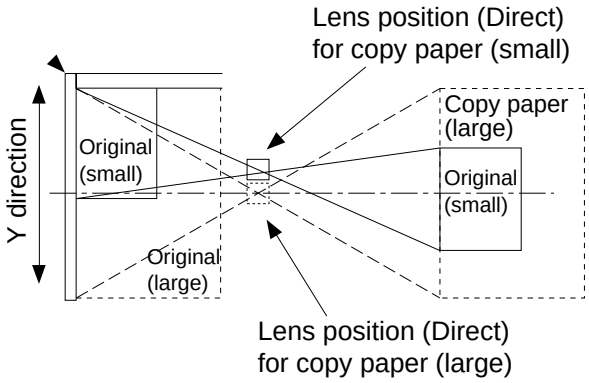

Figure 3-201 (top view)

The RDF installed to the machine uses center reference; when the size of the original and the size of the copy paper are identical in Direct mode, the lens is not moved in Y (vertical) direction (Figure 3-202).

If the size of the original and the size of the paper are different, on the other hand, or in Reduce/Enlarge mode, the lens is moved in Y (vertical) direction so that the image on the copy paper will be correct.

■ Using the RDF

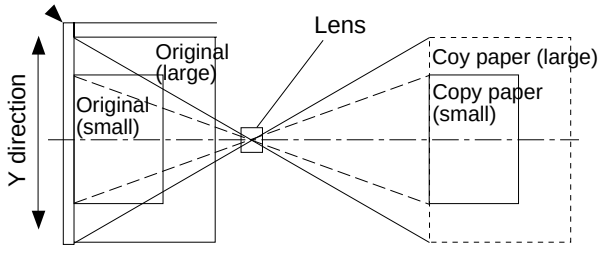

Figure 3-202 (top view)

COPYRIGHT © 1997 CANON INC.
CANON NP6560/NP6360/NP6260 REV. 0 NOV. 1997 PRINTED IN JAPAN (IMPRIME AU JAPON)

2. Moving the Lens

a. Moving the Lens in Y (vertical) Direction

The machine's lens is mounted on a lens stage, which is moved in Y (vertical direction) when the lens Y motor (M5) is rotated.

b. Moving the Lens in the X (horizontal) Direction

The lens X motor (M4) mounted behind the lens stage is used to move the lens in X (horizontal) direction.

3. Lens Motor Control Circuit

The lens X motor (M4) and the lens Y motor (M5) are 4-phase stepping motors. Both motors are controlled in the same way, and the lens X motor is discussed here.

The motor is controlled by the four types of motor drive signals from the DC controller PCB: M4A, M4A*, M4B, M4B*. The direction of the motor is changed by changing the timing at which these motor drive signals are sent.

To keep the lens X motor stationary, the lens X motor hold signal (X-HOLD) is generated, thereby applying brakes in the form of a voltage lower than when rotating the motor.

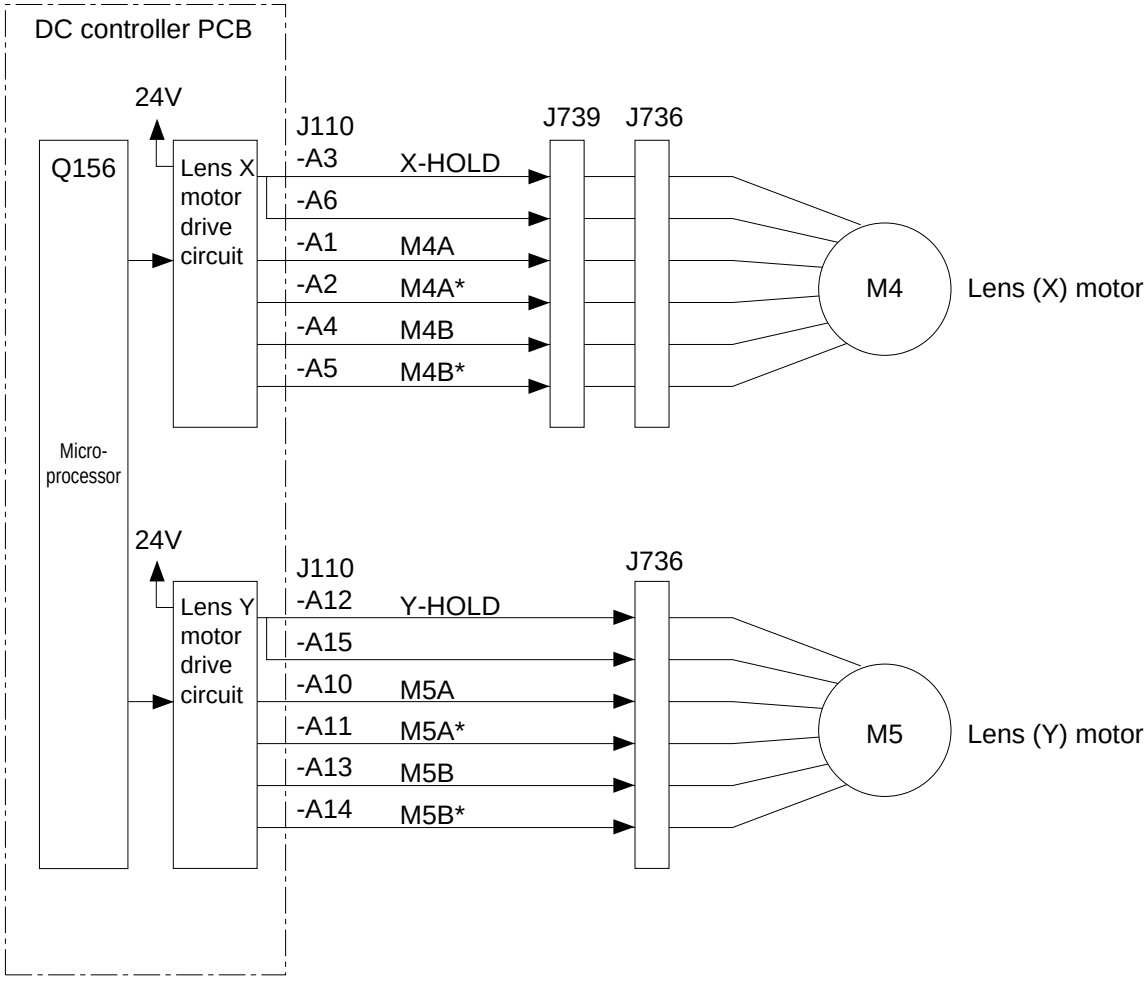

Figure 3-203

4. Moving the Lens

a. At Power-On

When the power switch is turned on, the lens X motor (M4) starts to rotate, and the lens moves in the direction of the lens X home position sensor (PS6). Then the lens Y motor (M5) rotates to move the lens in the direction of the lens Y home position sensor (PS7). When the signal plate on the lens housing blocks the lens X home position sensor (PS6), the X motor starts to rotate in reverse; when the signal plate on the lens stage blocks the Y home position sensor (PS7), the lens Y motor (M5) starts to rotate in reverse.

The motors stop to rotate when the lens has reached Direct/A4 width position. (See period I of Figure 3-204.)

b. While Making Copies

The microprocessor slave (Q140) remembers the location of the lens in Direct/A4 position. When a different ratio is selected, it immediately applies drive pulses to the lens X motor (M4)/Y motor (M5) to change the position of the lens. (See period II of Figure 3-204.)

The lens Y motor (M5) starts to rotate to move the lens when the Copy Start key has been pressed and the sizes of the original and the copy paper have been determined. (See period III of Figure 3-204.)

• Sequence of Operations

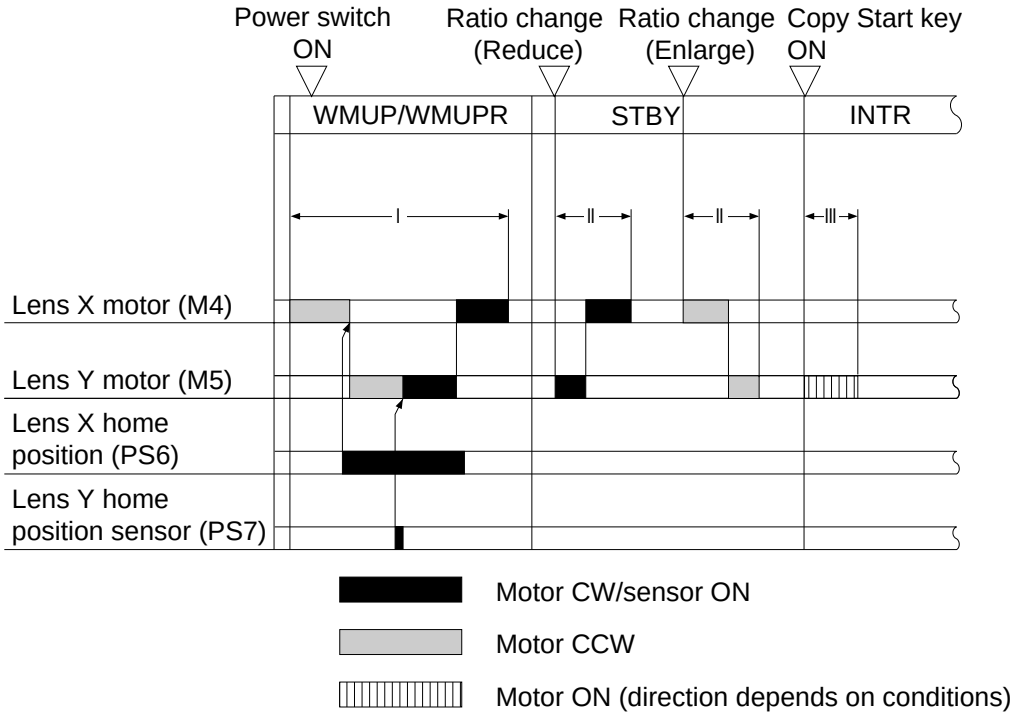

Figure 3-204

COPYRIGHT © 1997 CANON INC.
CANON NP6560/NP6360/NP6260 REV. 0 NOV. 1997 PRINTED IN JAPAN (IMPRIME AU JAPON)

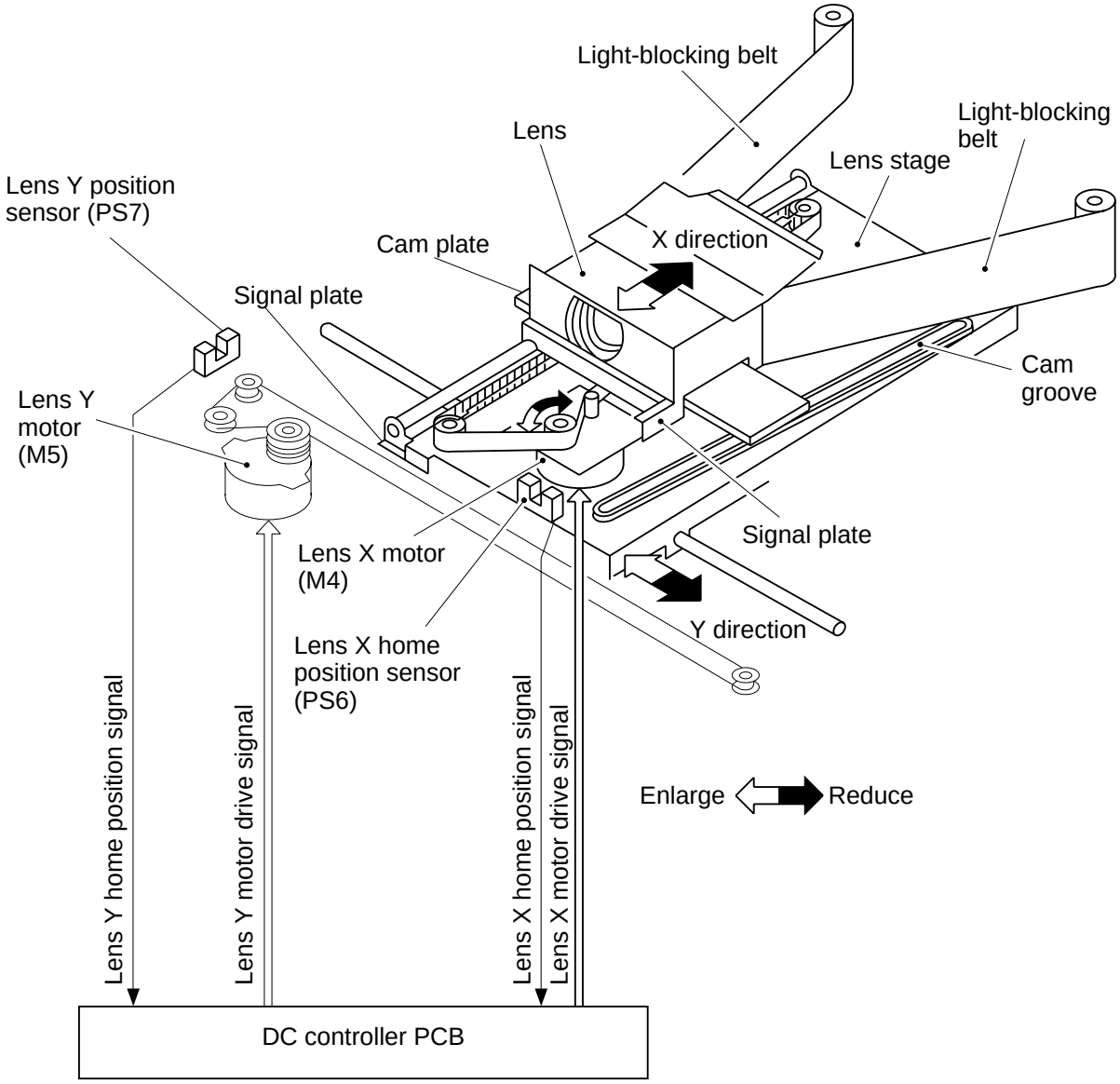
Light-blocking belt
Lens
Light-blocking belt
Lens stage
Lens Y position sensor (PS7)
Cam plate
X direction
Signal plate
Cam groove
Lens Y motor (M5)
Signal plate
Lens X motor (M4)
Y direction
Lens X home position sensor (PS6)
Lens Y home position signal
Lens Y motor drive signal
Lens X home position signal
Lens X motor drive signal
Enlarge
Reduce
DC controller PCB

Figure 3-205

III. SCANNER DRIVE SYSTEM

A. Scanner Movement

1. Outline of Movement

The scanner is moved forward or in reverse by changing the direction of rotation of the scanner motor (M3).

The speed of rotation of the scanner motor when the scanner is moving forward varies according to the selected reproduction ratio.

The speed of the scanner motor when the scanner is moving in reverse is 2.9 times the speed when the scanner is moving forward regardless of the selected reproduction ratio.

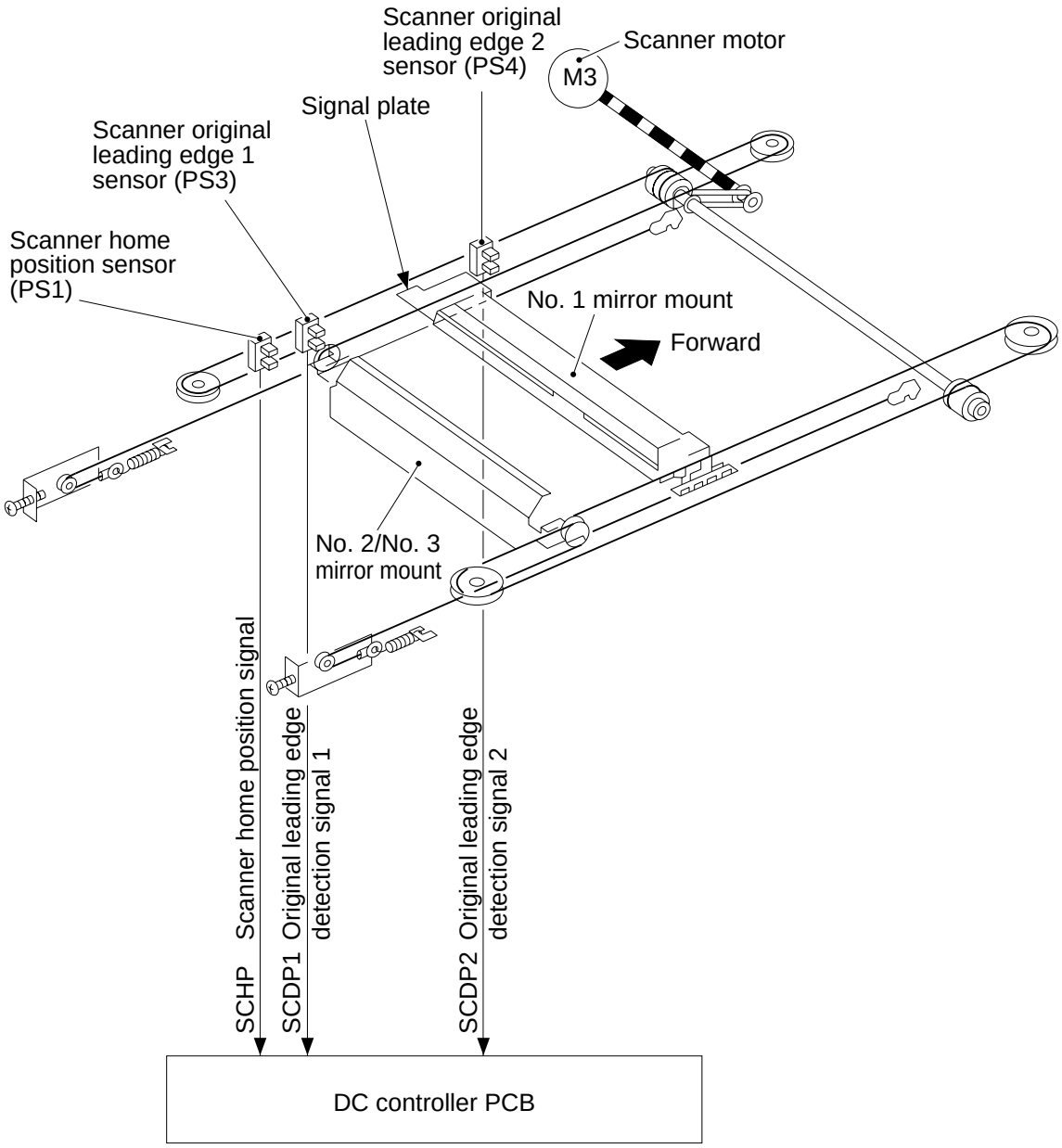

Figure 3-301

 COPYRIGHT © 1997 CANON INC.

The scanner is slowed down as soon as the signal plate has reached the scanner original leading edge 1 sensor (PS3); brakes are applied when it reaches the scanner home position sensor (PS1) so that it stops at its home position.

When stream reading mode is selected with the RDF in use, the scanner original leading edge 2 sensor (PS4) is used to find out whether the No. 1 mirror mount of the scanner has reached a specific position.

The distance over which the scanner travels varies according to the size of the copy paper and the selected reproduction ratio.

2. Relationship between the Scanner Sensors and the Signals

Sensor	Signal	Scanner		Description
		Forward	Reverse	
Scanner home position sensor (PS1)	SCHP			• Indicates that the scanner is at home position.
			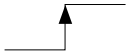	• Indicates that the scanner has reached a point in home position.
Original leading edge 1 sensor (PS3)	SCDP1	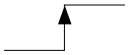		• Indicates that the registration clutch has turned on. • Indicates the scanner forward distance reference.
			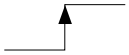	• Indicates that the scanner brakes have turned on.
Scanner leading edge 2 sensor (PS4)	SCDP2	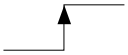		• Indicates that the scanner has reached stream reading position.

Table 3-301

3. Controlling the Scanner Motor Brake

a. Outline

The scanner motor is controlled by a braking mechanism so that the scanner may be stopped accurately at home position when it is moved in reverse, free from changes in the braking characteristics caused by changes in temperature.

b. Controlling the Braking Mechanism

The distance traveled by the scanner between when braking is applied and when the speed drops below a specific value is monitored to find out the degree of braking used to adjust the breaking mechanism (time). The speed of the scanner is monitored in relation to the intervals of scanner motor F signal (M3FG), and the distance of travel is monitored in relation to the number of FG signals.

- braking too weak (distance after braking is long)→correct to increase braking
- braking too strong (distance after braking is short)→correct to decrease braking

The data used to correct braking is not backed up, and therefore is lost when the power is turned off. A sampling scan is made during the warm-up period to collect braking correction data in preparation for copying operation. (At this time, the degree of braking is made maximum.)

Fixing assembly temperature is less than 100°C at time of power-on	After initializing the lens unit
Fixing assembly temperature is 100°C or more at time of power-on	After end of initial rotation

Table 3-302 Sampling Scan Timing

The scanning operation normally executed during the warm-up period is prohibited if the RDF remains open to ensure safety for the service person. Instead, the degree of braking is sampled during the first copying run, by making the degree of braking maximum.

Caution:

A sample scan is made if the copyboard cover open/closed detecting lever is pressed by a tool or the copyboard cover pen/closed sensor (PS5) is blocked. To avoid injuries, do not service under such conditions.

COPYRIGHT © 1997 CANON INC.

4. Basic Sequence of Operations

The distance over which the scanner moves is determined by the microprocessor based on the copy size, reproduction ratio, and copying mode.

The microprocessor computes the dimensions of the original when determining the distance over which the scanner moves forward.

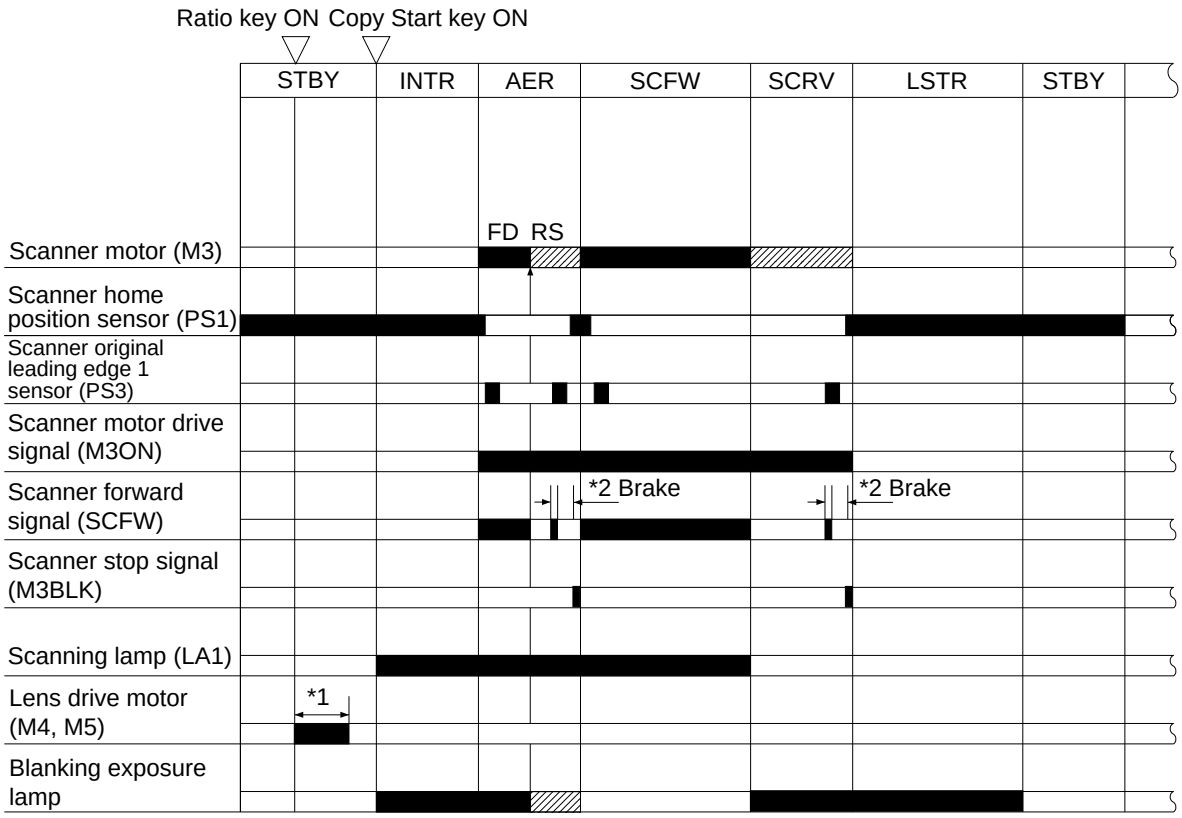

*1 Moves the lens according to the selected reproduction ratio and copy size.
*2 The degree of braking is automatically adjusted .

Figure 3-302

5. Movement of the Scanner in Page Separation Mode

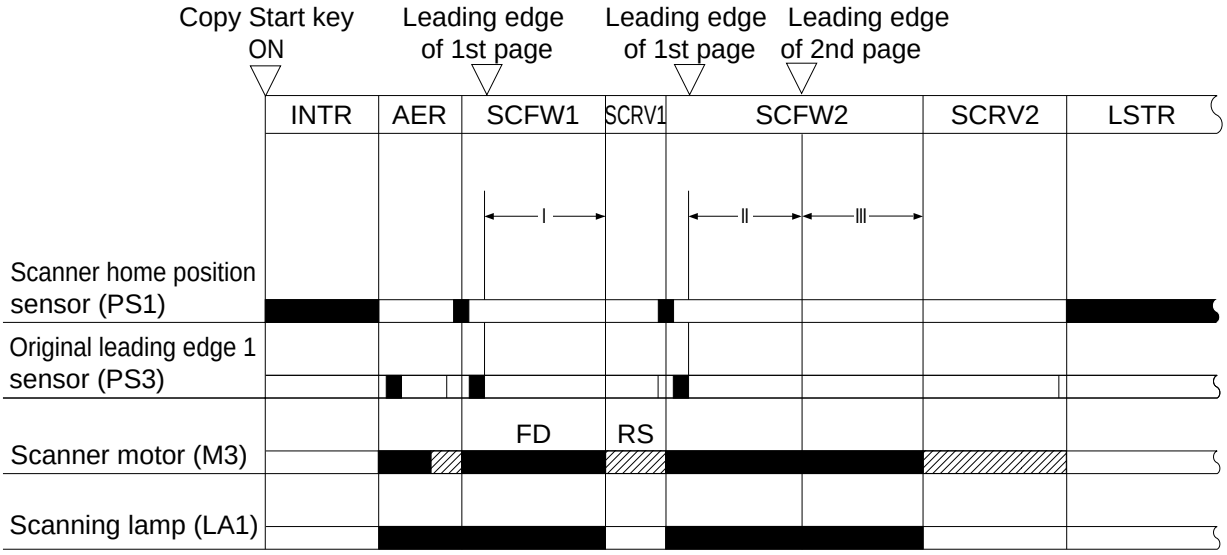

Figure 3-303

In Figure 3-303, all periods I, II, and III are controlled by the microprocessor on the DC controller PCB with reference to the original leading edge signal 1 (falling edge of SCDP1) for the 1st page.

The microprocessor determines the distance over which the scanner moves forward based on the selected reproduction ratio and the size of the original or selected cassette.

I, II: The distance over which the scanner moves forward is determined based on the selected reproduction ratio and the size of the original or the cassette size.

III: If original size detection has been executed, the microprocessor halves the measured size and uses the result as the center of the original, and the scanner moves assuming it to be the leading edge of the 2nd page.

If page separation is selected without original size detection, the control is based on the size of the selected cassette.

If the forward distance of II in Figure 3-303 is about 220 mm or more, the point about 220 mm is assumed as the leading edge of the 2nd page.

If the 1st and the 2nd pages are reversed using extended mode (Chapter 1), no change will occur except that the order of SCFW2/SCRV2 and SCFW1/SCRV1 is reversed.

 COPYRIGHT © 1997 CANON INC. CANON NP6560/NP6360/NP6260 REV. 0 NOV. 1997 PRINTED IN JAPAN (IMPRIME AU JAPON)

Reference:

If two or more mode is selected, the scanner is controlled based on the minimum value of the sizes which have been measured.

The microprocessor exerts control based on the size of the original when any of the following modes has been selected:

Mode	Size used
• RDF in use	Size of original detected by feeder
• Original frame erase mode	Size of original specified by user

Table 3-303

6. Movement of the Scanner with the RDF in Use (A4, 2 originals, 1 copy)

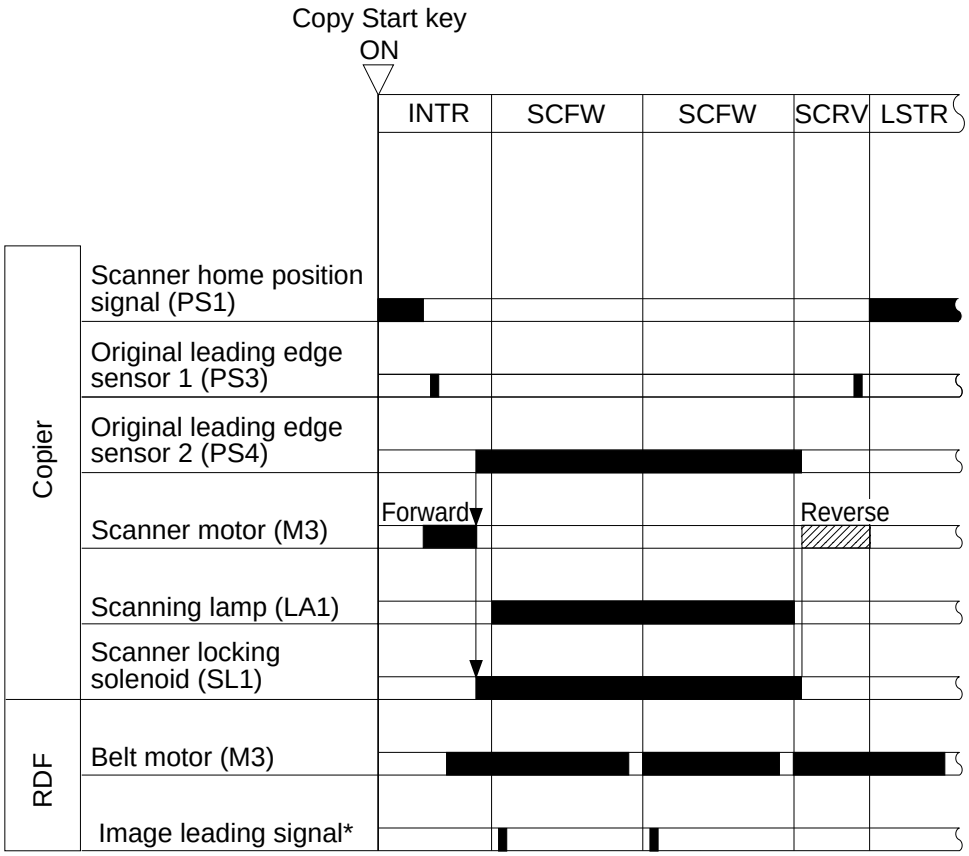

*Generated by the RDF to match RDF and copier registration.

Figure 3-304

a. Outline

If the copier is equipped with an RDF, stream reading is executed under the following conditions:

In stream reading, the copier's scanner is held in place, and the RDF slides the originals from right to left.

■ Conditions

- A4, LTR, or B5 one-sided original
- 1 original to 1 copy
- 70% to 115% reproduction ratio
- paper source NOT cassette 4

The use of stream reading enables omission of the scanner reverse period, thereby reducing the sheet-to-sheet distance and, ultimately, enabling a copying speed of 65 copies/minute (A4, LTR).

 COPYRIGHT © 1997 CANON INC. CANON NP6560/NP6360/NP6260 REV. 0 NOV. 1997 PRINTED IN JAPAN (IMPRIME AU JAPON)

b. Stream Reading with the RDF in Use

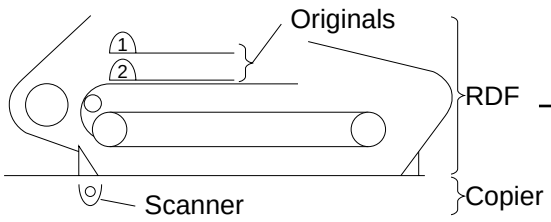

①Originals are placed.

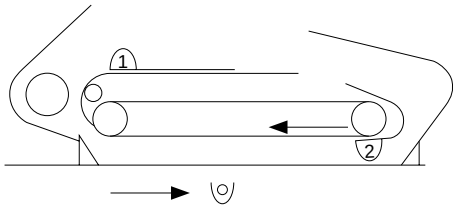

②The Copy Start key is pressed. The 2nd original is picked up from the right. The scanner moves to the center of the copyboard, and is locked in place by the scanner locking solenoid.

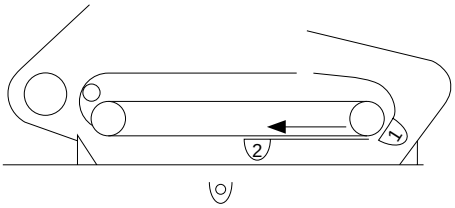

③The RDF sends the image leading edge signal to the copier when the leading edge of the 2nd original moves right next to the scanner. In response, the copier turns on the registration clutch so that the original and the copy paper are matched.
By this time, the 1st original has been picked up and is following the 2nd original.

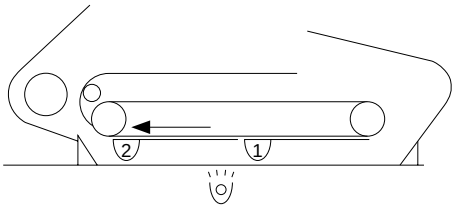

④The 2nd original is illuminated while it is moved over the scanner.
Then, the RDF sends the image leading edge signal for the 1st original.

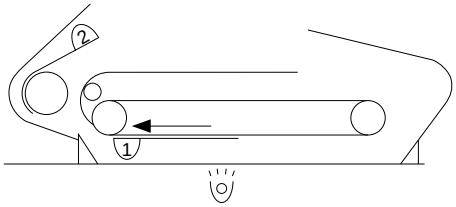

⑤The 1st original is illuminated while moving over the scanner.
The 2nd original is delivered from the left.

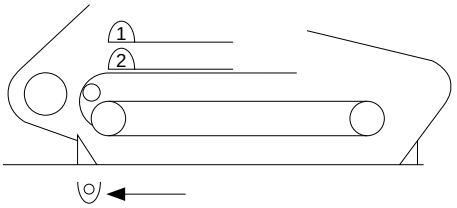

⑥The scanner returns to home position.
The 1st original is delivered from the left.

Figure 3-305

COPYRIGHT © 1997 CANON INC.

7. Movement of the Scanner with the RDF in Use (A4, 2 copies)

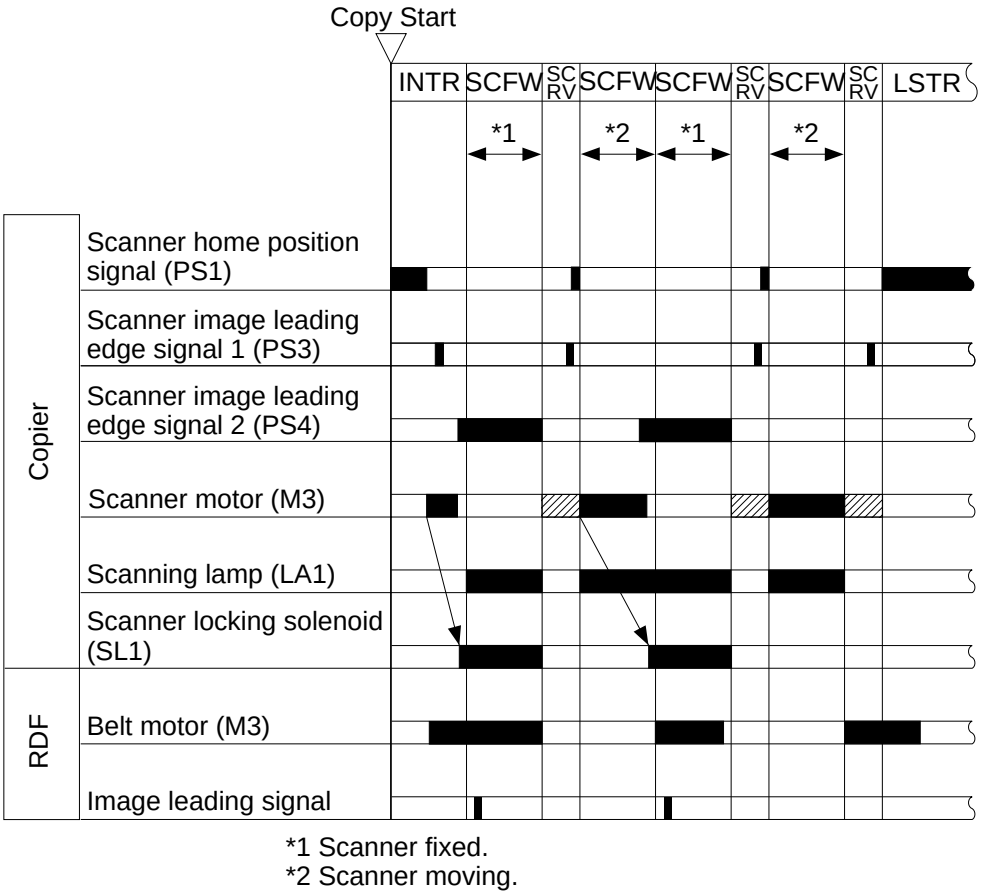

*1 Scanner fixed.
*2 Scanner moving.

Figure 3-306

a. Outline

If the copier is equipped with an RDF, it makes copies by combining stream reading (fixed scanner) and normal scanning (moving scanner).

■ Conditions

- A4, LTR, B5 one-sided original
- 1 original to multiple copies
- 70% to 115% reproduction ratio
- paper source NOT cassette 4

The sequence of operation is as follows:

①The 1st copy is made in stream reading.

②Immediately after stream reading, the original is stopped on the copyboard glass, and the remaining sets of copies are made in normal scanning mode (moving scanner).

 COPYRIGHT © 1997 CANON INC.

b. Combination of Stream Reading and Normal Scanning (A4, 2 originals, multiple copies)

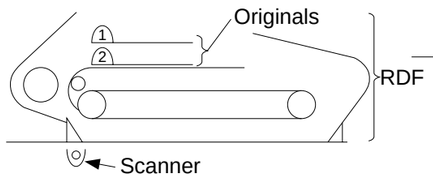

1) Originals are placed.

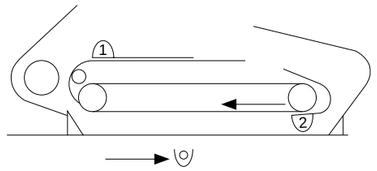

2) The Copy Start key is pressed. The 2nd original is picked up. The scanner moves to the center of the copyboard, and is locked in place by the scanner locking solenoid.

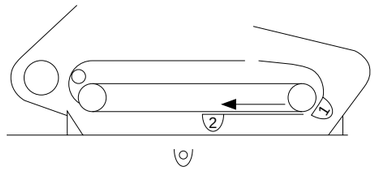

3) The RDF sends the image leading edge signal to the copier when the leading edge of the 2nd original moves right next to the scanner.
In response, the copier turns on the registration clutch so that the original and the copy paper are matched. The 1st original is picked up.

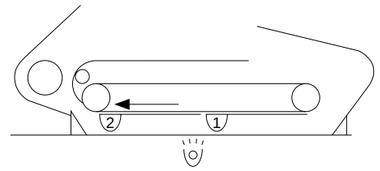

4) The 2nd original is illuminated while it is moved over the scanner.

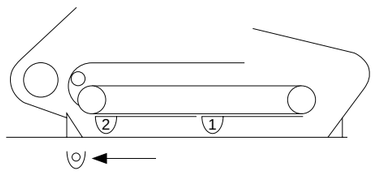

5) The 2nd original is stopped where stream reading has ended.

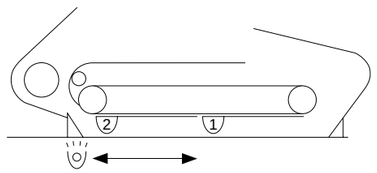

6) The scanner executes normal scanning to illuminate the remaining number of copies.

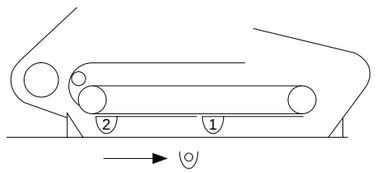

7) The scanner moves to the center of the copy-board, and is held in place by the scanner locking solenoid.

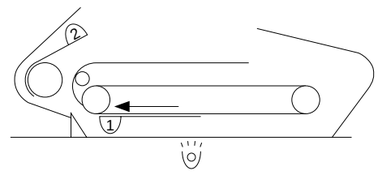

8) When the RDF has sent the image leading edge signal for the 1st original, the 1st original is moved over the scanner and illuminated.

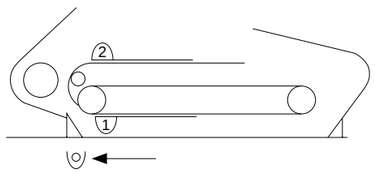

9) The 1st original is stopped where stream reading has ended. The scanner returns to home position.

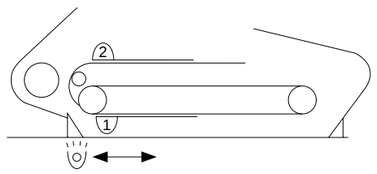

10) The scanner executes normal scanning to illuminate the remaining number of originals.

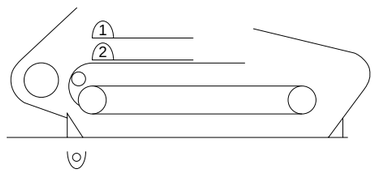

11) The 1st original is delivered.

Figure 3-307

COPYRIGHT © 1997 CANON INC.

 COPYRIGHT © 1997 CANON INC. CANON NP6560/NP6360/NP6260 REV. 0 NOV. 1997 PRINTED IN JAPAN (IMPRIME AU JAPON)

8. Scanner Motor (M3) Control Circuit

a. Outline

Figure 3-308 shows the circuit used to control the scanner motor, and the circuit has the following functions.

① Turning on and off the scanner motor.
② Controlling the direction of rotation of the scanner motor.
③ Controlling the speed of rotation of the scanner motor.

b. Stopping the Rotation of the Motor

When the scanner motor drive control signal (M3ON) goes '0', the drive circuit turns off so that the motor does not rotate.

c. Moving the Scanner Forward

When the scanner motor drive control signal (M3ON) goes '1' and the scanner forward signal (M3F/R) goes '0', the drive circuit turns on so that the scanner motor rotates clockwise, thereby moving the scanner forward.

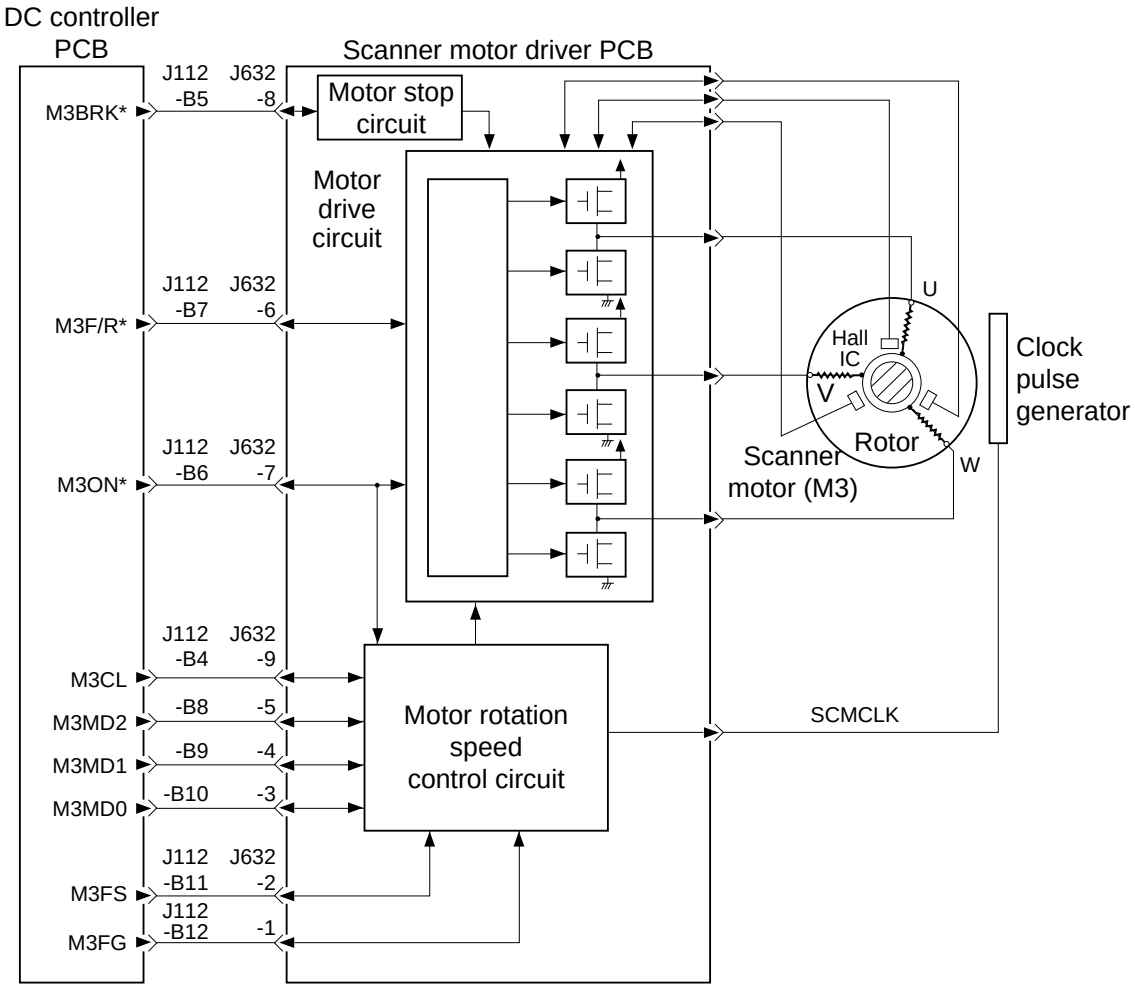

Figure 3-308

d. Moving the Scanner in Reverse

When the scanner motor drive signal (M3ON) goes '1' and the scanner forward signal (M3F/R) goes '1', the drive circuit turns on to rotate the scanner motor in counterclockwise direction, thereby moving the scanner in reverse.

e. Controlling the Speed of Rotation of the Scanner Motor

The DC microprocessor on the DC controller PCB sends the scanner speed signal (M3FS) to the scanner motor driver PCB according to the selected reproduction ratio.

The revolution speed control circuit compares the scanner speed signal and the clock pulses (SCMCLK) from the scanner motor, and sends control signals to suit the difference to the motor drive circuit.

The motor drive circuit turns on and off the power (while keeping the voltage the same) at short intervals to control the speed of rotation.

Since the speed of rotation of the scanner motor is varied according to the selected reproduction ratio, the reproduction ratio select signal (M3MD0, 1, 2) from the DC controller PCB is varied as shown in Table 3-304.

M3MD2	M3MD1	M3MD0	One-sided copying
0	0	0	204~172
0	0	1	171~144
0	1	0	143~120
0	1	1	119~100
1	0	0	99~79
1	0	1	78~62
1	1	0	61~49
1	1	1	Scanner reverse

Table 3-304

 COPYRIGHT © 1997 CANON INC.

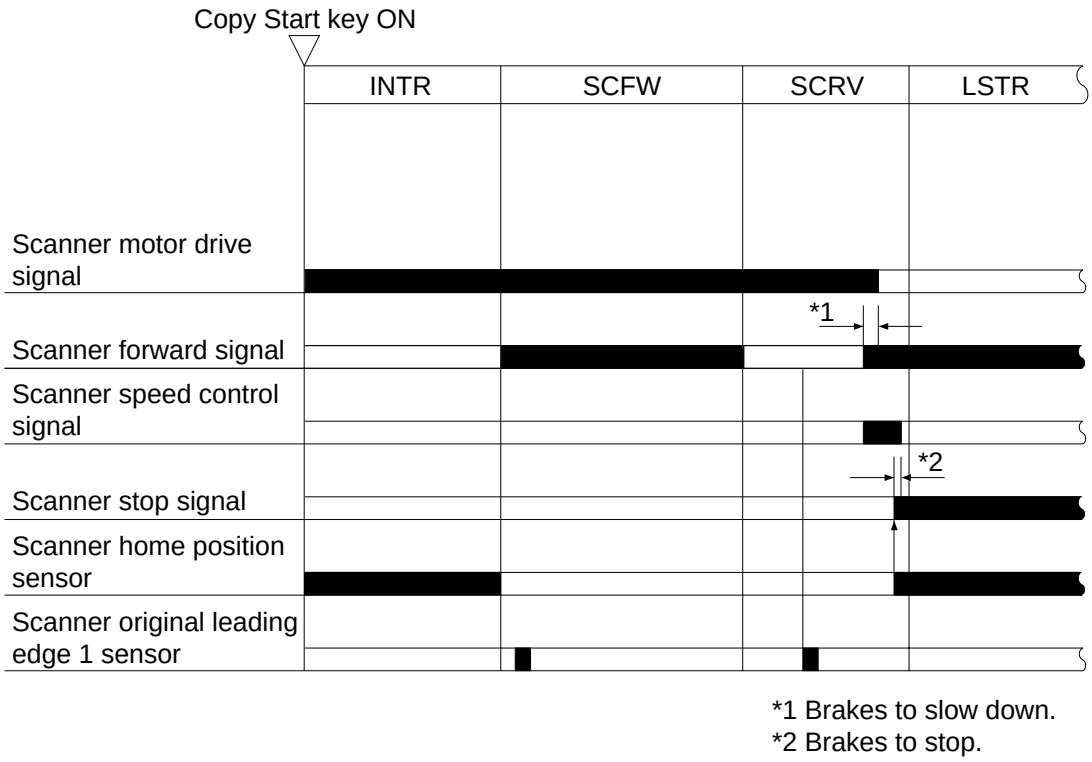
Copy Start key ON
INTR
SCFW
SCRV
LSTR
Scanner motor drive signal
*1
Scanner forward signal
Scanner speed control signal
*2
Scanner stop signal
Scanner home position sensor
Scanner original leading edge 1 sensor
*1 Brakes to slow down.
*2 Brakes to stop.

Figure 3-309

IV. OTHERS

A. Original Size Detection

1. Outline of Detection

The machine is equipped with auto paper selection and auto ratio selection functions, which necessitate the identification of the size of originals.

As many as four original detection circuits are mounted under the copyboard glass (Figure 3-401). The outputs of these circuits are checked by the DC controller when the copyboard cover is closed so as to identify the original as being A3, B4, A4, or B5.

An original detecting circuit consists of an LED which emits light against the original and a phototransistor which checks the light reflected by the original for output to the DC controller.

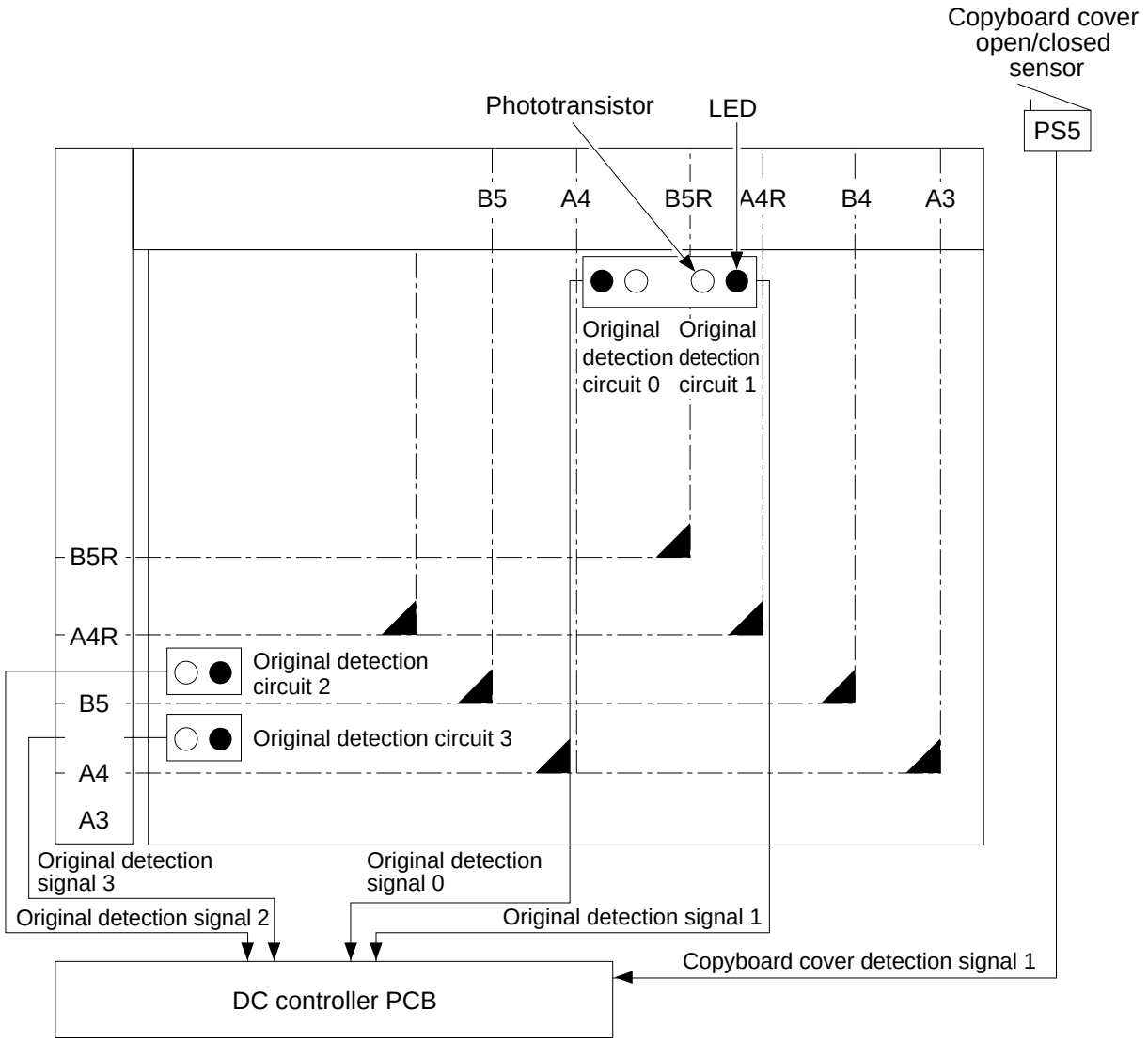

Figure 3-401

 COPYRIGHT © 1997 CANON INC. CANON NP6560/NP6360/NP6260 REV. 0 NOV. 1997 PRINTED IN JAPAN (IMPRIME AU JAPON)

2. Operation

The DC controller PCB measures the outputs of the original detection circuits at intervals of 0.2 sec until the Copy Start key is pressed or for 15 sec after the copyboard cover open/closed sensor (PS5) has turned on while the copyboard cover is being closed.

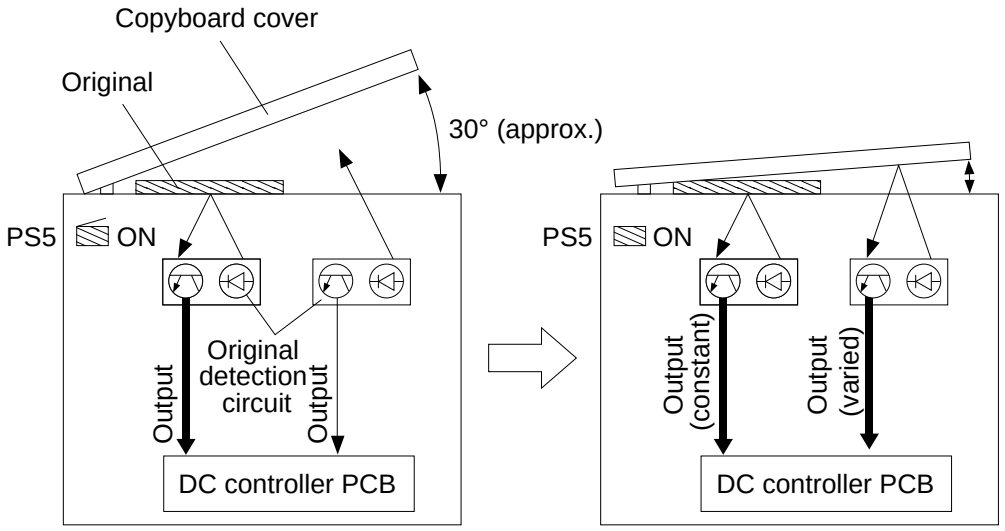

(The thickness of the output arrow represents the size of the level.)

Figure 3-402

If an original exists over a sensor, the original detection circuit receives the light reflected by the original so that the output of the detection circuit remains the same regardless of the angle of the copyboard cover.

If no original exists over the sensor, on the other hand, the output of the detection circuit immediately after PS5 turns on is small. When the copyboard cover is fully closed thereafter, the light reflected by the detection circuit receives the light reflected by the copyboard sheet, and the output will be larger.

Accordingly, the DC controller will assume the presence of an original if the output of the detection circuit remains the same, while assuming the absence of an original if the output changes.

This type of detection enables identification of the size of even a black original.

Reference:

1. If the original is thick and, as a result, the copyboard cover will not fully close after PS5 has turned ON, the level of the sensor output will not change regardless of the size of the original. If none of the levels (of the three sensors) does not change, the DC controller identifies the size of the original by comparing the measurement taken when PS5 has turned on against the slice level.
2. If the copyboard cover is opened (PS5 is off), the cassette containing the maximum size paper will be selected.

COPYRIGHT © 1997 CANON INC.

3. Size of Originals

The DC controller identifies the size of various originals with reference to combinations of original detection signals (DSIZE0 through 3).

① AB Configuration

Original detection signal				Size
DS3	DS2	DS1		
Sensor 3	Sensor 2	Sensor 1	Sensor 0	AB
0	0	0	0	Absent or, A5, A5R
0	0	0	1	B5R
0	1	0	0	B5
1	1	0	0	A4
0	0	1	1	A4R
0	1	1	1	B4
1	1	1	1	A3

Table 3-401

② Inch Configuration

Original detection signal			Size
DS2	DS1		
Sensor 2	Sensor 1	Sensor 0	Inch
0	0	0	None
0	0	1	LTRR
0	1	1	LGR
1	0	0	LTR
1	1	1	279.4mm × 431.8mm (11" × 17")

Table 3-402

 COPYRIGHT © 1997 CANON INC. CANON NP6560/NP6360/NP6260 REV. 0 NOV. 1997 PRINTED IN JAPAN (IMPRIME AU JAPON)

V. DISASSEMBLY AND ASSEMBLY

Here, the copier is discussed in terms of its mechanical characteristics and operation and how to disassemble and assemble it.

Be sure to observe the following for disassembly/assembly work:

1. ⚠ Disconnect the power plug for safety before starting disassembly/assembly work.
2. Unless otherwise noted, assemble the parts by reversing the steps used to disassemble them.
3. Identify the screws by type (length, diameter) and location.
4. One of the mounting screws of the rear cover is provided with a toothed washer to protect against static electricity. Do not leave it out during assembly work.
5. The screws used for grounding wires and varistors are provided with a toothed washer to ensure electrical continuity. Do not leave them out during assembly work.
6. As a rule, do not operate the machine with any of its parts removed.
7. Before sliding out the duplexing unit or the fixing assembly, check to make sure that the front door switch or the power switch is off.

COPYRIGHT © 1997 CANON INC.

A. Scanner Drive Assembly

1. Removing the Scanner Drive Motor

1) Remove the RDF/copyboard cover.
2) Remove the machine's rear cover.
3) Remove the three mounting screws each, and remove the RDF/copyboard cover.

Caution:

The mounting screws used on the RDF/copyboard cover are longer than others.

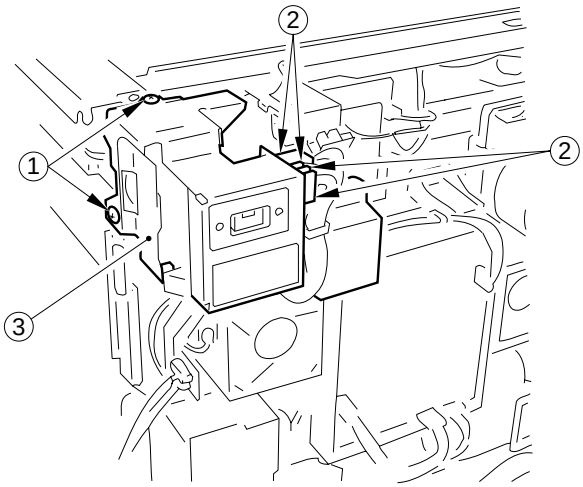

Figure 3-501

4) Remove the rear upper cover.
5) Remove the rear right cover.
6) Remove the multifeeder assembly.
7) Remove the three mounting screws ①, and disconnect the five connectors ②; then, remove the RDF rear right mount ③.

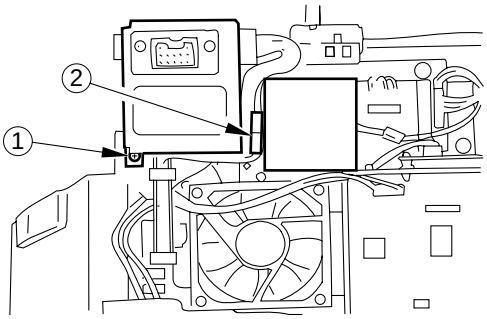

Figure 3-502

8) Remove the mounting screw ④, and remove the RDF/copyboard cover detection assembly ⑤.

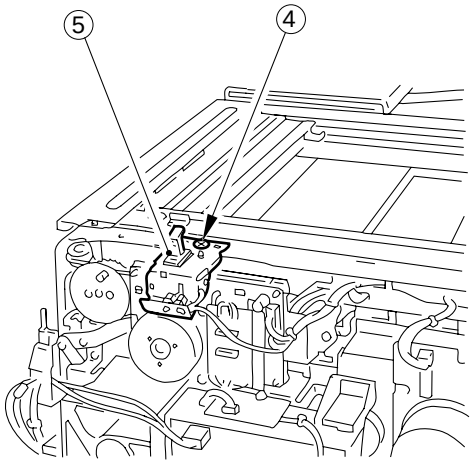

Figure 3-503

 COPYRIGHT © 1997 CANON INC. CANON NP6560/NP6360/NP6260 REV. 0 NOV. 1997 PRINTED IN JAPAN (IMPRIME AU JAPON)

9) Remove the three mounting screws ⑥, and disconnect the two connectors ⑦; then, remove the scanner drive motor assembly ⑧.

Caution:

A drive belt is on the gear of the motor shaft; remove the motor while detaching the belt.

Caution:

The scanner drive motor assembly is fixed in position at the factory with a jig making sure that the tension of the belt of the motor assembly is as specified.
When removing the scanner drive motor assembly, be sure to mark the edge of the motor assembly in advance.

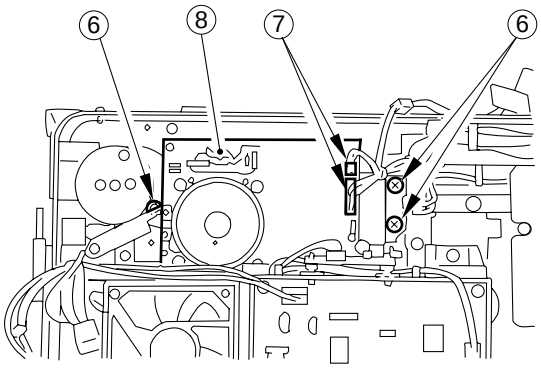

Figure 504

COPYRIGHT © 1997 CANON INC.

2. Routing the Scanner Drive Cable

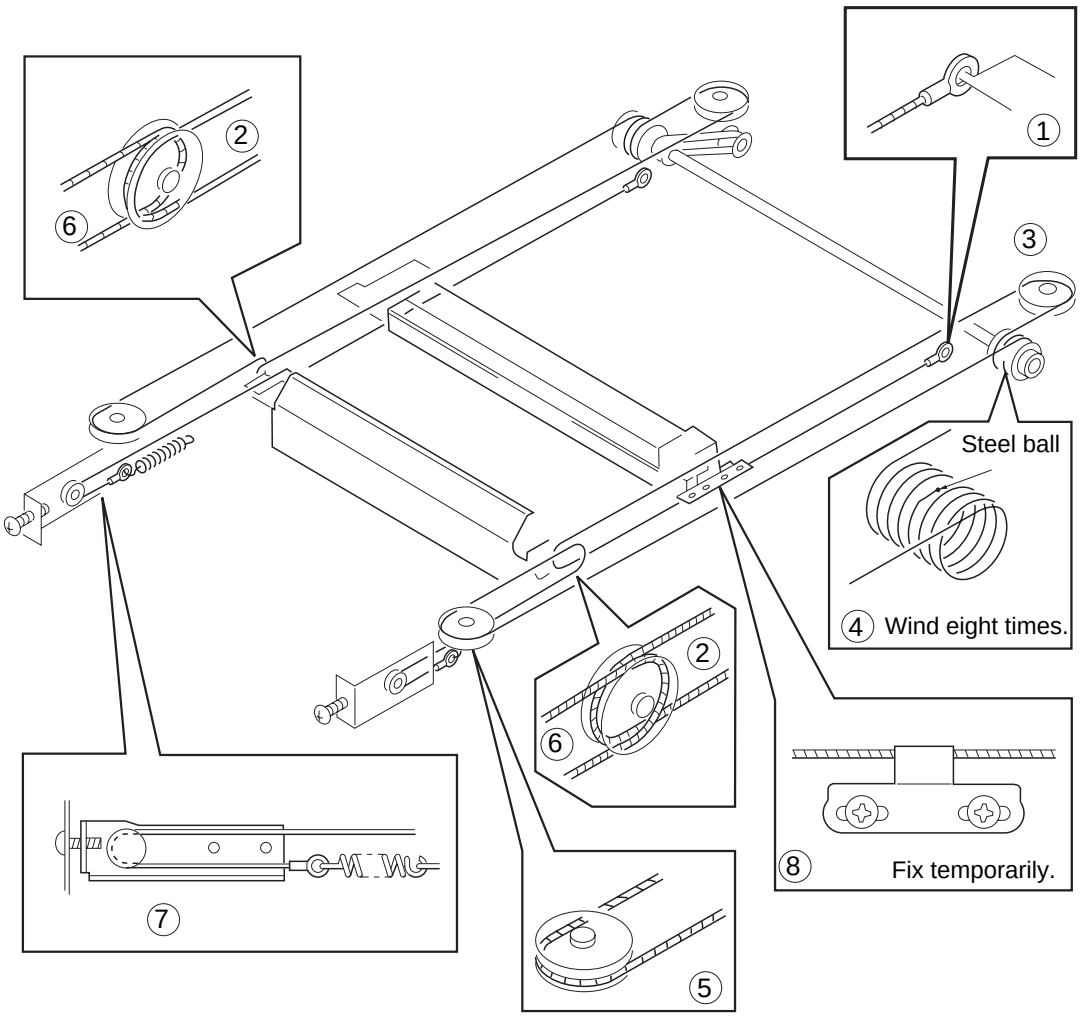

Figure 3-505

3. Orienting the Heat Absorbing Glass

Be sure to orient the heat absorbing glass whenever replacing the heat absorbing glass.

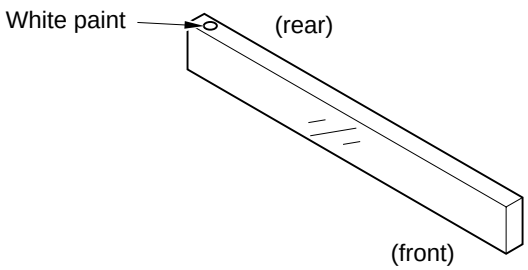

Figure 3-505a

 COPYRIGHT © 1997 CANON INC.

4. Removing the Scanner Drive Cable

1) Remove the upper right cover, left cover, rear cover, and rear upper cover.
2) Remove the copyboard glass.
3) Remove the control panel.
4) Remove the RDF rear right mount. (See p. 3-24.)
5) Remove the two mounting screws ①, and remove the scanner locking disc ②.

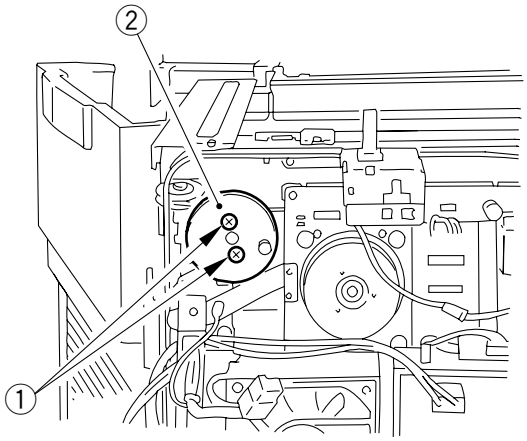

Figure 3-506

6) Disconnect the three connectors of the potential control PCB, and disconnect the connector of the service switch.
7) Remove the five mounting screws ③, and disconnect the connector ④; then, remove the scanner cooling fan ⑤.

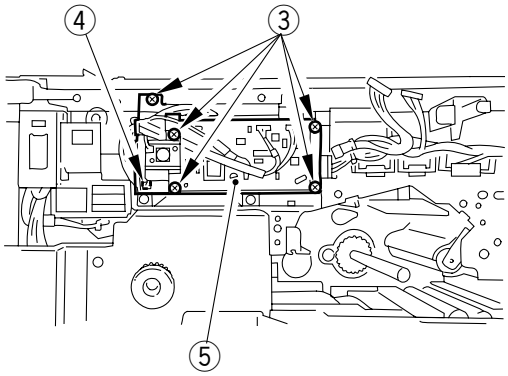

Figure 3-507

8) Remove the two cable fixing screws (rear) ⑥ from the No. 1 mirror mount.

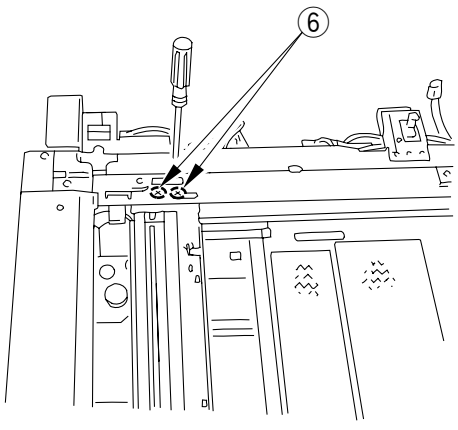

Figure 3-508

COPYRIGHT © 1997 CANON INC.

9) Remove the two cable fixing screws (front) from the No. 1 mirror mount.

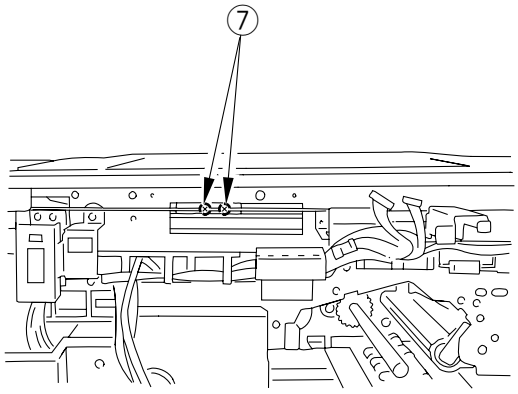

Figure 3-509

10) Loosen the tension screw ⑧ to loosen the scanner cable.
11) Remove the scanner cable.

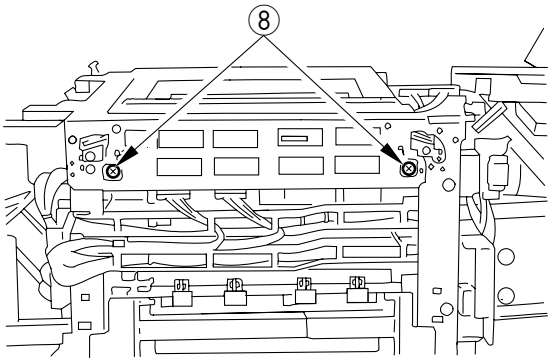

Figure 3-510

 COPYRIGHT © 1997 CANON INC. CANON NP6560/NP6360/NP6260 REV. 0 NOV. 1997 PRINTED IN JAPAN (IMPRIME AU JAPON)

5. Adjusting the Tension of the Scanner Drive Cable

If you have replaced the scanner drive cable, be sure to perform the following to adjust the tension:

1) Remove the five mounting screws, and remove the upper left cover.
2) Loosen the fixing screw on the tension spring bracket.
3) Turn the tension adjusting screw until the value is as follows:
   - Turn the tension adjusting screw A so that the reading of the spring gauge is 200 ±50 g when the scanner cable is pulled about 10 mm at the center.

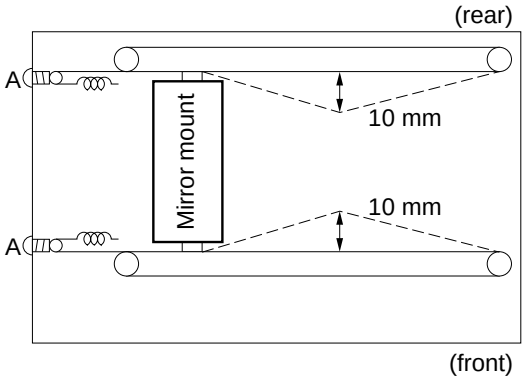

Figure 3-511

6. Positioning the Mirror

If you have replaced the scanner drive cable, be sure to adjust the position of the mirror as follows:

1) Move the No. 1 mirror mount and the No. 2/No. 3 mirror mount to the left.
2) Set the mirror positioning tool (front, rear; FY9-3011) as shown.

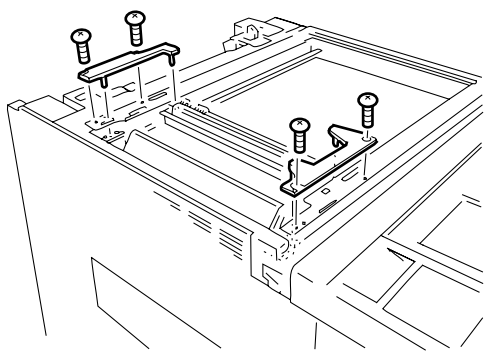

Figure 3-512

3) Loosen the two screws on the metal clamps used to fix the scanner drive cable to the No. 1 mirror mount.
4) Remove the tool.

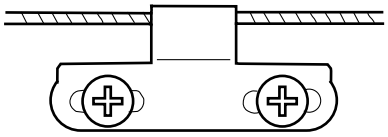

Figure 3-513

7. Positioning the Scanner Locking Solenoid (SL1)

- Making Adjustments

1) Remove the rear cover.
2) Remove the multifeeder assembly.
3) Adjust the stroke of the scanner locking solenoid once again so that it is as specified.

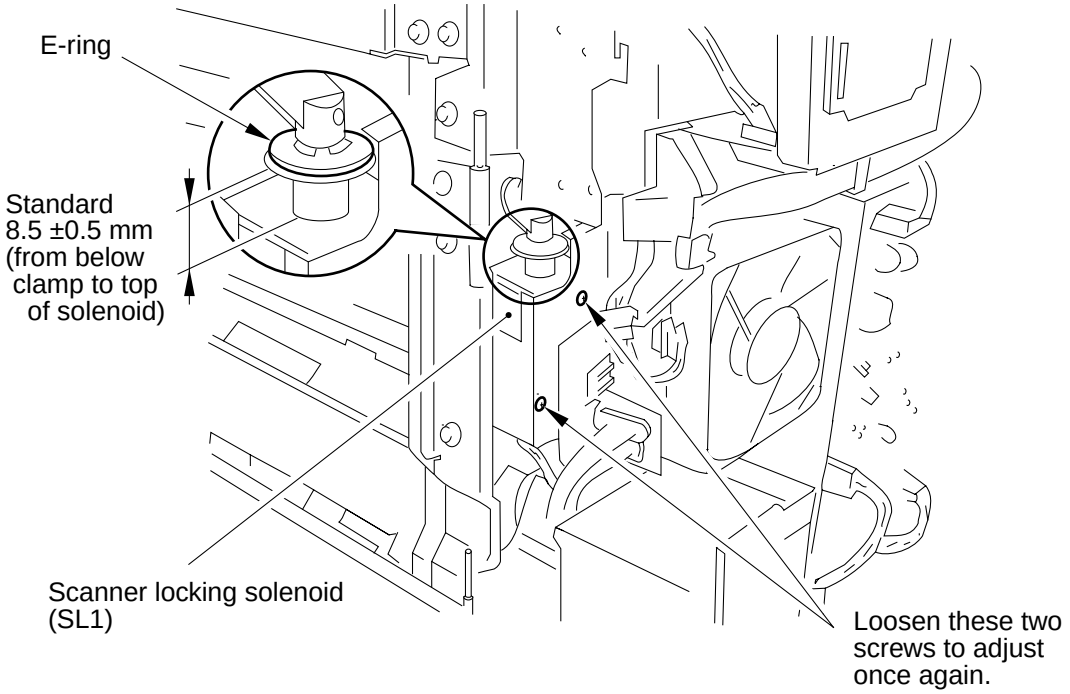

Figure 3-514

 COPYRIGHT © 1997 CANON INC.

B. Lens Drive Assembly

If you turn on the power supply without removing the lens metal fixing of the lens stage or move the lens or the lens stage without disconnecting the power plug, you can damage the gear of the output shaft.

a. Be sure to remove the lens metal fixing of the lens stage before connecting the power plug when installing the machine.
b. Be sure to disconnect the power plug before moving the lens stage or the zoom lens by hand.
   Further, avoid moving without care, and be sure to hold the area near the point of engagement with the rail.

1. Removing the Lens Y Direction Drive Motor

1) Remove the copyboard glass retainer, and remove the copyboard glass.
2) Move the No. 1 mirror mount to the left.
3) Remove the three mounting screws ①, and remove the lens hood ②.

Caution:

When installing the lens hood, fit the boss of the lens hood in the cut-off of the rail; then, hook at the rear while turning the lens hood clockwise.

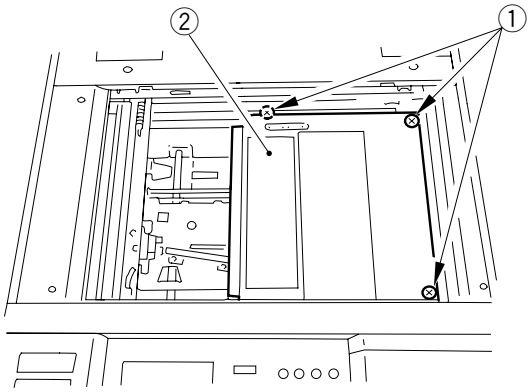

Figure 3-515

4) Remove the two mounting screws ③ of the cable, and remove the two mounting screws ④; then, lift the lens Y direction drive motor together with the support ⑤.

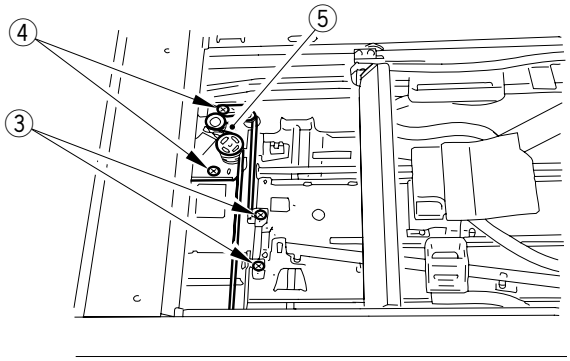

Figure 3-516

5) Disconnect the connector ⑥, and remove the two mounting screws ⑦; then, detach the lens Y direction drive motor ⑧ from the support.

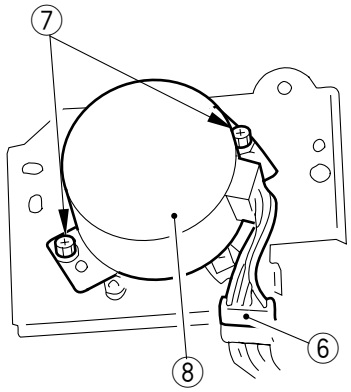

Figure 3-517

2. Removing the Lens Stage Temporarily

1) Remove the copyboard glass.
2) Move the No. 1 mirror mount to the left of the scanner rail.

Caution:

Be sure to push the center of the No. 1 mirror mount.

 COPYRIGHT © 1997 CANON INC.

3) Remove the lens hood.
4) Remove the mounting screw of the Y direction cable metal clamp; then, fix the end of the Y direction cable temporarily in place.
5) Remove the mounting screw ①, and remove the light-blocking belt retainer ② (on lens mount).

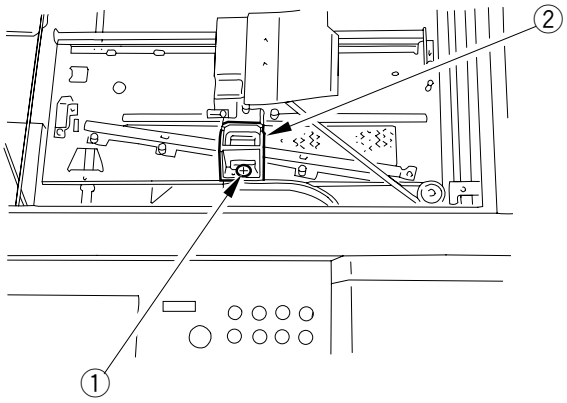

Figure 3-518

6) Remove the mounting screw ③, and remove the light-blocking curtain 2 (front) ④ together with the holder. (Fix the light-blocking belt mount temporarily in place with tape to the lens stage.)

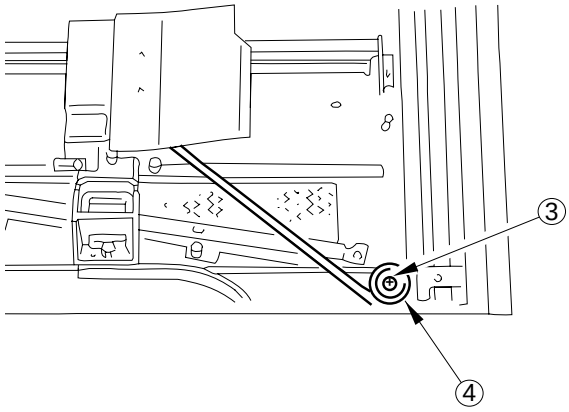

Figure 3-519

7) Lift the lens stage ⑤, and detach the bushing ⑥ from the rail ⑦.

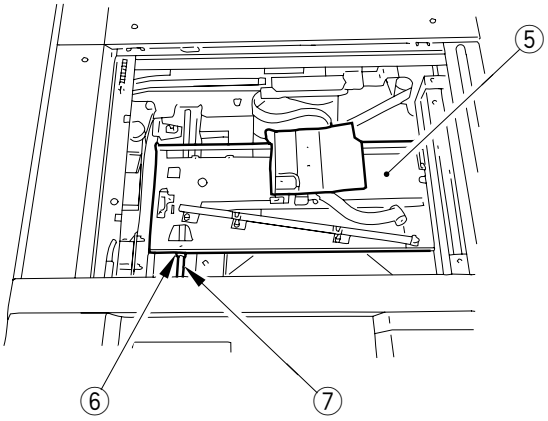

Figure 3-520

COPYRIGHT © 1997 CANON INC.

3. Installing the Light-Blocking Belt Mount

1) Wind the light-blocking sheet ② around the bobbin ① while removing the slack; then, turn the bobbing mount ③ clockwise two to three times so that the boss on the bottom of the bobbin mount is in the hole of the belt mount. Set the bobbin, and fix it in place with the mounting screw ⑤.

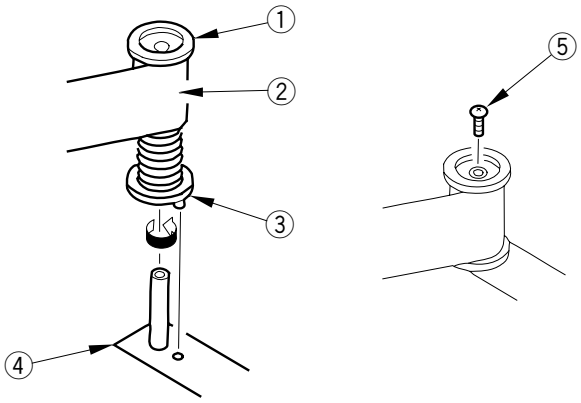

Figure 3-521

4. Removing the Lens X Direction Drive Motor

1) Remove the lens stage.
2) Disconnect the connector ①, and remove the mounting screw ②; then, remove the motor mount ③.

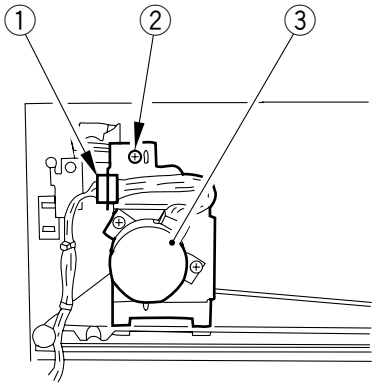

Figure 3-522

3) Remove the two mounting screws ④; then, detach the lens X direction motor ⑤ from the motor mount.

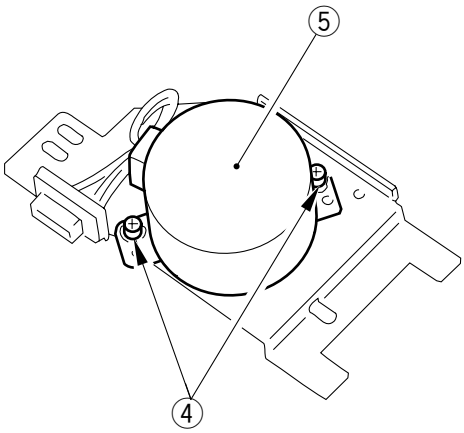

Figure 3-523

 COPYRIGHT © 1997 CANON INC. CANON NP6560/NP6360/NP6260 REV. 0 NOV. 1997 PRINTED IN JAPAN (IMPRIME AU JAPON)

5. Attaching the Lens X Direction Drive Belt

Fix the lens X direction drive motor ① in place with the mounting screw ② when it has lowered on its own weight.

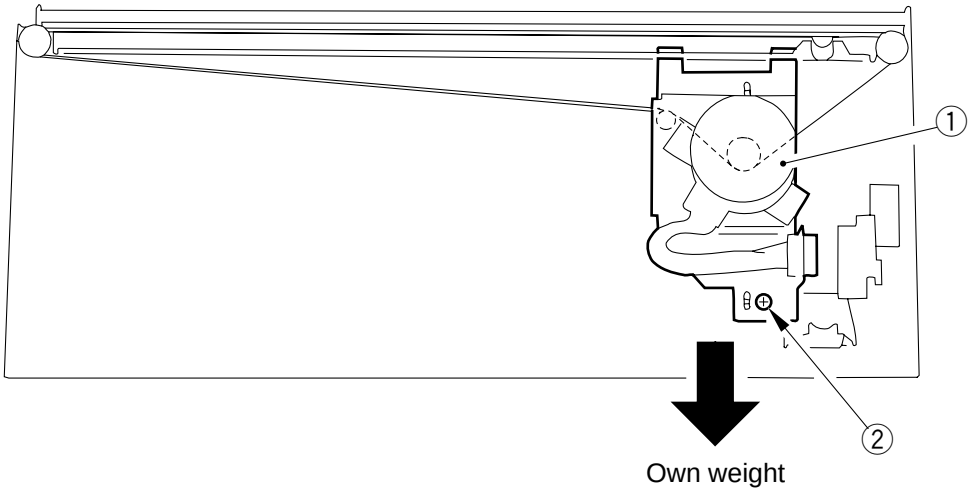

Figure 3-524

6. Routing the Light-Blocking Belt

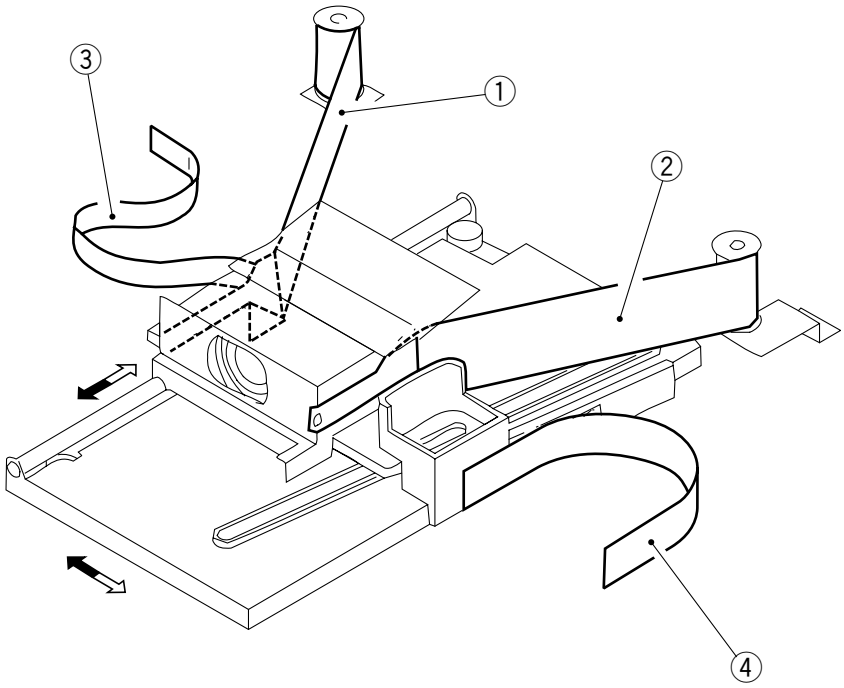

① Light-blocking belt 1 ③ Light-blocking belt 3
② Light-blocking belt 2 ④ Light-blocking belt 4

Figure 3-525

7. Replacing the Light-Blockig Belt

1) Fully wind the belt ① on the bobbin ② in clockwise direction; then, fix it in place with tape ③.
2) Fix the light-blocking belt in place on the lens mount.
3) Turn the bobbing clockwise and counterclockwise in units of half turns; then, let it go so that the spring inside the bobbin is freed.
4) Turn the bobbin clockwise two to two-and-a-half times, and remove the tape and pull out the end of the belt.
5) Hook the end of the belt on the lens unit.

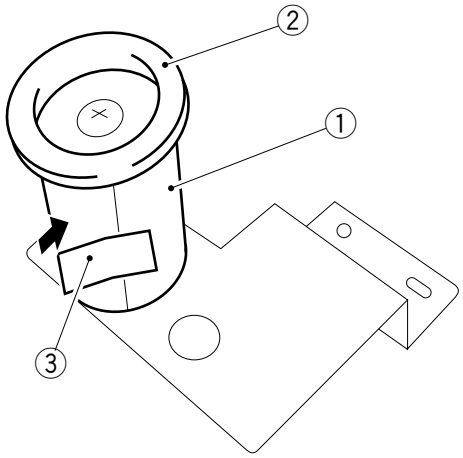

Figure 3-526

8. Removing the Light-Blocking Plate

1) Remove the copyboard glass.
2) Move the No. 1 mirror mount to the left, and remove the lens hood.
3) Remove the two screws ①, and remove the light-blocking plate ③ while lifting the lens stage ②.

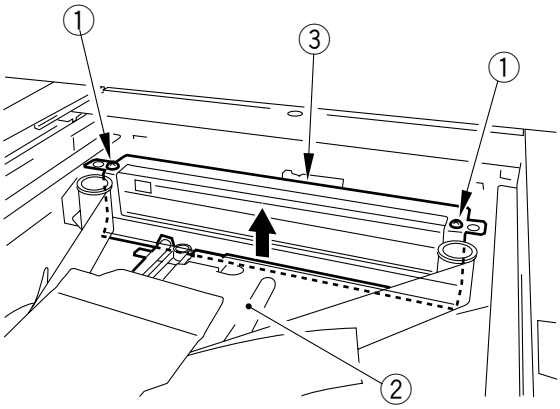

Figure 3-527

COPYRIGHT © 1997 CANON INC.

CHAPTER 4

IMAGE FORMATION SYSTEM

This chapter discusses the principles of how images are formed. It also explains the timing at which the various units involved in image formation are operated, and shows how they may be disassembled/assembled and adjusted.

I. PROCESSES 4-1
- A. Controlling the Drum Surface Potential 4-1
- B. Controlling the Intensity of the Scanning Lamp 4-6
- C. Controlling the Primary/Transfer Corona Current.....4-11
- D. Controlling the Separation/Pre-Transfer Corona Current.....4-15
- E. Controlling the Blank Exposure Lamp (LED) 4-19
- F. Drum Heater Circuit.....4-22
- G. Cleaning the Primary Charging Wire 4-25
- H. Pre-Transfer/Transfer/Separation Charging Wire Automatic Cleaning Mechanism.....4-26

II. DRUM CLEANING ASSEMBLY /DEVELOPING ASSEMBLY 4-28
- A. Outline 4-28
- B. Detecting the Level of Toner and Controlling the Supply Operation ..4-30
- C. Controlling the Developing Bias/Roller Electrode.....4-32
- D. Detecting the Waste Toner Feeding Screw (locking) 4-38

III. DISASSEMBLY AND ASSEMBLY 4-39
- A. Scanning Lamp Assembly.....4-40
- B. Standard White Plate 4-41
- C. Pre-Exposure Lamp Unit.....4-42
- D. Blanking Exposure Lamp Assembly 4-43
- E. Photosensitive Drum 4-44
- F. Potential Sensor Assembly.....4-46
- G. Primary Charging Assembly.....4-47
- H. Pre-Transfer Charging Assembly...4-47
- I. Transfer/Separation Charging Assembly 4-48
- J. Charging Wire.....4-51
- K. Developing Assembly 4-57
- L. Hopper Assembly 4-62
- M. Drum Cleaner 4-62
- N. Separation Claw/Separation Claw Drive Assembly.....4-66
- O. Waste Toner Feeding Assembly....4-66

COPYRIGHT © 1997 CANON INC. CANON NP6560/NP6360/NP6260 REV. 0 NOV. 1997 PRINTED IN JAPAN (IMPRIME AU JAPON)

I. PROCESSES

A. Controlling the Drum Surface Potential

1. Outline

The machine uses an electrostatographic method, and is constructed as shown in Figure 4-101.

The quality of copy images are mostly affected by the following:

① Changes in the sensitivity of the drum.
② Changes in the degree of charging by the primary charging assembly.
③ Changes in the degree of exposure.

These changes are in turn brought about by changes in the site environment (temperature, humidity) or deterioration of or dirt on associated parts.

The machine is equipped with a drum surface potential control mechanism to ensure stable latent static images in the presence of these factors.

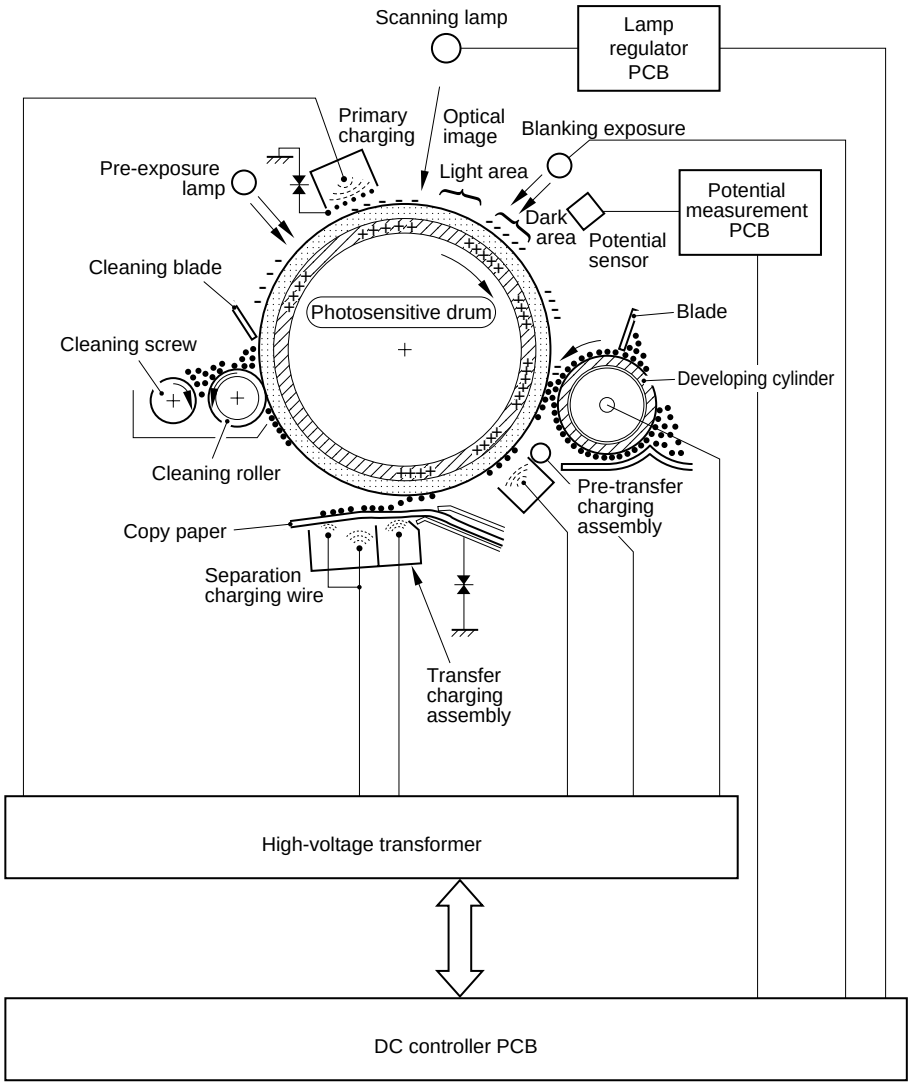

Figure 4-101

COPYRIGHT © 1997 CANON INC.

2. Control Method

The potential sensor inside the machine measures the dark area potential (V_D) and the light area potential (V_{L1}), and the machine makes corrections based on the measurements to enable a target value.

The light area potential (V_{L2}) for developing bias is measured based on the correction conditions, and the machine uses the measurement to determine the DC component of the developing bias.

Tables 4-101 and -102 show how many times the machine measures and corrects potential and when it initiates control.

	Correction	Measurement
V_D	8 (max.)	8 (max.)
V_{L1}	8 (max.)	8 (max.)
V_{L2}	0	1

Table 4-101 Measurement/Correction for Potential Control

Mode	Timing
Text mode	• Once every power-on. • Once while making the first copy between 10 and 60 min of power-on. • Once while making the first copy after 60 min of power-on.
Photo mode	• Once while making the first copy in photo mode after power-on.

Table 4-102 Timing of Potential Control

COPYRIGHT © 1997 CANON INC.
CANON NP6560/NP6360/NP6260 REV. 0 NOV. 1997 PRINTED IN JAPAN (IMPRIME AU JAPON)

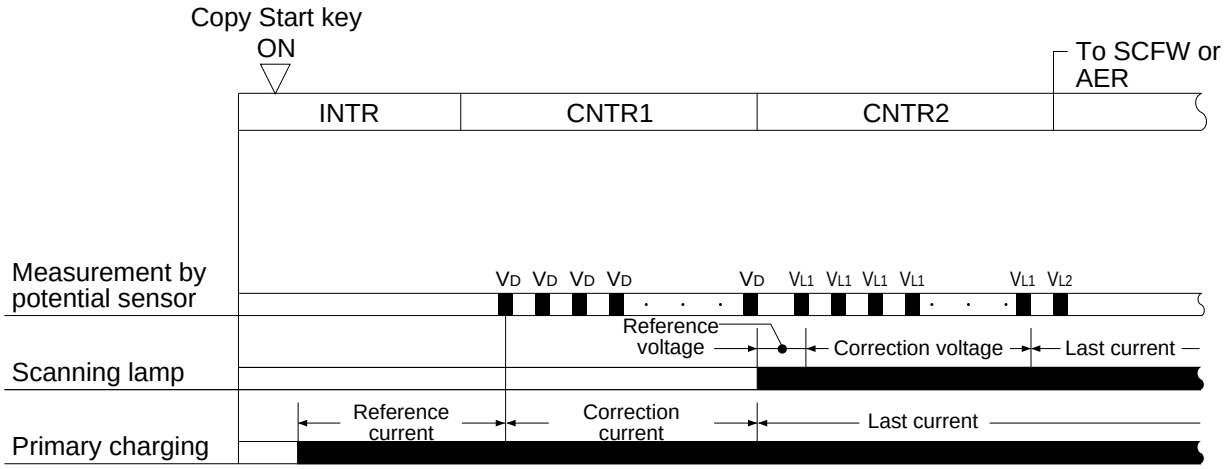

Figure 4-102

a. Controlling the Primary Charging Current

The light area potential (V_D) for the first time after power-on is measured by sending a standard current (stored in ROM) to the primary charging assembly and using the potential sensor.

The DC controller PCB compares the measurement of the drum surface potential and the target potential; if there is a discrepancy, the primary charging level control signal (HVTPC) from the DC controller PCB is corrected, and the potential is measured once again.

Caution:

If the measurement is not within the tolerance of the target value after eight tries, '1' is indicated to 'PLMT' (upper limit flag of primary current) in service mode (*1*; display mode).

b. Controlling the Intensity of the Scanning Lamp

The light area potential (V_L) is measured for the first time after power-on is measured by applying a reference activation voltage (stored in ROM) on the scanning lamp.

The scanning lamp illuminates the standard white plate, and the light reflected by it is directed to the drum.

The surface potential of the area on the drum exposed to the light is measured by the potential sensor, and the measurement is sent to the DC controller PCB.

The DC controller PCB compares the measurement against the target value; if there is a discrepancy, the intensity adjustment signal (LINT) from the DC controller PCB is corrected, and the potential is measured once again.

COPYRIGHT © 1997 CANON INC.

Caution:

If the measurement dose not fall within the tolerance after eight tires, '1' is indicated to 'LLMT' (upper limit flag of lamp activation voltage) in service mode (*1*; display mode).

c. Controlling the Developing Bias

The light area potential (V_{L2}) for the developing bias is measured in terms of the surface potential of the drum occurring when the scanning lamp is turned on based on the last intensity adjustment signal generated during V_{L1} control.

The DC controller PCB uses the measurement to control the developing bias DC level control signal (DEVDC) to control the DC bias applied by the high-voltage transformer on the developing cylinder.

3. Potential Measurement Circuit

Figure 4-103 is a cross sectional diagram of the potential sensor, and Figure 4-104 is a block diagram of the potential measurement circuit.

The drive signal from the sensor drive circuit drives the chopper so that the electrode of the sensor assembly can detect the drum surface potential.

The measurement signal of the drum surface signal is amplified by the pre-amplifier circuit, and is sent to the drum surface potential detection circuit.

The drum surface potential detection circuit converts the AC signal to an AC signal, and sends it to the level shift circuit through the 1/300 transformer circuit.

The output signal (analog) of the level shift circuit is sent to the microprocessor on the DC controller PCB.

a. Making Checks

① LED1 Activation

LED1 is normally on when the main motor rotates.

If it does not turn on, you may suspect a fault in the potential measurement unit.

Reference:

When LED1 is on normally, the potential sensor is operating normally.

Caution:

The sensor and the potential measurement PCB are adjusted to a high precision as a pair, and cannot be adjusted in the field. They are treated as a single entity service part.

 COPYRIGHT © 1997 CANON INC. CANON NP6560/NP6360/NP6260 REV. 0 NOV. 1997 PRINTED IN JAPAN (IMPRIME AU JAPON)

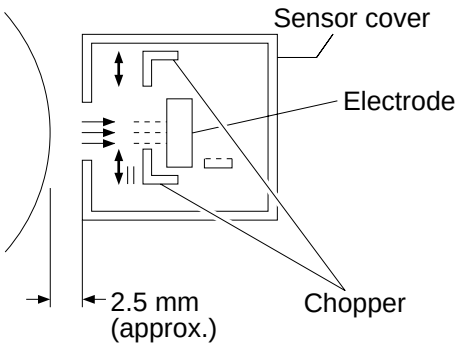

Figure 4-103 Sensor Cross Section

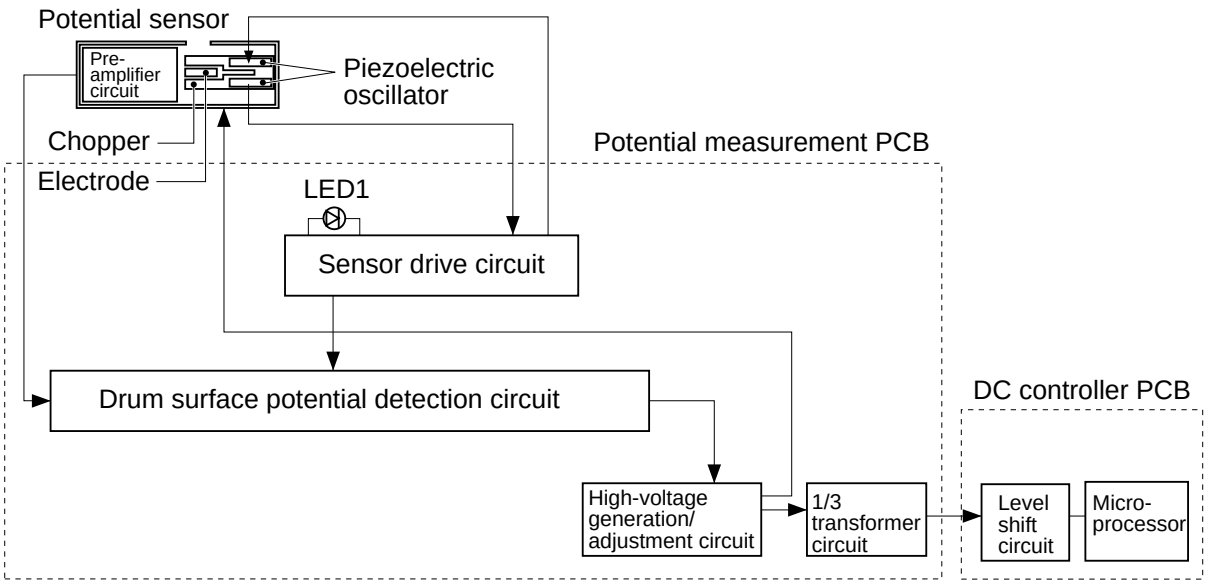

Figure 4-104

B. Controlling the Intensity of the Scanning Lamp

1. Outline

Figure 4-105 shows the circuit used to control the intensity of the scanning lamp, and the circuit has the following functions:

① Turning on and off the scanning lamp.

② Controlling the intensity of the scanning lamp.
- Keeps the intensity to a specific level in spite of changes in the power supply voltage.
- Controls the intensity to suit changes in the sensitivity of the drum.
- Controls the intensity to suit the setting of the Copy Density key.
- Controls the intensity (AE control) to suit the density of the original.

③ Checking the activation of the scanning lamp.

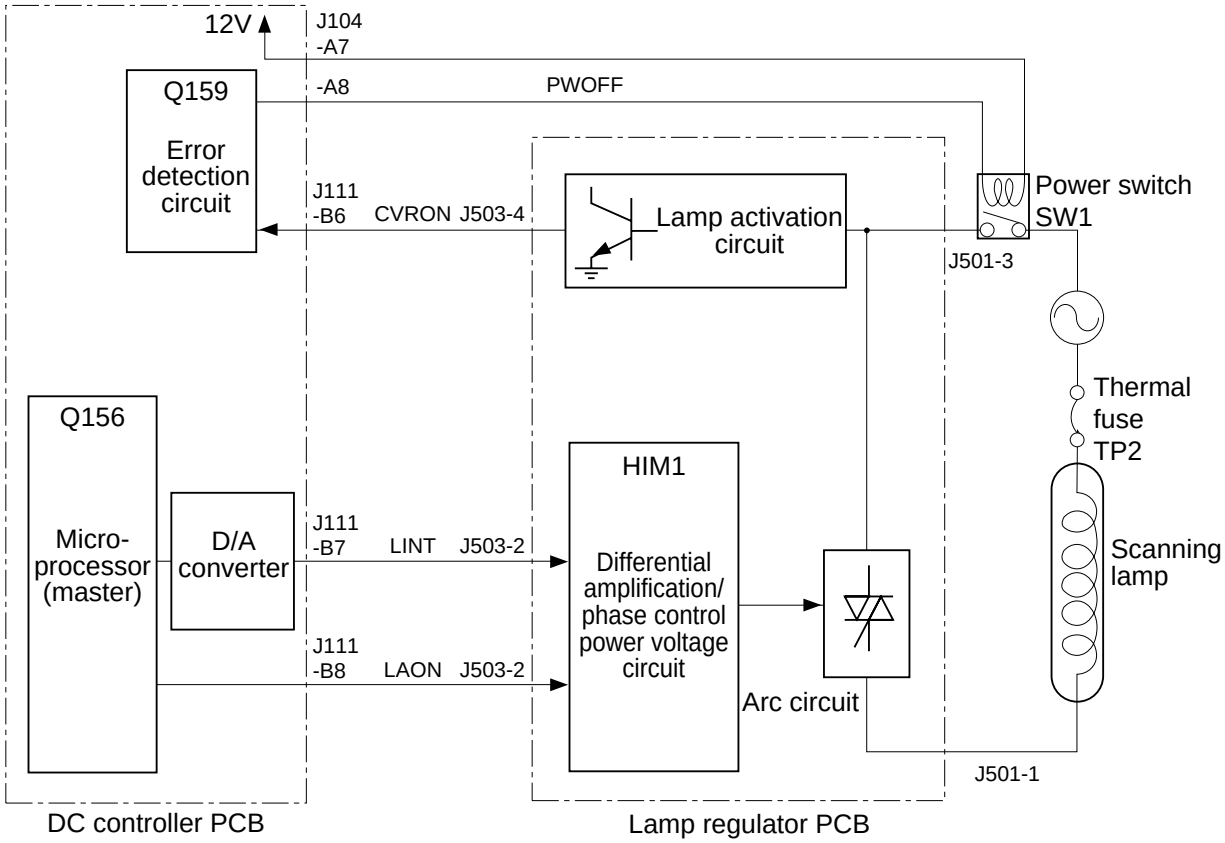

Figure 4-105

COPYRIGHT © 1997 CANON INC.

2. Operation

a. Turning On and Off the Scanning Lamp

When LAON (scanning lamp activation signal) is '0', the output of the differential amplification/phase control circuit goes '0', and the arc circuit remains off, depriving the scanning lamp (LA1) of power.

When LAON is '1', on the other hand, the output of the differential amplification/phase control circuit goes '1', and the arc circuit turns on, supplying the scanning lamp (LA1) with power.

b. Controlling the Intensity of the Scanning Lamp

The intensity of the scanning lamp is controlled by controlling the voltage of power supplied to the scanning lamp according to the intensity adjustment signal (LINT) from the DC controller PCB.

LINT varies the pulse duty between 10% and 57.6% according to the setting of the Copy Density key or the density of the original, sensitivity of the drum, and setting of the intensity control VR so that the effective value of the voltage of power to the scanning lamp will vary between 45 and 65 V (phase control).

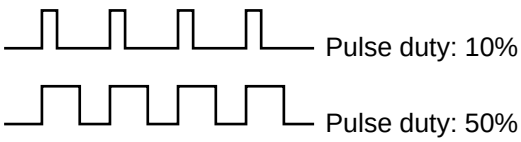

Figure 4-106

c. Checking the Activation of the Scanning Lamp

While the scanning lamp remains on, the activation detection circuit generates the activation detection signal (CVRON) at all times. CVRON is sent to the error detection circuit on the DC controller PCB.

If the lamp activation signal (LAON) goes '0' and the scanning lamp turns on because of a short in the activation circuit or the like, the DC controller PCB causes PWOFF to go '0', thereby turning off the relay inside the power switch and, ultimately, turning off the power switch (SW1); this condition deprives the lamp regulator of AC power.

3. Auto Exposure Control

The machine is equipped with an auto exposure mechanism which automatically controls the intensity of the scanning lamp to suit the density of the originals.

When copies are made in auto exposure (AE) mode, you can obtain fogging-free copies without having to adjust the copy density manually. The intensity of the lamp controlled by the AE mechanism is indicated on the control panel.

AE mode may be executed on the copier side or the RDF side, the latter of which is used when originals are placed in the RDF. The copier's AE mode is used, however, when manual feeding is selected.

COPYRIGHT © 1997 CANON INC.

a. AE Mode (CMAE) on the Copier's Side

During AE rotation (AER), the scanner is moved forward for 120 mm with the scanning lamp on; the potential of the drum is then measured at four locations of the copyboard (Figure 4-107) when the scanner is moved in reverse, and the measurements are sent to the DC controller PCB.

The DC controller PCB computes the average based on these surface potential measurements to determine the intensity of the scanner for copying.

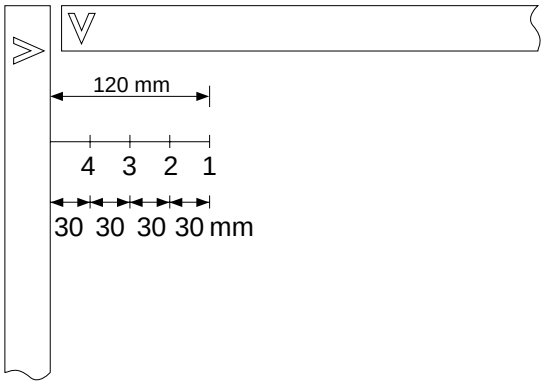

Figure 4-107

b. AE Mode (RFAE) on the RDF Side

The RDF is equipped with an AE sensor in its original feeding path to measure the density of originals while they are being moved.

The AE sensor is a reflecting type sensor in which two LEDs illuminate the original and a photodiode measures the reflected light (Figure 4-108).

AE sensor 1 (S7) is used for left pick-up, while AE sensor 2 (S33) is used for right pick-up (Figure 4-108).

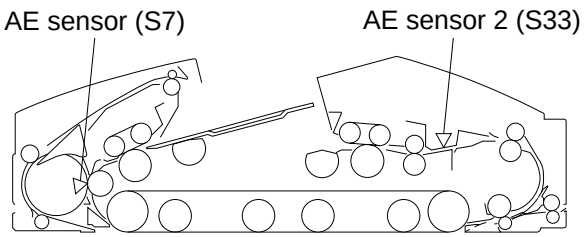

Figure 4-108

 COPYRIGHT © 1997 CANON INC. CANON NP6560/NP6360/NP6260 REV. 0 NOV. 1997 PRINTED IN JAPAN (IMPRIME AU JAPON)

The density at the five points shown in Figure 4-109 is measured, and the results are sent to the DC controller PCB, which in turn determines the intensity of the scanning lamp during copying. (The points of measurement differ between right pick-up and left pick-up.)

Figure 4-110 shows changes in the intensity of the scanning lamp in relation to the density of originals.

If the density of a specific original is higher (darker) than the Test Sheet and lower (lighter) than a newspaper, the intensity of the scanning lamp varies between F5 and F9 of copy density indication.

If it is lighter than the Test Sheet, the intensity will be an equivalent of F5; if it is darker than a newspaper, the intensity will be an equivalent of F9.

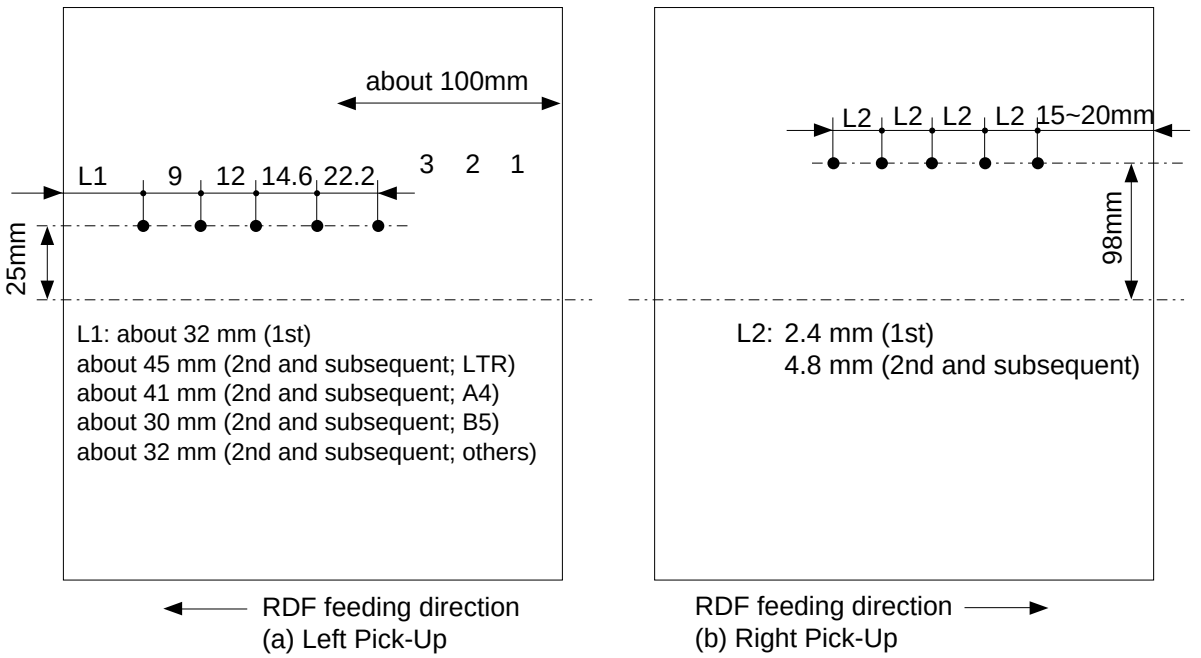

Figure 4-109 Points of Measurement on an Original

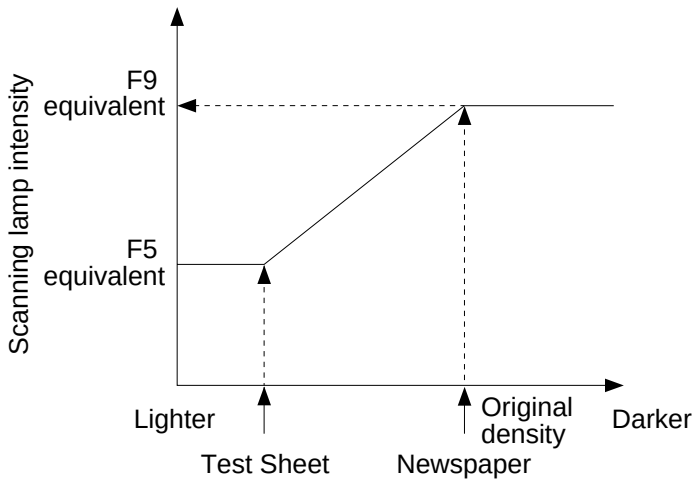

Figure 4-110

4. Making Checks

a. Checking the Voltage at J111-B8 (LAON)

Check to make sure that the voltage between J111-B8 and J111-B5 (GND) on the DC controller PCB is about 5 V when the scanner is moving forward and 0 V during initial rotation, when the scanner is moving in reverse, and during post rotation.

b. Intensity/AE Adjustment

Table 4-103 shows items that may be adjusted on the scanning lamp intensity control circuit.

Service mode	Function	Adjustment	Remarks
✻3✻ LIGHT _ 5 LIGHT 5P	Optimum intensity adjustment for potential control (copy density at 5)	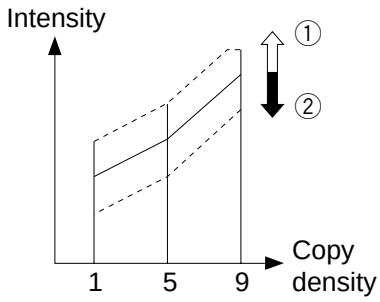	① If the setting is increased in service mode, the intensity during copying will increase, making the copy lighter. ② If the setting is decreased in service mode, the intensity during copying will decrease, making the copy darker.
✻3✻ GLEAM _ 5	Optimum exposure adjustment during non-potential control (copy density at 5)	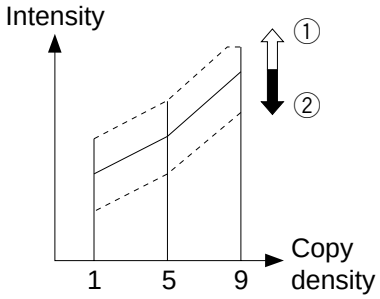	① If the setting is increased in service mode, the intensity during copying will increase, making the copy lighter. ② If the setting is decreased in service mode, the intensity during copying will decrease, making the copy darker.
✻3✻ AE _ SLOP	AE slope	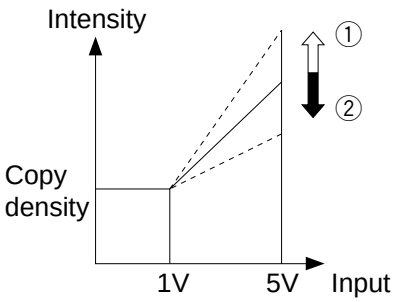	① If the setting is increased in adjustment mode, the copy of a newspaper will be darker. ② When the setting is decreased in adjustment mode, the copy of a newspaper will be lighter.

Table 4-103

COPYRIGHT © 1997 CANON INC.

C. Controlling the Primary/Transfer Corona Current

1. Outline

Figure 4-111 shows the circuit used to control the primary/transfer corona current, and the circuit has the following functions:

① Turning on and off the primary corona current.
② Controlling the primary corona current to a specific level.
③ Turning on and off the transfer corona.
④ Controlling the transfer corona current to a fixed level.

2. Controlling the Primary Corona Current

The DC controller compares the drum surface potential V_D obtained by the potential detection circuit against the target value; and, if there is a discrepancy, the signal from the DC controller used to control the primary corona current is corrected.

The corrected signal is converted into an analog value (HVTPC signal) by the D/A converter circuit, and is sent to the high-voltage transformer, thereby controlling the primary corona current.

The primary corona current output is turned on and off by higth-voltage remote signal (HVRMT), and is controlled by the HVTPC control.

When HVTPC is 3 to 11 V, the primary corona current turns on; it turns off when the signal is about 12 V or more.

a. When the Primary Corona Current Output Is Off
HVTPC is about 12 V
HVRMT is '0'
Variable width pulse oscillator circuit goes OFF.
Comparator circuit goes OFF.
Drive circuit goes OFF.
Primary high-voltage transformer goes OFF.

COPYRIGHT © 1997 CANON INC.

b. When the Primary Corona Current Output Is ON
HVTPC is less than about 11 V.
HVRMT is '1'.
Variable width pulse generator circuit goes ON.
Comparator circuit goes ON.
Drive circuit turns on.
Primary high-voltage transformer goes ON.

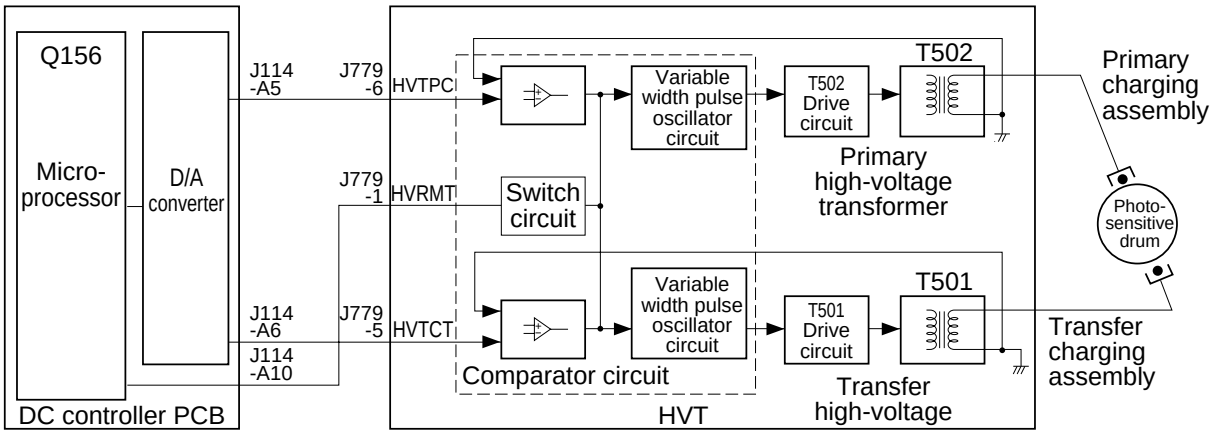

Figure 4-111

The above condition causes the high-voltage transformer to send high voltage suited to the output of the primary charging level control signal (HVTPC) to the primary charging assembly.

If an excess corona current flows because of changes in the environment, the return current to the comparator circuit increases, and the output decreases; this condition will decrease the corona current from the primary charging assembly, controlling it to a specific level at all times.

In photo mode, the target value is lowered by about 80 V than the dark area potential (V_D) used in normal copying mode. As such, potential control is executed while making the first copy in photo mode after power-on to control the primary corona current.

 COPYRIGHT © 1997 CANON INC.

3. Controlling the Transfer Corona Current

How well the toner image on the drum is transferred to copy paper is affected by changes in the environment (temperature, humidity).

To ensure a specific density in the presence of changes in the environment, the machine is designed to vary the transfer current level in relation to the temperature and the humidity measured by the environment sensor.

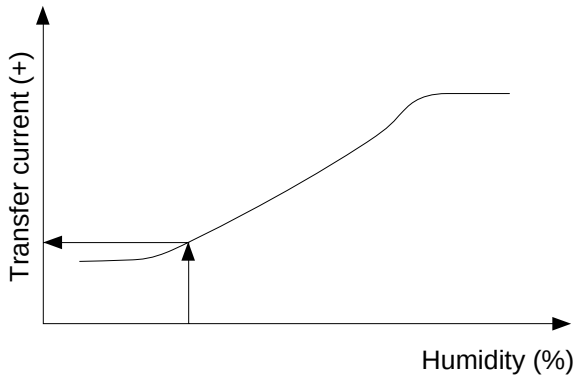

Figure 4-112

The transfer corona current output is turned on and off by the high-voltage remote signal (HVRMT). The output level of the transfer current, further, is controlled by the transfer charging level control signal (HVTCT).

When HVTCT is about 3 V or more and less than 11 V, the output of the transfer corona current turns on; it turns off when the signal is about 12 V or more.

a. When the Transfer Corona Current Output is OFF
HVTCT is about 12 V.
HVRMT is '0'.
Comparator circuit goes OFF.
Variable width pulse oscillator goes OFF.
Drive circuit goes OFF.
Primary transformer goes OFF.

COPYRIGHT © 1997 CANON INC.

b. When the Transfer Corona Current Output Is ON.
HVTCT is less than about 11 V.
HVRMT is '1'.
Comparator circuit goes ON.
Variable width pulse oscillator goes ON.
Drive circuit goes ON.
Primary high-voltage transformer goes ON.

The above condition causes the high-voltage transformer to send high voltage suited to the output of the transfer charging level control signal (HVTCT) to the transfer charging assembly.

If an excess corona current flows from the transfer charging assembly because of changes in the environment or the like, the return signal to the comparison circuit will increase and the output will decrease, causing the corona current from the transfer charging assembly to decrease and thereby controlling it to a specific level at all times.

 COPYRIGHT © 1997 CANON INC. CANON NP6560/NP6360/NP6260 REV. 0 NOV. 1997 PRINTED IN JAPAN (IMPRIME AU JAPON)

D. Controlling the Separation/Pre-Transfer Corona Current

1. Outline

Figure 4-113 shows the circuit used to control the separation corona current and the pre-transfer corona current, and the circuit has the following functions:

① Turning on and off the separation/pre-transfer corona current.
② Switching the separation corona current level.
③ Controlling the separation corona current to a specific level.
④ Switching the pre-transfer corona current level.
⑤ Controlling the re-transfer corona current to a specific level.

The DC component of the separation charging assembly and the pre-transfer charging assembly is controlled to a specific current by obtaining a sampling signal from the secondary side of the high-voltage transformer (HVT) with the aim of eliminating the effects of changes in the environment on corona charging. (The AC transformer is controlled to a specific voltage.)

The separation corona current is varied to eliminate the effects of changes in the environment by measuring the surface potential of the drum and in relation to the output of the environment sensor.

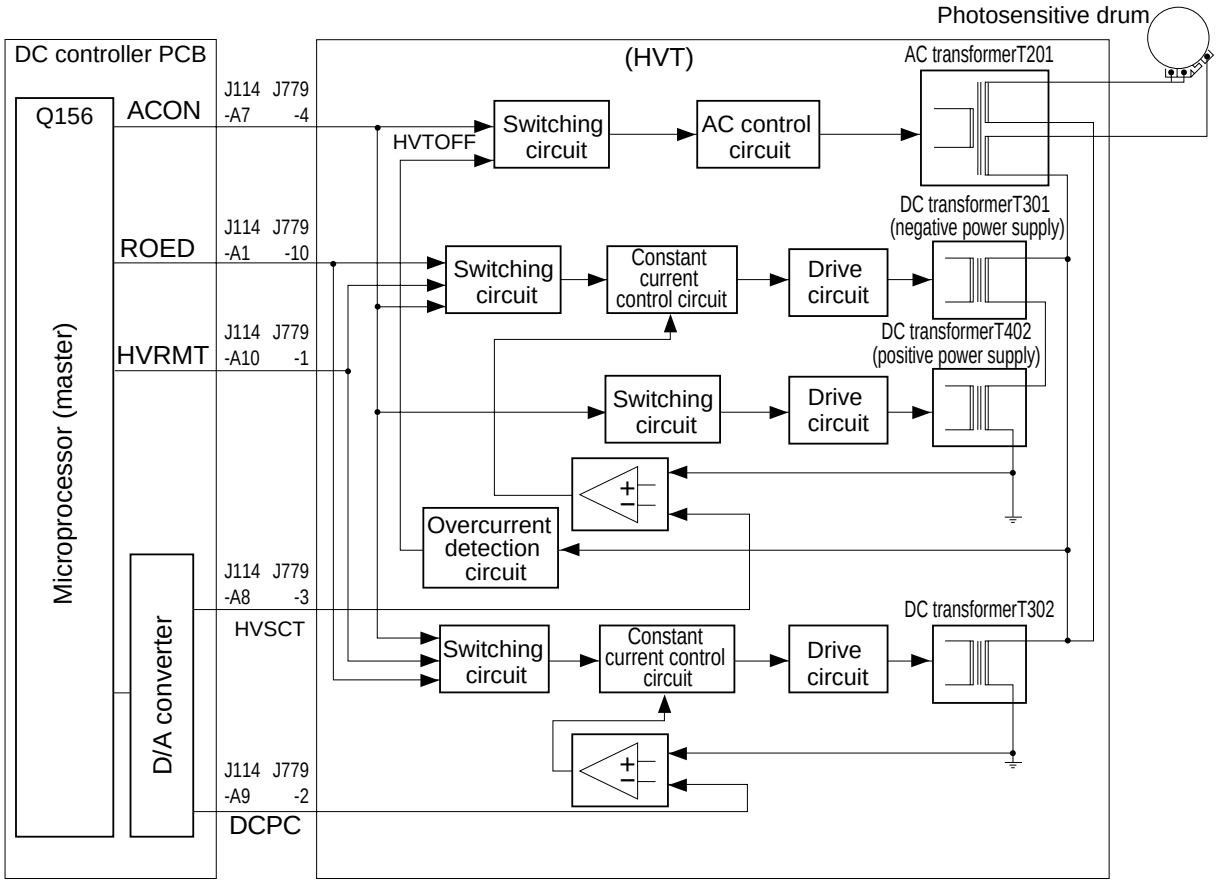

Figure 4-113

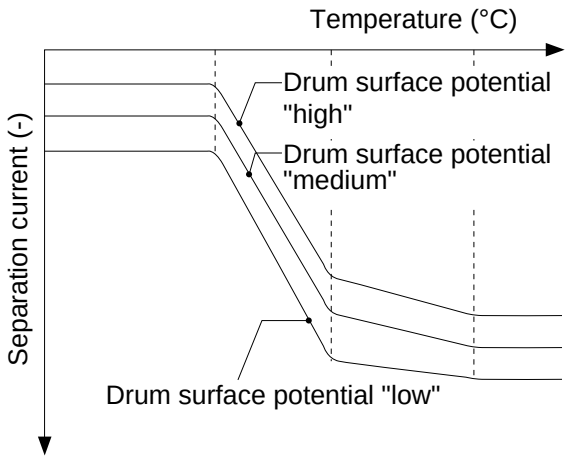

Figure 4-114

The transfer corona current is varied in relation to the temperature and the humidity measured by the environment sensor to eliminate the effects of changes in the environment.

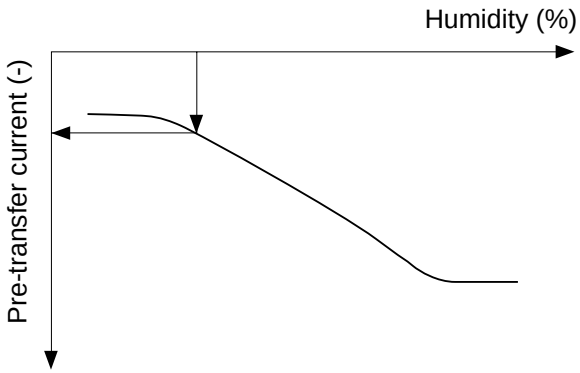

Figure 4-115

2. Turning On and Off the Separation/Pre-Transfer Corona Current

The separation/pre-transfer corona current is turned on and off when all outputs of the HVTAC drive signal (ACON), roller electrode rive signal (ROED), and high-voltage remote signal (HVRMT) generated by the DC controller PCB go ‘1’.

 COPYRIGHT © 1997 CANON INC.

3. Separation Corona Current (DC component)

For the output of the separation corona current (DC component), DC current is varied to suit the voltage level (3 to 11 V) of HVSCT.

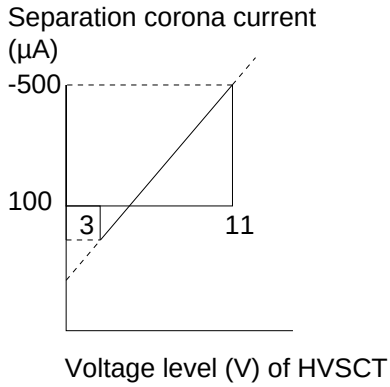

Figure 4-116

4. Pre-Transfer Corona Current (DC component)

The level of the pre-transfer corona current (DC component) is varied according to the voltage level of DCPC.

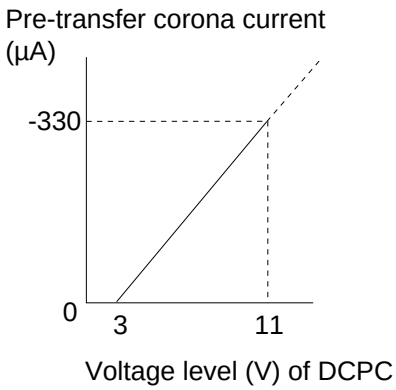

Figure 4-117

5. Controlling the DC Component of the Separation/Pre-Transfer Corona Current

If an overcurrent flows into the separation/pre-transfer charging assembly, the high-voltage stop signal (HVTOFF) is generated to temporarily stop the corona current (DC/AC component) applied to the pre-transfer/separation charging assembly.

When HVOFF is generated, the copier continues to operate, and the application of the corona current will be resumed when the application current returns to normal.

If leakage occurs because of an overcurrent caused by a broken charging wire or the like, and HVTOFF continues as a result, the application will not be resumed unless the cause is removed.

> When the corona current applied to the transfer/separation charging assembly stops because of an overcurrent, separation jams tend to occur frequently.
> Since the control panel will not indicate any message, check the relevant mechanisms if separation jams are frequent.

	Switching signals				Control signals	
Signal* / HVT output	HVRMT J114-A10	ACON J114-A7	ACBTP J114-A3	ROED J114-A1	HVSTC J114-A8	DCPC J114-A9
Pre-transfer ON	‘1’	‘1’	‘1’	‘0’	—	3~11V
Pre-transfer OFF	‘0’	‘0’	‘0’	‘0’	—	2V
Separation ON	‘1’	‘1’	‘1’	‘0’	3~11V	—
Separation OFF	‘0’	‘0’	‘0’	‘0’	2V	—

*Output from the DC controller PCB (connector of signal name).

Table 4-104 Combinations of Transfer/Separation Signals

COPYRIGHT © 1997 CANON INC.
CANON NP6560/NP6360/NP6260 REV. 0 NOV. 1997 PRINTED IN JAPAN (IMPRIME AU JAPON)

E. Controlling the Blanking Exposure Lamp (LED)

1. Outline

The blanking exposure lamp is a LED array consisting of 134 LEDs.

All 134 LEDs turns on when the blanking exposure lamp activation signal (BLKON) generated by the DC controller goes '0' while the drum is rotating but the original is not exposed, potential control is not on, and AE mode is off so as to prevent adhesion of excess toner to the photosensitive drum.

The six LEDs at the rear and the six LEDs at the front are turned on at all times.

2. Controlling the Activation in Reduce Mode

When the original is exposed in Reduce mode, as many LEDs (rear) as suited to the selected reproduction ratio are turned on to remove the image in the non-image area.

Some LEDs at the front are also turned on at this time to suit the size of the copy paper.

3. Controlling the Activation in Direct Mode

When the original is exposed in Direct mode, as many LEDs as suited at both front and rear are turned on to remove the image in the non-image area.

When a default-size copy paper is used to make a default-size copy or in Direct mode, a non-image width (Table 4-105) is created at both rear and front (standard frame erasing).

The non-image width may be set to 0 mm in service mode.

4. Controlling the Activation in Sheet Frame Erase Mode

LEDs are turned on so as to prevent adhesion of toner in widths of about 7 mm around the edges of the copy paper in sheet frame erase mode. The width remains the same regardless of the selected reproduction ratio.

Reference:

When using the multifeeder, you may specify a copy paper size or 'free': if you specify a size, frame erasing will be executed to suit the size; if you select 'free', on the other hand, frame erasing will be executed using the maximum size (297 × 432 mm).

COPYRIGHT © 1997 CANON INC.

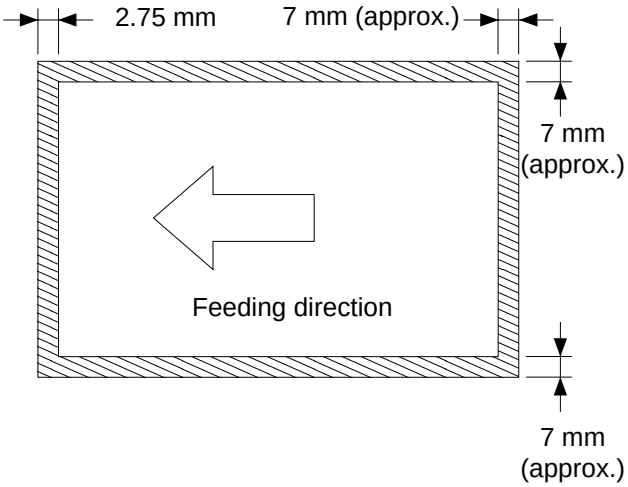

Figure 4-118

5. Controlling the Activation in Original Frame Erase Mode

LEDs are turned on to prevent adhesion of toner over widths of about 2 mm around the edges of the original for original frame erase mode.

Paper size	Non-image width
A4R, B5R, B4, A3, LTRR	2.75 ± 2.3mm
Other sizes	3.0 ± 2.55mm

Table 4-105

6. Controlling the Activation in Book Frame Erase Mode

LEDs are turned on to prevent adhesion of toner in widths of about 2 mm around the edges of the original in book erase mode.

LEDs are also turned on to prevent adhesion of toner in widths of about 20 mm (standard) along the middle of the paper. (The width may be adjusted to 20 ±10 mm in service mode.)

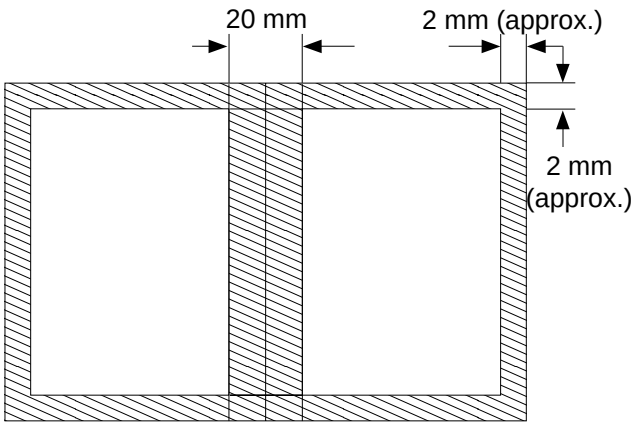

Figure 4-119

 COPYRIGHT © 1997 CANON INC. CANON NP6560/NP6360/NP6260 REV. 0 NOV. 1997 PRINTED IN JAPAN (IMPRIME AU JAPON)

7. Controlling the Activation in Hole Image Erase Mode

In hole image erase mode, images of such holes as punched in the original are erased by turning on LEDs to prevent adhesion of toner along the width.

The width may be adjusted between 1 and 20 mm.

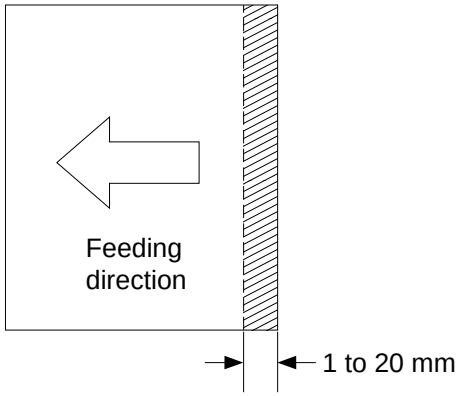

Figure 4-120

8. Controlling the Activation in AE Mode

In AE mode, the surface potential of the drum is measured so that the blank exposure LEDs would have to be turned off.

Since only parts of the photosensitive drum are used to measure the surface potential, however, those LEDs that are over the area of measurement are turned with the remaining LEDs kept on.

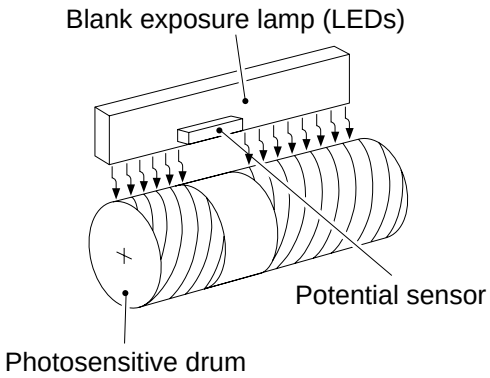

Figure 4-121

F. Drum Heater Circuit

1. Outline

The inside of the photosensitive drum is equipped with a drum heater (60 W), and the heater is controlled so that the surface of the drum remains a specific temperature.

The drum heater is supplied with AC power through a power switch (SW1), door switch (SW2), and drum heater switch and by way of an AC driver.

When the drum heater switch is ON and, in addition, the door switch (SW2) is ON, AC power is supplied regardless of the state (ON/OFF) of the power switch. When the drum heater switch (SW3) is OFF, on the other hand, AC power is supplied to the drum heater only if the power switch is OFF.

The drum heater drive circuit turns off when the drum heater drive signal (DHRD) generated by the DC controller PCB goes '0', thereby supplying the drum heater with half-wave AC power.

If the drum heater drive signal (DHRD) generated by the DC controller PCB is '1', on the other hand, full-wave AC power is supplied to the drum heater.

The relationship between the state of the copier and the state (ON/OFF) of the drum heater circuit of the AC driver is as follows:

State of copier	Drum heater drive circuit
Power plug connected and power switch OFF	ON (full-wave AC power)
During scannar forward/ standby	
During scannar reverse	OFF

Table 4-106

The temperature of the drum is monitored at all times by a thermistor (TH) built into the drum heater.

If the surface temperature of the drum falls below a specific value, the output of the comparison circuit goes '1', turning on the trigger circuit; as a result, the triac turns on to turn on the drum heater.

If the surface temperature of the drum is higher than a specific value, on the other hand, the output of the comparison circuit goes '0', turning off the drum heater.

Drum surface temperature: 42°C

Thermal fuse rated temperature: 76°C

 COPYRIGHT © 1997 CANON INC. CANON NP6560/NP6360/NP6260 REV. 0 NOV. 1997 PRINTED IN JAPAN (IMPRIME AU JAPON)

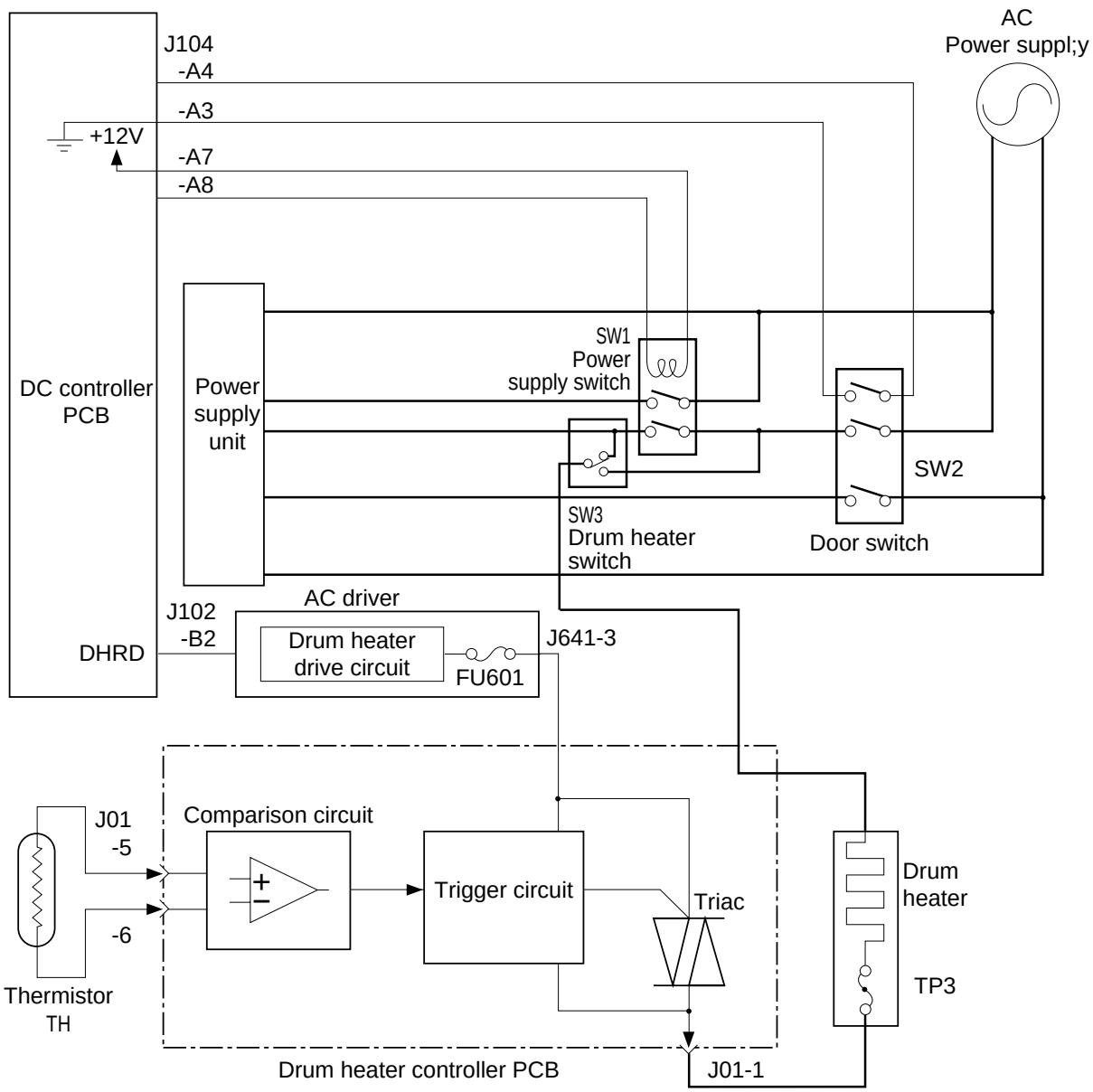
AC
Power suppl;y
J104
-A4
-A3
+12V
-A7
-A8
DC controller
PCB
Power
supply
unit
SW1
Power
supply switch
SW2
SW3
Drum heater
switch
Door switch
AC driver
J102
-B2
DHRD
Drum heater
drive circuit
FU601
J641-3
J01
-5
-6
Thermistor
TH
Comparison circuit
Trigger circuit
Triac
Drum
heater
TP3
Drum heater controller PCB
J01-1

Figure 4-122

2. Idle Rotation of the Photosensitive Drum and the Developing Cylinder

In a high humidity environment, the photosensitive drum and the developing cylinder tend to absorb moisture, leading to a lowered copy density and distorted images (as when the machine is turned on for the first time in the morning).

To prevent such a problem, if the surface temperature of the upper fixing roller is 75°C or less, the photosensitive drum and the developing cylinder are rotated idly during the wait-up period.

Idle rotation is controlled in ether of three modes according to the vapor ratio detected by an environment sensor as shown in Table 4-107.

Reference:

The term *vapor ratio* refers to the amount of vapor (g) contained in 1 kg of air.

The control modes shown in Table 4-107 may be adjusted in service mode.

Vapor ratio	Idle rotation	Remarks
7 g/kg or less	None	None
7 to 12 g/kg	Fixing roller 100°C through warm-up	2 to 2.5 min
12 g/kg or more	Power-on through fixing warm-up	Up to 6 min

Table 4-107

Reference:

The 100V machines are shipped with the drum heater switch (SW3) set to ON (idle rotation mode ON).

COPYRIGHT © 1997 CANON INC.

G. Cleaning the Primary Charging Wire

1. Outline

The machine is equipped with an automatic cleaning mechanism for the charging wire of the primary charging assembly which is executed when the following conditions are met:

- The surface temperature of the fixing roller at power-on is 100°C or less.
- The automatic cleaning mechanism is executed in user mode. (p. 1-17)
- Last rotation (LSTR) initiated every 2,000 copies ended. (If cleaning has been executed under the foregoing two conditions, cleaning will be executed every 2,000 copies thereafter.)

2. Automatic Cleaning Mechanism

If the surface temperature of the fixing roller is 100°C or less at power-on, the primary charging wire cleaner motor (M12) rotates clockwise to move the cleaner forward for about 20 sec. The cleaner motor then rotates counterclockwise to move the cleaner in reverse for about 16 sec. (The machine is not equipped with a position sensor.)

The RAM on the DC controller PCB keeps track of the cleaning operations so that cleaning is executed every 2,000 copies. (In the case of continuous copying, cleaning will be executed when as many copies as set have been made.)

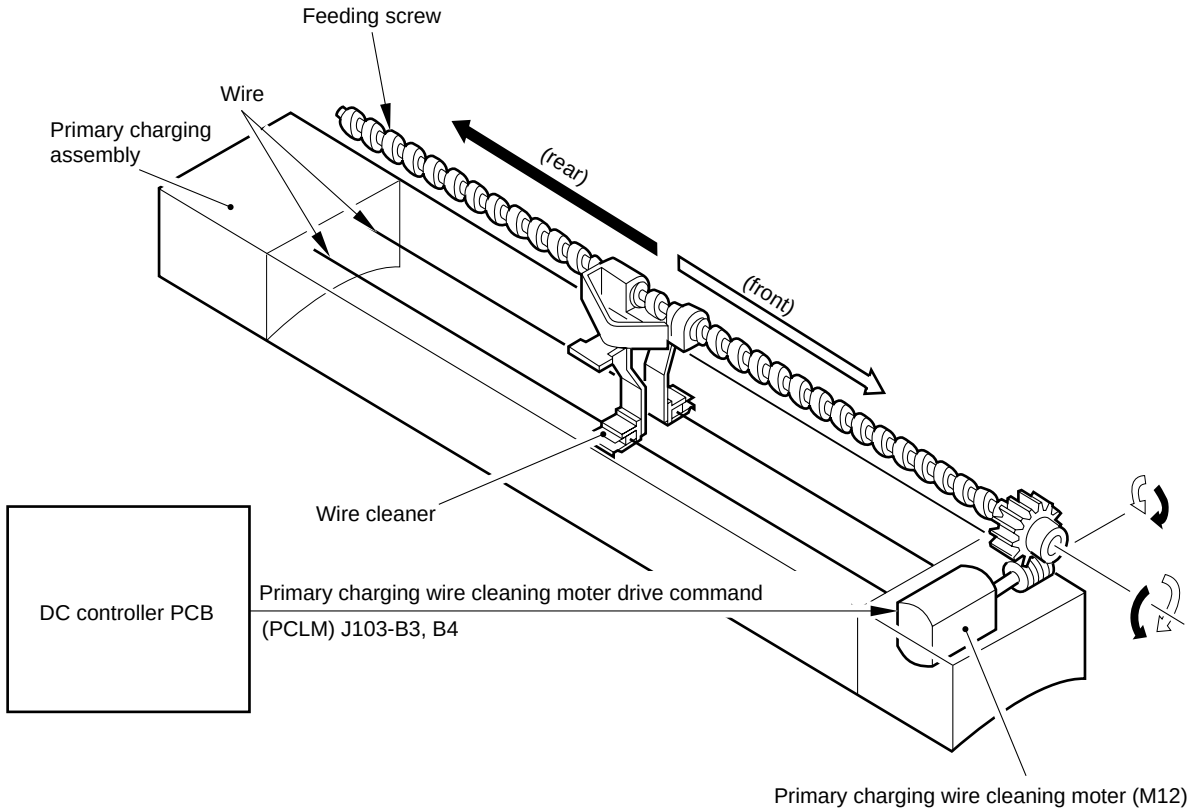

Figure 4-123

H. Pre-Transfer/Transfer/Separation Charging Wire Automatic Cleaning Mechanism

The machine is equipped with an automatic cleaning mechanism for the charging wire of the pre-transfer/transfer/separation charging assembly.

The cleaning mechanism for the pre-transfer/transfer/separation charging wire is executed under the conditions and the periods set for auto cleaning for the primary charging wire.

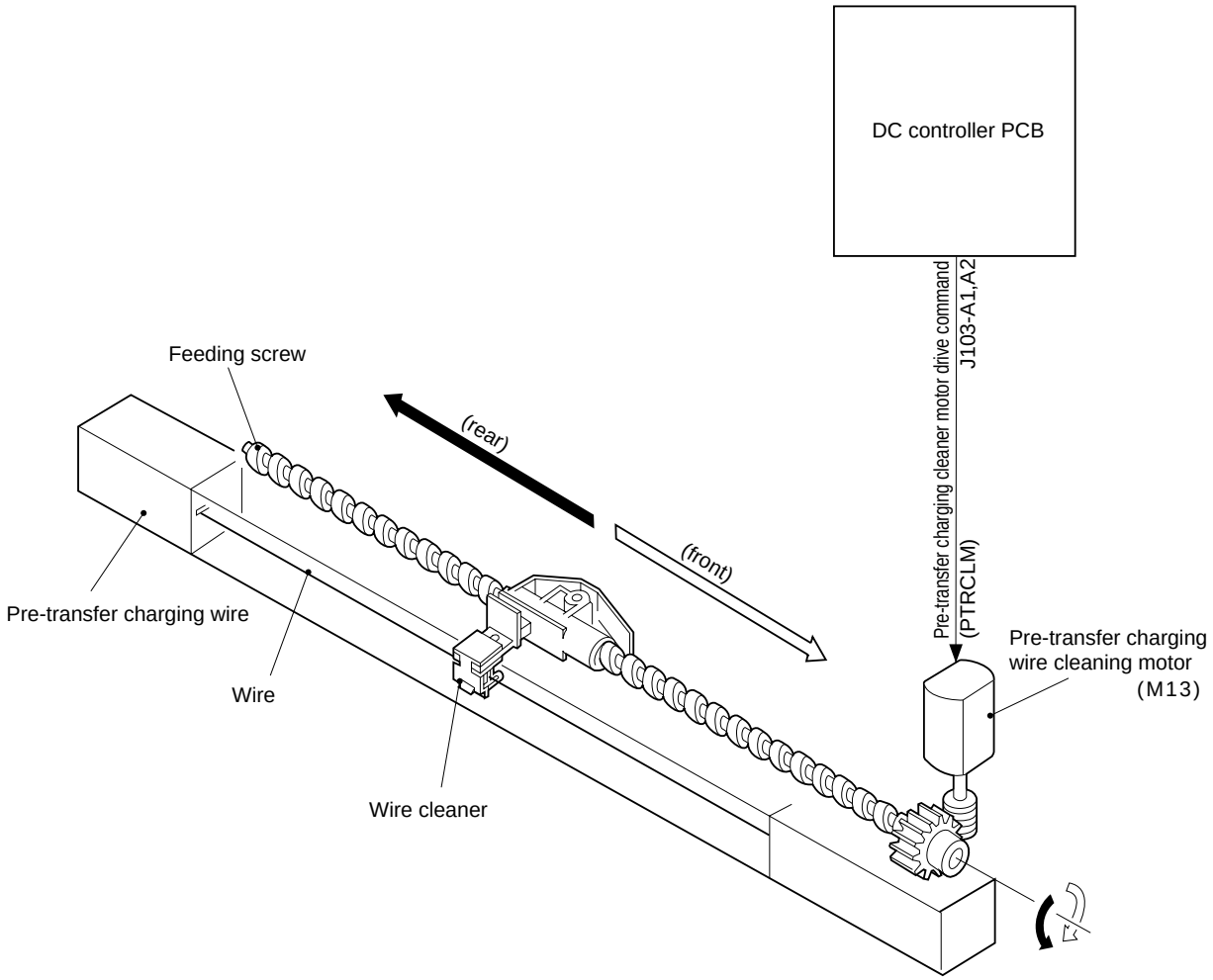

Figure 4-124 (pre-transfer charging assembly)

 COPYRIGHT © 1997 CANON INC.

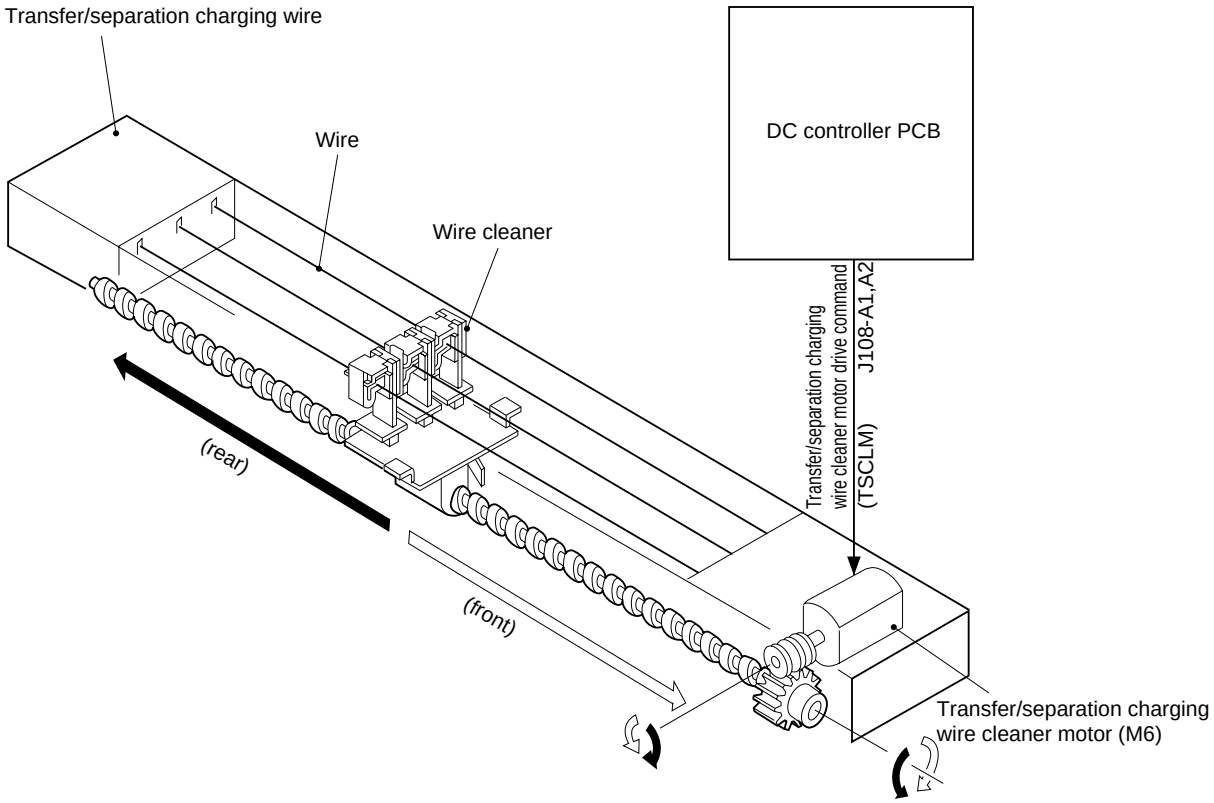

Figure 4-125 (transfer/separation charging assembly)

II. DRUM CLEANING ASSEMBLY/DEVELOPING ASSEMBLY

A. Outline

The developing assembly is operated by the drive of the main motor controlled by the developing clutch (CL8).

The cleaning assembly is provided with the drive of the main motor through drum gears.

The toner inside the developing assembly is monitored by the toner level detection circuit, and toner is supplied by the hopper assembly when the level falls below a specific value. The toner inside the hopper assembly is monitored by the toner sensor (TS1), and the Add Toner message will be indicated when the level of toner falls below a specific value. (Thereafter, copying will be forced off after making about 200 copies.)

The developing assembly is supplied with toner by the hopper assembly using the drive of the hopper motor 1 (M11). The toner inside the hopper assembly is stirred by the hopper motor 2 (M10).

The toner scraped off by the cleaning blade is moved to the rear of the copier by a feeding screw inside the cleaner assembly; it is then forwarded through the waste toner feeding pipe for collection in the waste toner case.

The waste toner feeding assembly is equipped with a torque limiter. If the screw becomes clogged with waste toner, the waste toner feeding screw detection circuit turns on to turn off the main motor (M1).

 COPYRIGHT © 1997 CANON INC. CANON NP6560/NP6360/NP6260 REV. 0 NOV. 1997 PRINTED IN JAPAN (IMPRIME AU JAPON)

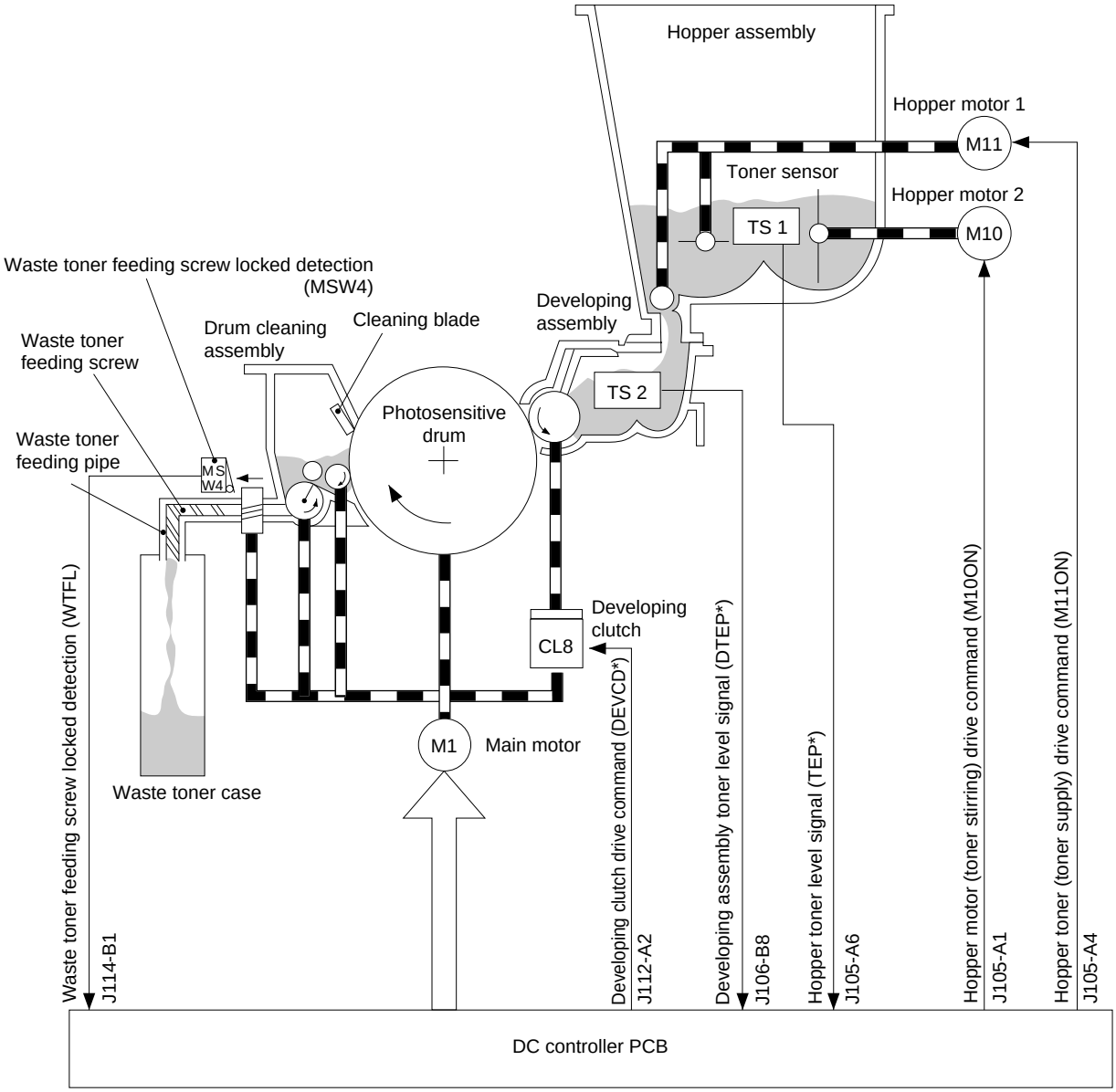
Hopper assembly
Hopper motor 1
M11
Toner sensor
Hopper motor 2
TS 1
M10
Waste toner feeding screw locked detection (MSW4)
Developing assembly
Drum cleaning assembly
Cleaning blade
Waste toner feeding screw
TS 2
Photosensitive drum
Waste toner feeding pipe
MS W4
Developing clutch
CL8
M1
Main motor
Waste toner case
Waste toner feeding screw locked detection (WTFL)
J114-B1
Developing clutch drive command (DEVCD*)
J112-A2
Developing assembly toner level signal (DTEP*)
J106-B8
Hopper toner level signal (TEP*)
J105-A6
Hopper motor (toner stirring) drive command (M10ON)
J105-A1
Hopper toner (toner supply) drive command (M11ON)
J105-A4
DC controller PCB

Figure 4-201

B. Detecting the Level of Toner and Controlling the Supply Operation

The toner inside the developing assembly is monitored by the toner sensor (TS2). When the toner inside the developing assembly falls below a specific level while the developing clutch (CL8) remains on during copying, the developing assembly toner level signal (DTEP*) goes '0' and is communicated to the DC controller.

When the DC controller has detected the developing assembly toner level signal (DTEP*) for 0.3 sec or more, it sends the hopper motor (toner supply) drive signal (M11ON), causing the hopper to supply toner.

When the toner inside the developing assembly has reached a specific value and the DC controller PCB has detected the developing assembly toner level signal (DTEP*=1) for 0.7 sec or more, the DC controller PCB stops the hopper motor 1 (M11).

If the toner sensor (TS2) goes out of order for some reason or if a fault in the hopper prevents supply operation and, as a result, the DC controller detects the developing assembly toner level signal (DTEP*=0) for 120 sec or more, the DC controller will indicate 'E020' and stop copying operation.

The level of toner inside the hopper is monitored by the hopper toner sensor (TS1) while the hopper motor 1 (M11) is operating to supply toner or while toner is being stirred.

When the toner inside the hopper falls below a specific level, the hopper level detection signal (TEP*) goes '0'. When the DC controller PCB has detected the signal for 1 sec or more, it will indicate the Add Toner message on the control panel. At this time, the Copy Start key on the control panel will change to red.

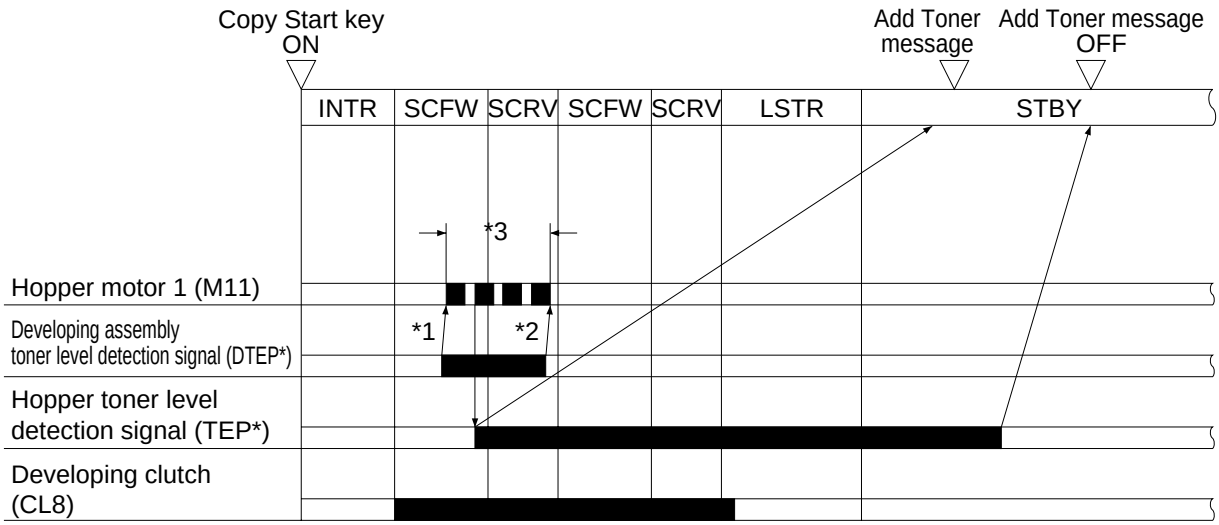

*1 Resumes supply operation when the developing assembly toner level detection signal = 0 has been detected for 0.3 sec or more.
*2 Suspends supply operation when the developing assembly toner level detection signal = 1 is detected for 0.7 sec.
*3 Drives the hopper for 2.0 sec and then holds it for 1 sec, supplying toner by repeating this sequence.

Figure 4-202

 COPYRIGHT © 1997 CANON INC. CANON NP6560/NP6360/NP6260 REV. 0 NOV. 1997 PRINTED IN JAPAN (IMPRIME AU JAPON)

The RAM on the DC controller PCB keeps count of copies being made; when it has detected the hopper toner level detection signal (TEP*=1) for 1 sec or more, it will assume the presence of toner, thereby cleaning the counter and turning off the Add Toner message on the control panel.

Reference:

The inside of both the developing assembly and the hopper assembly is each equipped with a piezoelectric oscillator.
In the absence of toner, the oscillator oscillates at several kHz, and the output of the sensor goes '0'. In the presence of toner, on the other hand, the weight of the toner stops the oscillation, and the output of the sensor goes '1'.

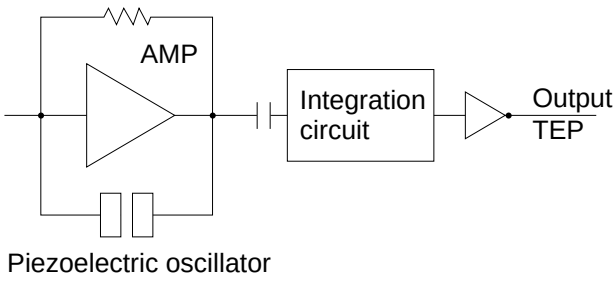

Figure 4-203

Caution:

If the developing assembly is not set inside the copier, do not install the developing assembly locking assembly. Otherwise, the toner collecting in the path from the hopper to the developing assembly can pour out because of the vibrations caused by inspection/repair work.

COPYRIGHT © 1997 CANON INC.

C. Controlling the Developing Bias/Roller Electrode

1. Outline

During copying, both AC bias and DC bias are applied to the developing cylinder. The DC bias is a voltage which is the sum of 100 V and V_{L2} measured by the potential sensor before copying is started.

When the machine is not making copies, the degree of the DC bias is varied to suit the surface potential of the drum to prevent adhesion of excess toner on the photosensitive drum.

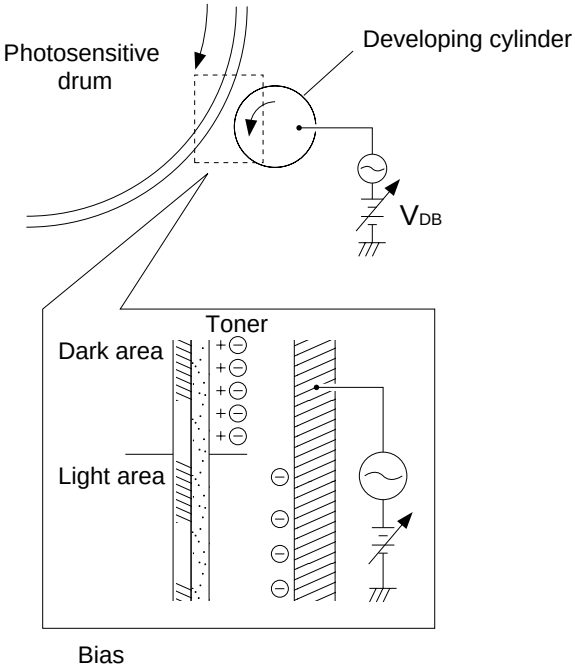

$V_{DB} = V_{L2} + 100$ [V]

Figure 4-204

2. Control Timing

Bias	Voltage	Period	Description
DC component	+600V	CNTR1, 2	To prevent adhesion of excess toner on the drum. (The surface potential varies constantly, and is measured by the potential sensor at all times.)
	+600V	INTR, AER, LSTR during copying	To prevent adhesion of excess toner on the drum.
	V_{L2}+100 [V]	SCFW, SCRV during copying	To prevent fogging of the background.
AC component 1500 Vp-p, 2700 Hz			To execute toner projection.

Table 4-201

 COPYRIGHT © 1997 CANON INC.

Surface Temperature of Fixing Roller 75°C or Less and Ambient Temperature 17°C or More

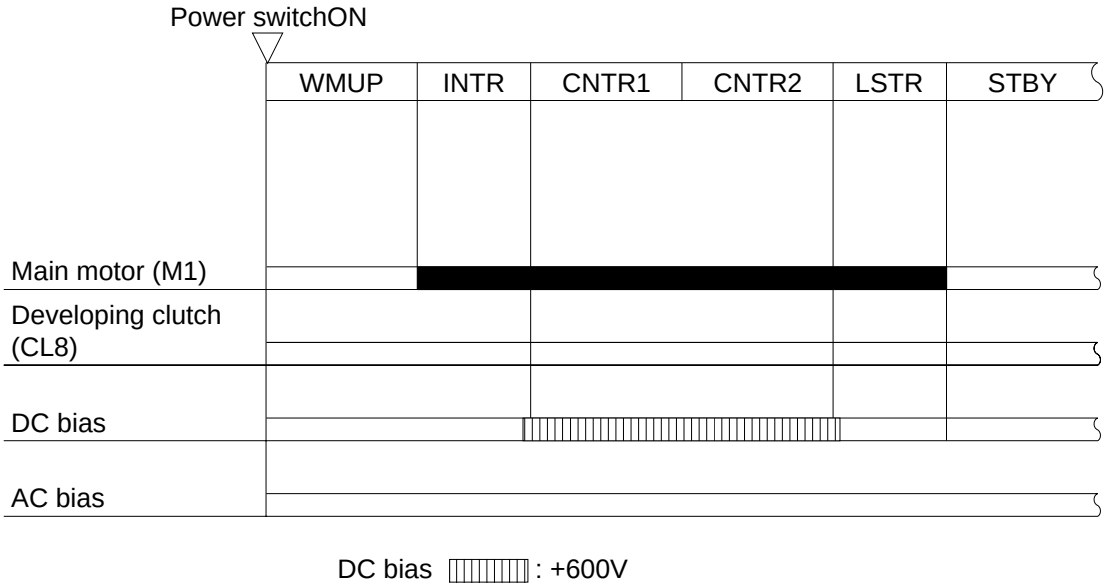

Figure 4-205

Making 2nd and Subsequent Copies 10 Min or Less after Power-On and 60 Min or Later

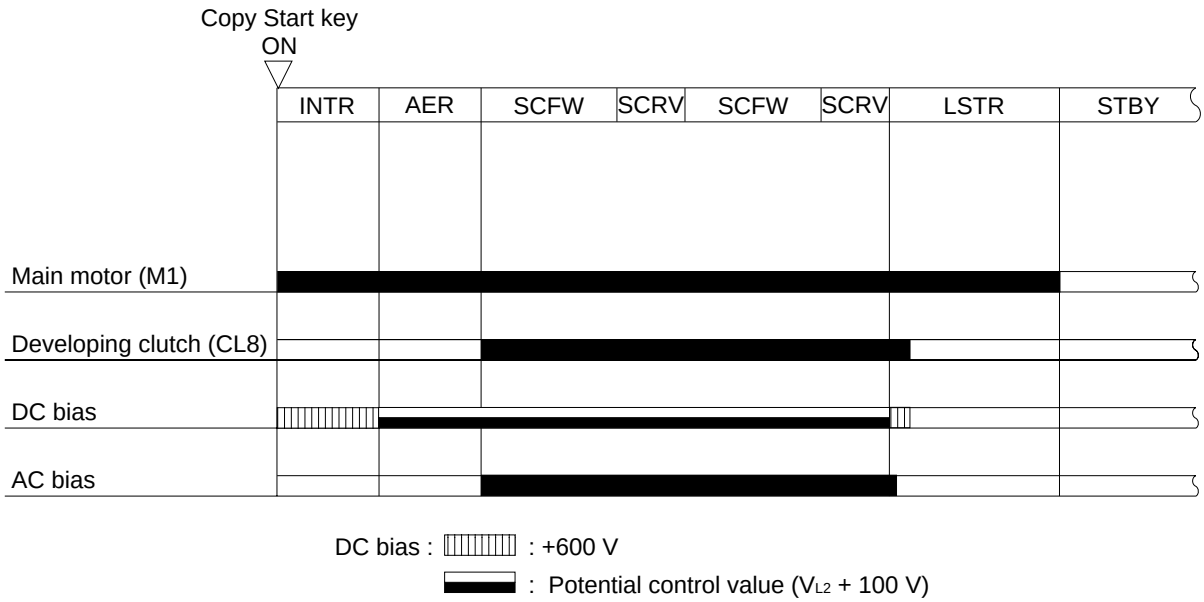

Figure 4-206

Making First Copy 10 Min or More after Power-On and 60 Min or Later

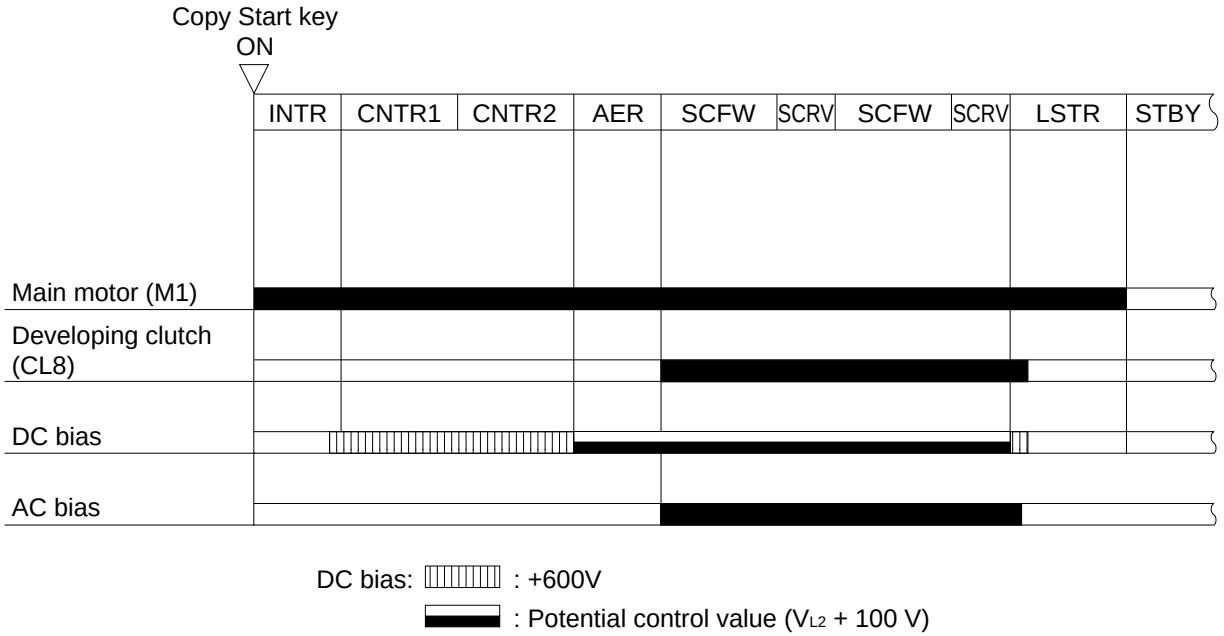

Figure 4-207

 COPYRIGHT © 1997 CANON INC.

3. Developing Bias Control Circuit

The circuit used to control the developing bias is provided with the following functions:

a. Turning on and off the AC bias
b. Controlling the voltage level of the DC bias
   ① AC Bias OFF control developing bias remote signal ACBTP is '0'
   AC bias switch circuit goes OFF.
   Drive circuit goes OFF.
   AC transformer T401 output is cut off.
   The above condition deprives the developing cylinder of AC bias.
   The above condition stops the AC bias to the developing cylinder.
   ② AC bias ON control developing bias remote signal ACBTP is '1'
   Drive circuit goes ON.
   AC bias switch circuit goes ON.
   The above condition causes the high-voltage transformer to increase the high-voltage transformer to 1500 Vp-p and supply it to the developing assembly.

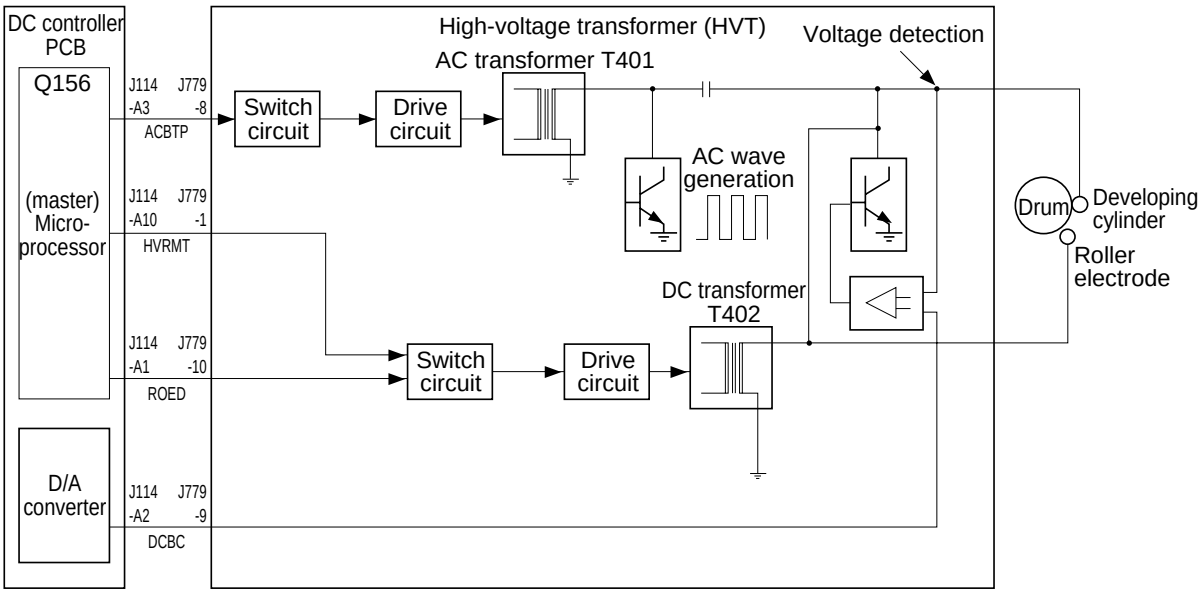

Figure 4-208

③ DC bias voltage level control
The voltage of the DC bias is determined by the signal (DCBC) from the DC controller.
- High-voltage remote signal (HVRMT) = 1
- Roller bias remote signal (ROED) = 1
- Developing DC control signal (DCBC) = 3 V or more or less than 12 V

The above condition turns on the AC bias switch circuit; when the output (DCBC) from the DC controller PCB increases, the output of DC bias will also increase.

Reference:

To prevent separation of sheets of copy paper in a high humidity environment, you may change the frequency of the developing bias in service mode (*5*, HI-HUME). A lower frequency will make the image as a whole to become darker (but possibly foggy), thereby facilitating separation with the help of toner. (Keep in mind that a low frequency can lead to foggy images.)

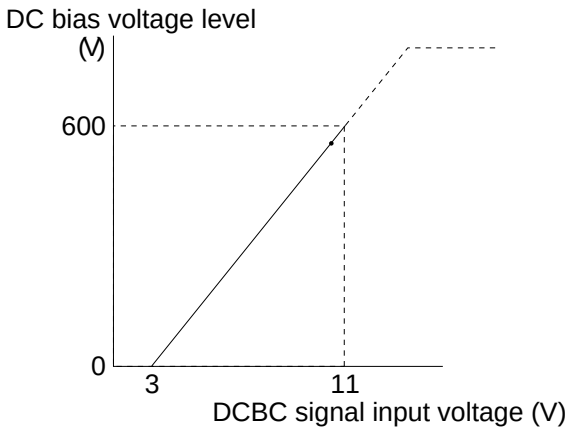

Figure 4-209

4. Roller Electrode Bias Control Circuit

The circuit used to control the roller electrode bias is equipped with the following functions:

a. Turning on and off the roller electrode.

① Roller electrode ON signal
- High-voltage remote signal (HVRMT) = 1

Roller bias signal (ROED) = 1
Switch circuit goes ON
High-voltage transformer drive circuit goes ON
DC transformer T402 goes ON

The above condition supplies the roller electrode with a bias of about 1000 V; the DC bias is not controlled to a specific voltage.

 COPYRIGHT © 1997 CANON INC. CANON NP6560/NP6360/NP6260 REV. 0 NOV. 1997 PRINTED IN JAPAN (IMPRIME AU JAPON)

② Turning off the roller electrode
- High-voltage remote signal (HVRMT) is '0' and roller bias signal (ROED) is '0'
  Switch circuit goes OFF.
  High-voltage transformer drive circuit goes OFF.
  DC transformer T402 goes OFF.
  The above condition deprives the roller electrode of bias.

	Switching signal				Control signal
Signal* / HVT output	HVRMT J114-A10	ACBTP J114-A3	ROED J114-A1	ACCON J114-A7	DCBC J114-A2
DC bias ON	'1'	'1'	'1'	'0'	3~11V
DC bias OFF	'0'	'0'	'0'	'0'	2V
Roller bias ON	'1'	'0'	'1'	'0'	—
Roller bias OFF	'0'	'0'	'0'	'0'	—

* Output from the DC controller PCB (connector No.).

Table 4-202 Combination of Developing DC/Roller Electrode Bias Output Signals

COPYRIGHT © 1997 CANON INC.

D. Detecting the Waste Toner Feeding Screw (locking)

If the waste toner pipe becomes stopped up by waste toner inside it and, as a result, the rotation of the feeding screw is hindered, waste toner can start to pour out because of feeding faults.

To prevent such a problem, the machine is equipped with a feeding screw detection mechanism.

The gear Ⓐ (Figure 4-210) used to drive the waste toner feeding screw becomes subject to force in the axial direction, and slides along the shaft.

The movement of the gear Ⓐ is monitored by the waste toner feeding screw detecting switch (MSW4). When MSW4 is pushed by the gear Ⓐ, the main motor (M1) will stop, and the DC controller will indicate 'E013' on the control panel.

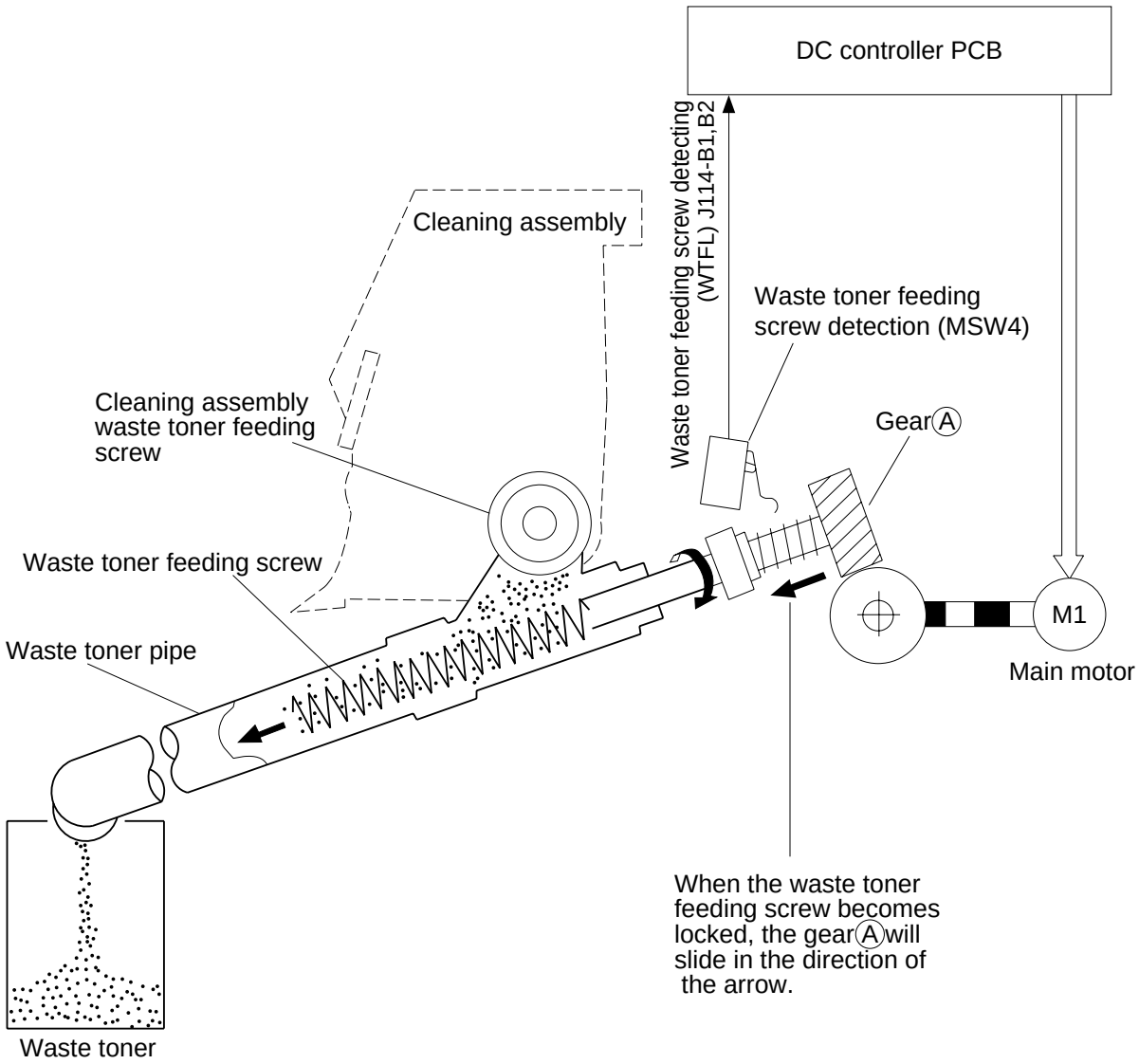

Figure 4-210 (rear view)

 COPYRIGHT © 1997 CANON INC. CANON NP6560/NP6360/NP6260 REV. 0 NOV. 1997 PRINTED IN JAPAN (IMPRIME AU JAPON)

III. DISASSEMBLY AND ASSEMBLY

Here, the copier is discussed in terms of its mechanical characteristics and operation and how to disassemble and assemble it.

Be sure to observe the following for disassembly/assembly work:

1. ⚠ Disconnect the power plug for safety before starting disassembly/assembly work.
2. Unless otherwise noted, assemble the parts by reversing the steps used to disassemble them.
3. Identify the screws by type (length, diacmeter) and location.
4. One of the mounting screws of the rear cover is provided with a toothed washer to protect against static electricity. Do not leave it out during assembly work.
5. The screws used for grounding wires and varistors are provided with a toothed washer to ensure electrical continuity. Do not leave them out during assembly work.
6. As a rule, do not operate the machine with any of its parts removed.
7. Before sliding out the duplexing unit or the fixing assembly, check to make sure that the front door switch or the power switch is off.
8. ⚠ Do NOT throw the toner into fire; it can explode.

COPYRIGHT © 1997 CANON INC.

A. Scanning Lamp Assembly

1. Removing the Scanning Lamp

1) Remove the copyboard glass retainer, and remove the copyboard glass.
2) Move the No. 1 mirror mount to the center (Cut-off area).
3) Remove the two mounting screws ①, and remove the reflecting shade ② and the support plate ③.

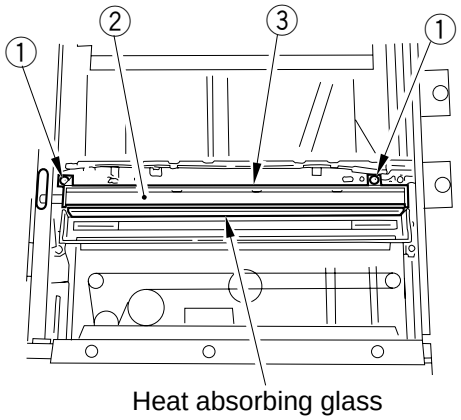

Figure 4-301

4) While pushing the electrode block at the rear toward the rear, remove the scanning lamp ④.

Reference:

You may remove the heat absorbing glass before removing the scanning lamp to facilitate the work. However, do not touch the glass while it is hot.

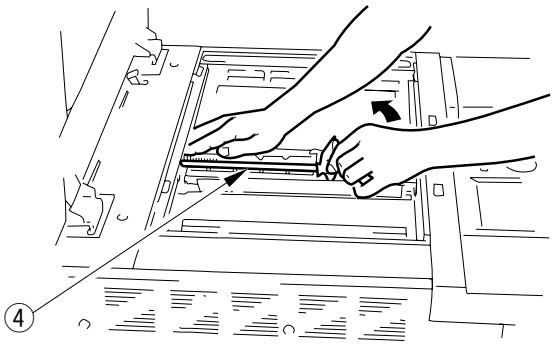

Figure 4-302

Caution:

1. Do not work if the surface of the scanning lamp is hot.
2. Do not leave fingerprints on the surface of the scanning lamp.
3. If the surface of the scanning lamp is soiled, dry wipe it.
4. Do not leave fingerprints on the reflecting shade.
5. Do not deform the reflecting shade.
6. To install the lens hood, fit the boss of the lens hood in the cut-off of the rail at the front, and then engage the hook at the rear while turning the lens hood slightly clockwise.

 COPYRIGHT © 1997 CANON INC.

2. Removing the Thermal Fuse

1) Remove the copyboard glass retainer, and remove the copyboard.
2) Remove the control panel.
3) Remove the scanning lamp.
4) Move the No. 1 mirror mount to the right end.
5) Remove the two mounting screws ①, and remove the thermal fuse ②.

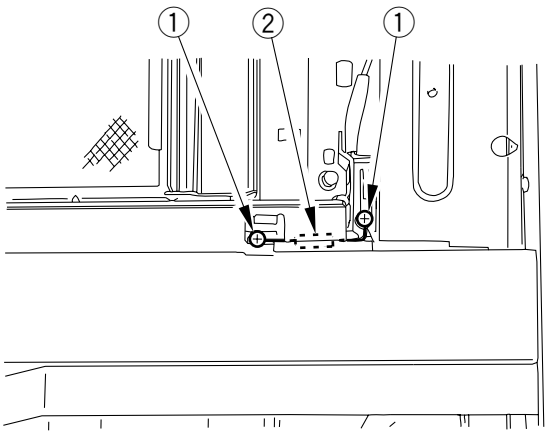

Figure 4-303

B. Standard White Plate

1) Remove the RDF.
2) Remove the rear cover.
3) Remove the two mounting screws ①, and remove the copyboard glass right retaining plate ②.

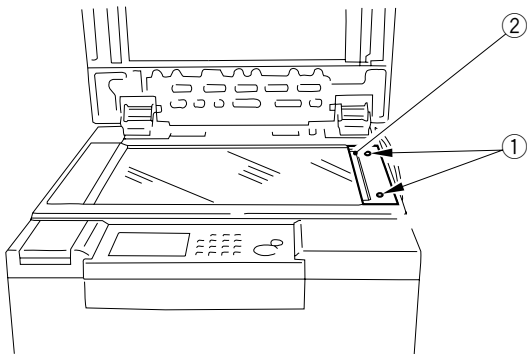

Figure 4-304

4) Remove the two stepped screws ③ (M3x3), and remove the standard white cover ④.

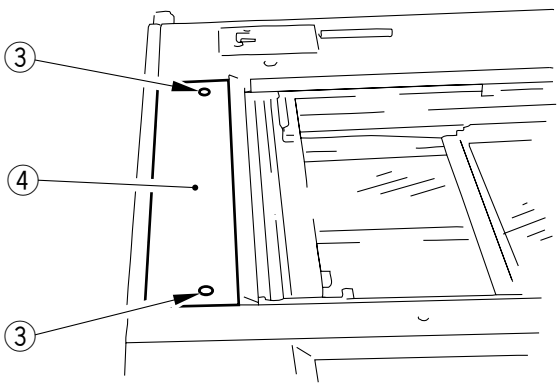

Figure 4-305

COPYRIGHT © 1997 CANON INC.

5) Remove the six mounting screws ⑤, and remove the RDF mount cover ⑥.
6) Remove the two mounting screws ⑦, and remove the rear top cover ⑧.

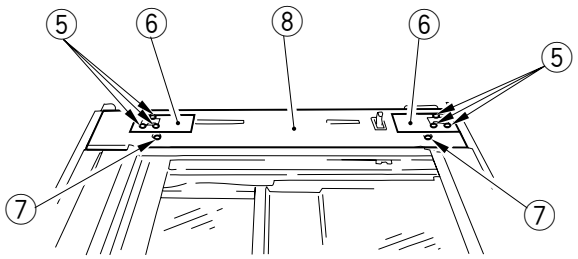

Figure 4-306

7) Remove the control panel.
8) Remove the two mounting screws ⑨, and remove the standard white plate ⑩.

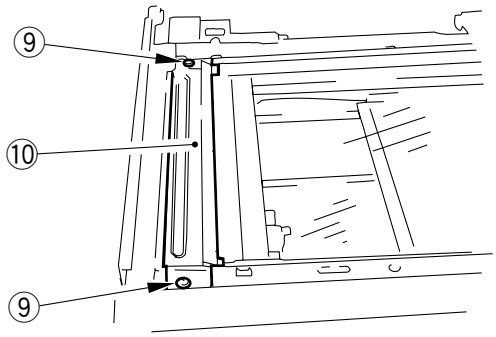

Figure 4-307

C. Pre-Exposure Lamp Unit

1. Removing the Pre-Exposure Lamp Unit

1) Open the front door, and slide out the hopper assembly; then, slide out the fixing/feeding unit.
2) Remove the process unit. (See p. 7-18.)
3) Remove the primary charging assembly and the pre-transfer charging assembly.
4) Remove the blanking exposure lamp assembly.
5) Remove the two mounting screws ①, and remove the blanking exposure assembly rail stay ②.

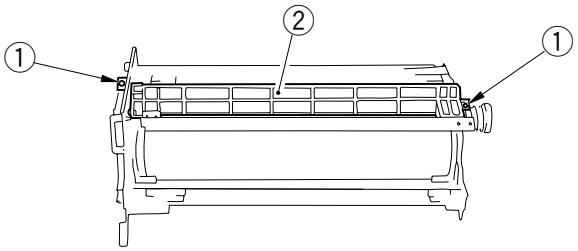

Figure 4-308

 COPYRIGHT © 1997 CANON INC. CANON NP6560/NP6360/NP6260 REV. 0 NOV. 1997 PRINTED IN JAPAN (IMPRIME AU JAPON)

6) Disconnect the connector ①, and remove the two mounting screws ②; then, remove the pre-exposure lamp unit ③.

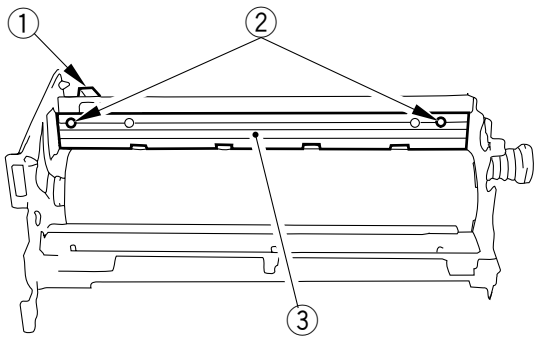

Figure 4-309

D. Blanking Exposure Lamp Assembly

1. Removing the Blanking Exposure Lamp Assembly

1) Open the front door, and slide out the hopper assembly.
2) Disconnect the two connectors ①, and remove the mounting screw ②; then, slide out the blanking exposure lamp assembly ③ slowly.

Caution:

When removing the blanking exposure lamp assembly, take care so as not to damage the photosensitive drum.

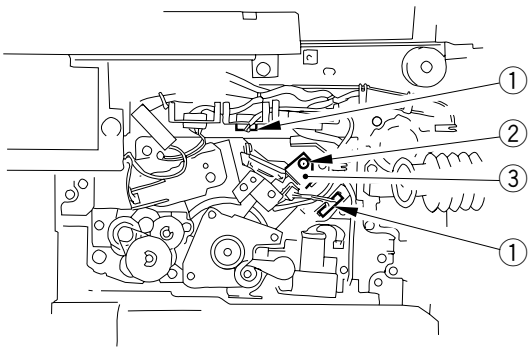

Figure 4-310

E. Photosensitive Drum

■ Points to Note When Handling the Photosensitive Drum

The machine uses an amorphous silicon drum, which will be subject to deterioration if not oriented correctly (applicable to the process unit also). Keep the following in mind whenever you need to handle the photosensitive drum:

① If you have removed the process unit from the copier or removed the photosensitive drum from the process unit, be sure to protect the photosensitive drum from light by wrapping it with the photosensitive drum protection sheet or six or more sheets of A3 (11"×17") or larger copy paper.

② Do not place the process unit or the photosensitive drum near a window or in an area exposed to direct rays of the sun.

③ Do not work in an area where the temperature/humidity changes abruptly or subject to a high/low temperature/humidity.

④ Do not work in an area subject to dust, ammonium gas, or organic gas.

The foregoing points apply equally to all types of photosensitive drums.

1. Removing the Drum Unit

1) Open the front door, and slide out the hopper assembly.
2) Remove the process unit. (See p. 7-18.)
3) Remove the primary charging assembly and the pre-transfer charging assembly.
4) Remove the blanking exposure lamp assembly.
5) Remove the blanking exposure assembly rail stay.
6) Remove the three mounting screws ①, and remove the gear plate ②.

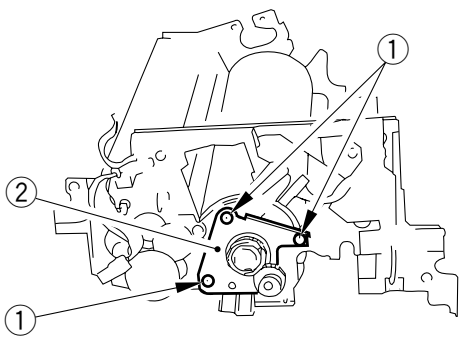

Figure 4-311

 COPYRIGHT © 1997 CANON INC. CANON NP6560/NP6360/NP6260 REV. 0 NOV. 1997 PRINTED IN JAPAN (IMPRIME AU JAPON)

7) Remove the two mounting screws ③, and remove the front side stay ④.

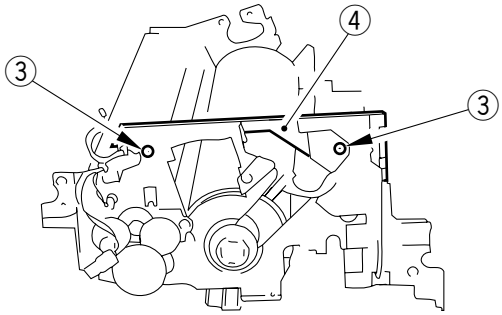

Figure 4-312

8) Holding it as shown, remove the photosensitive drum ⑤.

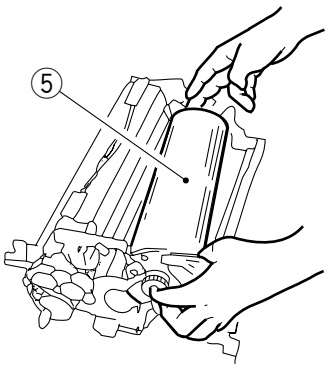

Figure 4-313

Caution:

Remove the photosensitive drum while taking care not to damage it. You need not remove the bearing at the rear and the gear at the front of the photosensitive drum.

COPYRIGHT © 1997 CANON INC.

2. Replacing the Drum Heater

1) Remove the photosensitive drum from the process unit.
2) Remove the two mounting screws ①, and remove the flange ② at the front.

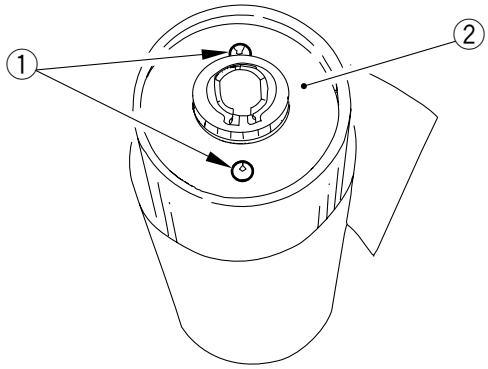

Figure 4-314

Caution:

Whenever you have removed the photosensitive drum, wrap it with six or more sheets of copy paper (A3/11"×17") or the drum protection sheet (stored near the waste toner case) to protect it from soiling and damage.

3) Pull out the flange at the front, and disconnect the connector; then, remove the drum heater from the photosensitive drum.

3. Installing the Photosensitive Drum

Install the photosensitive drum by reversing the steps used to remove it. During the work, be sure to take care, avoiding trapping of the cables (drum heater) and dirt or damage (drum surface).

F. Potential Sensor Assembly

1. Removing the Potential Sensor Assembly

1) Remove the blanking exposure lamp assembly from the copier. (See p. 4-43.)

Caution:

Keep in mind that the potential sensor assembly is an integrated part of the blanking exposure lamp assembly.

 COPYRIGHT © 1997 CANON INC. CANON NP6560/NP6360/NP6260 REV. 0 NOV. 1997 PRINTED IN JAPAN (IMPRIME AU JAPON)

G. Primary Charging Assembly

1. Removing the Primary Charging Assembly

1) Open the front door, and open the hopper assembly.
2) Loosen the mounting screw ①, and slide the fixing member ② upward; then, fix the fixing member in place.
3) Disconnect the connector ③, and remove the primary charging assembly ④.

Caution:

After installing the primary charging assembly, execute 'wire cleaning' in user mode. (You need not perform this step if the surface temperature of the upper fixing roller is 100°C or less, since wire cleaning will be executed automatically.)

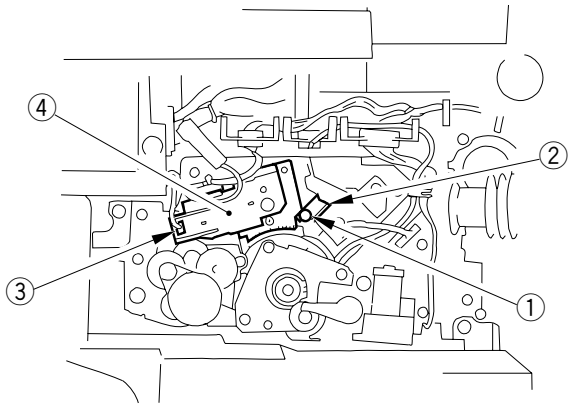

Figure 4-315

H. Pre-Transfer Charging Assembly

1. Removing the Pre-Transfer Charging Assembly

1) Open the front door, and slide out the hopper assembly.
2) Remove the mounting screw ①, and disconnect the connector ②; then, remove the pre-transfer charging assembly ③.

Caution:

After installing the pre-transfer charging assembly, execute 'wire cleaning' in user mode. (You need not perform this step if the surface temperature of the upper fixing roller is 100°C or less, since wire cleaning will be executed automatically.)

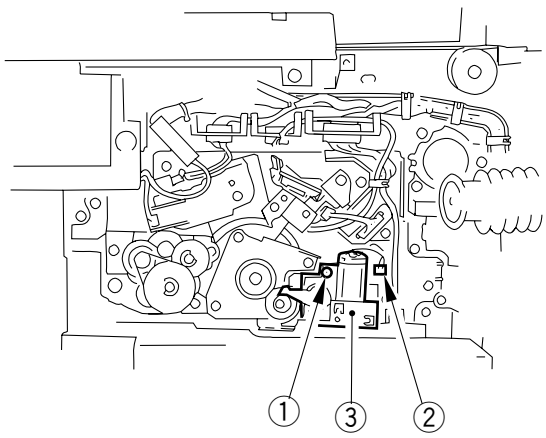

Figure 4-316

I. Transfer/Separation Charging Assembly

1. Removing the Transfer/Separation Charging Assembly

1) Open the front door, and slide out the fixing/feeding unit.
2) Remove the fixing/feeding front cover.
3) Remove the mounting screw ①, and remove the fixing guide ②.

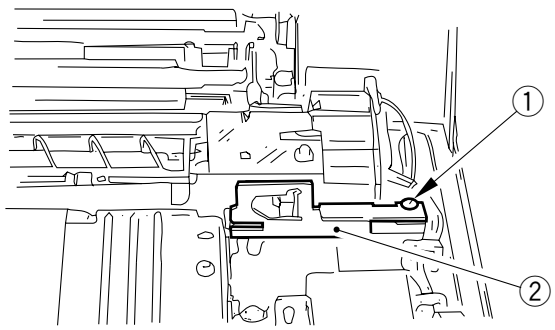

Figure 4-317

4) Disconnect the connector ③, and slide out the transfer/separation charging assembly ④ to the front; then, remove it by lifting it toward the left.

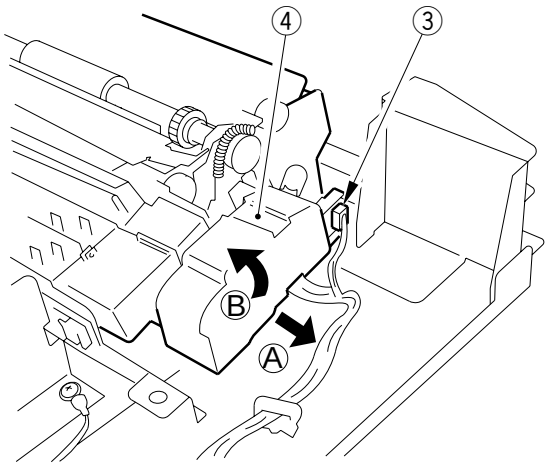

Figure 4-318

 COPYRIGHT © 1997 CANON INC. CANON NP6560/NP6360/NP6260 REV. 0 NOV. 1997 PRINTED IN JAPAN (IMPRIME AU JAPON)

2. Installing the Transfer/Separation Charging Assembly

Install the transfer/separation charging assembly by reversing the steps used to remove it with the following in mind:

1) Be sure to fit the four bosses ① of the transfer/separation charging assembly in the cut-off ② of the frame of the fixing/feeding unit.
2) Be sure to put the leaf spring ③ of the fixing/feeding unit into contact with the frame of the transfer/separation charging assembly (when sliding it from the front).

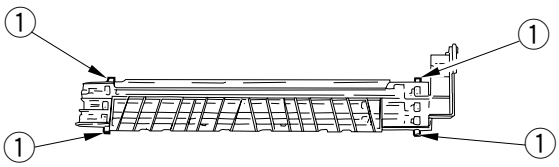

Figure 4-319

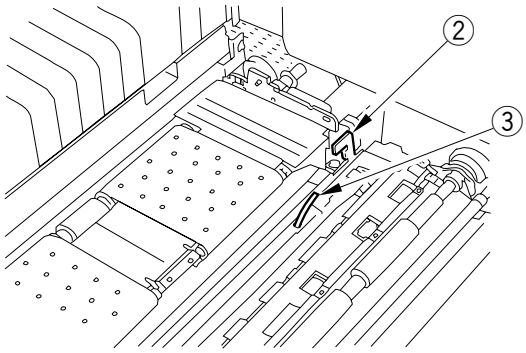

Figure 4-320

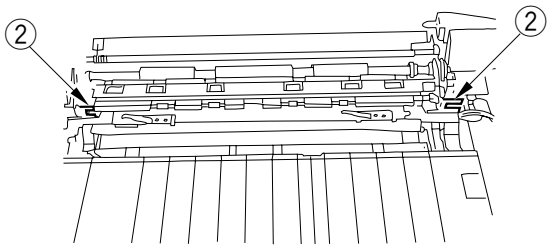

Figure 4-321

COPYRIGHT © 1997 CANON INC.

3) Be sure to use the mounting screw ⑤ when fixing the fixing guide plate ④ in place.

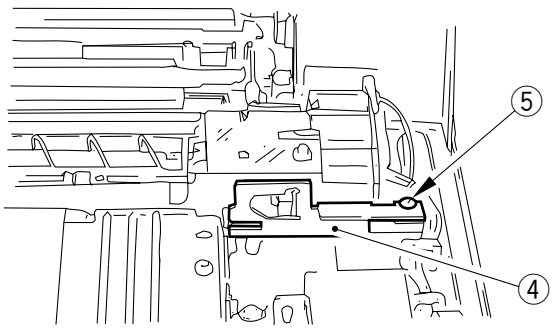

Figure 4-322

4) Be sure to execute 'wire cleaning' in user mode. (You need not perform this step if the surface temperature of the upper fixing roller is 100°C or less, since wire cleaning will be executed automatically.)

 COPYRIGHT © 1997 CANON INC.

J. Charging Wire

1. Outline

The photosensitive drum is surrounded by three charging wires: primary, pre-transfer, transfer/separation, each of which is 0.06 mm in diameter.

2. Removing the Wire Cleaner of the Primary Charging Assembly

1) Pick the wire cleaner with fingers, and disengage the hook with a screwdriver.

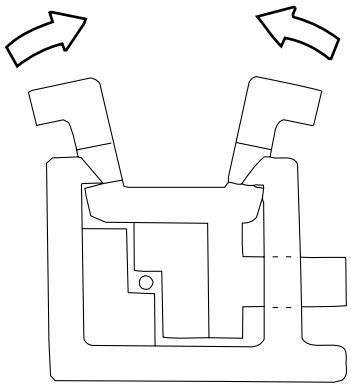

Figure 4-323

3. Stringing the Charging Wires

As a rule, with the exception of the grid wire, all charging wires are strung in the same way; here, the charging assembly is used to show the steps.

1) Remove the shielding plate (left, right) of the charging assembly. To prevent deformation (slack) of the charging assembly, be sure to remove the left and the right shielding plates individually (i.e., do not loosen the mounting screws ① of both plates at the same time).
2) Remove the wire cleaner.

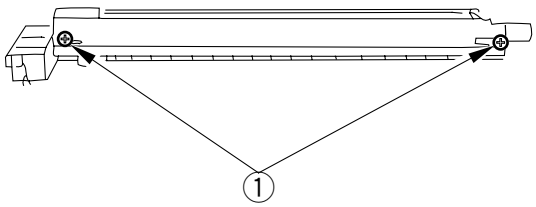

Figure 4-324

COPYRIGHT © 1997 CANON INC.

Caution:

For other charging assemblies, remove the two lids.

3) Free a length (about 5 cm) of wire from the charging reel, and form a loop at one end (2 mm dia.).

Reference:

When forming a loop, you may wind the charging wire around a hex key once; then, turn the key three to four times, and twist the wire.

4) Cut the end (excess) of the twisted wire with a nipper.
5) Hook the loop on the stud.

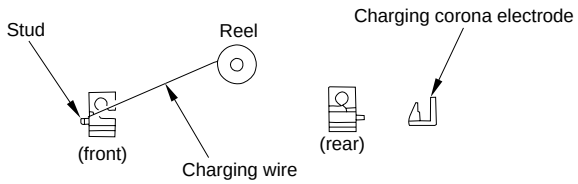

Figure 4-325

6) Hook the charging wire on the charging wire positioner at the rear; then, hook the wire on the charging wire tension spring as shown in Figure 4-326, and twist it.



Figure 4-326

7) Cut the excess charging wire with a nipper.
8) Pick the end of the charging wire tensioning spring with tweezers, and hook it on the charging electrode.
   In the case of the transfer charging assembly, hook it on the pin at the front.



Figure 4-327

 COPYRIGHT © 1997 CANON INC.

Caution:

After stringing the wire, check to make sure that
- It is not bent or twisted in the middle.
- It is in the V-groove of the charging wire positioner.

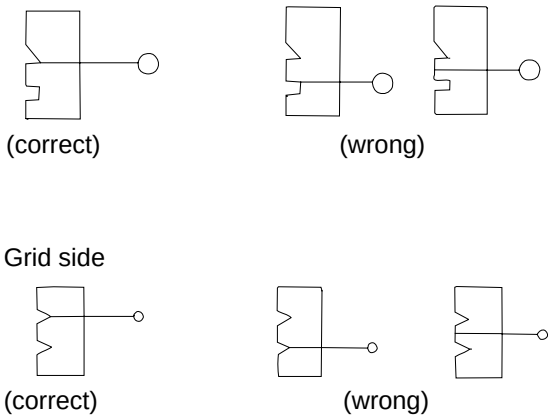

Figure 4-328 Primary Charging Wire

9) Install the cushion at the front of the charging wire. (This does not apply to the primary charging assembly.)
10) Install the shielding plates (left, right).

Caution:

For other charging assemblies, install the two lids.

11) Install the wire cleaner. (At this time, be sure that the cleaner is oriented correctly.)
12) Clean the charging wire with lint-free paper moistened with alcohol.

4. Stringing the Grid Wire of the Primary Charging Assembly

1) Loosen the two mounting screws used to keep the left and the right shielding plates in place.
2) Loosen the three mounting screws used to keep the motor unit at the front in place.

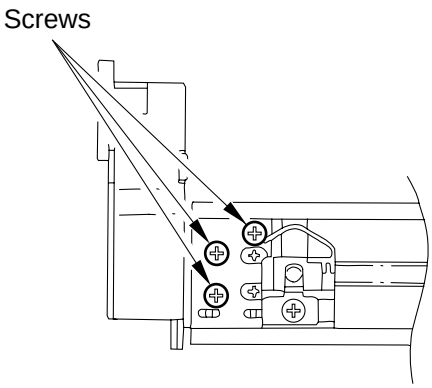

Figure 4-329

3) Loosen the mounting screw, and move the grid in the direction shown in Figure 4-330; then, fix it in place temporarily.
4) Free a length (about 5 cm) of wire from the charging wire reel (0.1 mm dia.), and form a loop at the end (2 mm dia.).

Reference:

To form a loop, wind the wiring wire around a hex key once; then, turn the hex key three to four times, and twist the wire.

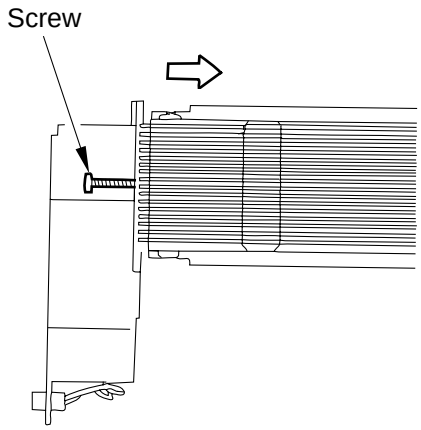

Figure 4-330

5) Cut the twisted charging wire (excess) with a nipper.
6) Hook the loop on the stud A shown in Figure 4-331.
7) After stringing it 31 runs, route it through section B, and give it a half turn; then, lead it between the washer and the motor unit, and wind it around the mounting screw once (clockwise), and fix it in place with a mounting screw.
8) Cut the excess charging wire with a nipper.
9) Tighten the screw loosened in step 3).
   Turn the screw until the tension of the grid wire is even.
   Pay attention to avoid deformation and slack; if necessary, try to tighten the mounting screw on the left/right shielding plate at the front earlier.
10) Tighten the mounting screws loosened in steps 1) and 2).
11) Wipe the grid wire with lint-free paper moistened with alcohol.

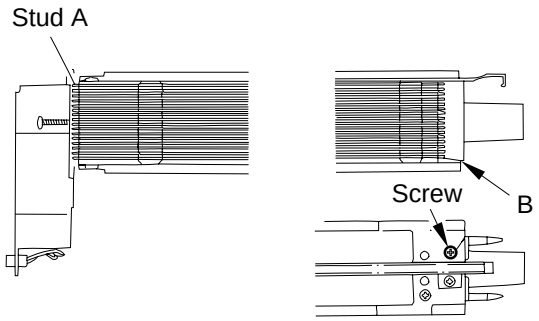

Figure 4-331

Caution:

① Check to make sure that the grid wire is not bent or twisted.
② Check to make sure that the wire is strung at equal intervals (i.e., it is in the groove of the block).

 COPYRIGHT © 1997 CANON INC. CANON NP6560/NP6360/NP6260 REV. 0 NOV. 1997 PRINTED IN JAPAN (IMPRIME AU JAPON)

5. Adjusting the Height of the Charging Wire

Charging assembly	Height of charging wire	Tolerance
Primary	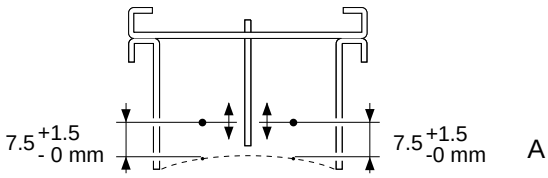	± 1mm
Pre-transfer	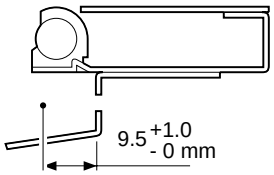	No mechanism
Transfer	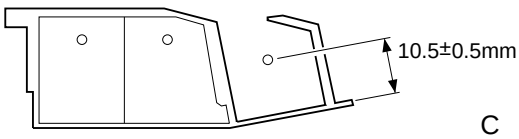	± 2mm
Separation	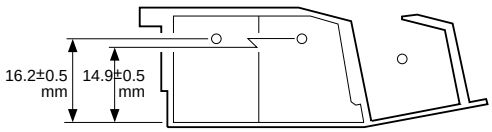	± 2mm

Figure 4-332

Reference:

The height (position) of the primary and the transfer charging wires may be adjusted by turning the screw behind the charging assembly. A full turn of the screw changes the position of the charging wire by about 0.7 mm.

6. Cleaning the Primary Charging Assembly Anti-Stray Sheet

1) Open the front door.
2) Remove the developing assembly.
3) Remove the hopper assembly.
4) Remove the process unit. (See p. 7-18.)
5) Remove the two screws ①, and remove the blanking exposure rail stay ②.

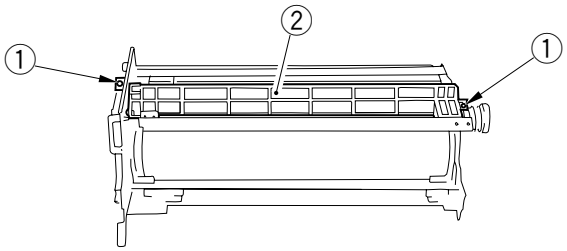

Figure 4-333

6) Clean the primary charging assembly anti-stray sheet ③.

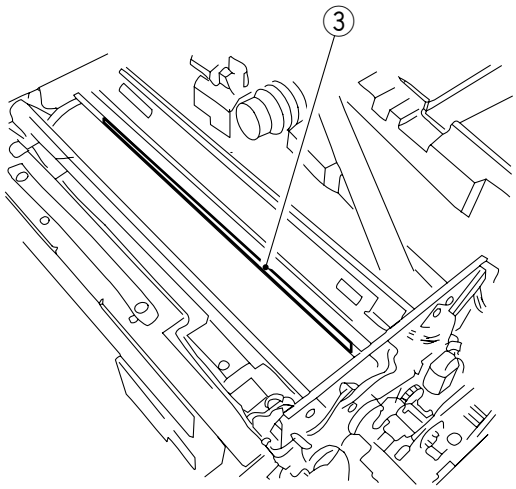

Figure 4-334

COPYRIGHT © 1997 CANON INC.
CANON NP6560/NP6360/NP6260 REV. 0 NOV. 1997 PRINTED IN JAPAN (IMPRIME AU JAPON)

K. Developing Assembly

Caution:

The machine's developing assembly is not equipped with a developing cylinder protection cover, requiring you to take care whenever you have removed the developing assembly.
If the developing assembly is not set inside the copier, be sure not to install the developing assembly locking assembly. Otherwise, the toner collecting in the path through which toner is fed from the hopper to the developing assembly can start to pour out because of the vibrations caused by inspection/repair work.

1. Removing the Developing Assembly from the Copier

1) Open the multifeeder door; then, remove the mounting screw, and remove the door stopper tape.
2) Remove the mounting screw ①, and push the developing assembly locking assembly ② in the direction of the arrow to remove.

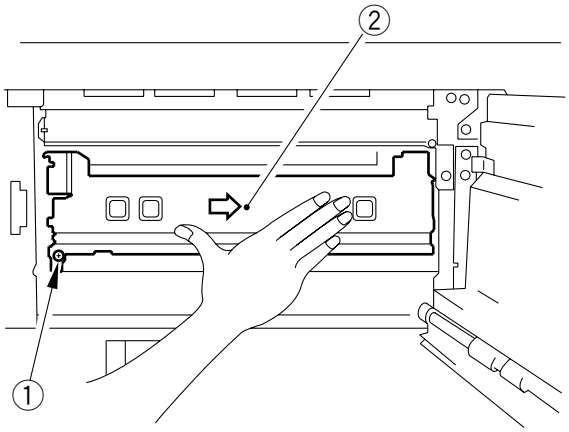

Figure 4-335

3) Disconnect the connector ③, and slide out the developing assembly ④ from the copier.

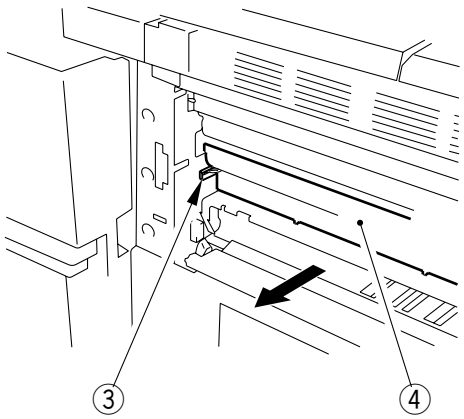

Figure 4-336

2. Removing the Blade Unit

1) Remove the developing assembly from the copier.
2) Remove the two mounting screws ①, and remove the developing assembly cover ②.

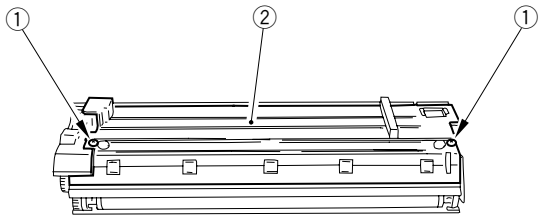

Figure 4-337

3) Place a newspaper on the floor or a desk, and empty the developing assembly of toner.
4) Remove the two mounting screws ③, and remove the blade unit ④ together with the mounting plate.

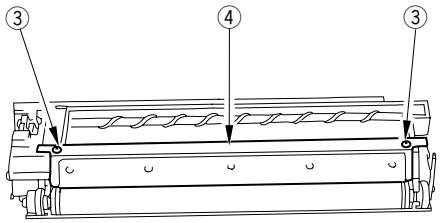

Figure 4-338

Caution:

The blade must be installed to a very high precision. Do not remove it on its own in the field. (You must remove its mounting plate.)

 COPYRIGHT © 1997 CANON INC.

3. Installing the Blade

Install the blade by reversing the steps used to remove it with the following in mind:

- Force the blade mounting plate against the developing assembly housing, and fix it in place with two mounting screws.
  (Before installing the blade, place copy paper on the developing cylinder to protect the cylinder.)

4. Removing the Developing Cylinder and the Magnetic Seal

1) Remove the developing assembly from the copier.
2) Remove the blade unit.
3) Remove the two mounting screws ①, and remove the gear unit together with the gear unit ②.

Caution:

Exercise care, as the gear engaged with the screw becomes free when the gear unit is removed.

4) Remove the grip ring ③ mounted to the cylinder shaft at the rear; then, remove the gear ④, parallel pin ⑤, and butting roll ⑥ (one each).

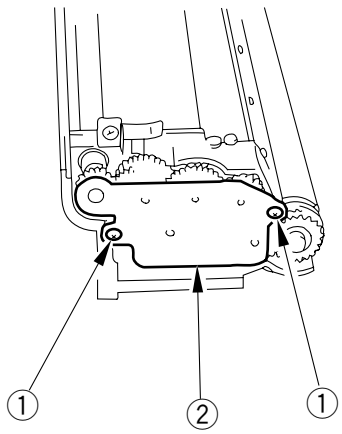

Figure 4-339

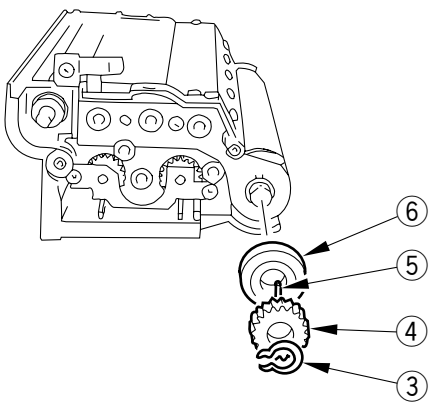

Figure 4-340

COPYRIGHT © 1997 CANON INC.

5) Remove the two mounting screws ⑦, and remove the electrode plate ⑧.

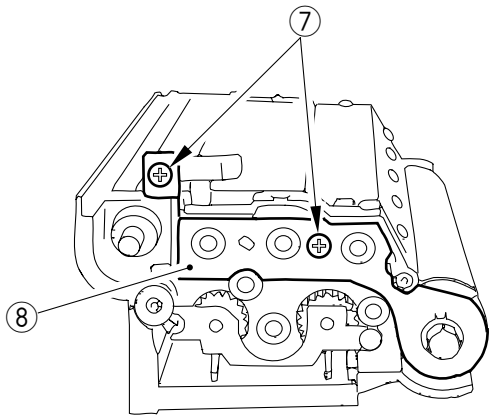

Figure 4-341

6) Remove the mounting screw ⑨, and remove the polarity positioning plate ⑩.

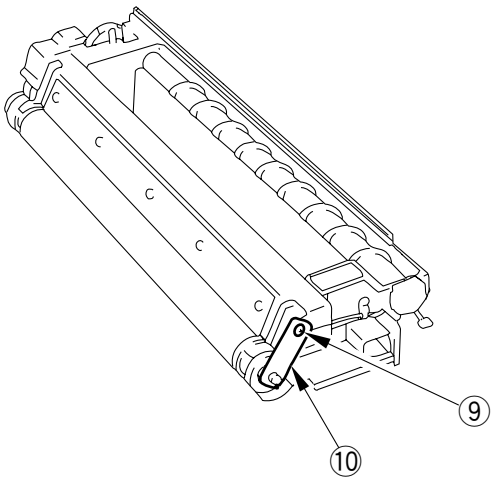

Figure 4-342

7) Remove the grip ring ⑪ mounted to the cylinder shaft at the front, and remove the butting roll ⑫.

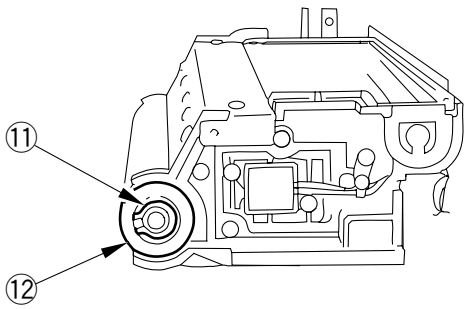

Figure 4-343

 COPYRIGHT © 1997 CANON INC. CANON NP6560/NP6360/NP6260 REV. 0 NOV. 1997 PRINTED IN JAPAN (IMPRIME AU JAPON)

8) Remove the two mounting screws ⑬, and remove the blade ⑭ together with the mounting plate.

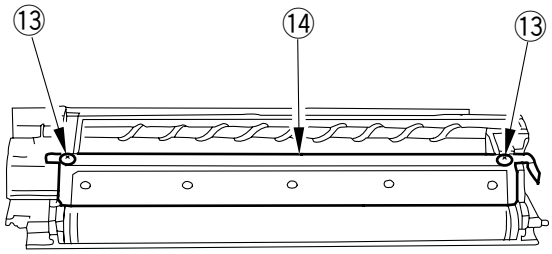

Figure 4-344

9) Remove the bearing ⑮ at the front and the rear, and remove the develop-ing cylinder ⑯.

Caution:

Do do not leave fingerprints or oils on the surface of the developing cylinder.
If any, dry wipe the surface with lint-free paper. (Do not use solvent.)

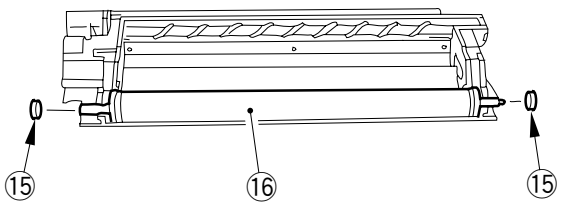

Figure 4-345

5. Cleaning the Developing Assembly Anti-Stray Sheet

1) Remove the developing assembly, and clean the developing assembly anti-stray sheet ①.

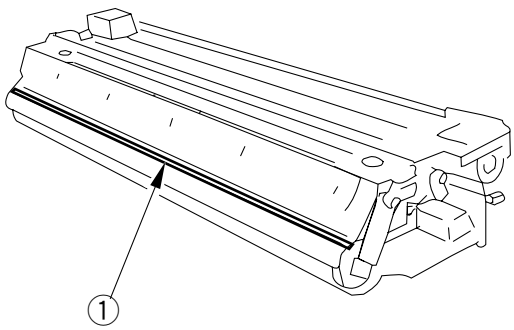

Figure 4-346

L. Hopper Assembly

1. Removing the Hopper Assembly from the Copier

1) Remove the developing assembly from the copier. (See p. 4-57.)
2) Slide out the hopper assembly to the front. (See p. 7-17.)
3) Remove the mounting screw ①, and remove the stopper ②; then, remove the hopper assembly ③.

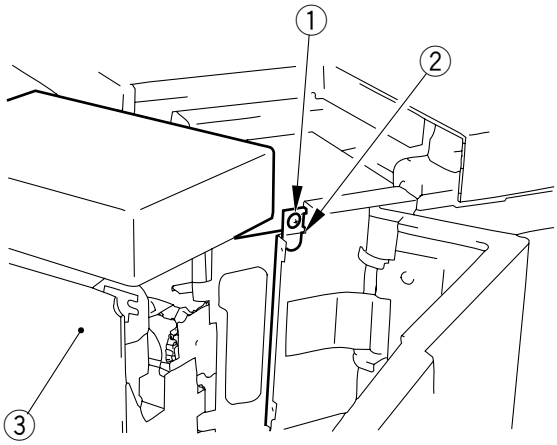

Figure 4-347

M. Drum Cleaner

1. Construction

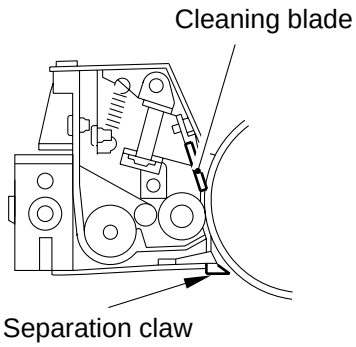

Figure 4-348

2. Removing the Cleaning Blade

1) Slide out the process unit from the copier. (See p. 7-18.)
2) Remove the primary charging assembly.
3) Disconnect the connector ① on the AC line of the drum heater.
4) Remove the four mounting screws ②, and remove the cleaning blade assembly ③.

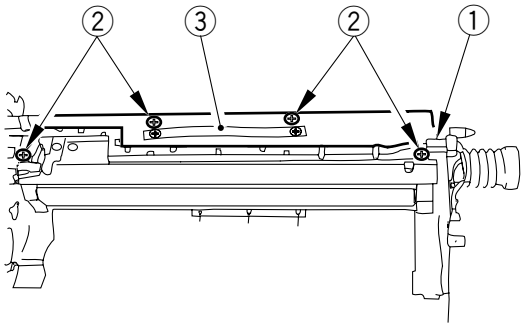

Figure 4-349

COPYRIGHT © 1997 CANON INC.

5) Remove the E-ring ④, and remove the pressure spring ⑤.

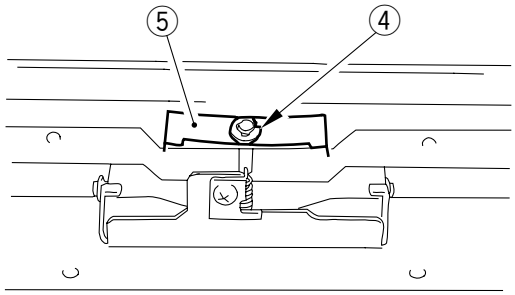

Figure 4-350

6) Loosen the five mounting screws ⑥, and remove the cleaning blade from the blade support plate.

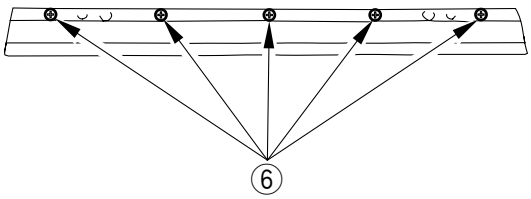

Figure 4-351

3. Installing the Cleaning Blade

Install the cleaning blade by reversing the steps used to remove it with the following in mind:

1) Butt the cleaning blade ① against the rear.

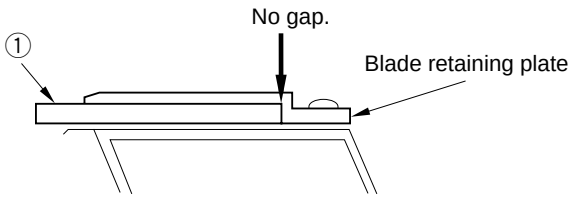

Figure 4-352

2) Lightly tighten the five mounting screws ② and stop turning them when resistance is felt, thereby fixing the cleaning blade in place temporarily.
3) Turn the screws fully (20° to 30°) in the order shown in Figure 4-353.

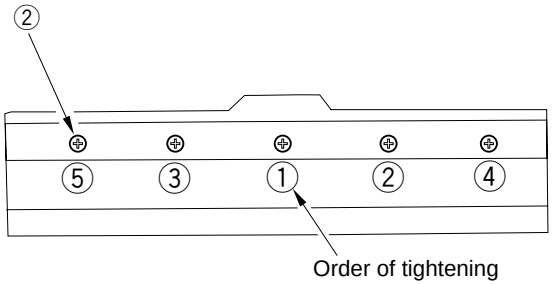

Figure 4-353

Caution:

After installing the cleaning blade, check to make sure that the edge of the blade is not appreciably wavy. Be sure to clean the groove in which the blade of the blade support plate is mounted, as the presence of toner or the like can cause the blade to become wavy.

4. Installing the Side Seal

1) Attach the side seal ① to the location indicated (both ends; make sure that the edge of the seal is as follows):
- If you are replacing the side seal ① at the front, push the magnetic roller ② toward the rear; then, work so that the inner edge of the side seal is within the washer area ③.
- If you are replacing the side seal ① at the rear, push the magnetic roller ② toward the front; then, work so that the inner edge of the side seal is within the washer area ③.

2) Make sure that the bottom edge of each side seal ① is 0 to 0.5 mm ④ away from the corner of the cleaner housing.
3) Fix the size seal ① (both front and rear) to the cleaner housing at the location indicated.

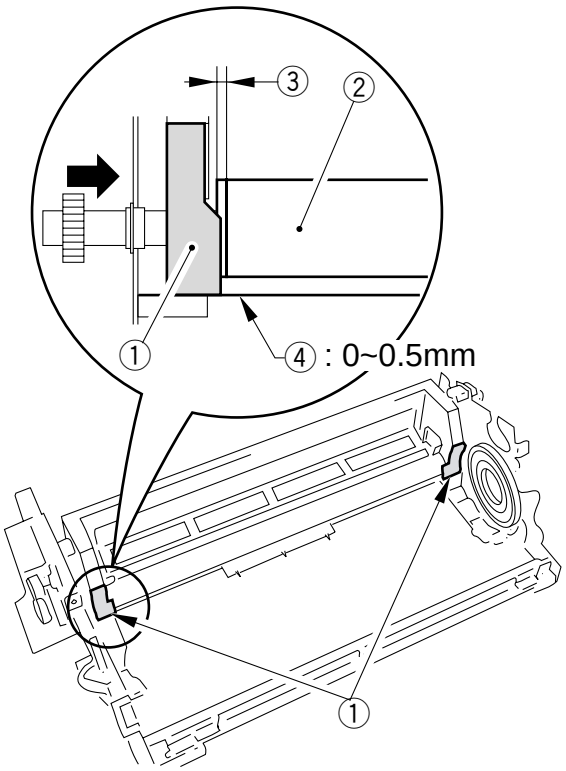

Figure 4-354

 COPYRIGHT © 1997 CANON INC.

5. Cleaning the Cleaner Side Scraper

Clean the cleaner side scraper when replacing the cleaning blade (every 500,000 copies).

1) Remove the cleaning blade.
2) Remove any paper lint collecting at the tip of the side scraper (gap Ⓐ between magnet roller and toner guide roller) with tweezers.
3) Remove the toner collecting on the surface of the magnetic roller. (Scoop up with copy paper shaped in the form of the letter U.)

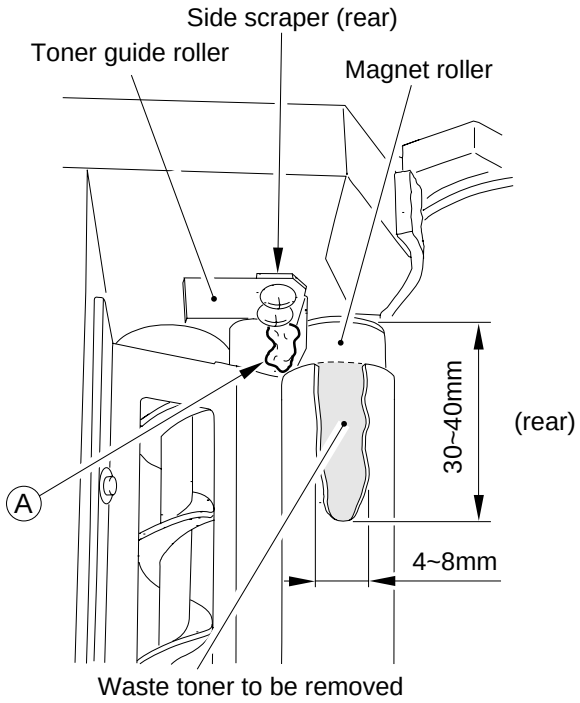

Figure 4-355a

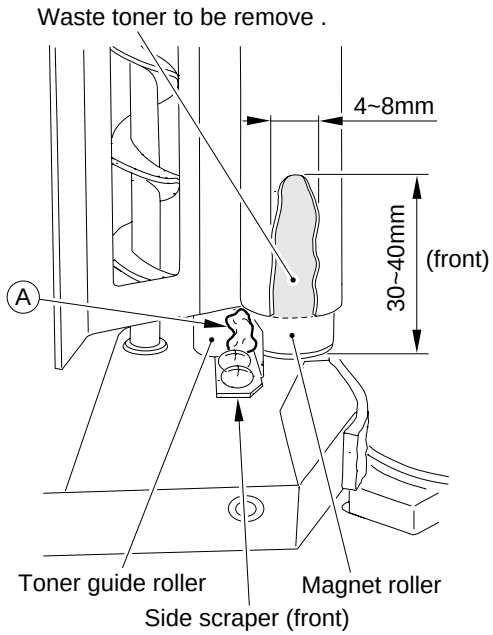

Figure 4-355b

4) Turn the magnet roller clockwise (viewing from the front).
5) When the area from which toner was removed in step 3) is everly coated, repeat steps 3) through 5).

N. Separation Claw/Separation Claw Drive Assembly

1. Removing from the Drum Unit

1) Remove the process unit from the copier. (See p. 7-18.)

Caution:

1. Take care not to bend the separation claw.
2. Take care not to damage the photosensitive drum.

2) Remove the screw ①, and remove the No. 2 insulating plate ②.
3) Remove the screw ③, and remove the claw holder ④.

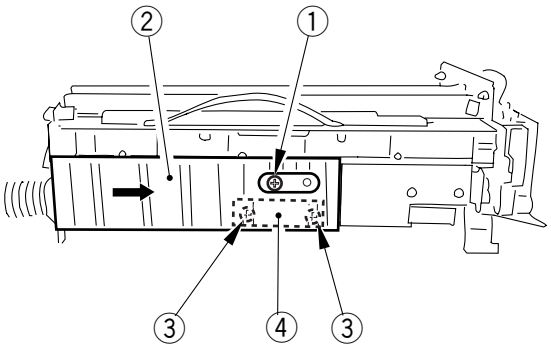

Figure 4-356

O. Waste Toner Feeding Assembly

1) Slide out the process unit and the fixing/feeding unit from the copier. (See p. 7-18.)
2) Remove the rear cover.
3) Remove the cleaner fan and the feeding fan. (See p. 7-30.)
4) Remove the high-voltage transformer PCB.
5) Remove the waste toner drive assembly together with the waste toner feeding assembly.
6) Remove the mounting screw ①, and remove the waste toner feeding screw detection circuit ②.

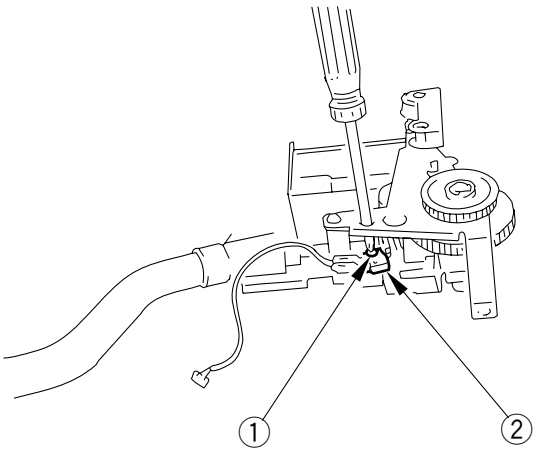

Figure 4-357

 COPYRIGHT © 1997 CANON INC. CANON NP6560/NP6360/NP6260 REV. 0 NOV. 1997 PRINTED IN JAPAN (IMPRIME AU JAPON)

7) Remove the two mounting screws ④, and remove the waste toner feeding assembly ⑤ from the waste toner drive assembly.

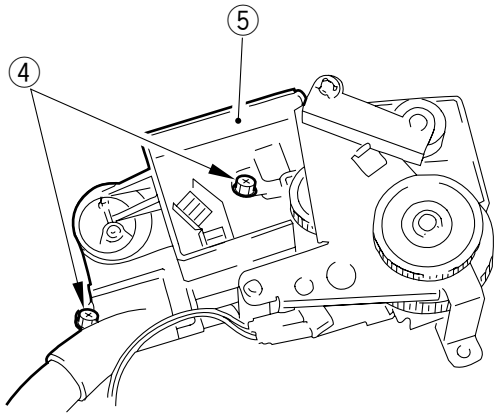

Figure 4-358

COPYRIGHT © 1997 CANON INC.

COPYRIGHT © 1997 CANON INC.
CANON NP6560/NP6360/NP6260 REV. 0 NOV. 1997 PRINTED IN JAPAN (IMPRIME AU JAPON)

CHAPTER 5

PICK-UP/FEEDING SYSTEM

This chapter explains the principles used from when copy paper is picked up to when a copy is delivered in view of the functions of electrical and mechanical units and in relation to their timing of operation. It also shows how these units may be disassembled/assembled and adjusted.

I. PICK-UP/FEEDING SYSTEM 5-1
A. Outline 5-1
II. CASSETTE PICK-UP 5-4
A. Pick-Up Operation 5-4
B. Cassette Lifter Operation 5-6
C. Identifying the Size of Copy Paper in the Cassette (Cassette 4 only) 5-8
III. FRONT PAPER DECK ASSEMBLY 5-13
A. Outline 5-13
B. Lifter Operation 5-16
C. Detecting the Presence/Absence of Paper in the Deck 5-19
D. High-Speed Pick-Up 5-19
IV. MULTIFEEDER 5-20
A. Pick-Up Operation 5-20
B. Identifying the Size of Paper in the Multifeeder 5-21
C. Sequence of Pick-Up Operations (multifeeder) 5-22
V. CONTROLLING THE REGISTRATION CLUTCH 5-23
VI. MAKING TWO-SIDED/OVERLAY COPIES 5-24
A. Making Two-Sided/Overlay Copies (1st side) 5-24
B. Making Two-Sided Copies (2nd side) 5-26
C. Making Overlay Copies (2nd side) 5-28
D. Reversal Delivery 5-32
E. Switching the Paper Size for Two-Sided/Overlay/Reversal Delivery Copies 5-34
F. Re-Pick Up from the Holding Tray 5-37
G. Skipping Operation 5-38
VII. DETECTING JAMS 5-46
A. Outline 5-46
VIII. DISASSEMBLY AND ASSEMBLY 5-60
A. Multifeeder Assembly 5-61
B. Front Paper Deck Assembly 5-69
C. Right Deck Pick-Up Assembly (cassette holder) 5-77
D. Left Deck Pick-Up Assembly 5-84
E. Pick-Up Vertical Path Roller Assembly 5-87
F. Registration Feeding Assembly 5-88
G. Feeding Assembly 5-90
H. Holding Tray Assembly 5-94
I. Holding Tray Feeding Assembly 5-109

COPYRIGHT © 1997 CANON INC. CANON NP6560/NP6360/NP6260 REV. 0 NOV. 1997 PRINTED IN JAPAN (IMPRIME AU JAPON)

I. PICK-UP/FEEDING SYSTEM

A. Outline

The machine uses a center reference method, in which paper is moved along the center of the pick-up/feeding path with the aim of improving pick-up/feeding performance.

The pick-up system consists of the front paper deck, cassettes, and multifeeder assembly; in addition, the system includes the holding tray assembly and the holding tray feeding assembly for making two-sided/overlay copies.

The feeding system has two feeding paths: for on-sided copies and for two-sided/overlay copies (through the holding tray assembly and the holding tray feeding assembly) The paths are separated by a delivery paper deflecting plate.

When making one-sided copies, the copy paper picked up from the cassette, front paper deck, or multifeeder, is controlled by the registration roller so that its leading edge matches the leading edge of the photosensitive drum; the paper is then moved through the transfer, separation, feeding, fixing, and delivery assemblies and then ultimately to the copy tray.

When making two-sided/overlay copies, on the other hand, copy paper is stacked on the holding tray after fixing on its first side; it is then picked up from the holding tray for fixing on its second side, and is sent through the holding tray feeding assembly and then to the copy tray through the same path as a one-sided copy.

COPYRIGHT © 1997 CANON INC.

As many as 17 sensors in total are used to monitor the movement of copy paper; see Figure 5-101 for arrangement.

Notation	Name	Notation	Name
PS8	Holding tray feeding assembly 1 paper sensor	PS24	Pick-up vertical path 0 paper sensor
PS9	Holding tray feeding assembly 2 paper sensor	PS27	Pick-up vertical path 3 paper sensor
PS10	External delivery sensor	PS30	Pick-up vertical path 4 paper sensor
PS12	Internal delivery sensor (reversing assembly)	PS33	Pick-up vertical path 1 paper sensor
PS14	Holding tray registration paper sensor	PS36	Pick-up vertical path 2 paper sensor
PS15	Holding tray inlet paper sensor	PS47	Fixing assembly outlet paper sensor
PS17	Holding tray pick-up sensor	PS49	Left deck outlet paper sensor
PS22	Multifeeder pick-up sensor	PS52	Claw jam sensor
PS23	Registration paper sensor		

Table 5-101

COPYRIGHT © 1997 CANON INC.
CANON NP6560/NP6360/NP6260 REV. 0 NOV. 1997 PRINTED IN JAPAN (IMPRIME AU JAPON)

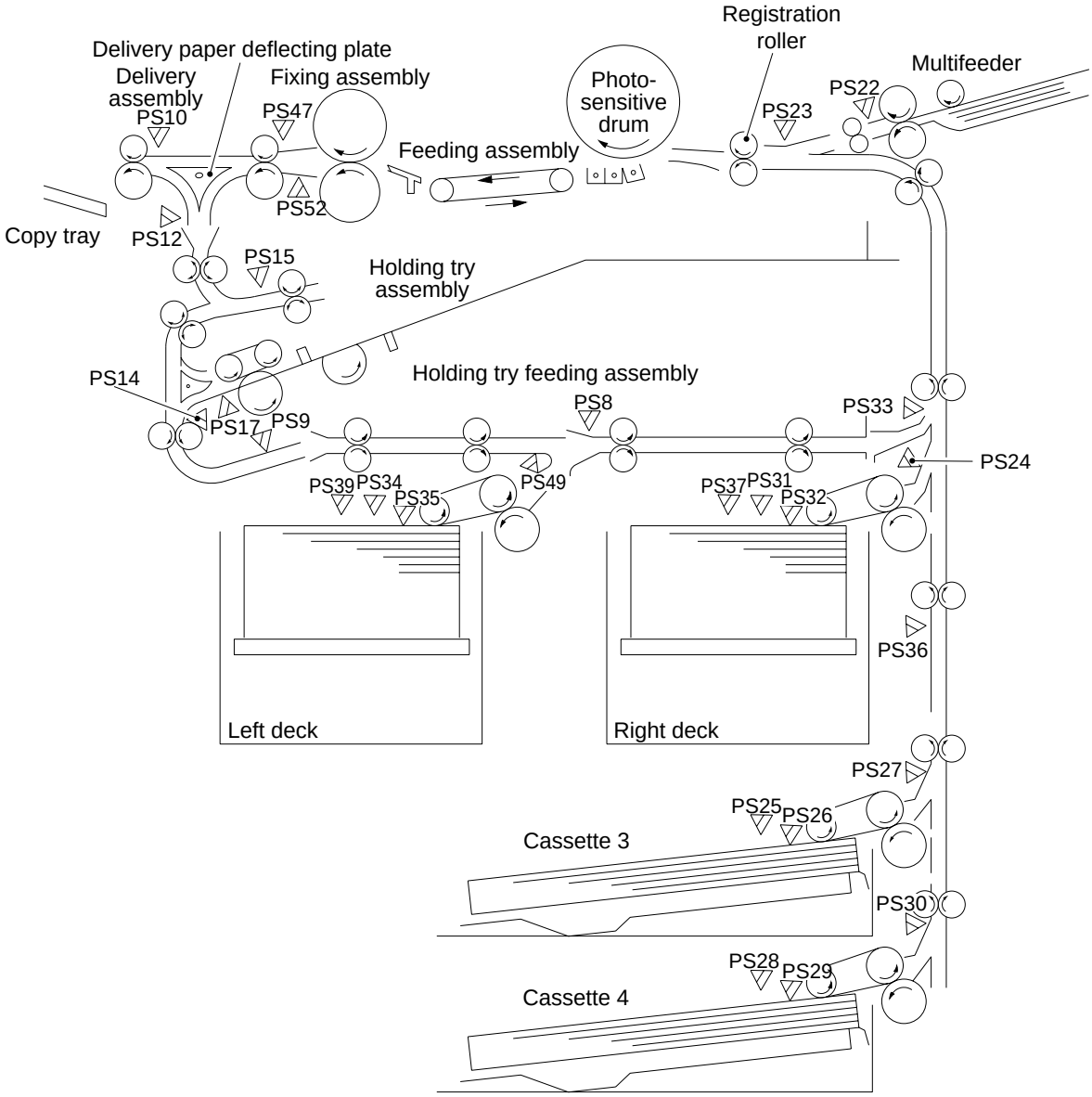
Registration roller
Delivery paper deflecting plate
Delivery assembly
Fixing assembly
Photo-sensitive drum
Multifeeder
PS10
PS47
PS22
PS23
Feeding assembly
PS52
Copy tray
PS12
PS15
Holding try assembly
PS14
Holding try feeding assembly
PS8
PS33
PS17
PS9
PS24
PS39
PS34
PS35
PS49
PS37
PS31
PS32
PS36
Left deck
Right deck
PS27
PS25
PS26
Cassette 3
PS30
PS28
PS29
Cassette 4

Figure 5-101

II. CASSETTE PICK-UP

A. Pick-Up Operation

Figure 5-201 is a diagram showing the cassette pick-up control system.

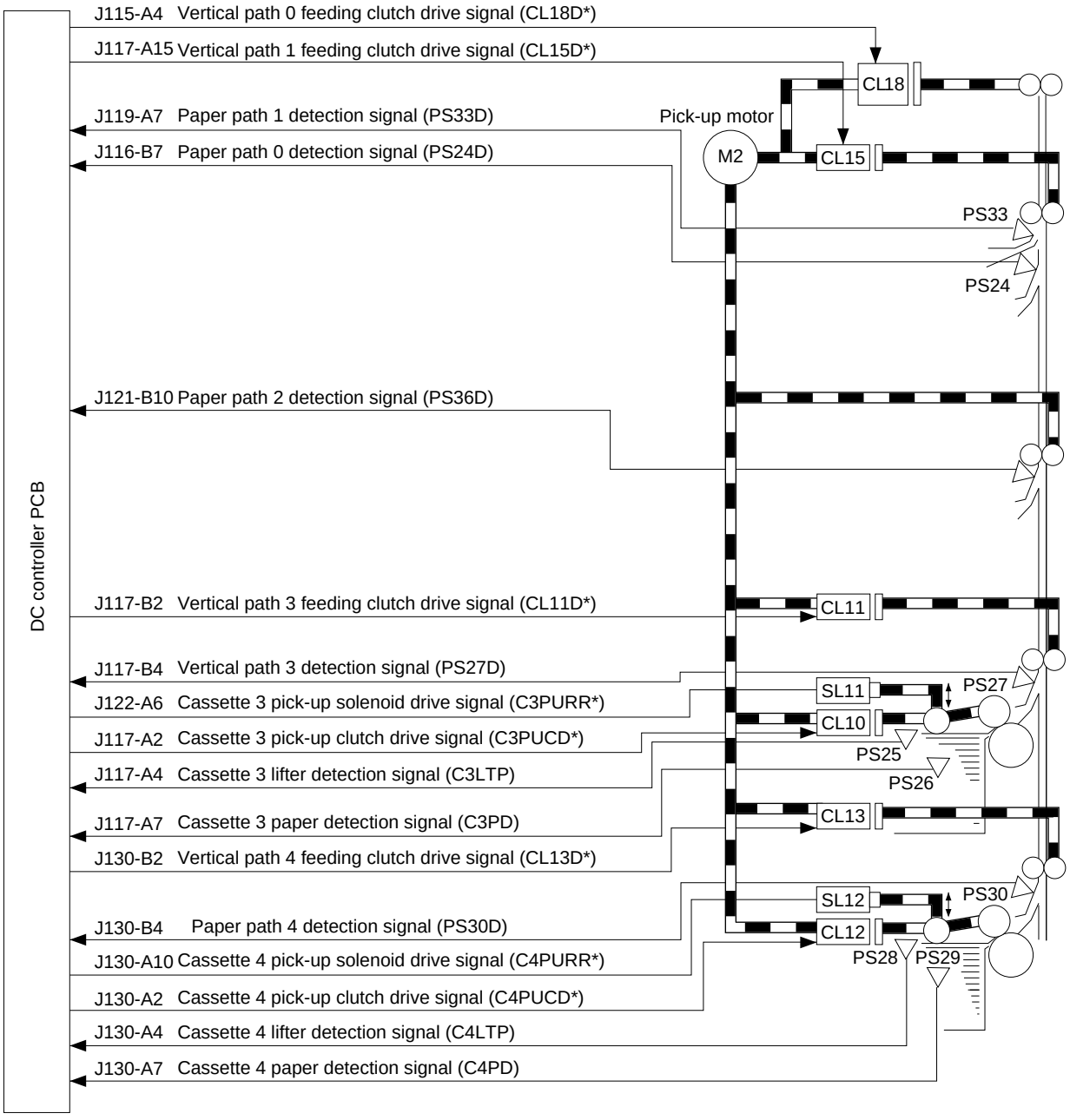

Figure 5-201

COPYRIGHT © 1997 CANON INC.
CANON NP6560/NP6360/NP6260 REV. 0 NOV. 1997 PRINTED IN JAPAN (IMPRIME AU JAPON)

1. Outline

The copy paper inside the cassette is held up by a lifter so that it remains in contact with the pick-up roller.

When the pick-up clutch (CL10/CL12) turns on, the pick-up roller starts to rotate to feed copy paper. Thereafter, the pick-up roller releasing solenoid (SL11/SL12) turns on and, as a result, the pick-up roller moves away from the surface of the paper.

The feeding roller and the separation roller serve to make sure that only one sheet of copy paper is moved to the feeding path; then, the copy paper is forwarded to the registration roller by the vertical path roller.

The registration roller serves to make sure that the leading edge of the copy paper matches the leading edge of the image on the photosensitive drum.

2. Sequence of Pick-Up Operations

• Cassette 3, A4, 2 Copies, Continuous

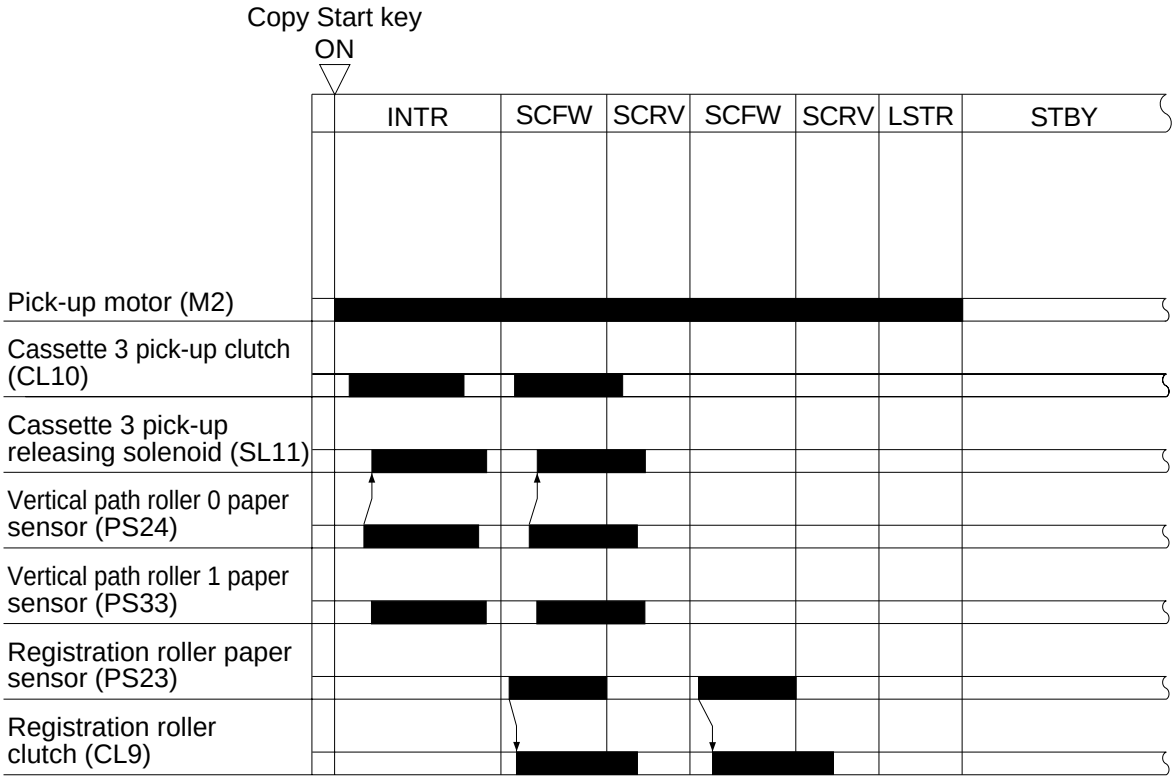

Figure 5-202

B. Cassette Lifter Operation

When the cassette is slid into the copier, pick-up roller moves down, and the light-blocking plate moves away from the lifter position sensor (PS31, PS34, PS25, PS28), turning on the lifter motor (M14, M15) and moving the lifter to move up. The lifter motor stops where the lifter position sensor (PS25, PS28) can detect the top surface of the stack of copy paper on the lifter.

When the cassette runs out of copy paper and the paper detecting lever moves away from the paper sensor (PS26, PS29), the DC controller PCB indicates the Add Paper message on the control panel.

When you hold the grip of the cassette, the light-blocking plate moves away from the cassette open/closed sensor 3/4 (PS50,PS51), and the condition causes the lifter to move down.

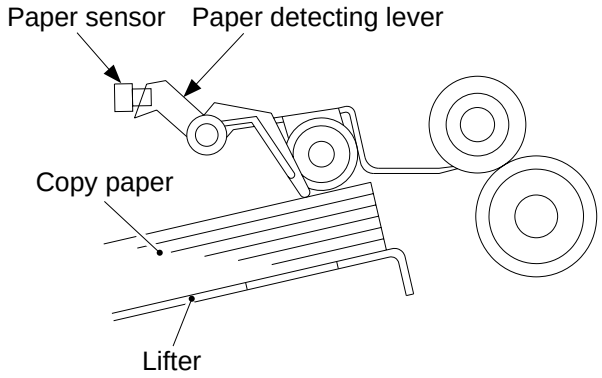

Figure 5-203 (paper present)

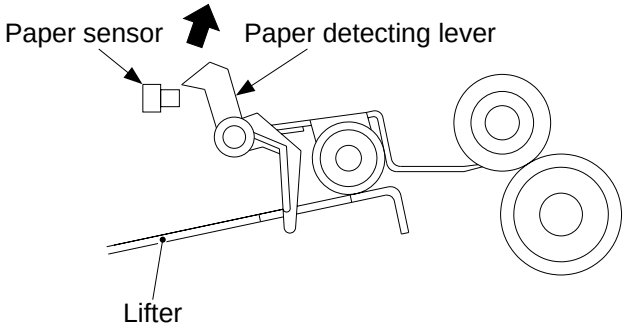

Figure 5-204 (paper absent)

 COPYRIGHT © 1997 CANON INC. CANON NP6560/NP6360/NP6260 REV. 0 NOV. 1997 PRINTED IN JAPAN (IMPRIME AU JAPON)

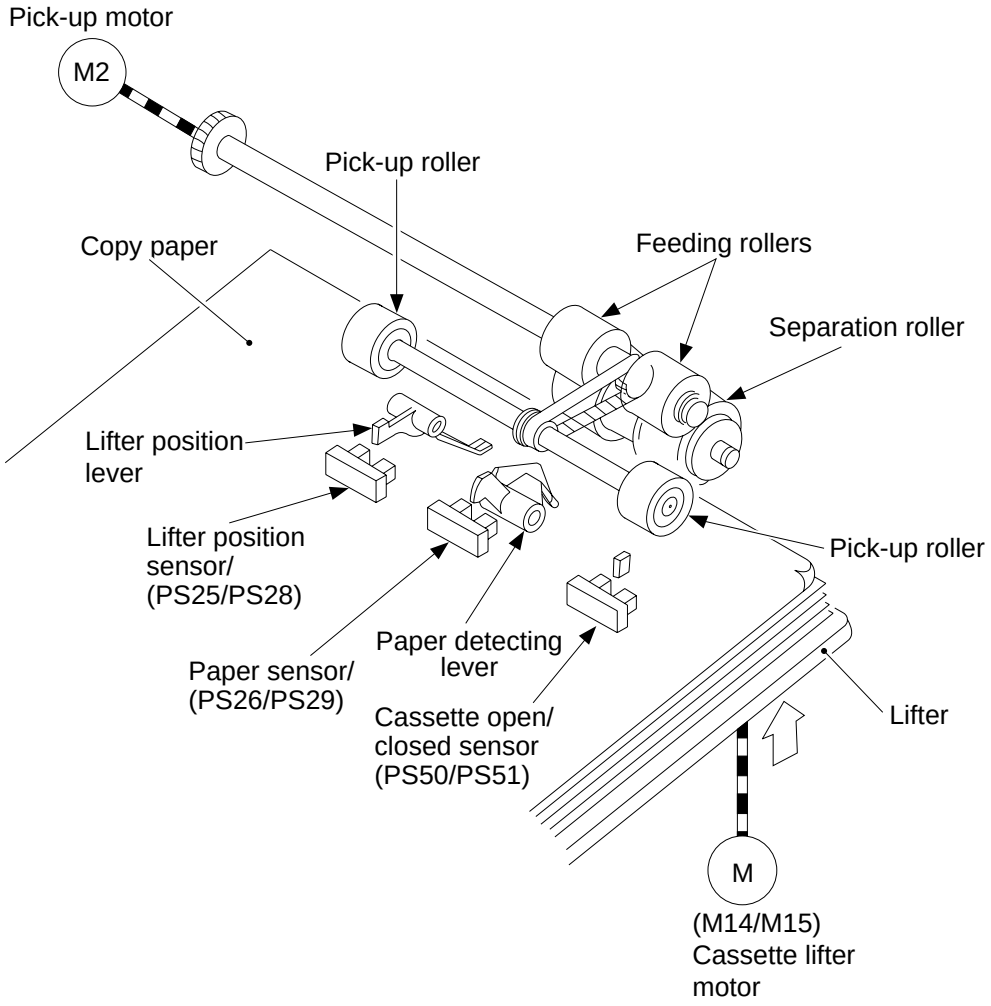
Pick-up motor
M2
Pick-up roller
Copy paper
Feeding rollers
Separation roller
Lifter position lever
Lifter position sensor/ (PS25/PS28)
Pick-up roller
Paper detecting lever
Paper sensor/ (PS26/PS29)
Cassette open/ closed sensor (PS50/PS51)
Lifter
M
(M14/M15) Cassette lifter motor

Figure 5-205

C. Identifying the Size of Copy Paper in the Cassette (Cassette 4 only)

1. Outline

The size of the copy paper inside the cassette is identified by the paper size sensor mounted to the rear of the cassette holder.

When the cassette is slid into the cassette holder, the paper size sensor is pushed by the boss on the cassette and turns on, thereby enabling identification of the width and the length of the copy paper.

The copier uses combinations of widths and lengths of copy paper to find out the size of the copy paper, and determines where to reverse the scanner and how to control the blanking exposure mechanism.

The boss used to push the paper size sensor operates in conjunction with the guide plate inside the cassette, and its position is set when the guide plate is set to suit the copy paper.

2. Identifying the Size of Copy Paper

The copy paper length sensor consists of two photointerrupters, and the length is identified with reference to combinations of the outputs of these two sensors.

The paper width sensor, on the other hand, is a variable resistor, and the resistance output of the sensor is used to identify the width of paper.

Figure 5-206 shows the relationship between paper widths and variable resistor outputs. You must register the correct basic settings whenever you have replaced the DC controller PCB or the sensor so that the relationship may be maintained. (See Chapter 11 “Registering the Paper Width Basic Value.”)

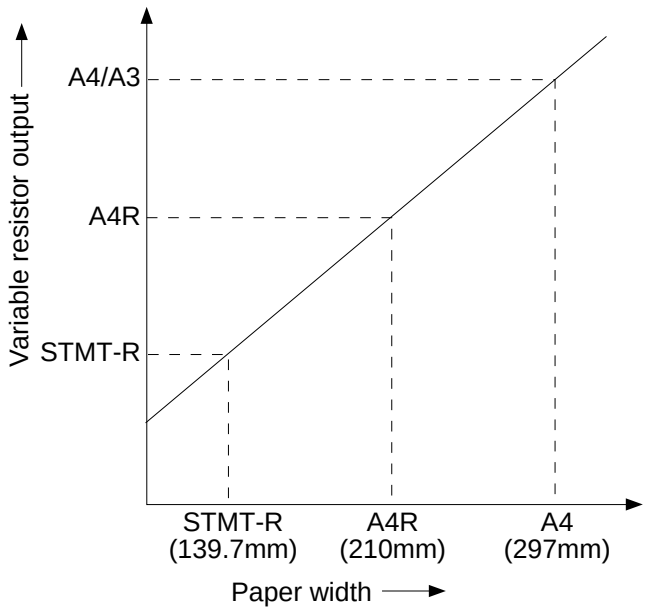

Figure 5-206

COPYRIGHT © 1997 CANON INC.

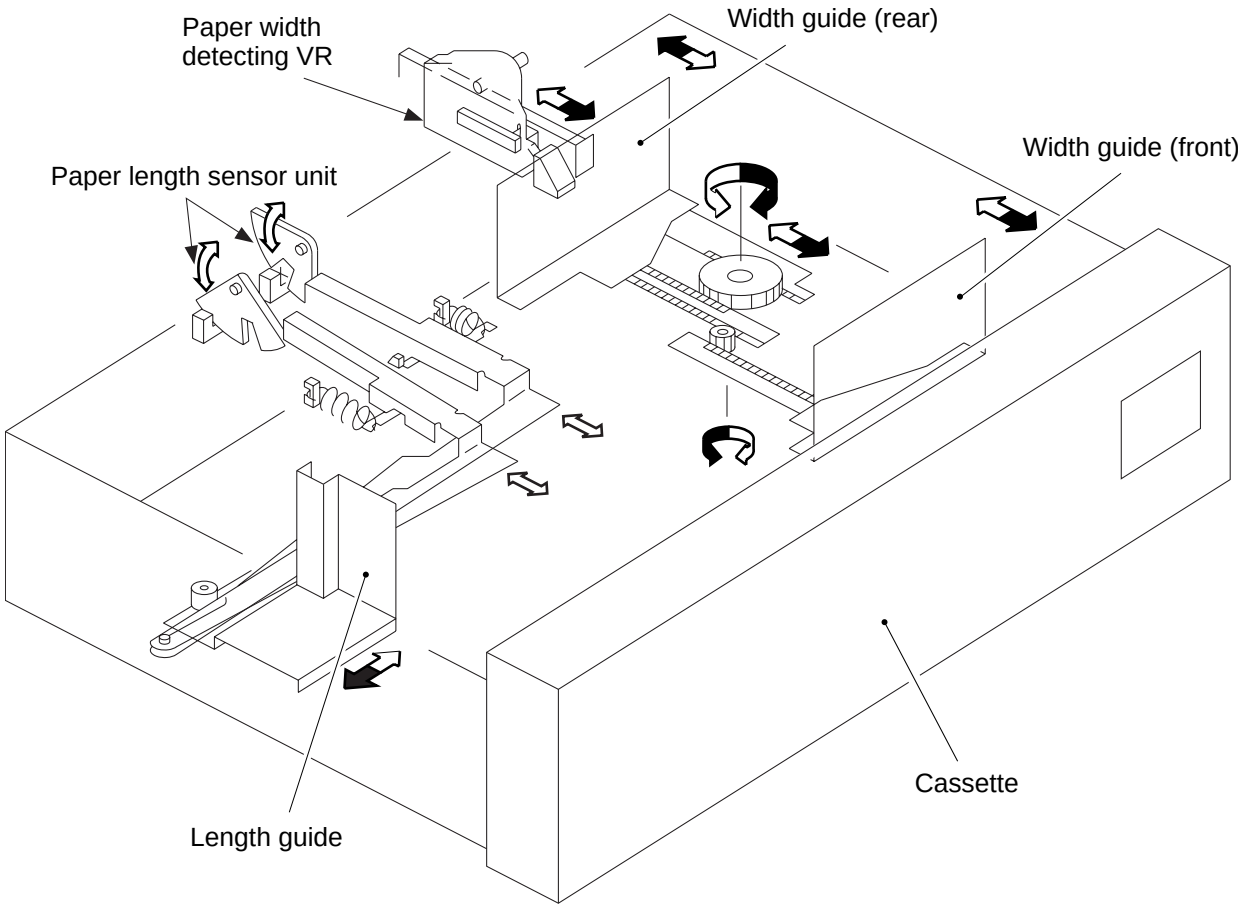
Paper width
detecting VR
Width guide (rear)
Width guide (front)
Paper length sensor unit
Cassette
Length guide

Figure 5-207

3. Markings on the Width Guide Rail

The width guide rail found inside the cassette has paper size reference holes which are identified by markings (A through M) as shown in Table 5-201.

Refer to the markings when skew pick-up occurs (as reported by the user) to determine whether the correct paper width is set. (This information is not disclosed to the user.)

Markings	Paper	Remarks
A	STMT-R	
B	A5-R	
C	B5-R	
D	KLGL-R	
E	GLTR-R	
F	G-LGL	G3
G	A4-R	
H	LGL/LTR-R	
I	FLSC	G2
J	B4/B5	
K	G-LTR	G1
L	279.4 × 431.8mm (11" × 17")/LTR	G5
M	A3/A4	

Table 5-201

 COPYRIGHT © 1997 CANON INC. CANON NP6560/NP6360/NP6260 REV. 0 NOV. 1997 PRINTED IN JAPAN (IMPRIME AU JAPON)

4. Paper Size

The microprocessor on the DC controller PCB identifies the size of paper with reference to inputs of paper length and according to the data shown in Table 5-202.

The paper sizes in Table 5-203 are specified in service mode selected in relation to each group.

(The asterisk indicates the paper size specified at time of shipment.)

Paper length sensor / Paper width sensor / Signal / ON/OFF	PS102/PS104	PS101/PS103	PS102/PS104	PS101/PS103	PS102/PS104	PS101/PS103	PS102/PS104	PS101/PS103
Signal	SZ 2	SZ 1	SZ 2	SZ 1	SZ 2	SZ 1	SZ 2	SZ 1
ON/OFF	0	0	0	1	1	0	1	1
288.5	A4		—		A3		—	
273.7	(G4)		—		279.4 × 431.8 (11" × 17")		—	
261.8	(G1)		—		—		—	
238.0	B5		—		B4		—	
212.9	STMT		LTRR		LGL		(G2)	
206.6	A5		A4R		—		(G3)	
196.6	G-LTRR		—		—			
186.0	K-LGLR		—		—		—	
165.2	B5R		—		—		—	
144.1	A5R		—		—		—	
	STMTR		—		—		—	

Table 5-202

Group		Size
G1	*	G-LTR K-LGL
G2	*	FOOLSCAP OFFICIO E-OFFI A-LGL A-OFFI
G3	*	G-LGL FOLIO AUS-FLS
G5	*	LTR A-LTR

Table 5-203

COPYRIGHT © 1997 CANON INC.

• Papers Used for the Machine

Paper	Notation	Size (vertical x horizontal in mm)
A3	A3	(297±1) × (420±1)
A4R	A4R	(210±1) × (297±1)
A4	A4	(297±1) × (210±1)
A5	A5	(210±1) × (148.5±1)
A5R	A5R	(148.5±1) × (210±1)
B4	B4	(257±1) × (364±1)
B5R	B5R	(182±1) × (257±1)
B5	B5	(257±1) × (182±1)
11" × 17"	11 × 17	(279±1) × (432±1)
LETTER-R	LTRR	(216±1) × (297±1)
LETTER	LTR	(297±1) × (216±1)
STATEMENT	STMT	(216±1) × (139.5±1)
STATEMENT R	STMTR	(139.5±1) × (216±1)
LEGAL	LGL	(216±1) × (356±1)
KOREAN LEGAL	K-LGL	(265±1) × (190±1)
KOREAN LEGAL R	K-LGLR	(190±1) × (265±1)
FOOLSCAP	FLSC	(216±1) × (330±1)
AUSTRALIAN FOOLSCAP	A-FLS	(206±1) × (337±1)
OFICIO	OFI	(216±1) × (317±1)
ECUADORAN OFICIO	E-OFI	(220±1) × (320±1)
BOLIVIA	B-OFI OFICIO	(216±1) × (355±1)
ARGENTINE LETTER	A-LTR	(280±1) × (220±1)
ARGENTINE LETTER-R	A-LTRR	(220±1) × (280±1)
GOVERNMENT LETTER	G-LTR	(267±1) × (203±1)
GOVERNMENT LETTER-R	G-LTRR	(203±1) × (267±1)
ARGENTINE LEGAL	A-LGL	(220±1) × (340±1)
GOVERNMENT LEGAL	G-LGL	(203±1) × (330±1)
FOLIO	FOLI	(210±1) × (330±1)
ARGENTINE OFICIO	A-OFI	(220±1) × (340±1)

Table 5-204

5. Registering Paper Width Basic Value

See Chapter 11 (service mode *3*; 'C4-STMTR' through 'MF-A4' under ADJUST).

 COPYRIGHT © 1997 CANON INC. CANON NP6560/NP6360/NP6260 REV. 0 NOV. 1997 PRINTED IN JAPAN (IMPRIME AU JAPON)

III. FRONT PAPER DECK ASSEMBLY

A. Outline

The paper deck controls the operation of each load according to the signals from the DC controller PCB to execute pick-up/feeding operation.

The loads related to pick-up/feeding and lifter are driven by the pick-up motor.

The service person is expected to register the new deck paper size in service mode whenever the deck size has been changed.

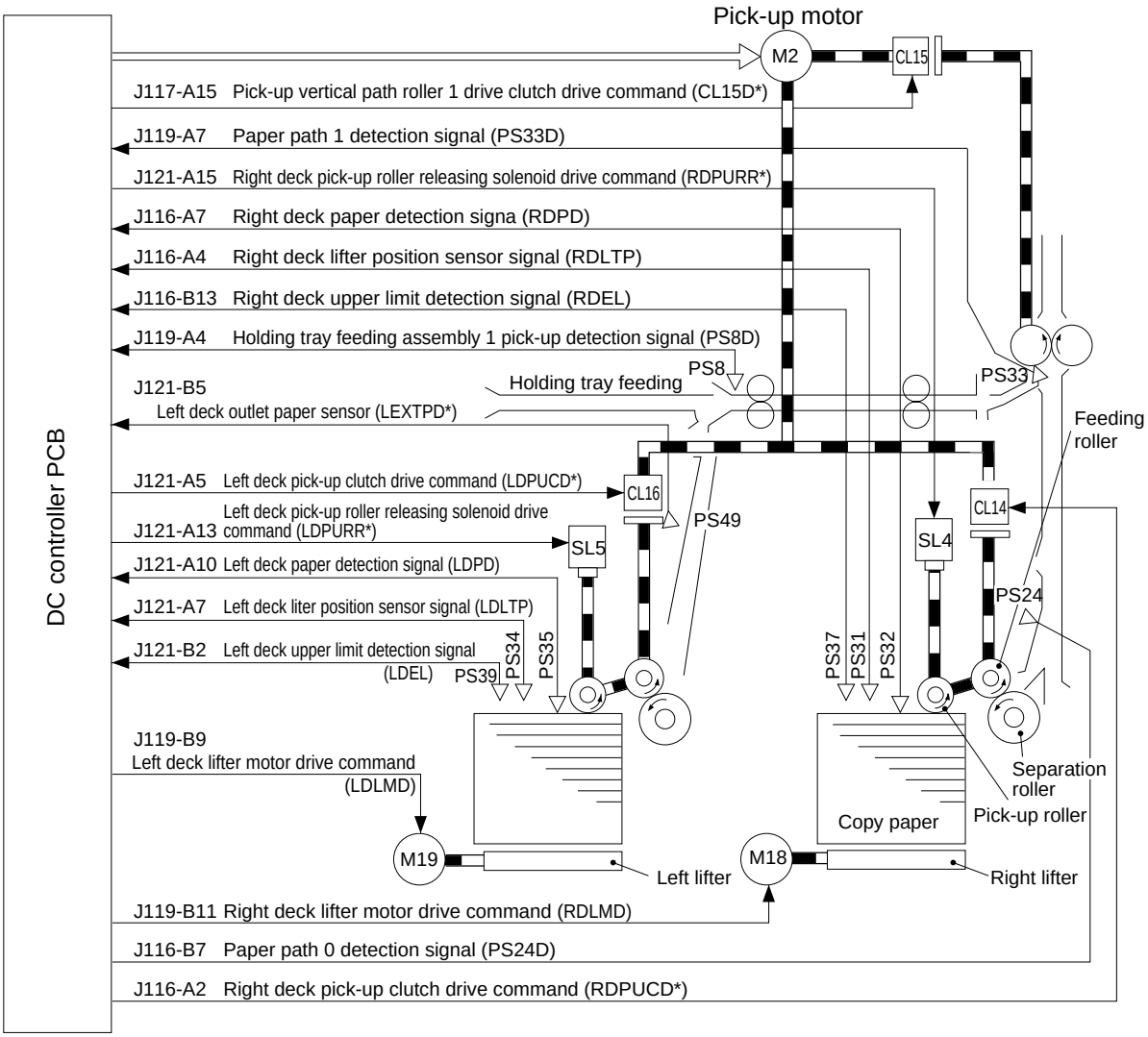

Figure 5-301

1. Pick-Up Operation

The copy paper inside the deck is held up by a lifter so that it remains in contact with the pick-up roller.

When the deck pick-up clutch (CL14/CL16) turns on, the pick-up roller starts to rotate to feed copy paper. Thereafter, the deck pick-up roller releasing solenoid (SL4/SL5) turns on so that the pick-up roller moves away from the surface of the paper.

The feeding roller and the separation roller make sure that only one sheet of copy paper is fed to the feeding path; the copy paper is forwarded to the registration roller by the work of the vertical path roller.

The registration roller controls the copy paper so that its leading edge matches the leading edge of the image on the photosensitive drum.

COPYRIGHT © 1997 CANON INC.
CANON NP6560/NP6360/NP6260 REV. 0 NOV. 1997 PRINTED IN JAPAN (IMPRIME AU JAPON)

2. Sequence of Pick-Up Operations

a. Right Deck, A4, 2 Copies

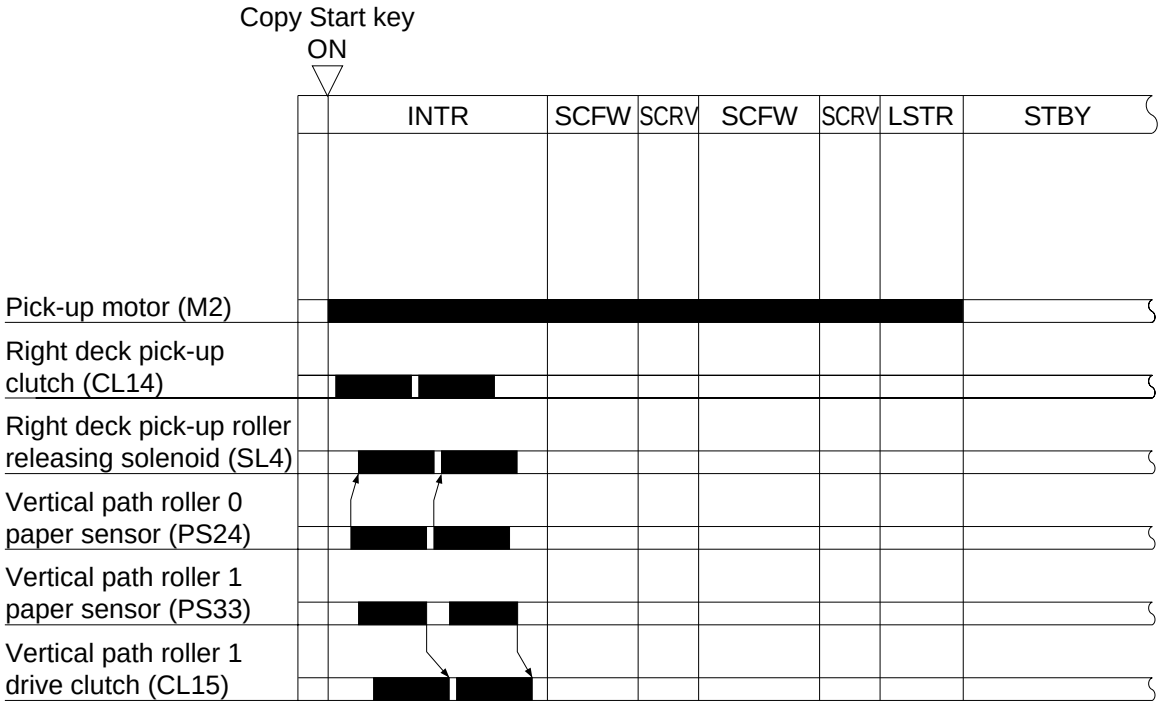

Figure 5-302

b. Left Deck, A4, 2 Copies

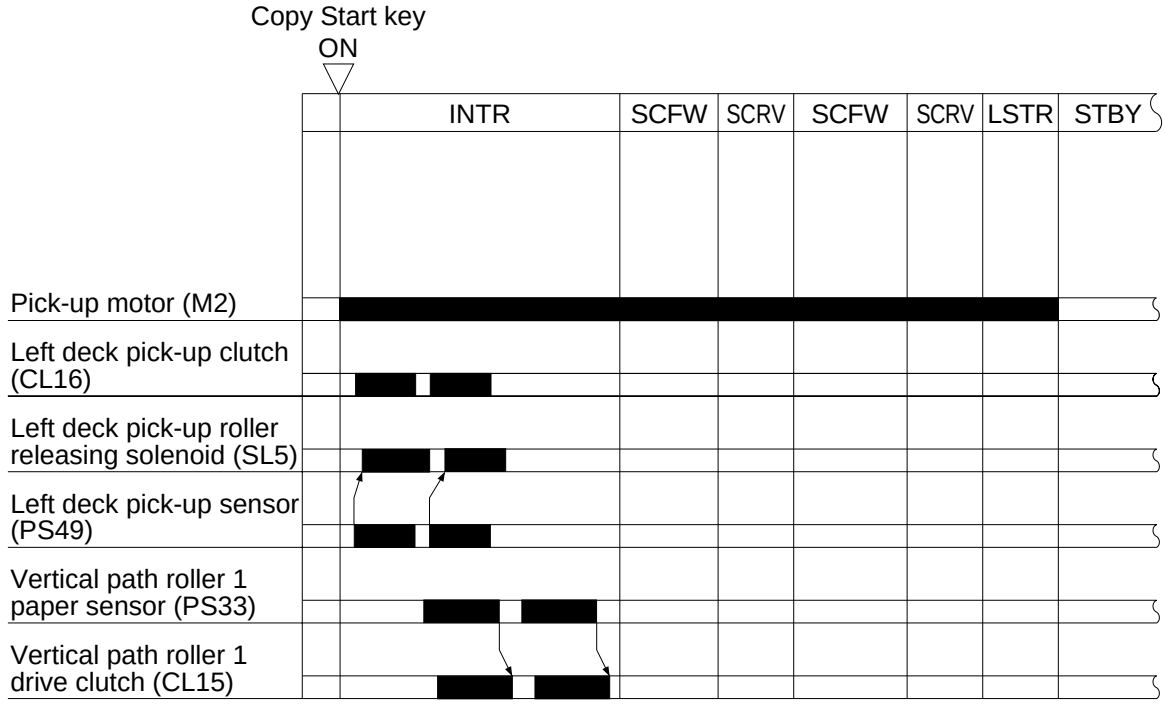

Figure 5-303

B. Lifter Operation

1. Operation

When the deck is slid into the pedestal, the deck open/closed sensor (PS38/PS40) turns on and, at the same time, the pick-up roller moves down and the light-blocking plate moves away from the deck lifter position sensor (PS31/PS34). This condition turns on the lifter drive motor (M18/M19), and lets the drive of the pick-up motor (M2) to the take-up shaft; the lifter then starts to move up.

The lifter stops where the deck lifter position sensor (PS31/PS34) can check the top surface of the copy paper.

The deck lifter limit sensor (PS37/PS39) is provided in consideration of such cases as when the lifter fails to stop moving up after the sensor arm has blocked the deck lifter position sensor (PS31/PS34).

Upon reaching the limit, the lifter is held up by the work of a gear.

When the deck is detached from the copier, the cable take-up gear disengages from the gear, and the lifter starts to move down on its own weight.

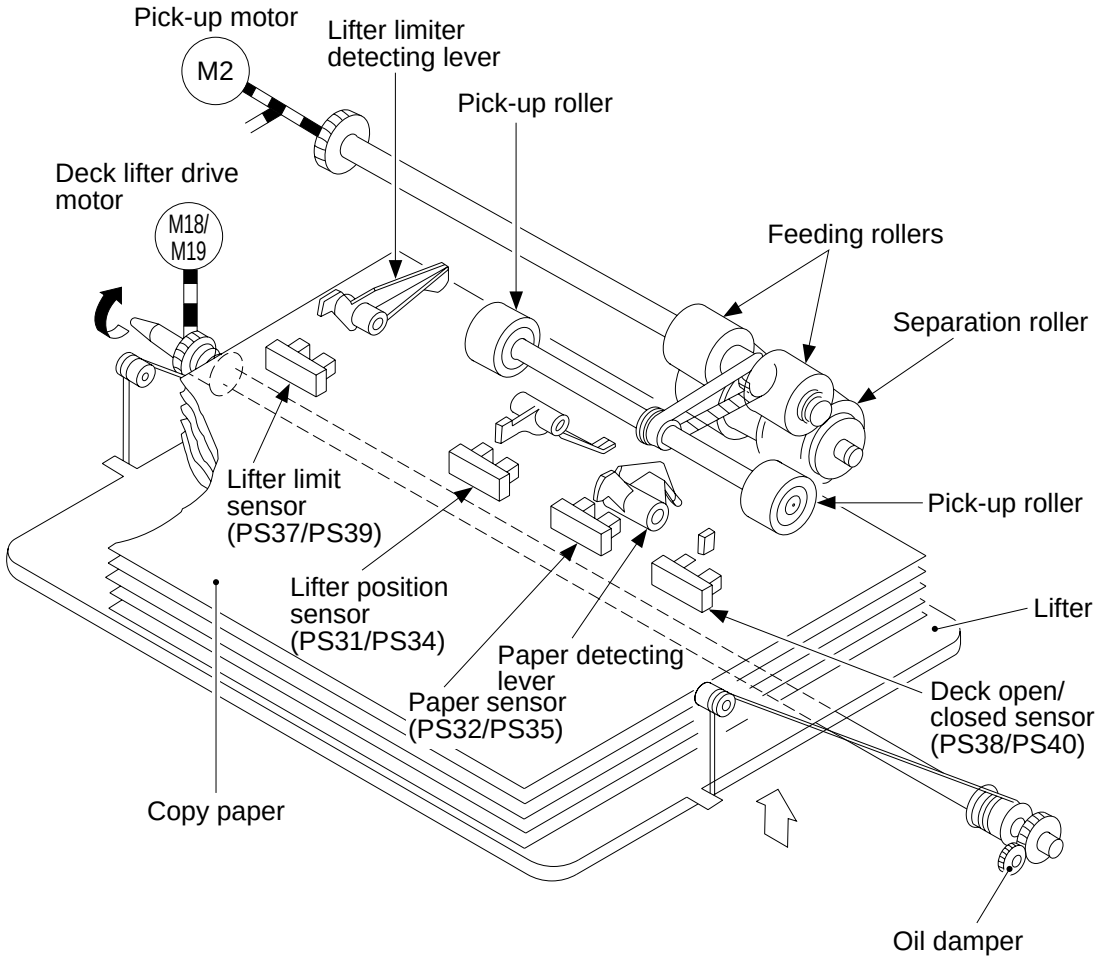

Figure 5-304

 COPYRIGHT © 1997 CANON INC. CANON NP6560/NP6360/NP6260 REV. 0 NOV. 1997 PRINTED IN JAPAN (IMPRIME AU JAPON)

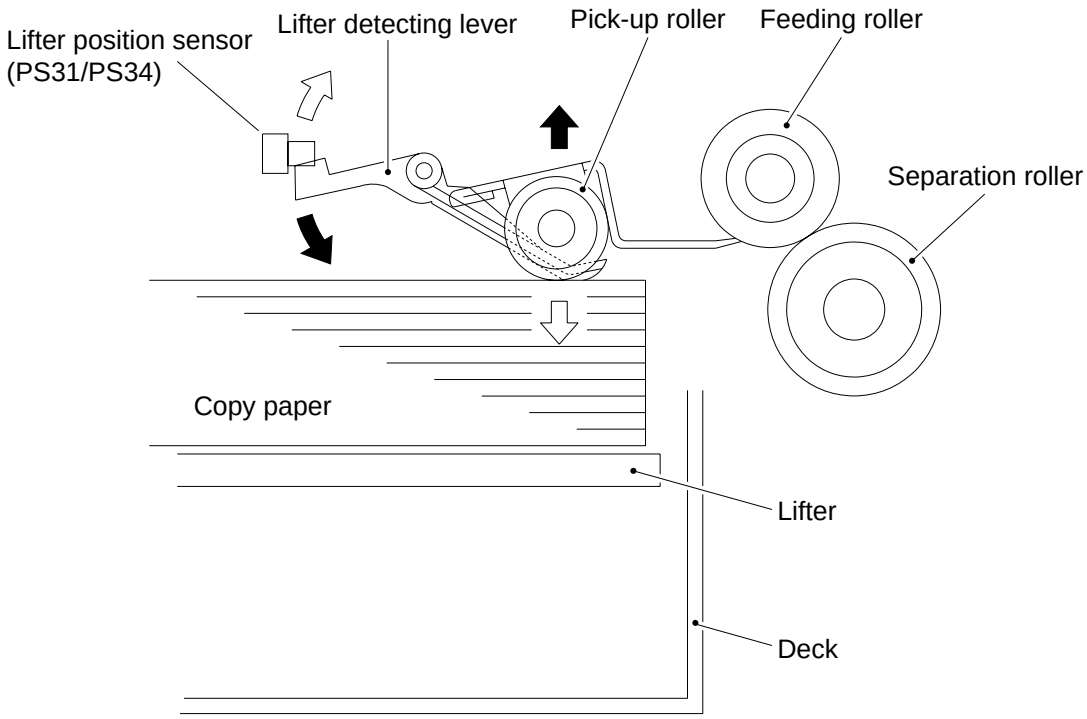

⬅ : Pick-up roller moves up; the light-blocking plate of the lifter detecting lever lowers to block the lifter position sensor (PS31/PS34).

⇦ : Pick-up roller moves down; the light-blocking plate of the lifter detecting lever rises to leave away from the lifter position sensor (PS31/PS34).

Figure 5-305

COPYRIGHT © 1997 CANON INC.

2. Deck Limit Detection

When the lifter reaches the lifter position sensor (PS31/PS34), the deck lifter position signal is sent to the microprocessor on the DC controller, causing the microprocessor to stop the deck lifter drive motor (M18/M19).

The deck limit sensor (PS37/PS39) is provided in consideration of such cases as when the motor fails to stop for some reason.

When the deck limit sensor (PS37/PS39) detects the deck, the deck limit signal is sent to the limit detection circuit on the DC controller PCB. In response, the limit detection circuit cuts off the deck drive signal coming from the microprocessor. (See Figure 5-306.)

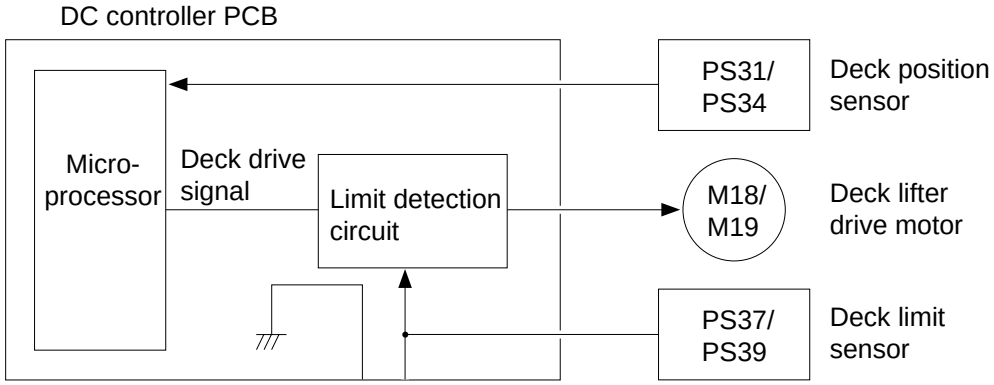

Figure 5-306 Deck Limit Detection

 COPYRIGHT © 1997 CANON INC. CANON NP6560/NP6360/NP6260 REV. 0 NOV. 1997 PRINTED IN JAPAN (IMPRIME AU JAPON)

C. Detecting the Presence/Absence of Paper in the Deck

1. Detecting the Presence/Absence of Paper in the Deck

The presence/absence of paper inside the deck is detected as follows by the deck paper sensor (PS32/PS35).

When the deck runs out of paper, the paper detecting lever leaves the paper sensor (PS32/PS35), causing the DC controller PCB to assume the absence of paper.

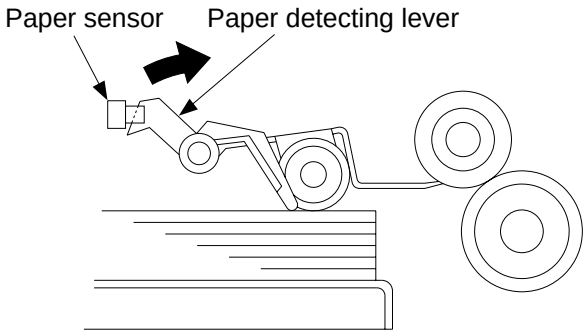

Figure 5-307 (paper present)

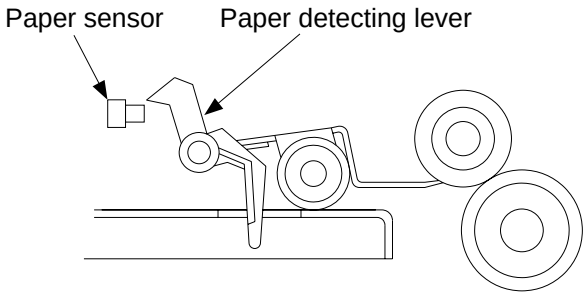

Figure 5-308 (paper absent)

2. Detecting the Size of the Deck

The service person is expected to enter the deck size.

D. High-Speed Pick-Up

When pick-up occurs from the right deck, the pick-up motor (M2) rotates at a high speed when picking up the first sheet so as to save on the first copy time; the period of high-speed rotation is as follows:

- After the first sheet has reached the pick-up vertical path sensor 0 (PS24) and until it arches against the registration roller.

The rate of high-speed rotation is about twice the speed of normal rotation.

COPYRIGHT © 1997 CANON INC.

IV. MULTIFEEDER

A. Pick-Up Operation

The presence/absence of paper in the multifeeder is detected by the multifeeder paper sensor (PS22).

When the multifeeder is selected as the source of paper and the Copy Start key is pressed with paper in the multifeeder, the multifeeder pick-up clutch (CL7) and multifeeder pick-up relay solenoid (SL15) turn on to rotate the pick-up roller, feeding roller, separation roller, and holding roller.

Then, the multifeeder solenoid (SL10) turns on in pick-up direction to lower the rotating pick-up roller to the copy paper, moving the topmost sheet of paper into the machine.

Each time a single sheet of paper has been picked up, the multifeeder pick-up roller solenoid (SL10) turns on in release direction to move the pick-up roller away from the copy paper; then, the multifeeder pick-up relay solenoid (SL15) turns off to move the paper with the registration roller and the holding roller.

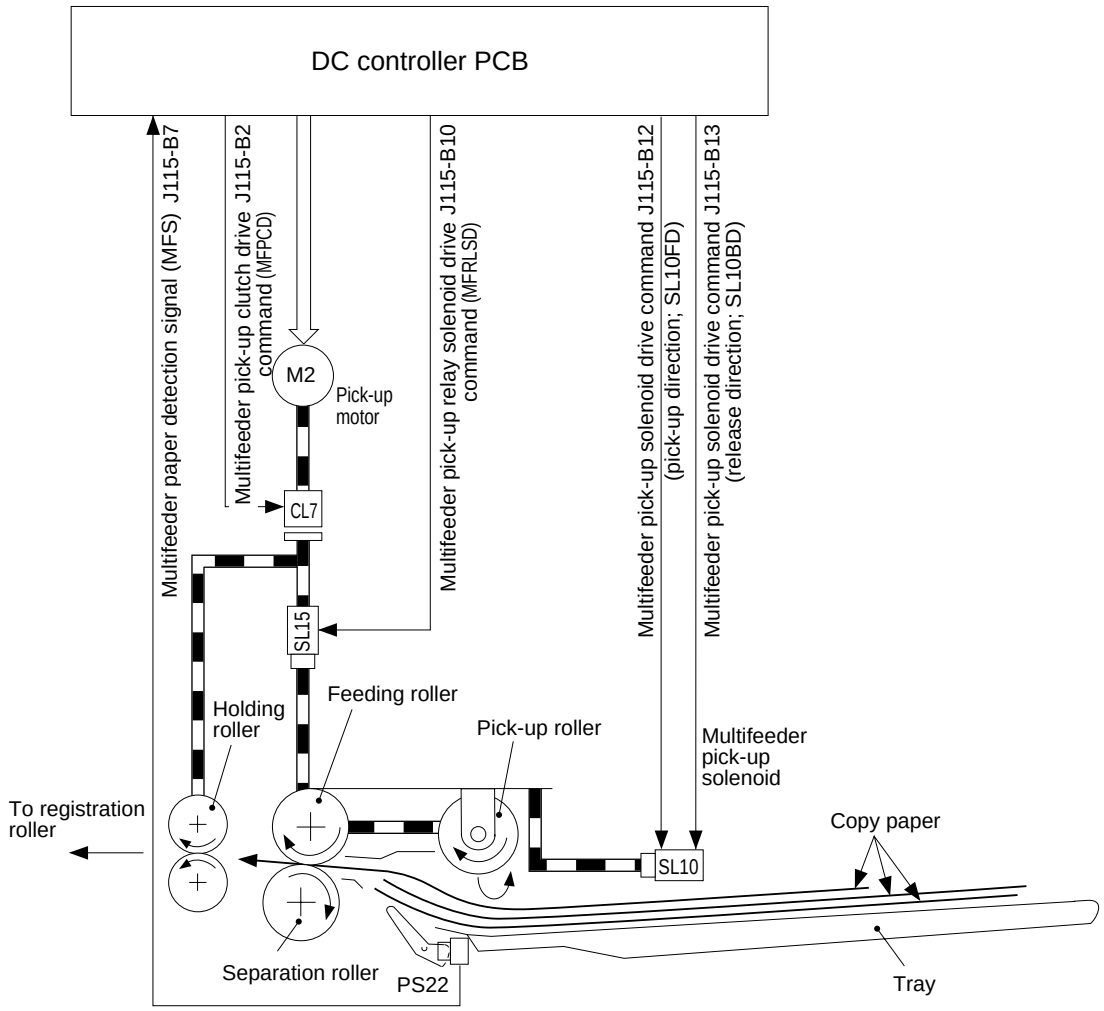

Figure 5-401

 COPYRIGHT © 1997 CANON INC. CANON NP6560/NP6360/NP6260 REV. 0 NOV. 1997 PRINTED IN JAPAN (IMPRIME AU JAPON)

B. Identifying the Size of Paper in the Multifeeder

When the user adjusts the slide guide of the multifeeder, the output of the variable resistor (SVR1) operating in conjunction with the slide guide is sent to the DC controller PCB, enabling the detection of the width of the copy paper.

The data on the width of the copy paper is used to determine how to control the lens and the blanking exposure mechanisms. The length of paper when the multifeeder is selected is identified in reference to the time during which the pre-registration paper sensor (PS23) remains on.

You must enter the paper with basic value whenever you have replaced the variable resistor. (See Chapter 11 “Registering the Paper Width Basic Value.”)

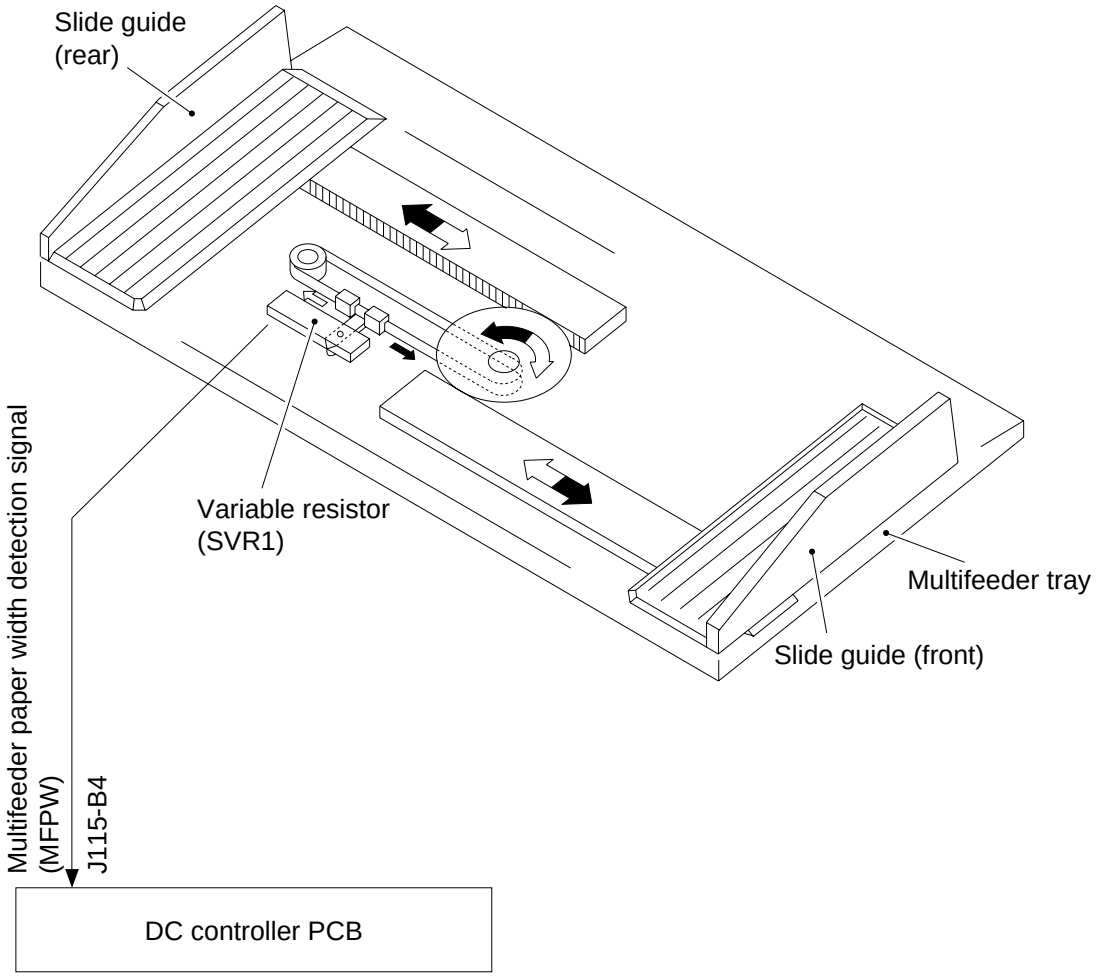

Figure 5-402

C. Sequence of Pick-Up Operations (multifeeder)

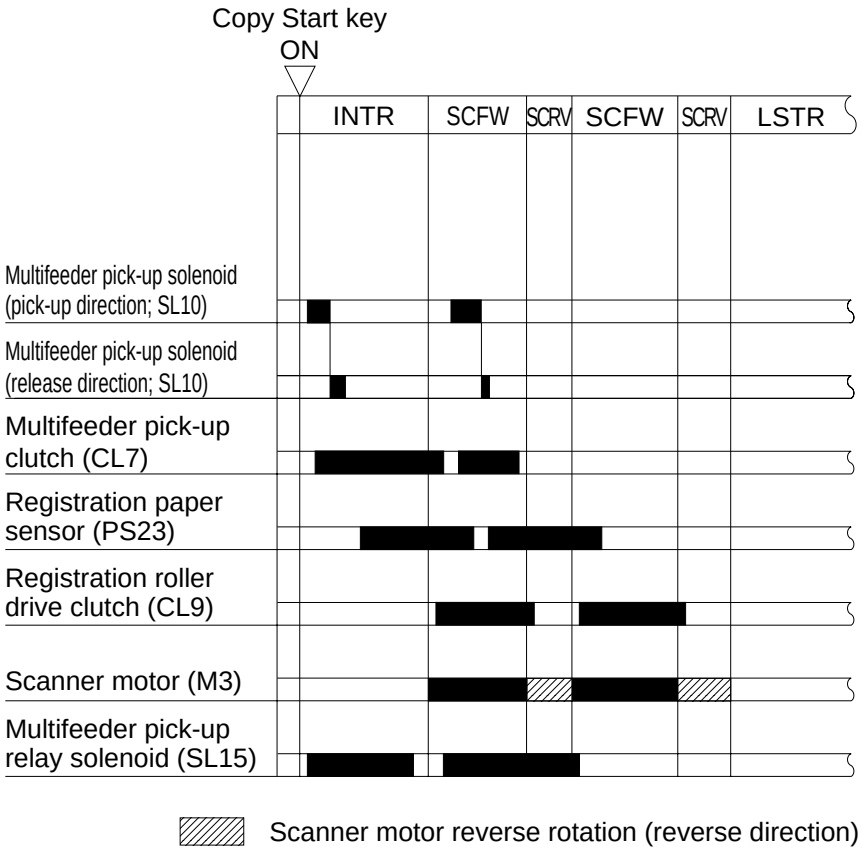

Figure 5-403

 COPYRIGHT © 1997 CANON INC. CANON NP6560/NP6360/NP6260 REV. 0 NOV. 1997 PRINTED IN JAPAN (IMPRIME AU JAPON)

V. CONTROLLING THE REGISTRATION CLUTCH

The registration clutch controls copy paper so that it matches the image on the photosensitive drum at a specific position.

In non-binding mode, the registration clutch exerts control so that the leading edge of copy paper matches the leading edge of the image.

In binding mode, control will be as shown in Figure 5-501 so as to create a leading edge width on copies.

Selected mode		Copy paper control timing	Shift (mm)	Copy paper on copy tray
One-sided original to One-sided copy		B	0 to 20 mm; the diagrams assume a shift set to 5 mm.	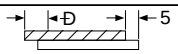
One-sided original to Two-sided copy	Copying on 1st side	A		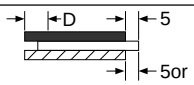
	Copying on 2nd side	B		
Two-sided original to Two-sided copy	Copying on 1st side	A		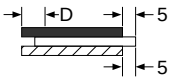
	Copying on 2nd side	B		
Two-sided original to One-sided copy	Copying on 1st side	B		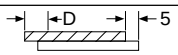
	Copying on 2nd side	B		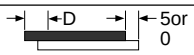
Page separation (one-sided copying)	Copying on 1st side (left)	B		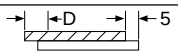
	Coping on 2nd side (right)	B		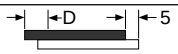
Page separation to Two-sided copy	Copying on 1st side (left)	A		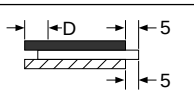
	Coping on 2nd side (right)	B		
One-sided original to Overlay copy	Copying on 1st side	B		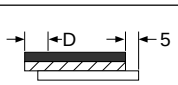
	Copying on 2nd side	B		
Two-sided original to Overlay copy	Copying on 1st side	B		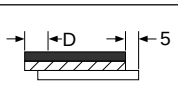
	Copying on 2nd side	B		
Page separation to Overly copying	Copying on 1st side (left)	B		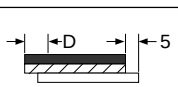
	Coping on 2nd side (right)	B		

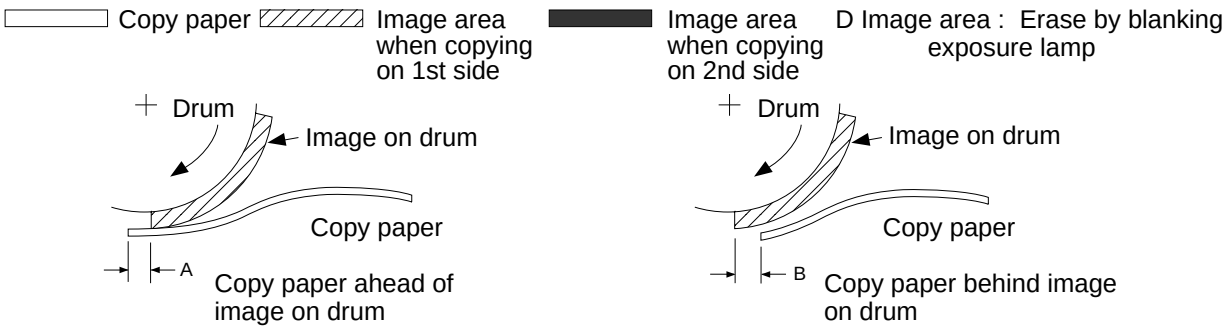

Figure 5-501

VI. MAKING TWO-SIDED/OVERLAY COPIES

A. Making Two-Sided/Overlay Copies (1st side)

When copying on the first side in two-sided/overlay mode, the delivery deflecting plate is shifted by the delivery paper deflecting solenoid (SL2) to a special feeding path.

The paper deflecting plate shifts up when the registration roler clutch (CL9) turns on.

After copying on the first side, the holding tray inlet roller (clockwise) feeds the copy paper to the holding tray.

Each time copy paper is fed to the holding tray, the holding tray swinging solenoid (SL9) and the holding tray (X, Y) motor (M8, M9) operate to assist stacking of paper. (See pp. 5-34 and -35.)

When the first sheet is stacked on the holding tray, the holding tray re-pick up roller is rotated to assist stacking. The holding tray is capable of holding as many as 50 sheets.

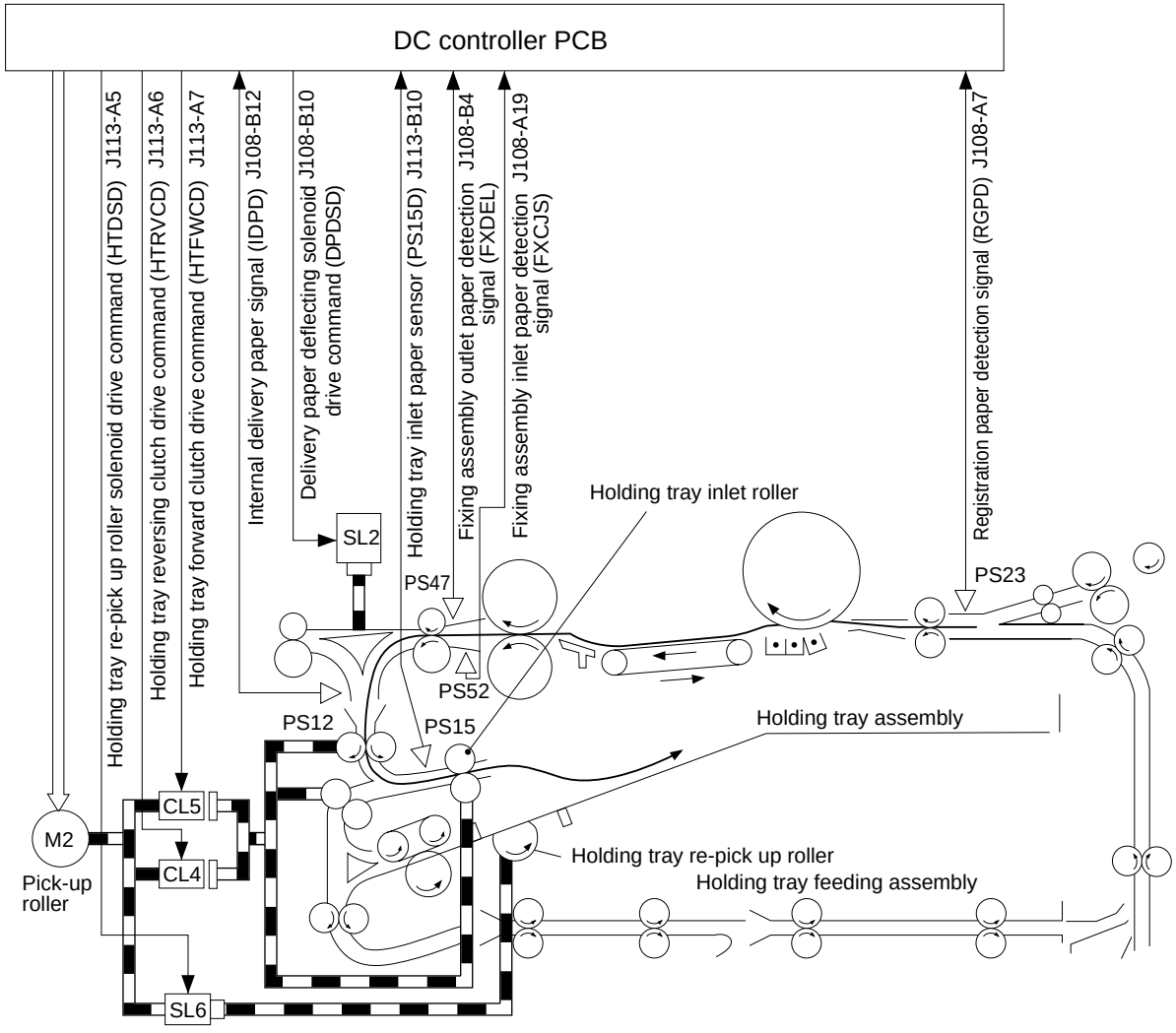

Figure 5-601

 COPYRIGHT © 1997 CANON INC. CANON NP6560/NP6360/NP6260 REV. 0 NOV. 1997 PRINTED IN JAPAN (IMPRIME AU JAPON)

1. Sequence of Operations (two-sided/overlay copies; 1st side)

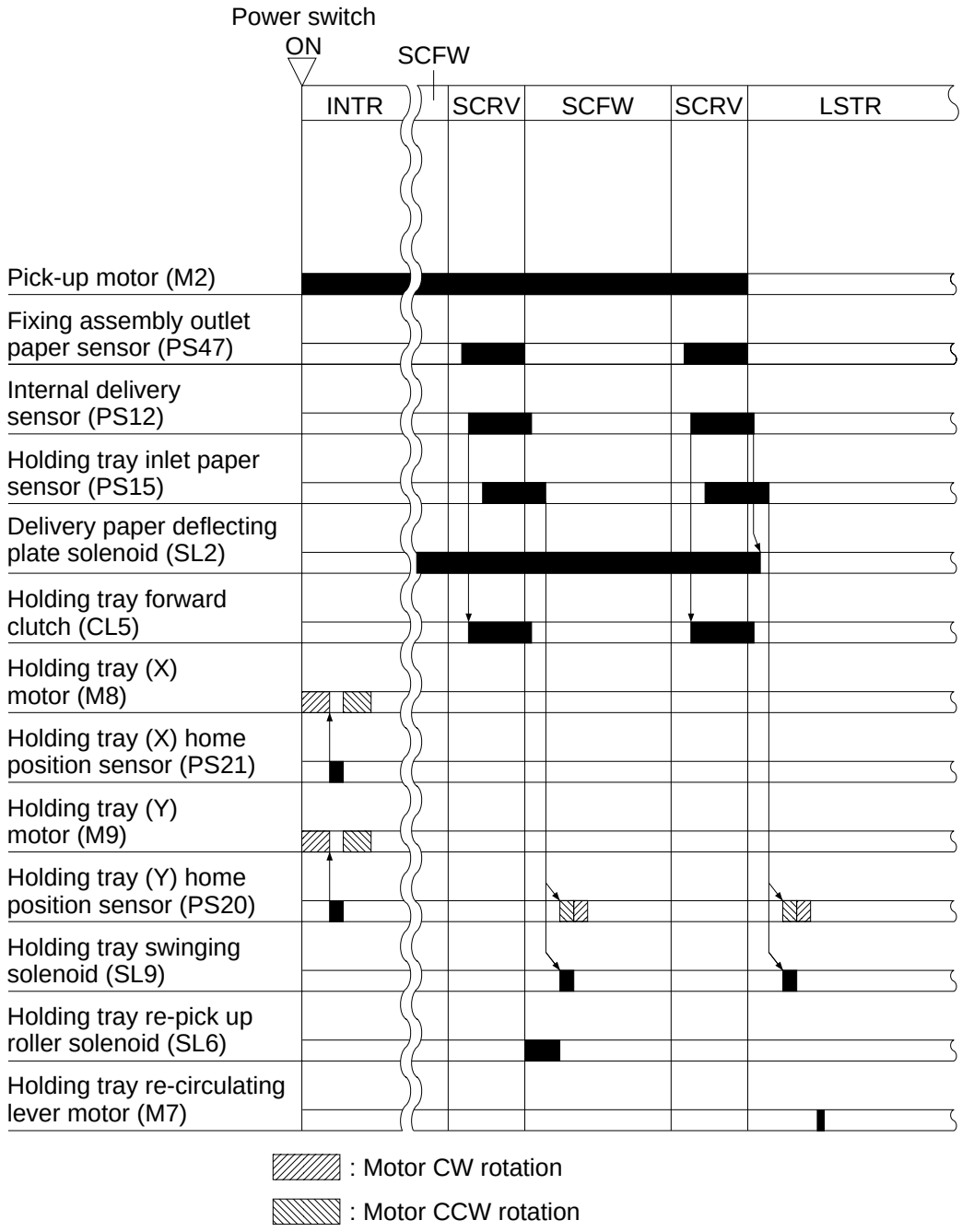

Figure 5-602

COPYRIGHT © 1997 CANON INC.

B. Making Two-Sided Copies (2nd side)

When copying on the second side of a two-sided copy, pick-up occurs on the holding tray.

When the Copy Start key is pressed, the bottommost sheet of the stack of copy paper on the holding tray is moved to the holding tray registration roller as the holding tray separation clutch (CL6) and the holding tray re-pick up roller solenoid (SL6) turn on in response to the movement of the sheet.

The leading edge of the sheet butts against the holding tray registration roller, and the sheet arches; then, it is set to the holding tray feeding assembly as soon as the holding tray registration clutch (CL3) turns on.

The copy paper is then sent to the registration roller through the holding tray feeding assembly.

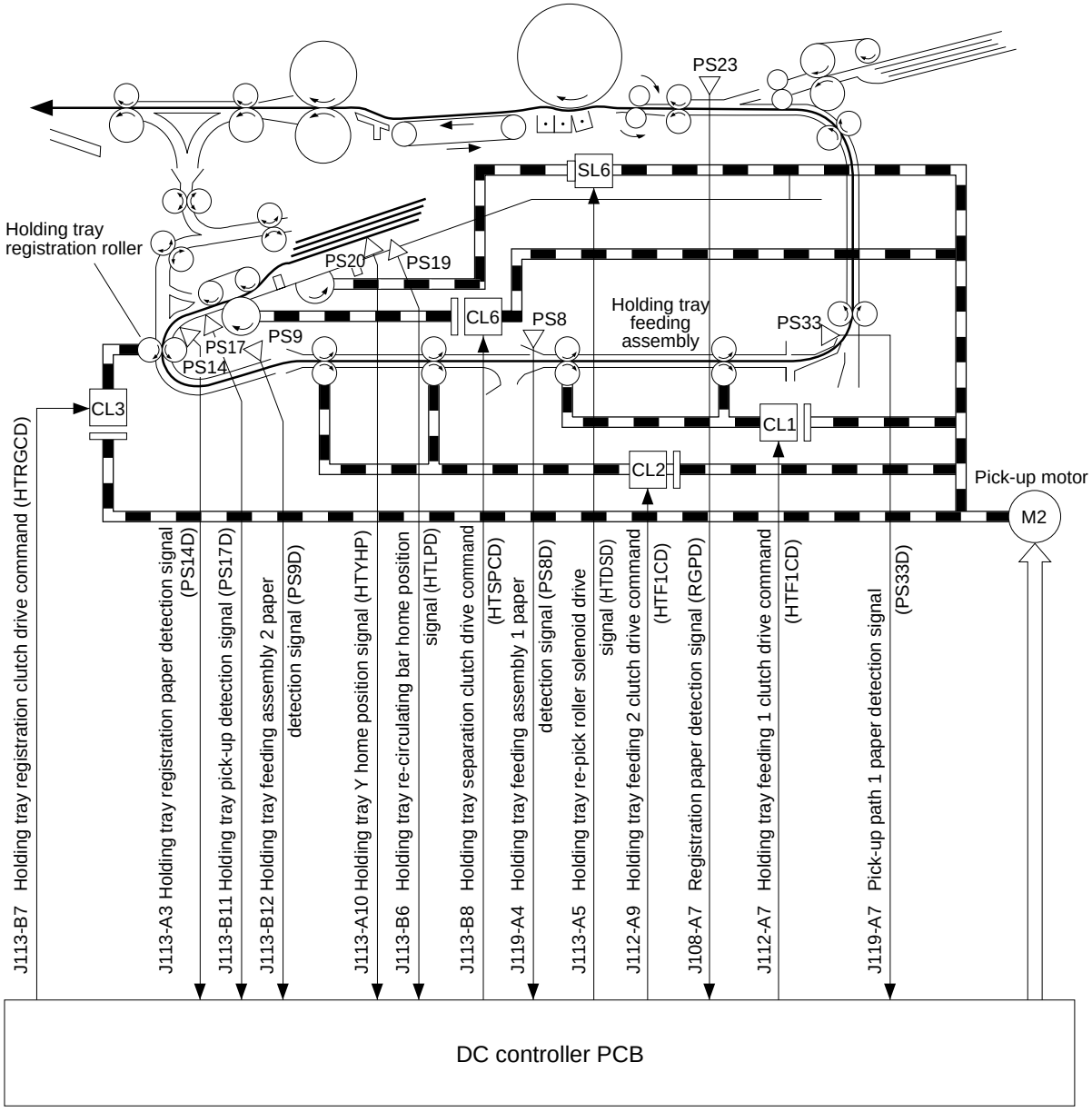

Figure 5-603

 COPYRIGHT © 1997 CANON INC.

1. Sequence of Operations (two-sided copying; 2nd side)

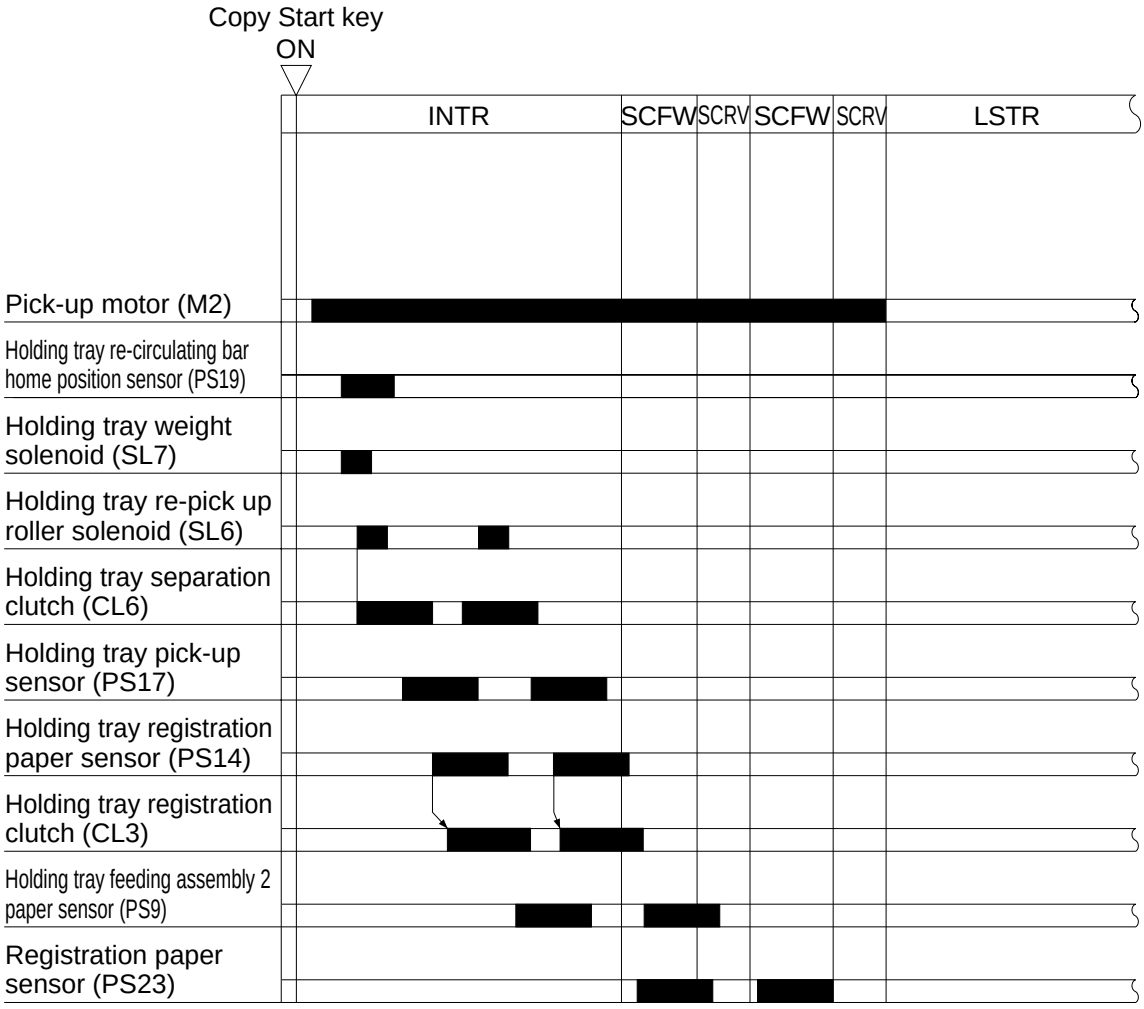

Figure 5-604

COPYRIGHT © 1997 CANON INC.

C. Making Overlay Copies (2nd side)

1. Outline

The feeding path for copying on the second side of an overlay copy is formed when the holding tray paper deflecting plate is shifted up by the holding tray paper deflecting plate solenoid (SL8).

When copying on the second side, pick-up occurs on the holding tray. The bottom-most sheet is picked up and sent to the holding tray inlet; then, the copy paper is switched back, and forwarded to the holding tray registration roller.

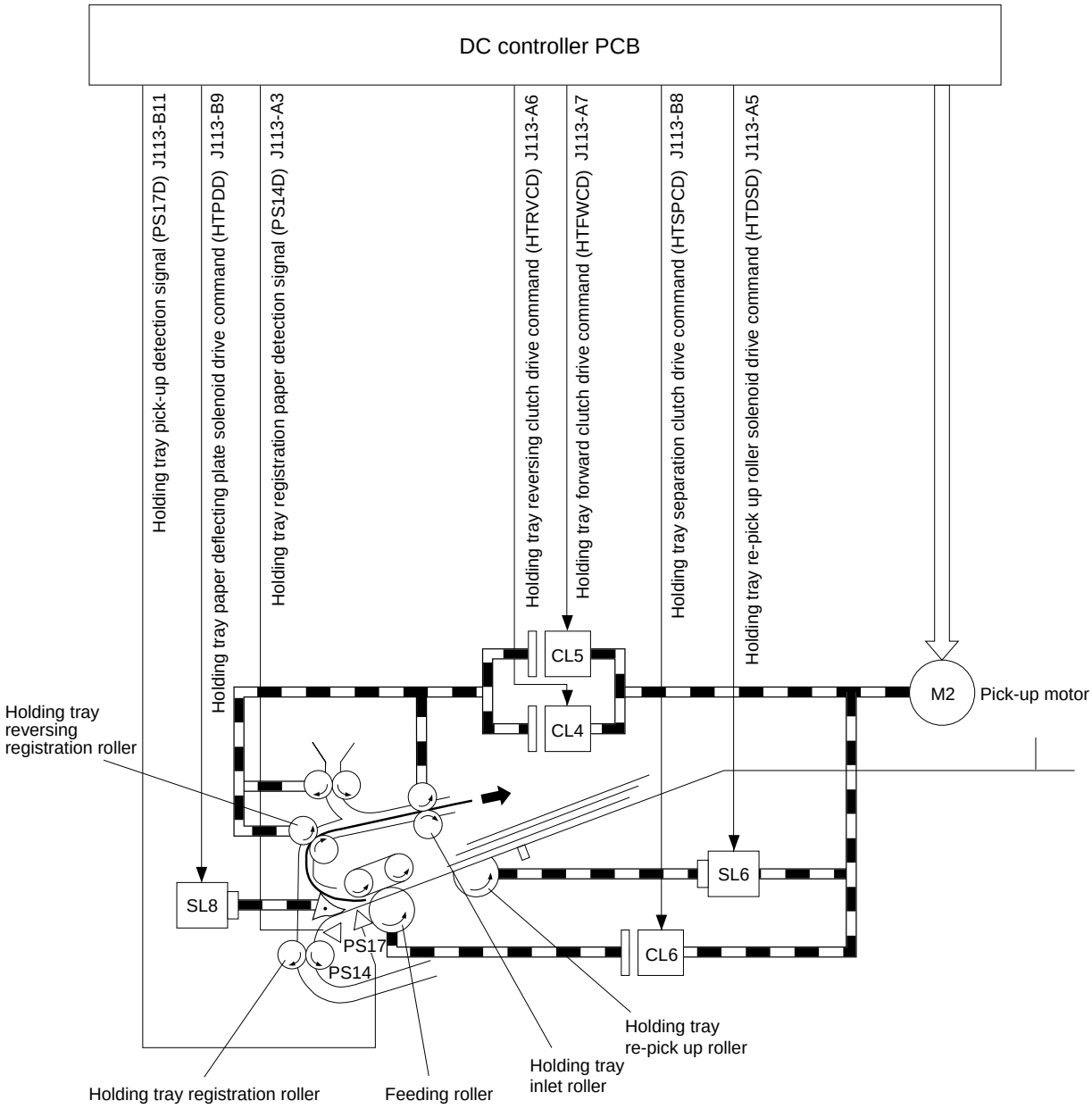

Figure 5-605

 COPYRIGHT © 1997 CANON INC. CANON NP6560/NP6360/NP6260 REV. 0 NOV. 1997 PRINTED IN JAPAN (IMPRIME AU JAPON)

2. Outline of Operation

① After pick-up, the copy paper is moved upward by the holding tray paper deflecting plate.

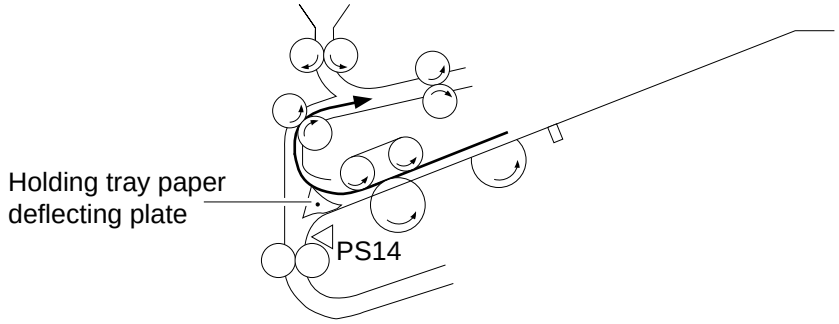

Figure 5-606

② As soon as the trailing edge of the copy paper leaves the holding tray paper deflecting plate, the holding tray forward clutch (CL5) turns off to stop the copy paper.

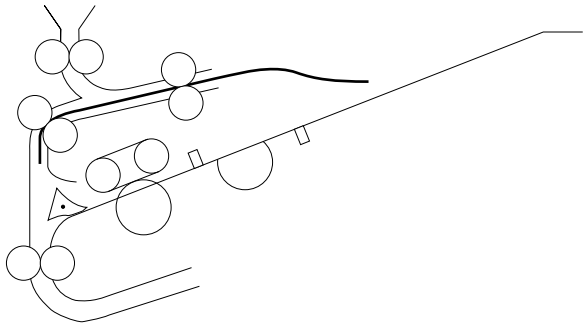

Figure 5-607

COPYRIGHT © 1997 CANON INC.

③ The holding tray reversing clutch (CL4) turns on, and the copy paper is reversed and forwarded to the holding tray registration roller.

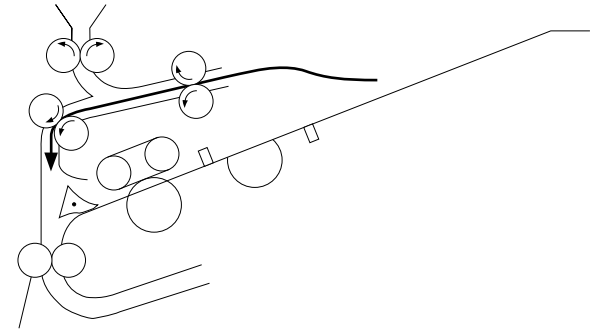

Figure 5-608

④ After reaching the holding tray registration roller, the copy paper is moved to the registration roller through the holding tray feeding assembly.

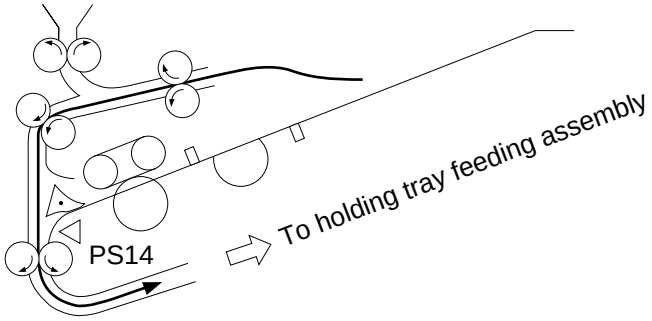

Figure 5-609

 COPYRIGHT © 1997 CANON INC.

3. Sequence of Operations (overlay copying; 2nd side)

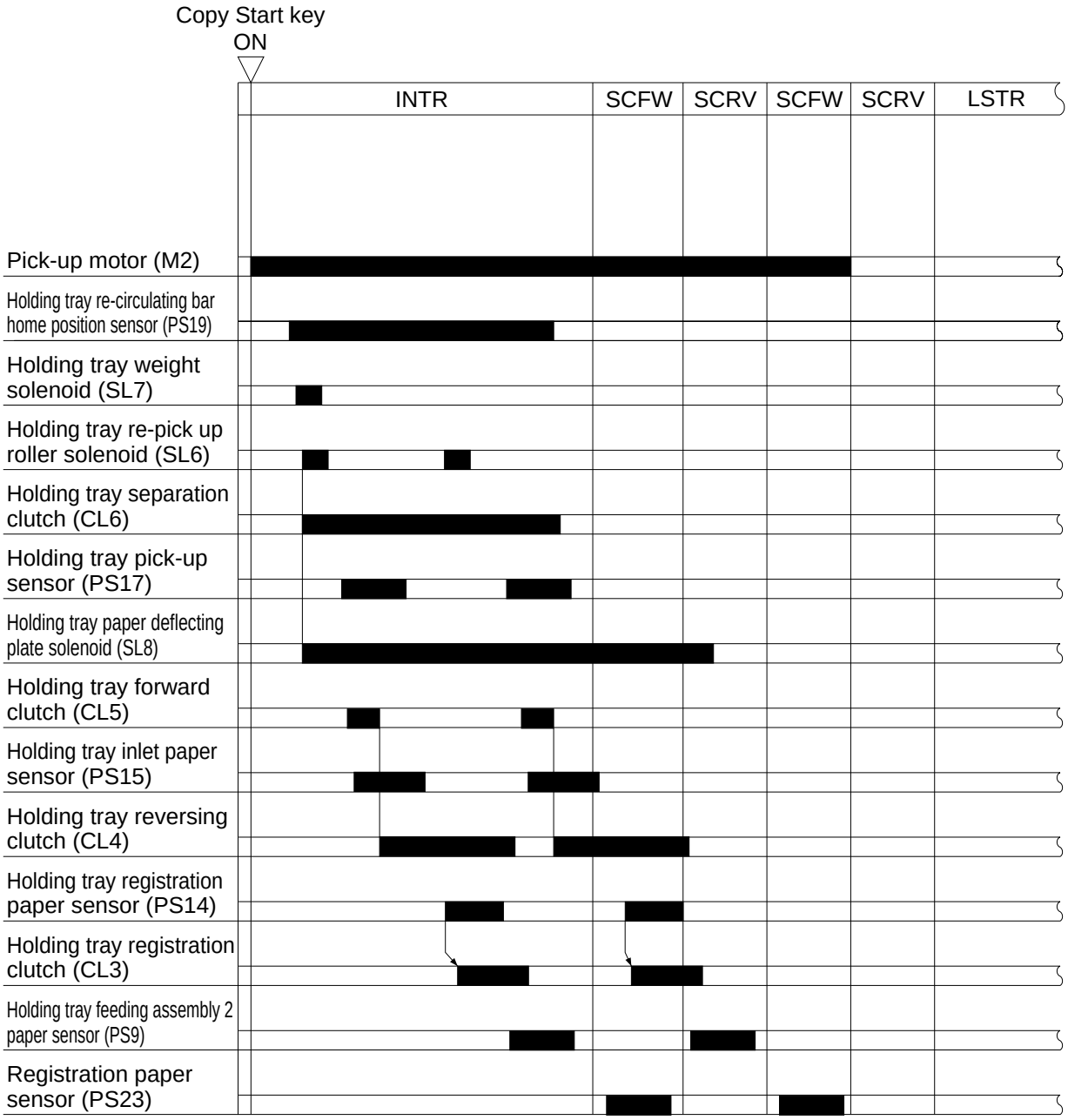

Figure 5-610

COPYRIGHT © 1997 CANON INC.

D. Reversal Delivery

The feeding path for reversed delivery is formed when the delivery deflecting plate is shifted up by the delivery deflecting plate solenoid (SL2).

The delivery deflecting plate shifts up as soon as the registration clutch (CL9) turns on, thereby moving the copy paper in the direction of the holding tray.

A specific period of time after the trailing edge of the copy paper has moved past the fixing assembly outlet sensor (PS47), the holding tray forward clutch (CL5) turns off and, at the same time, the holding tray reversing clutch (CL4) turns on.

This condition causes the roller inside the holding tray to rotate in reverse, moving the copy paper in the direction of delivery. (See Figure 5-612.)

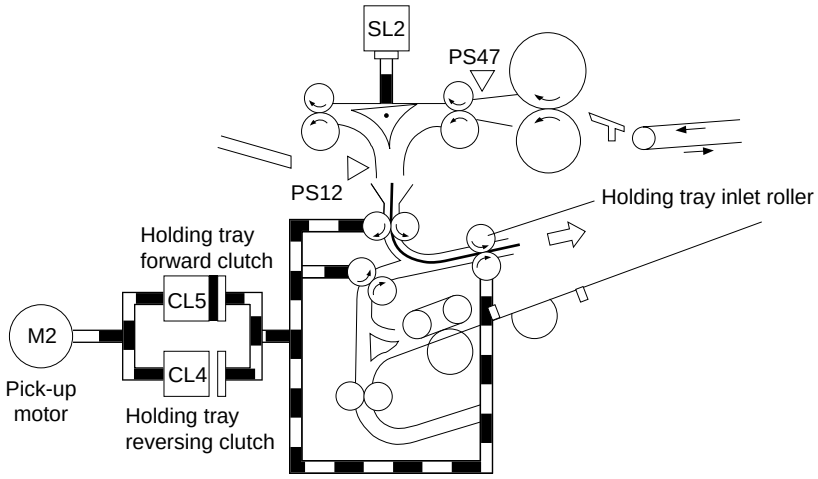

Figure 5-611 (clockwise rotation)

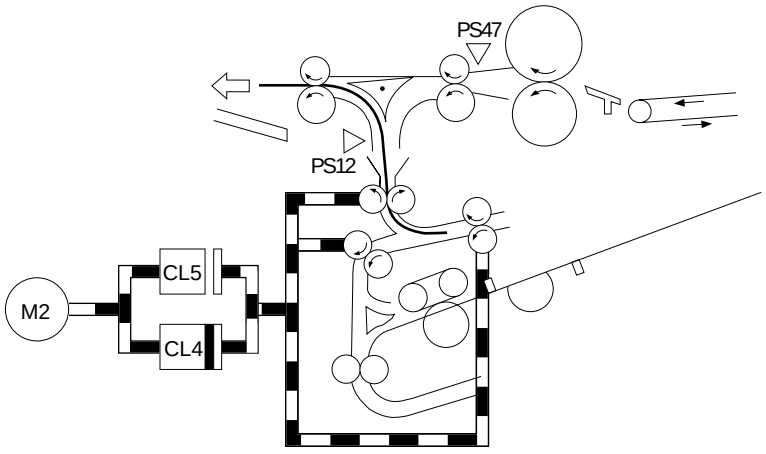

Figure 5-612 (counterclockwise rotation)

 COPYRIGHT © 1997 CANON INC.

1. Sequence of Reversal Delivery Operations

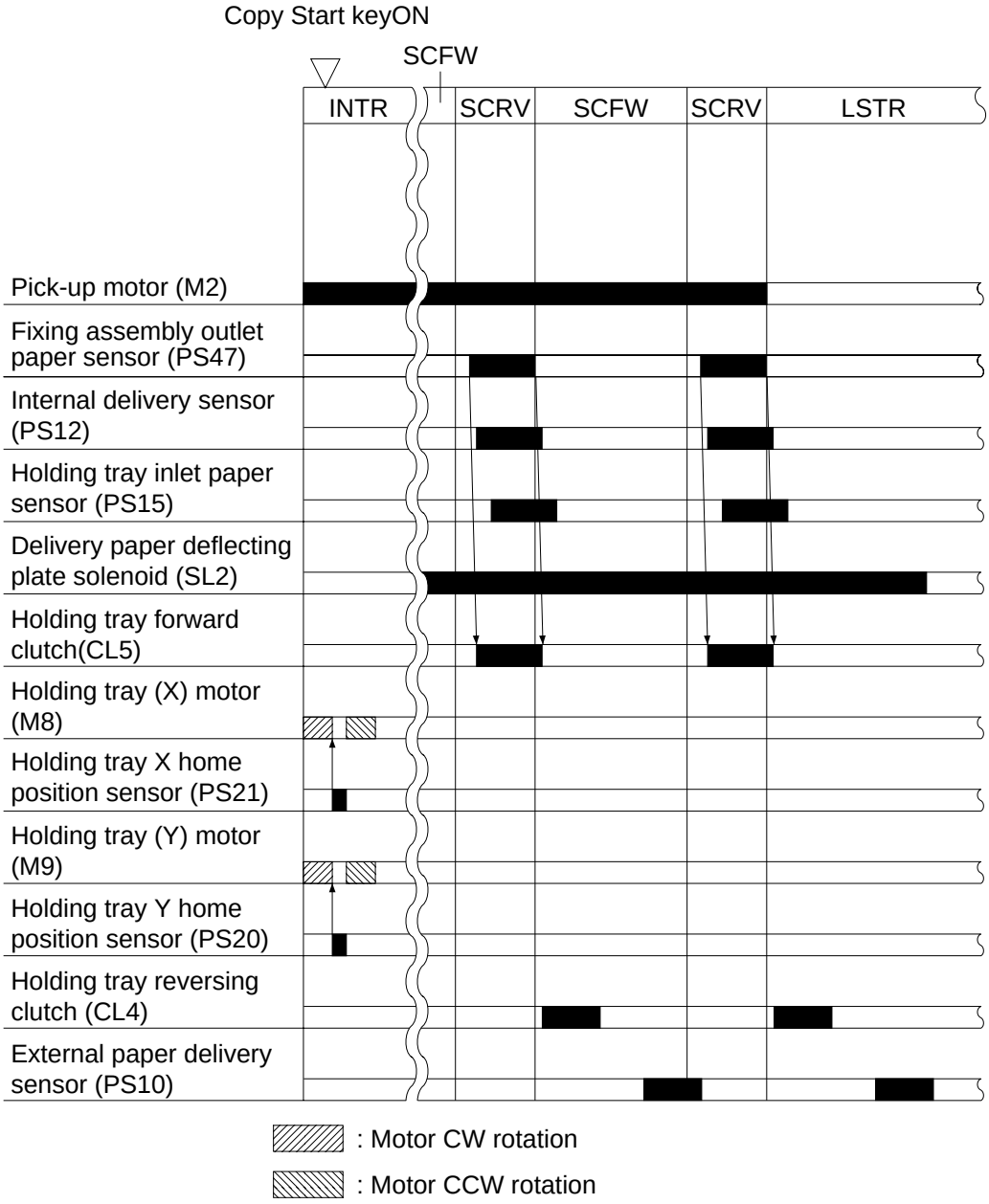

Figure 5-613

E. Switching the Paper Size for Two-Sided/Overlay/Reversal Delivery Copies

1. Movement of the Paper Size Guide

When the Copy Start key is pressed in two-sided/overlay/reversal delivery mode, the holding tray (X, Y) motor (M8, M9) starts to rotate clockwise, and the paper size guide plate moves in the direction of the arrow.

The motor (M8, M9) stops when the light-blocking plate of the paper size guide plate blocks the holding tray (X, Y) home position sensor (PS21, PS20).

The DC controller PCB sends pulses to the motor (M8, M9) according to the size of copy paper so that the motor rotates in reverse to move the paper size guide plate to suit the selected copy size and keep it in wait for the arrival of copy paper.

While copying on the second side, the motor (M8, M9) remains at rest until copying on the first side of the next copy starts.

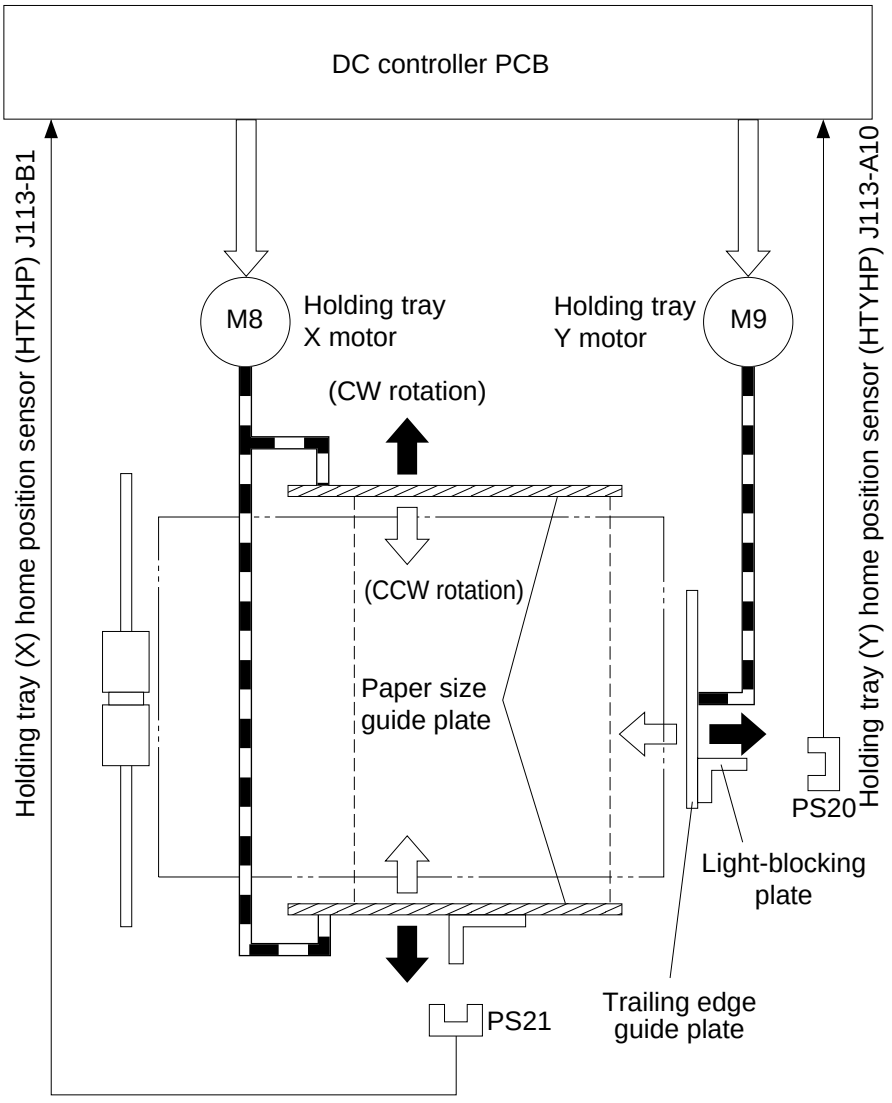

Figure 5-614

 COPYRIGHT © 1997 CANON INC. CANON NP6560/NP6360/NP6260 REV. 0 NOV. 1997 PRINTED IN JAPAN (IMPRIME AU JAPON)

2. Movement of the Paper Jogging Plate and the Trailing Edge Guide Plate

When copy paper arrives at the holding tray assembly, the paper jogging plate (X direction) and the trailing edge guide plate (Y direction) operate to put the sheets in order.

The paper jogging plate is opened by turning on and off the holding tray swinging solenoid (SL9) on the paper size guide plate of the holding tray so as to put the edges of the sheets flush, thereby preventing skew movement during re-pick up.

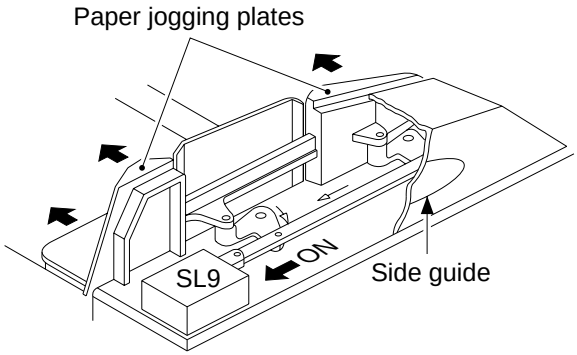

Figure 5-615

When copy paper reaches the holding tray assembly, the motor M9 rotates clockwise and couterclockwise to operate the trailing edge guide plate to arrange the trailing edge of the copy paper.

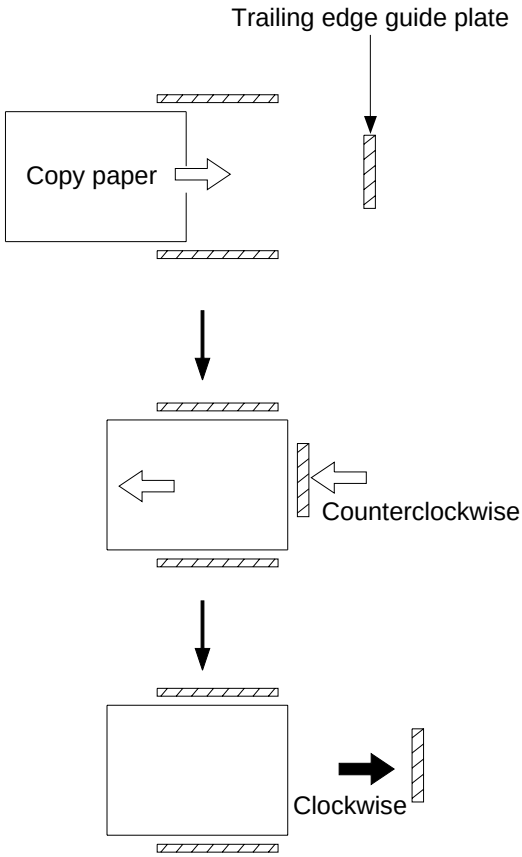

Figure 5-616

COPYRIGHT © 1997 CANON INC.

3. Detecting the Presence/Absence of Copy Paper

The presence of copy paper on the holding tray is checked for re-pick up operation.

When sheets have been stacked on the holding tray, the re-circulating lever is placed on the topmost sheet of the stack by operating the holding tray re-circulating motor (M7).

When the last sheet has been picked up, the re-circulating lever falls down to the holding tray. This condition enables the holding tray re-circulating lever home position sensor (PS19) to assume that the last sheet has been picked up, and the sensor generates the last copy detection signal (HPLPD).

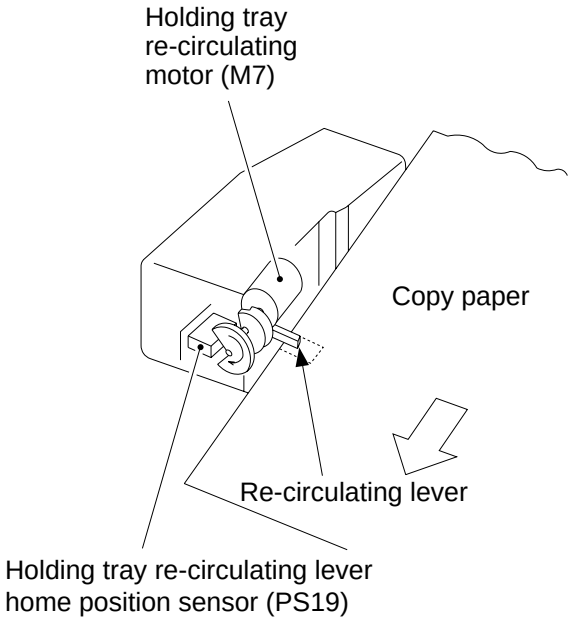

Figure 5-617

 COPYRIGHT © 1997 CANON INC.

F. Re-Pick Up from the Holding Tray

Pick-up/separation takes place when the Copy Start key is pressed for copying on the second side.

When the Copy Start key is pressed, the holding tray re-pick up solenoid (SL6) turns on to rotate the holding tray re-pick up roller, thereby feeding the copy paper in the direction of the feeding roller/separation belt; at the same time, the holding tray weight solenoid (SL7) turns on to lower the weight plate on the copy paper so as to assist feeding of copy paper.

If double feeding occurs, i.e., if two or more sheets are being sent to the feeding roller/separation belt by the holding tray re-pick up roller, the separation belt serves to push the top sheet back to the holding tray.

Reference:

The weight plate is lowered only when the first sheet is re-picked up and when the last sheet is picked up.

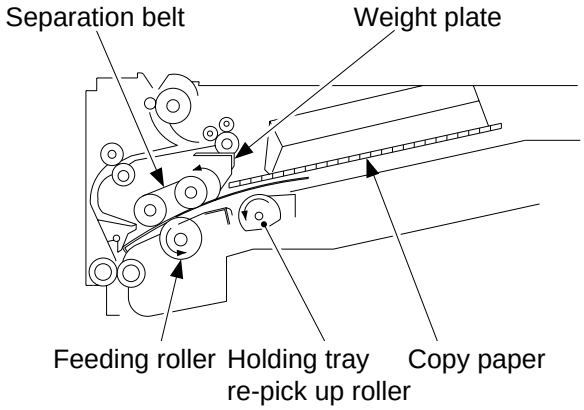

Figure 5-618

G. Skipping Operation

1. Outline

In skipping mode, every other original is skipped when making two-sided copies of one-sided originals with the aim of making full use of the space that occurs in the paper path in the holding tray assembly and the holding tray feeding assembly (space not covered by paper).

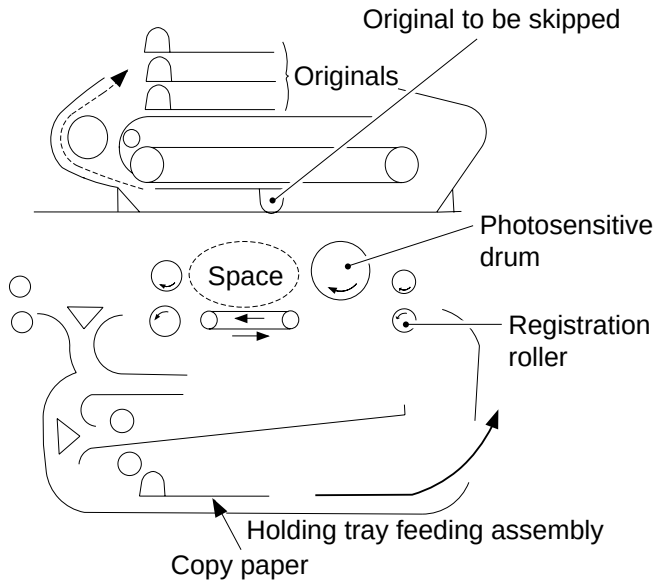

Figure 5-619

Skipping mode is executed automatically when the following conditions are met:

- Two-sided copies are made of one-sided originals using the RDF.
- The copy paper and the original are A4, B5, or LTR and they are fed horizontally.
- Neither binding mode nor cover mode is selected.
- Copy count is '2' or lower.

 COPYRIGHT © 1997 CANON INC.

2. Outline of Operations

The sequence of operation is as follows:

a. Making 2 Copies of 4 Originals
   4th original, 2nd, 4th, 3rd, 2nd, 1st, 3rd, 1st original
b. Making 2 Copies of 5 Originals
   5th original, 3rd, 1st, 5th, 4th, 3rd, 2nd, 1st, 4th, 2nd original
c. Making 1 Copy of 4 Originals
   4th original, 2nd, 3rd, 1st original
d. Making 1 Copy of 5 Originals
   5th original, 3rd, 1st, 4th, 2nd original

Reference:

Skipping mode may be disabled in user mode.

COPYRIGHT © 1997 CANON INC.

 COPYRIGHT © 1997 CANON INC. CANON NP6560/NP6360/NP6260 REV. 0 NOV. 1997 PRINTED IN JAPAN (IMPRIME AU JAPON)

3. Skipping Operation (odd number of originals)

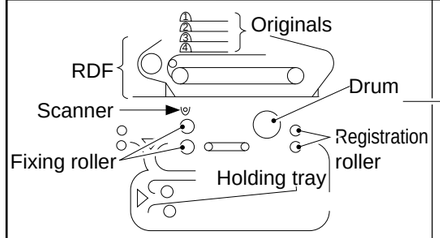

1) The Copy Start key is pressed. (The originals move as in right pick-up operation of the RDF.)

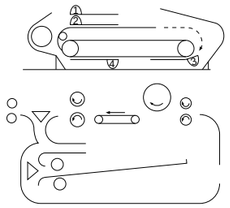

2) The 4th original is picked up.

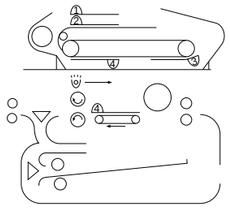

3) The 4th original is copied. The 3rd original is not copied (skipped), and is returned to the original tray of the RDF

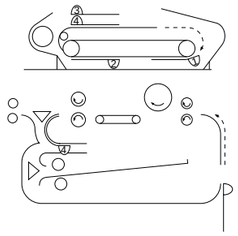

4) The 2nd original is picked up.

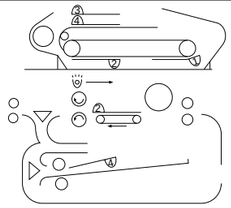

5) The 2nd original is copied. The 1st original is not copied (skipped), but is returned to the original tray of the RDF. At this time, the machine assumes that there is an even number of originals. (If making one copy each, goes to step 14.)

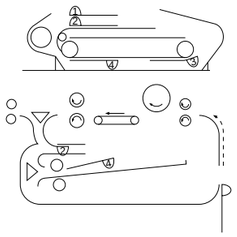

6) The 4th original is picked up.

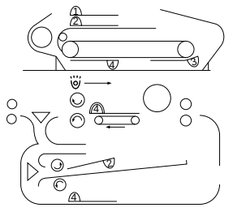

7) The 4th original is copied (for 2nd copy).

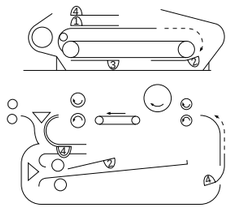

8) The 3rd original is picked up.

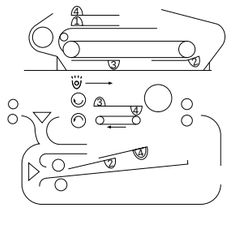

9) The 3rd original is copied on the back of 4th copy sheet picked up from the holding tray.

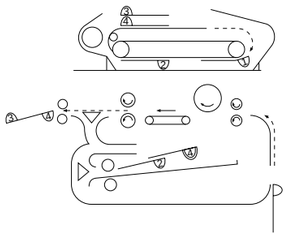

10) The 2nd original is picked up.

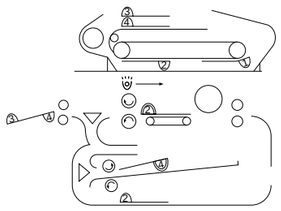

11) The 2nd original is copied (2nd copy).

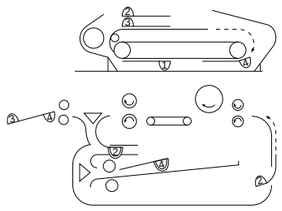

12) The 1st original is picked up.

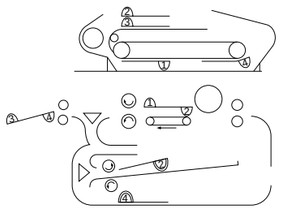

13) The 1st original is copied on the back of the 2nd copy sheet picked up from the holding tray. The 4th original is not copied (skipped), but is returned to the original tray of the RDF. (If making two copies each, repeats steps 6 through 13.)

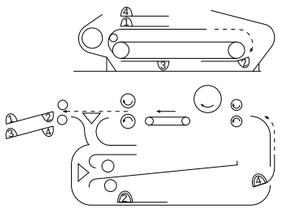

14) The 3rd original is picked up.

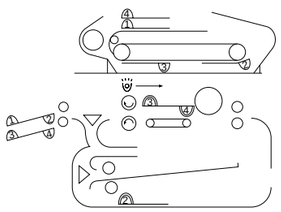

15) The 3rd original is copied (2nd copy) on the back of the 4th copy sheet picked up from the holding tray. The 2nd original is not copied (skipped), but is returned to the original tray of the RDF.

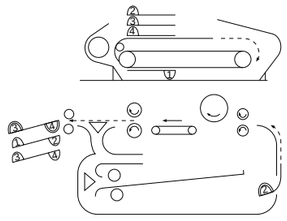

16) The 1st original is picked up.

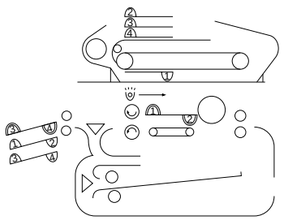

17) The 1st original is copied (2nd copy) on the back of the 2nd copy sheet picked up from the holding tray.

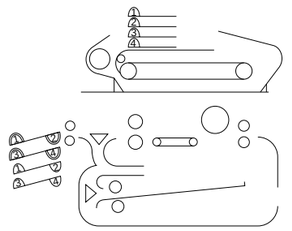

18) The operation ends.

Figure 5-620

COPYRIGHT © 1997 CANON INC.

4. Skipping Operation (odd number of originals)

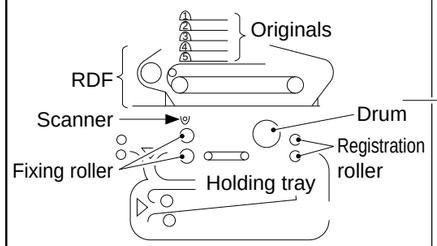

1) The Copy Start key is on. (The movement of originals is as in right pick-up of the RFD.)

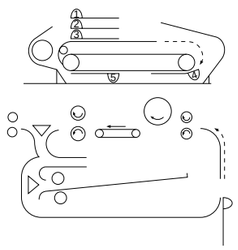

2) The 5th original is picked up.

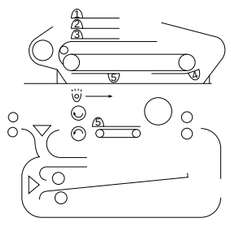

3) The 5th original is copied. The 4th original is not copied (skipped), but is returned to the original tray of the RDF.

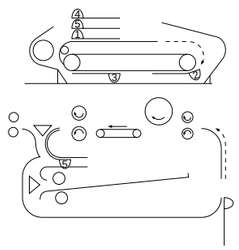

4) The 3rd original is picked up.

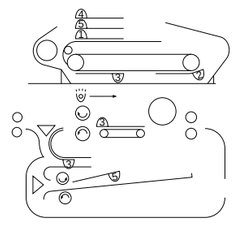

5) The 3rd original is copied. The 2nd original is not copied (skipped), but is returned to the original tray of the RDF.

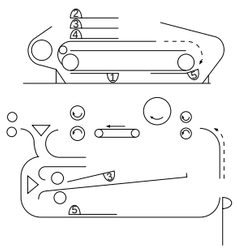

6) The 1st original is picked up.

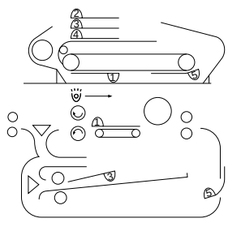

7) The 1st original is copied.

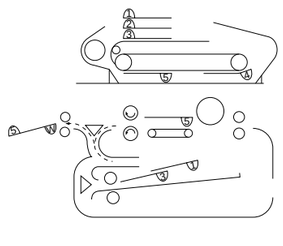

8) The 5th copy sheet picked up from the holding tray is moved through the delivery assembly and delivered. (If making one copy each, goes to step 20.)

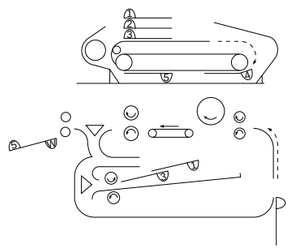

9) The 5th original is picked up.

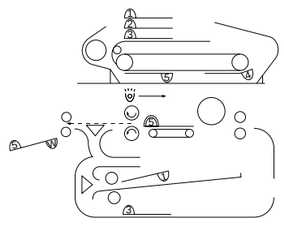

10) The 5th original is copied (2nd copy). (If making 2 copies each, repeats steps 9 through 19.)

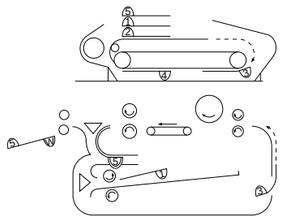

11) The 4th original is picked up.

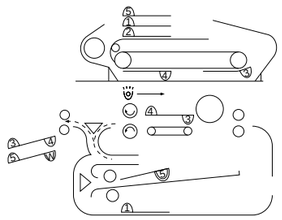

12) The 4h original is copied on the back of the 3rd copy sheet picked up from the holding tray, and the copy sheet is moved through the delivery assembly, reversed, and discharged.

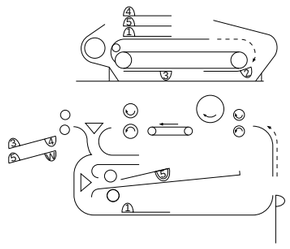

13) The 3rd original is picked up.

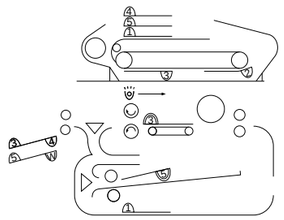

14) The 3rd original is copied (2nd copy).

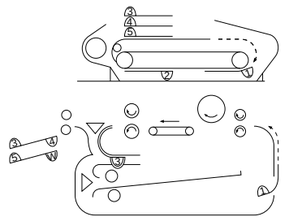

15) The 2nd original is picked up.

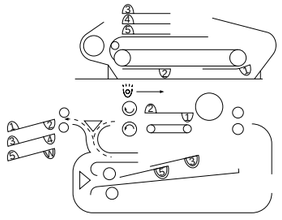

16) The 2nd original is copied on the back of the 1st copy sheet picked up from the holding tray, and the copy sheet is moved through the delivery assembly, reversed, and discharged.

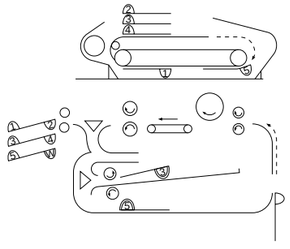

17) The 1st original is picked up.

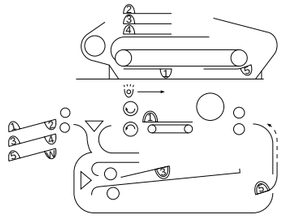

18) The 1st original is copied (2nd copy). The 5th original is not copied (skipped), but is returned to the original tray of the RDF.

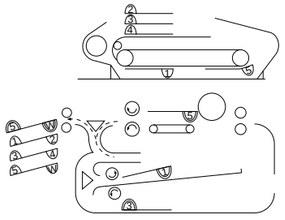

19) The 5th copy sheet picked up from the holding tray is moved through the delivery assembly, reversed, and discharged (2nd copy).

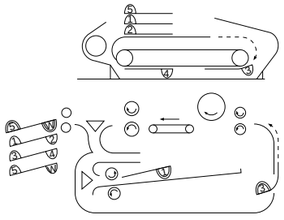

20) The 4th original is picked up.

Figure 5-621

COPYRIGHT © 1997 CANON INC.

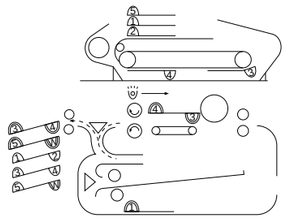

21) The 4th original is copied on the back of the 3rd copy sheet picked up from the holding tray (2nd copy), and the copy sheet is moved through the delivery assembly, reversed, and discharged. The 3rd original is not copied (skipped), but is returned to the original tray of the RDF.

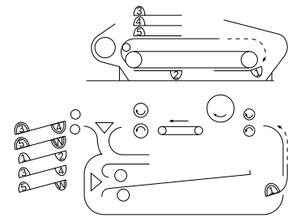

22) The 2nd original is picked up.

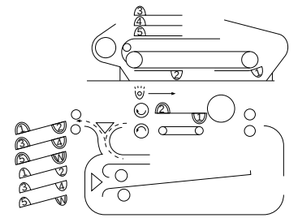

23) The 2nd original is copied on the back of the 1st copy sheet picked up from the holding tray (2nd copy), and the copy sheet is moved through the delivery assembly, reversed, and discharged.

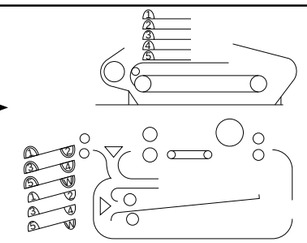

24) The operation ends.

Figure 5-622

COPYRIGHT © 1997 CANON INC.

 COPYRIGHT © 1997 CANON INC. CANON NP6560/NP6360/NP6260 REV. 0 NOV. 1997 PRINTED IN JAPAN (IMPRIME AU JAPON)

5. Reversal Delivery

Reversal delivery is executed when making copies of an odd number of originals in skipping mode and when reversal delivery is selected. In this mode, each copy is turned over upon delivery so that the stack will be collated when on the copy tray.

a. If copies are made of an odd number of originals in reversal delivery and skipping modes, they will be stacked as shown in Figure 5-623a.

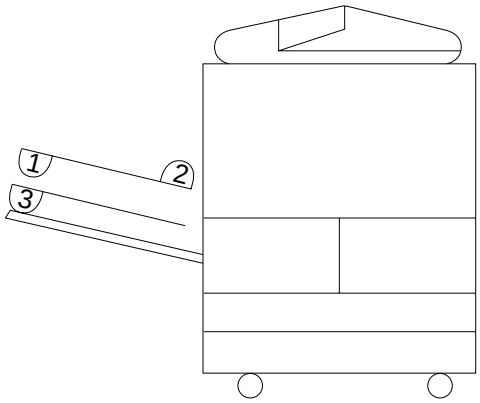

Figure 5-623a

b. If copies are made of an odd number of originals in reversal delivery and skipping modes, they will be stacked on the copy tray as shown in Figure 5-623b.

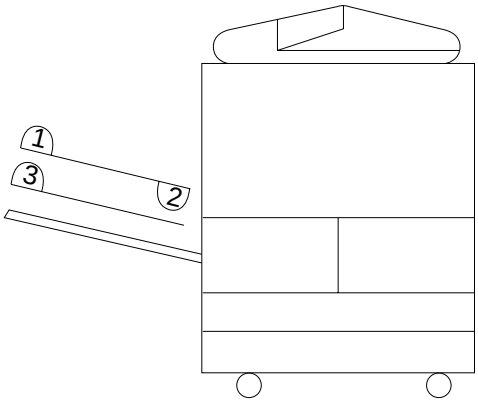

Figure 5-623b

VII. DETECTING JAMS

A. Outline

As many as 17 sensors are arrange as shown in Figure 5-701 to monitor the movement of copy paper.

The microprocessor reads in the signals coming from each of the sensors at such times as programmed to identify the presence of a jam. When it finds a jam, it causes all sheets moving ahead of the jam to be discharged, and stops the machine.

The control panel will offer instructions on how to remove jams after the suspension of operation.

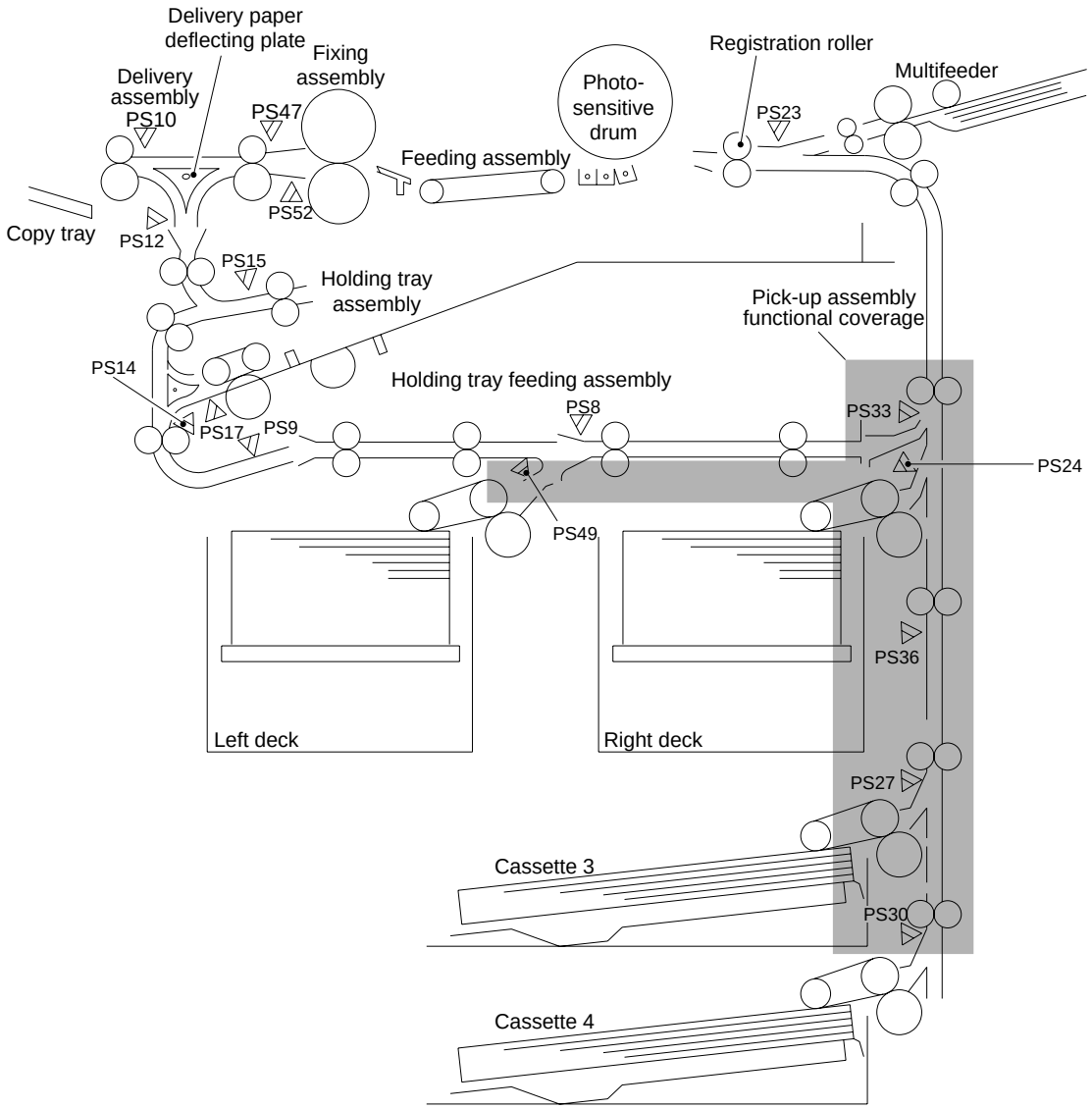

Figure 5-701

 COPYRIGHT © 1997 CANON INC.

Notation	Name	Type of jam	Notation	Name	Type of jam
PS8	Holding tray feeding assembly 1 paper sensor	Delay/stationary jams.	PS24	Pick-up vertical 0 paper sensor	Delay/stationary jams.
PS9	Holding tray feeding assembly 2 paper sensor	Delay/stationary jams.	PS27	Pick-up vertical path 3 paper sensor	Delay/stationary jams.
PS10	External delivery sensor	Delay/stationary jams.	PS30	Pick-up vertical path 4 paper sensor	Delay/stationary jams.
PS12	Internal delivery sensor (reversing assembly)	Stationary jams.	PS33	Pick-up vertical path 1 paper sensor	Delay/stationary jams.
PS14	Holding tray registration paper sensor	Delay/stationary jams.	PS36	Pick-up vertical path 2 paper sensor	Delay/stationary jams.
PS15	Holding tray inlet paper sensor	Delay/stationary jams.	PS47	Fixing assembly outlet paper sensor	Delay/stationary jams.
PS17	Holding tray pick-up sensor	Delay jams.	PS49	Left deck pick-up sensor	Delay/stationary jams.
PS19	Holing tray re-circulating bar home position sensor	Paper on holding tray.	PS52	Claw jam sensor	Stationary jams.
PS23	Registration paper sensor	Delay/stationary jams.			

Table 5-701

The microprocessor identifies any of the following conditions as the presence of a jam:

a. Copy paper is present at any of the sensors at power-on, at the end of wait-up, or during standby.
b. Copy paper does not reach a specific sensor within a specific period of time (delay jam):
   1. Registration roller delay jam identified by the registration paper sensor (PS23)

2. Pick-up vertical path feeding delay jam identified by the pick-up vertical path 1 paper sensor (PS33)
3. Pick-up vertical path feeding delay jam identified by the pick-up vertical path 0 paper sensor (PS24)
4. Pick-up vertical path feeding delay jam identified by the pick-up vertical path 2 paper sensor (PS36)
5. Pick-up vertical path feeding delay jam identified by the pick-up vertical path 3 paper sensor (PS27)
6. Pick-up vertical path feeding delay jam identified by the pick-up vertical path 4 paper sensor (PS30)
7. Fixing feeding re-pick up delay jam by the fixing assembly outlet paper sensor (PS47)
8. Fixing assembly feeding re-pick up delay jam identified by the external delivery sensor (PS10)
9. Holding tray inlet delay jam identified by the holding tray inlet paper sensor (PS15)
10. Holding tray pick-up delay jam identified by the holding tray pick-up sensor (PS17)
11. Holding tray registration delay jam identified by the holding tray registration paper sensor (PS14)
12. Holding tray feeding assembly 2 delay jam identified by the holding tray feeding assembly 2 paper sensor (PS9)
13. Holding tray feeding assembly 1 delay jam identified by the holding tray feeding assembly 1 paper sensor (PS8)

c. Copy paper does not move past a specific sensor within a specific period of time (stationary jam):
   1. Registration roller stationary jam identified by the registration paper sensor (PS23)
   2. Pick-up vertical path feeding stationary jam identified by the pick-up vertical path 1 paper sensor (PS33)
   3. Pick-up vertical path feeding stationary jam identified by the pick-up vertical path 0 paper sensor (PS24)
   4. Pick-up vertical path feeding stationary jam identified by the pick-up vertical path 2 paper sensor (PS36)
   5. Pick-up vertical path feeding stationary jam identified by the pick-up vertical path 3 paper sensor (PS27)
   6. Pick-up vertical path feeding stationary jam by the pick-up vertical path 4 paper sensor (PS30)
   7. Pick-up vertical path feeding stationary jam identified by the fixing assembly outlet paper sensor (PS47)
   8. External delivery stationary jam identified by the external paper sensor (PS10)
   9. Internal delivery stationary jam identified by the internal delivery sensor (PS12)
   10. Holding tray inlet stationary jam identified by the holding tray inlet paper sensor (PS15)
   11. Holding tray registration stationary jam identified by the holding tray registration paper sensor (PS14)
   12. Holding try feeding assembly 2 stationary jam identified by the holding tray feeding 2 paper sensor (PS9)
   13. Holding try feeding assembly 1 stationary jam identified by the holding tray feeding assembly 1 paper sensor (PS8)
   14. Fixing assembly separation claw assembly stationary jam identified by the claw jam sensor (PS52)

 COPYRIGHT © 1997 CANON INC.

1. Registration Roller Delay Jam

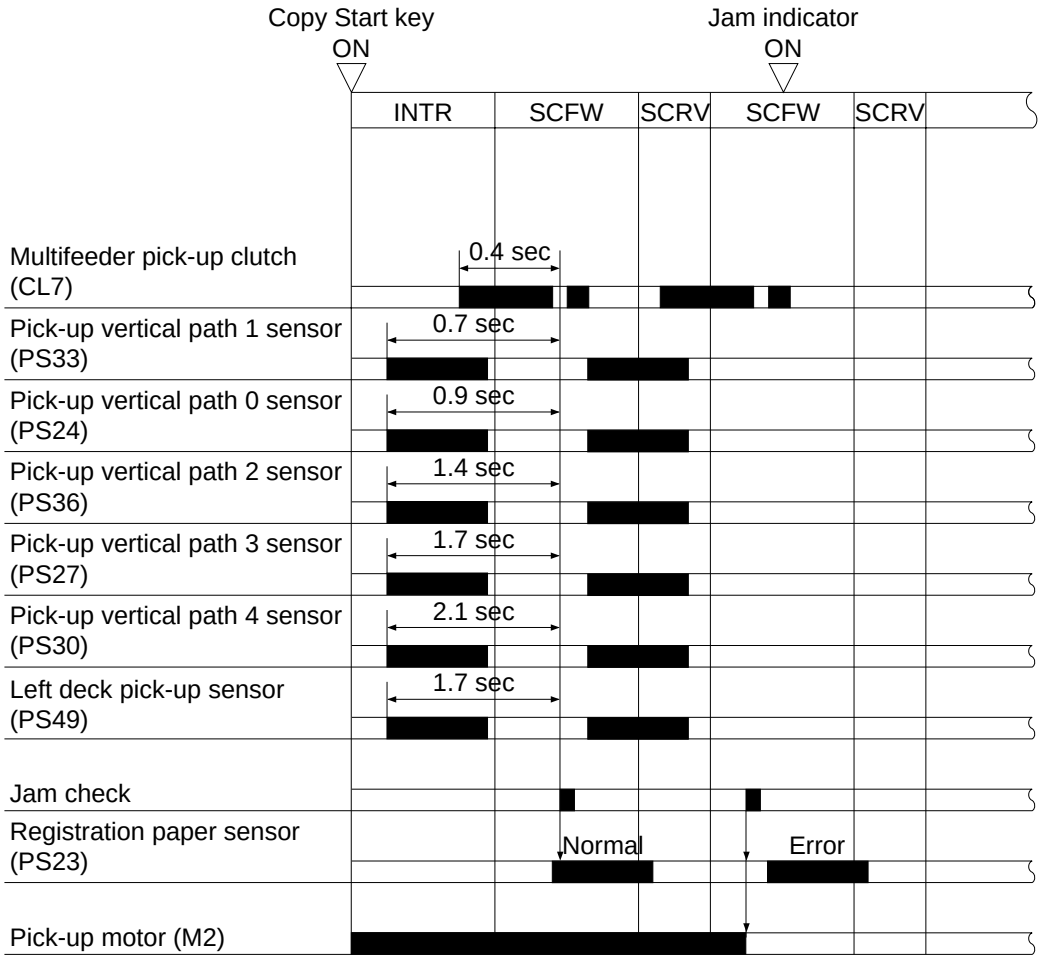

Figure 5-702

2. Registration Roller Stationary Jam

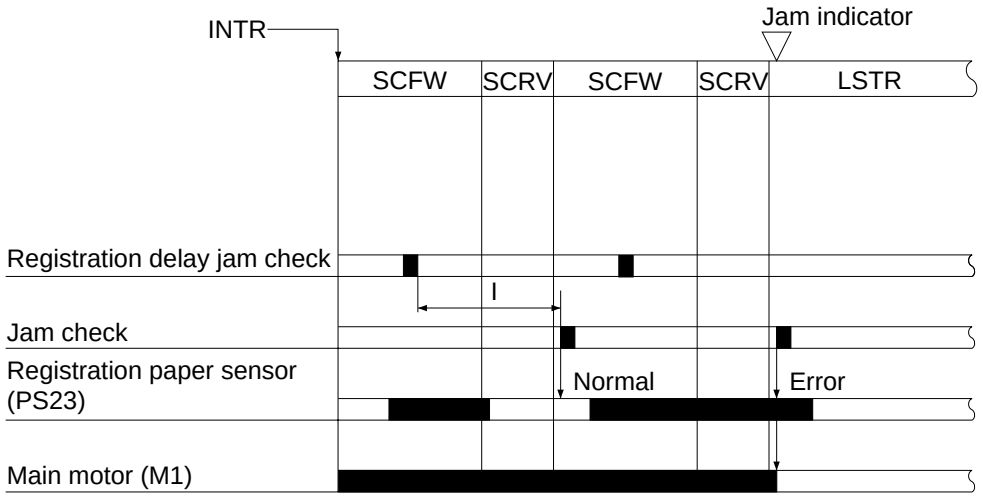

I: Varies according to length of paper.

Figure 5-703

COPYRIGHT © 1997 CANON INC.

3. Pick-Up Vertical Path Feeding 0/1 Delay Jam

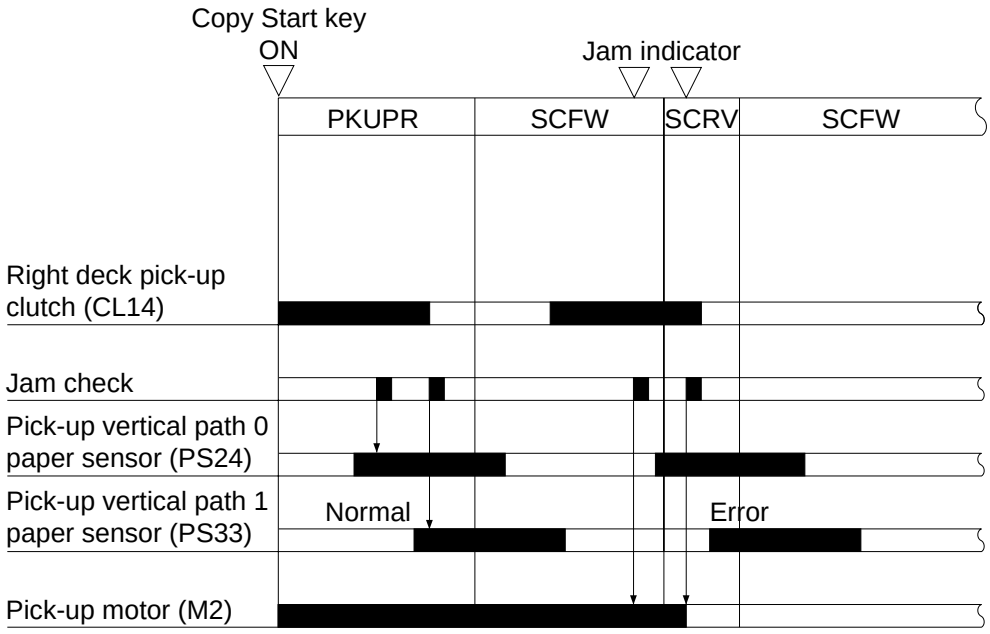

Figure 5-704

4. Pick-Up Vertical Path Feeding 0/1 Stationary Jam

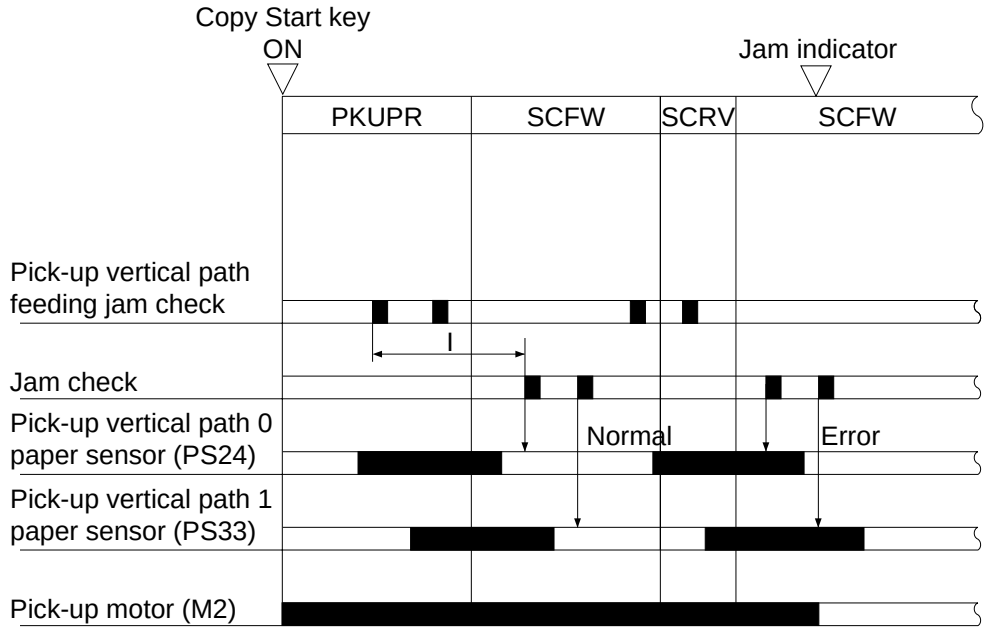

I: Varies according to paper length.

Figure 5-705

COPYRIGHT © 1997 CANON INC.
CANON NP6560/NP6360/NP6260 REV. 0 NOV. 1997 PRINTED IN JAPAN (IMPRIME AU JAPON)

5. Pick-Up Vertical Path Feeding 2 through 4 Delay Jam

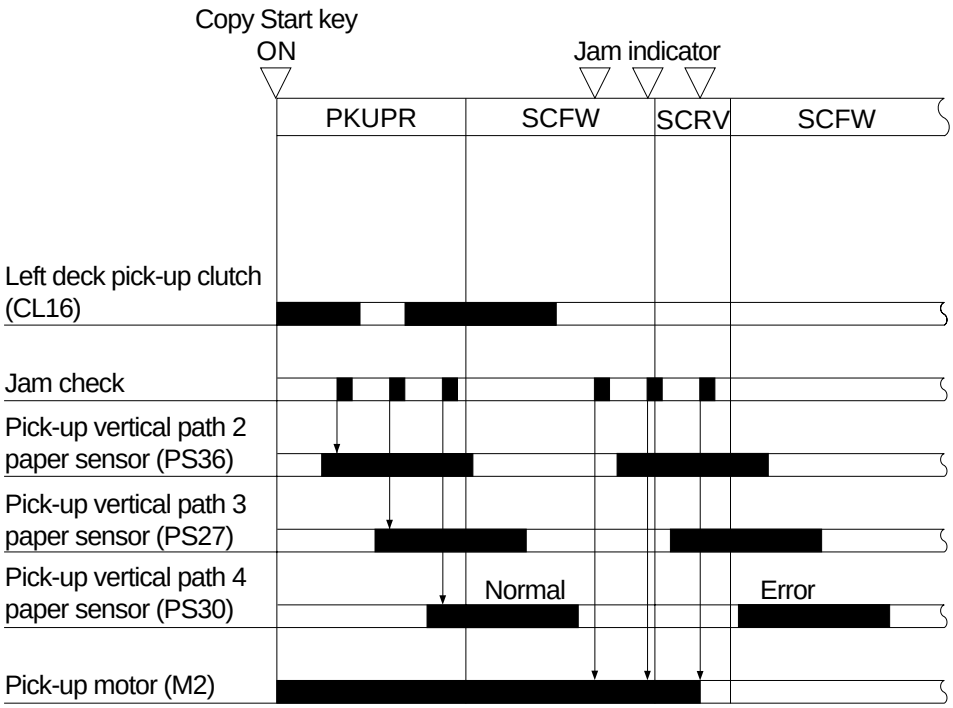

Figure 5-706

6. Pick-Up Vertical Path Feeding 2 through 4 Stationary Jam

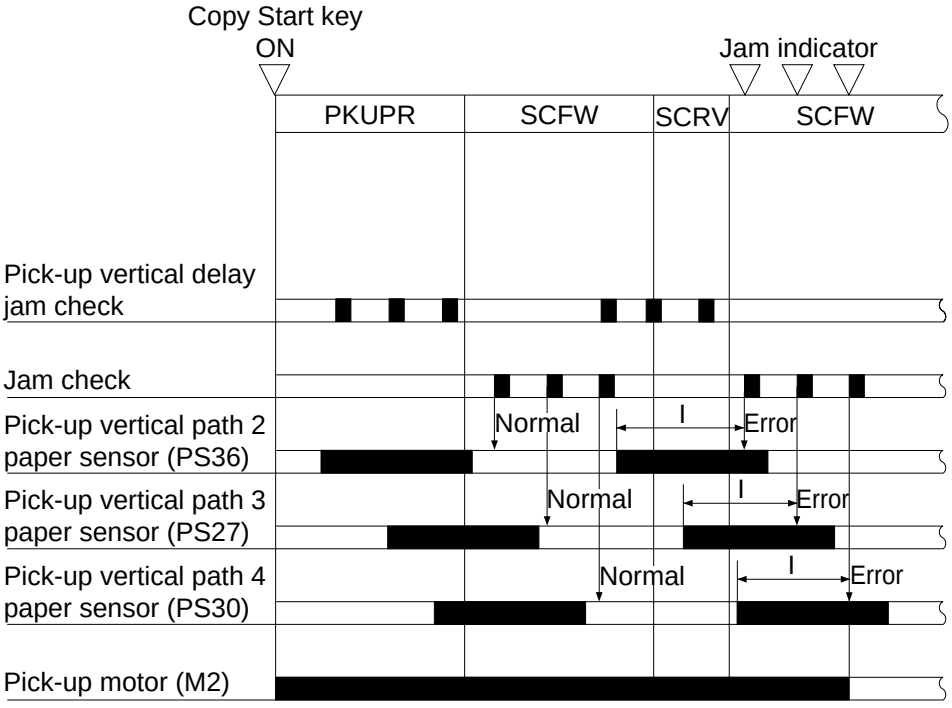

I: Varies according to paper length.

Figure 5-707

COPYRIGHT © 1997 CANON INC.

7. Fixing Assembly Outlet Delay Jam

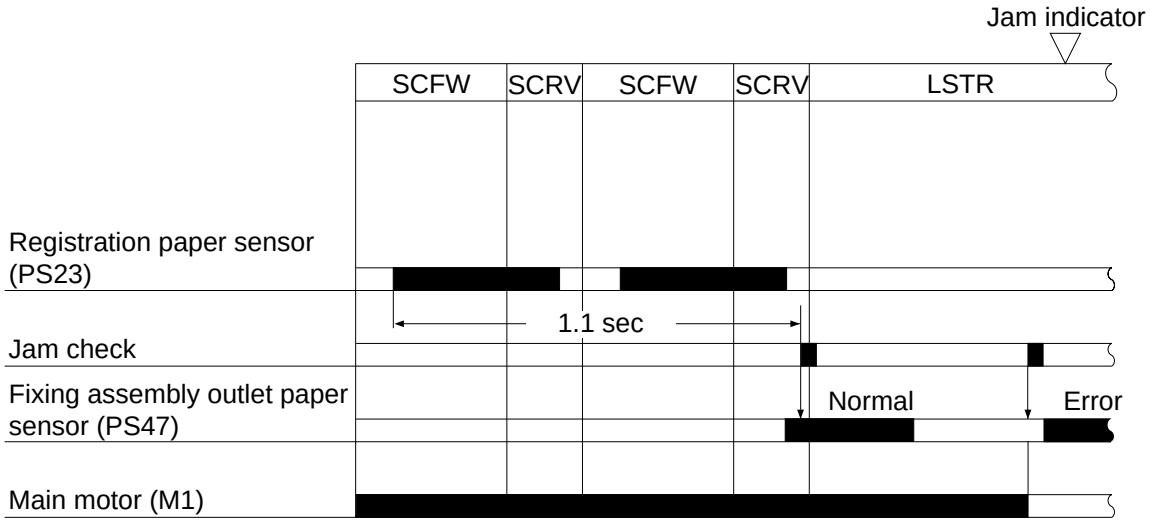

Figure 5-708

8. Fixing Assembly Outlet Stationary Jam

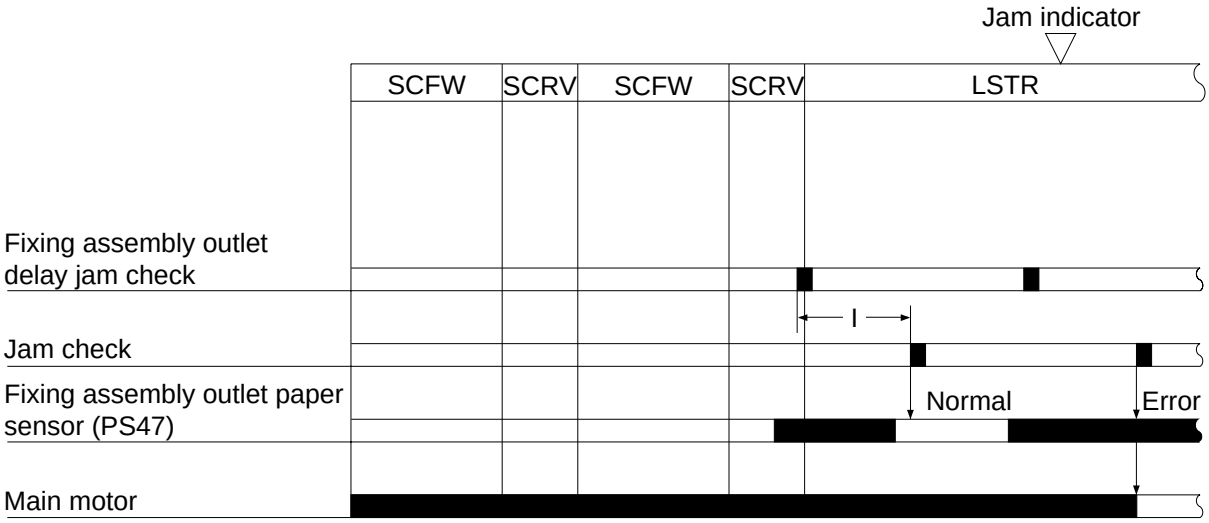

I: Varies according to paper length.

Figure 5-709

 COPYRIGHT © 1997 CANON INC. CANON NP6560/NP6360/NP6260 REV. 0 NOV. 1997 PRINTED IN JAPAN (IMPRIME AU JAPON)

9. External Delivery Delay Jam

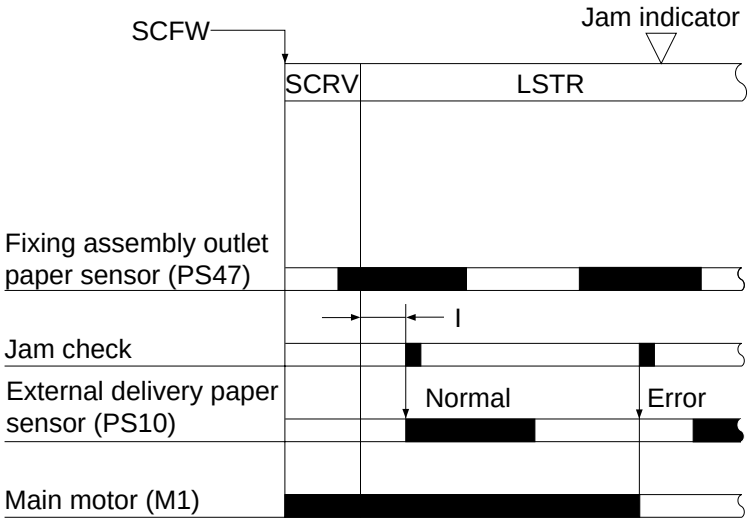

I : For normal delivery, about 0.25 sec.
: For reversal delivery, varies according to paper length.

Figure 5-710

10. External Delivery Stationary Jam

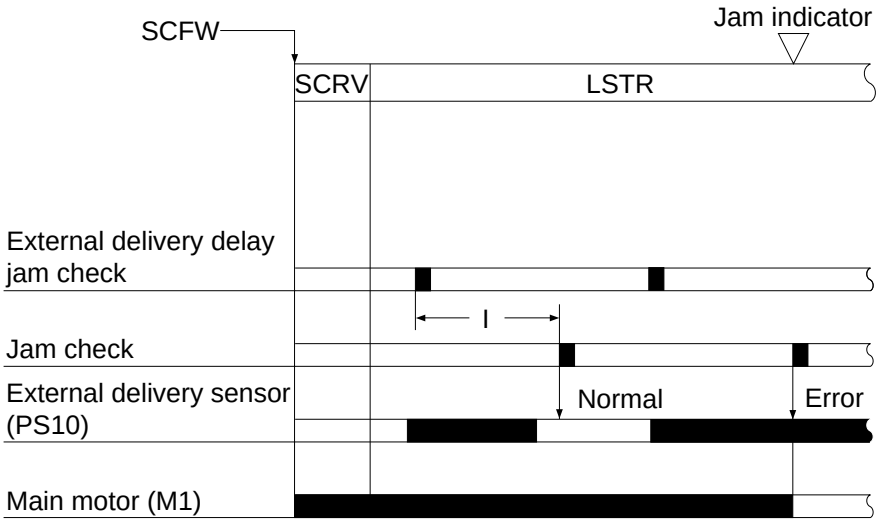

I: Varies according to paper length.

Figure 5-711

COPYRIGHT © 1997 CANON INC.

11. Internal Delivery Delay Jam

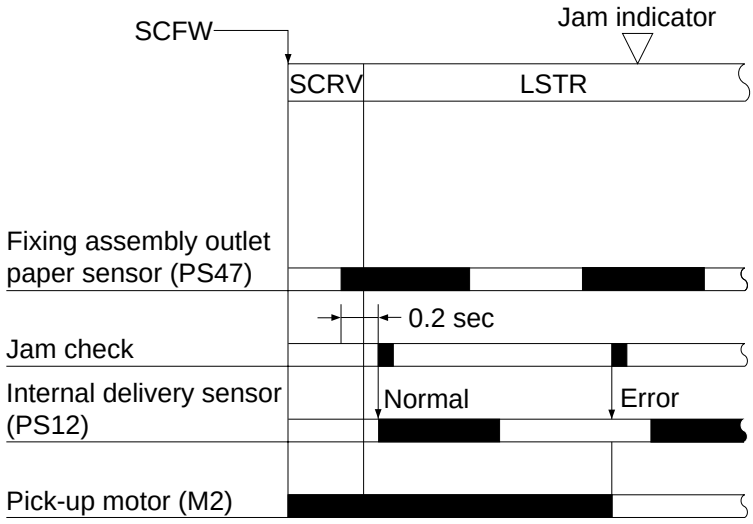

Figure 5-712

12. Internal Delivery Stationary Jam

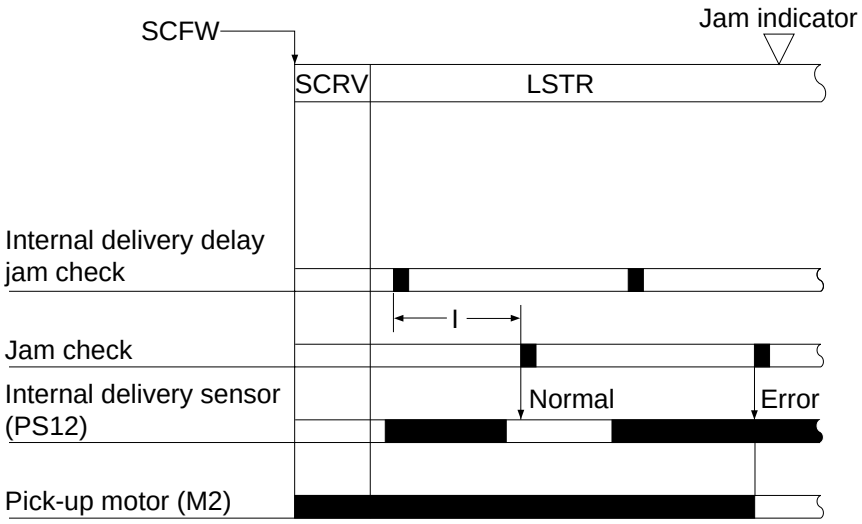

I: Varies according to paper length.

Figure 5-713

COPYRIGHT © 1997 CANON INC.
CANON NP6560/NP6360/NP6260 REV. 0 NOV. 1997 PRINTED IN JAPAN (IMPRIME AU JAPON)

13. Holding Tray Inlet Delay Jam

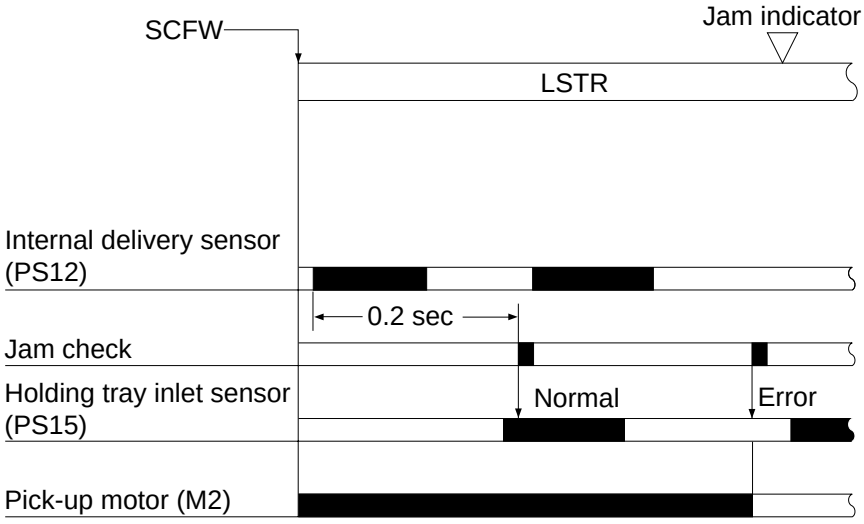

Figure 5-714

14. Holding Tray Inlet Stationary Jam

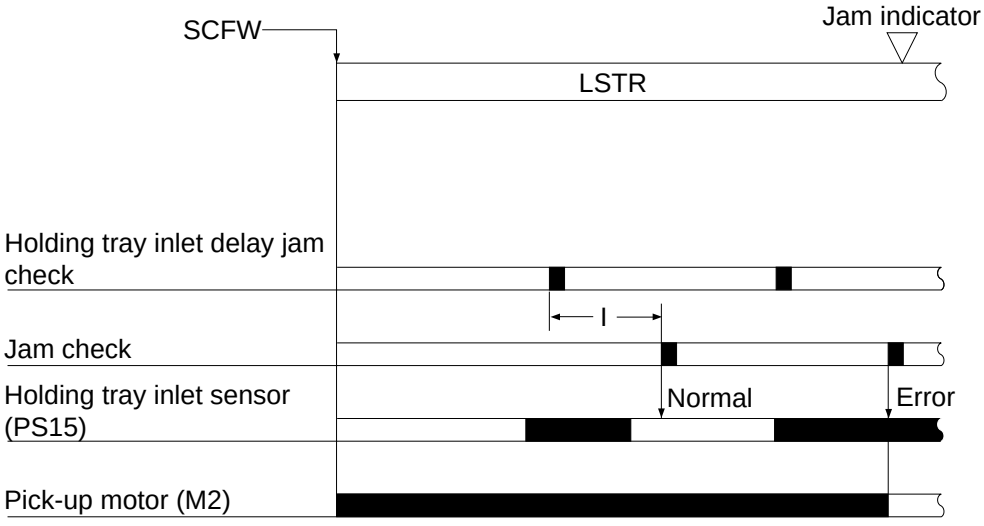

I: Varies according to paper length.

Figure 5-715

15. Holding Tray Re-Pick Up Delay Jam

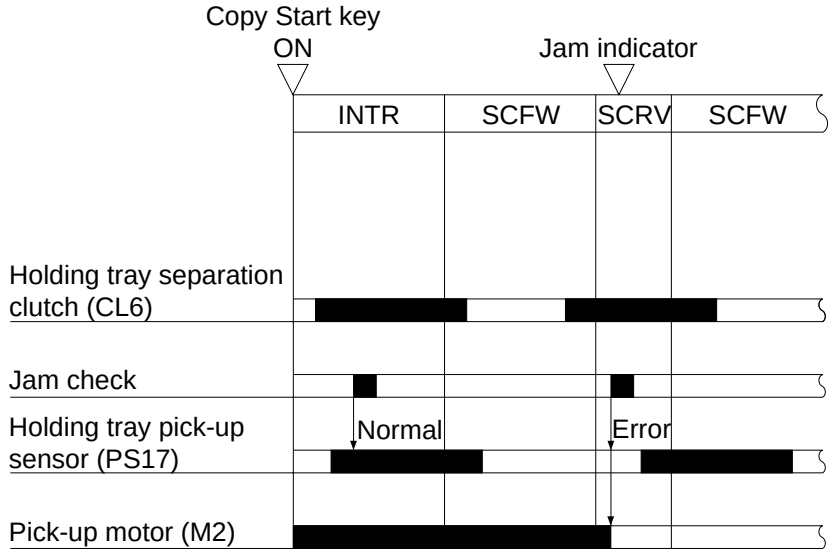

Figure 5-716

16. Holding Tray Registration Delay Jam

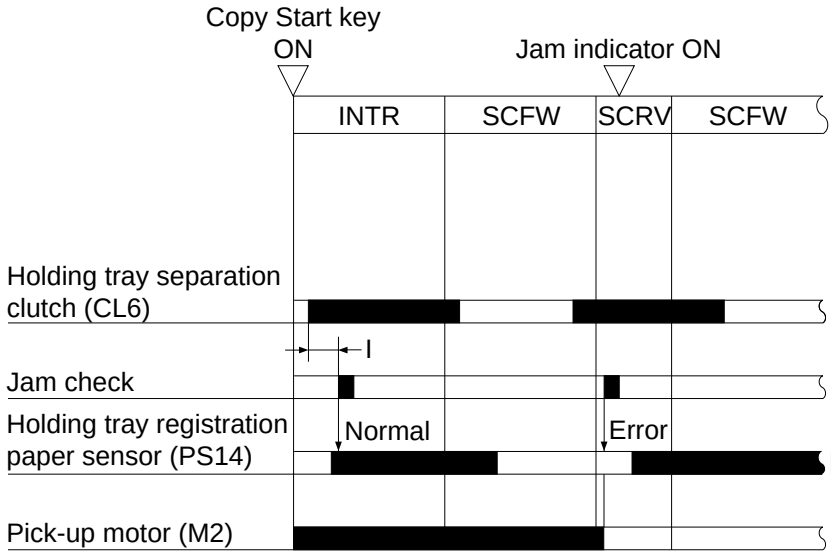

I : In two-sided copying, 0.1 sec.
: In overlay copying, varies according to paper length.

Figure 5-717

 COPYRIGHT © 1997 CANON INC.

17. Holding Tray Registration Stationary Jam

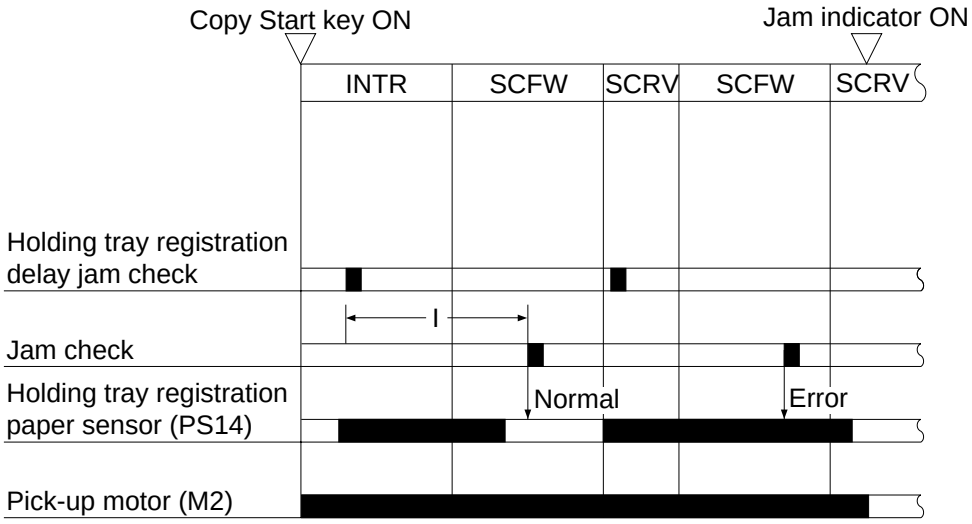

I: Varies according to paper length.

Figure 5-718

18. Holding Tray Feeding 1/2 Delay Jam

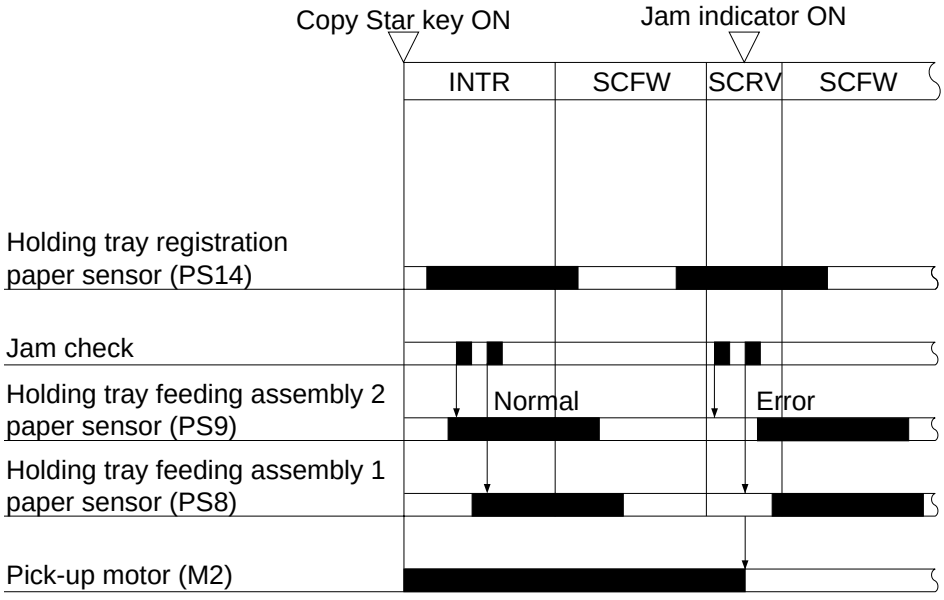

Figure 5-719

COPYRIGHT © 1997 CANON INC.

19. Holding Tray Feeding 1/2 Stationary Jam

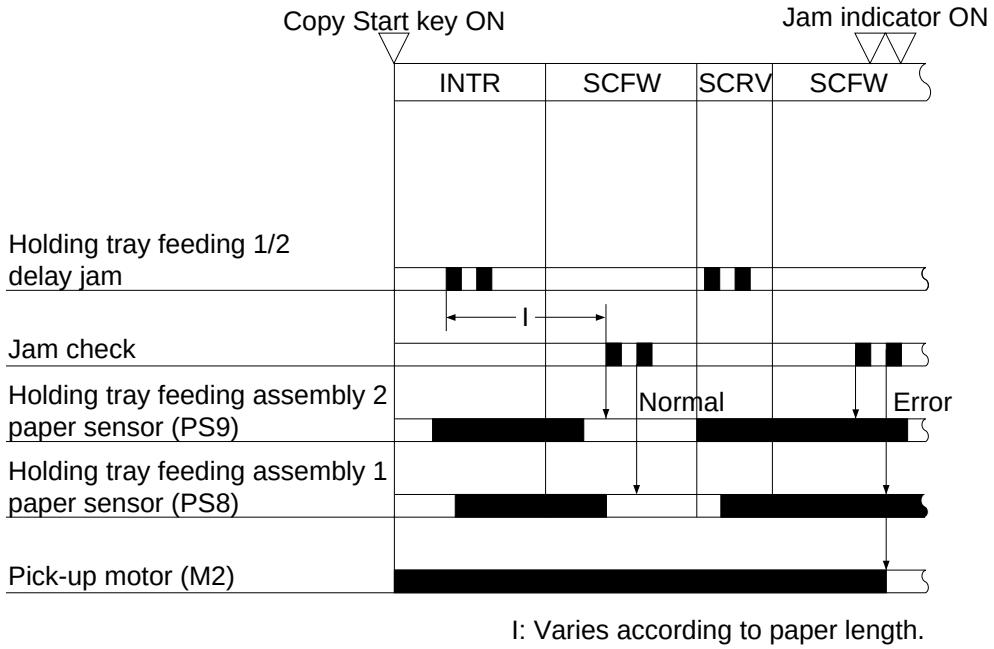

Figure 5-720

20. Left Deck Pick-Up Delay Jam

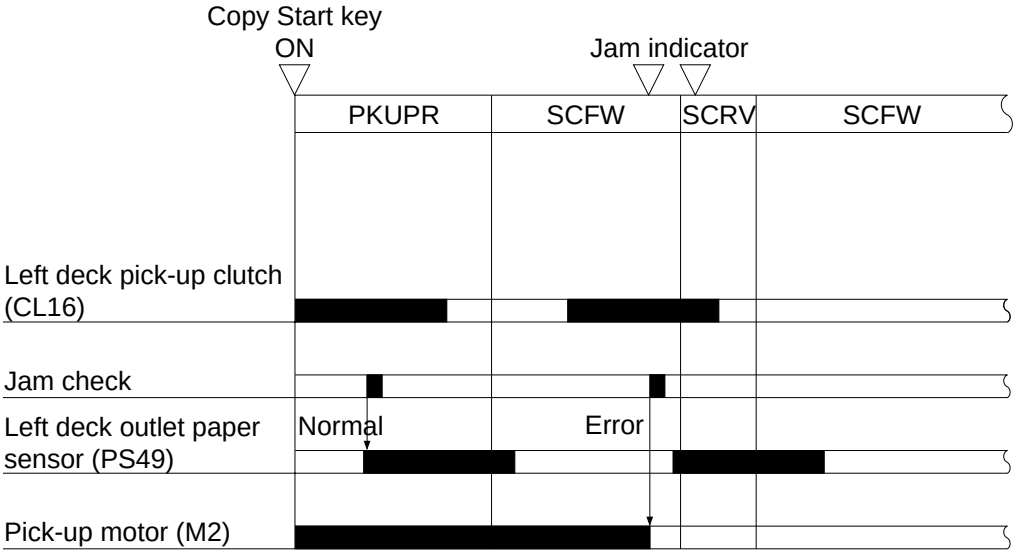

Figure 5-721

COPYRIGHT © 1997 CANON INC.
CANON NP6560/NP6360/NP6260 REV. 0 NOV. 1997 PRINTED IN JAPAN (IMPRIME AU JAPON)

21. Left Deck Pick-Up Stationary Jam

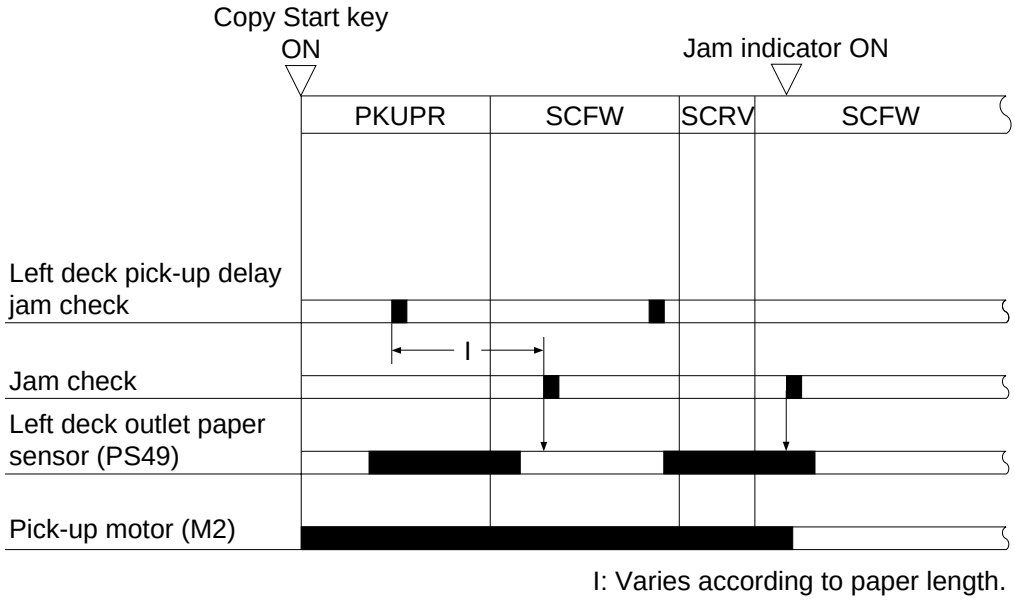

Figure 5-722

22. Fixing Separation Claw Assembly Stationary Jam

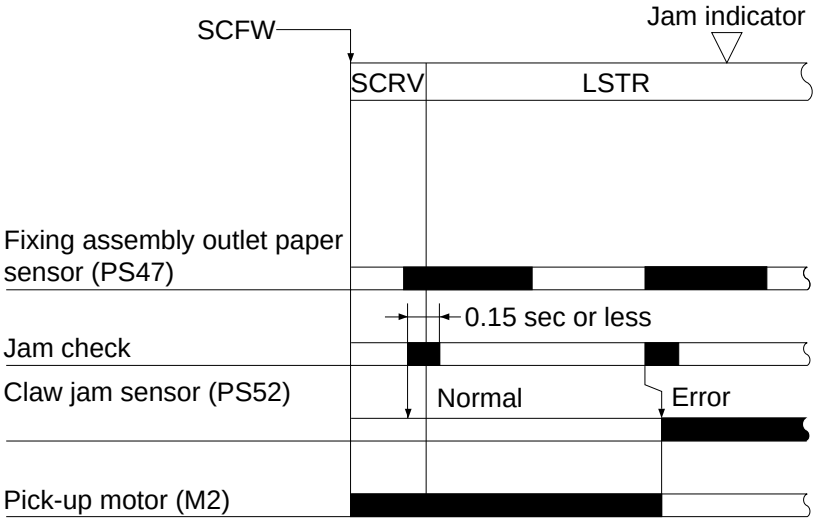

Figure 5-723

VIII. DISASSEMBLY AND ASSEMBLY

Here, the copier is discussed in terms of its mechanical characteristics and operation and how to disassemble and assemble it.

Be sure to observe the following for disassembly/assembly work:

1. ⚠ Disconnect the power plug for safety before starting disassembly/assembly work.
2. Unless otherwise noted, assemble the parts by reversing the steps used to disassemble them.
3. Identify the screws by type (length, diameter) and location.
4. One of the mounting screws of the rear cover is provided with a toothed washer to protect against static electricity. Do not leave it out during assembly work.
5. The screws used for grounding wires and varistors are provided with a toothed washer to ensure electrical continuity. Do not leave them out during assembly work.
6. As a rule, do not operate the machine with any of its parts removed.
7. Before sliding out the duplexing unit or the fixing assembly, check to make sure that the front door switch or the power switch is off.
8. ⚠ CAUTION: Before disassembly or reassembly work, disconnect the accessory (if an accessory is installed) and main body power cord(s).

 COPYRIGHT © 1997 CANON INC. CANON NP6560/NP6360/NP6260 REV. 0 NOV. 1997 PRINTED IN JAPAN (IMPRIME AU JAPON)

A. Multifeeder Assembly

1. Removing the Multifeeder Assembly

1) Remove the right cover and the upper right cover, and disconnect the two connectors ①.
2) Open the multifeeder assembly, and pull on the grip to open the multifeeder door. Remove the door tape, and lift the multifeeder assembly to detach it from the hinge.

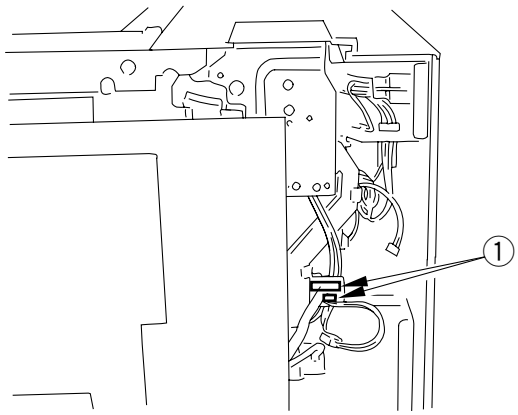

Figure 5-801

2. Removing the Pick-Up Roller

1) Open the multifeeder paper guide.
2) Remove the two stop rings ① each (left, right), two shutters each ②, and two rollers ③ each.

Caution:

If you used the multifeeder (manual feeding) during machine installation or after a long period of not using it, pick-up may fail. If such is the case, peel the protection sheet from the sponge roller, and dry wipe the surface of the sponge roller.

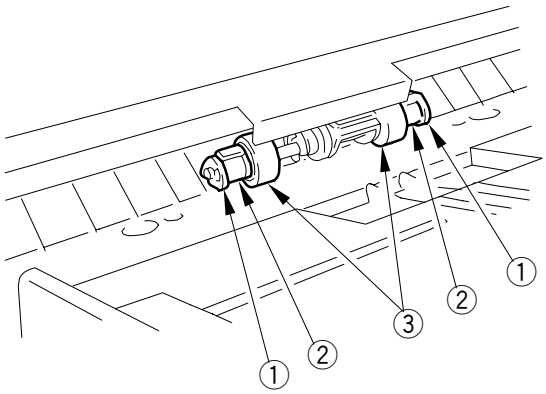

Figure 5-802

3. Installing the Pick-Up Roller

Install the pick-up roller by reversing the steps used to remove it with the following in mind:

- The pick-up roller used at the front and that used at the rear are NOT interchangeable.
- The collar on the pick-up roller to be used at the front is silver in color.

When installing the pick-up roller ① to the pick-up assembly, be sure to orient it so that the round marking ② on the collar (silver) is toward the front of the copier.

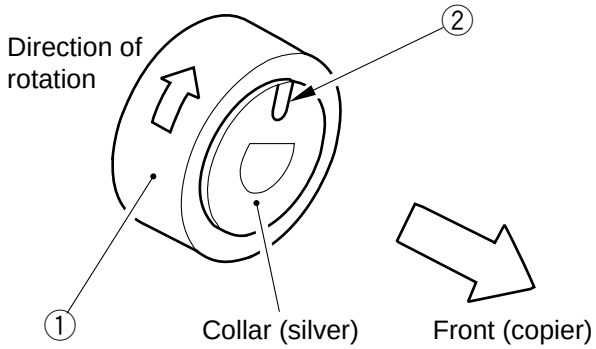

① Pick-up roller
② Marking (collar)

Figure 5-803

- The collar on the pick-up roller to be used at the rear is gold in color.

When installing the pick-up roller ④ to the pick-up assembly, be sure to orient it so that the round marking ⑤ on the side of the roller and the round marking ⑥ on the collar (gold) are toward the rear.

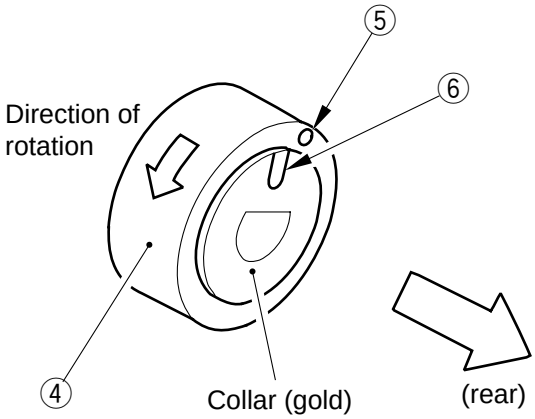

④ Pick-up roller
⑤ Marking (roller)
⑥ Marking (collar)

Figure 5-803a

4. Removing the Separation Roller

1) Remove the multifeeder assembly.
2) Remove the two mounting screws ①, and remove the registration upper roller assembly ②.

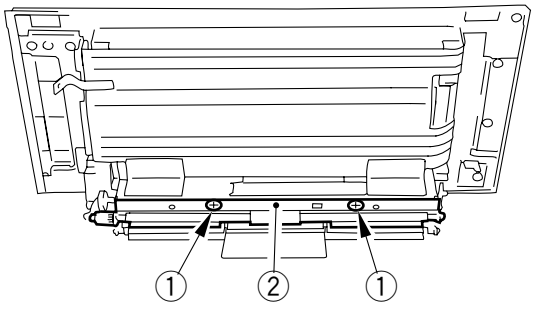

Figure 5-804

COPYRIGHT © 1997 CANON INC.

3) Remove the spring ③ at the front and the rear, and remove the mounting screw ④ at the front; then, pull out the positioning pin ⑤, and remove the registration lower roller assembly ⑥.

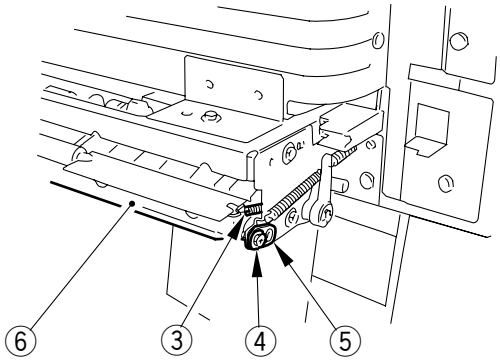

Figure 5-805

4) Remove the two mounting screws ⑦, and remove the separation roller support plate ⑧.
5) Remove the joint, and remove the separation roller ⑨.

Caution:

Take care when removing the separation roller, as the bushing at the front becomes disengaged.

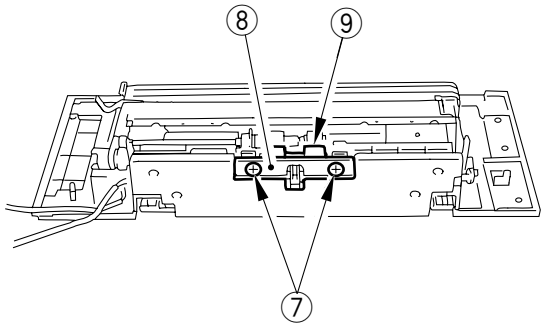

Figure 5-806

Caution:

The urethane sponge used on the roller is initially pink and changes to yellow over time, accelerated by exposure to light (pink to orange, and then to yellow).
The fact is common to all urethane sponge types, and will not affect its physical performance. Keep in mind that color difference, if any, does not indicate different part types.

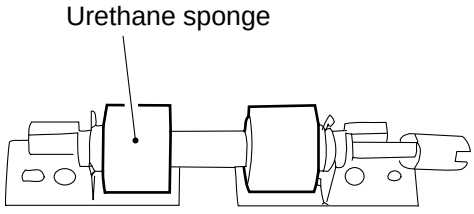

Figure 5-806a

COPYRIGHT © 1997 CANON INC.

5. Removing the Feeding Roller

1) Remove the multifeeder assembly.
2) Remove the separation roller.
3) Remove the pick-up roller from the front, and remove the stop ring.
4) Remove the stop ring ① at the front of the feeding roller assembly; then, remove the feeding roller assembly ③ together with the timing belt ②.

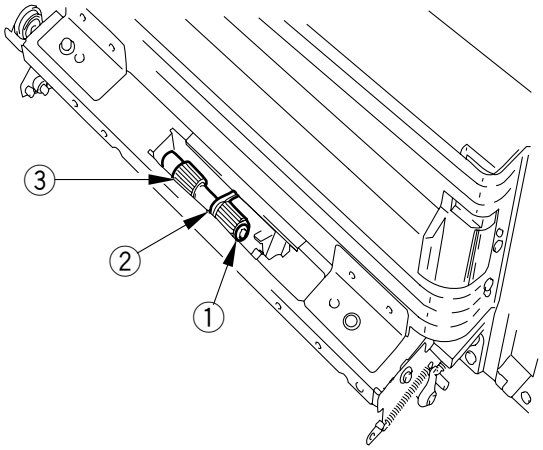

Figure 5-807

6. Removing the Multifeeder Paper Sensor

1) Remove the mounting screw ①, and remove the solenoid cover ②. Remove the mounting screw ③, and remove the solenoid ④ together with the support plate.

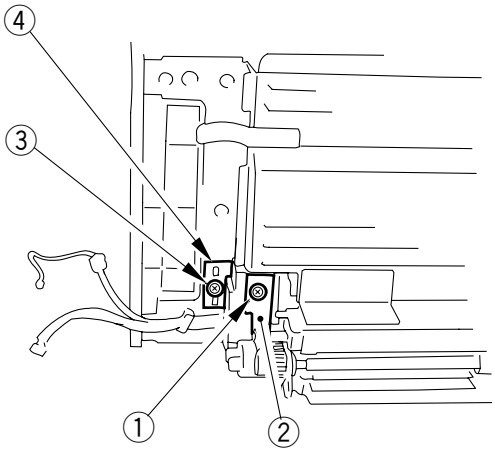

Figure 5-808

COPYRIGHT © 1997 CANON INC.

2) Remove the two mounting screws ⑤, and remove the grip ⑥.

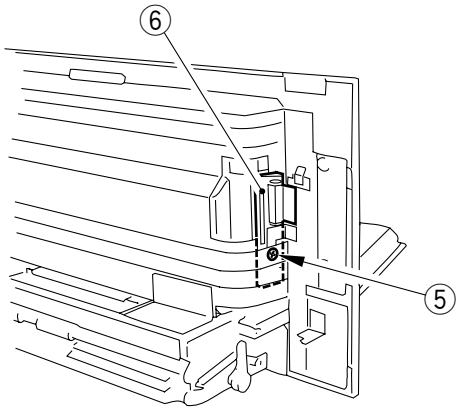

Figure 5-809

3) Remove the ten mounting screws ⑦, and remove the door sensor metal fixing ⑧ and the multifeeder cover ⑨.

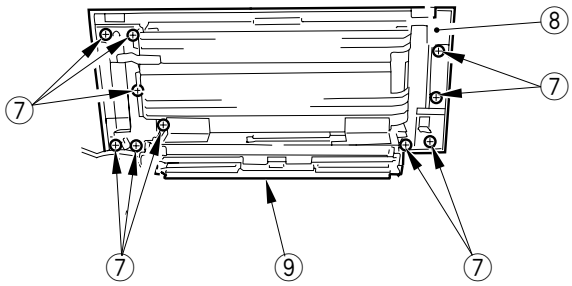

Figure 5-810

4) Remove the two mounting screws ⑩, and remove the lower cover ⑪.

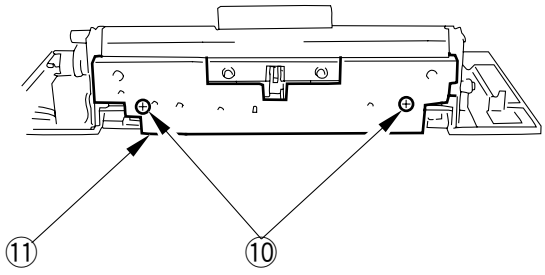

Figure 5-811

5) Remove the two mounting screws ⑫, and remove the guide plate ⑬.

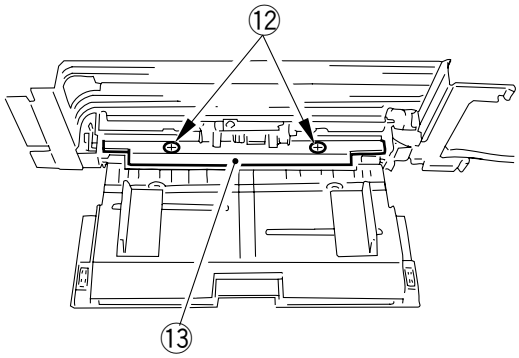

Figure 5-812

6) Remove the two mounting screws ⑭, and remove the sensor mount ⑮.
7) Detach the sensor from the sensor mount.

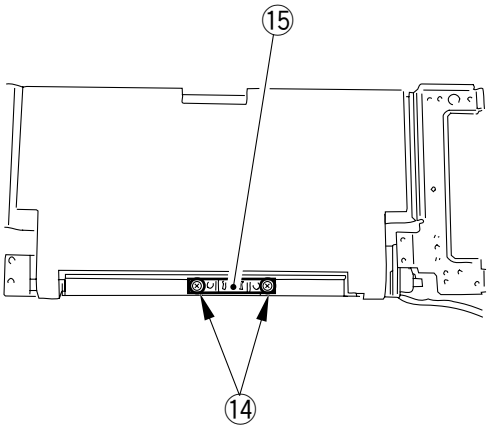

Figure 5-813

7. Attaching the Side Guide Timing Belt in the Multifeeder Assembly

Force the rack plate of the multifeeder against section A (open state).

Move the slide volume in the direction of B, and attach the timing belt to the pulley.

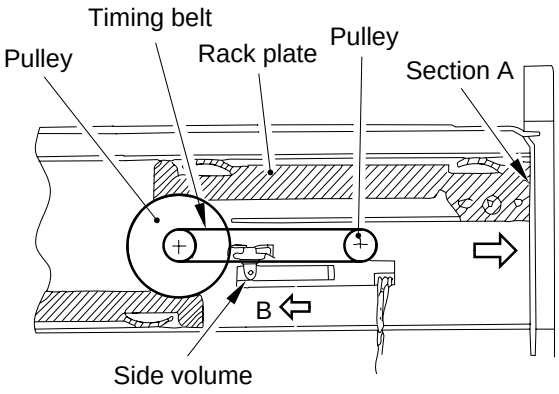

Figure 5-814

 COPYRIGHT © 1997 CANON INC. CANON NP6560/NP6360/NP6260 REV. 0 NOV. 1997 PRINTED IN JAPAN (IMPRIME AU JAPON)

8. Installing the Feeding Roller of the Multifeeder

When installing the pick-up roller ① to the multifeeder pick-up assembly, be sure to orient it so that the markings “5” ③ and the belt pulley face the front.

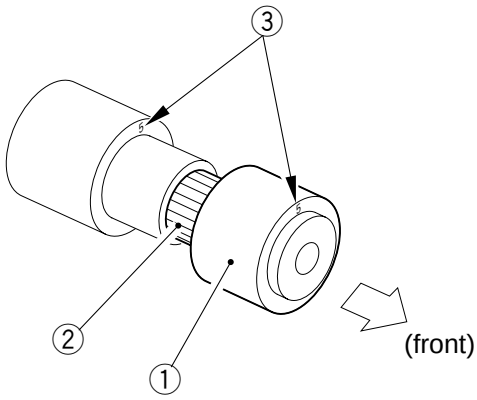

① Pick-up roller
② Belt pulley
③ Markings (roller)

Figure 5-815

9. Adjusting the Pressure of the Pick-Up/Feeding Roller of the Multifeeder

If double feeding or pick-up failure occurs during pick-up, adjust the position of the pressure spring of the separation roller.

- If double feeding occurs, move the spring in the direction of arrow A.
- If pick-up failure occurs, move the spring in the direction of arrow B.

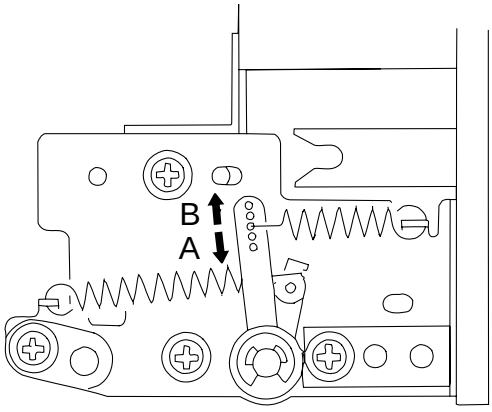

Figure 5-816

COPYRIGHT © 1997 CANON INC.

10. Position of the Pick-Up Roller Releasing Solenoid of the Multifeeder

Slide the solenoid in the direction of A to adjust so that the gap between the shutter ① and the shutter plate ② when the solenoid is pulled is 0.4 ±0.2 mm.

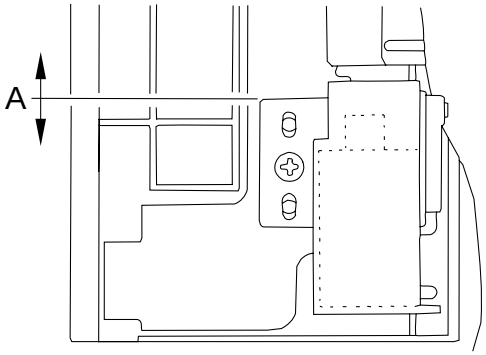

Figure 5-817

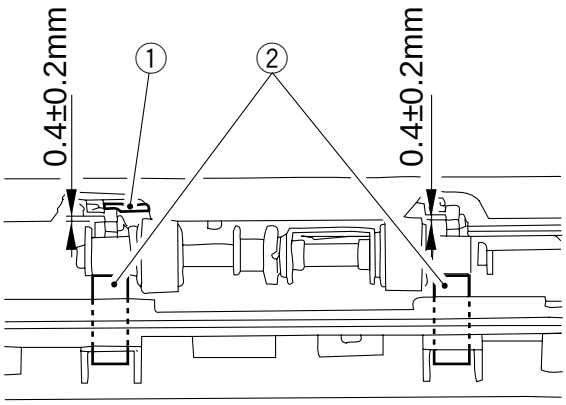

Figure 5-818

COPYRIGHT © 1997 CANON INC.
CANON NP6560/NP6360/NP6260 REV. 0 NOV. 1997 PRINTED IN JAPAN (IMPRIME AU JAPON)

B. Front Paper Deck Assembly

1. Removing the Paper Deck Assembly from the Copier

1) Remove the left/right stopper ① to the paper deck, and remove the paper deck.

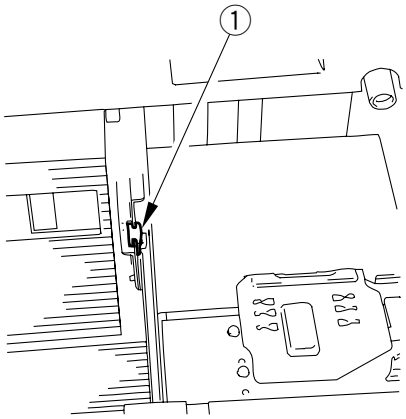

Figure 5-820 (left of right deck)

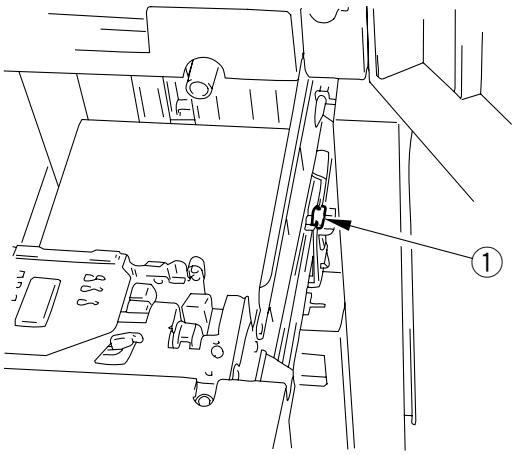

Figure 5-820a (right of right deck)

COPYRIGHT © 1997 CANON INC.

2. Removing the Lifter Cable

1) Remove the paper deck.
2) Remove the two mounting screws ① above, and loosen the two mounting screws ② on the side; then, remove the deck front cover ③.
3) Remove the two mounting screws ④ inside the deck, and remove the front and rear guide plates ⑤.

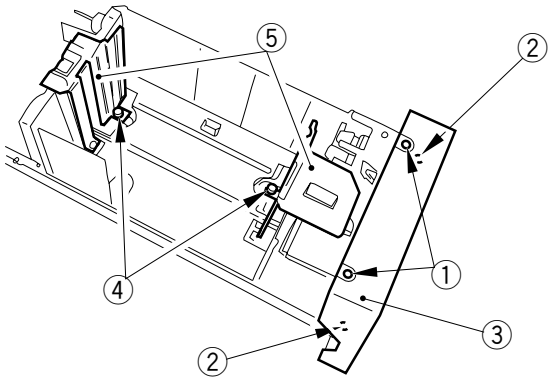

Figure 5-821

4) Mark the position of the latch assembly; then, remove the left and right mounting screws ⑥ (7 in total), and remove the latch assembly ⑦.
5) Remove the gear cover ⑧ from the front right.

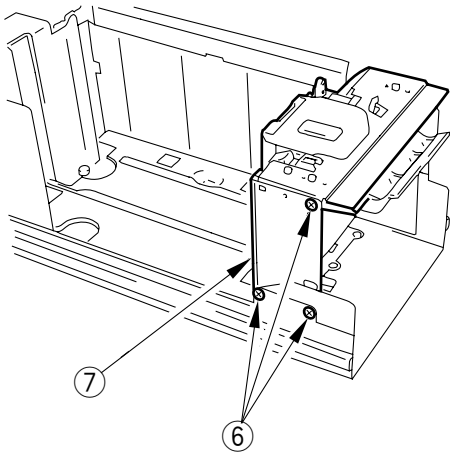

Figure 5-822a (left)

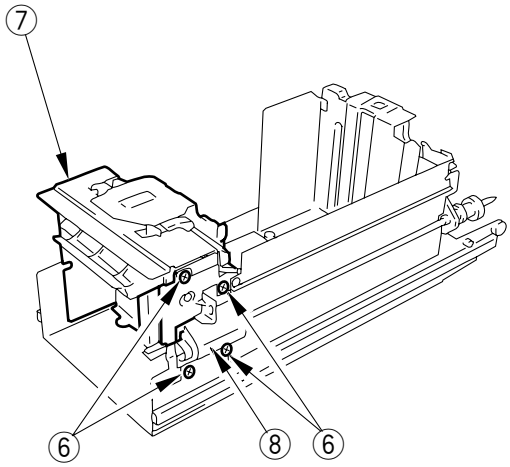

Figure 5-822b (right)

 COPYRIGHT © 1997 CANON INC.

6) Remove the mounting screw ⑨ at the front, and free the oil damper plate ⑩.

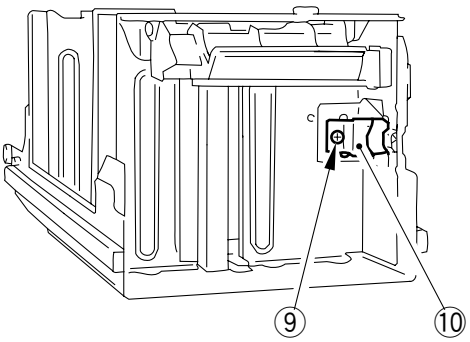

Figure 5-823

7) Remove the two hooks ⑪; then, remove the gear cover ⑫.

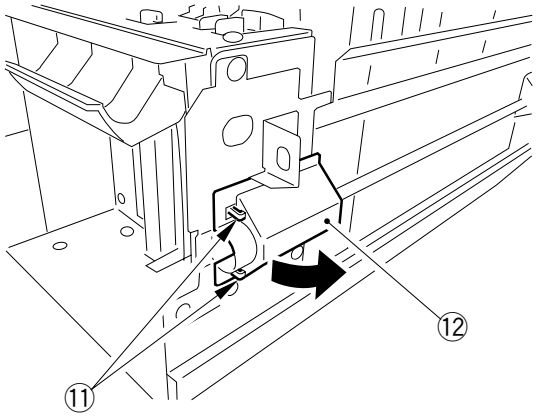

Figure 5-824

8) Remove the E-ring ⑬ at the front; then, while sliding out the gear and the pulley cover toward the front, detach the end of the cable ⑭ from the pulley.

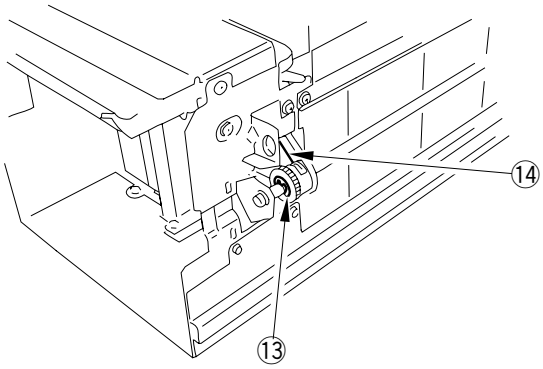

Figure 5-825

COPYRIGHT © 1997 CANON INC.

9) While holding the rear gear and the spring in place, remove the E-ring ⑮; then, while sliding out the pulley cover toward the front, detach the cable ⑰ from the pulley cover ⑯ .
10) Detach the end of the cable from the pulley.

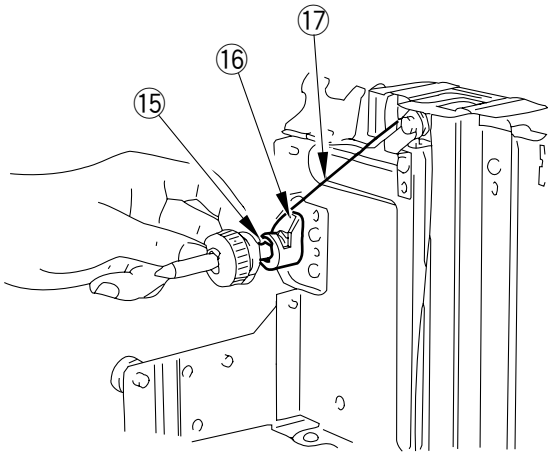

Figure 5-826

11) Remove the mounting screw ⑱, spring ⑲, and remove the grip assembly ⑳.

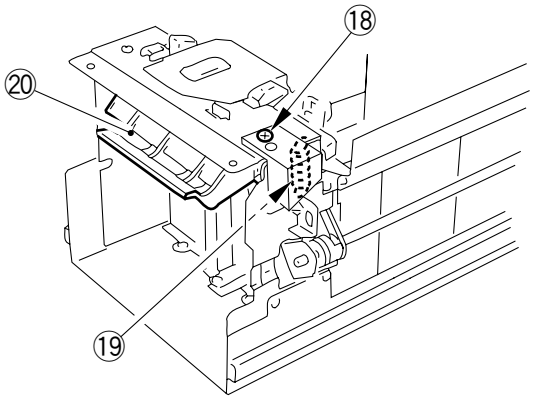

Figure 5-827

12) Remove the mounting screw ㉑ from the cable relay assembly at the front, and remove the stop ㉒.

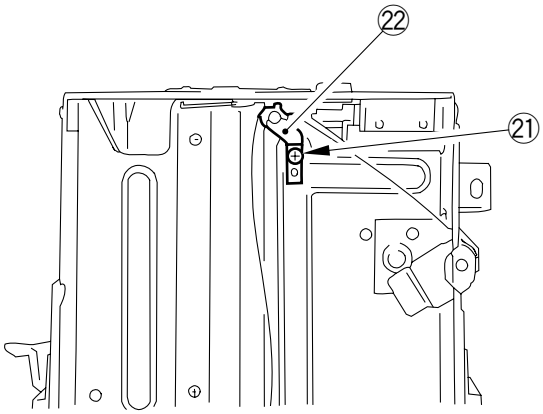

Figure 5-828

 COPYRIGHT © 1997 CANON INC.

13) Remove the mounting screw ㉓.from the cable relay assembly at the rear and remove the stop ㉔

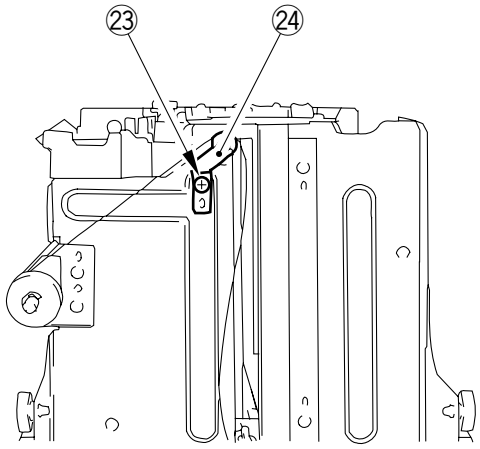

Figure 5-829

14) Remove the mounting screw ㉕, and remove the cable together with the mounting plate ㉖.

Caution:

If not done with care when setting the left compartment, the locking assembly of the grip and the fixing assembly of the machine will interfere with each other, loosening the fixing screw on the hook fixing plate and, ultimately, deforming the hook fixing plate.
The deformation will hinder locking if the left compartment at the correct position, and will gradually shift it to the front, encouraging deformation even more and ultimately leading to faulty registration and displacement of the left compartment.

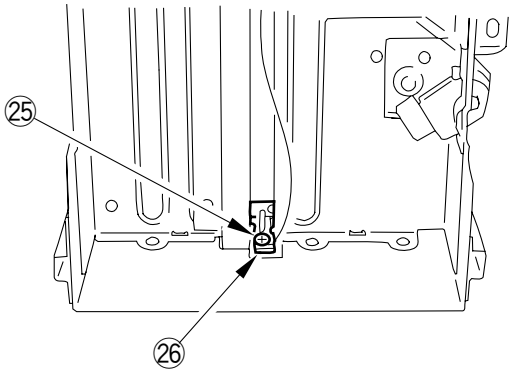

Figure 5-830 (front)

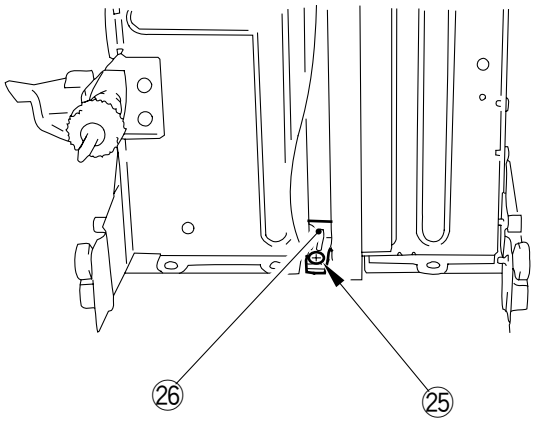

Figure 5-830a (rear)

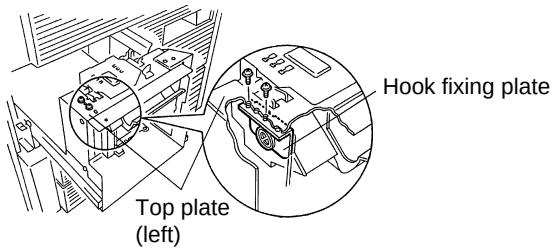

Figure 5-830b

3. Changing the Deck Paper Size

The deck paper size is changed by changing the position of the front, rear, and rear left guide plates.

Reference:

At time of shipment, the deck paper size is set to A4; if the user wants a non-A4 size, change the size; otherwise, skip the steps that follow. (You need, however, to attach the A4 size label.)

1) Slide out the deck to the front until it stops.
2) Remove the three mounting screws ① on the guide plates (front, rear, rear left); then, remove the three guide plates ②.

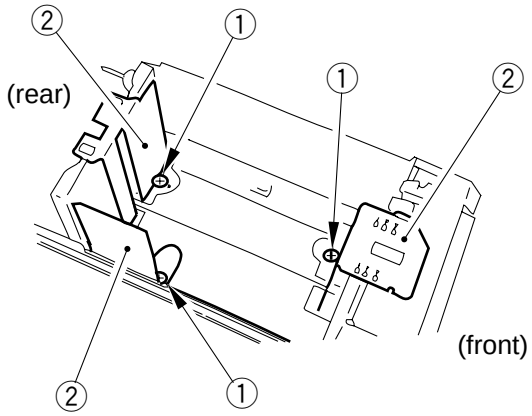

Figure 5-831

 COPYRIGHT © 1997 CANON INC.

3) While referring to the size markings on the deck base plate, front side plate, and guide plates, install the front, rear, and rear left guide plates ②.

Caution:

Make sure of the following about the front and rear guide plates:

- They are perpendicular to the base of the deck.
- They are parallel to the metal plates on the deck front and rear.

4) Place copy paper in the deck, and slide the deck in the machine.
5) Enter the new deck paper size in the copier's service mode (*5*).

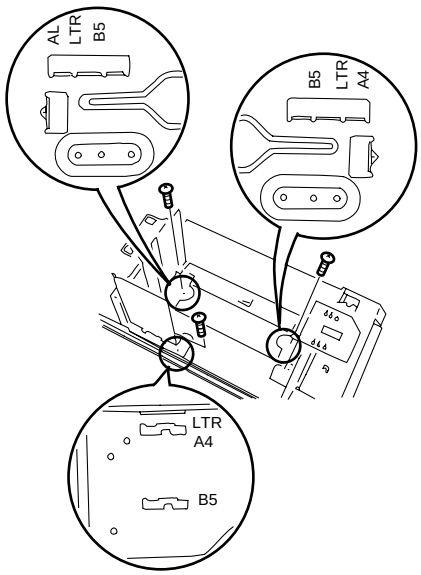

Figure 5-832

COPYRIGHT © 1997 CANON INC.

4. Adjusting the Deck Registration

Remove the deck front cover, and loosen the two mounting screws ① on the left and the right of the deck; then, shift the latch assembly ② to the front and rear until the position is as indicated in Figure 5-834.

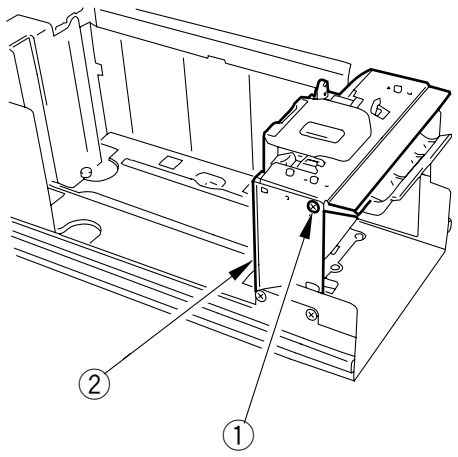

Figure 5-833a (left)

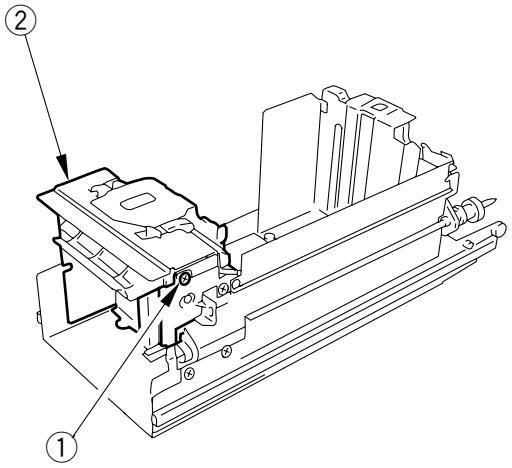

Figure 5-833b (right)

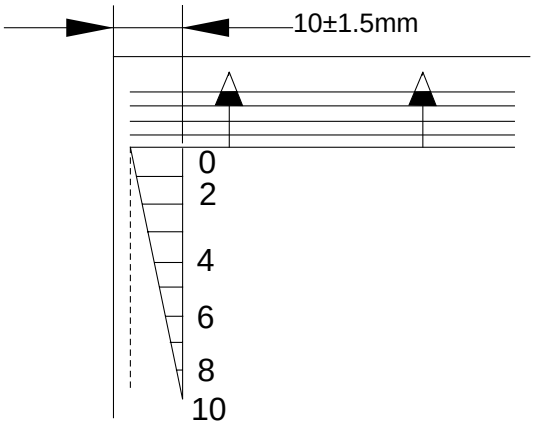

Figure 5-834

COPYRIGHT © 1997 CANON INC.

C. Right Deck Pick-Up Assembly (cassette holder)

1. Removing the Pick-Up Assembly from the Copier

1) Slide out the paper deck and the cassette of the pick-up assembly which you want to remove from the copier.
2) Open the upper right door and the lower right door.

Caution:

The pick-up assembly cannot be removed if you try to remove it without first removing the paper deck and the cassette because of the lifter.

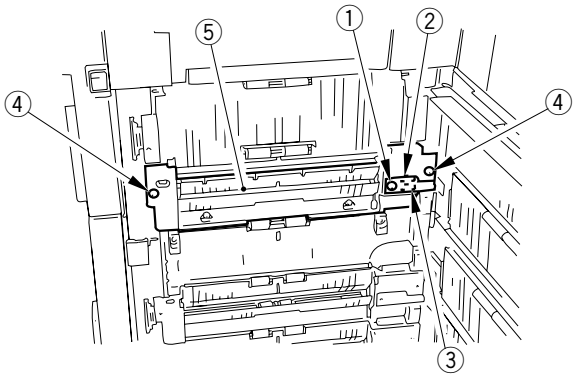

Figure 5-835

3) Remove the mounting screw ①, and remove the connector cover ②; then, disconnect the two connectors ③.
4) Remove the two mounting screws ④, and remove the pick-up assembly ⑤.

2. Removing the Pick-Up Roller

1) Remove the pick-up assembly.
2) Remove the two stop rings ① on the outside, and remove the pick-up roller ② in the direction of the arrow.

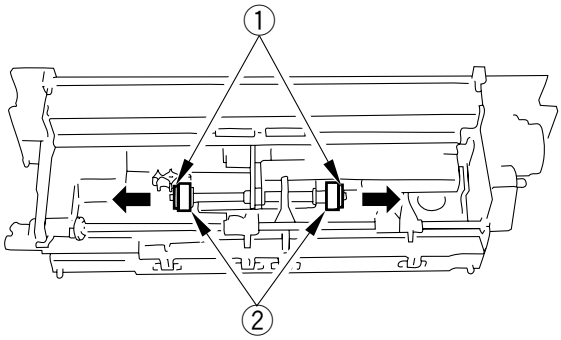

Figure 5-836

■ Orientation of the Pick-Up Roller

Install the pick-up roller by reversing the steps used to remove it with the following in mind:

- The pick-up roller used at the front and the rear are NOT interchangeable.
- The collar of the pick-up roller at the front is gold in color.

When installing the pick-up roller ① to the pick-up assembly, make sure that the round marking ② on the side of the roller and the round marking ③ on the collar (gold) face the front of the machine.

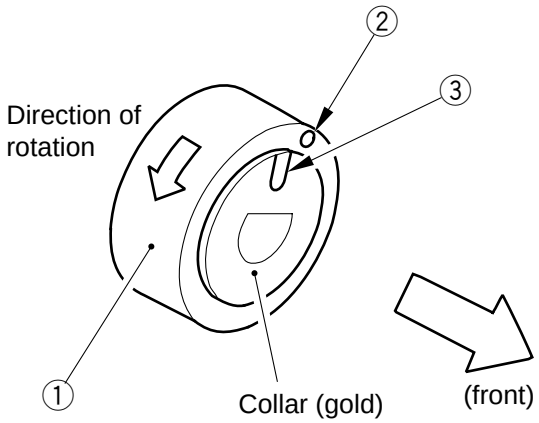

Figure 5-837a

- The collar of the pick-up roller at the rear is silver in color. When installing the pick-up roller ④ to the pick-up assembly, make sure that the round marking ⑤ on the collar (silver) is toward the rear.

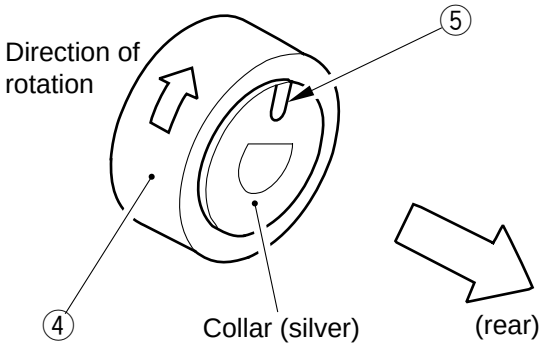

Figure 5-837b

COPYRIGHT © 1997 CANON INC.

3. Removing the Feeding Roller

1) Remove the pick-up assembly from the copier.
2) Remove the screw ②, and remove the feeding roller cover ①.
3) Remove the stop ring ③ from the front of the feeding roller.
4) Remove the stop ring ④ and the pick-up roller ⑤ at the front; then, remove the feeding roller ⑦ together with the timing belt ⑥.

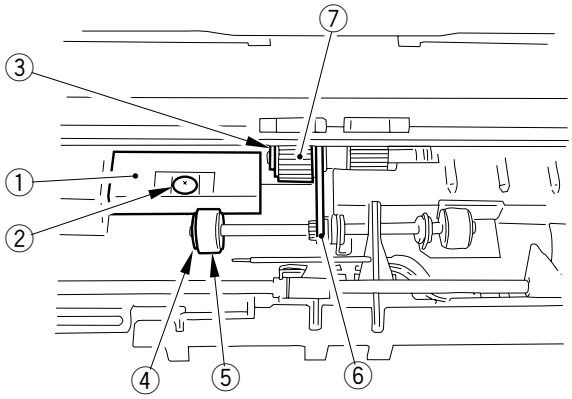

Figure 5-838

4. Removing the Separation Roller

1) Remove the two mounting screws ①, and remove the feeding guide plate ②; then, remove the open/close guide ③.

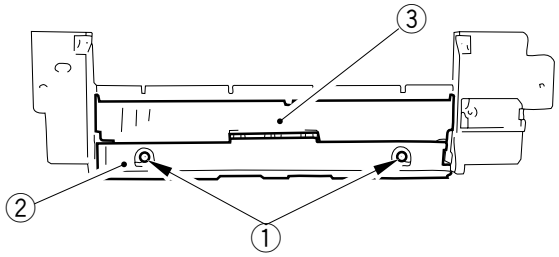

Figure 5-839

2) Remove the two mounting screws ④, and detach the separation roller assembly ⑤ from the joint.

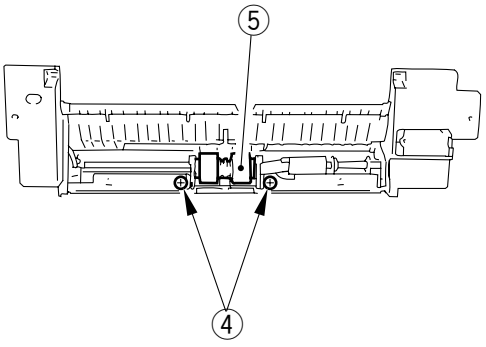

Figure 5-840

COPYRIGHT © 1997 CANON INC.

3) Remove the separation roller ⑥ from the separation roller shaft mount.

Caution:

Take care not to lose the pin on the roller.

Caution:

The urethane sponge used on the roller is initially pink and changes to yellow over time, accelerated by exposure to light (pink to orange, and then to yellow).
The fact is common to all urethane sponge types, and will not affect its physical performance. Keep in mind that color difference, if any, does not indicate different part types.

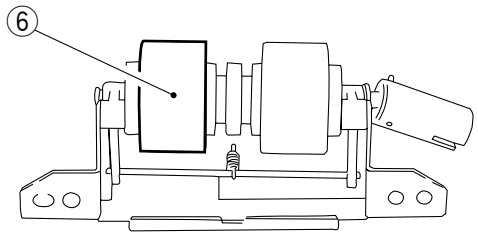

Figure 5-841

5. Adjusting the Pressure of the Separation Roller

If double feeding or pick-up failure occurs during pick-up, adjust the position of the pressure spring of the separation roller.

- If double feeding occurs, move the spring in the direction of B.
- If pick-up failure occurs, move the spring in the direction of A.

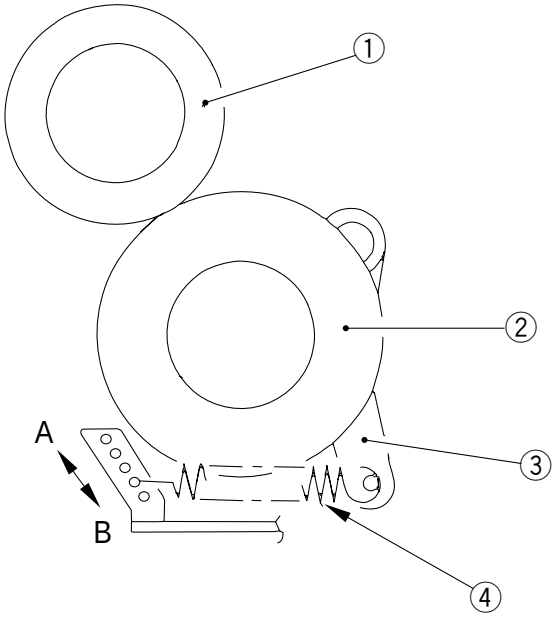

① Feeding roller ③ Pressure lever
② Separation roller ④ Pressure spring

Figure 5-842

 COPYRIGHT © 1997 CANON INC.

6. Orientation of the Separation Roller

Pay attention to the orientation of the separation roller whenever you are replacing it.

Caution:

If the separation roller is installed in the wrong orientation, interference with the clamping washer can cause problems.

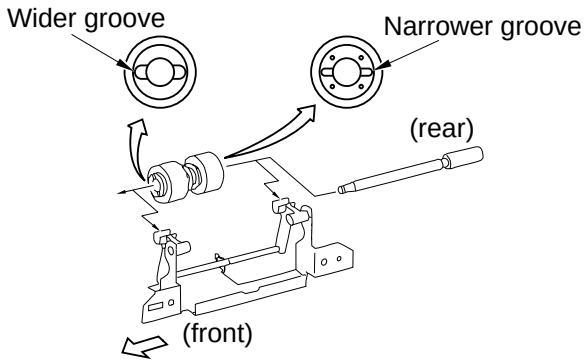

Figure 5-843

7. Orientation of the Feeding Roller of the Cassette/Deck Pick-Up Assembly

When installing the feeding roller assembly ① to the cassette/deck pick-up assembly, make sure that the belt pulley ② is toward the front of the copier.

When installing the feeding roller ③ to the feeding roller shaft ④, make sure that the marking "5" ⑤ faces the front of the copier.

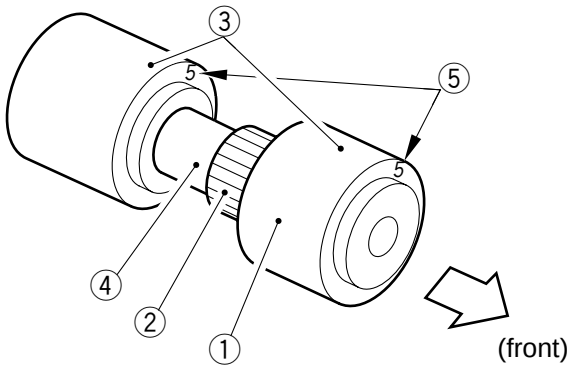

① Feeding roller assembly
② Belt pulley
③ Feeding roller
④ Feeding roller shaft
⑤ Marking (roller)

Figure 5-844

8. Positioning the Pick-Up Roller Releasing Solenoid of the Deck

As shown in Figure 5-845, adjust the position of the solenoid so that the left end of the right solenoid arm 2 is 57.2 ±0.5 mm from the center of the hole A in the solenoid mount.

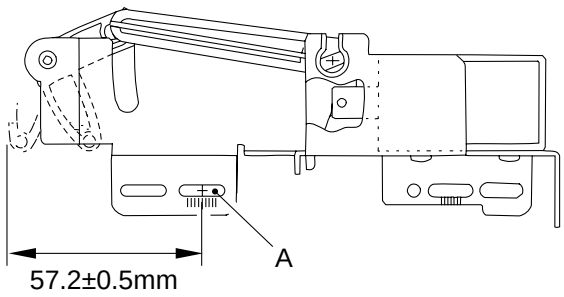

Figure 5-845

 COPYRIGHT © 1997 CANON INC.

9. Positioning the Pick-Up Roller Releasing Solenoid of the Cassette

As shown in Figure 5-846, adjust the position of the solenoid so that the distance from the bottom of the pick-up assembly and the section A of the roller arm is 36 ±0.5 mm. (Use two screws ①.)

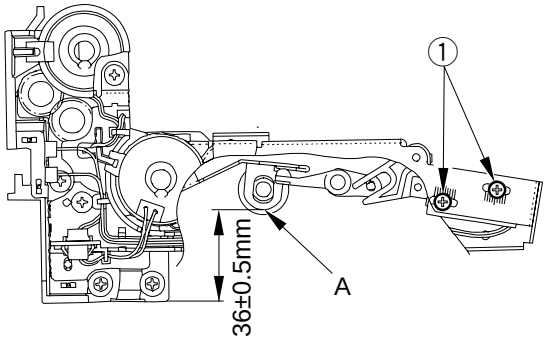

Figure 5-846

10. Adjusting the Registration for the Cassette

Loosen the screw ② shown in Figure 5-847 using a screwdriver ③, and adjust the position of the cassette hook plate ① so that the registration is as specified.

In the case of cassette 4, be sure to enter the paper width basic value (*4*) after making the adjustment.

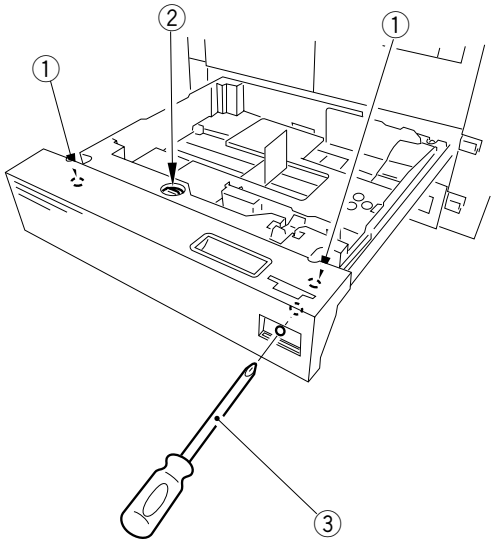

Figure 5-847

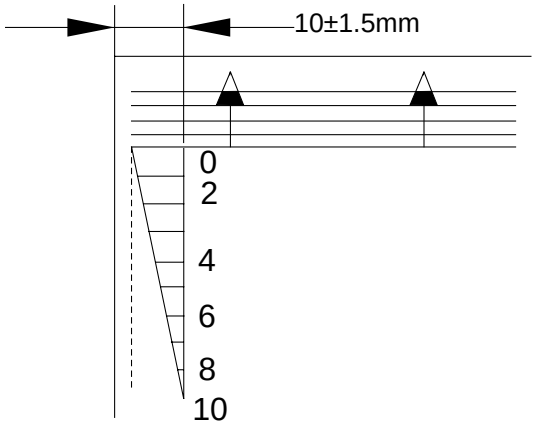

Figure 5-848

COPYRIGHT © 1997 CANON INC.

D. Left Deck Pick-Up Assembly

1. Removing the Pick-Up Assembly from the Copier

1) Remove the left/right paper deck.
2) Slide out the holding tray feeding assembly about 10 cm to the front.
3) Disconnect the two connectors ①, and remove the mounting screws ② from the two positioning pins; then, remove the positioning pins ③, and remove the left deck pick-up assembly ④.

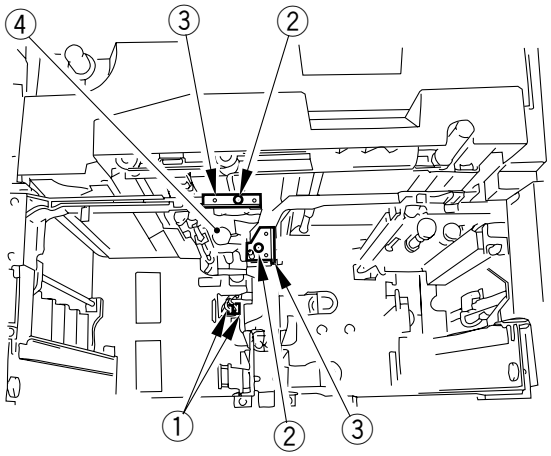

Figure 5-849

Note:

When installing the left deck pick-up assembly, slide out the holding tray feeding assembly slightly to the front.
Pay attention to the engagement of the gear.

2. Removing the Pick-Up Roller

1) Remove the left deck pick-up assembly from the copier.
2) Remove the two stop rings ① from the front and the rear; then, remove the two pick-up rollers ②.

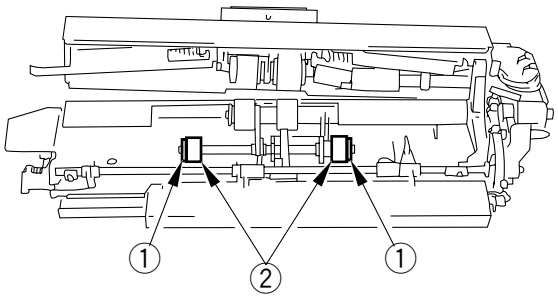

Figure 5-850

 COPYRIGHT © 1997 CANON INC.

■ Orientation of the Pick-Up Roller

Install the pick-up roller by reversing the steps used to remove it with the following in mind:

- The pick-up rollers used at the front and the rear are NOT interchangeable.
- The collar of the pick-up roller used at the front is gold.

When installing the pick-up roller ① to the pick-up assembly, make sure that the round marking ② on the side of the roller and the round marking ③ on the collar (gold) face the front.

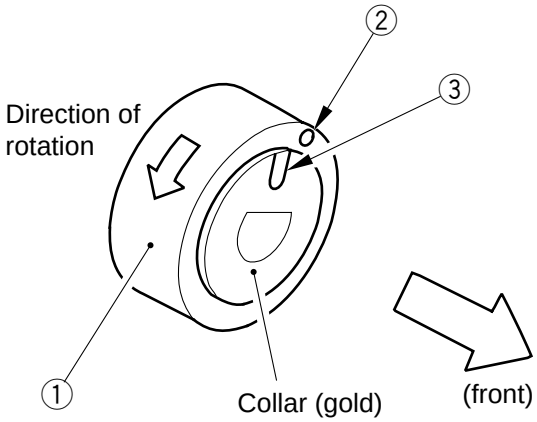

Figure 5-851a

- The collar of the pick-up roller used at the rear is silver in color. When installing the pick-up roller ④ to the pick-up assembly, make sure that the round marking ⑤ on the collar (silver) is toward the rear of the machine.

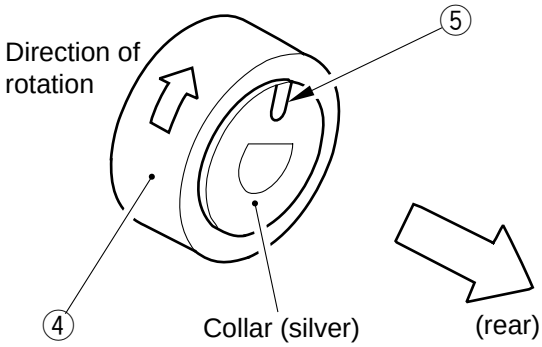

Figure 5-851b

COPYRIGHT © 1997 CANON INC.

3. Removing the Feeding Roller

1) Remove the left deck pick-up assembly from the copier.
2) Remove the stop ring ①; then, remove the feeding roller ③ together with the timing belt ②.

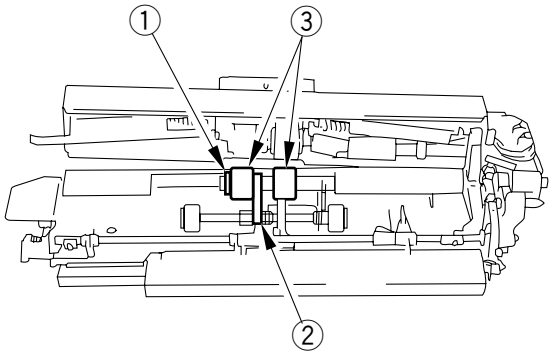

Figure 5-852

4. Removing the Separation Roller

1) Remove the left deck pick-up assembly from the copier.
2) Remove the mounting screw ①, and detach the separation roller assembly ② from the joint ③.

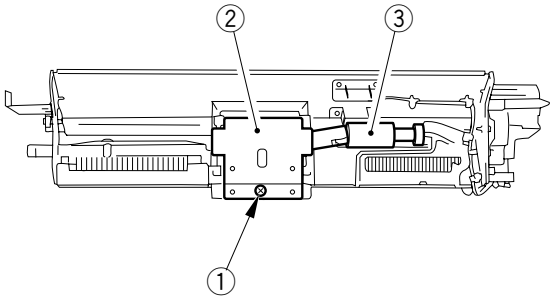

Figure 5-853

3) Remove the separation roller ④ from the separation roller shaft mount.

Note:

Take care not to lose the pin from the roller.

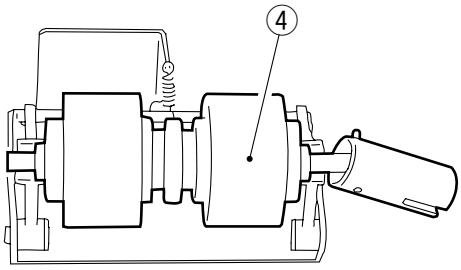

Figure 5-854

Note:

The urethane sponge used on the roller is initially pink and changes to yellow over time, accelerated by exposure to light (pink to orange, and then to yellow).
The fact is common to all urethane sponge types, and will not affect its physical performance. Keep in mind that color difference, if any, does not indicate different part types.

 COPYRIGHT © 1997 CANON INC.

5. Orientation of the Feeding Roller Assembly of the Left Deck Pick-Up Assembly

When orienting the feeding roller assembly ① to the left pick-up assembly, make sure that the belt pulley ② is toward the front.

When installing the feeding roller ③ to the feeding roller shaft ④, make sure that the marking "5" faces the front.

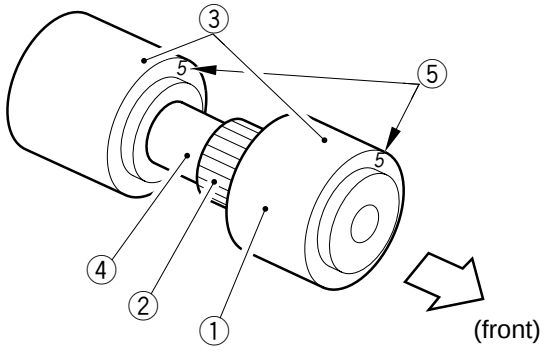

① Feeding roller assembly
② Belt pulley
③ Feeding roller
④ Feeding roller shaft
⑤ Marking (roller)

Figure 5-855

E. Pick-Up Vertical Path Roller Assembly

1. Removing the Pick-Up Vertical Path Roller Assembly

1) Open the upper right door and the lower right door.
2) Remove the right deck pick-up assembly/cassette pick-up assembly.
3) Remove the two mounting screws ①, and disconnect the connector; then, remove the pick-up vertical path roller assembly ②.

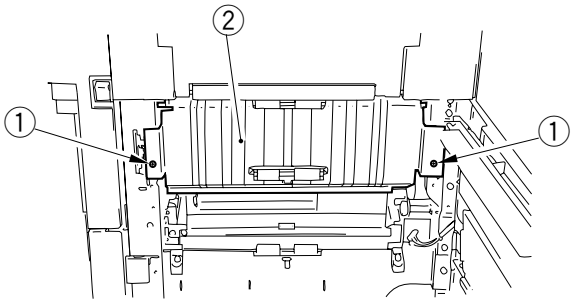

Figure 5-856

F. Registration Feeding Assembly

1. Construction

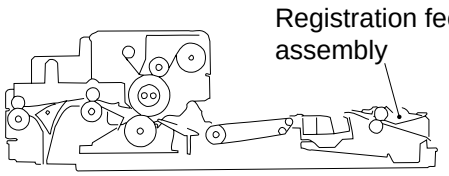

Figure 5-857

2. Removing the Registration Feeding Assembly

1) Open the front cover, and slide out the fixing/feeding unit from the copier.
2) Remove the fixing/feeding front cover, and remove the transfer/separation charging assembly.
3) Remove the two mounting screws ①, and remove the right rail support plate ②; then, remove the registration feeding assembly pressure spring ③.

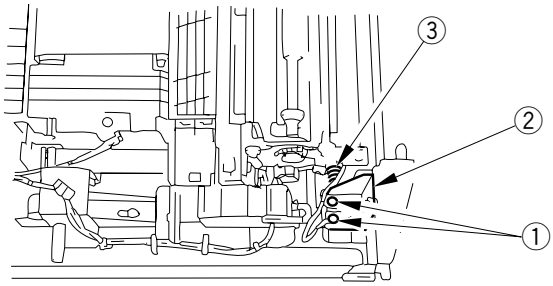

Figure 5-858

4) Remove the E-ring ④, and push in the spindle shaft ⑤ to remove.
5) Disconnect the connector ⑥, and remove the registration feeding assembly ⑦ from the fixing/feeding unit.

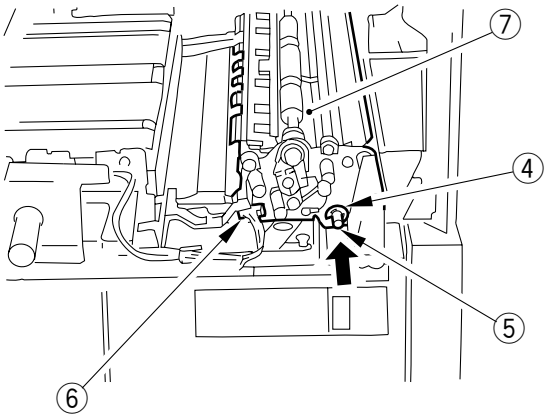

Figure 5-859

 COPYRIGHT © 1997 CANON INC.

3. Removing the Registration Roller (upper rubber roller)

1) Loosen the two set screws ① on the electromagnetic clutch at the rear.
2) Remove the spring ②, E-ring ③, spacer ④, bushing ⑤, and bearing ⑥.

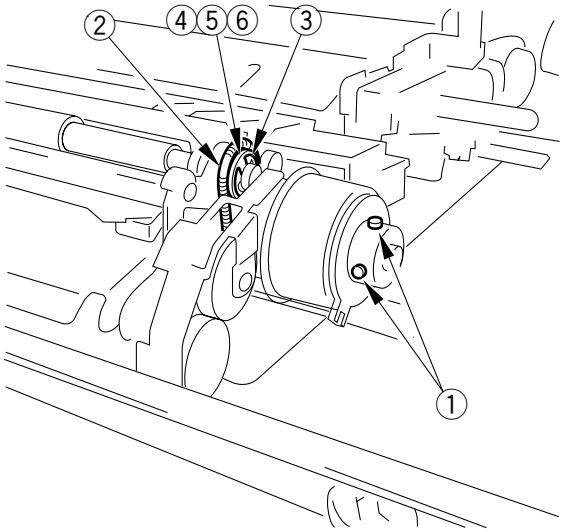

Figure 5-860

3) Remove the spring ⑦, E-ring ⑧, spacer ⑨, bearing ⑩, and bushing ⑪ at the front.
4) Remove the pre-transfer upper guide ⑫, and remove the registration roller (upper rubber roller) ⑬.

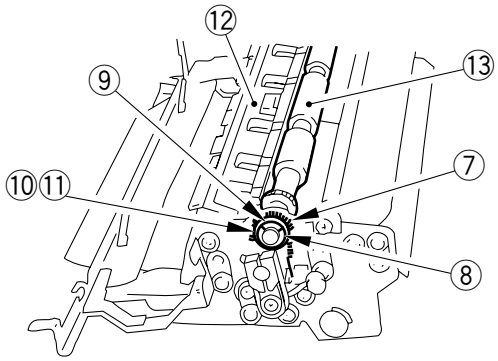

Figure 5-861

COPYRIGHT © 1997 CANON INC.

G. Feeding Assembly

1. Construction

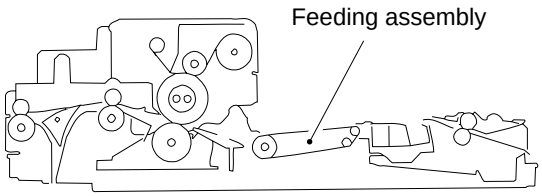

Figure 5-862

2. Removing the Fixing/Feeding Unit

1) Remove the front cover; then, open the hopper assembly, take out the power switch assembly cover, and close the hopper assembly.
2) Slide out the fixing/feeding unit.
3) Remove the screw ① (one each at left and right), and remove the fixing feeding unit stopper ②.
4) Remove the fixing/feeding unit from the copier.

Caution:

Keep in mind that the fixing/feeding unit weighs about 15 kg.

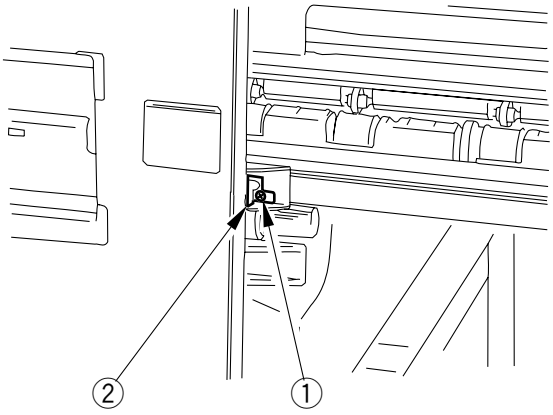

Figure 5-863 (left stopper)

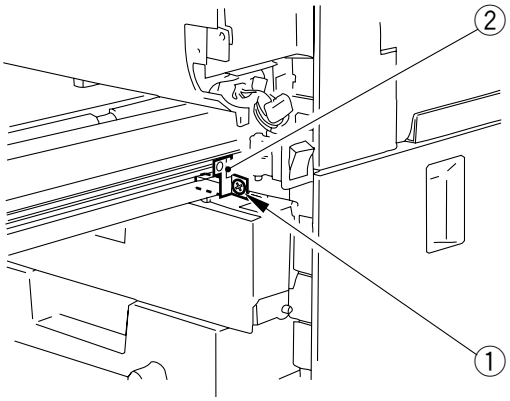

Figure 5-864 (right stopper)

 COPYRIGHT © 1997 CANON INC.

3. Removing the Feeding Belt

1) Remove the fixing/feeding unit from the copier.
2) Remove the fixing/feeding front cover.
3) Remove the E-ring ①, spacer ②, and bearing ③ at the front.

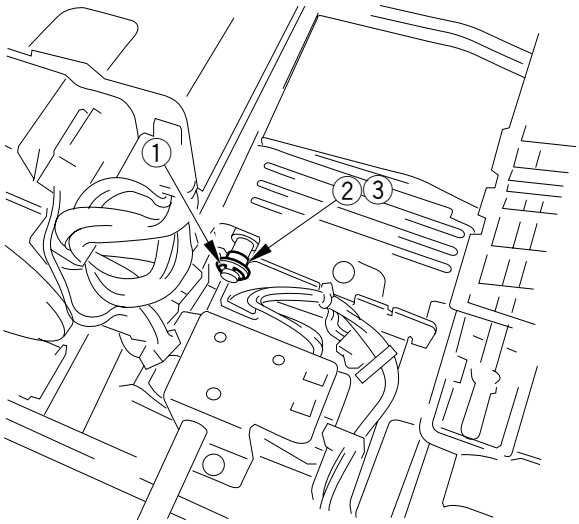

Figure 5-865

4) Remove the E-ring ③ and the two mounting screws ④ at the rear.

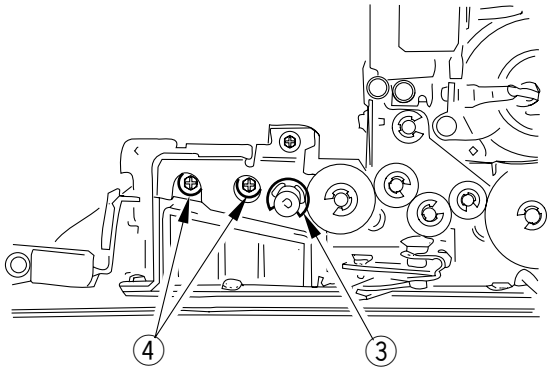

Figure 5-866

5) Remove the E-ring ⑤, gear ⑥, and pin ⑦ at the rear.
6) Remove the E-ring ⑧ and bearing ⑨ at the rear.

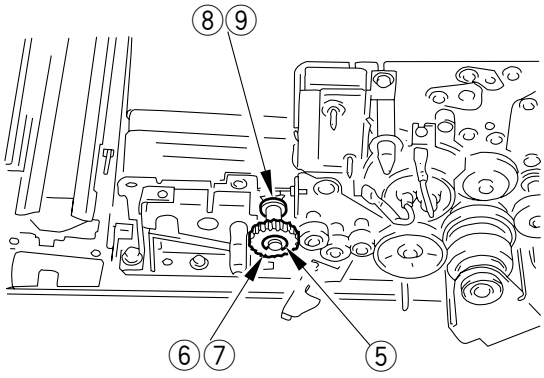

Figure 5-867

COPYRIGHT © 1997 CANON INC.

7) Remove the three harness retainers ⑩ and two edge saddles ⑪, and disconnect the connector ⑫; then, remove the screw ⑬, and remove the cord guide ⑭.

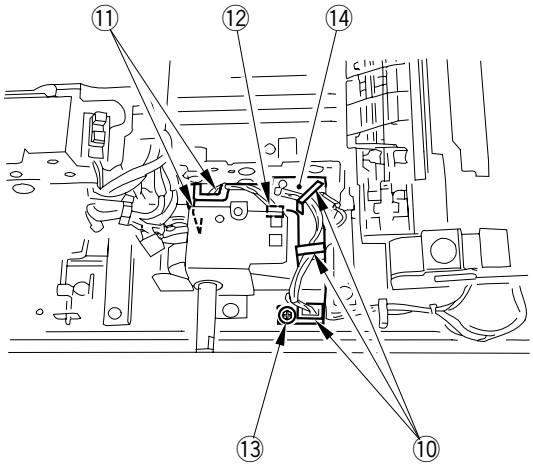

Figure 5-868

8) Remove the two screws ⑮, and remove the handle support plate ⑯.

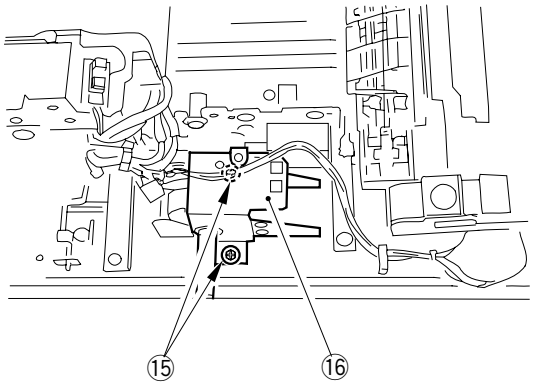

Figure 5-869

9) Remove the two mounting screws ⑰ (2 each at front and rear), and remove the feeding belt unit ⑱.

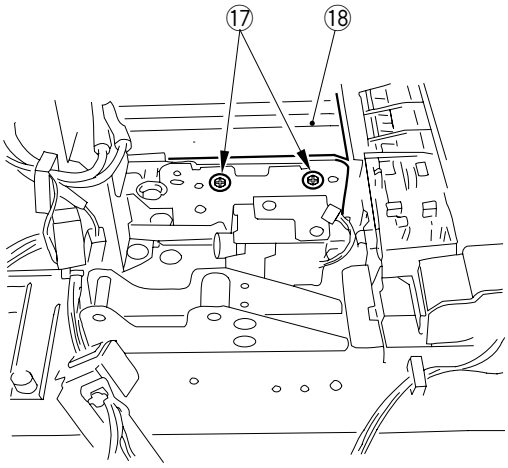

Figure 5-870 (front)

 COPYRIGHT © 1997 CANON INC.

10) Remove the screw ⑳, and remove the feeding upper plate ⑲ at the front; then, remove the feeding belt ㉑ and the postcard belt ㉒.

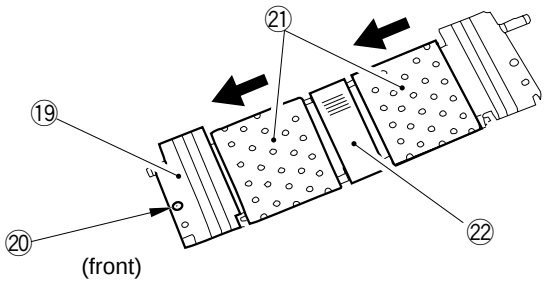

Figure 5-871

H. Holding Tray Assembly

1. Construction

① Holding tray inlet assembly
② Side guide plate
③ Y direction guide plate
④ Re-pick up assembly
⑤ Re-pick up roller

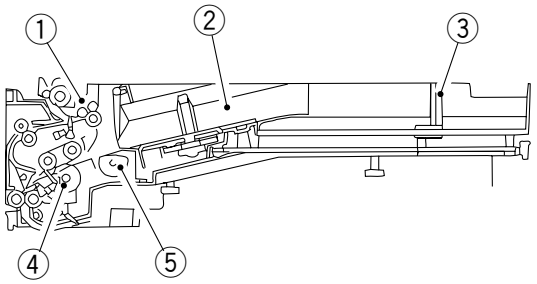

Figure 5-872a (cross section)

① Holding tray re-pick up roller (D-cut roller) solenoid (SL6)
② Holding tray reversing clutch (CL4)
③ Holding tray forward clutch (CL5)
④ Holding tray separation clutch (CL6)
⑤ Holding tray registration clutch (CL3)

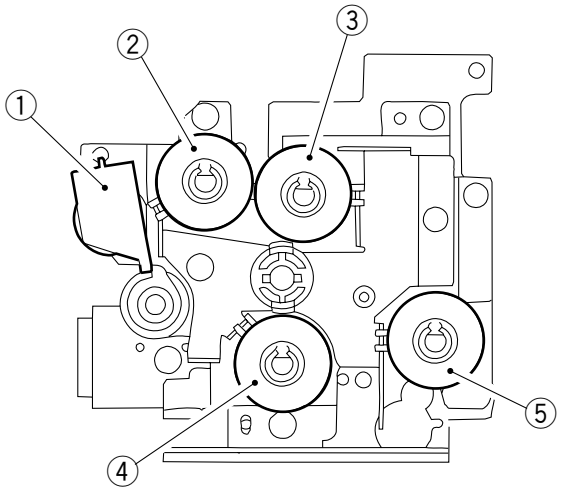

Figure 5-872b (rear view)

 COPYRIGHT © 1997 CANON INC.

2. Removing the Holding Tray from the Copier

1) Open the front cover.
2) Remove the fixing/feeding front cover.
3) Slide the holding tray assembly to the front and out of the copier.

3. Removing the Holding Tray Re-Pick Up Assembly

1) Slide the holding tray assembly to the front and out of the copier.
2) Remove the screw ③ (1 each), and remove the inlet assembly front upper cover ① and the inlet assembly rear cover ②; then, remove the two screws ⑤ and disconnect the two connectors ⑥ to remove the sided guide plate ④.

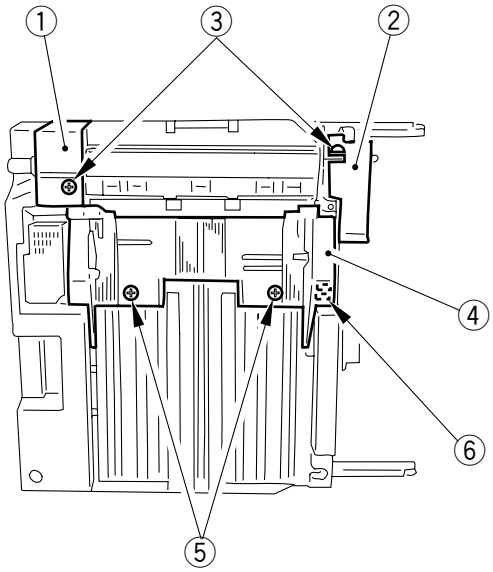

Figure 5-873

3) Remove the three mounting screws ⑦ (front).

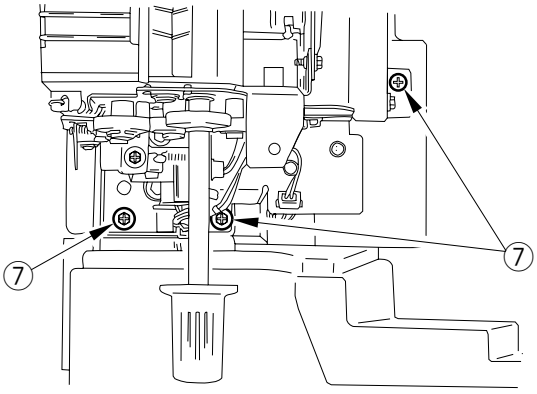

Figure 5-874 (front)

4) Remove the three mounting screws ⑧ (rear); while lifting the holding tray re-pick up assembly, disconnect the two connectors ⑨, and remove the holding tray re-pick up assembly ⑩.

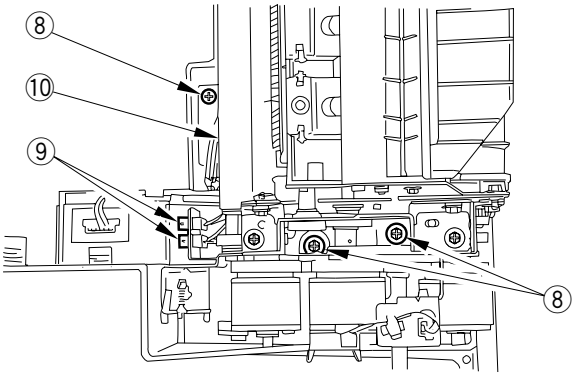

Figure 5-875 (rear)

4. Removing the Holding Tray Registration Paper Sensor

1) Open the front cover.
2) Slide the holding tray to the front and out of the copier.
3) Remove the holding tray re-pick up assembly.
4) Remove the two mounting screws ①, and remove the registration paper sensor assembly ②.

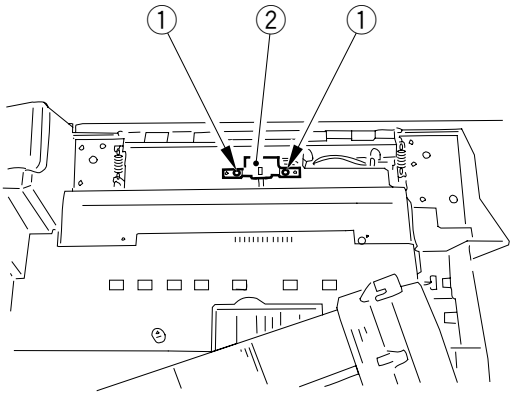

Figure 5-876

 COPYRIGHT © 1997 CANON INC.

5. Removing the Re-Pick Up Roller

1) Open the front cover.
2) Slide out the holding tray assembly to the front.
3) Remove the mounting screw ① (1 each), and remove the two pick-up rollers ②.

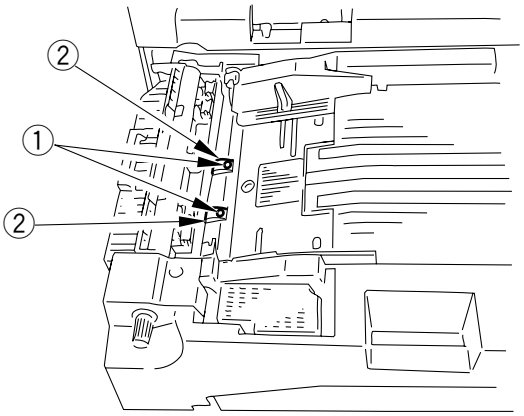

Figure 5-877

6. Removing the Holding Tray Driver PCB

1) Open the front cover.
2) Slide the holding tray assembly to the front and out of the copier.
3) Turn over the holding tray assembly.
4) Remove the two mounting screws ①, and remove the holding tray driver PCB cover ②.

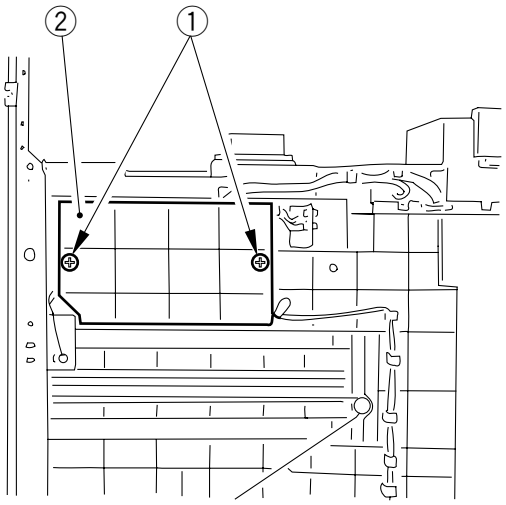

Figure 5-878

COPYRIGHT © 1997 CANON INC.

5) Remove the two mounting screws, and disconnect the nine connectors ④ (J201, J202, J203, J204, J205, J207, J208, J209, J210); then, remove the holding try drier PCB ⑤.

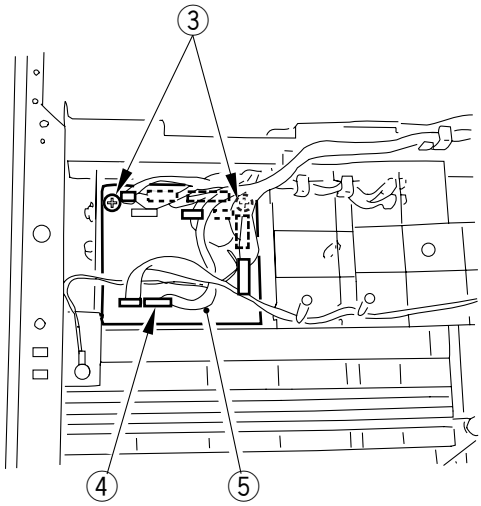

Figure 5-879

7. Removing the Holding Tray Y Motor

1) Slide the holding tray to the front and out of the copier.
2) Turn over the holding tray assembly.
3) Remove the two mounting screws ①, and remove the right rail ②.

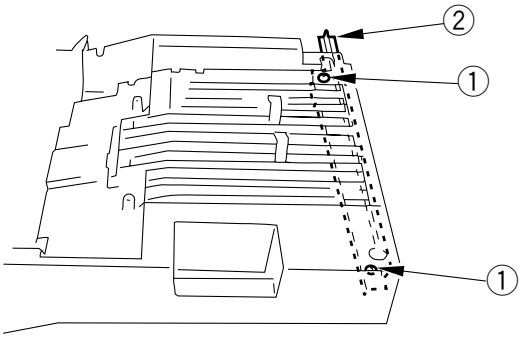

Figure 5-880

 COPYRIGHT © 1997 CANON INC.

4) Turn over the holding tray assembly.
5) Remove the E-ring ③, flange ④, and belt ⑤.

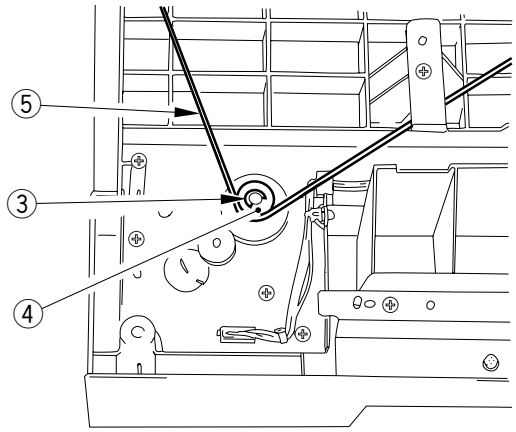

Figure 5-881

6) Remove the two mounting screws ⑥; then, turn over the holding tray Y motor assembly ⑦, and disconnect the connector.
7) Remove the two mounting screws, and remove the holding tray Y motor.

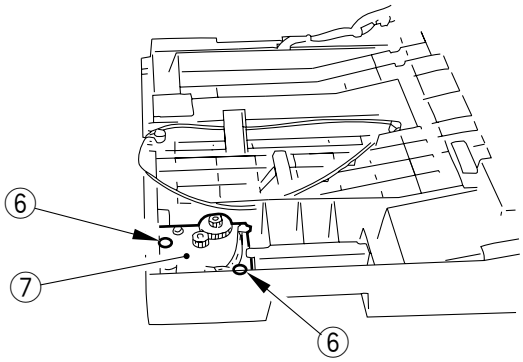

Figure 5-882

8. Removing the Y Motor Home Position Sensor

1) Slide the holding tray assembly to the front and out of the copier.
2) Remove the right rail, and turn over the holding tray assembly.
3) Remove the mounting screw ①, and remove the Y motor home position sensor assembly ②.

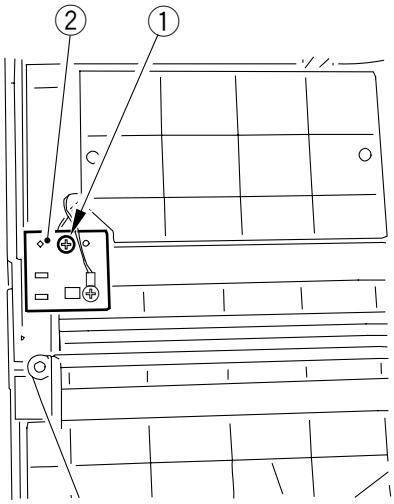

Figure 5-883

9. Removing the Holding Tray Inlet Assembly

1) Remove the mounting screw ①, and remove the inlet assembly front upper cover ②.

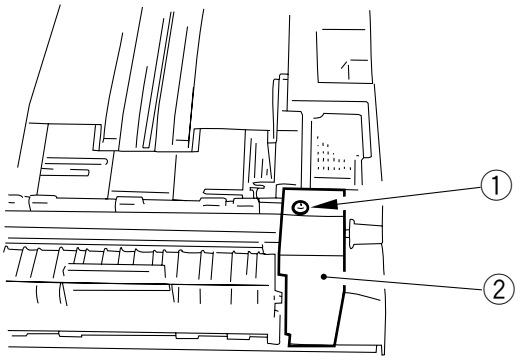

Figure 5-884

 COPYRIGHT © 1997 CANON INC. CANON NP6560/NP6360/NP6260 REV. 0 NOV. 1997 PRINTED IN JAPAN (IMPRIME AU JAPON)

2) Remove the mounting screw ③, and remove the inlet assembly rear upper cover ④.

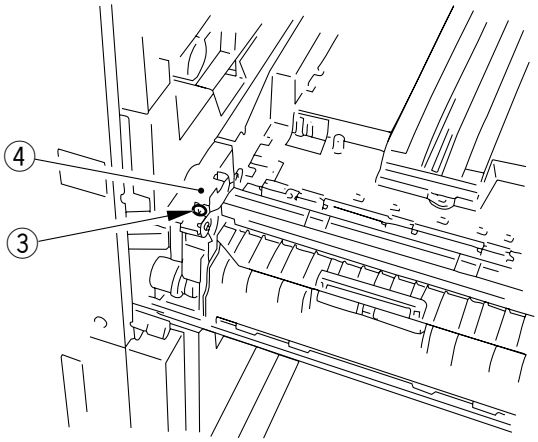

Figure 5-885

3) Remove the two mounting screws ⑤, and remove the inlet assembly ⑥.

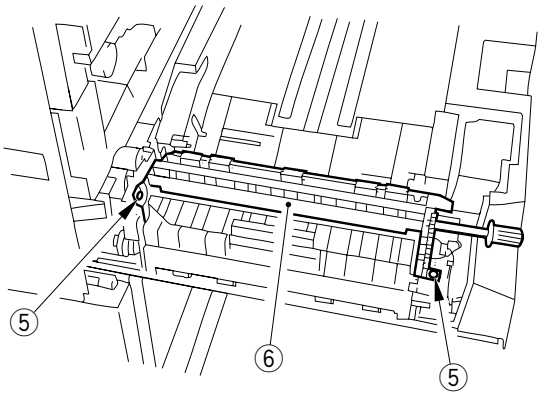

Figure 5-886

COPYRIGHT © 1997 CANON INC.

10. Removing the Feeding Roller/Separation Belt Assembly

1) Slide the holding tray assembly to the front.
2) Remove the holding tray inlet assembly.
3) Remove the mounting screw ①.

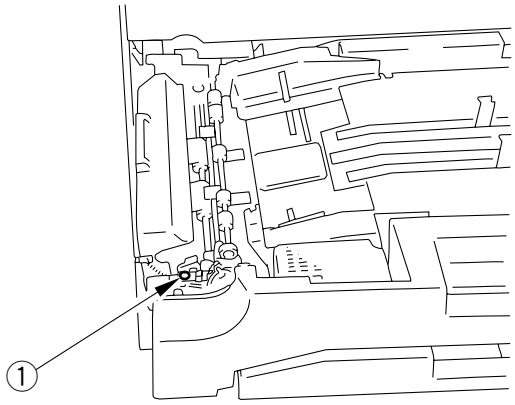

Figure 5-887

4) While opening the left cover ②, remove the feeding roller/separation belt assembly ③.

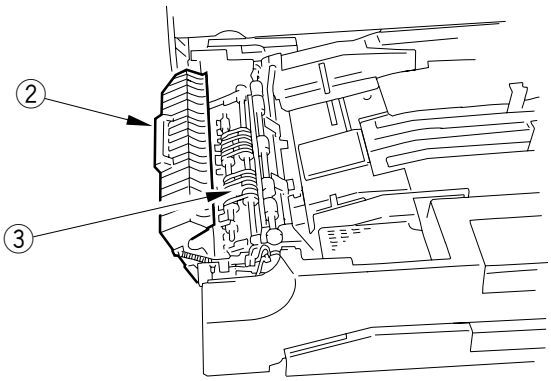

Figure 5-888

 COPYRIGHT © 1997 CANON INC.

11. Removing the Feeding Roller

1) Remove the feeding roller/separation belt assembly.
2) Remove the stop ring ① and the bushing ② at the front.

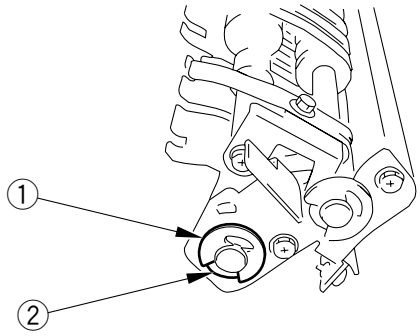

Figure 5-889

3) Remove the stop ring ③, gear ④, and bushing ⑤ at the rear.
4) Remove the roller ⑥ from the feeding roller assembly.

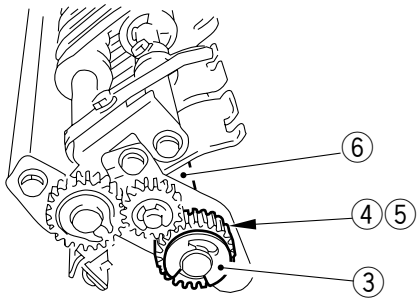

Figure 5-890

12. Removing the Separation Belt Assembly

1) Remove the feeding roller/separation belt assembly.
2) Remove the stop ring ① and the bushing ② at the front.
3) Lift the front of the separation belt assembly, and shift it to the rear; then, remove the separation belt assembly.
4) Detach the belt from the separation belt assembly.

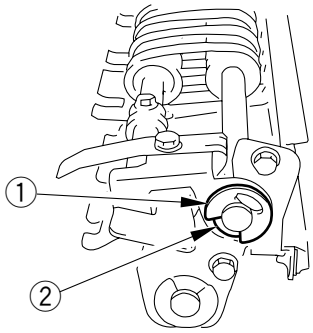

Figure 5-891

COPYRIGHT © 1997 CANON INC.

13. Adjusting the Pressure of the Separation Roller of the Holding tray

Turn the separation roller adjusting roll so that the distance to the shaft is 32.7 ±0.1 mm.

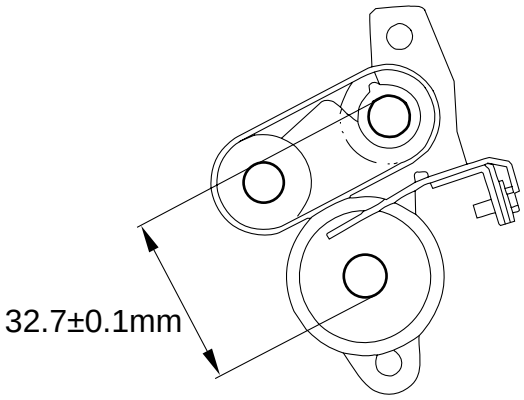

Figure 5-892

14. Positioning the Holding Tray Paper Deflecting Plate Drive Solenoid

Install the solenoid so that its stroke (distance between rubber silencer and solenoid edge) is 5.0 ±0.3 mm.

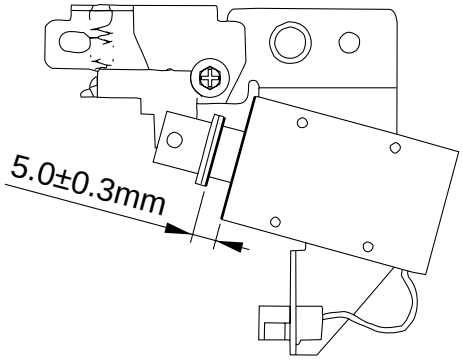

Figure 5-893

 COPYRIGHT © 1997 CANON INC.

15. Removing the Side Guide Plate Assembly

1) Mark the position of the side guide plate with a pencil or the like. (See Figure 5-902.)
2) Remove the two mounting screws ①, and disconnect the two connectors; then, remove the side guide plate assembly ②.

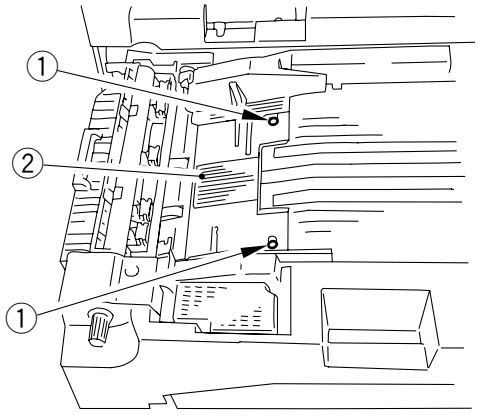

Figure 5-894

16. Removing the Holding Tray X Motor

1) Remove the side guide plate assembly.
2) Remove the mounting screw, and remove the motor cover.
3) Remove the two mounting screws ①, and disconnect the connector; then, remove the motor ②.

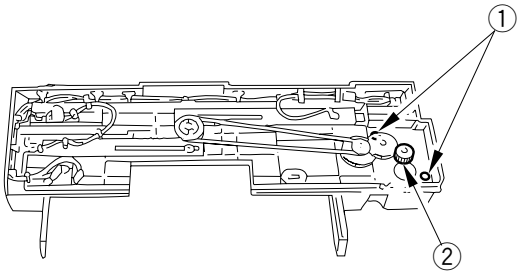

Figure 5-895

17. Removing the Holding Tray Re-Circulating Motor

1) Remove the side guide plate assembly.
2) With the paper jogging guide plate fully open, mark the position of the paper jogging guide plate assembly with a pencil or the like. (See Figure 5-901.)
3) Remove the three mounting screws ①, disconnect the connector ②, and remove the E-ring ③; then, remove the rear guide plate assembly ④.

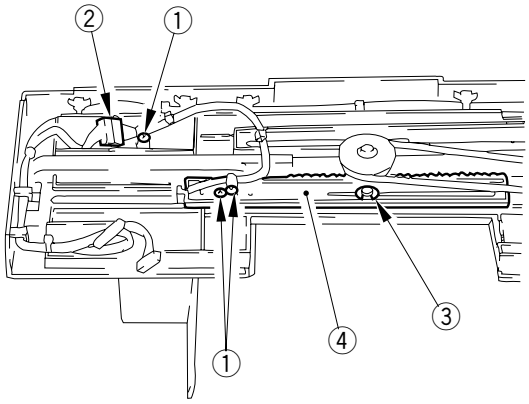

Figure 5-896

COPYRIGHT © 1997 CANON INC.

4) Remove the mounting screw ⑤, and remove the motor assembly ⑥.

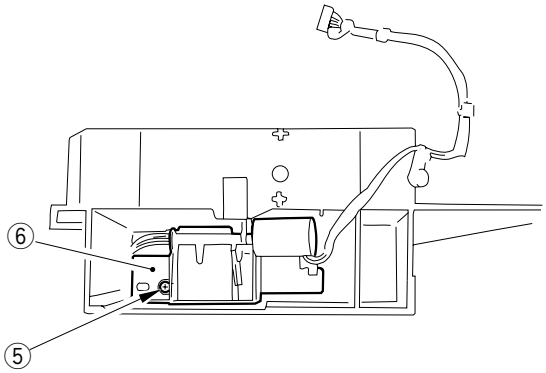

Figure 5-897

18. Removing the Holding Tray Paper Jogging Solenoid

1) Remove the side guide plate.
2) With the paper jogging guide plate fully open, mark the position of the paper jogging guide plate assembly with a pencil or the like.
3) Remove the three mounting screws ①, disconnect the connector ②, and remove the E-ring ③; then, remove the front guide plate assembly ④.

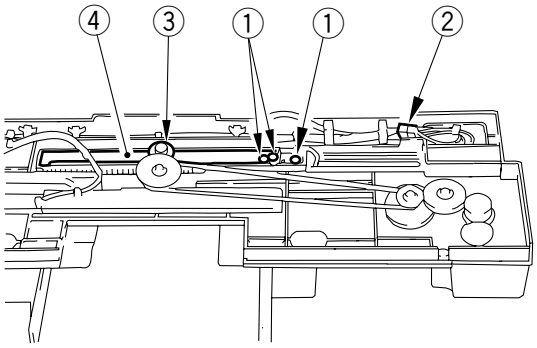

Figure 5-898

4) Remove the mounting screw ⑤, and remove the cover ⑥.

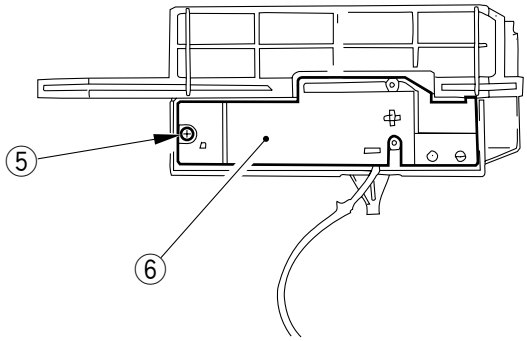

Figure 4-899

 COPYRIGHT © 1997 CANON INC.

5) Remove the two mounting screws ⑦, two grip rings ⑧, and spring pin ⑨; then, remove the solenoid ⑩.

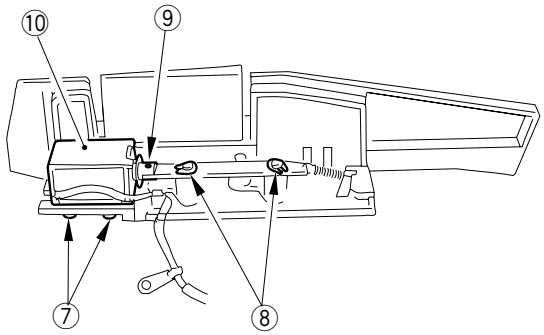

Figure 5-900

19. Installing the Holding Tray Paper Jogging Guide Plate Assembly

Mark the position of the paper jogging guide plate assembly with a pencil or the like, and install the plate in its initial position.

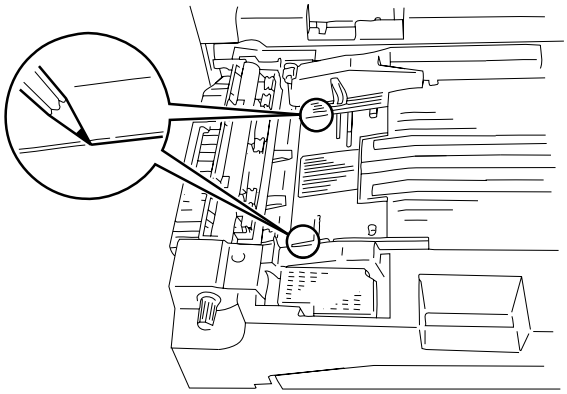

Figure 5-901

20. Installing the Holding Tray Assembly Side Guide Plate Assembly

Mark the position of the side guide plate assembly with a scribe, and install it along the marking.

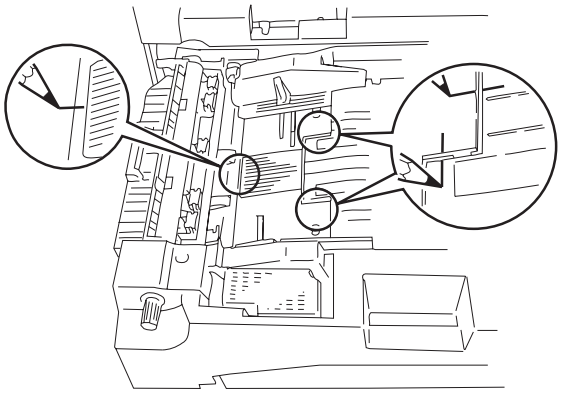

Figure 5-902

COPYRIGHT © 1997 CANON INC.

21. Attaching the Timing Belt of the Holding Tray Assembly Paper Jogging Guide Plate

Butt the rack plate of the paper jogging guide plate against section A (open state), and attach the timing belt to the pulley.

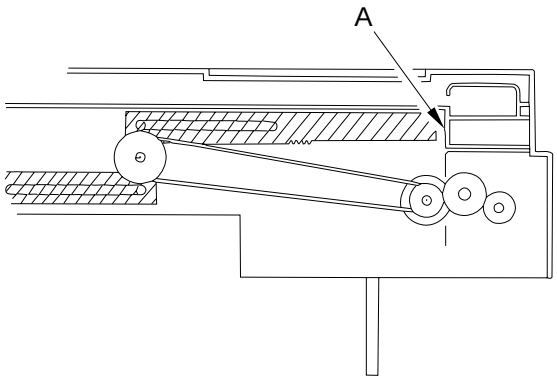

Figure 5-903

22. Positioning the Holding Tray Paper Jogging Solenoid

When installing the solenoid, position it so that the stroke (distance between rubber silencer and solenoid edge) is 1.5 ±0.3 mm.

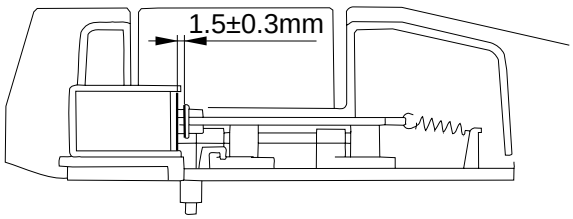

Figure 5-904

 COPYRIGHT © 1997 CANON INC. CANON NP6560/NP6360/NP6260 REV. 0 NOV. 1997 PRINTED IN JAPAN (IMPRIME AU JAPON)

I. Holding Tray Feeding Assembly

1. Removing the Holding Tray Feeding Assembly from the Copier

1) Open the front cover, and slide out the holding tray feeding assembly to the front.
2) Remove the three mounting screws ①, and remove the holding tray feeding assembly front cover ②.

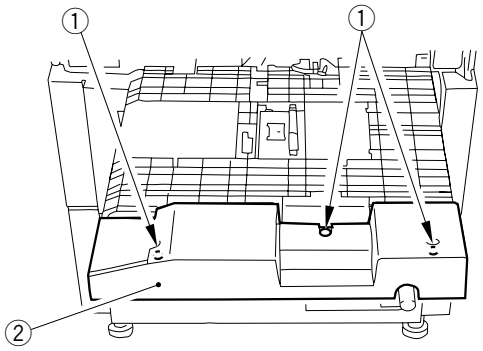

Figure 5-905

3) Remove the five mounting screws ③ and two metal fixings ④, and detach the holding tray feeding assembly ⑤ from the rail.

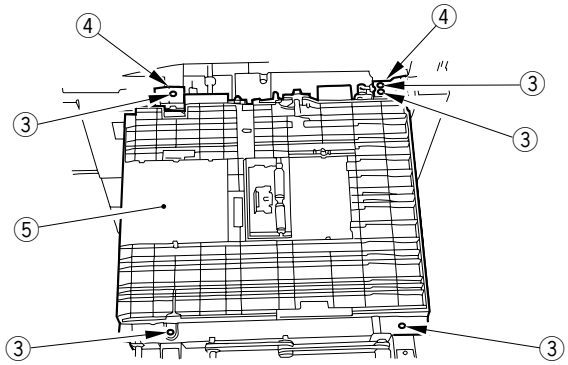

Figure 5-906

COPYRIGHT © 1997 CANON INC.

2. Removing the Sensor from the Holding Tray Feeding Assembly

1) Open the front cover, and slide out the holding tray feeding assembly to the front.
2) Remove the mounting screw ①, and remove the metal fixing ②; then, remove the holding tray feeding sensor cover ③ from under the holding tray feeding assembly.

Caution:

Do not open the holding tray feeding assembly upper guide more than it opens freely, or the stopper ④ will be damaged.

3) Remove the two mounting screws, and disconnect the connector; then, remove the sensor assembly from the holding tray feeding assembly.

Caution:

When installing the holding tray feeding assembly sensor cover, be sure to fit the two springs into the bosses behind the holding tray feeding assembly upper guide.

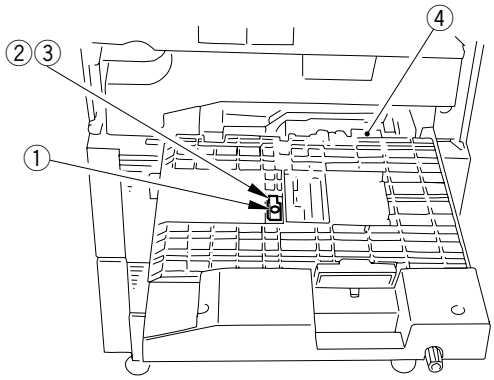

Figure 5-907

 COPYRIGHT © 1997 CANON INC.

CHAPTER 6

FIXING SYSTEM

This chapter explains the principles used to fuse toner images to transfer medium in view of the functions of electrical and mechanical units and in relation to their timing of operation. It also shows how these units may be disassembled/assembled and adjusted.

I. OUTLINE OF OPERATIONS.....6-1
- A. Outline 6-1
- B. Fixing Drive Assembly.....6-3
- C. Controlling the Fixing Temperature 6-5
- D. Reciprocating Mechanism for the Main Thermistor (TH1).....6-10
- E. Reciprocating Mechanism for the Upper Separation Claw 6-11
- F. SSR Error Detection Circuit for the Fixing Heater 6-12
- G. Locking Operation (fixing/feeding unit) 6-14
- H. Error Detection Circuit.....6-15

II. DISASSEMBLY AND ASSEMBLY 6-18
- A. Fixing Assembly 6-19
- B. Delivery Assembly.....6-33

COPYRIGHT © 1997 CANON INC. CANON NP6560/NP6360/NP6260 REV. 0 NOV. 1997 PRINTED IN JAPAN (IMPRIME AU JAPON)

I. OUTLINE OF OPERATIONS

A. Outline

The upper roller, lower roller, and delivery roller of the fixing assembly are driven by the main motor through clutches. (See Figure 6-101.)

The upper roller has two built-in heaters: after power-on, the sub heater is turned on only during WMUP, and the main heater is turned on and off during WMUP and during subsequent periods for temperature control. (See Figure 6-103.)

The surface temperature of the upper roller is monitored by the main thermistor (TH1), and the DC controller PCB controls it so that it remains a specific temperature (target value).

The web used to clean the upper fixing roller is of a one-way clutch type, and is operated by the fixing cleaning belt drive solenoid (SL14).

A message is indicated in service mode on the control panel when the fixing web drive solenoid (SL14) has operated 250,000 times. The cumulative count of how many times the fixing web drive solenoid has operated can be checked in service mode (*6*; ‘WEB’).

The cleaning belt detecting lever remains in direct contact with the cleaning belt, and shifts as the cleaning belt is taken up, causing the control panel to indicate 'E005' when it blocks the sensor (PS11).

The delivery assembly is equipped with a delivery paper deflecting plate. In two-sided/overlay copying, the DC controller PCB generates the delivery flapper solenoid drive signal to turn on the delivery flapper solenoid (SL2) so that the delivery flapper operates to forward copy paper to the holding tray.

The drive of the fixing cleaning belt drive solenoid (SL14) is used to trigger the external delivery sensor (PS10).

COPYRIGHT © 1997 CANON INC.

SL14 Activation
- twice for large-size copy
- once for small-size copy

Reference:

1. Heater
   600 W (main) + 600 W (sub)
2. Thermal switch: 240 ±10°C

COPYRIGHT © 1997 CANON INC.
CANON NP6560/NP6360/NP6260 REV. 0 NOV. 1997 PRINTED IN JAPAN (IMPRIME AU JAPON)

B. Fixing Drive Assembly

If a jam occurs in the fixing/delivery assembly, the DC controller PCB generates the fixing drive stop signal to turn off the fixing drive stop solenoid (SL3) so as to turn on the fixing brake clutch (CL19), thereby immediately stopping the fixing roller.

The cleaning belt used to clean the upper fixing roller is taken up by the cleaning belt take-up arm moving up and down in response to the activation of the fixing cleaning belt solenoid (SL14).

The area where the fixing roller comes into contact with the cleaning belt guide is made rather large so as to prevent offset.

The height of the fixing assembly inlet guide is varied by turning on and off the fixing assembly inlet guide drive solenoid (SL16) so as to facilitate feeding of copy paper.

The height is varied according to the following conditions, and the change is made with reference to a height of about 130 mm (at start of copying and upon end of rotation):

- High if the copy paper is B5R or longer (including B5R).
- Low if the copy paper is shorter than the above.

However, if 'free size' is selected for the multifeeder, the control will be as follows:

- High at the start of copying.

When the first copy paper moves past the registration paper sensor (PS23), its length is measured and the above control is executed.

COPYRIGHT © 1997 CANON INC.

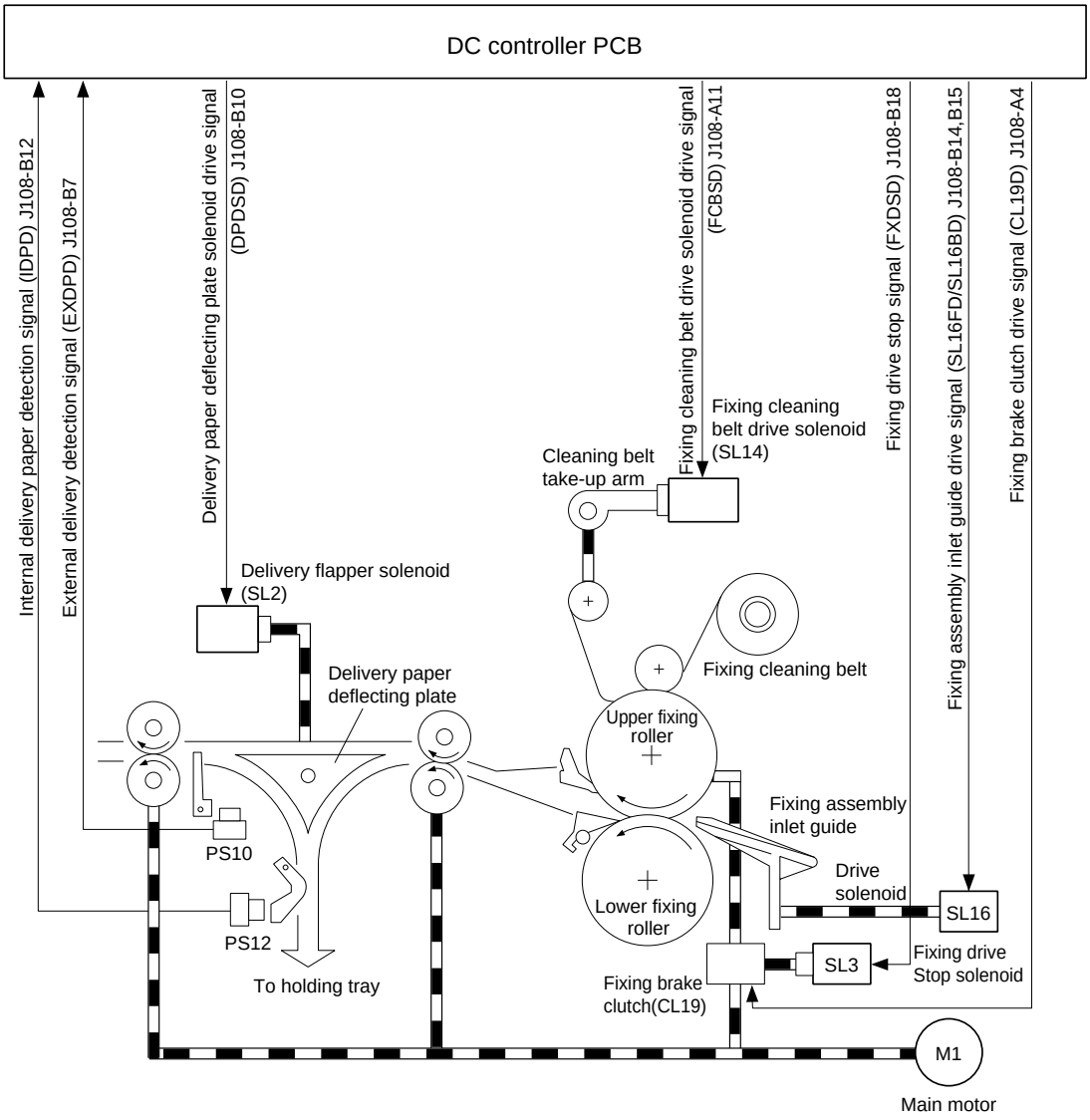

Figure 6-101

COPYRIGHT © 1997 CANON INC.
CANON NP6560/NP6360/NP6260 REV. 0 NOV. 1997 PRINTED IN JAPAN (IMPRIME AU JAPON)

C. Controlling the Fixing Temperature

The surface temperature of the machine's upper fixing roller is monitored by the main thermistor (TH1); measurements are taken and communicated to the microprocessor on the DC controller PCB.

The DC controller PCB uses these measurements to vary the main heater drive signal (MHRD) and the sub heater drive signal (SHRD).

The sub thermistor (TH2) is mounted at the rear of the upper fixing roller to check for an abnormal increase in temperature.

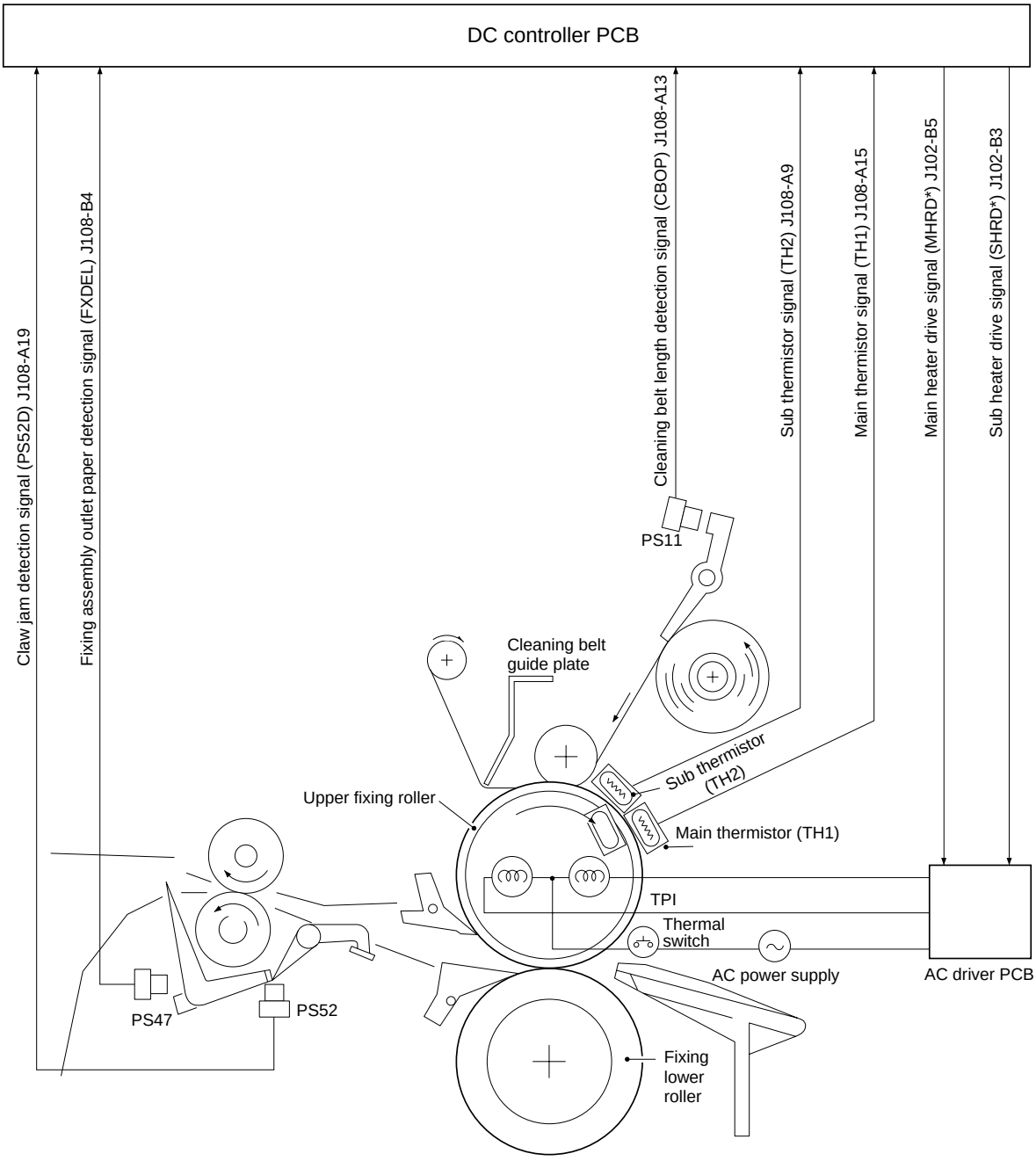

Figure 6-102

The machine uses the two types of control shown in Tables 6-101 and -102 according to how much time has passed since power-on.

- 60 Min from Power-On and Surface Temperature of Fixing Roller 75°C or Less

Control temperature	
Standby	Copying
210°C	212°C

Table 6-101

- 60 Min or More from Power-On

Control temperature	
Standby	Copying
200°C	203°C

Table 6-102

In addition, the following types of control exist for special conditions:

① Power Saving Mode

The following operation takes place when the Energy Saver (Pre-Heat) key is pressed; power-saving mode may be varied in user mode.

- Control Temperature during Power Saving

Saving rate	Control temperature*	Delivery
–10%	180°C	50 sec
–25%	155°C	90 sec
–50%	110°C	155 sec
Auto Energy Saver	160°C	80 sec

*Period between another press on the Energy Saver key and the start of STBY.

Table 6-103

COPYRIGHT © 1997 CANON INC.
CANON NP6560/NP6360/NP6260 REV. 0 NOV. 1997 PRINTED IN JAPAN (IMPRIME AU JAPON)

② Copy Speed Down Sequence

The machine is designed to turn out 60 copies normally and 65 copies when making one-sided copies of one original.

To ensure good fixing, however, it uses a longer sheet-to-sheet distance, thereby keeping the fixing temperature to a specific value when the surface temperature of the fixing roller is as shown in Table 6-104 as detected by the main thermistor (TH1).

Down sequence	Control temperature
60 cpm recovery mode	185°C
50 cpm mode	180°C
40 cpm mode	165°C
Copying stop	160°C
Stream reading 50 cpm mode	180°C
65 cpm stream reading mode recovery mode	185°C

Table 6-104

COPYRIGHT © 1997 CANON INC.

In down sequence, 50 cpm or 40 cpm mode is initiated to suit the surface temperature of the upper fixing roller.

Normal sequence will be initiated when the surface temperature of the upper fixing roller reaches a specific level (Table 6-104); however, once copying has been suspended, WMUP sequence will be used until the surface temperature of the upper fixing roller reaches 200°C.

If any of the foregoing levels of surface temperature is detected during copying operation, the machine starts WMUP sequence while indicating the remaining number of copies on the control panel. When the Copy Start key is pressed as in during STBY, the remaining number of copies are made.

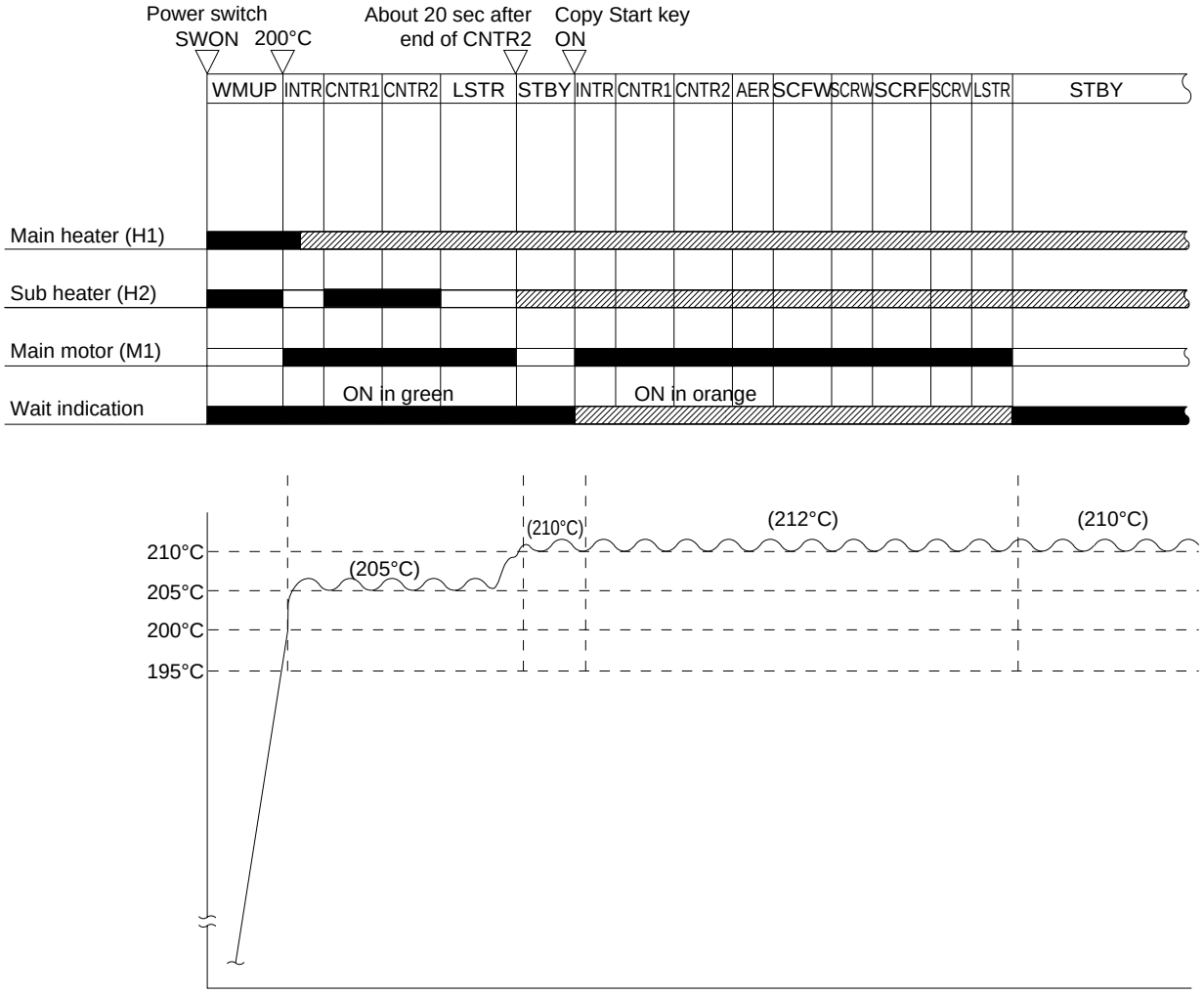

Figure 6-103

COPYRIGHT © 1997 CANON INC.
CANON NP6560/NP6360/NP6260 REV. 0 NOV. 1997 PRINTED IN JAPAN (IMPRIME AU JAPON)

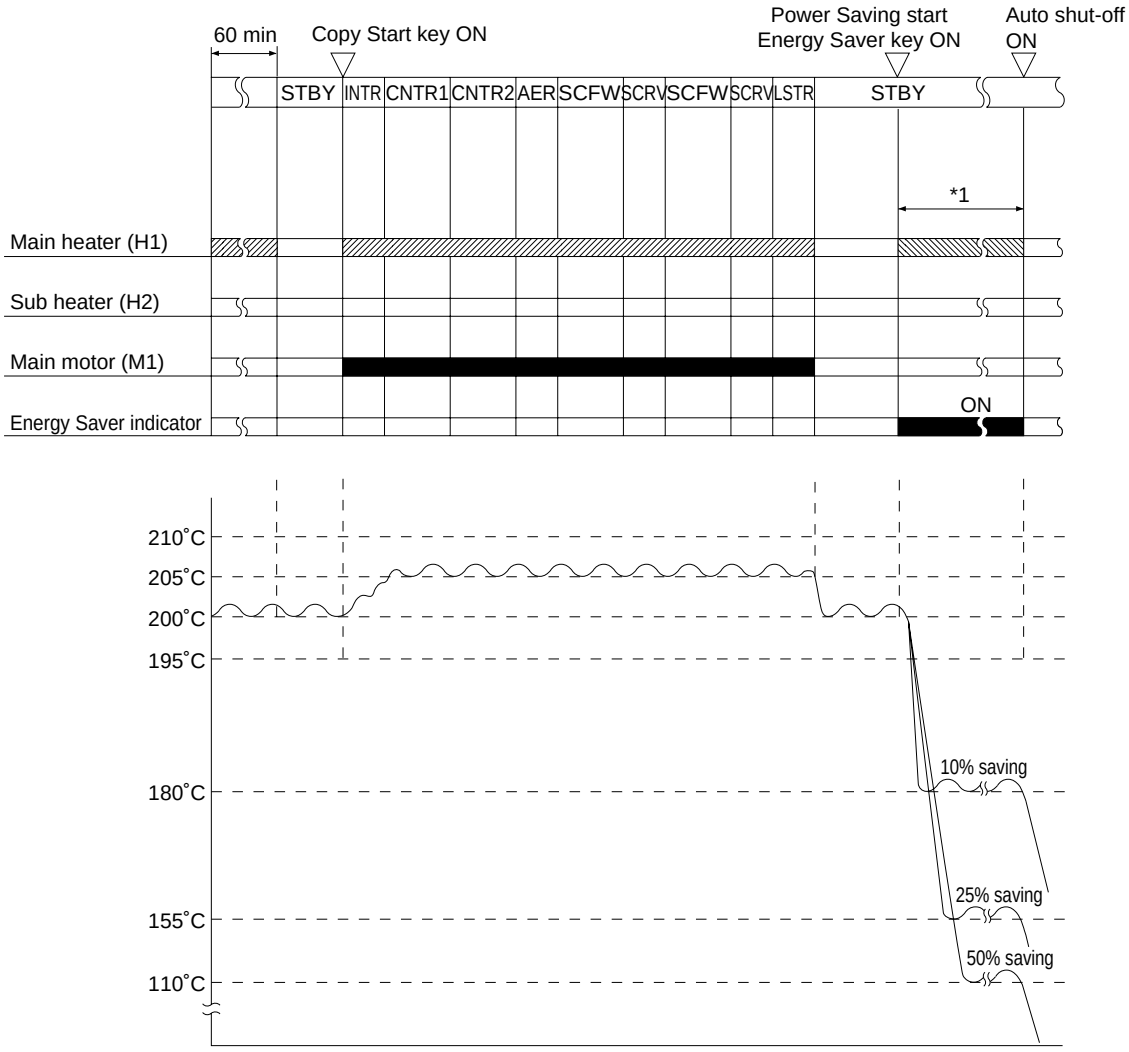

*1 : May be varied in user mode.

Figure 6-104

D. Reciprocating Mechanism for the Main Thermistor (TH1)

To prevent damage to the upper fixing roller by the main thermistor (TH1), the main thermistor is designed to slide back and forth in the axial direction of the upper fixing roller over a distance of 12 mm.

The reciprocating cam is supplied with drive by the cleaning belt drive solenoid (SL14) through a one-way arm.

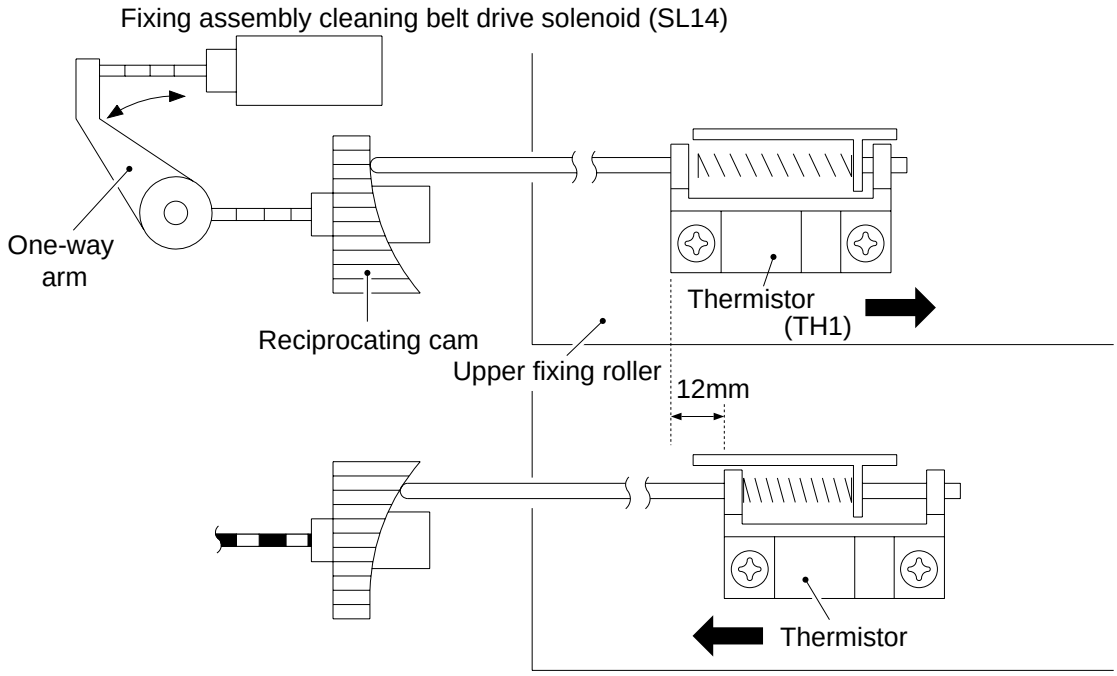

Figure 6-105

COPYRIGHT © 1997 CANON INC.
CANON NP6560/NP6360/NP6260 REV. 0 NOV. 1997 PRINTED IN JAPAN (IMPRIME AU JAPON)

E. Reciprocating Mechanism for the Upper Separation Claw

To prevent damage to the upper fixing roller by the upper separation claw, the upper separation claw is slid back and forth in the axial direction of the upper fixing roller over a distance of 3 mm.

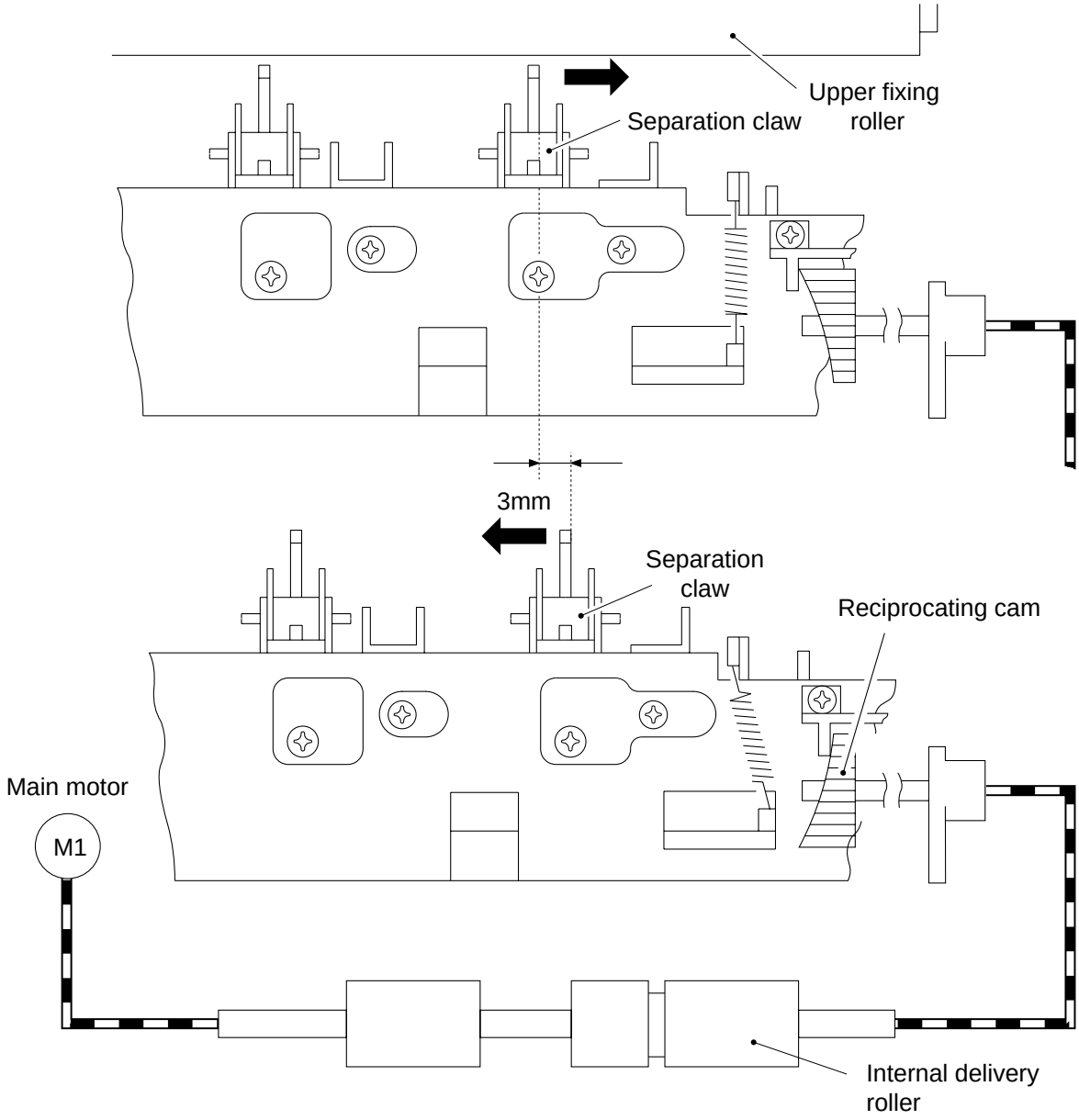

Figure 6-106

F. SSR Error Detection Circuit for the Fixing Heater

The machine's safety circuit for the fixing heater SSR uses the following signals sent to the DC controller PCB:

1. Fixing main heater drive signal (MHRD)
2. Main heater ON detection signal (MHOND)

Figure 6-107 shows the main heater only, but the sub heater is controlled in the same way.

Heater ON

The CPU causes the SSRON signal to go '0', and the MHRD signal goes '1' to turn on the heater. At this time, the fixing assembly feeding unit detection signal (FFURLS), power switch ON detection signal (MSWD), and front door open detection signal (FDOD) are '0'.

Heater OFF

The CPU causes the SSRON signal to go '1', and the MHRD signal goes '0' to turn off the heater.

SSR Error

If the main heater ON detection signal (MHOND) is '1' when the CPU on the DC controller PCB is not generating the fixing main heater drive signal (MHRD), i.e., gate array detection ①, or if the main heater ON detection signal (MHOND) is '0' when the CPU on the DC controller PCB is generating the fixing main heater drive signal (MHRD), i.e., CPU detection ②, the DC controller will identify an error in SSR and issue an E code.

To cut off the power to the AC circuit, the DC controller causes the power switch OFF signal (PWOFF) to go '0'. When the power switch is turned off, the power to the heater will be cut off; however, since the power to the DC controller PCB is maintained for a specific period of time, (see p. 7-9), the PWOFF signal is kept to prevent the relay inside the power switch from turning on, thereby locking the power switch ON detection signal (MSWD) from the power supply PCB.

Since the machine's main heater ON detection signal (MHOND) will go '1' under the following conditions, the SSRON signal is kept '0' so as to prevent detecting an SSR error wrongly:

1.When the fixing feeding unit is slid out (FFURLS=1).
2.When the front door is opened (FDOD=1).
3.When the power switch is turned off (MSWD=1).

 COPYRIGHT © 1997 CANON INC.

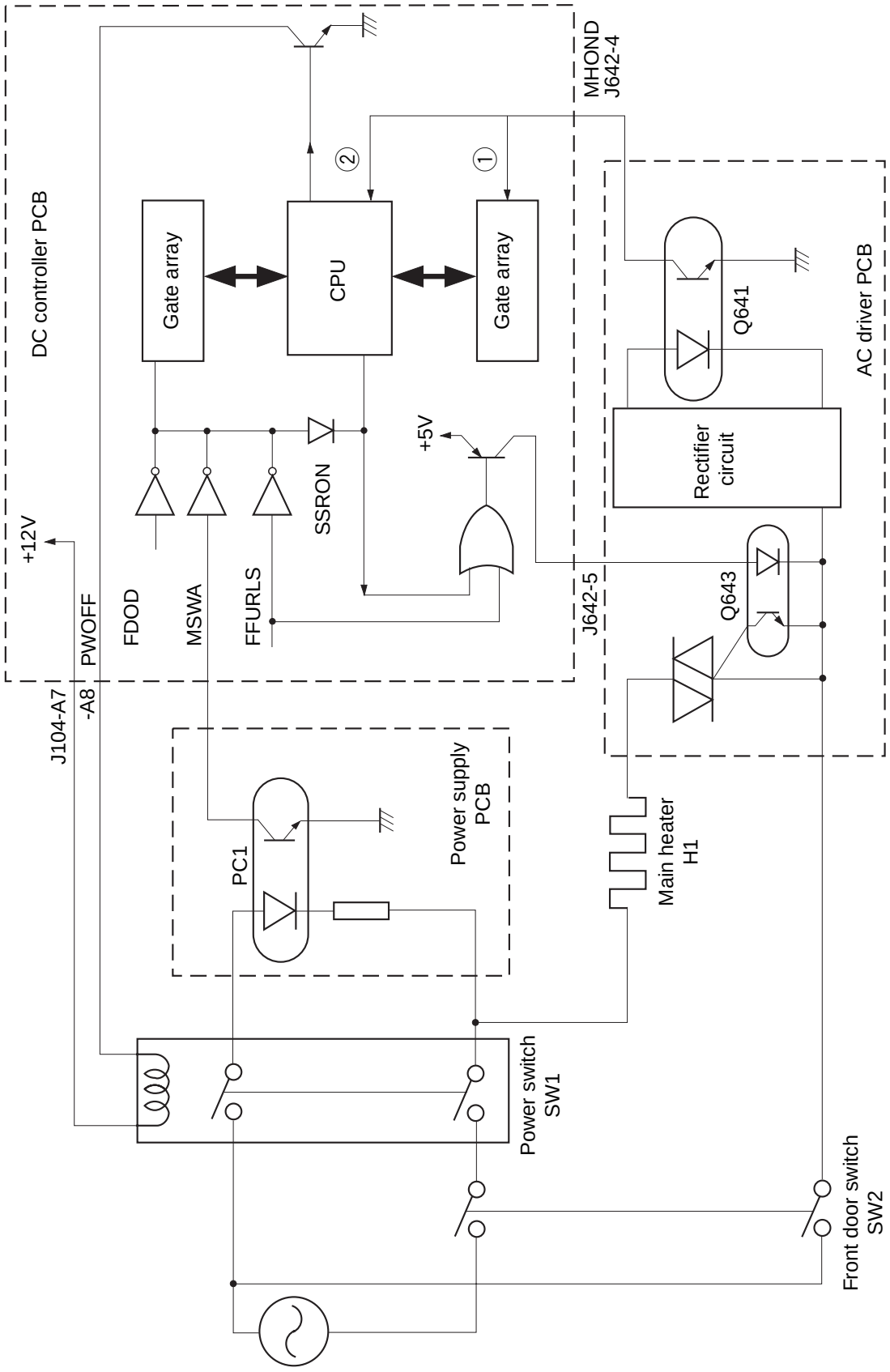
DC controller PCB
MHOND
J642-4
Gate array
CPU
Gate array
②
①
+5V
SSRON
+12V
PWOFF
FDOD
MSWA
FFURLS
J104-A7
-A8
J642-5
AC driver PCB
Q641
Rectifier circuit
Q643
Power supply PCB
PC1
Main heater H1
Power switch SW1
Front door switch SW2

Figure 6-107

G. Locking Operation (fixing/feeding unit)

If copy paper is trapped over the fixing/feeding unit and the holding tray unit when the machine is stopped because of a jam, i.e., if paper is over the internal delivery sensor (PS12), the main motor (M1) and the fixing/feeding unit locking solenoid (SL13) is turned on for about 3 sec, thereby lowering the locking lever from the fixing/feeding unit to the rear of the holding tray unit.

Because of the foregoing design, the holding tray unit will also slide out when the fixing/feeding unit is drawn out for removal of the jam, thereby preventing tearing the copy paper over two units.

This locking mechanism is released during initial rotation of the main motor after jam removal.

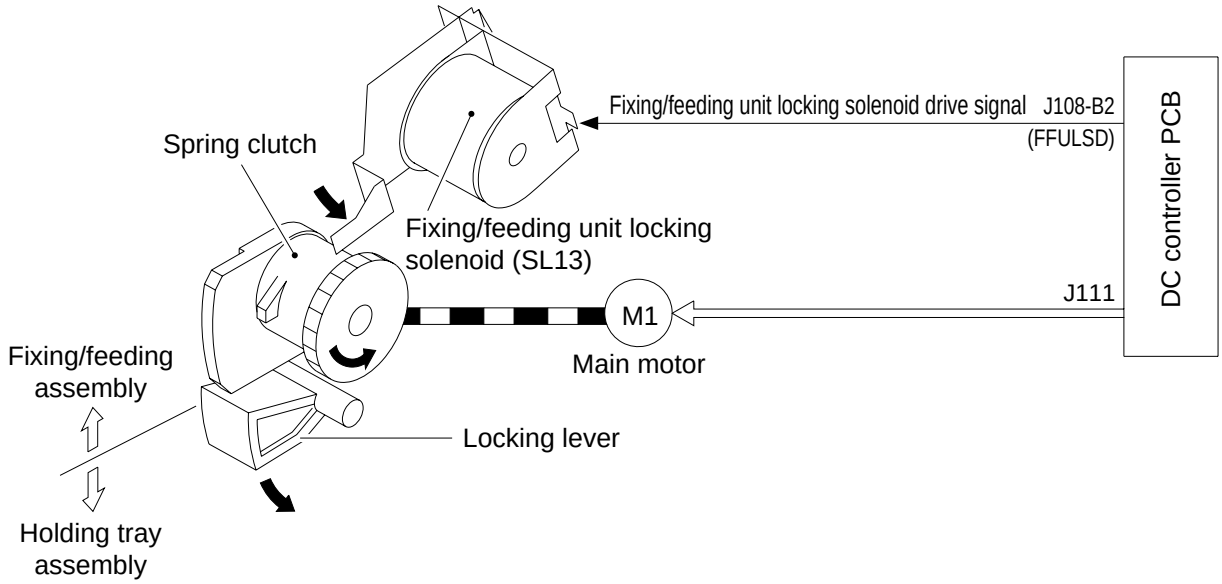

Figure 6-108

 COPYRIGHT © 1997 CANON INC. CANON NP6560/NP6360/NP6260 REV. 0 NOV. 1997 PRINTED IN JAPAN (IMPRIME AU JAPON)

H. Error Detection Circuit

1. Outline

Figure 6-109 is a block diagram showing the control circuit for the error detection circuit, and the circuit has the following functions:

a. Monitoring the activation of the scanning lamp (LA1).
b. Monitoring the activation of the fixing heater (main, H1; sub, H2).
c. Monitoring the rotation of each motor in normal mode and in stream reading mode.

Each function concentrates at the gate array on the DC controller PCB.

The gate array detects the state of each appropriate load used for the detection of an error, checks for the presence/absence of an error, and communicates the result to the master CPU.

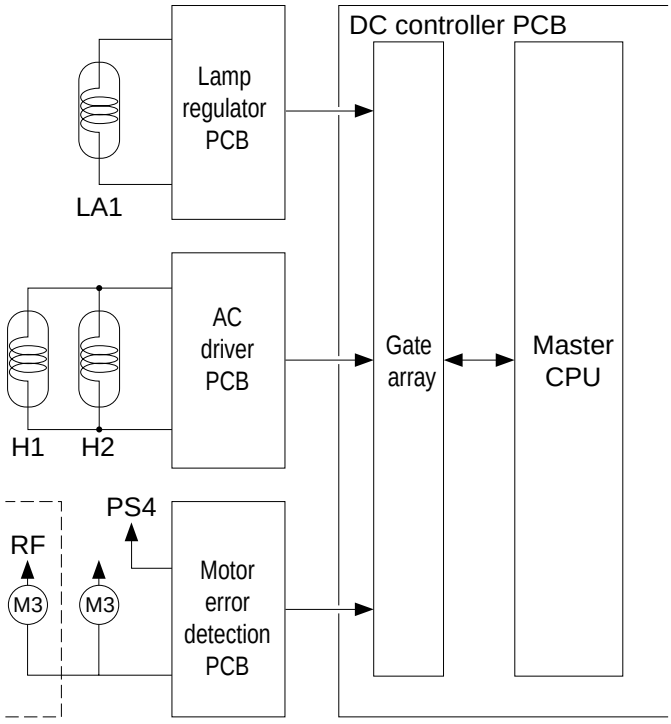

Figure 6-109

2. Scanning Lamp Error Activation Detection Circuit

The gate array receives the scanning lamp ON signal (CVRON) and the scanning lamp ON detection signal (CVR ACTIVE). If the scanning lamp is on in the absence of the scanning lamp ON signal, the gate array will identify an error.

At this time, the gate array will communicate to the master CPU the wrong detection and, at the same time, generates the power supply OFF signal.

COPYRIGHT © 1997 CANON INC.

As a result, the relay inside the power supply switch will be supplied with power, the power switch will be turned off, and the AC power supply will be cut off (error auto power off).

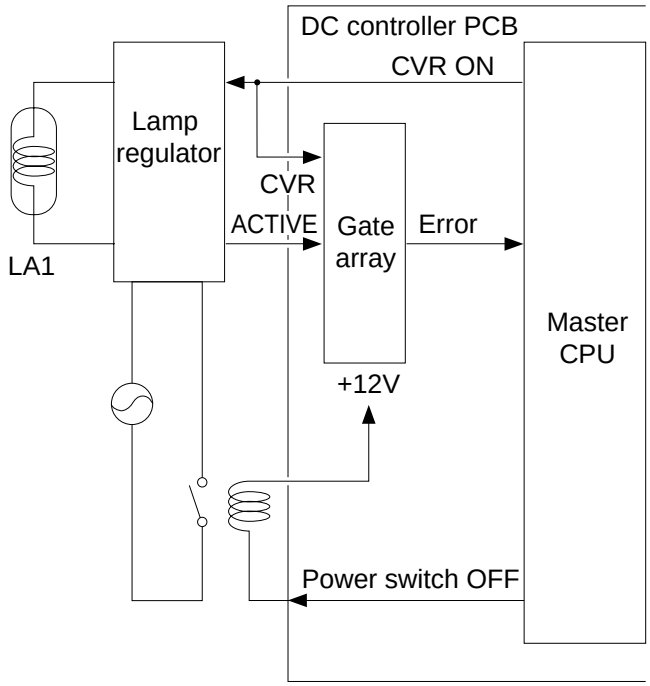

Figure 6-110

3. Fixing Heater Error Activation Detection Circuit

The gate array generates the fixing heater ON signal (SSR ON), and receives the fixing heater ON detection signal (SSR ACTIVE). An error is identified if the fixing heater is on in the absence of the fixing heater ON signal.

At this time, the gate array communicates an error in the activation of the fixing heater to the master CPU and, at the same time, generates the power switch OFF signal.

In addition, the thermistor used to monitor the surface temperature of the fixing roller generates the error signal (FUSER TEMP ERROR) to the gate array. The gate array will also turn off the power switch in response to an abnormal increase in the surface temperature of the fixing roller.

When the power supply switch OFF signal is generated, the relay inside the power switch is powered to turn off the power switch and the AC power supply.

If the fixing sub thermistor (TH2) detects an abnormal increase in temperature (230 ±10°C), the DC controller PCB indicates ‘E001’, and turns off the AC power supply.

The machine checks the fixing sub thermistor for a broken line, and indicates ‘E000’ for about 5 sec if it finds an open circuit and cuts off the AC power supply.

 COPYRIGHT © 1997 CANON INC. CANON NP6560/NP6360/NP6260 REV. 0 NOV. 1997 PRINTED IN JAPAN (IMPRIME AU JAPON)

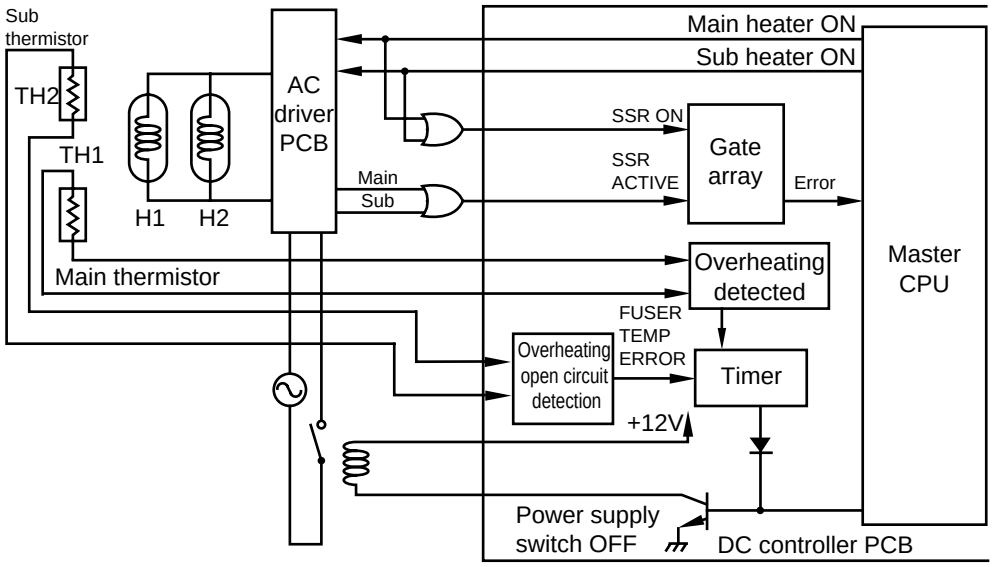

Figure 6-111

4. Motor Error Rotation Detection Circuit

The motor error rotation detection circuit checks for an error (suspension of rotation) in relation to the scanner motor (M3), RDF belt motor, and scanner original leading edge sensor 2 (PS4).

In response to the motor error OFF detection signal (ENCODER ERROR), the gate array resets the DC controller PCB.

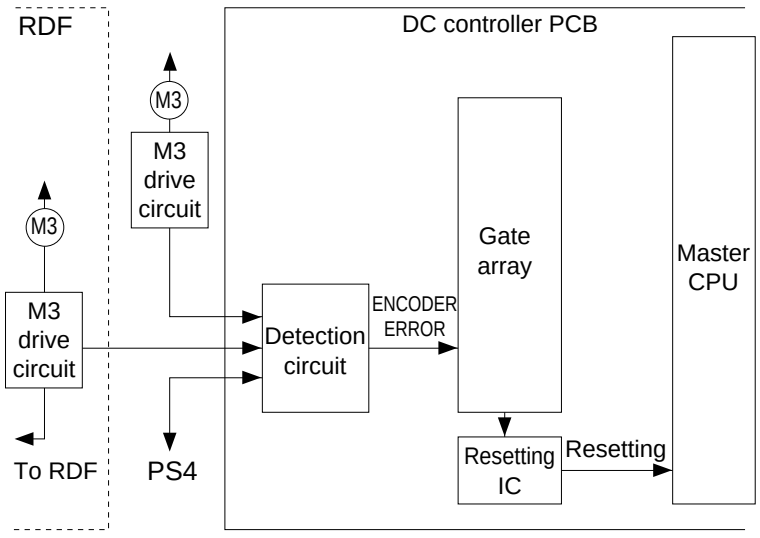

Figure 6-112

II. DISASSEMBLY AND ASSEMBLY

Here, the copier is discussed in terms of its mechanical characteristics and operation and how to disassemble and assemble it.

Be sure to observe the following for disassembly/assembly work:

1. ⚠ Disconnect the power plug for safety before starting disassembly/assembly work.
2. Unless otherwise noted, assemble the parts by reversing the steps used to disassemble them.
3. Identify the screws by type (length, diameter) and location.
4. One of the mounting screws of the rear cover is provided with a toothed washer to protect against static electricity. Do not leave it out during assembly work.
5. The screws used for grounding wires and varistors are provided with a toothed washer to ensure electrical continuity. Do not leave them out during assembly work.
6. As a rule, do not operate the machine with any of its parts removed.
7. Before sliding out the duplexing unit or the fixing assembly, check to make sure that the front door switch or the power switch is off.

COPYRIGHT © 1997 CANON INC.
CANON NP6560/NP6360/NP6260 REV. 0 NOV. 1997 PRINTED IN JAPAN (IMPRIME AU JAPON)

A. Fixing Assembly

1. Construction

① Fixing upper unit
② Upper roller
③ Lower roller

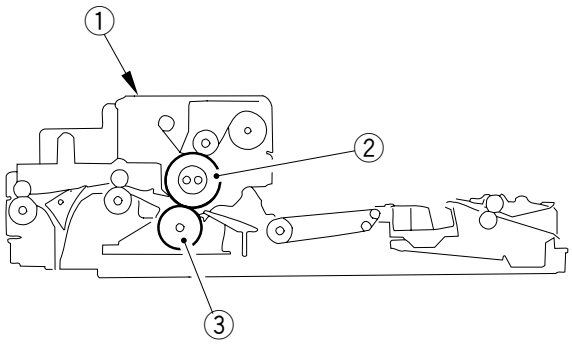

Figure 6-201

2. Locking Mechanism

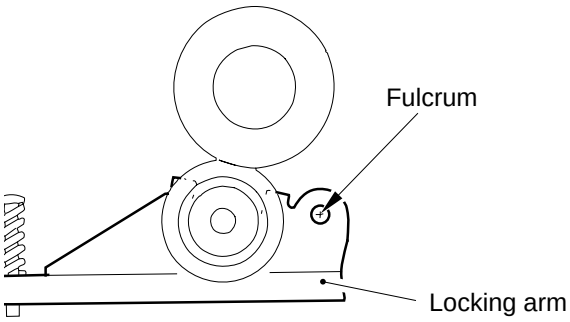

Figure 6-202

3. Removing the Fixing Cleaning Belt

a. Arrangement

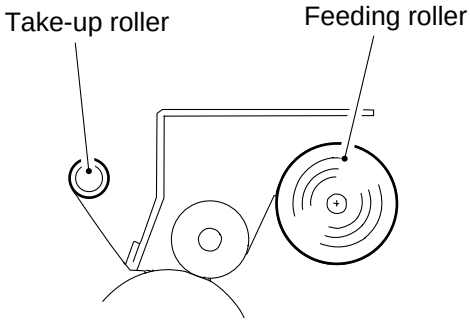

Figure 6-203

b. Removing the Fixing Cleaning Belt

1) Slide out the fixing/feeding unit from the copier.
2) Remove the fixing/feeding front cover.
3) Remove the mounting screw ①, and remove the fixing upper cover ②.

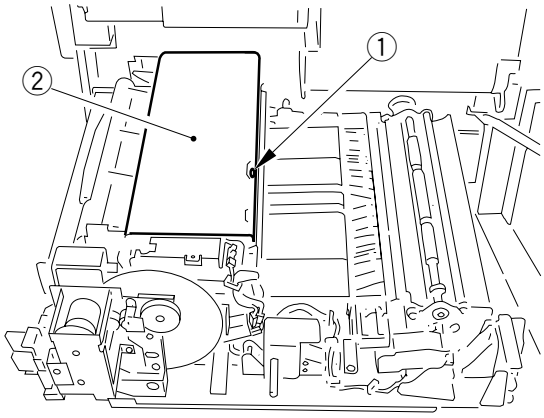

Figure 6-204

4) Remove the two mounting screws ③ used to hold the fixing cleaning belt assembly in place, and open the fixing cleaning belt upper assembly ④ upward.

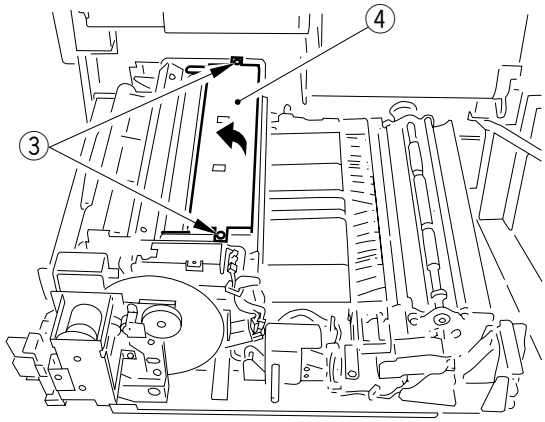

Figure 6-205

5) Remove the cleaning belt feeding roller ⑤ and the cleaning belt take-up roller ⑥ by pushing them toward the rear.

Caution: Be sure to remove the silicone oil collecting in the oil pan found under the cleaning belt feeding roller.

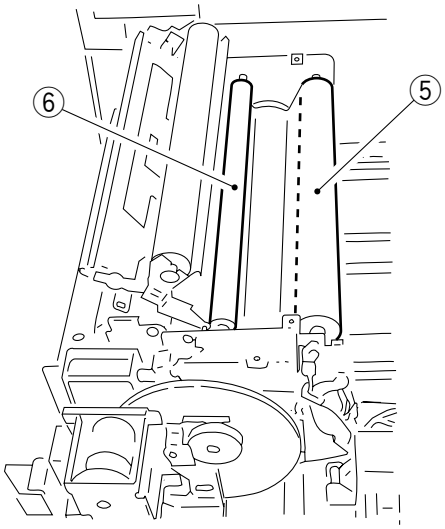

Figure 6-206

 COPYRIGHT © 1997 CANON INC. CANON NP6560/NP6360/NP6260 REV. 0 NOV. 1997 PRINTED IN JAPAN (IMPRIME AU JAPON)

4. Installing the Fixing Cleaning Belt

Install the fixing cleaning belt by reversing the steps used to remove it.

1) Wind the cleaning belt around the cleaning belt take-up roller ① twice to three times. When installing it to the front, be sure that the arm guide plate ② is on the outside of the take-up roller.

At this time, check to make sure that the area coming into contact with the roller is impregnated with oil.

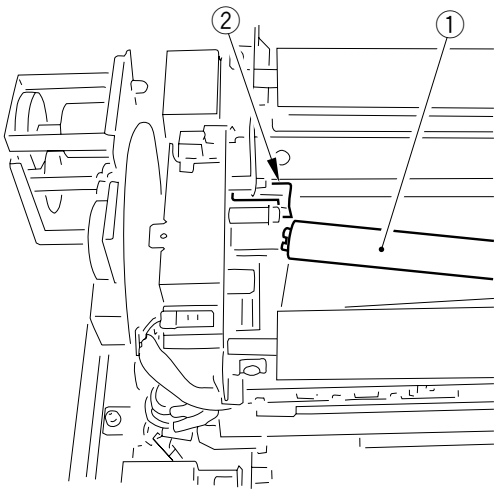

Figure 6-207

Caution:

Check to make sure that the fixing cleaning belt is not wound askew or it is not slack or wrinkled.
In addition, make sure that the direction of winding and the orientation are as shown in Figure 6-203.

2) After installing the fixing cleaning belt, move the one-way lever ③ in the direction of the arrow (Figure 6-208); then, turn it until all the slack has been removed from the fixing cleaning belt.

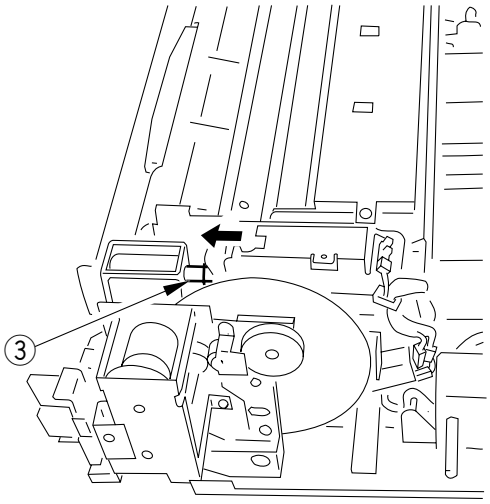

Figure 6-208

Caution:

Be sure to reset the counter (*6*; 'WEB') to '0' after replacing the fixing cleaning belt.

5. Removing the Upper Fixing Unit

1) Slide out the fixing/feeding unit from the copier.
2) Remove the fixing/feeding front cover.
3) Remove the fixing upper cover.
4) Open the fixing delivery assembly ①.

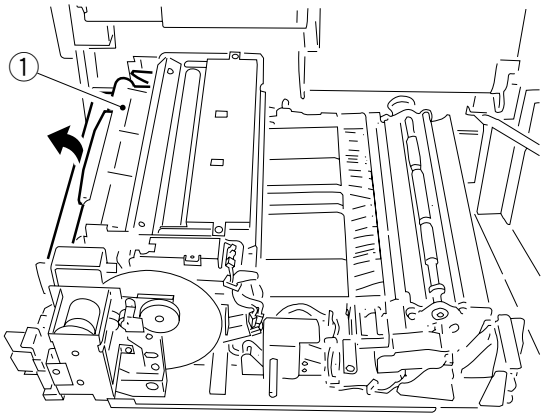

Figure 6-209

5) Remove the three mounting screws ②, and disconnect the connector ③; remove the gear unit ④.

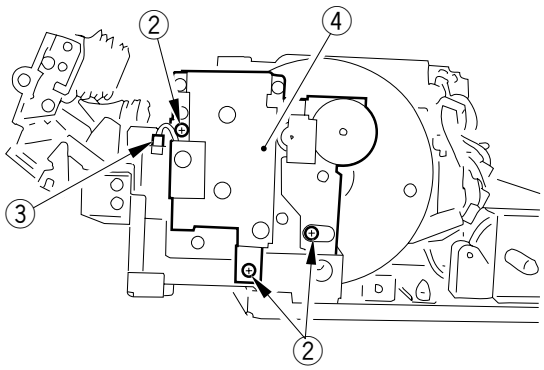

Figure 6-210

6) Remove the fixing web, and clean the silicone oil pan; then, remove the mounting screw ⑤ and the two harness retainers ⑥, and disconnect the four connectors ⑦.

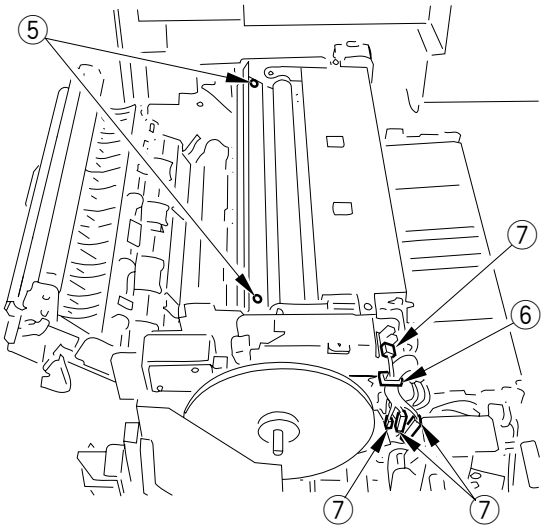

Figure 6-211

 COPYRIGHT © 1997 CANON INC. CANON NP6560/NP6360/NP6260 REV. 0 NOV. 1997 PRINTED IN JAPAN (IMPRIME AU JAPON)

7) Open the fixing upper unit ⑧ slightly, and remove it by lifting it to the left; then, place it on a desk.

Caution:

The silicone oil in the silicone oil can start to drip during the work; if possible, drain it in advance.

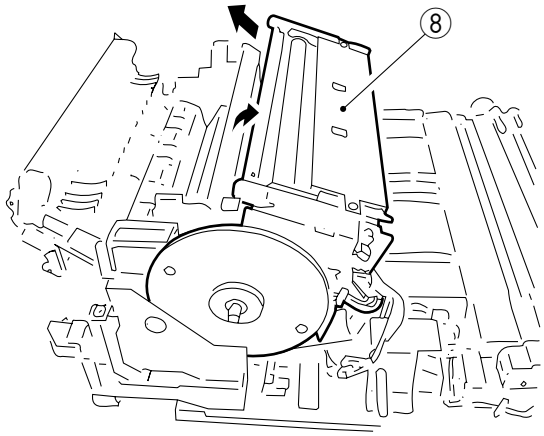

Figure 6-212

COPYRIGHT © 1997 CANON INC.

6. Removing the Fixing Heater

1) Slide out the fixing/feeding unit from the copier.
2) Remove the fixing/feeding front cover.
3) Open the fixing delivery assembly.
4) Remove the fixing upper cover, and remove the fixing cleaning belt; then, clean the silicone oil pan, and remove the fixing upper unit.
5) Remove the flywheel.
6) Remove the faston ① at the front of the heater (main heater, sub heater).
7) Remove the mounting screw ②, and remove the side electrode supply leaf spring ③ at the front.
8) Free the two cables ④ at the front of the heater from the wire saddles ⑤.
9) Remove the two fastons ⑥ at the rear.
10) Pull out the main heater and the sub heater from the fixing assembly to the front with care not to damage them.

Caution:

When opening the fixing upper unit during inspection/maintenance work, you could cause the side plate of the upper fixing unit to push down the height adjusting support plate of the fixing assembly inlet guide, lowering the fixing assembly inlet guide. Since such a condition will lead to jamming of copy paper, make sure not to open the fixing assembly upper unit with force.

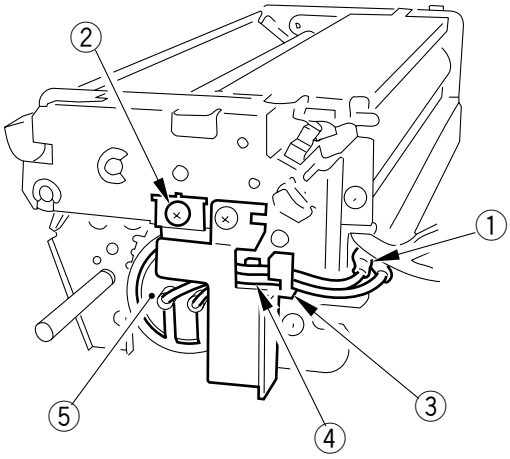

Figure 6-213

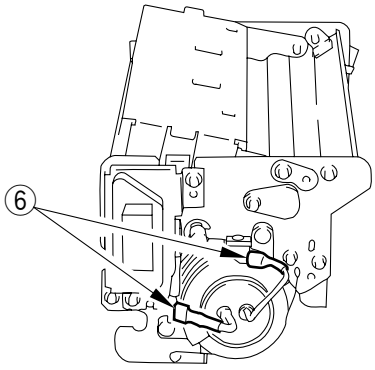

Figure 6-214

 COPYRIGHT © 1997 CANON INC.

7. Installing the Fixing Heater

Install the heater by reversing the steps used to remove it with the following in mind:

a. Do not touch the surface of the heater.
b. Orient both heaters so that the sides with longer heater wires are toward the front.
c. Install the main heater (600 W) to the right and the sub heater (600 W) to the left when viewing from the front.
d. While viewing from the rear of the copier, connect the faston on the right to the main heater and the faston at the top to the sub heater.

8. Removing the Fixing Upper Roller

1) Slide out the fixing/feeding unit from the copier.
2) Remove the fixing/feeding assembly front cover.
3) Open the fixing/delivery assembly.
4) Remove the flywheel.
5) Remove the fixing upper cover, and remove the fixing cleaning belt; then, clean the silicone oil pan, and remove the fixing upper unit.
6) Remove the main heater and the sub heater.
7) Remove the two mounting screws ② used to hold the fixing cleaning belt assembly ① in place, and release the cleaning belt.
8) Remove the two mounting screws ③, and remove the heater holder ④ at the rear.

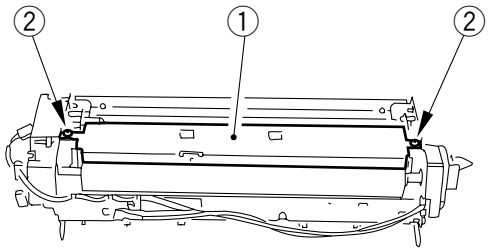

Figure 6-215

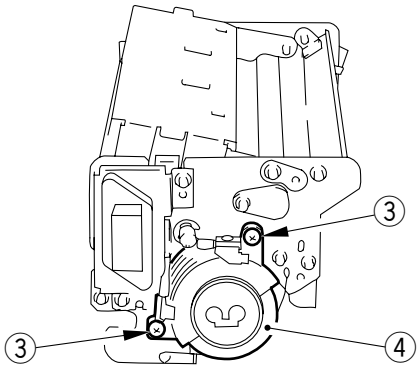

Figure 6-216

COPYRIGHT © 1997 CANON INC.

9) Remove the two stoppers ⑤ (front, rear).

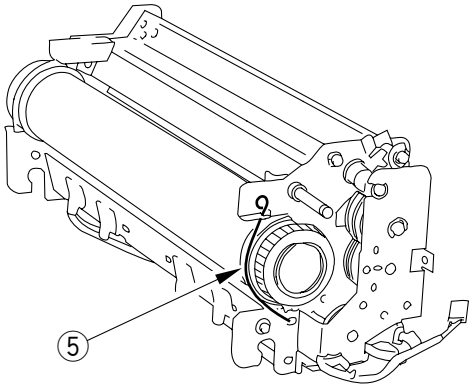

Figure 6-217 (front)

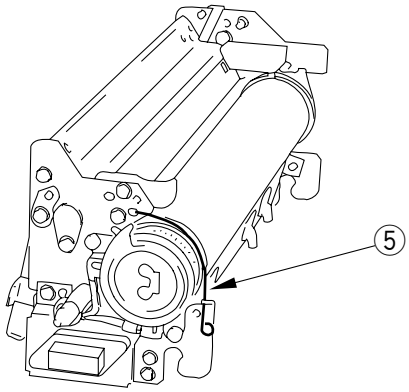

Figure 6-217a (rear)

10) While paying attention to the thermistor and the thermal switch, remove the upper roller unit ⑥.

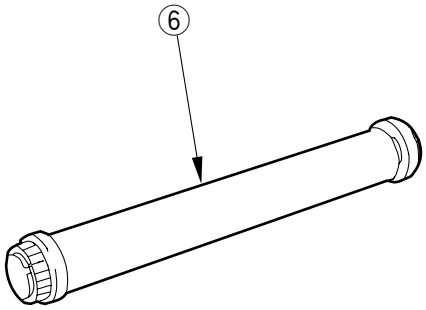

Figure 6-218

11) Remove the C-ring ⑦ and the gear ⑧ at the front.
12) Remove the C-ring ⑨ and the gear ⑩ at the rear.
13) Pull out the bearing ⑪ and the bushing ⑫ found at the rear to the front.
14) Slide out the bearing ⑬ and the bushing ⑭ found at the front of the upper roller to the front.

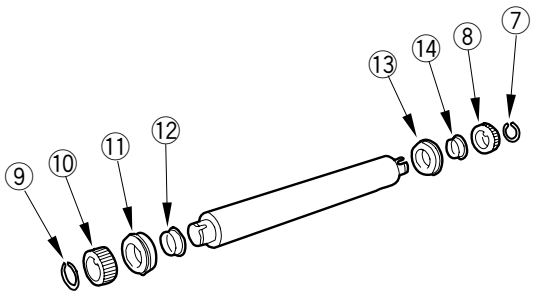

Figure 6-219

 COPYRIGHT © 1997 CANON INC. CANON NP6560/NP6360/NP6260 REV. 0 NOV. 1997 PRINTED IN JAPAN (IMPRIME AU JAPON)

9. Installing the Upper Fixing Roller

Install the upper roller by reversing the steps used to remove it.

• Handling the Upper Roller
If possible, wrap the roller with copy paper so as to protect its surface from dirt and scratches.

• Installing the Upper Roller

a. Orient it so that the side with a longer cut-off (section A in Figure 6-220) is toward the rear.

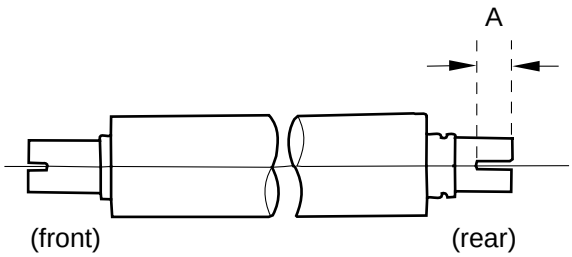

Figure 6-220

b. Be sure to install the collars ① ② of the bushing in the correct order shown in Figure 6-220a.

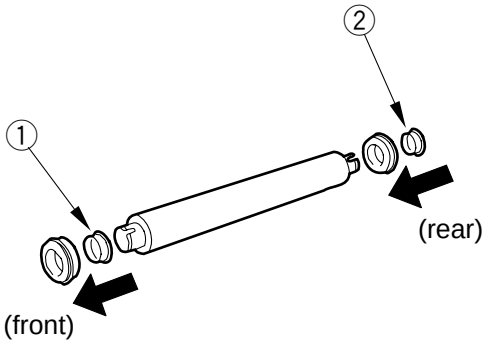

Figure 6-220a

10. Removing the Thermal Switch

1) Slide out the fixing/feeding unit from the copier.
2) Remove the fixing/feeding assembly front cover.
3) Remove the flywheel.
4) Remove the fixing assembly upper cover and the stay cover.
5) Remove the fixing cleaning belt. Remove the mounting screw ①, and remove the oil pan ②.
6) Remove the mounting screw ③ and faston ④; then, remove the thermal switch assembly holder ⑤.
7) Remove the four mounting screws ⑥, and remove the thermal switch assembly.
8) Remove the two mounting screws, and remove the thermal switch.

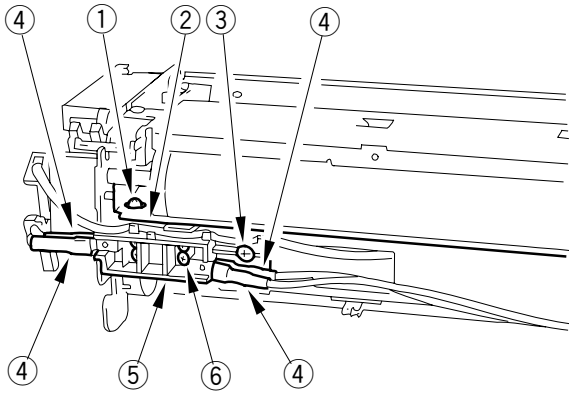

Figure 6-221

11. Removing the Main Thermistor (TH1)

1) Slide out the fixing/feeding unit from the copier.
2) Remove the fixing/feeding assembly front cover.
3) Remove the fixing assembly upper cover.
4) Remove the fixing cleaning belt.
5) Remove the mounting screw ①, and remove the oil pan ②.

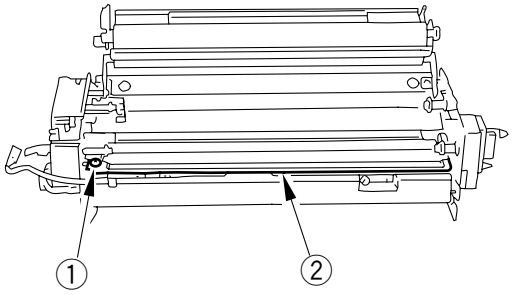

Figure 6-222

6) Remove the mounting screw ③, and shift the thermistor assembly ④ to the right to remove.

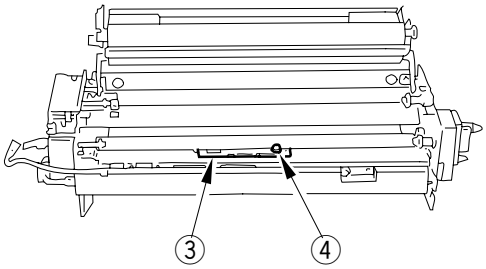

Figure 6-223

7) Remove the mounting screw ⑤ and two retaining spring ⑥, and remove the main thermistor ⑦.

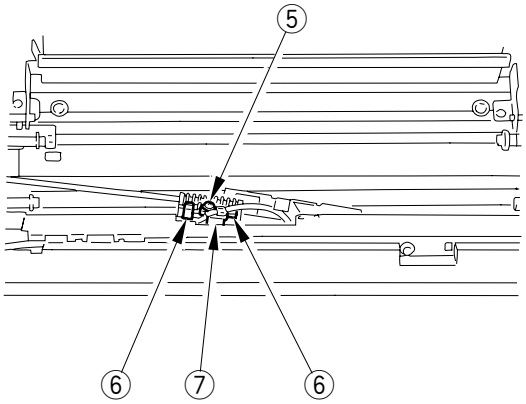

Figure 6-224

COPYRIGHT © 1997 CANON INC.

12. Removing the Lower Separation Claw Assembly

1) Slide out the fixing unit from the copier.
2) Remove the fixing/feeding assembly front cover.
3) Remove the brake unit.
4) Remove the fixing assembly upper cover.
5) Remove the fixing cleaning belt, clean the silicone oil pan; then, remove the fixing assembly upper unit.
6) Remove the two mounting screws ①, and remove the lower separation claw assembly 2 together with its support plate ②.
7) Remove the tension spring, and remove the lower separation claw assembly.

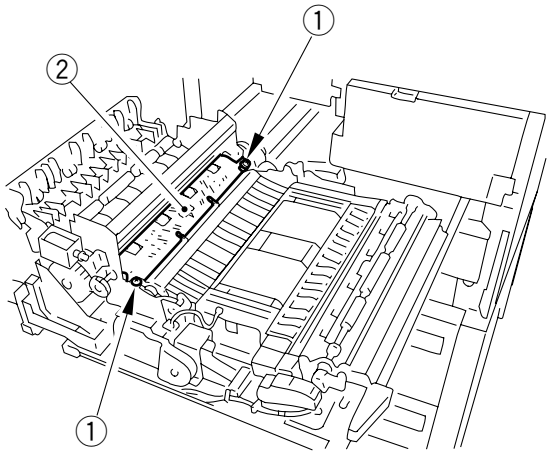

Figure 6-225

13. Removing the Lower Roller

1) Slide out the fixing/feeding unit from the copier.
2) Remove the fixing/feeding assembly front cover.
3) Remove the flywheel.
4) Remove the fixing assembly upper cover and the fixing cleaning belt; then, remove the silicone oil pan.
5) Remove the upper roller assembly of the fixing assembly.
6) Remove the lower separation claw support plate.
7) Remove the lower roller ① from the fixing assembly, remove the two E-rings ② from the lower roller, and remove the two bearings ③.

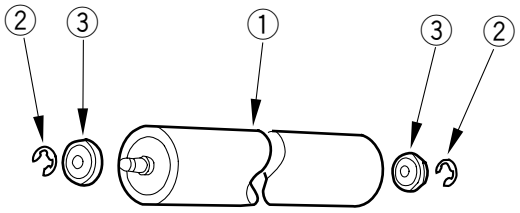

Figure 6-226

14. Removing the Upper Separation Claw

1) Slide out the fixing/feeding unit from the copier.
2) Open the fixing/delivery assembly, and release the spring ①; then, remove the upper separation claw ②.



Figure 6-227

15. Adjusting the Nip (tightening the pressure adjusting nut)

The nip width is correct if it is as indicated in Table 6-201. Otherwise, turn the pressure adjusting nut.

Caution:

a and c represent points 10 mm from both ends of copy paper.

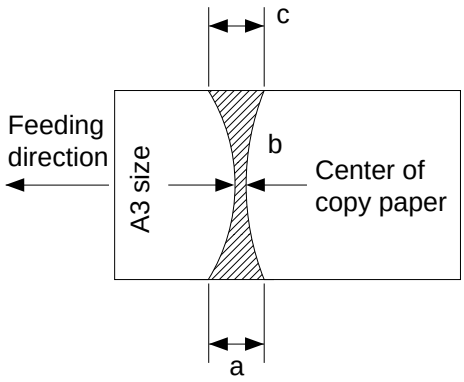

Figure 6-228

Dimensions	Measurements*
b	8.5 ± 0.5 mm
| a – c |	0.5 mm or less

*Be sure both upper and lower rollers are sufficiently warm before taking measurements.

Table 6-201

COPYRIGHT © 1997 CANON INC.

a. Measuring the Nip

Wait for 15 min after the copier finishes its warm-up period, and make 20 copies of A4; then, perform the following to measure the nip:

1) Place A3 paper, and select A3.
2) Open the RDF.
3) Start service mode (*4*); using the >> key, select 'NIP' in nip measurement mode.
4) Press the * key (user mode).

The machine will pick up paper, and will be ready for measurement.

Reference:

The paper will be stopped halfway once; it will then be automatically discharged in about 10 sec.

5) Measure the nip.

16. Adjusting the Fixing Clutch

When installing the fixing clutch, make adjustments by using the set screws ③ so that the gap between the 41T gear ① and the washer ② is 0.1 to 0.2 mm (about two sheets of 64 g/m^2 paper). At this time, be sure to fix the set screws ③ in place on the cut face of the shaft ④; further, be sure also to tighten the screw on the support plate 1 ⑤ before tightening the screw on the support 2 ⑥.

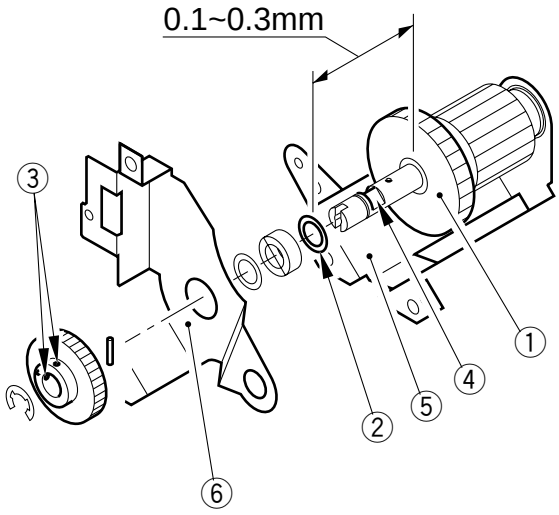

Figure 6-229

17. Removing the Sub Thermistor (TH2)

1) Slide out the fixing/feeding unit from the copier.
2) Remove the screw ②, and remove the fixing assembly upper cover ①; then, remove the screw ④, and remove the harness cover ③.

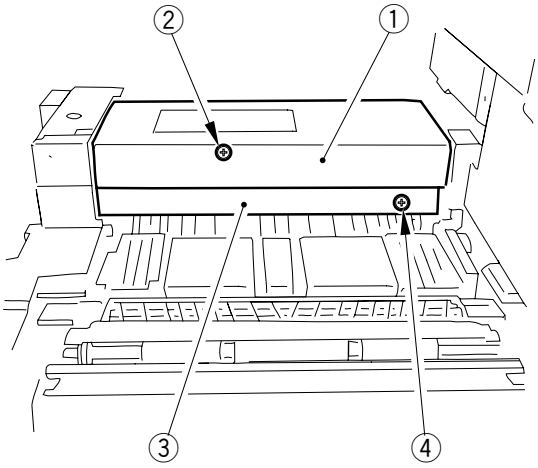

Figure 6-230

3) Remove the screw ⑥, and remove the sub thermistor unit ⑤.

Caution:

The sub thermistor cannot be replaced in the field. Replace it as part of the sub thermistor unit ⑤ shown in Figure 6-231.

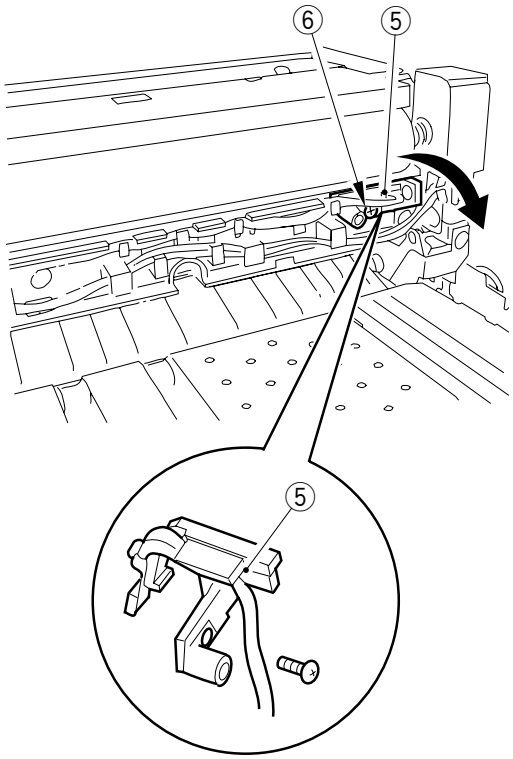

Figure 6-231

 COPYRIGHT © 1997 CANON INC. CANON NP6560/NP6360/NP6260 REV. 0 NOV. 1997 PRINTED IN JAPAN (IMPRIME AU JAPON)

B. Delivery Assembly

1. Construction

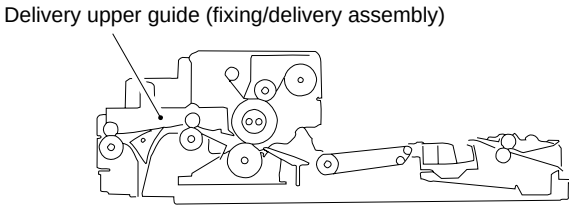

Figure 6-232

2. Removing the Delivery Upper Guide (fixing/delivery assembly)

1) Open the front door, and slide the fixing/feeding unit to the front and out of the copier.
2) Remove the fixing/feeding assembly front cover.
3) Remove the mounting screw ①, and pull out the pin ②; then, remove the delivery upper guide ③.

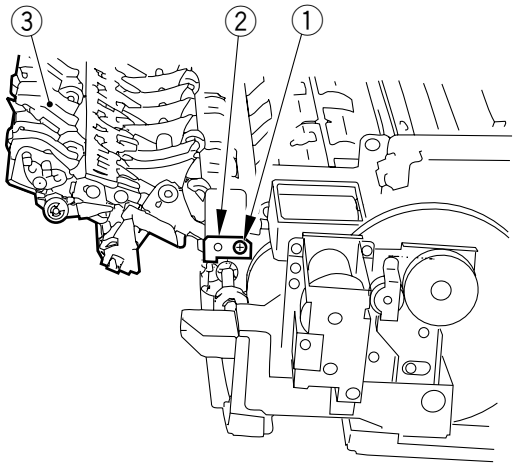

Figure 6-233

3. Removing the Fixing/Feeding Assembly Locking Assembly

1) Slide the fixing/feeding assembly unit to the front and out of the copier.
2) Remove the two mounting screws ① and E-ring ②; then, disconnect the connector ③, and remove the fixing/feeding locking assembly ④.

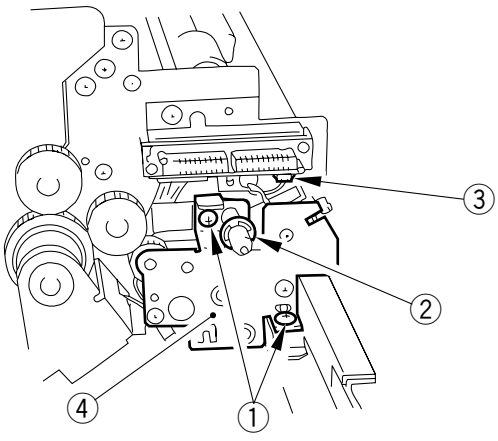

Figure 6-234

COPYRIGHT © 1997 CANON INC.

4. Removing the External Delivery Roller

1) Slide the fixing/feeding assembly unit to the front and out of the copier.
2) Remove the fixing/feeding assembly front cover.
3) Remove the two mounting screws ①, and remove the delivery roller guide ②.

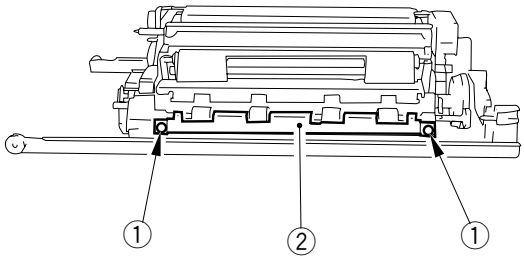

Figure 6-235

4) Remove the fixing/feeding assembly locking assembly.
5) Remove the two E-rings ③, gear ④, torque limiter ⑤, and bushing ⑥ at the front.
6) Remove the E-ring ⑦ and the bushing ⑧ at the rear, and remove the external delivery roller ⑨.

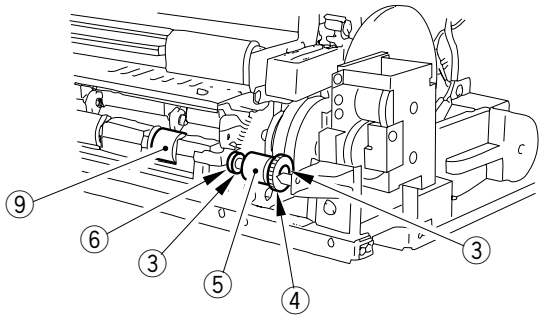

Figure 6-236 (front)

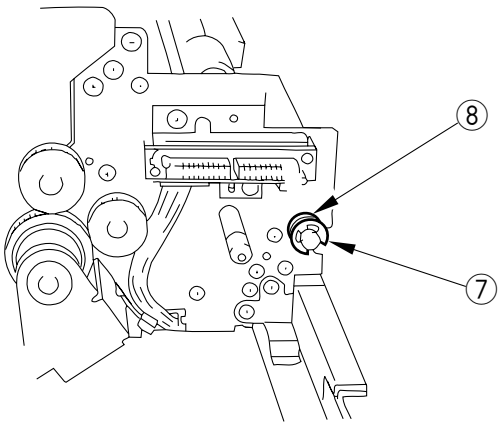

Figure 6-236a (rear)

 COPYRIGHT © 1997 CANON INC.

5. Removing the External Delivery Paper Sensor and the Internal Delivery Paper Sensor

1) Remove the external delivery roller.
2) Remove the two mounting screws ①; then, remove the external delivery sensor assembly and the internal delivery sensor assembly ②.

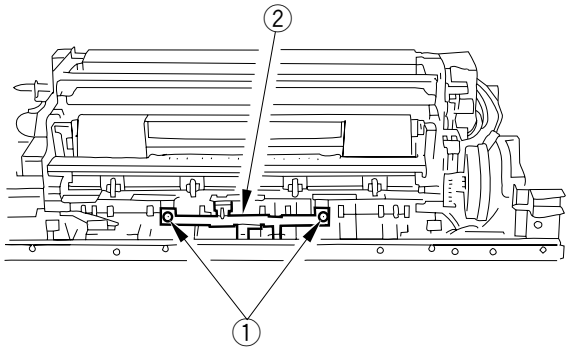

Figure 6-237

6. Removing the Fixing Assembly Outlet Paper Sensor Assembly

1) Slide the fixing/feeding unit to the front; then, remove the fixing/feeding front cover and the fixing assembly upper unit. (See p. 6-22.)
2) Remove the fixing assembly lower separation claw assembly. (See p. 6-29.)
3) Remove the mounting screw ①, and slide the fixing assembly outlet paper sensor assembly ② to the right; then, disconnect the connector ③ (J108), and remove the sensor.

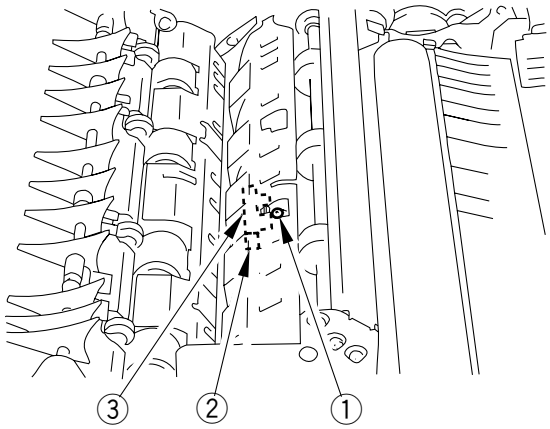

Figure 6-238

7. Removing the Internal Delivery Assembly Roller

1) Open the front door, and slide the fixing/feeding unit to the front and out of the copier.
2) Remove the fixing/feeding assembly front cover.
3) Remove the fixing assembly upper unit. (See p. 6-22.)
4) Remove the fixing assembly lower separation claw assembly. (See p. 6-31.)
5) Remove the E-ring ①, gear ②, and parallel pin ③ at the front.
6) Remove the E-ring ④ and the bushing ⑤.

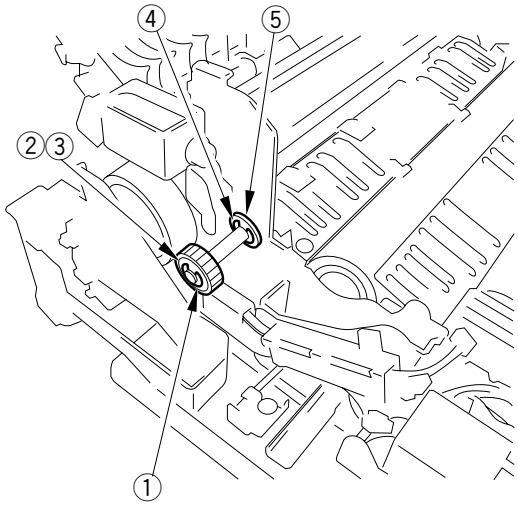

Figure 6-239

7) Remove the E-ring ⑥ and the gear ⑦ at the rear.
8) Remove the E-ring ⑧ and the bushing ⑨.
9) Remove the fixing assembly outlet paper sensor assembly. (See p. 6-39.)
10) Remove the internal delivery roller.

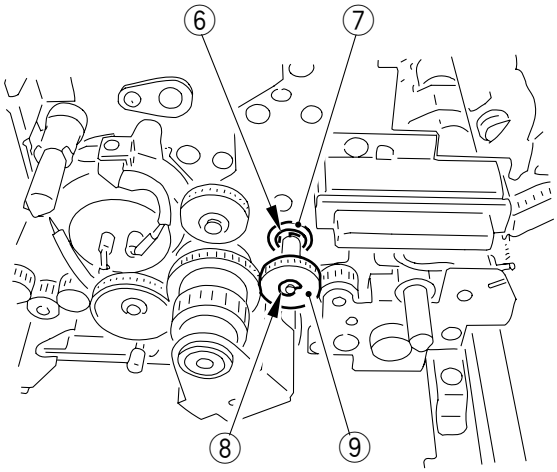

Figure 6-240

COPYRIGHT © 1997 CANON INC.

CHAPTER 7

EXTERNALS/AUXILIARY MECHANISMS

This chapter shows the copier's external parts, and explains the principles used for the copier's various control mechanisms in view of the functions of electrical and mechanical units and in relation to their timing of operation. It also shows how these units may be disassembled/assembled and adjusted.

I. CONTROL PANEL....7-1
A. Outline....7-1
B. Operation....7-1
II. FANS....7-6
III. POWER SUPPLY....7-9
A. Outline of Power Supply....7-9
B. Power Supply Circuit....7-10
C. Date/Time Display Power Supply..7-12
IV. DISASSEMBLY AND ASSEMBLY....7-13
A. External Covers....7-14
B. Control Panel....7-21
C. Door Switch Assembly....7-26
D. Fan Unit....7-28
E. Removing the Counter Assembly..7-32
F. Main Motor Assembly....7-32
G. Fixing/Waste Toner Drive Assembly....7-33
H. Main Drive Assembly (drum/developing)....7-35
I. Vertical Path Drive Assembly....7-36
J. Pick-Up Drive Assembly....7-38
K. Duplexing Drive (1) Assembly....7-39
L. Lifter Drive Assembly....7-40
M. Cassette Pick-Up Drive Assembly....7-41
N. Attaching the Drive Belt....7-43
O. DC Controller PCB....7-44
P. DC Power Supply Assembly....7-45
Q. High-Voltage Transformer Assembly....7-46
R. Power Supply Inlet Assembly....7-47

COPYRIGHT © 1997 CANON INC. CANON NP6560/NP6360/NP6260 REV. 0 NOV. 1997 PRINTED IN JAPAN (IMPRIME AU JAPON)

I. CONTROL PANEL

A. Outline

The machine's control panel consists of the control panel controller PCB, 320 × 240-dot liquid crystal display panel unit, transparent touch panel, and key switch panel, and it has the following functions:

① Data communication
② LCD processing
③ LCD contrast automatic and manual adjustment
④ Touch switch input
⑤ Key switch input

B. Operation

1. Data Communication

The control panel controller PCB communicates with the copier's image processor PCB through an interface unit to exchange data in serial mode.

The communication is controlled by the microprocessor on the control panel controller PCB.

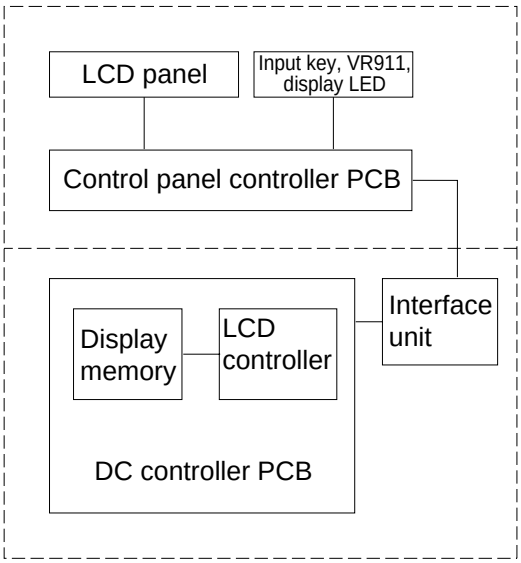

Figure 7-101

2. LCD Processing

The microprocessor on the DC controller PCB sends commands to the LCD controller according to instructions from its programs. In response, the LCD controller interprets and executes the commands. The LCD controller also turns on and off various instructions according to programs.

The LCD controller also serves to write display text codes into display RAM as necessary; the display RAM data is then sent to the display panel in response to the timing signals generated by the LCD controller.

COPYRIGHT © 1997 CANON INC.
CANON NP6560/NP6360/NP6260 REV. 0 NOV. 1997 PRINTED IN JAPAN (IMPRIME AU JAPON)

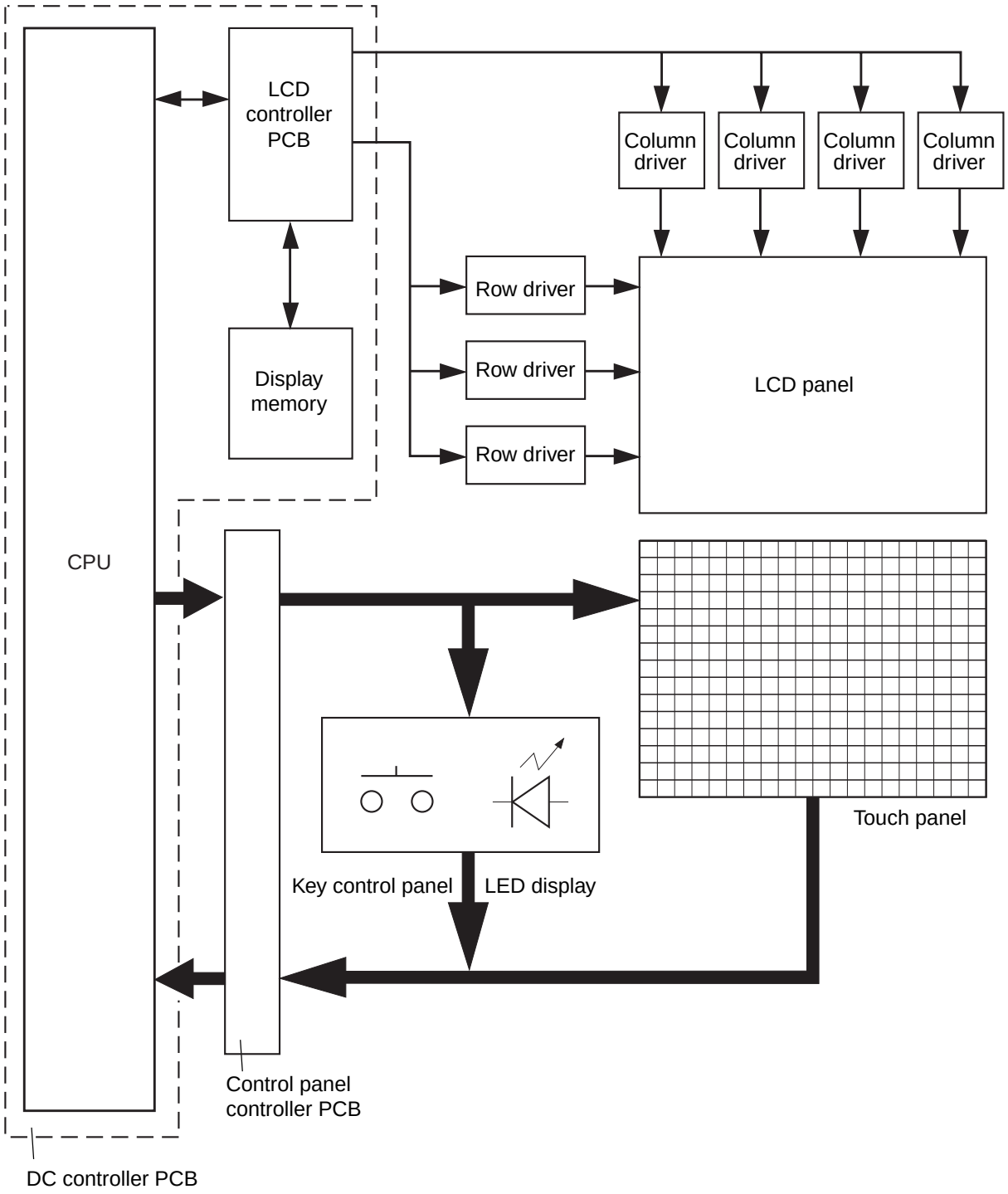
LCD controller PCB
Column driver
Column driver
Column driver
Column driver
Row driver
Row driver
Row driver
LCD panel
Display memory
CPU
Touch panel
Key control panel
LED display
Control panel controller PCB
DC controller PCB

Figure 7-102

3. Automatic Control of LCD Contrast

The control panel controller PCB is equipped with a mechanism capable of automatically adjusting the LCD contrast according to changes in temperature.

A thermistor (TH911) is mounted on the control panel controller PCB to monitor the temperature inside the control panel unit. The changes in the resistance of the thermistor caused by changes in temperature are used to vary the voltage supplied to the LCD assembly to maintain a specific contrast of the LCD display at all times.

The LCD contrast may be varied by adjusting the display contrast knob on the control panel to suit the user`s preference.

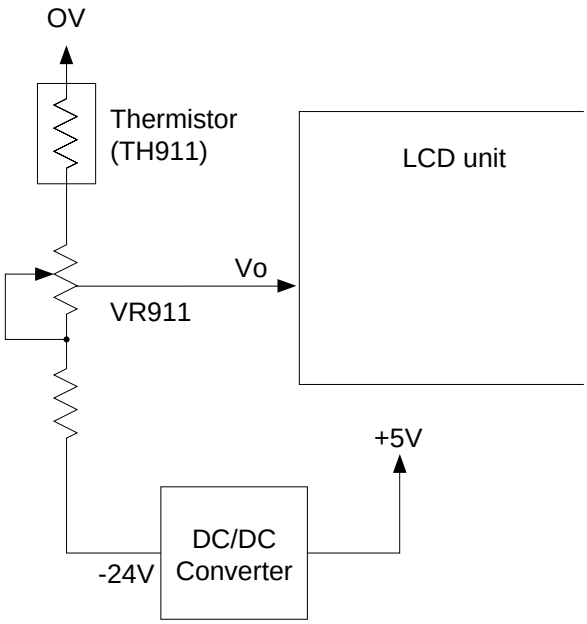

Vo: Voltage supplied to LCD unit

Figure 7-103

If the temperature around the control panel rises, the resistance of the thermistor will lower, thereby increasing the voltage (Vo) supplied to the LCD unit.

If the temperature around the control panel lowers, on the other hand, the resistance of the thermistor rises, thereby decreasing the voltage (Vo) supplied to the LCD unit.

 COPYRIGHT © 1997 CANON INC.

4. Touch Switch Inputs

The keys on the touch panel and the control panel controller PCB are connected as shown in Figure 7-102.

The touch switch panel consists of a sheet of glass having a transparent conducting membrane and a sheet of film with spacers in between; it shows a pattern consisting of 15 rows and 20 columns.

When its surface is pressed with a finger, contact between the glass and the film causes electrical continuity, thereby connecting a pair of electrodes so that the corresponding X/Y coordinates are obtained as in the case of a common key matrix.

In other words, the correspondence between key scan signals from the control panel controller circuit and the input signals to the control panel controller circuit enables the control panel controller PCB to identify which key has been pressed.

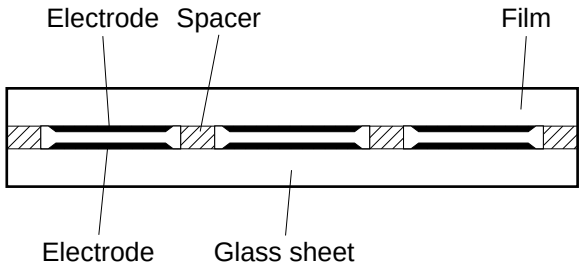

Figure 7-104

II. FANS

The machine is equipped with seven fans used to exhaust ozone, draw stray toner, and cool the inside.

Table 7-201 shows the function of each fan and the filter used and the orientation of the fan, while Figure 7-203 shows when each fan turns on.

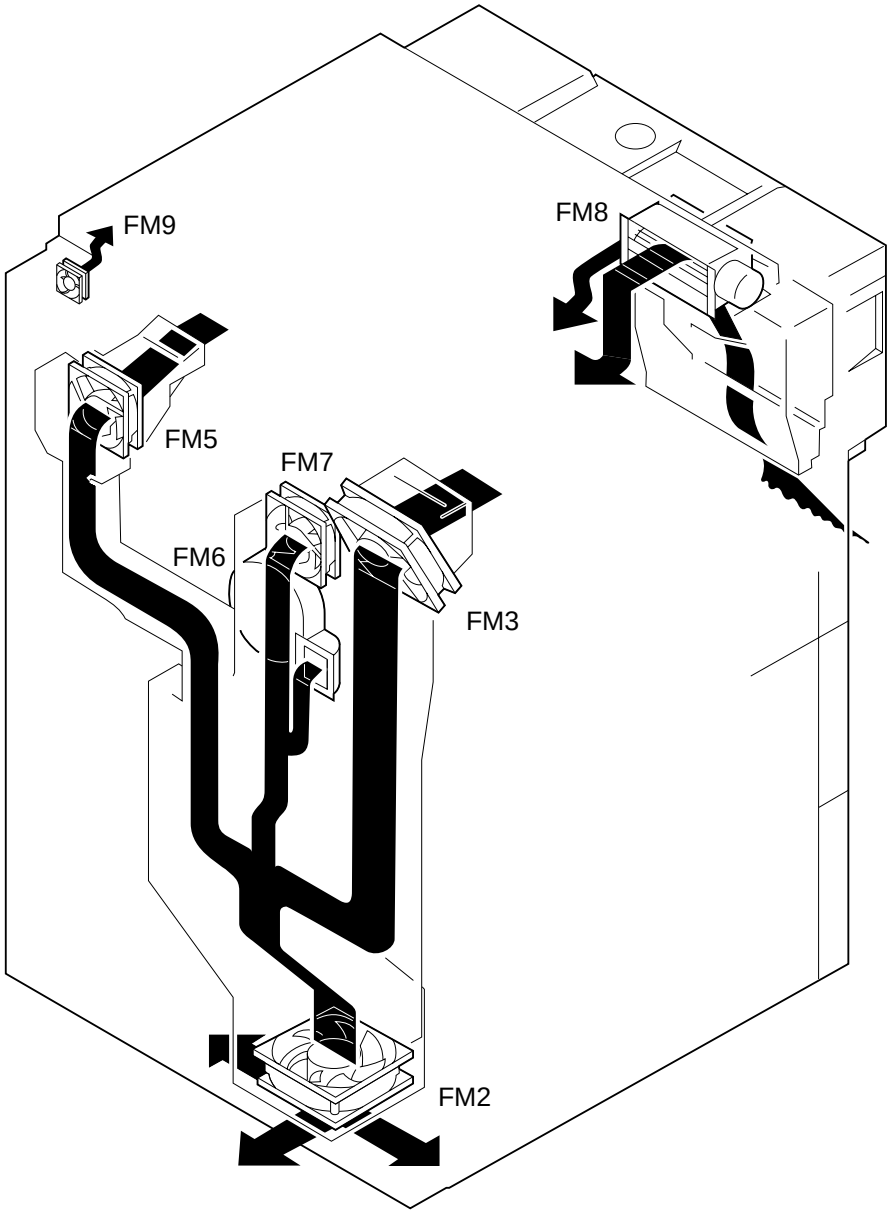

Figure 7-201

 COPYRIGHT © 1997 CANON INC. CANON NP6560/NP6360/NP6260 REV. 0 NOV. 1997 PRINTED IN JAPAN (IMPRIME AU JAPON)

Notation	Name	Orientation	Filter	Function
FM2	Exhaust fan	Blowing	Ozone	Discharges exhaust from each fan to the outside of the machine.
FM3	Fixing assembly heat exhaust fan	Drawing		Prevents increases in temperature inside the machine caused by the fixing heater. Exhausts silicone oil vapors.
FM5	Developing fan	Drawing		Draws toner astray near the developing assembly.
FM6	Feeding fan	Drawing		Keeps copy paper close to the feeding belt.
FM7	Cleaner fan	Drawing		Prevents increases in temperature inside the machine.
FM8	Scanner cooling fan	Blowing	Air, dust-proofing	Cooling the scanner, cooling the primary charging assembly.
FM9	Scanner motor cooling fan	Blowing	Dust-proofing	Cooling the scanner motor (M3).

Table 7-201

The following fans are controlled to two different speeds: full rotation and half rotation. As shown in Figure 7-202, each circuit is switched between +24 and +12V voltages by the CPU on the DC controller PCB.

- Exhaust fan (FM2)
- Feeding fan (FM6)
- Cleaner fan (FM7)
- Scanner cooling fan (FM8)
- Scanner motor cooling fan (FM9)

When the FMFLL signal from the CPU goes '1', +24 V will be supplied so that the fan rotates at full speed; when the FMHLF signal goes '1', on the other hand, +12 V will be supplied so that the fan rotates at half speed.

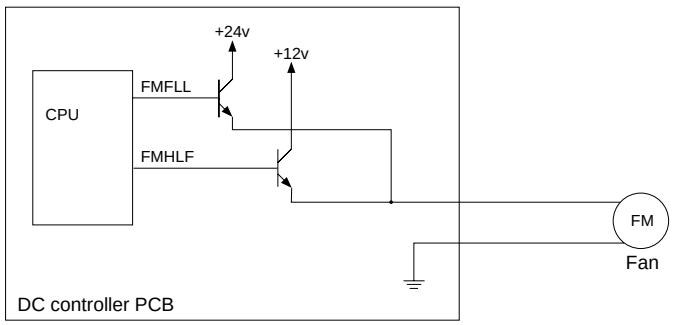

Figure 7-202

'E214' will be indicated on the control panel if the scanner motor cooling fan (FM9) does not send the scanner motor cooling fan rotation detection signal (FM9ROT) to the DC controller PCB for 2 sec or more.

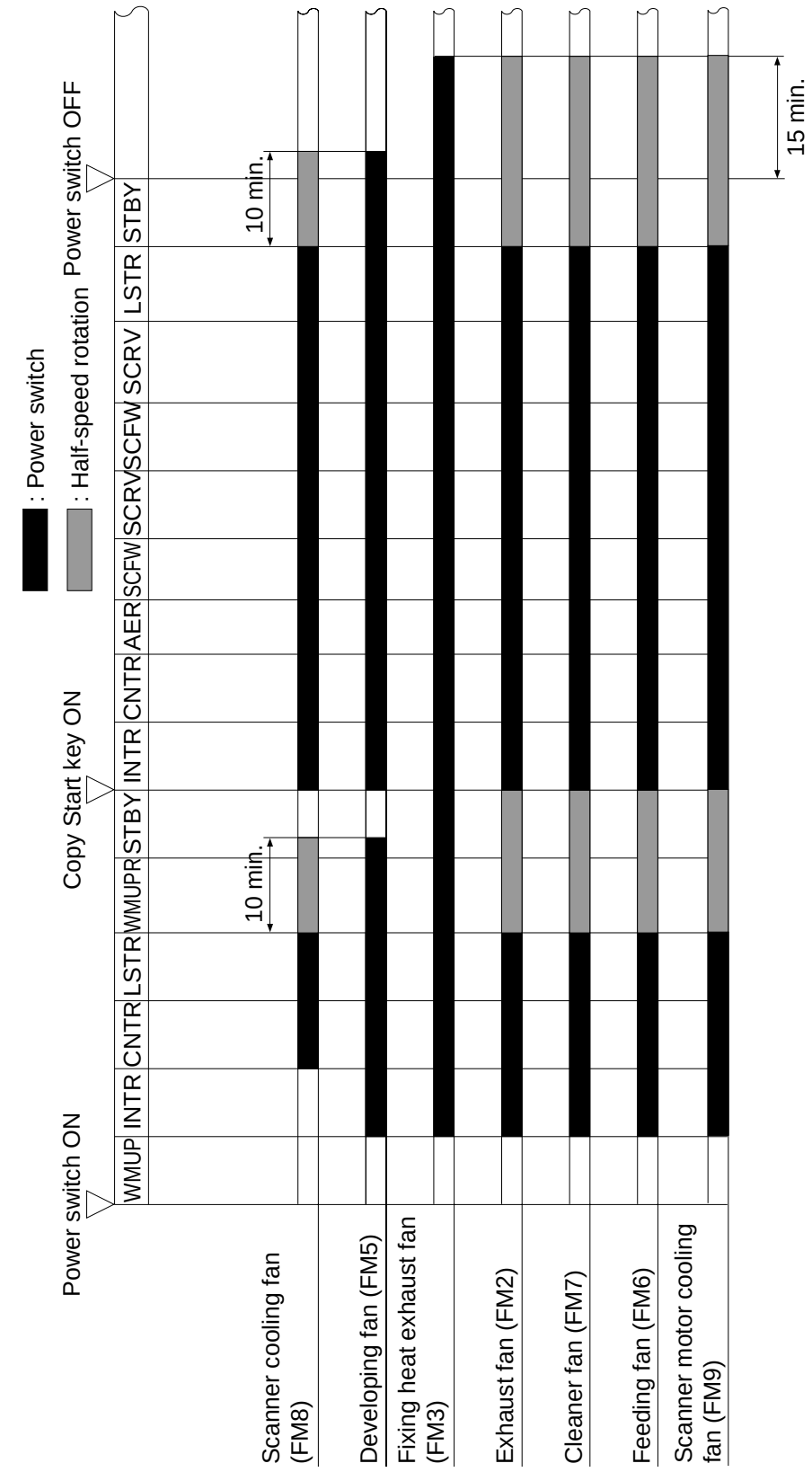

Figure 7-203 Sequence of Operations

COPYRIGHT © 1997 CANON INC.

III. POWER SUPPLY

A. Outline of Power Supply

Figure 7-301 is a block diagram showing the distribution of each power supplies.

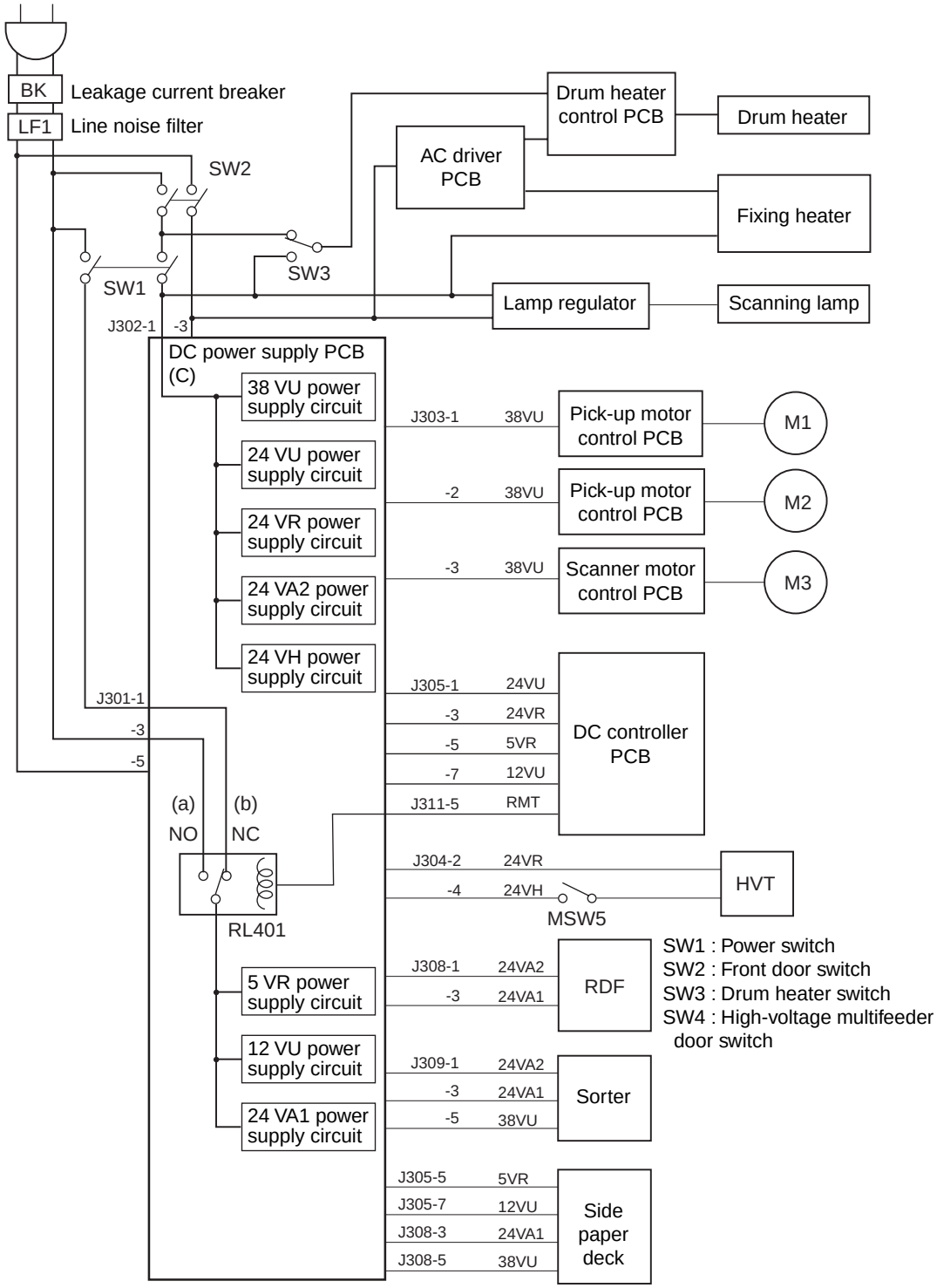

Figure 7-301

COPYRIGHT © 1997 CANON INC.

B. Power Supply Circuit

The machine's DC power supply provides DC outputs: 38 VU, 24 VU, 24 VR, 24 VA1, 24 VA2, 24 VH, 12 VU, and 5 VR.

The AC power supply consists of (a) an AC direct input line without a switch, (b) an input line by way of a power supply switch SW1, (c) an input line by way of power switch SW1 and door switch SW2, providing the DC power supply with DC AC power through three channels.

When the power switch SW1 is turned on, each power supply circuit is provided with AC power to generate a DC output; the 5VR, 12VU, and 24VA1 power supply circuits are controlled so that the input lines are switched by the remote signal (RMT) from the DC controller PCB.

When the power switch SW1 is turned on, each power supply circuit is provided with power through the line which leads through the power switch SW1 (line b), thereby turning on the microprocessor on the DC controller PCB; thereafter, the microprocessor on the DC controller PCB causes the remote signal RMT to go '1' turning on the relay RL401 so that the AC input line will switch to the AC direct input line (a).

The 38VU, 24VU, 24VR, 24VA2, and 24VH circuits turn off when the power switch SW1 is turned off; other DC power circuits, however, remain on to continue to supply the DC controller PCB with DC power, thereby keeping the fans rotating for a specific period of time (about 15 min); thereafter, the DC controller PCB causes the remote signal RMT to go '0' to cut off the AC circuits, thereby automatically shutting off the AC inputs to the DC power supply circuits.

Caution:

Check to make sure that the power plug is disconnected always before working on the DC controller, as for replacement.

 COPYRIGHT © 1997 CANON INC.

Reference:

The DC voltage tolerances are as follows:

- +38VU +10%, –7%
- +24VU +10%, –7%
- +24VR ±2%
- +24VA1 +10%, –20%
- +24VA2 +10%, –7%
- +24VH +10%, –7%
- +5VR ±4%
- +12VU +10%, –7%

However, the above assume that the AC input inaccuracy is ±10%.

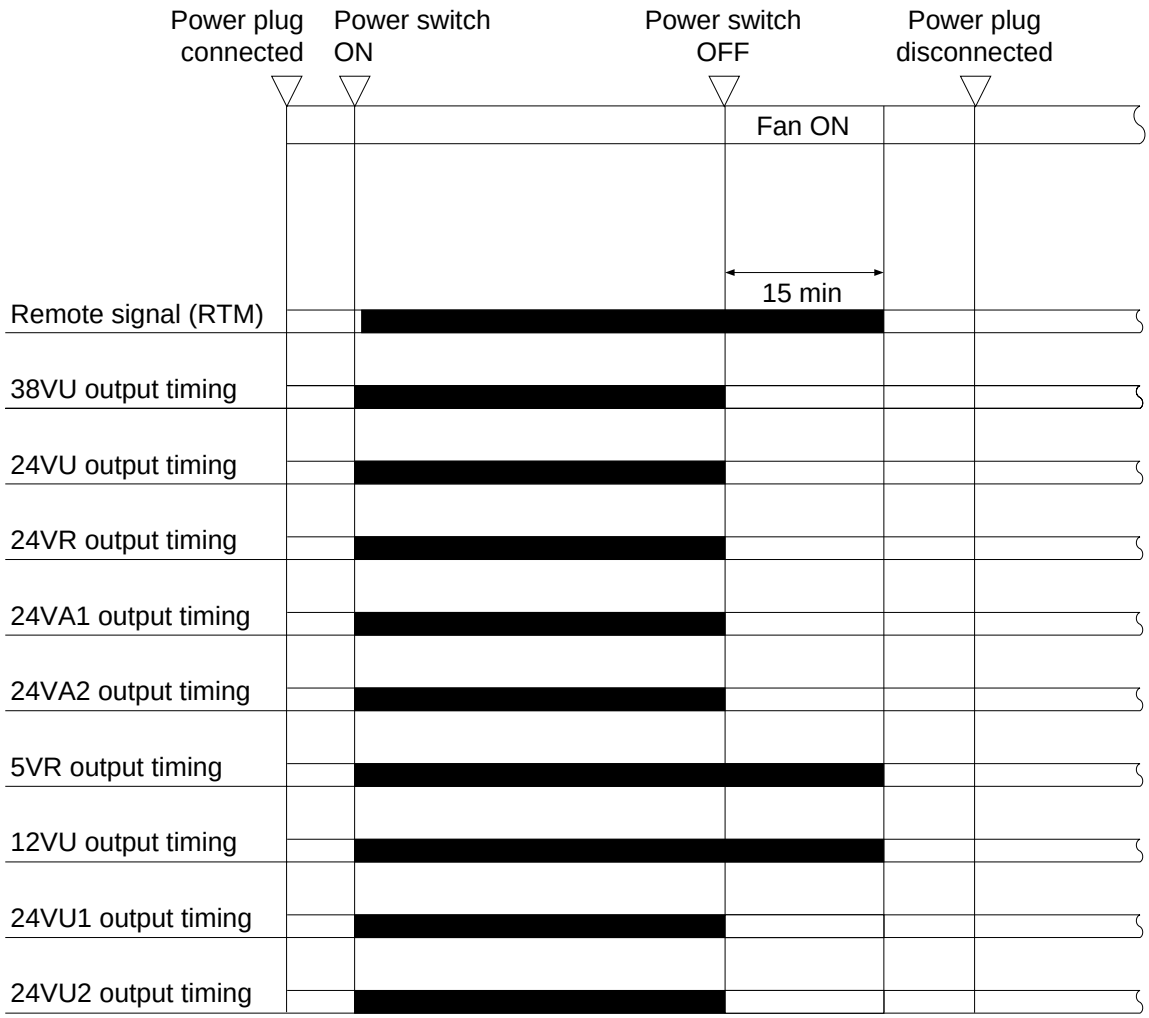

Figure 7-302

The power supply PCB is equipped with a leakage current breaker (BK), a fuse on its AC power input side, and an overcurrent protection circuit in its DC circuit.

If an overcurrent flows because of a short circuit in the line or the like, the protection circuit turns on to turn off the output of the power supply unit. In such a case, disconnect the copier's power plug, and remove the cause of activation before turning on the power.

The protection circuit may be reset by keeping the AC power supply of the power supply unit off for about 30 sec before turning on the AC power supply.

'E214' will be indicated on the control panel if the scanner motor cooling fan (FM9) does not send the scanner motor cooling fan rotation detection signal (FM9ROT) to the DC controller PCB for 2 sec or more.

Caution:

If an overcurrent flows in the output of the power supply unit, the protection circuit will normally turn on before the AC input fuse melts. Keep in mind that repeatedly turning on and off the AC power supply of the power supply unit with a short circuit in the output of the power supply unit can melt the fuse of the AC input.

C. Date/Time Display Power Supply

The DC controller PCB is equipped with a lithium battery to back up the data when the power plug is disconnected.

The lithium battery is designed to last for about five years with the power plug disconnected.

The date/time indication stops when its life ends, and the indication starts once again when the power plug is connected.

The lithium battery cannot be re-charged, requiring replacement (available as a service part, which will last for five years starting at the point of use—it will not discharge unless connected by its terminals).

Keep in mid that the back-up data will be lost when the battery comes to the end of its life—enter the appropriate data after replacement.

⚠ Caution:

Replace the lithium battery only with the one listed in the Parts Catalog.
Use of another battery may present a risk of fire or explosion.
The battery may present a fire or chemical burn hazard if mistreated.
Do not recharge, disassemble or dispose of it in fire. Keep the battery out of reach of children and discard any used battery promptly.

 COPYRIGHT © 1997 CANON INC. CANON NP6560/NP6360/NP6260 REV. 0 NOV. 1997 PRINTED IN JAPAN (IMPRIME AU JAPON)

IV. DISASSEMBLY AND ASSEMBLY

Here, the copier is discussed in terms of its mechanical characteristics and operation and how to disassemble and assemble it.

Be sure to observe the following for disassembly/assembly work:

1. ⚠ Disconnect the power plug for safety before starting disassembly/assembly work.
2. Unless otherwise noted, assemble the parts by reversing the steps used to disassemble them.
3. Identify the screws by type (length, diameter) and location.
4. One of the mounting screws of the rear cover is provided with a toothed washer to protect against static electricity. Do not leave it out during assembly work.
5. The screws used for grounding wires and varistors are provided with a toothed washer to ensure electrical continuity. Do not leave them out during assembly work.
6. As a rule, do not operate the machine with any of its parts removed.
7. Before sliding out the duplexing unit or the fixing assembly, check to make sure that the front door switch or the power switch is off.

COPYRIGHT © 1997 CANON INC.

A. External Covers

① Front door
② Multifeeder door
③ Upper right door (4)
④ Lower right door (2)
⑤ Lower right cover (1)

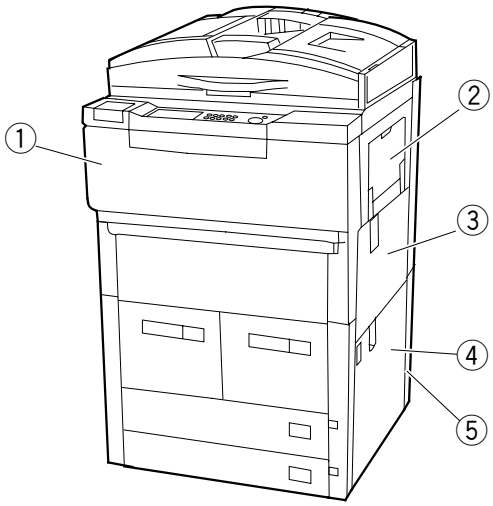

⑥ Rear cover (4)
⑦ Upper left cover (5)
⑧ Lower left cover (7)

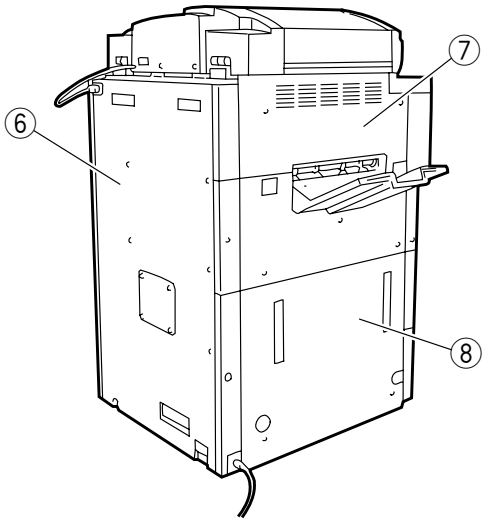

Figure 7-401

① Inside upper cover (2)
② Fixing front cover (3)
③ Feeding front cover (2)
④ Connector cover (1)
⑤ Power switch assembly cover (3)
⑥ Hopper cover

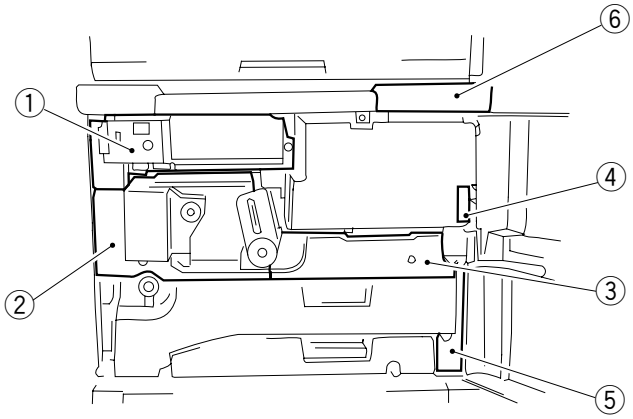

Figure 7-402

COPYRIGHT © 1997 CANON INC.

Remove the covers as needed when cleaning, inspecting, or repairing the inside of the machine as follows; those covers that may be detached by merely removing their mounting screws on their own are omitted from the discussions:

1. Removing the Front Door

1) Open the front door, and remove the mounting screw ② of the stopper tape ①; then, remove the two stoppers ③.

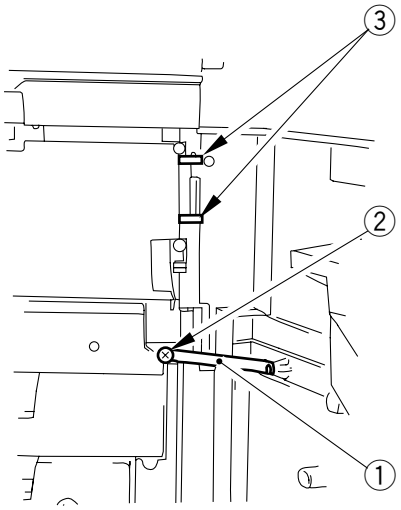

Figure 7-403

2) Pull out the pin ④.

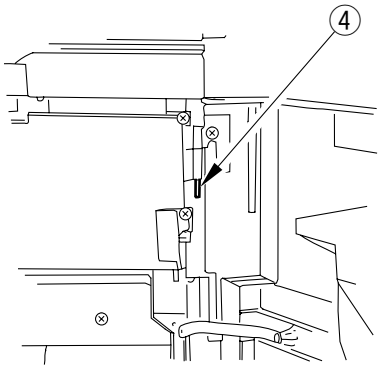

Figure 7-404

3) Pull out the front door ⑤ by lifting it at an angle.

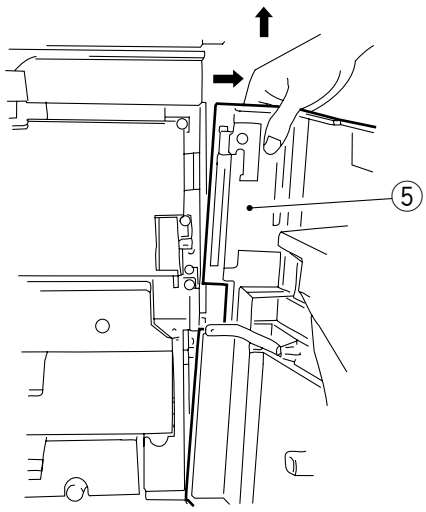

Figure 7-405

2. Removing the Inside Upper Cover

1) Open the front door, and shift the fixing/feeding assembly lever; then, slide out the fixing/feeding unit.
2) Remove the three mounting screw ①, and remove the inside upper cover ②.

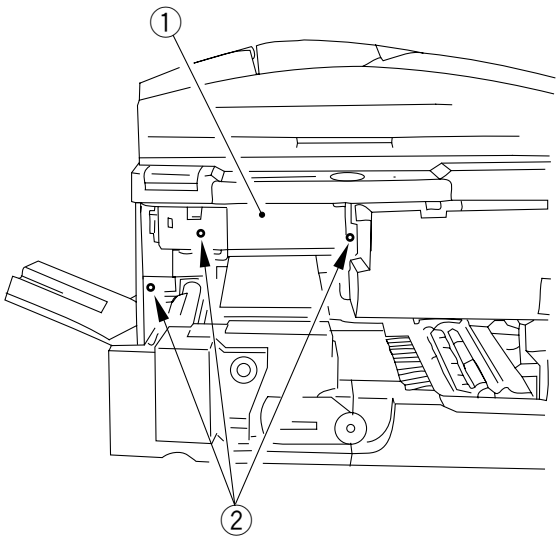

Figure 7-406

3. Removing the Fixing/Feeding Unit Front Cover

1) Open the front door, and slide out the fixing/feeding unit.
2) Remove the screw ① of the releasing lever; then shift and remove the releasing lever ② while pushing the rear of the releasing lever locking shaft (closer to the inside of the fixing/feeding assembly).
3) Remove the mounting screw ③, and remove the fixing knob ④.
4) Remove the two mounting screws ⑤, and remove the fixing front cover ⑥.
5) Remove the two mounting screws ⑦, and remove the feeding front cover ⑧.

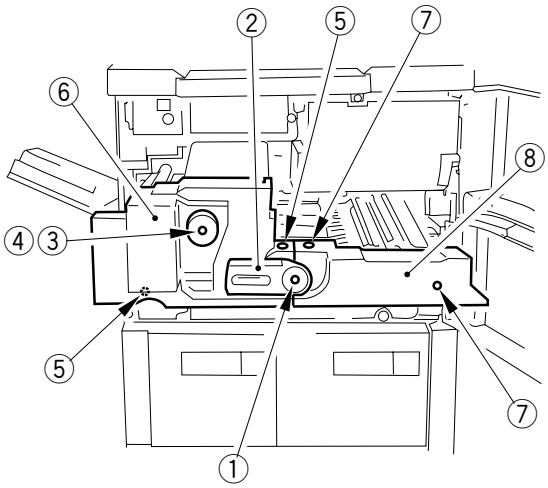

Figure 7-407

 COPYRIGHT © 1997 CANON INC.

4. Removing the Rear Cover

1) Remove the ten mounting screws ①, and remove the rear cover ②.

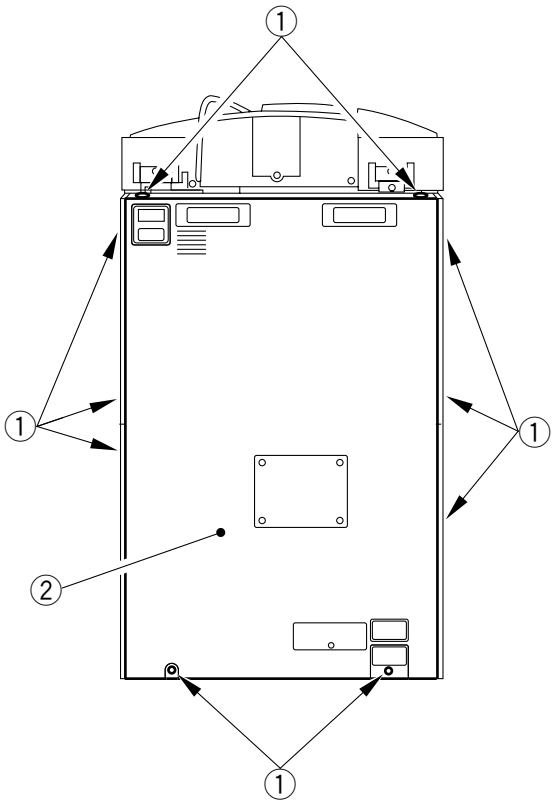

Figure 7-408

5. Sliding Out the Hopper Assembly

1) Open the front door, and open the hopper cover ①. Remove the three mounting screws ③; then, remove the three mounting screws ②, and connector cover. Disconnect the connector, and slide out the hopper ④ to the front and turn it.

Caution:

Check to make sure that the connector is connected before installing the hopper assembly.

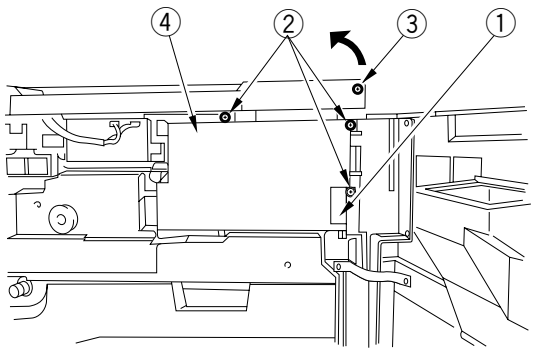

Figure 7-409

6. Removing the Process Unit

1) Open the front door.
2) Remove the developing assembly. (See p. 4-57.)
3) Remove the hopper assembly. (See p. 4-62.)
4) Slide out the fixing/feeding assembly, and place the drum protection sheet on the registration roller assembly.
5) Disconnect the four connectors ①, and remove the two mounting screws ②.

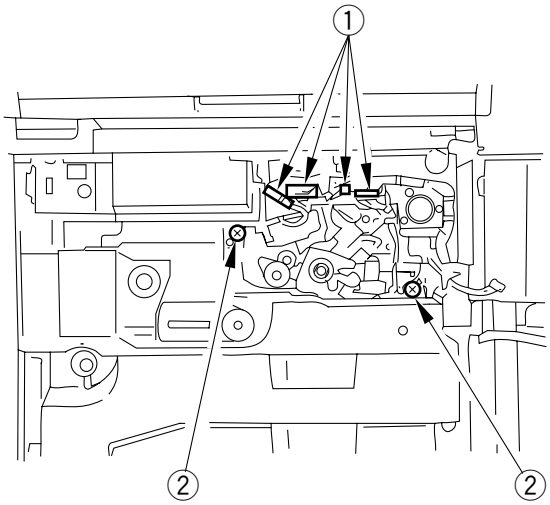

Figure 7-410

6) Insert the drum rotating tool ③ into the cut ④ in the drum shaft. Fix the drum in position so that the drum will not rotate counterclockwise, and insert a screwdriver into the center hole ⑤ of the drum rotating tool, and remove the drum fixing screw.

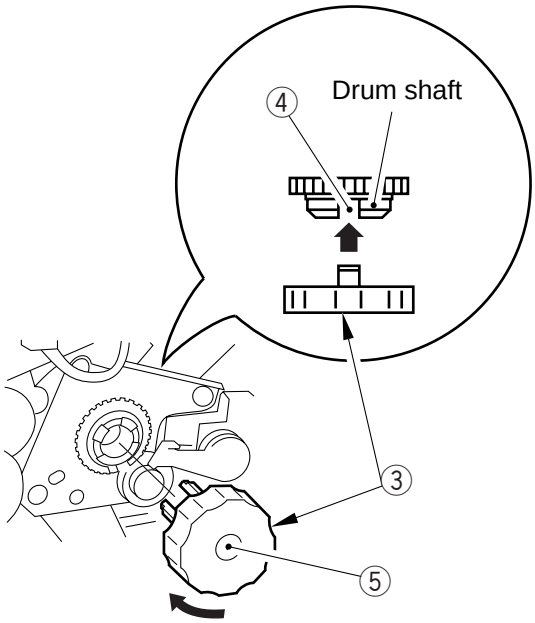

Figure 7-411

Caution:

If you rotate the drum counterclockwise, the cleaning blade will be displaced in relation to the drum, causing cleaning faults. Be sure to fix the drum in place before removing the drum fixing screw.

Reference:

If you merely want to release the hopper assembly without removing it, open the multifeeder door and the upper right door to allow for space in the front.

COPYRIGHT © 1997 CANON INC.

7) Slide out the process unit ⑥ until it stops.

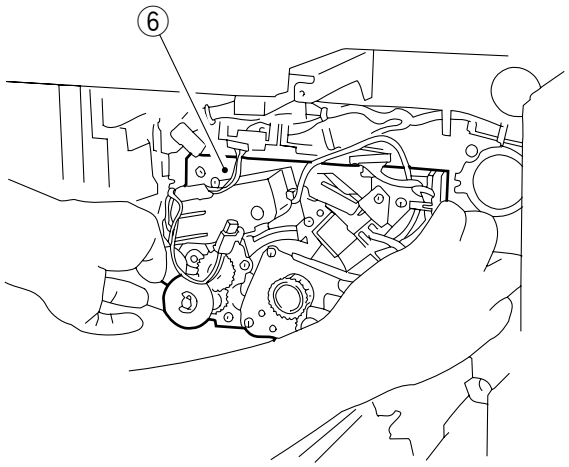

Figure 7-412

8) Hold the process unit as shown, and remove it.

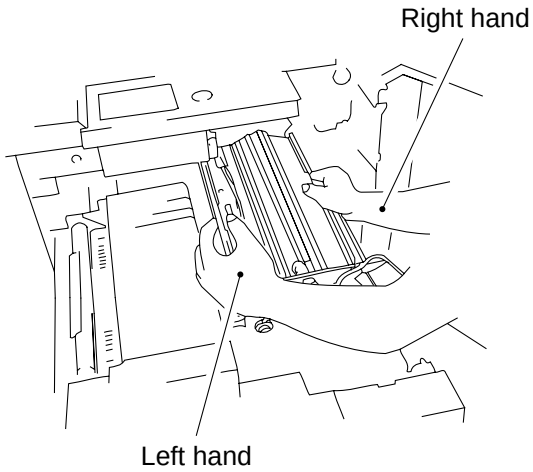

Figure 4-413

7. Installing the Process Unit

Install the process unit by reversing the steps used to remove it with the following in mind:

1) When placing the processing unit, be sure to align it along the guide plates ① at the front and the rear of the left rail.
   On the right rail side, be sure to place the process unit on the L-shaped stay.

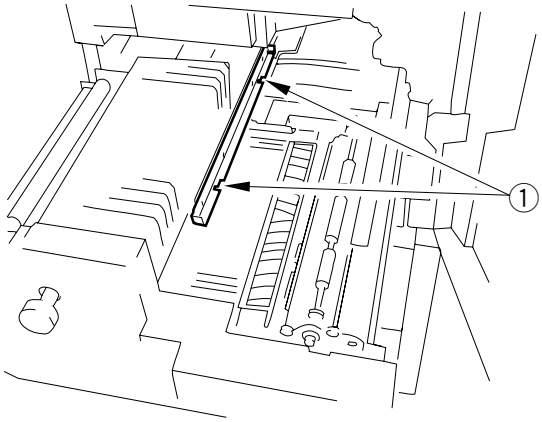

Figure 7-414 (rail side)

2) After inserting the process unit into the copier, match the cut-in of the drum shaft and the cut-in of the drum using the drum rotating tool ③; then, insert the drum fixing tool ⑤, and fit the mounting screw ④ into the center hole of the drum to fix it in place.

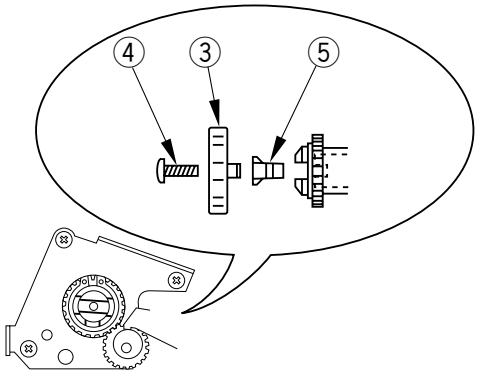

Figure 7-415

COPYRIGHT © 1997 CANON INC.

B. Control Panel

1. Removing the Control Panel from the Copier

1) Remove the mounting screw of the upper left cover and the two stepped screws (M3x2) of the standard white cover.
2) Open the RDF; then, remove the three mounting screws ① and the three RDF catch metal fixings ②.

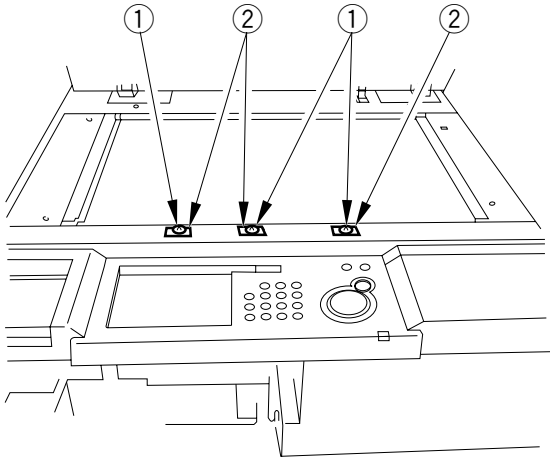

Figure 7-416

3) Remove the three screws ③, and remove the upper right cover ④.

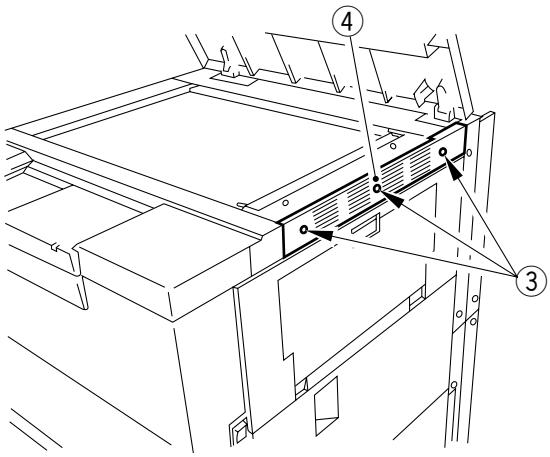

Figure 7-417

4) Remove the mounting screw ⑤ of the control panel.

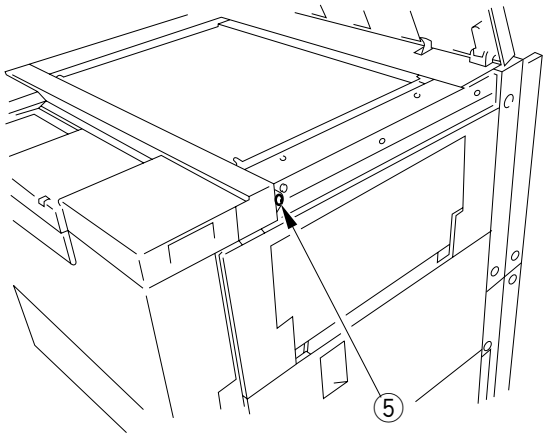

Figure 7-418

5) Open the front door; then, remove the three mounting screws ⑥ and the connector cover ⑦, and disconnect the connector, and open the hopper ⑧.

Caution:

Check to make sure that the connector is connected before installing the hopper assembly.

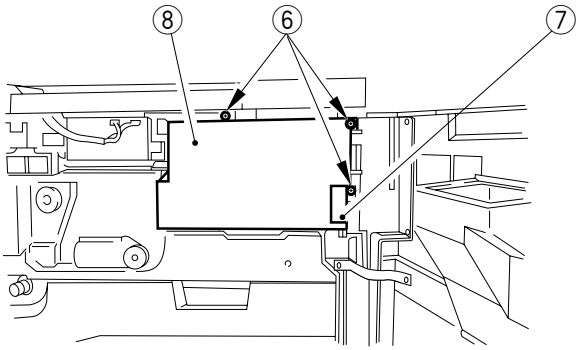

Figure 7-419

6) Shift the fixing/feeding assembly releasing lever ⑨ from horizontal to vertical position, and slide out the fixing/feeding assembly ⑩.

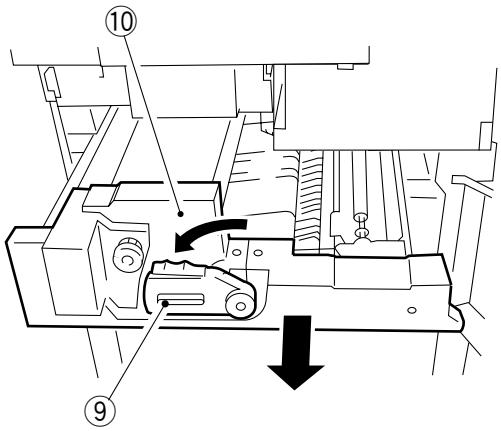

Figure 7-420

 COPYRIGHT © 1997 CANON INC.

7) Remove the three mounting screws ⑪, and remove the inside upper cover ⑫; then, slide in the fixing/feeding assembly.

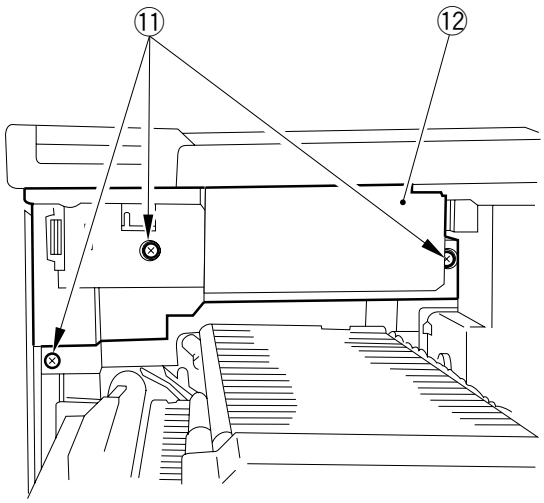

Figure 7-421

8) Remove the three mounting screws ⑬; then, remove the control panel, and turn it over.

Caution:

Take care not to damage the surface of the control panel by the chassis of the copier.

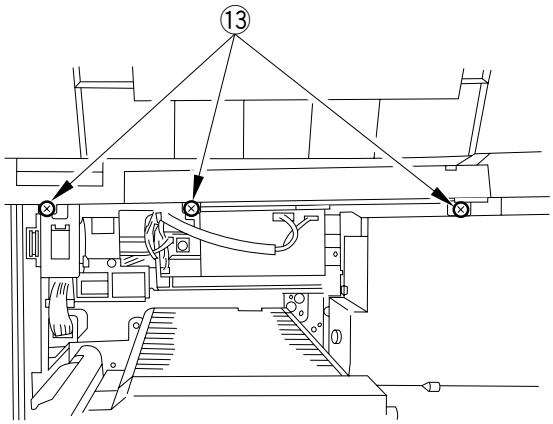

Figure 7-422

9) Disconnect the three connectors (J911, J915, J955).

2. Removing the Control Panel PCB

1) Remove the four mounting screws ①, and shift the back cover ② to the right to remove.

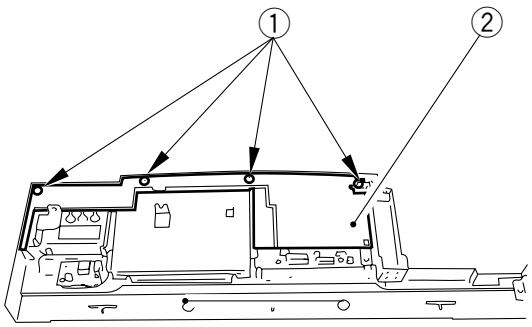

Figure 7-423

3. Removing the Touch Panel

1) Remove the six mounting screws ①, and remove the center support plate ②.

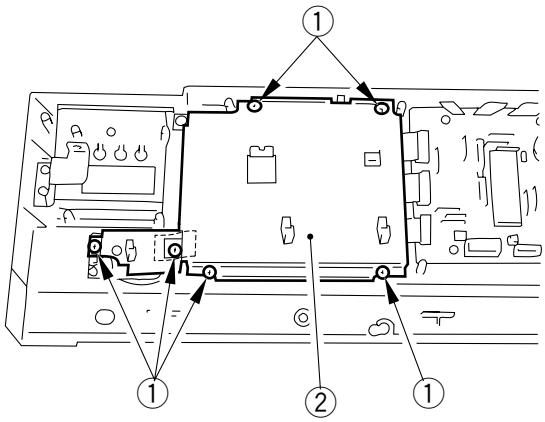

Figure 7-424

2) Remove the three flat cables ③ (J912, J913, J916) on the control panel CPU PCB, and disconnect the connector ④ (J956) of the inverter PCB.
3) Remove the five mounting screws ⑤, and remove the touch panel ⑥.

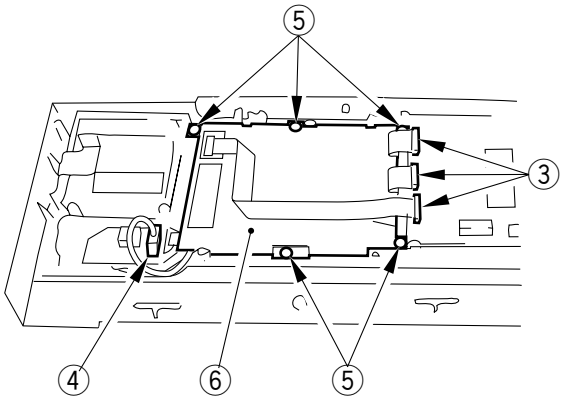

Figure 7-425

 COPYRIGHT © 1997 CANON INC. CANON NP6560/NP6360/NP6260 REV. 0 NOV. 1997 PRINTED IN JAPAN (IMPRIME AU JAPON)

4. Removing the Control Panel Controller (CPU) PCB

1) Remove the five mounting screws ①; then, remove the control panel right support plate ② and the control panel controller (CPU) PCB ③.

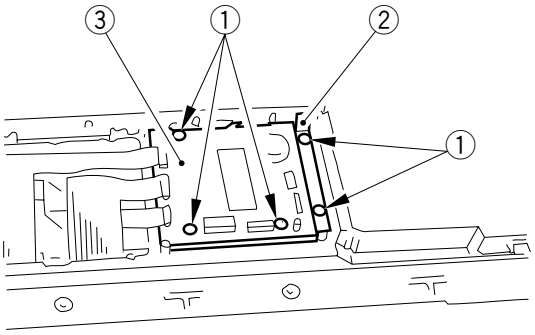

Figure 7-426

2) Remove the 13 mounting screws ④, and remove the numeric keypad ⑤.

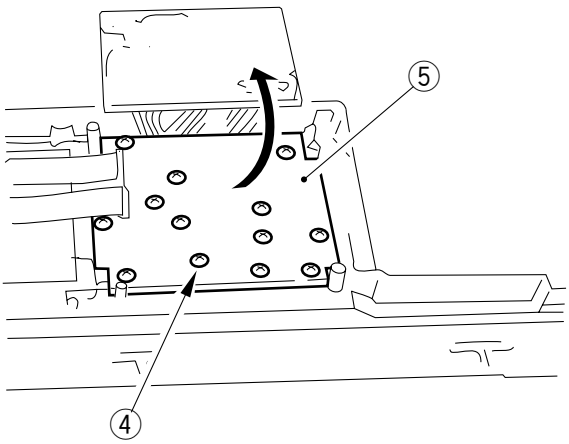

Figure 7-427

C. Door Switch Assembly

1. Removing the Front Door Switch Assembly

1) Open the front door.
2) Remove the inside upper cover.
3) Remove the control panel.
4) Remove the two mounting screws ①, and remove the door switch assembly ②.

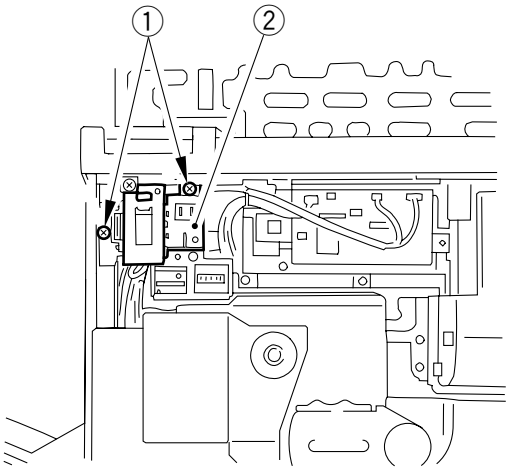

Figure 7-428

2. Removing the Multifeeder Door Switch Assembly

1) Remove the front door, and remove the hopper assembly.
2) Remove the three mounting screws ①, and remove the power supply switch assembly cover ②.

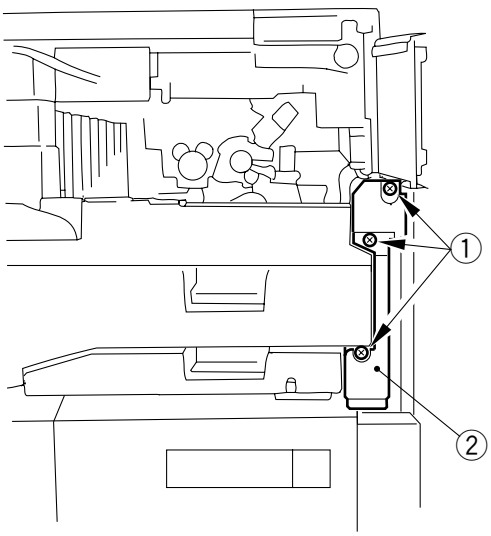

Figure 7-429

 COPYRIGHT © 1997 CANON INC.

3) Remove the two mounting screws ③, and remove the power switch ④.
4) Remove the mounting screw ⑤, and remove the multifeeder door sensor/multifeeder door catch assembly ⑥.

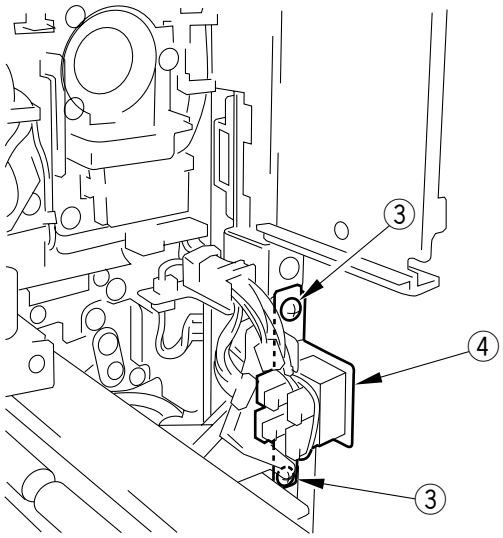

Figure 7-430

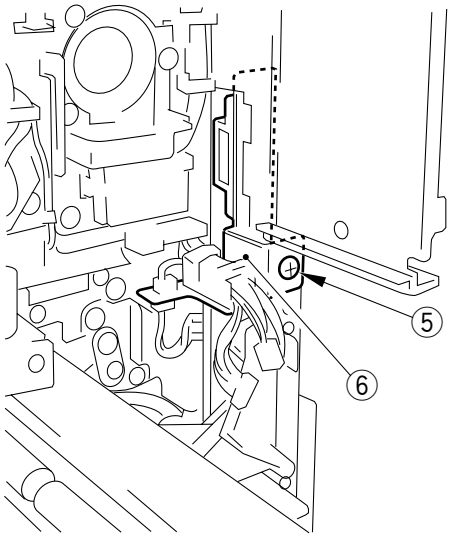

Figure 7-430a

5) Remove the sensor from the multifeeder door sensor/multifeeder door catch assembly.

3. Installing the Drum Heater Switch

Install the switch so that its right side is in ON position.

D. Fan Unit

1. Removing the Scanner Cooling Fan

1) Open the front door, and remove the inside upper cover. (See p. 7-16.)
2) Disconnect the three connectors (J1, J2, J3) of the potential control PCB, and disconnect the connector ② (J921) of the service switch PCB.
3) Remove the four mounting screws ③, and disconnect the connector ④; then, remove the scanner cooling fan unit ⑤ together with the potential control PCB.

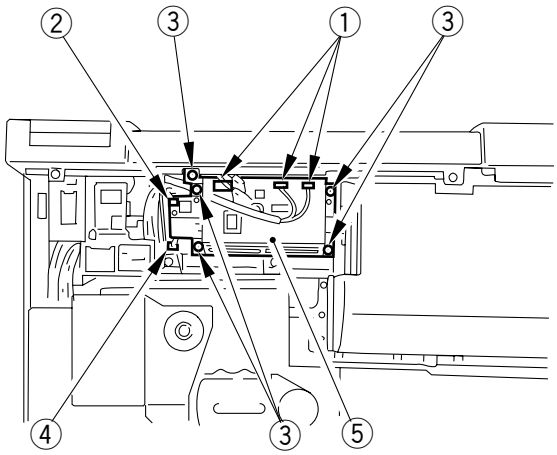

Figure 7-431

2. Removing the Exhaust Fan

1) Remove the rear cover.
2) Remove the two mounting screws ①, and disconnect the connector ②; then, remove the exhaust fan ③.

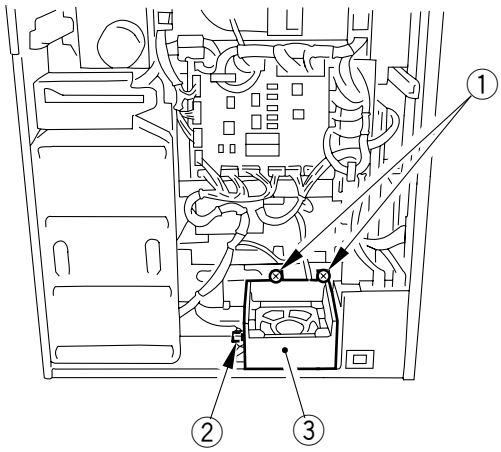

Figure 7-432

COPYRIGHT © 1997 CANON INC.

3. Removing the Fixing Heat Exhaust Fan

1) Remove the rear cover.
2) Remove the three mounting screws ①, and disconnect the connector ②; then, remove the fixing heat exhaust fan ③.

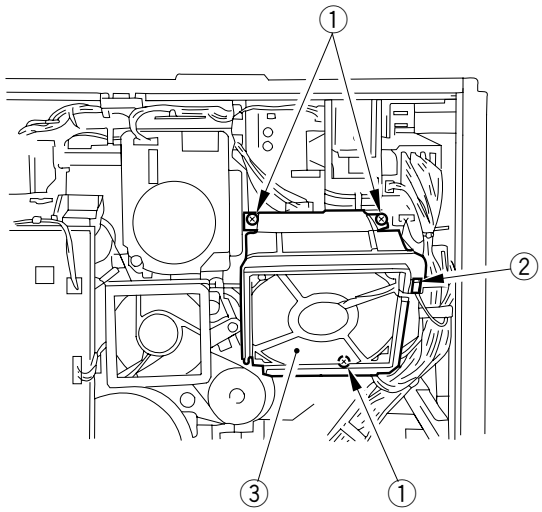

Figure 7-433

4. Removing the Developing Fan

1) Remove the rear cover.
2) Disconnect the connector (J301) ① of the high-voltage transferor PCB; then, remove the three mounting screws ②, and shift the high-voltage transformer assembly ③.

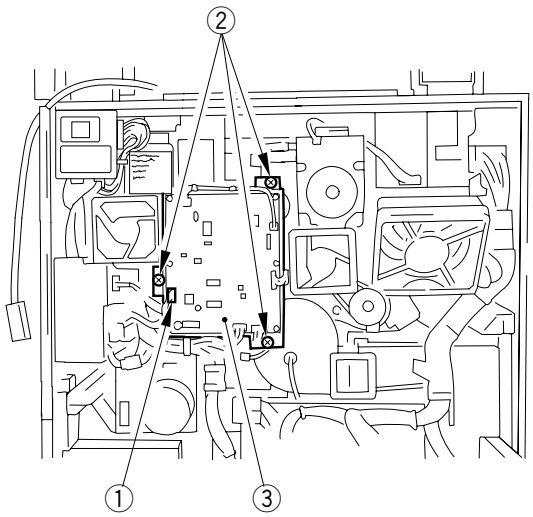

Figure 7-434

3) Remove the two mounting screws ④, and disconnect the connector ⑤; then, remove the developing fan ⑥.

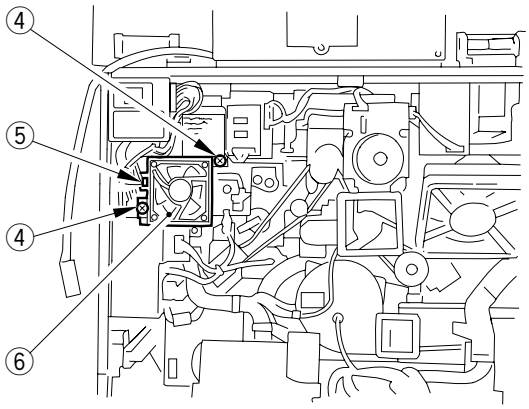

Figure 7-435

5. Removing the Cleaner Fan

1) Remove the rear cover.
2) Remove the three mounting screws, and shift the high-voltage transformer PCB.
3) Remove the two mounting screws ①, and disconnect the connector ②; then, remove the developing fan assembly ③.

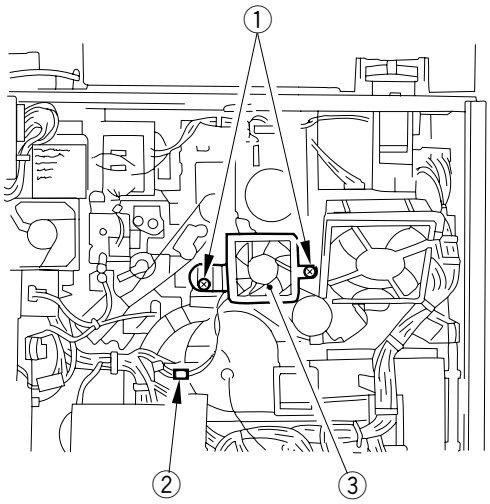

Figure 7-436

 COPYRIGHT © 1997 CANON INC.

6. Removing the Feeding Fan

1) Remove the rear cover.
2) Remove the three mounting screws, and shift the high-voltage transformer PCB.
3) Remove the cleaner fan.
4) Remove the two mounting screws ①, and disconnect the connector ②; then, remove the feeding fan ③.

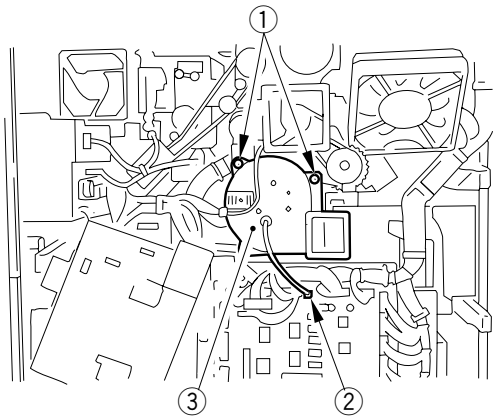

Figure 7-437

7. Removing the Scanner Motor Cooling Fan

1) Removing the rear cover.
2) Removing the two mounting screws ①, and disconnect the connector ②; then remove the scanner moter cooling fan ③.

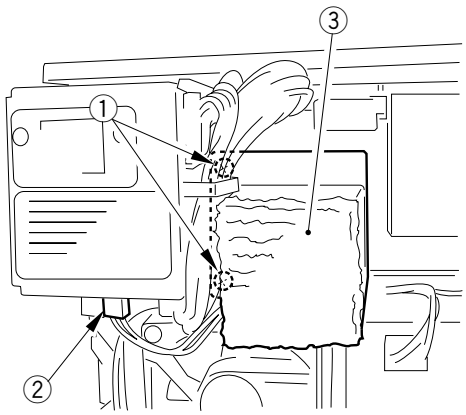

Figure 7-438

E. Removing the Counter Assembly

1) Open the front door, and remove the inside upper cover; then, remove the mounting screws from the control panel.
2) Remove the mounting screw ①, and disconnect the two connectors ②; then, remove the counter assembly ③ together with the support plate.

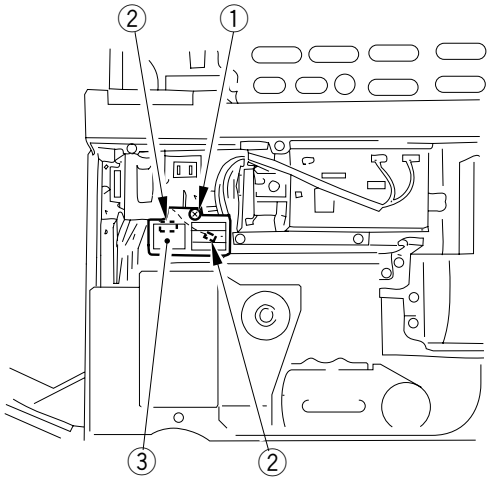

Figure 7-439

F. Main Motor Assembly

1. Removing the Main Motor

1) Remove the rear cover.
2) Remove the high-voltage PCB.
3) Remove the spring ①, and loosen the tension pulley; then, remove the four mounting screws ②, detach the belt from the end of the main motor, and remove the main motor ③.

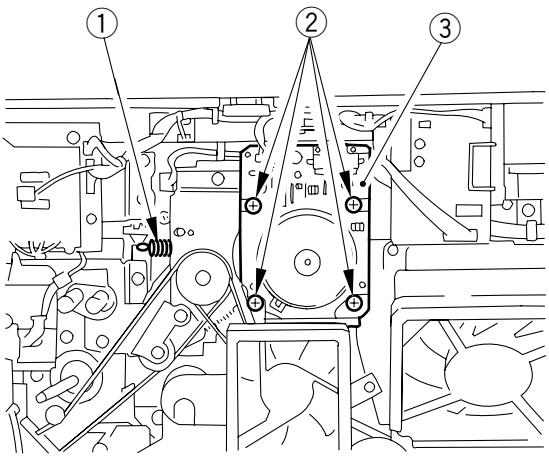

Figure 7-440

COPYRIGHT © 1997 CANON INC.

G. Fixing/Waste Toner Drive Assembly

1. Construction

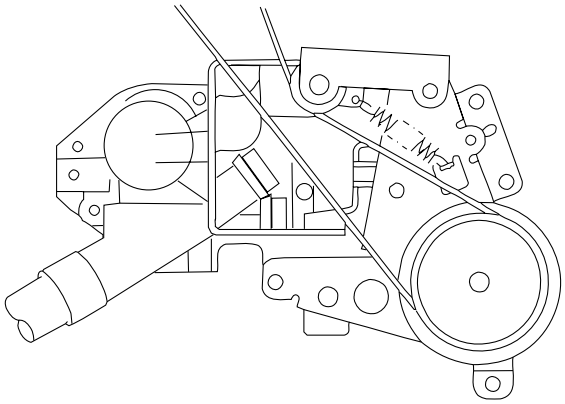

Figure 7-441

2. Removing the Waste Toner Bottle

1) Remove the two mounting screws, and remove the lower right cover; then, remove the waste toner bottle toward the multifeeder.

3. Removing the Fixing/Waste Toner Drive Assembly

1) Open the front door, and draw out the process unit, the fixing/feeding unit, and the holding tray assembly about 10 cm from the copier.
2) Remove the rear cover.
3) Remove the high-voltage transformer PCB.
4) Remove the cleaner fan and the feeding fan.
5) Remove the waste toner bottle.
6) Remove the spring ①, and loosen the tension pulley ②; then, detach the timing belt ③.

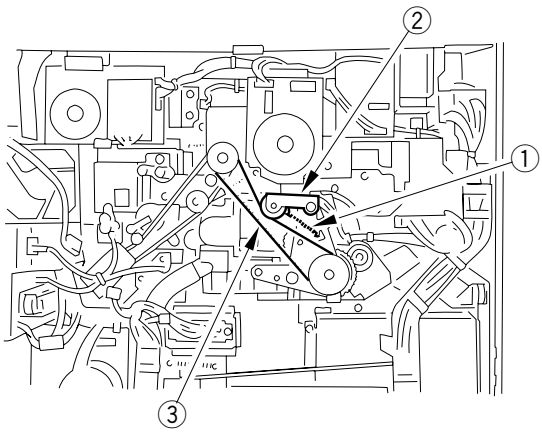

Figure 7-442

7) Remove the three mounting screws ④, and disconnect the holding tray assembly drawer connector ⑤.

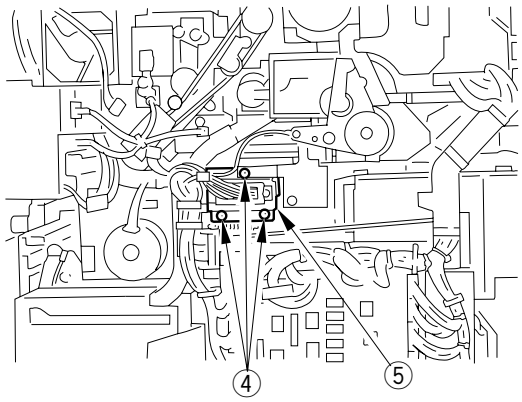

Figure 7-443

8) Remove the mounting screw ⑥ of the DC controller PCB, and disconnect the three connectors ⑦ (J113, J114, J115) and the two relay connectors ⑧.

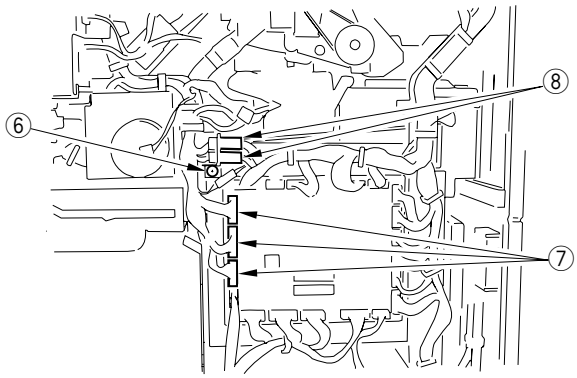

Figure 7-444

9) Remove the four mounting screws ⑨, and remove the fixing/waste toner drive assembly ⑩ together with the waste toner feeding assembly.

Caution:

Waste toner will start to pour out of the end of the waste toner pipe when the fixing/waste toner drive assembly is removed. Be sure to stop up the end with a ball of paper to prevent it.

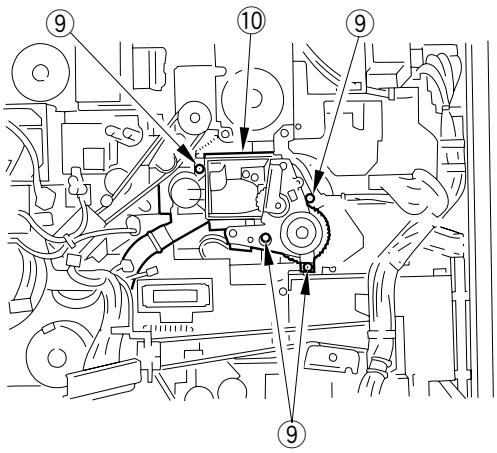

Figure 7-445

 COPYRIGHT © 1997 CANON INC.

H. Main Drive Assembly (drum/developing)

1. Construction

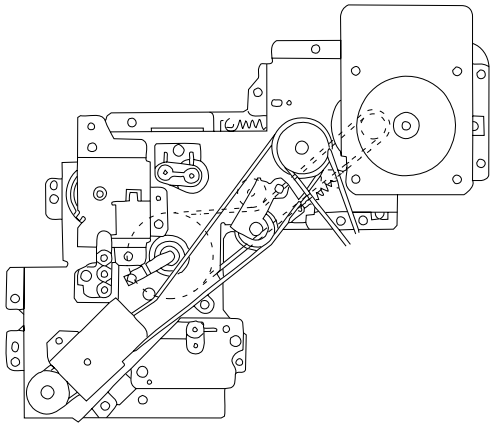

Figure 7-446

2. Removing

1) Open the front door, and slide out the process unit, fixing/feeding unit, and holding tray assembly about 10 cm from the copier.
2) Remove the rear cover.
3) Remove the high-voltage PCB and the high-voltage transformer assembly.
4) Remove the waste toner bottle.
5) Remove the cleaner fan, feeding fan, and developing fan.
6) Remove the fixing/waste toner drive assembly.
7) Remove the three mounting screws ①, and free the harness guide 1 ②.

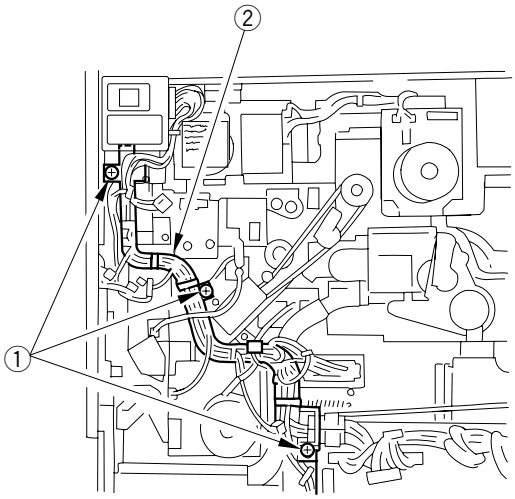

Figure 7-447

8) Remove the seven mounting screws ③, and remove the main drive unit ④.

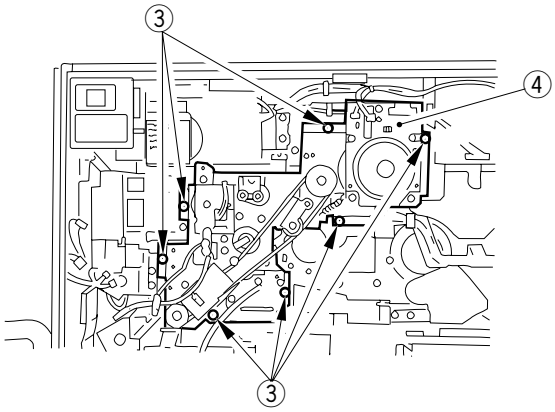

Figure 7-448

I. Vertical Path Drive Assembly

1. Construction

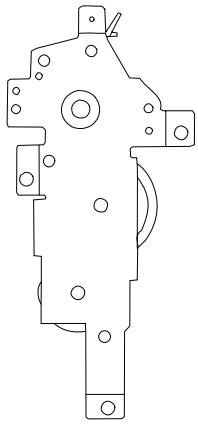

Figure 7-449

2. Removing

1) Remove the lower right cover.
2) Remove the rear cover.
3) Remove the waste toner bottle.
4) Remove the five mounting screws ①, and remove the rear right grip assembly ②.

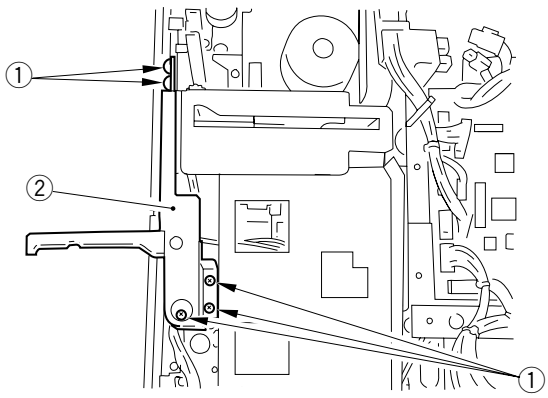

Figure 7-450

 COPYRIGHT © 1997 CANON INC.

5) Remove the three mounting screws ③, and remove the waste toner bottle support plate ④.

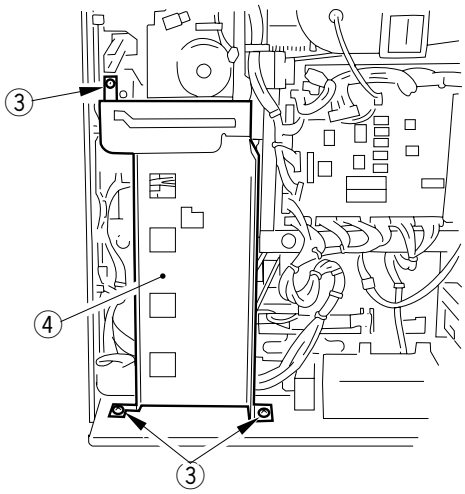

Figure 7-451

6) Remove the two mounting screws ⑤, and remove the harness guide 2 ⑥.

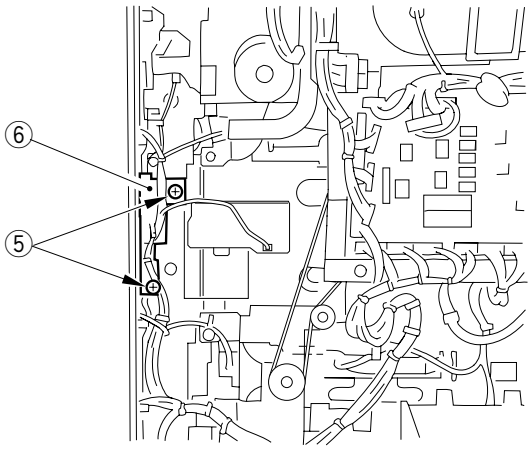

Figure 7-452

7) Remove the four mounting screws ⑦, and disconnect the two connectors ⑧; then, remove the vertical path drive assembly ⑨.

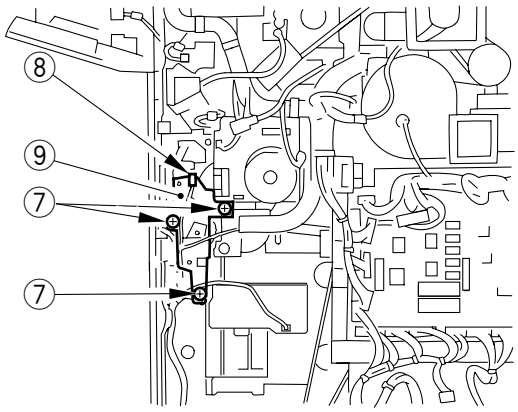

Figure 7-453

J. Pick-Up Drive Assembly

1. Construction

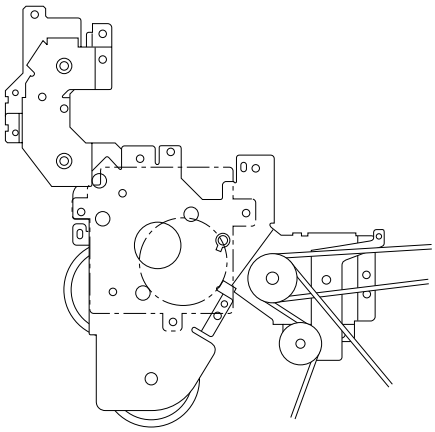

Figure 7-454

2. Removing

1) Open the front door, and slide out the process unit, fixing/feeding unit, and holding tray assembly about 10 cm from the copier.
2) Remove the rear cover.
3) Remove the high-voltage transformer PCB and the high-voltage transformer assembly.
4) Remove the waste toner bottle.
5) Remove the vertical path feeding assembly.
6) Remove the cleaner fan, feeding fan, and developing fan.
7) Remove the fixing/waste toner drive assembly.
8) Free the harness guide 1. (See Figure 7-447.)
9) Detach the timing belt.
10) Remove the two mounting screws ①, and remove the deck relay drive assembly ②.
11) Remove the seven mounting screws ③, then, remove the pick-up drive assembly ④.

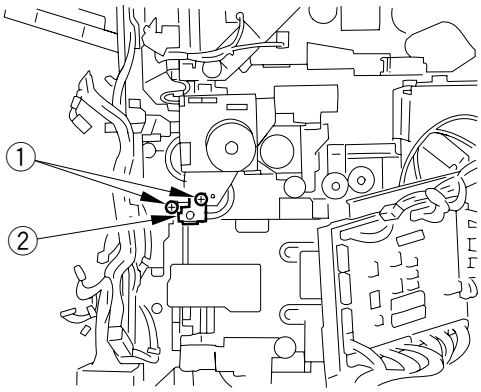

Figure 7-455

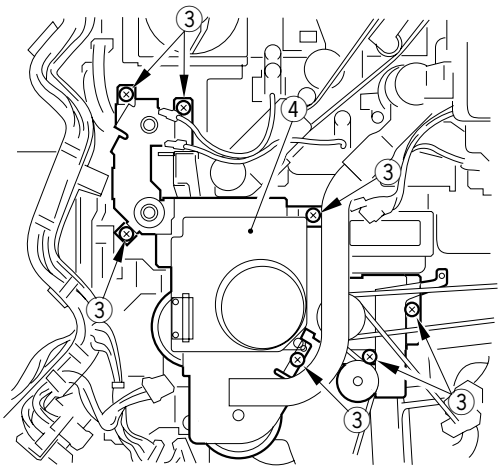

Figure 7-456

 COPYRIGHT © 1997 CANON INC.

K. Duplexing Drive (1) Assembly

1. Construction

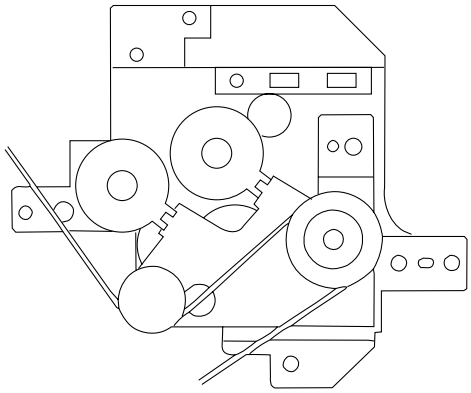

Figure 7-457

2. Removing

1) Open the front door, and slide out the holding tray assembly about 10 cm from the copier.
2) Remove the rear cover.
3) Remove the DC controller PCB.
4) Remove the spring ① of the tensioner, and detach the timing belt.
5) Remove the four mounting screws ②, and remove the duplexing drive (1) assembly ③.

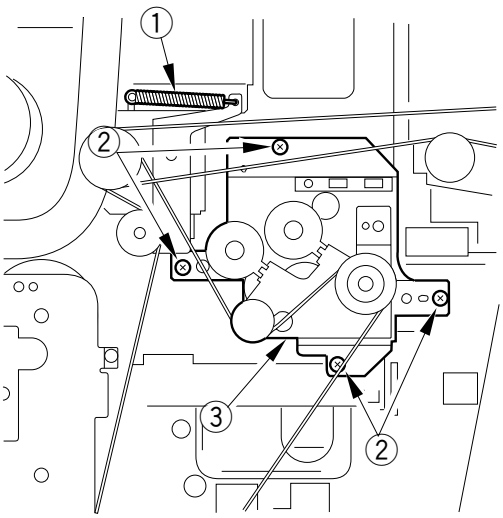

Figure 7-458

COPYRIGHT © 1997 CANON INC.

L. Lifter Drive Assembly

1. Construction

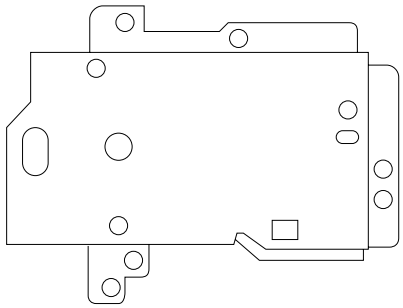

Figure 7-459

2. Removing

1) Open the front door, and slide out the holding tray assembly 10 cm from the copier.
2) Remove the rear cover.
3) Remove the waste toner bottle.
4) Remove the rear right grip assembly.
5) Remove the three mounting screws ①, and remove the waste toner bottle support plate ②.

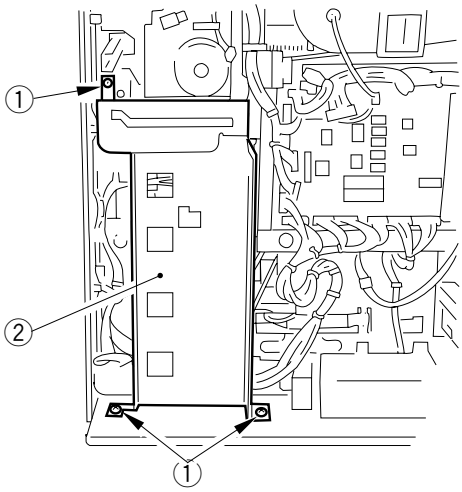

Figure 7-460

6) Disconnect the connector ③, and remove the three screws ④; then, remove the lifter drive assembly ⑤.

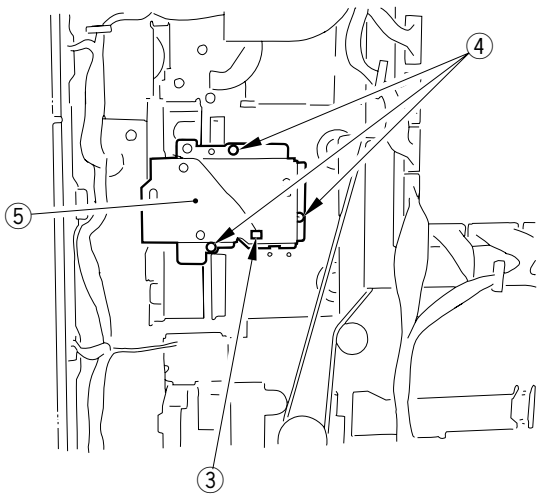

Figure 7-461

 COPYRIGHT © 1997 CANON INC. CANON NP6560/NP6360/NP6260 REV. 0 NOV. 1997 PRINTED IN JAPAN (IMPRIME AU JAPON)

M. Cassette Pick-Up Drive Assembly

1. Construction

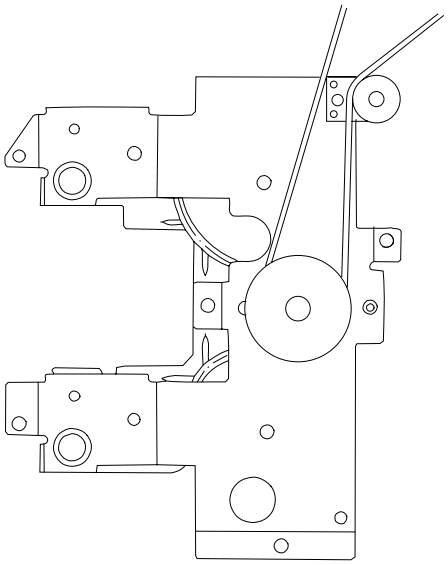

Figure 7-462

2. Removing

1) Open the front door, and slide out the holding tray assembly about 10 cm from the copier.
2) Remove the rear cover.
3) Remove the waste toner bottle.
4) Remove the waste toner bottle support plate.
5) Remove the rear right grip assembly.
6) Remove the DC controller PCB, and detach the timing belt.
7) Remove the two mounting screws ① each of the paper width sensor of the cassettes 3 and 4; then disconnect the connector ②.

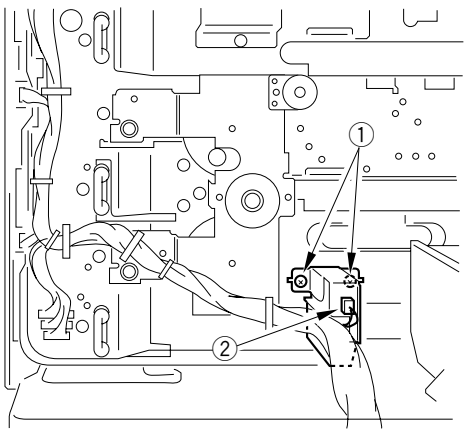

Figure 7-463

COPYRIGHT © 1997 CANON INC.

8) Remove the five mounting screws ③, and remove the cassette pick-up drive assembly ④.

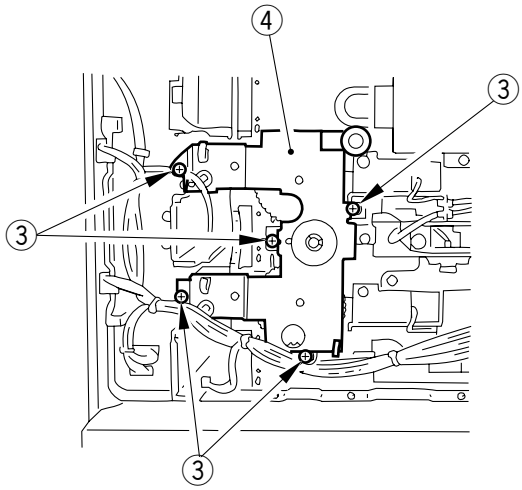

Figure 7-464

 COPYRIGHT © 1997 CANON INC.

N. Attaching the Drive Belt

Attach the drive belt on the gears and rollers as shown.

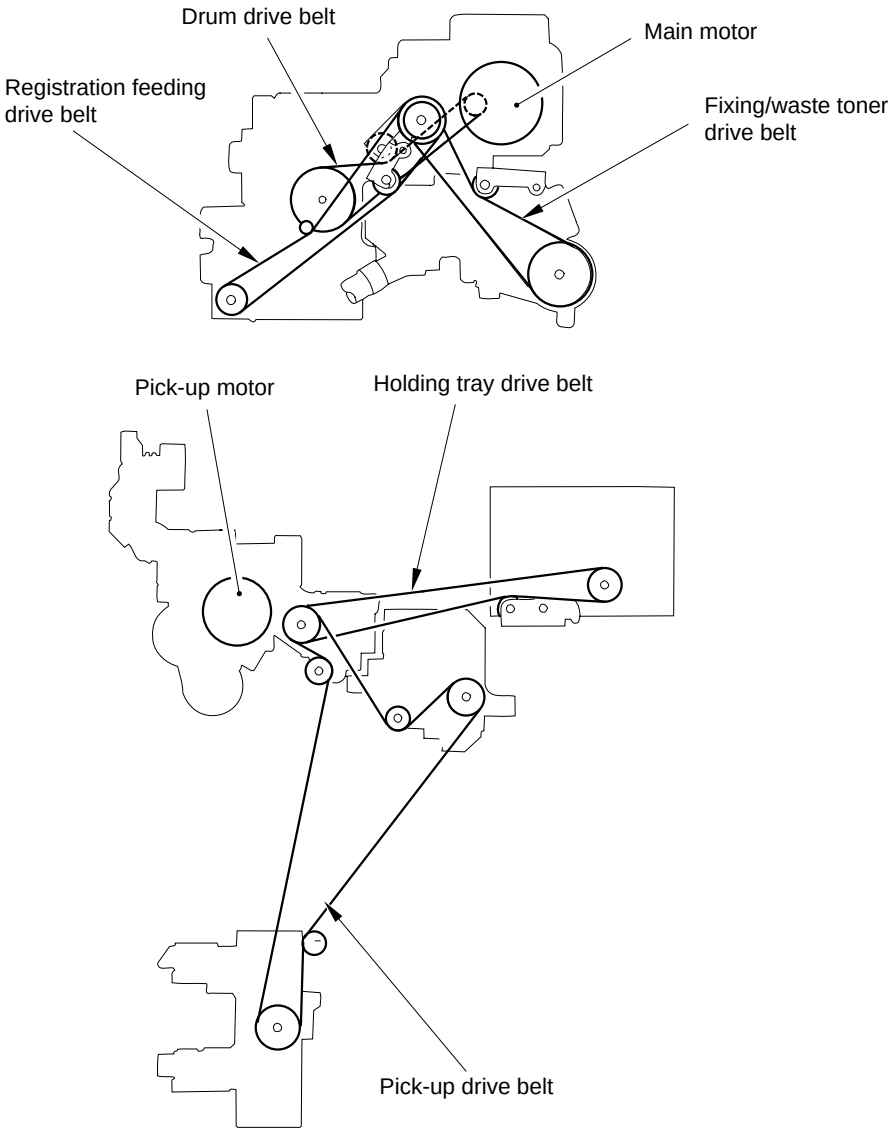

Figure 7-465

Caution:

Make sure that the holding tray drive belt is on the roller under (inner side) the pick-up drive belt and the pick-up drive belt is on the roller above (outer side) the pick-up drive belt.

O. DC Controller PCB

1. Removing the DC Controller PCB

1) Removing the rear cover.
2) Disconnect the connector of the DC controller PCB.
3) Remove the five mounting screws ① used to fix the mounting plate in place, and remove the DC controller PCB together with the mounting plate ②.

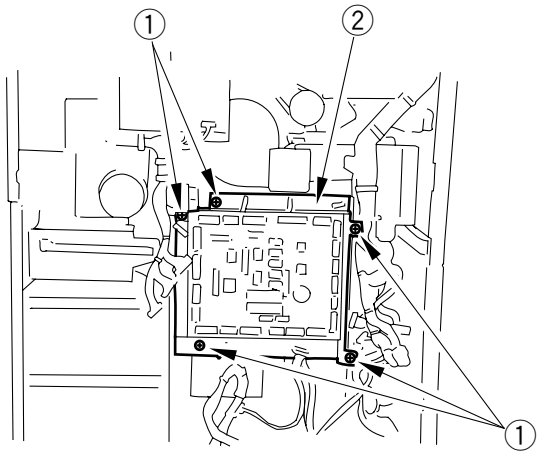

Figure 7-466

Caution:

The DC controller PCB is equipped with a built-in battery (BAT101). Keep the following in mind, as shorting across its terminals will lead to overheating:

2. Points to Note When Replacing the DC Controller PCB

- When sending the DC controller PCB to the workshop or the factory, put it in a conducting bag intact with its mount. Use a conducting bag whose one side is transparent, and make sure that the face of the PCB shows through.
- After replacement, make necessary settings in service mode and user mode.
- Record new service mode settings on the service label attached to the front door.

 COPYRIGHT © 1997 CANON INC.

P. DC Power Supply Assembly

1. Removing the DC Power Supply Assembly

1) Remove the upper left cover and the lower left cover.
2) Remove the nine mounting screws ①, and remove the DC power supply protection plate ②.

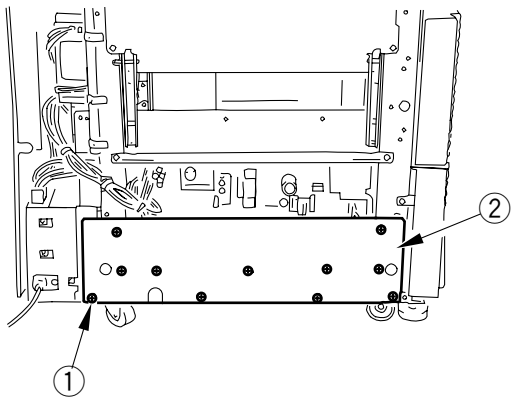

Figure 7-467

3) Disconnect the nine connectors (J303, J304, J305, J306, J308, J309, J311, J312, AC relay connector).
4) Remove the two mounting screws ③, and remove the DC power supply PCB ④ together with its mount.

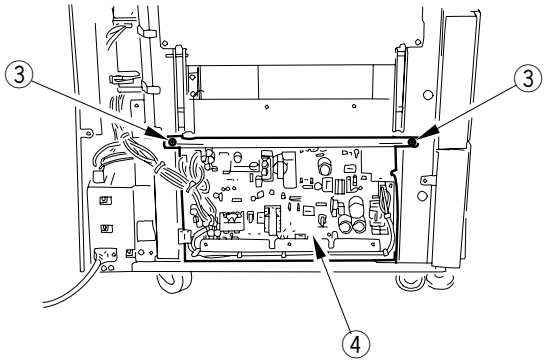

Figure 7-468

COPYRIGHT © 1997 CANON INC.

Q. High-Voltage Transformer Assembly

1. Removing the High-Voltage Transformer Assembly

1) Remove the rear cover.
2) Disconnect the four connectors ① (J201, J202, J203, J301).
3) Remove the three mounting screws ②, and remove the PCB assembly ③.

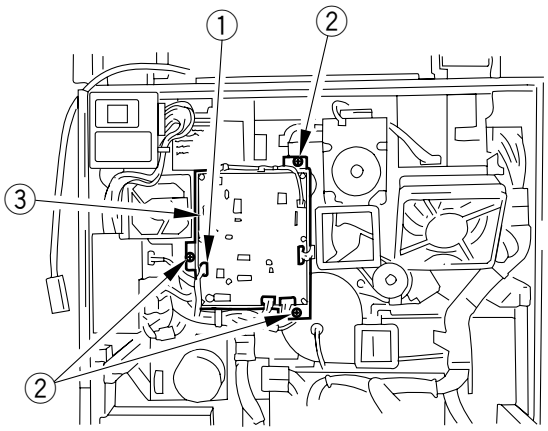

Figure 7-469

4) Remove the two fastons ④, and disconnect the connector ⑤; then, remove the two mounting screws ⑥, and remove the transformer assembly ⑦.

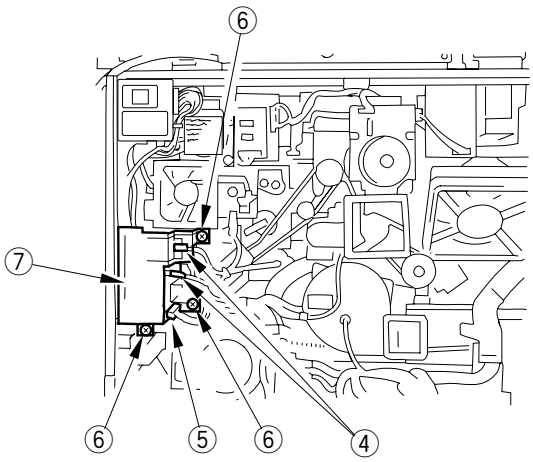

Figure 7-470

 COPYRIGHT © 1997 CANON INC. CANON NP6560/NP6360/NP6260 REV. 0 NOV. 1997 PRINTED IN JAPAN (IMPRIME AU JAPON)

R. Power Supply Inlet Assembly

1) Remove the rear cover.
2) Remove the upper left cover and the lower left cover.
3) Remove the four mounting screws ①.
4) Disconnect the four connectors ②, and remove the power supply cord mount ③.

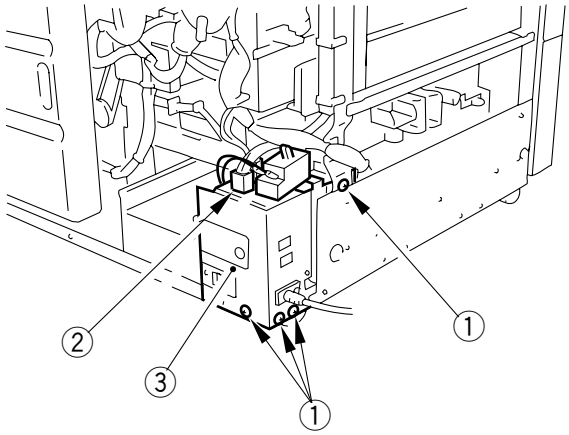

Figure 7-471

 COPYRIGHT © 1997 CANON INC. CANON NP6560/NP6360/NP6260 REV. 0 NOV. 1997 PRINTED IN JAPAN (IMPRIME AU JAPON)

CHAPTER 8

PAPER DECK-A1

This chapter explains the basic operation of the Paper Deck-A1 in view of various functions. It also discusses the relationship between the electrical system and the mechanical system, and provides an outline of the timing at which each part operates.

Note that the Paper Deck-A1 is referred to as “side paper deck” so as to distinguish it from the copier's front paper deck.

I. SIDE PAPER DECK 8-1
- A. Inputs to and Outputs from the Side Deck Driver.....8-1
- B. Pick-Up 8-4
- C. Detection of Paper for the Deck 8-7
- D. Deck Lifter 8-8
- E. Opening/Closing the Deck (compartment) 8-11
- F. Controlling the Deck Motor.....8-13

II. DETECTING JAMS 8-17
- A. Outline 8-17

III. DISASSEMBLY AND ASSEMBLY 8-19
- A. External Covers 8-20
- B. Paper Deck.....8-26
- C. Drive System 8-32
- D. Feeding System.....8-40
- E. Electrical System.....8-45

COPYRIGHT © 1997 CANON INC.

I. SIDE PAPER DECK

A. Inputs to and Outputs from the Side Deck Driver

1. Inputs to the Side Deck Driver (1/2)

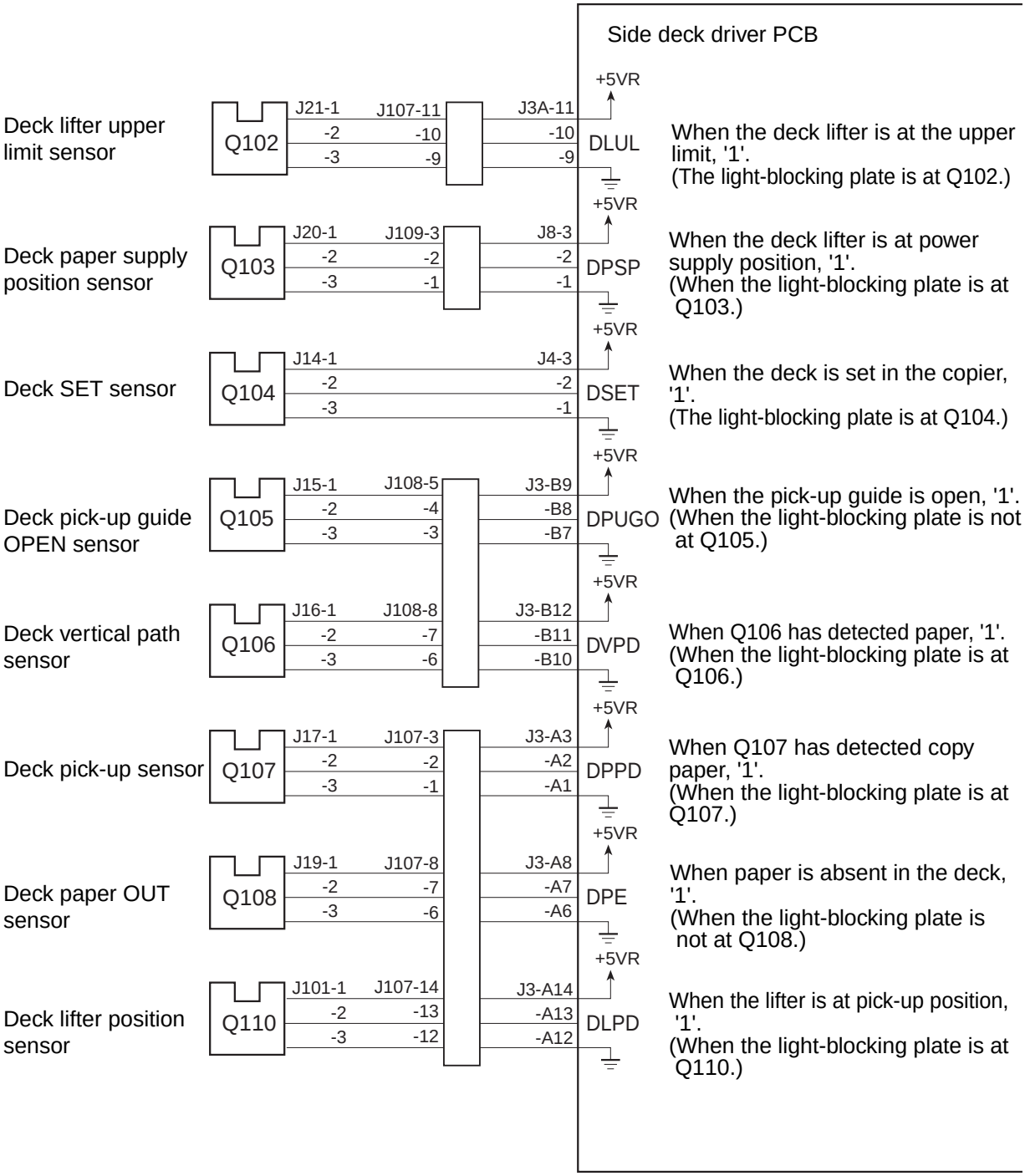

Figure 8-101a

COPYRIGHT © 1997 CANON INC.

2. Inputs to the Side Deck Driver (2/2)

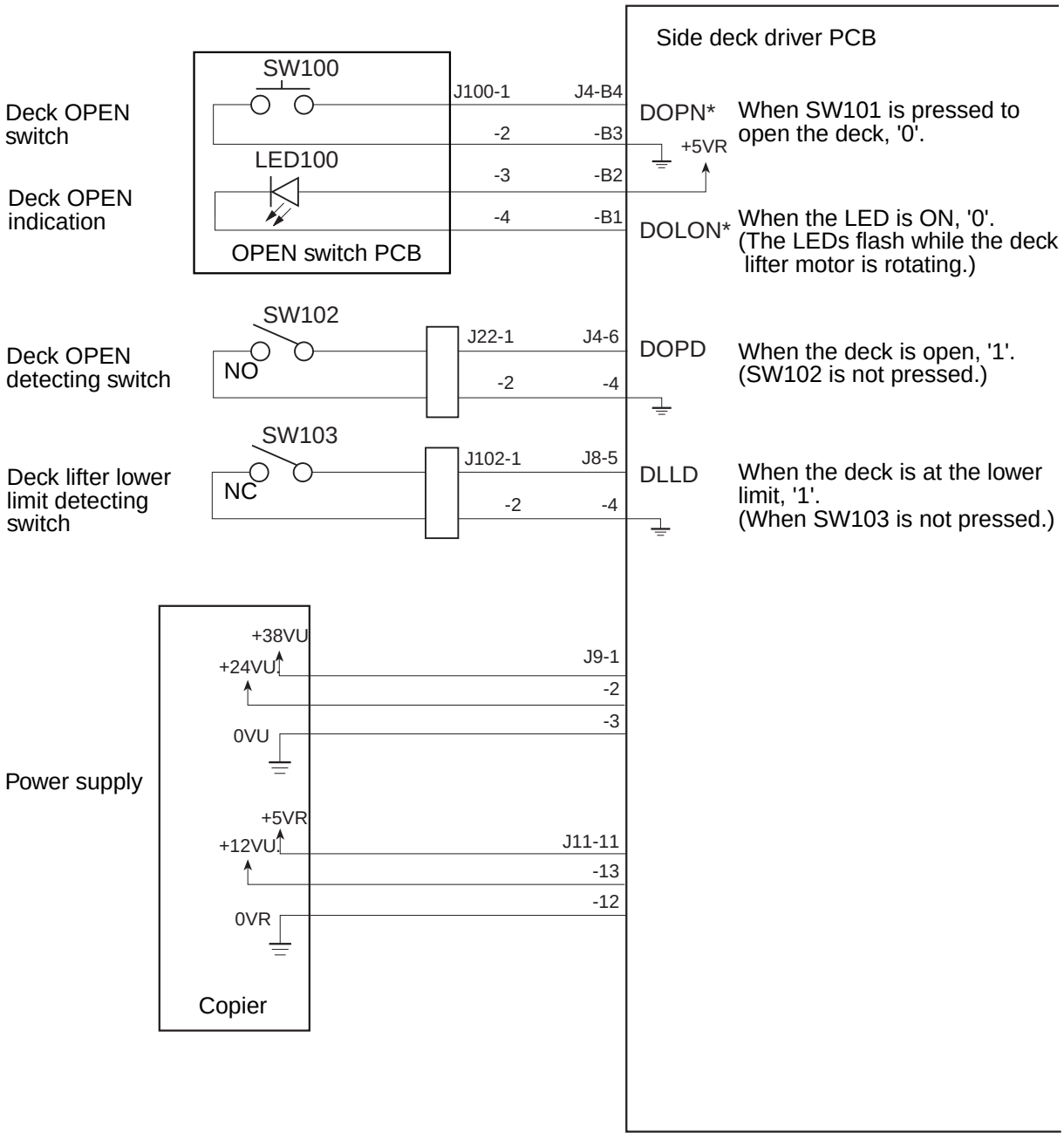

Figure 8-101b

COPYRIGHT © 1997 CANON INC.
CANON NP6560/NP6360/NP6260 REV. 0 NOV. 1997 PRINTED IN JAPAN (IMPRIME AU JAPON)

3. Outputs from the Side Deck Driver (1/1)

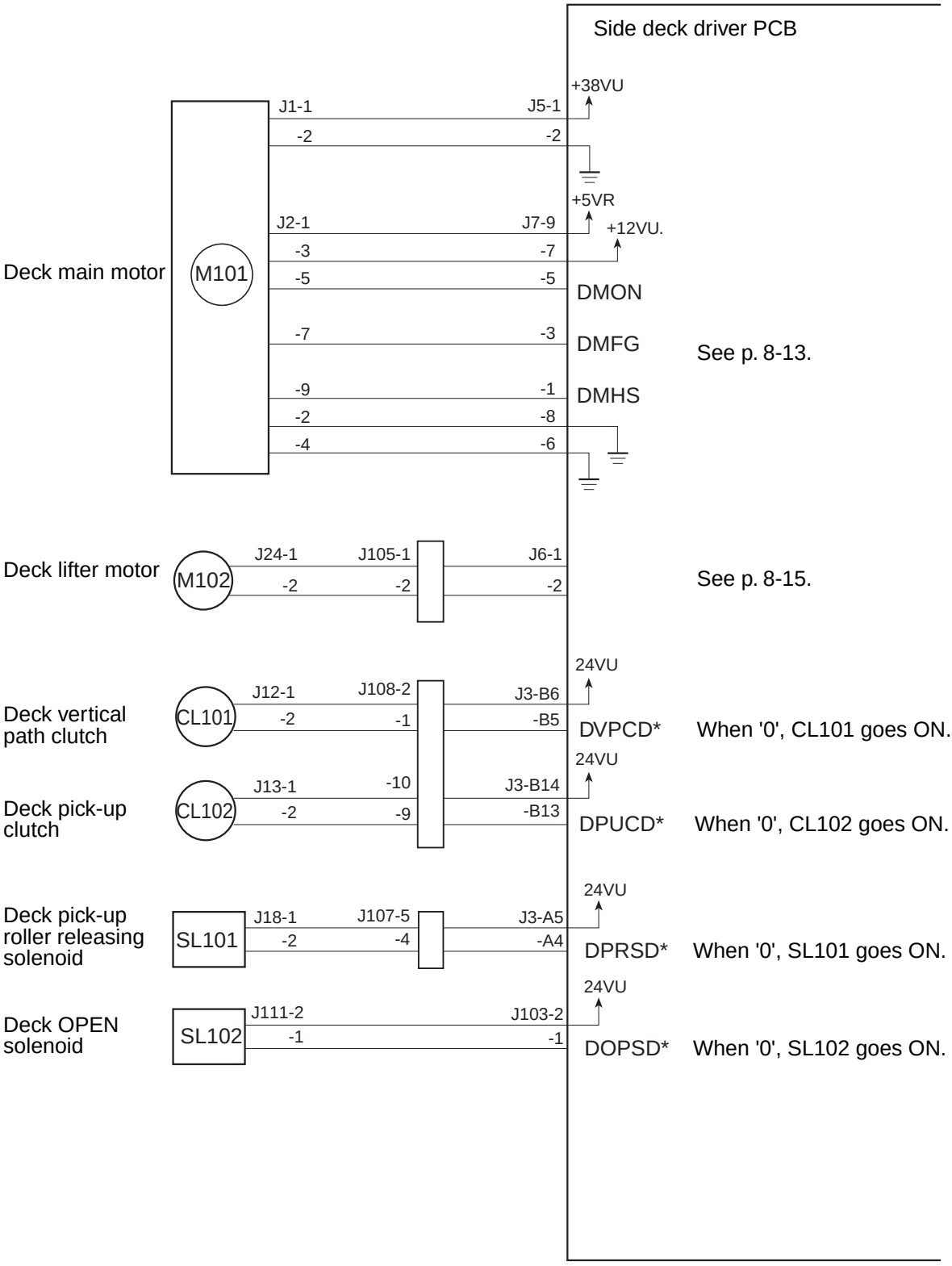

Figure 8-102

COPYRIGHT © 1997 CANON INC.

B. Pick-Up

1. Outline

The side paper deck ("deck" hereafter) is capable of accommodating 3,500 sheets of copy paper at once (A4, LTR, B5; 80 g/m^2), and picks up copy paper according to the control signal from the copier's DC controller PCB.

The lifter of the deck is driven by the deck lifter motor (M102), and copy paper is fed using the drive of the deck main motor (M101).

2. Pick-Up Operation

The copy paper inside the deck is held up by a lifter and kept in place at a specific position.

When the Copy Start key is pressed and the deck pick-up clutch (CL102) turns on, the drive of the deck main motor (M101) rotates the pick-up roller to pick up copy paper.

At this time, the feeding roller and the separation roller serve to make sure that only one sheet of copy paper is fed; thereafter, the deck pick-up roller releasing solenoid (SL101) turns on as soon as the deck paper sensor (Q107) detects copy paper, thereby moving the pick-up roller to move away from the surface of the copy paper.

The deck vertical path roller starts to rotate when the deck vertical path clutch (CL101) turns on. The copy paper is then sent to the copier's registration roller and made to arch (so that it will not move askew).

The registration roller controls the copy paper so that its leading edge matches the leading edge of the image on the photosensitive drum.

COPYRIGHT © 1997 CANON INC.
CANON NP6560/NP6360/NP6260 REV. 0 NOV. 1997 PRINTED IN JAPAN (IMPRIME AU JAPON)

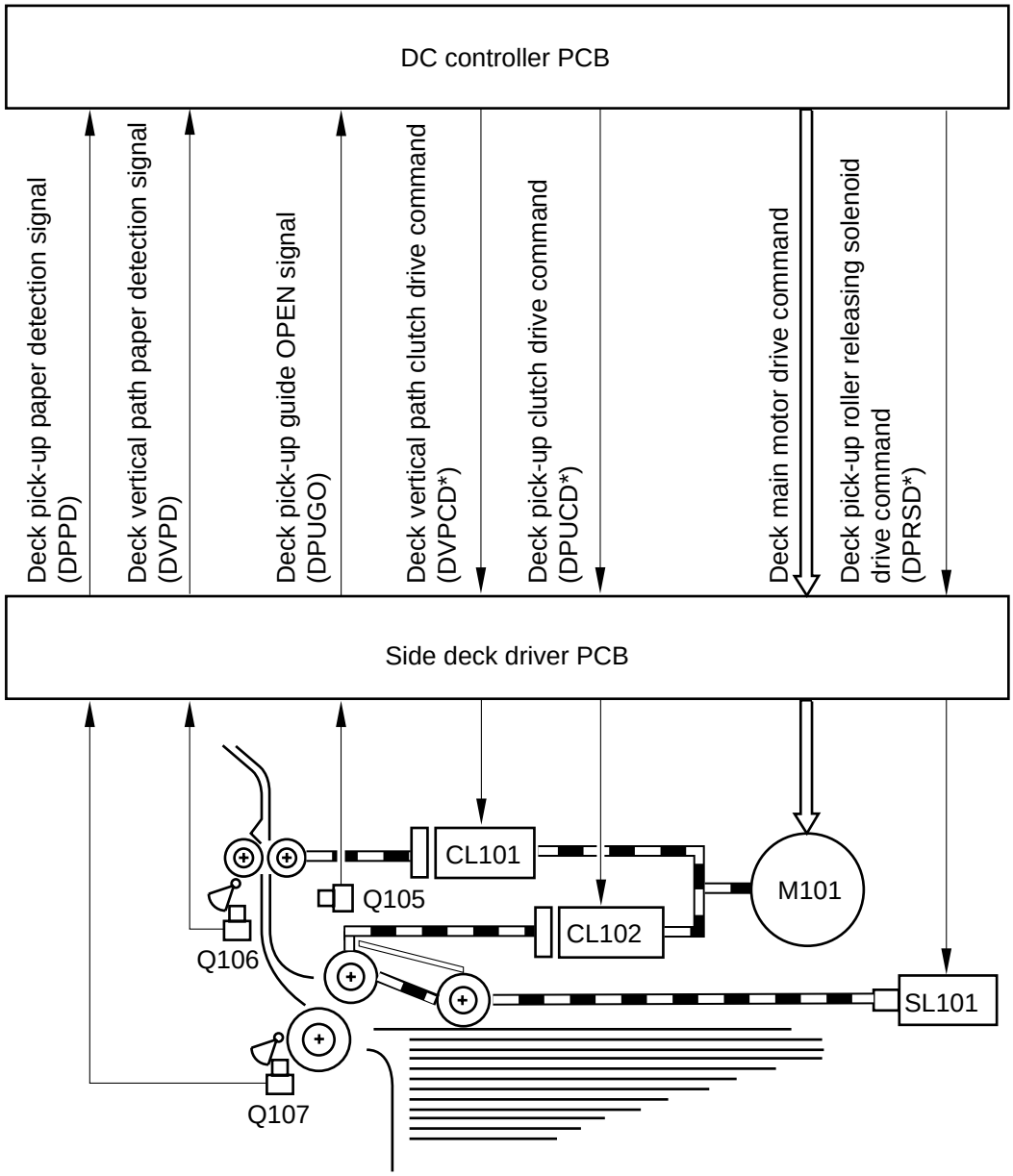

Figure 8-103

COPYRIGHT © 1997 CANON INC.

3. Sequence of Operations (deck pick-up)

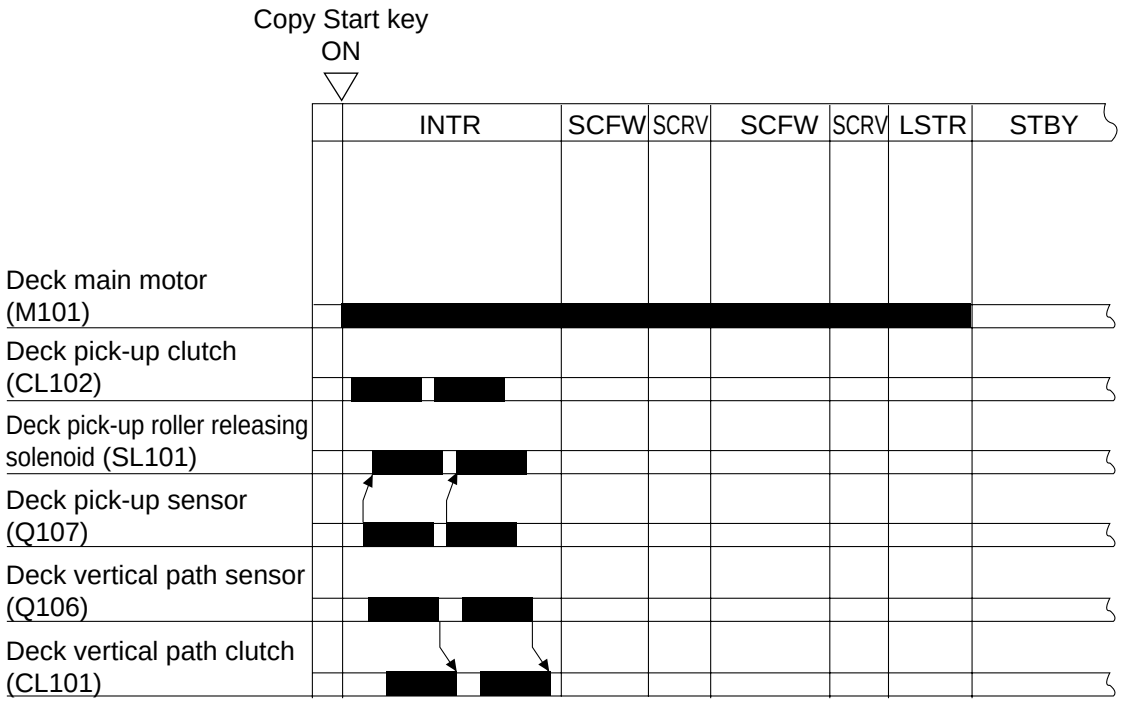

Figure 8-104

COPYRIGHT © 1997 CANON INC.
CANON NP6560/NP6360/NP6260 REV. 0 NOV. 1997 PRINTED IN JAPAN (IMPRIME AU JAPON)

C. Detection of Paper for the Deck

1. Detecting the Presence/Absence of Paper

The presence/absence of paper inside the deck is checked by the deck paper OUT sensor (Q108). When the deck runs out of paper, and the paper detecting lever of the pick-up roller assembly leaves the deck paper OUT sensor, the copier's control panel indicates the Add Paper message.

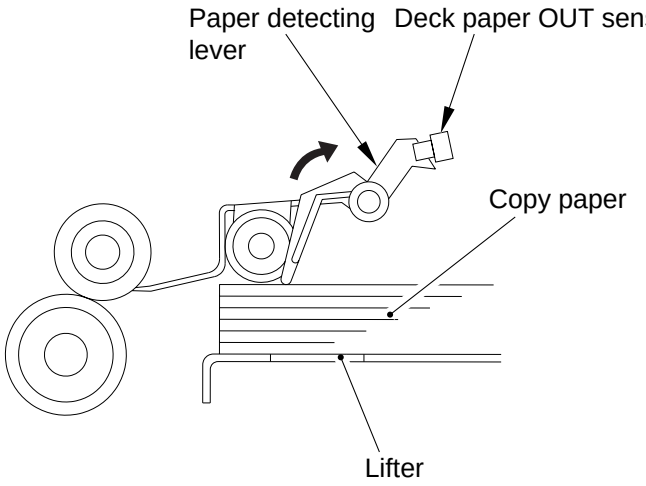

Figure 8-105a (paper present)

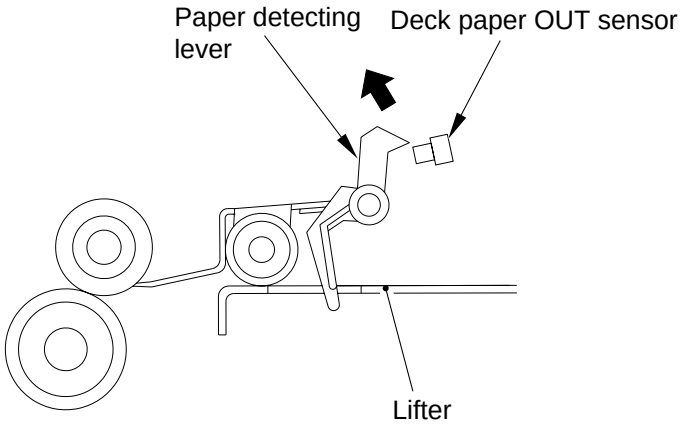

Figure 8-105b (paper absent)

2. Changing the Paper Size for the Deck

To change the paper size for the deck at time of machine installation or to comply with the user's request, shift the guide plate inside the deck to suit the copy paper, and enter the paper size in service mode (*5*; 'SDK_SZ').

COPYRIGHT © 1997 CANON INC.

D. Deck Lifter

1. Lifter Operation

The lifter of the deck is connected to the reel by means of a cable, and is driven by the deck lifter motor (M102). The lifter is moved up and down by switching the direction of the rotation of the motor.

When the deck (compartment) is pushed into the copier, the deck OPEN switch (SW102) is pushed, and the lifter moves up. Then, the lifter stops when the deck lifter position sensor (Q110) detects the top surface of the copy paper stacked on the lifter.

In consideration of such faults as when the deck fails to stop moving up after the sensor lever has blocked the deck lifter position sensor, a deck lifter upper limit sensor (Q102) is provided to prevent damage to the deck.

The lifter starts to move down when the deck OPEN switch (SW100) is pressed, and stops when it leaves the sensor lever of the deck paper supply position sensor (Q103), i.e., the falling edge of the sensor signal.

When copy paper has been supplied in this position, the lever of the deck paper supply position sensor is pushed, and the lifter moves farther down until the copy paper moves away from the sensor lever.

At this time, the lifter repeats moving down until the deck lifter lower limit switch (SW103) is pressed each time copy paper is supplied (maximum paper supply position).

COPYRIGHT © 1997 CANON INC.
CANON NP6560/NP6360/NP6260 REV. 0 NOV. 1997 PRINTED IN JAPAN (IMPRIME AU JAPON)

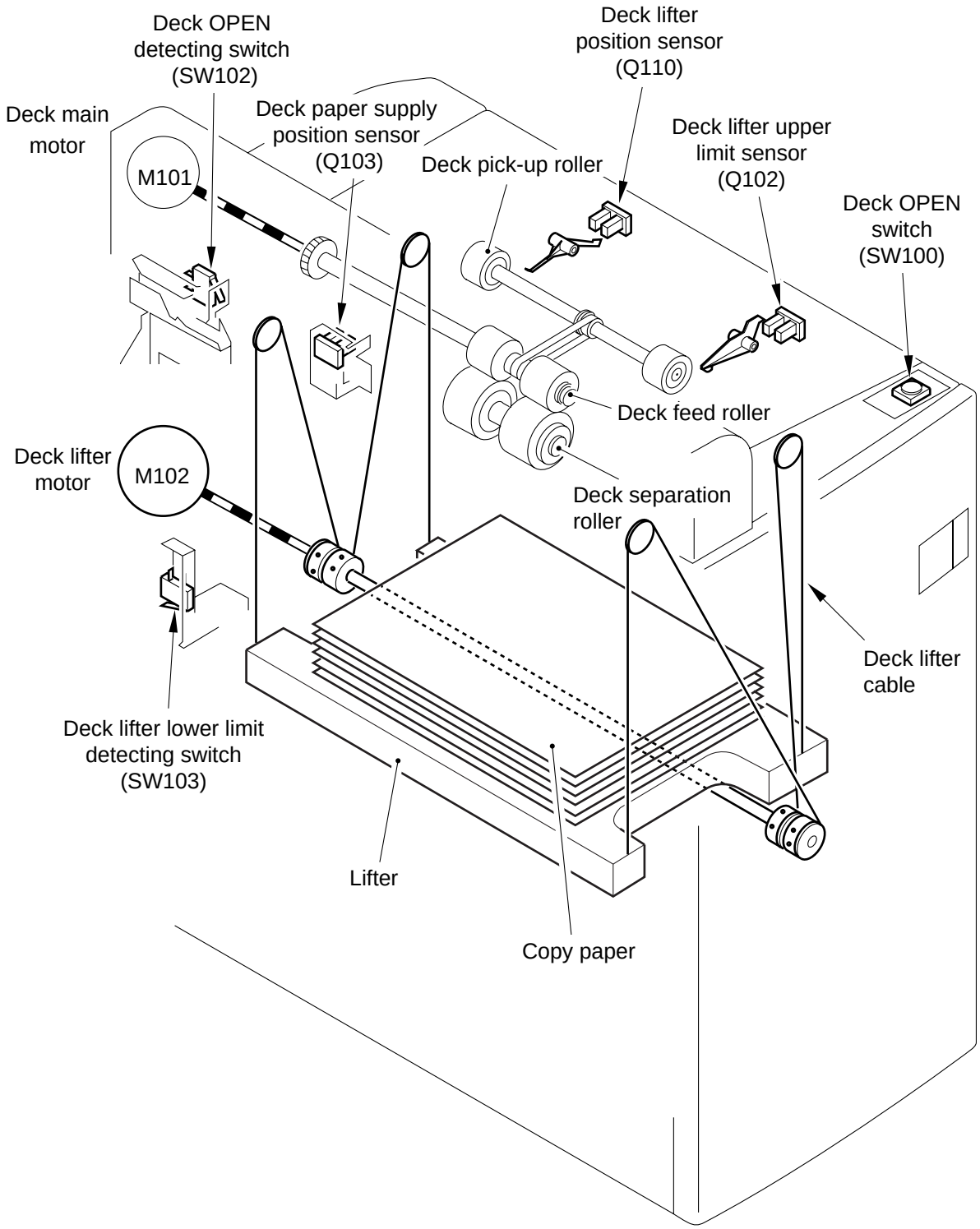
Deck OPEN
detecting switch
(SW102)
Deck lifter
position sensor
(Q110)
Deck main
motor
M101
Deck paper supply
position sensor
(Q103)
Deck pick-up roller
Deck lifter upper
limit sensor
(Q102)
Deck OPEN
switch
(SW100)
Deck feed roller
Deck lifter
motor
M102
Deck separation
roller
Deck lifter
cable
Deck lifter lower limit
detecting switch
(SW103)
Lifter
Copy paper

Figure 8-106

2. Detecting the Level of the Stack in the Deck (compartment)

The drive of the deck lifter motor (M102) is received by a coupling, and is transmitted to the rack by means of a drive belt. The rack is equipped with a black belt which moves in conjunction with the movement of the rack within the indicator window in the deck front cover.

When copy paper starts to run out and the lifter moves up to pick-up position, the area of the black belt inside the display window increases and the level of copy paper (white area) starts to decrease, indicating the remaining level of copy paper.

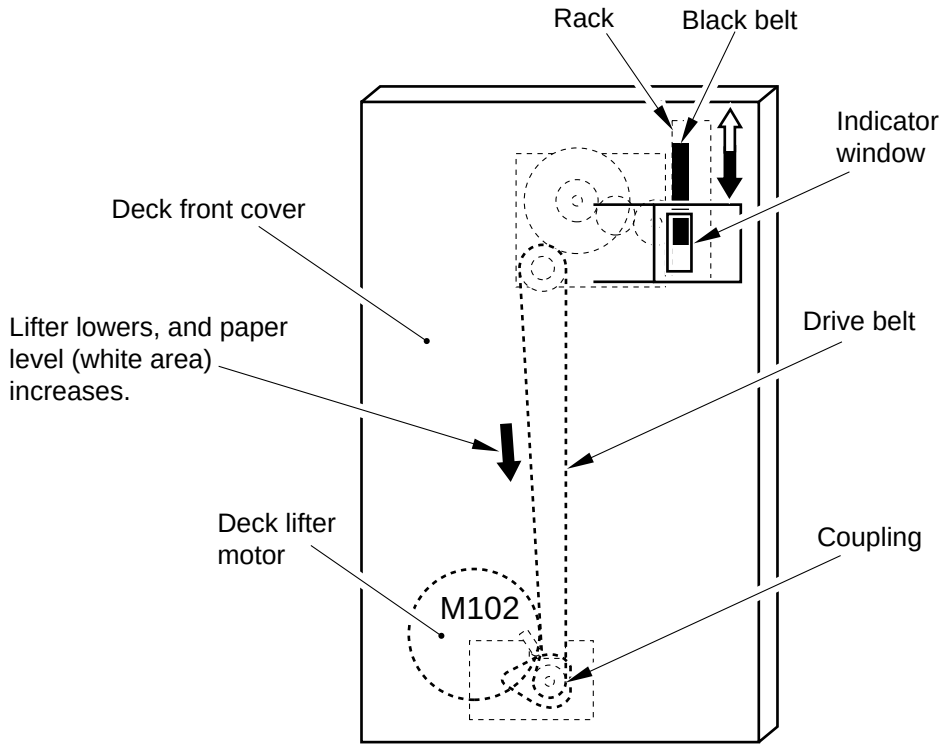

Figure 8-107

 COPYRIGHT © 1997 CANON INC. CANON NP6560/NP6360/NP6260 REV. 0 NOV. 1997 PRINTED IN JAPAN (IMPRIME AU JAPON)

E. Opening/Closing the Deck (compartment)

1. Opening/Closing the Deck

When the deck OPEN switch (SW100) is pressed, the deck lifter motor (M102) starts to rotate and the lifter inside the deck starts to move down. The deck motor stops when the deck paper supply position sensor (Q103) detects the lowering lifter. At the same time, the deck OPEN solenoid (SL102) turns on to release the locking, and the deck will push out to the front several centimeters by the work of a spring.

When the deck (compartment) is slid into the copier, the deck OPEN detecting switch (SW102) is pushed, and the lifter moves up to pick-up position.

When the deck lifter motor rotates to open/close the deck, the Deck Open indicator (LED100) on the OPEN switch PCB starts to flash.

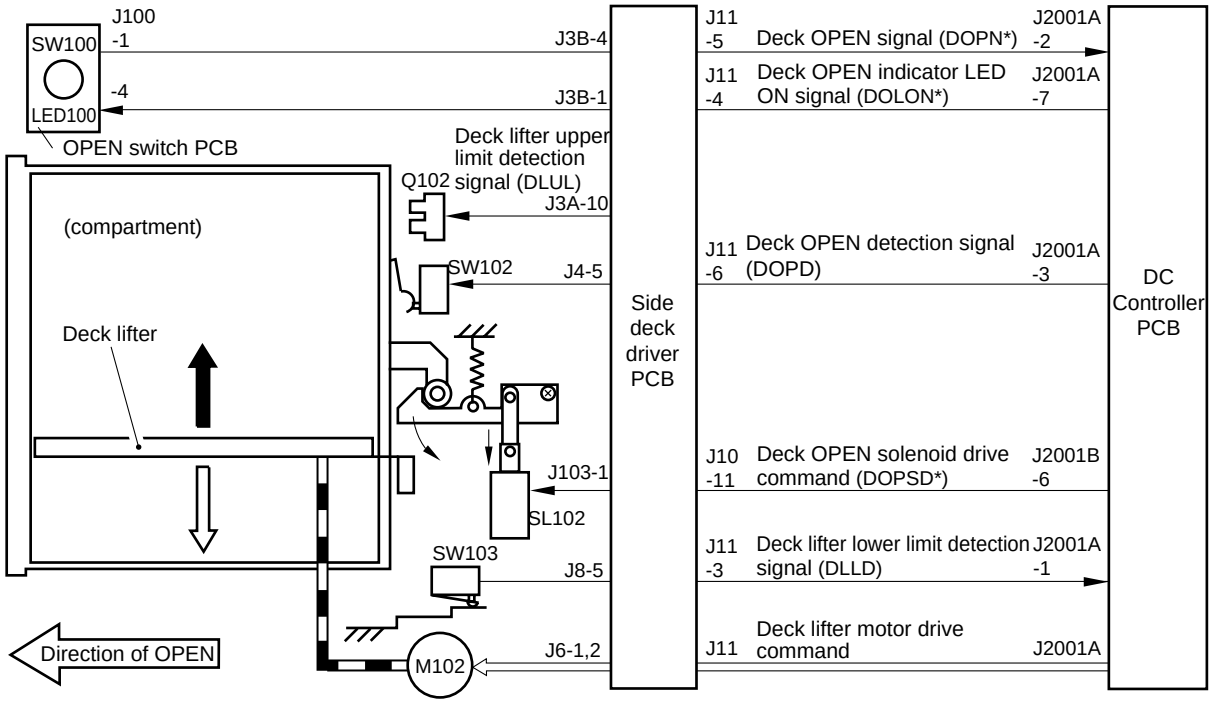

Figure 8-108

2. Sequence of Operations (deck opening/closing)

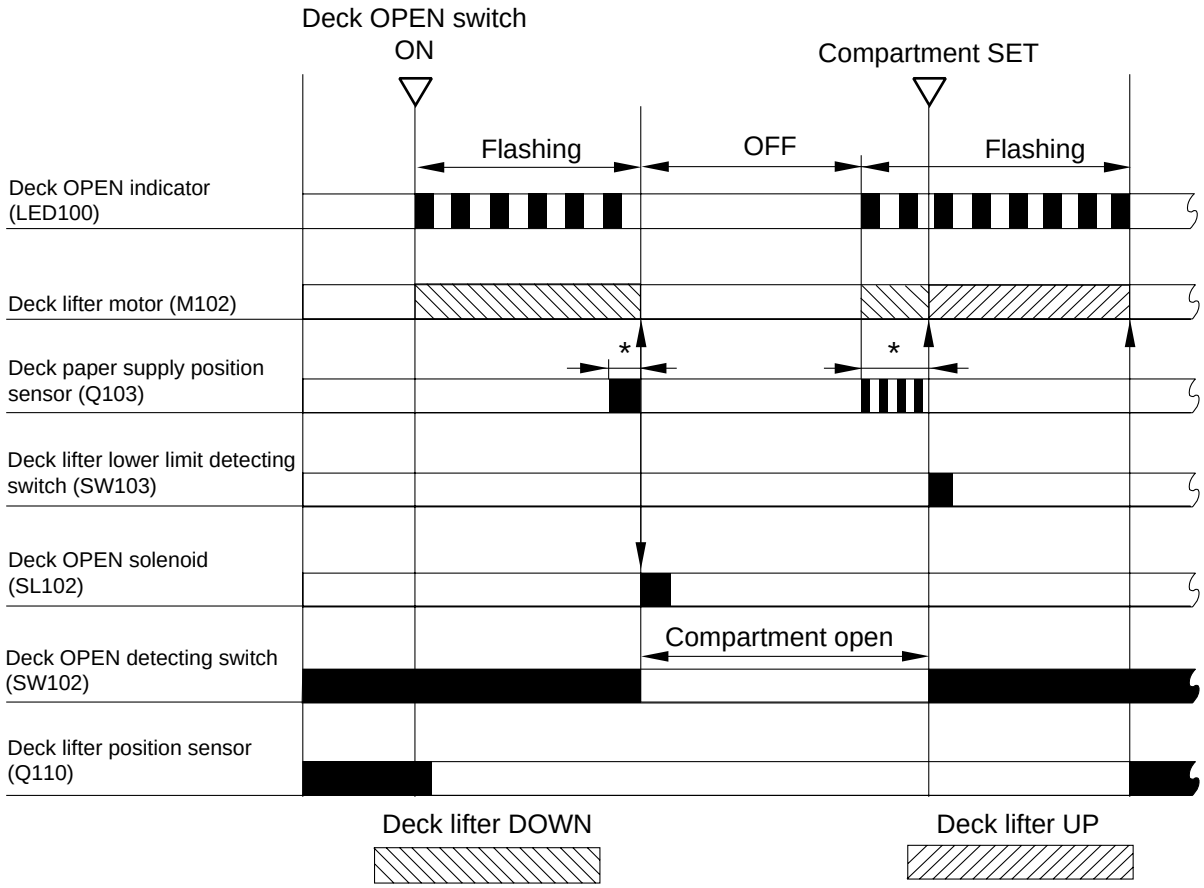

* : Varies according to the level of the stack.

Figure 8-109

 COPYRIGHT © 1997 CANON INC. CANON NP6560/NP6360/NP6260 REV. 0 NOV. 1997 PRINTED IN JAPAN (IMPRIME AU JAPON)

F. Controlling the Deck Motor

1. Controlling the Deck Main Motor (M101)

The deck main motor is controlled by the copier's DC controller; Figure 8-110 shows the circuit used to drive the deck main motor, and the circuit has the following functions:

① Turning on and off the deck main motor.
② Switching the speed of rotation of the deck main motor.

a. Turning On and Off the Motor

When the deck main motor drive signal (DMON) from the copier goes '1', the motor drive circuit turns on to rotate the motor at a specific speed. When the deck main motor drive signal (DMON) goes '0', on the other hand, the motor drive circuit turns off to stop the motor.

The copier's DC controller monitors the speed of rotation of the motor in reference to the deck main motor clock pulse signal (DMFG); if the pulse signal stops for a specific period (1.4 sec during initial rotation; 2.8 sec during normal copying), the DC controller will indicate 'E043' on the copier's controller.

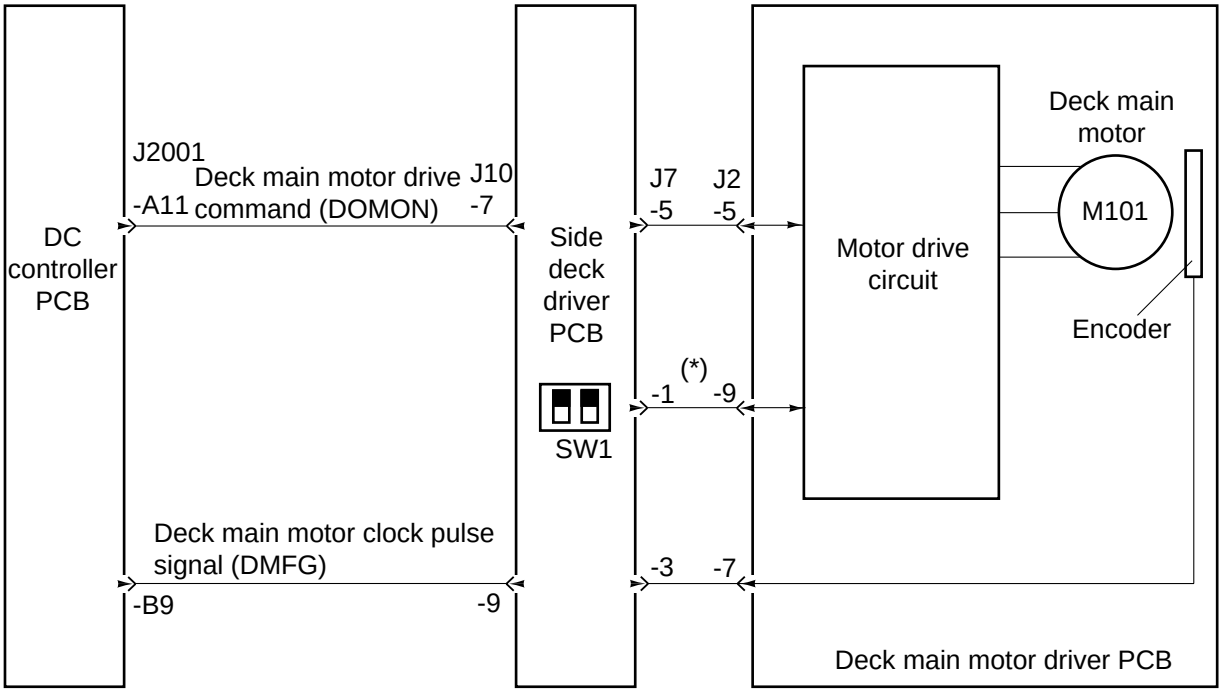

Figure 8-110

b. Switching the Speed of Rotation of the Motor

So as to accommodate future machines, the side deck driver PCB is equipped with a DIP switch (SW1) for switching the pick-up feeding speed.

When installing the deck to the copier, check to make sure that both bits of the DIP switch are at OFF (deck main motor high-speed signal DMHS=1); otherwise, the wrong pick-up/feeding speed will be selected, causing jams.

COPYRIGHT © 1997 CANON INC.

2. Controlling the Deck Lifter Motor (M102)

The deck lifter motor control circuit is found on the side deck driver PCB. See Figure 8-111 for its block diagram.

The combination circuit within the figure consists of various logic circuits, and the deck lifter motor is rotated clockwise/counterclockwise based on combinations of the deck lifter motor drive signal (DLMON*) and the deck lifter UP signal (DLUP*) from the copier's DC controller PCB.

If the deck lifter position sensor does not detect the lifter within 50 sec after the deck lifter UP signal has been generated, the copier's service mode (*1*; 'LIFT') indicates an alarm. If an alarm is noted, remove the cause, and turn off and on the copier to reset.

① Conditions for Moving Up the Lifter
- The deck (compartment) is closed, i.e., the deck OPEN detection signal (DOPD) is '0'.
- The deck lifter upper limit detection signal (DLUL) is '0' and, further, the deck lifter position detection signal (DLPD) is '0'.
- The deck lifter motor drive signal (DLMON*) is '0'.
- The deck lifter UP signal (DLUP*) is '0'.

As a result, the lifter starts to move up.

② Conditions for Moving Down the Lifter
- The deck (compartment) is open, i.e., the deck OPEN detection signal (DOPD) is '1'.
- The deck lifter lower limit detection signal (DLLD) is '0' and, further, the deck lifter position detection signal (DLPD) is '0'.
- The deck lifter motor drive signal (DLMON*) is '0'.
- The deck lifter UP signal (DLUP*) is '1'.

As result, the lifter starts to move down.

COPYRIGHT © 1997 CANON INC.

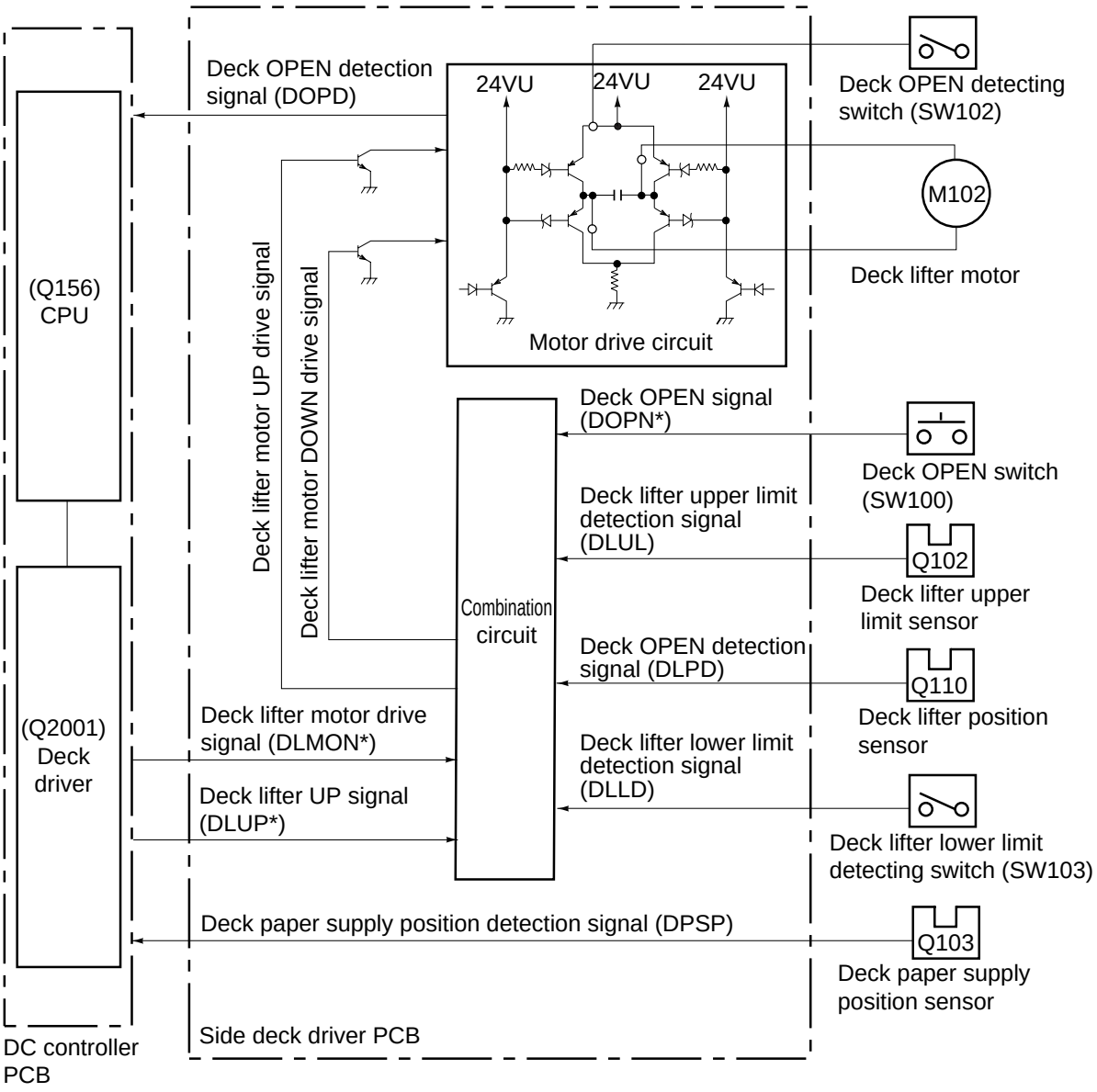

Figure 8-111

COPYRIGHT © 1997 CANON INC.

II. DETECTING JAMS

A. Outline

The side paper deck is equipped with the two sensors shown in Figure 8-201 used to check if copy paper is moving correctly.

The copier's microprocessor reads in the signals from the sensors at such times as programmed in advance to identify a jam. When the copier's microprocessor identifies a jam, it discharges all sheets moving ahead of the jam, and then stops the machine. Thereafter, the DC controller will show instructions on how to remove the jam on the copier's jam.

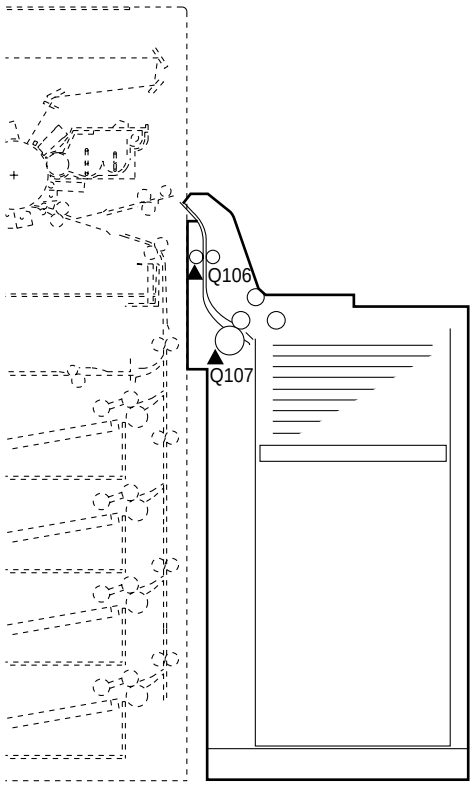

Figure 8-201

Notation	Name	Function
Q106	Deck vertical path sensor	Delay/stationary jam
Q107	Deck pick-up sensor	Delay/stationary

Table 8-201

The copier's microprocessor identifies any of the following conditions as a jam:

1. **When copy paper is present at any of the sensors at power-on, end of wait-up, or during standby.**

2. **Deck Pick-Up/Vertical Path Delay Jam**

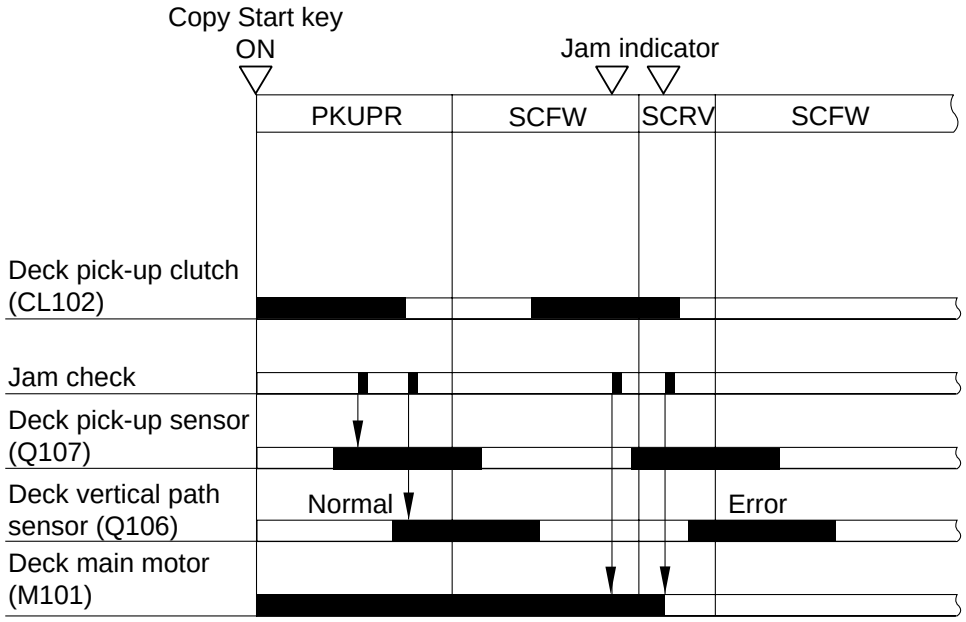

Figure 8-202

3. **Deck Pick-Up/Vertical Path Stationary Jam**

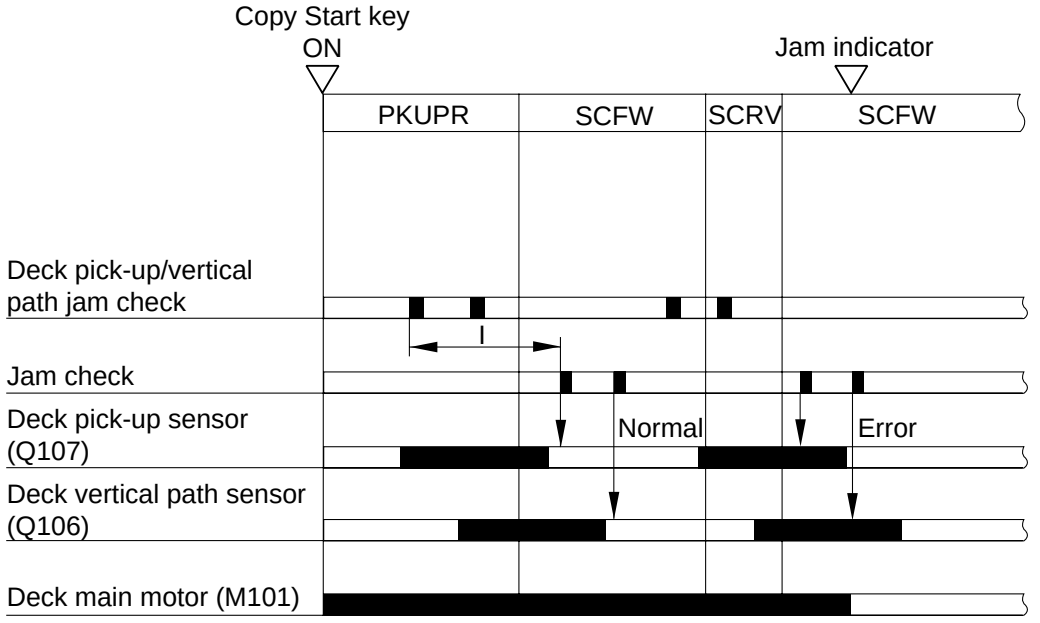

I: Varies according to length of paper.

Figure 8-203

COPYRIGHT © 1997 CANON INC.
CANON NP6560/NP6360/NP6260 REV. 0 NOV. 1997 PRINTED IN JAPAN (IMPRIME AU JAPON)

III. DISASSEMBLY AND ASSEMBLY

Here, the copier is discussed in terms of its mechanical characteristics and operation and how to disassemble and assemble it.

Be sure to observe the following for disassembly/assembly work:

1. ⚠ Disconnect the power plug for safety before starting disassembly/assembly work.
2. Unless otherwise noted, assemble the parts by reversing the steps used to disassemble them.
3. Identify the screws by type (length, diameter) and location.
4. One of the mounting screws of the rear cover is provided with a toothed washer to protect against static electricity. Do not leave it out during assembly work.
5. The screws used for grounding wires and varistors are provided with a toothed washer to ensure electrical continuity. Do not leave them out during assembly work.
6. As a rule, do not operate the machine with any of its parts removed.
7. Before sliding out the duplexing unit or the fixing assembly, check to make sure that the front door switch or the power switch is off.

COPYRIGHT © 1997 CANON INC.

A. External Covers

① Vertical path cover (front)
② Vertical path unit cove
③ Vertical path assembly opening/ closing grip
④ Vertical path cover (rear)
⑤ Rear cover
⑥ Upper cover
⑦ Right cover
⑧ Front cover
⑨ Compartment opening/closing switch
⑩ Upper front cover
⑪ Deck releasing grip

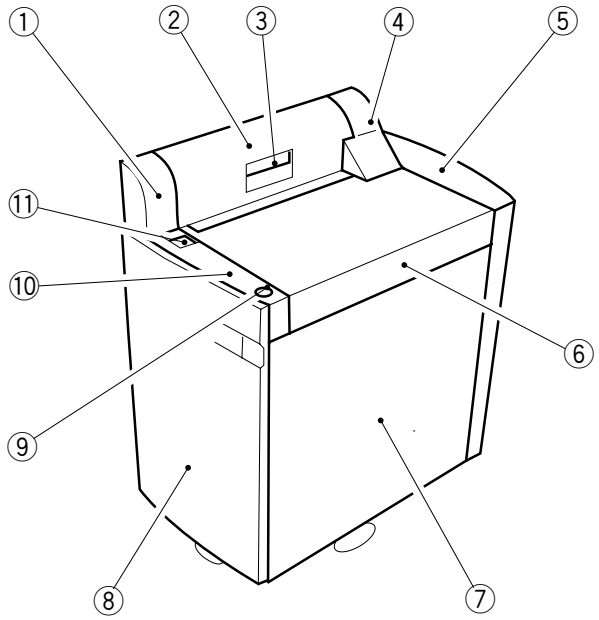

Figure 8-300

1. Removing the Front Cover

1) Detach the deck from the copier, and push down the latch plate ② of the compartment with a finger to open the compartment.

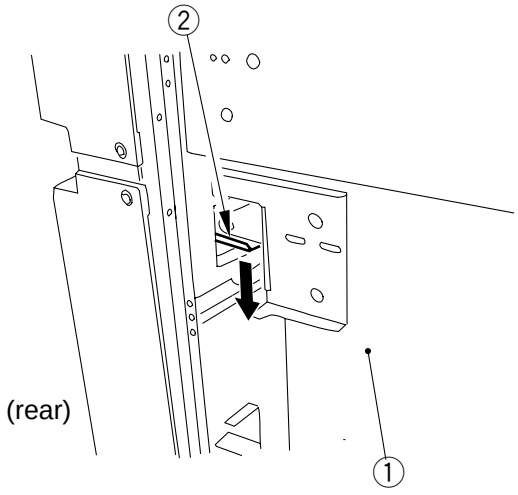

Figure 8-301

COPYRIGHT © 1997 CANON INC.

2) Loosen the four screws ③, and remove the front cover ④ of the deck toward the front.

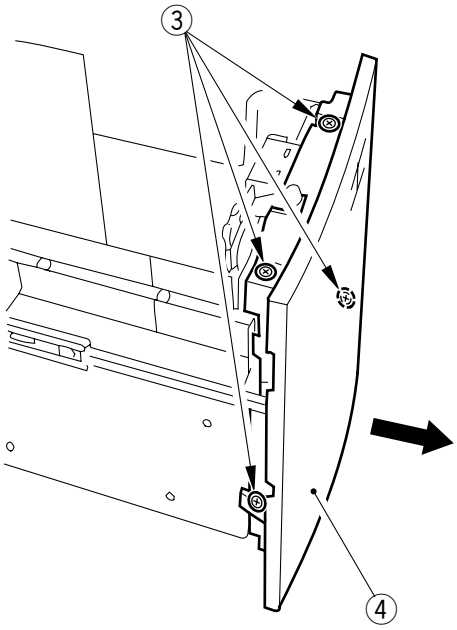

Figure 8-302

Caution:
When installing the front cover to the deck, make sure that the coupling for the paper level indicator is correctly aligned.

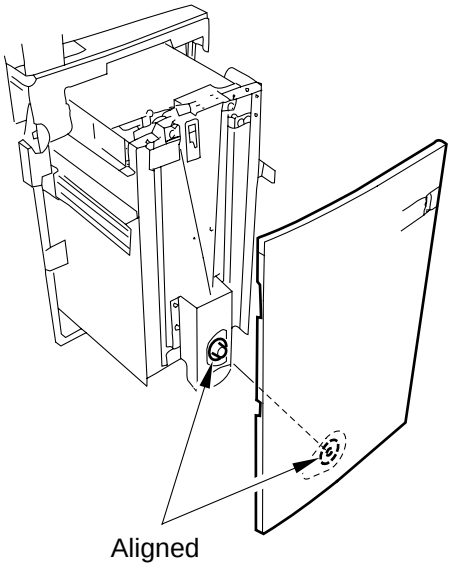

Figure 8-303

Caution:

Install the front cover so that the gap between the front cover and the upper front cover is 3 ±1 mm.

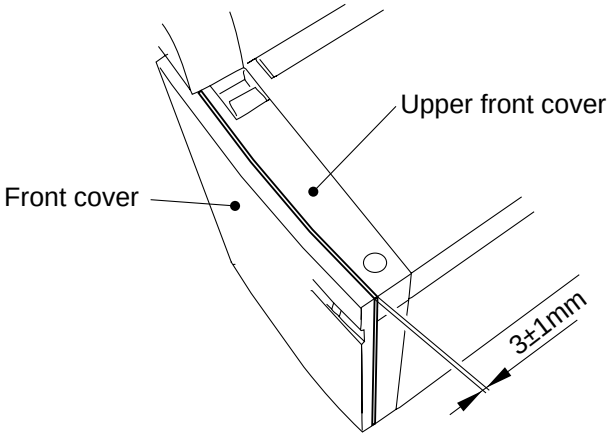

Figure 8-303a

Caution:

If you inadvertently moved the paper level indicator drive belt behind the front cover after removing the front cover, or if you have moved the deck lifter, move the deck lifter to its lower limit, and move the drive belt by hand until it gives slight resistance in the direction of the arrow (Figure 8-304, increasing the white area) before installing the front cover. (If the deck is driven while there is a discrepancy between the paper level indicator and the deck lifter, the drive system for the paper level indicator can become damaged.)

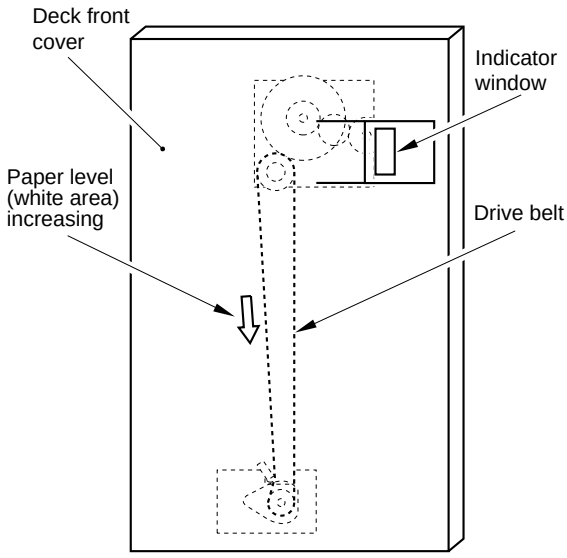

Figure 8-304 (front view)

COPYRIGHT © 1997 CANON INC.

2. Removing the Vertical Path Cover (rear)

1) Remove the deck from the copier; then, remove the six screws ①, and remove the rear cover ②.
2) Holding the vertical path assembly opening/closing grip, open the deck vertical path assembly.
3) Remove the two screws ③, and remove the vertical path cover (rear) ④.

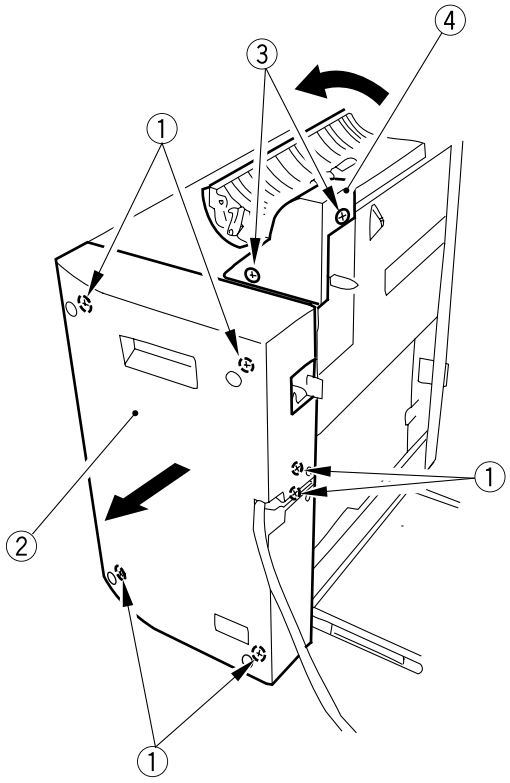

Figure 8-305

3. Removing the Right Cover

1) Detach the deck from the copier, and push down the latch plate ② of the compartment ① with a finger to open the compartment ①.

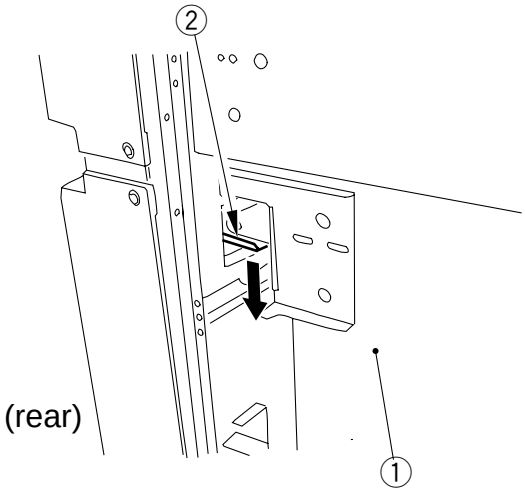

Figure 8-306

COPYRIGHT © 1997 CANON INC.

2) Remove the three screws ③, and shift the right cover ④ in the direction of the arrow (Figure 8-307) to remove.

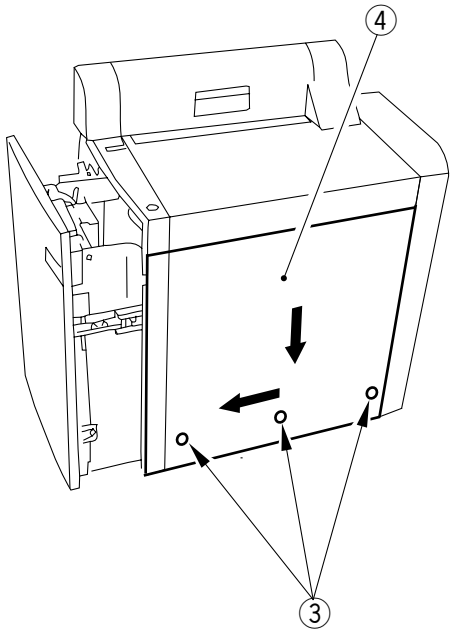

Figure 8-307

4. Removing the Upper Cover

1) Remove the vertical path cover (rear). (See p. 8-24.)
2) Push down the latch plate ② of the compartment ① to open the compartment.

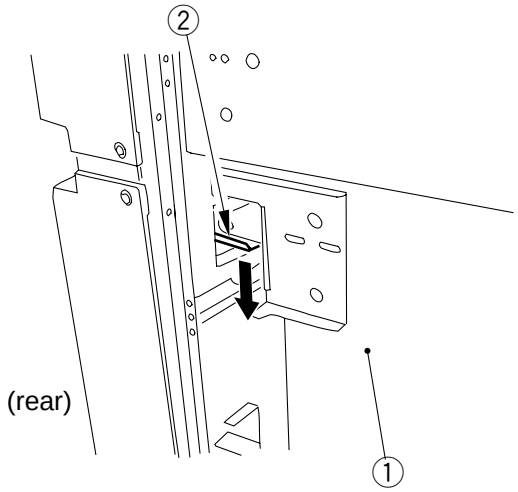

Figure 8-308

 COPYRIGHT © 1997 CANON INC. CANON NP6560/NP6360/NP6260 REV. 0 NOV. 1997 PRINTED IN JAPAN (IMPRIME AU JAPON)

3) Remove the three screws ③, and disconnect the connector ④; then, remove the upper front cover ⑤.

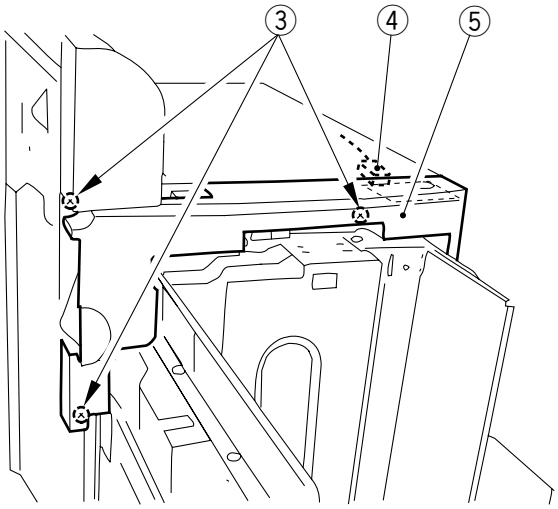

Figure 8-309

4) Close the deck vertical path assembly, and remove the two screws ⑥; then, move the upper cover ⑦ in the direction of the arrow (Figure 8-310).

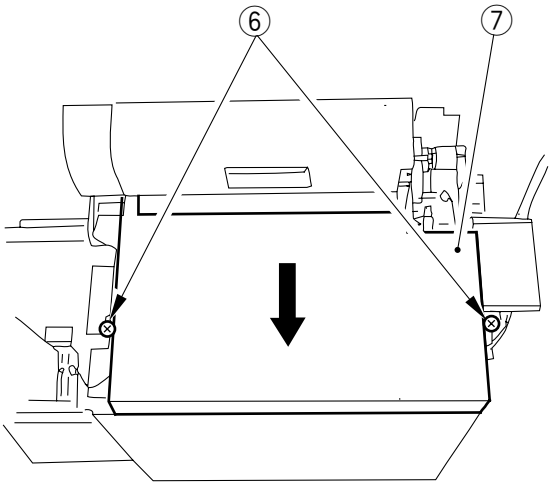

Figure 8-310

COPYRIGHT © 1997 CANON INC.

B. Paper Deck

1. Removing the Deck from the Copier

1) To prevent deformation of the roll support plate ①, place a stack of copy paper ③ (about 8 cm high) on the floor to serve as the base for the deck ②.

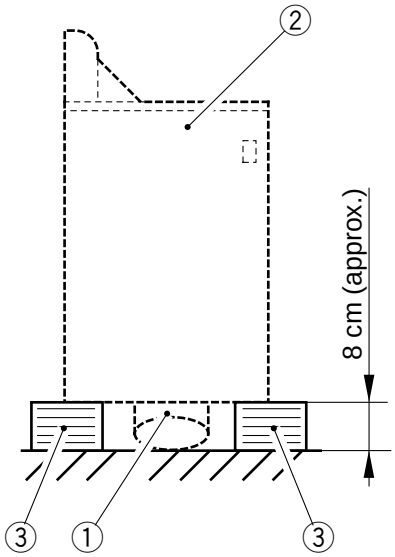

Figure 8-350

2) Remove the right cover. (See p. 8-23.)
3) As shown, match the hole in the deck lower left stay and the hole in the compartment, and insert a screwdriver ④ from inside the compartment to prevent the compartment from closing.

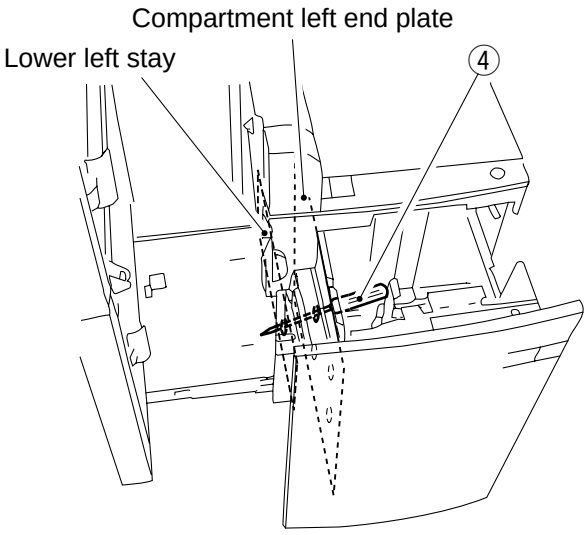

Figure 8-351

COPYRIGHT © 1997 CANON INC.

4) Remove the four screws ⑤, and remove the deck ⑥ from the deck mount ⑦.

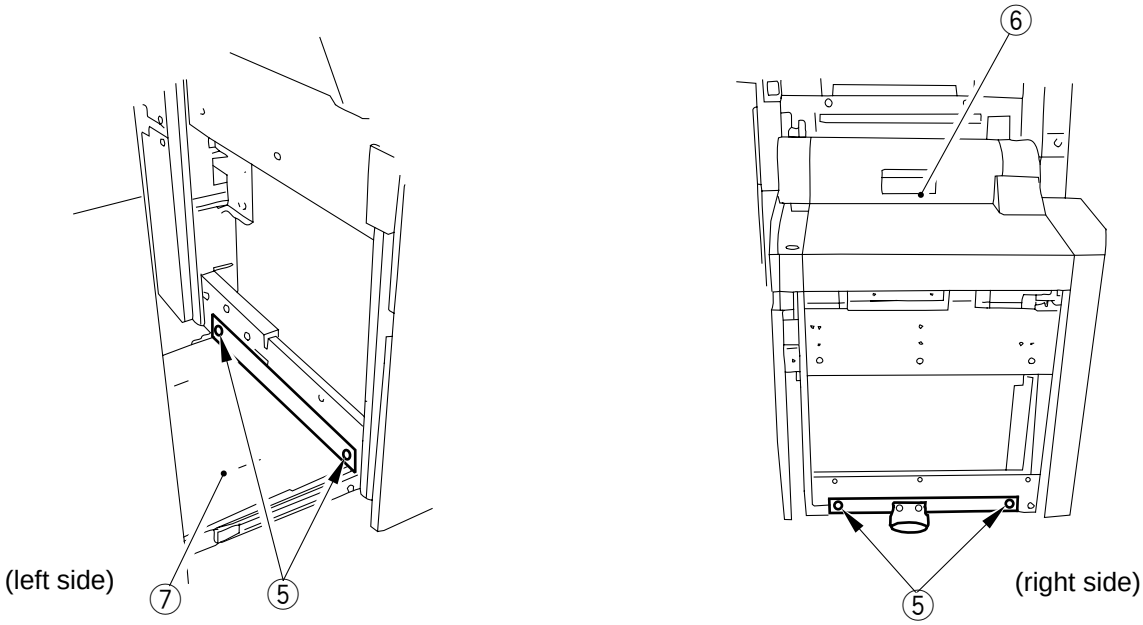

Figure 8-352

5) Holding the deck as shown (Figure 8-353), and place it on the stack of paper prepared in step 1).

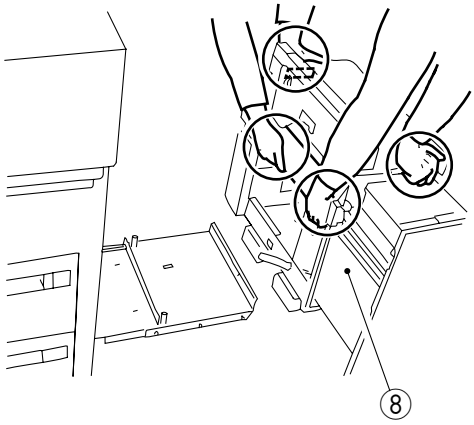

Figure 8-353

2. Removing the Compartment

1) To prevent deformation of the roll support plate ①, place a stack of copy paper ③ (about 8 cm high) on the floor to serve as the base for the deck ②.

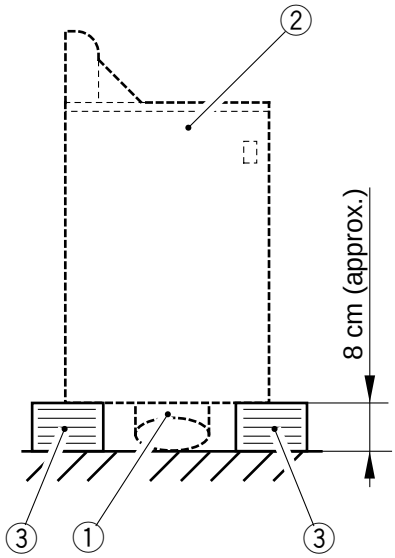

Figure 8-354

2) Detach the deck from the copier, and push down the latch plate ⑤ of the compartment ④ with a finger to open the compartment.

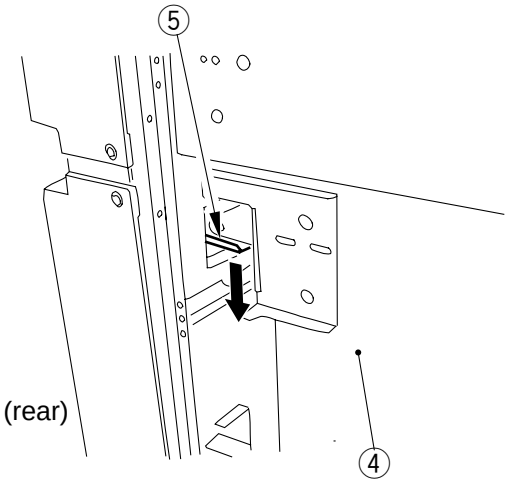

Figure 8-355

 COPYRIGHT © 1997 CANON INC. CANON NP6560/NP6360/NP6260 REV. 0 NOV. 1997 PRINTED IN JAPAN (IMPRIME AU JAPON)

3) Remove the screw ⑥ and the stopper plate ⑦, and slide out the compartment ⑧ to the front.

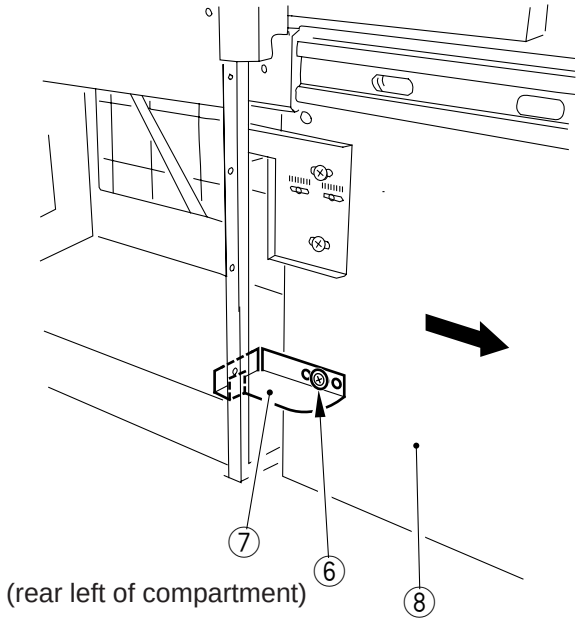

Figure 8-356

4) Remove the right cover. (See p. 8-23.)
5) Remove the screw ⑨ of the harness guide, and disconnect the two connectors ⑩; then, remove the three screws each of the compartment rails ⑪ left and right, and remove the compartment ⑧ by lifting it.
6) Place the compartment ⑧ on the stack of paper prepared in step 1).

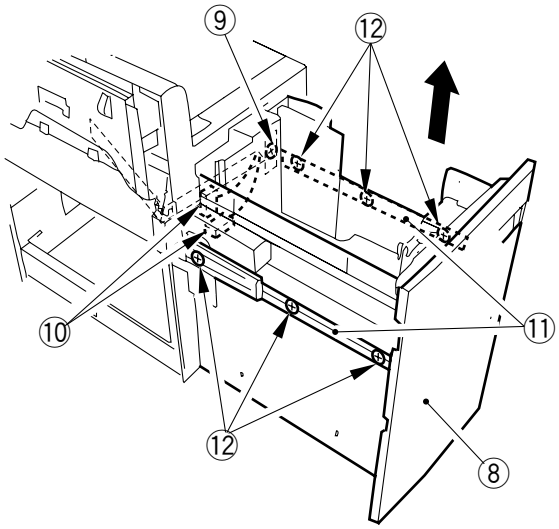

Figure 8-357

3. Changing the Deck Paper Size

If you need to change the paper size for the paper deck to suit the user's needs, perform the following:

1) Open the compartment of the paper deck, and remove all copy paper.
2) If the lifter of the paper deck is up, turn on the copier, and push the sensor lever ② of the paper supply position sensor inside the compartment ① so that the lifter lowers to the lower limit.

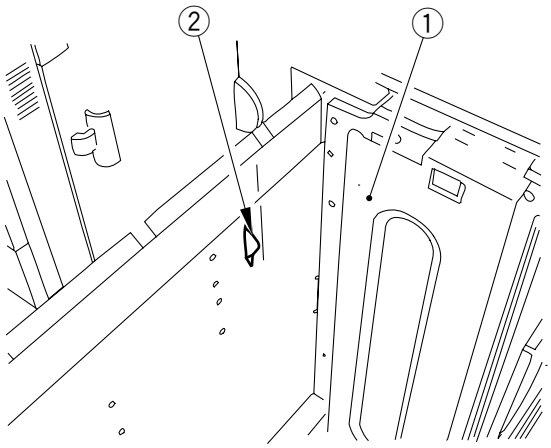

Figure 8-358

3) Remove the screw ③, and fix the trailing edge guide plate ④ in position to suit the new paper size.
4) Remove the screw ⑤ (1 each), and fix the left/right guide plate ⑥ to suit the new paper size.

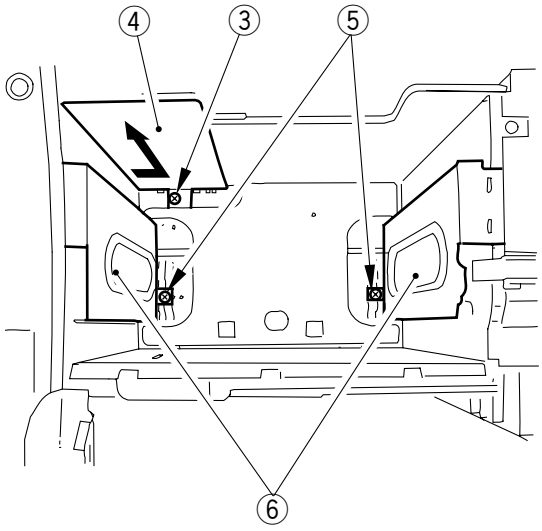

Figure 8-359

COPYRIGHT © 1997 CANON INC.
CANON NP6560/NP6360/NP6260 REV. 0 NOV. 1997 PRINTED IN JAPAN (IMPRIME AU JAPON)

4. Adjusting the Deck Registration

If the left/right registration (standard, 0 ±1.5 mm) must be adjusted, perform the following:

1) Draw out the compartment, and fix the latch plate ① of the deck opening solenoid (SL102) using the two screws ②. (At this time, refer to line ③ on the latch plate.)

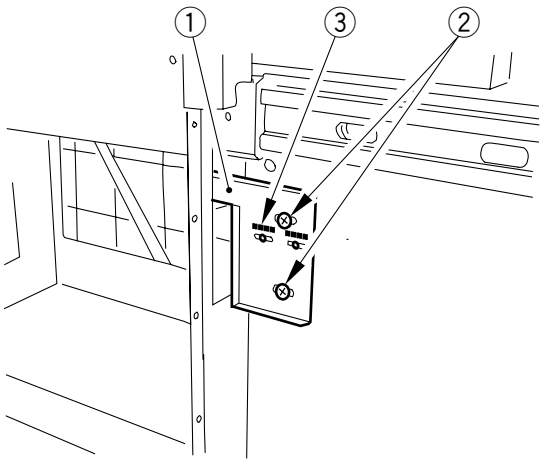

(rear left of compartment)

Figure 8-360

5. Positioning the Roll

If the compartment cannot be opened/closed smoothly, requiring adjustment of the roller position, perform the following:

1) Remove the front cover. (See p. 8-20.)
2) Slide out the compartment fully, and adjust the four mounting screws ④ on the roll support plate ③ so that the roll ① is about 3 mm from the floor ②.

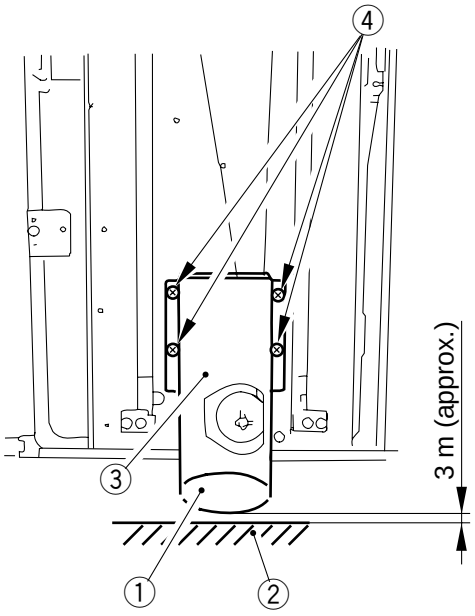

Figure 8-361

C. Drive System

1. Removing the Deck Pick-Up Clutch (CL102)

1) Remove the deck pick-up unit. (See p. 8-40.)
2) Disconnect the connector ①, and remove the E-ring ②; then, remove the deck pick-up clutch ③.

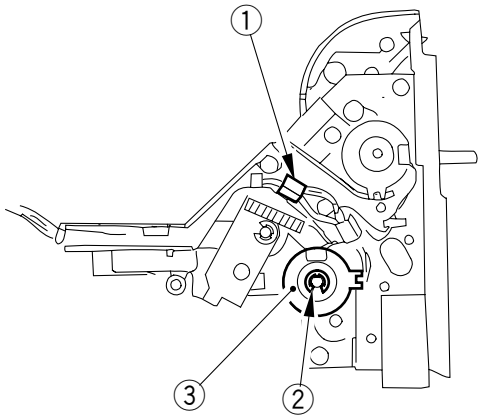

Figure 8-400

2. Removing the Deck Vertical Path Clutch (CL101)

1) Remove the vertical path cover (rear). (See p. 8-23.)
2) Disconnect the connector ①, and remove the E-ring ②; then, remove the deck vertical path clutch ③.

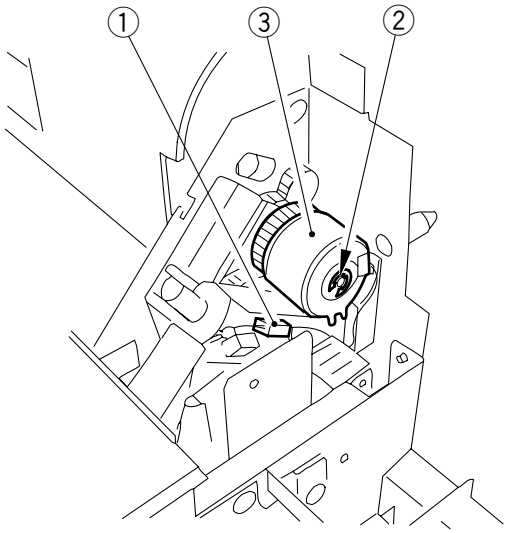

Figure 8-401

 COPYRIGHT © 1997 CANON INC. CANON NP6560/NP6360/NP6260 REV. 0 NOV. 1997 PRINTED IN JAPAN (IMPRIME AU JAPON)

3. Removing the Deck Main Motor (M101)

1) Detach the deck from the copier; then, remove the six screws, and remove the rear cover.
2) Disconnect the two connectors ①, and remove the four screws ②, and remove the deck main motor ③. (At this time, take care not to damage the gear at the end of the motor spindle.)

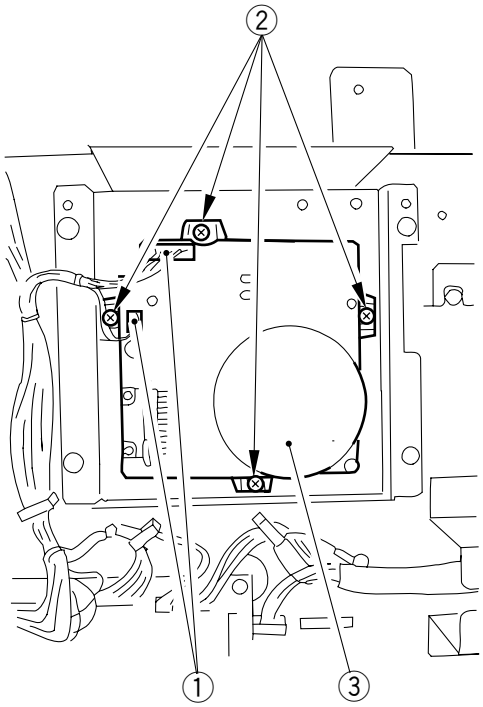

Figure 8-402

4. Removing the Deck Lifter Motor (M102)

1) Open the compartment of the deck; remove all copy paper, if any.
2) Turn on the copier; if the lifter of the deck is up, push the sensor lever ① of the paper supply position inside the compartment with a finger. Stop the lifter ② about 7 cm from the base of the compartment, and insert a hex wrench ④ into the hole of the lifter drive shaft ③, and fix the lifter drive shaft ③ temporarily in place to prevent it from turning.

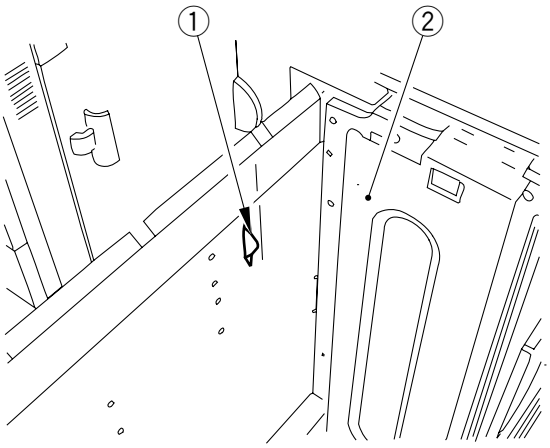

Figure 8-403

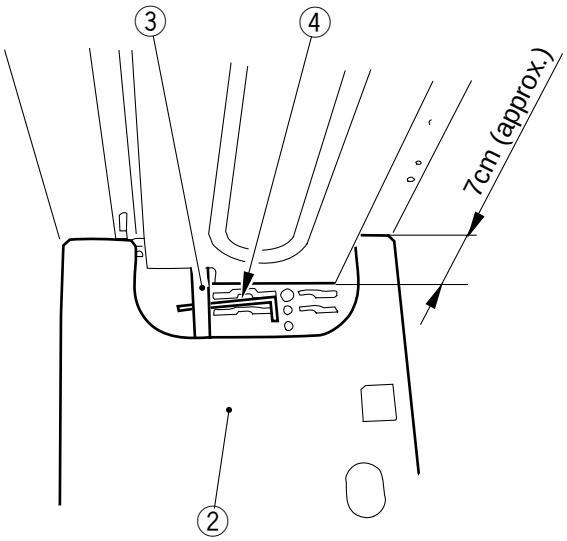

Figure 8-404

 COPYRIGHT © 1997 CANON INC.

3) Remove the compartment from the deck. (See p. 8-28.)
4) Disconnect the two connectors ⑤, and remove the five screws ⑥; then, remove the deck lifter motor unit ⑦.

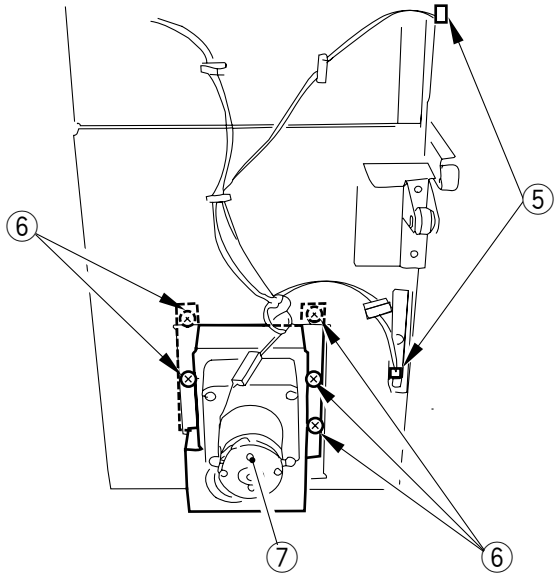

Figure 8-405

5. Removing the Lifter Cable (deck front)

1) Open the compartment of the deck; remove all copy paper, if any.
2) Remove the screw, and remove the trailing edge guide plate from inside the compartment.
3) Push the sensor lever ① of the paper supply sensor inside the compartment with a finger to lower the lifter until the holes (left-right) in the compartment side plate and the holes (left/right) in the lifter match; then, insert two screwdrivers (to position the lifter).

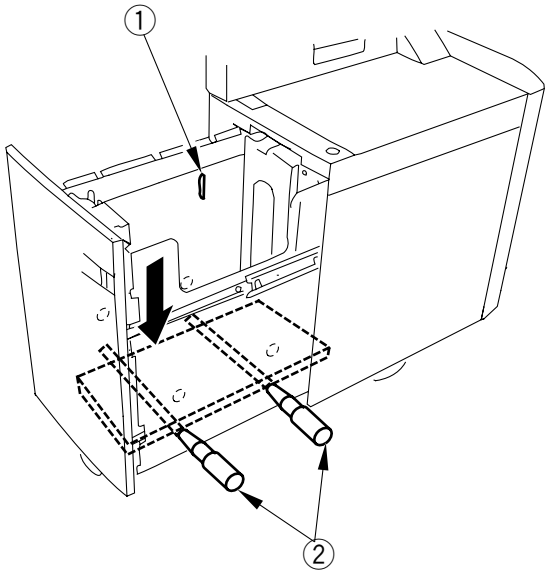

Figure 8-406

COPYRIGHT © 1997 CANON INC.

4) Remove the front cover of the deck. (See p. 8-20.)
5) Remove the four screws ③, and remove the roll support plate ④.

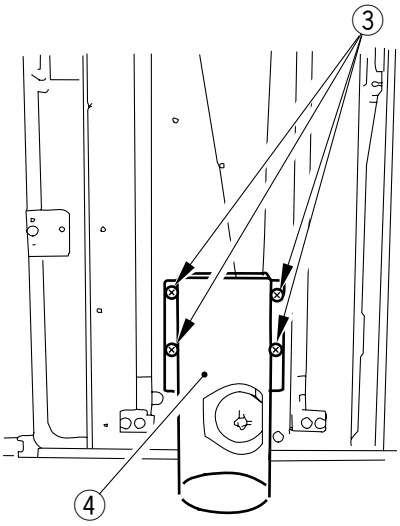

Figure 8-407

6) Remove the coupling shaft ⑤ and the E-ring ⑥; then, remove the pulley cover ⑦.
7) Remove the two screws ⑧ and the cable fixing plate ⑨; then, remove the lifter cable ⑩ on the outside.
8) Remove the two screws ⑪ and the cable fixing plate ⑫; then, remove the lifter cable ⑬ on the inside.
   • To detach the lifter cable ⑬ on the inside from the pulley ⑭ on the inside, remove the two set screws ⑯ on the pulley ⑮ on the outside, and remove the pulley in advance.

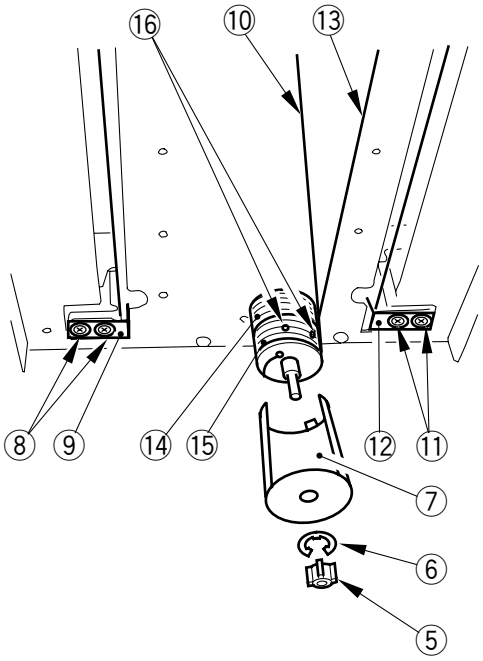

Figure 8-408

 COPYRIGHT © 1997 CANON INC.

6. Removing the Lifter Cable (deck rear)

1) Open the compartment; remove all copy paper, if any.
2) Remove the screw, and remove the rear edge guide plate inside the compartment.
3) Push the sensor lever ① of the paper supply position sensor inside the compartment with a finger to lower the lifter until the holes (left/right) in the compartment side plate and the holes in the lifter (left/right) match; then, insert two screwdrivers ②. (At this time, try to keep the top face of the lifter along the line marked on the left side plate of the compartment to facilitate the work.)

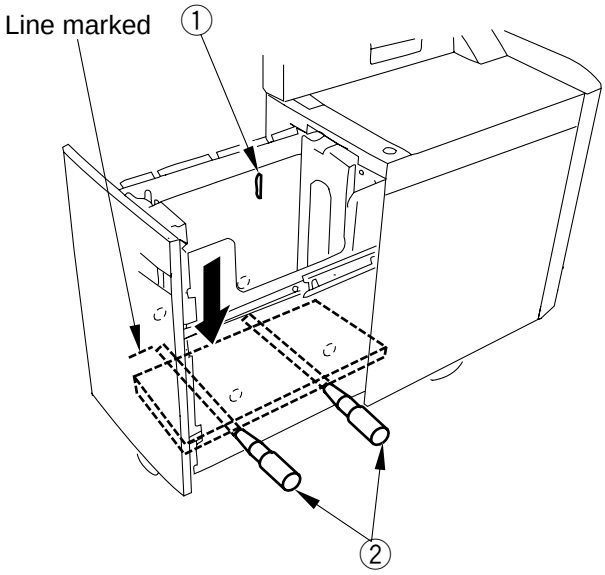

Figure 8-409

4) Remove the compartment. (See p. 8-28.)
5) Remove the screw ③, and remove the sensor plate ④; then, remove the screw ⑤, and remove the harness guide ⑥.
6) Disconnect the five connectors ⑦, and remove the five screws ⑧; then, remove the metal plate ⑨.

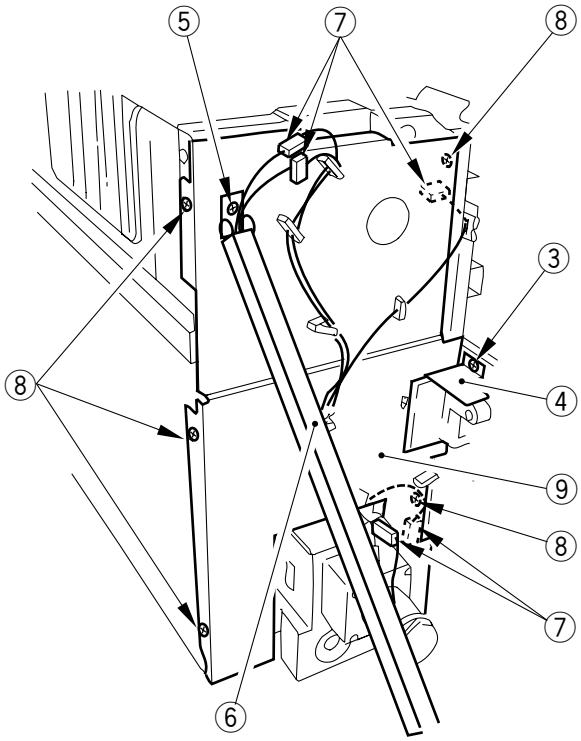

Figure 8-410

7) Insert a hex wrench ⑪ in the hole of the lifter drive shaft ⑩ to keep the shaft from turning.

Caution:

If you fail to perform this step, the lifter cable will become slack when the lifter unit is removed.

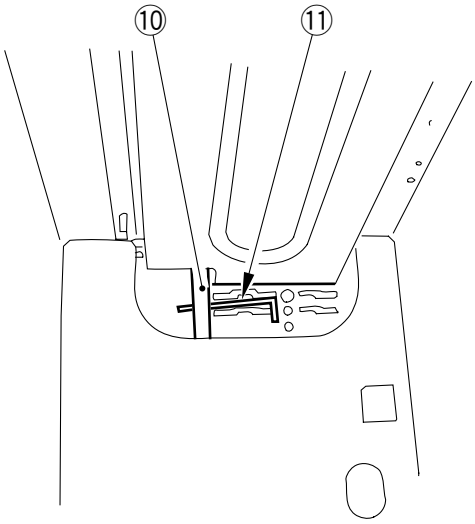

Figure 8-411

8) Remove the five screws ⑫, and remove the lifter motor unit ⑬.

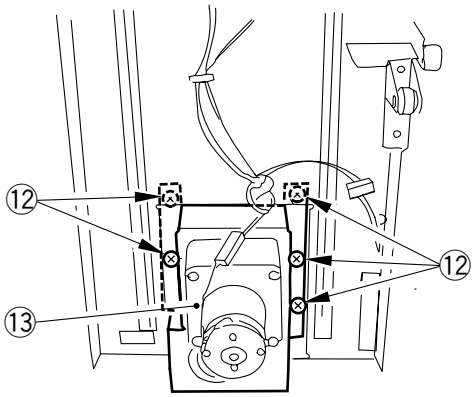

Figure 8-412

 COPYRIGHT © 1997 CANON INC. CANON NP6560/NP6360/NP6260 REV. 0 NOV. 1997 PRINTED IN JAPAN (IMPRIME AU JAPON)

7. Routing the Lifter Cable

1) Check to make sure that the lifter drive shaft and the lifter are held in place with hex wrenches ① and screwdrivers ②.
2) Fix the cable fixing plate ③ in place on the lifter with two screws.
3) Hook the lifter cable on the pulley ④.
4) Hook the ball of the lifter cable on the lifter drive shaft; then, wind it about 1.5 times along the groove of the pulley ⑤. At this time, be sure that the lifter cable is taut until the drivers have been lifted until they stop.
5) While keeping the spatial relationship, fix the pulley in place to the lifter drive shaft with two set screws ⑥.
6) After fixing all pulleys that have been removed to the lifter drive shaft, measure the distance (height) from the base plate of the compartment to the top face of the lifter to check that the lifter is level.

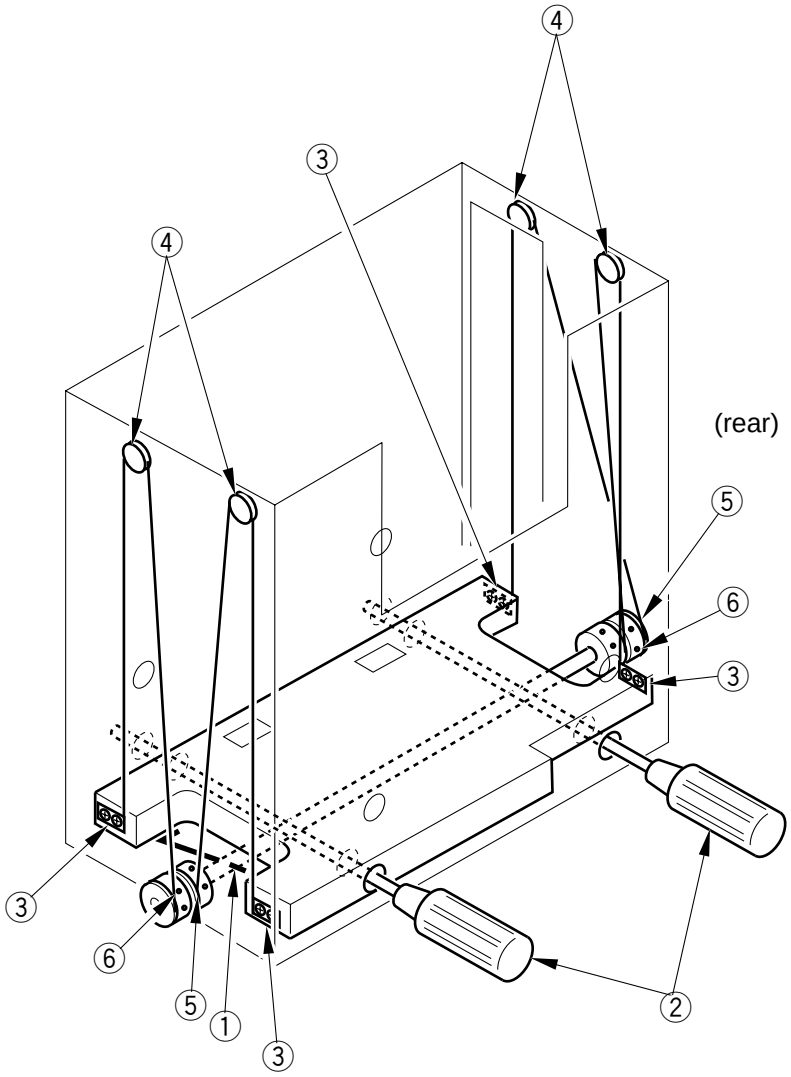

Figure 8-413

COPYRIGHT © 1997 CANON INC.

D. Feeding System

1. Removing the Deck Pick-Up Unit

1) Remove the upper cover. (See p.8-24.)
2) Disconnect the two connectors ①, and remove the four screws ②.
3) Remove the deck pick-up unit ③.

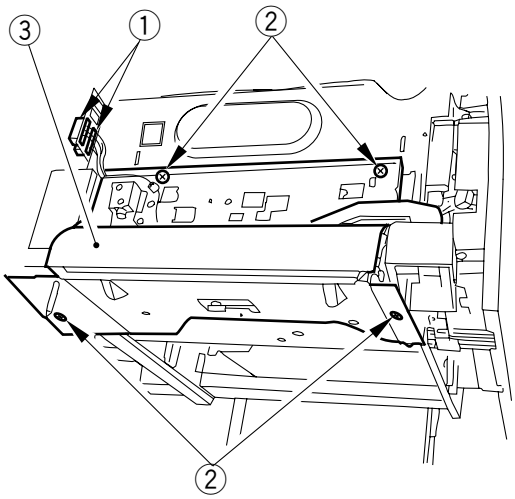

Figure 8-450

Caution:

When installing the deck pick-up unit ③, be sure to tightenz the two screws shown in advance.

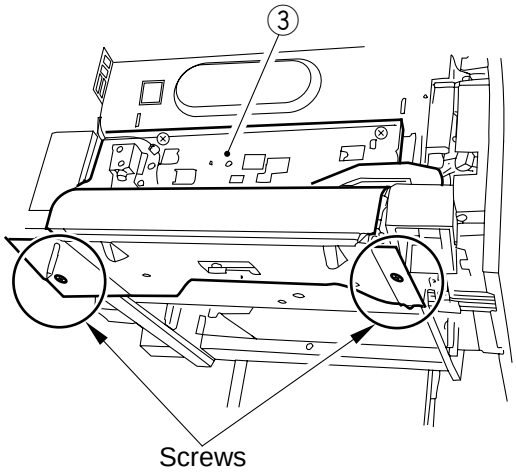

Figure 8-451

 COPYRIGHT © 1997 CANON INC. CANON NP6560/NP6360/NP6260 REV. 0 NOV. 1997 PRINTED IN JAPAN (IMPRIME AU JAPON)

2. Removing the Deck Pick-Up Roller

1) Remove the deck pick-up unit. (See p. 8-40.)
2) Turn over the deck pick-up unit, and remove the resin ring ① (1 each); then, remove the deck pick-up roller ② (1 each).

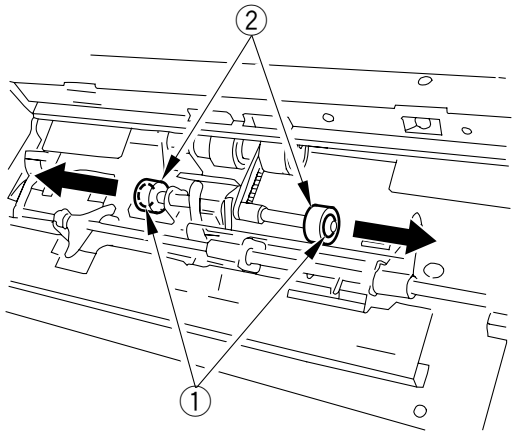

Figure 8-452

3. Orientation of the Deck Pick-Up Roller

When installing the deck pick-up roller, check to make sure that the makings on the roller and the side of the collar are as shown in Figure 8-453.

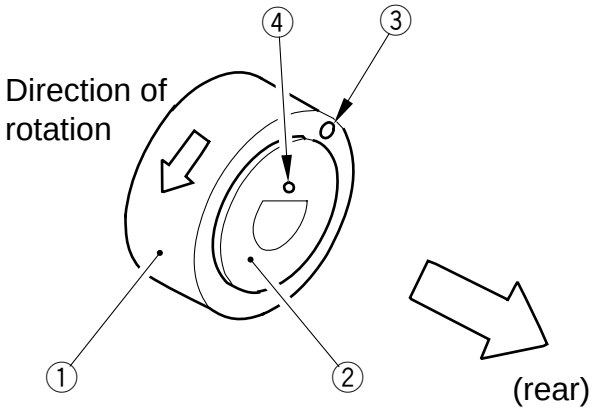

① Deck pick-up roller
② Collar
③ Marking (roller)
④ Marking (collar)

Figure 8-453

4. Removing the Deck Feeding Roller

1) Remove the deck pick-up unit. (See p. 8-40.)
2) Open the deck vertical path assembly, and turn over the deck pick-up unit.
3) Remove the resin ring ①, and remove the deck feeding roller ② and the drive belt ③ toward the front.

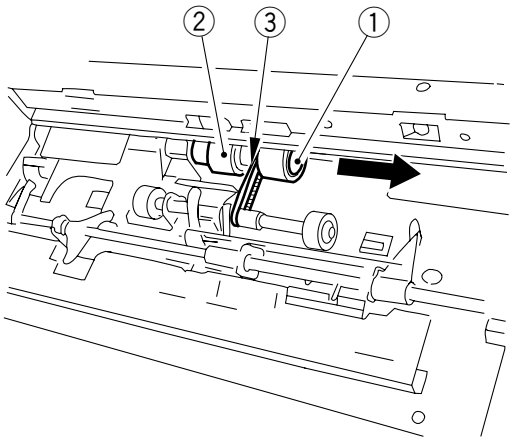

Figure 8-454

5. Orientation of the Deck Feeding Roller

When installing the deck feeding roller ①, make sure that the belt pulley ② is toward the front. When installing the feeding roller rubber to the feeding roller shaft, make sure that the marking "5" ③ faces the rear.

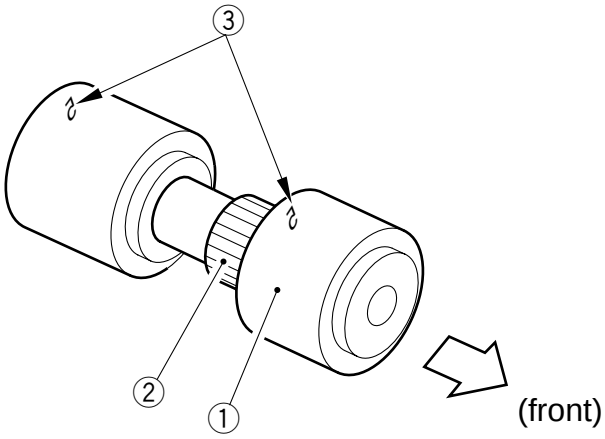

Figure 8-455

COPYRIGHT © 1997 CANON INC.

6. Removing the Deck Separation Roller

1) Detach the deck from the copier, and remove the two screws ①; then, remove the separation roller support plate ②.
2) Remove the joint, and remove the deck separation roller ③.

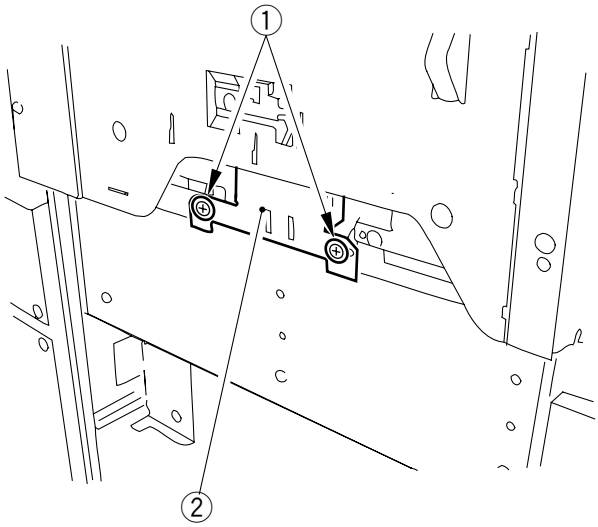

Figure 8-456

Caution:

The urethane sponge used on the deck separation roller is initially pink and changes to yellow over time, accelerated by exposure to light (pink to orange, and then to yellow).

The fact is common to all urethane sponge types, and will not affect its physical performance. Keep in mind that color difference, if any, does not indicate different part types.

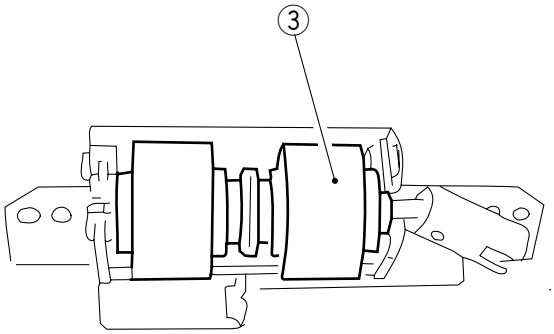

Figure 8-456a

7. Adjusting the Deck Separation Roller Pressure

If double feeding or separation failure occurs when pick-up is from the side paper deck, adjust the position of the pressure spring of the deck separation roller

- If pick-up failure occurs, move the spring in the direction of arrow A.
- If double feeding occurs, move the spring in the direction of arrow B.

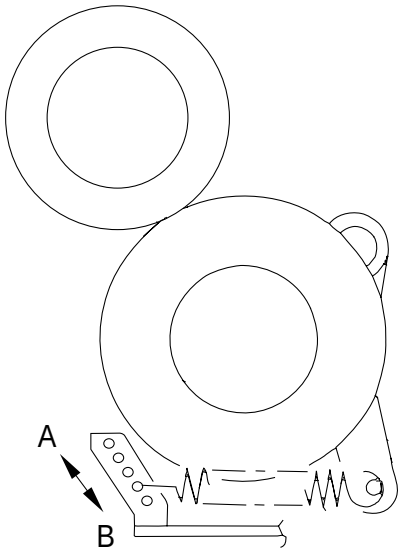

Figure 8-457

8. Positioning the Deck Pick-Up Roller Releasing Solenoid (SL101)

Before removing the deck pick-up roller releasing solenoid ① from the support plate, try to remember the position of the two fixing screws ② on the solenoid with reference to the scale on the support plate; or, mark the position on the support plate to identify the position of the solenoid.

Be sure to fix the solenoid in its initial position whenever installing it on its own.

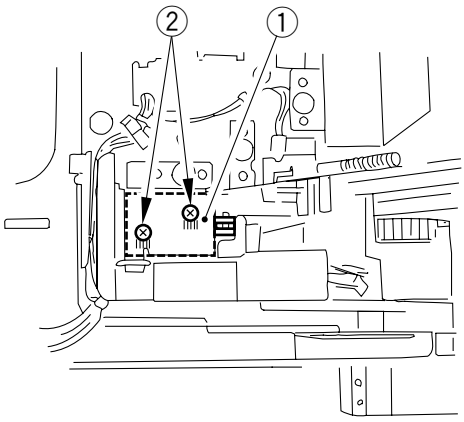

Figure 8-458

COPYRIGHT © 1997 CANON INC.

E. Electrical System

1. Removing the Side Deck Driver PCB

1) Detach the deck from the copier; then, remove the six screws, and remove the rear cover.
2) Disconnect the 10 connectors ①, and remove the four screws ②; then, remove the deck driver PCB ③.

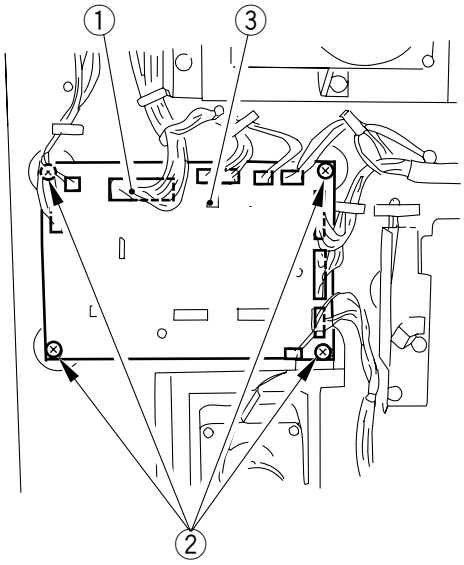

Figure 8-500

2. Removing the OPEN Switch PCB

1) Detach the deck from the copier, and push down the latch plate ② of the compartment ① with a finger to open the compartment.

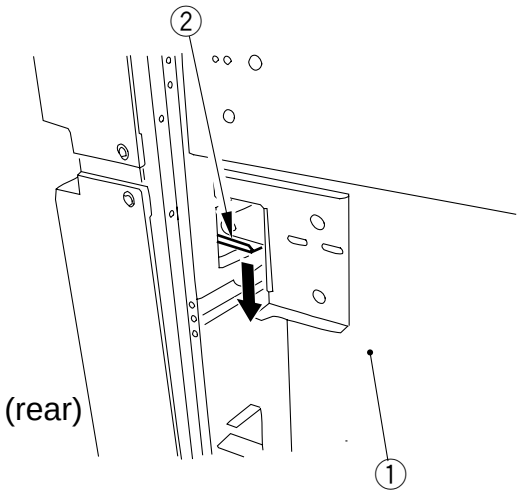

Figure 8-501

2) Remove the three screws ③, and disconnect the connector ④; then, remove the upper front cover ⑤.

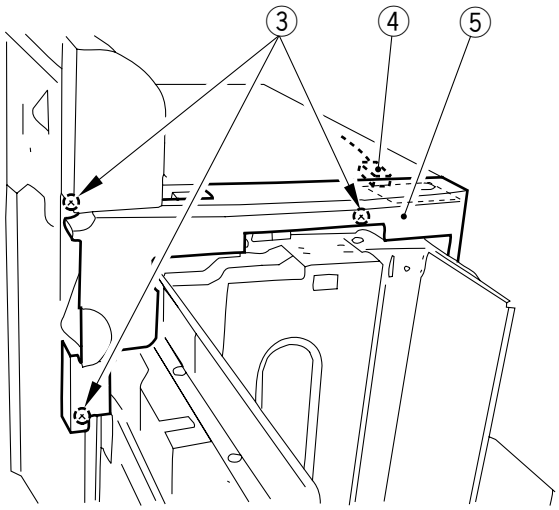

Figure 8-502

3) Remove the two screws ⑥, and remove the OPEN switch PCB ⑦.

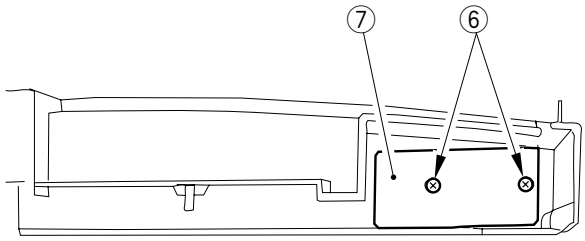

Figure 8-503

 COPYRIGHT © 1997 CANON INC. CANON NP6560/NP6360/NP6260 REV. 0 NOV. 1997 PRINTED IN JAPAN (IMPRIME AU JAPON)

CHAPTER 9

INSTALLATION

This chapter introduces requirements for the site of installation, and shows how the copier may be installed using step-by-step instructions.

I. SELECTING THE SITE 9-1
II. UNPACKING AND INSTALLING 9-4
A. Unpacking.....9-5
B. Installing the Scanner.....9-7
C. Installing the Fixing Assembly.....9-8
D. Installing the AP Kit and the Charging Assemblies.....9-10
E. Installing the Copy Tray 9-16
F. Checking the Developing Assembly 9-17
G. Installing the Pick-Up Assembly 9-19
H. Supplying Toner.....9-21
I. Connecting the RDF Connector 9-25
J. Image/Function Checks and User Mode 9-26
K. Image/Operation Checks and User Mode.....9-30
III. RELOCATING THE MACHINE.....9-31
IV. INSTALLING THE CONTROL CARD V 9-32
V. INSTALLING THE COPY DATA CONTROLLER-A1.....9-40
A. Setting the Board.....9-40
B. Installing to the Copier 9-44
C. Checking the Operation.....9-46
VI. INSTALLING THE REMOTE DIAGNOSTIC DEVICE II.....9-56
A. Installation to the Copier 9-56

COPYRIGHT © 1997 CANON INC.

I. SELECTING THE SITE

Make sure of the following when selecting the site of installation; if possible, pay a visit to the user's before delivery of the machine.

1. The site must provide an exclusive power source (rating ±10%), enabling proper grounding.
2. The site must be 7.5° to 32.5°C/45.5° to 90.5°F in temperature and 5% to 85% RH in humidity. Avoid areas near water faucets, water boiler, humidifier, or refrigerator.
3. Avoid areas near a source of fire or subject to dust or ammonia gas; as necessary, provide curtains to protect against direct rays of the sun.
4. Be sure that the room is well ventilated; the amount of ozone generated by the machine is of a level which is harmless to the health of the people working around it. Some, nevertheless, find the odor not pleasant when working long hours.
5. Be sure that none of the feet of the copier is off the floor. The machine must remain level at all times.
6. Keep the machine at least 10 cm/3.9 in away from the wall to allow ample space for operation.

COPYRIGHT © 1997 CANON INC.

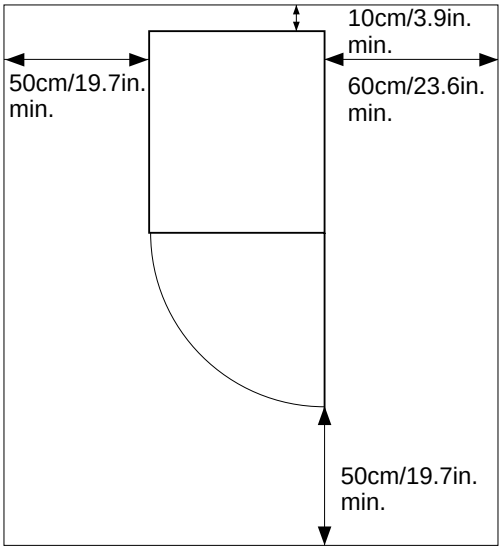

Figure 9-101

7. Keep the machine in a well ventilated area of the room, making sure that the exhaust of another machine, if any, will not be drawn into the machine.
   Do not place the machine near the air inlet of the room.

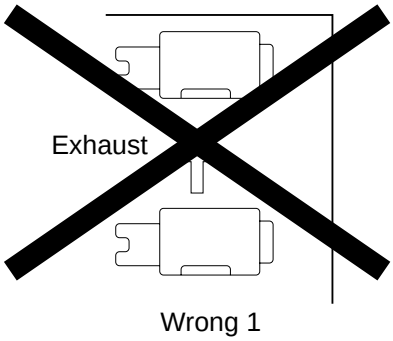

Figure 9-102

Note:

In general, the silicone gas (vapors of the silicone oil of the fixing assembly) from the copier soils the corona charging wire, making the life of the wire shorter. (This is most conspicuous in a low-humidity environment.)

COPYRIGHT © 1997 CANON INC.

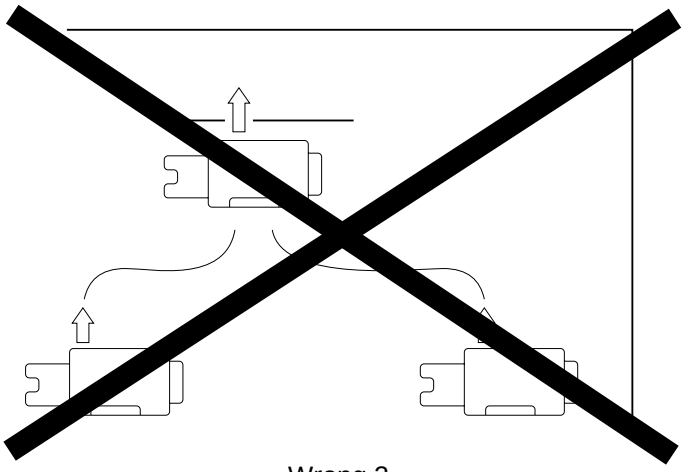

Wrong 2

Figure 9-103

COPYRIGHT © 1997 CANON INC.

II. UNPACKING AND INSTALLING

When a piece of metal is brought in from a cold to a warm area, droplets of water tend to form on its surface. This phenomenon is known as condensation, and the use of a copier subjected to condensation can turn out blank copies.

If you are installing a machine just brought in from a cold place, keep it without unpacking for at least one hour so that it becomes used to the room temperature.

Caution:

A. Keep the following in mind when delivering the machine to the user by way of stairs:
   1. Draw out the fixing/feeding unit, holding tray, and copy paper from the machine, and deliver them separately. (If an RDF is installed, remove it also.)
   2. To lift the body, do not use the grips on the pick-up/delivery assembly; rather, keep the hands at four bottom corners of the machine.

B. If the environment has a relatively high humidity, image faults can occur, requiring you to switch on the drum heater to prevent the problem.
   If the reading of 'RHUM' (inside humidity) in service mode (*1*) is 60% or more, turn on the drum heater (right of the switch pressed).

C. Shift up the two (front) adjusters on the bottom of the machine to check to make sure that they are released.
   Take care not to lose the adjusters. (They can be shaken out while the machine is being moved.)

D. Be sure to work in a group of three. In particular, when removing the pads, one person should be at the rear of the machine holding one grip and one at the front holding one grip while one removes the pads and the base plate on each side.

E. Keep the following in mind when moving the machine:
   1. The grip to be used in the side (Figure) is kept on the side of the machine.
   2. Check to make sure it has been inserted fully before holding it and lifting the machine. (It can slip out if not handled with care.)
   3. The machine weighs about 210 kg. Be sure to work in a group of four when lifting it.

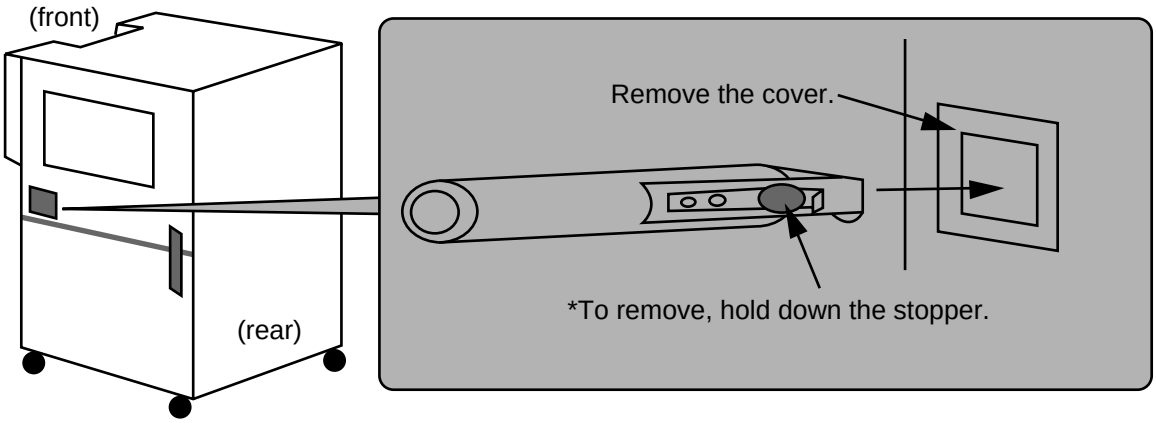

COPYRIGHT © 1997 CANON INC.
CANON NP6560/NP6360/NP6260 REV. 0 NOV. 1997 PRINTED IN JAPAN (IMPRIME AU JAPON)

A. Unpacking

<table>
<tr><th>Step</th><th>Work</th><th>Remarks</th></tr>
<tr><td>1</td><td>Unpack the copier, and remove the plastic sheets.</td><td></td></tr>
<tr><td>2</td><td>Insert the grip that comes with the machine into the front of the pick-up side.
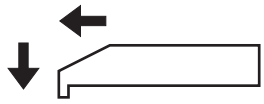
Caution:
Be sure to hold the stopper so that it faces down; otherwise, it can slip off while lifting the machine.</td><td>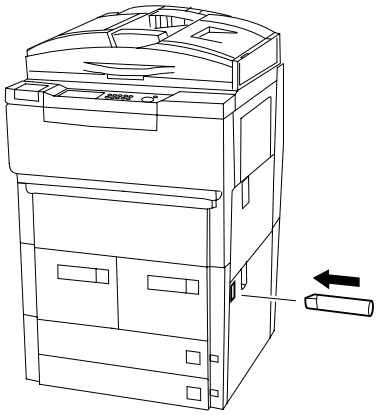</td></tr>
<tr><td>3</td><td>Hold the grips on the pick-up side (front/rear), and lift the machine slightly to remove the two pads. Then, remove the cardboard sheet (base plate).
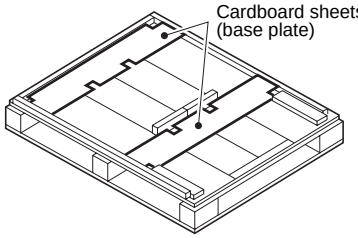</td><td rowspan="2">
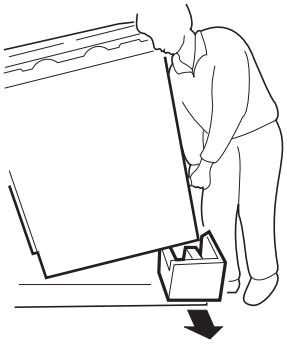
The machine weighs about 210 kg.</td></tr>
<tr><td>4</td><td>Hold the grips (front/rear) on the delivery side, and lift the machine slightly to remove the two pads. Then, remove the cardboard sheets (base plates).</td></tr>
</table>

COPYRIGHT © 1997 CANON INC.

Step	Work	Remarks
5	Shift the two adjusters up (front), and check to make sure that they are released.	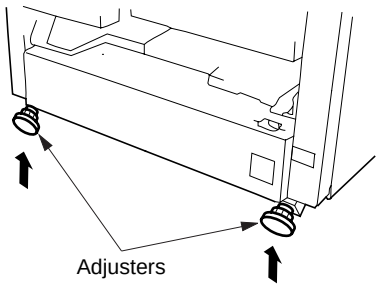
6	Remove the two slope plates out of the skid.	
7	Turn over the slope plates; then, match the pin holes in the skid and the pin holes in the slope plates, and insert the pins (1 each). • Hold the grips (front/rear) of the machine, and move the machine along the slope plates to the floor.	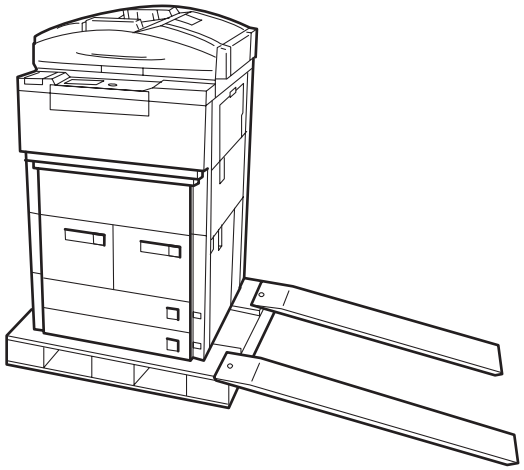
8	Open the cardboard box that comes with the machine, and take out the parts and materials.	Check to make sure that all attachments are found in the box. • User's Manual • Copy tray • Grip (×1) • Drum rotating tool • Mode memory sheet • Grip assembly cover (large; ×3) • Grip assembly cover (small; ×1) • Developing assembly (×1) • Drum protection sheet • Cassette size label • Manual Feed label (for RDF) • Size protect tab (×3) • Variable size cassette sticker

 COPYRIGHT © 1997 CANON INC. CANON NP6560/NP6360/NP6260 REV. 0 NOV. 1997 PRINTED IN JAPAN (IMPRIME AU JAPON)

B. Installing the Scanner

Step	Work	Remarks
1	Remove the packing tape from the machine.	
2	Open the RDF.	Remove the protective tape from the size index and the protective sheet from the copyboard glass.
3	Move the scanner fixing plate (packing tape) to the front, and remove it. (Keep the fixing plate in store. You may need it when relocating the machine in the future.)	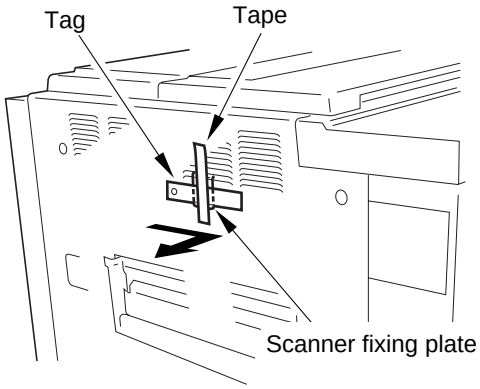

COPYRIGHT © 1997 CANON INC.

C. Installing the Fixing Assembly

Step	Work	Remarks
1	Open the front door.	
2	Shift the fixing assembly releasing lever in the direction of the arrow (counterclockwise) to release the transfer/separation charging assembly. Then, slide out the fixing feeding unit to the front.	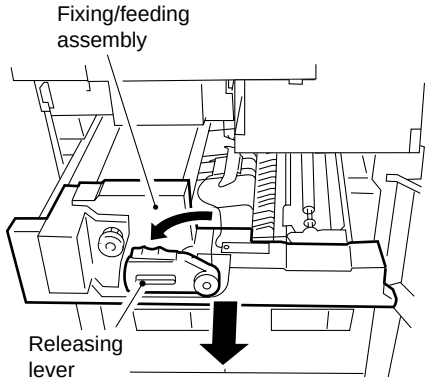
3	Remove the tag and the separation releasing block from the fixing/feeding assembly. **Caution:** Be sure to remove any foreign matter (glue from tape) from the feeding belt.	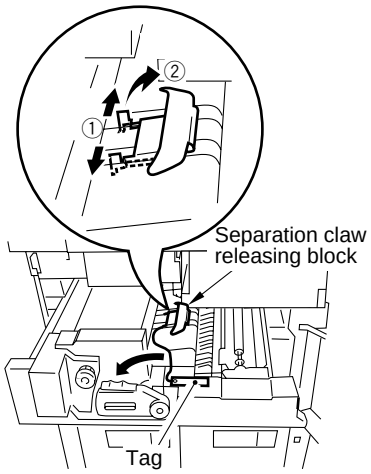
4	Remove the tag retaining tape, and open the fixing/delivery assembly.	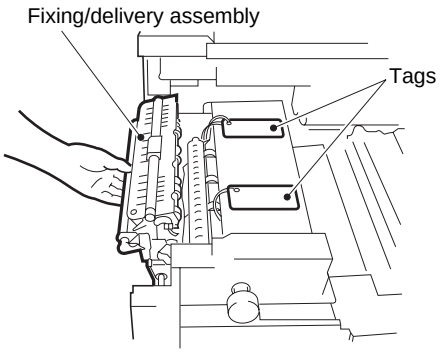

 COPYRIGHT © 1997 CANON INC. CANON NP6560/NP6360/NP6260 REV. 0 NOV. 1997 PRINTED IN JAPAN (IMPRIME AU JAPON)

Step	Work	Remarks
5	Remove the two fixing assembly nip releasing screws.	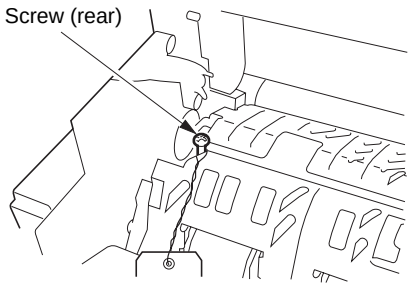 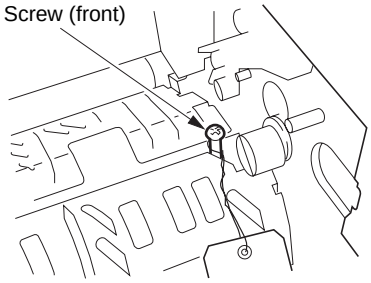
6	Close the fixing/delivery assembly.	

D. Installing the AP Kit and the Charging Assemblies

Step	Work	Remarks
1	While pushing the rear (fixing/feeding assembly inside) of the releasing lever locking shaft, shift up the releasing lever. Remove the two screws, and remove the feeding assembly front cover.	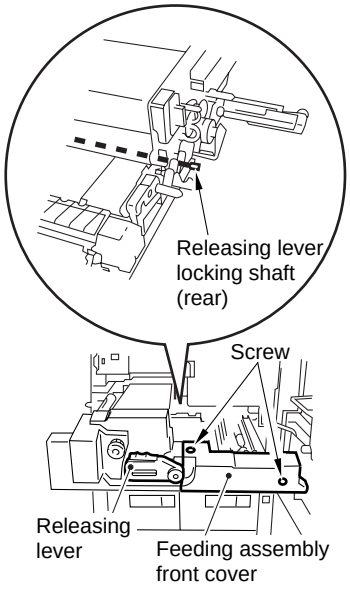
2	Remove the screw, and remove the metal fixing; then, disconnect the connector. Holding the front and the rear of the transfer/separation charging assembly, pull the assembly to the front, and then pull it to the upper left to remove. Using alcohol, clean the transfer/separation charging assembly. Install the transfer/separation charging assembly, connect the connector. Install the metal fixing. **Caution:** Be sure to keep the transfer/separation charging assembly in contact with the transfer guide, and take care not to damage the gut wire. Further, be sure that the charging assembly is fully dry.	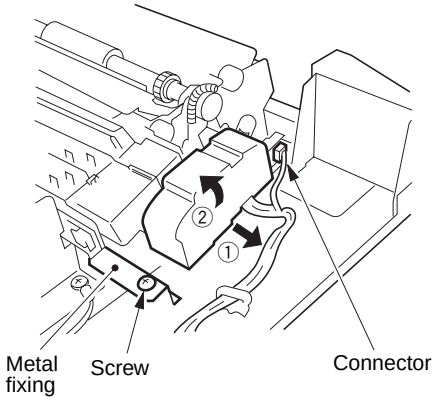

 COPYRIGHT © 1997 CANON INC. CANON NP6560/NP6360/NP6260 REV. 0 NOV. 1997 PRINTED IN JAPAN (IMPRIME AU JAPON)

Step	Work	Remarks
3	Install the feeding assembly front cover with two screws. While pushing the rear (fixing/feeding assembly inside) of the releasing lever locking shaft; then, lock the lever in place (lever to the left). Slide the fixing/feeding assembly into the machine; then, lock it in place with the lever.	
4	Remove the tag tape; then open the multifeeder door and the upper right door, and remove the screw from the door tape (door stopper) of the front door (so that the front door will not close the hopper when the hopper is opened.)	
5	Open the hopper cover, and remove the three screws and the connector cover.	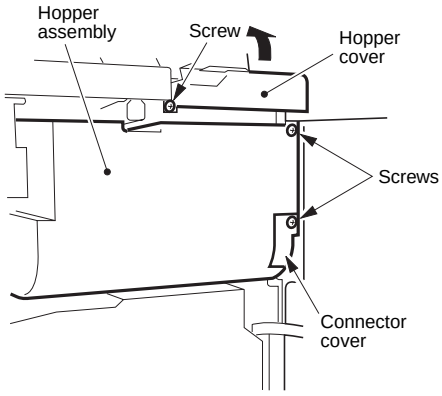
6	Disconnect the connector, and release the hopper assembly.	
7	Slide out the hopper assembly to the front, and turn it 90° to the front right.	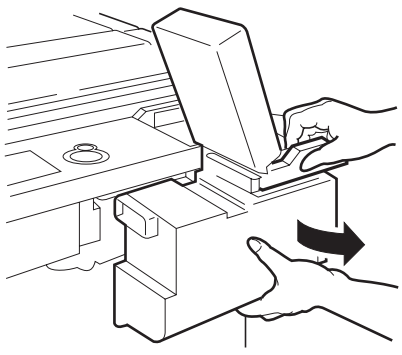

Step	Work	Remarks
8	Disconnect the connector, and loosen the screw; then, move the charging assembly metal fixing in the direction of the arrow (upper right), and fix it in place with a screw. Remove the primary charging assembly. Using alcohol, clean the primary charging assembly.	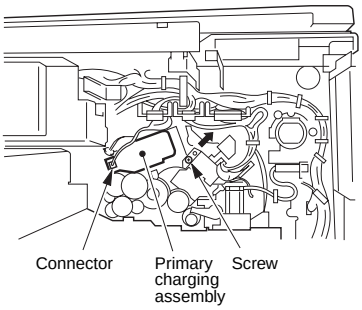
9	Disconnect the connector, and remove the screw. Then, slide out the pre-transfer charging assembly. Using alcohol, clean the pre-transfer charging assembly.	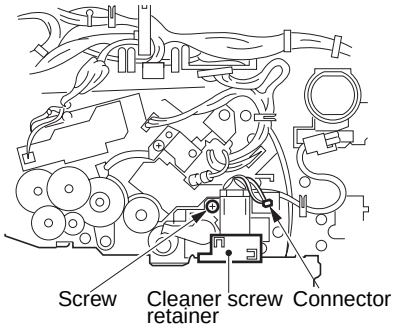
10	Disconnect the four connectors, and remove the two screws. (You will remove the drum fixing screw in step 11.) **Caution:** Free the harness from the edge saddle.	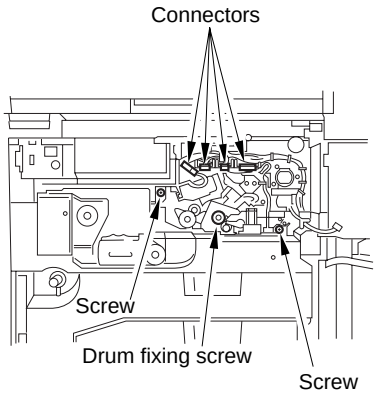

 COPYRIGHT © 1997 CANON INC. CANON NP6560/NP6360/NP6260 REV. 0 NOV. 1997 PRINTED IN JAPAN (IMPRIME AU JAPON)

Step	Work	Remarks
11	Insert the drum rotating tool into the cut-in of the drum shaft. While holding the rotating tool so as to prevent the drum from rotating counterclockwise, remove the drum fixing screw and the drum fixing (cut-in member). **Caution:** 1. If you let the drum to rotate counterclockwise, the cleaning blade will not be in contact with the drum correctly, causing cleaning faults. To prevent such faults, be sure to hold the drum in place before removing the drum fixing screw. 2. Do not expose the photosensitive drum to light for longer than 30 min. 3. Do not ever expose the photosensitive drum to direct rays of the sun. 4. Whenever placing the photosensitive drum or the process unit outside the machine, be sure to cover it with six or more sheets of copy paper to protect it against light.	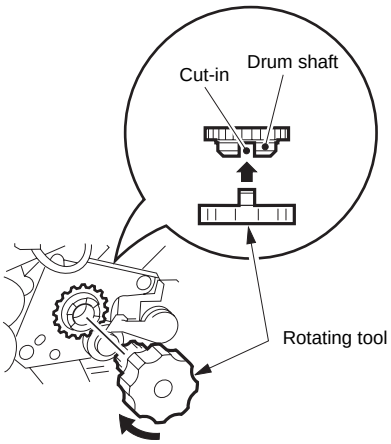
12	Slide out the fixing/feeding assembly while paying attention to the hopper. Place the drum protection sheet that comes with the machine to protect the rubber roller of the registration roller assembly and the drum.	
13	Slide out the process unit to the front, and insert the drum rotating tool that comes with the machine into the front of the drum shaft; while rotating the drum clockwise, check to make sure that the drum is free of damage.	

COPYRIGHT © 1997 CANON INC.

Step	Work	Remarks
14	Slide the process unit into the machine; then, using the drum rotating tool, match the cut-in of the drum shaft and the cut-in of the drum. Thereafter, insert the drum fixing (cut-in member) to hold the drum in place with the drum rotating tool, and insert the screw in the tool to fix it in place.	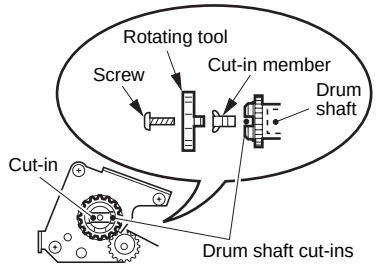
15	Remove the drum protection sheet from the fixing/feeding assembly, and slide the fixing/feeding assembly into the machine.	
16	Fix the process unit in place with two mounting screws, and connect the four connectors. Slide the primary charging assembly and the pre-transfer charging assembly; then, fix them in place. Put the harness in the edge saddle.	**Caution:** 1. Check to make sure that each charging assembly is fully dry. 2. When inserting the pre-transfer charging assembly, keep it in parallel to the process unit so as to avoid damage to the surface of the roller electrode. 3. Check to make sure that the one-way arm of the pre-transfer assembly is securely on the eccentric cam.
17	Close the hopper assembly, and connect the connector of the hopper. Keep the connector cover, and fix it in place with a screw; fix the hopper unit in place with two screws; then, fix the end of the door tape in place with a screw.	**Caution:** Check to make sure that the connector is connected before installing the hopper assembly.

 COPYRIGHT © 1997 CANON INC.

Step	Work	Remarks
18	Remove the two screws, and remove the cover from the lower rear right of the copier. You will be using the drum protection sheet when servicing the process unit; remove dirt, if any, keep it together with the drum rotating tool near the waste toner case (behind the machine). (Keep the drum rotating tool in the hole of the grip found above the waste toner case together with the toner case cap.) **Caution:** Do not roll the drum protection sheet.	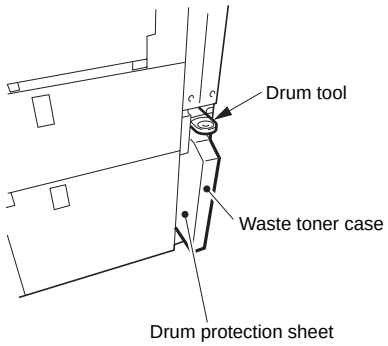
19	Install the lower rear right cover of the machine.	

E. Installing the Copy Tray

1. Replacing the Delivery Roller Leaf Spring

When removing the stapler sorter or the sorter from the machine (i.e., to use the copy tray), you must replace the two leaf springs of the delivery roller with leaf springs (weaker spring pressure) identified with a green sticker.

When installing a stapler sorter or a sorter to the machine, check to find out if the two leaf springs at the center are stronger than the two leaf springs on the sides; if so, do not perform the steps that follow.

Step	Work	Remarks
1	Remove the two screws, and remove the cover from the fixing/delivery assembly.	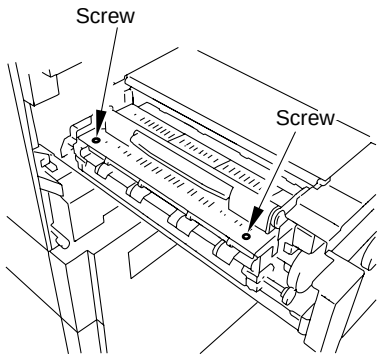
2	Remove the screw, and remove the two leaf springs (w/ rolls) at the center; then, separate the leaf springs and the roll.	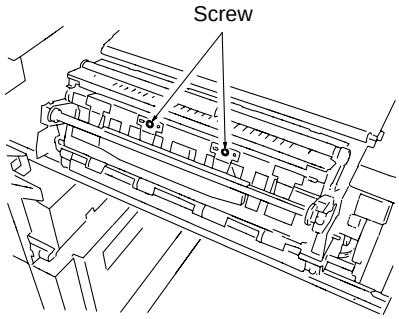
3	Fit the roll to the leaf spring that comes with the machine, and install the leaf spring to the fixing/delivery assembly.	
4	Install the cover to the fixing/delivery assembly (2 screws), and slide in the fixing/delivery assembly into the machine, and close the front door.	

 COPYRIGHT © 1997 CANON INC. CANON NP6560/NP6360/NP6260 REV. 0 NOV. 1997 PRINTED IN JAPAN (IMPRIME AU JAPON)

F. Checking the Developing Assembly

Step	Work	Remarks
1	Open the multifeeder tray. Open the multifeeder door, and remove the screw from the door tape.	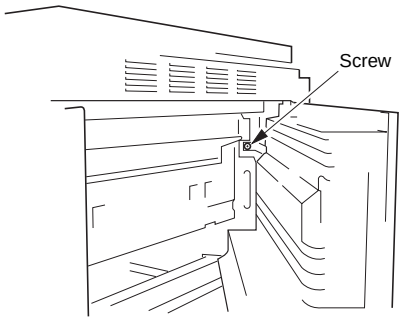
2	Remove the screw, and slide the developing assembly locking unit in the direction of the arrow (rear) to remove.	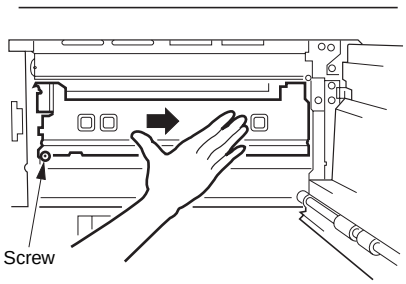
3	Take the developing assembly out of the shipping box. Check the surface of the cylinder for scratches while turning the developing cylinder gear by hand.	
4	Holding the center (grip pocket) of the developing assembly, install it to the machine. Connect the connector. **Caution:** When installing the developing assembly, insert it from above so that the developing cylinder will not come into contact with the metal plate of the developing assembly mount.	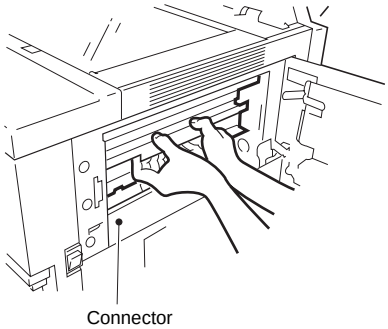

COPYRIGHT © 1997 CANON INC.

Step	Work	Remarks
5	Insert the developing assembly locking unit from the right side (rear); when, it is horizontal, insert it to the left side (front). Fix the developing assembly locking unit with a screw.	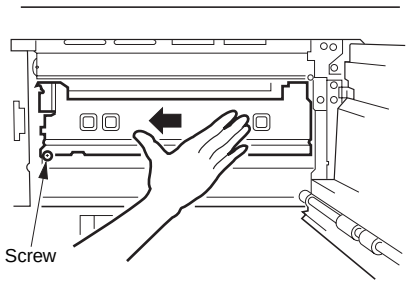
6	Install the door tape of the multifeeder door with a screw.	

 COPYRIGHT © 1997 CANON INC. CANON NP6560/NP6360/NP6260 REV. 0 NOV. 1997 PRINTED IN JAPAN (IMPRIME AU JAPON)

G. Installing the Pick-Up Assembly

For the 4-cassette type, skip steps 3, 4, 5, 6,7, and 8.

Step	Work	Remarks
1	Open the multifeeder; then, holding the grip of the multifeeder, open the multifeeder door. Shift the lever in the direction of the arrow, and remove the pick-up roller pressure releasing spacer.	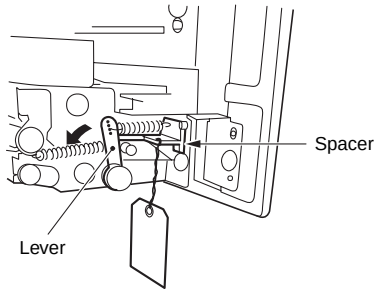
2	Slide the right deck/cassette halfway out, and open the upper right cover and the lower right cover; then, remove the pick-up roller pressure releasing spacer of the right deck (cassettes 3 and 4). **Reference:** If the cassette is set, the spacer is locked in place and makes removal difficult.	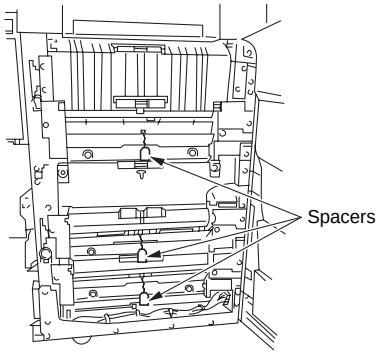 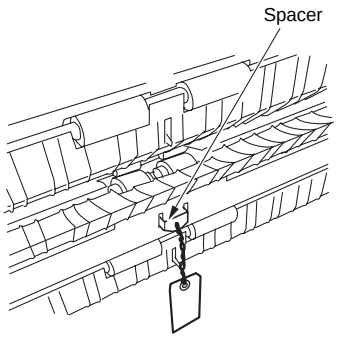

COPYRIGHT © 1997 CANON INC.

Step	Work	Remarks
3	Slide out the right deck until it stops, and remove the right/left stopper up.	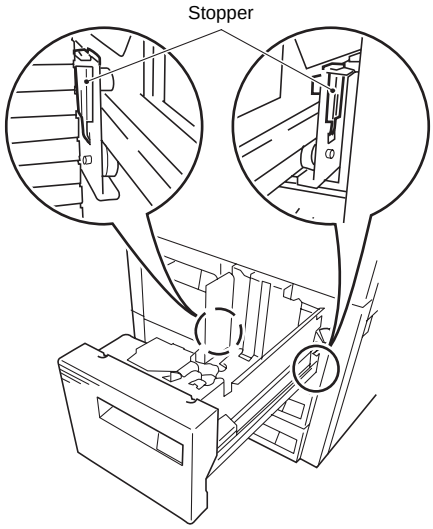
4	Lift the right deck off the machine and onto the floor.	
5	Slide out the left deck halfway, and remove the pressure releasing spacer from the right deck side.	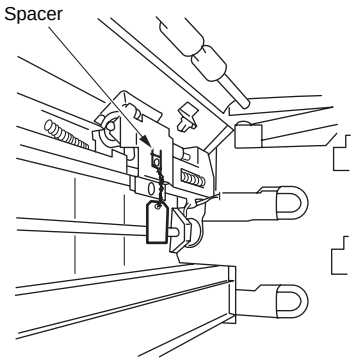
6	Push in the left deck.	
7	Insert the right deck into the machine, and install the left/right stopper.	
8	Push in the right deck/cassette, and close the upper right cover, lower right cover, and multifeeder.	

 COPYRIGHT © 1997 CANON INC.

H. Supplying Toner

Step	Work	Remarks
1	Check to find out the orientation (left/right) of the toner bottle mouth.	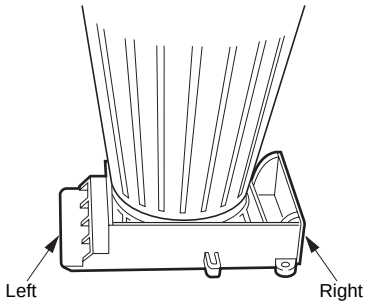
2	Shake the toner bottle ten or more times vigorously.	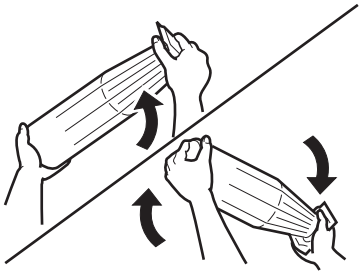
3	Open the hopper cover, and fit the boss on the tip of the toner bottle in the groove of the toner supply mouth. • The toner supply mouth and the toner bottle lock into position.	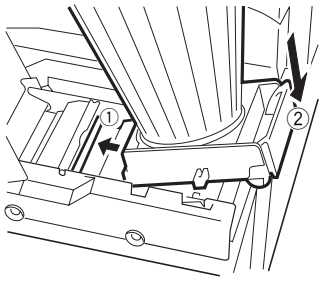

COPYRIGHT © 1997 CANON INC.

Step	Work	Remarks
4	Holding the shutter (black) of the machine on the right side of the toner supply mouth of the hopper, pull it to the right. Keep pulling until the shutter stops.	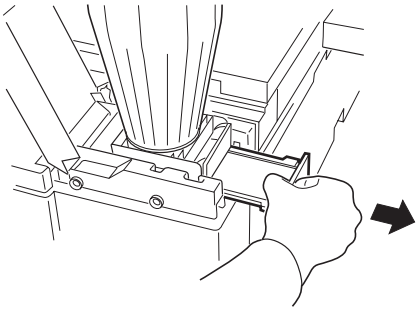
5	Pull the shutter on the toner bottle side to the right.	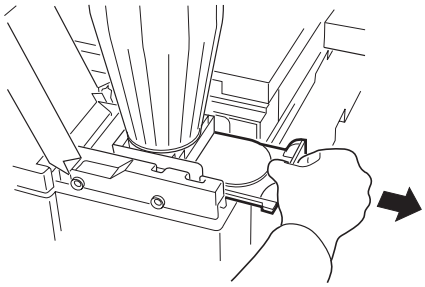
6	Toner starts to fall from the toner bottle to the hopper; tap lightly on the bottom of the toner bottle until all toner has fallen.	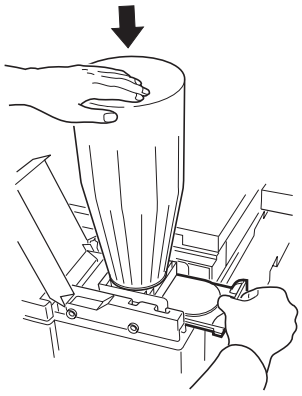

COPYRIGHT © 1997 CANON INC.

Step	Work	Remarks
7	Holding the shutter of the toner bottle, push it to the left until it stops.	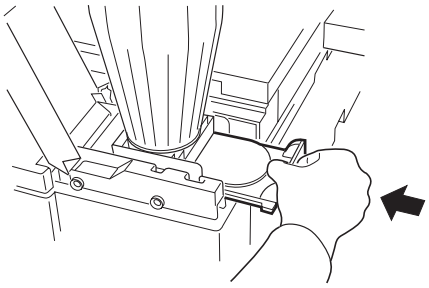
8	Holding the shutter on the machine, push it to the left until it stops.	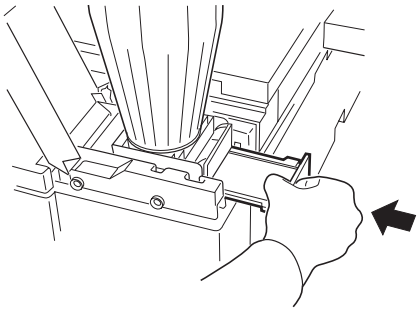
9	Push the shutter on the machine until it is at ⏮ indicated on the hopper assembly. • The toner bottle gets unlocked.	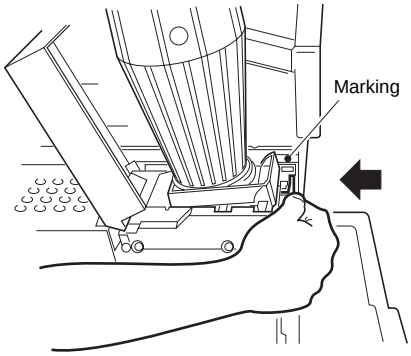

COPYRIGHT © 1997 CANON INC.

Step	Work	Remarks
10	Pull the toner bottle in the left upward direction, and remove it upward.	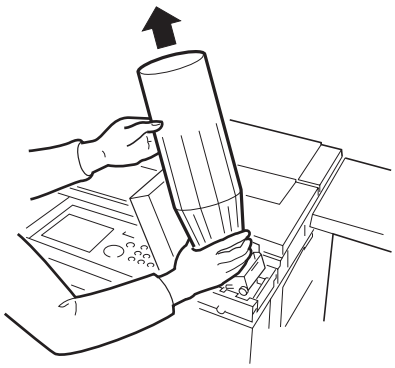
11	Close the hopper cover.	

COPYRIGHT © 1997 CANON INC.

I. Connecting the RDF Connector

Step	Work	Remarks
1	Remove the face plate of the RDF connector.	
2	Insert the RDF connector (male) to the connector (female) of the machine.	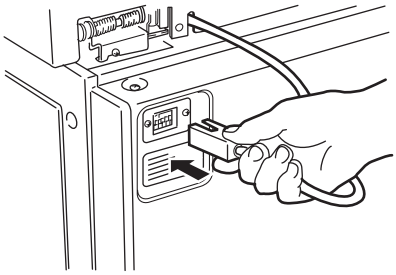

COPYRIGHT © 1997 CANON INC.

J. Image/Operation Checks and User Mode

Step	Work	Remarks
1	Connect the power plug to the power outlet, and insert the door switch actuator into the door switch assembly of the front door.	
2	Slide out the holding tray and the holding tray feeding assembly, and check to make sure that the parts are not damaged or soiled with foreign matter.	
3	Slide out the paper deck and the cassette to the front, and remove the packing materials.	**Caution:** Be sure to remove all packing materials before turning on the power.
4	Fit the side guide plate of cassette 4 using the hole with the marking (A4/A3). Install the size protect tab that comes with the machine working from inside the cassette so that the hole with the marking A (STRMT-R) and the hole with the marking H (LTR-R) are out of view. **Caution:** Skip this step if you are using Inch-configured paper.	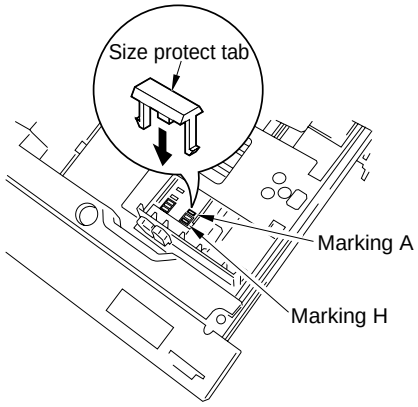
5	Turn on the power.	• Adjust the contrast of the control panel using the Display contrast key for better viewing. (Advise the user how to use the key.) • Check that the Add Paper indicator turns on. • Enter a number (keypad) to check that the copy count display is correct. (Press the Clear key thereafter.)

 COPYRIGHT © 1997 CANON INC. CANON NP6560/NP6360/NP6260 REV. 0 NOV. 1997 PRINTED IN JAPAN (IMPRIME AU JAPON)

Step	Work	Remarks
6	Adjust the size guide plate to suit the needs of the user, and place copy paper in the cassette and the paper deck.	
7	Attach the appropriate stickers to the paper size plate of the paper deck and the cassettes.	
8	Slide the cassette and the paper deck into the machine.	
9	Attach the variable size cassette sticker to the cassette 4 to suit the user's needs.	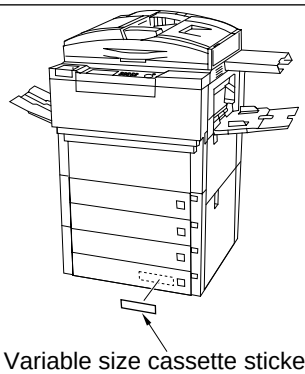 Variable size cassette sticker
10	Insert the copy tray to the copier.	
11	When the wait period ends, start service mode. (Press the service switch with a clip through the hole in the inside upper left cover.) Select 'TONER-S' (*4*), and press the user mode key *. ↓ Check that 'CHECK THE DEVELOPER' is indicated. ↓ After making sure that the developing assembly is installed, press the OK key. ↓ Press the user mode key *. ↓ Toner is supplied (from hopper to develop); (about 8 to 10 min). ↓ ↓ Press the Reset key twice to leave service mode.	• Close the front door so that the inside is free of light. • The mode lasts about 10 min (max.) to supply toner from the hopper to the developing assembly. **Caution:** Do NOT turn off the power while the machine is operating.

Step	Work	Remarks
12	Perform the following while toner is being supplied. 1. Remove the screw used to keep the center of the right cover in place, and install the original tray to the machine (right) with two stepped screws. (You will not be using the removed screw.) 2. Attach the mode memory sheet to the cover of the toner supply mouth. **Reference:** If you find installing the original tray difficult, loosen the two mounting screws and start over.	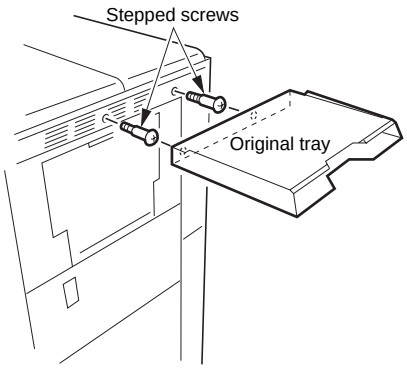
13	Attach the Manual Feed Instructions label to the manual feed tray of the RDF.	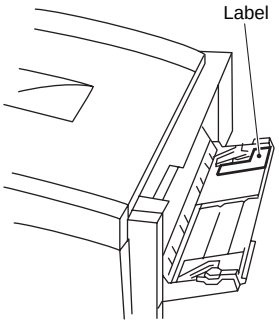
14	When the toner supply operation has ended, place the Test Sheet on the copyboard, make copies, and check the copy images. At times, toner can fall from the drum separation claws, soiling the initial ten or so copies. (This phenomenon will disappear as copies are made.) Check to make sure that pick-up from each source is normal.	• Check to make sure that no abnormal sound is heard. • Check images of copies made at each default ratio. • Check to make sure that as many copies as set are made. • If there is a difference in density between left and right, adjust the height of the rear of the primary charging wire to correct.
15	Make two-sided/overlay copies.	• Check to make sure that copying operation is normal. • Check to make sure that abnormal noise is not heard. • Check to make sure that paper feeding in the holding tray assembly is normal.

 COPYRIGHT © 1997 CANON INC.

Step	Work	Remarks
16	Set appropriate settings for the standard mode to suit the needs of the user in user mode and service mode (*5*). (Press the Reset key twice to end service mode.)	For service mode (*5*), see p. 11-242.
17	Remove the door switch actuator, and install the door tape (door stopper); then, close the front door.	
18	Clean up the area around the machine.	
19	Move the machine to the site of installation, and adjust the two adjusters.	
20	As necessary, turn ON the drum heater switch (by pushing it on the right side) to suit the environment.	
21	Store away the grip after removing it from the front of the pick-up side under the grip of the rear of the pick-up side. Install the four covers (3 large, 1 small) of the grip assembly.	
22	As necessary, install the accessories (sorter, etc.) according to their respective Installation Procedure.	
23	Fill out the Service Sheet.	

COPYRIGHT © 1997 CANON INC.

K. Image/Operation Checks and User Mode

Step	Work	Remarks
1	Press the releasing button, and slide out the cassette.	
2	While squeezing the tabs inside the hooks, lift the cover of the side guide plate to remove. (You need not perform with step for cassette 4.)	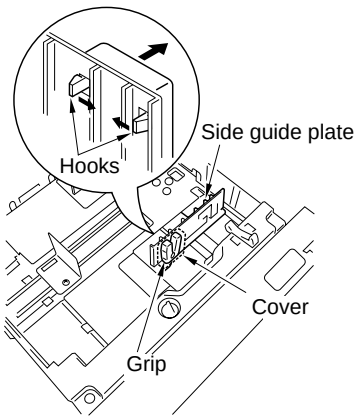
3	Hold the grip of the side guide plate, and slide it to suit the desired size.	
4	Install the cover of the side guide plate. (You need not perform this step for cassette 4.)	
5	Remove the screw from the rear guide plate, and move the rear guide plate to the desired index; then, fix it in place. (In the case of cassette 4, hold the grip of the rear guide plate, and slide it to suit the desired size.) If the paper is A3 or 11x17 in size, install the rear guide plate by orienting it as shown. (In the case of cassette 4, hold the grip of the rear guide plate, and slide it fully to the left; then, shift down the grip to the right.)	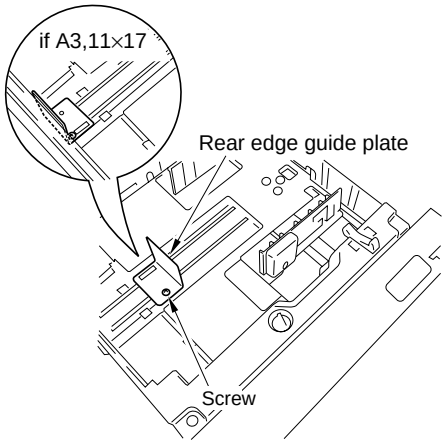
6	Put copy paper in the cassette.	
7	Attach the new size sticker to the paper size indicating plate of the cassette.	
8	Slide the cassette into the copier.	
9	For cassettes 3, start service mode (*5*), and enter the paper size using CST-SZ3. (Skip this step for cassette 4.)	

 COPYRIGHT © 1997 CANON INC. CANON NP6560/NP6360/NP6260 REV. 0 NOV. 1997 PRINTED IN JAPAN (IMPRIME AU JAPON)

III. RELOCATING THE MACHINE

If you must relocate the machine after installation by truck or other means of transportation, perform the following steps:

Step	Work	Checks	Remarks
1	Make a copy in Direct.		
2	Remove all copy paper from the left/right paper deck and each cassette.		
3	Turn off the power switch, and disconnect the power plug from the power outlet.	Check to make sure that the lens is within lens hood.	
4	Fix the No. 2 mirror mount in place with the locking plate from the left cover side.	Check to make sure that the No. 2 mirror mount will not move.	
5	Remove the developing assembly.	Ship the developing assembly separately.	
6	Tape the following in place so that they will not be shaken out of place during transport: transfer charging assembly, fixing/feeding unit assembly releasing lever, holding tray assembly, and holding tray feeding assembly.		
7	Tape the following in place: front door, hopper cover, each cassette, left/right paper deck cover, and machine right door (upper/lower).		
8	Place A3 copy paper on the copyboard glass, and tape the copyboard cover or the RDF in place.		

Caution:

A. Observe the following if you are using stairs when moving the machine into or out of the user's:
1. Be sure to remove the fixing/feeding unit assembly, holding tray, and copy paper; and ship them separately from the machine. (If an RDF is installed, be sure to detach it also.)
2. When lifting the machine, do not use the grips on the pick-up assembly/delivery assembly; rather, support it at the four corners of its bottom.

B. Check to make sure that the two adjusters (front) on the bottom of the machine are facing up and released. The adjusters can slip out; take care not to lose them.

C. When moving the machine in and out of the site of installation, be sure to remove the Paper Deck-A1 (accessory).

COPYRIGHT © 1997 CANON INC.

IV. INSTALLING THE CONTROL CARD V

1) Open the RDF, and remove the three mounting screws ① and three metal fixings ② (catch for RDF).

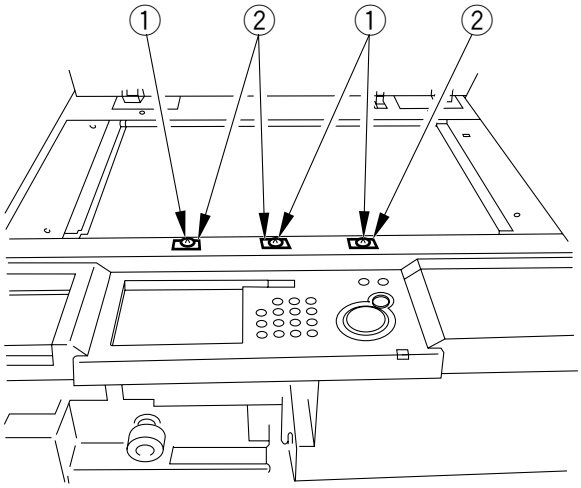

Figure 9-401

2) Remove the three screws ③ at the front of the upper right cover of the machine.

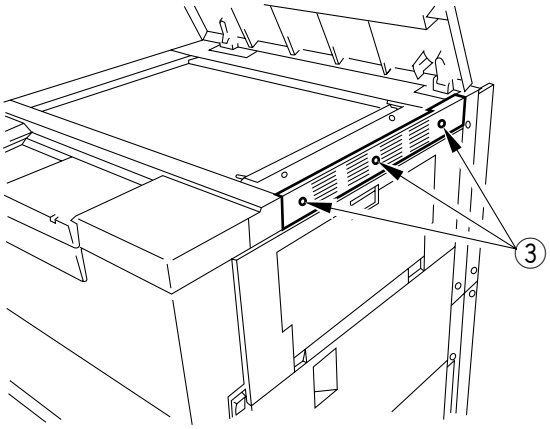

Figure 9-402

 COPYRIGHT © 1997 CANON INC. CANON NP6560/NP6360/NP6260 REV. 0 NOV. 1997 PRINTED IN JAPAN (IMPRIME AU JAPON)

3) Remove the screw ④ from the control panel.

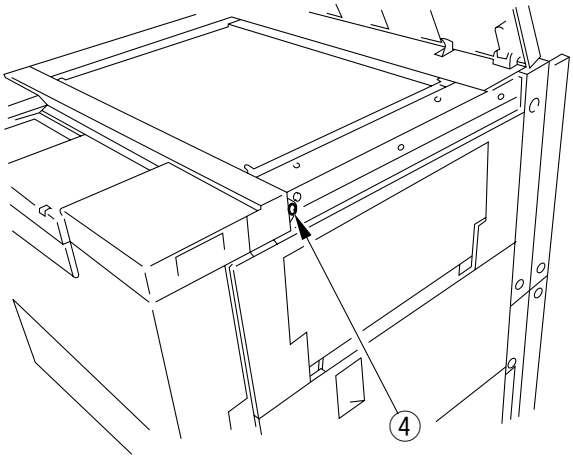

Figure 9-403

4) Open the front door, and open the hopper cover. Remove the three screws ⑤ and the connector cover ⑥; then, disconnect the connector and slide out the hopper assembly ⑦ to the front and rotate it.

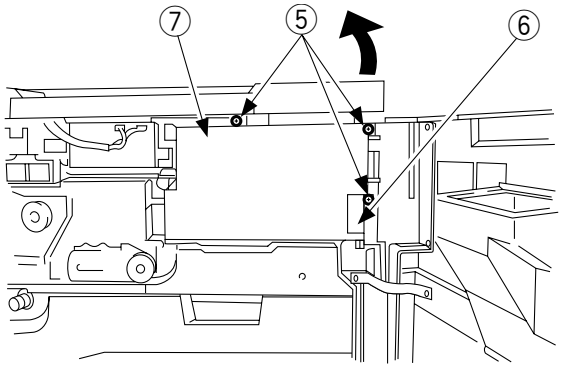

Figure 9-404

5) Shift the fixing/feeding assembly releasing lever ⑧ from vertical to horizontal position, and slide out the fixing/feeding assembly ⑨.

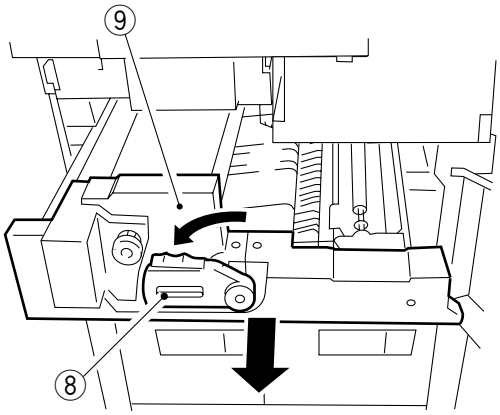

Figure 9-405

6) Remove the three screws ⑩, and remove the inside upper cover ⑪; then, slide in the fixing/feeding assembly.

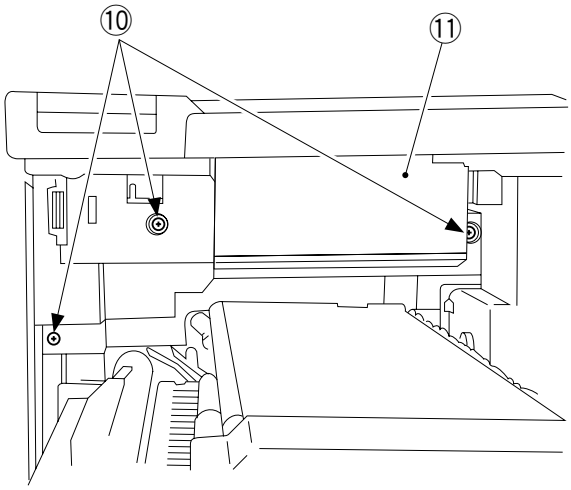

Figure 9-406

7) Remove the three screws ⑫; then, remove the control panel, and turn it over.

Caution:

Take care not to damage the surface of the control panel by the chassis of the machine.

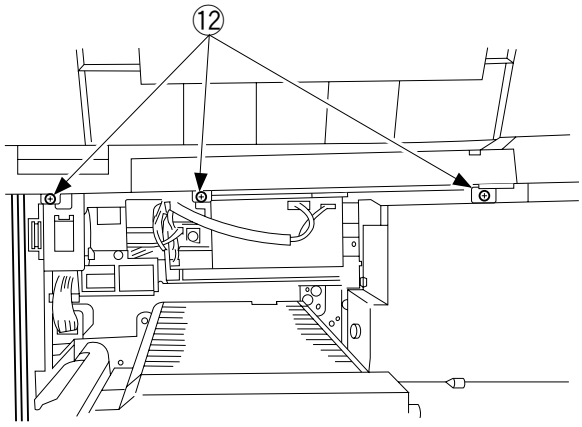

Figure 9-407

 COPYRIGHT © 1997 CANON INC. CANON NP6560/NP6360/NP6260 REV. 0 NOV. 1997 PRINTED IN JAPAN (IMPRIME AU JAPON)

8) Remove the four self-tapping screws ⑬, and shift the control panel PCB cover ⑭ about 5 mm to the right to remove.

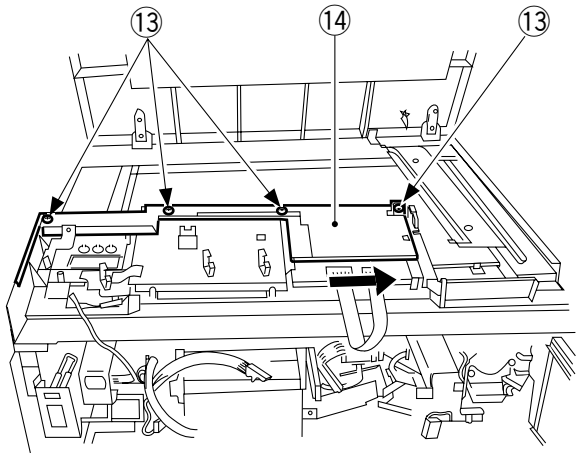

Figure 9-408

9) Remove the control card inlet face plate ⑮.

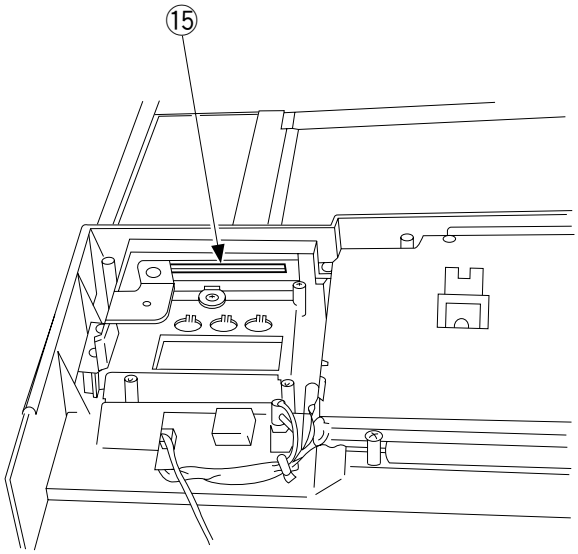

Figure 9-409

10) Remove the screw ⑯ from the face plate.

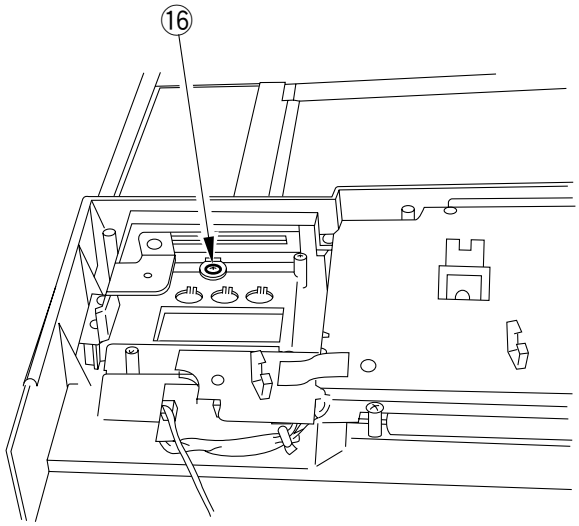

Figure 9-410

11) Place the sheet ⑰ over the hole in the control panel (display hole of the control card).

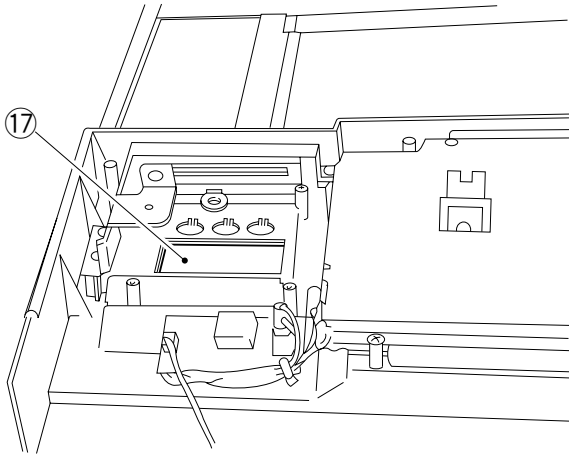

Figure 9-411

 COPYRIGHT © 1997 CANON INC. CANON NP6560/NP6360/NP6260 REV. 0 NOV. 1997 PRINTED IN JAPAN (IMPRIME AU JAPON)

12) Remove the protective sheet from the display of the control card.
13) Fix the control card in place with four screws ⑱. At this time, insert a card into the control card, and fix the control card in place where the card can be slid in and out smoothly.

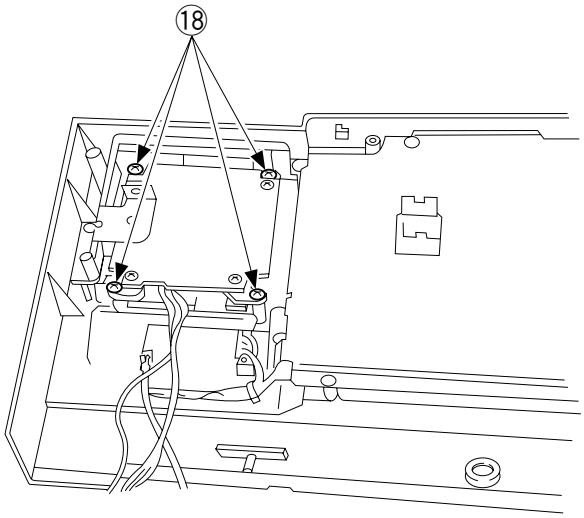

Figure 9-412

Further, check to make sure that the connector ⑲ for the printer is centered over the hole.

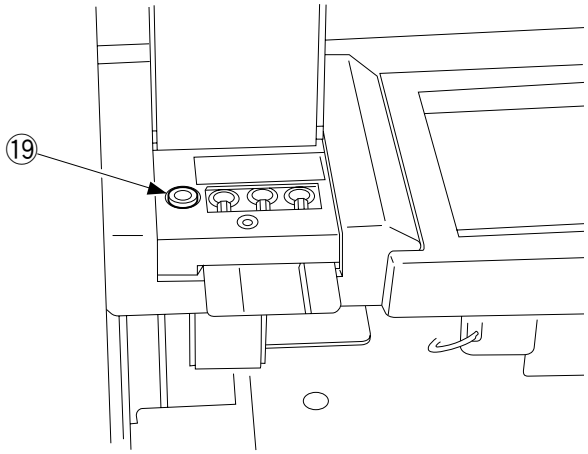

Figure 9-413

COPYRIGHT © 1997 CANON INC.

14) Install the grounding wire ⑳ of the control card as shown in Figure 9-414.

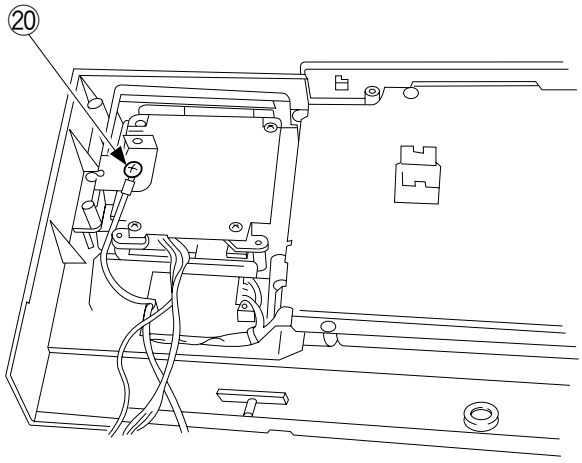

Figure 9-414

15) Disconnect the shorting connector ㉑ shown in Figure 9-415.

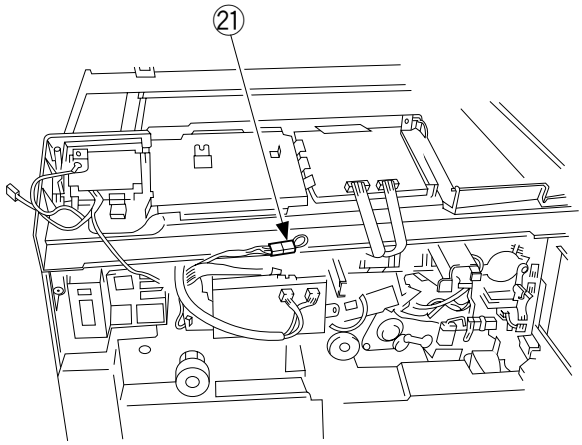

Figure 9-415

16) Connect the 4P connector of the machine and the 4P connector of the control card.

Caution:

Be sure to lead the harness through the harness retainer so that it will not come into contact with the scanner cable or the drive pulley.

 COPYRIGHT © 1997 CANON INC.

17) Remove the protective sheet from the control panel plate of the control card.
18) Install the control panel plate ㉒ of the control card to the control panel of the machine.

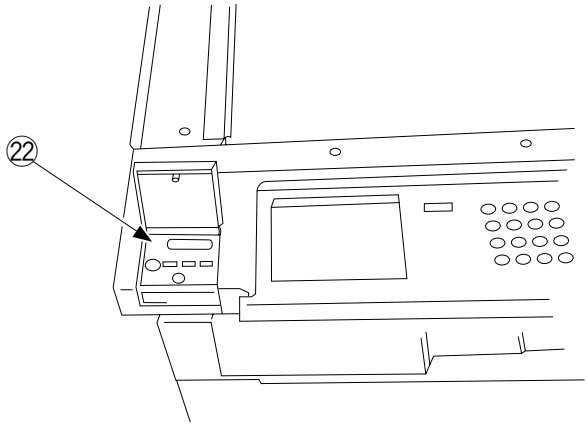

Figure 9-416

19) Install the control panel to the machine.
20) Install the hopper and the cover to the machine.

Caution:

When installing the hopper assembly, check to make sure that the connector is connected.

21) Turn on the machine, and check the operation of the control card.

V. INSTALLING THE COPY DATA CONTROLLER-A1

Note:
The Copy Data Controller-A1 is not available in certain sales areas.

A. Setting the Board

1) Remove the two screws, and remove the top cover.

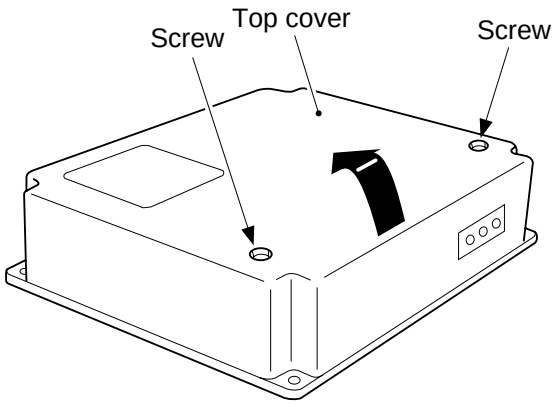

Figure 9-501

2) Set the DIP switch (SW1, SW5) on the Copy Data Controller-A1 according to the needs of the user.

2-1) Set the DIP switch (SW1-4) according to the type of copier.

2-2) If control by group is desired, set the DIP switch (SW5-2) according to the control paper size.
- To control AB-configuration paper (A3, A4, B4, B5), shift it to OFF.
- To control inch-configuration paper (11 × 17, LTR, LGL, STMT), shift it to ON.

COPYRIGHT © 1997 CANON INC.
CANON NP6560/NP6360/NP6260 REV. 0 NOV. 1997 PRINTED IN JAPAN (IMPRIME AU JAPON)

	Bit	Position	Description	Remarks
SW1	1~3	OFF	Selects normal operation.	
	4	ON	Selects IPC communication.	If this model.
		OFF	Selects serial communication.	If existing machine.
	5	ON	Selects the use of a central control device.	Requires a Copy Data Interface Board-B1.
		OFF	Selects normal operation or remote control using commercially available modems.	Requires a commercially available modem and a Copy Data Interface Board-B1 if remote control using commercially available modems is desired.
	6	ON	RAM clear.	
		OFF	Selects normal operation.	
SW5	1	ON	For factory use.	
		OFF	Selects normal operation.	
	2	ON	Selects control of inch-configured (11 × 17, LTR, LGL, STMT) paper.	To select a size other than those on the left, use service mode. See 10) under “C. Checking Operation.”
		OFF	Selects AB-configured (A3, A4, B4, B5) paper.	
	3	ON	Selects service mode operation.	
		OFF	Selects normal operation.	
	4	ON	Selects group control.	See Note.
		OFF	De-selects group control.	
	5, 6	OFF	Reserved.	

Note:
Set the DIP switch (SW5-4) to OFF if the user intends to use Control Card V or only use remote control by the Copy Data Controller-A1, i.e., if the user wants no more than such functions as ID input, control by paper size, control by toner color, control by copying mode, and control by paper type.

Table 9-501

COPYRIGHT © 1997 CANON INC.

2-3) If the user does not want control by group, set the DIP switch (SW5-4) to OFF.
If you are connecting a Copy Data Interface Board-B1, Remote Diagnostic Unit-A1, or Copy Data Interface Board-A1, see A. “Setting the Board” in the appropriate Installation Procedure.

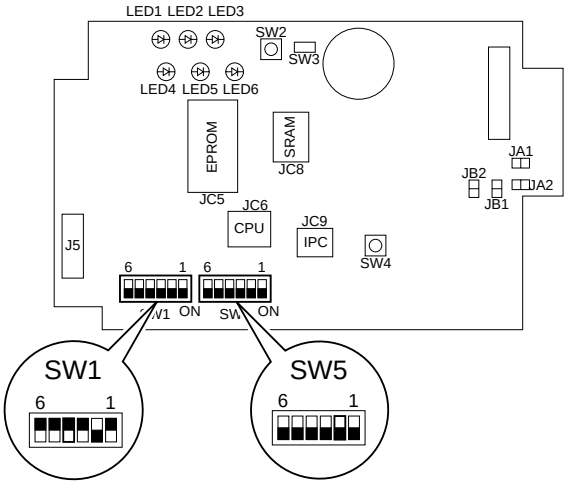

Figure 9-502

3) Set the jumper connectors (JA1, JA2, JB1, JB2) on the Copy Data Controller-A1 according to the specifications of the user.

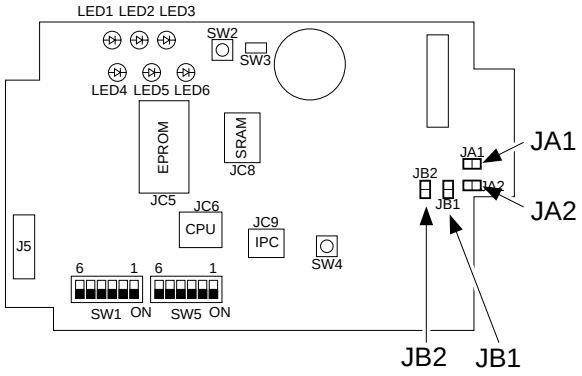

Figure 9-503

a. If you are connecting a Remote Diagnostic Unit-A1 or a Copy Data Interface Board-B1, i.e., if a Power Supply-A1 is necessary,

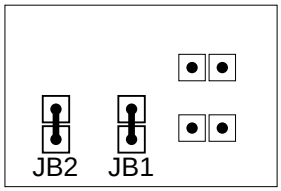

Figure 9-504

 COPYRIGHT © 1997 CANON INC. CANON NP6560/NP6360/NP6260 REV. 0 NOV. 1997 PRINTED IN JAPAN (IMPRIME AU JAPON)

b. If you are not connecting a Remote Diagnostic Unit-A1 or a Copy Data Interface Board-B1, i.e., if a Power Supply-A1 is not necessary,

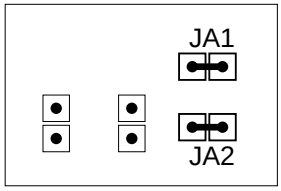

Figure 9-505

4) If the user will be using a card reader, connect the card reader relay cable to the Copy Data Controller-A1 J4 (9p).

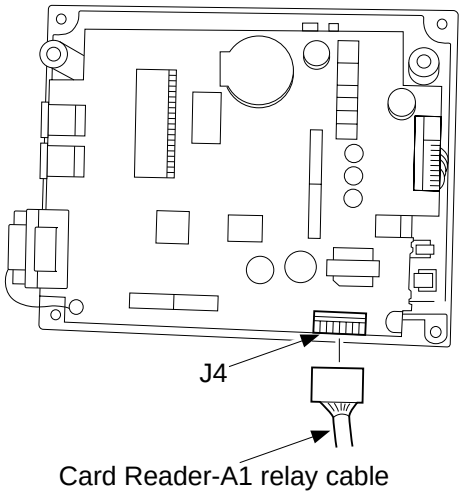

Figure 9-506

B. Installing to the Copier

Keep the following in mind when installing the Copy Data Controller-A1 to the copier:

1. Observe the laws and regulations of the country.
2. Make sure that the copier has been properly installed before starting the work.
3. Make sure that the copier's power plug is disconnected during the work.
4. Identify the type of screw (length, diameter), and be sure to use the correct screws.
5. Prepare settings data in advance on a computer at the service station. (This applies only when remote control is desired.)

1) Remove the four screws, and remove the face plate from the copier's rear cover.

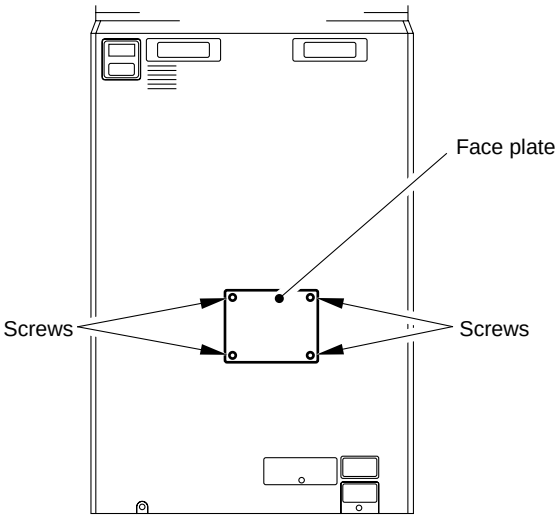

Figure 9-507

2) Remove the relay postheader from the cable, and connect it directly to the connector on the copier's DC controller PCB.

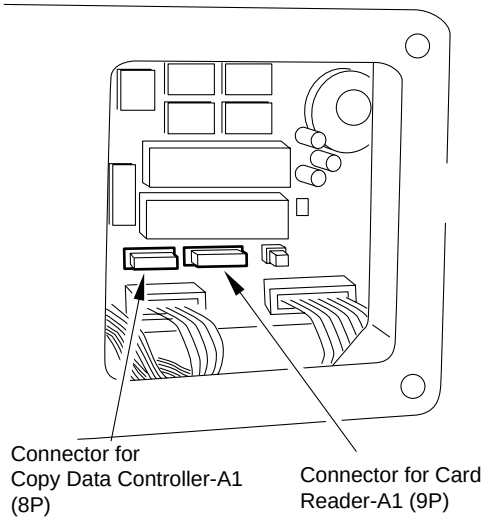

Figure 9-508

 COPYRIGHT © 1997 CANON INC.

3) If the user will be using a Card Reader-A1, connect the Card Reader-A1 relay cable directly to the connector on the copier's DC controller PCB.
   (At this time, disconnect the relay postheader from the relay cable.)
4) Fix the Copy Data Controller-A1 to the copier's rear cover with four screws.

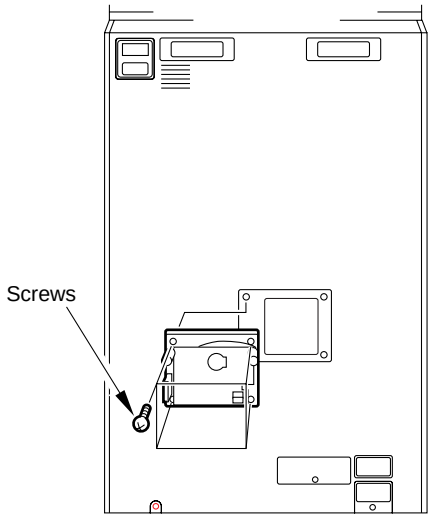

Figure 9-509

COPYRIGHT © 1997 CANON INC.

C. Checking the Operation

1) If you are not connecting a Remote Diagnostic Unit-A1 or a Copy Data iterface Board-B1, i.e., if a Power Supply-A1 is not necessary, go to step 4).
Connect the connector of the Power Supply-A1 to the connector of the Copy Data Controller-A1 as indicated.
(Make sure that the cord is in the groove of the board.)

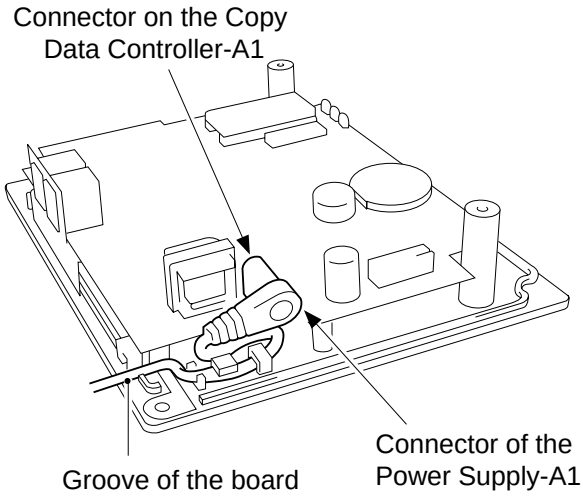

Figure 9-510

2) Connect the Power Supply-A1 to the power plug, and check that LED1 on the Copy Data Controller-A1 turns on.

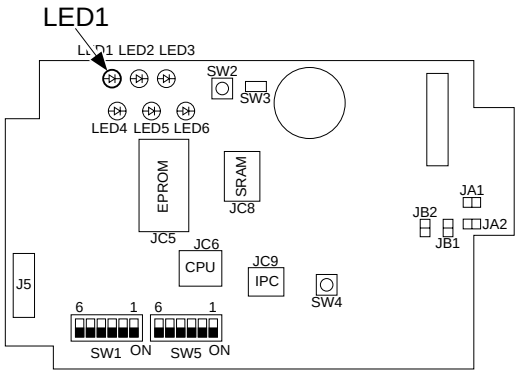

Figure 9-511

 COPYRIGHT © 1997 CANON INC. CANON NP6560/NP6360/NP6260 REV. 0 NOV. 1997 PRINTED IN JAPAN (IMPRIME AU JAPON)

3) Turn on the copier's main switch, and check that LED2 on the Copy Data Controller-A1 flashes.
Make one copy, and check that LED3 flashes during copying operation.

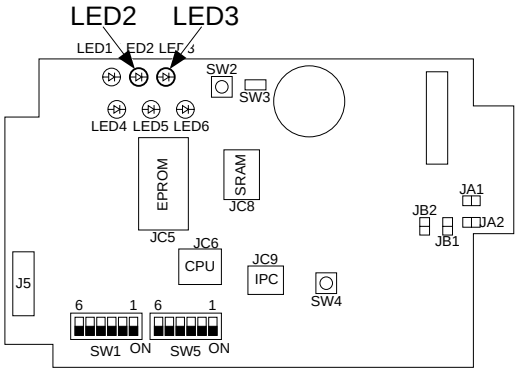

Figure 9-512

4) If you are connecting a Remote Diagnostic Unit-A1 or a Copy Data Interface Board-B1, i.e., if a Power Supply-A1 is necessary, go to step 5).
Turn on the copier's main switch, and check that LED1 turns on and LED2 flashes on the Copy Data Controller-A1.
Make one copy, and check that LED3 flashes during copying operation.

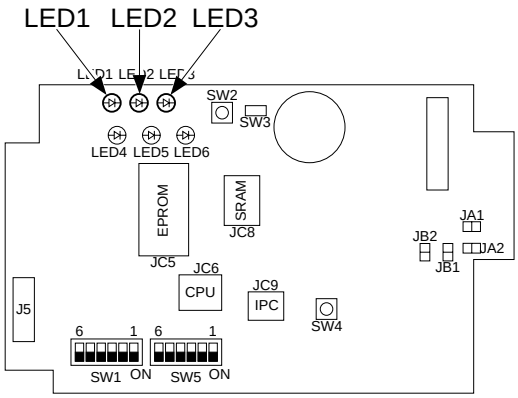

Figure 9-513

5) If the user does not want group control, go to step 11).
Set the mode of input, type of control, and paper size according to the needs of the user.
Shift the DIP switch (SW5-3) on the Copy Data Controller-A1 to ON.

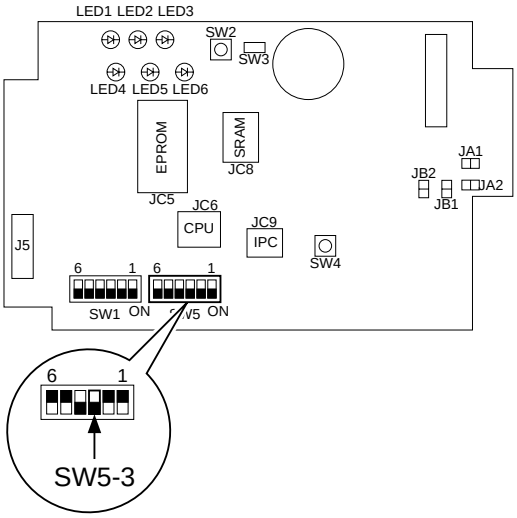

Figure 9-514

6) Connect the connector of the Ten Key Pad-A1 to the connector (J3) on the Copy Data Controller-A1.

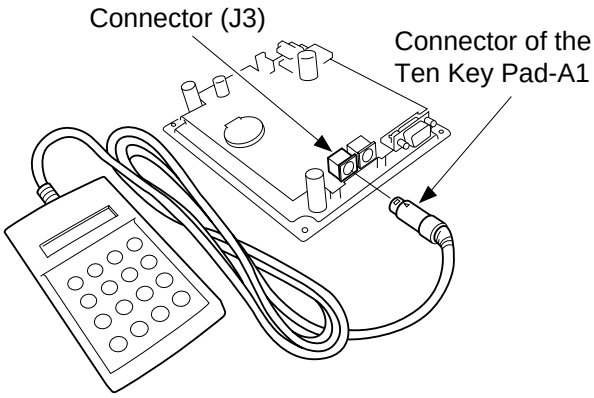

Figure 9-515

 COPYRIGHT © 1997 CANON INC. CANON NP6560/NP6360/NP6260 REV. 0 NOV. 1997 PRINTED IN JAPAN (IMPRIME AU JAPON)

7) Push the switch (SW2) on the Copy Data Controller-A1 to enter service mode.

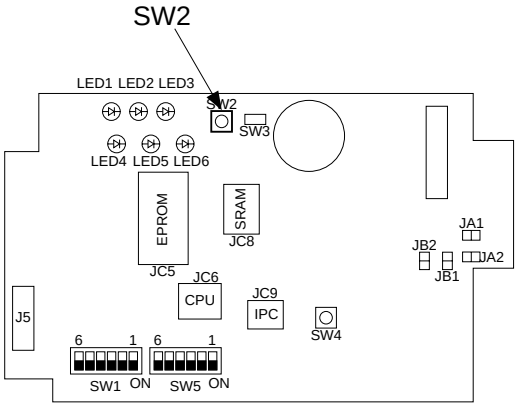

Figure 9-516

8) Set the mode of input as follows:

8-1) Select card or ID input using the Ten Key Pad-A1. (The default is card input.)

8-2) To change from card input to ID input, operate as follows:
To change from ID to card* input, go to step 8-4).
*You will need a Card Reader-A1.
MANAGE=CARD appears.

8-3) Press the ② key, and press the ENT key.
The display will show MANAGE=ID.

8-4) To change to card input, press the ① key when the display shows MANAGE=ID; then, press the ENT key.
The display will show MANAGE=CARD.

Code	Input mode
1	Card
2	ID

Table 9-502

Note:

1. Setting the DIP switch (SW5-4) on the Copy Data Controller-A1 to OFF de-selects group control, and the display will be as follows:



Figure 9-517

2. If ID mode has been stored in the copier's memory, you can use that ID for the Copy Data Controller-A1. To do so, operate as follows:

COPYRIGHT © 1997 CANON INC.

■ Using an Existing ID

a) Set the DIP switch (SW1) on the Copy Data Controller-A1 as indicated:

	Bit	Position
SW1	1, 2	ON
	3	OFF

Table 9-503

b) Press the switch (SW4) on the Copy Data Controller-A1.
LED5 turns on for a brief moment when the data has been drawn successfully.

c) LED5 flashes if the attempt to draw the data fails. Press the switch (SW4) once again, and check that LED5 turns on.
The copier cannot deliver paper while data is being drawn.

d) Set the DIP switch (SW1) on the Copy Data Controller-A1 as follows. (LED5 should go out.)

	Bit	Position
SW1	1, 2, 3	OFF

Table 9-504

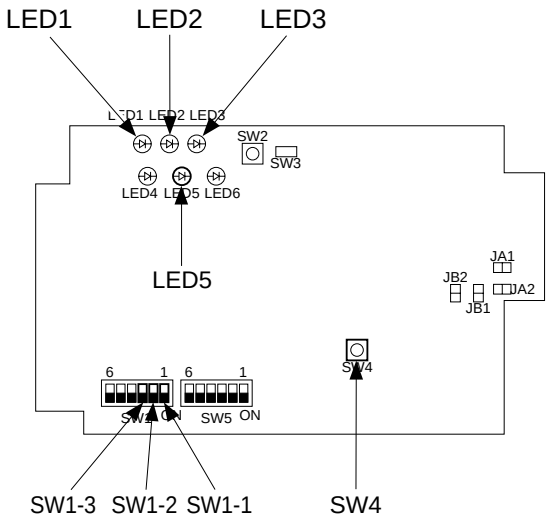

Figure 9-518

COPYRIGHT © 1997 CANON INC.

9) Set the mode of control.
9-1) Set the mode of control using the Ten Key Pad-A1.
Press ▽/△ until the display shows FORMAT=1.
9-2) According to the type of copier and the specifications of the user, set the mode of control as indicated. (The default is '1'.)

No.	No. of groups	Paper size	Mode
1	3000	5	—
2	1000	5	one-sided/two-sided
3	1000	5	mono/2-color/full-color

Table 9-505

9-3) To select '3' as the mode of control, for example,
1. The display shows FORMAT=1. Since the default is '1', change it to '3'.
Press the 3 key.
A press on the C key clears the input, allowing you to try again.
A press on the ESC key cancels the operation.
2. When the display shows FORMAT=3_, press the ENT key.
3. The display shows FORMAT=3_, and the cursor flashes for a while to indicate that formatting is under way. Then, the cursor stops flashing to indicate that '3' has been selected for the mode of control.

Note:
Setting a new mode of control clears such data as the unit price, upper limit, counter reading, and ID. Set them again as necessary.

10) Set the control paper size.

10-1) Use the DIP switch on the Copy Data Controller-A1 and the Ten Key Pad-A1 to change the control paper size. If the default represents the control paper size, go to step 11).

10-2) Use the ▽/△ key to scan through the paper sizes. (However, control paper size 5 'OTH' cannot be changed and is not displayed.)

EX1:

1. The display shows SIZE 1 =A3.
2. Press the ▽ key.
3. The display shows SIZE 2 =A4.
4. Press the ▽ key.
5. The display shows SIZE 3 =B4.
6. Press the ▽ key.
7. The display shows SIZE 4 =B5.
8. Press the △ key.
9. The display shows SIZE 3 =B4.
10. Press the △ key.
11. The display shows SIZE 2 =A4.

EX2:

To change B4 to LGL, control paper size 3,

1. Press the ▽/△ key so that the display shows SIZE 3 =B4.
2. Look for the value that represents LGL from Table 9-506 (conversion table); press ① ③.
3. The display shows SIZE 3 =13.
4. Press the ENT key.
5. The display shows SIZE 3 =LGL to indicate the end of the operation.

Note:

1. You cannot make multiple paper size codes for SIZE1 through 4.
2. The counter reading remains intact after changing the size.

COPYRIGHT © 1997 CANON INC.
CANON NP6560/NP6360/NP6260 REV. 0 NOV. 1997 PRINTED IN JAPAN (IMPRIME AU JAPON)

10-3) Study the conversion table for paper codes.

Size	Code	Size	Code
B5	1	postcard (Jpn)	25
FOOLS	2	U LARGE 2	26
A4	3	GLTR	27
B4	5	10 × 8	28
A3	7	GLGL	29
U SMALL (US)	8	KLGL	33
STMT	9	OFFICIO	35
U LARGE (UL)	10	EOFFICIO	36
LTR	11	AOFFICIO	37
LGL	13	BOFFICIO	38
LDR (11 × 7)	15	ALT R	39
A5	17	ALGL	41
AFOOLS	18	12 × 18	48
A6	19	B3	49
FOLIO	21	A2	50
COMPUTER	23	17 × 22	51
U SMALL 2	24	18 × 24	52

Table 9-506

11) Check the DIP switch settings.
11-1) Shift the DIP switch (SW5-3) on the Copy Data Controller-A1 to OFF.
11-2) Press the ▽/△ key so that the display shows the setting of the DIP switch (SW1, SW5) on the Copy Data Controller-A1.

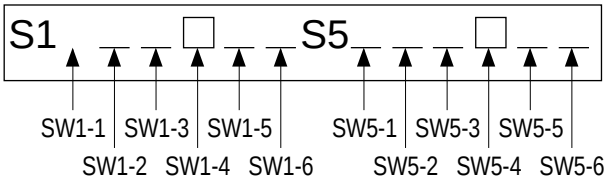

□: indicates that the bit is at ON.
__: indicates that the bit is at OFF.

Figure 9-519

11-3) Check the setting of the DIP switch (SW1, SW5) on the Copy Data Controller-A1. (See Table 9-501.)
If the setting is not correct, go to 3. “Setting the Board,” and make the correct setting.
If you are setting the Copy Data Interface Board-B1, Copy Data Interface Board-A1, or the Remote Diagnostic Unit-A1 as an option, see the appropriate Installation Procedure.

COPYRIGHT © 1997 CANON INC.

11-4) Press the switch (SW2).

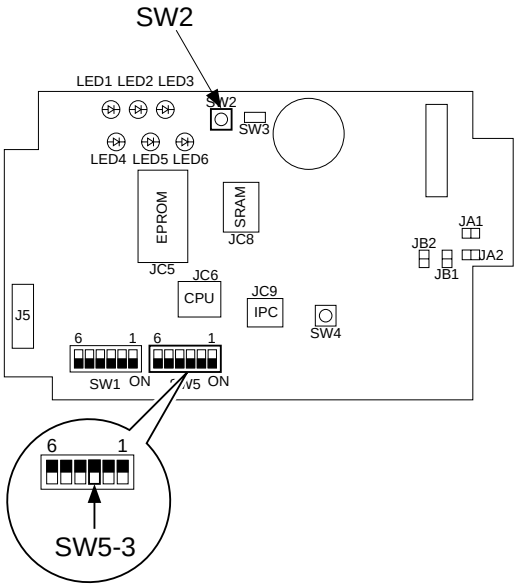

Figure 9-520

11-5) Check that the Ten Key Pad-A1 shows the following, and disconnect the Ten Key Pad-A1.



Figure 9-521

12) Attach the Switch Settings label to the top cover, and record the setting of each switch on the label.

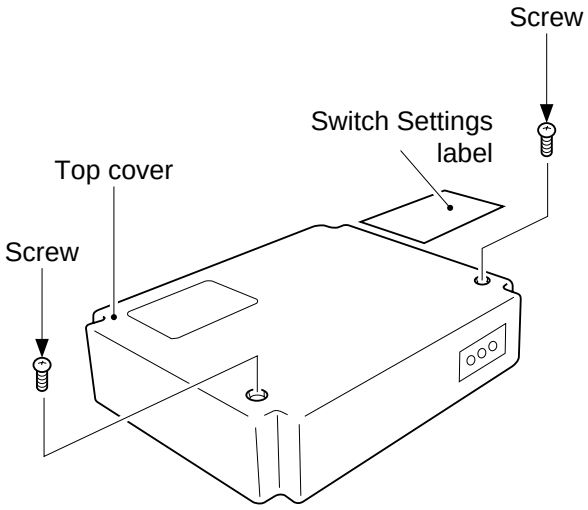

Figure 9-522

 COPYRIGHT © 1997 CANON INC. CANON NP6560/NP6360/NP6260 REV. 0 NOV. 1997 PRINTED IN JAPAN (IMPRIME AU JAPON)

13) Fix the top cover with two screws. (At this time, make sure that the cable of the power supply unit is fixed in place inside the Copy Data Controller-A1 and is not trapped by the top cover.)
14) If you are connecting the Control Card Printer A-1, connect it to the connector (J4) of Copy Data Controller-A1. (As necessary, use a relay cable.)
If off-line control is planned, connect it to the RS232C I/F connector of Copy Data Controller-A1.

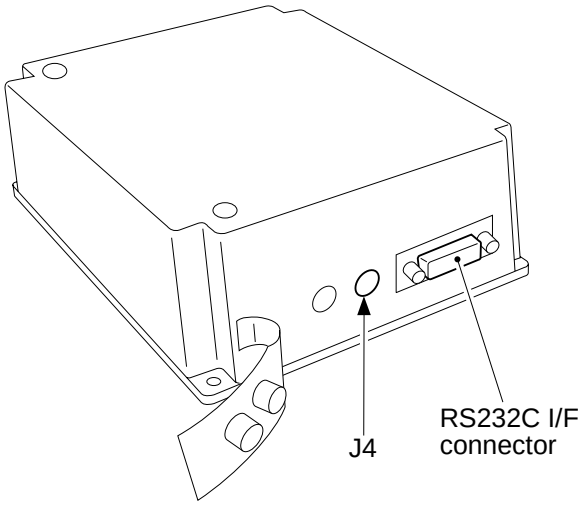

Figure 9-523

15) End the installation after making sure that no cable is outside of the Copy Data Controller-A1.
Put the petty-pull at the lower right of the copier's rear.

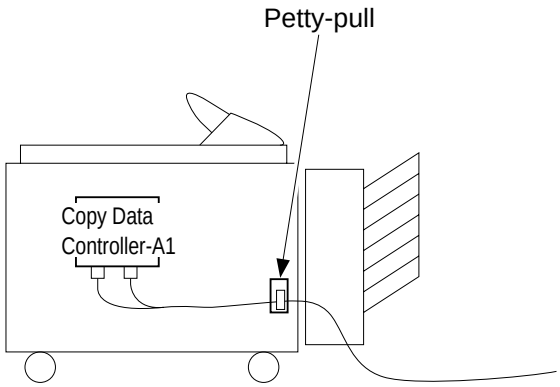

Figure 9-524

16) Hook the cable connected to the Copy Data Controller-A1 on the petty-pull.
17) Make sure that no cable is trapped by the casters of the copier or the sorter.

COPYRIGHT © 1997 CANON INC.

VI. INSTALLING THE REMOTE DIAGNOSTIC DEVICE II

Note:
The Remote Diagnostic Device II is not available in certain sales areas.

A. Installation to the Copier

Caution:
Keep the following in mind when installing the RDD to the copier:

1. This accessory is to be installed by a qualified personal.
2. Make sure the copier has been properly installed before starting the work.
3. Keep the copier's power cord disconnected during the work.
4. Be sure to use the appropriate screws (length, diameter).
5. Make sure the computer in the service station has been properly loaded with the RDD's settings data.

1) Remove the two screws ② to detach the RDD's top cover ①.

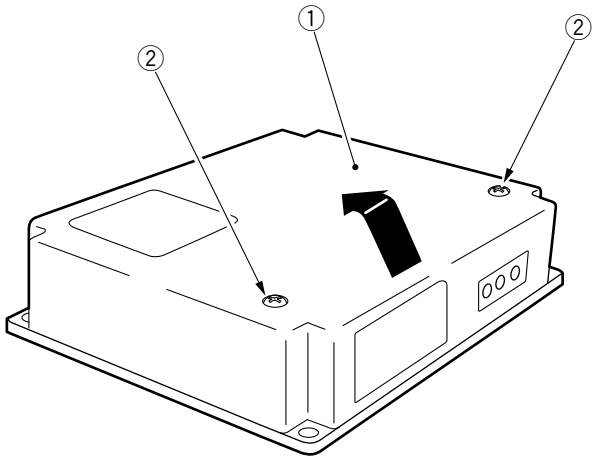

Figure 9-601

 COPYRIGHT © 1997 CANON INC.

2) Connect the Power Supply Unit's connector ③ to the RDD's connector ④ as shown.

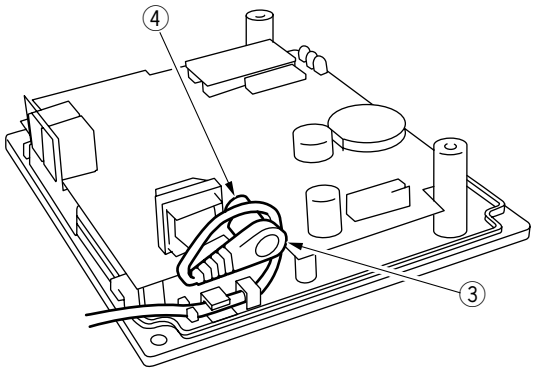

Figure 9-602

3) Remove the four screws ⑥, and detach the face cover ⑤ from the copier's rear cover.

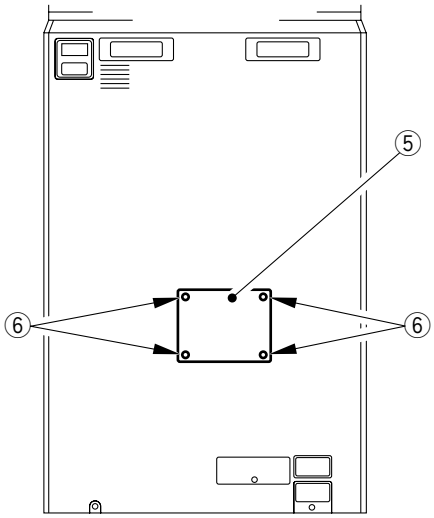

Figure 9-603

4) Connect the RDD's cable to the connector J128 on the copier's DC controller PCB.

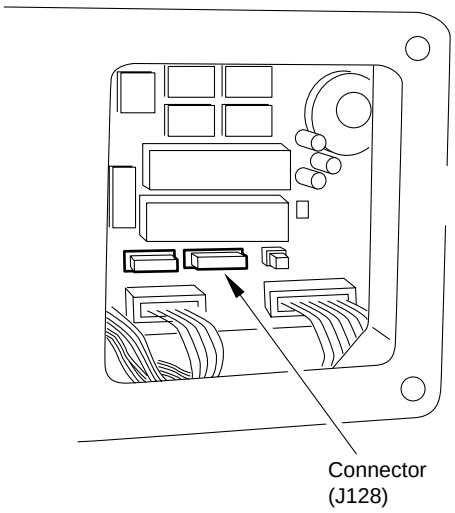

Figure 9-604

5) Fix the RDD in place on the copier's rear cover with four screws ⑦; use the screws that come with the RDD.

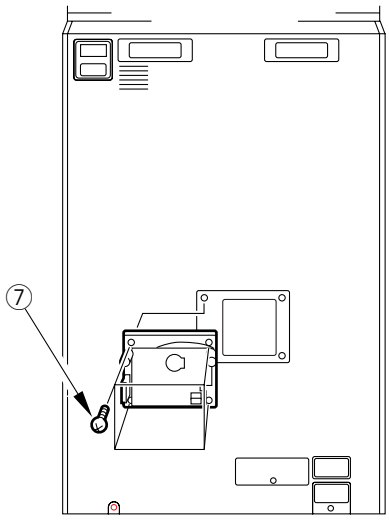

Figure 9-605

 COPYRIGHT © 1997 CANON INC.

6) Remove the slack from the cable between the copier and the RDD; keep the excess cable to the RDD using the harness band ⑧.

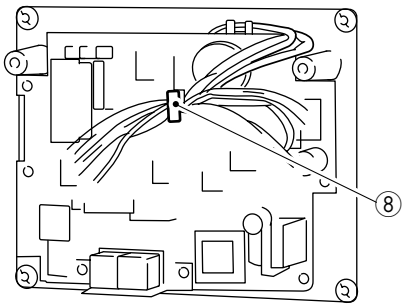

Figure 9-606

7) Shift bit 4 of the DIP switch 2 ⑨ to ON so that the communication mode between the RDD and the copier is IPC mode.

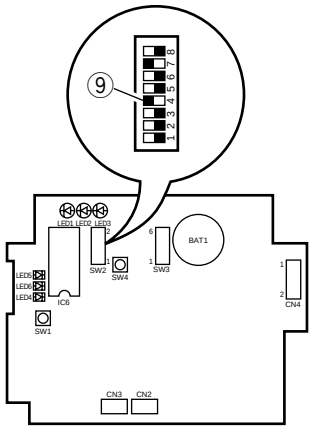

Figure 9-607

8) If the ROM IC6 ⑩ is mounted on the RDD's PCB, shift bit 7 of the DIP switch 2 ⑪ to ON; otherwise, shift bit 7 of the DIP switch 2 ⑪ to OFF.

Note:

1. If the ROM (IC6; ⑩) is not mounted, you need not mount it.
2. If you are mounting or replacing the ROM (IC6; ⑩) for upgrading the RDD, be sure to shift bit 7 of the DIP switch 2 ⑪ to ON.

COPYRIGHT © 1997 CANON INC.

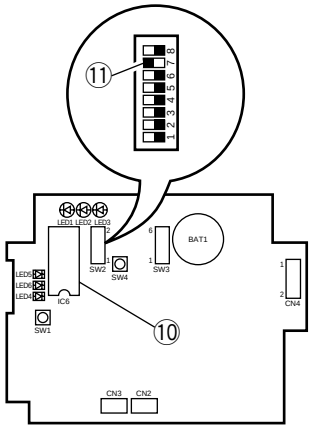

Figure 9-608

9) Set the bits of the DIP switch 3 ⑫ on the RDD's PCB as indicated in Table 9-601.

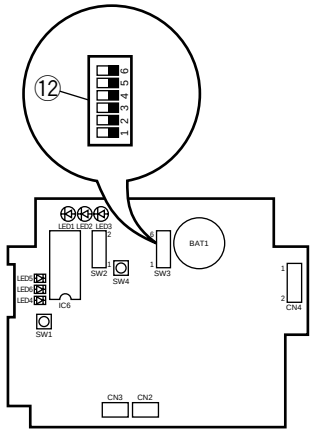

Figure 9-609

Switch	Setting	Description
SW3-1 SW3-2	AII OFF	
SW3-3	ON	
SW3-4	ON	selects push pulse for RDD circuit configuration
	OFF	selscts dial pulse for RDD circuit configuration
SW3-5	ON	sets dial pulse speed to 20 PPS
	OFF	sets dial pulse speed to 10 PPS
SW3-6	–	reserved

Table 9-601

 COPYRIGHT © 1997 CANON INC.

10) Fit the Power Supply Unit into the power plug, and check that LED 1 ⑬ (green) on the RDD's PCB comes on.

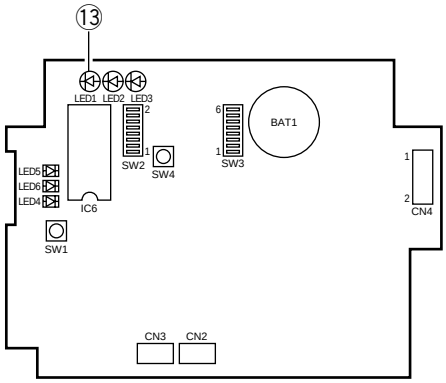

Figure 9-610

11) Reset the RDD's RAM.
Set the bits on the DIP switch 2 ⑭ on the RDD's PCB as indicated in the table, and press the push switch 4 ⑮ to make sure that LED5 ⑯ (red) comes on.

bits on SW2	Setting
SW2-1	OFF
SW2-2	OFF
SW2-3	ON
SW2-4	ON
SW2-5	OFF
SW2-6	OFF
SW2-7	See step 8).
SW2-8	OFF

Table 9-602

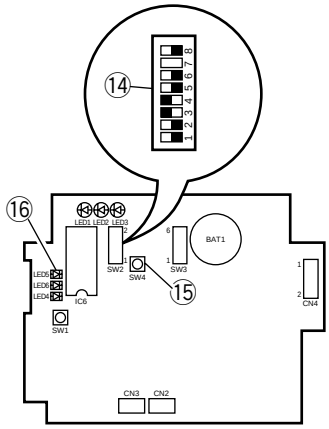

Figure 9-611

12) After making sure that LED5 ⑯ (red) has come on, set the bits on the DIP switch 2 ⑭ on the RDD's PCB as indicated in the table, and press the push switch 4 ⑮ to make sure that LED5 ⑯ (red) goes out, indicating that the RAM has been reset.

bits on SW2	Setting
SW2-1	OFF
SW2-2	OFF
SW2-3	OFF
SW2-4	ON
SW2-5	OFF
SW2-6	ON
SW2-7	See step 8).
SW2-8	OFF

Table 9-603

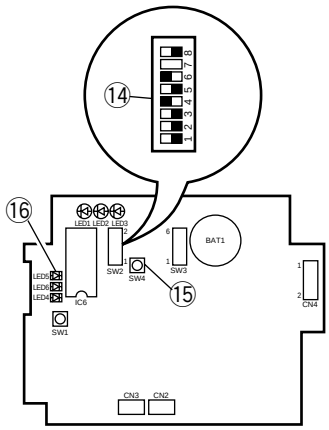

Figure 9-612

13) Shift bit 6 of the DIP switch 2 ⑰ on the RDD's PCB to OFF.

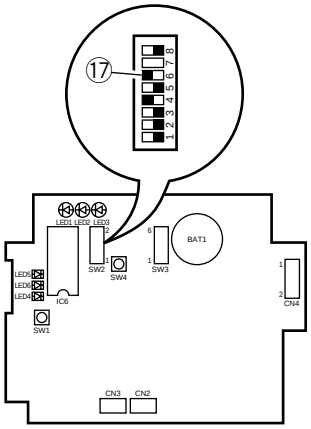

Figure 9-613

 COPYRIGHT © 1997 CANON INC.

14) Connect the RDD to the telephone line.
If you are connecting the RDD on its own, connect the modular jack cable to the RDD's connector ⑱ (LINE).
If you will be using the RDD's extra circuit, connect the existing telephone or fax machine to the RDD's connector ⑲ (TEL), and connect the telephone circuit to the RDD's connector ⑱ (LINE).

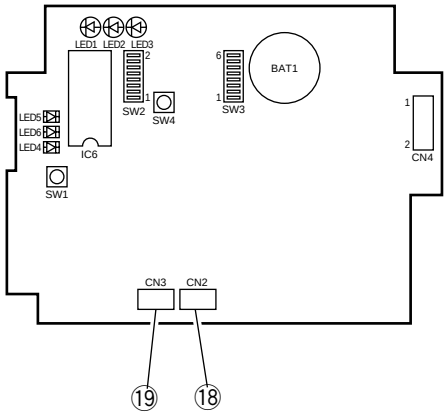

Figure 9-614

15) Call up the service station, and request the RDD's initial settings. (LED 4 ⑳ (red) starts to flash upon receipt.)

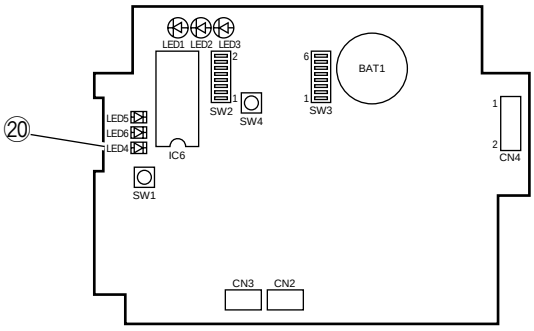

Figure 9-615

16) Call up the service station to check if the initial settings have been successfully made; if the attempt has failed, reset the RAM once again starting with step 11) through 13).

Important:

You must confirm that the RDD's settings are correct by calling the service station.

17) Check that you can place a telephone call from the RDD to the computer in the service station.
Press the push switch 4 ⑮. LED6 ㉑ (red) should come on; it will go out when transmission ends successfully, or will start to flash if transmission fails.
Retransmission is executed in response to a press on the push switch 4 ⑮ while LED6 ㉑ is flashing.
Transmission is canceled in response to a press on the push switch 1 ㉒ while LED6 ㉑ is flashing.

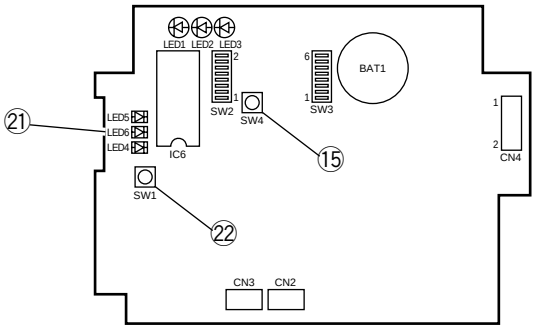

Figure 9-616

18) Check that the communications between the RDD and the copier are executed normally.
Connect the copier's power plug, and switch it on to make sure that LED 2 ㉓ (orange) flashes.

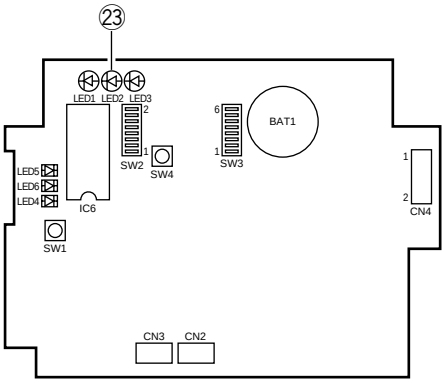

Figure 9-617

 COPYRIGHT © 1997 CANON INC.

19) Press the copier' COPY START key to make sure that LED3 ㉔ (pink) flashes each time a copy is delivered.

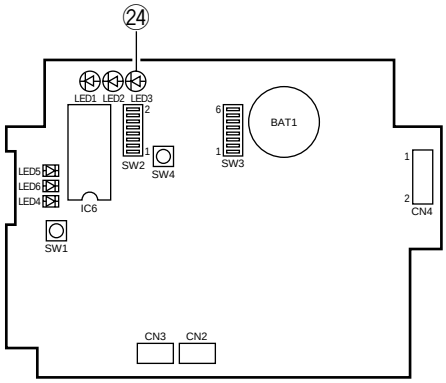

Figure 9-618

20) Attach the Switch setting label ㉕, to the RDD's top cover ①; then, record the setting of each switch on the label.

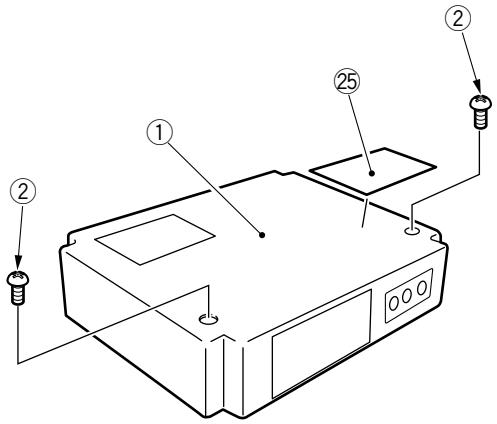

Figure 9-619

21) Fix the RDD's top cover ① in place using two screws ②. (Make sure that the Power Unit's cable is fixed in place on the cable guide inside the RDD and is not trapped by the top cover ①.)

COPYRIGHT © 1997 CANON INC.

 COPYRIGHT © 1997 CANON INC. CANON NP6560/NP6360/NP6260 REV. 0 NOV. 1997 PRINTED IN JAPAN (IMPRIME AU JAPON)

CHAPTER 10

MAINTENANCE AND INSPECTION

This chapter provides tables of periodically replaced parts and consumables/durables and scheduled servicing charts.

I. PERIODICALLY REPLACED PARTS....10-1
II. CONSUMABLES AND DURABLES...10-2
A. Copier.....10-2
B. Paper Deck-A1.....10-3
III. SCHEDULED SERVICING TABLE.....10-4
IV. SCHEDULED SERVICING CHART ...10-6
A. Copier.....10-6
B. Paper Deck-A1.....10-8

COPYRIGHT © 1997 CANON INC. CANON NP6560/NP6360/NP6260 REV. 0 NOV. 1997 PRINTED IN JAPAN (IMPRIME AU JAPON)

I. PERIODICALLY REPLACED PARTS

Some parts of the machine must be replaced on a periodical basis to maintain the performance of the machine at a specific level regardless of the presence/absence of damage (when they fail, they will affect the performance to a significant degree).

Schedule the replacement so that it coincide with a scheduled service visit.

as of November 1997

No.	Parts name	Part number	Q'ty	Life (copies)	Remarks
1	Primary/pre-transfer/transfer/ separation charging wire	FY3-0030-000	AR	250,000	100V
		FY3-0040-000	AR	250,000	120/230V
2	Primary charging assembly grid wire	FY1-0883-000	AR	500,000	

Note: The above values are all estimates and are subject to change based on future data.

Table 10-101

COPYRIGHT © 1997 CANON INC.

II. CONSUMABLES AND DURABLES

Some parts of the machine may need replacement once or more because of wear or damage. Use the table as a reference, and replace them as needed.

A. Copier

as of November 1997

No.	Parts name	Parts number	Q'ty	Life (copies)	Remarks
1	Multifeeder pick-up roller	FF5-1220-000	1	120,000	Front Actual number of copies.
		FF5-1221-000	1	120,000	Rear Actual number of copies.
2	Multifeeder feeding roller	FB2-7522-000	2	120,000	Actual number of copies.
3	Multifeeder separation roller	FB2-7545-000	1	120,000	Actual number of copies.
4	Scanning lamp	FH7-3333-000	1	250,000	100V/120V
5	Scanning lamp	FH7-3282-000	1	250,000	220V/240V
6	Cleaner separation claw	FB2-6899-000	3	250,000	
7	Fixing cleaning belt	FA3-8908-000	1	250,000	
8	Delivery upper separation claw	FC1-0391-030	6	500,000	
9	Pick-up roller (paper deck, cassette)	FF5-1220-000	4	250,000	Rear Actual number of copies.
		FF5-1221-000	4	250,000	Front Actual number of copies.
10	Feeding roller (paper deck, cassette)	FB2-7695-000	8	250,000	Actual number of copies.
11	Separation roller (paper deck, cassette)	FB2-7777-000	4	250,000	Actual number of copies.
12	Duplexing pick-up crescent roller	FC2-1532-000	2	250,000	Actual number of copies.
13	Duplex upper separation belt	FA5-5427-000	8	250,000	Actual number of copies.
14	Duplexing feeding roller	FC2-1533-000	1	250,000	
15	Primary charging wire cleaner 1	FF2-3552-000	2	500,000	
16	Primary charging cleaner 2	FF2-3551-000	2	500,000	
17	Transfer charging wire cleaner	FF2-3552-000	1	500,000	
		FF2-3551-000	1	500,000	
18	Separation charging wire cleaner	FF5-3090-000	2	500,000	
19	Pre-transfer charging wire cleaner	FF5-3090-000	1	500,000	

Table 10-201a

COPYRIGHT © 1997 CANON INC.

No.	Parts name	Parts number	Q'ty	Life (copies)	Remarks
20	Pre-transfer charging assembly scraperr	FB4-3689-000	1	500,000	
21	Upper fixing roller	FB4-3690-000	1	500,000	
22	Lower fixing roller	FB3-9164-000	1	500,000	
23	Heat insulating bush (front, rear)	FB4-3689-000	2	500,000	Simultaneously w/ upper fixing roller.
24	Fixing main thermistor (TH1)	FH7-7349-000	1	500,000	
25	Fixing sub thermistor (TH2)	FG5-8812-000	1	500,000	
26	Pick-up clutch (left deck, cassette)	FH7-5763-000	3	1,000,000	Actual number of copies.
27	Pick-up clutch (right deck)	FH7-5729-000	1	1,000,000	Actual number of copies.
28	Cleaning blade	FB2-8453-000	1	1,000,000	Use both edges; 500,000 for each.
29	Primary charging assembly	FG5-4378-030	1	1,000,000	
30	Transfer/separation charging assembly	FG5-9592-000	1	1,000,000	
31	Pre-transfer charging assembly	FG5-8809-000	1	1,000,000	
32	Fixing thermal switch	FH7-7154-000	1	1,000,000	
33	Delivery lower separation claw	FA2-9037-000	2	1,000,000	
34	Developing cylinder	FG5-8230-020	1	1,000,000	
35	Developing assembly roll	FB2-6933-000	2	1,000,000	

Table 10-201b

B. Paper Deck-A1

as of November 1997

No.	Parts name	Parts number	Q'ty	Life (copies)	Remarks
1	Side paper deck pick-up roller*	FF5-1220-000	1	250,000	Front Actual number of copies.
		FF5-1221-000	1	250,000	Rear Actual number of copies.
2	Side paper deck feeding roller	FB2-7695-000	2	250,000	Actual number of copies.
3	Side paper deck separation roller	FB2-7777-000	1	250,000	Actual number of copies.

***** Exercise care during replacement; the pick-up roller of the side paper deck and the pick-up roller of the machine must be oriented differently.

Table 10-201c

COPYRIGHT © 1997 CANON INC.

III. SCHEDULED SERVICING TABLE

Caution:

1. As a rule, provide scheduled servicing every 250,000 copies.
2. Check the Service Record before setting out on a visit, and take any parts likely to need replacement.
3. If you use alcohol to clean a charging wire, check to make sure it has fully dried before installing it to the machine.

Step	Work	Checks	Remarks
1	Meet the person in charge.	Check the general condition.	
2	Take notes of the counter reading.	Check the faulty copies.	
3	Make test copies.	a. Density of image b. Dirt on background c. Clarity of characters d. Leading edge margin e. Fixing, registration, back (for soiling) f. Counter operation	Standard: 4.5 ±1.5 mm (Direct)
4	Clean the charging assemblies: • Charging wire • Grid wire • Shielding plate • Roller electrode		Dry wipe with lint-free paper; then, clean with alcohol.
5	Clean the optical path: • Scanner reflecting plate • Scanner side reflecting plate • Lens • No. 1/2/3/4/5/6 mirror • Dust-proofing glass • Pre-exposure lamp sheet • Standard white plate • Heat absorbing glass		Use a blower brush; if necessary, use alcohol. Moist cloth Dry wipe.
6	Check the waste toner case.	If the waste toner case is half full or more, dispose of the toner in a plastic bag; or, replace the waste toner case.	

 COPYRIGHT © 1997 CANON INC. CANON NP6560/NP6360/NP6260 REV. 0 NOV. 1997 PRINTED IN JAPAN (IMPRIME AU JAPON)

No.	Work	Checks	Remarks
7	Clean the transfer guide. • Transfer guide plate (upper, lower) • Transfer/separation charging guide rail		
8	Check and clean the cleaner assembly: • Magnet roller (check) • Separation claw (clean) • Side scraper (check)	If the coating of toner on the magnet roller is not even, • Turn the magnet roller in reverse to remove paper lint or the like. • Remove the paper lint from the side scraper assembly.	Remove the photosensitive drum from the process unit.
9	Clean the separation/feeding assembly: • Feeding belt		After cleaning, install the photo-sensitive drum.
10	Clean the fixing/delivery assembly: • Guide • Separation claw (upper/lower) • Cleaning belt (check)		 Solvent Solvent
11	Provide scheduled servicing suited to the number of copies made.		Alcohol
12	Clean the copyboard glass.		
13	Make test copies.		
14	Make sample copies.		
15	Put sample copies in order, and tidy up the area around the machine.		
16	Record the most recent counter reading.		
17	Fill out the Service Sheet, and report to the person in charge.		

COPYRIGHT © 1997 CANON INC.

IV. SCHEDULED SERVICING CHART

Caution:
Do not use solvents or oils other than those specified.

A. Copier

△ : Clean ● : Replace × : Oil □ : Adjust ◎ : Inspect

Unit	Part	Intervals					Remarks
		at installation	every 250,000	every 500,000	every 750,000	every 1,000,000	
Optical path	No. 1/No. 6 mirror		△				Use blower brush; for No. 5 mirror, use mirror cleaning tool.
	Dust-proofing glass		△				
	Heat absorbing glass		△				
	Standard white plate		△				
	Reflecting shade (scanning lamp)		△				
Use alcohol; then, apply oil.	Scanner rail		△ ×				Use alcohol; then, apply lubricant.
	Scanner cable		□ ◎				Check and adjust if for initial 250,000.
Charging assembly	Charging wire (primary, pre-transfer, transfer, separation)	△	●				
	Grid wire (primary)	△	△	●			
	Shielding plate (each charging assembly)	△	△				
	Roller electrode waste toner case (pre-transfer charging assembly)		△				
Photosensitive drum	Photosensitive rum		△				Use solvent.
	Anti-stray toner sheet (primary charging assembly)		△				
	Slip ring					△ ×	Use alcohol; then, apply BARRIERTA IMI.

Note 1: Take care not to touch the mirrors or the lenses.

COPYRIGHT © 1997 CANON INC.
CANON NP6560/NP6360/NP6260 REV. 0 NOV. 1997 PRINTED IN JAPAN (IMPRIME AU JAPON)

Unit	Part	Intervals					Remarks
		at installation	every 250,000	every 500,000	every 750,000	every 1,000,000	
Developing assembly	Developing cylinder	◎					
	Developing roller		△				
	Anti-stray toner sheet (developing assembly)		△				
Cleaner	Blade			*		●	*Replace edge. Apply toner.
	Side scraper assembly			△			Remove paper lint.
	Separation claw		●				
Fixing assembly	Inlet guide		△				
	Fixing cleaning belt	◎					Take up during installation.
	Thermistor		△				
	Oil receptacle		△				
Delivery assembly	Separation claw (upper/lower)		△	● (upper)		● (lower)	
Waste toner collection assembly	Waste toner		◎				Remove as necessary.
Externals	Copyboard glass		△				
	Ozone filter		△				
	Air filter (scanner cooling fan)		△				
Pick-up assembly	Pick-up roller		●				
	Feeding roller		●				
	Separation roller		●				
Feeding assembly	Transfer guide/roll		△				
	Registration roller (upper/lower)		△				
	Feeding belt		△				
	Feeding roller		△				
Holding tray	Pick-up roller (crescent)		●				
	Upper separation belt		●				
	Separation lower feeding roller		●				
Hopper	Toner supply mouth		△				
	Toner receptacle		△				

COPYRIGHT © 1997 CANON INC.

B. Paper Deck-A1

△ : Clean ● : Replace × : Oil □ : Adjust ◎ : Inspect

Unit	Part	Intervals					Remarks
		at installation	every 250,000	every 500,000	every 750,000	every 1,000,000	
Pick-up assembly	Pick-up roller		●				
	Feeding roller		●				
	Separation roller		●				
	Vertical path, roll		△				

COPYRIGHT © 1997 CANON INC.
CANON NP6560/NP6360/NP6260 REV. 0 NOV. 1997 PRINTED IN JAPAN (IMPRIME AU JAPON)

CHAPTER 11

TROUBLESHOOTING

This chapter provides tables of maintenance/inspection, standards/adjustments, and identification of problems (image fault/malfunction).

I. MAINTENANCE AND INSPECTION 11-3
- A. Image Adjustment Basic Procedure 11-3
- B. Points to Note for Scheduled Servicing 11-4

II. STANDARDS/ADJUSTMENTS 11-5
- A. Image Adjustment 11-5
- B. Exposure System 11-11
- C. Image Formation System 11-16
- D. Pick-Up/Feeding System 11-23
- E. Fixing System 11-37
- F. Electrical System 11-41

III. IMAGE FAULTS 11-62
- A. Initial Checks 11-62
- B. Sample Image Faults 11-66
- C. Troubleshooting Image Faults 11-67

IV. TROUBLESHOOTING MALFUNCTIONS 11-83
- A. Troubleshooting Malfunctions 11-83

V. TROUBLESHOOTING FEEDING PROBLEMS 11-117
- A. Copy Paper Jams 11-117
- B. Feeding Faults 11-124

VI. ARRANGEMENT AND FUNCTIONS OF ELECTRICAL PARTS 11-125
- A. Sensors 11-126
- B. Switches and Solenoids 11-130
- C. Motors and Fans 11-134
- D. Clutches 11-136
- E. Lamps, Heaters, and Photosensors 11-138
- F. PCBs 11-140
- G. Paper Deck-A1 11-142
- H. Variable Resistors (VR), Light-Emitting Diodes (LED), and Check Pins by PCB 11-146

VII. SERVICE MODE 11-157
- A. Outline 11-157
- B. Using Service Mode 11-158
- C. Using Adjustment Mode and Options Mode 11-158
- D. Display Mode (✻1✻) 11-160
- E. I/O Display Mode (✻2✻) 11-177
- F. Adjustment Mode (✻3✻) 11-213
- G. Function Mode (✻4✻) 11-231
- H. Options Mode (✻5✻) 11-242
- I. Counter Mode (✻6✻) 11-254

VIII. SELF DIAGNOSIS 11-260
- A. Copier 11-260
- B. RDF-D1 11-265
- C. Sorter 11-267

COPYRIGHT © 1997 CANON INC. CANON NP6560/NP6360/NP6260 REV. 0 NOV. 1997 PRINTED IN JAPAN (IMPRIME AU JAPON)

Guide to the Troubleshooting Table

You will find troubleshooting steps organized in tables which are modified versions of general flow charts. Study the following for an idea of how to consult them.

EX.AC power is absent.

Cause	Step	Checks	YES/NO	Action
Power plug	1	Is the power plug connected to the power outlet?	NO	Connect the power plug.
Covers	2	Are the front door and the delivery cover closed firmly?	NO	Close the door and the cover.
Power supply	3	Is the specified voltage present at the power outlet?	NO	The problem is not of the machine. Advise the user.
	4	Is the specified voltage present between J1-1 and J1-2? (J1 is found near the power cord mount.)	YES	Go to step 6.

- If you want to find out the cause (possible faulty part), see the column under “Cause.” In the case of “AC power is absent,” the power plug may be disconnected, the covers may not be closed firmly, or the main power supply is absent.
- If you want to find out the action to take or the steps to correct a specific problem, go through the steps in order. Answer YES or NO to the questions under “Checks,” and take the action indicated accordingly.

COPYRIGHT © 1997 CANON INC.

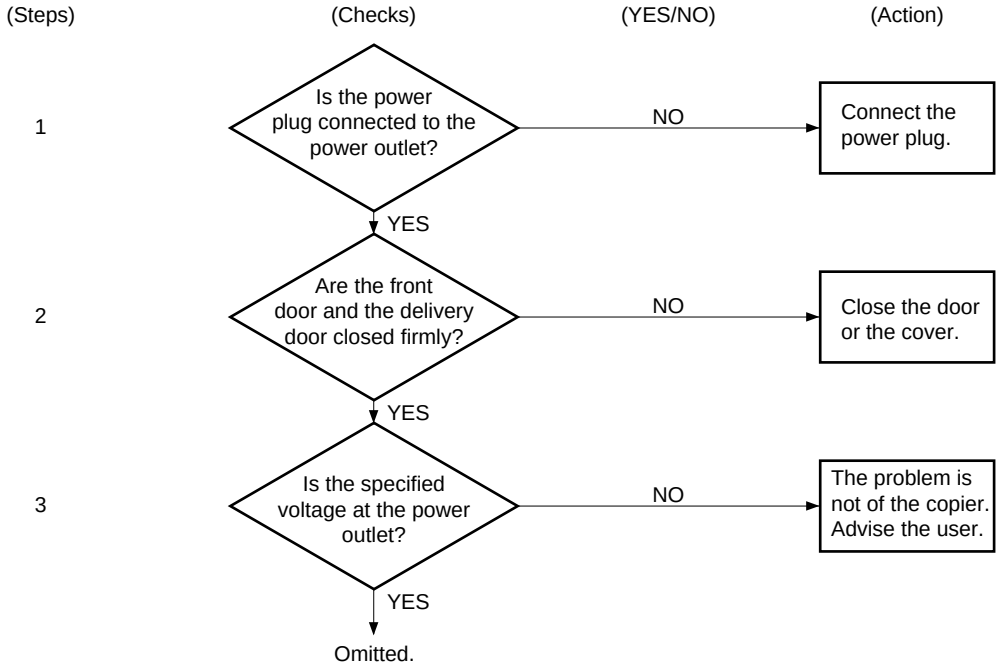

■ When checking the voltage using a meter, you may come across such instructions as “Measure the voltage between J109-1 (+) and J109-2 (–) on the DC controller PCB.” Connect the positive probe of the meter to the terminal marked (+) and the negative probe to the terminal marked (–).

 COPYRIGHT © 1997 CANON INC. CANON NP6560/NP6360/NP6260 REV. 0 NOV. 1997 PRINTED IN JAPAN (IMPRIME AU JAPON)

■ Non-AE, Copy Density at 5

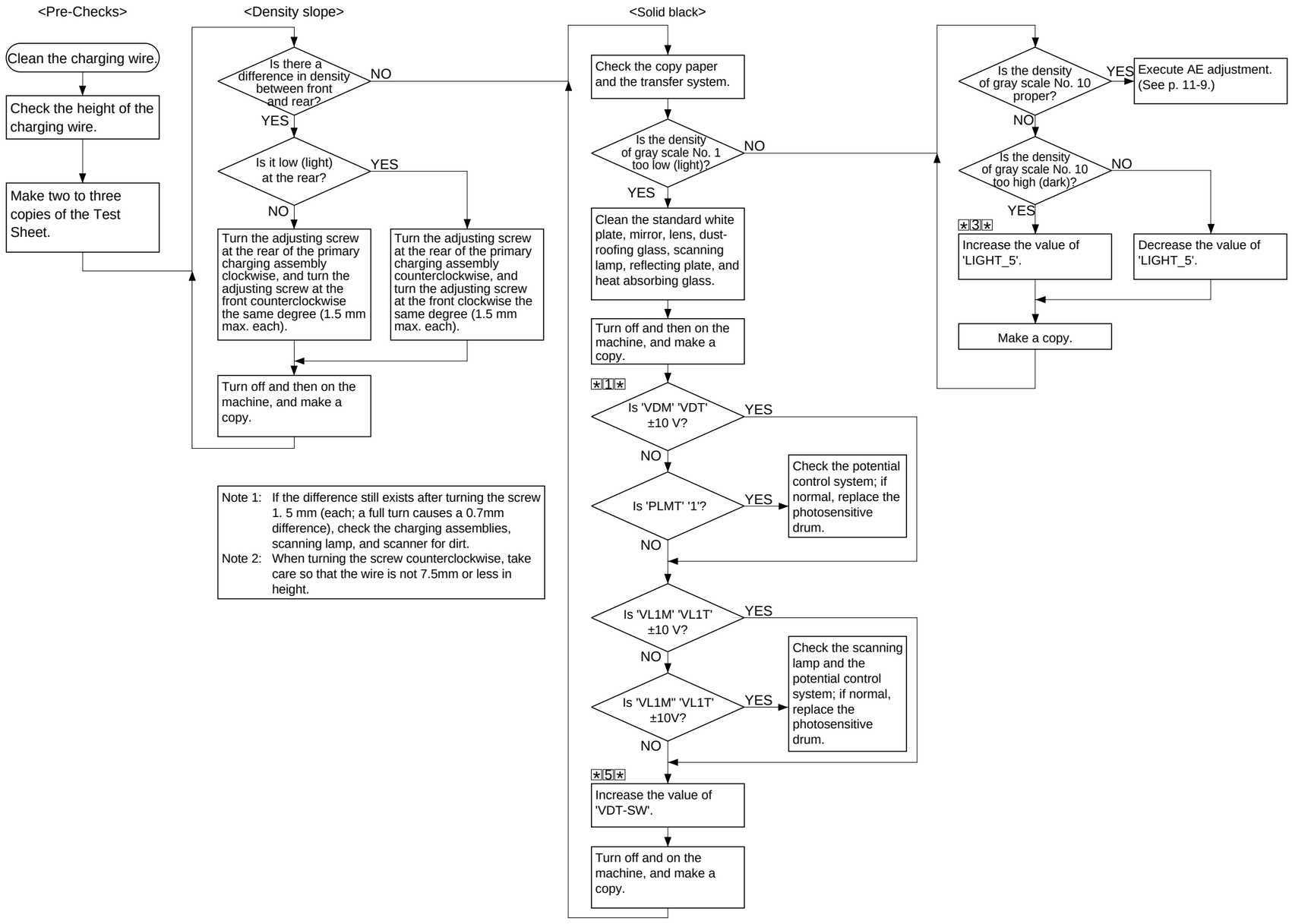

B. Points to Note for Scheduled Servicing

Caution:

- Make thorough checks of the block (front, rear) for melting by leakage, deformation by heat, tears, and yellowing. If any fault is found, replace it.
- Be sure to check and clean the inner side as well as the outer side of the block (front, rear).
- Do NOT use a cloth coated with metal powder for cleaning.
- Do NOT use a moist cloth for cleaning. Use lint-free paper, and clean. (Be sure that the part is fully dry before putting it back into the machine.
- Try to finish all work (scheduled servicing/maintenance) within a specific period of time.

Parts	Tools/chemicals	Remarks
Copyboard glass	Alcohol	Cleaning
Lens	Blower brush	Cleaning
Heat absorbing glass	Lint-free paper	Dry wiping
Standard white plate	Lint-free paper	Dry wiping
Reflecting plate	Blower brush	Cleaning
No. 1 through No. 3 mirrors	Blower brush or lint-free paper	Cleaning with blower brush; if necessary, lint-free paper

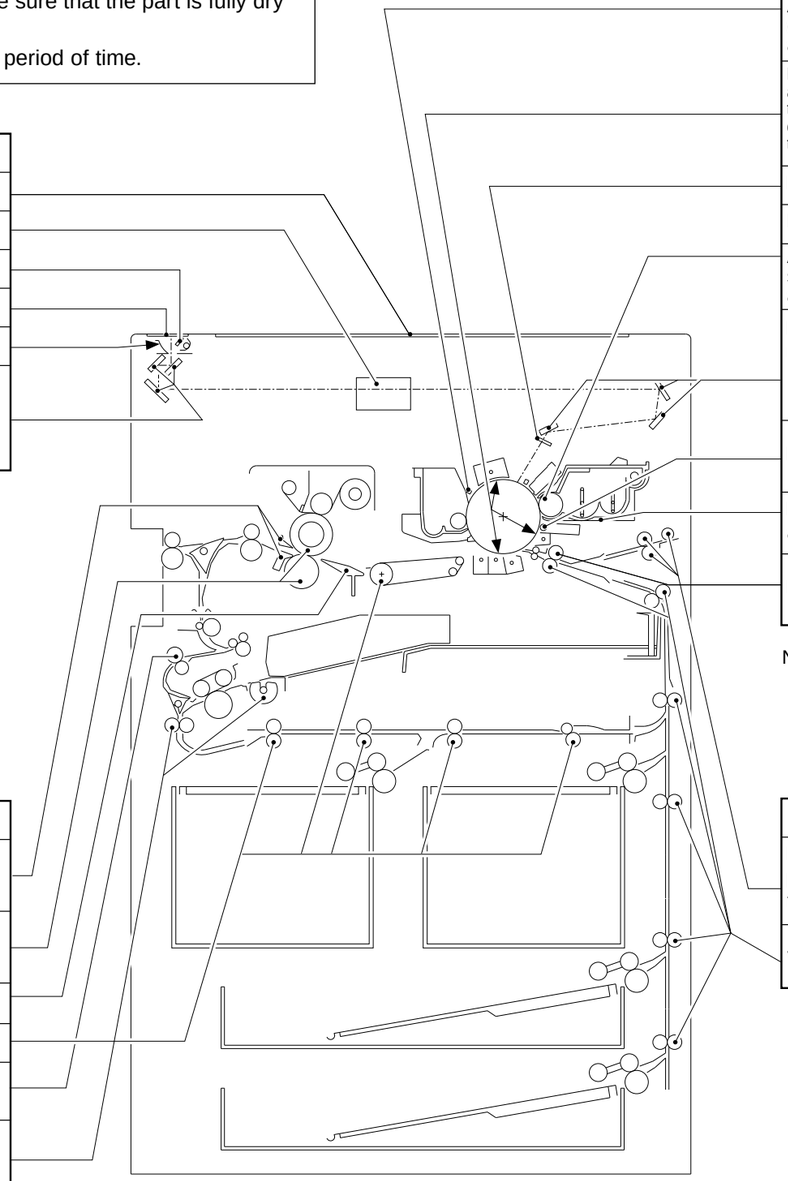

Parts	Tools/chemicals	Remarks
Pre-exposure lamp		Cleaning
Anti-stray toner (primary charging assembly)		Cleaning
Primary charging assembly, transfer/separation charging assembly, pre-transfer charging assembly	Alcohol, lint-free paper	Dry wiping; then, using lint-free paper moistened with alcohol
Dust-proofing glass	Lint-free paper	Cleaning
Blanking exposure lamp		Cleaning
Anti-stray toner sheet (developing assembly)		Cleaning
No. 4 through No. 6 mirrors	Blower brush or lint-free paper	Cleaning with blower brush; if necessary, using lint-free paper. For No. 5 mirror, use mirror cleaning tool
Roller electrode		Dispose of toner collecting on roller electrode
Developing assembly mount	Moist cloth (Note)	Cleaning
Registration roller	Alcohol, lint-free paper	Cleaning

Note: Make sure no droplets of water remain.

Parts	Tools/chemicals	Remarks
Separation claw	Solvent and lint-free paper	Cleaning
Upper roller, lower roller	Cleaning oil, lint-free paper	Cleaning
Paper guide	Solvent, lint-free paper	Cleaning
Feeding assembly	Moist cloth (Note)	Cleaning
Re-pick up assembly, refreshing roller	Alcohol, lint-free paper	Cleaning
Re-pick up assembly, pick-up roller, registration roller	Alcohol, lint-free paper	Cleaning

Parts	Tools/chemicals	Remarks
Multifeeder tray, pick-up roller, feeding roller	Alcohol, lint-free paper	Cleaning
Vertical path roller	Alcohol, lint-free paper	Cleaning

COPYRIGHT © 1997 CANON INC.

CANON NP6560/NP6360/6260 REV. 0 NOV. 1997 PRINTED IN JAPAN (IMPRIME AU JAPON)

II. STANDARDS/ADJUSTMENTS

A. Image Adjustment

1. Adjusting the Image Leading Edge Margin

Select 'LE_BLANK' in service mode (✻ 3 ✻).

Make adjustments so that the image leading edge margin is 4.5 ±1.5 mm when the Test Sheet is copied in Direct.

(unit: 0.1 mm)

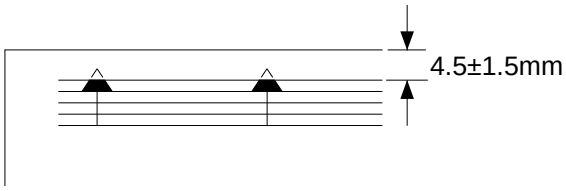

Figure 11-201

2. Adjusting the Image Leading Edge Non-Image Width (registration)

Select 'REGIST' in service mode (✻ 3 ✻).

Make adjustments so that the image leading edge non-image width is 4.5 ±1.5 mm when the Test Sheet is copied in Direct.

(unit: 0.1 mm)

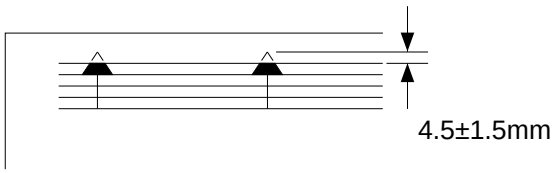

Figure 11-202

COPYRIGHT © 1997 CANON INC.

3. Adjusting the Left/Right Registration (left/right front deck paper deck, cassette)

Make adjustments by moving the horizontal registration adjusting plate of each left/right paper deck/cassette so that the distance between the line in the copy image and the edge of the copy paper is 10 ±1.5 mm.

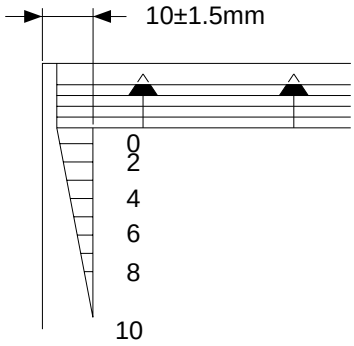

Figure 11-203

a. Left/Right Front Paper Deck

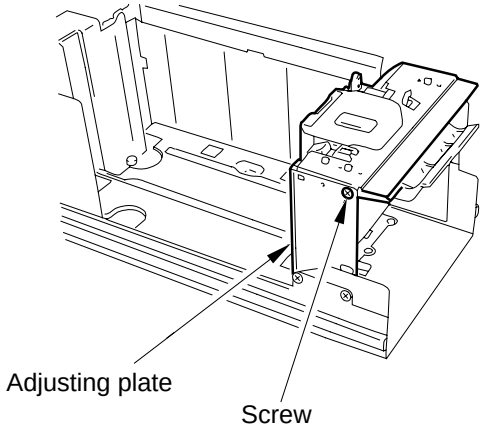

Figure 11-204a

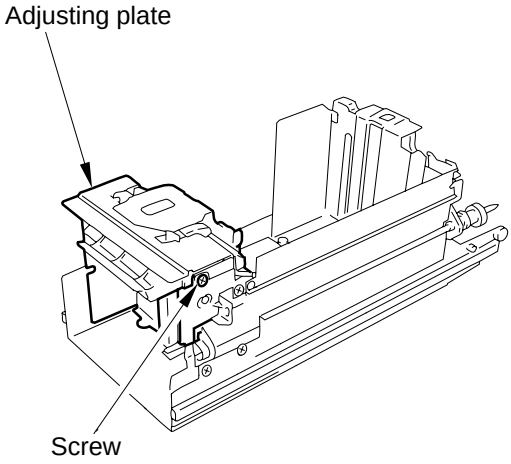

Figure 11-204b

 COPYRIGHT © 1997 CANON INC.

b. Cassette

Turn the horizontal registration adjusting screw of each cassette, and make adjustments so that the copy image and the edge of copy sheet is 0 ±1.5 mm when the Test Sheet is copied in Direct.

1) Slide out the cassette, and loosen the two screws ① and the locking pick ② of the inside unit. (The cassette 4 is not equipped with a locking pick.)
2) Detach the paper size plate of the cassette, and turn the horizontal adjusting screw with a screwdriver ③.

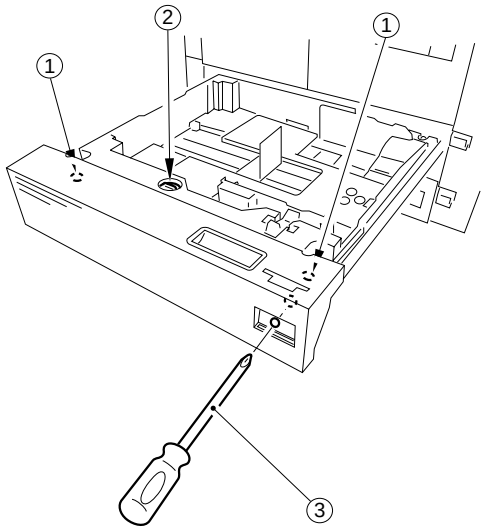

Figure 11-205

3-1 Adjusting the Left/Right Registration (paper deck-A1)

1) Make a copy of the Test Sheet, and check to make sure that the left/right registration between copy image and paper deck is 0 ±1.5 mm or less.
2) If the left/right registration is not as specified, adjust the position of the latch plate of the deck opening solenoid by turning the two adjusting screws. (At this time, use the scale on the latch plate as a reference.)

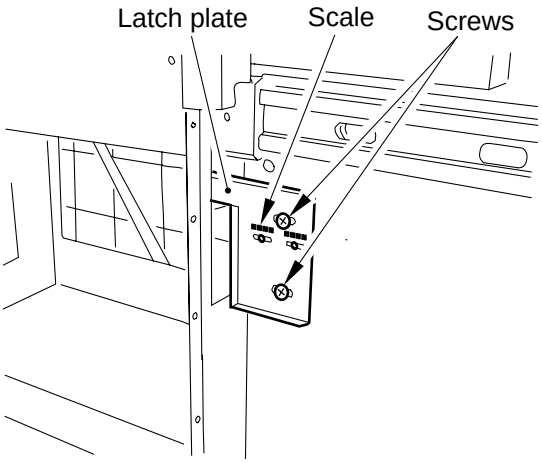

Figure 11-205a (rear left of compartment)

4. Adjusting the Left/Right Registration (holding tray position; 2nd side of two-sided/overlay copies)

Loosen the two screws, and move the guide plate of the holding tray assembly so that the distance between the line in the copy image and the edge of the copy paper is 10 ±2.0 mm in Direct.

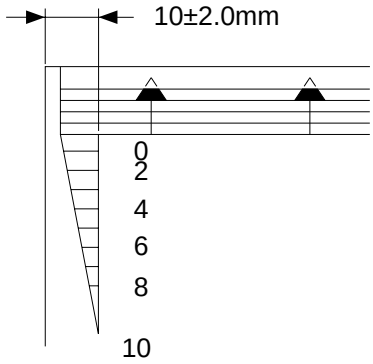

Figure 11-206

5. Adjusting the Left/Right Margin

Make adjustments so that the image left/right margin is 2.75 ±2.5 mm when the Test Sheet is copied in Direct.

Be sure to adjust the left/right registration before making this adjustment.

a. Front Margin Adjustment (left margin)

Select 'F-BLANK' in service mode (✻3✻), and change the setting. Increasing the setting increases the front margin.

(unit: 0.1 mm)

b. Adjusting the Rear Margin (right margin)

Select 'R-BLANK' in service mode (✻3✻), and change the setting. Increasing the setting increases the rear margin.

(unit: 0.1 mm)

 COPYRIGHT © 1997 CANON INC.

6. Executing AE Automatic Adjustment

1) Open the front door, and insert the door switch actuator into the door switch actuator.
2) Push the service mode switch over the cover.
3) Select the following in service mode:
   AE_ADJ:0 ← (✻: START)
   (0: F5, 1:F9).
4) Place the Test Sheet on the copyboard, and close the copyboard cover.

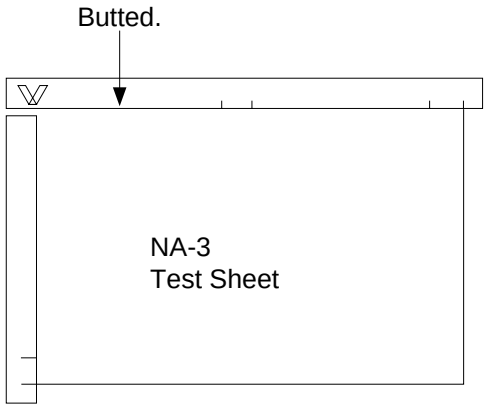

Figure 11-207

5) Press the user mode key ✻ once.
   • The scanning lamp turns on, and auto adjustment is executed.

   AE_ADJ: 1 ← (✻: START)
   Changes to '1'.

6) Place a newspaper on the copyboard, and close the copyboard cover.
7) Press the user mode key ✻ once.
   • The scanning lamp turns on, and automatic adjustment is executed.

   AE_ADJ: 0 ← (✻: START)
   Changes to '0'.
8) Press the Reset key twice to end service mode.

COPYRIGHT © 1997 CANON INC.

7. Adjusting the AE Slope

After executing AE auto adjustment, make a copy of a newspaper (or a rather dark original). If the copy is foggy or too light, perform the following:

1) Open the front door, and insert the door switch actuator into the door switch assembly.
2) Press the service mode switch over the cover with a clip.
3) Select 'AE_SLOP' in service mode (✻3✻).
4) Place a newspaper (or a relatively dark original) on the copyboard.
5) Change the setting using the numeric keypad, and press the user mode key (✻).
   ① If you decrease the setting in adjustment mode,
   →Copies of a newspaper will be lighter.
   ② If you increase the setting in adjustment mode,
   →Copies of a newspaper will be darker.

Note:
You may press the Copy Start key to make copies.

6) Press the Reset key twice to end service mode.

8. Adjusting the Distance between the Side Guide Plates of the Holding Tray Assembly

If a sheet of paper of a width different from the specified dimension (because of poor cutting) is used and tends to cause a fault during re-pick up, check the distance between the side guide plates of the holding tray assembly.

1) After copying on the first side of a two-sided copy, slide out the holding tray, butt the copy paper on the holding tray against the side guide plate at the rear, and check that the copy paper is 1.2 to 2.0 mm away (L) from the side guide plate at the front.
2) If the distance (L) is not between 1.2 and 2.0 mm, select 'paper size_PSZ' in service mode (*3*), and change the setting so that the distance is 1.2 to 2.0 mm.
3) A higher setting will increase the distance between the side guide plates in 0.367 mm increments.

Caution:
a. Each setting is effective only for the respective size. Adjust for the size suffering from re-pick up fault only.
b. If no re-pick up fault is noted, it is best to leave the setting as it is. An increase in the distance between copy paper and the front side guide plate will cause variation in registration for 2nd sides, while a decrease in the distance will affect the alignment of the stack of sheets.

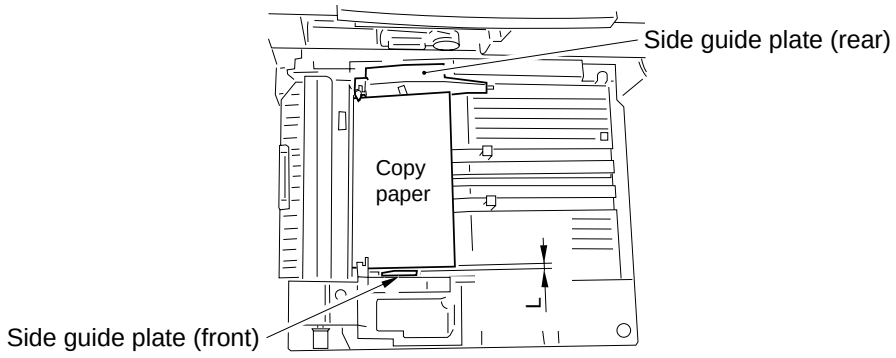

Figure 11-207a

 COPYRIGHT © 1997 CANON INC.

B. Exposure System

1. Routing the Scanner Drive Cable

Route the cable as indicated (① through ⑧), and adjust the tension of the cable and the position of the mirror.

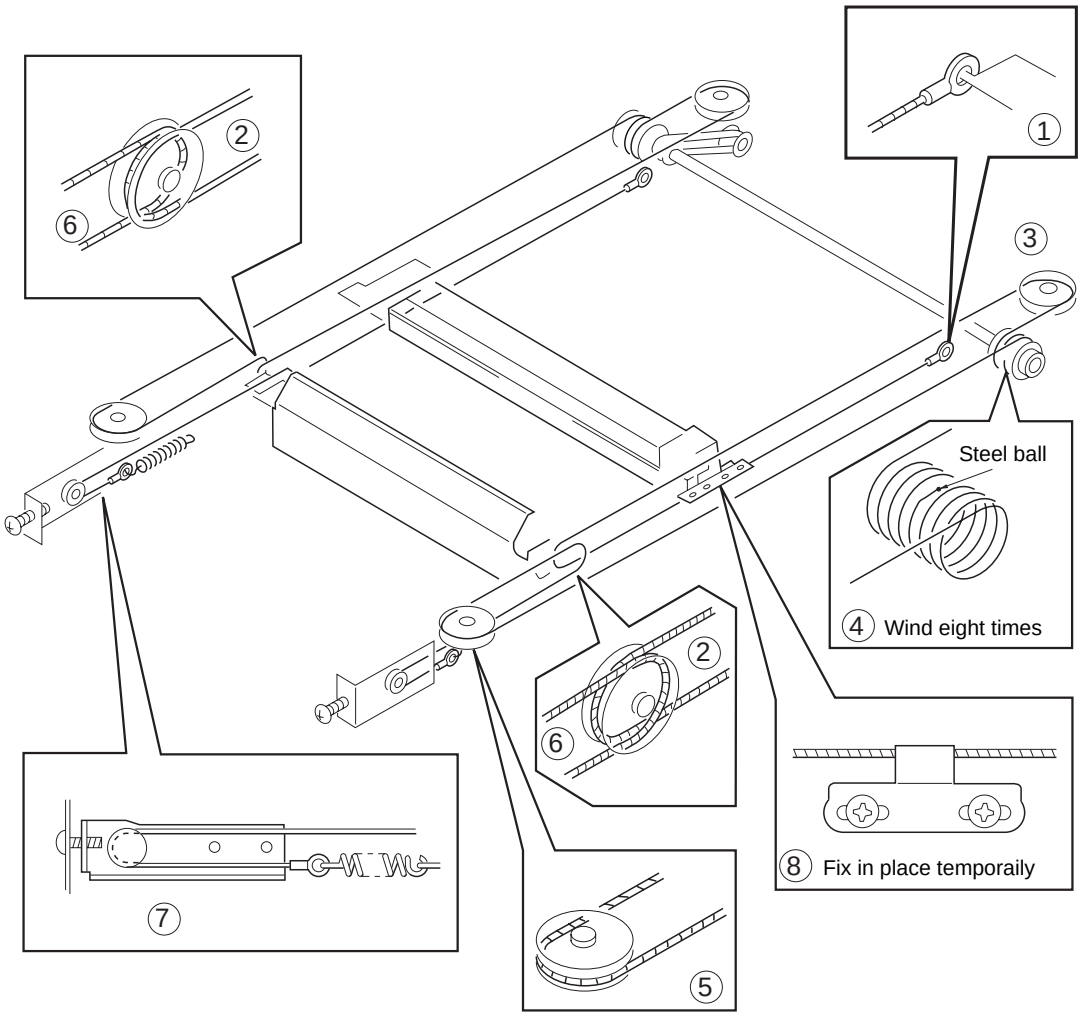

Figure 11-208

2. Orientation of the Heat Absorbing Glass

When replacing the heat absorbing glass, make sure that the white paint marking is toward the rear of the machine.

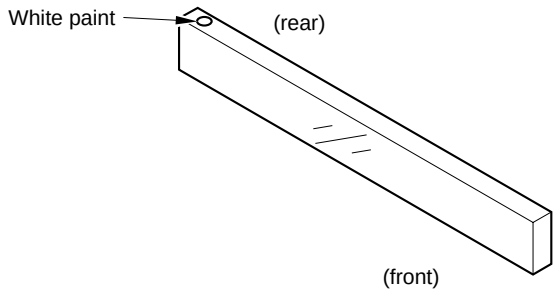

Figure 11-209

3. Adjusting the Tension of the Scanning Lamp Cable

1) Remove the two mounting screws, and remove the left cover.
2) Loosen the fixing screw on the tension spring bracket.
3) Turn the tension adjusting screw so that the reading is as indicated.
   - Turn the tension adjusting screw A so that the reading of the spring gauge is 200 ±50 g when the center of the scanner cable is pulled about 10 mm.

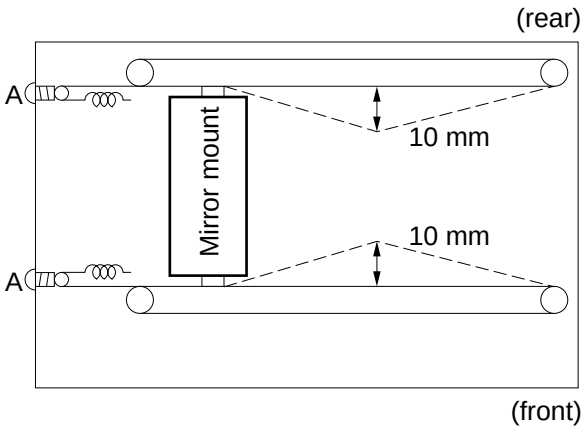

Figure 11-210

 COPYRIGHT © 1997 CANON INC. CANON NP6560/NP6360/NP6260 REV. 0 NOV. 1997 PRINTED IN JAPAN (IMPRIME AU JAPON)

4. Adjusting the Position of the Mirror

You must always adjust the position of the mirror whenever you have installed the scanner drive cable.

1) Move the No. 1 mirror mount and the No. 2/No. 3 mirror to the left.
2) Set the mirror positioning tool (front, rear; FY9-3011) as shown.

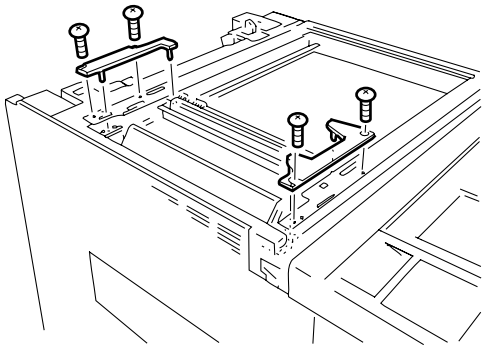

Figure 11-211

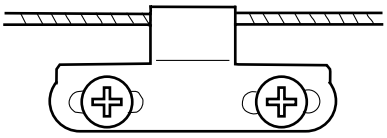

Figure 11-212

COPYRIGHT © 1997 CANON INC.

5. Cleaning the Mirror (No. 5 mirror)

1) Remove the copyboard glass.
2) Remove the lens hood.
3) Remove the mirror guide plate.
4) Move the lens stage in the direction of Enlarge.
5) Remove the screw, and remove the mirror cleaning tool.
6) While butting the mirror cleaning tool ① against the No. 5 mirror as shown, clean the mirror by moving the tool in the direction of the arrow.
   At this time, be sure that your finger or the cleaning tool will not touch the No. 4 mirror.

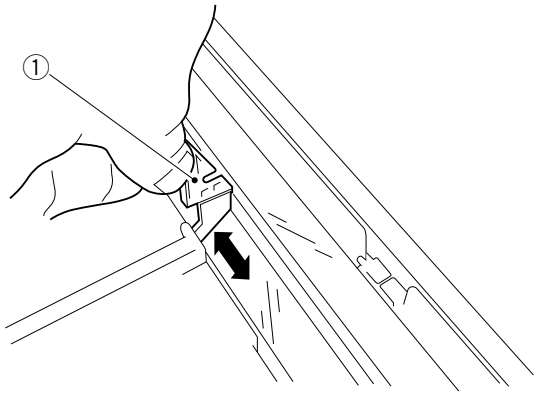

Figure 11-213

6. Routing the Light-Blocking Belt

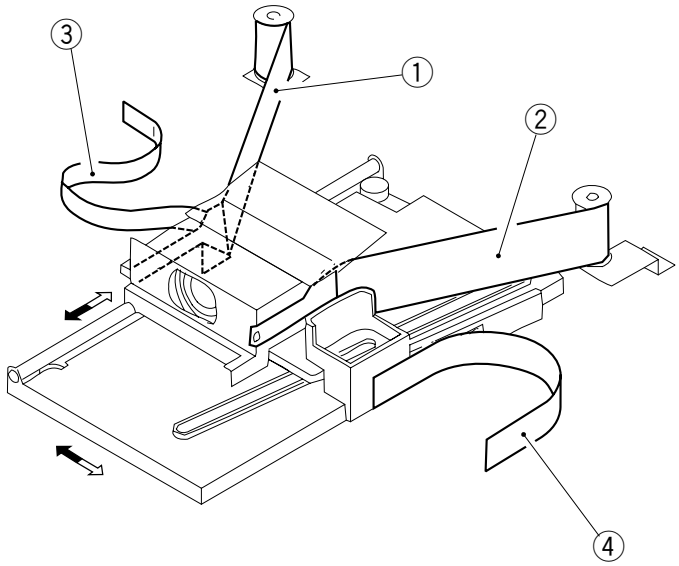

① Light-blocking belt 1
② Light-blocking belt 2
③ Light-blocking belt 3
④ Light-blocking belt 4

Figure 11-214

 COPYRIGHT © 1997 CANON INC. CANON NP6560/NP6360/NP6260 REV. 0 NOV. 1997 PRINTED IN JAPAN (IMPRIME AU JAPON)

7. Routing the Lens X Direction Drive Belt

Fix the lens X direction drive motor ① with the mounting screw ② where the motor has lowered on its own weight.

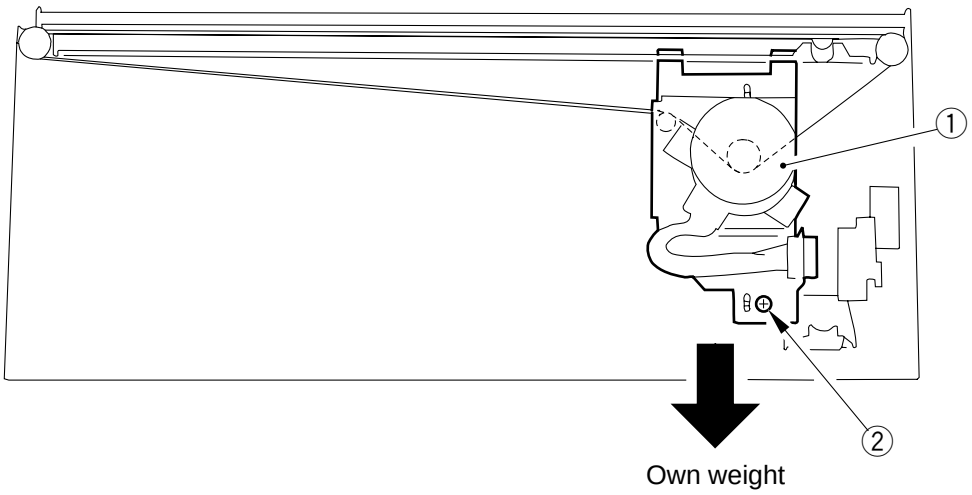

Figure 11-215

8. Adjusting the Position of the Scanner Locking Solenoid (SL1)

1) Remove the rear cover.
2) Remove the multifeeder assembly. (See Chapter 5.)
3) Adjust the stroke of the scanner locking solenoid as indicated.

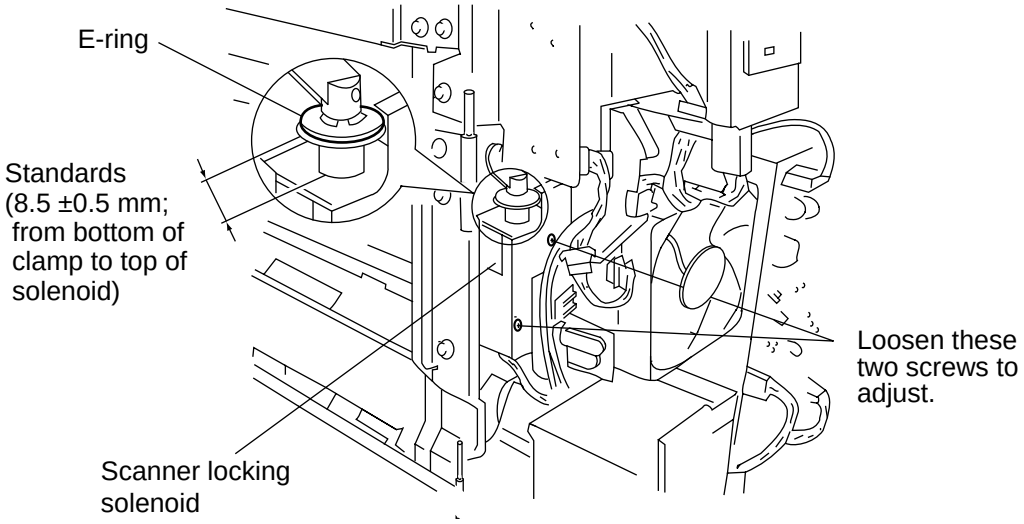

Figure 11-216

COPYRIGHT © 1997 CANON INC.

C. Image Formation System

1. Grid Wire of the Primary Charging Assembly

1) Loosen the two mounting screws used to fix the left/right shielding plate in place.
2) Loosen the three mounting screws used to fix the motor unit in place at the front.

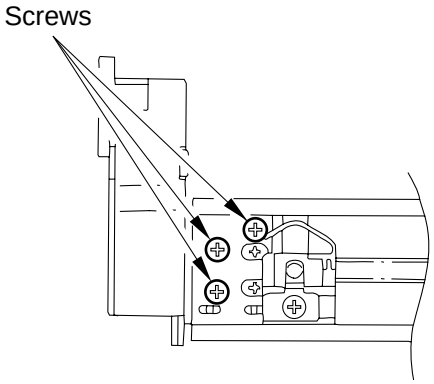

Figure 11-217

3) Loosen the mounting screw, and move the assembly in the direction indicated in Figure 11-218; then, fix it in place temporarily.

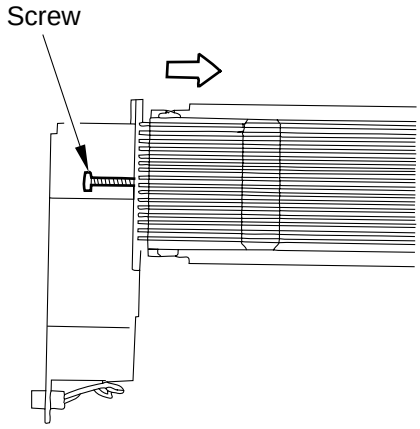

Figure 11-218

4) Free a length of charging wire (about 5 cm) from the charging wire reel (0.1mm dia.); then, form a loop at its end (2mm dia.)

Reference:

To form a loop, wind the charging wire around a hex key three to four times, and twist the charging wire.

5) Cut the twisted charging wire (excess) with a nipper.

 COPYRIGHT © 1997 CANON INC.

6) Hook the loop on the stud A shown in Figure 11-219.

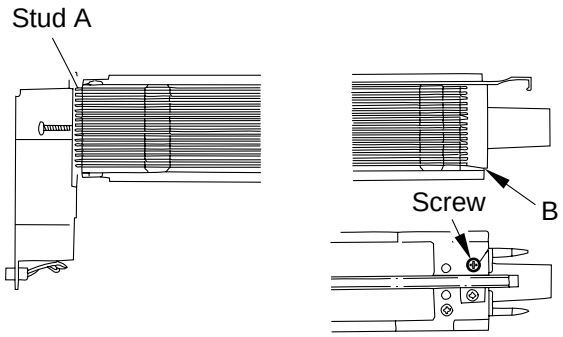

Figure 11-219

7) After routing the wire for 31 runs, lead it through section B, give it a 1/2 turn, lead it between washer and motor unit, wind it once around the mounting screw clockwise, and fix it in place with the mounting screw.
8) Cut the excess charging wire with a nipper.
9) Tighten the mounting screw loosened in step 8).
Take care to avoid deformation (slack) of the charging assembly. Try to tighten the mounting screw (front) on the shielding plate (left, right) earlier.

COPYRIGHT © 1997 CANON INC.

2. Adjusting the Height of the Charging Wire

Charging assembly	Height of charging wire	Tolerance
Primary	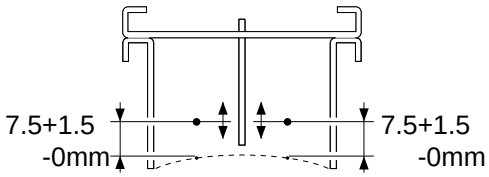	±1mm
Pre-transfer	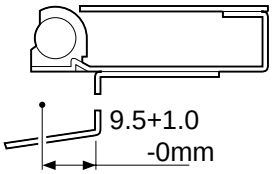	No adjusting mechanism
Transfer	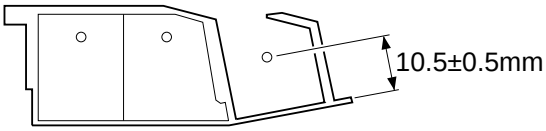	±2mm
Separation	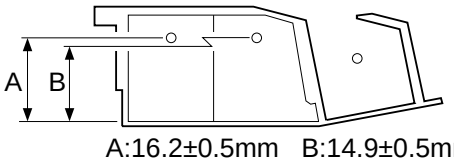	±2mm

Table 11-201

Reference:

You can adjust the height (position) of the primary, transfer/separation charging wire by turning the screw behind the charging assembly. A full turn changes the position of the charging wire by about 0.7 mm.

 COPYRIGHT © 1997 CANON INC.

3. Adjusting the Position of the Blanking Exposure Lamp

1) Place the Test Sheet on the copyboard.
2) Select A4 copy paper.
3) Make a copy, and check that the left/right registration is correct.
4) Make a copy in Direct.
5) Check the image, and measure the non-image width shown in Figure 11-220.

Standard

Paper	Left/right non-image width (W1)
All sizes	2.75 ± 2.5mm

(w/ standard frame erasing)

Table 11-202

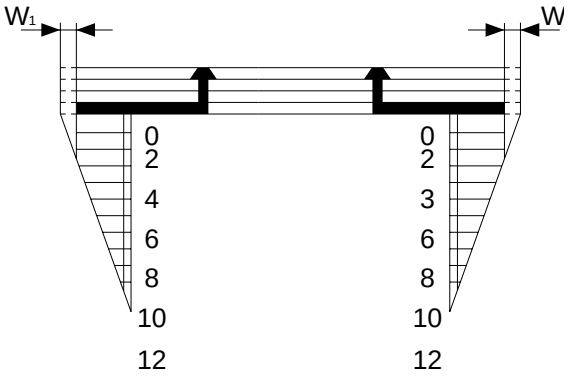

Figure 11-220

6) If the non-image width is not as specified, turn the adjusting screw to adjust the position of the blanking exposure lamp assembly.

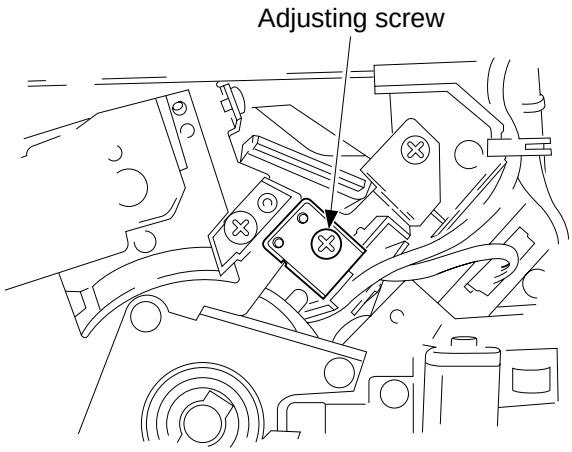

Figure 11-221

4. Position of the Roller Electrode

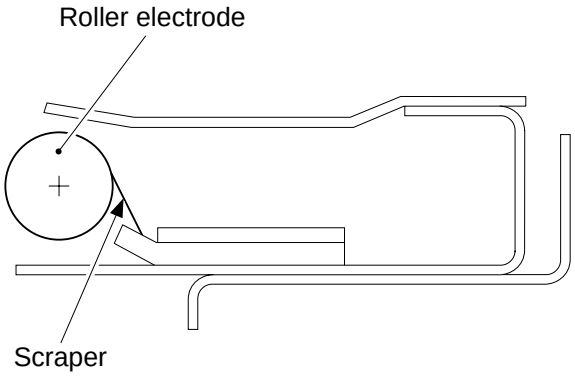

Figure 11-222

5. Adjusting the Position of the Cleaning Assembly Side Seal

1) Attach the side seal ① to the location indicated (both ends; make sure that the edge of the seal is as follows):
- If you are replacing the side seal ① at the front, push the magnetic roller ② toward the rear; then, work so that the inner edge of the side seal is within the washer area ③.
- If you are replacing the side seal ① at the rear, push the magnetic roller ② toward the front; then, work so that the inner edge of the side seal is within the washer area ③.

2) Make sure that the bottom edge of each side seal ① is 0 to 0.5 mm ④ away from the corner of the cleaner housing.
3) Fix the size seal ① (both front and rear) to the cleaner housing at the location indicated.

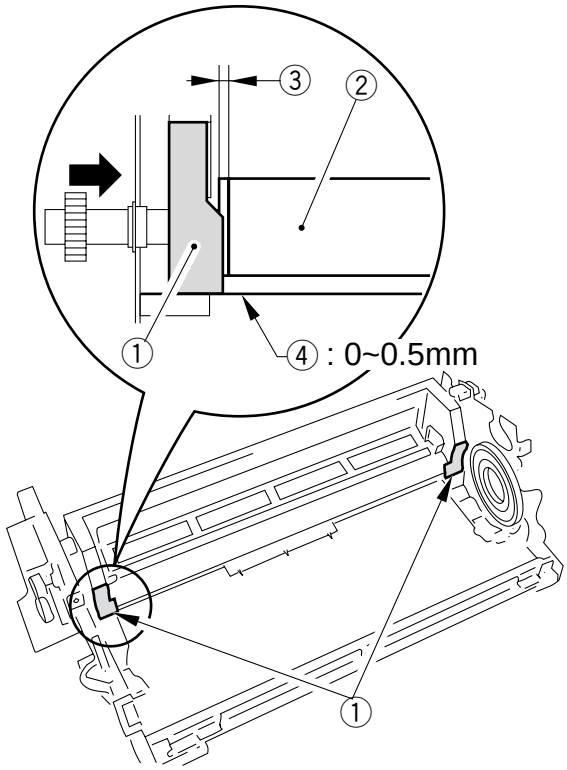

Figure 11-223

 COPYRIGHT © 1997 CANON INC.

6. Cleaning the Cleaner Side Scraper

Perform the following steps whenever you have replaced the cleaning blade (every 500,000 copies).

1) Remove the cleaning blade.
2) Remove the paper lint collecting at the tip of the side scraper (gap Ⓐ between magnet roller and toner guide roller) with tweezers.
3) Remove the toner coated on the surface of the magnet roller. (Shape copy paper into the letter U, and scoop up the toner.)

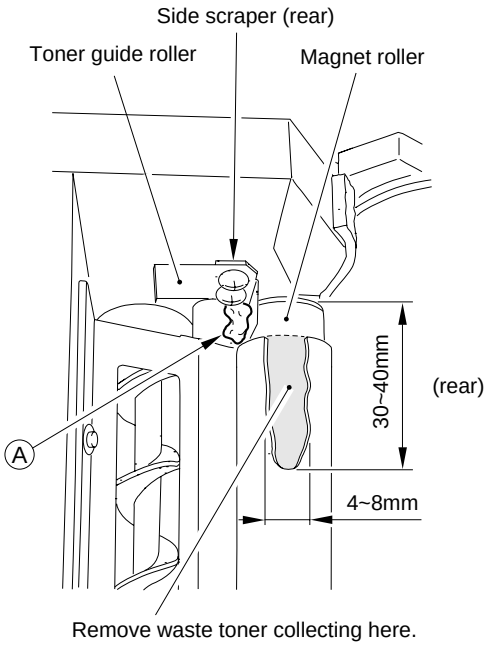

Figure 11-224 (rear)

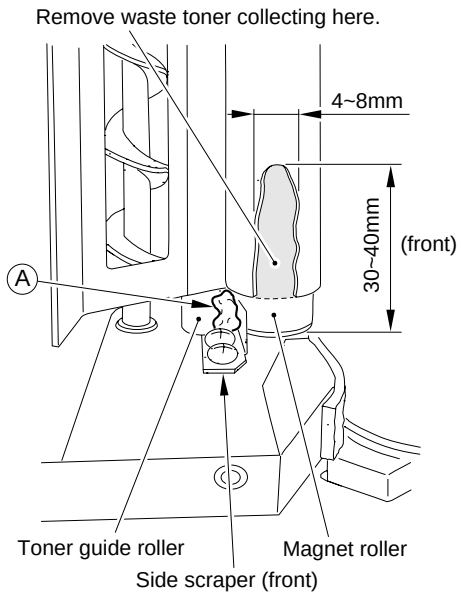

Figure 11-224a (front)

4) Turn the magnet roller clockwise (viewing it from the front).
5) When the area from which toner was removed in step 3) is everly coated, repeat steps 3) through 5).

 COPYRIGHT © 1997 CANON INC.

D. Pick-Up/Feeding System

1. Orientation of the Cassette/Front Paper Deck Pick-Up Roller

Install the pick-up roller by reversing the steps used to remove it with the following in mind:

- The pick-up roller at the front and the one at the rear are not interchangeable.
- The collar of the pick-up roller at the front is gold.
  When installing the pick-up roller ① to the pick-up assembly, make sure that the round marking ② on the side of the roller and the round marking ③ on the collar (gold) face the front of the copier.

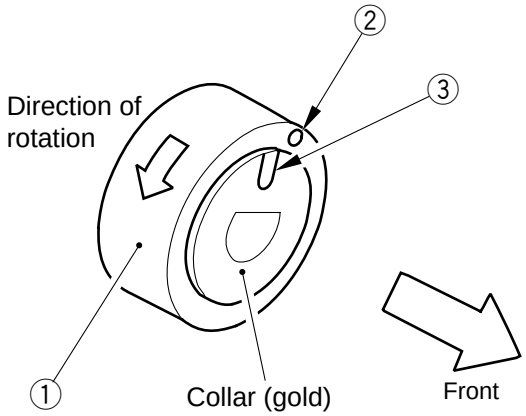

Figure 11-225

- The collar of the pick-up roller at the rear is silver. When installing the pick-up roller ④ to the pick-up roller, make sure that the round marking ⑤ on the collar (silver) faces the rear.

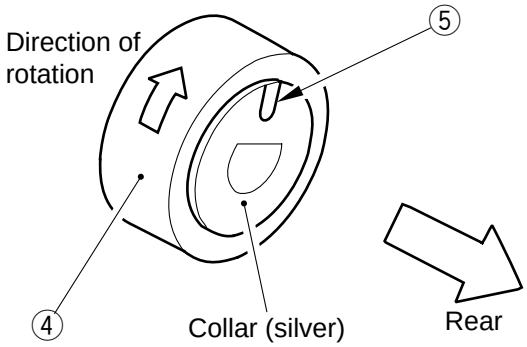

Figure 11-225a

COPYRIGHT © 1997 CANON INC.

2. Orientation of the Cassette/Front Paper Deck Separation Roller

Keep the following in mind when replacing the separation roller.

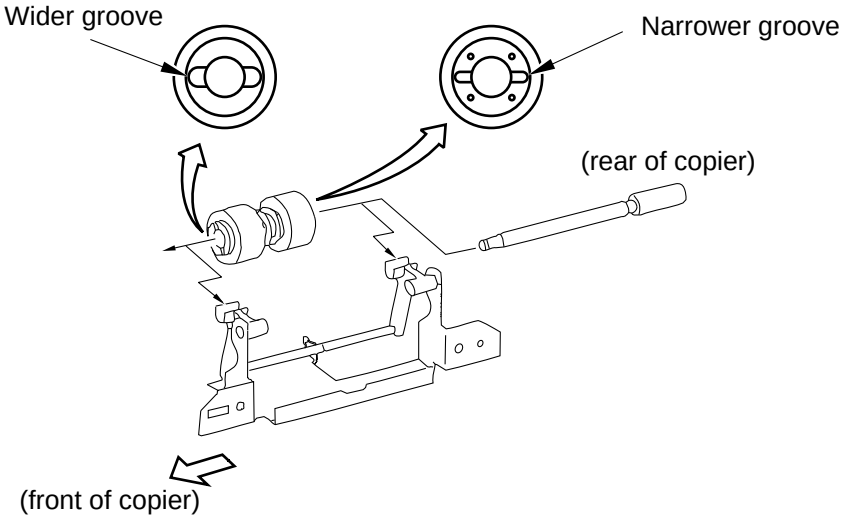

Figure 11-226

3. Orientation of the Feeding Roller (cassette/front paper deck)

When installing the feeding roller assembly ① of the cassette/deck pick-up assembly, be sure that the belt pulley ② is toward the front.

When installing the feeding roller ③ to the feeding roller shaft ④, be sure that the marking "5" ⑤ faces the front.

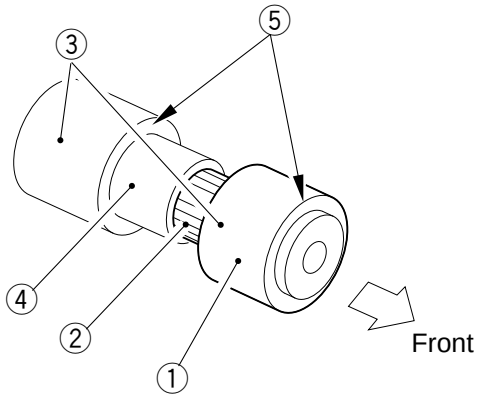

Figure 11-227

 COPYRIGHT © 1997 CANON INC.

4. Orientation of the Multifeeder Pick-Up Roller

4-1 Orientation of the Paper Deck-A1 Pick-Up Roller

Install the pick-up roller by reversing the steps used to remove it with the following in mind:

- The pick-up roller at the front and the rear are not interchangeable.
- The collar of the pick-up roller at the front is silver.
  When installing the pick-up roller ① to the pick-up assembly, be sure that the round marking ② on the collar (silver) faces the front.

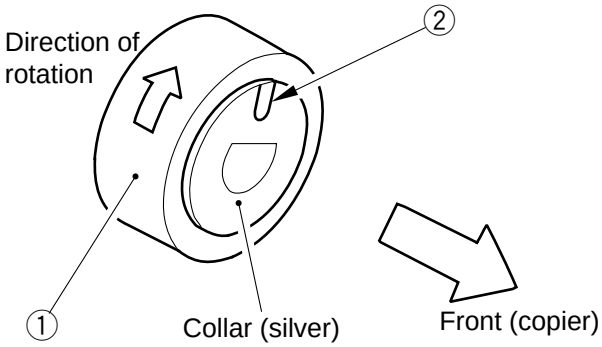

① Pick-up roller
② Marking (collar)

Figure 11-228

- The collar of the pick-up roller at the rear is gold.
  When installing the pick-up roller ④ to the pick-up assembly, make sure that the round marking ⑤ on the side of the roller and the round marking ⑥ on the collar (gold) face the rear.

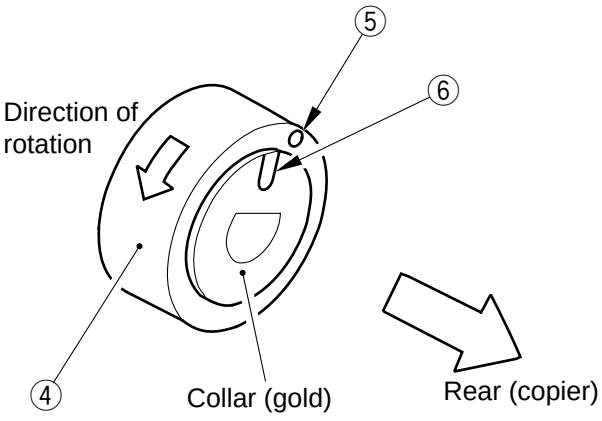

④ Pick-up roller
⑤ Marking (roller)
⑥ Marking (collar)

Figure 11-228a

COPYRIGHT © 1997 CANON INC.

5. Rotation of the Multifeeder Feeding Roller

When installing the pick-up roller ① to the multifeeder pick-up assembly, be sure that the belt pulley ② is toward the rear.

When installing the feeding roller ③ to the feeding roller shaft ④, make sure that the marking "5" ⑤ faces the front.

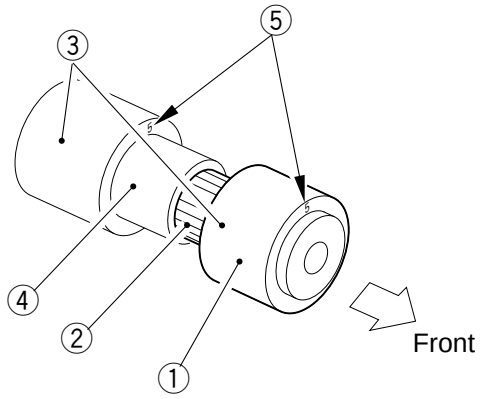

Figure 11-229

5-1 Orientation of the Paper Deck-A1 Feeding Roller

When installing the feeding roller assembly ① to the paper deck pick-up assembly, make sure that the belt pulley ② is toward the front.

When installing the feeding roller ③ to the feeding roller shaft ④, make sure that the marking "5" ⑤ faces the rear.

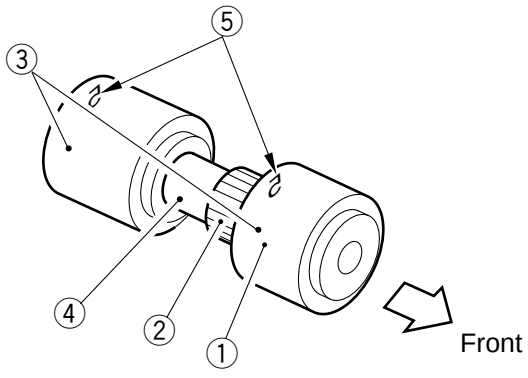

Figure 11-229a

 COPYRIGHT © 1997 CANON INC.

6. Adjusting the Separation Roller Pressure of the Cassette/Front Paper Deck

If double feeding or pick-up failure occurs during pick-up, adjust the position of the separation roller pressure spring.

- If double feeding occurs, move the spring in the direction of arrow B.
- If pick-up failure occurs, move the spring in the direction of arrow A.

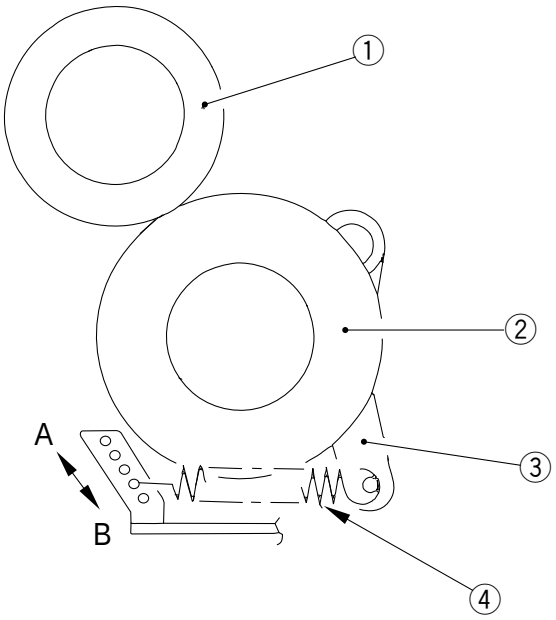

① Feeding roller
② Separation roller
③ Locking lever
④ Pressure spring

Figure 11-230

7. Adjusting the Separation Roller Pressure of the Holding Tray

Turn the separation adjusting roll so that the shaft distance to the separation belt is 32.7 ±0.1 mm.

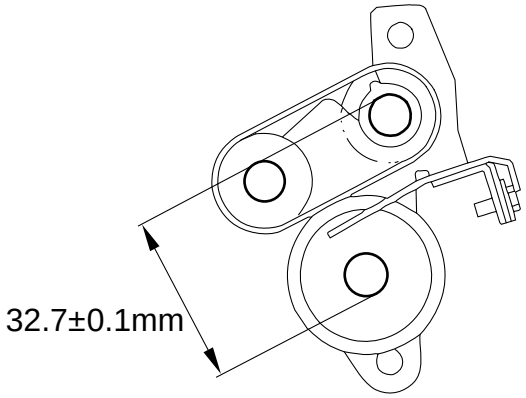

Figure 11-231

8. Pick-Up/Feeding Roller of the Multifeeder

If double feeding or pick-up failure occurs during pick-up, adjust the position of the pressure spring of the separation roller.

- If double feeding occurs, move the spring in the direction of arrow A.
- If pick-up failure occurs, move the spring in the direction of B.

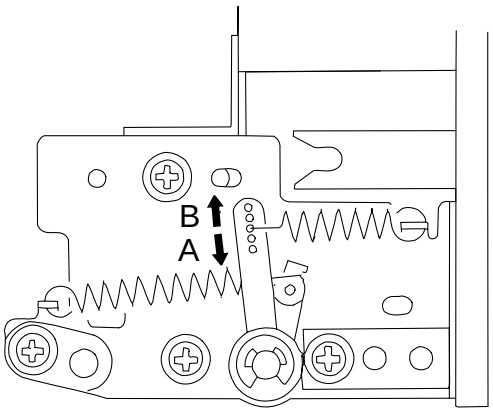

Figure 11-232

 COPYRIGHT © 1997 CANON INC.

9. Adjusting the Position of the Pick-Up Roller Releasing Solenoid (cassette)

Turn the screw to adjust so that the distance of the bottom edge of the A roller support plate bushing from the bottom face of the pick-up unit of each holder is 36 ±0.5 mm when the plunger of the pick-up roller releasing solenoid is pulled as shown.

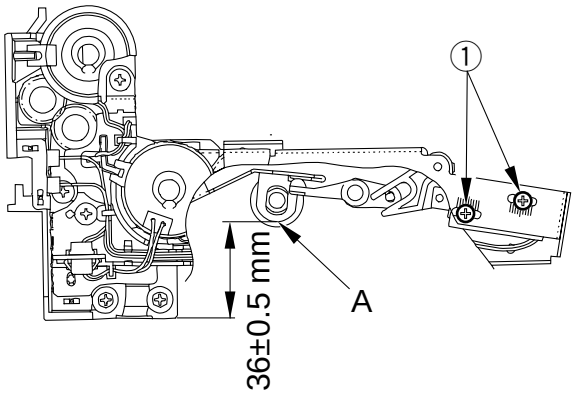

Figure 11-233

9-1 Adjusting the Position of the Pick-Up Roller Releasing Solenoid (front paper deck)

Adjust the position of the solenoid so that the left edge of the right solenoid arm 2 is 57.2 ±0.5 mm from the center of the solenoid mount as shown in Figure 11-233a.

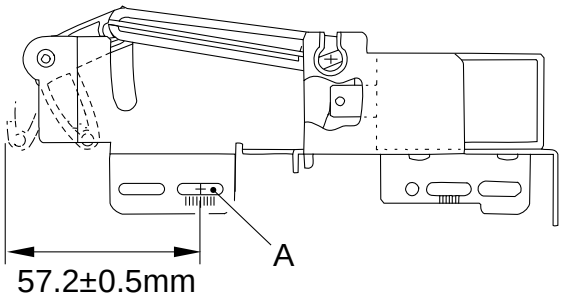

Figure 11-233a

9-2 Adjusting the Position of the Pick-Up Roller Releasing Solenoid (paper deck-A1)

Before removing the deck pick-up roller releasing solenoid ① from the support plate, remember the position of the two fixing screws ② on the solenoid with reference to the scale on the support plate. Or, mark the position of the solenoid on the support plate with a scribe.

If you are installing the solenoid on its own, be sure to fix it in its initial position.

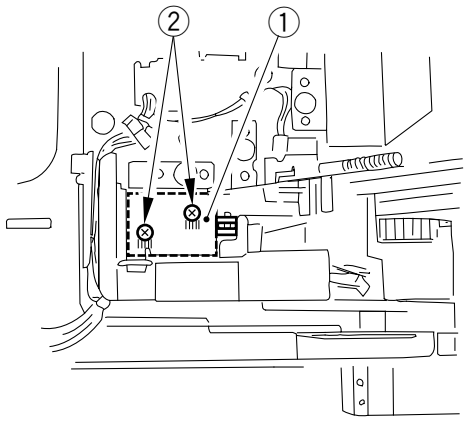

Figure 11-233b

 COPYRIGHT © 1997 CANON INC. CANON NP6560/NP6360/NP6260 REV. 0 NOV. 1997 PRINTED IN JAPAN (IMPRIME AU JAPON)

10. Adjusting the Position of the Pick-Up Roller Releasing Solenoid (multifeeder)

Slide the solenoid in the direction of A so that the gap between the shutter ① and the shutter plate ② is 0.4 ±0.2 mm when the solenoid is pulled.

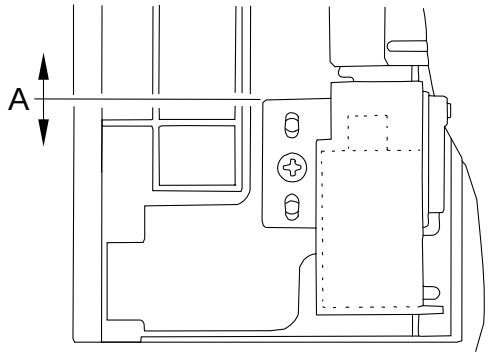

Figure 11-234

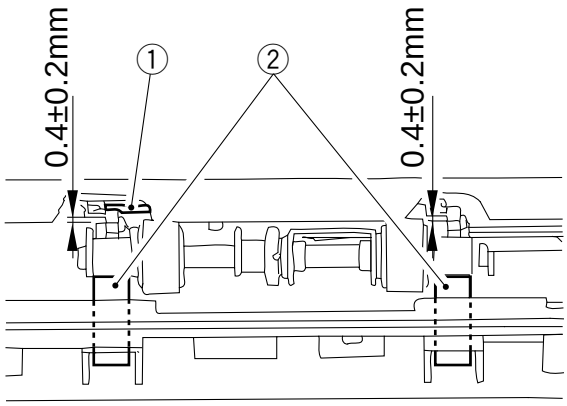

Figure 11-234a

11. Routing the Timing Belt of the Side Guide (multifeeder assembly)

Butt the rack plate of the multifeeder against section A (open condition).
Move the slide volume in the direction of B, and attach the timing belt on the pulley.

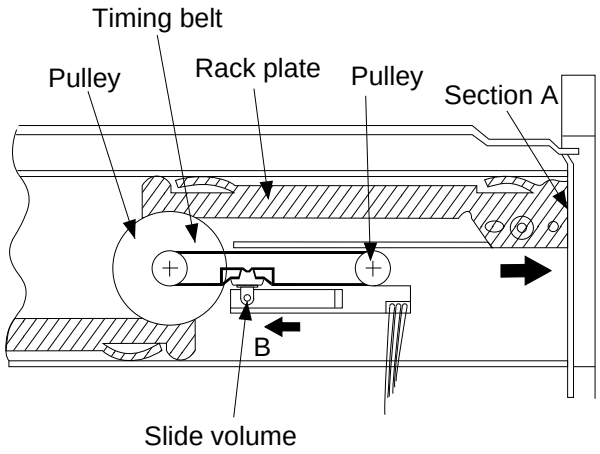

Figure 11-235

12. Adjusting the Position of the Solenoid (delivery paper deflecting plate solenoid)

Fix the delivery paper deflecting plate solenoid temporarily in place with a mounting screw; then, move down the lever ① in the direction of arrow A, push the delivery deflecting plate drive solenoid ② B in the direction of arrow B, and tighten the mounting screw ③.

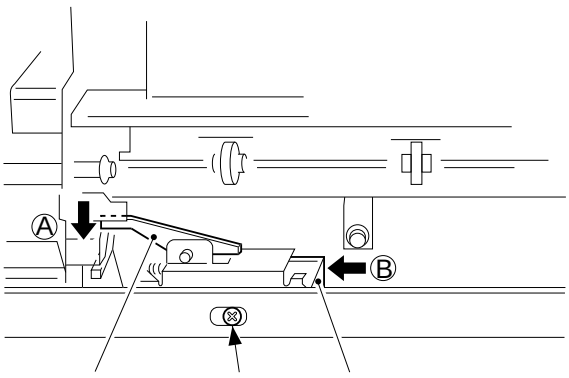

Figure 11-236

 COPYRIGHT © 1997 CANON INC.

13. Adjusting the Position of the Holding Tray Paper Deflecting Plate Drive Solenoid

Install the solenoid so that its stroke (end-to-end distance between rubber silencer and solenoid) is 5.0 ±0.3 mm.

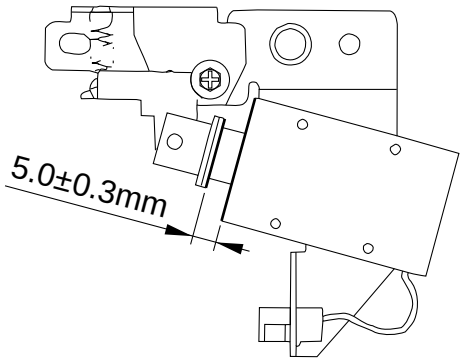

Figure 11-237

14. Adjusting the Position of the Holding Tray Assembly Side Guide Plate

Mark the position of the side guide plate with a pencil in advance, and install it with reference to the marking.

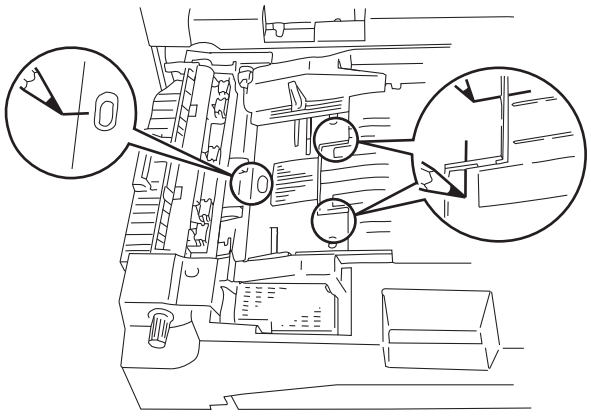

Figure 11-238

COPYRIGHT © 1997 CANON INC.

15. Adjusting the Position of the Holding Tray Paper Jogging Plate

Mark the position of the holding tray paper jogging plate in advance, and install it with reference to the marking.

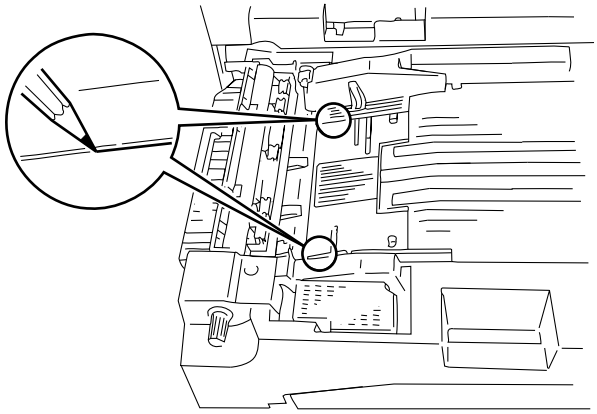

Figure 11-239

16. Adjusting the Timing Belt of the Holding Tray Paper Jogging Guide Plate

Butt the rack plate of the paper jogging guide plate against section A (open state). Then, attach the timing belt to the pulley.

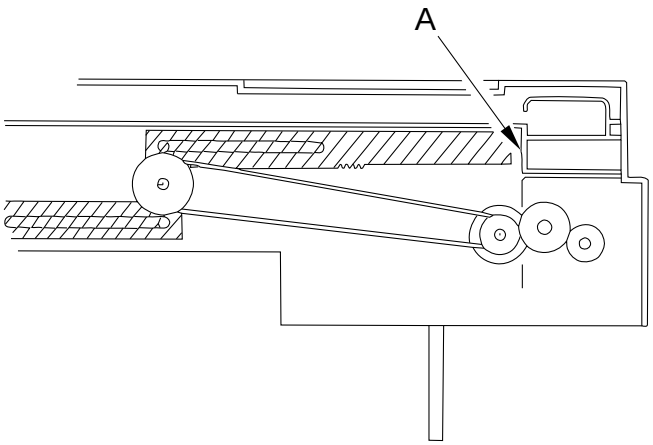

Figure 11-240

 COPYRIGHT © 1997 CANON INC.

17. Adjusting the Position of the Holding Tray Paper Jogging Plate Solenoid

Install the solenoid so that its stroke (end-to-end distance between rubber silencer and solenoid) is 1.5 ±0.3 mm.

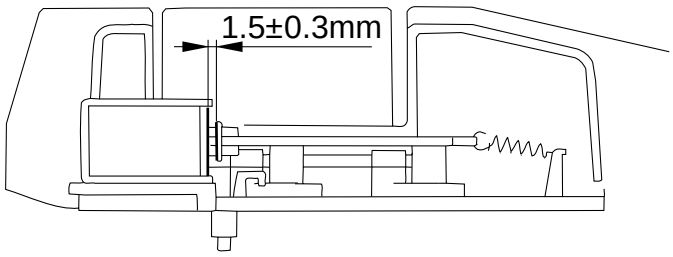

Figure 11-241

18. Drive Belt

Route the drive belt on the pulley and the roller as shown.

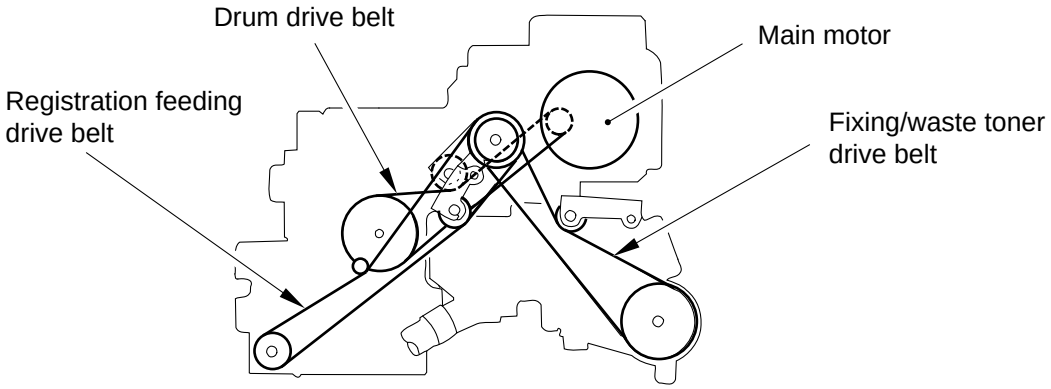

Figure 11-242

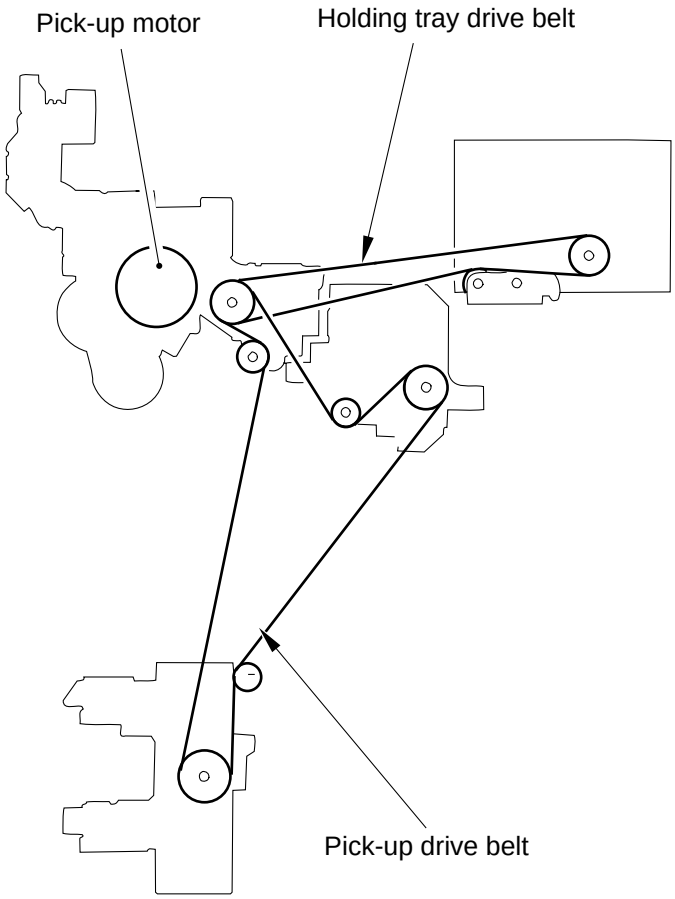

Figure 11-243

Caution:

When installing the holding drive belt, be sure to attach the holding tray drive belt on the pulley at the bottom (inside when viewing form the rear) and to attach the pick-up drive belt on the pulley at the top (outside when viewing from the rear).

 COPYRIGHT © 1997 CANON INC.

E. Fixing System

1. Points to Note When Installing the Fixing Heater

1) Do not touch the surface of the heater.
2) For both heaters, install them with the side with the longer heater wire toward the front.
3) Install the main heater (600 W) on the right and the sub heater (600 W) on the left (viewing from the front).
4) Connect the heater wire on the right to the main heater and the one at the top to the sub heater (when viewing from the rear).

2. Adjusting the Position of the Fixing Assembly Inlet Guide

• Points to Note in the Field

① For the position, see the diagram.
② The “low” position is when the solenoid (SL16) is ON.
③ Make sure the difference in height of the inlet guide between front and rear is 0.5 mm or less.
④ To adjust the height of the inlet guide, loosen the fixing screw on the height adjusting support plate.
⑤ Make checks by removing the lower roller.

COPYRIGHT © 1997 CANON INC.

■Height of the Fixing Inlet Guide
(dimensions indicate center of inlet guide)

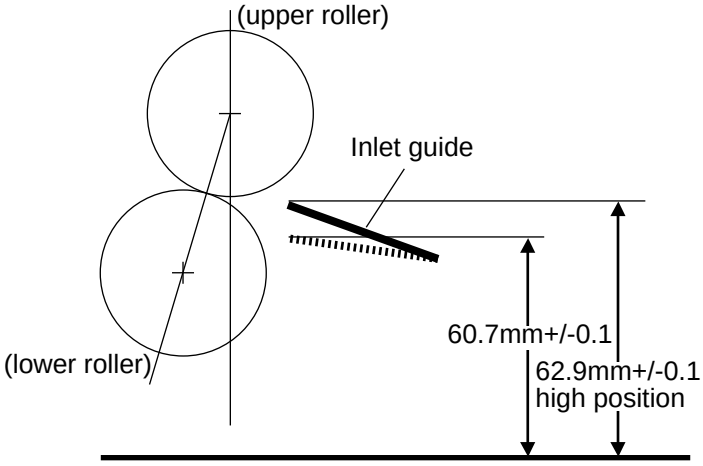

■Height of the Fixing Inlet Guide
(dimensions indicate center of inlet guide)

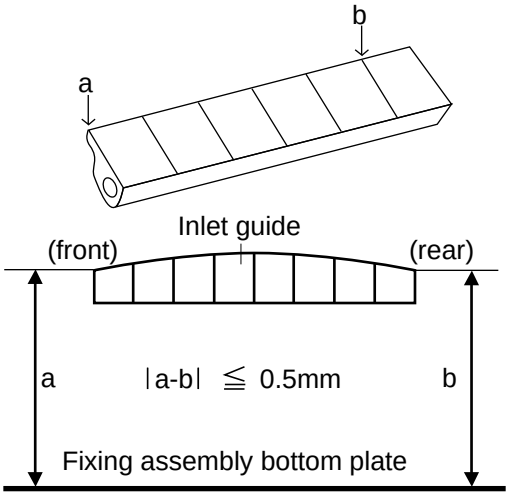

Figure 11-244

Caution:
Do not loosen the mounting screw on the inlet guide mount. If you have removed the inlet guide mount, you need to adjust the inlet guide plate.
If you should have loosened it, be sure to adjust it to its initial position with reference to the scale on the fixing assembly mount.

 COPYRIGHT © 1997 CANON INC. CANON NP6560/NP6360/NP6260 REV. 0 NOV. 1997 PRINTED IN JAPAN (IMPRIME AU JAPON)

3. Adjusting the Lower Roller Pressure (nip)

The nip width must be as indicated in Table 11-203. Otherwise, adjust it by turning the pressure adjusting nut.

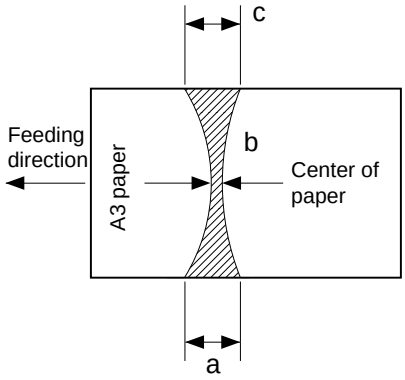

Figure 11-245

Note:
a and c represent points 10 mm from both ends of copy paper.

Dimensions	Measurement*
b	8.5±0.5mm
|a-c|	0.5 mm or less

*Take measurements when both upper and lower rollers are adequately warm.

Table 11-203

a. Taking Measurements
Wait 15 min after the end of the machine's warm-up period; then, make 20 A4 copies before taking measurements.

1) Select A3.
2) Open the copyboard cover.
3) Start service mode (✻ 4 ✻), and select 'NIP' (nip adjustment).
4) Press the user mode key ✻.
   - A3 copy paper is picked up and discharged as shown in Figure 11-245 ready for measurement.

Reference:
The paper is discharged halfway out. It is then discharged in about 20 sec.

5) Measure the nip.

4. Adjusting the Fixing Clutch

When installing the fixing clutch, make adjustments by using the set screws ③ so that the gap between the 41T gear ① and the washer ② is 0.1 to 0.2 mm (about two sheets of 64 g/m^2 paper). At this time, be sure to fix the set screws ③ in place on the cut face of the shaft ④; further, be sure also to tighten the screw on the support plate 1 ⑤ before tightening the screw on the support 2 ⑥.

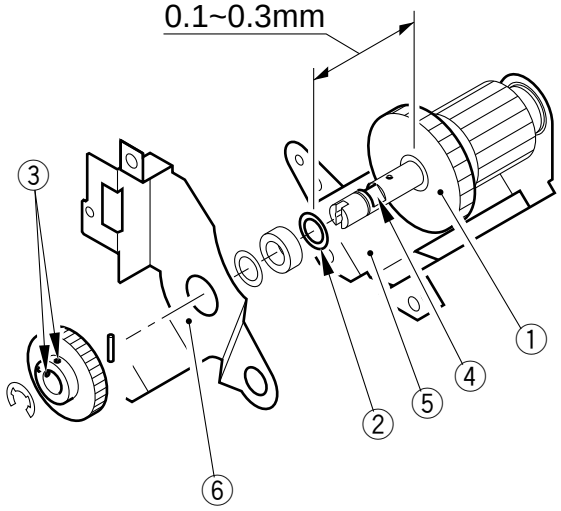

Figure 11-246

COPYRIGHT © 1997 CANON INC.
CANON NP6560/NP6360/NP6260 REV. 0 NOV. 1997 PRINTED IN JAPAN (IMPRIME AU JAPON)

F. Electrical System

1. When Replacing the DC Controller PCB

1) Install the new DC controller PCB.
2) Press the service mode switch with a clip over the cover.
3) Select the following in service mode (✻ 4 ✻):
   'RAM_INIT':0 ← (✻: START)
4) Press the user mode key ✻.
5) Execute AE adjustment.
6) Enter the values indicated on the label attached behind the front door.
7) Enter the settings suited to the user in service mode (✻ 5 ✻).
8) Press the Reset key twice.

2. Checking the Surface Potential Control System

a. Outline

If an image fault occurs, try to find out whether the problem is in the latent image formation block (including the photosensitive drum and the potential control system) or the developing/transfer system, requiring a check on the surface potential. (You may check the surface potential in service mode.)

b. Disabling the Auto Control Mechanism

You may disable the auto control mechanism to find out whether the corona current control, lamp intensity control, or developing bias control is faulty or not (non-auto control mode).

Further, as a temporary remedy, you may use non-auto control mode against a fault in the auto control mechanism.

In auto control mode, all outputs are set to default settings.

① Steps

1) Select 'PO_CONT' in service mode (✻ 4 ✻).
2) Check to make sure that the indication on the display is as follows:

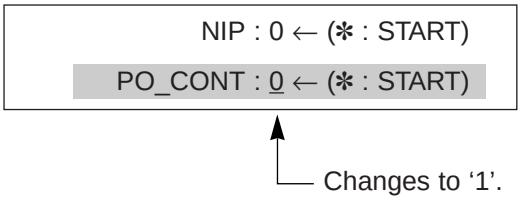

3) Press the user mode key ✻.
   • Non-auto control mode starts.

```
                    NIP : 0 ← (✻ : START)
                 PO_CONT : 1 ← (✻ : START)
```

4) Press the Reset key twice.

Caution:
When non-auto control mode is executed, all control (corona current, intensity, developing bias) is set to default settings stored in ROM.

② Using Non-Auto Control Mode

Use non-auto control mode to find out if a fault, if any, is on the input or the output side of the microprocessor on the DC controller PCB.

c. Zero-Level Check

You may use a zero-level check to find out whether the surface potential control circuit is good or not.

Reference:
In a zero-level check, a check is made to find out whether the microprocessor identifies a 0V condition when the surface potential of the drum is 0 V.

Using a zero-level check, you can find out whether the microprocessor on the DC controller PCB or the measuring unit is good or not.

A zero-level check may be either of the following:

Method 1 enables you to check the lever shift circuit on the DC controller, while method 2 enables you to check the potential measurement circuit.

 COPYRIGHT © 1997 CANON INC.

① Method 1
1) Turn off the power switch.
2) Short J127-1 and -2 on the DC controller PCB, and disconnect J103.
3) Set the door switch actuator into the door switch assembly, and turn on the power switch.
4) Start service mode (✻2✻), and check that the indication of address P023 during initial rotation (hexa decimal analog value) is between '0003' and '0001B'.

If not between '0003' and '0001B', suspect a fault on the DC controller PCB.

5) Turn off the power switch, and remove the door switch actuator.
6) Remove the jumper wire from the DC controller PCB.
7) Connect the connector to J103 on the DC controller PCB.
8) Turn on the power switch.

② Method 2
1) Turn off the power switch.
2) Remove the blanking exposure lamp assembly.
3) Connect the connector of the potential sensor.
4) Set the potential sensor to the potential sensor checking electrode (FY9-3012).

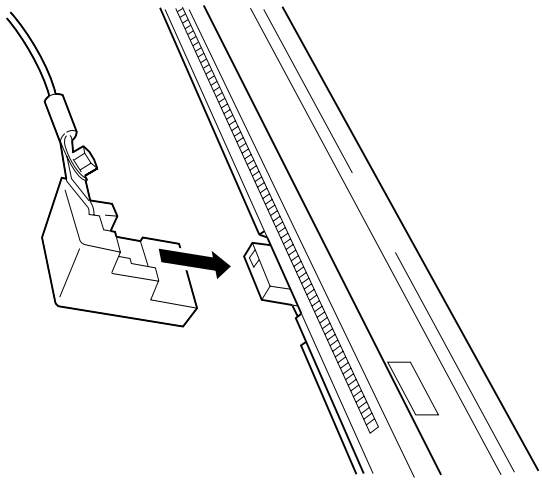

Figure 11-247

Caution:
When setting the checking electrode to the potential sensor, make sure that the magnet of the checking electrode will not touch the potential sensor cover.

COPYRIGHT © 1997 CANON INC.

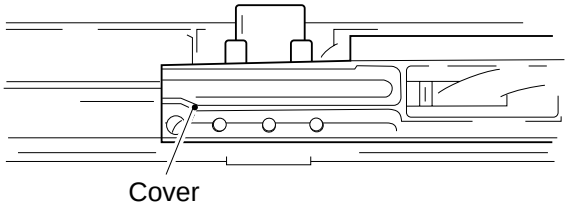

Figure 11-248

Caution:
Set the clip fully away from the sensor cover and the sensor window so that it will never come into contact with them.

5) Connect the cable of the potential sensor checking electrode to the Support metal plate (GND) of the potential measurement PCB.
6) Insert the door switch actuator into the door assembly.
7) Turn on the power switch.

Caution:
Do not touch the potential sensor once you have turned on the power switch.

8) Start service mode (✻2✻), and check to make sure that address P023 during initial rotation (hexadecimal analog value) is between '0003' and '0001B'.

Reference:
1. If the indication is as specified under method 1 and not as specified under method 2.
   Suspect dirt on the sensor or a fault in the potential measurement unit.
2. If the indication is as specified under both method 1 and method 2,
   You may assume that the operation and signal path from the potential sensor unit and the microprocessor on the DC controller PCB are normal.

9) Turn off the power switch.
10) Remove the potential sensor checking electrode.
11) Install the blanking exposure lamp assembly.
12) Turn on the power switch.

 COPYRIGHT © 1997 CANON INC.

3. Checking the Potential System

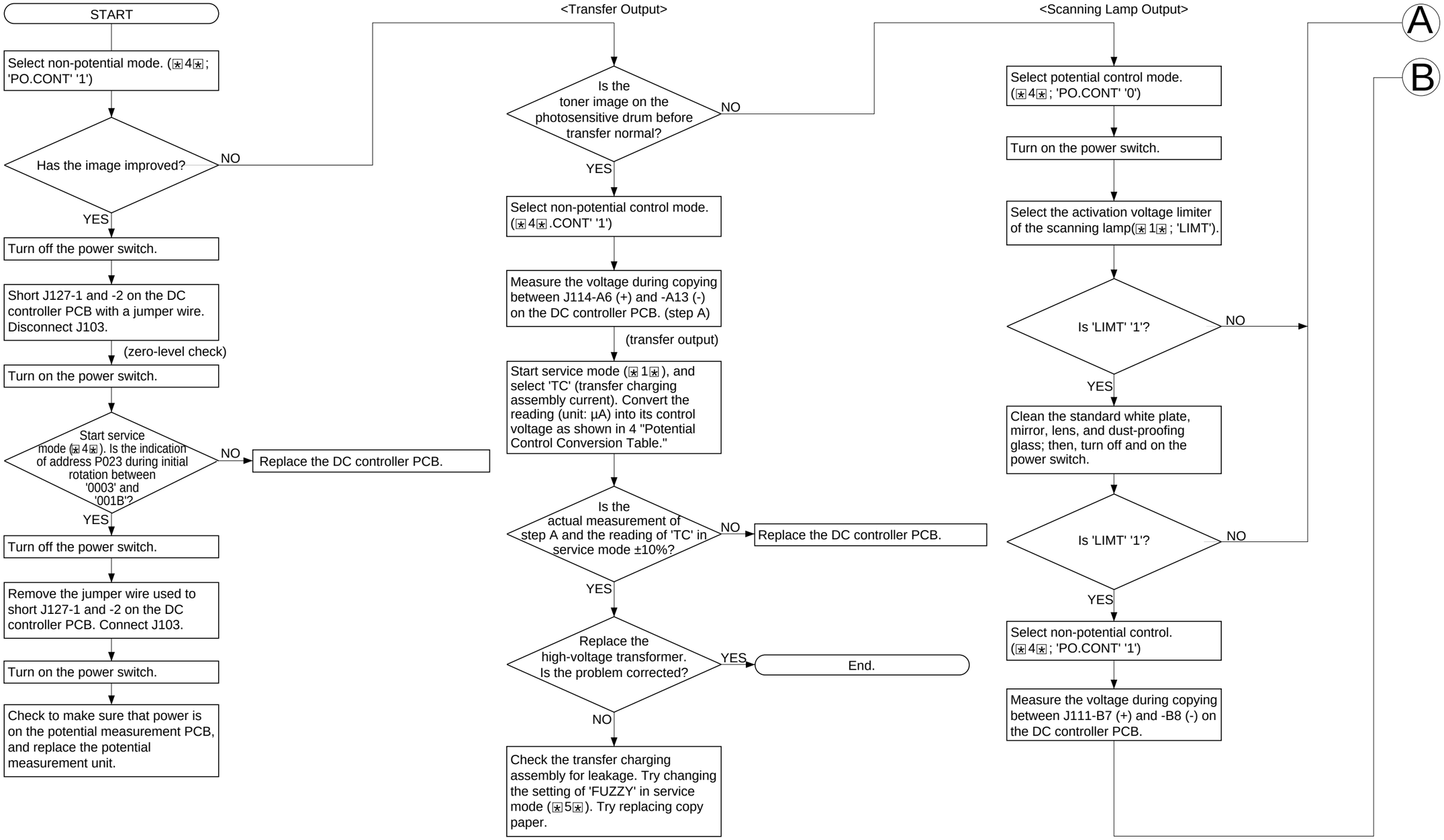

COPYRIGHT © 1997 CANON INC.

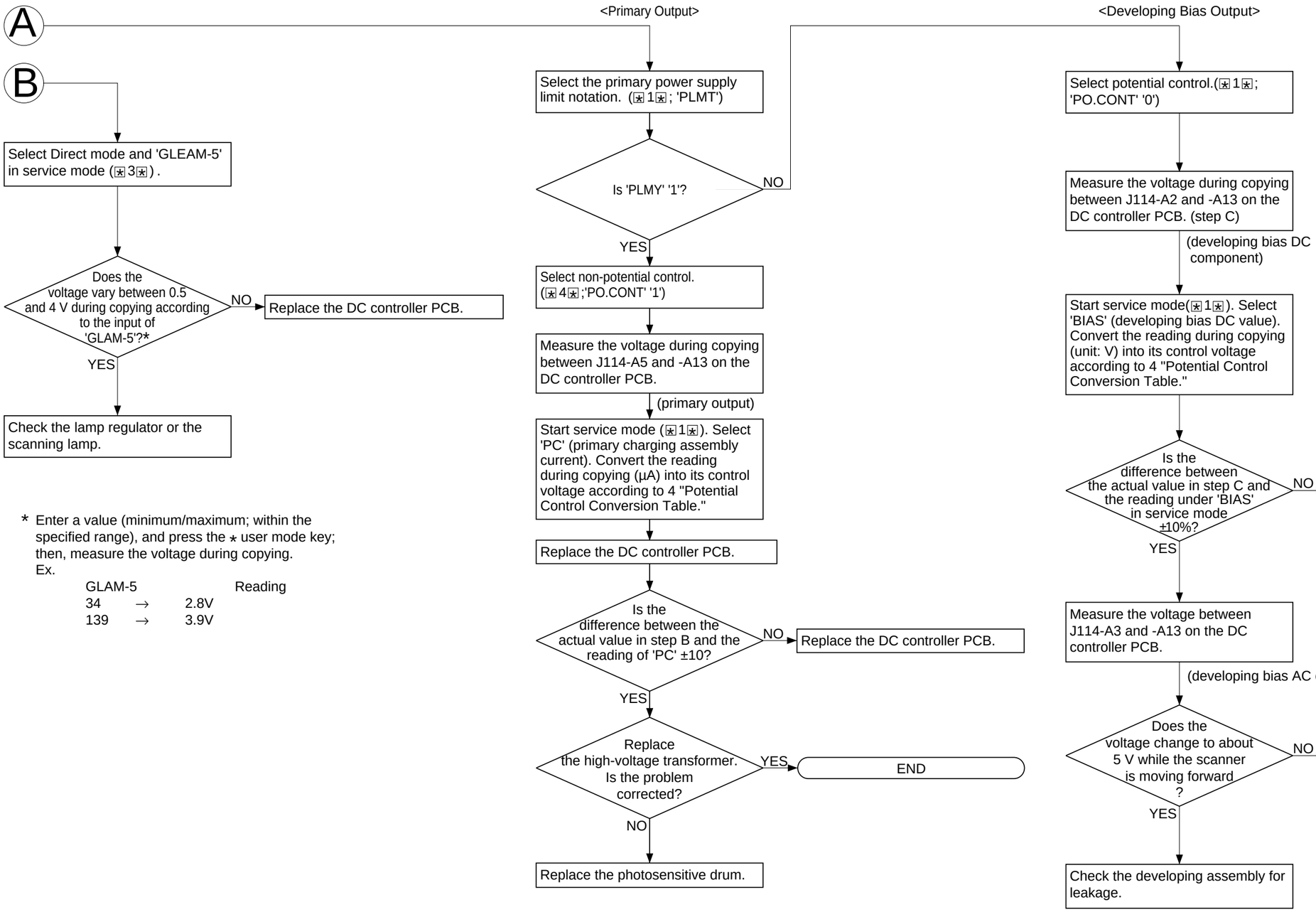

* Enter a value (minimum/maximum; within the specified range), and press the ⋆ user mode key; then, measure the voltage during copying.
Ex.

GLAM-5		Reading
34	→	2.8V
139	→	3.9V

COPYRIGHT © 1997 CANON INC. CANON NP6560/NP6360/NP6260 REV. 0 NOV. 1997 PRINTED IN JAPAN (IMPRIME AU JAPON)

4. Potential Control System Conversion Table

Control (V)	Primary (µA)	Developing bias (V)	Pre-transfer (µA)	Transfer (µA)	Separation (µA)
3.00	1,400	0	0	440	100
3.05	1,391	3	–2	437	96
3.10	1,382	7	–4	434	92
3.15	1,373	11	–6	431	88
3.20	1,365	15	–8	429	85
3.25	1,356	18	–10	426	81
3.30	1,347	22	–12	426	77
3.35	1,338	26	–14	420	73
3.40	1,330	30	–16	418	70
3.45	1,321	33	–18	415	66
3.50	1,312	37	–20	412	62
3.55	1,303	41	–22	409	58
3.60	1,295	45	–24	407	55
3.65	1,286	48	–26	404	51
3.70	1,277	52	–28	401	47
3.75	1,268	56	–30	398	43
3.80	1,260	60	–33	396	40
3.85	1,251	63	–35	393	36
3.90	1,242	67	–37	390	32
3.95	1,233	71	–39	387	28
4.00	1,225	75	–41	385	25
4.05	1,216	78	–43	382	21
4.10	1,207	82	–45	379	17
4.15	1,198	86	–47	376	13
4.20	1,190	90	–49	374	10
4.25	1,181	93	–51	371	6
4.30	1,172	97	–53	368	2
4.35	1,163	101	–55	365	–1
4.40	1,155	105	–57	363	–5
4.45	1,146	108	–59	360	–8
4.50	1,137	112	–61	357	–12
4.55	1,128	116	–63	354	–16
4.60	1,120	120	–66	352	–20

COPYRIGHT © 1997 CANON INC.

Control (V)	Primary (µA)	Developing bias (V)	Pre-transfer (µA)	Transfer (µA)	Separation (µA)
4.65	1,111	123	–68	349	–23
4.70	1,102	127	–70	346	–27
4.75	1,093	131	–72	343	–31
4.80	1,085	135	–74	341	–35
4.85	1,076	138	–76	338	–38
4.90	1,067	142	–78	335	–42
4.95	1,058	146	–80	332	–46
5.00	1,050	150	–82	330	–50
5.05	1,041	153	–84	327	–53
5.10	1,032	157	–86	324	–57
5.15	1,023	161	–88	321	–61
5.20	1,015	165	–90	319	–65
5.25	1,006	168	–92	316	–68
5.30	997	172	–94	313	–72
5.35	938	176	–96	310	–76
5.40	980	180	–99	308	–80
5.45	971	183	–101	305	–83
5.50	962	187	–103	302	–87
5.55	953	191	–105	299	–91
5.60	945	195	–107	297	–95
5.65	936	198	–109	294	–98
5.70	927	202	–111	291	–102
5.75	918	206	–113	288	–106
5.80	910	210	–115	286	–110
5.85	901	213	–117	283	–113
5.90	892	217	–119	280	–117
5.95	883	221	–121	277	–121
6.00	875	225	–123	275	–125
6.05	866	228	–125	272	–128
6.10	857	232	–127	269	–132
6.15	848	236	–129	266	–136
6.20	840	240	–132	264	–140
6.25	831	243	–134	261	–143
6.30	822	247	–136	258	–147

COPYRIGHT © 1997 CANON INC.
CANON NP6560/NP6360/NP6260 REV. 0 NOV. 1997 PRINTED IN JAPAN (IMPRIME AU JAPON)

Control (V)	Primary (µA)	Developing bias (V)	Pre-transfer (µA)	Transfer (µA)	Separation (µA)
6.35	813	251	–138	255	–151
6.40	805	255	–140	253	–155
6.45	796	258	–142	250	–158
6.50	787	262	–144	247	–162
6.55	778	266	–146	244	–166
6.60	770	270	–148	242	–170
6.65	761	273	–150	239	–173
6.70	752	277	–152	236	–177
6.75	743	281	–154	233	–181
6.80	735	285	–156	231	–185
6.85	726	288	–158	228	–188
6.90	717	292	–160	225	–192
6.95	708	296	–162	222	–196
7.00	700	300	–165	220	–200
7.05	691	303	–167	217	–203
7.10	682	307	–169	214	–207
7.15	673	311	–171	211	–211
7.20	665	315	–173	209	–215
7.25	656	318	–175	204	–218
7.30	647	322	–177	203	–222
7.35	638	326	–179	200	–226
7.40	630	330	–181	198	–230
7.45	621	333	–183	195	–233
7.50	612	337	–185	192	–237
7.55	603	341	–187	189	–241
7.60	595	345	–189	187	–245
7.65	586	348	–191	184	–248
7.70	577	352	–193	181	–252
7.75	568	356	–195	178	–256
7.80	560	360	–198	176	–260
7.85	551	363	–200	173	–263
7.90	542	367	–202	170	–267
7.95	533	371	–204	167	–271
8.00	525	375	–206	165	–275

COPYRIGHT © 1997 CANON INC.

Control (V)	Primary (µA)	Developing bias (V)	Pre-transfer (µA)	Transfer (µA)	Separation (µA)
8.05	516	378	–208	162	–278
8.10	507	382	–210	159	–282
8.15	498	386	–212	156	–286
8.20	490	390	–214	154	–290
8.25	481	393	–216	151	–293
8.30	472	397	–218	148	–297
8.35	463	401	–220	145	–301
8.40	455	405	–222	143	–305
8.45	446	408	–224	140	–308
8.50	437	412	–226	137	–312
8.55	428	416	–228	134	–316
8.60	420	420	–231	132	–320
8.65	411	423	–233	129	–323
8.70	402	427	–235	126	–327
8.75	393	431	–237	123	–331
8.80	385	435	–239	121	–335
8.85	376	438	–241	118	–338
8.90	367	442	–243	115	–342
8.95	358	446	–245	112	–346
9.00	350	450	–247	110	–350
9.05	341	453	–249	107	–353
9.10	332	457	–251	104	–357
9.15	323	461	–253	101	–361
9.20	315	465	–255	99	–365
9.25	306	468	–257	96	–368
9.30	297	472	–259	93	–372
9.35	288	476	–261	90	–376
9.40	280	480	–264	88	–380
9.45	271	483	–266	85	–383
9.50	262	487	–268	82	–387
9.55	253	491	–270	79	–391
9.60	245	495	–272	77	–395
9.65	236	498	–274	74	–398
9.70	227	502	–276	71	–402

 COPYRIGHT © 1997 CANON INC.

Control (V)	Primary (µA)	Developing bias (V)	Pre-transfer (µA)	Transfer (µA)	Separation (µA)
9.75	218	506	–278	68	–406
9.80	210	510	–280	66	–410
9.85	201	513	–282	63	–413
9.90	192	517	–284	60	–417
9.95	183	521	–286	57	–421
10.00	175	525	–288	55	–425
10.05	166	528	–290	52	–428
10.10	157	532	–292	49	–432
10.15	148	536	–294	46	–436
10.20	140	540	–297	44	–440
10.25	131	543	–299	41	–443
10.30	122	547	–301	38	–447
10.35	113	551	–303	35	–451
10.40	105	555	–305	33	–455
10.45	96	558	–307	30	–458
10.50	87	562	–309	27	–462
10.55	78	566	–311	24	–466
10.60	70	570	–313	22	–470
10.65	61	573	–315	19	–473
10.70	52	577	–317	16	–477
10.75	43	581	–319	13	–481
10.80	35	585	–321	11	–485
10.85	26	588	–323	8	–488
10.90	17	592	–325	5	–492
10.95	8	596	–327	2	–496
11.00	0	600	–330	0	–500

COPYRIGHT © 1997 CANON INC.

5. Checking the Environment Sensor

1) Start service mode (✻ 1 ✻), and take notes of the readings of temperature and humidity on the control panel display.
   Data A
   'RTMP' °C .....Data A1
   'RHUM' % .....Data A2
2) Press the Reset key twice, and turn off the power switch.
3) Remove the environment sensor, and insert the environment sensor jig (FY9-3014) in its place.
4) Turn on the power switch, and leave the machine alone for 5 min.
5) Start service mode (✻ 1 ✻), and take notes of the readings of temperature and humidity on the control panel display.
   Data B
   'RTMP' °C .....Data B1
   'RHUM' % .....Data B2
6) Compare data A and data B.
   • difference between data A1 and data B1 is 0 ±5
   • difference between data A2 and data B2 is 0 ±20
   If the difference between data A and data B is not as specified, replace the environment sensor.
7) Press the Reset key twice, and turn off the power switch.
8) Remove the environment sensor jig, and insert the environment sensor.
9) Install all covers.

Caution:
The environment sensor jig (FY9-3014) is adjusted to high precision at the factory. Be sure to keep it in an air-tight case with a drying agent for storage.

 COPYRIGHT © 1997 CANON INC.

6. Checking the Photointerrupters

You can check the machine's photointerrupters either with a conventional meter or the machine's service mode.

a. Using a Tester

1) Set the meter to the 30VDC range.
2) Connect the – probe of the meter to GND on the DC controller PCB.
3) Connect the + probe to the terminals (DC controller PCB) shown in the table.
4) Make checks as instructed.

b. Using Service Mode

1) Open the front door, and insert the door switch actuator into the door switch assembly.
2) Press the service switch with a clip over the cover.
3) Press [*], [2], and [*] in sequence on the control panel.
4) Using the keypad on the control panel, enter the address of each photointerrupter; then, check the reading.

Caution:

The machine's motors may start to operate when you turn on or off the sensors; exercise extra caution.

Sensor	Connector No. *2* address	Checks		*2* notation	Voltage
PS1 Scanner HP sensor	J111-A2 P007-03	Move the scanner by hand while in standby.	When the light-blocking plate is at PS1.	1	5V
			When the light-blocking plate is not at PS1.	0	0V
PS3 Scanner original leading edge 2 sensor	J111-A5 P107-6	Move the scanner by hand while in standby.	When the light-blocking plate is at PS3.	0	5V
			When the light-blocking plate is not at PS3.	1	0V
PS4 Scanner original leading edge 2 sensor	J111-A8 P002-04	Move the scanner by hand while in standby.	When the light-blocking plate is at PS4.	0	0V
			When the light-blocking plate is not at PS4.	1	1V
PS5 Copyboard cover open/closed sensor	J112-A4 P007-02	Move the copyboard cover by hand while in standby.	When the cover is closed.	1	5V
			When the cover is opened.	0	0V
PS6 Lens XHP sensor	J110-A8 P102-02	Put paper over PS6 while in standby.	When paper is not over PS6.	0	0V
			When paper is over PS6.	1	5V
PS7 Lens YHP sensor	J110-B2 P102-03	Put paper over PS7 while in standby.	When paper is not over PS7.	0	0V
			When paper is over PS7.	1	5V
PS8 Holding tray feeding assembly 1 paper sensor	J119-A4 P002-04	Insert paper in the detecting lever assembly of PS8 while in standby.	When paper is inserted.	1	5V
			When paper is removed.	0	0V
PS9 Holding tray feeding assembly 2 paper sensor	J113-B12 P002-03	Insert paper in the detecting lever assembly of PS9 while in standby.	When paper is inserted.	1	5V
			When paper is removed.	0	0V

 COPYRIGHT © 1997 CANON INC. CANON NP6560/NP6360/NP6260 REV. 0 NOV. 1997 PRINTED IN JAPAN (IMPRIME AU JAPON)

Sensor	Connector No. *2* address	Checks		*2* notation	Voltage
PS10 External delivery sensor	J108-B7 P005-04	Insert paper in the detecting lever assembly of PS10 while in standby.	When paper is inserted.	1	5V
			When paper is removed.	0	0V
PS11 Fixing cleaning belt length sensor	J108-A13 P005-05	Insert paper in the detecting lever assembly of PS11 while in standby.	When paper is inserted.	1	5V
			When paper is removed.	0	0V
PS12 Internal delivery sensor	J108-B12 P005-02	Insert paper in the detecting lever assembly of PS12 while in standby.	When paper is inserted.	0	0V
			When paper is removed.	1	5V
PS14 Holding tray registration paper sensor	113-A3 P005-07	Insert paper in the detecting lever assembly of PS14 while in standby.	When paper is inserted.	1	5V
			When paper is removed.	0	0V
PS15 Holding tray inlet paper sensor	J113-B10 P005-06	Insert paper in the detecting lever assembly of PS15 while in standby.	When paper is inserted.	1	5V
			When paper is not inserted.	0	0V
PS17 Holding tray pick-up sensor	J113-B11 P005-09	Insert paper in the detecting lever assembly of PS17 while in standby.	When paper is inserted.	1	5V
			When paper is not inserted.	0	0V

COPYRIGHT © 1997 CANON INC.

Sensor	Connector No. *2* address	Checks		*2* notation	Voltage
PS19 Holding tray re-circulating bar HP sensor	J113-B6 P005-10	Insert paper in the detecting lever assembly of PS19 while in standby.	When paper is inserted.	1	5V
			When paper is not inserted.	0	0V
PS20 Holding tray YHP sensor	J113-A10 P100-03	Move the rear partition plate by hand while in standby.	When the light-blocking plate is at PS20.	1	5V
			When the light-blocking plate is not at PS20.	0	0V
PS21 Holding tray XHP sensor	J113-B1 P100-02	Move the side guide by hand while in standby.	When the light-blocking plate is at PS21.	1	5V
			When the light-blocking plate is not at PS21.	0	0V
PS22 Multifeeder paper sensor	J115-B7 P002-05	Insert paper in the detecting lever assembly of PS22 while in standby.	When paper is inserted.	1	5V
			When paper is removed.	0	0V
PS23 Registration paper sensor	J108-A7 P002-02	Move the detecting lever by hand while in standby.	When the light-blocking plate is at PS23.	1	5V
			When the light-blocking plate is not at PS23.	0	0V
PS24 Pick-up vertical path 0 sensor	J116-B7 P002-00	Move the detecting lever by hand while in standby.	When the light-blocking plate is at PS24.	1	5V
			When the light-blocking plate is not at PS24.	0	0

 COPYRIGHT © 1997 CANON INC.

Sensor	Connector No. *2* address	Checks		*2* notation	Voltage
PS25 Cassette 3 lifter position sensor	J117-A4 P008-08	Move the detecting lever by hand while in standby.	When the light-blocking plate is at PS25.	1	5V
			When the light-blocking plate is not at PS25.	0	0V
PS26 Cassette 3 paper sensor	J117-A7 P008-06	Move the detecting lever by hand while in standby.	When the light-blocking plate is at PS26.	1	5V
			When the light-blocking plate is not at PS26.	0	0V
PS27 Pick-up vertical path 3 paper sensor	J117-B4 P008-04	Move the detecting lever by hand while in standby.	When the light-blocking plate is at PS27.	1	5V
			When the light-blocking plate is not at PS27.	0	0V
PS28 Cassette 4 lifter position sensor	J130-A4 P008-09	Move the detecting lever by hand while in standby.	When the light-blocking plate is at PS28.	1	5V
			When the light-blocking plate is not at PS28.	0	0V
PS29 Cassette 4 paper sensor	J130-A7 P008-07	Move the detecting lever by hand while in standby.	When the light-blocking plate is at PS29.	1	5V
			When the light-blocking plate is not at PS29.	0	0V
PS30 Pick-up vertical path 4 sensor	J130-B4 P008-05	Move the detecting lever by hand while in standby.	When the light-blocking plate is at PS30.	1	5V
			When the light-blocking plate is not at PS30.	0	0V
PS31 Right deck lifter position sensor	J116-A4 P005-08	Move the detecting lever by hand while in standby.	When the light-blocking plate is at PS31.	1	5V
			When the light-blocking plate is not at PS31.	0	0V

COPYRIGHT © 1997 CANON INC.

Sensor	Connector No. *2* address	Checks		*2* notation	Voltage
PS32 Right deck paper sensor	J116-A7 P007-10	Move the detecting lever by hand while in standby.	When the light-blocking plate is at PS32.	1	5V
			When the light-blocking plate is not at PS32.	0	0V
PS33 Pick-up vertical path 1 sensor	J119-A7 P007-12	Move the detecting lever by hand while in standby.	When the light-blocking plate is at PS33.	1	5V
			When the light-blocking plate is not at PS33.	0	0V
PS34 Left deck lifter position sensor	J121-A7 P007-15	Move the detecting lever by hand while in standby.	When the light-blocking plate is at PS34.	1	5V
			When the light-blocking plate is not at PS34.	0	0V
PS35 Left deck paper sensor	J121-A10 P007-11	Move the detecting lever by hand while in standby.	When the light-blocking plate is at PS35.	1	5V
			When the light-blocking plate is not at PS35.	0	0V
PS36 Pick-up vertical path 2 sensor	J121-B10 P007-13	Move the detecting lever by hand while in standby.	When the light-blocking plate is at PS36.	1	5V
			When the light-blocking plate is not at PS36.	0	0V
PS37 Right deck limiter sensor	J116-B13 ————	Move the detecting lever by hand while in standby.	When the light-blocking plate is at PS37.	—	5V
			When the light-blocking plate is not at PS37.	—	0V
PS38 Right deck open/closed sensor	J116-B10 P007-04	Move the detecting lever by hand while in standby.	When the light-blocking plate is at PS38.	1	5V
			When the light-blocking plate is not at PS38.	0	0V

 COPYRIGHT © 1997 CANON INC.

Sensor	Connector No. *2* address	Checks		*2* notation	Voltage
PS39 Left deck limit sensor	J121-B2 ————	Move the detecting lever by hand while in standby.	When the light-blocking plate is at PS39.	—	5V
			When the light-blocking plate is not at PS39.	—	0V
PS40 Left deck open/closed sensor	J121-A2 P007-04	Move the detecting lever by hand while in standby.	When the light-blocking plate is at PS40.	1	5V
			When the light-blocking plate is not at PS40.	0	0V
PS41 Upper right door sensor	J119-B4 P007-00	Move the detecting lever by hand while in standby.	When the light-blocking plate is at PS41.	1	5V
			When the light-blocking plate is not at PS41.	0	0V
PS42 Upper right door sensor	J119-B7 P007-01	Move the detecting lever by hand while in standby.	When the light-blocking plate is at PS42.	1	5V
			When the light-blocking plate is not at PS42.	0	0V
PS46 Multifeeder door sensor	J105-A9 P005-03	Move the detecting lever by hand while in standby.	When the light-blocking plate is at PS46.	1	5V
			When the light-blocking plate is not at PS46.	0	0V
PS47 Fixing assembly outlet paper sensor	J108-B4 P005-08	Move the detecting lever by hand while in standby.	When the light-blocking plate is at PS47.	1	5V
			When the light-blocking plate is not at PS47.	0	0V
PS48 Scanner locked sensor	J114-A14 P009-03	Move the detecting lever by hand while in standby.	When the light-blocking plate is at PS48.	1	5V
			When the light-blocking plate is not at PS48.	0	0V

COPYRIGHT © 1997 CANON INC.

Sensor	Connector No. *2* address	Checks		*2* notation	Voltage
PS49 Left deck outlet paper sensor	J121-B5 P009-04	Move the detecting lever by hand while in standby.	When the light-blocking plate is at PS49.	1	5V
			When the light-blocking plate is not at PS49.	0	0V
PS50 Cassette 3 open/closed sensor	J117-B7 P009-05	Hold the grip and move the cassette 3.	When the light-blocking plate is at PS50.	1	5V
			When the light-blocking plate is not at PS50.	0	0V
PS51 Cassette 4 open/closed sensor	J130-B7 P009-06	Hold the grip and move the cassette 4.	When the light-blocking plate is at PS51.	1	5V
			When the light-blocking plate is not at PS51.	0	0V
PS52 Claw jam sensor	J108-A19 P009-01	Move the detecting lever while in standby.*	When the light-blocking plate is at PS52.	1	5V
			When the light-blocking plate is not at PS52.	0	0V
PS53 Fixing/feeding assembly unit sensor	J108-A2 P005-01	Move the releasing lever of the fixing/feeding assembly by hand while in standby.	When the light-blocking plate is at PS53.	0	0V
			When the light-blocking plate is not at PS53. (unit set)	1	5V

* Or, tape the detecting lever in place, and push in the fixing/feeding unit, holding tray, or holding tray feeding assembly into the machine.

** Or, put copy paper over the sensor to keep the light-receiving area from light.

 COPYRIGHT © 1997 CANON INC.

7. Registering the Paper Width Basic Value (✻4✻; cassette/multifeeder)

Perform the steps that follow whenever you have

- replaced the machine's paper width detecting VR (including the multifeeder); or
- adjusted the front/rear registration of the cassette.

For cassette 4, you must work on 'STMTR' and 'A4R'; for the multifeeder, you must work on 'A6R', 'A4R', and 'A4'.

a. Cassettes 4

In the case of the cassette 4,

1) Start service mode (✻4✻), and select the 8th screen.
2) Slide out the cassette 4, and set the paper width guide plate inside to STMTR; then, slide the cassette into the machine.
3) Press 'C4_STMTR' on the screen on the control panel.
4) Press the ✻ key.
   - Check to make sure that the value XXXX indicated under 'C4_STMTR: XXX' is the same as '(XXX)'.
5) Slide out the cassette 4, and set the paper width guide plate inside the cassette to A4R; then, slide the cassette into the machine.
6) Press 'C4_A4R' on the screen on the control panel.
7) Press the ✻ key.
   - Check to make sure that the value YYY indicated under 'C4_A4R: YYY' is the same as '(YYY)'.

b. Multifeeder

Perform the steps shown for the cassette 4; however, you must perform them for A6R, A4R, and A4.

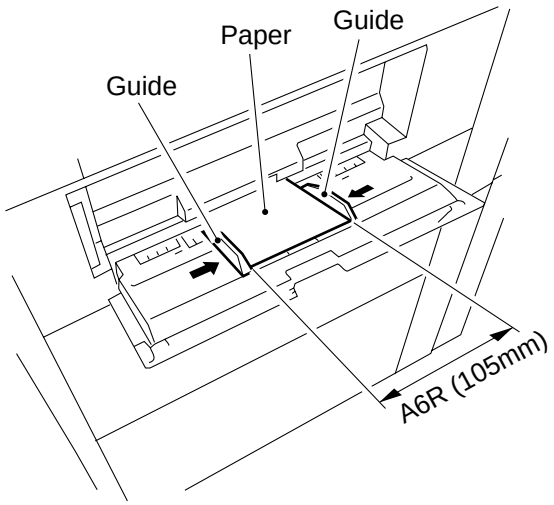

Figure 11-249

III. IMAGE FAULTS

A. Initial Checks

1. Checking the Site Environment

Make sure of the following:

a. The voltage of the power source is the rating ±10%. (The power plug must not be disconnected at night.)
b. The machine is not near areas of high temperature/humidity (near water faucets, water boilers, humidifiers, and sources of fire), and it is not in a cold or dusty place.
c. The machine is not in a place exposed to ammonium gas.
d. The machine is not exposed to direct rays of the sun. (Otherwise, provide curtains.)
e. The room is well ventilated.
f. The machine is kept level.

2. Checking the Originals

Check the originals to find out whether the problem is caused by the type of original or the machine.

a. The copy density is best set to scale 5 ±1.
b. Originals with a reddish background may not provide good contrast (red sheets, slips, etc.).
c. The density of originals at times affect the copy quality:

Reference:

- If the original is a diazo copy or has an appreciable transparency, copies can be mistaken for “foggy” copies.
- If the original is made in light pencil, the copies can be mistaken for “light” copies.

COPYRIGHT © 1997 CANON INC.
CANON NP6560/NP6360/NP6260 REV. 0 NOV. 1997 PRINTED IN JAPAN (IMPRIME AU JAPON)

3. Checking the Copyboard Cover, Copyboard Glass, and Standard White Plate

Check the copyboard cover, copyboard glass, and standard white plate for dirt and scratches. If dirt is found, clean them with solution of mild detergent or alcohol; if scratches are found, replace them.

4. Checking the Charging Assemblies

a. Check each charging assembly for dirt and faults on its charging wire (scratches, etc.).
b. Clean the charging wire of each charging assembly. (If dirt cannot be removed, replace it.)
c. Check the height of the charging wire of each charging assembly.
d. Check to make sure that each charging assembly is securely set.
e. Check the charging wire spring for rusting.
f. Check the anti-vibration rubber (each charging assembly, except primary charging assembly) for displacement.

5. Checking the Developing Assembly

a. Check to make sure that the rolls on both ends of the developing assembly are in contact with the drum.
b. Check to make sure that the surface of the developing cylinder is coated with an even layer of toner.

6. Checking the Paper

a. Check to make sure that the paper is of a type recommended by Canon.
b. Check to make sure that the paper is not moist.
Try copy paper fresh out of package.

7. Checking the Periodically Replaced Parts

Check the parts against the scheduled servicing chart and the periodically replaced parts table; replace the parts accordingly.

8. Others

Bringing in a machine from a cold to warm place (especially in winter for installation) can cause condensation inside the machine, leading to various problems.

Reference:

a. On the scanning system (glass, mirror, lens), it can cause light images.
b. On the charging system, it can cause leakage.
c. On the pick-up/feeding guide plate, it can cause feeding faults.
If condensation is noted, dry wipe the part or leave the machine powered for 60 min.

COPYRIGHT © 1997 CANON INC.

Caution:

If the copy has an uneven density (between front) or is too light or foggy, perform the “Image Adjustment Basic Procedure” before consulting the troubleshooting tables.

 COPYRIGHT © 1997 CANON INC. CANON NP6560/NP6360/NP6260 REV. 0 NOV. 1997 PRINTED IN JAPAN (IMPRIME AU JAPON)

B. Sample Image Faults

not available

 COPYRIGHT © 1997 CANON INC. CANON NP6560/NP6360/NP6260 REV. 0 NOV. 1997 PRINTED IN JAPAN (IMPRIME AU JAPON)

C. Troubleshooting Image Faults

1. The copy is too light (halftone only).

Cause	Step	Checks	YES/NO	Action
	1	Perform the Image Adjustment Basic Procedure. Is the problem corrected?	YES	End.
Scanner	2	Clean the standard white plate, mirror, lens, and dust-proofing glass. Is the problem corrected?	YES	End.
Developing assembly	3	Are the rolls of the developing assembly in firm contact with the drum during copying?	NO	Check the developing assembly locking lever.
Developing assembly	4	Is the developing cylinder coated with an even layer of toner?	NO	Check the developing assembly.
Lamp regulator	5	Replace the lamp regulator. Is the problem corrected?	YES	End.
DC controller PCB			NO	Replace the DC controller PCB.

COPYRIGHT © 1997 CANON INC.

2. The copy is too light (including solid black).
3. The copy is too light (entire face).

Cause		Step	Checks	YES/NO	Action
		1	Perform the Image Adjustment Basic Procedure. Is the problem corrected?	YES	End.
		2	Turn off the power switch during copying, and open the front door. Is the toner image on the surface of the photosensitive drum before transfer more or less normal?	NO	Go to step 7.
Transfer	Transfer/ separation charging assembly	3	Is the charging wire of the transfer charging assembly hooked correctly and is its height correct?	NO	1. Hook the charging wire correctly. 2. Adjust the height of the charging wire.
	Copy paper	4	Is the transfer/separation assembly set securely?	NO	1. Clean the charging wire. 2. Set the charging assembly securely.
		5	Set 'FUZZY' in service mode (✻ 5 ✻) to '1', and make a copy. Is the problem corrected?	YES	End. (The problem is due to the environment.)
				NO	Set 'FUZZY' back to '0', and perform the following steps.
		6	Try fresh copy paper. Is the problem corrected?	YES	1. The paper may be moist. Advise the user on the correct method of storing paper. 2. Advise the user that the use of paper not recommended by Canon may not bring the best results.

Cont'd

 COPYRIGHT © 1997 CANON INC. CANON NP6560/NP6360/NP6260 REV. 0 NOV. 1997 PRINTED IN JAPAN (IMPRIME AU JAPON)

Cause		Step	Checks	YES/NO	Action
Transfer	Lower transfer guide/varistor	7	Measure the resistance between the PCBs (metal sections) of the lower transfer guide and the feeding assembly. Is it 0 ?	YES	1. Check to see if the transfer guide should be in contact with the side plate of the feeding assembly (metal section). 2. Replace the varistor.
	DC controller PCB			NO	Check the high-voltage transformer (HVT) and the DC controller PCB.
Development	Developing assembly	8	Is the developing assembly set securely? Are the rolls of the developing assembly in firm contact with the photosensitive drum?	NO	Check the developing assembly locking unit.
Pre-transfer charging assembly		9	Is the pre-transfer charging wire hooked correctly and is its height correct?	NO	1. Hook the charging wire correctly. 2. Adjust the height of the charging wire.
		10	Is the pre-transfer charging assembly set correctly?	NO	1. Clean the charging wire. 2. Set the charging assembly securely.
Potential control, Photosensitive drum		11	Turn off and then on the power switch, and check the readings of 'VD' and 'VL1' in service mode (✻ 1 ✻). Are the readings of 'VDM' and 'VL1M' the target value (VDT, VL1T) ±10V?	NO	Check the potential control system; if normal, replace the photosensitive drum.
Developing bias control				YES	Check the developing bias control system.

COPYRIGHT © 1997 CANON INC.

4. The copy has an uneven density (darker at front).
5. The copy has an uneven density (lighter at front).

Cause	Step	Checks	YES/NO	Action
Primary charging wire	1	Perform the Image Adjustment Basic Procedure. Is the problem corrected?	YES	End.
Developing assembly	2	Are the developing rolls of the developing assembly firmly in contact with the photosensitive drum?	NO	Check the developing assembly locking unit.
Scanner	3	Clean the scanning lamp, reflecting plate, side reflecting plate, mirror, lens, dust-proofing glass, and heat absorbing glass. Is the problem corrected?	YES	End.
Pre-exposure lamp	4	Is the pre-exposure lamp flashing during copying?	NO	1. Replace the pre-exposure lamp. 2. Replace the DC controller PCB.
Developing assembly	5	Is the developing cylinder coated with an even layer of toner?	NO	1. Clean the tip of the blade of the developing assembly (dry wiping). 2. Clean the surface of the developing cylinder. 3. Check the toner inside the developing assembly to see if it is level.
Charging assembly, Copy paper			YES	1. Clean all charging wires once again, and check their height. 2. Try replacing copy paper.

 COPYRIGHT © 1997 CANON INC. CANON NP6560/NP6360/NP6260 REV. 0 NOV. 1997 PRINTED IN JAPAN (IMPRIME AU JAPON)

6. The copy is foggy. (overall)

Cause	Step	Checks	YES/NO	Action
LIGHT_5	1	Perform the Image Adjustment Basic Procedure. Is the problem corrected?	YES	End.
Scanner	2	Clean the scanning lamp, reflecting plate, side reflecting plate, mirror, lens, dust-proofing glass, and heat absorbing glass. Is the problem corrected?	YES	End.
Cleaner assembly	3	Is the cleaning blade installed correctly?	NO	Install the cleaning blade.
Pre-exposure lamp, DC controller PCB	4	Is the pre-exposure lamp flashing during copying?	NO	1. Replace the pre-exposure lamp. 2. Replace the DC controller PCB.
Developing roll	5	Are the developing rolls worn?	YES	Replace the developing rolls.
Developing cylinder	6	Replace the developing cylinder. Is the problem corrected?	YES	Replace the developing cylinder.
Lamp regulator	7	Replace the lamp regulator. Is the problem corrected?	YES	End.
Potential control system	8	Make the checks on p. 11-42. Is the potential sensor normal?	YES	Replace the DC controller PCB.
DC controller PCB	9	Set the meter to the 30VDC range, and measure the voltage between J114-A2 (DCBC) and J114-A13 (GND) on the DC controller PCB.	NO	Replace the DC controller PCB.
High-voltage transformer, Developing assembly			YES	1. Check the wiring from the DC controller PCB and the high-voltage transformer; if normal, replace the high-voltage transformer. 2. Check the developing assembly.

COPYRIGHT © 1997 CANON INC.

7. The copy has vertical fogging.
8. The copy has black lines (vertical, fuzzy, thick).

Cause	Step	Checks	YES/NO	Action
Primary charging assembly	1	Clean the charging wire, grid wire, and shielding plate. Is the problem corrected?	YES	End.
Scanner system	2	Clean the scanning lamp, reflecting plate, side reflecting plate, lens, mirror, dust-proofing glass, and heat absorbing glass. Is the problem corrected?	YES	End.
Pre-exposure lamp	3	Clean the pre-exposure lamp. Is the problem corrected?	YES	End.
Developing assembly	4	Is the developing cylinder coated with an even layer of toner?	NO	Check and clean the edge of the blade of the developing assembly.
Fixing assembly, Cleaner assembly			YES	Check the fixing assembly and the cleaner assembly.

 COPYRIGHT © 1997 CANON INC. CANON NP6560/NP6360/NP6260 REV. 0 NOV. 1997 PRINTED IN JAPAN (IMPRIME AU JAPON)

9. The copy has black lines (vertical, fine).

Cause	Step	Checks	YES/NO	Action
Copyboard glass	1	Dese the problem occur only in stream reading mode?	YES	Check the copyboard glass for dirt and scratches at the point where the scanner is fixed in position in stream reading mode.
	2	Press the Copy Start key, and turn off the power switch when copy paper is in the feeding assembly. At this time, does the copy before moving through the fixing assembly have black lines?	NO	Go to step 6.
Photosensitive drum cleaner assembly	3	Is paper or foreign matter trapped on the cleaning blade of the cleaner assembly?	YES	Remove the foreign matter, and clean the cleaning blade and the outside of the cleaner assembly.
	4	Are there scratches on the cleaning blade? (Feel the edge of the cleaning blade with a finger to find out.)	YES	Switch to the new side (edge). If both edges have scratches, find out the cause.
Photosensitive drum	5	Are there scratches or black lines on the surface of the photosensitive drum in the peripheral direction?	YES	Replace the photosensitive drum. If scratches are found, find out the cause.
Developing system, Exposure system			NO	Check the developing system and the exposure system.
Fixing assembly	6	Are there scratches or black lines on the surface of the fixing assembly upper roller in the peripheral direction?	YES	1. Replace the upper roller. 2. Check the take-up mechanism for the cleaning belt. 3. Check the reciprocating mechanism of the thermistor and the separation claw.
			NO	Check the inlet of the fixing assembly for dirt.

COPYRIGHT © 1997 CANON INC.

10. The copy has white spots (vertical).
11. The copy has white lines (vertical).

Cause	Step	Checks	YES/NO	Action
Fixing assembly	1	Press the Copy Start key while keeping the copyboard cover open, and turn off the power switch while copy paper is moving through the feeding assembly. At this time, does the copy image before moving through the fixing assembly have white spots or white lines?	NO	1. Clean the inlet (upper, lower) of the fixing assembly. 2. Check the upper roller of the fixing assembly. 3. Check the take-up mechanism (cleaning) for the web. 4. Clean the separation claw.
Primary charging assembly	2	Clean the charging wire, grid wire, and shielding plate of the primary charging assembly. Is the problem corrected?	YES	Clean the parts thoroughly with alcohol. If the dirt cannot be removed, replace the charging wire.
Developing assembly	3	Is the developing cylinder coated with an even layer of toner?	NO	Check the blade edge of the developing assembly for paper lint.
Copy paper	4	Use fresh copy paper. Is the problem corrected?	YES	The copy paper may be moist. Advise the user on the correct method of storing paper.
Photosensitive drum	5	Are there scratches on the surface of the photosensitive drum corresponding to the problem in the copy image in the peripheral direction?	YES	Be sure to find out the cause of the scratches, and then replace the photosensitive drum.

Cont'd

 COPYRIGHT © 1997 CANON INC. CANON NP6560/NP6360/NP6260 REV. 0 NOV. 1997 PRINTED IN JAPAN (IMPRIME AU JAPON)

Cause	Step	Checks	YES/NO	Action
Transfer/ separation charging assembly, Pre-transfer charging assembly	6	Are the separation claws of the cleaner assembly in contact with copy paper while the copy paper is being fed?	YES	1. Clean the pre-transfer charging assembly and the transfer/separation charging assembly. If the dirt cannot be removed, replace the charging wire. 2. Try replacing the copy paper. 3. Select 'FUZZY' in service mode (✻5✻), and set it to '3'.
Blanking exposure lamp, DC controller PCB	7	Are the blank exposure LEDs (lamp) corresponding to the problem in the copy image ON while the scanner is moving forward?	YES	Check the wiring from the blanking exposure lamp to the DC controller PCB; if normal, replace the DC controller PCB.
External light			NO	Check the photosensitive drum to see if it should not be exposed to external light.

COPYRIGHT © 1997 CANON INC.

12. The copy has white spots (horizontal).

Cause	Step	Checks	YES/NO	Action
Developing assembly	1	Is the problem noted at intervals of about 52 mm?	YES	1. Clean the developing rolls. 2. Dry wipe the surface of the developing cylinder. 3. If the surface of the developing cylinder have scratches, replace the developing cylinder.
Drum	2	Is the problem noted at intervals of about 25 cm?	YES	1. Clean the drum. 2. If scratches are found, replace the drum.
Copy paper	3	Try fresh copy paper. Is the problem corrected?	YES	The copy paper may be moist. Advise the user on the correct method of sorting paper.
Scanner rail, Scanner cable	4	Does the problem occur at the same location on all copies?	YES	1. Check the scanner rail for foreign matter. 2. Adjust the scanner cable.
Charging wire, Photosensitive drum	5	Are there scratches on the surface of the photosensitive drum?	NO	Clean the charging assembly.
			YES	Replace the photosensitive drum.

 COPYRIGHT © 1997 CANON INC. CANON NP6560/NP6360/NP6260 REV. 0 NOV. 1997 PRINTED IN JAPAN (IMPRIME AU JAPON)

13. The copy has a soiled back.

Cause	Step	Checks	YES/NO	Action
	1	Turn off the power switch while copy paper is moving through the feeding assembly. At this time, is the back of the paper soiled?	NO	Go to step 3.
Developing assembly	2	Does the problem occur at intervals of about 52 mm?	YES	1. Clean the registration roller. 2. Clean the transfer guide. 3. Check the developing assembly for leakage of toner.
Cleaner assembly			NO	1. Clean the feeding assembly. 2. Check the cleaner assembly for leakage of toner.
Fixing assembly	3	Is the take-up mechanism of the fixing cleaning belt and the cleaning mechanism of the upper roller normal?	NO	1. Check the take-up mechanism of the cleaning belt. 2. Clean the upper roller and the lower roller. 3. Clean the fixing assembly inlet guide.
Delivery assembly			YES	Clean the delivery roller and the separation claws.

COPYRIGHT © 1997 CANON INC.

14. The copy has fixing faults.

Cause		Step	Checks	YES/NO	Action
Fixing assembly	Upper roller, Lower roller	1	Does the problem occur in vertical direction?	YES	Check the upper roller and the lower roller for scratches.
	Heater (H1, H2)	2	Does the heater (H1, H2) turn on immediately after power-on?	NO	See “The heater fails to turn on.”
	Lower roller pressure	3	Is the lower roller pressure (nip) as specified?	NO	Adjust the lower roller pressure.
Copy paper		4	Is the paper of a type recommended by Canon?	NO	Try paper recommended by Canon. If the results are good, advise the user to use recommended paper.
Upper fixing roller				YES	Check the upper roller for peeling.

COPYRIGHT © 1997 CANON INC.
CANON NP6560/NP6360/NP6260 REV. 0 NOV. 1997 PRINTED IN JAPAN (IMPRIME AU JAPON)

15., 16., 17. The copy has displaced leading edge registration.

Cause	Step	Checks	YES/NO	Action
Original	1	Is the original placed correctly?	NO	Place it correctly.
Copy paper	2	Is the paper of a type recommended by Canon?	NO	Try recommended paper. If the results are good, advise the user to use recommended paper.
	3	Make copies using the paper deck and each of the cassettes. Is the problem noted on all copies?	YES	Go to step 4.
			NO	Check each pick-up system.
Pick-up roller	4	Has the pick-up roller reached its average life?	YES	If wear is noted on the pick-up roller, replace it.
Leading edge margin	5	Adjust the leading edge margin. Is the problem corrected?	YES	End.
Registration clutch, Registration roller	6	Set the meter to the 30DC range, and measure the voltage between J108A-5 (+) and J108A-6 (–) on the DC controller PCB. Does it change from 24 to 0 V instantaneously while the scanner is moving forward?	YES	1. Check the No. 1 registration clutch. 2. Check the registration roller for deformation and wear.
DC controller PCB			NO	Replace the DC controller PCB.

COPYRIGHT © 1997 CANON INC.

18. The copy is blurred and fuzzy.

Cause	Step	Checks	YES/NO	Action
Scanner drive cable	1	Is the cable overlapping on the cable pulley while the scanner is moving, or is the cable too slack or taut?	YES	1. Route the cable once again. 2. If cable is twisted or frayed, replace it.
Scanner rail	2	Move the No. 1 mirror mount by hand. Does it move smoothly?	NO	Clean the surface of the scanner rail with alcohol. Thereafter, apply a small amount of lubricant.
Photosensitive drum	3	Does the problem occur at intervals of about 25 cm?	YES	1. Check the drum gear. 2. Check the ends of the drum (in contact with the developing rolls) for scraches and protrusions.
Drum drive gear	4	Does the problem occur at intervals of about 3 mm?	YES	Check the drum drive gear.
Developing gear	5	Does the problem occur at intervals of about 6 mm?	YES	Check the developing assembly.
Cleaner assembly gear	6	Does the problem occur at intervals of about 6 mm?	YES	Check the cleaner assembly.
Drum drive system			NO	Check the drum drive system.

 COPYRIGHT © 1997 CANON INC. CANON NP6560/NP6360/NP6260 REV. 0 NOV. 1997 PRINTED IN JAPAN (IMPRIME AU JAPON)

19. The copy has horizontal fogging.

Cause	Step	Checks	YES/NO	Action
	1	Does the problem occur at the same location on all copies made in Direct?	YES	Go to step 3.
Scanning lamp, Lamp regulator	2	Does the scanning lamp flicker while the scanner is moving forward?	YES	Check the scanning lamp and the lamp regulator.
Scanner	3	Make reduced copies, and compare it against ones made in Direct. Are the positions of the problem different?	NO	Check the scanning system.
Feeding assembly			YES	Check the feeding system.

20. The copy has poor sharpness.

Cause	Step	Checks	YES/NO	Action
Copyboard glass	1	Is oil found on the copyboard glass?	YES	Clean the copyboard glass.
Mirror	2	Is the horizontal reproduction ratio in Direct mode as specified?	NO	Adjust the distance between No. 1 mirror and No. 2 mirror.
Scanner	3	Clean the scanning lamp, reflecting plate, mirror, lens, dust-proofing glass, and heat absorbing glass. Is the problem corrected?	YES	End.
Photosensitive drum	4	Replace the photosensitive drum. Is the problem corrected?	YES	End.
Lens drive assembly			NO	Check the operation of the lens drive assembly.

COPYRIGHT © 1997 CANON INC.

21. The copy is blank.

Cause	Step	Checks	YES/NO	Action
Primary charging assembly	1	Is the primary charging assembly set securely?	NO	Set the charging assembly.
	2	Is the charging wire or the grid wire broken?	YES	String the charging wire and the grid wire newly.
Developing assembly	3	Is the developing assembly in firm contact with the drum?	NO	Check the developing assembly locking lever.
DC controller PCB	4	Does the blanking exposure lamp remain OFF while the scanner is moving forward?	NO	Check the DC controller PCB.
Scanning lamp	5	Does the scanning lamp remain ON during copying?	NO	See “The scanning lamp fails to turn ON.”
Connector	6	Are the connectors of the PCBs connected securely?	NO	Connect them securely.
Potential control system	7	Is the control by the potential sensor executed normally?	NO	Replace the potential measurement unit.
Developing bias	8	Is the contact of the developing bias firmly in place?	NO	Fix it in place.
Main motor (M1)	9	•Is the 1st copy blank halfway? •Is the 1st copy blank, does the 2nd copy have displaced registration, and does a stationary jam occur in this	NO	Replace the main motor (M1).

22. The copy is solid black.

Cause	Step	Checks	YES/NO	Action
	1	Does the scanning lamp remain ON during copying?	NO	See “The scanning lamp fails to turn on.”

 COPYRIGHT © 1997 CANON INC. CANON NP6560/NP6360/NP6260 REV. 0 NOV. 1997 PRINTED IN JAPAN (IMPRIME AU JAPON)

IV. TROUBLESHOOTING MALFUNCTIONS

A. Troubleshooting Malfunctions

Caution:
Whenever installing/removing any sensor, pay attention to the orientation/position of the spring used to lock down the detecting lever in position.

1. E000

Cause	Step	Checks	YES/NO	Action
Sub thermistor (TH2)	1	Clear 'E000'. Turn off and then on the power switch. Is 'E000' indicated for about 5 sec, and then does the power switch turn off automatically?	YES	Check the sub thermistor (TH2)
	2	Execute 'ERROR' in service mode (✻4✻) to clear 'E000'. Check to make sure that the fixing assembly is set securely. Turn off the power switch, and disconnect the power plug. Does the heater of the fixing roller turn on when the power switch is turned on? **Caution:** Keep in mind that repeating this step several times will cause the fixing temperature to rise abnormally, damaging the fixing roller and the separation claws.	NO	Replace the DC controller or the SSR.
Main thermistor (TH1)	3	Turn off the power switch, cool the upper fixing roller, and turn on the power switch. Select the screen showing 'FTMP' in service mode (✻1✻). Does the value of 'FTMP' remain the same? (After the check, be sure to turn off the power switch.)	YES	Check the wiring from J108 on the DC controller PCB to the thermistor (TH1); if normal, replace the thermistor (TH1).
Thermistor	4	Is the thermistor in even contact with the upper fixing roller?	NO	Install the thermistor correctly.
Thermistor	5	Clean the contact area of the thermistor. Is the problem corrected?	YES	End.

Cont'd

COPYRIGHT © 1997 CANON INC.

Cause	Step	Checks	YES/NO	Action
Environment	6	Does the problem occur only when the machine is turned on for the first time in the morning?	YES	•Advise the user that the site is out of specification. •Advise the user not to turn on the machine until the room is warm enough.
Main thermistor (TH1)	7	Replace the thermistor. Is the problem corrected?	YES	End.
DC controller PCB			NO	Replace the DC controller PCB.

2. E001

Cause	Step	Checks	YES/NO	Action
	1	Execute 'ERROR' in service mode (✻4✻), and open the front door and the delivery assembly to cool the fixing roller. Is 'E001' indicated immediately after power-on when the power switch is turned on?	NO	Go to step 3.
Thermistor (TH1/TH2)	2	Turn off the power switch, and slide out the fixing feeding assembly. Disconnect the relay connector J2757 from inside the fixing unit, and set the meter to the 1KΩ range. Connect the probe to the terminal of the harness on the thermistor side. Is the reading about 0Ω at this time? (After the check, be sure to connect J2757.)	YES	Replace the thermistor.
DC controller PCB			NO	Replace the DC controller PCB.
AC driver	3	Replace the AC driver. Is the problem corrected?	YES	End.
DC controller PCB			NO	Check the wiring from the AC drive to the DC controller; if normal, replace the DC controller PCB.

 COPYRIGHT © 1997 CANON INC.

3. E002
4. E003

Cause	Step	Checks	YES/NO	Action
	1	Execute 'ERROR' in service mode (✻4✻), and turn on the power once again. Is either of the following correct? •The fixing heater fails to turn on. •'E002' or 'E003' is indicated.	YES	Go to the appropriate section.
	2	Is the contact of the connectors J108 and J2755, relay connector J2757, and the connector J2745 inside the fixing assembly good? Further, is the wiring from the thermistor to the connector J108 on the DC controller PCB good?	NO	Connect them securely.
Main thermistor (TH1)	3	Is the thermistor in even contact with the upper fixing roller?	NO	Install the thermistor once again.
Main thermistor (TH1)	4	Clean the contact area of the thermistor. Is the problem corrected?	YES	End.
Environment	5	Does the problem occur only when the machine is turned on for the first time in the morning?	YES	•Advise the user that the site is out of specification. •Advise the user not to turn on the machine until the room is warm enough.
Main thermistor (TH1)	6	Replace the thermistor. Is the problem corrected?	YES	End.
DC controller			NO	Replace the DC controller PCB.

5. E004

Cause	Step	Checks	YES/NO	Action
Fixing heater	1	Execute 'ERROR' in service mode (✻4✻). Does the fixing heater turn on immediately after power-on?	NO	See "The fixing heater fails to operate."
AC driver	2	Replace the AC driver. Is the problem corrected?	YES	End.
DC controller PCB			NO	Replace the DC controller PCB.

COPYRIGHT © 1997 CANON INC.

6. E005

Cause	Step	Checks	YES/NO	Action
Fixing cleaning belt	1	Is the cleaning belt of the fixing assembly taken up?	YES	Replace the cleaning belt.
Cleaning belt detecting lever	2	Is the position of the cleaning belt detecting lever correct?	NO	Correct the position of the lever.
Fixing/feeding unit	3	Is the fixing/feeding unit set in the machine correctly?	YES	The connector at the rear of the fixing/feeding unit may have poor contact; make a check.
DC controller PCB	4	Is the voltage between J108-A13 (+) and J108-A12 (–) on the DC controller PCB about 5 V? Is the cleaning belt length sensor (PS11) normal? (See the instructions on how to check photointerrupters.)	NO	Replace the DC controller PCB.
Sensor (PS11)			YES	Replace the sensor.

7. E006

Cause	Step	Checks	YES/NO	Action
Fixing/feeding connector	1	Is the connector fixed in position correctly? Is it securely connected to the copier's connector?	NO	Check the connector. Fix it firmly in position if necessary.
Fixing/feeding unit sensor (PS53)	2	Is the fixing/feeding unit sensor (PS53) normal?	NO	Check the PS53 and connector.
DC controller PCB			YES	Replace the DC controller PCB.

8. E010

Cause	Step	Checks	YES/NO	Action
	1	Is the connector of the main motor connected?	NO	Connect the connector.
DC controller PCB	2	Does the voltage between J111-B4 (+) and J111-B1 (–) on the DC controller PCB change from 0 to about 5 V when the Copy Start key is pressed?	NO	Replace the DC controller PCB.
Main motor (M1)	3	Replace the main motor. Is the problem corrected?	YES	End.

 COPYRIGHT © 1997 CANON INC.

9. E013

Cause	Step	Checks	YES/NO	Action
Waste toner feeding screw (locked)	1	Is the waste toner feeding screw drive gear pushing the waste toner feeding screw locked detecting switch (SW4)?	YES	The feeding screw inside the waste toner pipe is locked for some reason. Remove the waste toner pipe, and try turing the screw by hand. If it can be rotated easily, install it and see if the problem has been corrected; otherwise, replace the waste toner pipe, and remove the cause.
MSW4	2	Is the voltage between J114-B1 (+) and J114-B2 (–) on the DC controller PCB about 5 V when the switch is pressed and about 0 V when released?	NO	Replace MSW4.
DC controller PCB			YES	Replace the DC controller PCB.
Harness of vertical path roller drive clutch (CL15)	3	Does the harness of the vertical path roller drive clutch have an open circuit?	YES	Replace the clutch (SL15).

COPYRIGHT © 1997 CANON INC.

10. E015

<table>
<tr><th>Cause</th><th>Step</th><th>Checks</th><th>YES/NO</th><th>Action</th></tr>
<tr><td>Power supply (motor controller PCB is integrated with pick-up motor)</td><td>1</td><td>Set the meter to the 200VDC range, and connect the + probe to J612-3 and the – probe to J612-4 on the DC controller PCB. Is the voltage about 12 V?</td><td>NO</td><td>Check the wiring from the DC power supply PCB to the motor controller PCB; if normal, replace the DC power supply PCB.</td></tr>
<tr><td rowspan="2">DC controller PCB</td><td>2</td><td>Is the voltage between the following pins on the DC controller PCB as indicated?<table><tr><th>(+)</th><th>(–)</th><th>Voltage</th></tr><tr><td>J114-B10</td><td>J114-B9</td><td>about 12 V</td></tr><tr><td>J114-B12</td><td>J114-B11</td><td>about 5 V</td></tr></table></td><td>NO</td><td>Check the wiring from the DC controller PCB to the motor controller PCB; if normal, replace the DC controller PCB.</td></tr>
<tr><td>3</td><td>Connect the + probe to J114-B8 and the – probe to GND on the DC controller PCB. Does the voltage change to about 5 V as soon as the motor starts to rotate?</td><td>NO</td><td>Check the wiring from the DC controller PCB to the motor controller PCB; if normal, replace the DC controller PCB.</td></tr>
<tr><td>Pick-up motor (M2)</td><td>4</td><td>Replace the pick-up motor (M2). Is the problem corrected?</td><td>YES</td><td>End.</td></tr>
</table>

 COPYRIGHT © 1997 CANON INC. CANON NP6560/NP6360/NP6260 REV. 0 NOV. 1997 PRINTED IN JAPAN (IMPRIME AU JAPON)

11. E020

Cause	Step	Checks	YES/NO	Action
	1	Remove the upper cover of the developing assembly. Is the developing assembly almost overflowing with toner? (After the check, be sure to install the upper cover.)	YES	Go to step 6.
	2	Is the hopper full of toner?	NO	Go to step 5.
Hopper assembly sensor	3	Select ‘P002’ in service mode (✻2✻). Is bit 10 (TEP) of the message display ‘0’ (toner absent)?	YES	Replace the hopper assembly sensor.
Hopper	4	Set ‘HPPR_MTR’ in service mode (✻4✻), and press the * key. At this time, does the hopper motor rotate for about 3 sec?	NO	See “The hopper motor fails to operate.”
Connection (between hopper assembly and developing assembly)			YES	Check to make sure that the hopper assembly and the developing assembly are connected securely.
Toner sensor	5	Install the developing assembly, and set the copy count to ‘20’. Select ‘P002’ in service mode (✻2✻). Does bit 9 (DTEP) on the message display indicate ‘0’ (toner present) during copying?	NO	Replace the toner level detection PCB.
DC controller PCB			YES	Replace the DC controller PCB.
Connector (hopper assembly)	6	Is the connector disconnected?	YES	Connect the connector.
Outlet (hopper assembly)	7	Is the end of the outlet cover bent, limiting the amount of toner moving from the hopper to the developing assembly?	YES	Replace the seal of the outlet, and replace the hopper collars 1 and 2.

COPYRIGHT © 1997 CANON INC.

12. E030 (The total copy counter fails to turn on.)

Cause	Step	Checks	YES/NO	Action
Total copy counter	1	Turn off the power switch, and disconnect J104 from the DC controller. Set the meter to the × 1KΩ range, and measure the resistance between J104-B2 and J104-B1. Is it about 500Ω?	NO	Check the wiring from the DC controller PCB to the total copy counter; if normal, replace the total copy counter.
Total copy counter	2	Connect J104 to the DC controller PCB, and turn on the power switch. Set the meter to the 30VDC range, and measure the voltage between J104-B2 (+) and J104-A6 (–) on the DC controller PCB. When the Copy Start key is pressed, does it change from about 24 V to about 0 V and then to 24 V?	YES	Replace the total copy counter.
DC controller PCB			NO	Replace the DC controller PCB.

13. E031 (The option counter has an open circuit.)

Cause	Step	Checks	YES/NO	Action
Option counter	1	Turn off the power switch, and disconnect J104 from the DC controller. Set the meter to the × 1KΩ range, and measure the resistance between J104-B6 and J104-B7. Is it about 500Ω?	NO	Check the wiring from the DC controller PCB to the total copy counter; if normal, replace the total copy counter.
Total copy counter	2	Connect J104 to the DC controller PCB, and turn on the power switch. Set the meter to the 30VDC range, and measure the voltage between J104-B6 (+) and J104-A6 (–) on the DC controller PCB. Does it change from about 24 V to about 0 V and then to about 24 V?	YES	Replace the total copy counter.
DC controller PCB			NO	Replace the DC controller PCB.

 COPYRIGHT © 1997 CANON INC. CANON NP6560/NP6360/NP6260 REV. 0 NOV. 1997 PRINTED IN JAPAN (IMPRIME AU JAPON)

14. E043 (Paper deck-A1)

<table>
<tr><th>Cause</th><th>Step</th><th>Checks</th><th>YES/NO</th><th>Action</th></tr>
<tr><td>Side deck driver PCB</td><td>1</td><td>Is there electrical continuity between the following connectors on the side deck drive PCB?
<table><tr><th>Signal</th><th>Connectors</th></tr><tr><td>38VU</td><td>J5-1 ↔ J9-1</td></tr><tr><td>0VU</td><td>J5-2 ↔ J9-3</td></tr><tr><td>DMFG</td><td>J7-3 ↔ J10-9</td></tr><tr><td>DMON</td><td>J7-5 ↔ J10-7</td></tr><tr><td>0VU</td><td>J7-6 ↔ J9-3</td></tr><tr><td>12VU</td><td>J7-7 ↔ J11-13</td></tr><tr><td>0VR</td><td>J7-8 ↔ J11-12</td></tr><tr><td>5VR</td><td>J7-9 ↔ J11-11</td></tr></table></td><td>NO</td><td>Replace the side deck driver PCB.</td></tr>
<tr><td>Deck main motor (M101)</td><td rowspan="2">2</td><td rowspan="2">Replace the deck main motor (M101) of the paper deck-A1. Is the problem corrected?</td><td>YES</td><td>End.</td></tr>
<tr><td>DC controller PCB</td><td>NO</td><td>Check the harness from the DC controller PCB to the motor; if normal, replace the DC controller PCB.</td></tr>
</table>

COPYRIGHT © 1997 CANON INC.

15. E050

Cause	Step	Checks	YES/NO	Action
Holding tray X home position sensor (PS21)	1	Is the holding tray X home position sensor (PS21) normal?	NO	Replace the sensor (PS21).
Holding tray X motor (M8)	2	Disconnect J209 from the holding tray driver PCB. Is there electrical continuity between the following pins on the motor side? J209-1 and -2 J209-5 and -6	NO	Replace the holding tray X motor (M8).
Holding tray driver PCB	3	Replace the holding tray driver PCB. Is the problem corrected?	YES	End.
DC controller PCB			NO	Replace the DC controller PCB.

16. E051

Cause	Step	Checks	YES/NO	Action
Holding tray Y home position sensor (PS20)	1	Is the holding tray Y home position sensor (PS20) normal?	NO	Replace the sensor (PS20).
Holding tray Y motor (M9)	2	Disconnect J208 from the holding tray driver PCB. Is there electrical continuity between the following pins on the motor side? J208-4 and -5 J208-8 and -9	NO	Replace the holding tray Y motor (M9).
Holding tray driver PCB	3	Replace the holding tray driver PCB. Is the problem corrected?	YES	End.
DC controller PCB			NO	Replace the DC controller PCB.

 COPYRIGHT © 1997 CANON INC. CANON NP6560/NP6360/NP6260 REV. 0 NOV. 1997 PRINTED IN JAPAN (IMPRIME AU JAPON)

17. E202 (The keys on the control panel are locked.)

Cause	Step	Checks	YES/NO	Action
	1	Is the scanner at home position when E202 turns on?	NO	See “The scanner fails to rotate.”
Scanner home position sensor (PS1)	2	Is the scanner home position sensor (PS1) normal? (See the instructions on how to check photointerrupters.)	YES	Check the wiring from the DC controller to PS1; if normal, replace the sensor PS1.
DC controller PCB			NO	Replace the DC controller PCB.

18. E203

Cause	Step	Checks	YES/NO	Action
	1	Is the scanner at home position when ‘E202’ is indicated?	NO	See “The scanner fails to move forward.”
Scanner home position sensor	2	Is the scanner home position sensor (PS1) normal?	NO	Replace the scanner home position sensor.
DC controller PCB			YES	Replace the DC controller PCB.

19. E204 (The keys on the control panel are locked.)

Cause	Step	Checks	YES/NO	Action
	1	Does the scanner move forward when the Copy Start key is pressed?	NO	See “The scanner fails to move forward.”
Scanner original leading edge sensor 1/2 (PS3/4)	2	Is the scanner original leading edge sensor 1/2 (PS3/4) normal? (See the instructions on how to check the photointerrupters.)	NO	Check the wiring from the DC controller PCB to PS3/4; if normal, replace PS3/4.
DC controller PCB			YES	Replace the DC controller PCB.

COPYRIGHT © 1997 CANON INC.

20. E210 (fault in lens X direction drive system)
21. E212 (fault in lens Y direction drive system)

Cause	Step	Checks	YES/NO	Action
	1	Does the lens move in X/Y direction when the power switch is turned on?	NO	See “The lens fails to move.”
Lens X home position sensor (PS6)	2	Is the lens X/Y home position sensor (PS6/7) normal? (See the instructions on how to check photointerrupters.)	NO	Check the wiring from the DC controller PCB to PS6; if normal, replace PS6.
Lens Y home position sensor (PS7)				Check the wiring from the DC controller PCB to PS7; if normal, replace PS7.
X direction belt support plate	3	Is friction absent between the X direction drive belt and the belt support plate?	YES	Replace the belt support plate with one with spacers.
DC controller PCB	4	Replace the DC controller PCB. Is the problem corrected?	YES	End.

22. E213

Cause	Step	Checks	YES/NO	Action
Scanner locking solenoid (SL1)	1	Try stream reading. Is the scanner locked at the center of the copyboard?	NO	Check the wiring up to the scanner locking solenoid and the connectors; if normal, adjust the position of the solenoid or replace the solenoid.
Scanner locked sensor (PS48)	2	Is the scanner locked sensor normal?	NO	Replace the scanner locked sensor.
Original leading edge sensor 2 (PS4)	3	Is the original leading edge sensor 2 normal?	NO	Replace the original leading edge sensor 2.

23. E214

Cause	Step	Checks	YES/NO	Action
Scanner motor cooling fan (FM9)	1	Is the scanner motor cooling fan rotating?	NO	Replace the scanner cooling fan.
DC controller PCB			YES	Replace the DC controller PCB.

 COPYRIGHT © 1997 CANON INC. CANON NP6560/NP6360/NP6260 REV. 0 NOV. 1997 PRINTED IN JAPAN (IMPRIME AU JAPON)

24. E240

Cause	Step	Checks	YES/NO	Action
DC controller PCB	1	Turn on and off the power switch. Is the problem corrected?	YES	End.
			NO	Replace the DC controller PCB.

25. E243

Cause	Step	Checks	YES/NO	Action
DC controller PCB	1	Turn on and off the power switch. Is the problem corrected?	YES	End.
			NO	Replace the DC controller PCB.
Control panel PCB	2	Replace the control panel PCB. Is the problem corrected?	YES	End.

26. E710/E711

Cause	Step	Checks	YES/NO	Action
Malfunction	1	Turn on and off the power switch. Is the problem corrected?	YES	End.
DC controller PCB			NO	Replace the DC controller PCB.

27. E712

Cause	Step	Checks	YES/NO	Action
Malfunction	1	Turn off and then on the power switch. Is the problem corrected?	YES	End.
Connector	2	Is the connector (J772) connecting the RDF and the machine securely connected?	NO	Replace the DC controller PCB.
RDF controller PCB	3	Replace the RDF controller PCB. Is the problem corrected?	YES	End.
DC controller PCB			NO	Replace the DC controller PCB.

COPYRIGHT © 1997 CANON INC.

28. E713

Cause	Step	Checks	YES/NO	Action
Malfunction	1	Turn on and off the power switch. Is the problem corrected?	YES	End.
Connector	2	Is the connector (J703) connecting the sorter and the copier securely connected?	NO	Replace the DC controller PCB.
Sorter controller PCB	3	Replace the sorter controller PCB. Is the problem corrected?	YES	End.
DC controller PCB			NO	Replace the DC controller PCB.

29. E800

Cause	Step	Checks	YES/NO	Action
Malfunction	1	Turn off and then on the power switch. Is the problem corrected?	YES	End.
J716	2	Is the relay connector J716 under the power switch (SW1) connected securely?	NO	Connect it securely.
Power switch (SW1)	3	Set the meter to the $\times 1\Omega$ range. Disconnect the relay connector J716, and connect the probe of the meter to the connector terminal on the power switch side. Is the voltage about 30Ω?	NO	Replace the power switch (SW1).
DC controller PCB			YES	Check the wiring from the DC controller PCB to the power switch (SW1); if normal, replace the DC controller PCB.

30. E802

Cause	Step	Checks	YES/NO	Action
Malfunction	1	Turn off and on the power switch. Is the problem corrected?	YES	End.
DC controller PCB	2	Replace the DC controller PCB. Is the problem corrected?	YES	End.
Power supply unit			NO	Check the wiring and electrical continuity from the DC controller to the power switch (SW1); if normal, replace the DC controller PCB.

 COPYRIGHT © 1997 CANON INC. CANON NP6560/NP6360/NP6260 REV. 0 NOV. 1997 PRINTED IN JAPAN (IMPRIME AU JAPON)

31. AC power is absent.

Cause	Step	Checks	YES/NO	Action
Power plug	1	Is the power plug connected to the power outlet?	NO	Connect the power plug.
Power source	2	Is the rated AC voltage present at the power source?	NO	The problem is not the machine's. Advise the user.
	3	Is the rated voltage present between J301-1 and J301-5, between J301-3 and J301-5, and between J302-1 and J302-3? (J301 and J302 are in the power supply unit.)	YES	End.
Leakage current breaker (BK)	4	Remove the rear cover, and check the leakage current breaker installed on the power supply cord mount. Is it normal (switch is at '1')?	NO	Remove the cause of the activation, and shift the switch to '1'.
Power supply cord, Line filter (LF1)	5	Replace the power cord and the line filter (LF1). Is AC power supplied?	YES	End.
			NO	Check the wiring of the AC power line, and check the connectors for poor contact.
Front door	6	Is the front door closed securely?	NO	Close the front door.
Front door switch (SW2)	7	Is the front door switch (SW2) firmly pressed when the front door is closed?	NO	Adjust the position of the switch (SW2).
Front door switch (SW2)	8	Remove the door switch, and connect the probe of the meter to door switches 1 and 2 or 3 and 4; is the resistance 0Ω when the actuator is pressed and ∞Ω when released?	NO	Replace the door switch.
Wiring	9	Is the wiring connected to the door switch normal?	NO	Connect it correctly.
Power supply switch (SW1)	10	Connect the probes of the meter to both terminals of the power switch (SW1). Is the resistance 0Ω when the switch is turned on and ∞Ω when turned off?	NO	Replace the power switch.
Wiring			YES	Check the wiring of the AC power supply line. Check the connectors for poor contact.

COPYRIGHT © 1997 CANON INC.

32. DC power supply is absent.

<table>
<tr><th>Cause</th><th>Step</th><th>Checks</th><th>YES/NO</th><th>Action</th></tr>
<tr><td>AC power supply</td><td>1</td><td>Is the specified voltage present between J301-1 and J301-5, between J301-3 and J301-5, and between J302-1 and J302-3? (J301 and J302 are in the DC power supply unit.)</td><td>NO</td><td>See “AC power is absent.”</td></tr>
<tr><td></td><td>2</td><td>Has the fuse (FU51, FU1) on the DC power supply blown?</td><td>YES</td><td>Remove the cause, and replace the fuse.</td></tr>
<tr><td></td><td>3</td><td>Turn off the power switch, and disconnect the power plug. About 1 min thereafter, connect the power pug. Is DC power present when the power switch is turned on?</td><td>YES</td><td>End.</td></tr>
<tr><td>Wiring, DC load</td><td rowspan="2">4</td><td rowspan="2">Turn off the power switch, and disconnect all connectors from the DC power supply PCB (J303, J304, J305, J306, J308, J309, J311). Turn on the power switch, and measure the voltage between the terminals shown. Is it as indicated?
<table>
<tr><th>Connector</th><th>Pin</th><th>Output</th><th>Remarks</th></tr>
<tr><td rowspan="3">J303</td><td>1</td><td>38VU</td><td>+10%,-7%</td></tr>
<tr><td>2</td><td>38VU</td><td>+10%,-7%</td></tr>
<tr><td>3</td><td>38VU</td><td>+10%,-7%</td></tr>
<tr><td rowspan="2">J304</td><td>2</td><td>24VR</td><td>±2%</td></tr>
<tr><td>4</td><td>24VU</td><td>+10%,-7%</td></tr>
<tr><td rowspan="4">J305</td><td>1</td><td>24VU</td><td>+10%,-7%</td></tr>
<tr><td>3</td><td>24VR</td><td>±2%</td></tr>
<tr><td>5</td><td>5VR</td><td>±4%</td></tr>
<tr><td>7</td><td>12VU</td><td>+10%,-7%</td></tr>
<tr><td>J306</td><td>1</td><td>24VU</td><td>+10%,-7%</td></tr>
<tr><td rowspan="3">J308</td><td>1</td><td>24VU</td><td>+10%,-7%</td></tr>
<tr><td>3</td><td>24VA</td><td>+10%,-20%</td></tr>
<tr><td>5</td><td>38VU</td><td>+10%,-7%</td></tr>
<tr><td rowspan="2">J309</td><td>1</td><td>24VU</td><td>+10%,-7%</td></tr>
<tr><td>3</td><td>24VU2</td><td>+10%,-7%</td></tr>
<tr><td rowspan="2">J311</td><td>1</td><td>24VA2</td><td>+10%,-7%</td></tr>
<tr><td>2</td><td>38VU</td><td>+10%,-7%</td></tr>
</table>
However, the above assumes that the inaccuracy of the AC input is ±10%.</td><td>YES</td><td>Turn off the power switch, connect one of the disconnected connectors, and turn on the power. Repeat this for all connectors to find the one which activates the protection circuit. Check the wiring and DC loads from that connector.</td></tr>
<tr><td>DC power supply PCB</td><td>NO</td><td>Replace the DC power supply PCB.</td></tr>
</table>

 COPYRIGHT © 1997 CANON INC.

33. Pick-up fails. (deck pick-up; front paper deck + cassette)

Cause	Step	Checks	YES/NO	Action
Upper right door, Lower right door	1	Are the upper right door and the lower right door closed securely?	NO	Close the door securely.
Lifter	2	Slide out the deck from the machine. Does the lifter move down? Set the deck. Is the sound of the lifter moving up heard?	NO	See “The lifter fails to move up.”
Pick-up roller	3	Does the pick-up roller rotate?	YES	If the roller is soiled, clean it with alcohol. If deformation by wear is noted, replace it.
Belt	4	Is the belt used to transmit drive to the pick-up roller attached correctly?	NO	Attach the belt correctly.
Drive belt, Gear, Coupling	5	Is the drive from the pick-up motor transmitted to the pick-up assembly through the drive belt, gear, and coupling?	NO	Check the drive belt, gear, and coupling.
DC controller PCB output	6	Set the meter to the 30VDC range. Does the voltage between J116-A2/J121-A5 and GND change from 24 to 0 V when the Copy Start key is pressed?	NO	Replace the DC controller PCB.
Deck pick-up clutch (CL14, right deck; CL16, left deck)			YES	Check the wiring up to the clutch; if normal, replace the clutch.

COPYRIGHT © 1997 CANON INC.

34. The deck lifter fails to move up. (front paper deck + cassette)

Cause	Step	Checks	YES/NO	Action
Deck	1	Is the deck set correctly?	NO	Set the deck correctly.
Lifter cable	2	Is the lifter cable routed correctly?	NO	Route the cable correctly.
Spring, Lever	3	Push down the pick-up roller releasing lever with a finger. Does the pick-up roller move down?	NO	Remove the pick-up assembly, and check the spring and the lever.
Pick-up motor (M2)	4	Does the pick-up motor (M2) rotate?	YES	Go to step 6.
DC controller PCB, Deck open/closed sensor (PS38, right deck; PS40, left deck)	5	Set the meter to the 12VDC range. Does the voltage between J116-B10/J121-A2 and GND (–) on the DC controller PCB change from about 0 to 5 V when the deck is closed?	NO	Replace the DC controller PCB.
			YES	Check the wiring up to the sensor; if normal, replace the sensor.
Lifter position sensor (PS31, right deck; PS34, left deck)	6	Set the meter to the 12VDC range. Is the voltage between J116-A4/J121-A7 (+) and GND (–) as indicated when the deck is opened/closed? when closed, 0 V when opened, 5 V	YES	Check the lever and the wiring; if normal, replace the sensor.
Deck lifter drive motor (M18, right deck; M19, left deck)	7	Set the meter to the 30VDC range. Does the voltage between J119-B9 (left)/-B11(right) (+) and GND (–) on the DC controller PCB change from 0 to 24 V when the deck is slid into the machine?	YES	Check the wiring up to the deck lifer drive motor; if normal, replace the clutch.
DC controller PCB			NO	Replace the DC controller PCB.

 COPYRIGHT © 1997 CANON INC. CANON NP6560/NP6360/NP6260 REV. 0 NOV. 1997 PRINTED IN JAPAN (IMPRIME AU JAPON)

35. Pick-up fails. (cassette pick-up)

Cause	Step	Checks	YES/NO	Action
	1	Slide in and out the cassette. Is the sound of the lifter falling and the lifter motor turning heard?	NO	See “The lifter fails to move up.”
Drive gear	2	Is the drive belt attached correctly?	NO	Attach the belt correctly.
Upper right door, Lower right door	3	Are the upper right door and the lower right door fully closed?	NO	Close the doors.
Locking spring	4	Are the upper right door and the lower right door keeping the vertical path rollers 0, 1, 2, 3, and 4 in place?	NO	Check the spring used for locking.
Vertical path roller 0 clutch (CL18), Vertical path roller 1 clutch (CL15), Vertical path roller 2 clutch (CL17), Vertical path roller 3 clutch (CL11), Vertical path roller 4 clutch (CL13)	5	Open the upper right door and the lower right door, and insert a screwdriver into the door switch. Do the vertical path rollers 0, 1, 2, 3, and 4 rotate when the Copy Start key is pressed?	NO	Check the wiring; if normal, replace the clutch.
Registration roller, Drive clutch	6	Is the leading edge of the copy paper as far as the registration roller assembly?	YES	See “The registration roller fails to rotate.”
Pick-up assembly	7	Open the upper right door and the lower right door, and insert a screwdriver into the door switch. Does the feeding/separation roller rotate when the Copy Start key is pressed?	YES	Go to step 9.

Cont’d

COPYRIGHT © 1997 CANON INC.

<table>
<tr><th>Cause</th><th>Step</th><th>Checks</th><th>YES/NO</th><th>Action</th></tr>
<tr><td>Pick-up clutch</td><td rowspan="2">8</td><td rowspan="2">Set the meter to the 30VDC range, and connect the probes of the meter to the connectors on the DC controller shown. Does the voltage change from 24 to 0 V when the Copy Start key is pressed?
<table><tr><th>Cassette</th><th>Clutch</th><th>+</th><th>–</th></tr><tr><td>3</td><td>CL10</td><td>J117-A2</td><td>GND</td></tr><tr><td>4</td><td>CL12</td><td>J130-A2</td><td>GND</td></tr></table></td><td>YES</td><td>Check the wiring; if normal, replace the corresponding clutch.</td></tr>
<tr><td>DC controller PCB</td><td>NO</td><td>Replace the DC controller PCB.</td></tr>
<tr><td>Sensor</td><td rowspan="2">9</td><td rowspan="2">Find out which sensor found the jam using ‘B-JAM’ in service mode (✻ 4 ✻). Is the sensor normal?</td><td>NO</td><td>Check the wiring and the lever; if normal, replace the sensor.</td></tr>
<tr><td>Pick-up assembly</td><td>YES</td><td>Remove the pick-up assembly, and check the spring.</td></tr>
</table>

 COPYRIGHT © 1997 CANON INC.

36. The lifter fails to move up. (cassette)

Cause	Step	Checks	YES/NO	Action
Cassette size detecting switch	1	Is the size of the cassette indicated on the message display?	NO	Check the cassette size detecting switch.
Gear, Lever	2	Slide out the cassette, and move up the lifter by hand. Does it move smoothly?	NO	Remove the pick-up assembly, and check the gear and the lever.
Latch assembly (cassette)	3	Is the movement of the latch assembly of the grip on the cassette normal?	NO	Install the latch assembly correctly.
Spring, Lever	4	Push up the pick-up roller releasing lever with a finger. Does the pick-up roller move down?	NO	Remove the pick-up assembly, and check the spring and the lever.
Lifter position sensor	5	Is the lifter sensor (PS25, PS28) normal?	NO	Check the lever and the wiring; if normal, replace the sensor.
Cassette 3 lifter motor (M14), Cassette 4 lifter motor (M15)	6	Connect the connectors, and turn on the power switch. Set the meter to the 30VDC range, and connect the – probe to GND, and the + probe to the following. Does the voltage change from about 0 to 24 V when the cassette is slid in? M14:J119-A9 M15:J119-A11	YES	Remove the pick-up assembly, and check the gear; if normal, replace the motor.
DC controller PCB			NO	Replace the DC controller PCB.

37. Pick-up fails. (multifeeder)

Cause	Step	Checks	YES/NO	Action
Pick-up roller, Pick-up/feeding roller, Separation roller	1	Is the orientation of the pick-up roller, pick-up/feeding roller, and separation roller correct?	NO	Install the rollers correctly.
Belt, Gear, Coupling	2	Is the drive from the main motor transmitted to the multifeeder pick-up assembly through the belt, gear, and coupling?	NO	Check the belt, gear, and coupling.
	3	Is the leading edge of the copy paper as far as the registration roller?	YES	See “The registration roller fails to rotate.”
DC controller PCB	4	Set the meter to the 30VDC range, and connect the probe of the meter to J115-B1 (+) and J115-B2 (–) on the DC controller PCB; then, select the multifeeder. Does the voltage change from 24 to 0 V when the Copy Start key is pressed?	NO	Replace the DC controller PCB.
Multifeeder pick-up clutch (CL7)	5		YES	Replace the multifeeder pick-up clutch (CL7).
Multifeeder pick-up solenoid (SL10)	6	Connect the probes of the meter to J115-B11 (+) and J115-B12 (–) on the DC controller PCB. Does the voltage change from about 0 V to 24 V and then to 0 V when the Copy Start key is pressed?	NO	Replace the multifeeder pick-up solenoid (SL10).
DC controller PCB			YES	Replace the DC controller PCB.

 COPYRIGHT © 1997 CANON INC. CANON NP6560/NP6360/NP6260 REV. 0 NOV. 1997 PRINTED IN JAPAN (IMPRIME AU JAPON)

38. The vertical path roller fails to rotate.

Cause	Step	Checks	YES/NO	Action
Belt, Gear, Coupling	1	Is the drive from the pick-up motor (M2) transmitted to each vertical path roller through the belt, gear, and coupling?	NO	Install the belt, gear, and coupling correctly.
Vertical path roller clutch	2	Connect the – probe of the tester to GND and the + probe to the terminal indicated. Does the voltage change from about 24 to 0 V as soon as the roller starts to rotate? Vertical path 0 drive clutch (CL18) – J115-A4 Vertical path 1 drive clutch (CL15) – J117-A15 Vertical path 3 drive clutch (CL11) – J117-B2 Vertical path 4 drive clutch (CL13) – J130-B2	YES	Replace the appropriate clutch.
DC controller PCB			NO	Replace the DC controller PCB.

39. The registration roller fails to rotate.

Cause	Step	Checks	YES/NO	Action
Belt, Gear, Coupling	1	Is the drive from the main motor (M1) transmitted to the registration roller through the belt, gear, and coupling?	NO	Install the belt, gear, and coupling correctly.
Registration paper sensor (PS23)	2	Is the registration paper sensor (PS23) normal?	NO	Replace the sensor (PS23).
Registration roller drive clutch (CL9)	3	Connect the – probe of the meter to GND and the + probe to J108-A5. Does the voltage change from about 24 to 0 V as soon as the registration roller starts to rotate?	YES	Replace the clutch (CL9).
DC controller PCB			NO	Replace the DC controller PCB.

COPYRIGHT © 1997 CANON INC.

40. The scanner fails to move forward.

<table>
<tr><th>Cause</th><th>Step</th><th>Checks</th><th>YES/NO</th><th>Action</th></tr>
<tr><td>Cable</td><td>1</td><td>Is the scanner drive cable routed correctly?</td><td>NO</td><td>Route the cable correctly.</td></tr>
<tr><td>Scanner path</td><td>2</td><td>Is the scanner rail free of dirt? Does the scanner move smoothly when pushed by hand?</td><td>NO</td><td>Is the surface of the scanner rail soiled? Is there foreign object that comes into contact with the scanner. As necessary, clean, lubricate, or correct.
Reference:
If the surface of the rail is soiled, clean it with alcohol, and apply a small amount of lubricant.</td></tr>
<tr><td>Scanner motor (M3)</td><td rowspan="2">3</td><td rowspan="2">Set the meter to the 12VDC range, and connect the probes of the meter to the terminals shown. Does the voltage change when the Copy Start key is pressed?
<table><tr><th></th><th>+</th><th>–</th><th>Voltage</th></tr><tr><td>M3ON</td><td>J112-B6</td><td>J112-B3</td><td>about 0 to 5 V</td></tr><tr><td>M3F/R</td><td>J112-B7</td><td>J112-B3</td><td>about 0 to about 5 to 0 V</td></tr></table></td><td>YES</td><td>Replace the scanner. motor.</td></tr>
<tr><td>DC controller PCB</td><td>NO</td><td>Check the wiring from the DC controller PCB to the scanner motor; if normal, replace the DC controller</td></tr>
</table>

41. The scanner fails to move in reverse.

<table>
<tr><th>Cause</th><th>Step</th><th>Checks</th><th>YES/NO</th><th>Action</th></tr>
<tr><td></td><td>1</td><td>Does the scanner move forward?</td><td>NO</td><td>See “The scanner fails to move forward.”</td></tr>
<tr><td>DC controller PCB</td><td rowspan="2">2</td><td rowspan="2">Set the meter to the 12 VDC range. Does the voltage between J112-B7 (+) and J112-B3 (–) on the scanner controller PCB change to about 5 V when the scanner stops moving forward?</td><td>NO</td><td>Replace the DC controller PCB.</td></tr>
<tr><td>Scanner motor (M3)</td><td>YES</td><td>Check the wiring from the DC controller PCB to the scanner motor; if normal, replace the scanner motor.</td></tr>
</table>

 COPYRIGHT © 1997 CANON INC.

42. The blanking exposure lamp fails to turn on.

Cause	Step	Checks	YES/NO	Action
DC controller PCB	1	Remove the blanking exposure lamp, and connect the connector. Select 'BLANK' in service mode (✻4✻). Does the blanking exposure lamp turn on when the user mode key is pressed?	YES	Check the wiring from the blanking exposure lamp to the DC controller PCB; if normal, replace the DC controller PCB.
Blanking exposure lamp	2	Replace the blanking exposure lamp. Does the new lamp turn on correctly?	YES	End.
DC controller PCB			NO	Check the wiring from the blanking exposure lamp to the DC controller PCB; if normal, replace the DC controller PCB.

43. The pre-exposure lamp fails to turn on.

Cause	Step	Checks	YES/NO	Action
DC controller PCB	1	Set the meter to the 30VDC range. Does the voltage between J103-B2 (–) and GND change from 24 to 0 V when the Copy Start key is pressed?	NO	Replace the DC controller PCB.
Pre-exposure lamp PCB			YES	Check the wiring from the DC controller PCB to the pre-exposure lamp PCB; if normal, replace the pre-exposure lamp.

COPYRIGHT © 1997 CANON INC.

44. The scanning lamp fails to turn on.

Cause	Step	Checks	YES/NO	Action
Connector	1	Select 'SCAN LAMP' in service mode (✻4✻). Does the scanner lamp remain on for 3 sec when the user mode key is pressed?	YES	The connector may have poor contact. Check the connector.
Lamp (LA1)	2	Is the scanning lamp (LA1) installed correctly?	NO	Disconnect the power plug, and install the lamp correctly.
Thermal fuse (FU1)	3	Disconnect the power plug from the power outlet, and remove the thermal fuse. Is there electrical continuity between both terminals of the thermal fuse?	NO	Replace the thermal fuse. **Caution:** The lamp may have turned on wrongly, the fuse may be installed wrongly, or the cooling fan may be malfunctioning. Make checks.
Lamp (LA1)	4	Set the meter to the Ω×1 range, and disconnect the connector J4. Does the index of the meter swing when the probes of the meter are connected to both terminals of the lamp?	NO	Replace the lamp.
DC controller PCB	5	Set the meter to the 12VDC range, and measure the voltage between J111-B8 (+) and J111-B5 (–) on the DC controller PCB. Does it change from about 5 to 0 V when the Copy Start key is pressed?	NO	Replace the DC controller PCB.
Lamp regulator (LR1)	6	Replace the lamp regulator. Is the problem corrected?	YES	End.
Wiring			NO	1. Check the AC harness from the power supply switch to the lamp regulator. 2. Check the DC harness from the DC controller PCB to the lamp regulator.

 COPYRIGHT © 1997 CANON INC.

45. The hopper motor (M10) fails to operate.

Cause	Step	Checks	YES/NO	Action
	1	Execute 'HPPR_MTR' in service mode (✻4✻). Does the hopper motor rotate?	NO	Go to step 3.
Toner level detection circuit	2	Does bit 10 of 'P002' in service mode (✻4✻) indicate '0' (toner absent)?	YES	If there is toner in the developing assembly, replace the toner detection PCB.
DC controller PCB	3	When the hopper motor is turned on by executing 'HPPR-MTR' in service mode (✻4✻), does the voltage between J105-A1 (+) and J105-A2 (–) on the DC controller PCB change from 24 to about 0 V?	NO	Replace the DC controller PCB.
J770, J719	4	Is the connection of relay connectors J770 and J719 secure?	NO	Connect the connectors correctly.

COPYRIGHT © 1997 CANON INC.

46. The hopper motor (M11) fails to operate.

Cause	Step	Checks	YES/NO	Action
	1	Does the hopper motor rotate when 'HPPR_MTR' is executed in service mode (✻4✻)?	NO	Go to step 3.
Toner level detection PCB	2	Does bit 10 of 'P002' in service mode (✻2✻) indicate '0' (toner absent)?	YES	If there is toner in the developing assembly, replace the toner level detection PCB.
DC controller PCB	3	When the hopper motor is turned by executing 'HPPR-MTR' in service mode (✻4✻), does the voltage between J105-A3 (+) and J105-A4 (–) on the DC controller PCB change to about 0 V?	NO	Replace the DC controller PCB.
J770, J720	4	Is the connection of the relay connectors J770 and J720 secure?	NO	Connect the connectors securely.

47. The drum heater fails to operate.

Cause	Step	Checks	YES/NO	Action
	1	Open the front door, and release the fixing/feeding assembly. Is the end of the drum warm? (Do NOT touch the surface of the drum.)	YES	The drum heater is operating normally.
DC controller PCB	2	Set the meter to the 12VDC range, and connect the probes of the DC controller PCB to J102-B2 (+) and J102-B1 (–) on the DC controller PCB. Does the voltage between terminals change to 5 V during copying and to 0 V during standby?	NO	Replace the DC controller PCB.
J7	3	Is the relay connector J7 connected securely?	NO	Connect the connector securely.
AC driver	4	Replace the AC driver. Is the problem corrected?	YES	End.
Drum heater (H3)	5	Remove the drum, and set the meter to the Ω×1 range. Does the index of the meter swing when its probes are connected to both terminals of the heater?	NO	Replace the drum heater.
Drum heater controller PCB			YES	Replace the drum heater controller PCB.

 COPYRIGHT © 1997 CANON INC.

48. The lens fails to move.

<table>
<tr><th>Cause</th><th>Step</th><th>Checks</th><th>YES/NO</th><th>Action</th></tr>
<tr><td>Rail</td><td>1</td><td>Turn off the power switch, and disconnect the power plug from the power outlet. Does the lens move smoothly when the pulley of the lens motor is moved by hand?</td><td>NO</td><td>Check the rail for foreign matter and dirt. Clean, as necessary.</td></tr>
<tr><td>Drive belt</td><td>2</td><td>Is the drive belt attached correctly?</td><td>NO</td><td>Attach the belt correctly.</td></tr>
<tr><td>DC power supply</td><td>3</td><td>Set the meter to the 30VDC range, and connect the probes to the connectors J305-1 (+) and J305-2 (–) on the DC power supply PCB. Is there 24 VU (DC)?</td><td>NO</td><td>See “DC power is absent.”</td></tr>
<tr><td>DC controller PCB</td><td rowspan="2">4</td><td rowspan="2">Set the meter to the 200Ω range, and connect the probes of the meter to the connectors of the lens motor indicated; is the resistance between connectors as indicated?
<table>
<tr><th>Motor</th><th>+</th><th>–</th><th>Resistance</th></tr>
<tr><td rowspan="8">X motor (M4)</td><td>J110-A1</td><td>J110-A2</td><td rowspan="2">about 135Ω</td></tr>
<tr><td>J110-A4</td><td>J110-A5</td></tr>
<tr><td>J110-A1</td><td>J110-A3</td><td rowspan="4">about 48Ω</td></tr>
<tr><td>J110-A2</td><td>J110-A3</td></tr>
<tr><td>J110-A4</td><td>J110-A3</td></tr>
<tr><td>J110-A5</td><td>J110-A3</td></tr>
<tr><td rowspan="4">Y motor (M5)</td><td>J110-A10</td><td>J110-A11</td><td rowspan="2">about 135Ω</td></tr>
<tr><td>J110-A13</td><td>J110-A14</td></tr>
<tr><td>J110-A10</td><td>J110-A12</td><td rowspan="4">about 48Ω</td></tr>
<tr><td>J110-A11</td><td>J110-A12</td></tr>
<tr><td>J110-A13</td><td>J110-A12</td></tr>
<tr><td>J110-A14</td><td>J110-A12</td></tr>
</table></td><td>YES</td><td>Replace the DC controller PCB.</td></tr>
<tr><td>Lens motor (M4, M5)</td><td>NO</td><td>Replace the lens motor.</td></tr>
</table>

COPYRIGHT © 1997 CANON INC.

49. The Add Toner indicator fails to turn on.

Cause	Step	Checks	YES/NO	Action
	1	Is there toner in the hopper assembly?	YES	Go to step 3.
Toner sensor (hopper assembly), DC controller PCB	2	Select 'P002' in service mode (✻2✻). Move the toner around the toner sensor (TS1) to expose the sensor. Does bit 10 on the message display indicate '0' (toner absent)?	NO	1. Replace the toner sensor (TS1). 2. Replace the DC controller PCB.
DC controller PCB			YES	1. Replace the DC controller PCB. 2. Replace the control panel.
	3	Open the upper cover of the developing assembly. Is the toner level sensor blocked by toner?	YES	End.

50. The Add Toner indicator fails to turn off.

Cause	Step	Checks	YES/NO	Action
Toner	1	Is there toner at the rear of the hopper assembly?	NO	The level of toner inside the hopper is not enough. Supply toner.
Toner sensor (TS1)	2	Select 'P002' in service mode (✻2✻). At this time, does bit 10 on the message display indicate '0' (toner absent)?	YES	Replace the toner sensor (TS1) of the hopper assembly.
DC controller PCB/Control panel			NO	1. Replace the DC controller PCB. 2. Replace the control panel.

 COPYRIGHT © 1997 CANON INC. CANON NP6560/NP6360/NP6260 REV. 0 NOV. 1997 PRINTED IN JAPAN (IMPRIME AU JAPON)

51. The Set Control Card message fails to turn off.

Cause	Step	Checks	YES/NO	Action
CC-V	1	Can copies be made without setting a control card?	YES	Check the connector of the CC-V for a short circuit.
Control panel	2	Replace the control panel. Is the message indicated?	YES	End.
DC controller PCB			NO	Replace the DC controller PCB.

52. The Set Control Card message fails to turn off.

Cause	Step	Checks	YES/NO	Action
Control card	1	Is the control card inserted correctly?	NO	Replace the DC controller PCB.
DC controller PCB	2	Can copies be made?	NO	Replace the DC controller PCB.
CC-V			YES	Replace the CC-V.

53. Jams occur at the fixing assembly inlet.

Cause	Step	Checks	YES/NO	Action
Coupling (fixing assembly waste toner drive assembly)	1	Is the parallel pin groove of the coupling chafed so that the coupling does not move smoothly?	YES	Apply lubricant to the coupling contact area of the fixing assembly waste toner drive assembly.

54. The Add Paper message fails to turn off.

Cause	Step	Checks	YES/NO	Action
Cassette pick-up assembly	1	Does the gear of the lifter motor or the cassette pick-up assembly have a missing tooth?	YES	Using a jig, install the lifer motor correctly. Or, replace the lifter motor and the cassette pick-up assembly at the same time.

COPYRIGHT © 1997 CANON INC.

55. The fixing heater fails to operate.

<table>
<tr><th>Cause</th><th>Step</th><th>Checks</th><th>YES/NO</th><th>Action</th></tr>
<tr><td>Thermal switch (TP1)</td><td>1</td><td>Slide out the fixing assembly, and connect the probes of the tester to both terminals of the thermal switch (TP1). Is there electrical continuity?</td><td>NO</td><td>Replace the thermal switch.</td></tr>
<tr><td>Fixing heater (H1, H2)</td><td>2</td><td>Slide out the fixing assembly, and connect probes of the meter to both terminals of the fixing heater (H1, H2). Is there electrical continuity?</td><td>NO</td><td>Replace the fixing heater.</td></tr>
<tr><td>AC driver PCB</td><td rowspan="2">3</td><td rowspan="2">Is the voltage between the connectors on the DC con-troller PCB indicated in the table 5 V?
<table><tr><th>Heater</th><th>(+)</th><th>(–)</th></tr><tr><td>Main heater (H1)</td><td>J102-B5</td><td>J102-B1</td></tr><tr><td>Sub heater (H2)</td><td>J102-B3</td><td>J102-B1</td></tr></table></td><td>YES</td><td>Replace the AC driver PCB.</td></tr>
<tr><td>DC controller PCB</td><td>NO</td><td>Replace the DC con-troller PCB.</td></tr>
</table>

 COPYRIGHT © 1997 CANON INC.

56. Pick-up fails. (paper deck-A1)

Cause	Step	Checks	YES/NO	Action
Upper right door, Lower right door	1	Are the upper right door and the lower right door closed firmly?	NO	Close the doors.
Lifter	2	Slide out the compartment from the deck. Does the lifter move down? Further, is the sound of the lifter moving up heard when the compartment is set?	NO	See “The lifter fails to move up.”
Deck pick-up roller	3	Does the pick-up roller rotate?	YES	If the roller is soiled, clean it with alcohol. If deformation by wear is found, replace the roller.
Belt	4	Is the belt used to transmit the drive to the pick-up roll attached correctly?	NO	Attach the belt correctly.
Drive belt, Gear, Coupling	5	Is the drive from the deck main motor transmitted to the pick-up assembly through the drive belt, gear, and coupling?	NO	Check the drive belt, gear, and coupling.
DC controller PCB	6	Set the meter to the 30VDC range. Does the voltage between J2001-A9/J2001-A10 and GND change from 24 to 0 V when the Copy Start key is pressed?	NO	Replace the DC control PCB.
Deck pick-up/ vertical path clutch (CL102, pick-up; CL101, vertical path)			YES	Check the wiring to the clutch; if normal, replace the clutch.

COPYRIGHT © 1997 CANON INC.

57. The deck lifter fails to move up. (paper deck-A1)

Cause	Step	Checks	YES/NO	Action
Paper deck -A1	1	Is the deck set correctly?	NO	Set the deck correctly.
Lifter cable	2	Is the lifter cable routed correctly?	NO	Route the cable correctly.
Spring, Lever	3	Push up the pick-up roller releasing lever with a finger. Does the pick-up roller move down?	NO	Remove the pick-up assembly, and check the spring lever.
Deck lifter motor (M102)	4	Does the deck lifter motor rotate?	YES	Go to step 6.
DC controller PCB	5	Set the meter to the 12VDC range. Does the voltage between 2001A-3 and GND (–) on the DC controller PCB change from about 0 to 5 V when the deck is closed?	NO	Replace the DC controller PCB.
Deck open detecting switch (SW102)			YES	Check the wiring to the switch; if normal, replace the switch.
Deck lifter position sensor (Q110)	6	Set the meter to the 12VDC range. Does the voltage between J2001A-4 (+) and GND (–) on the DC controller PCB change as follows? when the deck is closed, 0 V when the deck is opened, 5 V	YES	Check the lever and the wiring; if normal, replace the sensor.
DC controller PCB			NO	Replace the DC controller PCB.

 COPYRIGHT © 1997 CANON INC. CANON NP6560/NP6360/NP6260 REV. 0 NOV. 1997 PRINTED IN JAPAN (IMPRIME AU JAPON)

V. TROUBLESHOOTING FEEDING PROBLEMS

A. Copy Paper Jams

Jams in the machine tend to occur in any of the following blocks:
① Pick-up assembly
② Separation/feeding assembly
③ Fixing/delivery assembly
④ Drum cleaner assembly
⑤ Holding tray assembly
⑥ Feeding assembly

The troubleshooting procedures, therefore, are organized according to location.

You can check the location and the type of jam using 'B_JAM' in service mode (✻1✻ ; eight most recent jams).

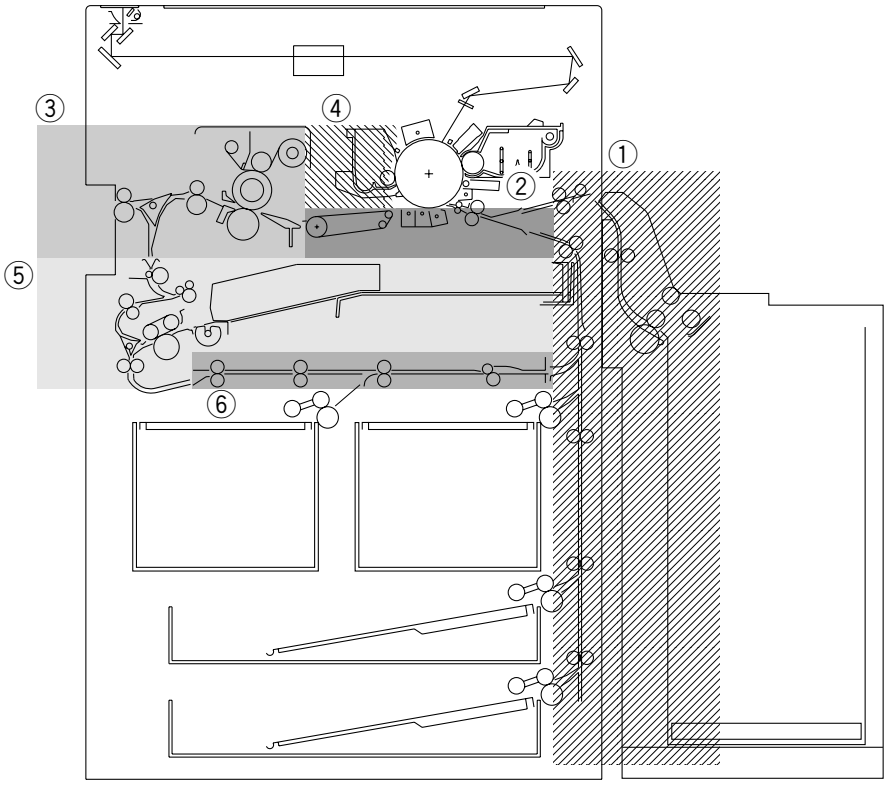

Figure 11-501

1. Pick-Up Assembly

Cause	Step	Checks	YES/NO	Action
Pick-up assembly	1	Is the copy paper curled or wavy?	YES	Replace the paper. Advise the user on the correct method of storing paper.
	2	Try Canon-recommended paper. Is the problem corrected?	YES	Advise the user on the correct method of storing paper.
DC controller PCB, Pick-up clutch	3	Is the pick-up roller of the selected cassette, deck, or multifeeder rotating during copying?	NO	See the relevant section.
Pick-up roller	4	Is the pick-up roller deformed or worn?	YES	Replace the pick-up roller.
Guide plate			NO	Check the guide plate for deformation.

 COPYRIGHT © 1997 CANON INC.

2. Separation/Feeding Assembly

Cause	Step	Checks	YES/NO	Action
Copy paper	1	Is the leading edge of copy paper past the registration roller?	YES	Go to step 5.
Registration roller	2	Is the coupling of the registration roller engaged correctly?	NO	Set the fixing/feeding unit correctly.
	3	Is the registration roller worn, deformed, or soiled?	YES	If dirt is found, clean it with alcohol; if wear or deformation is found, replace the part.
	4	Is the roller retaining spring on both ends of the registration roller installed correctly?	NO	Set it correctly.
			YES	Check the transfer guide for foreign matter and deformation.
Registration clutch	5	Does the registration clutch operating normally?	NO	Check the registration clutch.
Transfer/ separation charging assembly	6	Is the transfer/separation charging assembly set correctly?	YES	Check the transfer/separation charging assembly.
	7	Are there burrs on the paper guide of the transfer/separation charging assembly?	YES	Remove the burrs.
Copy paper	8	Try Canon-recommended paper. Is the problem corrected?	YES	Advise the user to use recommended paper.
Separation claw (cleaner assembly)	9	Is the separation claw under the cleaner assembly damaged?	YES	Replace the separation claw.
Feeding belt	10	Are the two feeding belts moving normally?	NO	Check the belt and the pulley.
Feeding fan			YES	Check the feeding fan to see if it is operating normally.

COPYRIGHT © 1997 CANON INC.

3. Fixing/Delivery Assembly

Cause		Step	Checks	YES/NO	Action
Delivery assembly separation claw		1	Is the separation claw worn or deformed?	YES	1. Replace the separation claw. 2. If dirt is found, clean the part with solvent.
Fixing assembly	Upper/lower roller	2	Is the upper/lower roller deformed or damaged?	YES	Replace the roller.
	Paper guide	3	Is the paper guide soiled with toner?	YES	Clean it with solvent.
		4	Is the height of the paper guide correct?	NO	Adjust the height.
	Nip	5	Is the lower roller pressure (nip) as specified?	NO	Adjust the nip.
	Cleaning belt	6	Is the cleaning belt taken up correctly?	NO	Check the fixing cleaner assembly.
Delivery assembly	Sensor lever	7	Does each sensor lever move smoothly?	NO	Adjust so that the lever moves smoothly.
	Delivery sensor	8	Are the external delivery sensor (PS10) and the fixing assembly outlet sensor (PS47) normal?	NO	Replace the sensor.
	Delivery paper deflecting plate	9	Is the delivery paper deflecting plate oriented in the direction of delivery?	NO	Orient the paper deflecting plate correctly.
	Delivery roller drive assembly	10	Does the delivery roller move smoothly?	NO	Check the delivery roller drive assembly.
Leading edge margin				YES	Check to make sure that the leading edge of copies has a margin.

4. Fixing/Delivery Assembly (reversed delivery)

Cause	Step	Checks	YES/NO	Action
Internal delivery sensor (PS12)	1	Is the internal delivery sensor (PS12) normal?	NO	Replace the sensor.
Delivery paper deflecting plate solenoid (SL2)	2	Does the delivery paper deflecting plate operate normally?	NO	Adjust the position of the delivery paper deflecting solenoid, or replace it.
Holding tray forward clutch (CL5)	3	Does the holding tray inlet roller rotate initially?	NO	Replace the holding tray forward clutch (CL5).
Holding tray reversing clutch (CL4)	4	Does the holding tray inlet roller rotate at the correct timing?	NO	Replace the holding tray reversing clutch (CL4).

 COPYRIGHT © 1997 CANON INC. CANON NP6560/NP6360/NP6260 REV. 0 NOV. 1997 PRINTED IN JAPAN (IMPRIME AU JAPON)

5. Cleaning Assembly

Cause	Step	Checks	YES/NO	Action
Transfer/separation charging assembly, Pre-transfer charging assembly	1	Are the transfer/separation charging assembly and the pre-transfer charging assembly set securely?	NO	Set the transfer/separation charging assembly securely.
	2	Is the height of the charging wire as specified?	NO	Adjust the height of the charging wire.
Separation claw (cleaner assembly)	3	Is the separation claw under the cleaner assembly damaged?	YES	Replace the separation claw.
Copy paper	4	Try Canon-recommended paper. Is the problem corrected?	YES	Advise the user to use recommended paper.
High-voltage transformer, DC controller PCB			NO	1. Check the high-voltage transformer. 2. Check the DC controller PCB.

6. Holding Tray Assembly (two-sided/overlay copying, 1st side)

Cause	Step	Checks	YES/NO	Action
	1	Perform steps 1 through 3 under 4. “Fixing Delivery Assembly.” Is the problem corrected?	YES	End.
Holding tray inlet paper sensor (PS15)	2	Is the holding tray inlet paper sensor (PS15) normal?	NO	Replace the sensor (PS15).

COPYRIGHT © 1997 CANON INC.

7. Holding Tray Assembly (re-pick up)

Cause	Step	Checks	YES/NO	Action
Copy paper (sheet alignment)	1	Is the stack of sheets of copy paper on the holding tray normal?	YES	Go to step 5.
Copy paper	2	Does the copy paper come into contact with the side guide plate of the holding tray assembly when it is being delivered to the holding tray?	NO	Check the copy paper; if necessary, advice the user to use recommended paper.
Side guide plate	3	Is the distance between the side guide plate of the holding tray assembly and the copy paper normal?	NO	Adjust the distance between the side guide plate and the copy paper. (See p. 11-10.)
Left/right registration	4	Is the left/right registration for 1st side and 2nd side within spec?	NO	Adjust the left/right side registration.
			YES	To eliminate the contact with the side guide plate, adjust the registration for 1st sides so that 0 ≦ (registration setting for 1st sides) – (registration setting for 2nd sides) ≦ 1.0.
Holding tray separation clutch (CL6)	5	Is the holding tray separation clutch (CL6) normal?	NO	Replace the clutch (CL6).
Holding tray re-pick up roller solenoid (SL6)	6	Is the holding tray re-pick up tray rotating?	NO	Replace the solenoid (SL6).
Holding tray pick-up sensor (PS17)	7	Is the holding tray pick-up sensor (PS17) normal?	NO	Replace the sensor (PS17).
Holding tray registration clutch (CL3)	8	Is the holding tray registration clutch (CL3) normal?	NO	Replace the clutch (CL3).
Holding tray registration sensor (PS14)	9	Is the holding tray registration sensor (PS14) normal?	NO	Replace the sensor (PS14).
Holding tray weight solenoid (SL7)	10	Is the holding tray weight plate operating?	NO	Replace the solenoid (SL7).

 COPYRIGHT © 1997 CANON INC.

8. Holding Tray Assembly (overlay, re-pick up)

Cause	Step	Checks	YES/NO	Action
	1	Perform the steps under 7. “Holding Tray.” Is the problem corrected?	YES	End.
Holding tray paper deflecting plate	2	Is there deformation or scratches on the holding tray paper deflecting plate?	YES	Replace the paper deflecting plate.
Holding tray paper deflecting plate solenoid (SL8)	3	Does the holding tray paper deflecting plate operate at the correct timing?	NO	Replace the solenoid (SL8).
Holding tray reversing clutch (CL4)	4	Does the roller rotation reverse at the correct timing?	NO	Check the wiring from the DC controller PCB to the holding tray reversing clutch (CL4); if normal, replace the clutch (CL4).

9. Holding Tray Feeding Assembly

Cause	Step	Checks	YES/NO	Action
	1	Is the holding tray feeding assembly set correctly?	NO	Set it correctly.
Holding tray feeding clutch (CL1), Holding tray feeding clutch (CL2)	2	Does the paper move correctly inside the holding tray feeding assembly?	NO	Replace the clutch (CL1 or CL2).
Holding tray feeding assembly 1 paper sensor (PS8), Holding tray feeding assembly 2 paper sensor (PS9)	3	Are the holding tray feeding assembly 1 paper sensor (PS8) and the holding tray feeding assembly 2 paper sensor (PS9) normal?	NO	Replace the sensor (PS8 or PS9).

COPYRIGHT © 1997 CANON INC.

B. Feeding Faults

1. Double Feeding

Cause	Step	Checks	YES/NO	Action
Separation roller	1	Is the separation roller deformed or worn?	YES	Replace the separation roller.
Spring			NO	Replace the spring used to pull the separation roller.

2. Wrinkles

Cause		Step	Checks	YES/NO	Action
Pick-up assembly		1	Turn off the machine while copy paper is moving through the feeding assembly. At this time, is the copy paper wrinkled or is it moving askew?	YES	Check the pick-up assembly. Check the registration roller.
Copy paper		2	Try fresh copy paper. Is the problem corrected?	YES	The paper may be moist. Advise the user on the correct method of storage.
		3	Try Canon-recommended paper. Is the problem corrected?	NO	Advise the user to use Canon-recommended paper.
Fixing assembly	Paper guide	4	Is the paper guide soiled with toner?	YES	Clean the guide with solvent.
		5	Is the height of the paper guide correct?	NO	Adjust the height of the paper guide.
	Lower roller	6	Is the lower roller pressure (nip) as specified?	NO	Adjust it.
	Upper/lower roller			NO	Try replacing the upper and lower rollers one after the other.

 COPYRIGHT © 1997 CANON INC. CANON NP6560/NP6360/NP6260 REV. 0 NOV. 1997 PRINTED IN JAPAN (IMPRIME AU JAPON)

VI. ARRANGEMENT AND FUNCTIONS OF ELECTRICAL PARTS

COPYRIGHT © 1997 CANON INC.

A. Sensors

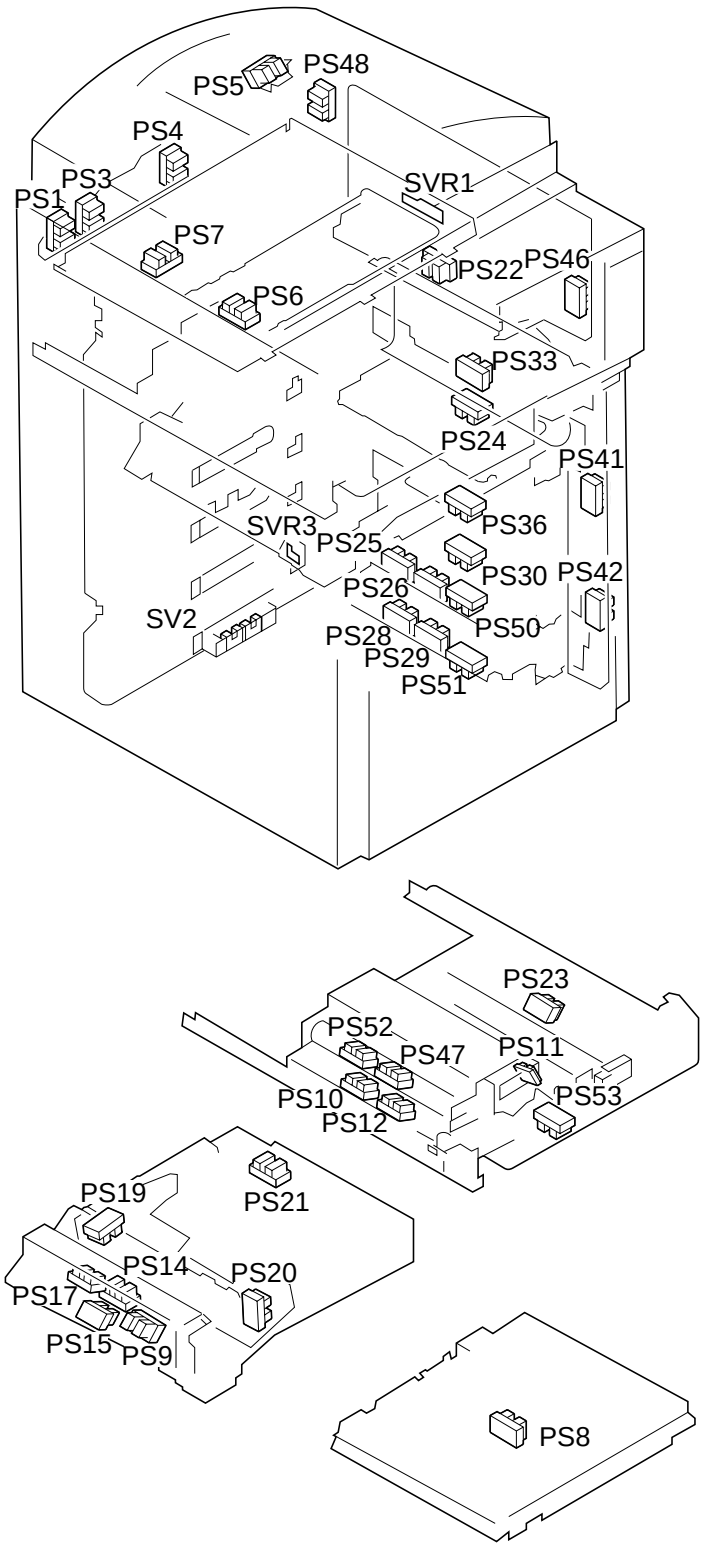

Figure 11-601

 COPYRIGHT © 1997 CANON INC.

Symbol	Name	Notation	Function
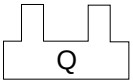	Photointerrupter	PS1	Scanner home position detection
		PS3	Scanner original leading edge 1 detection
		PS4	Scanner original leading edge 2 detection
		PS5	Copyboard cover open/closed detection
		PS6	Lens X home position detection
		PS7	Lens Y home position detection
		PS8	Holding tray feeding assembly 1 paper detection
		PS9	Holding tray feeding assembly 2 paper detection
		PS10	External delivery detection
		PS11	Fixing cleaning belt length detection
		PS12	Internal delivery detection
		PS14	Holding tray registration paper detection
		PS15	Holding tray inlet paper detection
		PS17	Holding tray pick-up detection
		PS19	Holding tray re-circulating bar home position detection
		PS20	Holding tray Y home position detection
		PS21	Holding tray X home position detection
		PS22	Multifeeder pick-up detection
		PS23	Registration paper detection
		PS24	Pick-up vertical path 0 paper detection
		PS25	Cassette 3 lifter detection
		PS26	Cassette 3 paper detection
		PS27	Pick-up vertical path 3 paper detection
		PS28	Cassette 4 lifter detection
		PS29	Cassette 4 paper detection
		PS30	Pick-up vertical path 4 paper detection
		PS33	Pick-up vertical path 1 paper detection
		PS36	Pick-up vertical path 2 paper detection
		PS41	Upper right door open detection
		PS42	Lower right door open detection
		PS46	Multifeeder door open detection
		PS47	Fixing assembly outlet paper detection
		PS48	Scanner locked detection
		PS50	Cassette 3 open/closed detection
		PS51	Cassette 4 open/closed detection
		PS52	Claw jam detection
		PS53	Fixing/feeding unit detection
	Variable resistor	SV2	Cassette 4 paper length detection
		SVR1	Multifeeder paper width detection
		SVR3	Cassette 4 paper width detection

Table 11-601

COPYRIGHT © 1997 CANON INC.

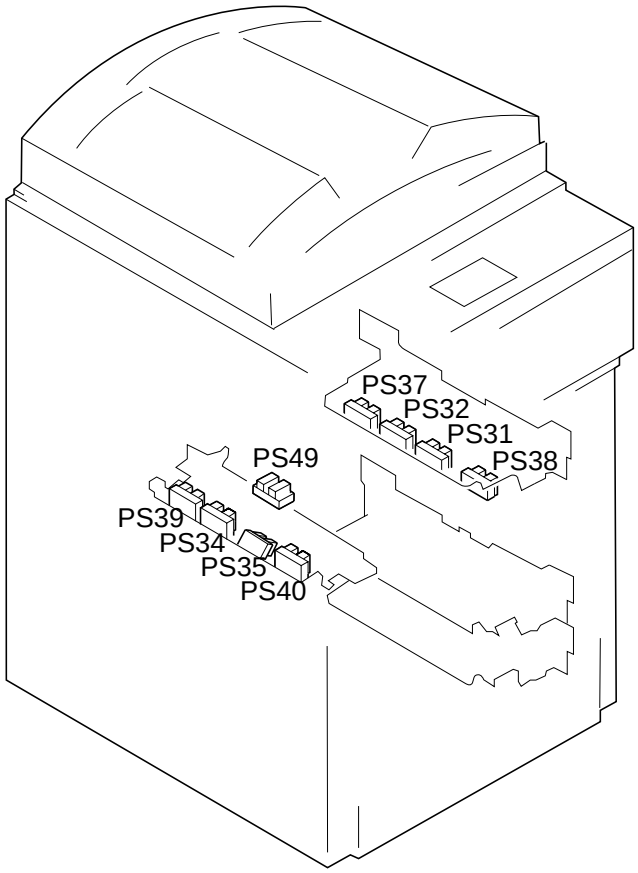

Figure 11-602

 COPYRIGHT © 1997 CANON INC.

Symbol	Name	Notation	Function
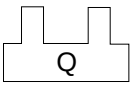	Photointerrupter	PS31	Right deck lifter position detection
		PS32	Right deck paper detection
		PS34	Left deck lifter position detection
		PS35	Left deck paper detection
		PS37	Right deck lifter limit detection
		PS38	Right deck open/closed detection
		PS39	Left deck lifter limit detection
		PS40	Left deck open/closed detection
		PS49	Left deck pick-up assembly outlet paper detection

Table 11-602

COPYRIGHT © 1997 CANON INC.

B. Swithes and Solenoids

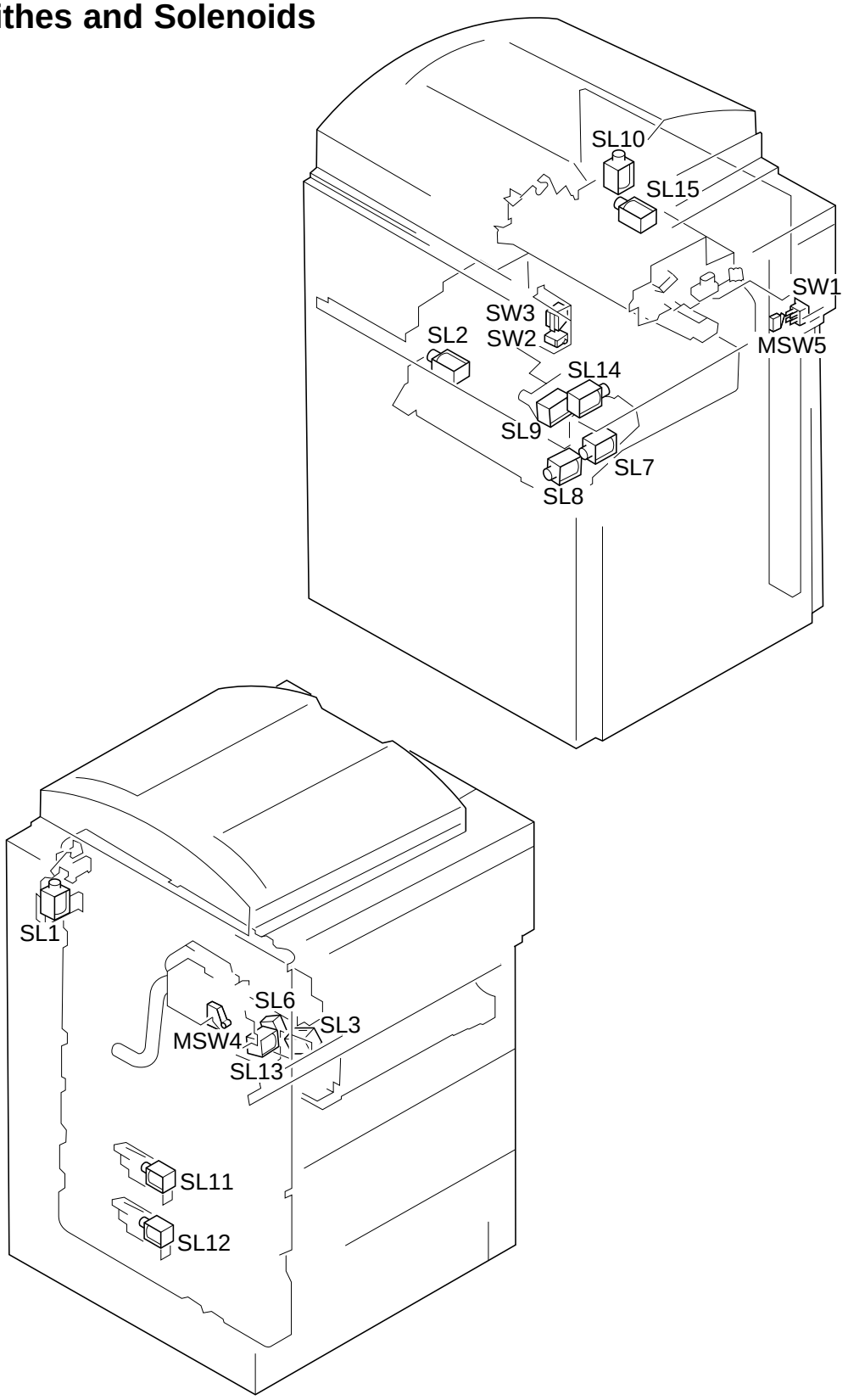

Figure 11-603

 COPYRIGHT © 1997 CANON INC.

Symbol	Name	Notation	Function
S L	Solenoid	SL1	Scanner locking
		SL2	Delivery paper deflecting plate drive
		SL3	Fixing drive
		SL6	Holding tray re-pick up roller (D-cut roller) drive
		SL7	Holding tray weight drive
		SL8	Holding tray paper deflecting plate drive
		SL9	Holding tray swinging
		SL10	Multifeeder pick-up
		SL11	Cassette 3 pick-up roller release
		SL12	Cassette 4 pick-up roller release
		SL13	Fixing/feeding unit locking
		SL14	Fixing cleaning belt drive
		SL15	Multifeeder pick-up relay
		SL16	Fixing assembly inlet guide drive
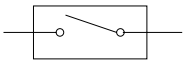	Microswitch/switch	MSW4	Waste toner feeding screw locked detection
		MSW5	Multifeeder door switch
		SW1	Power switch
		SW2	Door switch
		SW3	Drum heater switch

Table 11-603

COPYRIGHT © 1997 CANON INC.

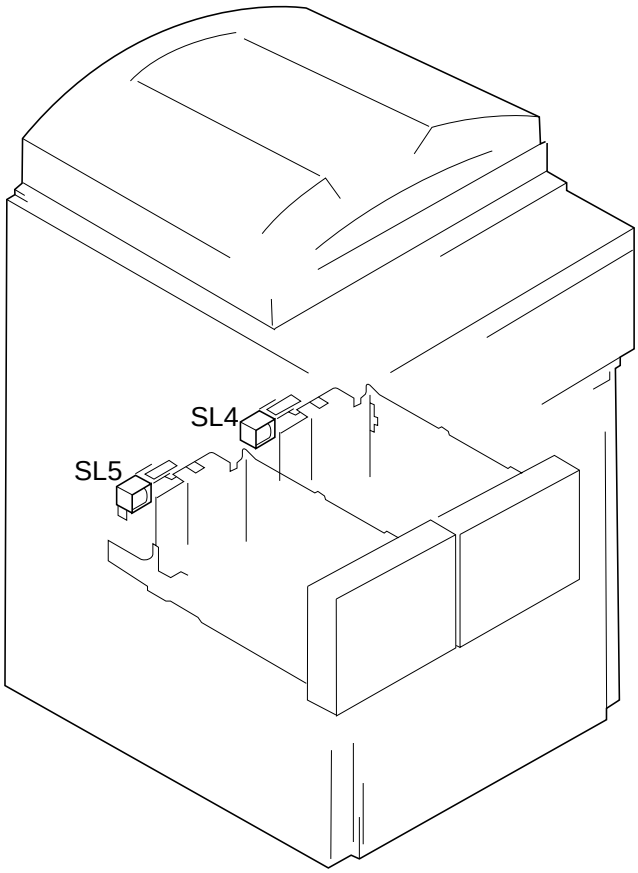

Figure 11-604

 COPYRIGHT © 1997 CANON INC.

Symbol	Name	Notation	Function
S L	Solenoid	SL4	Right deck pick-up roller release
		SL5	Left deck pick-up roller release

Table 11-604

COPYRIGHT © 1997 CANON INC.

C. Motors and Fans

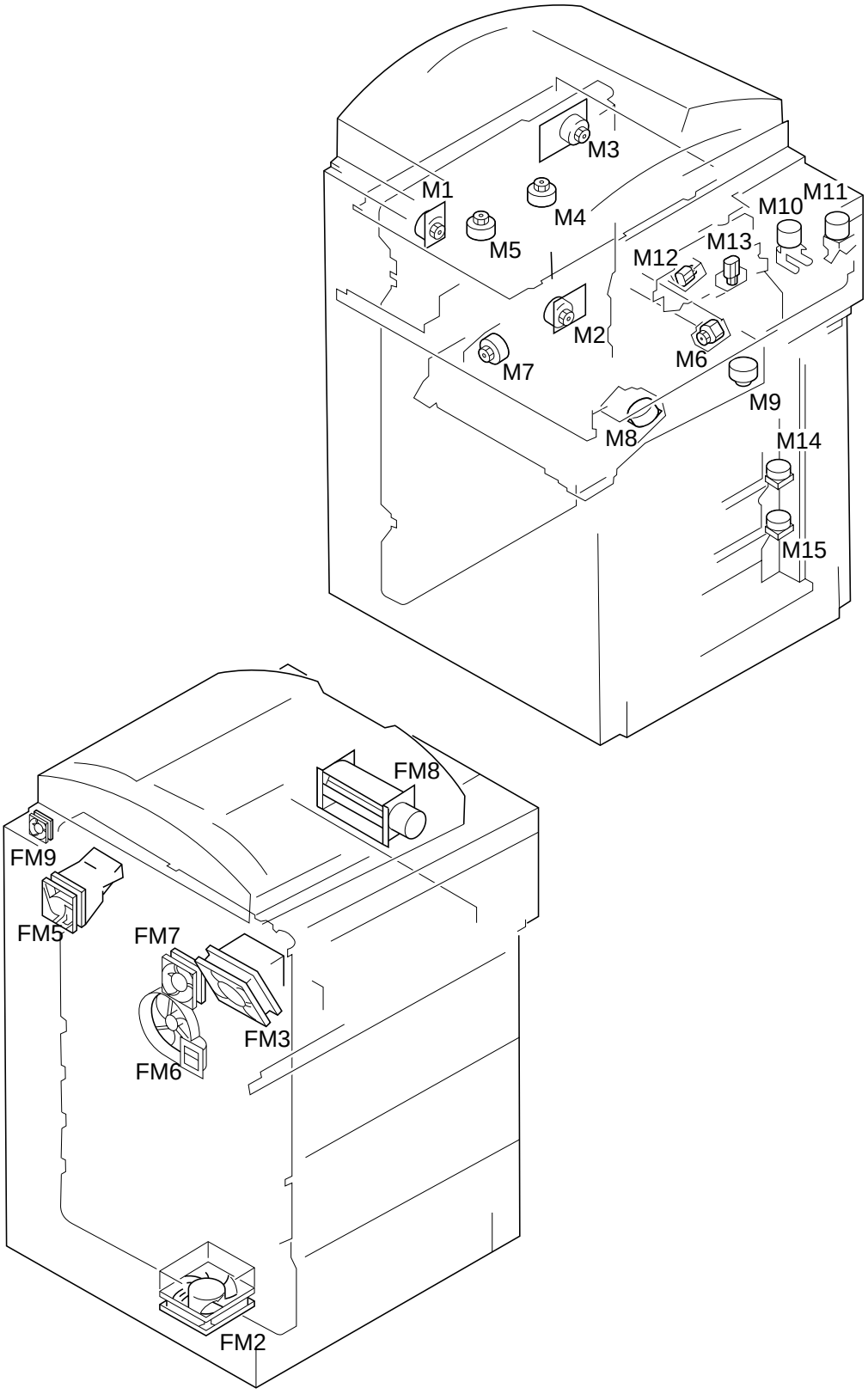

Figure 11-605

 COPYRIGHT © 1997 CANON INC.

Symbol	Name	Notation	Function
	Fan	FM2	Exhaust fan
		FM3	Fixing heat discharge fan
		FM5	Developing fan
		FM6	Feeding fan
		FM7	Cleaner fan
		FM8	Scanner cooling fan
		FM9	Scanner motor cooling fan
	Motor	M1	Main motor
		M2	Pick-up motor
		M3	Scanner motor
		M4	Lens X motor
		M5	Lens Y motor
		M6	Transfer/separation charging wire cleaning motor
		M7	Holding tray re-circulating bar motor
		M8	Holding ray X motor
		M9	Holding tray Y motor
		M10	Hopper motor (toner supply)
		M11	Hopper motor (toner stirring)
		M12	Primary charging wire cleaning motor
		M13	Pre-transfer charging wire cleaning motor
		M14	Cassette 3 lifter motor
		M15	Cassette 4 lifter motor

Table 11-605

COPYRIGHT © 1997 CANON INC.

D. Clutches

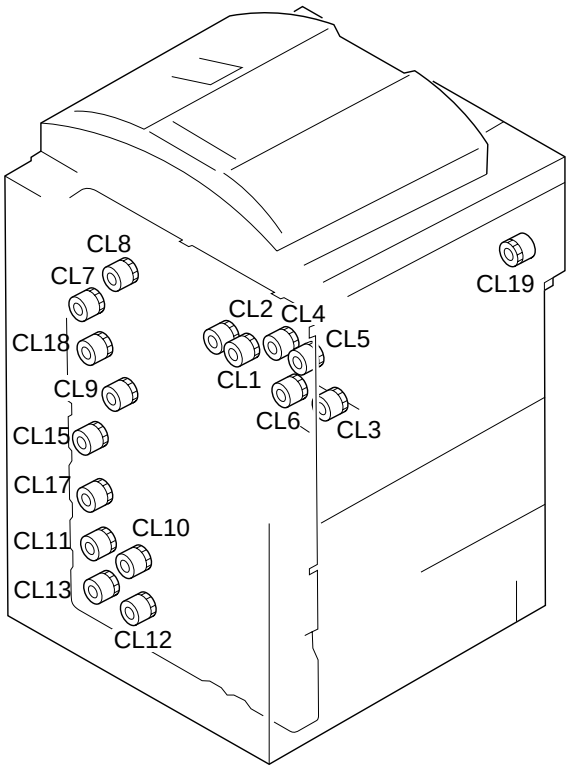

Figure 11-606

Symbol	Name	Notation	Function
CL	Clutch	CL1	Holding tray feeding 1
		CL2	Holding tray feeding 2
		CL3	Holding tray registration
		CL4	Holding tray reversal
		CL5	Holding tray forward
		CL6	Holding tray separation
		CL7	Multifeeder pick-up
		CL8	Developing
		CL9	Regist roller drive
		CL10	Cassette 3 pick-up
		CL11	Vertical path roller 3 drive
		CL12	Cassette 4 pick-up
		CL13	Vertical path roller 4 drive
		CL15	Vertical path roller 1 drive
		CL17	Vertical path roller 2 drive
		CL18	Vertical path roller 0 drive
		CL19	Fixing brake

Table 11-606

 COPYRIGHT © 1997 CANON INC.

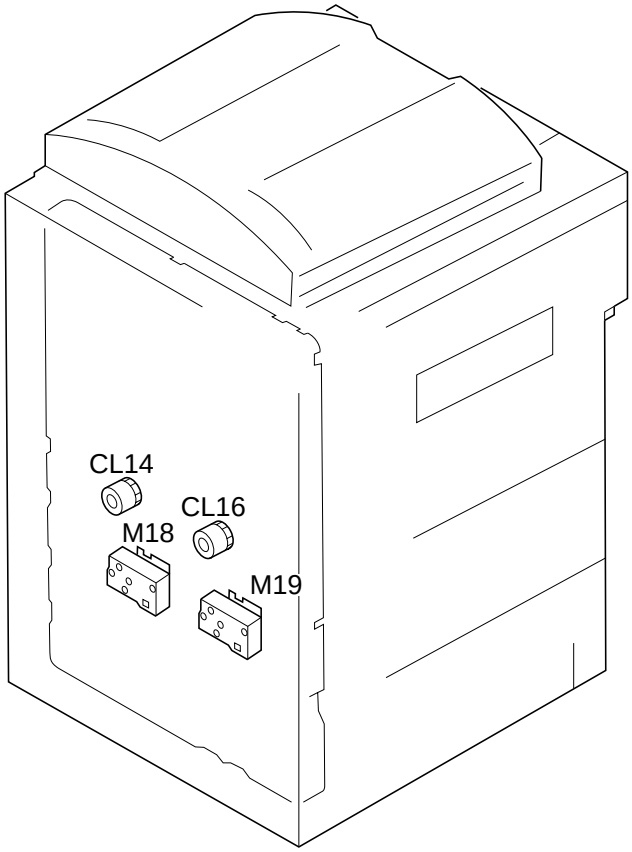

Figure 11-607

Symbol	Name	Notation	Function
M	Motor	M18	Right deck lifter drive
		M19	Left deck lifter drive
CL	Clutch	CL14	Right deck pick-up
		CL16	Left deck pick-up

Table 11-607

COPYRIGHT © 1997 CANON INC.

E. Lamps, Heaters, and Photosensors

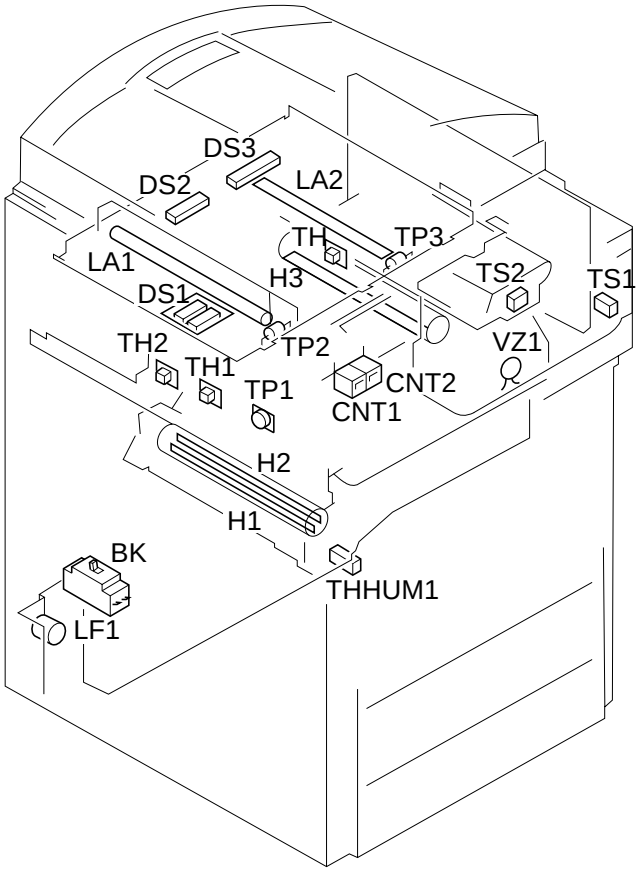

Figure 11-608

 COPYRIGHT © 1997 CANON INC.

Symbol	Name	Notation	Function
B K	Leakage current circuit breaker	BK	Leakage/over-current breaker
CNT	Counter	CNT1	Total copy counter
		CNT2	Accessories copy counter
	Photosensor	DS1	Original size 1 detection
		DS2	Original size 2 detection
		DS2	Original size 3 detection
	Heater	H1	Fixing main heater
		H2	Fixing sub heater
		H3	Drum heater
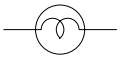	Lamp	LA1	Scanning lamp
		LA2	Pre-exposure lamp
L F	Line filter	LF1	Noise filter
	Thermistor	TH1	Fixing heater main thermistor
		TH2	Fixing heater sub thermistor
		TH	Drum heater thermistor
	Environment sensor	THHUM1	Temperature humidity sensor (internal temperature sensor)
	Toner sensor	TS1	Hopper toner sensor
		TS2	Developing assembly toner sensor
	Varistor	VZ1	Varistor
	Thermal switch	TP1	Fixing heater thermal switch
	Thermal fuse	TP2	Scanning lamp thermal fuse
		TP3	Drum heater thermal fuse

Table 11-608

COPYRIGHT © 1997 CANON INC.

F. PCBs

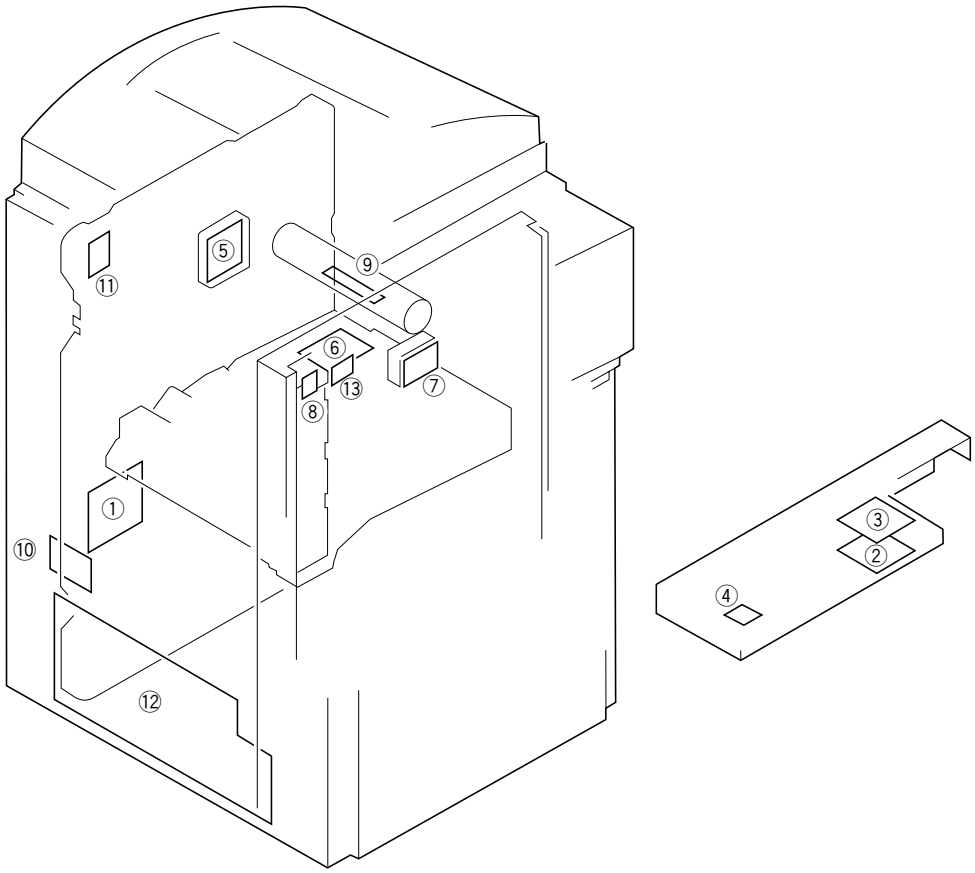

Figure 11-609

 COPYRIGHT © 1997 CANON INC.

Ref.	Name	Function
①	DC controller PCB	Sequence control
②	Control panel CPU PCB	Control panel control
③	Control panel key PCB	Control panel key input, LED indication
④	FL inverter PCB	Control panel back-light lamp power supply
⑤	HVT PCB	High-voltage output
⑥	Holding tray control PC	Holding tray sensor, solenoid, clutch control
⑦	Potential control PCB	Photosensitive drum surface potential control
⑧	Accessories copy counter PCB	Accessories copy counter signal relay
⑨	Drum heater controller PCB	Drum heater control
⑩	AC driver PCB	AC circuit control
⑪	Lamp regulator PCB	Scanning lamp control
⑫	DC power supply PCB	DC power supply
⑬	Service switch PCB	Service mode switching

Table 11-609

COPYRIGHT © 1997 CANON INC.

G. Paper Deck-A1

1. Sensors and Switches

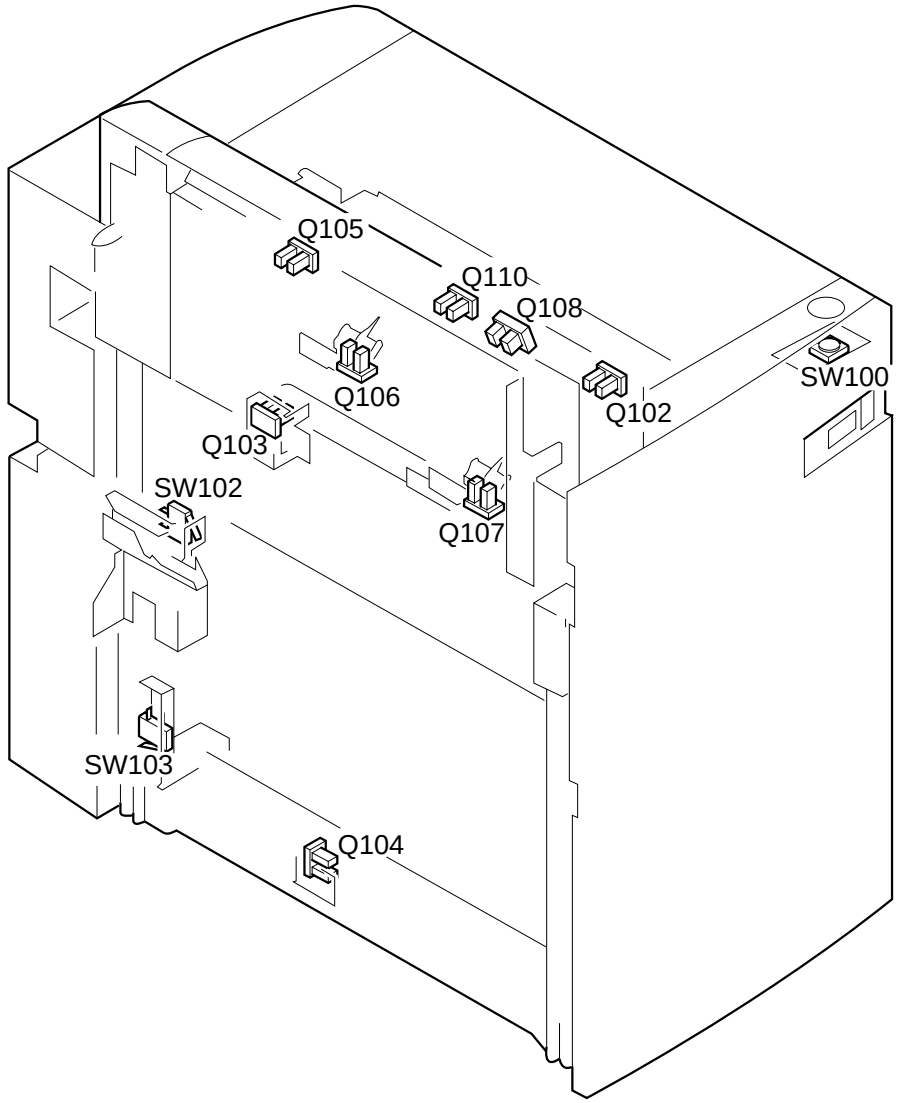

Figure 11-610a (paper deck-A1)

 COPYRIGHT © 1997 CANON INC.

Symbol	Name	Notation	Function
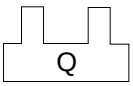	Photointerrupter	Q102	Deck lifter upper limit detection
		Q103	Deck paper supply position detection
		Q104	Deck set detection
		Q105	Deck pick-up guide open detection
		Q106	Deck vertical path paper detection
		Q107	Deck pick-up paper detection
		Q108	Deck paper absent detection
		Q110	Deck lifter position detection
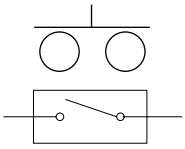	Switches	SW100	Deck open switch
	Microswitch	SW102	Deck open detecting switch
		SW103	Deck lifter lower limit detecting switch

Table 11-610a (paper deck-A1)

2. Motors, Clutches, Solenoids, and PCBs

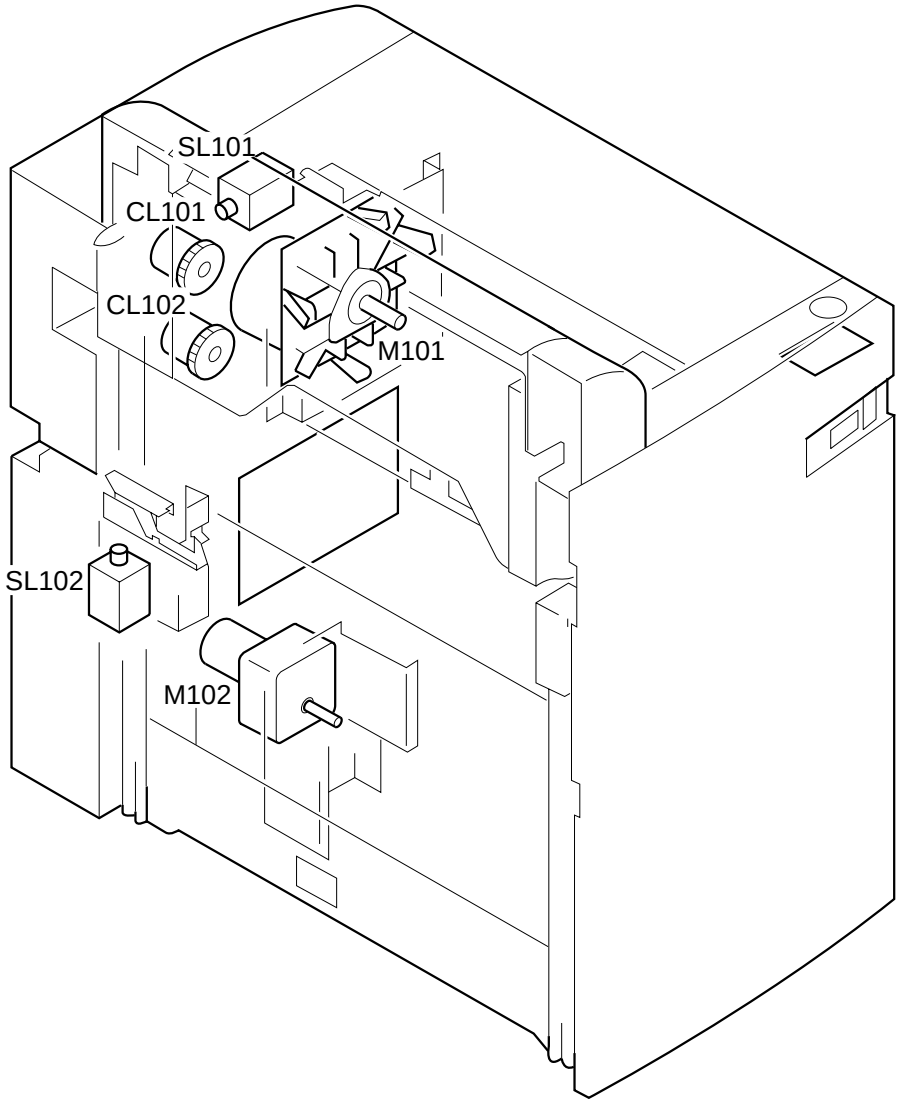

Figure 11-610b (paper deck-A1)

 COPYRIGHT © 1997 CANON INC.

Symbol	Name	Notation	Function
M	Motor	M101 M102	Deck main motor Deck lifter motor
CL	Clutch	CL101 CL102	Deck vertical path clutch Deck pick-up clutch
S L	Solenoid	SL101 SL102	Deck pick-up roller releasing solenoid Deck open solenoid
	PCB	① ②	Side deck driver PCB Open switch PCB

Table 11-610b (paper deck-A1)

H. Variable Resistors (VR), Light-Emitting Diodes (LED), and Check Pins by PCB

Of the VRs, LEDs, and check pins used in the machine, those needed to service the machine in the field are discussed.

Caution:

1. Some LEDs are dimly lit because of leakage current even when off; this is a normal condition and should be kept in mind.
2. VRs that may be used in the field.....
   VRs that must not be used in the field.....

Caution:

Those VRs and check pins not discussed herein are for use at the factory, requiring special tools and high precision. Do not touch them in the field.

1. DC Controller PCB

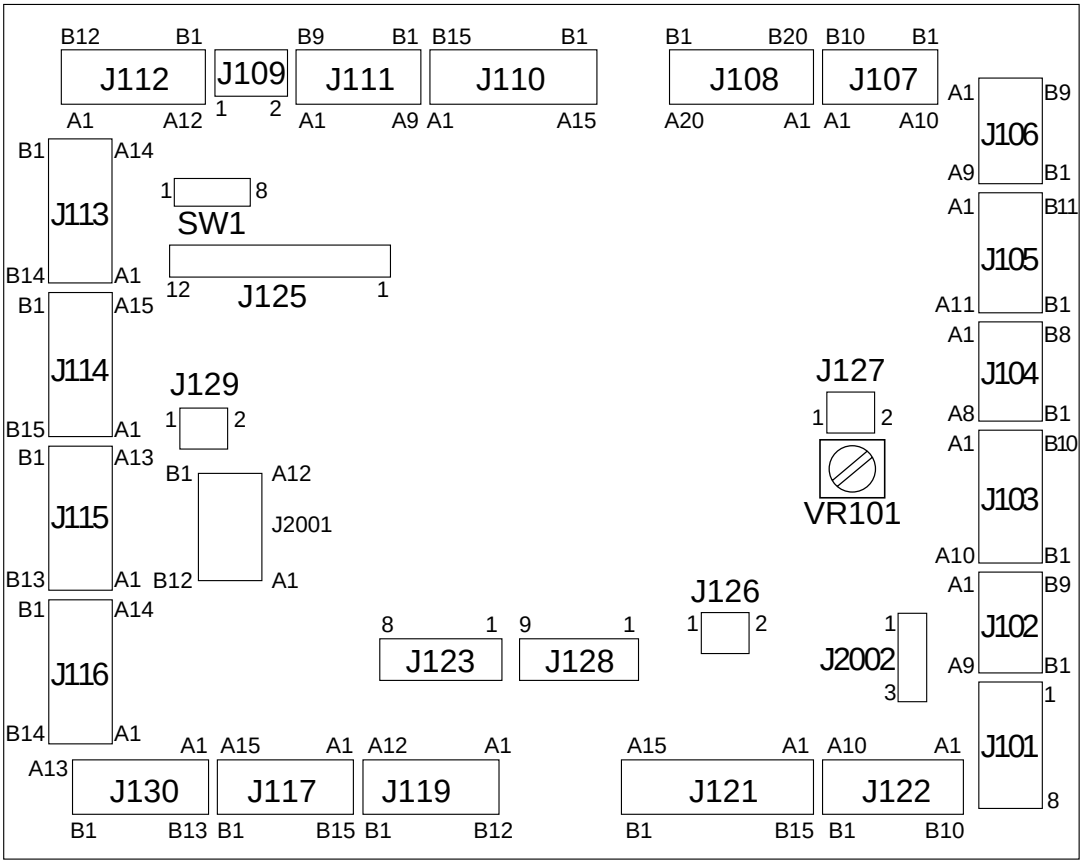

Figure 11-611

 COPYRIGHT © 1997 CANON INC.

SW1-2	SW1-2	SW1-3	SW1-4	SW1-5	SW1-6	SW1-7	SW1-8	Voltage	Size (vertical)
OFF	OFF	OFF	—	—	ON/OFF	—	ON	100V	AB
OFF	ON	OFF	—	—	ON	—	ON/OFF	230V	AB/Inch
ON	OFF	OFF	—	—	ON	—	OFF	230V	A
ON	ON	OFF	—	—	ON	—	ON	120V	Inch

Table 11-611

Caution:
DIP SW 1-3 to 8 on the DC controller is for use at the factory only; do not touch it. Otherwise, the machine may malfunction.

AB (4R4E)	Ratio
200%	200.0%
A4→A3, B5→B4	141.1%
A4→B4	122.4%
B4→A3, B5→A4	115.4%
100%	100.0%
A3→B4, A4→B5	86.5%
B4→A4	81.6%
A3→A4, B4→B5	70.7%
50%	50.0%

Table 11-612

Inch (4R3E)	Ratio
200%	200.0%
LTR→11"×17"	129.4%
LGL→11"×17"	121.4%
100%	100.0%
LGL→LTR	78.6%
LGL→11"×17"	73.3%
11"×17"→LTR	64.7%
50%	50.0%

Table 11-613

COPYRIGHT © 1997 CANON INC.

A (2R2E)	Ratio
200%	200.0%
A4→A3	141.4%
100%	100.0%
A3→A4	70.7%
50%	50.0%

Table 11-614

AB/Inch (4R4E)	Ratio
200%	200.0%
A4/LTR→A3, B5→B4	141.4%
A4/LTR→B4	122.4%
B4→A3, B5→A4/LTR	115.4%
100%	100.0%
A3→B4, A4/LTR→B5	86.5%
B4→A4/LTR	81.6%
A3→A4/LTR, B4→B5	70.7%
50%	50.0%

Table 11-615

Connector	Description
J123	For factory
J125	For factory
J126	For factory
J129	For factory

Table 11-616

 COPYRIGHT © 1997 CANON INC.

2. AC Driver PCB

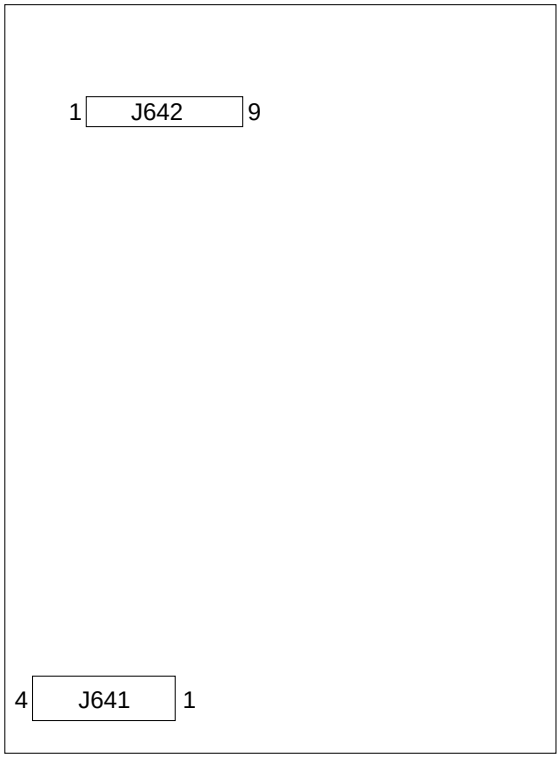

Figure 11-612

3. DC Power Supply PCB

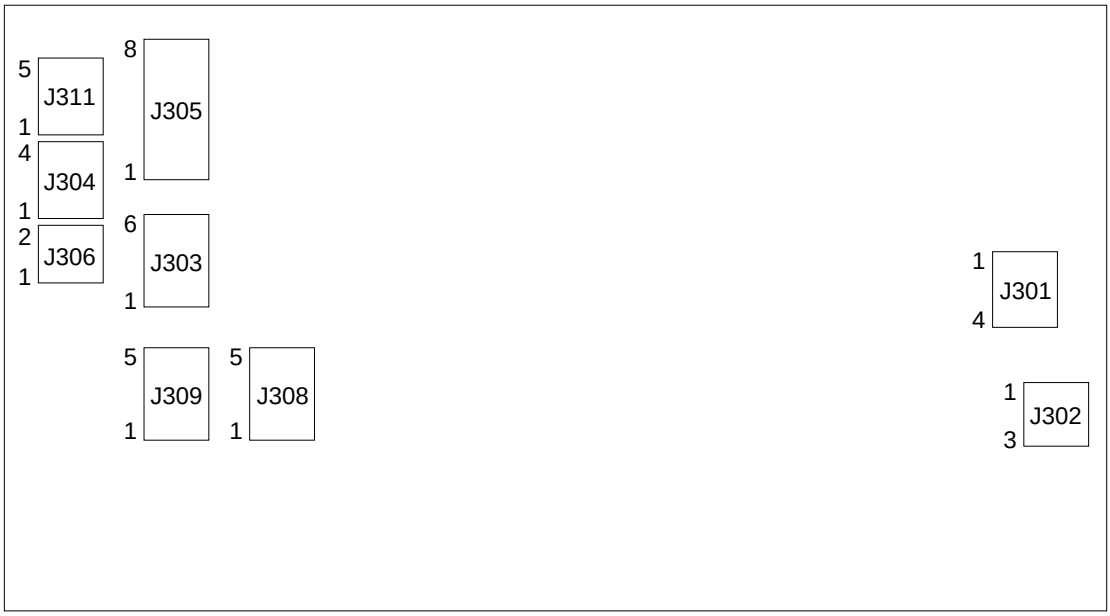

Figure 11-613

COPYRIGHT © 1997 CANON INC.

4. Control CPU PCB

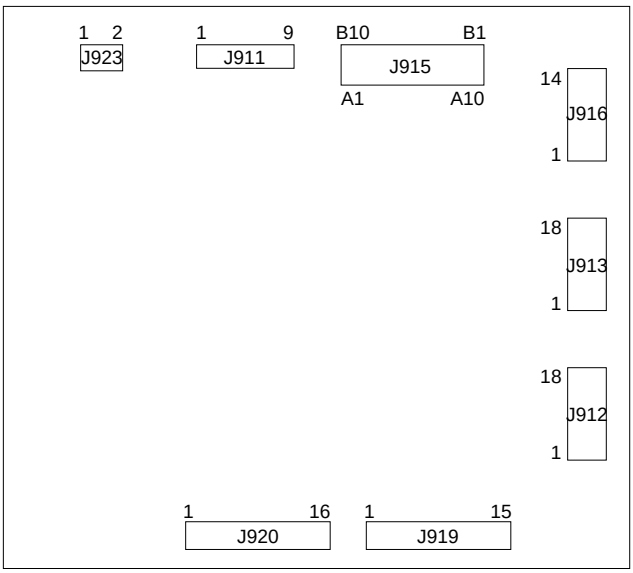

Figure 11-614

 COPYRIGHT © 1997 CANON INC.

5. Holding Tray Driver PCB

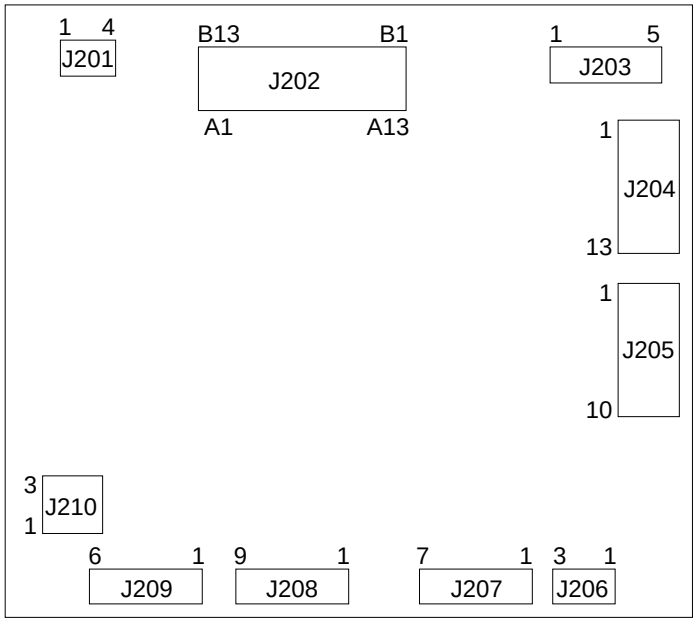

Figure 11-615

6. Potential Measurement PCB

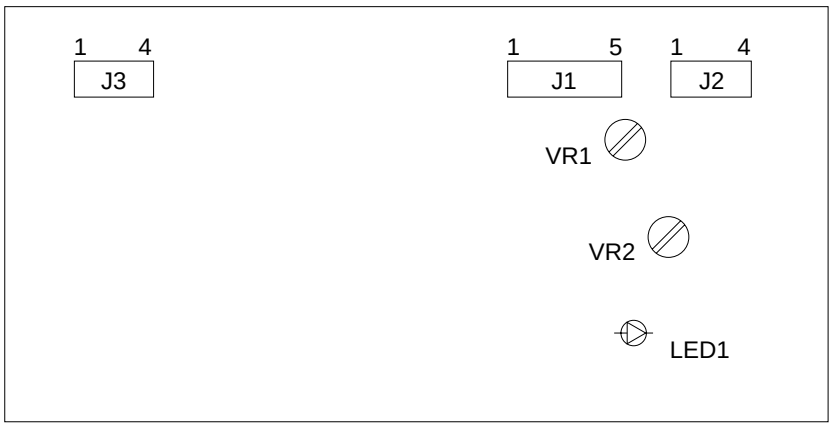

Figure 11-616

VR	Description
VR1	For factory
VR2	For factory

Table 11-617

LED	Description
LED1	ON while drum surface potential is being measured.

Table 11-618

 COPYRIGHT © 1997 CANON INC.

7. HVT1 PCB

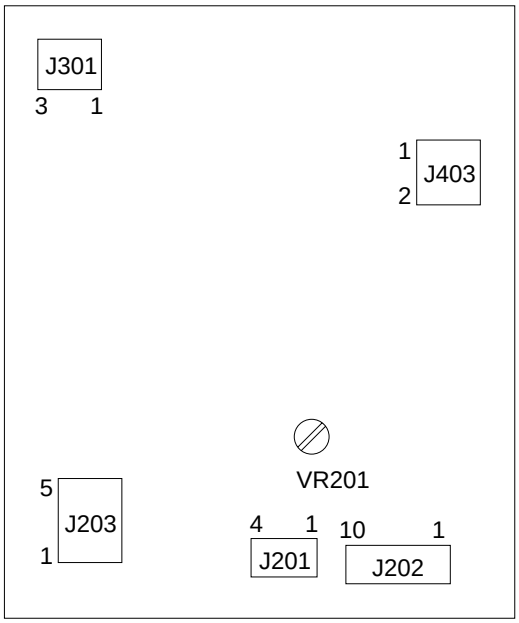

Figure 11-617

VR	Description
VR201	For factory

Table 11-619

8. HVT2 PCB

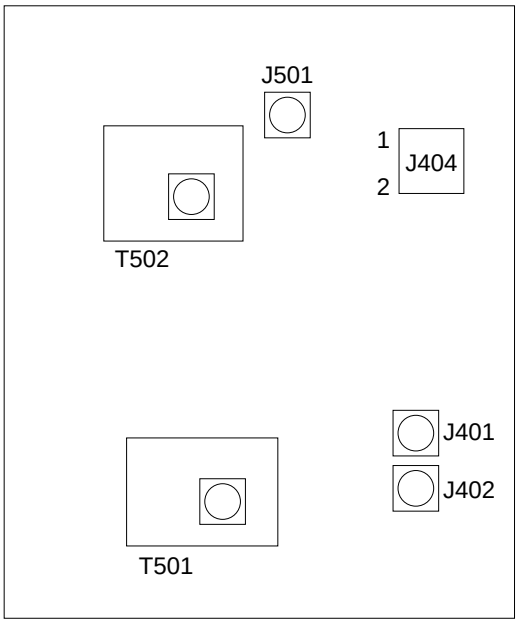

Figure 11-618

9. Inverter PCB

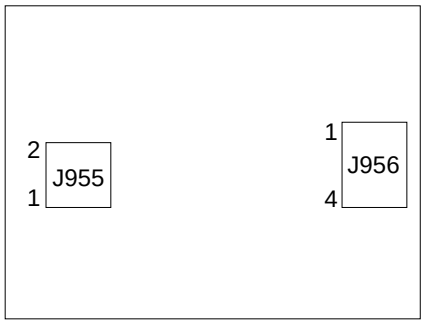

Figure 11-619

 COPYRIGHT © 1997 CANON INC.

10. Lamp Regulator PCB

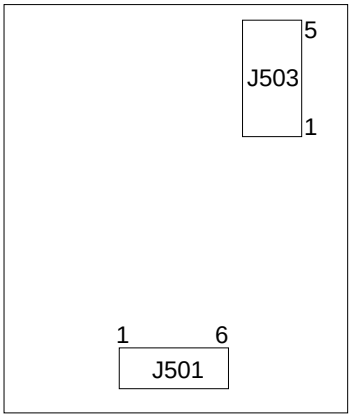

Figure 11-620

11. Counter PCB

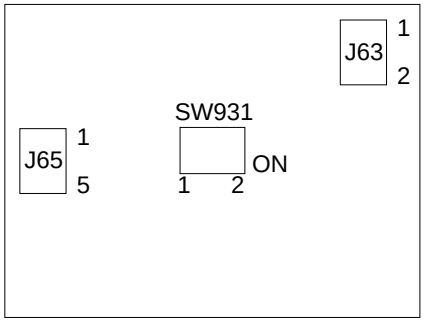

Figure 11-621

SW931-1	SW931-2	Description
0	0	Assumes that the sub counter is not connected.
1	0	Assumes that the sub counter is a small-size copy counter.
0	1	Assumes that the sub counter is a two-sided copy counter.
1	1	Assumes that the sub counter is a large-size copy counter.

Table 11-620

COPYRIGHT © 1997 CANON INC.

12. Side Deck Driver (paper deck-A1)

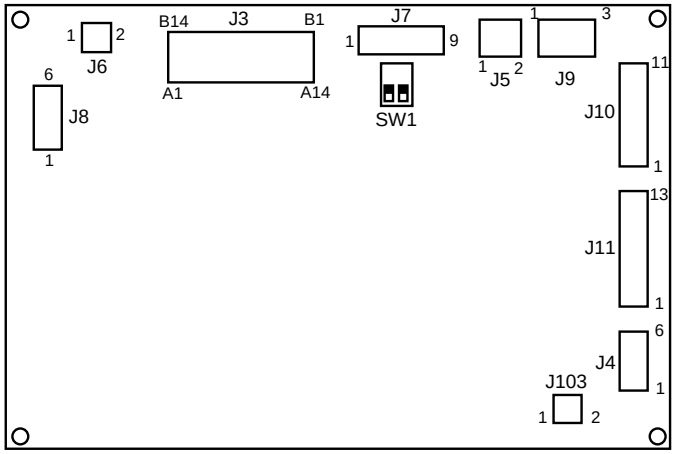

Figure 11-622

SW1-1	SW1-2	Mode
OFF	OFF	Deck main motor high-speed*
ON	ON	Deck main motor low-speed.

*This model only.

Table 11-621

 COPYRIGHT © 1997 CANON INC.

VII. SERVICE MODE

A. Outline

The machine's service mode is divided into the following six:

Item	Display	Mode
1	DISPLAY	Display mode
2	I/O DISPLAY	I/O mode
3	ADJUST	Adjustment mode
4	FUNCTION	Function mode
5	OPTION	Options mode
6	COUNTER	Counter mode

Table 11-701

Each mode has sub menus as explained on the pages that follow, and may be checked on the message display.

Reference:

When you have selected a mode, you will find a specific page reference number in the upper right corner of the display.

COPYRIGHT © 1997 CANON INC.

B. Using Service Mode

1) Open the front door, and insert the door switch actuator. If you want to make checks while making copies (I/O display mode), set the appropriate copying mode.
2) Press the service mode switch with a hex key.
   • The machine starts service mode and indicates '$' in the upper right corner of the message display.
3) Enter the number of the mode (See table 11-701.) you want for checks or adjustments using the ✻ key and the keypad; for example, ✻, 3, and ✻.
4) Using the ◀◀ or ▶▶ key, select the appropriate screen.
5) Make checks or adjustments.
   • To store any input data, press the user mode key (✻).
6) End service mode.
   • Press the Reset key ( ) once to leave the current mode.
   • Press the Reset key twice to end service mode.
   • Service mode ends when you turn off the power switch or disconnect the power plug. (It will not end, however, when you open the front door or the pick-up door.)

C. Using Adjustment Mode and Options Mode

In adjustment mode and options mode, the options made on the control panel are stored in the RAM on the control PCB so that they drive the machine as if they were made on the variable resistor and switches.

Table 11-702 is the label attached behind the machine's front door.

Each machine is adjusted at the factory, and the adjustment values are recorded on this label.

If you replaced the DC controller PCB or initialized the RAM, you must enter the values recorded on the label in the RAM on the control PCB. By the same token, you must record any new values you entered in the field on this label.

 COPYRIGHT © 1997 CANON INC.

	TYP				TYP		
LIGHT_5				MF_A6R			
LIGHT_5P				MF_A4R			
AE_SLOP				MF_A4			
GLEAM_5				BOOK_ERA			
BRAKE_SC				ATM			
REGIST				DOC_ST			
LE_BLANK				P_INT_RVL			
F_BLANK				RFAE_F5L			
R_BLANK				REAE_F9L			
TE_BLANK				RFAE_F5R			
PRIMARY				RFAE_F9R			
BIAS				LA_LCKPS			
PRETRANS				LA_SPEED			
TRN_1				RF_LENSY			
TRN_DUP				11×17PSZ			
TRN_OVL				LGL_PSZ			
SEP_1				LTR_PSZ			
SEP_DUP				LTRR_PSZ			
SEP_OVL				STMT_PSZ			
C1_STMTR				A3_PSZ			
C1_A4R				A4_PSZ			
C2_STMTR				A4R_PSZ			
C2_A4R				A5_PSZ			
C3_STMTR				B4_PSZ			
C3_A4R				B5_PSZ			
C4_STMTR				B5R_PSZ			
C4_A4R							

Table 11-702

COPYRIGHT © 1997 CANON INC.

D. Display Mode (✻1✻)

Using the ◄◄ or ►► key, select the appropriate screen.

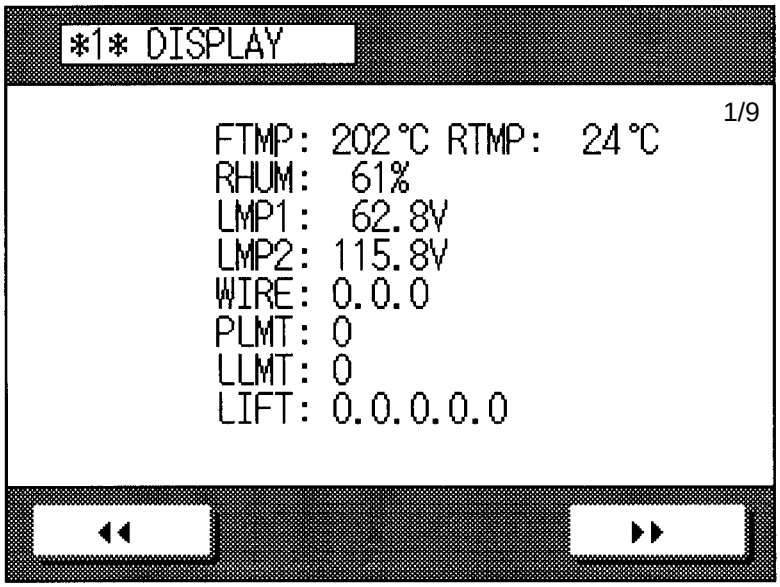

Screen 1-1

Item	Description	Remarks
FTMP	Indicates the surface temperature (output of thermistor TH1) of the fixing roller.	Unit:°C
RTMP	Indicates the machine internal temperature (output of temperature sensor on DC controller PCB).	
RHUM	Indicates the machine internal humidity (output of humidity sensor on DC controller PCB).	
LMP1	Indicates the activation voltage of the scanning lamp (100/120V model).	Unit: V
LMP2	Indicates the activation voltage of the scanning lamp (230V model).	Unit: V
WIRE	Indicates a value other than '0' if the primary, pre-transfer, or transfer/separation charging wire cleaner stops at a point other than home position. The cleaner can at times return to home position when wire cleaning is executed in user mode.	
PLMT	Indicates '1' during current control of the primary charging assembly or when the current has reached the upper or the lower limit.	1: error 0: normal
LLMT	Indicates '1' when the activation voltage of the scanning lamp has reached the upper limit; '2' when it has reached the lower limit.	0: normal 1: error 2: error

 COPYRIGHT © 1997 CANON INC.

Item	Description	Remarks
LIFT	Indicates '1' if the lifter position sensor does not turn on within 13 sec after the UP command for the lifter (paper deck/cassette) has been issued. Order of Indication • Paper Deck Type right deck, left deck, cassette 3, cassette 4, side paper deck (if installed)	Resetting is by turning OFF and ON the power switch.

- For LMP1 and LMP2, the activation control voltage value is indicated even when the scanning lamp is off.

Caution:

If a value other than '0' is indicated for 'WIRE' because of an error in the charging cleaner, be sure to execute 'wire cleaning' in user mode.
If the wire cleaner motor and the wire cleaner unit are normal, executing wire cleaning turns on the cleaner unit and stops it at home position, clearing the indication to '0'.
(Unless you execute wire cleaning, the associated operation is prohibited and the machine will not be reset even when the machine is turned off and on.)

COPYRIGHT © 1997 CANON INC.

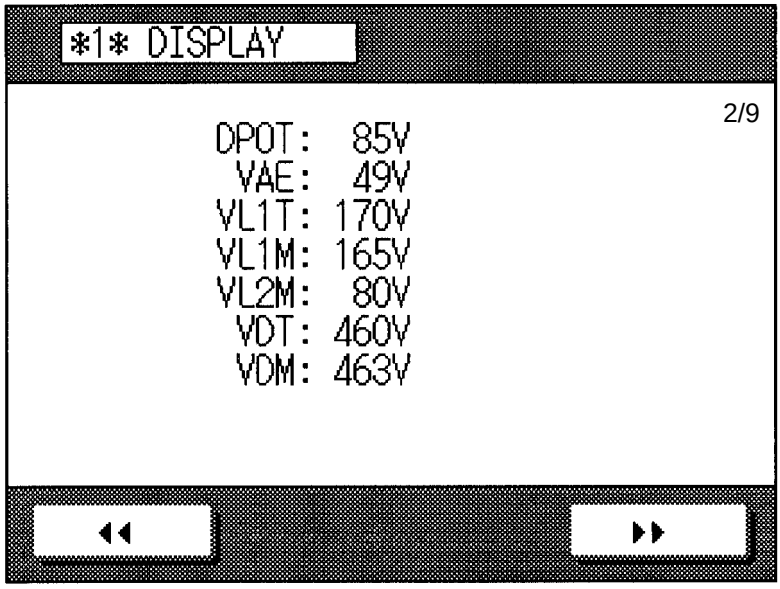

Screen 1-2

Item	Description	Remarks
DPOT	Indicates the surface potential of the drum.	Unit: V
VAE	Indicates the average surface potential during AE measurement.	Unit: V
VL1T	Indicates the VL1 (light area potential) target value.	Unit: V
VL1M	Indicates the VL1 (light area potential) measured value.	Unit: V
VL2M	Indicates the VL2 (developing bias light area potential) measured value.	Unit: V
VDT	Indicates the VD (dark area potential) target value.	Unit: V
VDM	Indicates the VD (dark area potential) measured value.	Unit: V

 COPYRIGHT © 1997 CANON INC.

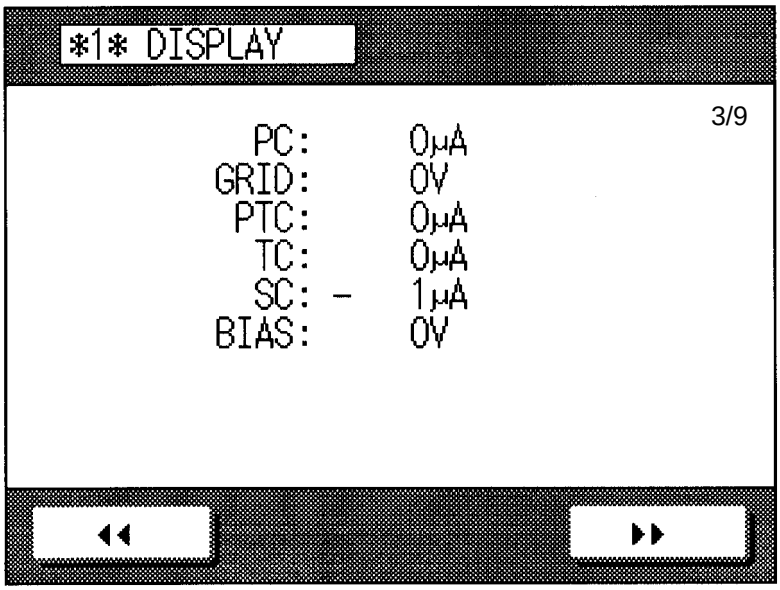

Screen 1-3

Item	Description	Remarks
PC	Indicates the current value of the primary charging assembly.	
GRID	Indicates the grid current value of the primary charging assembly.	
PTC	Indicates the current value of the pre-transfer charging assembly.	
TC	Indicates the current value of the transfer charging assembly.	
SC	Indicates the current value of the separation charging assembly.	
BIAS	Indicates the DC value of the developing bias.	

• Indicates '0' when the HVT unit turns off.

COPYRIGHT © 1997 CANON INC.

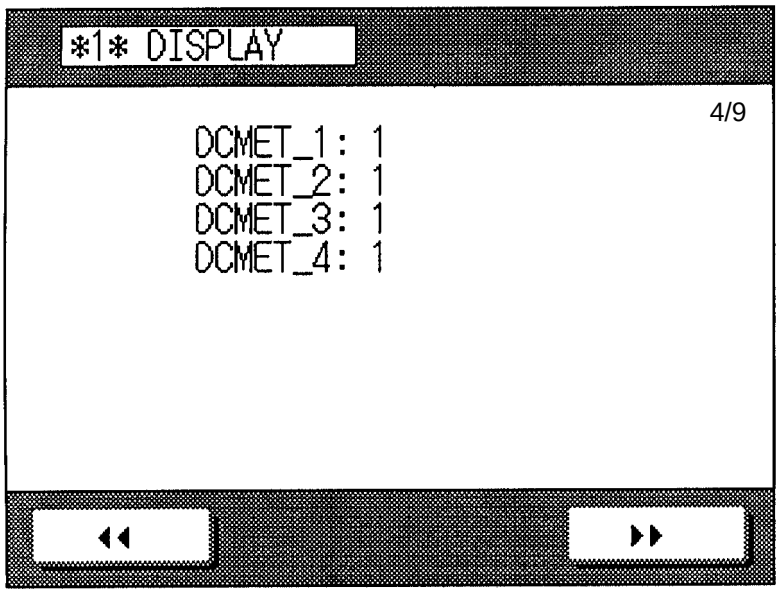

Screen 1-4

Item	Description	Remarks
DCMET-1	Indicates the output of the original size sensor 1.	
DCMET-2	Indicates the output of the original size sensor 2.	
DCMET-3	Indicates the output of the original size sensor 3.	
DCMET-4	Indicates the output of the original size sensor 4.	

 COPYRIGHT © 1997 CANON INC.

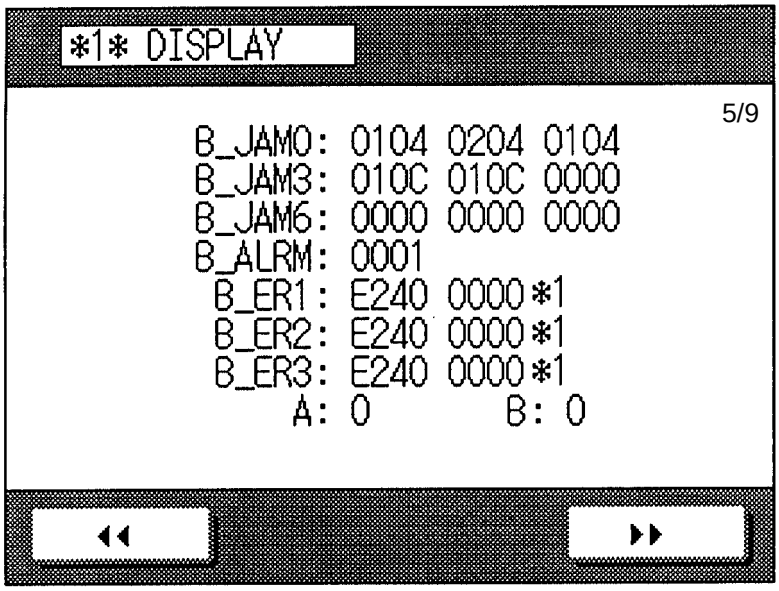

Screen 1-5

Item	Description	Remarks
B-JAM0	Indicates the locations of the most recent and the second most recent jams that occurred in the machine.	See Table 11-703. *3
B-JAM3	Indicates the locations of the third, fourth, and fifth most recent jams that occurred in the machine.	See Table 11-703.
B-JAM6	Indicates the sixth, seventh, and eighth most recent jams that occurred in the machine.	See Table 11-703.
B-ALRM *1	Not used.	
B-ER1 *2	Indicates the most recent self diagnosis code for the machine (excluding RDF).	
B-ER2 *2	Indicates the second most recent self diagnosis code for the machine (excluding RDF).	
B-ER3 *2	Indicates the third most recent self diagnosis code for the machine (excluding RDF).	
A	Indicates a type of E002 (temperature of fixing roller fails to reach specific value within specific time).	1: 70° to 100°C 2: 100° to 150°C
B	Indicates the type of thermistor that detected E001 (temperature of fixing roller exceeded specific value).	1: main thermistor (TH1) 2: sub thermistor (TH2)

*1: No data is used to represent alarm in the machine.
*2: For 'B-ER', the four bits to the right of 1–3 remain '0000', and no E code is indicated.
*3: For 'B-JAM', JAM associated with the RDF is limited to '0700'. For details, see the next screen (DF-JAM).

COPYRIGHT © 1997 CANON INC.

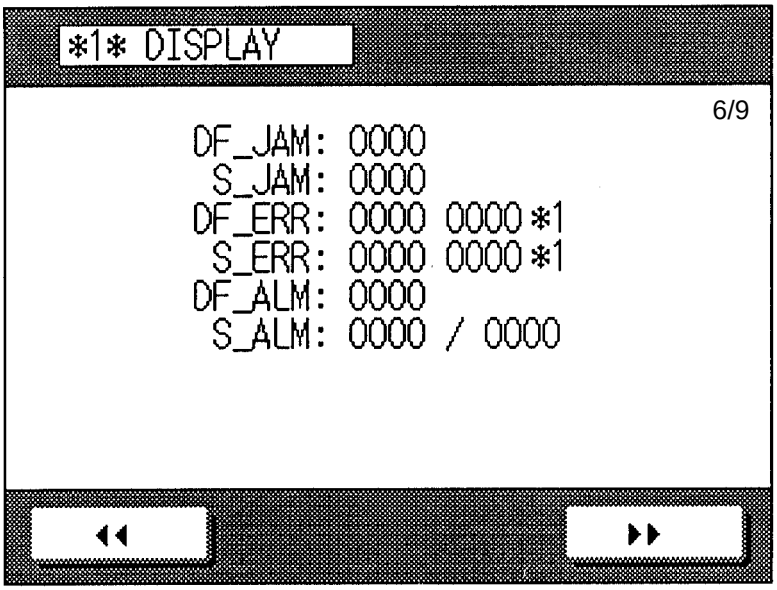

Screen 1-6

Item	Description	Remarks
DF-JAM	Indicates the location of the jam (in RDF).	See Tables 11-708 through -710.
S-JAM	Indicates the location of the jam (sorter).	See Table 11-704.
DF-ERR *1	Indicates the results of self diagnosis (RDF). *2	
S-ERR *1	Indicates the result of self diagnosis (sorter). *3	
DF-ALM	Indicates the nature of the alarm (RDF).	See Table 11-707.
S-ALM	Indicates the nature of the alarm (sorter).	See Tables 11-705 and -706.

*1: The four bits to the right of 'DF-ERR' and 'S-ERR' remain '0000' (no change).
*2: For example, if 'E480' is detected,
DF-ERR: 8000 0000
The '4' of 'E480' represents the RDF, and is omitted in DF-ERR notation.
'E400' cannot be indicated.
*3: For example, if 'E530' is detected,
S-ERR: 3000 0000
'5' of 'E530' represents the sorter, and is omitted in S-ERR notation.
'E500' cannot be indicated.

 COPYRIGHT © 1997 CANON INC.

Higher-Order 2 Digits / Lower-Order 2 Digits

Code	Jam type	Code	Sensor	Notation
01	Delay jam	01	Pick-up vertical path 0	PS24
02	Stationary jam	02	Pick-up vertical path 1	PS33
03	Power-on jam	03	Pick-up vertical path 2	PS36
04 *1	Double feeding jam	04	Pick-up vertical path 3	PS27
05	Timing jam	05	Pick-up vertical path 4	PS30
06	Sorter jam	06	Holding tray pick-up	PS17
07 *2	RDF jam	07	Holding tray registration	PS14
		08	Holding tray feeding assembly 1	PS8
		09	Holding tray feeding assembly 2	PS9
		0A	Registration	PS23
		0B	Holding tray inlet	PS15
		0C	Fixing assembly outlet	PS47
		0D	External delivery	PS10
		0E	Left deck pick-up assembly	PS49
		0F	Internal delivery	PS12 (*3)
		10	Fixing claw jam	PS52 (*4)
		11	Side paper deck pick-up assembly	Q107
		12	Side paper deck vertical path	Q106

To Reset, Open the front door, remove the jam, and close the front door.

*1: The location of a double feeding jam (lower-order 2 digits) is indicated as '00' only (01, 02, and so on are not used).
*2: Indicates a jam in RDF stream reading; for a jam in left pick-up, check under 'RF-JAM'.
*3: Applicable only to power-on jam.
*4: Applicable only to power-on and initial rotation jams.

Table 11-703

Sorter Jam Code

Code	Description
03	Feeding delay jam
04	Feeding stationary jam
07	Power-on jam
08	Door open jam (copy paper being fed)
09	Door open jam (during stapling)
0A	Bin outside sensor jam

Table 11-704

COPYRIGHT © 1997 CANON INC.

Sorter Alarm Code

Tray

Code	Type	Resetting
02	Overstacking	Remove all sheets from the bins.

Table 11-705

Stapler

Code	Type	Resetting
01	Stapling down	Run a self check.
02	Staple jam	Open the front door, remove all staple jams, and close the front door.
03	Stapler safety mechanism ON	Open the front door, remove all jams, and close the front door.
05	Stapler over capacity	Remove all sheets from the bins.
06	Stapler capacity full	Remove all sheets from the bins.
07	Paper size mixed	Remove all sheets from the bins.
09	Bin inside paper	Remove all sheets from the bins.
0A	Staple absent	Set a new cartridge.

Table 11-706

 COPYRIGHT © 1997 CANON INC.

RDF Alarm Code

Code	Type	RDF	Resetting
01	Re-circulating lever idle swing	Stops	Turn on and off the original sensor (S1).
03	Pick-up/separation failure	Stops	Turn on and off the original sensor (S1).
05	Original overriding paper stopper plate	Stops	Turn on and off the original sensor (S1), and open and close the RDF.
11	Change in number of originals after jam recovery	Stops	Turning on and off the original sensor (S1).
12	Wrong number of originals	Counts up to 100 sheets, and stops	Turns on and off the original sensor (S1), and open and close the RDF.
13	Original pulled out	Stops	Turn on and off the original sensor (S1), and open and close the RDF.
14	Wrong original size	Stops	Turn on and off the original sensor (S1), and open and close the RDF.
15	Mixed original size detected in image composition mode	Stops	Turn on and off the original sensor (S1), and open and close the RDF.
21	Operation mode error	Stops	Turns on and off the original sensor (S1).

Table 11-707

COPYRIGHT © 1997 CANON INC.

RDF Jam Code
RDF-D1

	Type	Sensor	Chronological sequence	Code
Right/left pick-up	Original left behind	S5	The belt motor (M3) rotates in reverse. S5 detects an original.	19
	Original pulled out	S1, S2	Pick-up motor (M1) turns on. S2 does not detect an original for a specific period of time. S1 does not detect an original.	21
	Original pulled out	S15, S27	The pick-up motor (M1) and the pick-up clutch (CL1) turn on. S15 does not detect an original for a specific period of time. S27 does not detect an original.	66
	Lever idle rotation	S29, S30	The re-circulating bar swings idly without coming into contact with an original.	03
Left pick-up	Left pick-up trailing edge skew	S3, S4	Left pick-up is executed. The original left S3 and S4 with a discrepancy of 8 mm in timing.	11
	Left pick-up fault	S3	Edge feeding is executed. The entire original leaves S3.	13
	Left pick-up delay	S3	The pick-up motor (M1) turns on. The original is fed for an equivalent of 500 mm. S3 does not detect the original.	22
	Registration delay	S2, S3	S2 detects an original. The original is fed for an equivalent of 60 mm. S3 does not detect the original.	23
	Left pick-up skew	S3, S4	Left pick-up is executed. TS3 and S4 detect the original with a discrepancy of 10 mm in timing.	24
	Left pick-up stationary	S3	S3 detects an original for an equivalent of 660 mm or more.	31
Right pick-up	Right pick-up delay	S15	The pick-up motor (M1) turns on. The original is fed for an equivalent of 500 mm. S15 does not detect the original.	61
	Right registration delay	S16, S17	S16 detects an original. The original is fed for an equivalent of 160 mm. S17 does not detect the original.	62
	Right registration delay	S17, S20	S17 detects an original. The original is fed for an equivalent of 130 mm. S20 does not detect an original.	63
	Right pick-up stationary	S17	S17 detects an original for an equivalent of 266 mm or more.	64
	Right pick-up leading edge skew	S15, S16	Right pick-up is executed. S15 and S16 detect the original with a discrepancy of 15 mm or more in timing.	65
	Right pick-up trailing edge skew	S15, S16	Right pick-up is executed. The original leaves S15 and S16 with a discrepancy of 15 mm or more in timing.	71

Table 11-708

 COPYRIGHT © 1997 CANON INC.

RDF-D1

	Type	Sensor	Chronological sequence	Code
Manual feed	Manual feed pick-up stationary	S32	The feeding motor (M8) turns on. The original does not leave S32 after it has been fed an equivalent of 1000 mm.	91
	Manual feed pick-up delay	S20	The feeding motor (M8) turns on. The original is fed an equivalent of 1000 mm. S20 does not detect the original.	92
	Manual feed pick-up stationary	S20	S20 detects an original for an equivalent of 750 mm or more.	A1
	Manual feed delivery stationary	S20	The belt motor (M3) turns on. The original is fed for an equivalent of 532 mm or more. S20 does not detect an original.	A2
	Manual feed delivery stationary	S19, S20	S20 detects an original. The original is fed for an equivalent of "length in feeding direction × 1.5" mm or more. The original does not leave S19.	A3
	Manual feed original left behind	S5	The belt motor (M3) rotates in reverse. S5 detects an original.	A4
Reversal	Reversal leading edge skew	S3, S4	Reversal starts. S3 and S4 detect an original with a discrepancy of 10 mm or more in timing.	15
	Reversal original left behind	S3	Reversal starts. S3 detects paper.	51
	Reversal pick-up delay	S3, S5	Reversal starts. The paper is fed for an equivalent of 163 mm from S5. S3 does not detect paper.	52
	Reversal pick-up leading edge skew	S3, S4	Reversal starts. S3 and S4 detect an original with a discrepancy of 10 mm or more.	53
	Reversal pick-up stationary	S3	Reversal starts. The original is fed for an equivalent of "length in feeding direction × 1.5" mm. The original does not leave S3.	54
	Reversal delay	S5	The belt motor (M3) turns on. The original is fed for an equivalent of 115 mm. S5 does not detect the original.	14
	Reversal stationary	S5	S3 detects an original for an equivalent of "length in feeding direction × 1.5" mm or more.	41
	Stream reading	S20	• In stream reading, the speed of the belt motor (M3) when the leading edge of the original is at image exposure start position is below a specific value. • In stream reading, the copier sends a command for an outside control speed for the belt motor (M3).	F4H
		S17	• In stream reading, the point of edge feeding from the pre-registration sensor is within a specific range.	FEH
	Error detection		Any of the conditions for E402, E403, E406, or E408 is detected. Note: For each code, the first and the second faults are treated as a jam; the third and the subsequent faults are treated as errors. This is to prevent issuing an error in response to the wrong placement of an original. The count returns to '0' when the power is turned off and then on again.	

If E402, E43, E406, and E408 are detected in sequence, an error will not be identified, as each has merely been detected no more than once.

Table 11-709

COPYRIGHT © 1997 CANON INC.

RDF-D1

	Type	Sensor	Chronological sequence	Code
Delivery	Delivery delay	S5, S6	S5 detects an original. The original is fed for an equivalent of 218 mm or more. S6 does not detect an original.	25
	Delivery stationary	S6	S6 detects an original for an equivalent of “length in feeding direction × 1.5” mm or more.	26
Others	RDF open	S31	The RDF is identified as being open.	E2
	Pick-up signal error	S13, S14, S23, S24,	The right or left cover is identified as being opened during operation.	E3
	Initial original left behind		The copier sends a command for pick-up when the RDF is not ready.	E4
	Size error		A large-size original is detected in reduced page composition mode.	E6
	Stream reading error	S20 S17	• In stream reading, the speed of the belt motor (M3) when the leading edge of the original is at image exposure start position is below a specific value. • In stream reading, the copier sends a command for an outside control speed for the belt motor (M3). • In stream reading, the edge feeding stop position from the pre-registration sensor is outside a specific range.	F4H
	Error detection		Any of the conditions for E402, E403, E406, or E408 is detected. Note: For each code, from the first to the third faults are treated as a jam; the fourth and the subsequent faults are treated as errors. This is to prevent issuing an error in response to the wrong placement of an original. The count returns to ‘0’ when the power is turned off and then on again.	FEH

Table 11-710

 COPYRIGHT © 1997 CANON INC.

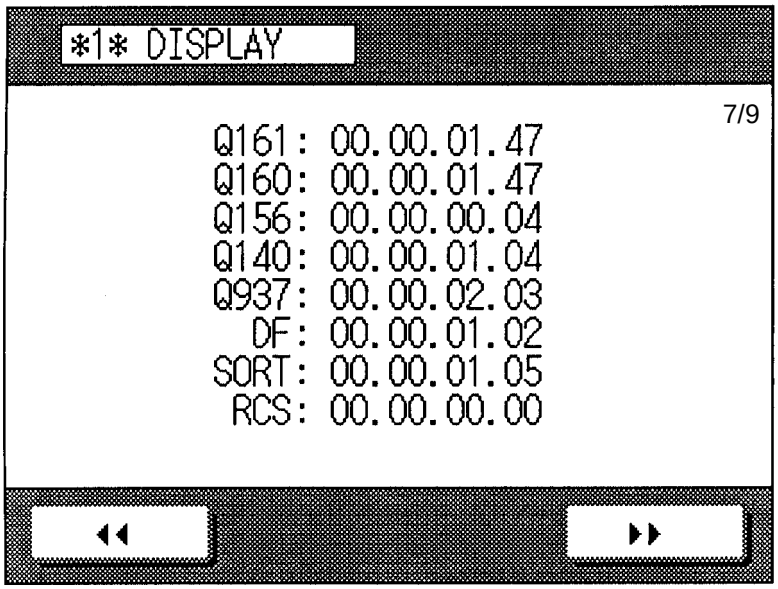

Screen 1-7

Item	Description	Remarks
Q161	Indicates the version of the ROM (Q161) on the controller PCB.	See “Guide to Version.”
Q160	Indicates the version of the ROM (Q160) on the controller PCB.	See “Guide to Version.”
Q156	Indicates the version of the ROM (Q156) on the controller PCB.	See “Guide to Version.”
Q140	Indicates the version of the ROM (Q140) on the DC controller PCB.	See “Guide to Version.”
Q937	Indicates the version of the ROM (Q937) on the control panel PCB.	See “Guide to Version.”
DF	Indicates the version of the ROM (IC2) on the RDF controller PCB.	See “Guide to Version.”
SORT	Indicates the version of the ROM (Q937) on the sorter controller PCB.	See “Guide to Version.”

■ Guide to Version

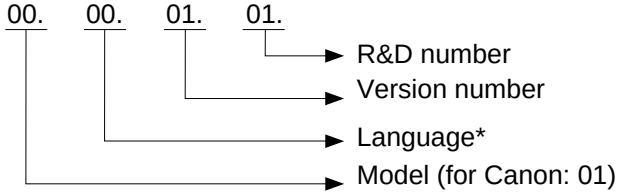

*Language

10:Japanese	70:Finnish
20:English	80:Italian
(20:North America; 21:UK)	90:Norwegian
30:French	A0:Portuguese
40:German	B0:Spanish
50:Danish	C0:Swedish

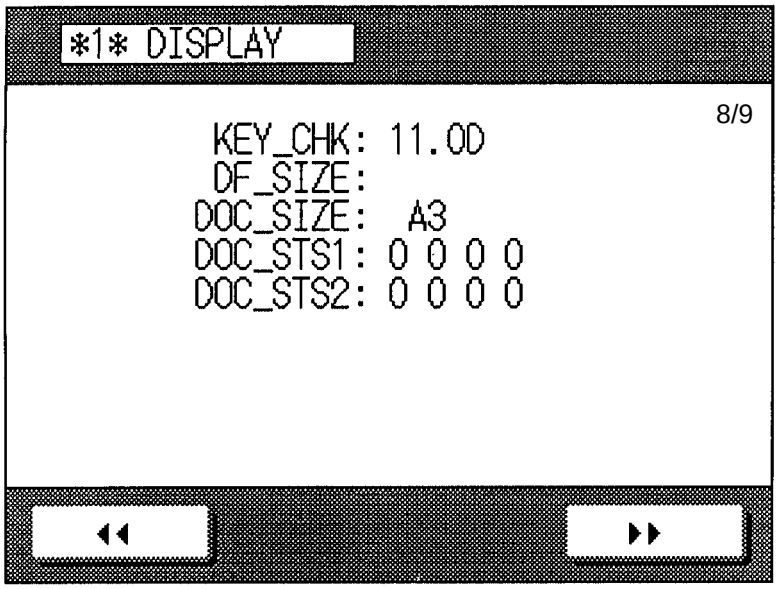

Screen 1-8

Item	Description	Remarks
KEY-CHK	Indicates the code of the key pressed on the control panel. *1	See Table 11-711.
DF-SIZE	Indicates the size of the original detected by the RDF.	
DOC-SIZE	Indicates the size of the original detected by the original size sensor of the copier.	
DOC-STS1	Indicates the output (0/1) of the original size sensor of the copier. *2	
DOC-STS2	Indicates the output (0/1) of the original size sensor of the copier. *2	

*1: On the touch panel,

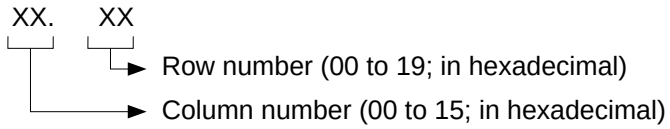

 COPYRIGHT © 1997 CANON INC.

Notation	Key	Notation	Key	Notation	Key	Notation	Key
00. 0F	Reset	05. 0F	7	0A. 0F	0	0F. 0F	Energy Saver (Pre-heat)
01. 0F	Stop	06. 0F	Clear	0B. 0F	3	10. 0F	Interrupt
02. 0F	Start	07. 0F	2	0C. 0F	6	11. 0F	Additional Functions (User Mode)
03. 0F	1	08. 0F	5	0D. 0F	9	12. 0F	Guide
04. 0F	4	09. 0F	8	0E. 0F	ID		

Table 11-711

*2: Corresponding original size sensor.

DOC,STSI: X X X X
↓ ↓ ↓ ↓
1 0 3 2

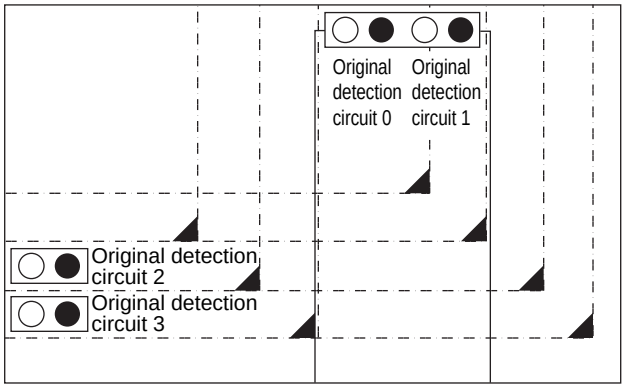

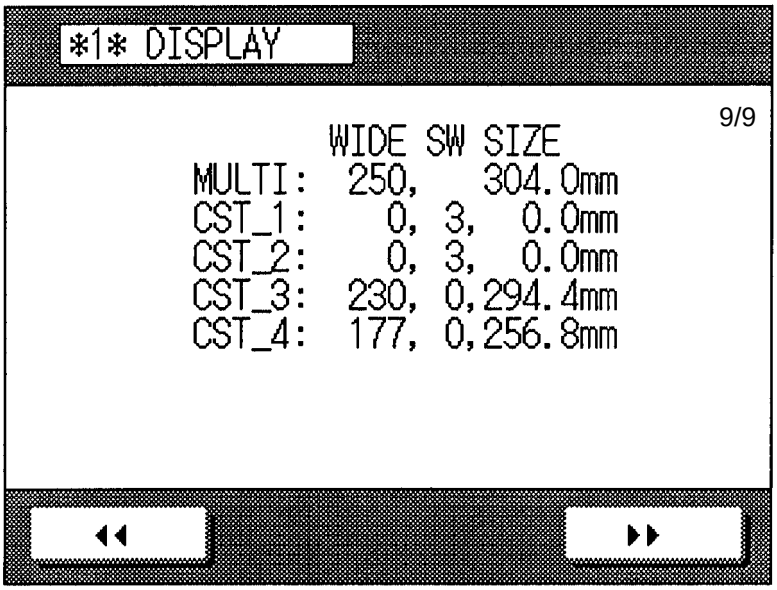

Screen 1-9

Item	Description	Remarks
MULTI	Indicates the paper size sensor output and the width of the copy paper set in the multifeeder. WIDE : paper width sensor output (analog) SW : paper length sensor output (0/1) SIZE : paper width (mm)	
CST-1 (Not used)	Indicates the paper size sensor output and the width of the copy paper set in the cassette 1. WIDE : paper width sensor output (analog) SW : paper length sensor output (0/1) SIZE : paper width (mm)	
CST-2 (Not used)	Indicates the paper size sensor output and the width of the copy paper set in the cassette 2. WIDE : paper width sensor output (analog) SW : paper sensor output (0/1) SIZE : paper width (mm)	
CST-3 (Not used)	Indicates the paper size sensor output and the width of the copy paper set in the cassette 3. WIDE : paper width sensor output (analog) SW : paper width sensor output (0/1) SIZE : paper width (mm)	
CST-4	Indicates the paper width size sensor output and the width of the copy paper set in cassette 4. WIDE : paper width sensor output (analog) SW : paper length sensor output (0/1) SIZE : paper width (mm)	

 COPYRIGHT © 1997 CANON INC. CANON NP6560/NP6360/NP6260 REV. 0 NOV. 1997 PRINTED IN JAPAN (IMPRIME AU JAPON)

E. I/O Display Mode (*2*)

Using the keypad, select the appropriate screen.
The display indicates the state of the input and output ports.

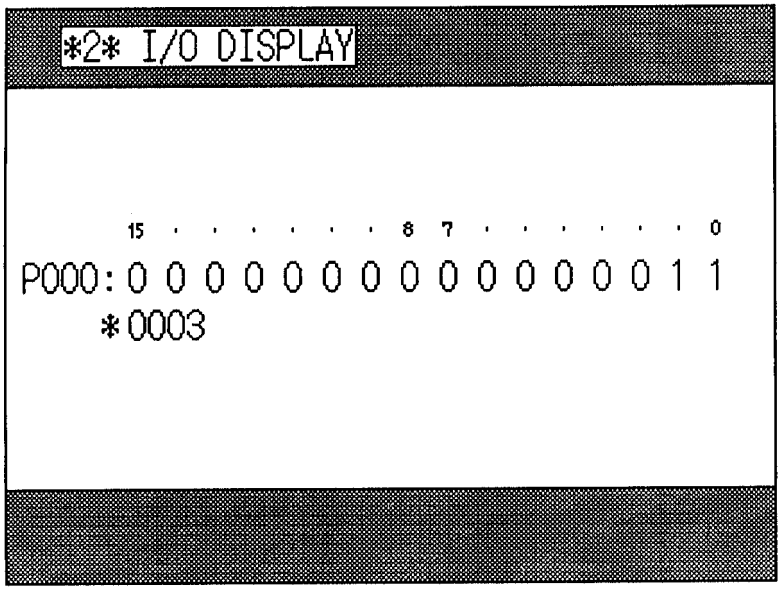

Screen 2-1

Convert the bit data into hexadecimal data when making in terms of analog data (for example, address P023 photosensitive drum potential signal).

Address	Description	Notation	Signal	Jack	Remarks
P000-00	Pick-up motor drive signal	M02	M2ON	J114-B8	0: ON
P000-01	Drum motor drive signal	M01	M1ON	J111-B4	0: ON
P000-02	Developing fan drive signal	FM05	FM5D	J115-A1	1: ON
P000-03	Developing clutch drive signal	CL08	DEVCD	J112-A2	1: ON
P000-04	Holding tray feeding 1 clutch drive signal	CL01	HTF1CD	J112-A7	1: ON
P000-05	Scanner locking solenoid drive signal	SL01	SLCKSD	J114-A12	1: ON
P000-06	Multifeeder pick-up roller clutch drive signal	CL07	MFPCD	J115-B2	1: ON
P000-07	Multifeeder pick-up solenoid drive signal	SL10	SL10BD SL10FD	J115-B12	1: ON
P000-08	Vertical path roller 0 drive clutch drive signal	CL18	CL18D	J115-A4	1: ON
P000-09	Right deck pick-up clutch drive signal	CL14	RDPUCD	J116-A2	1: ON
P000-10	Left deck pick-up clutch drive signal	CL16	LDPUCD	J121-A2	1: ON
P000-11	Right deck lifter drive motor drive signal (paper deck type only)	M18	RDLMD	J119-B11	1: ON
P000-12	Left deck lifter drive motor drive signal (paper deck type only)	M19	LDLMD	J119-B9	1: ON
P000-13	Vertical path roller 1 drive clutch drive signal	CL15	CL15D	J117-A15	1: ON
P000-14	Vertical path roller 2 drive clutch rive signal	CL17	CL17D	J121-B8	1: ON
P000-15	Right deck pick-up roller releasing solenoid drive signal	SL04	RDPURR	J116-A10	1: ON

 COPYRIGHT © 1997 CANON INC.

Address	Description	Notation	Signal	Jack	Remarks
P001-00	Holding tray paper deflecting solenoid drive signal	SL08	HTPDD	J113-B9	1: ON
P001-01	Holding tray weight solenoid drive signal	SL07	HTWSD	J113-A4	1: ON
P001-02	Holding tray D-cut (pick-up) roller solenoid drive signal	SL06	HTDSD	J113-A5	1: ON
P001-03	Fixing assembly inlet guide drive signal	SL16	FXGDSD	J108-B15	1: ON
P001-04	Holding tray swing solenoid drive signal	SL09	HTJSD	J113-B5	1: ON
P001-05	Cassette 3 lifter motor drive signal	M14	C3LMD	J119-A9	1: ON
P001-06	Cassette 4 lifter motor drive signal	M15	C4LMD	J119-A11	1: ON
P001-07	Cassette 3 pick-up clutch drive signal	CL10	C3PUCD	J117-A2	1: ON
P001-08	Cassette 4 pick-up clutch drive signal	CL12	C4PUCD	J130-A2	1: ON
P001-09	Pick-up vertical path roller 3 drive clutch	CL11	CL11D	J117-B2	1: ON
P001-10	Pick-up vertical path roller 4 drive clutch drive signal	CL13	CL13D	J130-B2	1: ON
P001-11	Cassette 3 pick-up roller releasing solenoid drive signal	SL11	C3PURR	J122-A6	1: ON
P001-12	Cassette 4 pick-up roller releasing solenoid drive signal	SL12	C4PURR	J130-A10	1: ON
P001-13	Fixing assembly inlet guide drive signal	SL16	FXGUSD	J108-B14	1: ON
P001-14	Wire cleaning motor HP signal			—	
P001-15	Size detection drive			J110-B4/ -B7/-B10	

COPYRIGHT © 1997 CANON INC.

Address	Description	Notation	Signal	Jack	Remarks
P002-00	Pick-up vertical path 0 paper detection signal	PS24	PS24D	J116-B7	1: paper present
P002-01	Stream reading home position detection signal	PS04	SCDP2	J111-A8	0: home position
P002-02	Registration paper detection signal	PS23	RGPD	J108-A7	1: paper present
P002-03	Holding tray feeding assembly 2 paper detection signal	PS09	PS9D	J113-B12	1: paper present
P002-04	Holding tray feeding assembly 1 paper detection signal	PS08	PS8D	J119-A4	1: paper present
P002-05	Multifeeder paper detection signal	PS22	MFS	J115-B7	1: paper present
P002-06	Fixing sub heater ON detection signal	H2	SHOND	J102-B4	1: ON
P002-07	Fixing main heater ON detection signal	H1	MHOND	J102-B6	1: ON
P002-08	Waste toner feeding screw locked detection signal	MSW4	WTFL	J114-B1	1: ON
P002-09	Developing assembly toner level signal	TS2	DTEP	J106-B8	0: toner absent
P002-10	Hopper toner level signal	TS1	TEP	J105-A6	0: toner absent
P002-11	Original size 1 detection signal	DS1	DSZ1	J110-B5	0: original present
P002-12	Original size 2 detection signal	DS2	DSZ2	J110-B8	0: original present
P002-13	Original size 3 A detection signal	DS3	DSZ3A	J110-B12	0: original present
P002-14	Original size 3 B detection signal	DS3	DSZ3B	J110-B11	0: original present
P002-15	Not used				

 COPYRIGHT © 1997 CANON INC.

Address	Description	Notation	Signal	Jack	Remarks
P003-00	Left deck pick-up roll releasing solenoid drive signal	SL05	LDPURR	J121-A13	1: ON
P003-01	CC-X count signal	CCX10	CCXNTD	J123-6	1: count up
P003-02	High-voltage output enable signal	HVT	HVTRMT	J114-A10	0: ON
P003-03	Control card V drive signal	CCV	CCNTD	J106-B1	1: count up
P003-04	Feeding fan/cleaner fan drive signal (half speed)	FM06/07	FM6D	J109-1/ J114-B3	1: half speed
P003-05	Feeding fan/cleaner fan drive signal (full speed)	FM06/07	FM6D	J109-1/ J114-B3	1: full speed
P003-06	Fixing heat delivery/ discharge drive signal (half speed)	FM02 FM03	FM2D FM3D	J118-B7 J104-A1	1: half speed
P003-07	Discharge/drive signal (full speed)	FM02	FM2D	J118-B7	1: full speed
P003-08	Potential sensor power-on signal	POT	POT-S-ON	J103-B8	1: ON
P003-09	Multifeeder pick-up relay solenoid drive signal	SL15	MFRLSD	J115-B10	1: ON
P003-10	Developing bias AC output signal	HVT	BIASAC	J114-A3	0: ON
P003-11	Roller electrode bias output signal	HVT	PSTBIAS	J114-A1	0: ON
P003-12	Pre-transfer/separation AC output signal	HVT	PSTAC SPAC	J114-A7	0: ON
P003-13	Scanning lamp ON signal	LA1	LAON	J114-A8	0: ON
P003-14	Fixing main heater drive signal	H1	MHRD	J102-B5	0: ON
P003-15	Fixing sub heater drive signal	H2	SHRD	J102-B3	0: ON

COPYRIGHT © 1997 CANON INC.

Address	Description	Notation	Signal	Jack	Remarks
P004-00	Scanner motor brake signal	M03	M03BK	J112-B5	1: ON
P004-01	Scanner motor forward signal	M03	M03FW	J112-B7	0: forward 1: reverse
P004-02	Scanner motor drive signal	M03	M03ON	J112-B6	0: ON
P004-03	Scanner motor (current control) current limiter	M03	M03CL	J112-B4	1: ON
P004-04	Scanner motor mode 1 signal	M03	M03MD0	J112-B10	
P004-05	Scanner motor mode 2 signal	M03	M03MD1	J112-B9	
P004-06	Scanner motor mode 3 signal	M03	M03MD2	J112-B8	
P004-07	Blanking exposure power supply (0 V) signal	LED2	B0V	J103-A8	0: ON
P004-08	Control panel LCD back-light signal	LCD	LCDGHT	J105-B11	1: ON
P004-09	Control panel CPU reset signal	OPEPANE	OPRST	J105-B5	0: reset
P004-10	Internal signal (watch dog)				
P004-11	Power switch OFF signal	SW01	PWOFF	J104-A8	1: ON
P004-12	FT prohibit signal	M3	PWOFF	J112-B1	1: ON
P004-13	Not used				
P004-14	Internal signal (tray X shift start)				
P004-15	Internal signal (tray Y shift start)				

 COPYRIGHT © 1997 CANON INC. CANON NP6560/NP6360/NP6260 REV. 0 NOV. 1997 PRINTED IN JAPAN (IMPRIME AU JAPON)

Address	Description	Notation	Signal	Jack	Remarks
P005-00	Front door open detection signal	SW03	FDOD	J104-A3	1: open
P005-01	Fixing/feeding unit detection signal	PS53	FFUCNT	J108-A2	0: connected
P005-02	Internal delivery signal	PS12	IDPD	J108-B12	0: paper present
P005-03	Multifeeder door open detection signal	PS46	MFDC	J105-A9	1: closed 0: open
P005-04	External delivery signal	PS10	EXDPD	J108-B7	1: paper present
P005-05	Fixing cleaning belt length detection signal	PS11	CBOP	J108-A13	1: belt absent
P005-06	Holding tray inlet paper detection signal	PS15	PS15D	J113-B10	1: paper present
P005-07	Holding tray registration paper detection signal	PS14	PS14D	J113-A3	1: paper present
P005-08	Fixing assembly outlet paper detection signal	PS47	FXDEL	J108-B4	1: paper present
P005-09	Holding tray pick-up paper detection signal	PS17	PS17D	J113-B11	1: paper present
P005-10	Holding tray re-circulating bar home position signal	PS19	HTLPD	J113-B6	0: home position
P005-11	Hopper connector detection			J105-A4	0: disconnected
P005-12	Holding tray unit detection signal	HT	HTCNT	J113-A14	0: connected
P005-13	Power switch ON detection signal	SW1	SW1ON	J102-A6	0: ON
P005-14	Control card detection signal	CCV	CCNNT	J106-B2	1: card present
P005-15	Internal signal (encoder error detection)				1: error

COPYRIGHT © 1997 CANON INC.

Address	Description	Notation	Signal	Jack	Remarks
P006-00	Hopper motor (toner stirring) drive signal	M11	M10ON	J105-A3 J105-A4	1: ON
P006-01	Pre-exposure LED ON signal	LED1	PEXP	J103-B2	1: ON
P006-02	Hopper motor (toner supply) drive signal	M10	M11ON	J105-A1 J105-A2	1: ON
P006-03	Drum heater full-wave/half-wave switching signal	H3	DHRD	J102-B2	1: half wave 0: full wave
P006-04	Total copy counter drive signal	CNT1	TCNTD	J104-B2	1: count up
P006-05	Accessory copy counter drive signal	CNT2	OPCNTD	J104-B6	1: count up
P006-06	Scanner cooling fan drive signal (half speed)	FM08	FM8D	J104-A5	1: half speed
P006-07	Scanner cooling fan drive signal (full speed)	FM08	FM8D	J104-A5	1: full speed
P006-08	Fixing drive solenoid drive signal	SL03	FXDSD	J108-B18	1: ON
P006-09	Fixing cleaning belt drive signal	SL14	SL14	J108-A11	1: ON
P006-10	Delivery paper deflecting plate solenoid drive signal	SL02	DPDSD	J108-B10	1: ON
P006-11	Holding tray re-circulating lever motor drive signal	M07	M7ON	J113-A9	1: ON
P006-12	Holding tray registration clutch drive signal	CL03	HTRGCD	J113-B7	1: ON
P006-13	Holding tray separation clutch drive signal	CL06	HTSPCD	J113-B8	1: ON
P006-14	Holding tray forward clutch drive signal	CL05	HTFWCD	J113-A7	1: ON
P006-15	Holding tray reversing clutch drive signal	CL04	HTRVCD	J113-A6	1: ON

 COPYRIGHT © 1997 CANON INC.

Address	Description	Notation	Signal	Jack	Remarks
P007-00	Upper right door open detection signal	PS41	RUPDOP	J119-B4	1: closed 0: open
P007-01	Lower right door open detection signal	PS42	RLWDOP	J119-B7	1: closed 0: open
P007-02	Copyboard cover closed signal	PS05	CBCC	J112-A4	1: closed 0: open
P007-03	Scanner home position signal	PS01	SCHP	J111-A2	1: home position
P007-04	Right deck open/closed detection signal	PS38	RDEOP	J116-B10	1: closed 0: open
P007-05	Left deck open/closed detection signal	PS40	LDEOP	J121-A2	1: closed 0: open
P007-06	Cassette 1 paper length 0 signal	SV3	C1PL0	J122-A5	
P007-07	Cassette 1 paper length 1 signal	SV3	C1PL1	J122-A6	
P007-08	Cassette 2 paper length 0 signal	SV4	C2PL0	J122-B5	
P007-09	Cassette 2 paper length 1 signal	SV4	C2PL1	J122-B6	
P007-10	Right deck paper detection signal	PS32	RDPD	J116-A7	1: paper present
P007-11	Left deck paper detection signal	PS35	LDPD	J121-A10	1: paper present
P007-12	Pick-up vertical path 1 paper detection signal	PS33	PS33D	J119-A7	1: paper present
P007-13	Pick-up vertical path 2 paper detection signal	PS36	PS36D	J121-B10	1: paper present
P007-14	Right deck lifter position sensor signal	PS31	RDLTP	J116-A4	1: pick-up position
P007-15	Left deck lifter position sensor signal	PS34	LDLTP	J121-A7	1: pick-up position

COPYRIGHT © 1997 CANON INC.

Address	Description	Notation	Signal	Jack	Remarks
P008-00	Cassette 3 paper length 0 signal	SV1	C3PL0	J122-A1	
P008-01	Cassette 3 paper length 1 signal	SV1	C3PL1	J122-A2	
P008-02	Cassette 4 paper length 0 signal	SV2	C4PL0	J122-B1	
P008-03	Cassette 4 paper length 1 signal	SV2	C4PL1	J122-B2	
P008-04	Pick-up vertical path 3 paper detection signal	PS27	PS27D	J117-B4	1: paper present
P008-05	Pick-up vertical path 4 paper detection signal	PS30	PS30D	J130-B4	1: paper present
P008-06	Cassette 3 paper detection signal	PS26	C3PD	J117-A7	1: paper present
P008-07	Cassette 4 paper detection signal	PS29	C4PD	J130-A7	1: paper present
P008-08	Cassette 3 lifter position sensor signal	PS25	C3LTP	J117-A4	1: pick-up position
P008-09	Cassette 4 lifter position sensor signal	PS28	C4LTP	J130-A4	1: pick-up position
P008-10	Internal signal (fixing assembly temperature error detection)				
P008-11	Internal signal (CVR error detection)				
P008-12	Internal signal (SSR error detection)				
P008-13	Internal signal (power supply switch open circuit detection)				
P008-14	Internal signal (total copy counter open circuit detection)				
P008-15	Internal signal (accessory counter open circuit detection)				

 COPYRIGHT © 1997 CANON INC.

Address	Description	Notation	Signal	Jack	Remarks
P009-00	Holding tray feeding unit detection signal	HT	HTFCNT	J119-A2	0: connected
P009-01	Fixing claw jam detection signal	PS52	FXCJS	J108-A19	1: paper present
P009-02	Service switch detection signal	SSW1	SSWON	J106-B5	1: ON
P009-03	Scanner locked detection signal	PS48	SCLK	J114-A14	1: locked
P009-04	Left deck pick-up outlet paper detection signal	PS49	LEXTPD	J121-B5	1: paper present
P009-05	Cassette 3 open/closed detection	PS50	C3SS	J117-B7	1: open 0: closed
P009-06	Cassette 4 open/closed detection	PS51	C4SS	J130-B7	1: open 0: closed
P009-07	Sub thermistor error detection signal	TH2		J108-A9	1: error

Address	Description	Notation	Signal	Jack	Remarks
P010-00	Not used				
P010-01	Holding tray feeding 2 clutch drive signal	CL02	HTF2CD	J112-A9	1: ON
P010-02	Fixing/feeding unit locking solenoid drive signal	SL13	FFULSD	J108-B2	1: ON
P010-03	Power supply unit internal relay drive signal	RL401	RL401D	J102-A5	1: ON
P010-04	Not used				
P010-05	Not used				
P010-06	Not used				
P010-07	Not used				

COPYRIGHT © 1997 CANON INC.

Address	Description	Notation	Signal	Jack	Remarks
P011-00	Not used				
P011-01	Not used				
P011-02	Not used				
P011-03	Not used				
P011-04	Multifeeder pick-up solenoid drive signal	SL10	SL10D	J115-B13	1: ON
P011-05	Internal signal (clock)				
P011-06	Not used				
P011-07	Pick-up motor brake signal	M02	M02BLK	J114-B5	1: brake ON

Address	Description	Notation	Signal	Jack	Remarks
P012-00	Internal signal (digit)			J125-1	
P012-01	Internal signal (digit)			J125-2	
P012-02	Internal signal (digit)			J125-3	
P012-03	Internal signal (digit)			J125-4	
P012-04	Not used				
P012-05	Not used				
P012-06	Not used				
P012-07	Not used				

Address	Description	Notation	Signal	Jack	Remarks
P017-00	Internal signal (key return)			J125-5	
P017-01	Internal signal (key return)			J125-6	
P017-02	Internal signal (key return)			J125-7	
P017-03	Internal signal (key return)			J125-8	
P017-04	Internal signal (key return)			J125-9	
P017-05	Internal signal (key return)			J125-10	
P017-06	Internal signal (key return)			J125-11	
P017-07	Internal signal (key return)			J125-12	

 COPYRIGHT © 1997 CANON INC. CANON NP6560/NP6360/NP6260 REV. 0 NOV. 1997 PRINTED IN JAPAN (IMPRIME AU JAPON)

Address	Description	Notation	Signal	Jack	Remarks
P020	Multifeeder paper width signal (analog)	SVR1		J115-B4	
P021	Cassette 1 paper width signal	SVR4	C1PW	J130-B10	
P022	Cassette 2 paper width signal	SVR5	C2PW	J130-A12	
P023	Photosensitive drum potential signal (analog)		POT	J103-B9	
P024	Cassette 3 paper width signal	SVR2	C3PW	J117-B10	
P025	Cassette 4 paper width signal	SVR3	C4PW	J117-A12	
P026	Not used				

COPYRIGHT © 1997 CANON INC.

RDF-D1 (1/6)

Address	Description	Notation	Signal	Jack	Remarks
P027-00	Solenoid 2 drive signal		SL2D		0: ON
P027-01	Clutch 1 drive signal		CL1D		0: ON
P027-02	Solenoid 4 drive signal		SL4D		0: ON
P027-03	Solenoid 6 drive signal		SL6D		0: ON
P027-04	Solenoid 5 drive signal		SL5D		0: ON
P027-05	Solenoid 1 drive signal (released)		SL1RD		0: OFF
P027-06	Solenoid 1 drive signal		SL1AD		0: ON
P027-07	Solenoid over drive signal				0: ON
P028-00	Not used				
P028-01	Not used				
P028-02	Not used				
P028-03	Not used				
P028-04	Stopper motor (M7) excitation A signal				0: ON
P028-05	Stopper motor (M7) excitation B signal				0: ON
P028-06	Stopper motor (M7) drive signal				0: ON
P028-07	AE sensor discharging signal				0: ON
P029-00	Edge detection signal		EDGO		1: ON
P029-01	Cooling fan (M9) drive signal		M9D		0: ON
P029-02	Re-circulating motor (M4) drive signal		RCMD		0: ON
P029-03	Not used				
P029-04	Not used				
P029-05	Not used				
P029-06	Not used				
P029-07	Not used				

 COPYRIGHT © 1997 CANON INC.

RDF-D1 (2/6)

Address	Description	Notation	Signal	Jack	Remarks
P030-00	Edge detection signal (S20)		EDG		0: paper present
P030-01	Registration detection signal (S3)		RG1		0: paper detection
P030-02	Belt motor clock detection signal (S11)		BTLK		Alternates between 0 and 1.
P030-03	Pick-up motor clock detection signal (S9)		PCLK		Alternates between 0 and 1.
P030-04	Pre-registration detection signal (S17)		RGF		0: paper detection
P030-05	Not used				
P030-06	Not used				
P030-07	Not used				
P031-00	D/A converter serial signal				
P031-01	D/A converter load signal				
P031-02	Reversing motor (M2) mode 0 signal				
P031-03	Reversing motor (M2) mode 1 signal				
P031-04	D/A converter serial communication clock signal				
P031-05	Delivery motor clock detection signal (S12)		DLCLK		Alternates between 0 and 1.
P031-06	Not used				
P031-07	Not used				
P032-00	Internal signal (sensor sensitivity switch signal 2)				
P032-01	Internal signal (sensor sensitivity switch signal 1)				
P032-02	Reversing motor (M2) drive signal				0: ON
P032-03	Belt motor clock detection signal (S11)		BTLK		Alternates between 0 and 1.
P032-04	Feeding motor clock detecting signal (S22)		FDCLK		Alternates between 0 and 1.
P032-05	Pick-up motor (M1) CW rotation signal				1: CW rotation
P032-06	Pick-up motor (M1) rotation speed control signal				1: ON
P032-07	Pick-up motor (M1) CCW rotation signal				1: CCW rotation

COPYRIGHT © 1997 CANON INC.

RDF-D1 (3/6)

Address	Description	Notation	Signal	Jack	Remarks
P036-00	Not used				
P036-01	Not used				
P036-02	Not used				
P036-03	Not used				
P036-04	DIP switch 1–5 detection signal				1: ON
P036-05	DIP switch 1–6 detection signal				1: ON
P036-06	DIP switch 1–7 detection signal				1: ON
P036-07	Right cover open/closed detection signal (S23/S24)		RCVF		1: closed
P037-00	Not used				
P037-01	Not used				
P037-02	Not used				
P037-03	Not used				
P037-04	Push switch 1 detection signal				1: ON
P037-05	Push switch 2 detection signal				1: ON
P037-06	Push switch 3 detection signal				1: ON
P037-07	Left cover open/closed detection signal (S13/S14)		LCVF		1: closed
P038-00	Not used				
P038-01	Not used				
P038-02	Not used				
P038-03	Not used				
P038-04	Re-circulating lever hold detection signal				0: hold
P038-05	RDF open detection signal (S31)		RFOS		1: closed
P038-06	Manual feed et detection signal (S32)		MFST		1: paper detection
P038-07	Sub try detection signal (S28)		TYP		1: closed

 COPYRIGHT © 1997 CANON INC.

RDF-D1 (4/6)

Address	Description	Notation	Signal	Jack	Remarks
P039-00	Re-circulating lever detection signal 2 (S30)		RSC2		0: flag absent
P039-01	Re-circulating lever detection signal (S29)		RSC1		0: flag absent
P039-02	Pick-up roller home position detection signal 1 (S8)		PRHP1		1: home present
P039-03	Skew detection signal 2 (S16)		SKW2		1: paper detection
P039-04	Paper pick-up signal 2 (S15)		PDP2		1: paper detection
P039-05	Power drop monitor signal				1: low
P039-06	Stopper home position sensor (S26)		SPHP		1: home position
P039-07	Tray position detection signal (S25)		TRY		1: down
P040-00	Not used				
P040-01	Original set LED ON signal				0: ON
P040-02	LED1 ON signal				0: ON
P040-03	LED2 ON signal				0: ON
P040-04	LED3 ON signal				0: ON
P040-05	Not used				
P040-06	Not used				
P040-07	Not used				
P041-00	Matrix digit 0 signal				
P041-01	Matrix digit 1 signal				
P041-02	Matrix digit 2 signal				
P041-03	Matrix digit 3 signal				
P041-04	Matrix common 0 signal				
P041-05	Matrix common 1 signal				
P041-06	Matrix common 2 signal				
P041-07	Matrix common 3 signal				

COPYRIGHT © 1997 CANON INC.

RDF-D1 (5/6)

Address	Description	Notation	Signal	Jack	Remarks
P042-00	A/D demultiplexer select signal 1				
P042-01	A/D demultiplexer select signal 2				
P042-02	A/D demultiplexer select signal 3				
P042-03	Encoder FV conversion adjustment signal				
P042-04	Feeding motor (M8) drive signal				0: ON
P042-05	Feeding motor (CW) rotation signal				1: CW rotation
P042-06	Feeding motor mode 1 signal				
P042-07	Feeding motor mode 2 signal				
P043-00	Skew detection signal 1 (S4)		SKW1		0: paper detection
P043-01	Manual feed registration detection signal (S19)		MFRG		0: paper detection
P043-02	Original detection signal 1 (S1)		DOD1		1: paper detection
P043-03	Original detection signal 2 (S27)		DOD2		1: paper detection
P043-04	Pick-up detection signal 1 (S2)		PDP1		1: paper detection
P043-05	Reversal detection signal (S5)		TRS		1: paper detection
P043-06	Delivery detection signal (S6)		DER		1: paper present
P043-07	Power drop monitor signal (internal)				1: down
P048	Belt motor current control DA signal				Hexadecimal (4 digits)
P049	Reversing motor current control DA signal				
P050	AE sensor LED (O) DA signal				
P051	AE sensor LED (G) DA signal				
P052	AE sensor LED offset DA signal				
P053	Original sensor (S1) DA signal				
P054	Registration sensor (S3) DA signal				
P055	Skew sensor (S4) DA signal				

 COPYRIGHT © 1997 CANON INC.

RDF-D1 (6/6)

Address	Description	Notation	Signal	Jack	Remarks
P056	Image leading edge sensor (S20) DA signal				Hexadecimal (4 digits)
P057	Manual feed set sensor (S32) DA signal				
P058	Original sensor 2 (S27) DA signal				
P059	Not used				
P060	Original detection VA resistance (VR1)				Hexadecimal (4 digits)

COPYRIGHT © 1997 CANON INC.

Stapler Sorter-E2 (1/8)

Address	Description	Notation	Signal	Jack	Remarks
P062-00	Feeding motor (M1) control signal		FDPWM		1: ON
P062-01	Push bar drive motor (M7) rotation control signal				1: UP
P062-02	Not used				
P062-03	Push bar drive motor (M7) drive signal				1: ON
P062-04	Guide bar motor (M8) pulse signal 1		GBMA		1: ON
P062-05	Guide bar motor (M8) pulse signal 2		GBMB		1: ON
P062-06	Guide bar motor (M8) pulse signal 3		GBMA		1: ON
P062-07	Guide bar motor (M8) pulse signal 4		GBMB		1: ON
P063-00	Reference wall drive motor (M6) control signal 1		GWMA		1: ON
P063-01	Reference wall drive motor (M6) control signal 2		GWMB		1: ON
P063-02	Non-sort paper detection signal (PI3)		NSPEXT		1: paper detection
P063-03	Reference wall home position signal (PI13)		GWHP		1: home position
P063-04	Sort paper detection signal (PI4)		SPEXT		1: paper present
P063-05	Guide bar home position signal (PI16)		GBHP		1: home position
P063-06	Multi guide drive motor control signal 1 (M5)		MGMA		1: ON
P063-07	Multi guide drive motor control signal 1 (M5)		MGMB		1: ON

 COPYRIGHT © 1997 CANON INC.

Stapler Sorter-E2 (2/8)

Address	Description	Notation	Signal	Jack	Remarks
P064-00	D/A converter serial signal				
P064-01	Not used				
P064-02	Feeding motor (M1) speed control signal		FDMVC		1: speed control
P064-03	D/A converter load signal				0: load
P064-04	D/A converter serial communication clock signal				
P064-05	Not used				
P064-06	Not used				
P064-07	Not used				
P065-00	Feeding motor (M1) CW rotation		FDMCCW		1: ON
P065-01	Feeding motor (M1) CCW rotation		FDMCCW		1: ON
P065-02	Stapler unit claw releasing solenoid (SL5) drive signal		MHRSLD		1: ON
P065-03	Paper path switching solenoid (SL1) drive signal		PSLD		1: ON
P065-04	Paper retaining solenoid (SL3) drive signal		PHSLD		1: ON
P065-05	Stapler unit position claw releasing solenoid (SL5) drive signal		HDRSLD		1: ON
P065-06	Stapler motor (M2) CCW rotation signal		SPMCCW		1: ON
P065-07	Stapler motor (M2) CW rotation signal		SPMCW		1: ON

COPYRIGHT © 1997 CANON INC.

Stapler Sorter-E2 (3/8)

Address	Description	Notation	Signal	Jack	Remarks
P066-00	Bin shift motor (M9) drive signal				1: UP
P066-01	Stapler until swing motor (M4) rotation signal				1: ON
P066-02	Stapler unit swing motor (M4) drive signal				1: ON
P066-03	Not used				
P066-04	Not used				
P066-05	Not used				
P066-06	Not used				
P066-07	Not used				
P067-00	Stapler unit shift home position signal (S2)		MVHP		1: home position
P067-01	Logic voltage monitor signal				0: down
P067-02	Not used				
P067-03	Bin paper sensor 2 analog input signal (S7)				At input, alternates between 1 and 0.
P067-04	Stapler paper sensor analog input signal				At input, alternates between 1 and 0.
P067-05	Bin paper sensor analog input signal (S4)				At input, alternates between 1 and 0.
P067-06	Feeding motor current analog input signal				At input, alternates between 1 and 0.
P067-07	Feeding motor speed control analog input signal				At input, alternates between 1 and 0.
P071-00	Matrix digit output signal 0				
P071-01	Matrix digit output signal 1				
P071-02	Matrix digit output signal 2				
P071-03	Matrix digit output signal 3				
P071-04	Matrix digit output signal 4				
P071-05	Matrix SEG output signal 0				
P071-06	Matrix SEG output signal 1				
P071-07	Matrix SEG output signal 2				

 COPYRIGHT © 1997 CANON INC.

Stapler Sorter-E2 (4/8)

Address	Description	Notation	Signal	Jack	Remarks
P072-00	Matrix COM input signal 0				
P072-01	Matrix COM input signal 1				
P072-02	Matrix COM input signal 2				
P072-03	Matrix COM input signal 3				
P072-04	Matrix COM input signal 4				
P072-05	Gear switching solenoid (SL4) drive signal		GCSLD		1: ON
P072-06	Not used				
P072-07	All solenoids drive signal				1: all ON
P073-00	Stapling home position signal (Q1)		SPL-HP		1: home position
P073-01	Reference wall HP detection signal (PI13)		GWHP		1: home position
P073-02	Stapler unit swing HP detection signal (PI9)		SWHP		1: home position
P073-03	Multi guide HP detection signal (PI12)		MGHP		1: home position
P073-04	Stapler unit swing prohibit position signal (MSW2)		SGSTPP		1: staple enabled
P073-05	Stapler unit orientation position 2 signal (S1)		HLD2		1: front signal
P073-06	Stapler unit orientation position 1 signal (S1)		HLD1		1: 2, rear 1 staple
P073-07	Paper retaining signal (PI11)		PHS		1: retaining position
P074-00	Not used				
P074-01	Multi guide drive motor/reference wall drive motor drive signal				1: ON
P074-02	Not used				
P074-03	Not used				
P074-04	Not used				
P074-05	Not used				
P074-06	Not used				
P074-07	Not used				

COPYRIGHT © 1997 CANON INC.

Stapler Sorter-E2 (5/8)

Address	Description	Notation	Signal	Jack	Remarks
P075-00	Stapling position LED4 ON signal				1: ON
P075-01	Stapling position LED1 ON signal				1: ON
P075-02	Add Staple LED ON signal				1: ON
P075-03	Stapling position LED5 ON signal				1: ON
P075-04	Stapling position LED2 ON signal				1: ON
P075-05	Front access key LED ON signal				1: ON
P075-06	Stapling position LED3 ON signal				1: ON
P075-07	Staple key LED ON signal				1: ON
P076-00	DIP switch 1-4 detection signal				1: ON
P076-01	DIP switch 1-3 detection signal				1: ON
P076-02	DIP switch 1-2 detection signal				1: ON
P076-03	DIP switch 1-1 detection signal				1: ON
P076-04	Joint signal (PI1)		JNTS		1: connected to copier
P076-05	Not used				
P076-06	Not used				
P076-07	Not used				

 COPYRIGHT © 1997 CANON INC.

Stapler Sorter-E2 (6/8)

Address	Description	Notation	Signal	Jack	Remarks
P077-00	DIP switch 1-8 detection signal				1: ON
P077-01	DIP switch 1-7 detection signal				1: ON
P077-02	DIP switch 1-6 detection signal				1: ON
P077-03	DIP switch 1-5 detection signal				1: ON
P077-04	Front door open signal (MSW3)		DROPN		1: closed
P077-05	Not used				
P077-06	Not used				
P077-07	Not used				
P078-00	Staple mode key check signal				1: ON
P078-01	Stapler unit set detection signal				1: stapler unit present
P078-02	Staple absent (SW1) signal		HKEPN		1: staple absent
P078-03	Stapler safety detection signal (MSW1)		SFTYSW		1: ON
P078-04	Stapler unit swing position signal (PI10)		SWGP		1: ON
P078-05	Not used				
P078-06	Not used				
P078-07	Not used				
P079-00	Front access key check signal				1: ON
P079-01	Shift down key check signal				1: ON
P079-02	Bin home position signal (PI18)		BHP		1: home position
P079-03	PCB check signal				0: S-order PCB
P079-04	Front door open internal signal		DROPN		1: door closed
P079-05	Not used				
P079-06	Not used				
P079-07	Not used				

COPYRIGHT © 1997 CANON INC.

Stapler Sorter-E2 (7/8)

Address	Description	Notation	Signal	Jack	Remarks
P080-00	Staple Start key check signal				1: ON
P080-01	Shift up key check signal				1: ON
P080-02	Feeding guide home position detection signal (PI6)				1: ON
P080-03	Bin paper detection signal (PI7)				1: paper present
P080-04	Feeding guide UP signal (PI2)				1: UP
P080-05	Not used				
P080-06	Not used				
P080-07	Not used				
P081-00	Not used				
P081-01	Not used				
P081-02	Not used				
P081-03	Not used				
P081-04	Not used				
P081-05	Controller PCB LED1 ON signal				1: ON
P081-06	Controller PCB LED2 ON signal				1: ON
P081-07	Not used				
P083-00~07	Bin paper sensor 2 (S7) A/D input				Hexadecimal (4 digits)
P084-00~07	Stapler internal paper sensor (S5) A/D input				
P085-00~07	Bin internal sensor (S4) A/D input				
P086-00~07	Feeding motor current (M1) A/D input				
P087-00~07	Feeding motor speed control (M1) A/D input				
P088-00~07	Stapler internal paper sensor (S5) D/A output				
P089-00~07	Swing motor current (M4) D/A output				
P090-00~07	Staple unit shift motor current (M3) D/A output				

 COPYRIGHT © 1997 CANON INC.

Stapler Sorter-E2 (8/8)

Address	Description	Notation	Signal	Jack	Remarks
P091-00~07	Bin shift motor current (M9) D/A output				Hexadecimal (4 digits)
P092-00~07	Guide bar drive motor current (M8) D/A output				
P093-00~07	Bin paper light adjustment (S4) D/A output				
P094-00~07	Push bar drive motor current (M7)				
P095-00~07	Bin paper sensor 2 light adjustment (S7) D/A output				

COPYRIGHT © 1997 CANON INC.

Sorter-G1 (1/3)

Address	Description	Notation	Signal	Jack	Remarks
P062-00	Joint signal (MS1)	MS1	SOP		1: open
P062-01	Not used				
P062-02	Not used				
P062-03	Not used				
P062-04	Not used				
P062-05	Not used				
P062-06	Bin paper sensor				0: paper present
P062-07	Not used				
P063-00	Not used				
P063-01	Not used				
P063-02	Not used				
P063-03	Not used				
P063-04	Not used				
P063-05	Not sued				
P063-06	Not used				
P063-07	Not used				
P064-00	Bin paper sensor	PT1	BPD		1: paper present
P064-01	24V detection				1: power down
P064-02	Bin HP sensor connector detection				0: connector off
P064-03	Lead cam sensor connector detection				0: connector off
P064-04	Bin shift clock sensor connector detection				0: connector off
P064-05	Guide bar HP sensor connector detection				0: connector off
P064-06	Not used				
P064-07	Not used				

 COPYRIGHT © 1997 CANON INC. CANON NP6560/NP6360/NP6260 REV. 0 NOV. 1997 PRINTED IN JAPAN (IMPRIME AU JAPON)

Sorter-G1 (2/3)

Address	Description	Notation	Signal	Jack	Remarks
P065-00	Feeding motor clock sensor	PI6	FMCLK		
P065-01	Bin shift motor clock sensor	PI9	BMCLK		
P065-02	Lead cam sensor	PI2	LCHP		1: HP
P065-03	Bin HP sensor	PI3	BHP		1: HP
P065-04	Guide bar HP sensor	PI7	SGBHP		1: HP
P065-05	Not used				
P065-06	Not used				
P065-07	Not used				
P066-00	Not sued				
P066-01	Not used				
P066-02	Guide bar swing motor pulse signal 0	M3	GBMA		
P066-03	Guide bar swing motor pulse signal 1	M3	GBMB		
P066-04	Feeding motor clock sensor	PI6	FMCLK		
P066-05	Not used				
P066-06	Bin shift motor clock sensor	PI9	BMCLK		
P066-07	Guide bar swing motor control signal		GBMON		1: ON
P067-00	Feeding motor PWM signal	M1	FMD		0: ON
P067-01	Feeding motor brake signal	M1			1: brake
P067-02	Bin shift motor PWM signal	M2			1: ON
P067-03	Bin shift motor drive singal	M2			1: ON
P067-04	Paper path switching sole-noid drive signal	SL2	PSLD		1: ON
P067-05	Not used				
P067-06	Paper retaining plate solenoid drive signal	SL3	PHSLD		1: ON
P067-07	Bin shift motor UP signal	M2	BMUP		0: UP

COPYRIGHT © 1997 CANON INC.

Sorter-G1 (3/3)

Address	Description	Notation	Signal	Jack	Remarks
P068-00	DIP switch SW1				0: ON
P068-01	DIP switch SW2				0: ON
P068-02	DIP switch SW3				0: ON
P068-03	DIP switch SW4				0: ON
P068-04	Push switch SW2				0: ON
P068-05	Push switch SW3				0: ON
P068-06	Not used				
P068-07	Not used				
P069-00	Bin paper sensor D/A output 0				
P069-01	Bin paper sensor D/A output 1				
P069-02	Bin paper sensor D/A output 2				
P069-03	Bin paper sensor D/A output 3				
P069-04	Bin paper sensor D/A output 4				
P069-05	Bin paper sensor D/A output 5				
P069-06	Bin paper sensor D/A output 6				
P069-07	Bin paper sensor D/A output 7				
P070-00	Joint sensor				0: open
P070-01	Door sensor				0: open
P070-02	Not used				
P070-03	Not used				
P070-04	Sort sensor				1: paper present
P070-05	Non sort sensor				1: paper present
P070-06	Not used				
P070-07	Not used				
Hereafter	Not used				

 COPYRIGHT © 1997 CANON INC.

Address	Description	Notation	Signal	Jack	Remarks
P097-00 P097-01	Primary charging wire cleaning motor drive signal	M12	PCLM	J103-B3 J103-B4	1/0: CW rotation 0/1: CCW rotation
P097-02 P097-03	Pre-transfer charging wire cleaning motor drive signal	M13	PTRCLM	J103-A1 J103-A2	1/0: CW rotation 0/1: CCW rotation
P097-04 P097-05	Transfer/separation charging wire cleaning motor drive signal	M06	TSCLM	J108-B19 J108-A1	1/0: CW rotation 0/1: CCW rotation
P097-06	Primary charging wire cleaner HP signal		PCLHP		1: HP
P097-07	Not used				

Address	Description	Notation	Signal	Jack	Remarks
P098-00	Not used				
P098-01	Pre-transfer charging wire cleaner home position signal		PTCLHP		1: HP
P098-02	Transfer/separation charging wire cleaner home position signal		TSCLHP		1: HP
P098-03	Not used				
P098-04	Holding tray Y motor hold signal	M08	M08HLD	J113-A12	
P098-05	Holding tray Y motor (phase A) signal	M08	M08A	J113-A13	
P098-06	Holding tray Y motor (phase B) signal	M08	M08B	J113-A11	
P098-07	Holding tray X motor hold signal	M09	M09HLD	J113-B3	

COPYRIGHT © 1997 CANON INC.

Address	Description	Notation	Signal	Jack	Remarks
P100-00	Holding tray X motor (phase A) signal	M09	M09A	J113-B2	
P100-01	Holding tray X motor (phase B) signal	M09	M09B	J113-B4	
P100-02	Holding tray Y home position signal	PS20	HTXHP	J113-A10	
P100-03	Holding tray X home position signal	PS21	HTYHP	J113-B1	1: HP
P100-04	Lens X motor hold signal	M04	M04ACM M04BCM	J110-A3 J110-A6	
P100-05	Lens X motor (phase A) signal	M04	M04A	J110-A1 J110-A2	
P100-06	CVR PWM signal			J111-B7	
P100-07	Not used				

Address	Description	Notation	Signal	Jack	Remarks
P101-00	Lens X motor (phase B) signal	M04	M04B	J110-A4 J110-A5	
P101-01	Lens Y motor hold signal	M05	M05ACM M05BCM	J110-A12 J110-A15	
P101-02	Not used				
P101-03	Not used				
P101-04	Not used				
P101-05	Not used				
P101-06	Not used				
P101-07	Not used				

 COPYRIGHT © 1997 CANON INC.

Address	Description	Notation	Signal	Jack	Remarks
P102-00	Lens Y motor (phase A) signal	M05	M05A	J110-A10 J110-A11	
P102-01	Lens Y motor (phase B) signal	M05	M05B	J110-A13 J110-A14	
P102-02	Lens X home position signal	PS06	LXHP	J110-A8	1: HP
P102-03	Lens Y home position signal	PS07	LYHP	J110-B2	1: HP
P102-04	Internal signal (lens X operation complete)				
P102-05	Internal signal (lens Y operation complete)				
P102-06	Internal signal (holding tray X operation complete)				
P102-07	Internal signal (holding tray Y operation complete)				

Address	Description	Notation	Signal	Jack	Remarks
P104-00	Not used				
P104-01	Not used				
P104-02	Internal signal (holding tray X shift start)				
P104-03	Not used				
P104-04	Not used				
P104-05	Not used				
P104-06	Not used				
P104-07	Not used				

Address	Description	Notation	Signal	Jack	Remarks
P105-00	Internal signal (Holding tray Y shift start)				
P105-01	Not used				
P105-02	Not used				
P105-03	Not used				
P105-04	Not used				
P105-05	Not used				
P105-06	Not used				
P105-07	Not used				

COPYRIGHT © 1997 CANON INC.

Address	Description	Notation	Signal	Jack	Remarks
P118-00	Digit 0 input				
P118-01	Digit 0 input				
P118-02	Digit 0 input				
P118-03	Digit 0 input				
P118-04	Digit 0 input				
P118-05	Digit 0 input				
P118-06	Digit 0 input				
P118-07	Digit 0 input				

Address	Description	Notation	Signal	Jack	Remarks
P119-00	Digit 1 input				
P119-01	Digit 1 input				
P119-02	Digit 1 input				
P119-03	Digit 1 input				
P119-04	Digit 1 input				
P119-05	Digit 1 input				
P119-06	Digit 1 input				
P119-07	Digit 1 input				

Address	Description	Notation	Signal	Jack	Remarks
P120-00	Digit 2 input				
P120-01	Digit 2 input				
P120-02	Digit 2 input				
P120-03	Digit 2 input				
P120-04	Digit 2 input				
P120-05	Digit 2 input				
P120-06	Digit 2 input				
P120-07	Digit 2 input				

 COPYRIGHT © 1997 CANON INC. CANON NP6560/NP6360/NP6260 REV. 0 NOV. 1997 PRINTED IN JAPAN (IMPRIME AU JAPON)

Address	Description	Notation	Signal	Jack	Remarks
P121-00	Digit 3 input				
P121-01	Digit 3 input				
P121-02	Digit 3 input				
P121-03	Digit 3 input				
P121-04	Digit 3 input				
P121-05	Digit 3 input				
P121-06	Digit 3 input				
P121-07	Digit 3 input				

Note: P122 through P124 are ports in the paper deck-A1.

Address	Description	Notation	Signal	Jack	Remarks
P122-00	Deck lifter UP signal	M102	DLUP	J2001-A5	1: UP
P122-01	Deck lifter motor drive signal	M102	DLMON	J2001-A6	1: ON
P122-02	Deck open LED ON signal	LED100	DOLON	J2001-A7	1: ON
P122-03	Deck pick-up roller releasing solenoid drive signal	SL101	DPRSD	J2001-A8	0: ON
P122-04	Deck pick-up clutch drive signal	CL102	DPUCD	J2001-A9	0: ON
P122-05	Deck vertical path clutch drive signal	CL101	DVPCD	J2001-A10	0: ON
P122-06	Deck main motor drive signal	M101	DMON	J2001-A11	0: ON
P122-07	Deck main motor double-speed signal	M101	DMDS	J2001-A12	0: double speed

Address	Description	Notation	Signal	Jack	Remarks
P123-00	Deck pick-up guide open detection signal	Q105	DPUGO	J2001-B7	0: open
P123-01	Deck set detection	Q104	DSET	J2001-B8	0: open
P123-02	Deck main motor drive detection signal	M101	DMDT	N.C	0: ON
P123-03	Deck pick-up clutch open circuit detection	CL102	DPCDT	N.C	1: open circuit
P123-04	Deck lifter lower limit detection signal	SW103	DLLD	J2001-A1	1: lower limit
P123-05	Deck open signal	SW100	DOPN	J2001-A2	0: ON
P123-06	Deck open detection signal	SW102	DOPD	J2001-A3	0: open
P123-07	Deck lifter position detection signal	Q110	DLPD	J2001-A4	1: pick-up position

COPYRIGHT © 1997 CANON INC.

Address	Description	Notation	Signal	Jack	Remarks
P124-00	Deck paper supply position detection signal	Q103	Q103	J2001-B1	1→0: paper supply position
P124-01	Deck paper absent detection signal	Q108	DPE	J2001-B2	1: paper present
P124-02	Deck pick-up paper detection signal	Q107	DPPD	J2001-B3	1: paper detection
P124-03	Deck vertical path paper detection signal	Q106	DVPD	J2001-B4	1: paper detection
P124-04	Deck main motor brake signal	M101	DMBRK	J2001-B5	1: brake
P124-05	Not used				
P124-06	Deck open solenoid drive signal	SL102	DOPSD	J2001-B6	0: ON
P124-07	Not used				

Address	Description	Notation	Signal	Jack	Remarks
P125-00	Scanner motor cooling fan rotation detection signal	FM9	FM9ROT	J2001-B11	0: rotation
P125-01	Not used				
P125-02	Not used				
P125-03	Not used				
P125-04	Not used				
P125-05	Not used				
P125-06	Not used				
P125-07	Not used				

 COPYRIGHT © 1997 CANON INC.

F. Adjustment Mode (✻3✻)

Using the ◄◄ or ►► key, select the appropriate screen.
Press the appropriate item to select. (The selected item is highlighted.)
Enter a value, and press the OK key to store. Make a check by pressing the user mode key.

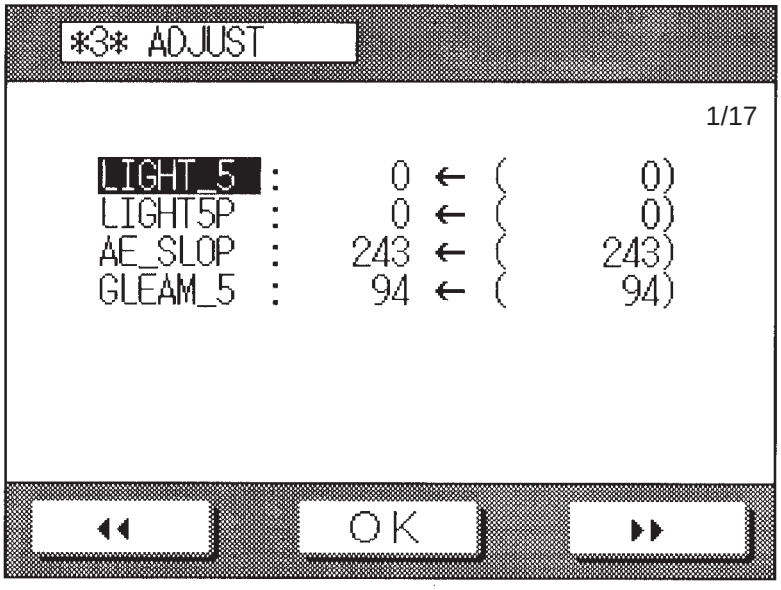

Screen 3-1

Item	Description	Settings	Remarks
LIGHT-5	Use it to adjust the reference activation voltage for the scanning lamp used during copying.	–35~35	A higher setting decreases the copy density.
LIGHT-5P	Use it to adjust the reference activation voltage for the scanning lamp used during copying in photo mode.	–35~35	A higher setting decreases the copy density.
AE-SLOP	Use it to adjust the intensity used when copying a newspaper original in AE mode.	0~1023	A higher setting increases the density of the copies of a newspaper original.
GLEAM-5	Use it to adjust the degree of optimum exposure.	53~139	A higher setting decreases the copy density.

COPYRIGHT © 1997 CANON INC.

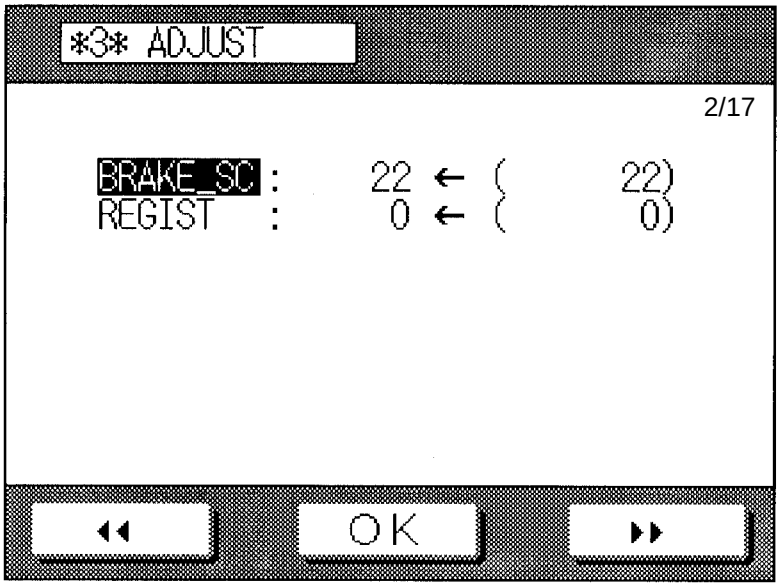

Screen 3-2

Item	Description	Settings	Remarks
BRAKE-SC	Not used.		
REGIST	Use it to adjust the leading edge margin used during copying (registration).	–100~100	A higher setting delays the timing at which the registration roller turns on (decreasing the leading edge margin). Unit: 0.1 mm

 COPYRIGHT © 1997 CANON INC.

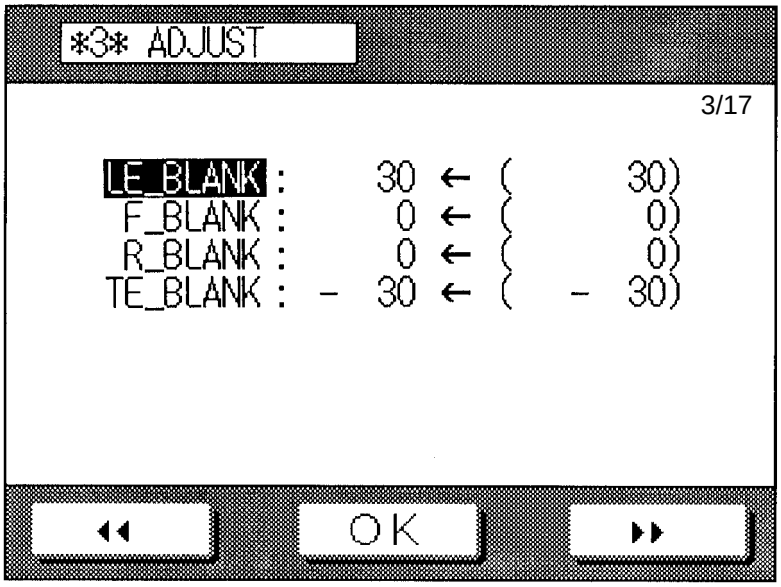

Screen 3-3

Item	Description	Settings	Remarks
LE-BLANK	Use it to adjust the leading edge non-image width (blanking exposure activation period).	–100~100	A higher setting increases the leading edge non-image width.
F-BLANK	Use it to adjust the front margin (blank exposure lamp activation period).	–100~100	A higher setting increases the front margin.
R-BLANK	Use it to increase the rear margin (blank exposure lamp activation period).	–100~100	A higher setting decreases the rear margin.
TE-BLANK	Use it to adjust the trailing edge non-image width (blank exposure activation period).	–100~100	A higher setting decreases the trailing edge non-image width.

COPYRIGHT © 1997 CANON INC.

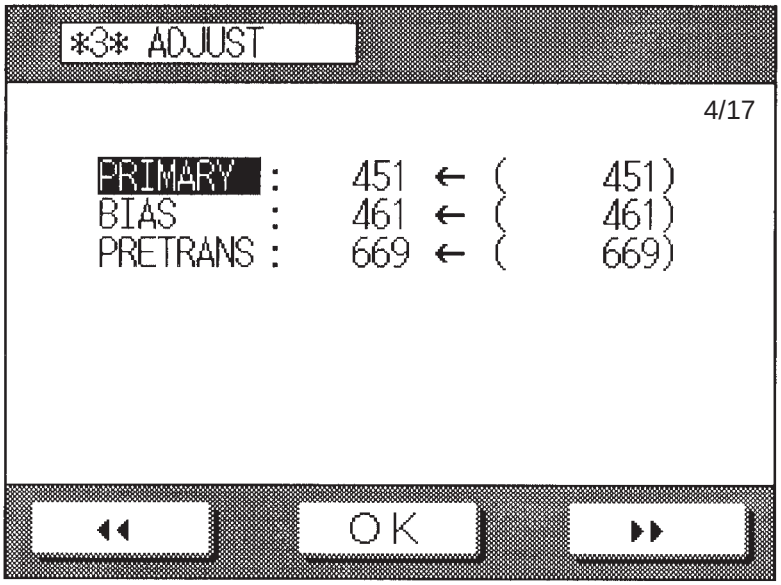

Screen 3-4

Item	Description	Settings	Remarks
PRIMARY	Use it to adjust the application voltage correction value for the primary charging assembly. (It is pre-adjusted at the factory; enter the value recorded on the service label if you have replaced the DC controller PCB.)	0~1023	
BIAS	Use it to adjust the developing assembly bias. (It is pre-adjusted at the factory; enter the value recorded on the service label if you have replaced the DC controller PCB.)	Label value ±34	
PRE-TRANS	Use it to adjust the current for the pre-transfer charging assembly. (It is pre-adjusted at the factory; enter the value recorded on the label if you have replaced the DC controller PCB.)	Label value ±200	

 COPYRIGHT © 1997 CANON INC.

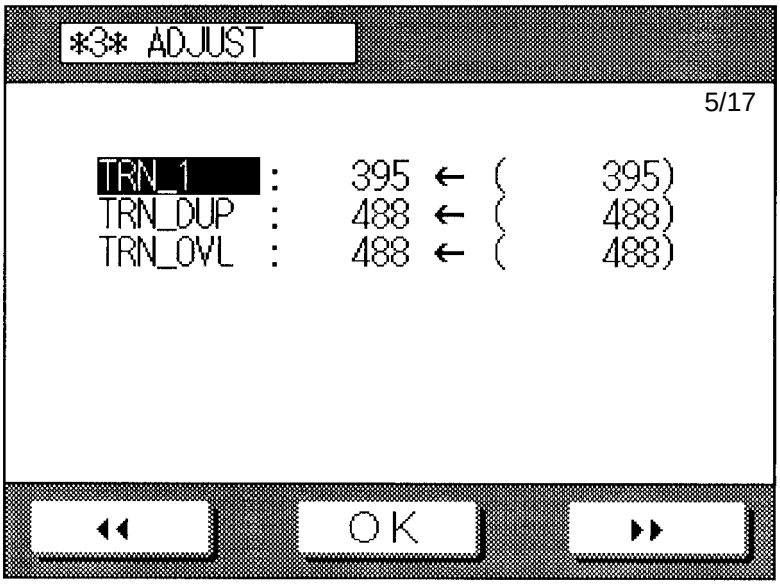

Screen 3-5

Item	Description	Settings	Remarks
TRN-1	Use it to adjust the current (1st side) for the transfer charging assembly. (It is pre-adjusted at the factory; enter the value recorded on the service label if you have replaced the DC controller PCB.)	Label value ±100	
TRN-DUP	Use it to adjust the current (2nd side of two-sided) for the transfer charging assembly. (It is pre-adjusted at the factory; enter the value recorded on the service label if you have replaced the DC controller PCB.)	Label value ±100	
TRN-OVL	Use it to adjust the current (2nd side of overlay) for the transfer charging assembly. (It is pre-adjusted at the factory; enter the value recorded on the service label if you have replaced the DC controller PCB.)	Label value ±100	

COPYRIGHT © 1997 CANON INC.

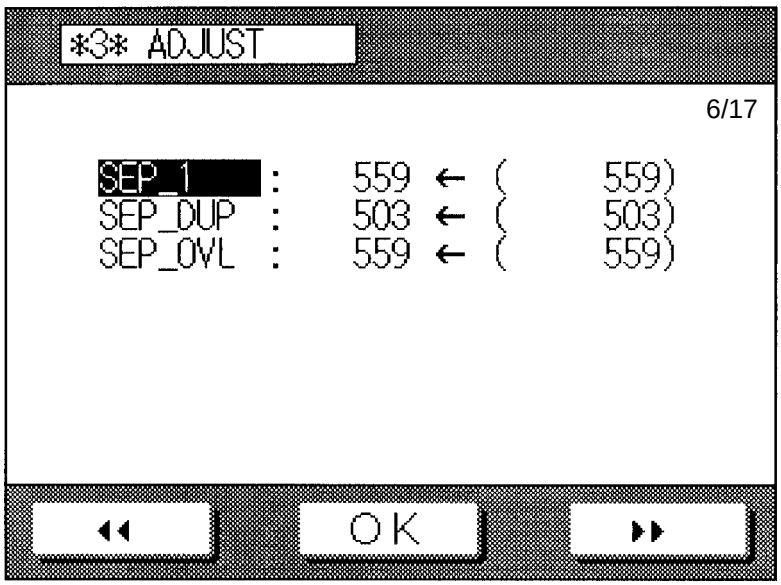

Screen 3-6

Item	Description	Settings	Remarks
SEP-1	Use it to adjust the current (1st side) for the separation charging assembly. (It is pre-adjusted at the factory; enter the value recorded on the service label if you have replaced the DC controller PCB.)	Label value ±200	
SEP-DUP	Use it to adjust the current (2nd side of two-sided) for the separation charging assembly. (It is pre-adjusted at the factory; enter the value recorded on the service label if you have replaced the DC controller PCB.)	Label value ±200	
SEP-OVL	Use it to adjust the current (2nd side of overlay) for the separation charging assembly. (It is pre-adjusted at the factory; enter the value on the service label if you have replaced the DC controller PCB.)	Label value ±200	

 COPYRIGHT © 1997 CANON INC.

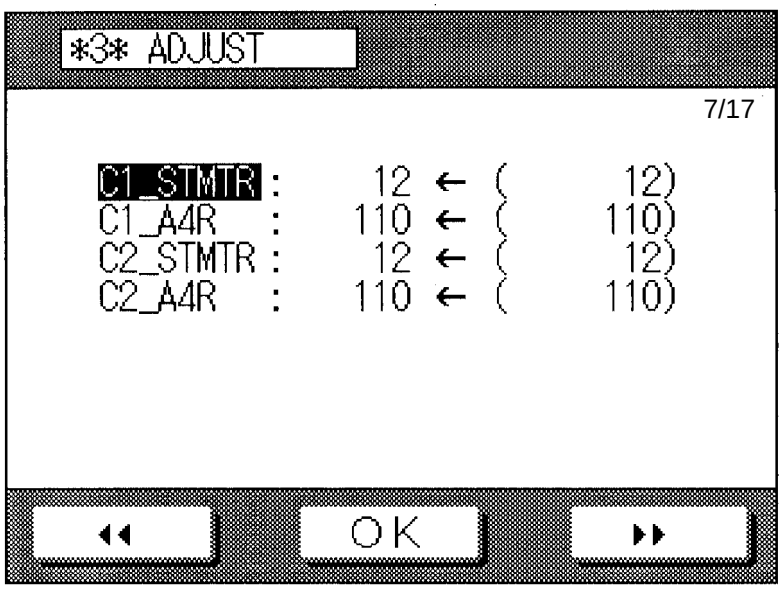

Screen 3-7

Item	Description	Settings	Remarks
C1-STMTR (Not used)	Use it to fine-adjust or enter the paper width basic value (STMTR) for the cassette 1.	000~255	
C1-A4R (Not used)	Use it to fine-adjust or enter the paper width basic value (A4R) for the cassette 1.	000~255	
C2-STMTR (Not used)	Use it to fine-adjust or enter the paper width basic value (STMTR) for the cassette 3.	000~255	
C2-A4R (Not used)	Use it to fine adjust or enter the paper width basic value (A4R) for the cassette 2.	000~255	

COPYRIGHT © 1997 CANON INC.

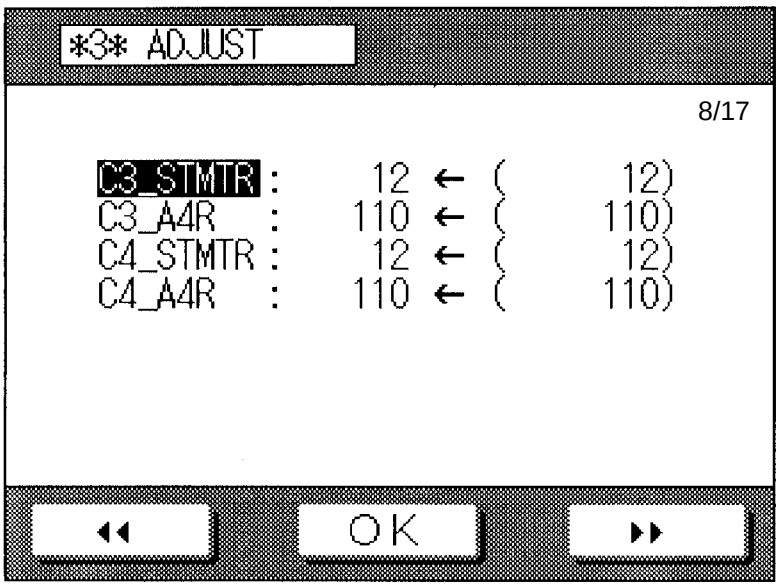

Screen 3-8

Item	Description	Settings	Remarks
C3-STMTR (Not used)	Use it to fine-adjust or enter the paper width basic value (STMR) for the cassette 3.	000~255	
C3-A4R (Not used)	Use it to fine-adjust or enter the paper width basic value (A4R) for the cassette 3.	000~255	
C4-STMTR	Use it to fine-adjust or enter the paper width basic value (STMTR) for the cassette 4.	000~255	
C4-A4R	Use it to fine-adjust or enter the paper width basic value (A4R) for the cassette 4.	000~255	

 COPYRIGHT © 1997 CANON INC.

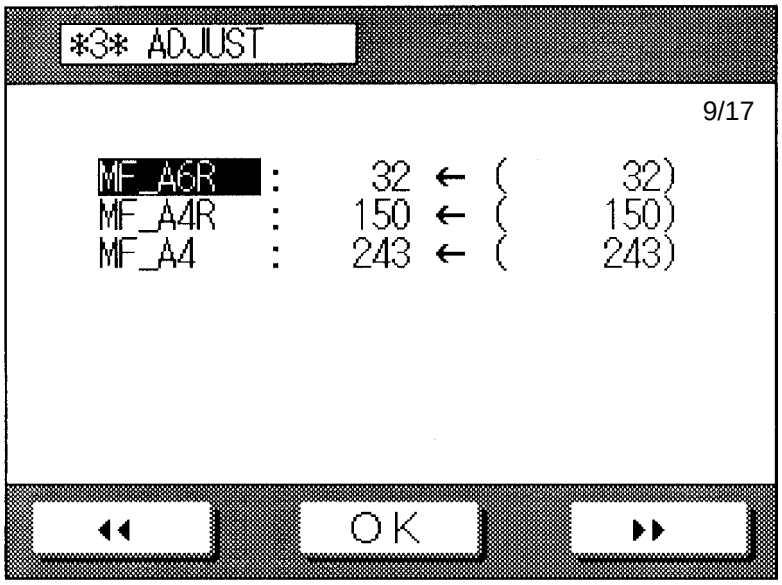

Screen 3-9

Item	Description	Settings	Remarks
MF-A6R	Use it to fine-adjust or enter the paper width basic value (A6R) for the multifeeder.	000~255	
MF-A4R	Use it to fine-adjust or enter the paper width basic value (A4R) for the multifeeder.	000~255	
MF-A4	Use it to fine-adjust or enter the paper width basic value (A4) for the multifeeder.	000~255	

COPYRIGHT © 1997 CANON INC.

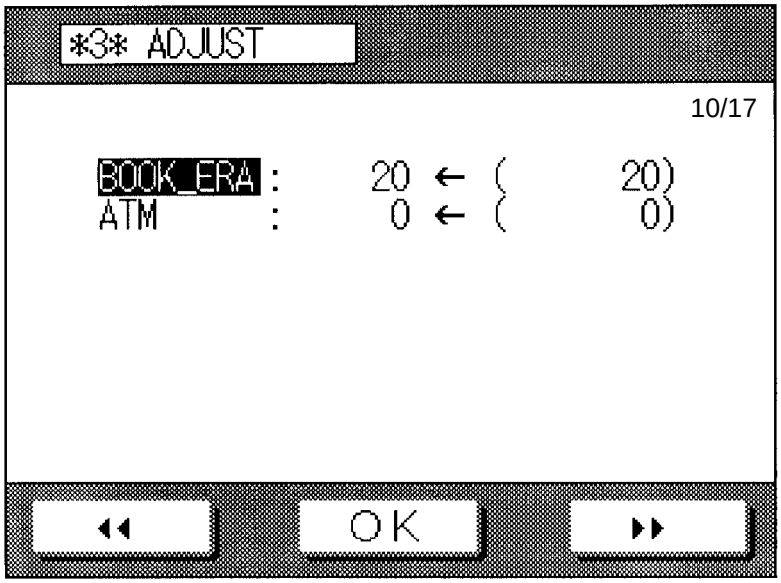

Screen 3-10

Item	Description	Settings	Remarks
BOOK-ERA	Use it to adjust the width for book frame erasing.	10~30	Unit:1 mm A higher setting increases the margin.
ATM	Use it to select an operating environment in relation to atmospheric pressure. 0: 1 to 0.75 atm (up to altitude of 2500 m) 1: 0.75 to 0.70 atm (up to altitude of 2500 to 3000 m) 2: 0.70 to 0.65 atm (up to altitude of from	0~2	A low atmospheric pressure tends to cause leakage; lower the target potential for potential control.

 COPYRIGHT © 1997 CANON INC.

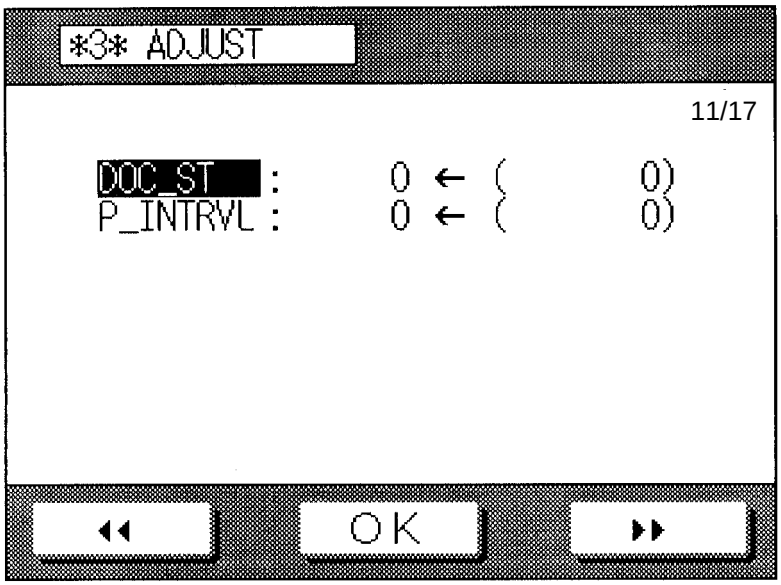

Screen 3-11

Item	Description	Settings	Remarks
DOC-ST	Us it to adjust the original stop position for the RDF. The RDF will switch position for left, right, and manual feed pick-up mechanisms.	–1023~ 1023	Unit:0.5 mm The effective range is between –10 and +10, beyond which no change occurs.
P-INTRVL *	Use it to adjust the original-to-original distance for the RDF (2-on-1 mode). The RDF will switch position for left and right pick-up mechanisms.	–1023~ 1023	Unit:0.5 mm The effective range is between –10 and +10, beyond which no change occurs.

* Used to adjust sheet-to-sheet distance for reduced image composition using the RDF (pp. 5-32 to -35 of the RDF-D1 Service Manual). The adjustments that may be made on the RDF may be made using the copier: a press on the DIP switch for the RDF corresponds to a change in the settings in service mode.

COPYRIGHT © 1997 CANON INC.

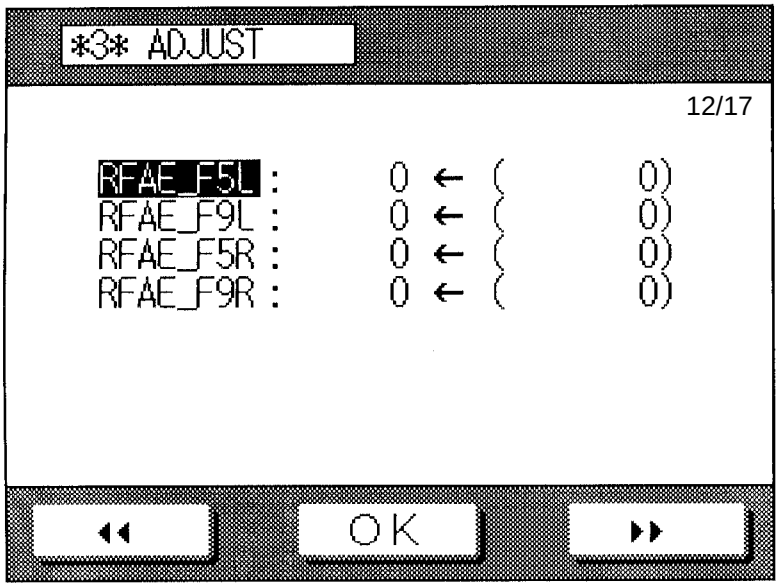

Screen 3-12

Item	Description	Settings	Remarks
RFAE-F5L	Use it to adjust the RDF scanning lamp reference activation voltage (left pick-up in AE mode).	–1023~ 1023	A higher setting makes the slope gentle.
RFAE-F9L	Use it to adjust the RDF newspaper original intensity (left pick-up in AE mode).	–1023~ 1023	A higher setting makes the slope steep.
RFAE-F5R	Use it to adjust the RDF scanning lamp reference activation voltage (right pick-up in AE mode).	–1023~ 1023	A higher setting makes the slope gentle.
RFAE-F9R	Use it to adjust the RDF newspaper original intensity (right pick-up in AE mode).	–1023~ 1023	A higher setting makes the slope steep.

 COPYRIGHT © 1997 CANON INC.

Caution:

Keep the following in mind when using 'DOC-ST', 'P-INTRVL', and 'LA-SPEED':

1. These items operate on the memory settings of the RDF controller PCB. You need not enter the settings if you merely initialized the copier's RAM, since they are retained by the RDF.
2. The items are used to change the memory settings of the RDF controller PCB, and will not directly feed settings to the memory on the RDF controller PCB; the operation will be as follows:

   <Operation 1>

   If you enter '5'^{NEW} for 'DOC-ST' in place of the existing '2'^{OLD}, 5 – 2 = +3, shifting the original stop position by +3.

   <Operation 2>

   If you enter '7' for 'P-INTRVL' in place of the existing '5', –7 – (–5) = –2, changing the sheet-to-sheet distance by –2.

3. These items relate to SW1 on the RDF controller PCB; pick-up and delivery settings will be by the user mode key (*) on the copier's control panel.

COPYRIGHT © 1997 CANON INC.

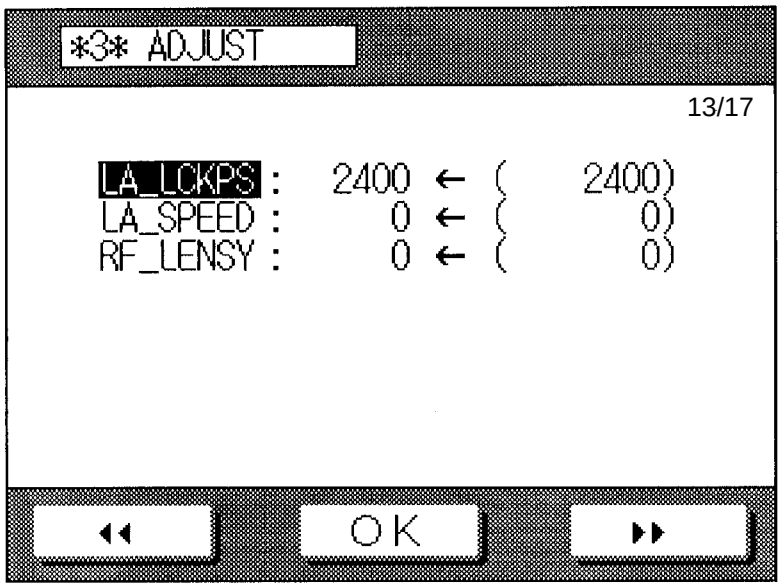

Screen 3-13

Item	Description	Settings	Remarks
LA-LCKPS	Use it to adjust the image leading edge for the RDF-D1 (stream reading mode).	2300~ 2500	A higher setting advances the timing at which registration turns on, thereby increasing the margin.
LA-SPEED	Use it to adjust the original feeding speed in stream reading mode.	–1023~ 1023	A higher setting increases the speed, thereby contracting the image. about ±3 mm (total of 6 mm)
RF-LENSY	Use it to adjust the offset in the lens Y direction in right pick-up mode of the RDF-D1 (adjusting the displacement of the lens reference position in right pick-up mode in relation to left pick-up mode).	–50~50	A higher setting increases the margin in stream reading mode (shifting the copy image to the rear). Unit:0.1 mm

 COPYRIGHT © 1997 CANON INC.

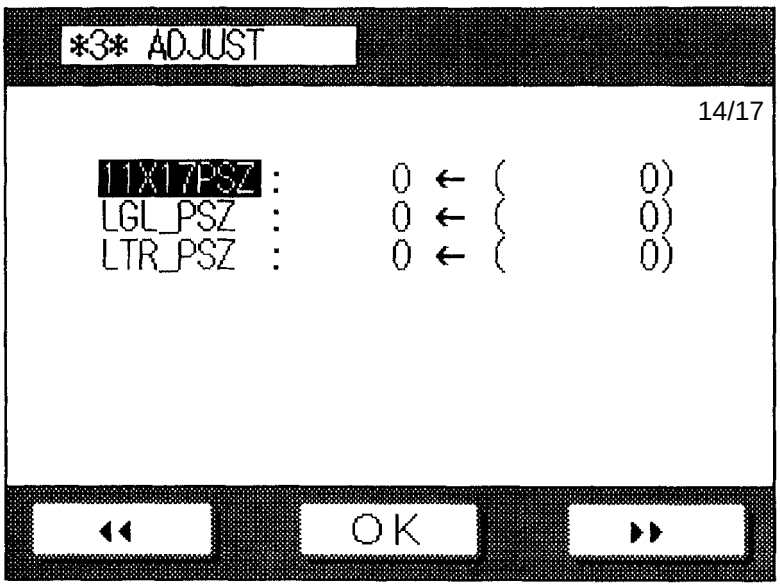

Screen 3-14

Item	Description	Settings	Remarks
11 × 17PSZ LGL_PSZ LTR_PSZ	Use it to fine-adjust the paper jogging guide plate swing (duplexing unit) for each paper size. Use the item if pick-up faults occur or paper moves askew when pick-up is from the duplexing unit or in two-sided/overlay copying.	–10~+10	1 step = 0.183 mm × 2 For each step, the change will affect both front and rear paper jogging plates so that a single step results in a change of 0.367 mm. (A negative value decreases the swing distance.) See p. 11-10.

COPYRIGHT © 1997 CANON INC.

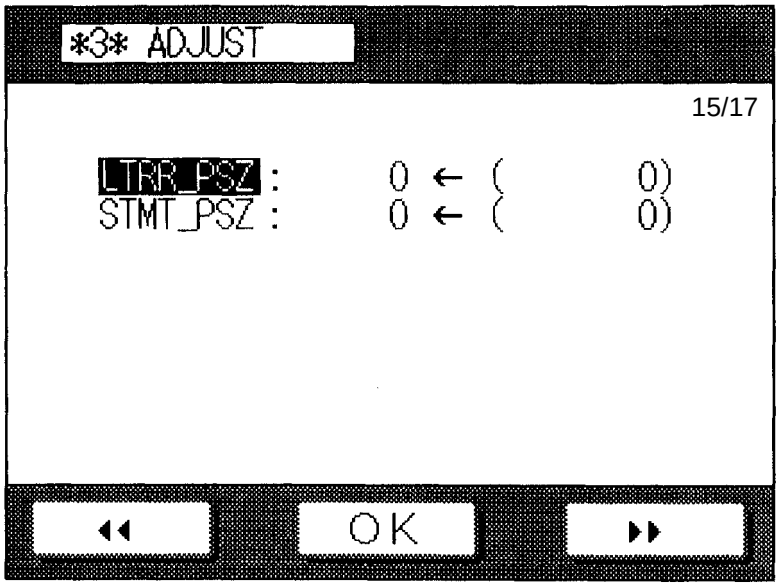

Screen 3-15

Item	Description	Settings	Remarks
LTRR_PSZ STMT_PSZ	Use it to fine-adjust the paper jogging guide plate swing (duplexing unit) for each paper size. Use the item if pick-up faults occur or paper moves askew when pick-up is from the duplexing unit or in two-sided/overlay copying.	–10~+10	1 step = 0.183 mm × 2 For each step, the change will affect both front and rear paper jogging plates so that a single step results in a change of 0.367 mm. (A negative value decreases the swing distance.) See p. 11-10.

 COPYRIGHT © 1997 CANON INC.

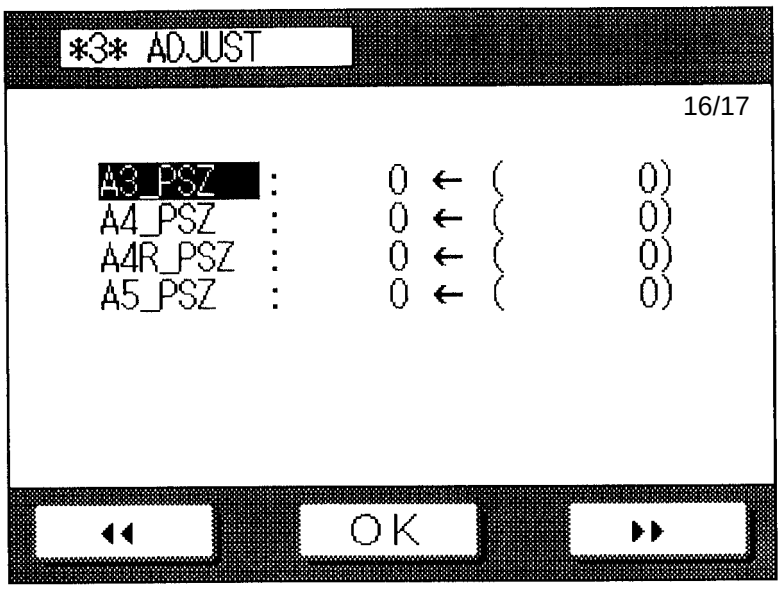

Screen 3-16

Item	Description	Settings	Remarks
A3_PSZ A4_PSZ A4R_PSZ A5_PSZ	Use it to fine-adjust the paper jogging guide plate swing (duplexing unit) for each paper size. Use the item if pick-up faults occur or paper moves askew when pick-up is from the duplexing unit or in two-sided/overlay copying.	–10~+10	1 step = 0.183 mm × 2 For each step, the change will affect both front and rear paper jogging plates so that a single step results in a change of 0.367 mm. (A negative value decreases the swing distance.) See p. 11-10.

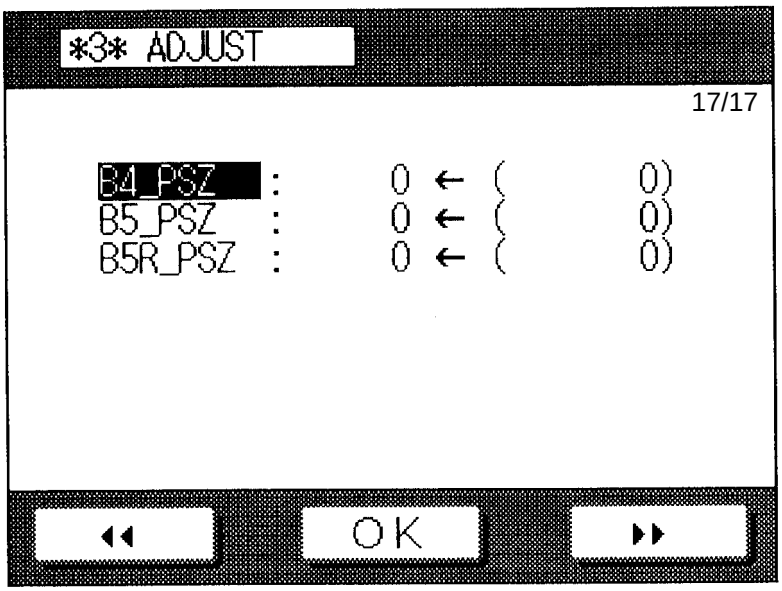

Screen 3-17

Item	Description	Settings	Remarks
B4_PSZ B5_PSZ B5R_PSZ	Use it to fine-adjust the paper jogging guide plate swing (duplexing unit) for each paper size. Use the item if pick-up faults occur or paper moves askew when pick-up is from the duplexing unit or in two-sided/overlay copying.	–10~+10	1 step = 0.183 mm × 2 For each step, the change will affect both front and rear paper jogging plates so that a single step results in a change of 0.367 mm. (A negative value decreases the swing distance.) See p. 11-10.

 COPYRIGHT © 1997 CANON INC.

G. Function Mode (✻4✻)

Using the ◄◄ or ►► key, select the appropriate item.
Press the appropriate item to select. (The selected item is highlighted.)
A press on the user mode key (*) will execute the selected item.
Check to make sure that the machine is in standby before executing any item.

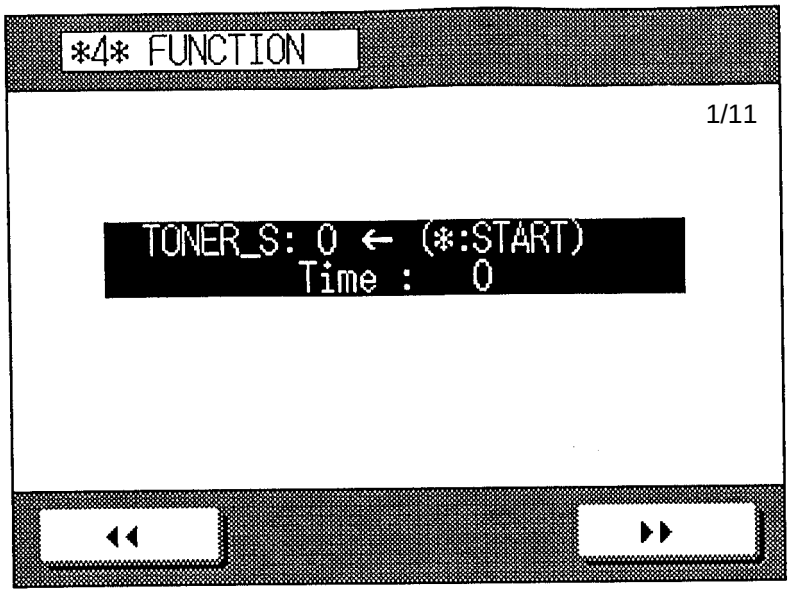

Screen 4-1

Item	Description	Remarks
TONER-S	Use it to supply toner during machine installation. The duration of supply will be indicated in seconds; normally, it takes 7 to 9 min (420 sec to 540 sec). Check that the developing assembly is set correctly and locked in position before pressing OK to start.	The operation will stop automatically.

The display will indicate the message “Check the Developer” in response to a press on the * key. If the developing assembly has been installed, press the OK key on the touch panel, and then press the * key.

COPYRIGHT © 1997 CANON INC.

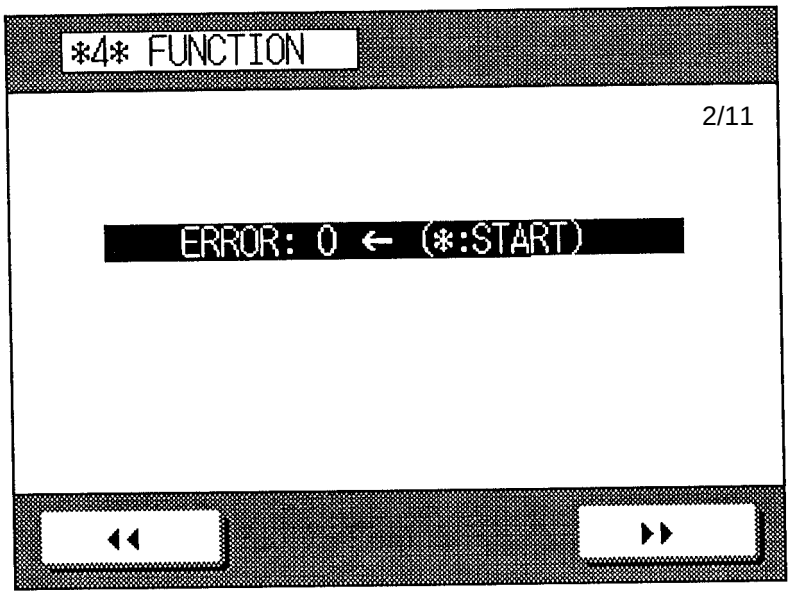

Screen 4-2

Item	Description	Remarks
ERROR	Use it to initialize E000, E001, E002, E003, E005, E013, E020, jam history, error history, sorter jam, RDF jam, or alarm history. However, initializing E000 or the like will not initialize the jam history.	

 COPYRIGHT © 1997 CANON INC.

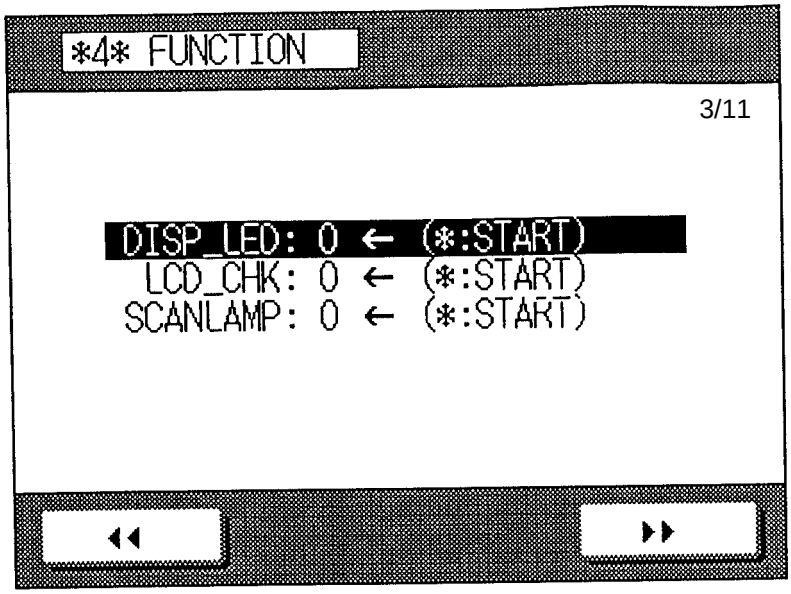

Screen 4-3

Item	Description	Remarks
DISP-LED	Use it to turn on the LEDs on the control panel.*	
LCD-CHK	Use it to turn on the LCD on the control panel. (The LCD back-light will turn off for 3 sec and then will turn on.)	
SCANLAMP	Use it to turn on the scanning lamp. (At this time, the scanner cooling fan will also operate.)	The lamp remains on for 3 sec.

* The Start key (red),
Start key (green),
Energy Saver (Pre-Heat) key,
Interrupt key,
Additonal Functions (User Mode) key,
Guide key
and pilot lamp will turn on and off in sequence.

COPYRIGHT © 1997 CANON INC.

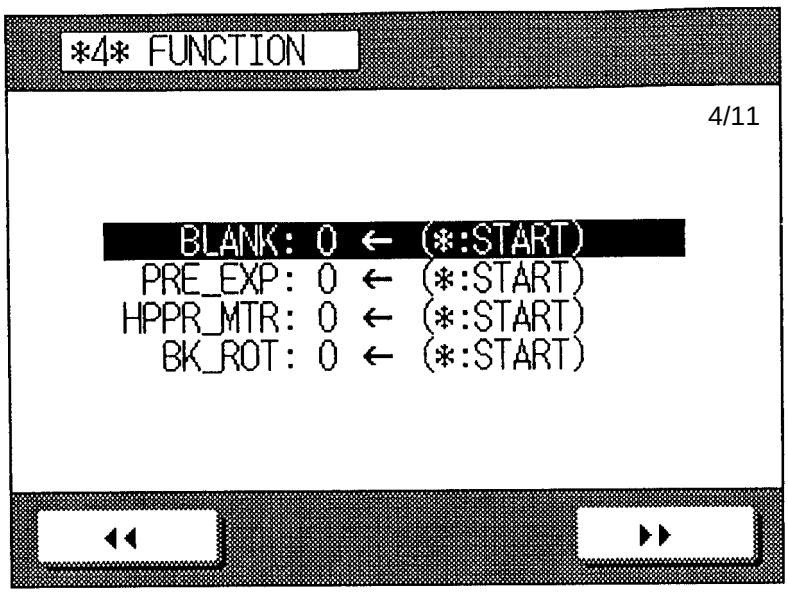

Screen 4-4

Item	Description	Remarks
BLANK	Use it to turn on the blanking exposure lamp.	The lamp will remain on for 3 sec.
PRE-EXP	Use it to turn on the pre-exposure LED.	The LED will remain on for 3 sec.
HPPR-MTR	Use it to turn on the hopper motor. (M10 and M11 rotate at the same time.)	The motor operates for 3 sec.
BK-ROT	Use it to turn on the developing cylinder.	The cylinder operates for about 2 min.

 COPYRIGHT © 1997 CANON INC.

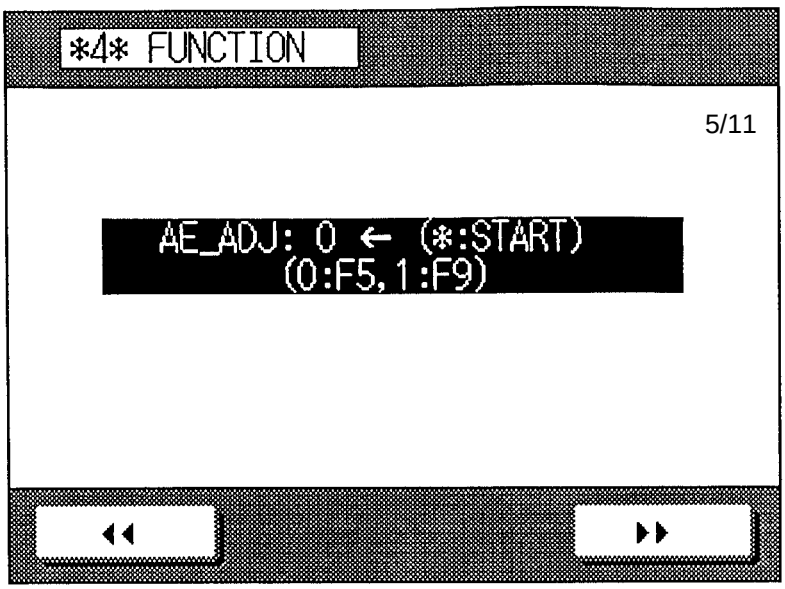

Screen 4-5

Item	Description	Remarks
AE-ADJ	Use it to execute density measurement level automatic adjustment for AE mode. If '0' is indicated, set an F5 original. If '1' is indicated, set an F9 original.	

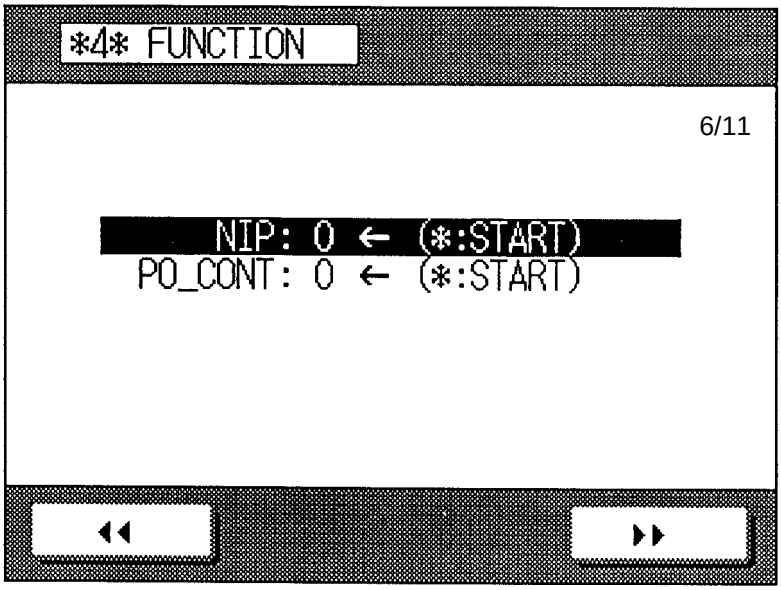

Screen 4-6

Item	Description	Remarks
NIP	Use it to execute nip automatic measurement for the fixing roller. A solid black image will automatically be made and stopped at the fixing roller; it will automatically be discharged in 20 sec.	See p. 11-39.
PO-CONT	Use it to turn on and off potential control.	1: OFF 0: ON

 COPYRIGHT © 1997 CANON INC.

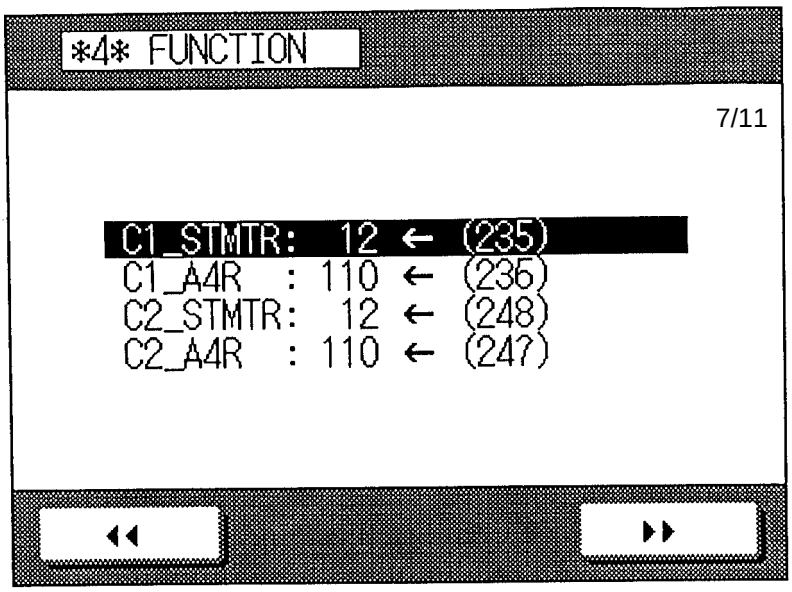

Screen 4-7

Item	Description	Remarks
C1-STMTR (Not used)	Use it to execute automatic adjustment of paper width reference point 1 (STMTR) for the cassette 1.	
C1-A4R (Not used)	Use it to execute automatic adjustment of paper width reference point 2 (A4R) for the cassette 2.	
C2-STMTR (Not used)	Use it to execute automatic adjustment of paper width reference point 1 (STMTR) for the cassette 2.	
C2-A4R (Not used)	Use it to execute automatic adjustment of paper width reference point 2 (A4R) for the cassette 2.	

* Slide out each cassette, and adjust the paper width guide plate inside the cassette to the appropriate size; then, slide in the cassette. Thereafter, select the item on the screen to execute.

COPYRIGHT © 1997 CANON INC.

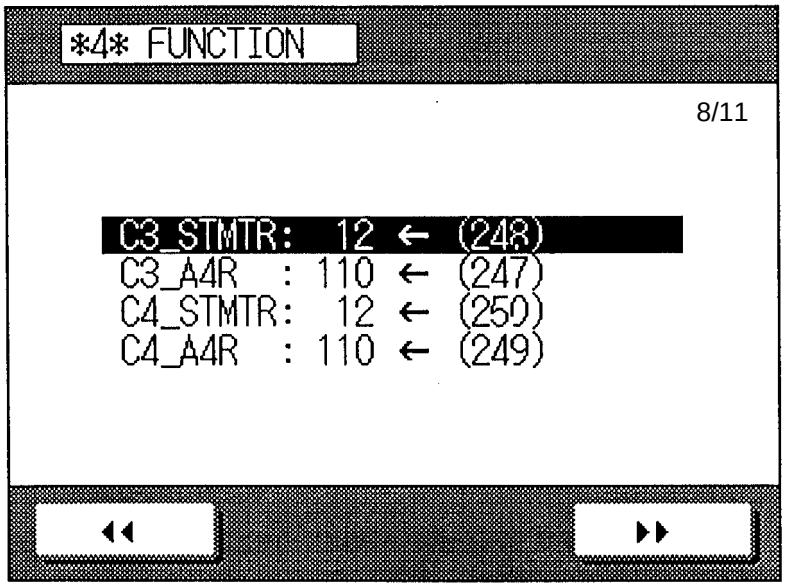

Screen 4-8

Item	Description	Remarks
C3-STMTR (Not used)	Use it to execute automatic adjustment of paper width reference point 1 (STMTR) for the cassette 3.	
C3-A4R (Not used)	Use it to execute automatic adjustment of paper width reference point 2 (A4R) for the cassette 3.	
C4-STMTR	Use it to execute automatic adjustment of paper width reference point 1 (STMTR) for the cassette 4.	
C4-A4R	Use it to execute automatic adjustment of paper width reference point 2 (A4R) for the cassette 4.	

* Slide out each cassette, and adjust the paper width guide plate inside the cassette to the appropriate size; then, slide in the cassette. Thereafter, select the item on the screen to execute.

 COPYRIGHT © 1997 CANON INC.

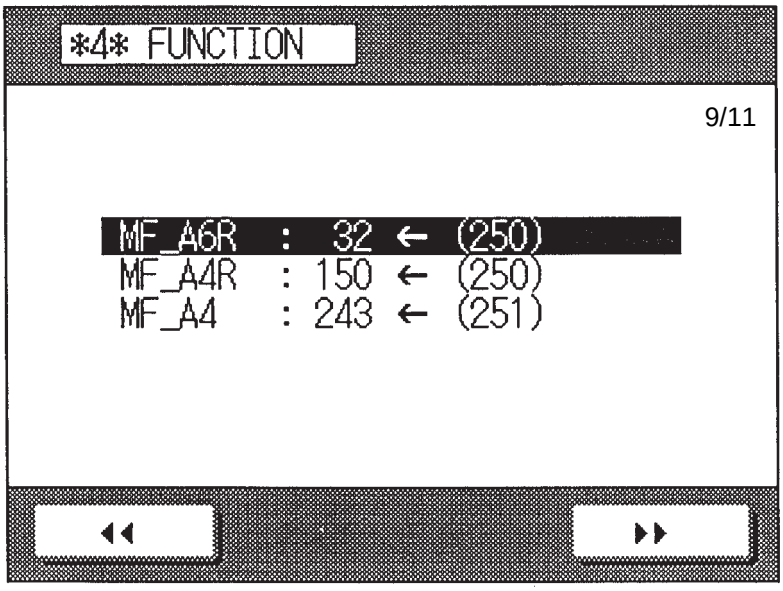

Screen 4-9

Item	Description	Remarks
MF-A6R	Use it to execute automatic adjustment of paper width reference point 1 (A6R) for the multifeeder.	
MF-A4R	Use it to execute automatic adjustment of paper width reference point 2 (A4R) for the multifeeder.	
MF-A4	Use it to execute automatic adjustment of paper width reference point 3 (A4) for the multifeeder.	

* Slide out each cassette, and adjust the paper width guide plate inside the cassette to the appropriate size; then, slide in the cassette. Thereafter, select the item on the screen to execute.

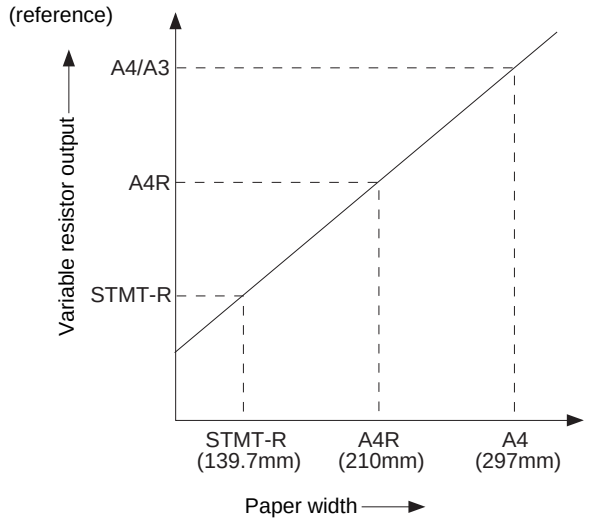

Figure 11-701

Caution:
The “A6R” width is one of the basic values to be used when the paper width detecting VR is replaced for the multifeeder; however, note that the size label does not have a notation indicating “A6R”, and you will not feel a click on the width guide. Keep in mind that A6R is A4 paper folded in fourths, and its width is 105 mm.

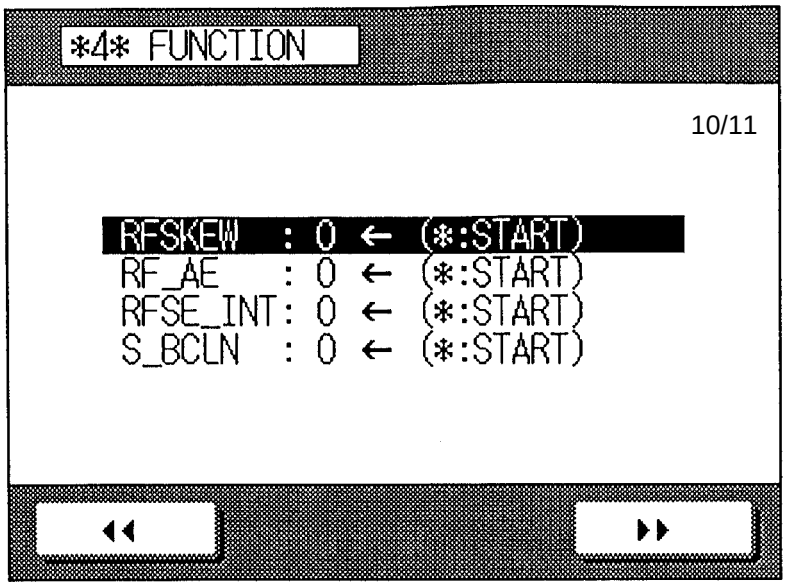

Screen 4-10

Item	Description	Remarks
RFSKEW	Use it to execute skew adjustment of the RDF.	
RF-AE	Use it to execute automatic adjustment of the AE sensor for the RDF.	
RFSE-INT	Use it to initialize the sensor of the RDF.	*
S-BCLN	Use it to clean the separation belt of the RDF.	

* The screen continues to indicate ‘0’ even after you have executed ‘START’. To find out whether the item is being executed or not, refer to LEDs 1, 2, and 3 on the RDF controller PCB (flashing in sequence or simultaneously).

 COPYRIGHT © 1997 CANON INC.

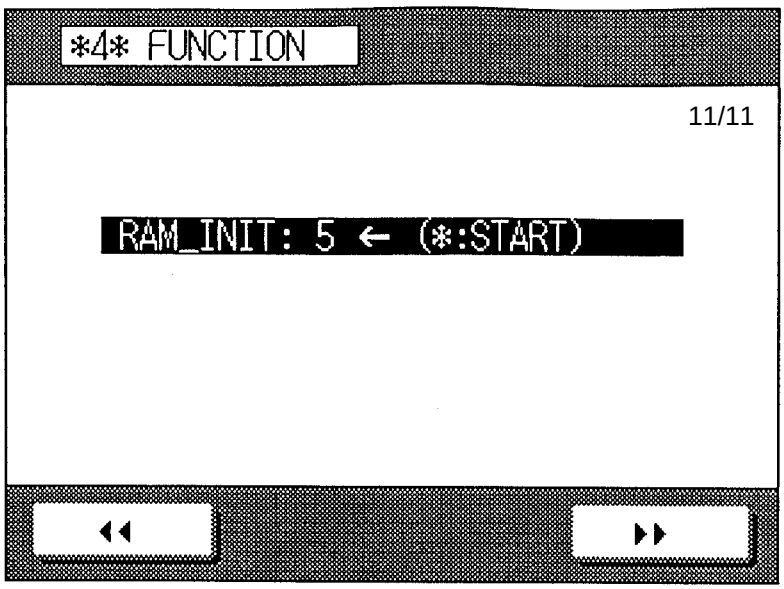

Screen 4-11

Item	Description	Remarks
RAM-INIT	Use it to initialize the RAM on the DC controller PCB.	After initialization, the screen changes to the Copying Standard screen.

H. Options Mode (✻5✻)

Using the ◄◄ or ►► key, select the appropriate screen.
Press the appropriate item to select. (The selected item will be highlighted.)
Enter the appropriate value using the keypad.
Use user mode to set/cancel each mode.

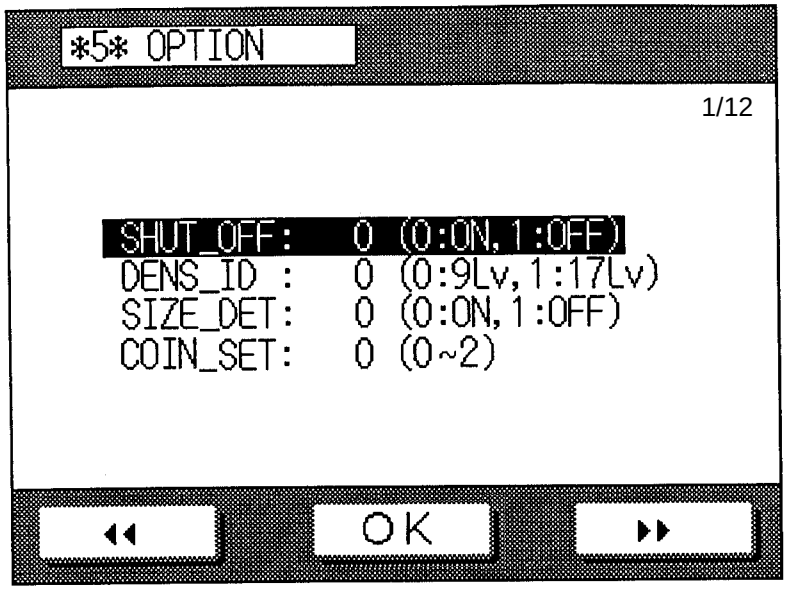

Screen 5-1

Item	Description	Remarks
SHUT-OFF	Use it to turn on or off the auto shut-off function.	1: OFF 0: ON
DENS-ID	Use it to change the copy density notation.	0: 9 steps 1: 17 steps
SIZE-DET	Use it to turn on or off the size detection function.	1: OFF 0: ON
COIN-SET	Use it to change the notation for the control card indicated on the control panel between coin or copy card.	0: control card 1: coin 2: copy card

 COPYRIGHT © 1997 CANON INC. CANON NP6560/NP6360/NP6260 REV. 0 NOV. 1997 PRINTED IN JAPAN (IMPRIME AU JAPON)

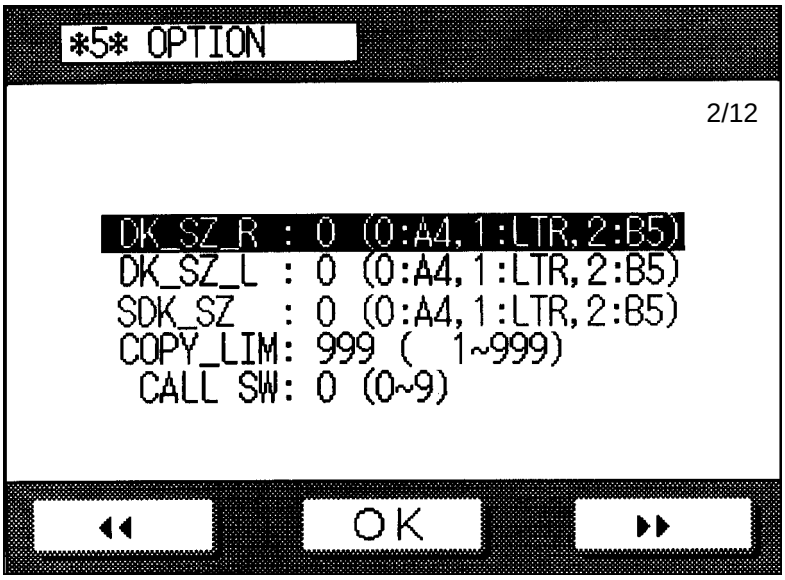

Screen 5-2

Item	Description	Remarks
DK-SZ-R	Use it to change the paper size for the right deck.	0: A4 1: LTR 2: B5
DK-SZ-L	Use it to change the paper size for the left deck.	0: A4 1: LTR 2: B5
SDK-SZ	Use it to change the paper size for the paper deck-A1.	0: A4 1: LTR 2: B5
COPY-LIM	Use it to change the upper limit (number of copies; between 1 and 999).	
CALL-SW	1. You may select any available space in the current mode. 2. Use 'CALL SW' under 'OPTION' in service mode (*5*); initially, '0'. 0 : Do not use for call function (all for mode memory). 1–9 : Use for call function as selected (copy mode storage). 3. A mode may be "called" back as in mode memory. (No storage occurs in a jam, alarm, interrupt, or start after interruption state.) <If the setting is '3',> 7 of mode memory: copying mode used initially. 8 of mode memory: copying mode used immediately thereafter. 9 of mode memory: copying mode used second immediately thereafter. 1–6 of mode memory: used as regular mode memory functions.	

COPYRIGHT © 1997 CANON INC.

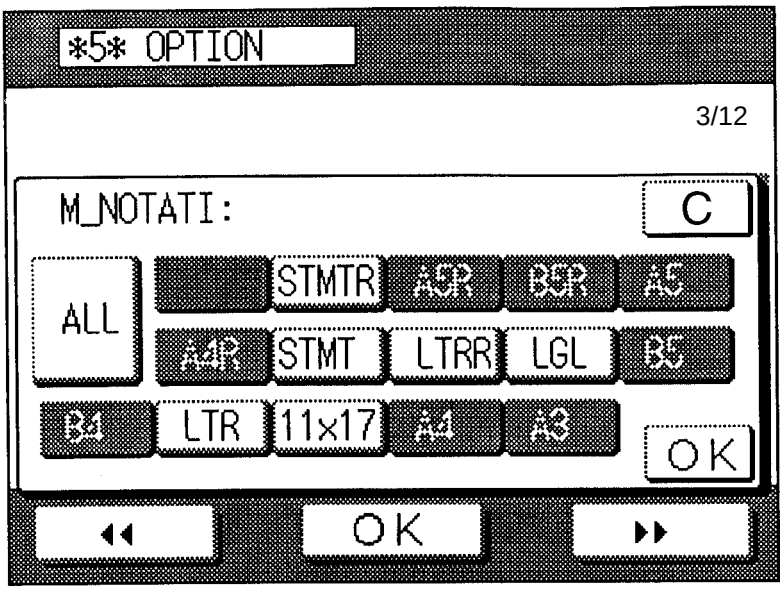

Screen 5-3

Item	Description	Remarks
M-NOTATI	Use it to change the paper size choices for the multifeeder.	

 COPYRIGHT © 1997 CANON INC. CANON NP6560/NP6360/NP6260 REV. 0 NOV. 1997 PRINTED IN JAPAN (IMPRIME AU JAPON)

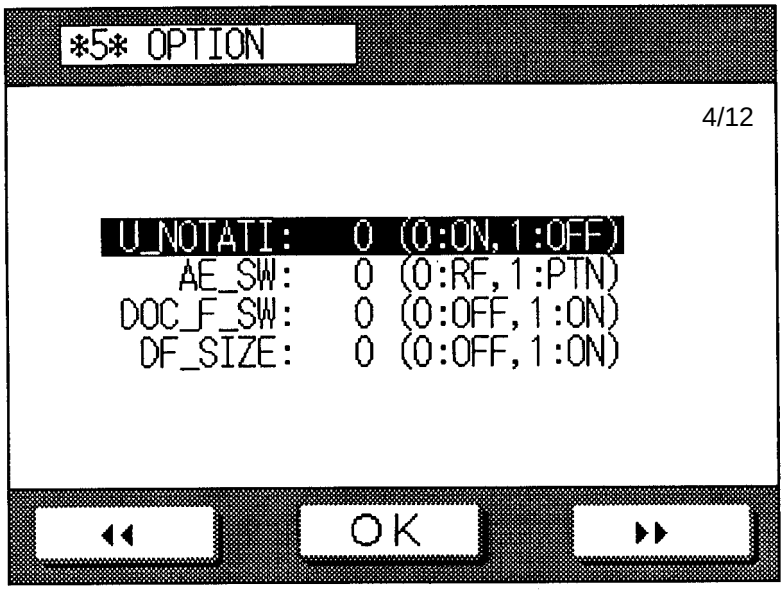

Screen 5-4

Item	Description	Remarks
U-NOTATI	Use it to change the notation for the universal cassette. 0: U1, U2, U3, U5 1: paper size selected by CST-GRP	
AE-SW	Use it to select the RDF's AE or the copier's AE. (Normally, the RDF's AE is used when the RDF is in use; select the copier's AE if the RDF's AE fails for some reason.) Note: Stream reading is not executed if the RDF's AE is disabled.	1: Copier 0: RDF
DOC-F-SW	Use it to turn on and off stream reading.	0: stream reading on 1: stream reading off
DF-SIZE	Use it to enable or disable detection for auto paper selection for a mix of AB and Inch originals (detection for a AB/Inch mix; e.g., A4 and LTR	0: disable 1: enable

COPYRIGHT © 1997 CANON INC.

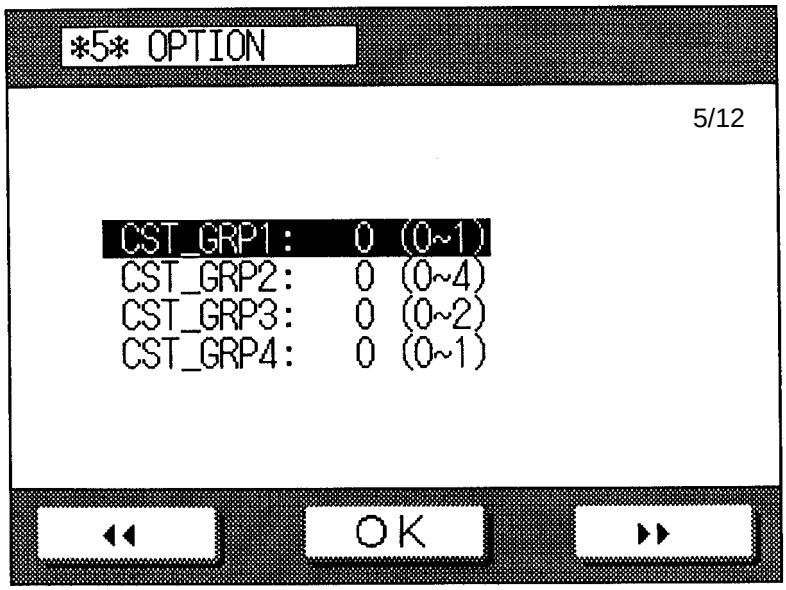

Screen 5-5

Item	Description	Remarks
CST-GRP1	Use it to select the paper notation if universal cassette notation (U-NOTARI) is set to '1'. 0: G LTR (indicated as LTR) 1: K LGL (indicated as U)	
CST-GRP2	Use it to select the paper notation if universal cassette notation (U-NOTARI) is set to '1'. 0: FLSC (indicated as FLSC) 1: OFI (indicated as OFI) 2: E-OFI (indicated as OFI) 3: A-LGL (indicated as LGL) 4: S-OFI (indicated as OFI)	
CST-GRP3	Use it to select the paper notation if universal cassette notation (U-NOTARI) is set to '1'. 0: G LGL (indicated as LGL) 1: FOLI (indicated as FOLI) 2: A FLS (indicated as FLSC)	
CST-GRP4	Use it to select the paper notation if universal cassette notation (U-NOTGARI) is set to '1'. 0: LTR (indicated as LTR) 1: A LTR (indicated as LTR)	

 COPYRIGHT © 1997 CANON INC.

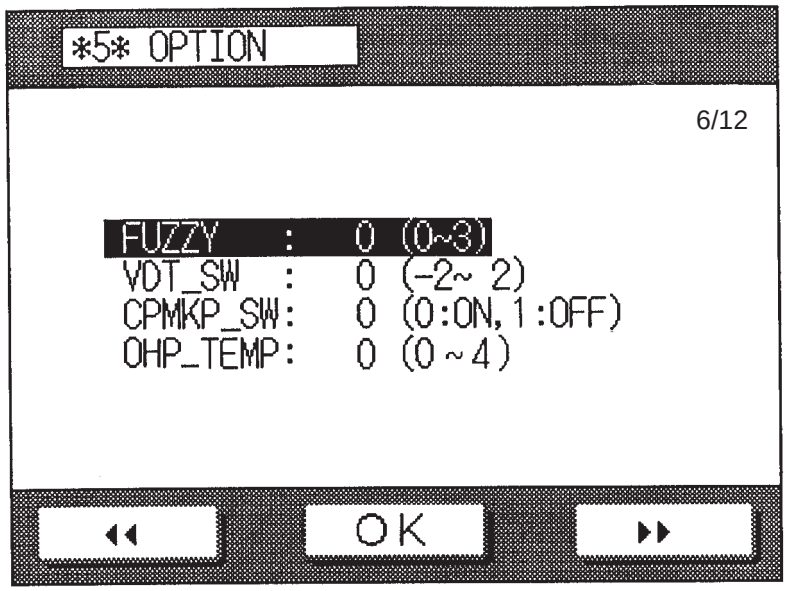

Screen 5-6

Item	Description	Remarks
FUZZY	Use it to control (fuzzy) the current applied to the pre-transfer, transfer, and separation charging assembly to suit the ambient temperature; or, to prohibit it and select one of three environment settings.	0: fuzzy control ON 1: if image is light because of high humidity 2: if average humidity 3: if cleaner separation claw and copy paper come into contact because of low humidity press '0', '1', '2', or '3' on the keypad, and press the " * " key.
VDT-SW	Use it to switch the dark area target potential (VDT) if the solid black on copies is too light.	–2: make lighter –1: make somewhat lighter 0: default +1: make somewhat darker +2: make darker
CPMKP-SW	Use it to turn on or off the sequence used to lower the copying speed to maintain fixing in low-temperature conditions.	0: ON 1: OFF
OHP_TEMP	Use it to lower the fixing temperature. (Setting this mode invalidates 'WARM_UP' settings selected (P. 11-253).	0: normal control 1: normal control –5°C 2: normal control –10°C 3: normal control –15°C 4: normal control –20°C

COPYRIGHT © 1997 CANON INC.

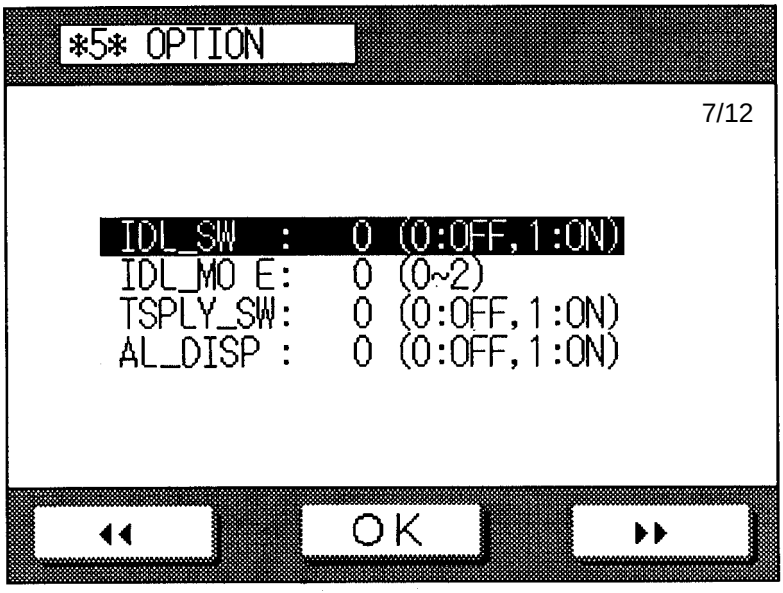

Screen 5-7

Item	Description	Remarks
IDL-SW	Use it to enable or disable idle rotation mode to prevent distorted images in high humidity conditions or if the images are too light, say in the morning.	0: OFF (no idle rotation) 1: ON (control at IDL-MODE setting)
IDL-MODE	Use it to switch idle rotation mode when the power is turned on while the surface temperature of the fixing roller is 75°C or less. Even under normal operating conditions, set it to '1' or '2' if the humidity increases at night to cause image faults.	0: auto control by data of humidity sensor 1: 2-min idle rotation 2: 5-min idle rotation
TSPLY-SW	Use it to switch the toner supply sequence by the humidity sensor.	0: toner supply motor control by humidity data Medium to low humidity: 2 sec ON 1 sec OFF High humidity: 4 sec ON 2 sec OFF 1: 2 sec ON, 1 sec OFF
AL_DISP	Use it to enable or disable messages (always or only when in service mode; Add Fixing Cleaning Belt and Waste Toner Full).	0: only in service mode 1: always

 COPYRIGHT © 1997 CANON INC.

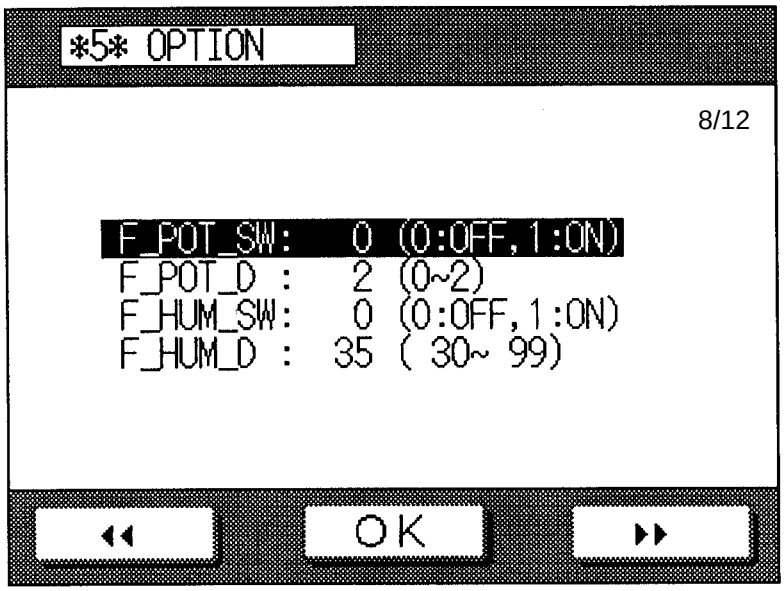

Screen 5-8

Item	Description	Remarks
F-POT-SW	Enter '1' if transfer/separation faults occur because of a fault in the sensor. Use it as a temporary remedy until replacement of the potential sensor.	
F-POT-D	Use it together with 'F-POT-SW' (0 changed to 1). 0: if image ratio of originals (text) is low 1: if image ratio of originals (photo) is high 2: not used usually, but re-transfer (white spot at 50 mm along leading edge) occurs. The degree of separation current is highest at '0' and lowest at '2'.	
F-HUM-SW	Enter '1' if the environment sensor is faulty. (Control is with reference to the input in 'F-HUM-D' instead of the output of the humidity sensor.) Use it as a temporary remedy until replacement of the environment sensor.	
F-HUM-D	Enter an approximate humidity of the site (between 30% and 99%).	Factory default : 35

COPYRIGHT © 1997 CANON INC.

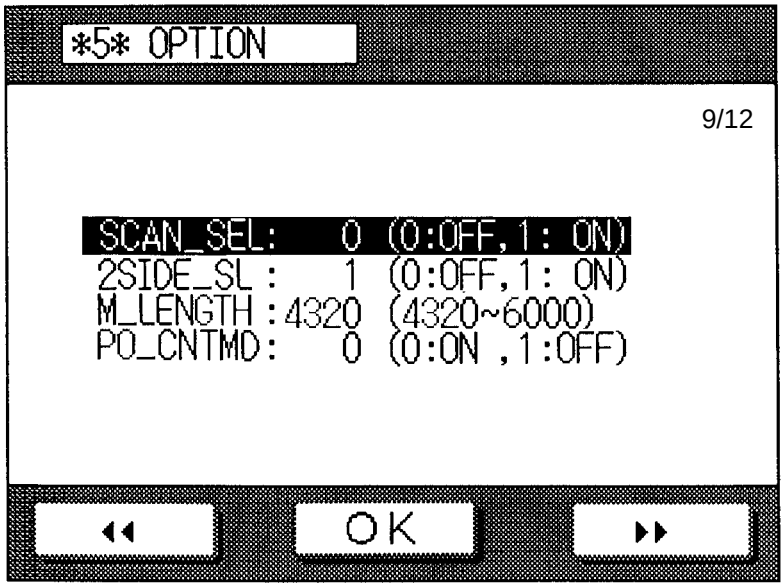

Screen 5-9

Item	Description	Remarks
SCAN_SEL	Use it to enable or disable the original size detection function for the RDF. ON: If the selected mode does not require detection of original size (APS, AMS, frame erasing, etc.), correction is made when assuming an original size considering the paper size and the selected ratio.	0: OFF 1: ON
2SIDE_SL	Use it to specify two-sided mode as the standard mode (one-sided to two-sided). If '0' is selected, the notation "two-sided" will not be indicated unless 'initialize standard mode' is selected in user mode.	0: OFF 1: ON
M-LENGTH	Use it to register a non-default size for the multifeeder. **Note:** Copies may be made only when the sorter is not installed. (Otherwise, a sorter jam will occur because of a paper length not suited to the sorter.)	432 to 600 mm
PO-CNTMD	Use it to enable or disable potential control for the first copying operation at power-on, after 10 min, and after 60 min.	0: ON 1: OFF

 COPYRIGHT © 1997 CANON INC.

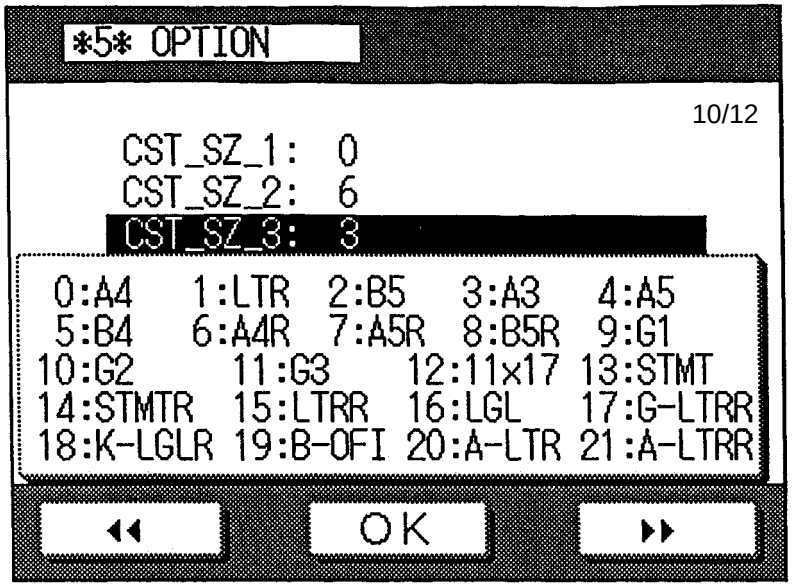

Screen 5-10

Item	Description	Remarks
CST-SZ-1	Use it to change the paper size for the 1st cassette.	
CST-SZ-2	Use it to change the paper size for the 2nd cassette.	
CST-SZ-3	Use it to change the paper size of the 3rd cassette.	

Note: The notations G1, G2, and G3 indicate the paper sizes selected under ‘CST_GRP’ (p. 11-246).

COPYRIGHT © 1997 CANON INC.

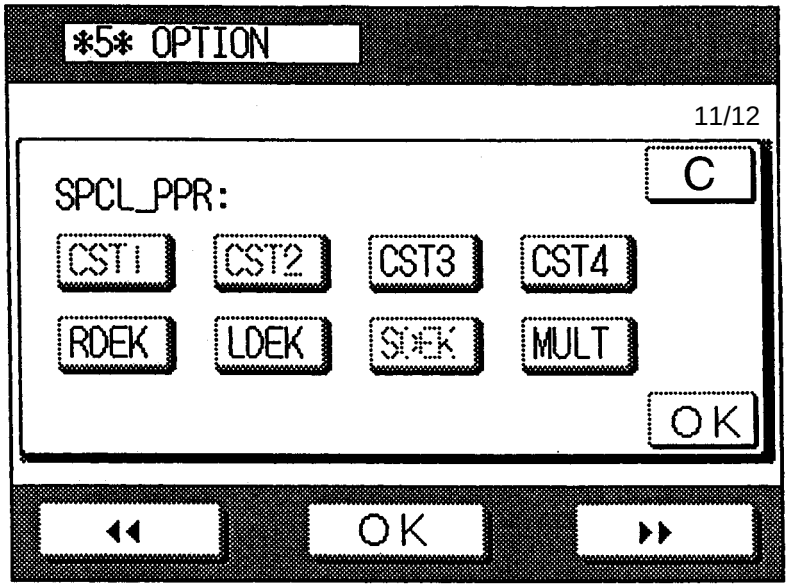

Screen 5-11

Item	Description	Remarks
SPCL-PPR	Use it to select the cassette to use when making copies in thick paper mode.	

Note 1: When thick mode is selected, copying does not start for a maximum of 30 sec until the fixing temperature reaches 202°C (211°C for the first run in the morning) so as to ensure stable fixing.

Note 2: When thick paper mode is selected, the setting made under 'OHP_TEMP' (p. 11-247) will be invalid.

 COPYRIGHT © 1997 CANON INC.

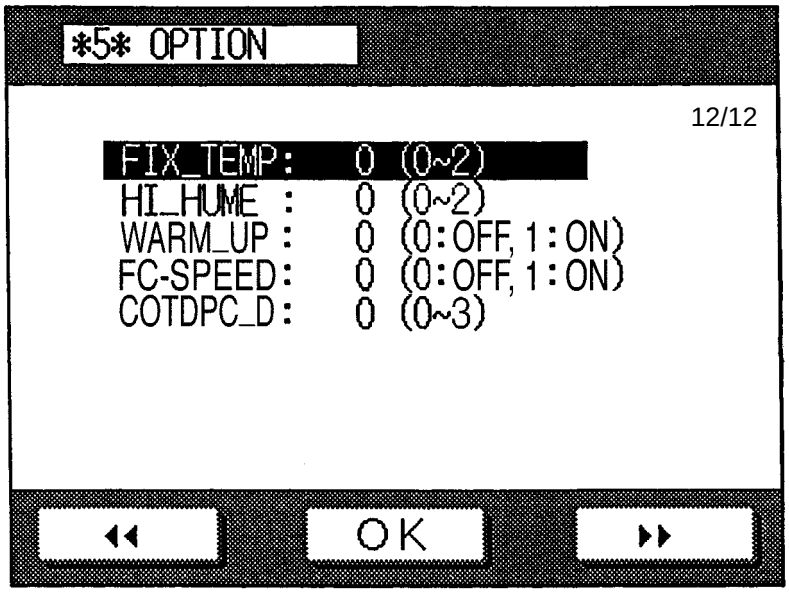

Screen 5-12

Item	Description	Remarks
FIX-TEMP	Use it to change the fixing temperature for copy down sequence. 0: standard 1: standard +10°C (priority on fixing) 2: standard -5°C (priority on productivity)	
HI-HUME	Use it to change the developing bias frequency to suit the humidity condition. 0: 2700 Hz (default) 1: 2700 Hz for 1st side of overlay copy 2000 Hz for 2nd side of overlay copy 2: 2000 Hz	
WARM-UP	Use it to reduce sequence when the power switch is turned on for the first time in the morning (temperature of the fixing assembly 75°C or less). 0: standard (default) 1: shorter (see table below) Sequence / Temperature: INTR start: 180°C STBY: 185°C Copying start: 185°C	
FC-SPEED	For factory	0: default
COTDPC_D	Use it to select the target potential for the "lower" dark area potential (V_D) 0: standard (default) 1: V_D lower by about 20 V 2: V_D lower by about 40 V 3: V_D lower by about 60 V **NOTE:** Selecting 1, 2, or 3, moreover, can lead to a lower-than-standard image quality. A reduction of V_D also affects the target potential after changes have been made to 'ATM' (*3*), but it does not affect photo mode (user mode). The setting selected under 'VDT_SW' is added to or taken from the setting being made in this mode.	The degree of toner consumption may be reduced by selecting 1, 2, or 3. For instance, selecting 1, 2, or 3 will result in a reduction of about 5%, 10%, or 15%, respectively. (These, however, all depend on the environmental conditions and the machine in question.)

COPYRIGHT © 1997 CANON INC.

I. Counter Mode (✻6✻)

Using the ◄◄ or ►► key, select the appropriate screen.

Press the appropriate counter mode (to highlight), and press the C key on the control panel while holding down the service switch, the counter will return to '00000000'.

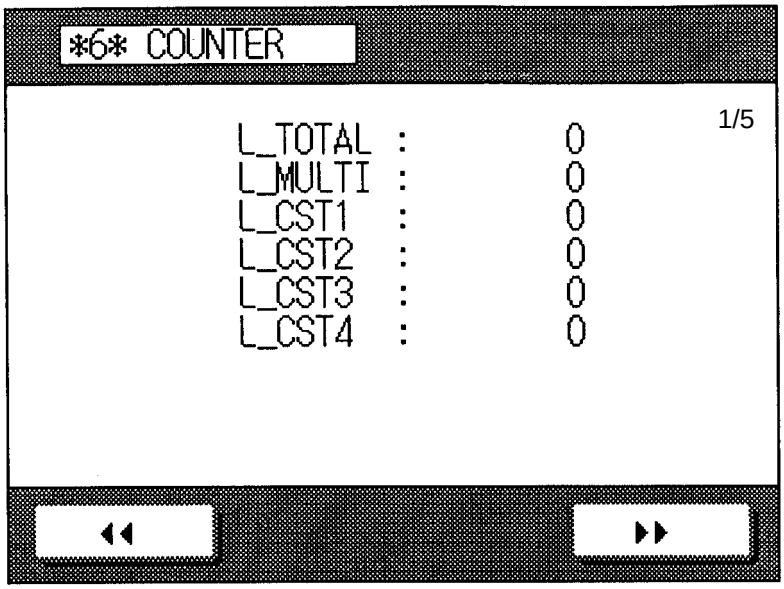

Screen 6-1

Item	Description	Remarks
L-TOTAL	Large size copy total copy counter (300 mm long or more; or, non-default size)	After '99999999', returns to '00000000'.
L-MULTI	Large size copy copy counter for multifeeder (300 mm long or more; or, non-default size)	After '99999999', returns to '00000000'.
L-CST1	Large size copy copy counter for cassette 1 (no counting if front paper deck type; 300 mm long or more; or, non-default size)	After '99999999', returns to '00000000'.
L-CST2	Large size copy copy counter for cassette 2 (not counting front paper deck type; 300 mm long or more; or, non-default size)	After '99999999', returns to '00000000'.
L-CST3	Large size copy copy counter for cassette 3 (300 mm long or more; or, non-default size)	After '99999999', returns to '00000000'.
L-CST4	Large size copy counter for cassette 4 (300 mm long or more; or, non-default size)	After '99999999', returns to '00000000'.

 COPYRIGHT © 1997 CANON INC.

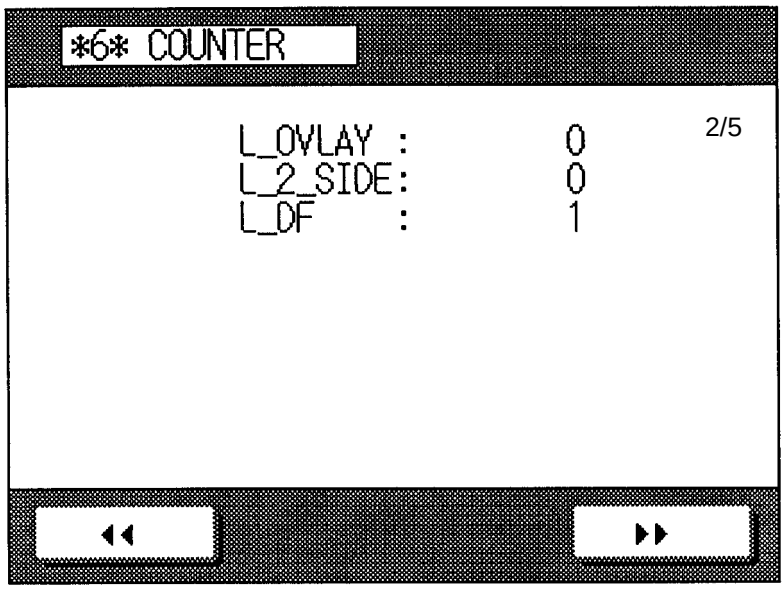

Screen 6-2

Item	Description	Remarks
L-OVERLAY	Large size copy copy counter (2nd side of overlay; 300 mm long or more; or, non-default size)	After '99999999', returns to '00000000'.
L-2-SIDE	Large size copy copy counter (2nd size of two-sided; 300 mm long or more; or, non-default size)	After '99999999', returns to '00000000'.
L-DF	Large size original feed counter (300 mm long or more; or, non-default size)	After '99999999', returns to '00000000'.

COPYRIGHT © 1997 CANON INC.

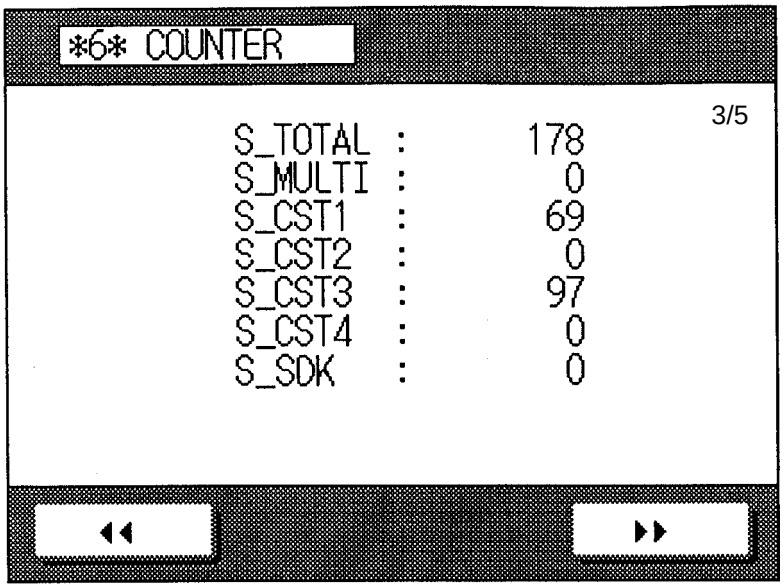

Screen 6-3

Item	Description	Remarks
S-TOTAL	Small size copy total copy counter (less than 300 mm long; or, non-default size)	After '99999999', returns to '00000000'.
S-MULTI	Small size copy copy counter for multifeeder (less than 300 mm long; or, non-default size)	After '99999999', returns to '00000000'.
S-CST1	Small size copy copy counter for cassette 1/ right deck (no counting if front paper deck type; less than 300 mm long; or, non-default size)	After '99999999', returns to '00000000'.
S-CST2	Small size copy copy counter for cassette 2/left deck (not counting front paper deck type; less than 300 mm long; or, non-default size)	After '99999999', returns to '00000000'.
S-CST3	Small size copy copy counter for cassette 3 (less than 300 mm long; or, non-default size)	After '99999999', returns to '00000000'.
S-CST4	Small size copy counter for cassette 4 (less than 300 mm long; or, non-default size)	After '99999999', returns to '00000000'.
S-SDK	Copy counter for paper deck-A1 (less than 300 mm long)	After '99999999', returns to '00000000'.

 COPYRIGHT © 1997 CANON INC.

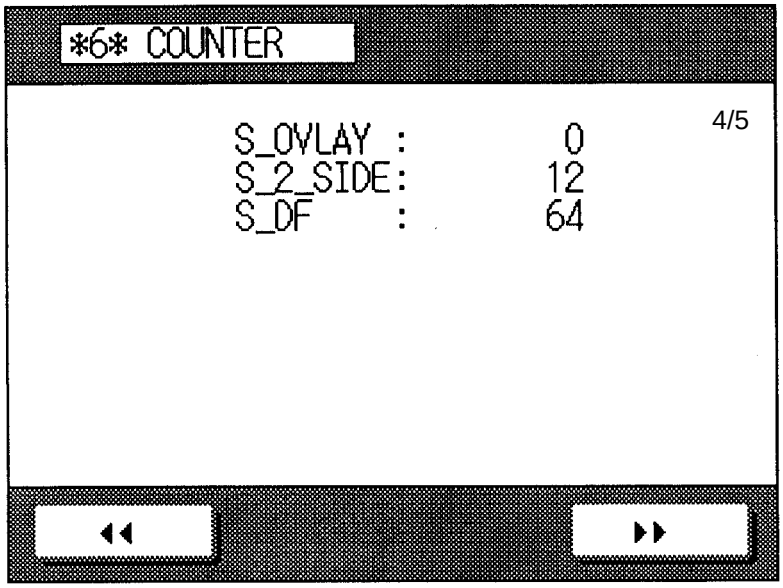

Screen 6-4

Item	Description	Remarks
S-OVERLAY	Small size copy copy counter (2nd side of overlay; less than 300 mm long; or, non-default size)	After '99999999', returns to '00000000'.
S-2-SIDE	Small size copy copy counter (2nd side of two-sided; less than 300 mm long; or, non-default size)	After '99999999', returns to '00000000'.
S-DF	Small size original feed counter (less than 300 mm long)	After '99999999', returns to '00000000'.

COPYRIGHT © 1997 CANON INC.

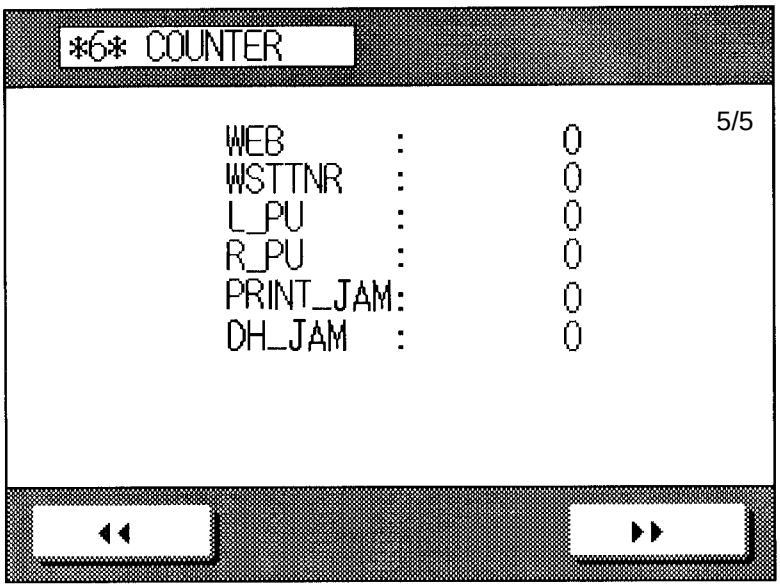

Screen 6-5

Item	Description	Remarks
WEB	Copy counter for after replacing the fixing cleaning belt (alarm is issued when service mode starts after having made 250,000 copies using the data)	After ‘99999999’, returns to '00000000'.
WSTTNR	Copy counter for after disposing of the waste toner from the case (alarm is issued when service mode starts after having made 250,000 copies using the data)	After ‘99999999’, returns to '00000000'.
L_PU*	Counter for RDF left pick-up	After ‘99999999’, returns to ‘00000000’.
R_PU*	Counter for RDF right pick-up	After ‘99999999’, returns to ‘00000000’.
PRINT-JAM	Counter for copier and sorter jams	After ‘99999999’, returns to ‘00000000’.
DH-JAM	Counter for feeder jams	After ‘99999999’, returns to ‘00000000’.

*Like the RDF’s separation pad, some parts need replacement based on the number of copies made according to pick-up direction (left or right).

 COPYRIGHT © 1997 CANON INC.

■ Count Increments

① TOTAL
- 1st side of an overlay/two-sided copy
  when the sheet is stacked on the holding tray
- one-sided copy or 2nd side of an overlay/two-sided copy
  when the sheet is discharged outside the machine (in the bin if a sorter is installed)

② OVERLAY, 2_SIDE
- overlay/two-sided copy
  when the sheet is discharged outside the machine

③ MULTI, CST
- when the sheet is discharged outside the machine.
- 1st side of an overlay/two-sided copy
  when the sheet is stacked on the holding tray

④ RDF
- when the original is pulled in and its size is identified

COPYRIGHT © 1997 CANON INC.

VIII. SELF DIAGNOSIS

The microprocessor on the machine's DC controller PCB is equipped with a mechanism that checks the condition of the machine (of its sensors, in particular), and indicates an error code when it detects a fault.

A. Copier

Code	Cause	Description
E000 (Note 1)	• Main thermistor (TH1; poor contact, open circuit) • Fixing heater (H1, H2; open circuit) • SSR (fault) • DC controller PCB (fault) • Sub thermistor (TH2; poor contact or open circuit; the power will turn off in about 5 sec after indication)	• The temperature of the upper fixing roller does not reach 70°C within 3 min and 30 after power-on.
E001	• Main thermistor (TH1; short circuit) • SSR (fault) • DC controller PCB (fault) • Sub thermistor (TH2; error temperature increase)	• The temperature of the upper fixing roller exceeds 230°C for 2 sec or more.
E002	• Main thermistor (TH1; poor contact, open circuit) • Fixing heater (H1, H2) • Thermal switch (TS1; open circuit) • SSR (fault) • DC controller PCB (fault)	• The temperature of the upper fixing roller does not reach 100°C in 2 min after it has reached 70°C. • The temperature of the upper fixing roller does not reach 150°C in 2 sec or more after it has reached 100°C.
E003	• Main thermistor (TH1; poor contact) • Fixing heater (H1, H2; open circuit) • Thermal switch (TS1; open circuit) • SSR (fault) • DC controller PCB (fault)	• The temperature of the upper fixing roller is 70°C or less for 2 sec or more after it has reached 100°C.
E004	• SSR (fault) • DC controller PCB (fault)	• The SSR used to drive the fixing heater has a short circuit.
E005	• Cleaning belt for the fixing assembly (taken up) • Cleaning belt sensor (PS11; fault) • DC controller PCB (fault)	• The cleaning belt for the fixing assembly has been taken up more than specified.
E006	• Fixing/feeding unit sensor (PS53;fault) • Connector for fixing assembly (fault; rear) • DC controller PCB (fault)	• The fixing feeding assembly became disconnected during copying.

 COPYRIGHT © 1997 CANON INC.

Code	Cause	Description
E010	• Main motor (M1; fault) • DC controller PCB (fault)	• After the main motor drive signal has been generated, 2 or more pulses are not received every 1 sec.
E013	• Waste toner feeding screw (error) • DC controller PCB (fault)	• The waste toner feeding screw cannot rotate, and the switch (MSW4) is pressed several times within a specific period of time.
E015	• Pick-up motor (M2; fault) • DC controller PBC (fault)	• After the pick-up motor drive signal has been generated, 2 or more pulses are not received every 1 sec.
E020	• Hopper motor (M10, M11; fault) • Toner level detection sensor (TS2) inside developing assembly (fault) • Toner level detection sensor (TS1) inside hopper (fault) • DC controller PCB (fault) • Hopper connector (disconnected)	• During copying, the toner supply signal is '0' (toner absent) for 2 min or more. • During installation, the toner supply signal does not go '1' in 10 min or more when executing toner supply sequence.
E030	• Total copy counter (open circuit) • DC controller PCB (fault)	• When the total copy counter is off, an open circuit is detected in the total counter.
E031	• Accessories copy counter (open circuit) • DC controller PCB (fault) • Electromagnetic clutch (CL15) for vertical path drive (harness broken)	• When the accessories counter is off, an open circuit is detected in the accessory counter.
E043	• Deck main motor (M101; fault) • Slide deck drive PCB (fault) • DC controller PCB (fault)	• During initial rotation, clock pulses of the deck main motor are not received for 1.4 sec or more. • During copying, clock pulses of the deck main motor are not received for 2.8 sec or more.
E050	• Holding tray X home position sensor (PS21; fault) • Holding tray X motor (M8; fault) • DC controller PCB (fault)	• While the holding tray X motor (M8) drive signal is being generated, the holding tray X home position signal (HTXHP) is not generated with 4 sec. • While the holding tray X motor (M8) drive signal is being generated, the holding tray X home position signal (HTXHP) is generated for 2 sec or more.

COPYRIGHT © 1997 CANON INC.

Code	Cause	Description
E051	• Holding tray Y home position sensor (PS20; fault) • Holding tray Y motor (M9; fault) • DC controller PCB (fault)	• While the holding tray Y motor (M9) drive signal is being generated, the holding tray Y home position signal (HTYHP) is not generated within 4 sec. • While the holding tray Y motor (M9) drive signal is being generated, the holding tray Y home position signal (HTYHP) is generated for 2 sec or more.
(E202) No code indication; keys locked.	• Scanner motor (M3; fault) • Scanner home position sensor (PS1; faulty) • DC controller PCB (fault)	• The scanner home position signal (SCHP) is not generated within 10 sec after the power switch or the Copy Start key has been turned ON.
E203	• Scanner motor (M3; fault) • Scanner home position (PS1; fault) • DC controller PCB (fault)	• The scanner motor clock pulse signal (SCMCLK) is not generated even though the scanner motor is rotating. • While the scanner motor (M3) drive signal is being generated, the scanner home position signal (SCHP) is generated for 0.5 sec or more.
(E204) No code indication keys locked	• Scanner motor (M3; fault) • Scanner original leading edge sensor (PS3, PS4; fault) • DC controller PCB (fault)	• The scanner leading edge signal (SCDP1) is not generated within 0.8 sec after the scanner has started to move forward. • The scanner leading edge signal (SCDP2) is not generated within 1.0 sec after the scanner has started to move forward.
E210	• Lens X home position sensor (PS6; fault) • Lens X motor (M4; fault) • DC controller PCB (fault)	• The lens X home position signal (LXHP) is not generated within 9 sec after the power switch or the Copy Start key is turned on. • The lens X home position signal (LXHP) is generated for 2 sec or more.
E212	• Lens Y home position sensor (PS7; fault) • Lens Y motor (M5; fault) • DC controller PCB (fault)	• The lens Y home position signal (LYHP) is not generated within 9 sec after the power-switch or the Copy Start key is turned on. • The lens Y home position signal (LYHP) is generated for 2 sec or more.

 COPYRIGHT © 1997 CANON INC.

Code	Cause	Description
E213	• Scanner locked sensor (PS48; fault) • Scanner locking solenoid (SL1; fault) • DC controller PCB (fault)	• During copying in stream reading mode, the scanner locked sensor signal (SCLK) is not generated within a specific period of time. • The scanner does not stop at the scanner original leading edge 2 sensor (PS4).
E214	• Scanner motor cooling fan (FM9;fault) • DC controller PCB (fault)	• The rotation of the scanner motor cooling fan is not detected for a specific period of time.
E220	• Lamp regulator (fault) • DC controller PCB (fault)	• During standby, the scanning lamp turns on. • During copying, the scanning lamp turns off. • The lamp ON detection signal (CVRON) is generated although the scanning lamp ON signal (LAON) is '0'.
E240	• DC controller PCB (fault)	• There is an error in the communication between the microprocessor master (Q156) and the microprocessor slave (Q140) on the DC controller PCB.
E243	• DC controller PCB (fault) • Control panel PCB (fault)	• An error has occurred in the communication between the master (Q156) on the microprocessor on the DC controller PCB and the microprocessor on the control panel PCB.
E710	• DC controller PCB (fault)	• At power-on, the copier detects an error in communication between copier and external device because of an error in the copier's communication IC (IPC;Q158).
E711	• DC controller PCB (fault)	• After power-on, the copier detects an error in communication between copier and external device because of an error in the copier's communication IC (IPC;Q158).
E712	• RDF controller PCB • Connector (poor contact) • 24V power supply (poor contact)	• The communication control IC (IPC) on the RDF controller PCB goes out of order.
E713	• Sorter controller PCB (fault) • Connector (poor connection) • 24V power supply	• The communication control IC (IPC) on the sorter controller PCB goes out of order.

COPYRIGHT © 1997 CANON INC.

Code	Cause	Description
E800	• Auto power-off circuit (open circuit) • DC controller PCB (fault)	• The auto power-off has an open circuit. • The auto power-off signal is generated twice or more within 2 sec.
E802	• Auto power-off circuit (fault) • DC controller PCB (fault)	• The relay (RY401) in the power supply unit does not operate in response to the auto power-off signal.

Caution:

1. When the self-diagnosis mechanism has turned on, you reset the machine by turning off its power switch. This, however, does not work for E000, E001, E002, E003, E004, E005, E013, or E020. It is to prevent the user from casually resetting the machine when the thermistor has an open circuit; otherwise, the fixing roller will overheat or the hopper will overflow.
   In most models, the power switch will automatically turn off in about 20 sec for E000 through E003 even if you leave the machine alone. The machine's power-switch, however, will turn off in about 5 sec after indicating 'E000' if the sub thermistor (TH2) has an open circuit.
   For E000, E001, E002, E003, E004, E005, E013, and E020, you must initialize the data in the RAM on the DC controller PCB.
   1) Start service mode (✻ 4 ✻).
   2) Using the ◀◀ or ▶▶ key, select 'ERROR'.
   3) Press ✻ (user mode) to clear the indication.
   4) The message panel on the control panel will be refreshed, and the Copy Mode screen will return.
2. For E015, E202, and E204, you can make checks in reference to B-ERR1, B-ERR2, and B-ERR3 in service mode (✻ 1 ✻).

 COPYRIGHT © 1997 CANON INC. CANON NP6560/NP6360/NP6260 REV. 0 NOV. 1997 PRINTED IN JAPAN (IMPRIME AU JAPON)

B. RDF-D1

Code	Cause	Description
E400	• Data communication (with copier)	• The communication is monitored at all times. The error occurs when there is an interruption for 5 sec.
E401	• Pick-up roller sensor (S8, S21; fault) • Pick-up motor (M1; fault) • Pick-up clutch (CL1; fault)	• Initialization does not end in 2 sec. (The flat face of the pick-up roller/D-cut roller is at top, and is at home position.)
E402	• Belt motor clock sensor (S11; fault) • Belt motor (M3; fault)	• The number of belt motor clock pulses within 100 msec is less than specified.
E403	• Reversing motor clock sensor (S10; fault) • Reversing motor (M2; fault)	• The number of reversal motor clock pulses within 100 msec is less than specified.
E404	• Delivery motor clock sensor (S12; fault) • Delivery motor (M5; fault)	• The number of delivery motor clock pulses within 200 msec is less than specified.
E405	• Pick-up motor clock sensor (S9; fault) • Pick-up motor (M1; fault)	• The number of pick-up motor clock pulses within 200 msec is less than specified.
E406	• Original stopper motor (M7; fault) • Stopper home position sensor (S26; fault) • Motor (out of order) • Tray trailing edge sensor (low performance)	• The guide shift by the original stopper motor does not end within a specific period of time. • The sensor output does not change when the original stopper motor has been driven for 2 sec or more.
E407	• Original tray ascent motor (M6; fauly) • Tray position sensor (S25; fault)	• The tray shift by the original tray ascent motor does not end within a specific period of time.
E408	• Feeding motor clock sensor (S22; fault) • Feeding motor (M8; fault)	• The number of feeding motor clock pulses within 100 msec is less than specified.
E411	• Registration sensor 1 (S3; fault) • Skew sensor 1 (S4; fault) • Manual feed registration sensor (S19; fault) • Image leading edge sensor 1 (S20; fault) • Original sensor 1 (S1; fault) • Original sensor 2 (S27; fault)	The sensor output is 2.3 V or more in the absence of paper.

COPYRIGHT © 1997 CANON INC.

Note:

When the self-diagnosis has turned on, you can reset the machine by turning it off once.
If the RDF is out of order, disconnect the lattice connector on the RDF side, open the RDF, and set the original on the copyboard glass to continue to make copies.

 COPYRIGHT © 1997 CANON INC. CANON NP6560/NP6360/NP6260 REV. 0 NOV. 1997 PRINTED IN JAPAN (IMPRIME AU JAPON)

C. Sorter

Code	Cause	Description
E500	• The CPU (Q1) or the communications IC (Q3) on the sorter controller PCB is not operating normally.	• An error in the communication between sorter and copier occurred.
E510	• Feeding motor (M1; fails) • Feeding guide (up/down mechanism, interference, etc.)	• The clock signal from the motor remains off for 250 msec.
E522	• Push bar motor (M7; fails)	• After the motor drive signal has been generated, the operation does not end in 2 sec.
E523	• Reference wall motor (M6; fails)	• After the motor drive signal has been generated, the operation does not end in 2 sec.
E524	• Multi guide motor (M5; fails)	• After the motor drive signal has been generated, the operation does not end in 2 sec.
E525	• Bin paper sensor automatic adjustment (fails)	• The bin paper sensor cannot be adjusted automatically, or the automatic adjustment setting has an error.
E526	• Bin paper sensor (S6, S7; auto adjust fault)	• The bin paper sensor (S6, S7) cannot be adjusted automatically, or the automatic adjustment setting has an error.
E530	• Guide bar swing motor (M8; fails)	• After the motor drive signal has been generated, the operation does not end within a specific period of time. for front access, 5 sec for others, 2 sec
E531	• Stapler unit swing motor (M4; fails)	• After the motor drive signal has been generated, the operation does not end in 2 sec. • Clock signals from the motor clock sensor (PI8) are not received for 250 msec. • The input signal from the swing home position sensor (PI9) does not change for 1 sec or more.

COPYRIGHT © 1997 CANON INC.

■ Sorter

• Error Indication, Error Description, Detection Timing

Code	Cause	Description
E532	• Stapler unit shift motor (M3; fails)	• After the motor drive signal has been generated, the operation does not end in 5000 msec.
E533	• Stapler paper sensor automatic adjustment (fault)	• The stapler automatic adjustment mechanism fails, or the automatic adjustment setting has an error.
E540	• Bin shift motor (M9; fails)	• After the motor drive signal has been generated, the operation does not end within a specific period of time. for initial, 20 sec for others, 2 sec • Clock signals from the motor clock sensor (PI17) are not received for 250 msec or more. • Input signals from the lead cam position sensor (PI20) do not change for 2 sec or more.
E550	• Power supply (fault)	• During initial rotation or when the Copy Start key is pressed, 24 VP is not supplied.

■ Resetting

If the copier is making copies,

① Indicates the message Jam.
② When reset, indicates the message 'Turn On the Power'.
③ When turned off and then on, runs a self check. If the results are good, the machine is reset; otherwise, starts down* state (indicating 'E5XX' on its control panel).

If the copier is not making copies,

① Indicates the message 'Turn On the Power'.
② When turned off and then on, runs a self check. If the results are good, reset; otherwise, starts down* state (indicating 'E5XX' on its control panel).

• Down State and Operation (associated with an E code)

① Indicates 'E5XX'.
② When the sorter is detached, ready for making copies (in modes not requiring the sorter).
③ Indicates the message Mode Not Available if a mode requiring the sorter is selected.

* After the copier started down state, you may turn it off and then on; if the results of the self check it runs in response are good, it will be reset (with the sorter connected).

 COPYRIGHT © 1997 CANON INC. CANON NP6560/NP6360/NP6260 REV. 0 NOV. 1997 PRINTED IN JAPAN (IMPRIME AU JAPON)

APPENDIX

A. GENERAL TIMING CHART I A-1
B. SIGNALS AND ABBREVIATIONS ...A-3
C. GENERAL CIRCUIT DIAGRAM A-5
D. PAPER DECK-A1 GENERAL CIRCUIT DIAGRAM A-7
E. SPECIAL TOOLS A-9
F. SOLVENTS AND OILS.....A-10

COPYRIGHT © 1997 CANON INC. CANON NP6560/NP6350/NP6251 REV. 0 JULY 1997 PRINTED IN JAPAN (IMPRIME AU JAPON)

A. GENERAL TIMING CHART I

• A4, 2 Copies Continuous, Right Deck

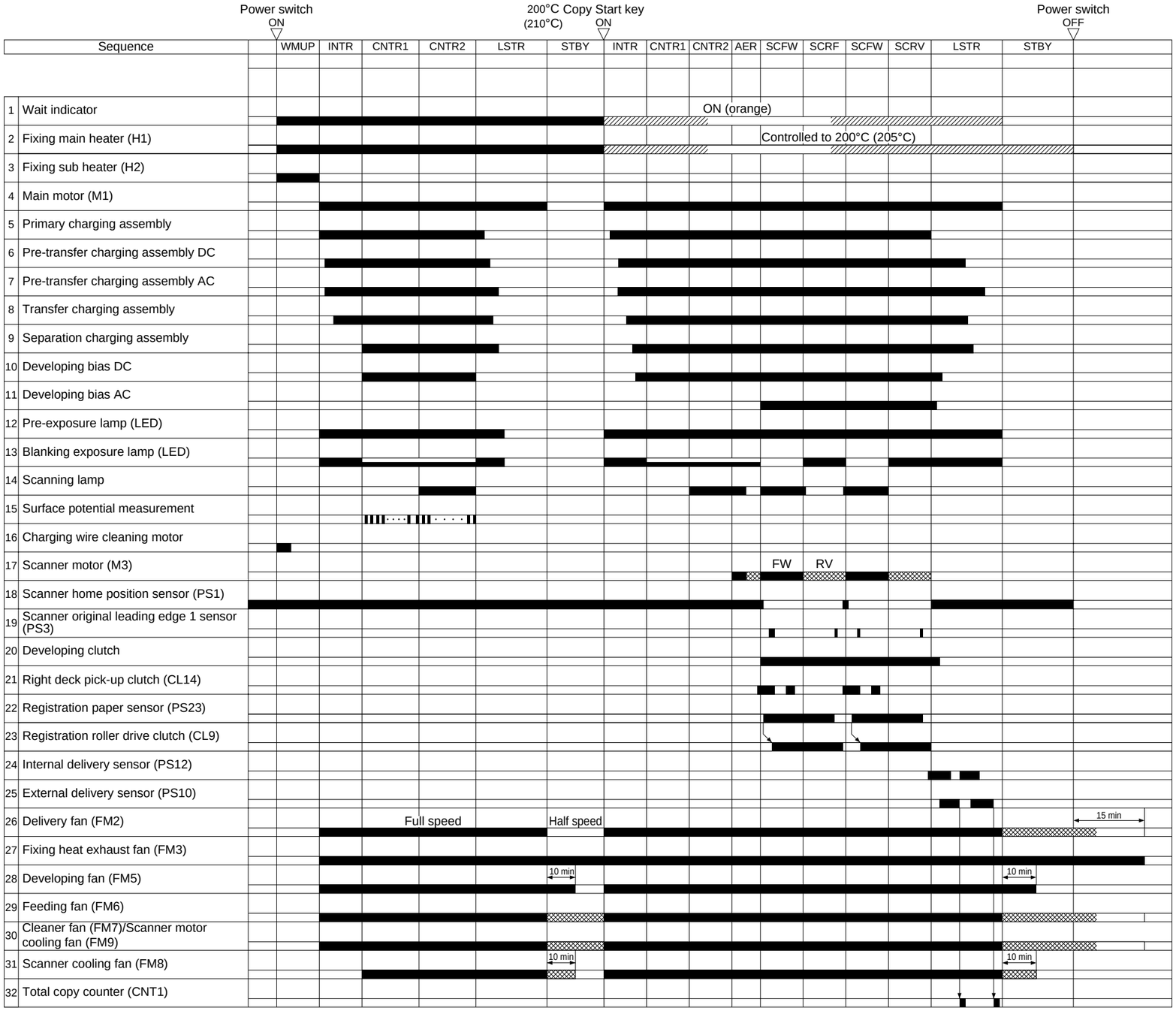

COPYRIGHT © 1997 CANON INC.

GENERAL TIMING CHART II (CONSOLIDATED)

• Copier + RDF-D1 + Stapler Sorter-E2

• A4, 2 Originals, 2 Copies, Right Deck Pick-Up; RDF Right Pick-Up (stream reading); Sorter Double Stapling

Note:
The notation SCFW with an asterisk (*) is in stream reading mode.

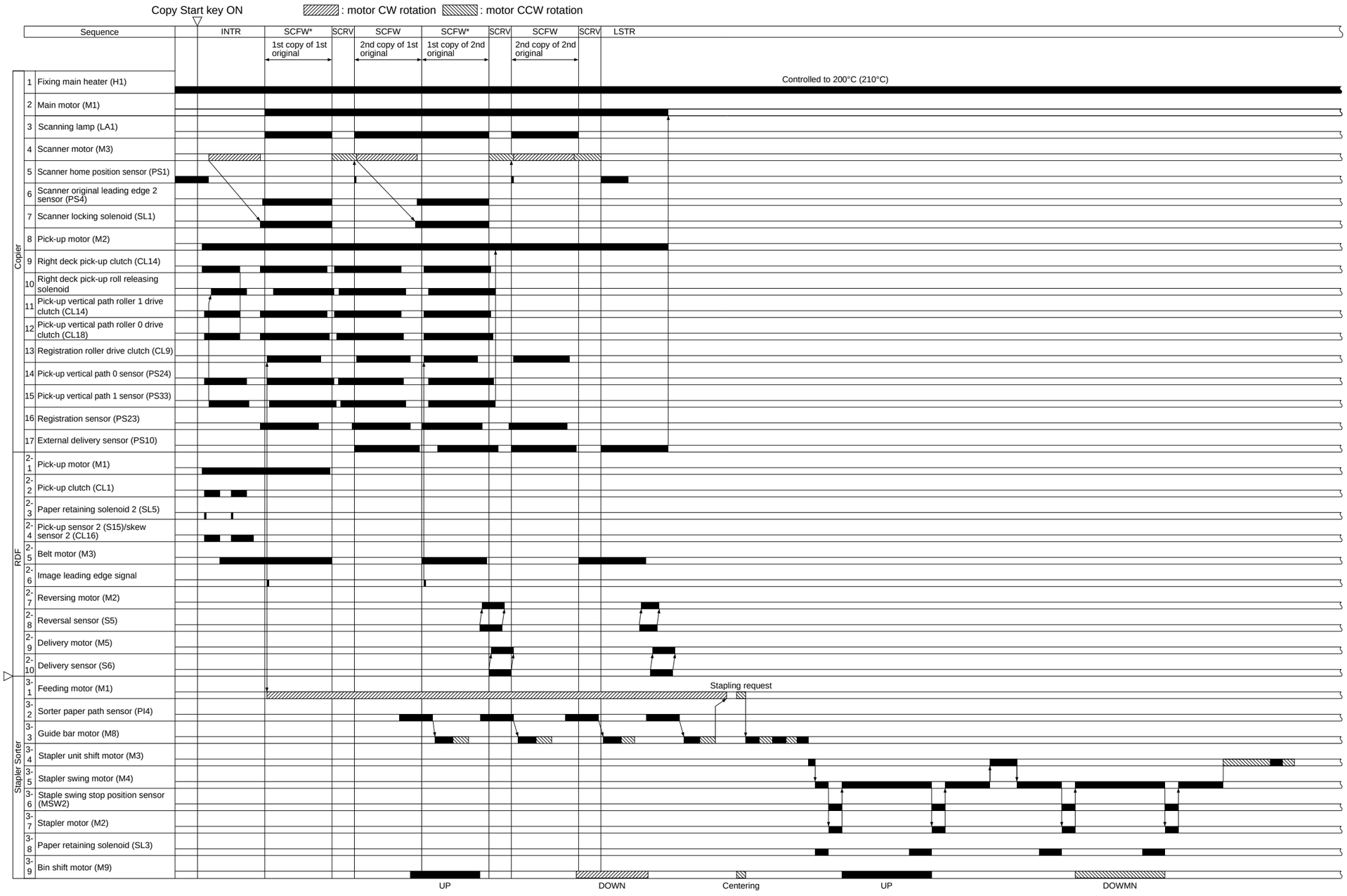

COPYRIGHT © 1997 CANON INC.

CANON NP6560/NP6360/NP6260 REV. 0 NOV. 1997 PRINTED IN JAPAN (IMPRIME AU JAPON)

B. SIGNALS AND ABBREVIATIONS

What follow below is a list of signals and abbreviation used in the chapters of the manual and circuit diagrams.
The abbreviations within parentheses represent analog signals, shich cannot be expressed in terms of '1' or '0'.

1. Signals

ACBTP	AC BIAS TIMING PULSE command
ACON	AC TRANSFORMER DRIVE command
LED2ON	BLANK EXPOSURE (0V) command
RDLTP	RIGHT DECK LIFTER POSITION signal
C3LMD	CASSETTE 3 LIFTER MOTOR DRIVE command
C3LTP	CASSETTE 3 LIFTER POSITION signal
C3PD	CASSETTE 3 PAPER DETECT signal
C3PL0	CASSETTE 3 PAPER LENGTH signal
C3PL1	CASSETTE 3 PAPER LENGTH signal
C3PUCD	CASSETTE 3 PICK-UP ROLLER CLUTCH DRIVE command
C3PURR	CASSETTE 3 PICK-UP ROLLER RELEASE SOLENOID DRIVE command
C3PW	CASSETTE 3 PAPER WIDTH signal
C3SS	CASSETTE 3 SET UP signal
C4LMD	CASSETTE 4 LIFTER MOTOR DRIVE command
C4LTP	CASSETTE 4 LIFTER POSITION signal
C4PD	CASSETTE 4 PAPER DETECT signal
C4PL0	CASSETTE 4 PAPER LENGTH signal
C4PL1	CASSETTE 4 PAPER LENGTH signal
C4PUCD	CASSETTE 4 PICK-UP ROLLER CLUTCH DRIVE command
C4PURR	CASSETTE 4 PICK-UP ROLLER RELEASE SOLENOID DRIVE command
C4PW	CASSETTE 4 PAPER WIDTH signal
C4SS	CASSETTE 4 SET UP signal
CBCC	COPYBOARD COVER CLOSED signal
CBOP	CLEANING BELT OUT PRECAUTION signal
CCNNT	CONTROL CARD DETECT signal
CCNTD	CONTROL CARD DRIVE command
CL11D	VERTICAL PATH ROLLER 3 CLUTCH DRIVE command
CL13D	VERTICAL PATH ROLLER 4 CLUTCH DRIVE command
CL15D	VERTICAL PATH ROLLER 1 CLUTCH DRIVE command
CL18D	VERTICAL PATH ROLLER 0 CLUTCH DRIVE command
DCBC	DC BIAS CONTROL signal
DCBTP	DC BIAS TIMING PULSE command
DEVCD	DEVELOPING CLUTCH DRIVE command
DHRD	DRUM HEATER DRIVE command
DPDSD	DELIVERY PAPER DEFLECTOR SOLENOID DRIVE command
DSZ1	DOCUMENT SIZE 1 signal
DSZ2	DOCUMENT SIZE 2 signal
DSZ3A	DOCUMENT SIZE 3 signal
DSZ3B	DOCUMENT SIZE 3 signal
DTEP	DEVELOPER TONER signal
EXDPD	EXTERNAL DELIVERY PAPER DETECT signal
FCBSD	FIXING CLEANING BELT DRIVE SOLENOID DRIVE command
FDOD	FRONT DOOR OPEN DETECT signal
FFUCNT	FIXING/FEEDER UNIT CONNECT signal
FFULSD	FIXING/FEEDER UNIT LOCK SOLENOID DRIVE command
FM2D	EXHAUST FAN DRIVE command (HALF SPEED)
FM3D	EXHAUST FAN DRIVE command (HALF SPEED)
FM7D	EXHAUST FAN DRIVE command (HALF SPEED)
FM2D	EXHAUST FAN DRIVE command (FULL SPEED)
FM3D	EXHAUST FAN DRIVE command (FULL SPEED)
FM5D	DEVELOPING UNIT COOLING FAN DRIVE command
FM6D	FEEDER FAN DRIVE command
FM7D	EXHAUST FAN DRIVE command (FULL SPEED)
FM8D	SCANNING LAMP COOLING FAN DRIVE command
FM9ROT	SCANNER MOTOR COOLING FAN ROTATION DETECTION signal
FXCJS	FIXING ASSEMBLY CLAW JAM signal
FXDEL	FIXING UNIT DELIVERY PAPER DETECT signal
FXDSD	FIXING UNIT DRIVE SOLENOID command
FXGDSD	FIXING ASSEMBLY GUIDE DOWN SOLENOID DRIVE command
FXGUSD	FIXING ASSEMBLY GUIDE UP SOLENOID DRIVE command
HTCNT	HOLDING TRAY CONNECT signal
HTDSD	HOLDING TRAY D-CUT SOLENOID DRIVE command
HTF1CD	HOLDING TRAY FEEDER 1 CLUTCH DRIVE command
HTF2CD	HOLDING TRAY FEEDER 2 CLUTCH DRIVE command
HTFCNT	HOLDING TARY FEEDER UNIT CONNECT signal
HTFWCD	HOLDING TRAY FORWARD CLUTCH DRIVE command
HTJSD	HOLDING TRAY JOGGING SOLENOID DRIVE command
HTLPD	HOLDING TRAY LAST PAPER DETECT HOME POSITION signal
HTPDD	HOLDING TRAY PAPER DEFLECTOR SOLENOID DRIVE command
HTRGCD	HOLDING TRAY REGISTRATION ROLLER CLUTCH DRIVE command
HTRVCD	HOLDING TRAY REVERSE CLUTCH DRIVE command
HTSPCD	HOLDING TRAY SEPARATION CLUTCH DRIVE command
HTWSD	HOLDING TRAY WEIGHT SOLENOID DRIVE command
HTXHP	HOLDING TRAY X HOME POSITION signal
HTYHP	HOLDING TRAY Y HOME POSITION signal
HUM1	MACHINE INSIDE HUMIDITY signal 1
HUM2	MACHINE INSIDE HUMIDITY signal 2
HVPCT	PRE-TRANSFER CORONA CURRENT CONTROL command
HVSCT	SEPARATION CORONA CURRENT CONTROL command
HVTCT	TRANSFER CORONA CURRENT CONTROL command
HVTPC	PRIMARY CORONA CURRENT CONTROL command
IDPD	INSIDE DELIVERY PAPER DETECT signal
LAON	SCANNING LAMP DRIVE command
LCDLGHT	LCD BACK-LIGHT ON command
LED2CK	BLANK EXPOSURE command (CLOCK)
LED2DT	BLANK EXPOSURE command (DATA)
LED2LD	BLANK EXPOSURE command (DATA LATCH)
LINT	CVR PWM signal
LXHP	LENS X HOME POSITION signal
LYHP	LENS Y HOME POSITION signal
M1H/L	MAIN MOTOR SPEED CHANGE command
M2BLK	PAPER PICK-UP MOTOR BRAKE command
M2H/L	PAPER PICK-UP MOTOR SPEED CHANGE command
M3BRK	SCANNER MOTOR BRAKE command

COPYRIGHT © 1997 CANON INC.

M3F/R	SCANNER MOTOR FORWARD command
M3FS	SCANNER MOTOR SPEED signal
M3MD0	SCANNER MOTOR REPRODUCTION RATIO SELECT (0) command
M3MD1	SCANNER MOTOR REPRODUCTION RATIO SELECT (1) command
M3MD2	SCANNER MOTOR REPRODUCTION RATIO SELECT (2) command
M3ON	SCANNER MOTOR DRIVE command
M3CL	SCANNER MOTOR PLL CONTOL command
M4A	LENS X MOTOR (A) command
X-HOLD	LENS X MOTOR (HOLD) command
M4B	LENS X MOTOR (B) signal
M5A	LENS Y MOTOR (A) signal
Y-HOLD	LENS Y MOTOR (HOLD) signal
M5B	LENS Y MOTOR (B) signal
M8A	HOLDING TRAY X MOTOR (A) command
M8B	HOLDING TRAY X MOTOR (B) command
M8HLD	HOLDING TRAY X MOTOR (HOLD) command
M9A	HOLDING TRAY Y MOTOR (A) command
M9B	HOLDING TRAY Y MOTOR (B) command
M9HLD	HOLDING TRAY Y MOTOR (HOLD) command
M1FG	MAIN MOTOR 1/4 CLOCK PULSE signal
M1ON	MAIN MOTOR DRIVE command
M10ON	HOPPER MOTOR (TONER SUPPLY) DRIVE command
M11ON	HOPPER MOTOR (TONER STIRRING) DRIVE command
M2ON	PAPER FEED MOTOR DRIVE command
M7ON	HOLDING TRAY LAST PAPER DETECT MOTOR DRIVE command
MFDC	MULTIFEEDER DOOR OPEN DETECT signal
MFPCD	MULTIFEEDER PICK-UP CLUTCH ROLLER DRIVE command
MFPW	MULTI FEEDER PAPER WIDTH signal
MFRLSD	MULTIFEEDER PICK-UP RELAY SOLENOID DRIVE command
MFS	MULTIFEEDER PAPER DETECT signal
MHOND	MULTIFEEDER PAPER DETECT signal
MHRD	MAIN HEATER DRIVE command
OPCNTD	OPTION COUNTER DRIVE command
OPRST	OPERATION PANEL CPU RESET command
PCLHP	PRIMARY CORONA WIRE CLEANER HOME POSITION signal
PCLM	PRIMARY CORONA WIRE CLEANER MOTOR DRIVE command
PEXP	PRE-EXPOSURE LED DRIVE command
POT	PHOTOSENSITIVE DRUM SURFACE POTENTIAL signal MOTOR
POT-S-ON	PHOTOSENSITIVE DRUM SURFACE POTENTIAL SENSOR POWER ON command
PS14D	HOLDING TRAY REGISTRATION PAPER DETECT signal
PS15D	HOLDING TRAY ENTRANCE PAPER DETECT signal
PS17D	HOLDING TRAY PAPER DETECT signal
PS24D	PICK-UP VERTICAL PATH-0 PAPER DETECT signal
PS27D	PICK-UP VERTICAL PATH-3 PAPER DETECT signal
PS30D	PICK-UP VERTICAL PATH-4 PAPER DETECT signal
PS33D	PICK-UP VERTICAL PATH-1 PAPER DETECT signal
PS36D	PICK-UP VERTICAL PATH-2 PAPER DETECT signal
PS8D	HOLDING TRAY FEEDER 1 PAPER DETECT signal
PS9D	HOLDING TRAY FEEDER 2 PAPER DETECT signal
PTCLHP	PRE-TRANSFER CORONA WIRE CLEANER HOME POSITION signal
PTRCLM	PRE-TRANSFER CORONA WIRE CLEANER MOTOR DRIVE command
PWOFF	POWER SWITCH OFF command
RDEL	RIGHT DECK LIFTER LIMIT signal
RDEOP	RIGHT DECK OPEN DETECT signal
RDFEDGE	RDF DOCUMENT LEADING EDGE signal
RDLMD	RIGHT DECK LIFTER MOTOR DRIVE command
RDPD	RIGHT DECK PAPER DETECT signal
RDPUCD	RIGHT DECK PICK-UP ROLLER CLUTCH DRIVE command
RDPURR	RIGHT DECK PICK-UP ROLLER RELEASE SOLENOID DRIVE command
RGCD	REGISTRATION ROLLER CLUTCH DRIVE command
RGPD	REGISTRATION PAPER DETECT signal
RL401D	PWU RELAY DRIVE command
RLWDOP	RIGHT LOWER DOOR OPEN DETECT signal
ROED	ROLLER ELECTRO BIAS DRIVE command
RUPDOP	RIGHT UPPER DOOR OPEN DETECT signal
SCDP1	SCANNER DOCUMENT LEADING EDGE 1 signal
SCHP	SCANNER HOME POSITION signal
SHOND	SUB HEATER ON DETECT signal (120V)
SHRD	SUB HEATER DRIVE command (120V)
SL10BD	MULTIFEED ROLLER SOLENOID DRIVE command
SL10FD	MULTIFEED ROLLER SOLENOID DRIVE command
SL10D	MULTI FEEDER PICK-UP SOLENOID DRIVE command
SSWON	SERVICE SWITCH signal
SW1ON	POWER SWITCH ON DETECT signal
TCNTD	TOTAL COUNTER DRIVE command
TEP	HOPPER TONER signal
TH1	FIXING HEATER THERMISTOR signal 1
TH2	FIXING HEATER THERMISTOR signal 2
TH	DRUM HEATER THERMISTOR signal
TSCLHP	TRANSFER/SEPARATION CORONA WIRE CLEANER HOME POSITION signal
TSCLM	TRANSFER/SEPARATION CORONA WIRE CLEANER DRIVE command
WTFL	WASTE TONER FEEDING SCREW LOCK DETECT signal

2. Abbreviations

AER	AE (MEASUREMENT) ROTATION
CNTR1	CONTROL ROTATION 1
CNTR2	CONTROL ROTATION 2
INTR	INITIAL ROTATION
LSTR	LAST ROTATION
SCFW	SCANNER FORWARD
SCRV	SCANNER REVERSE
STBY	STANDBY
WAIT	WAIT
WMUP	WARM UP
WMUPR	WARM UP ROTATION

COPYRIGHT © 1997 CANON INC. CANON NP6560/NP6360/NP6260 REV. 0 NOV. 1997 PRINTED IN JAPAN (IMPRIME AU JAPON)

DC CONTROLLER PCB

DC POWER SUPPLY UNIT

HOLDING TRAY CONTROL PCB

AC DRIVER PCB

DRUM HEATER CONTROL PCB

HIGH VOLTAGE UNIT

CONTROL PANEL CONTROLLER PCB

TEN KEY PCB

CONTROL PANEL BACKLIGHT LAMP

CONTROL PANEL LCD

SERVICE SWITCH PCB

CARD READER (ACC)

Holding tray forward clutch

Holding tray registration clutch

Holding tray reversing clutch

Holding tray separation clutch

Holding tray re-pick-up roller (D-cut roller) solenoid

Holding tray recirculating lever motor

Holding tray recirculating lever home position sensor

Holding tray switching solenoid

Holding tray(Y) home position sensor

Holding tray (Y) motor

Holding tray (X) motor

Holding tray(X) home position sensor

Holding tray paper deflecting plate solenoid

Holding tray weight solenoid

Holding tray inlet paper sensor

Holding tray feeding assembly 2 paper sensor

Holding tray registration paper sensor

Holding tray pick-up sensor

Waste toner feeding screw locking detection

Scanner locked sensor

Scanner locking solenoid

Cleaner fan

Pick-up motor

Multifeeder pick-up solenoid

Multifeeder paper sensor

Multifeeder pick-up clutch

Multi-feeder pick-up relay solenoid

Multifeeder paper width detection

Multifeeder door switch

High voltage unit 1

High voltage unit 2

Pre-transfer corona wire cleaning motor

Pre-exposure LED

Primary corona wire cleaning motor

Potential sensor

Blank-exposure LED

Scanner cooling fan

Fixing heat exhausting fan

Hopper motor (for stirring)

Hopper toner sensor

Hopper motor (for supply)

Pick-up vertical path roller 0 drive clutch

Developing fan

Environment sensor

Pick-up vertical path 2 sensor

Right deck limiter sensor

Right deck open/closed sensor

Pick-up vertical path 3 sensor

Right deck pick-up clutch

Right deck limiter position sensor

Right deck paper sensor

Pick-up vertical path roller 1 drive clutch

Cassette 4 paper width detection

Exhaust fan

Developing assembly toner level detection

Pick-up vertical path roller 3 drive clutch

Cassette 3 open/closed sensor

Cassette 3 pick-up roller releasing solenoid

Cassette 3 paper sensor

Cassette 3 limiter position sensor

Right deck limiter drive

Left deck limiter drive

Upper right door sensor

Lower right door sensor

Cassette 4 lifter motor

Cassette 3 lifter motor

Pick-up vertical path 1 sensor

Holding tray feeding assembly 1 paper sensor

Holding tray feeding assembly inlet detection

Left dick outlet paper sensor

Left deck limiter sensor

Right deck pick-up roller releasing solenoid

Left deck paper sensor

Left deck pick-up roller releasing solenoid

Left deck limiter position sensor

Left deck pick-up clutch

Left deck open/closed sensor

Cassette 4 paper length detection

Pick-up vertical path roller 4 drive clutch

Pick-up vertical path 4 sensor

Cassette 4 open/closed sensor

Cassette 4 pick-up roller releasing solenoid

Cassette 4 limiter position sensor

Cassette 4 paper sensor

Cassette 4 pick-up clutch

Holding tray feeding 2 clutch

Holding tray feeding 1 clutch

Copyboard cover open/closed sensor

Developing clutch

Lamp regulator

Scanner motor

Main motor

Feeding fan

Fixing assembly pick-up sensor

Fixing assembly inlet guide drive solenoid

Fixing assembly outlet paper sensor

Fixing/feeding unit locking solenoid

Fixing assembly main thermistor

Fixing assembly sub thermistor

Delivery paper deflecting plate solenoid

Fixing cleaning belt drive solenoid

Fixing cleaning belt length sensor

Fixing assembly internal delivery sensor

Fixing assembly external delivery sensor

Fixing/feeding unit sensor

Registration roller drive clutch

Registration paper sensor

Transfer/separation corona wire cleaning motor

Fixing brake clutch

Lens(Y) motor

Lens(Y) home position sensor

Lens(X) motor

Lens(X) home position sensor

Original size detection

Scanner original loading home position sensor

Scanner original loading edge-1 sensor

Scanner original loading edge-2 sensor

Scanning lamp

Thermal fuse

Fixing main heater

Fixing sub heater

Front door switch (SW2)

Drum heater switch (SW3)

Power supply switch (SW1)

Lamp regulator

Cassette heater power supply cord (accessory)

Cassette heater

Drum heater

Circuit breaker

Noise filter

Scanner motor cooling fan

Exhaust fan

Fixing drive stop solenoid

To earth Fuser Reed unit

To earth Regi sub unit

LENS STAG UNIT

STAGE UNIT

POWER CORD MOUNT

to SORTER

to HOLDING TRAY CONTROL PCB

to PAPER DECK-A1

to TRAY RAIL

COUNTER 2 (ACC)

TOTAL COUNTER

Flexible cable

Fuse

Multifeeder door sensor

Developing assembly toner level detection

COPYRIGHT © 1997 CANON INC.

CANON NP6560/NP6360/NP6260 REV. 0 NOV. 1997 PRINTED IN JAPAN (IMPRIME AU JAPON)

D. PAPER DECK-A1 GENERAL CIRCUIT DIAGRAM

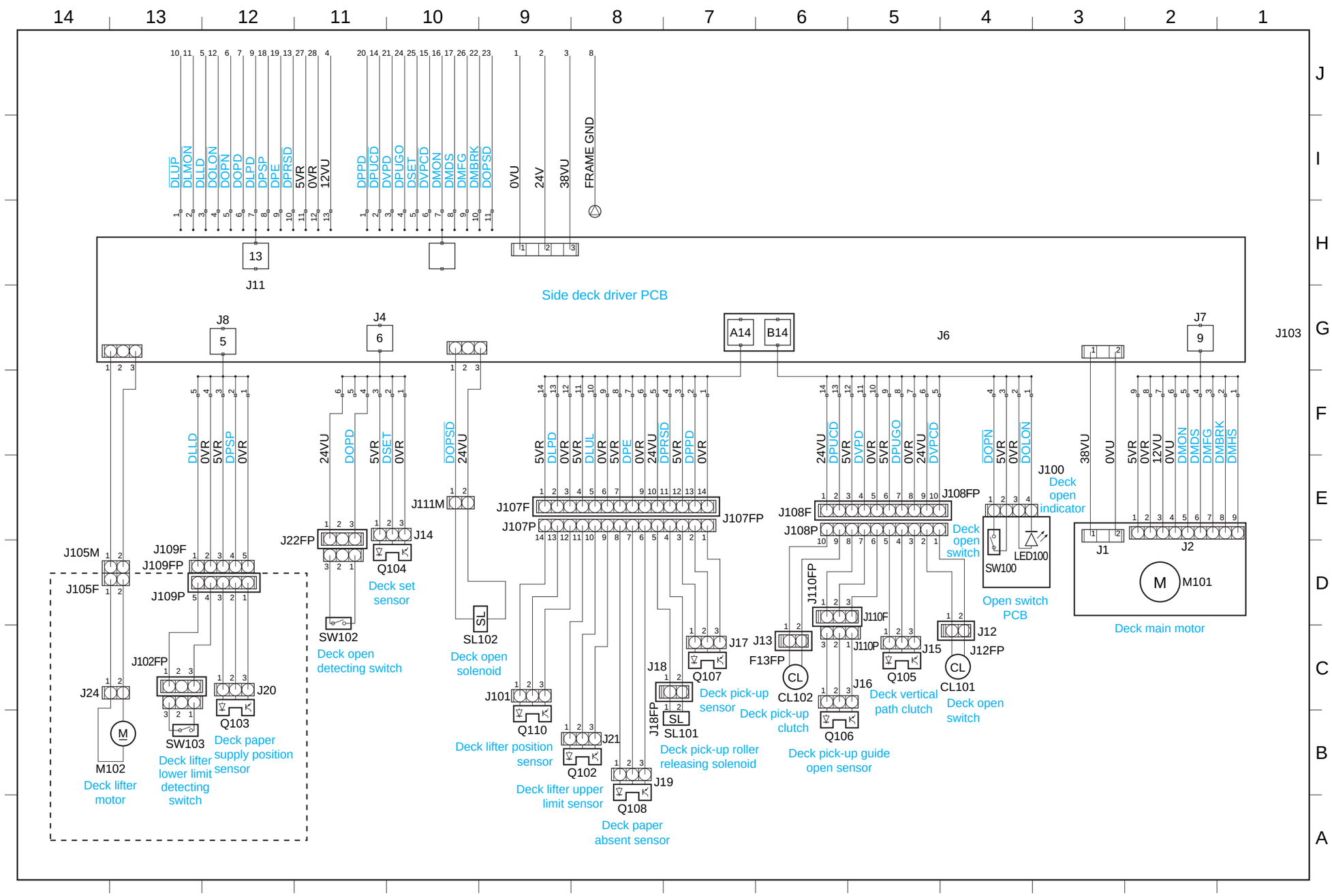

COPYRIGHT © 1997 CANON INC.

E. SPECIAL TOOLS

No.	Tool name	Tool number	Shape	Category*	Remarks
1	Door switch	TKN-0093	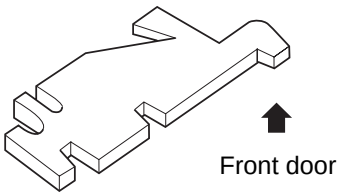	A	
2	Cleaning oil	CK-0054		A	Use to clean the fixing roller. (10 packs/box)
3	Mirror positioning tool	FY9-3011	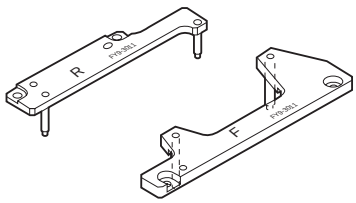	B	Use to adjust the No. 1 and No. 2 mirror position. (front and rear in a pair)
4	Potential sensor checking electrode	FY9-3012	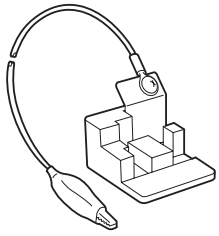	B	Use to check the potential sensor.
5	Environment sensor checking tool	FY9-3014	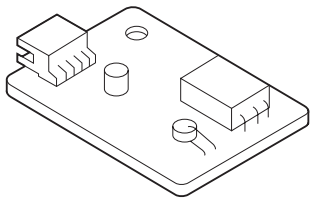	B	Use to check the environment sensor.

*The tools are categorized as follows:
A: tools that must be carried by each service person.
B: tools that must be carried by a group of about five service persons.
C: tools that must be kept by each workshop.

COPYRIGHT © 1997 CANON INC.

F. SOLVENTS AND OILS

No.	Description	Use	Composition	Description
1	Ethyl alcohol (Etanol) Isopropyl alcohol (Isopropanol)	Cleaning: e.g., glass, plastic, rubber parts; external covers	C_2H_5O $(CHZ_3)_2$ CHOH	• Do not bring near open fire. • Procure localy. • Isopropyl alcohol may be substituted.
2	MEK	Cleaning: e.g., metal; oil or toner	$CH_3COC_2H_5$	• Do not bring near fire. • Procure locally.
3	Heat-resisting grease	Lubricating; e.g., fixing drive assemblies	Lithium soap (mineral oil family) Moblybdenum bisulfide	• CK-0427 (500 g/can)
4	Lubricant oil	Lubricating: scanner rail; spring clutch	Mineral oil (paraffin family)	• CK-0451 (100 cc)
5	Lubricant oil		Mineral oil (paraffin family)	• CK-0524 (100 cc)
6	Lubricant oil	Lubricating: plastic drive and friction parts	Slicone oil	• CK-0562 (20 g)
7	Lubricant grease (BARRIERTA IMI)	Lubricating: slip ring (photosensitive drum)	Fluoric oil	• FY9-6008 (10 g)

COPYRIGHT © 1997 CANON INC.
CANON NP6560/NP6360/NP6260 REV. 0 NOV. 1997 PRINTED IN JAPAN (IMPRIME AU JAPON)

Prepared by

OFFICE IMAGING PRODUCTS TECHNICAL SUPPORT DEPARTMENT 1
OFFICE IMAGING PRODUCTS TECHNICAL SUPPORT DIVISION

CANON INC.

Printed in Japan

REVISION 0 (NOV. 1997) [18723]

5-1, Hakusan 7-chome, Toride-shi, Ibaraki 302 Japan

Canon

This publication is printed on
70% reprocessed paper.

PRINTED IN JAPAN (IMPRIME AU JAPON) 1197AB1.21-1