NP6621

SERVICE MANUAL

REVISION 0

Canon

FEB. 1998 FY8-13F4-000

COPYRIGHT © 1998 CANON INC.
CANON NP6621 REV.0 FEB. 1998 PRINTED IN JAPAN (IMPRIME AU JAPON)

IMPORTANT

THE INFORMATION CONTAINED HEREIN IS PUBLISHED BY CANON, INC., JAPAN, AND IS FOR REFERENCE USE ONLY. SPECIFICATIONS AND OTHER INFORMATION CONTAINED HEREIN MAY VARY SLIGHTLY FROM ACTUAL MACHINE VALUES OR THOSE FOUND IN ADVERTISING AND OTHER PRINTED MATTER.

ANY QUESTIONS REGARDING INFORMATION CONTAINED HEREIN SHOULD BE DIRECTED TO THE COPIER SERVICE DEPARTMENT OF THE SALES COMPANY.

COPYRIGHT © 1998 CANON INC.

Printed in Japan

Imprimé au Japon

Use of this manual should be strictly supervised to avoid disclosure of confidential information.

Prepared by

OFFICE IMAGING PRODUCTS TECHNICAL SUPPORT DEPARTMENT 1
OFFICE IMAGING PRODUCTS TECHNICAL SUPPORT DIVISION

CANON INC.

5-1, Hakusan 7-chome, Toride-shi Ibaraki, 302-0023 Japan

Introduction

This Service Manual provides basic facts and figures you will need to service the plain paper copier NP6621 in the field.

The NP6621 is designed to enable automated copying work and may be configured with the following accessory; for servicing information on the sorter, ADF, and control card, see their respective Service Manuals:

1. Cassette Feeding Module-B2
2. Cassette Feeding Module-A2
3. Cassette Feeding Unit-K1
4. Paper Deck Pedestal-K1
5. Control Card IV N
6. ADF-E1
7. RDF-F1
8. Stapler Sorter-D1
9. Sorter 10-B1
10. Remote Diagnostic Device II

This Service Manual contains descriptions on the 1-Cassette Feeding Unit-B1 and the 2-Cassette Feeding Unit-A2.

Note:
The Cassette Feeding Unit-B2, the Cassette Feeding Unit-A2 the cassette feeding Unit K1, the Paper Deck Pedestal-K1 and Remote Diagnostic Device II may not be available for sale in some areas.

This Service Manual is organized as follows:

CHAPTER 1, “General Introduction,” explains the NP6621’s features, specifications, and step-by-step instructions on how to operate the copier.

CHAPTER 2, “Copying Processes,” shows how the NP6621 generates copies while discussing each of the steps involved.

CHAPTER 3, “Operations and Timing,” explains the NP6621’s mechanical system by function and principles behind its electrical system in relation to timing of each operation.

CHAPTER 4, “Mechanical System,” provides instructions on how to disassemble/assemble and adjust the NP6621.

CHAPTER 5, “Installation,” provides points to note when selecting the site of installation and instructions on how to install the NP6621.

CHAPTER 6, ‘Maintenance and Inspection,” gives tables of periodically replaced parts and consumables/durables as well as a scheduled servicing chart.

APPENDIX contains a general timing chart, general circuit diagrams, and PCB diagrams.

This Service Manual is accompanied by the Service Handbook, which provides information on how to maintain and inspect the NP6621 through adjustment and troubleshooting work.

Information found in this manual may be updated from time to time for product improvement, and major updates are communicated in the form of *Service Information* bulletins.

All service persons are expected to be thoroughly familiar with this Service Manual, the Service Handbook, and Service Information bulletins and be ready to respond to the needs of the user.

COPYRIGHT © 1998 CANON INC. CANON NP6621 REV.0 FEB. 1998 PRINTED IN JAPAN (IMPRIME AU JAPON)

RDF-F1 (Recirculating Document Feeder)
Automatically feeds a set of up to 100 originals to the platen glass for copying. The RDF can also turn over two-sided originals for automatic two-sided copying.



MS-B1 (10 bins)
Automotically sorts and groups sets of up to 10 copies.

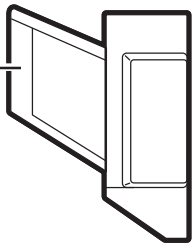

ADF-E1 (Automatic Document Feeder)
Automatically feeds sets of up to 30 originals to the copyboard for copying.



Control Card IV N
Allows you to monitor the number of copies made by each card holder.



Stapler Sorter-D2 (10 bins)
Automatically sorts or groups copies into 10 bins at (30 pages per set). Staples sets of up to 20 copies each.

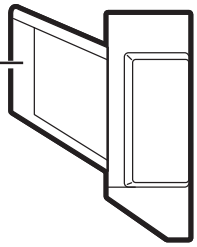

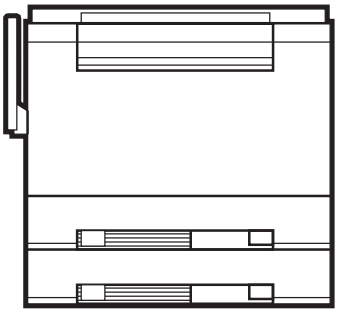

Cassette Feeding Module-B2
Allows you to increase your paper supply through the addition of one paper cassette.



Cassette Feeding Module-A2
Allows you to increase your paper supply through the addition of two paper cassettes.

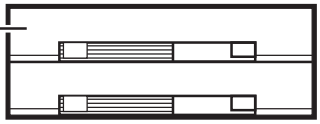

Cassette Feeding Unit-K1
Allows you to increase your paper supply through the addition of three paper cassettes.

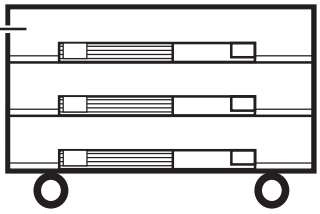

Paper Deck Pedestal-K1
Holds up to 1500 sheets of one type of paper.

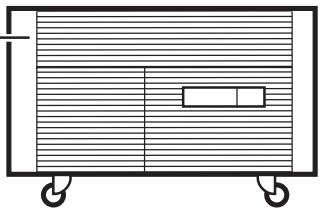

COPYRIGHT © 1998 CANON INC. CANON NP6621 REV.0 FEB. 1998 PRINTED IN JAPAN (IMPRIME AU JAPON)

CONTENTS

CHAPTER 1 GENERAL DESCRIPTION

I. FEATURES 1-1
II. SPECIFICATIONS 1-2
A. Copier 1-2
B. Cassette Feeding Module-B2/ Cassette Feeding Module-A2/Cassette Feeding Unit-K1 1-5
C. Paper Deck Pedestal-K1 1-6
III. NAMES OF PARTS 1-7
A. Exterior 1-7
B. Cross Section 1-8
IV. BASIC OPERATION 1-13
A. Control Panel 1-13
B. Making Copies 1-16
C. Using the Stack Bypass 1-17
D. User Mode 1-19
V. WARNINGS AND ACTIONS 1-26
A. Jam Indicator 1-26
B. Cleaning the Static Charge Eliminator 1-33
VI. ROUTINE CLEANING 1-34

CHAPTER 2 COPYING PROCESS

I. IMAGE FORMATION 2-1
A. Outline 2-1
B. Latent Static Image Formation Block 2-2
C. Step 1 (pre-exposure) 2-3
D. Step 2 (primary charging) 2-3
E. Step 3 (image exposure) 2-4
F. Step 4 (development) 2-4
G. Step 5 (transfer) 2-5
H. Step 6 (separation) 2-6
I. Step 7 (fixing) 2-7
J. Step 8 (drum cleaning) 2-7
II. AUXILIARY PROCESS 2-8
A. Blank Exposure 2-8

CHAPTER 3 OPERATIONS AND TIMING

I. BASIC OPERATIONS 3-1
A. Functional Construction 3-1
B. Outline of Electrical Circuitry 3-2
C. Inputs to the DC Controller 3-3
D. Outputs from the DC Controller 3-8
E. Inputs to and Outputs from the Cassette Feeding Module-B2 Driver PCB 3-13
F. Inputs to and Outputs from the Cassette Feeding Module-A2 Driver PCB 3-14
G. Inputs to and Outputs from the Cassette Feeding Unit-K1 Driver PCB 3-16
H. Main Motor Control Circuit 3-21
I. Basic Sequence of Operations (2 copies, continuous, AE) 3-22
J. Original Size Detecton Control 3-23
II. EXPOSURE SYSTEM 3-27
A. Varying the Reproduction Ratio 3-27
B. Lens Drive System 3-27
C. Scanner Drive System 3-31
D. Operations of the Scanner in Page Separation Mode 3-34
III. IMAGE FORMATION SYSTEM 3-35
A. Outline 3-35
B. Sequence of Operations (image formation system) 3-36
C. Controlling the Scanning Lamp 3-37
D. Controlling the Primary Charging Roller 3-38
E. Controlling the Transfer Roller Bias 3-41
F. Controlling the Static Eliminator Bias 3-44
G. Controlling the Developing Bias 3-46
H. Copy Density Automatic Control 3-48
I. Developing/Cleaning Assembly 3-50
J. Blank Exposure Control 3-53
K. Primary Charging Roller Cleaning Control 3-55
L. Transfer Roller Locking/Releasing Control 3-56
IV. PICK-UP/FEEDING SYSTEM 3-57
A. Pick-Up from the Machine 3-57
B. Making Two-Sided Copies (1copy) ... 3-61

COPYRIGHT © 1998 CANON INC.
CANON NP6621 REV.0 FEB. 1998 PRINTED IN JAPAN (IMPRIME AU JAPON)

C. Duplexing Unit 3-63
D. Pick-Up from the Cassette Feeding Module-A2 3-72
E. Pick-Up from the Cassette Feeding Unit-K1 3-74
F. Paper Deck Pedestal-K1 3-76
G. Multifeeder 3-82
H. Identifying the Size of the Cassette ... 3-85
I. Fixing/Delivery Assembly 3-87
J. Detecting Jams 3-92
V. POWER SUPPLY 3-101
A. Outline of Power Distribution 3-101
B. Power Supply Circuitry 3-102
C. Detecting Errors on the Power Supply PCB 3-103
D. Protection Mechanisms for the Power Supply Circuit 3-104
VI. SERVICE MODE 3-105
A. Outline 3-105
B. Using Service Mode 3-105
C. Control Display Mode (‘1’) 3-107
D. I/O Mode (‘2’) 3-110
E. Adjustment Mode (‘3’) 3-114
F. Operation/Inspection Mode (‘4’) 3-117
G. Machine Settings Mode (‘5’) 3-118
H. Counter Mode (‘6’) 3-120
VII. SELF DIAGNOSIS 3-121
A. Copier Self Diagnosis 3-121
B. Self Diagnosis on the Cassette Feeding Unit 3-124
C. RDF/ADF Self Diagnosis 3-125
D. Sorter Self Diagnosis 3-126
VIII. STANDARDS AND ADJUSTMENTS 3-127
A. Electrical 3-127

CHAPTER 4 MECHANICAL SYSTEM

I. EXTERNALS 4-1
A. External Covers 4-1
B. Control Panel 4-2
C. Removing the Display Panel 4-2
D. Fan 4-3
E. Counter 4-4
II. DRIVE SYSTEM 4-5
A. Scanner Drive System 4-5
B. Lens Drive Assembly 4-10
C. Main Motor 4-14
III. PICK-UP/FEEDING SYSTEM 4-15
A. Pick-Up Assembly 4-15
B. Multifeeder Assembly 4-17
C. Registration Roller Assembly 4-20
D. Feeding Assembly 4-22
E. Delivery Assembly 4-22
F. Duplexing Assembly 4-23
G. Cassette Unit 4-24
H. Paper Deck Pedestal-K1 4-27
IV. EXPOSURE SYSTEM 4-34
A. Illuminating Assembly 4-34
V. CHARGING SYSTEM 4-38
A. Drum Unit 4-38
B. Primary Charging Assembly 4-39
C. Transfer Charging Assembly 4-40
D. Drum Heater 4-41
VI. DEVELOPING SYSTEM 4-42
VII. FIXING SYSTEM 4-45
VIII. ELECTRICAL 4-50
A. DC Controller PCB 4-50
B. Composite Power Supply PCB 4-50
C. AE Sensor PCB 4-51

CHAPTER 5 INSTALLATION

I. SELECTING THE SITE 5-1
II. UNPACKING AND INSTALLING THE COPIER 5-2
A. Unpacking and Removing Fixings 5-2
B. Turning On the Copier 5-5
C. Checking the Images and Operations 5-7
D. Attaching the Drum Unit 5-8
E. Changing the Cassette Size 5-9
III. RELOCATING THE COPIER 5-11
IV. REPLACING THE DRUM UNIT 5-12
V. INSTALLING THE CONTROL CARD IV N 5-14
VI. CASSETTE HEATER KIT 5 INSTALLATION PROCEDURE 5-16
A. Unpacking 5-16
B. Installation (to copying machine) 5-17
C. Installation (to a Cassette Feeding Module-A2/B2/Cassette Feeding Unit-K1) 5-20
VII. CASSETTE HEATER KIT 7 INSTALLATION PROCEDURE 5-24
A. Unpacking 5-24
B. Installation 5-25
C. Attaching the Ratings Label 5-27
VIII. INSTALLING THE REMOTE DIAGNOSTIC DEVICE II 5-28
A. Unpacking 5-28
B. Installation to the Copier 5-28

COPYRIGHT © 1998 CANON INC.
CANON NP6621 REV.0 FEB. 1998 PRINTED IN JAPAN (IMPRIME AU JAPON)

CHAPTER 6 MAINTENANCE AND SERVICING

I. PERIODICALLY REPLACED PARTS 6-1
A. Periodically Replaced Parts 6-1
II. DURABLES AND CONSUMABLES 6-2
A. Copier 6-2
B. Cassette Feeding Module-B2, Cassette Feeding Module-A2, and Cassette Feeding Unit-K1 6-3
C. Paper Deck Pedestal-K1 6-3
III. BASIC SERVICING 6-4
IV. SERVICING CHART 6-5
A. Scheduled Maintenance Work 6-5

APPENDIX

A. GENERAL TIMING CHART A-1
B. SIGNALS AND ABBREVIATIONS A-2
C. GENERAL CIRCUIT DIAGRAM A-5
D. DC CONTROLLER CIRCUIT DIAGRAM A-7
E. COMPOSITE POWER SUPPLY CIRCUIT DIAGRAM A-21
F. CONTROL PANEL KEY PCB A-27
G. AE SENSOR CIRCUIT DIAGRAM A-31
H. INTENSITY SENSOR CIRCUIT DIAGRAM A-32
I. TONER LEVEL DETECTION CIRCUIT DIAGRAM A-33
J. CASSETTE FEEDING MODULE-B2 GENERAL CIRCUIT DIAGRAM A-34
K. CASSETTE FEEDING MODULE-B2 DRIVER CIRCUIT DIAGRAM A-35
L. CASSETTE FEEDING MODULE-A2 GENERAL CIRCUIT DIAGRAM A-37
M. CASSETTE FEEDING MODULE-A2 DRIVER CIRCUIT DIAGRAM A-38
N. CASSETTE FEEDING UNIT-K1 GENERAL CIRCUIT DIAGRAM A-41
O. CASSETTE FEEDING UNIT-K1 ..... A-42
P. PAPER DECK PEDESTAL-K1 GENERAL CIRCUIT DIAGRAM A-45
Q. PAPER DECK PEDESTAL-K1 DRIVER CIRCUIT DIAGRAM A-46
R. SPECIAL TOOLS A-47
S. SOLVENTS/OILS A-48

COPYRIGHT © 1998 CANON INC.
CANON NP6621 REV.0 FEB. 1998 PRINTED IN JAPAN (IMPRIME AU JAPON)

COPYRIGHT © 1998 CANON INC.
CANON NP6621 REV.0 FEB. 1998 PRINTED IN JAPAN (IMPRIME AU JAPON)

CHAPTER 1
GENERAL DESCRIPTION

I. FEATURES 1-1
II. SPECIFICATIONS 1-2
A. Copier 1-2
B. Cassette Feeding Module-B2/ Cassette Feeding Module-A2/Cassette Feeding Unit-K1 1-5
C. Paper Deck Pedestal-K1 1-6
III. NAMES OF PARTS 1-7
A. Exterior 1-7
B. Cross Section 1-8
IV. BASIC OPERATION 1-13
A. Control Panel 1-13
B. Making Copies 1-16
C. Using the Stack Bypass 1-17
D. User Mode 1-19
V. WARNINGS AND ACTIONS 1-26
A. Jam Indicator 1-26
B. Cleaning the Static Charge Eliminator 1-33
VI. ROUTINE CLEANING 1-34

COPYRIGHT © 1998 CANON INC. CANON NP6621 REV.0 FEB. 1998 PRINTED IN JAPAN (IMPRIME AU JAPON)

COPYRIGHT © 1998 CANON INC. CANON NP6621 REV.0 FEB. 1998 PRINTED IN JAPAN (IMPRIME AU JAPON)

I. FEATURES

When fitted with options, it provides a maximum of four paper sources.

1. Multiple front loading and multifeeder for space saving.

- The cassette may be slid out to the front for paper supply work.
- With the adjustable cassette and the multifeeder, various types of paper may be used.

2. Office conveniences and ecology.

- The copier is designed compact, enabling effective use of office space.
- The use of roller charging has proved to reduce the generation of ozone significantly.(1/100 to 1/1000 compared to other Canon copiers)
- As the pick-up mechanism, center-reference is adopted in consideration of the use of recycled paper.
- A significant number of parts are made of plastic in an effort to promote recycling.
- The copier is designed as a clamshell type to facilitate clearing of jammed paper.

3. Dependable high image quality.

- The new HQ (high-quality) toner ensures faithful reproduction of solid black, text, and photos.
- In addition to Canon's own single-component toner projection development method, the use of auto image control (AIC) ensures stable reproduction of images.

4. Practical basic features.

- As many as 21 copies (A4/Letter, horizontal) may be made per minute.
- Copies may be as large as A3/11×17 or as small as A5/STMT, accommodating postcards.
- The AE mechanism promises enhanced reproduction of newspapers or diazo originals.
- Using page separation mode, a book may be copies with its lift and right pages processed separately.
- Copies may be made in zoom between 49% and 204%.
- The zoom fine-adjustment mechanism ensures better control for faithful reproduction of originals.
- The auto energy saver mechanism helps further saving of energy.
- The interrupt mechanism enables cutting in on a continuous copying session.

COPYRIGHT © 1998 CANON INC.
CANON NP6621 REV.0 FEB. 1998 PRINTED IN JAPAN (IMPRIME AU JAPON)

II. SPECIFICATIONS

A. Copier

1. Configuration

Item	Specifications
Body	Desktop
Copyboard	Fixed
Light source	Halogen lamp
Lens	Zoom lens
Photosensitive medium	OPC

2. Type

Item		Specifications
Copying		Indirect electrostatic photography
Charging		Roller (direct charging)
Exposure		Slit (moving light source)
Copy density adjustment		Automatic (AE) or manual
Development		Dry (toner projection)
Pick-up	Automatic	2 cassettes
	Manual	Multifeeder
Transfer		Roller
Separation		Curvature + static eliminator
Cleaning		Cleaning blade
Fixing		Heat roller, 900W

COPYRIGHT © 1998 CANON INC.
CANON NP6621 REV.0 FEB. 1998 PRINTED IN JAPAN (IMPRIME AU JAPON)

3. Performance

Item			Specifications
Original type			Sheet, book, 3-D object (2 kg/2.204 lb. max.)
Maximum original size			A3 (297 x 420 mm)
Reproduction ratio			DIRECT, 2R2E (Table 1-1); zoom between 49% and 204% (fine zooming provided)
Wait time			30 sec
First copy time			9.7 sec (approx.; A4, DIRECT, non-AE, cassette 1)
Continuous copying			100 copies (max.; upper limit may be changed in service mode)
Copying speed			See Table 1-202.
Copy size			Cassette: A3 to A5 Manual: A3 to postcard
Copy paper type	Cassette		Plain paper (64g to 80 g/m^2), tracing paper[*1], colored paper[*1], recycled paper (64 to 80 g/m^2), eco paper (80 g/m^2)
	Manual		Plain paper (64 to 80 g/m^2), tracing paper[*1], colored paper[*1], recycled paper (64 to 80 g/m^2), eco paper (80 g/m^2 [*1]), transparency[*3], postcard, label sheet[*1], Thick paper (81 to 128 g/m^2)
	Two-sided/overlay copying[*2]		Plain paper (64 to 80 g/m^2), colored paper, postcard, recycled paper (64 to 80 g/m^2), eco paper (80 g/m^2)
Cassette			34 mm deep (approx.; about 250 sheets of 80 g/m^2); no claw, front loading (center reference)
Multifeeder			5 mm (max. stacking height; i.e., about 50 sheets of 80 g/m^2); no claw (center reference)
Copy tray			100 sheets (approx.: A3, 80 g/m^2)
Non-image width		One-sided	2.0 ±1.0 mm (leading edge); 2.5 ±1.5 mm (left/right, trailing edge)
		Multifeeder	2.0 ±1.0 mm (leading edge); 3.5 ±1.5 mm (left/right, trailing edge)
Auto clear			Provided (2 min standard; may be varied in 1-min increments between 1 and 9 min; may be deactivated)
Auto power-off			Provided (5 min standard; 2, 5, 10, 15, 30, 60, or 120 min; may be varied in user mode)
Options			Cassette Feeding Module-B2, Cassette Feeding Module-A2, Cassette Feeding Unit-K1, Control Card IV N, Stapler Sorter-D2, Sorter 10-B1, ADF-E1, RDF-F1, Paper Deck Pedestal-K1, Remote Diagnostic Device II

*1 Canon recommended paper.
*2 If in manual mode, remove curling before second feeding.
*3 Fan out sheets before setting to eliminate adhesion.

COPYRIGHT © 1998 CANON INC.
CANON NP6621 REV.0 FEB. 1998 PRINTED IN JAPAN (IMPRIME AU JAPON)

4. Others

Item		Specifications	
Operating environment	Temperature	7.5° to 32.5°C/45.5 to 90.5°F	
	Humidity	5% to 85%	
	Atmospheric pressure	810.6 hPa to 10313.3 hPa (0.8 to 1 atm)	
Power supply		Serial numbers	
	230 V (50Hz)	QBSxxxxx, UDNxxxxx, SBExxxxx, TBHxxxxx, UDPxxxxx	
Power consumption	Standby	0.042 kwh (reference only)	
	Continuous copying	0.663 kwh (reference only)	
Noise	Copying	66 dB or less (1m front)	By ISO sound power level measurement
	Standby	40 dB or less (1m front)	
Ozone (avr over 8 hr)		0.02 ppm or less	
Dimensions	Width	585 mm	
	Depth	640 mm	
	Height	624 mm	
Weight		77 kg/169.8 lb (approx.)	
Consumables	Copy paper	Keep wrapped; store avoiding humidity.	
	Cartridge	Avoid direct sunshine; store at 40°C/104°F, 85% or less.	

Reproduction ratio	DIRECT	1: 1 (±0.5%)
		230V
	REDUCE I	1: 0.500
	REDUCE II	1: 0.707
	ENLARGE I	1: 1.414
	ENLARGE II	1: 2.000
	ZOOM	49% to 204 % (1% increments)

Table 1-201 Defaults Reproduction Ratio

COPYRIGHT © 1998 CANON INC.
CANON NP6621 REV.0 FEB. 1998 PRINTED IN JAPAN (IMPRIME AU JAPON)

Reproduction ratio		Copy size	Q'ty
DIRECT	1: 1 (±0.5%)	A3 (297 × 420)	11
		A4 (210 × 297)	21
		A5 (148 × 210)	21
		B4 (257 × 364)	12
		B5 (182 × 257)	21
		A4R (297 × 210)	16
		A5R (210 × 148)	18
		B5R (257 × 182)	18
REDUCE	1: 0.500 (+1.0%)	A3 → A5R	20
	1: 0.707 (+1.0%)	A3 → A4R	15
		B4 → B5R	17
ENLARGE	1: 2.000 (+1.0%)	A5R → A3	12
	1: 1.414 (+1.0%)	A4R → A3	12
		B5R → B4	14

Table 1-202 Copying Speeds

Specifications subject to change without notice.

B. Cassette Feeding Module-B2/Cassette Feeding Module-A2/ Cassette Feeding Unit-K1

Copy paper type	Same as copier.
Cassette specifications	Same as copier
Power supply	34 VDC, 24 V, 5 V (supplied by copier)
Dimensions (WxDxH; mm/in)	Cassette Feeding Module-B2: 585 × 622 × 105/23.0 × 24.5 × 4.1 Cassette Feeding Module-A2: 585 × 622 × 210/23.0 × 24.5 × 8.3 Cassette Feeding Unit-KI: 585 × 622 × 384/23.0 × 24.5 × 15.1
Weight	Cassette Feeding Module-B2: 9 kg/19.8 lb Cassette Feeding Module-A2: 16 kg/32.3 lb Cassette Feeding Unit-KI: 29.6 kg/65.3 lb

Table 1-203

COPYRIGHT © 1998 CANON INC.
CANON NP6621 REV.0 FEB. 1998 PRINTED IN JAPAN (IMPRIME AU JAPON)

C. Paper Deck Pedestal-K1

Method of pick-up	Clawless
Loading method	Front loading
Type of paper	Plain paper (64 to 80 g/m^2), Colored paper*
Size of paper	A4 (landscape), B5 (landscape), LTR (landscape)
Capacity	162 mm high (one side; equivalent of 1500 sheets of 80 g/m^2 paper)
Switching (size)	Partitioning plate (incremental)
Control panel	No (use copier' s control panel)
Display	No (see copier' s display)
Power supply	34 VDC, 24 V, 5 V (supplied by copier)
Weight	31.7 kg/70.0 lb
Dimensions (W × D × H; mm/in)	610 × 583 × 414/24.0 × 21.4 × 16.3

Table 1-204

COPYRIGHT © 1998 CANON INC.
CANON NP6621 REV.0 FEB. 1998 PRINTED IN JAPAN (IMPRIME AU JAPON)

III. NAMES OF PARTS

A. Exterior

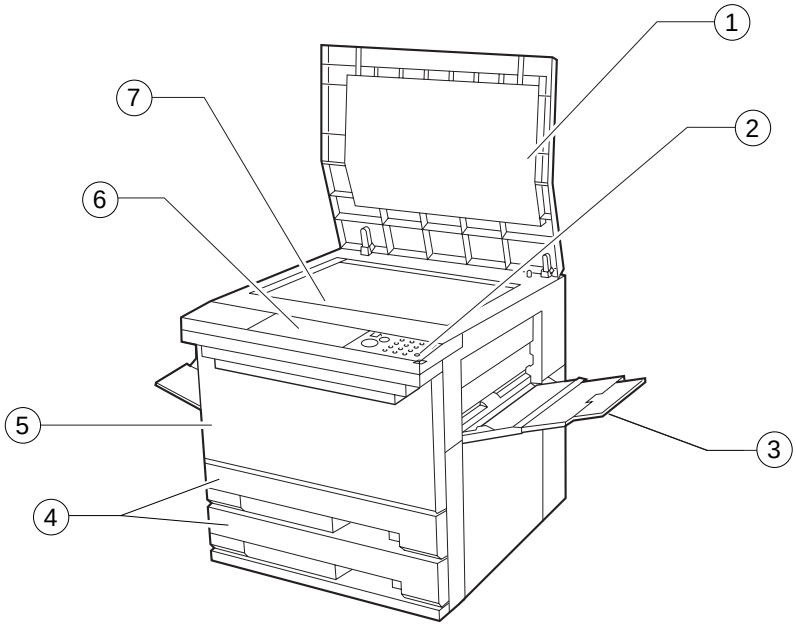

① Copyboard cover
② Power switch
③ Multifeeder
④ Cassette
⑤ Front door
⑥ Control panel
⑦ Copyboard glass

Figure 1-301

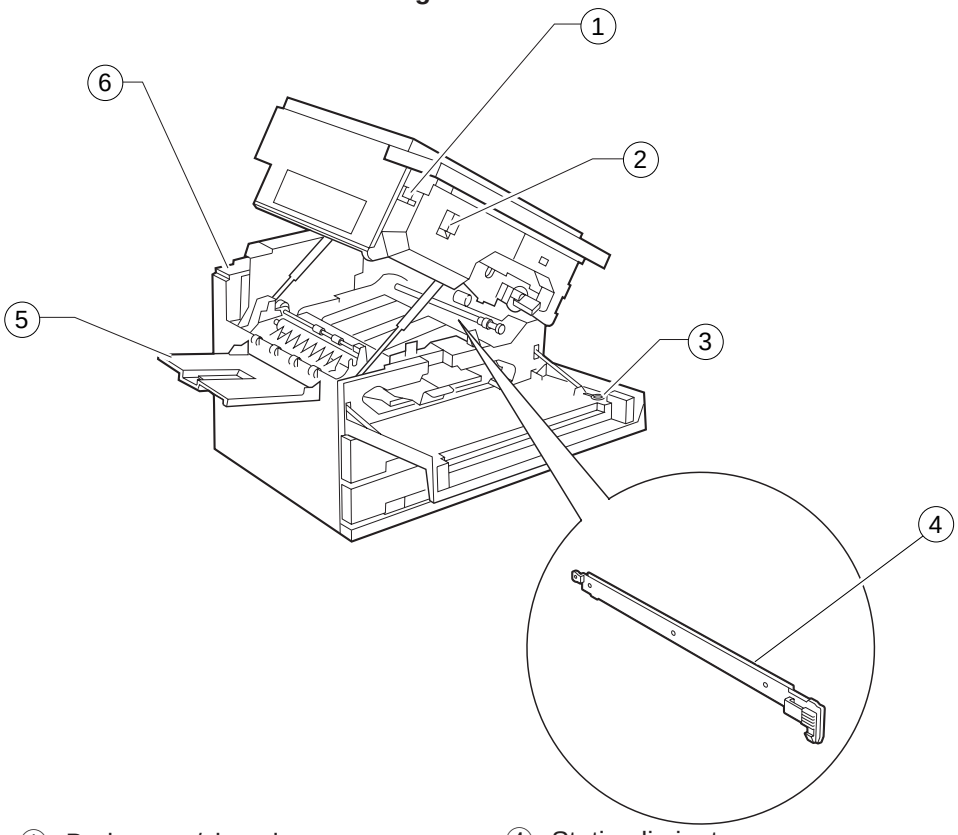

① Body open/close lever
② Copy density correction volume
③ Static eliminator cleaner
④ Static eliminator
⑤ Copy tray
⑥ Anti-condensation heater switch (rear)
Fluorescent heater switch (front)

Figure 1-302

COPYRIGHT © 1998 CANON INC.

B. Cross Section

1. Cross Section of the Body

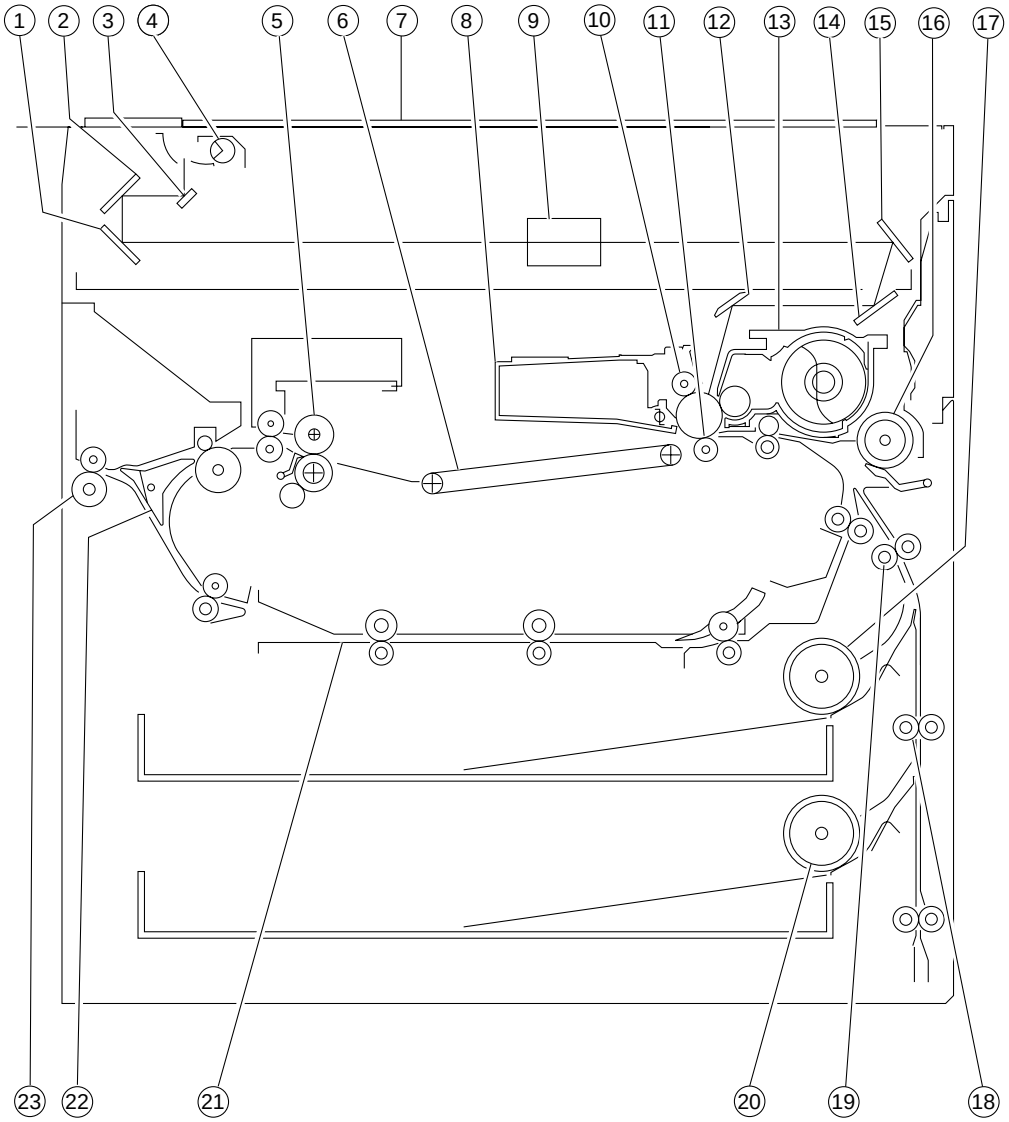

① No. 3 mirror
② No. 2 mirror
③ No. 1 mirror
④ Scanning lamp
⑤ Fixing unit
⑥ Feeding assembly
⑦ Copyboard glass
⑧ Drum unit
⑨ Lens
⑩ Primary charging roller
⑪ Transfer roller
⑫ No. 6 mirror
⑬ Developing assembly
⑭ No. 4 mirror
⑮ No. 5 mirror
⑯ Multifeeder pick-up roller
⑰ Cassette 1 pick-up roller
⑱ Vertical path roller 2
⑲ Vertical path roller 1
⑳ Cassette 2 pick-up roller
㉑ Duplexing unit
㉒ Delivery paper deflecting plate
㉓ Delivery roller

Figure 1-303

COPYRIGHT © 1998 CANON INC.
CANON NP6621 REV.0 FEB. 1998 PRINTED IN JAPAN (IMPRIME AU JAPON)

2. Cassette Feeding Module-A2

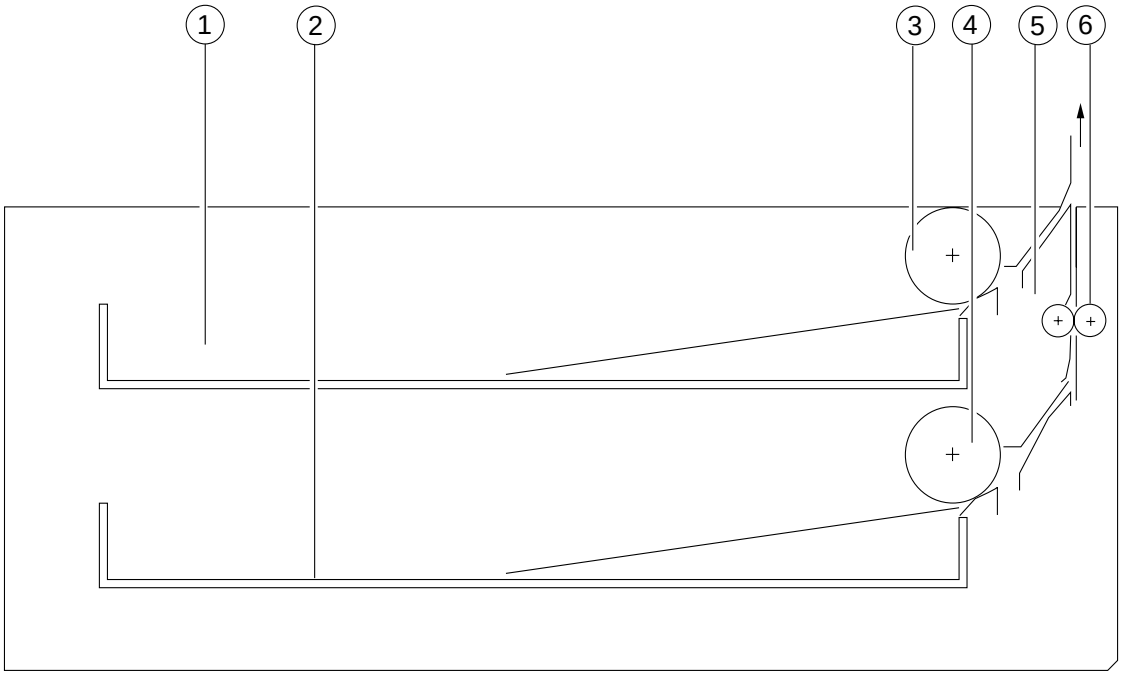

① Cassette 3
② Cassette 4
③ Cassette 3 pick-up roller
④ Cassette 4 pick-up roller
⑤ Drive roller
⑥ Feeding roller

Figure 1-304

COPYRIGHT © 1998 CANON INC.
CANON NP6621 REV.0 FEB. 1998 PRINTED IN JAPAN (IMPRIME AU JAPON)

3. Cassette Feeding Unit-K1

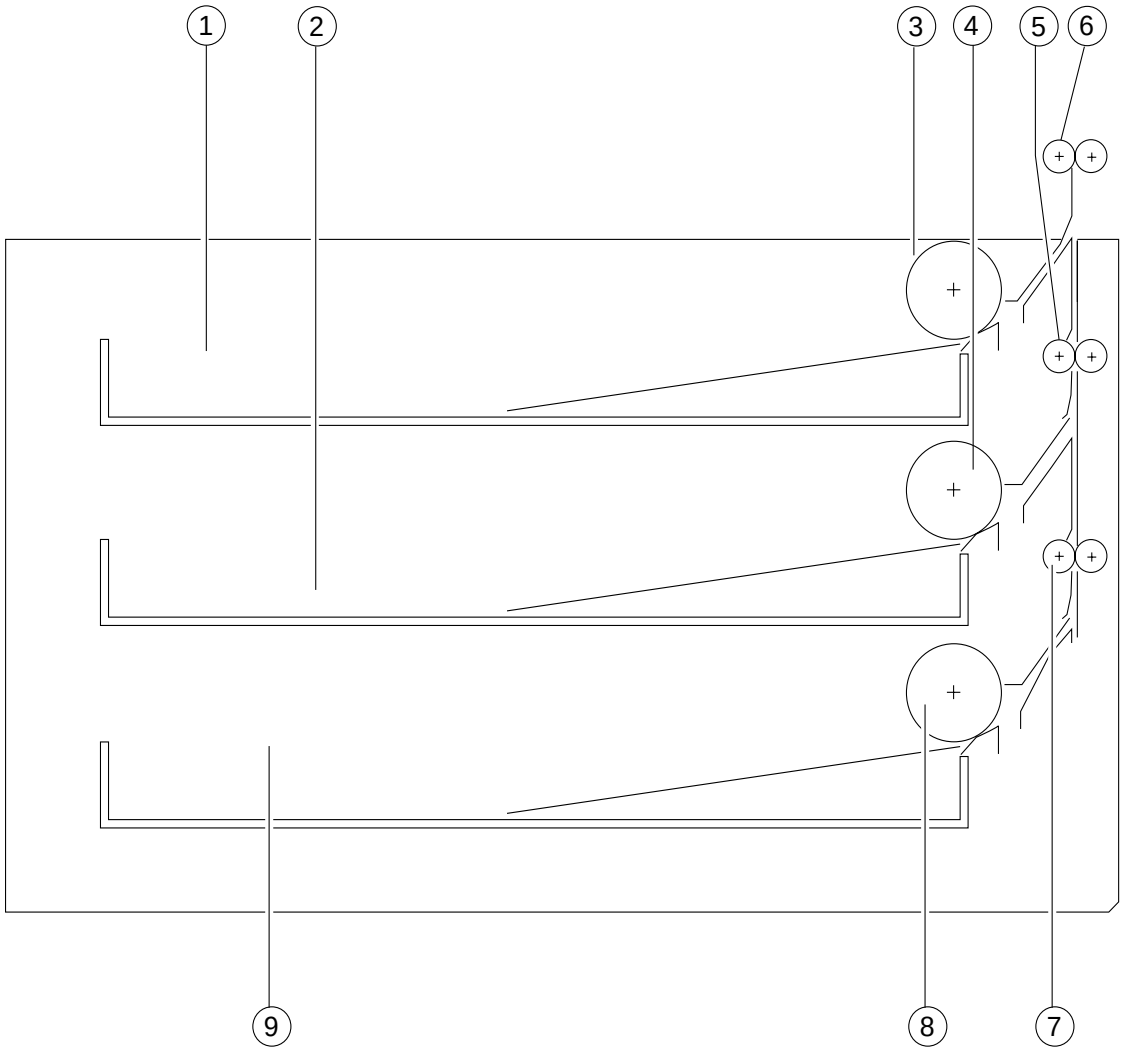

① Cassette 3
② Cassette 4
③ Cassette 3 pick-up roller
④ Cassette 4 pick-up roller
⑤ Vertical path roller 4
⑥ Vertical path roller 3
⑦ Vertical path roller 5
⑧ Cassette 5 pick-up roller
⑨ Cassette 5

Figure 1-305

COPYRIGHT © 1998 CANON INC.
CANON NP6621 REV.0 FEB. 1998 PRINTED IN JAPAN (IMPRIME AU JAPON)

4. Paper Deck Pedestal-K1

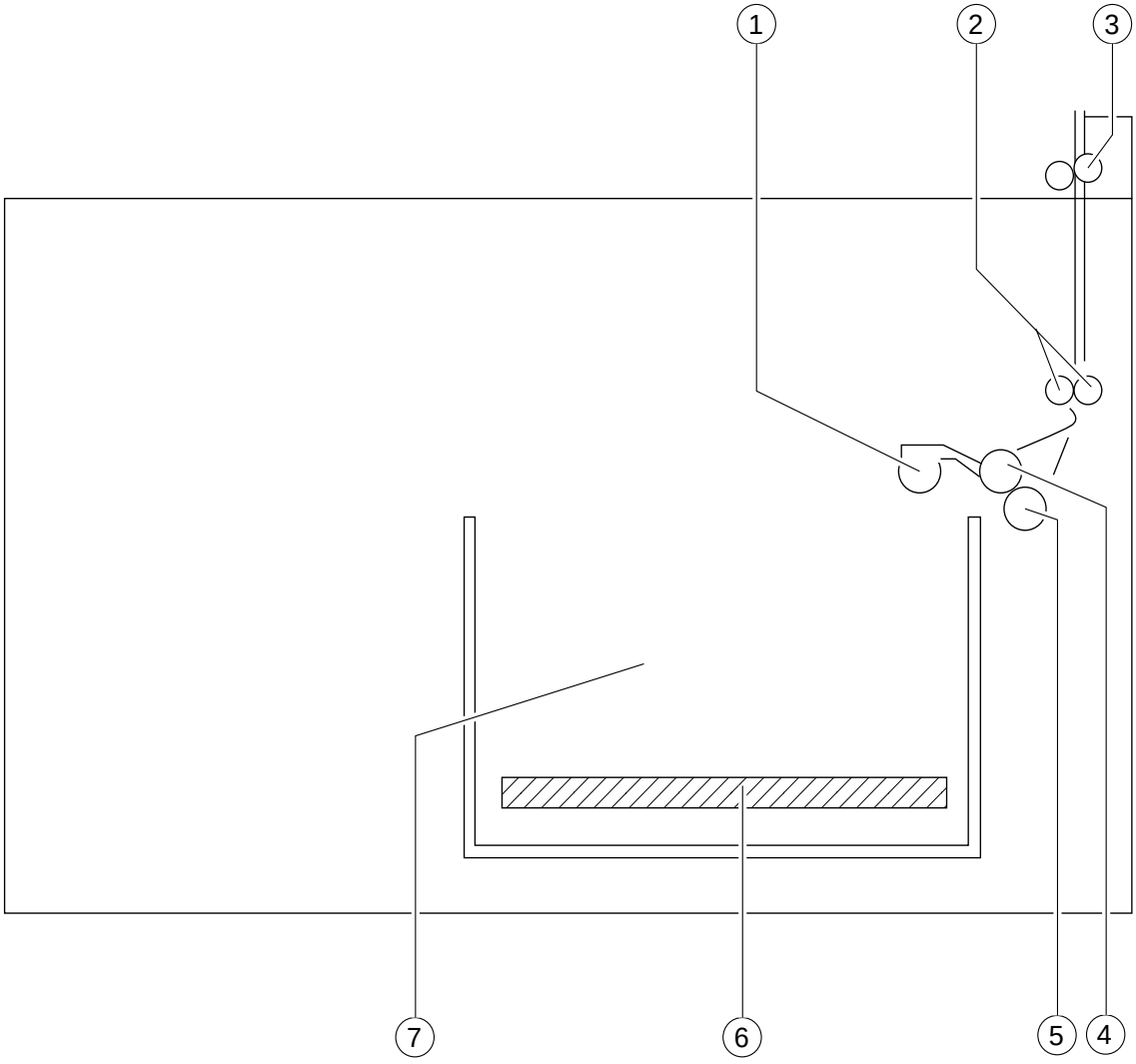

① Deck pick-up roller
② Deck vertical path roller
③ Vertical path roller 3
④ Deck feeding roller
⑤ Deck separation roller
⑥ Lifter
⑦ Deck

Figure 1-306

COPYRIGHT © 1998 CANON INC.
CANON NP6621 REV.0 FEB. 1998 PRINTED IN JAPAN (IMPRIME AU JAPON)

COPYRIGHT © 1998 CANON INC.
CANON NP6621 REV.0 FEB. 1998 PRINTED IN JAPAN (IMPRIME AU JAPON)

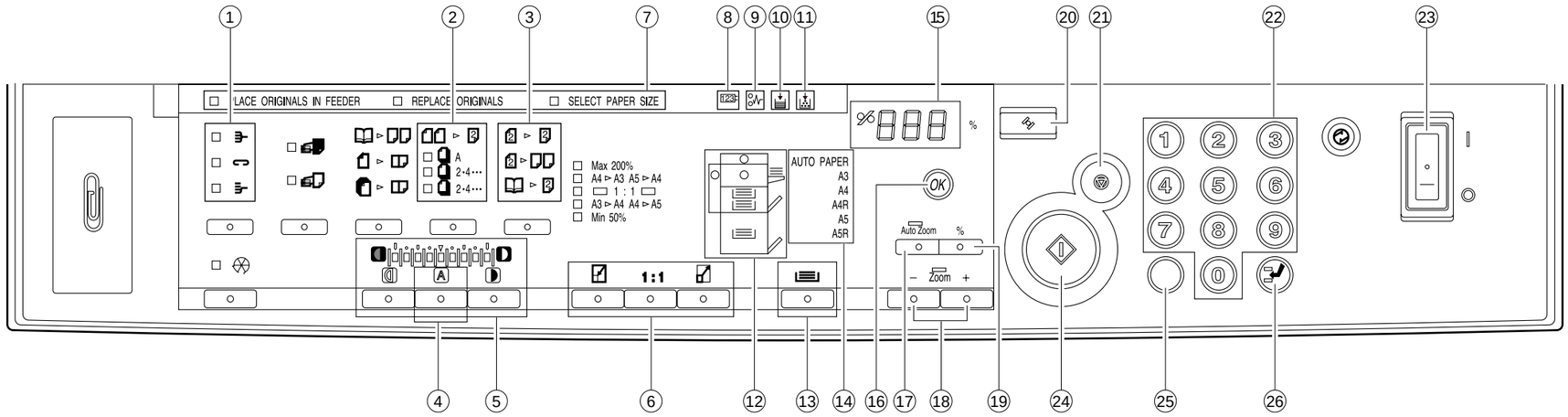

Figure 1-401

① Sorter key	Press to set or cancel the Sort, Staple Sort, and Group modes.	
	□	Sort mode: When copying a multi-page document, copies are automatically sorted into sets arranged in page order. * To use this mode, your copier must be equipped with the optional Stapler Sorter, Sorter, or ADF/RDF.
	□	Staple Sort mode: When copying a multi-page document, copies are automatically sorted into sets arranged in page order and then stapled. * To use this mode, your copier must be equipped with the optional Stapler Sorter.
	□	Group mode: When copying a multi-page document, all copies of the same original page are grouped together, and output into different bins. * To use this mode, your copier must be equipped with the optional Stapler Sorter or Sorter.
② Two-sided key (left side)	Press to set or cancel the following two-sided copy modes: 1 2-sided, 2 2-sided, 2 1-sided, Book 2-sided.	
	1 ▷ 2	1 2-sided: Makes two-sided copies from one-sided originals.
	□ A	When you do not know the total page number of the original, the copier automatically counts the original.
	□ 3 · 5····	Select when you know beforehand that there is an odd number of originals. This will save the time spent on counting the original.
	□ 2 · 4····	Select this when you know beforehand that there is an even number of originals. This will save the time spent on counting the original.
③ Two-sided key (right side)	2 ▷ 2	2 2-sided: Makes two-sided copies from two-side originals.
	2 ▷	2 1-sided: Makes one-sided copies from two-sided originals.
	Book ▷ 2	Book 2-sided: Makes two-sided copies from facing pages in a book.
④ AE key	Press to set or cancel the AE (Automatic Exposure) mode.	
⑤ Copy exposure key	Press to manually adjust the copy exposure.	
⑥ Reduce/1:1/Enlarge key	Press to enlarge or reduce using a preset copy ratio, or to return the copier to 100% copying (1:1).	
⑦ Message display	Place originals in feeder	Flashes when the original in the feeder needs to be reloaded.
	Enter frame erase/margin size	Flashes when the width of the edges to be erased or the margin needs to be specified. * Enter the measurement with the Number keys and then press the OK key.
	Replace originals	Flashes when the first original copied needs to be replaced with the next one.
	Set copy ratio	Flashes when the copy ratio needs to be specified. * Enter the copy ratio with the preset copy ratio key, the reduce/1:1/enlarge keys, or the Zoom key, and then press the OK key.
	Select paper size	Flashes when the paper size needs to be specified. * Select a paper size with the paper select key, and then press the OK key.
	Enter original size	Flashes when the original size needs to be specified. * Enter the original size with the Number keys and then press the OK key.

Table 1-401

		Flashes when the original size needs to be selected. * Select the original size with the paper select key, and then press the OK key.
		Flashes when the copy size needs to be entered. * Enter the copy size with the Number keys, and then press the Ok key.
⑧ Check Control Card indicator	123	Flashes when the control card is not properly inserted.
⑨ Paper Jam indicator		Flashes when a paper jam occurs.
⑩ Add Paper indicator		Flashes when the paper supply in the cassete or stack bypass tray runs out, and when the cassette is not properly set.
⑪ Replace Toner Cartridge indicator		Flashes when the toner runs low and must be replaced with a new one.
⑫ Paper Supply/Jam Location indicator	Lights to indicate the selected paper cassete or stack bypass. When a paper jam occurs, the location of the paper jam flashes. It also lights when the Sorter or right door needs to be inspected, or when a paper jam occurs in the ADF/RDF.	
⑬ Paper select key	Press to select Auto Paper selection, a paper cassette, or the stack bypass.	
⑭ Select paper size indicator	The size of the original/copy paper selected with the Paper select key lights.	
⑮ Copy quantity/copy ratio display	Displays the entered copy quantity copy ratio, and Additional Functions settings.	
⑯ OK key	Press to confirm items and functions that have been selected when setting modes.	
⑰ Auto Zoom key	Press to set or cancel the Auto Zoom mode. Auto Zoom automatically selects the appropriate copy ratio, based on the size of the originals and the selected copy paper.	
⑱ Zoom key	Press to set or cancel the Zoom mode. Zoom mode allows you to specify a copy ratio from 49 to 204% in 1% increments. Continue pressing for fast selection.	
⑲ % key	Press to display the selected copy ratio.	
⑳ Reset key	Press to return the settings to standard mode.	
㉑ Stop key	Press to stop the coper before copying is completed.	
㉒ Number keys	Press the enter copy quantity and other numerical values when setting a mode.	
㉓ Power switch	Press to turn the power ON and OFF.	
㉔ Start key	Press to begin copying.	
㉕ Clear key	Press to return the copy quantity to one, or to clear an incorrectly entered value when setting a mode.	
㉖ Interrupt key	Press to temporarily stop the current copy job to make priority copies.	

Table 1-402

COPYRIGHT © 1998 CANON INC.
CANON NP6621 REV.0 FEB. 1998 PRINTED IN JAPAN (IMPRIME AU JAPON)

COPYRIGHT © 1998 CANON INC.
CANON NP6621 REV.0 FEB. 1998 PRINTED IN JAPAN (IMPRIME AU JAPON)

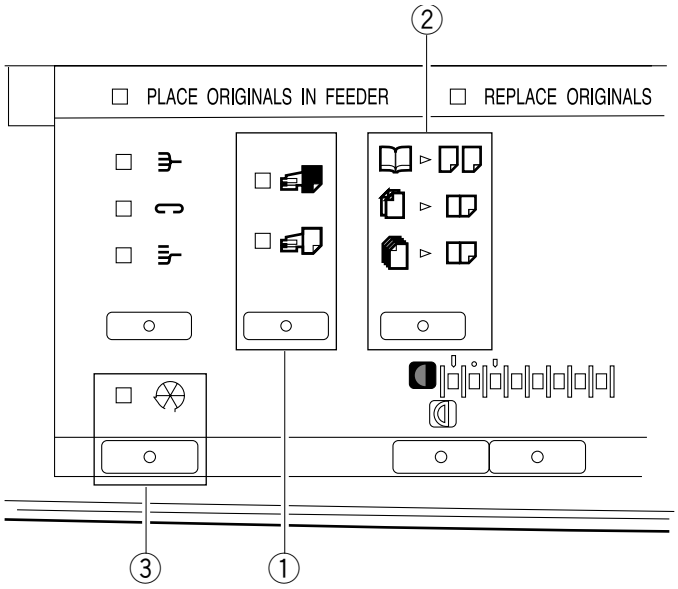

Figure 1-402

① Transparency Interleaving key	Press to set or cancel the Transparency Interleaving mode.	
		The interleaf sheets are printed with the same images as the transparencies.
		The interleaf sheets are left blank.
② Two-page Separation/Image Combination key (left side)		Copies facing pages in a bound original onto two copy sheets.
		2 ON 1: Reduces two originals to fit on one side of a single copy sheet.
		2 ON 1/2 Sided: Reduces four originals to fit on two sides of a single copy sheet.
③ Additional Functions key	Press to set or change standard settings and custom settings according to specific user needs, and when adjusting and cleaning the copier.	

Table 1-403

COPYRIGHT © 1998 CANON INC.

B. Making Copies

1) Place your originals.

a. Placing originals on the platen glass

- Lift the platen glass cover.
- Place your original on the platen glass. The surface that you want to copy must face down. Align the edge of the original with the → mark in the centre of the platen glass.
- Gently lower the platen glass cover.

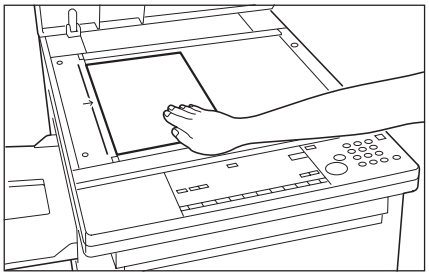

Figure 1-403

b. Placing originals in the ADF or RDF (option)

- Adjust the slide guides to fit the size of your originals.
- Neatly stack your originals face up in the original tray.

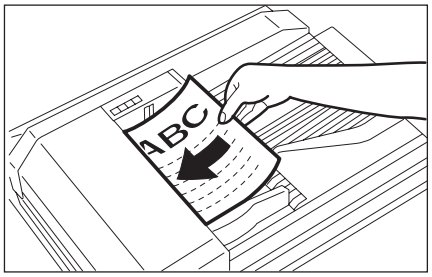

Figure 1-404

2) Programme the copy settings.

- Press the 0 - 9 keys to enter the number of copies.
- Press the ☼ - ☼ keys to adjust the copy exposure.
- Press the ▭ key to select the copy paper size.
- Press the ▭ - ▭ keys to select a preset copy ratio.

3) Press the ◇ key.

a. After copying begins, you cannot change the number of copies, paper size, copy ratio or other copy settings.

b. The copier's counter automatically counts up one as each copy is output to the copy tray.

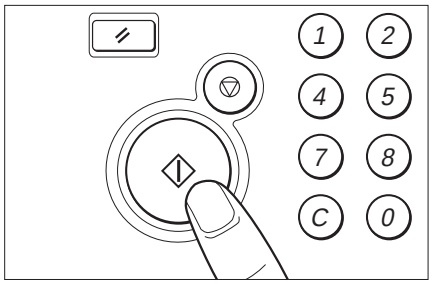

Figure 1-405

c. If you want to stop the copier before copying is complete, press the ⊘ key.

Reference:

Pressing the ⊘ key will not clear the copy settings. To clear the copy settings, press the ▭ key.

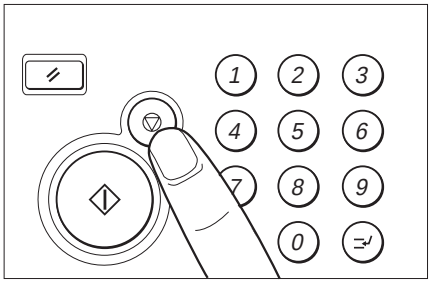

Figure 1-406

COPYRIGHT © 1998 CANON INC.
CANON NP6621 REV.0 FEB. 1998 PRINTED IN JAPAN (IMPRIME AU JAPON)

C. Using the Stack Bypass

You can place up to 50 sheets of copy paper (a stack approximately 5 mm high) in the stack bypass to be automatically fed into the copier. Use the stack bypass when you want to copy on special stock, such as transparencies or labels, or when the paper size that you want to copy on will not fit in a cassette.

Note:
Note the following points when using the stack bypass:

a. Paper size: A5 (horizontal placement) to A3
b. Paper weight: 64 to 128 g/m^2
c. Acceptable paper
   - Plain paper (64 to 128 g/m^2)
   - Coloured paper
   - No. 2 master drawing paper
   - Labels
   - Transparencies
   - Postcards
   - Recycled paper
d. Curl down copy stock before use.
e. There are some types of copy stock which meet the above specifications but which cannot be fed in the stack bypass.

Notes:
1. Do not use the sort/staple-sort/group mode when copying postcards as it may result in a paper jam.
2. A5R-size copy paper cannot be used to make two-sided or overlay copies.
3. Insert A4-size labels horizontally.
4. If you want the copy stock placed in the stack bypass to be selected when using Auto Paper Selection, specify the size.

1) Place your originals.

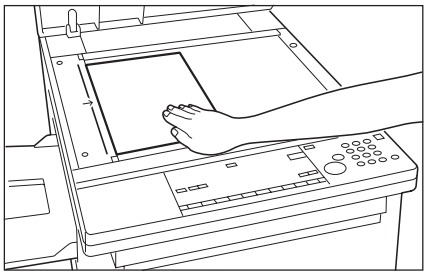

Figure 1-407

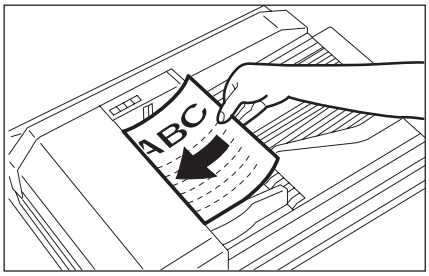

Figure 1-408

2) Programme the copy settings.
3) Open the stack bypass.

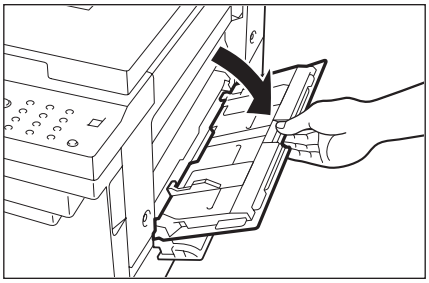

Figure 1-409

COPYRIGHT © 1998 CANON INC.

4) Adjust the slide guides to fit the size of the copy stock.

Reference:

1. Be sure to adjust the slide guides to fit the size of the copy stock.
2. When feeding A4R or A3-size copy stock, pull out the auxiliary tray.

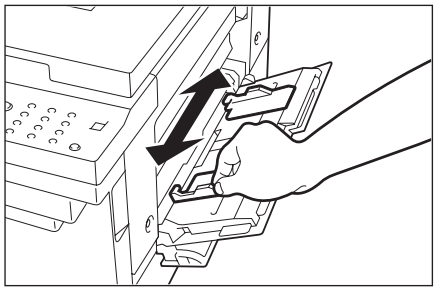

Figure 1-410

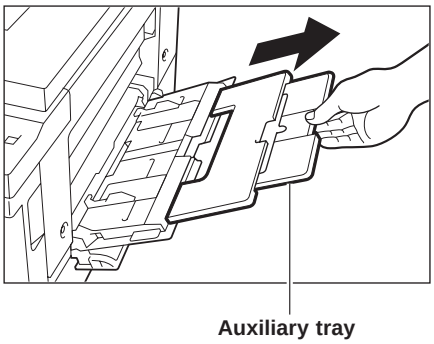

Figure 1-411

5) Align the required number of sheets of copy stock with the slide guides. The surface that you want to copy on must face up. Insert the copy stock into the copier until it stops.

Notes:

1. Make sure that the height of the paper is not higher than the limit mark on the inside of the slide guides.
2. If the Stack Bypass Size Entry in Custom Settings is ON, select a paper size at this point.

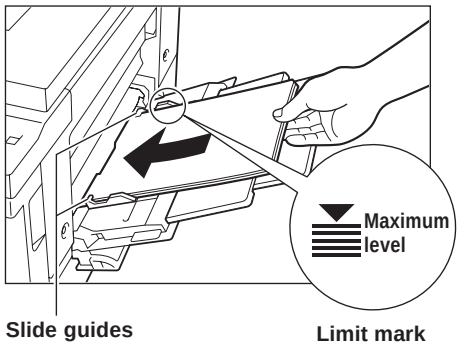

Figure 1-412

6) Press the key until the stack bypass lights on the Paper Supply indicator.

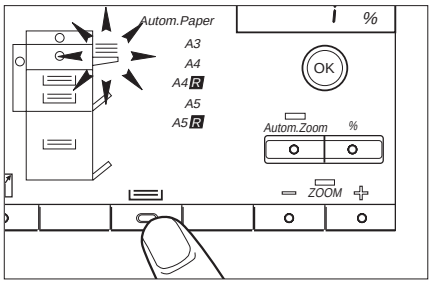

Figure 1-413

COPYRIGHT © 1998 CANON INC.
CANON NP6621 REV.0 FEB. 1998 PRINTED IN JAPAN (IMPRIME AU JAPON)

7) Press the ◈ key.

If you set the Two-sided, Two-page separation, Overlay, Image Separation or Transparency Interleaving modes in step 1 for stack bypass feeding, and you have not selected the size of the paper to be fed, the Paper Size indicator flashes.

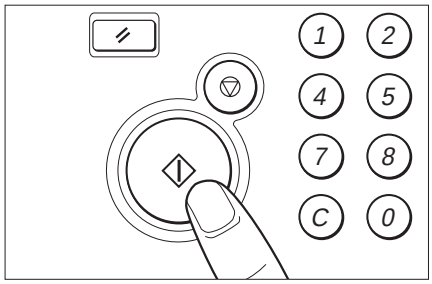

Figure 1-414

Press the ▭ key to select the size of the paper to be fed into the stack bypass.

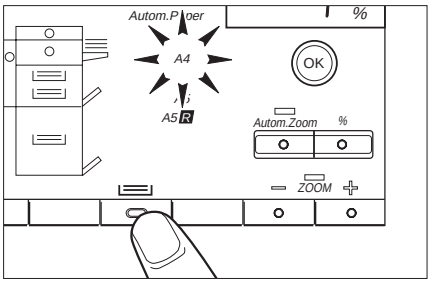

Figure 1-415

Then press the ◈ key. If the size you want cannot be selected, press the ▭ key so that the Stack Bypass Size Entry display disappears, then press the ◈ key.

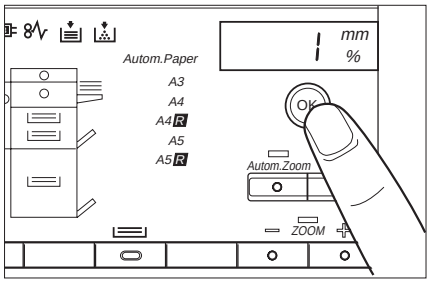

Figure 1-416

D. User Mode

1. Outline

You can change or adjust the factory settings for various functions to meet your specific copying needs. It is also possible to perform cleaning and to make adjustments to the copier.

You can change or adjust the settings for the following items:

	Function	Initial setting
01	Auto Clear Time	2 min.
02	Auto Energy Saver Time	5 min.
03	Zoom Fine Adjustment	0%
04	Auto Cassette Selection ON/OFF	ON
05	Stack Bypass Size Specification ON/OFF	OFF
06	Auto Sort ON/OFF	ON
07	Feeder Cleaning	
08	Standard Copy Settings	
09	Input Unit mm/Inch Selection	2 min.
00	Initializing Additional Functions	NP Drum Cartridge Counter

Table 1-404

2. The Use of Keys and Displays That Appear When Changing the Settings

a. The Use of Keys

- Additional Function key : Press this key to set or cancel the Additional Functions and return to the normal copying mode.
- OK key : Press this key to indicate the item that you want to change.
- C key : Press this key to clear any mistakes that you have made when changing the settings. Also press this key to return to the last previous setting that you had entered.
- Copy Quantity/Copy Ratio Display

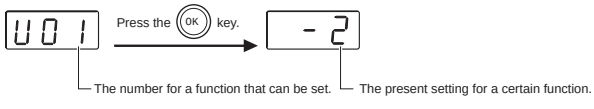

Figure 1-417

3. Auto Clear Time

If the copier is not operated (no keys are pressed) for a certain period of time, the copier automatically returns to the standard copy settings. This time period is called the "Auto Clear Time." You can cancel or freely change the Auto Clear Time.

Auto Clear Time can be set from 1 to 9 minutes in one-minute increments.

1) Press the Additional Function key.
   - "U01" appears in the Copy quantity/Copy ratio display.
     To continue setting other Additional Functions, press the 1 key.

Reference:
Once you set the Additional Functions mode, the key turns red and copying operations cannot be initiated.

2) Check the Copy quantity/Copy ratio display.
   If "U01" is displayed, proceed to the next step.

Reference:
If "U01" is not displayed or if you make a mistake while entering a value, press either the 1 key or press the C key and then the 1 key.

3) Press the OK key.
   - The current setting is displayed in the Copy quantity/Copy ratio display.
   - The possible settings for Auto Clear Time appear in the Copy quantity / Copy ratio display as follows:

Auto Clear Time (min.)	Settings
0	–0
1	–1
2	–2
3	–3
4	–4
5	–5
6	–6
7	–7
8	–8
9	–9

Table 1-405

4) Enter the Auto Clear Time with the Number keys (0 - 9).
   - The setting time is displayed in the Copy quantity/Copy ratio display.

Reference:
1. The initial setting for the Auto Clear Time is 2 minutes.
2. You can set Auto Clear Time from 1 to 9 minutes, in one-minute increments.
3. To cancel this function, press the 0 key.
4. If you make a mistake while entering a value, enter the correct value and it will replace the incorrect one that was previously entered, or press the C key and after the display clears, enter the correct value.

5) Press the OK key.
   The Auto Clear Time is changed and "U01" is displayed.

Reference:
If the Reset key is pressed before the OK key is pressed, the Auto Clear Time that was set is cleared and the copier returns to the normal copying mode.

4. Auto Energy Saver Time

1) Press the Additional Function key.
   - "U01" appears in the Copy quantity/Copy ratio display.
2) Press the 2 key.
3) Press the OK key.
   - The current setting is displayed in the Copy quantity/Copy ratio display.
     The possible settings for Auto Energy Saver Time appear in the Copy quantity / Copy ratio display as follows:

Auto Energy Saver Time (min.)	Settings
2	–1
5	–2
10	–3
15	–4
30	–5
60	–6
120	–7

Table 1-406

4) Enter the Auto Energy Saver Time with the Number keys (1 - 7).
   - The setting time is displayed in the Copy quantity/Copy ratio display.
5) Press the OK key.
   - The Auto Energy Saver Time is changed and "U02" is displayed.

COPYRIGHT © 1998 CANON INC.
CANON NP6621 REV.0 FEB. 1998 PRINTED IN JAPAN (IMPRIME AU JAPON)

5. Zoom Fine Adjustment

- If there is a slight difference in size between the original and output copy images when the copy ratio is set to 100% (direct), use this function to correct the error. Adjustments can be made independently in the X (horizontal) and Y (vertical) directions.
  You can make adjustments from –1% to +1%, in 0.2% increments.
- Press the ◁ ▷ keys to adjust the copy ratio for Zoom Fine Adjustment. The zoom fine adjustments can be confirmed by looking at the copy exposure display.
- Confirm fine adjustments by making copies and comparing them with the original.
- Even if you press the ⇗ key, the zoom fine adjustments made in the Additional Functions mode will not change.
- The zoom fine adjustments are also effective when making reduced/enlarged copies.

1) Press the Additional Functions key.
   - "U01" appears in the Copy quantity/Copy ratio display.
   - Once you set the Additional Functions mode, the ◈ key turns red and copying operations cannot be initiated.
2) Press the 3 key.
   - If you make a mistake while entering a value, press either the 3 key or press the C key and then the 3 key.
3) Press the OK key.
   - "–1" is displayed in the Copy quantity/Copy ratio display, and the current setting in the X direction is displayed in the copy exposure display.
   - The X,Y directions appear in the Copy quantity/Copy ratio display as follows:

Adjustment Directions	Settings
X direction	–1
Y direction	–2

Table 1-407

- Fine adjustments ratios are displayed in the copy exposure display as follows:

a. Zoom Fine Adjustment (Reduction): Press the ◁ key.

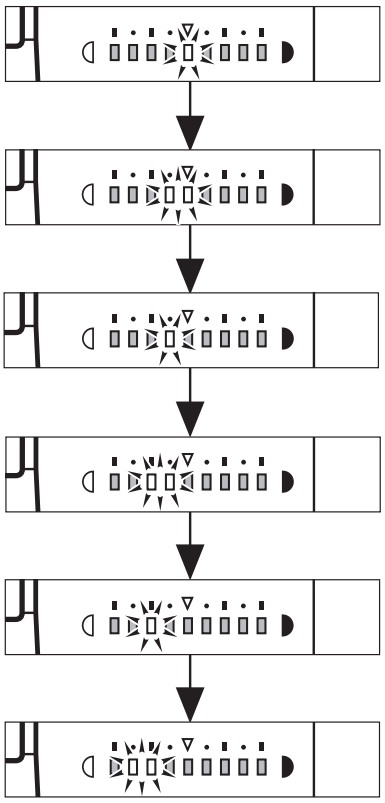

b. Zoom Fine Adjustment (Enlargement): Press the ▷ key.

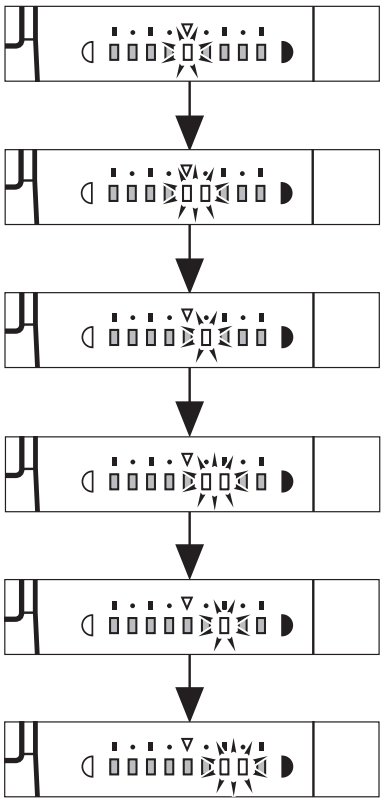

COPYRIGHT © 1998 CANON INC.

4) Make fine adjustments to the copy ratio in the X direction.
   - Press the Exposure keys () to adjust the copy ratio.
   - The initial setting for Zoom Fine Adjustment is 0%.
   - If you make a mistake while entering a value, press the C key and then re-enter the value.
5) Press the OK key.
   - The fine adjustments to the copy ratio in the X direction are made.
   - Then "–2" is displayed in the Copy quantity/ Copy ratio display and the current setting for the Y direction is displayed in the copy exposure display.
6) Adjust the copy ratio in the Y direction.
   - Press the Exposure keys (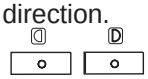) to adjust the copy ratio.
   - The initial setting for Zoom Fine Adjustment is 0%.
   - If you make a mistake while entering a value, press the C key and then re-enter the value.
7) Press the OK key.
   - The Zoom Fine Adjustment is set and "U03" is displayed.
   - If the Clear key is pressed before the Copy key is pressed, the Zoom Fine Adjustment that was set is cleared and the copier returns to the normal copying mode.

6. Auto Cassette Switching ON/OFF

- Auto Cassette Switching ON/OFF
  This function sets Auto Paper Selection and Auto Cassette Switching for each cassette.
  (Auto Paper Switching automatically selects the appropriate copy paper (cassette) according to the size of the original and the selected copy ratio.
  Auto Cassette Switching automatically supplies paper from another paper cassette loaded with the same paper size if the selected paper cassette runs out during continuous copying.)
  Auto Cassette Switching can be set individually for each cassette.
  ON: Cassettes are selected automatically.
  OFF: Cassettes are only selected manually.
- The initial setting for Auto Cassette Switching is ON.

1) Press the Additional Functions key.
   - "U01" appears in the Copy quantity/Copy ratio display.
   - Once you set the Additional Functions mode, the Copy key turns red and copying operations cannot be initiated.
2) Press the 4 key.
   - If you make a mistake while entering a value, press either the START key or press the C key and then the 4 key.
3) Press the OK key.
   - The Paper Supply/Jam Location indicator for the upper cassette of the copier main unit light continuously. The current setting for the upper cassette of the copier main unit is displayed in the Copy quantity/Copy ratio display.
     The ON/OFF settings for the Auto Cassette Switching function are as shown in the table below.

Auto Cassette Switching	Settings
ON	–1
OFF	–0

Table 1-408

4) Press the Number keys (1, 0) to select Auto Cassette Switching ON or OFF for the top cassette in the copier main unit. The current setting is displayed in the Copy quantity/Copy ratio display.
   - The initial setting for Auto Cassette Selection is ON.
   - If coloured paper or another type of special copy stock of the same size is loaded in one of the paper cassettes, then you may not want the copier to automatically switch the paper cassette. Select OFF.
   - If you make a mistake while entering a value, enter the correct value and it will replace the incorrect one that was previously entered, or press the C key and after the display clears, enter the correct value.
5) Press the  key.
   - The bottom cassette of the copier main unit lights.
6) Press the Number keys (1, 0) to select Auto Cassette Switching ON or OFF for the bottom cassette in the copier main unit.
   - Repeat steps ❺ and ❻ to select the Auto Cassette Switching for all of the cassettes.
   - This procedure is the same when the copier is equipped with the optional Cassette Feeding Module or Cassette Pedestal.
7) Press the OK key.
   - Auto Cassette Switching ON or OFF is set and "U04" is displayed.
   - If the Clear key is pressed before the Copy key is pressed, the changed Auto Cassette Switching ON/OFF setting is cleared and the copier returns to the normal copying mode.

COPYRIGHT © 1998 CANON INC.
CANON NP6621 REV.0 FEB. 1998 PRINTED IN JAPAN (IMPRIME AU JAPON)

7. Stack Bypass Size Entry ON/OFF

- When making two-sided and overlay copies, etc. on copy paper placed in the stack bypass, you must specify the size of the paper.
  - OFF: The "SELECT PAPER SIZE" display flashes and the stack bypass paper size is specified when the ◎ key is pressed only if necessary according to the set copy mode.
  - ON: The "SELECT PAPER SIZE" display flashes and the stack bypass paper size is specified when copy paper is placed in the stack bypass.
    Like the paper cassettes, the stack bypass can also be selected during Auto Paper and Auto Zoom.
- The initial setting for Stack Bypass Size Specification is OFF.

1) Press the Additional Function key.
   - "U01" appears in the Copy quantity/Copy ratio display.
   - Once you set the Additional Functions mode, the ◎ key turns red and copying operations cannot be initiated.
2) Press the 5 key.
   - If you make a mistake while entering a value, press either the 5 key or press the C key and then the 5 key.
3) Press the OK key.
   - The current setting is displayed in the Copy quantity/Copy ratio display.
   - The Stack Bypass Size Entry ON/OFF settings appear as follows.

Stack Bypass Size Entry ON/OFF	Settings
ON	–1
OFF	–0

Table 1-409

4) Press the Number keys (1, 0) to select stack bypass Size Entry ON or OFF. The current setting is displayed in the Copy quantity/Copy ratio display.
   - The initial setting for Stack Bypass Size Entry is OFF.
   - If you make a mistake while entering a value, enter the correct value and it will replace the incorrect one that was previously entered, or press the C key and after the display clears, enter the correct value.
5) Press the OK key.
   - Stack Bypass Size Entry ON or OFF is set and "U5" is displayed.
   - If the ⌿ key is pressed before the OK key is pressed, the changed Stack Bypass Size Entry ON/OFF setting is cleared and the copier returns to the normal copying mode.

8. Auto Sort ON/OFF (When equipped with the ADF/RDF and Stapler Sorter/ Sorter (options))

- Auto Sort is a function which automatically outputs copies in the Non-Sort mode if your copier is equipped with the ADF/RDF and Stapler Sorter/ Sorter (options) and the original is only one sheet or one set of copies, or in the Sort mode if the original is more than one sheet or one set of copies.
  When Auto Sort is OFF, copies are output in the mode indicated by the Sorter indicator.
  - ON: Copies are automatically output in the Sort mode
  - OFF: Copies are output in the mode indicated by the Sorter indicator.
    The Sort mode is selected with the Sorter key.
- The initial setting for Auto Sort is ON.

1) Press the Additional Function key.
   - "U01" appears in the Copy quantity/Copy ratio display.
   - Once you set the Additional Functions mode, the ◎ key turns red and copying operations cannot be initiated.
2) Press the 6 key.
   - If you make a mistake while entering a value, press either the 6 key or press the C key and then the 6 key.
3) Press the OK key.
   - The current setting is displayed in the Copy quantity/Copy ratio display.
     The settings for the Auto Sort appear in the Copy quantity/Copy ratio display as follows:

Auto Sort	Settings
ON	–1
OFF	–0

Table 1-410

COPYRIGHT © 1998 CANON INC.

4) Press the Number keys (1, 0) to select Auto Sort ON/OFF.
   - The settings are displayed in the Copy quantity/Copy ratio display.
   - The initial setting for Auto Sort is ON.
   - If you make a mistake while entering a value, enter the correct value and it will replace the incorrect one that was previously entered, or press the C key and after the display clears, enter the correct value.
5) Press the OK key.
   - Auto Sort ON or OFF is set and "U06" is displayed.
   - If the Reset key is pressed before the OK key is pressed, the changed setting is cleared and the copier returns to the normal copying mode.

9. Feeder Cleaning (When equipped with the ADF/RDF (options))

- This function automatically cleans the ADF/RDF (option) Feeding Roller when it becomes dirty with pencil lead, etc. If your originals have black streaks or appear dirty after feeding them into the ADF/RDF, perform Feeder Cleaning. Cleaning is accomplished by repeated feeding of blank originals (copy sheets) through the ADF/RDF.

1) Press the Additional Function key.
   - "U01" appears in the Copy quantity/Copy ratio display.
   - Once you set the Additional Functions mode, the Additional Function key turns red and copying operations cannot be initiated.
2) Press the 7 key.
   - If you make a mistake while entering a value, press either the 7 key or press the C key and then re-enter the value.
3) Place about 10 blank A4-size originals (copy sheets) in the ADF/RDF. Then, press the Start key.
   - Feeder Cleaning begins.
   - To stop Feeder Cleaning before it is completed, press the Stop key.
   - To use this function, your copier must be equipped with the ADF/RDF.
   - Use blank A4-size originals to perform cleaning.
   - Dirt will be picked up on the blank originals used for cleaning.
   - During feeder cleaning, "U08" flashes in the copy quantity display. After feeder cleaning is finished , "U08" stops flashing and lights.

10. Standard Copy Settings (Store/Initialize)

- The Standard Copy Settings which are set when the Reset key is pressed can be changed and stored as desired. In addition, the changed Standard Copy Settings can be returned to initial settings.
- The factory-preset (initial) standard copy settings are as follows:
  - Copy exposure: Automatic Exposure Control
  - Paper selection: Auto Paper Selection
  - Number of copies: 1
  - Copy output: Non-Sort
  - Copying: 1 → 1 Sided
  - Copy ratio: Direct (100%)

1) Press the Additional Function key.
   - "U01" appears in the Copy quantity/Copy ratio display.
   - Once you set the Additional Functions mode, the Additional Function key turns red and copying operations cannot be initiated.
2) Press the 8 key.
   - If you make a mistake while entering a value, press either the 8 key or press the C key and then the 8 key.
3) Press the OK key.
   - "–1" is displayed in the Copy quantity/Copy Ratio display.
   - The settings for Standard Copy Seeting Store/Initialize are as shown in the table below.

Standard Copy Setting Store/Initialize	Settings
Store	–1
Initialize	–0

Table 1-411

4) Press the Number keys (1, 0) to select Standard Copy Settings Store or Initialize.
   - The settings are displayed in the Copy quantity/Copy ratio display.
   - If you make a mistake while entering a value, enter the correct value and it will replace the incorrect one that was previously entered, or press the C key and after the display clears, enter the correct value.
5) Press the OK key.
   - The Standard Copy Settings are stored or initialized and "U08" is displayed.
   - If the Reset key is pressed before the OK key is pressed, the changed settings for Standard Copy Setting Store/Initialize are cleared and the copier returns to the normal copying mode.

COPYRIGHT © 1998 CANON INC.
CANON NP6621 REV.0 FEB. 1998 PRINTED IN JAPAN (IMPRIME AU JAPON)

11. Initializing User Mode

- The settings that were changed in the Additional Functions mode can be restored to their initial settings.

1) Press the Additional Function key.
   - "U01" appears in the Copy quantity/Copy ratio display.
   - Once you set the Additional Functions mode, the ◈ key turns red and copying operations cannot be initiated.
2) Press the 0 key twice.
   - If you make a mistake while entering a value, press either the 0 key twice or press the C key and then press the 0 key twice.
3) Press the OK key.
   - "–1" is displayed in the Copy quantity/Copy ratio display.
4) Press the 0 key.
   - "–0" is displayed in the Copy quantity/Copy ratio display.
   - If you make a mistake while entering a value, enter the correct value and it will replace the incorrect one that was previously entered, or press the C key and after the display clears, enter the correct value.
5) Press the OK key.
   - The Additional Functions are initialized and "U00" is displayed.

Note:
If the ⌫ key is pressed before the OK key is pressed, the Additional Functions are not initialized, and the copier will return to the normal copying mode.

COPYRIGHT © 1998 CANON INC.
CANON NP6621 REV.0 FEB. 1998 PRINTED IN JAPAN (IMPRIME AU JAPON)

V. WARNINGS AND ACTIONS

A. Jam Indicator

1. When ① Flashes on the Control Panel

1) Open the front door.

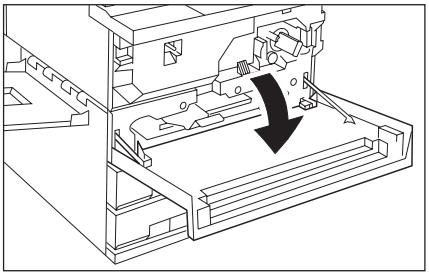

Figure 1-501

2) Lift the green lever on the left side to open the top of the main unit.

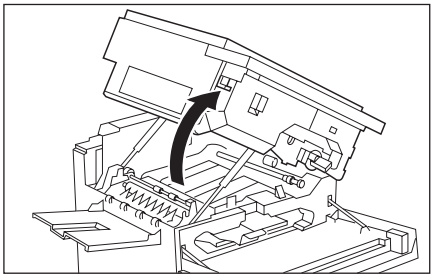

Figure 1-502

3) Slowly remove any jammed paper, taking care not to tear it.
   - If a paper jam occurs in a location similar to that shown in the picture to the lower, slowly turn the green knob in the direction of the arrows and remove the jammed paper.

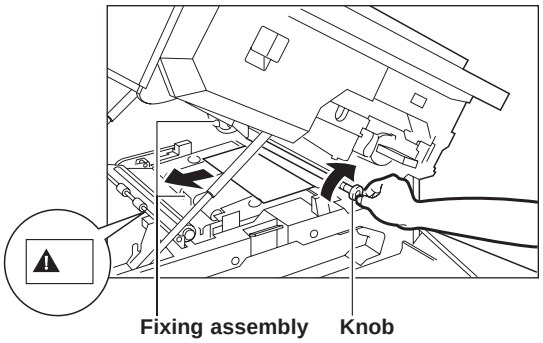

Figure 1-503

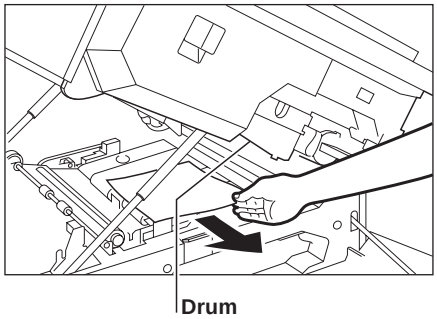

Figure 1-504

Caution:

1. The area surrounding the fixing assembly gets hot during copying. When clearing a paper jam in that area, be careful. Do not touch any part of the fixing assembly, because you could burn yourself.
2. When removing jammed paper or otherwise inspecting the inside of the copier, do not allow necklaces, bracelets or other metal objects to touch the inside of the copier, as this may result in burns or electrical shock.
3. When removing copy paper which has become jammed from inside the copier, take care not to allow the toner on the jammed copy paper to come into contact with your hands or clothing, as this will dirty your hands and clothing. If they become dirty, wash them immediately with cold water. Washing with warm water will set the toner and make it impossible to remove toner stains.
4. When removing copy paper which has become jammed from inside the copier, remove the jammed copy paper gently to prevent the toner on the paper from scattering and entering your eyes or mouth. If toner enters your eyes or mouth, wash immediately with cold water and consult a physician.

Notes:

1. If the jammed paper tears while removing it, be sure to remove any pieces remaining inside the copier.
2. Do not touch the purple colored surface of the drum; doing so will adversely affect the copy quality.

COPYRIGHT © 1998 CANON INC.
CANON NP6621 REV.0 FEB. 1998 PRINTED IN JAPAN (IMPRIME AU JAPON)

- If a paper jam occurs in a location similar to that shown in the picture to the lower, slowly pull the paper out in the direction of the arrows, taking care not to tear it.

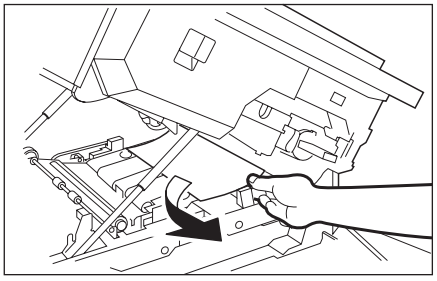

Figure 1-505

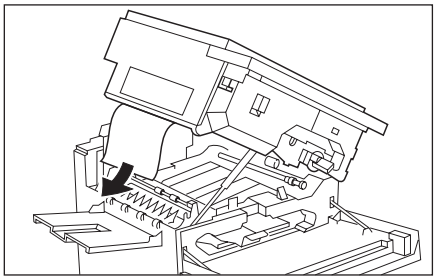

Figure 1-506

- If you cannot find the jammed paper, lift the lever as shown in the picture. If paper is jammed here, gently remove the paper so that it does not tear.

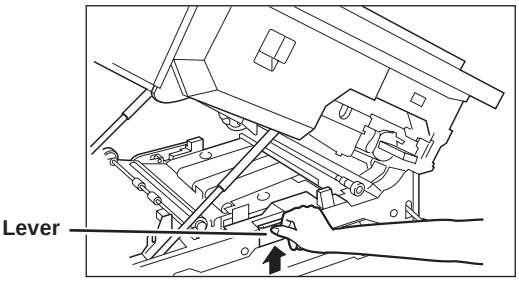

Figure 1-507

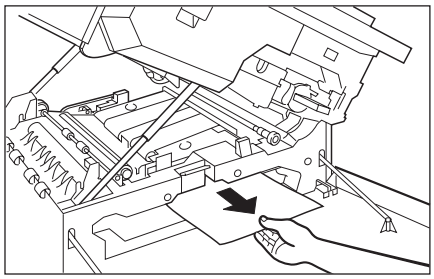

Figure 1-508

4) Gently close the top of the main unit.

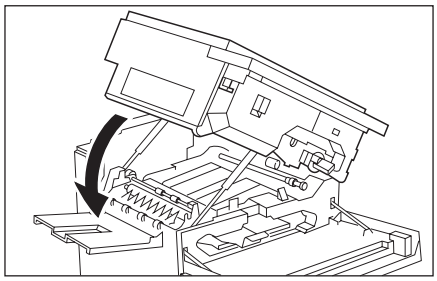

Figure 1-509

5) If a paper jam occurs while using the stack bypass, remove paper placed there and then gently remove any paper jammed in the stack bypass so that it does not tear.

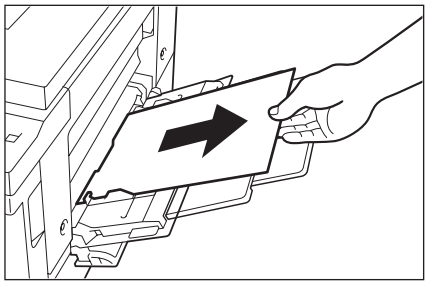

Figure 1-510

6) Close the stack bypass, then open the right door of the copier main unit cassette.

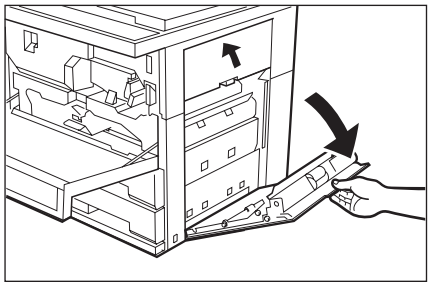

Figure 1-511

COPYRIGHT © 1998 CANON INC.

7) Place your finger on the inner guide.
   • Push the inner guide down towards you and gently pull out any jammed paper so that it does not tear.

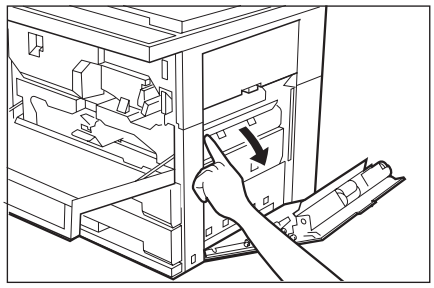

Figure 1-512

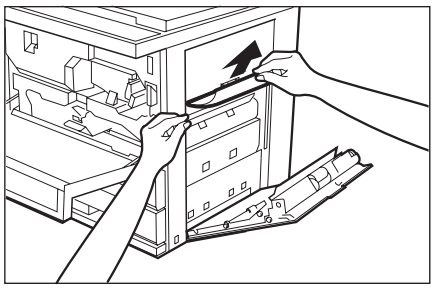

Figure 1-513

8) Securely close the right door of the cassette.
   • When using the stack bypass, place the copy paper in the stack bypass.

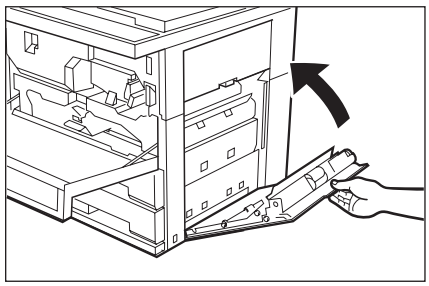

Figure 1-514

• After inspecting all areas that appeared on the control panel, and removing all jammed paper, close the front door.
  If the Sorter/Stapler Sorter (options) is attached, after closing the main unit, return the Sorter/Stapler Sorter to its original position.
  If a paper jam occurred while using the ADF/RDF (options), after clearing the paper jam, place the first page of the original back in the ADF/RDF and press the ◈ key. The copier will make the remaining copies.
• It is not necessary to enter the number of copies again after removing jammed paper. The copier automatically senses the number of jammed sheets, and adjusts the number of copies accordingly.

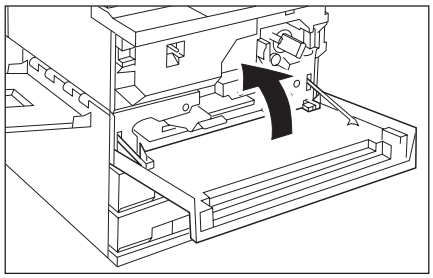

Figure 1-515

2. When ② Flashes on the Control Panel

• If ① and ② both flash at the same time, check ① first before checking ②.

1) Open the front door.

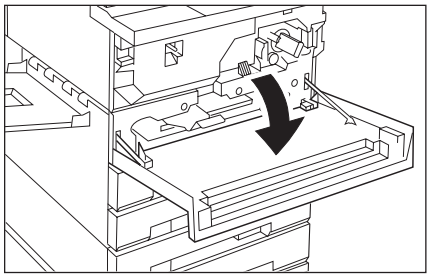

Figure 1-516

COPYRIGHT © 1998 CANON INC.
CANON NP6621 REV.0 FEB. 1998 PRINTED IN JAPAN (IMPRIME AU JAPON)

2) Open the right door of the cassette.
   - Place your finger on the green finger grip and pull open the inner guide for the copier main unit cassette. If the Cassette Feeding Module or Paper Deck (options) is attached, open both doors.

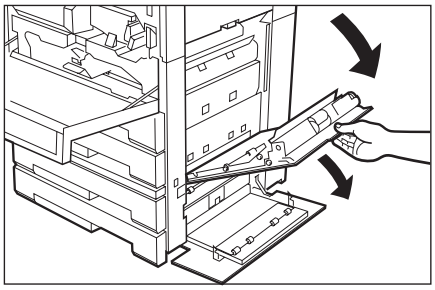

Figure 1-517

3) Gently pull out any jammed paper so that it does not tear.
   - If a paper jam is located in the Paper Deck (options), then pull the green grip and pull out any jammed paper.

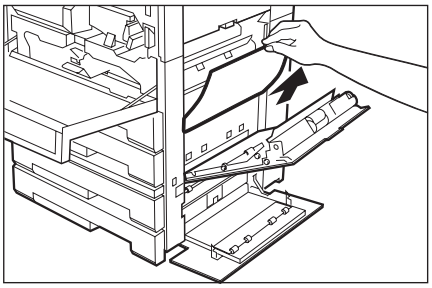

Figure 1-518

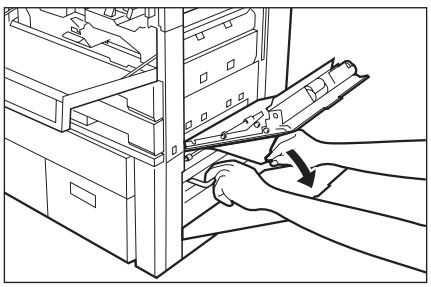

Figure 1-519

4) If you cannot clear the paper jam after following steps ❶ and ❷, then pull out the cassette.

Note:
If you cannot see the cassette because the front door is in the way, close the front door. After you have cleared the paper jam, open and close the front door once again.

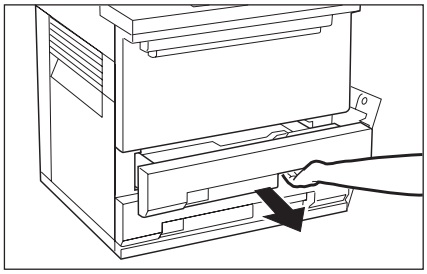

Figure 1-520

5) Remove any paper that is sticking out of the cassette.

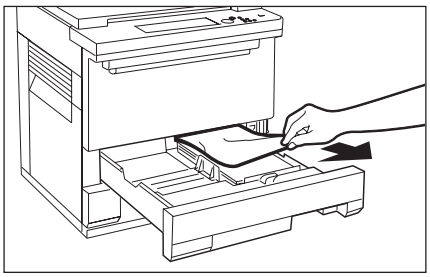

Figure 1-521

6) Return the cassette to its original position and securely close the inner guide and right door for the copier main unit cassette, or the right door of the Paper Deck (options).

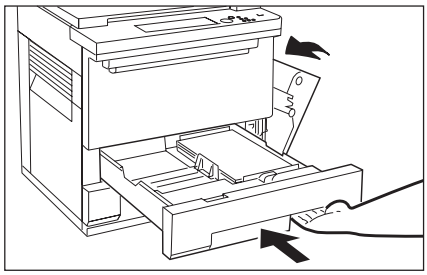

Figure 1-522

COPYRIGHT © 1998 CANON INC.

7) After inspecting all jam location areas that appeared on the control panel, and removing any jammed paper, close the front door.
If a paper jam occurred while using the ADF/RDF (options), after clearing the paper jam, place the first page of the original back in the ADF/DRF and press the ◇ key. The copier will make the remaining copies.

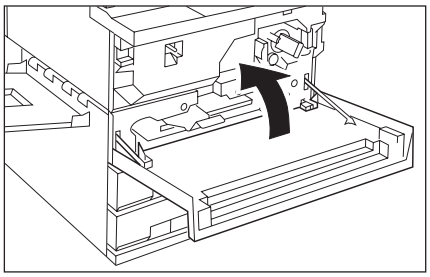

Figure 1-523

3. If Lights (Checking the Right Door/Sorter/Stapler Sorter)

1) If the ② indicator lights, then check to make sure that the right door of the cassette is securely closed.
If not, close it securely.

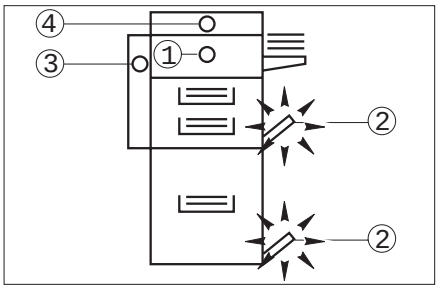

Figure 1-524

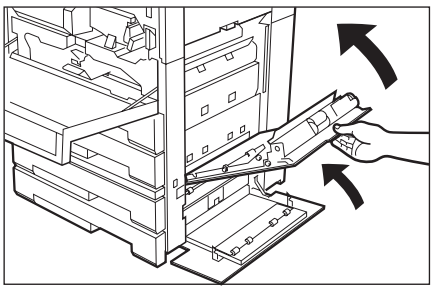

Figure 1-525

2) If the indicator ③ lights, close the Stapler Sorter cover and return the Sorter/Stapler Sorter to its original position.
If the indicator ③ lights after making copies, remove any copy paper that is located in the Sorter bins.

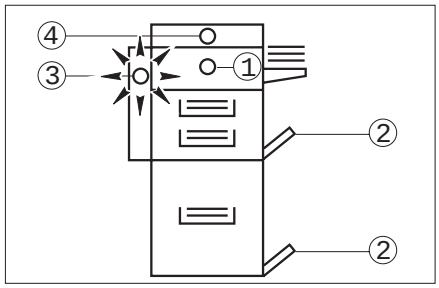

Figure 1-526

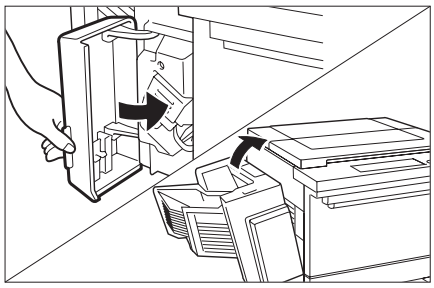

Figure 1-527

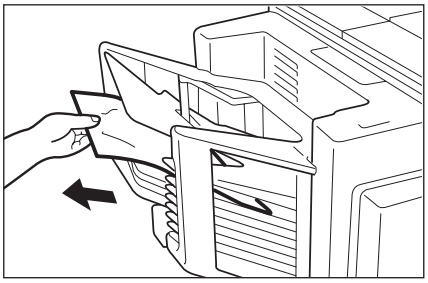

Figure 1-528

COPYRIGHT © 1998 CANON INC.
CANON NP6621 REV.0 FEB. 1998 PRINTED IN JAPAN (IMPRIME AU JAPON)

4. If [icon] Flashes (Replacing the Toner Cartridge)

- If the toner has run low, the Replace Toner Cartridge indicator ([icon]) will flash.
  Follow the procedure described below and replace the used toner cartridge with a new one.

1) Open the front door.

Note:
Do not lift the green lever on the left side to open the top of the main unit. Some toner may spill out of the toner cartridge opening.

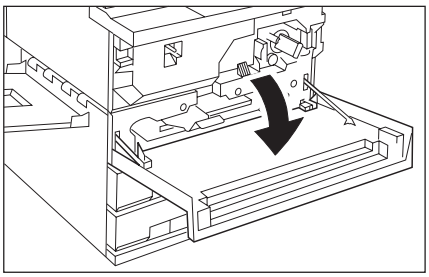

Figure 1-529

2) Grip the handle of the toner cartridge.
   Push in the cartridge lever and turn the cartridge clockwise until it reaches a horizontal position. When the handle is at a horizontal position pull out the toner cartridge.

Caution:
When removing used toner cartridges from the copier, remove the cartridges carefully to prevent toner from scattering and entering your eyes or mouth. If toner enters your eyes or mouth, wash immediately with cold water and consult a physician.

Warning:
Do not throw toner cartridges into open fires, as this may cause the toner to ignite and result in burns or fire. When disposing of toner cartridges, place them in a bag to prevent toner from spattering, and dispose of them as unburnable garbage.

Note:
Take care when replacing the toner cartridge because some toner may spill out of the toner cartridge opening. Also, some toner may stick to the toner cartridge, so be careful not to get toner on your clothes.

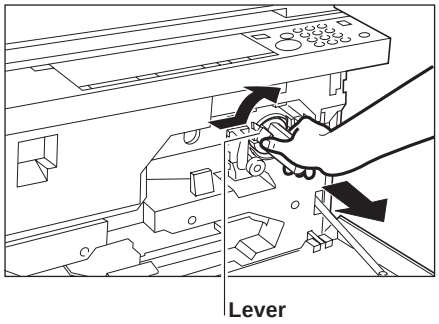

Figure 1-530

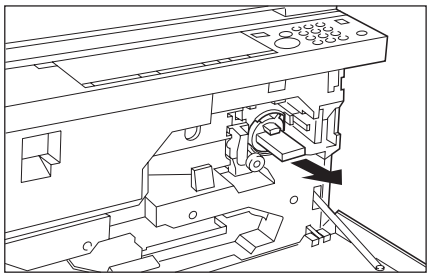

Figure 1-531

3) Prepare a new toner cartridge.

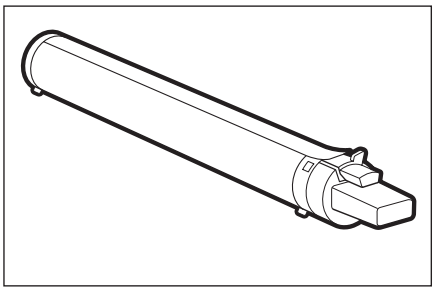

Figure 1-532

4) Hold the new toner cartridge level.
   - Shake the cartridge to evenly distribute the toner within the cartridge.

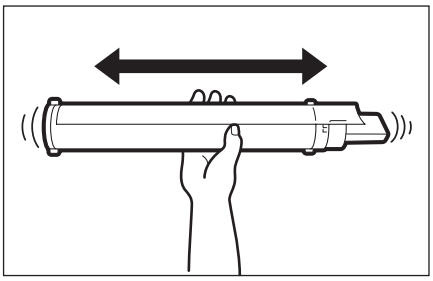

Figure 1-533

COPYRIGHT © 1998 CANON INC.

5) Set the new toner cartridge.
   - Gently insert it into the copier as far as it will go.
   - Make sure that the toner cartridge is inserted all the way into the copier.

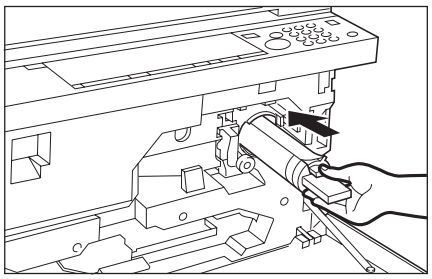

Figure 1-534

6) Pull the toner cartridge sealing tape off.
   - Pressing down on the toner cartridge, grip the orange sealing tape tab and pull the sealing tape straight out of the cartridge.
   - Pull the toner cartridge sealing tape off straight.

Caution:
Some toner may stick to the toner cartridge seal, so be careful not to get toner on your clothes.

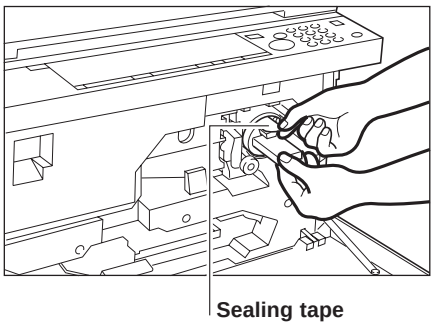

Figure 1-535

7) Grip the toner cartridge handle. Turn the cartridge counter-clockwise until it locks into place.

Note:
Be sure to turn the cartridge until it locks into place. If it does not lock into place, toner may spill out.

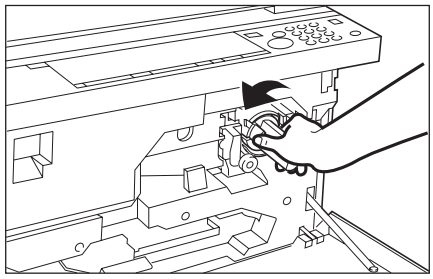

Figure 1-536

8) Securely close the front door.
   - You cannot close the front door until the main unit is closed.
   - You cannot operate the copier if the front door is open.

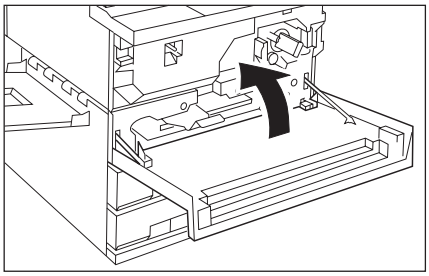

Figure 1-537

COPYRIGHT © 1998 CANON INC.
CANON NP6621 REV.0 FEB. 1998 PRINTED IN JAPAN (IMPRIME AU JAPON)

B. Cleaning the Static Charge Eliminator

1) Open the front door.
   - Remove any originals that have been placed on top of the copier so that they do not fall off when you open the main unit.
2) Lift the green lever on the left side to open the top of the main unit.
3) With two fingers, grip the finger grip located on the front part of the static charge eliminator. Lift and pull out the static charge eliminator from the copier.

Note:
Do not touch the purple coloured surface of the drum; doing so will adversely affect the copy quality.

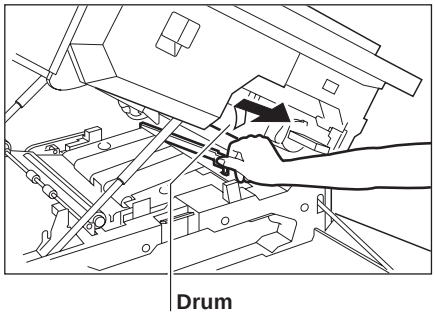

Figure1-538

4) Using the static charge eliminator cleaning brush (attached to the back side of the front door), sweep clean the slot on the static charge eliminator.
   - The static charge eliminator cleaning brush is very small and easy to lose, so it is recommended that you return it to its storage location on the back side of the front door after you have finished cleaning the slot on the static charge eliminator.

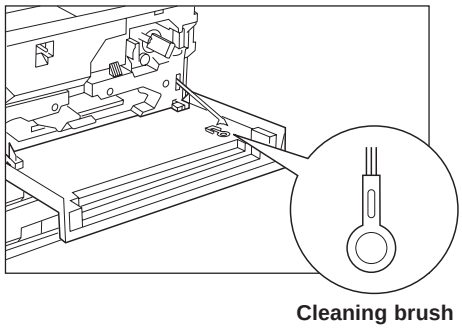

Figure1-539

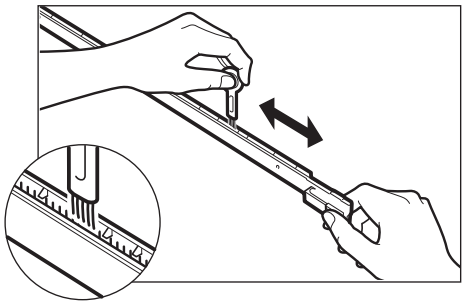

Figure1-540

5) With two fingers grip the finger grip of the static charge eliminator.
   Insert the static charge eliminator back into the copier until you hear a click.

Note:
Be careful not to touch the purple-colored surface on the drum of the main unit as doing so will prevent clear copies from being made.

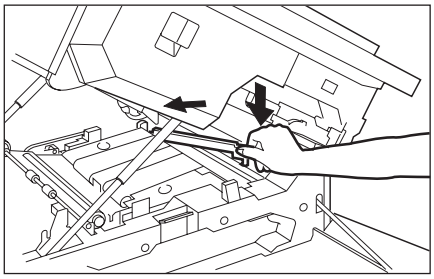

Figure1-541

6) Securely close the top of the main unit.
   - You cannot close the front door until the main unit is closed.
7) Securely close the front door.
   - If the Sorter or Stapler Sorter (options) is attached, after closing the main unit, return it to its original position.
   - You cannot operate the copier if the front door is open.

COPYRIGHT © 1998 CANON INC.

VI. ROUTINE CLEANING

Clean the following parts once a week or whenever copies appear dirty.

Warning:

1. When cleaning the copier, first turn OFF the power switch and unplug the power plug. Failure to observe these items may result in fire or electrical shock.
2. Clean the copier using a firmly wrung-out cloth dampened with a mild cleansing detergent. Do not use alcohol, benzene, paint thinner, or other inflammable substances. If inflammable substances come into contact with a high-voltage area inside the copier, it may result in fire or electrical shock.

1. Platen glass
   - Clean the platen glass with a cloth dampened with water or a mild cleaning agent. Then, wipe with a dry cloth.
2. Underside of the platen glass cover
   - Clean the underside of the platen glass cover with a cloth dampened with water or a mild cleaning agent. Then, wipe with a dry cloth.
3. Bottom of the ADF/RDF (Accessory)
   - Move the feeding belt with your hand as you wipe it with a cloth dampened with water or a mild cleaning agent. Then, wipe with a dry cloth.

COPYRIGHT © 1998 CANON INC.
CANON NP6621 REV.0 FEB. 1998 PRINTED IN JAPAN (IMPRIME AU JAPON)

CHAPTER 2
COPYING PROCESS

I. IMAGE FORMATION 2-1
A. Outline 2-1
B. Latent Static Image Formation Block .. 2-2
C. Step 1 (pre-exposure) 2-3
D. Step 2 (primary charging) 2-3
E. Step 3 (image exposure) 2-4
F. Step 4 (development) 2-4
G. Step 5 (transfer) 2-5
H. Step 6 (separation) 2-6
I. Step 7 (fixing) 2-7
J. Step 8 (drum cleaning) 2-7
II. AUXILIARY PROCESS 2-8
A. Blank Exposure 2-8

COPYRIGHT © 1998 CANON INC. CANON NP6621 REV.0 FEB. 1998 PRINTED IN JAPAN (IMPRIME AU JAPON)

COPYRIGHT © 1998 CANON INC. CANON NP6621 REV.0 FEB. 1998 PRINTED IN JAPAN (IMPRIME AU JAPON)

I. IMAGE FORMATION

A. Outline

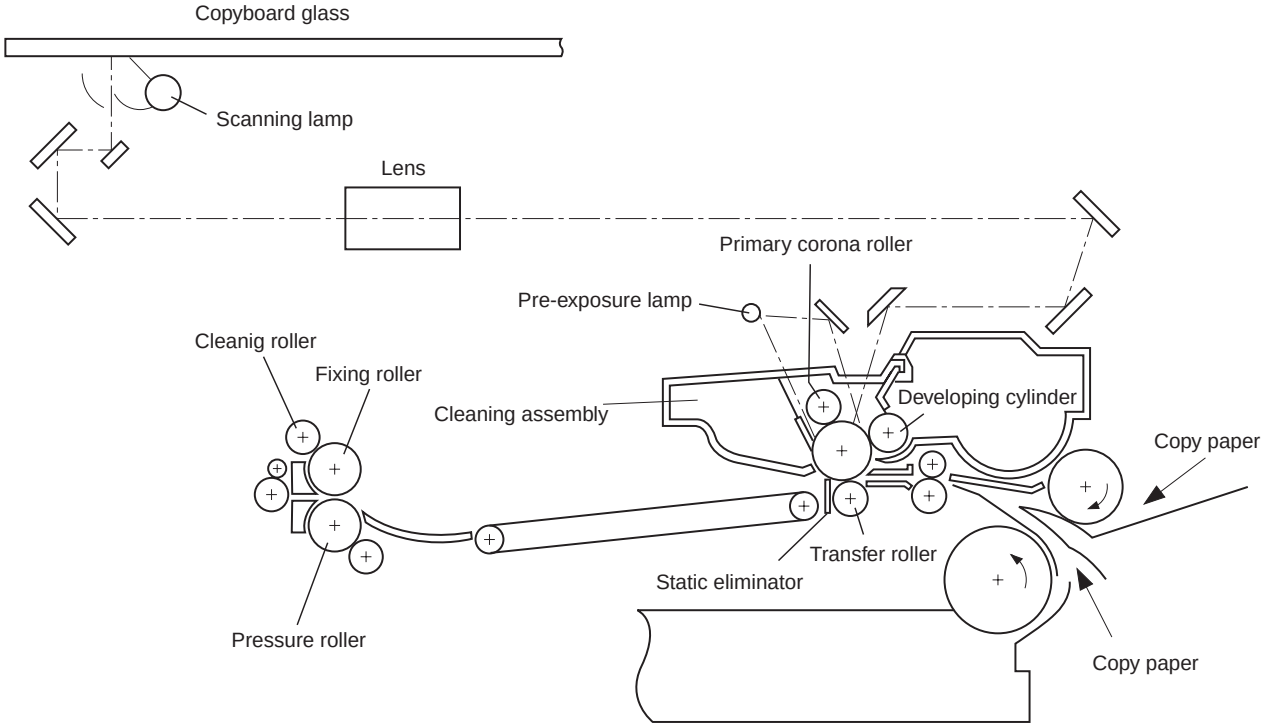

Figure 2-101

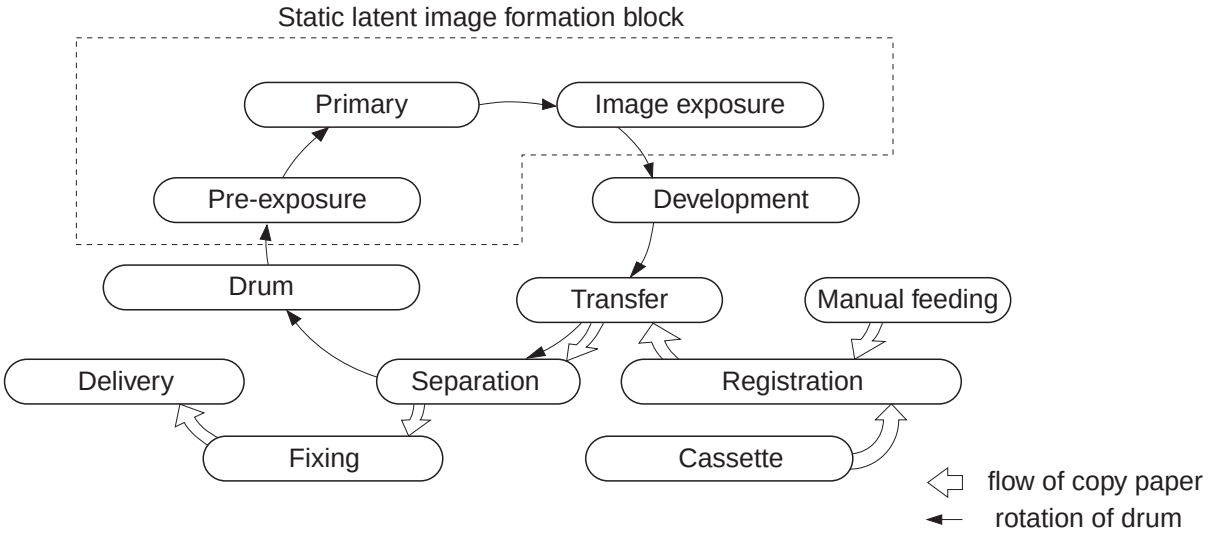

Figure 2-102

COPYRIGHT © 1998 CANON INC.
CANON NP6621 REV.0 FEB. 1998 PRINTED IN JAPAN (IMPRIME AU JAPON)

The copier forms images through the following steps, and each of the steps functions as described below.

step 1 pre-exposure
step 2 primary charging (negative DC)
step 3 image exposure
step 4 development (AC and negative DC bias)
step 5 transfer (negative DC)
step 6 separation (curvature + static eliminator)
step 7 fixing
step 8 drum cleaning

The photosensitive drum consists of a photoconducting layer on the outside and an aluminum base on the inside; the photoconducting layer is made of organic photoconductor (OPC), and the aluminum conductor is a photoconductor.

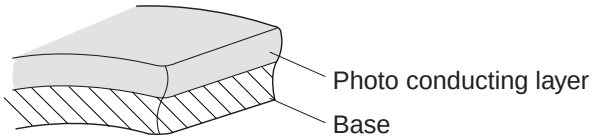

Figure 2-103

B. Latent Static Image Formation Block

The block consists of three steps; at the end of the block, areas of the drum corresponding to the black areas of the original are left with negative charges and the areas of the drum corresponding to the white areas of the original are rid of negative charges.

The images formed on the drum by the presence and absence of negative charges are not visible to the human eye and, therefore, the term *latent static* images.

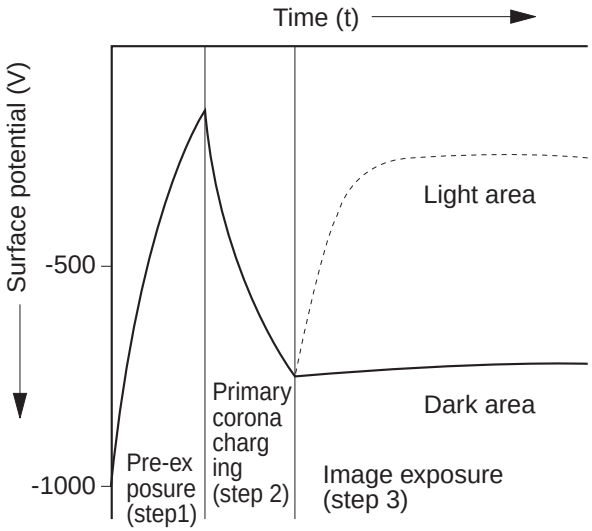

Figure 2-104

COPYRIGHT © 1998 CANON INC.
CANON NP6621 REV.0 FEB. 1998 PRINTED IN JAPAN (IMPRIME AU JAPON)

C. Step 1 (pre-exposure)

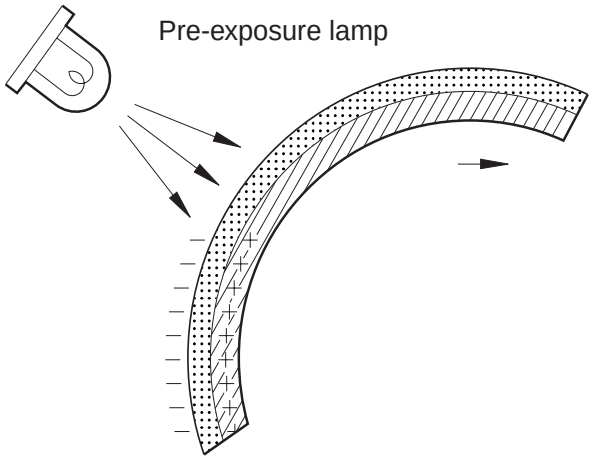

Figure 2-105

Before primary charging takes place, the light of the pre-exposure lamp is directed to the photosensitive drum to eliminate the residual charges on the drum, thereby preventing uneven density.

D. Step 2 (primary charging)

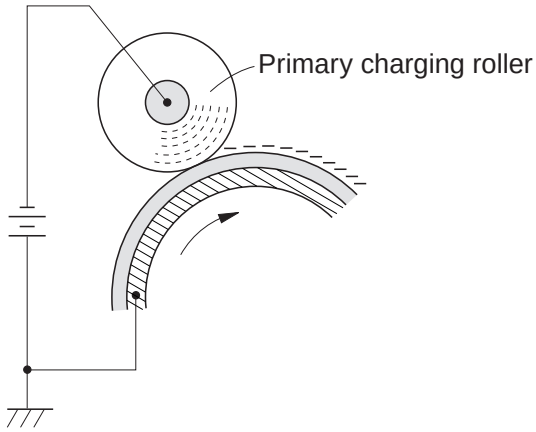

Figure 2-106

The copier uses what is termed *primary charging*, in which a charging roller made of conducting material directly charges the photosensitive drum. Compared to the conventional corona charging method, direct charging provides such advantages as a low application voltage and virtual absence of ozone.

The primary charging roller is a special roller and possesses different characteristics from the transfer roller.

COPYRIGHT © 1998 CANON INC.

E. Step 3 (image exposure)

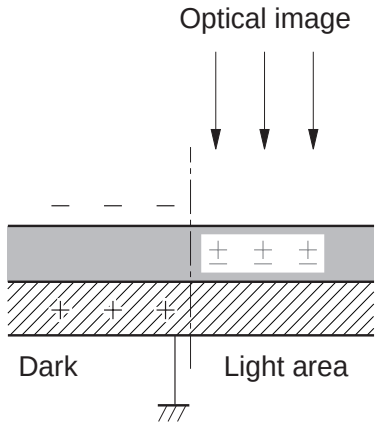

Figure 2-107

In this step, the optical image of an original is projected on the photosensitive drum to neutralize the charges in the *light* areas.

F. Step 4 (development)

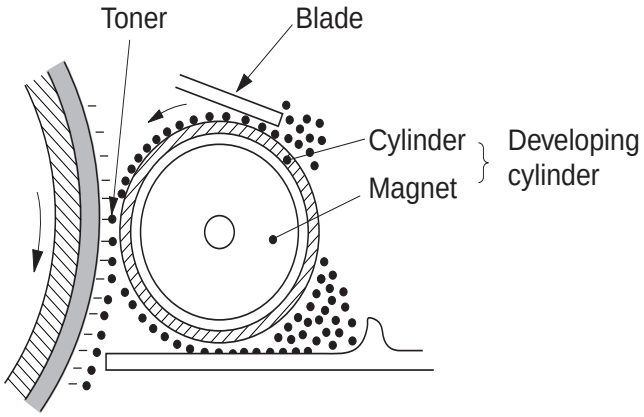

Figure 2-108

As shown in Figure 2-108, the developing assembly consists of a fixed magnet, a cylinder that rotates around the magnet, and a rubber blade.

The toner is a one-component toner whose main ingredient is magnetic resins.

The toner has insulating characteristics and becomes positively charged by friction against the rubber blade, which remains in contact under pressure with the cylinder; the toner is evened out to form a thin layer on the cylinder owing to the elasticity of the rubber.

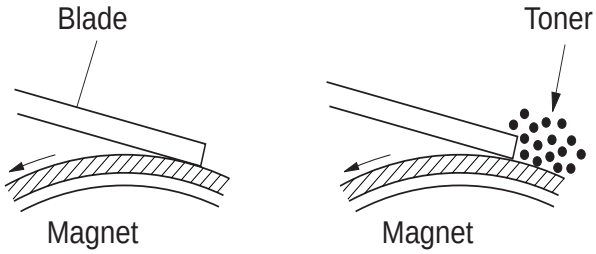

Figure 2-109

COPYRIGHT © 1998 CANON INC.
CANON NP6621 REV.0 FEB. 1998 PRINTED IN JAPAN (IMPRIME AU JAPON)

An AC bias and DC bias (negative component) are applied simultaneously* to the developing cylinder and the blade.

* Termed *development bias*, whose negative component is larger than that of the positive component.

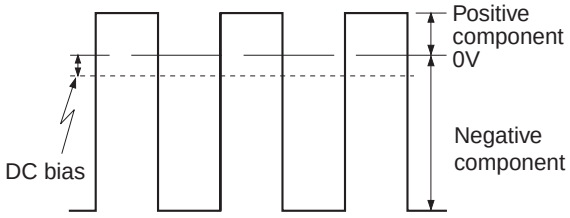

Figure 2-110

During copying operation, the drum surface potential and development bias (at time of positive component) draw toner to the photosensitive drum to turn the latent static image into a visible image. The excess toner is drawn away from the photosensitive drum by the work of the drum surface potential and the developing bias (at time of negative component).

The AC bias (frequency, in particular) mainly affects gradation; a lower frequency improves the gradation, but tends to result in fogging. The DC bias relates to copy density and fogging; a higher bias, that is closer to 0 V, darkens the image but in turn could lead to fogging.

G. Step 5 (transfer)

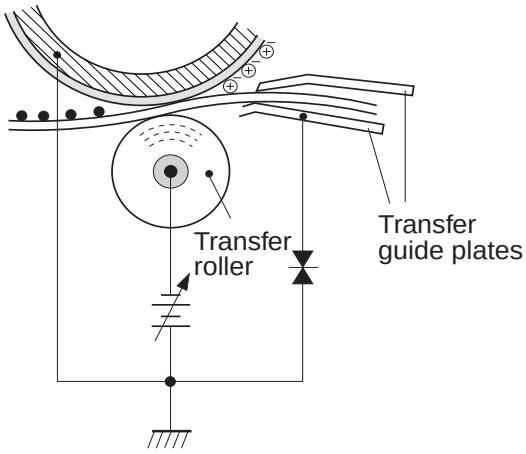

Figure 2-111

The transfer roller deposits negative charges on the back of copy paper to attract toner from the drum surface to the copy paper.

The copier uses a roller transfer method, which requires a lower transfer voltage compared to corona transfer methods and generates virtually no ozone.

To prevent transfer failure or soiling of the back of copy paper, the transfer guide is grounded through a varistor.

Reference:

If the transfer guide was grounded, the charges that should be on the back of copy paper would escape, causing transfer failure; by the same token, if the transfer guide is not grounded at all, it would become charged and soiled with deposits of toner, soiling the back of copy paper.

COPYRIGHT © 1998 CANON INC.

Reference:

If the image on the photosensitive drum fails to transfer to copy paper because of a jam or the like, the transfer charging roller could become soiled with toner.

To prevent such a problem, the copier uses a positive transfer voltage when the scanner is moving in reverse or during post rotation, thereby returning the positively charged toner on the transfer roller to the photosensitive drum.

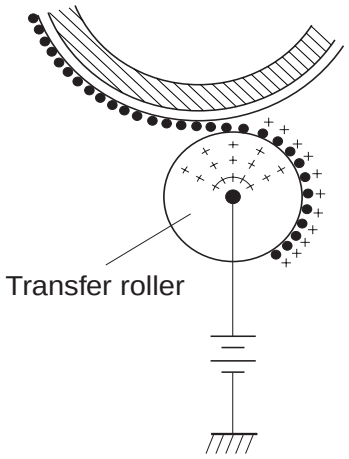

Figure 2-112

H. Step 6 (separation)

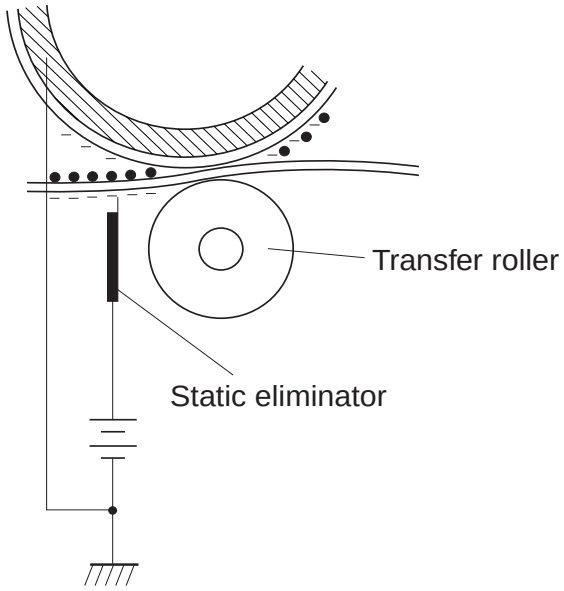

Figure 2-113

The copier uses a curvature separation method, which separates copy paper from the photosensitive drum by the rigidity of the paper. However, thin paper could at times fail to separate from the drum because of its low rigidity. To prevent such a problem, a positive charge is applied to the separation static eliminator, thereby weakening the static attraction for better separation.

COPYRIGHT © 1998 CANON INC.
CANON NP6621 REV.0 FEB. 1998 PRINTED IN JAPAN (IMPRIME AU JAPON)

I. Step 7 (fixing)

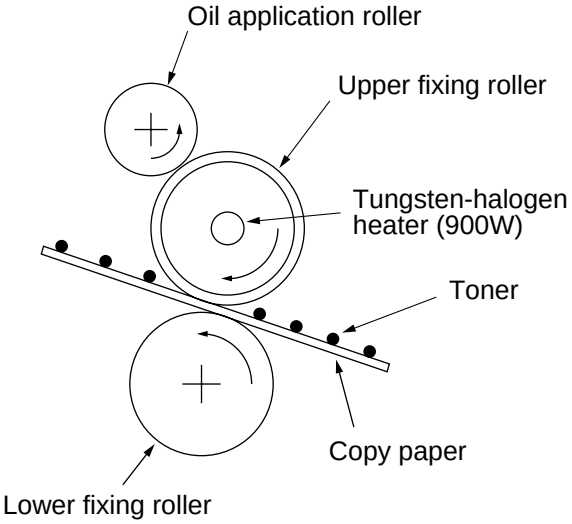

Figure 2-114

In this step, the copy paper is pressed between two heated rollers to make the toner image permanent.

To prevent the copy paper from wrapping around the roller and toner offsetting (adhesion of toner to the roller and transfer of the toner to the next copy), the surface of the upper fixing roller is cleaned with the cleaning roller.

J. Step 8 (drum cleaning)

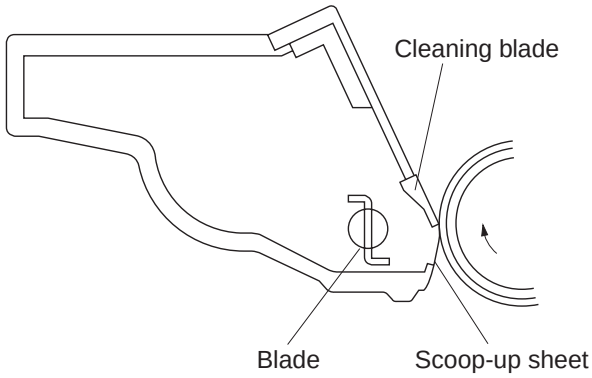

Figure 2-115

In this step, the cleaning blade scrapes off the toner remaining on the photosensitive drum in preparation for the next copy run. The toner is gathered by the scoop-up sheet and collected at the rear by a blade.

COPYRIGHT © 1998 CANON INC.

II. AUXILIARY PROCESS

A. Blank Exposure

Blank exposure is executed to remove the drum surface potential of the non-image area that occurs as a result of the difference among copy sizes or when making copies in Reduce mode.

The light from the pre-exposure lamp is reflected by the reflecting plate and directed to the photosensitive drum.

The non-image area between sheets of copy paper is created by reflecting the light from the pre-exposure lamp by a separate reflecting plate, exposing the whole area.

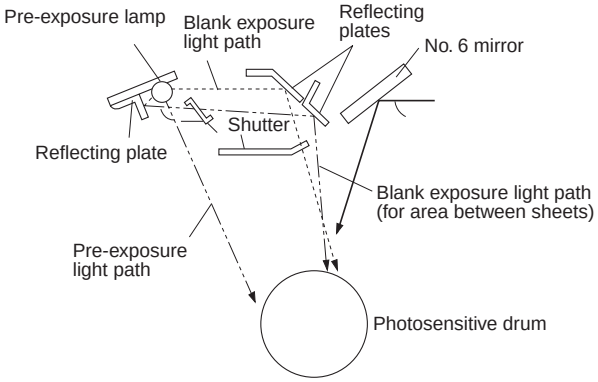

Figure 2-201

COPYRIGHT © 1998 CANON INC.
CANON NP6621 REV.0 FEB. 1998 PRINTED IN JAPAN (IMPRIME AU JAPON)

CHAPTER 3
OPERATIONS AND TIMING

In outline diagrams, ▬▬ represents mechanical drive paths, and ⟶ indicates electrical signal paths.

Signals in digital circuits are identified as '1' for High and '0' for Low. The voltage of signals, however, depends on the circuit.

Nearly all operations of the product are controlled by a microprocessor; the internal workings of the processor are not relevant to the service person's work and, therefore, are left out of the discussions. By the same token, no repairs are prescribed for the PCBs at the user's premises; for this reason, PCBs are discussed by means of block diagrams rather than circuit diagrams.

For the purpose of explanation, discussions are divided into the following: from sensors to main PCB input ports; from main output ports to loads; and minor control circuits and functions.

I. BASIC OPERATIONS 3-1
- A. Functional Construction 3-1
- B. Outline of Electrical Circuitry 3-2
- C. Inputs to the DC Controller 3-3
- D. Outputs from the DC Controller 3-8
- E. Inputs to and Outputs from the Cassette Feeding Module-B2 Driver PCB 3-13
- F. Inputs to and Outputs from the Cassette Feeding Module-A2 Driver PCB 3-14
- G. Inputs to and Outputs from the Cassette Feeding Unit-K1 Driver PCB 3-16
- H. Main Motor Control Circuit 3-21
- I. Basic Sequence of Operations (2 copies, continuous, AE) 3-22
- J. Original Size Detecton Control 3-23

II. EXPOSURE SYSTEM 3-27
- A. Varying the Reproduction Ratio 3-27
- B. Lens Drive System 3-27
- C. Scanner Drive System 3-31
- D. Operations of the Scanner in Page Separation Mode 3-34

III. IMAGE FORMATION SYSTEM 3-35
- A. Outline 3-35
- B. Sequence of Operations (image formation system) 3-36
- C. Controlling the Scanning Lamp 3-37
- D. Controlling the Primary Charging Roller 3-38
- E. Controlling the Transfer Roller Bias 3-41
- F. Controlling the Static Eliminator Bias 3-44
- G. Controlling the Developing Bias 3-46
- H. Copy Density Automatic Control 3-48
- I. Developing/Cleaning Assembly 3-50
- J. Blank Exposure Control 3-53
- K. Primary Charging Roller Cleaning Control 3-55
- L. Transfer Roller Locking/Releasing Control 3-56

IV. PICK-UP/FEEDING SYSTEM 3-57
- A. Pick-Up from the Machine 3-57
- B. Making Two-Sided Copies (1copy) ... 3-61
- C. Duplexing Unit 3-63
- D. Pick-Up from the Cassette Feeding Module-A2 3-72
- E. Pick-Up from the Cassette Feeding Unit-K1 3-74
- F. Paper Deck Pedestal-K1 3-76
- G. Multifeeder 3-82
- H. Identifying the Size of the Cassette ... 3-85

COPYRIGHT © 1998 CANON INC. CANON NP6621 REV.0 FEB. 1998 PRINTED IN JAPAN (IMPRIME AU JAPON)

I. Fixing/Delivery Assembly 3-87
J. Detecting Jams 3-92
V. POWER SUPPLY 3-101
A. Outline of Power Distribution 3-101
B. Power Supply Circuitry 3-102
C. Detecting Errors on the Power Supply PCB 3-103
D. Protection Mechanisms for the Power Supply Circuit 3-104
VI. SERVICE MODE 3-105
A. Outline 3-105
B. Using Service Mode 3-105
C. Control Display Mode (‘1’) 3-107
D. I/O Mode (‘2’) 3-110
E. Adjustment Mode (‘3’) 3-114
F. Operation/Inspection Mode (‘4’) 3-117
G. Machine Settings Mode (‘5’) 3-118
H. Counter Mode (‘6’) 3-120
VII. SELF DIAGNOSIS 3-121
A. Copier Self Diagnosis 3-121
B. Self Diagnosis on the Cassette Feeding Unit 3-124
C. RDF/ADF Self Diagnosis 3-125
D. Sorter Self Diagnosis 3-126
VIII. STANDARDS AND ADJUSTMENTS 3-127
A. Electrical 3-127

COPYRIGHT © 1998 CANON INC. CANON NP6621 REV.0 FEB. 1998 PRINTED IN JAPAN (IMPRIME AU JAPON)

I. BASIC OPERATIONS

A. Functional Construction

The machine can be divided into four functional blocks: pick-up/feeding system, exposure system, image formation system, and control system.

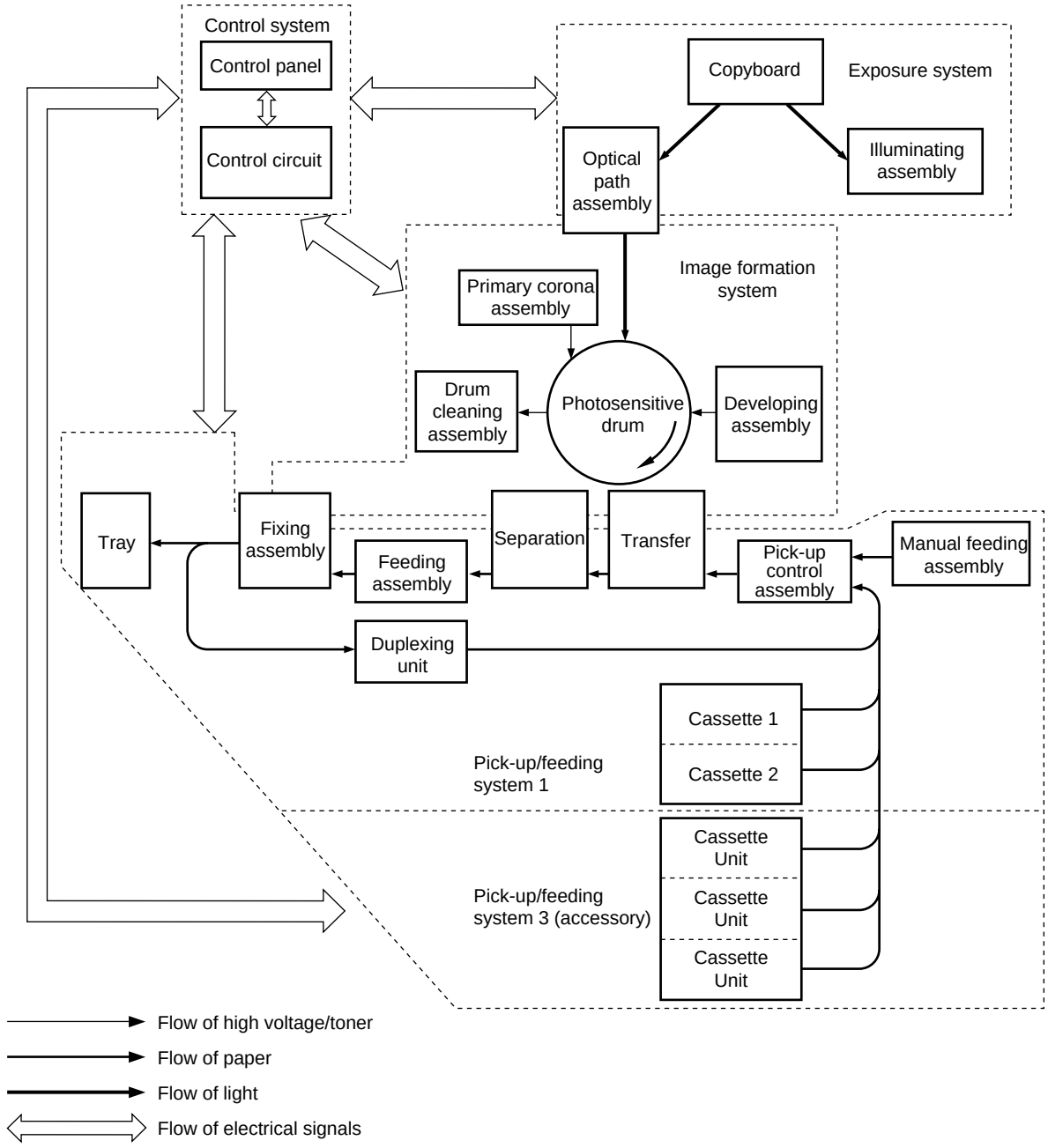

Figure 3-101

COPYRIGHT © 1998 CANON INC.

B. Outline of Electrical Circuitry

The machine's most electrical mechanisms are controlled by the microprocessor on its DC controller PCB. The microprocessor reads the input signals from the sensors and operation keys according to its pre-programmed instructions and sends signals to drive such loads as motors, solenoids, and lamps as necessary.

The machine's microprocessor is capable of reading analog signals as well as digital signals using its A/D converter.

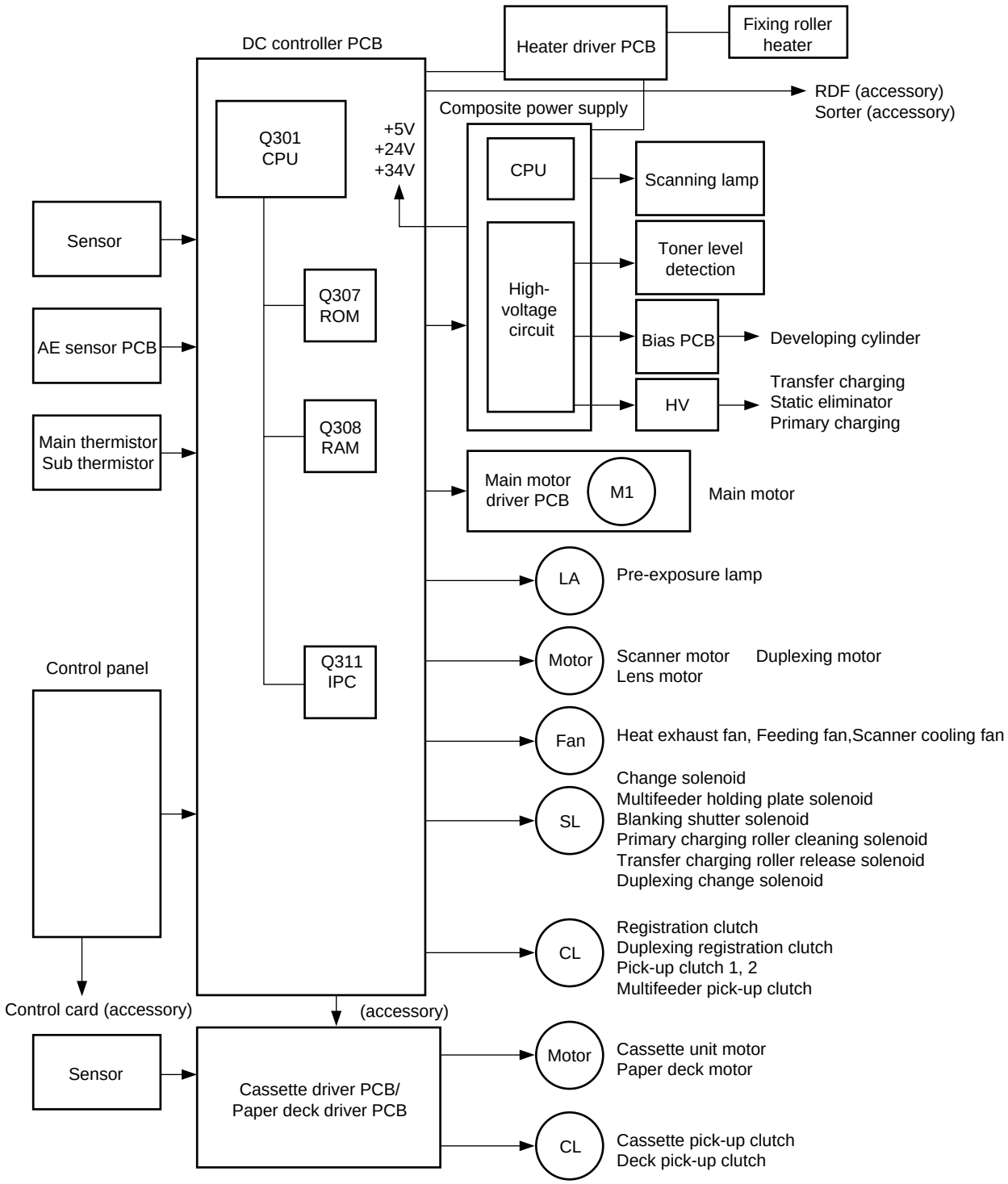

Figure 3-102

COPYRIGHT © 1998 CANON INC.
CANON NP6621 REV.0 FEB. 1998 PRINTED IN JAPAN (IMPRIME AU JAPON)

C. Inputs to the DC Controller

1. Inputs to the DC Controller PCB (1/5)

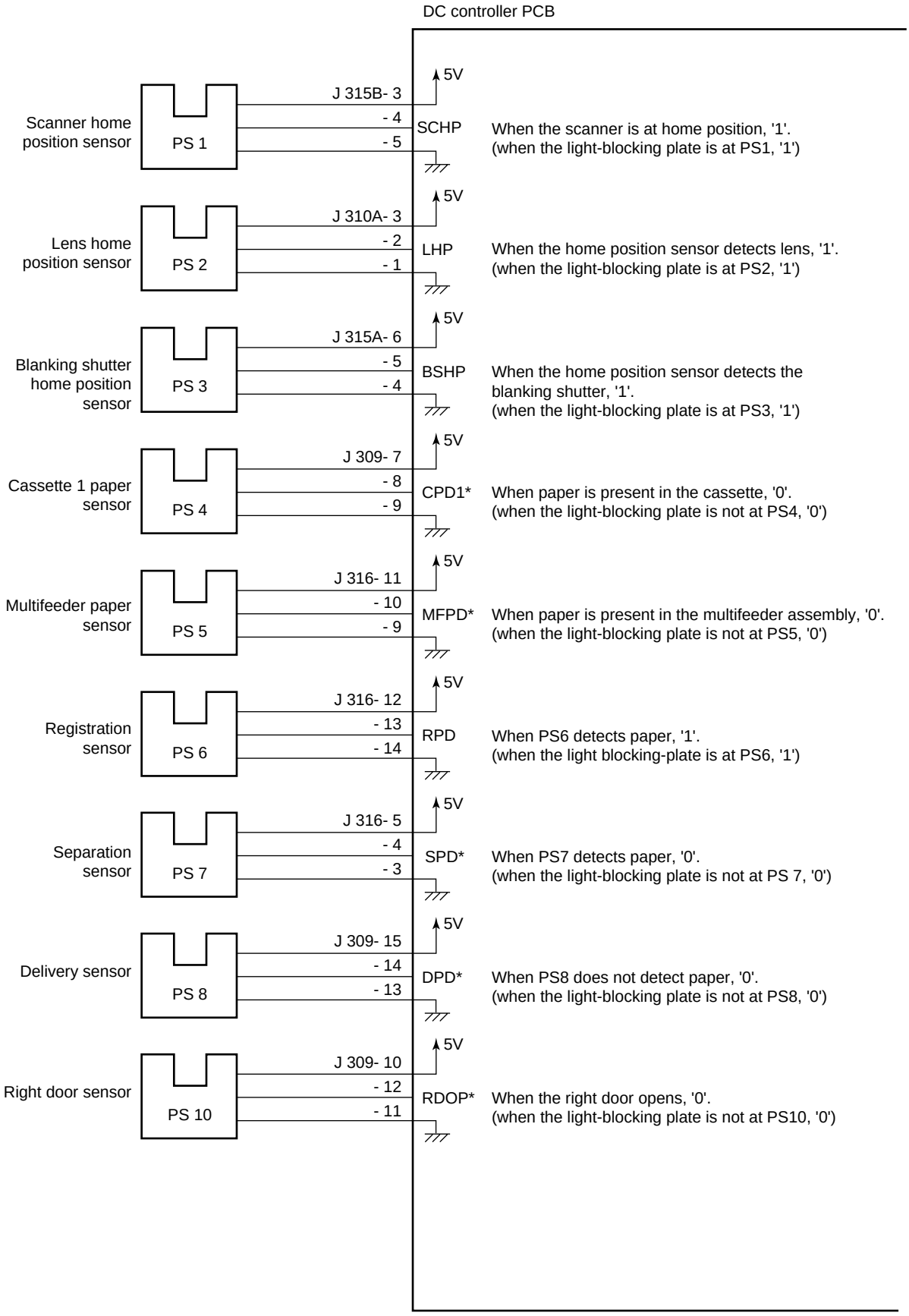

Figure 3-103

COPYRIGHT © 1998 CANON INC.

2. Inputs to the DC Controller (2/5)

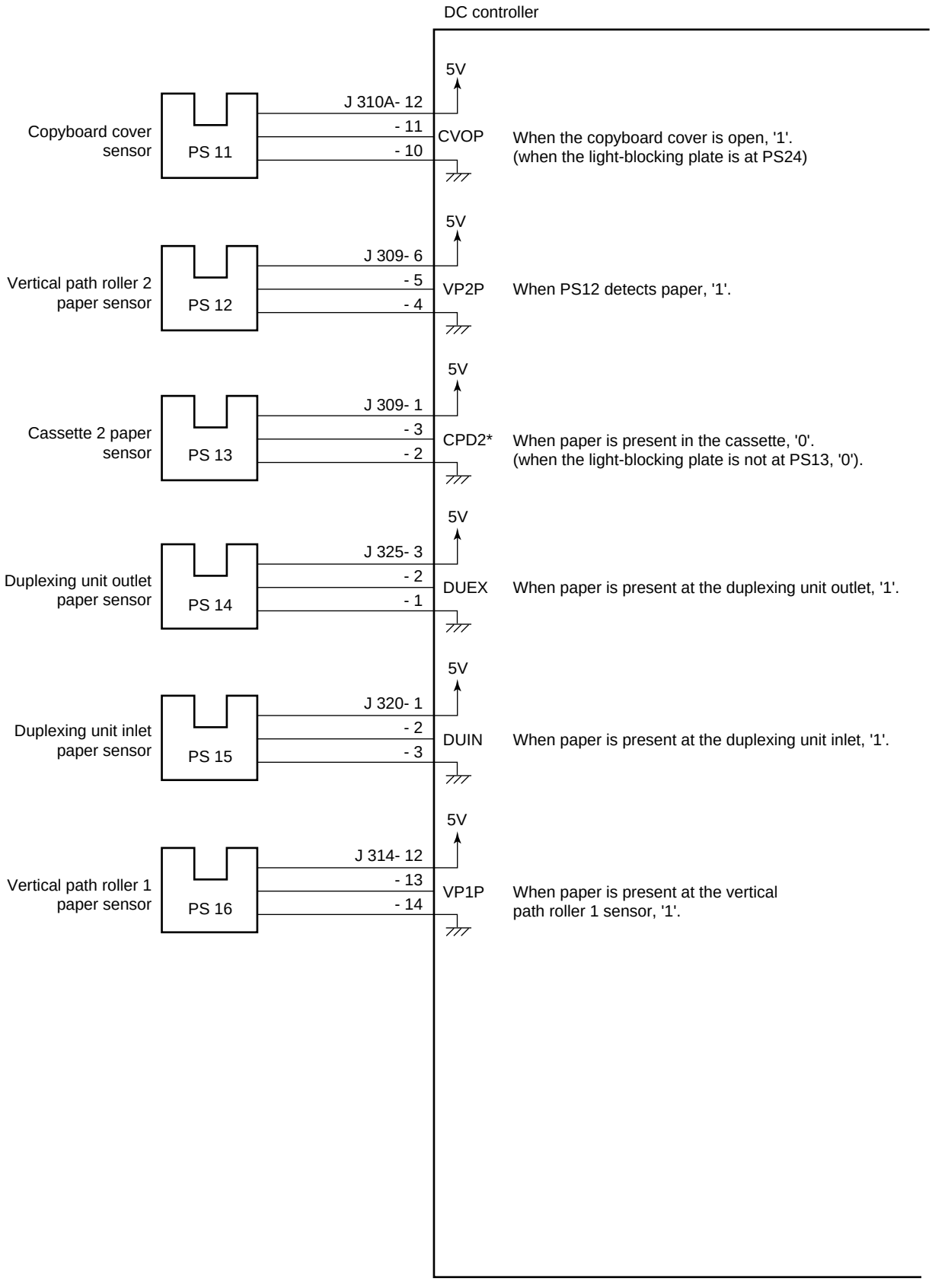

Figure 3-104

COPYRIGHT © 1998 CANON INC.
CANON NP6621 REV.0 FEB. 1998 PRINTED IN JAPAN (IMPRIME AU JAPON)

3. Inputs to the DC controller (3/5)

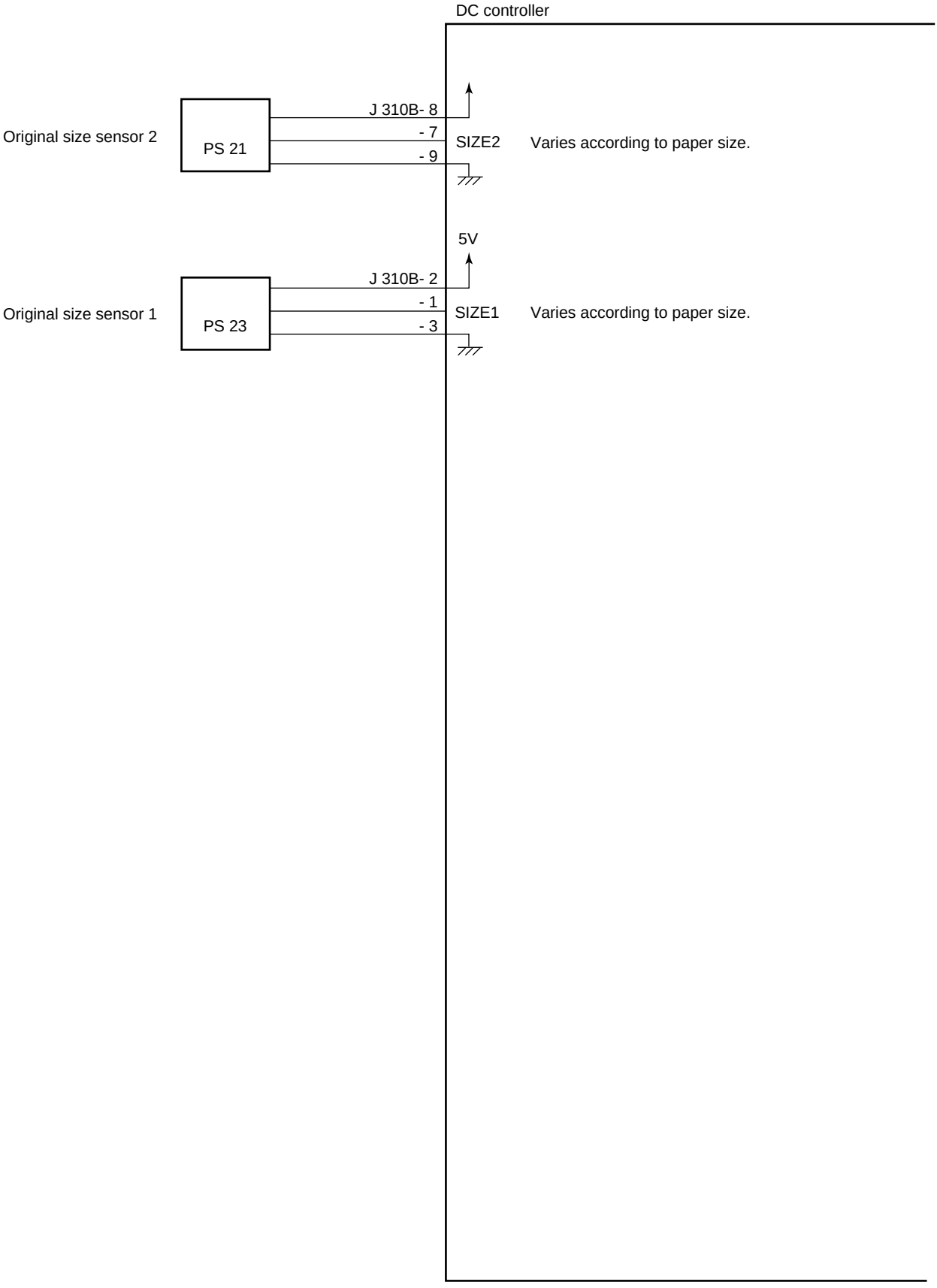

Figure 3-105

COPYRIGHT © 1998 CANON INC.

4. Inputs to the DC Controller PCB (4/5)

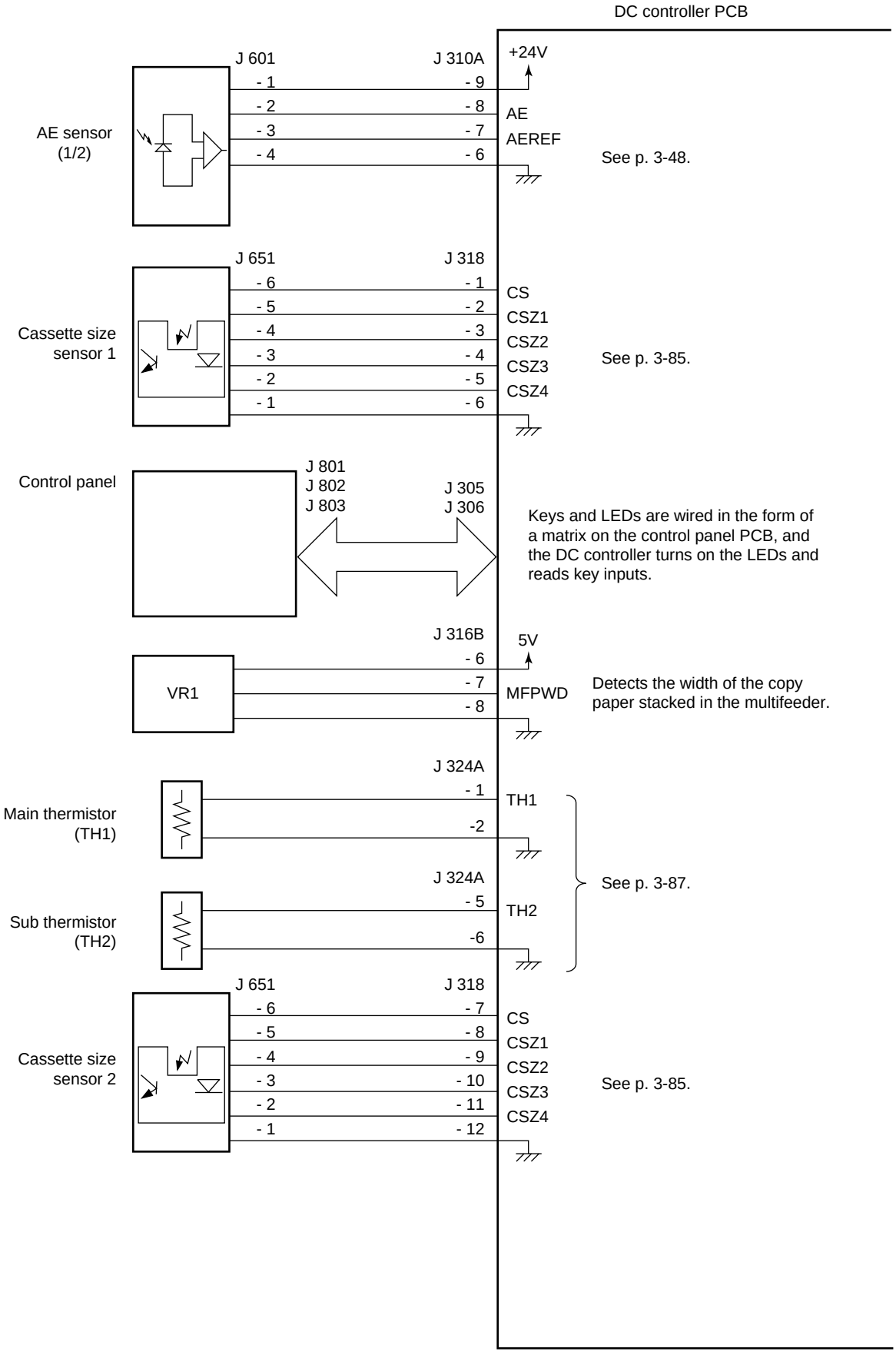

Figure 3-106

COPYRIGHT © 1998 CANON INC.
CANON NP6621 REV.0 FEB. 1998 PRINTED IN JAPAN (IMPRIME AU JAPON)

5. Inputs to the DC Controller PCB (5/5)

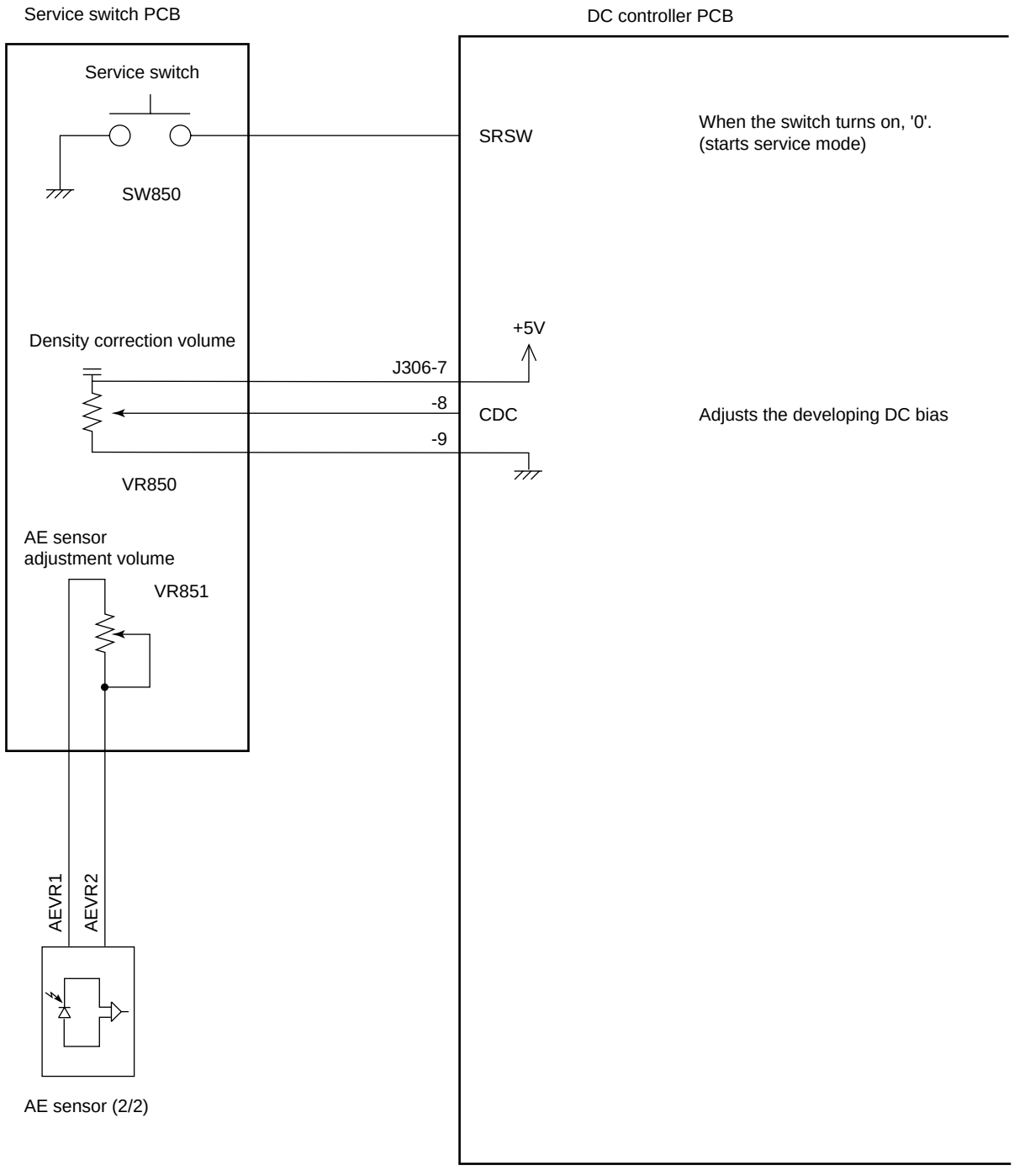

Figure 3-107

COPYRIGHT © 1998 CANON INC.

D. Outputs from the DC Controller

1. Outputs from the DC Controller PCB (1/5)

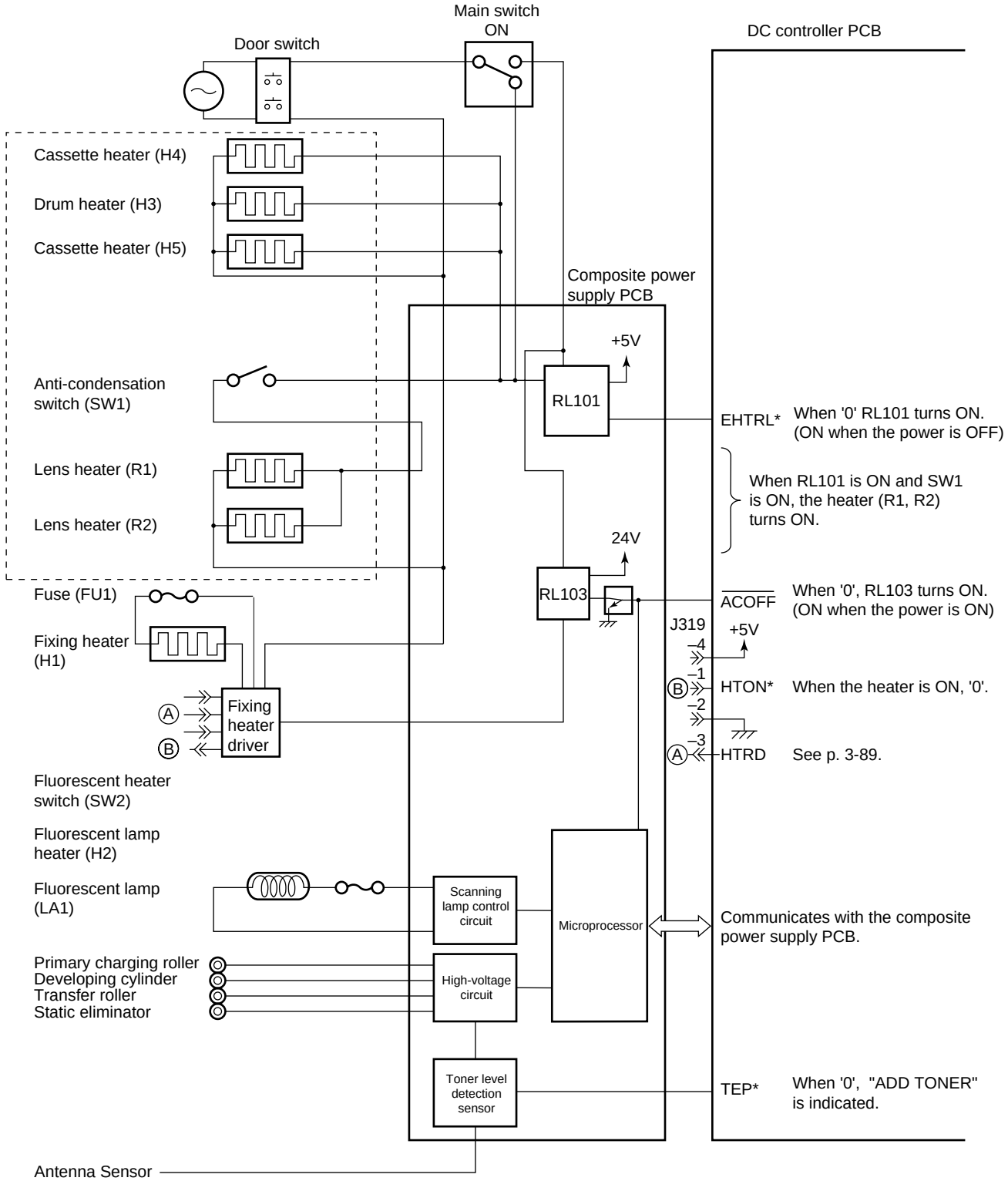

Figure 3-108

COPYRIGHT © 1998 CANON INC.
CANON NP6621 REV.0 FEB. 1998 PRINTED IN JAPAN (IMPRIME AU JAPON)

2. Outputs from the DC Controller PCB (2/5)

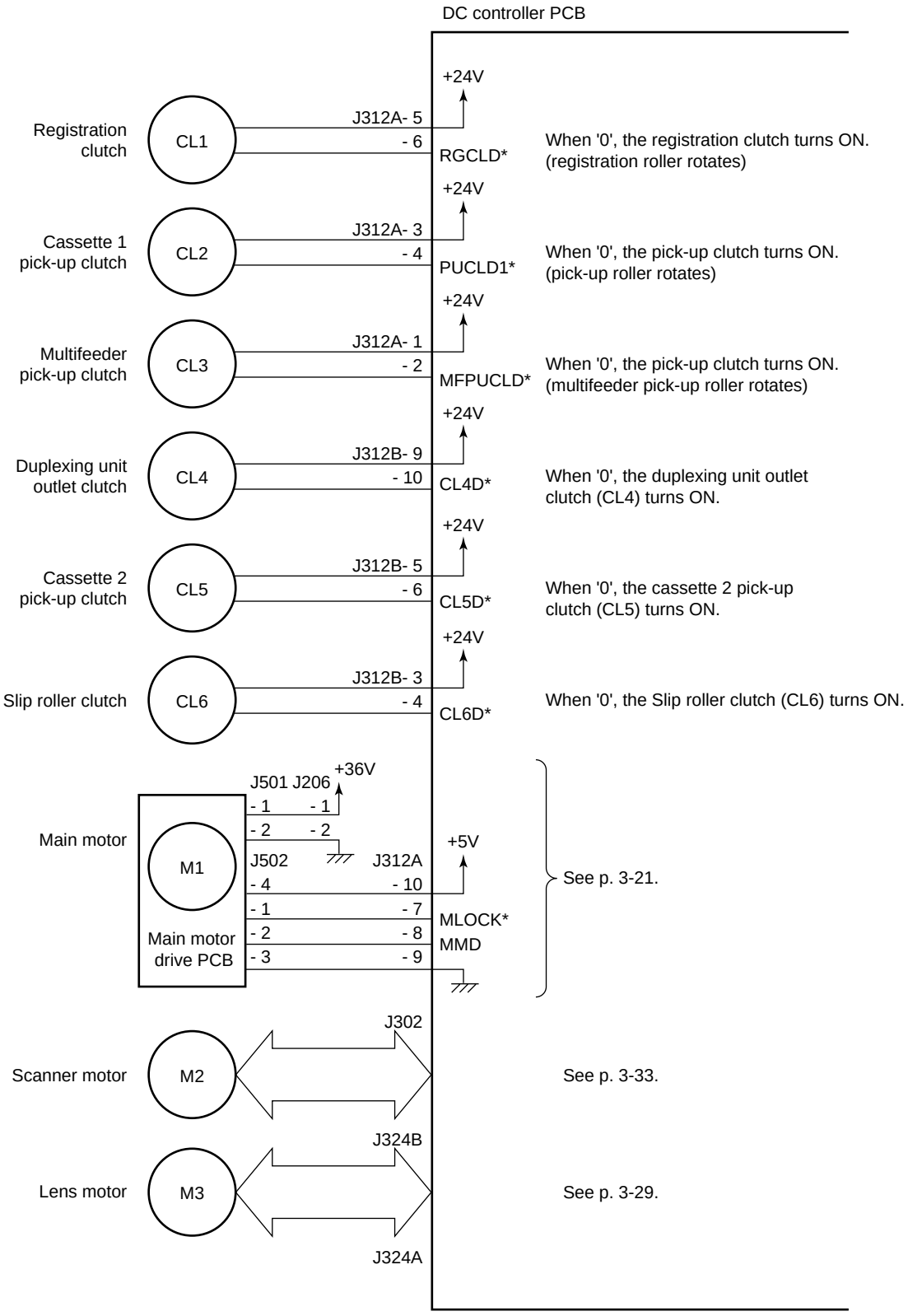

Figure 3-109

3. Outputs from the DC Controller PCB (3/5)

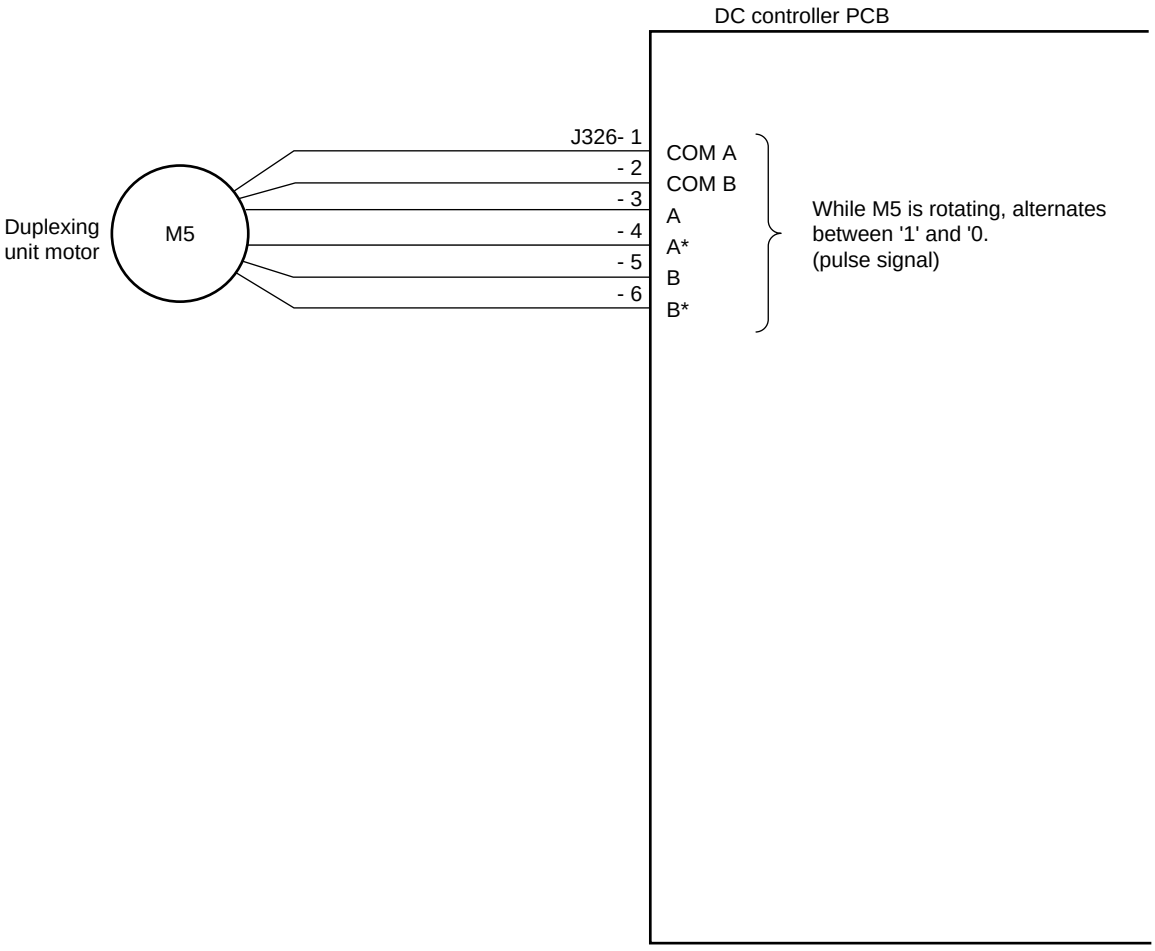

Figure 3-110

COPYRIGHT © 1998 CANON INC.
CANON NP6621 REV.0 FEB. 1998 PRINTED IN JAPAN (IMPRIME AU JAPON)

4. Outputs from the DC Controller PCB (4/5)

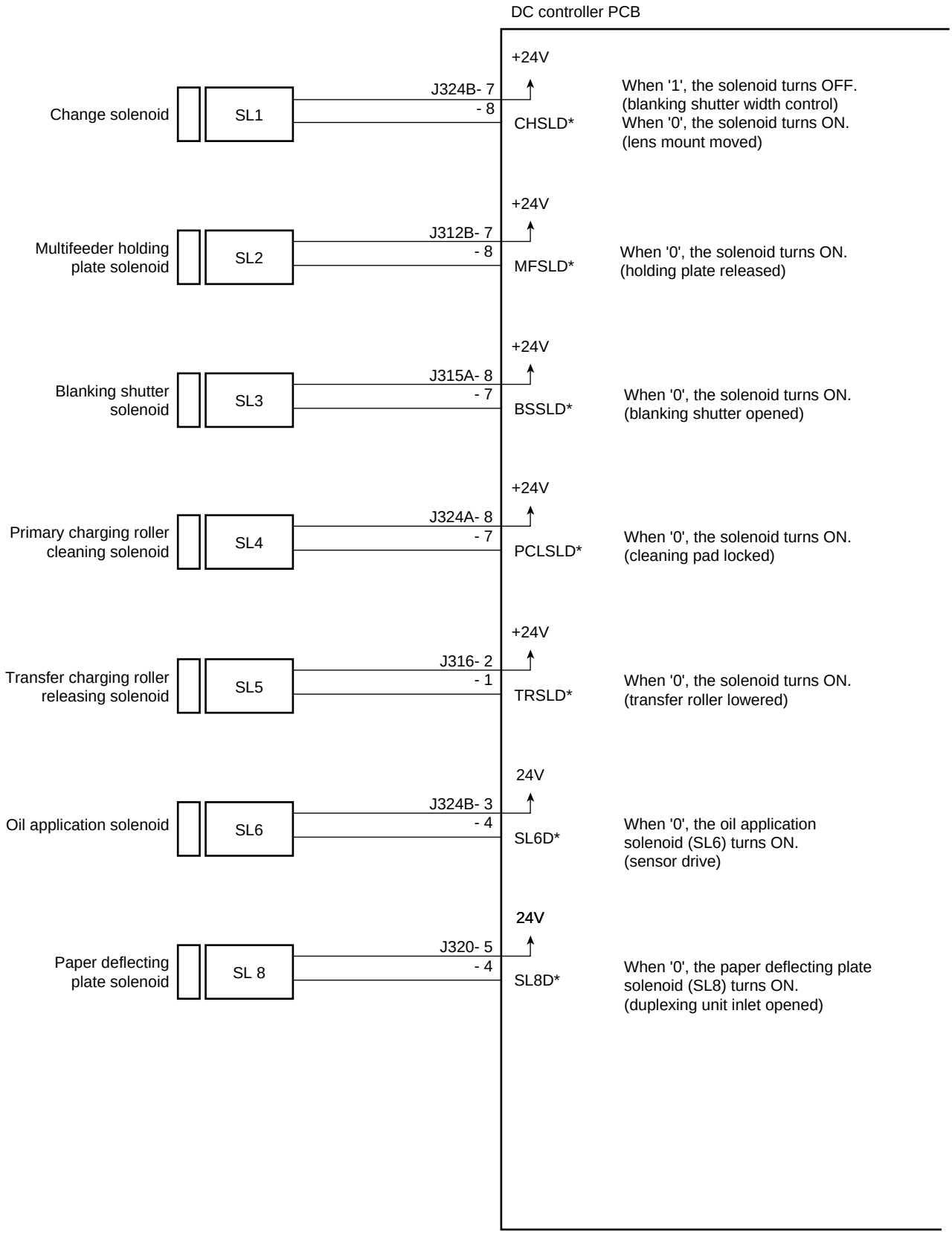

Figure 3-111

COPYRIGHT © 1998 CANON INC.

5. Outputs from the DC Controller PCB (5/5)

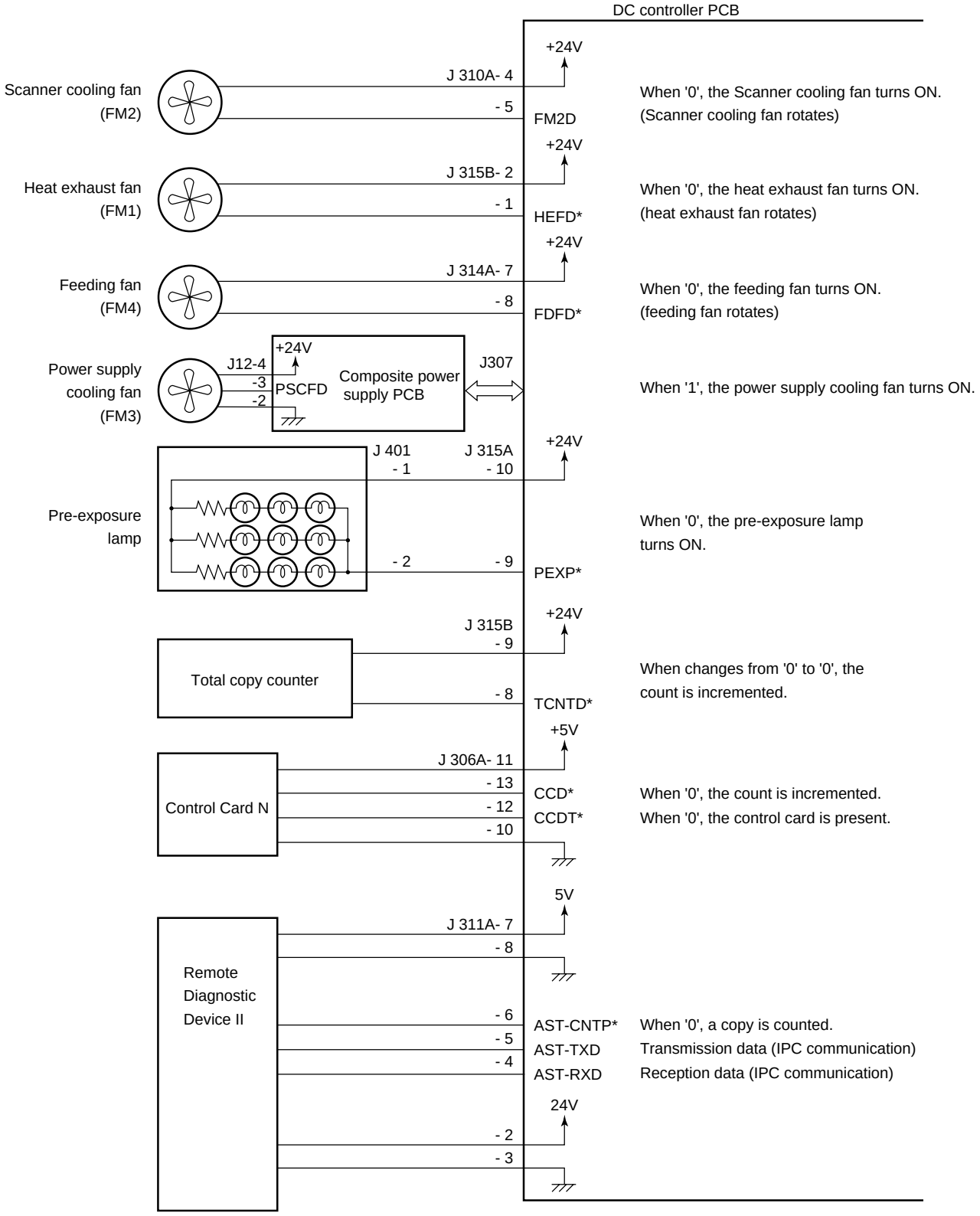

Figure 3-112

COPYRIGHT © 1998 CANON INC.
CANON NP6621 REV.0 FEB. 1998 PRINTED IN JAPAN (IMPRIME AU JAPON)

E. Inputs to and Outputs from the Cassette Feeding Module-B2 Driver PCB

1. Inputs to and Outputs from the Cassette Feeding Module-B2 Driver PCB (1/1)

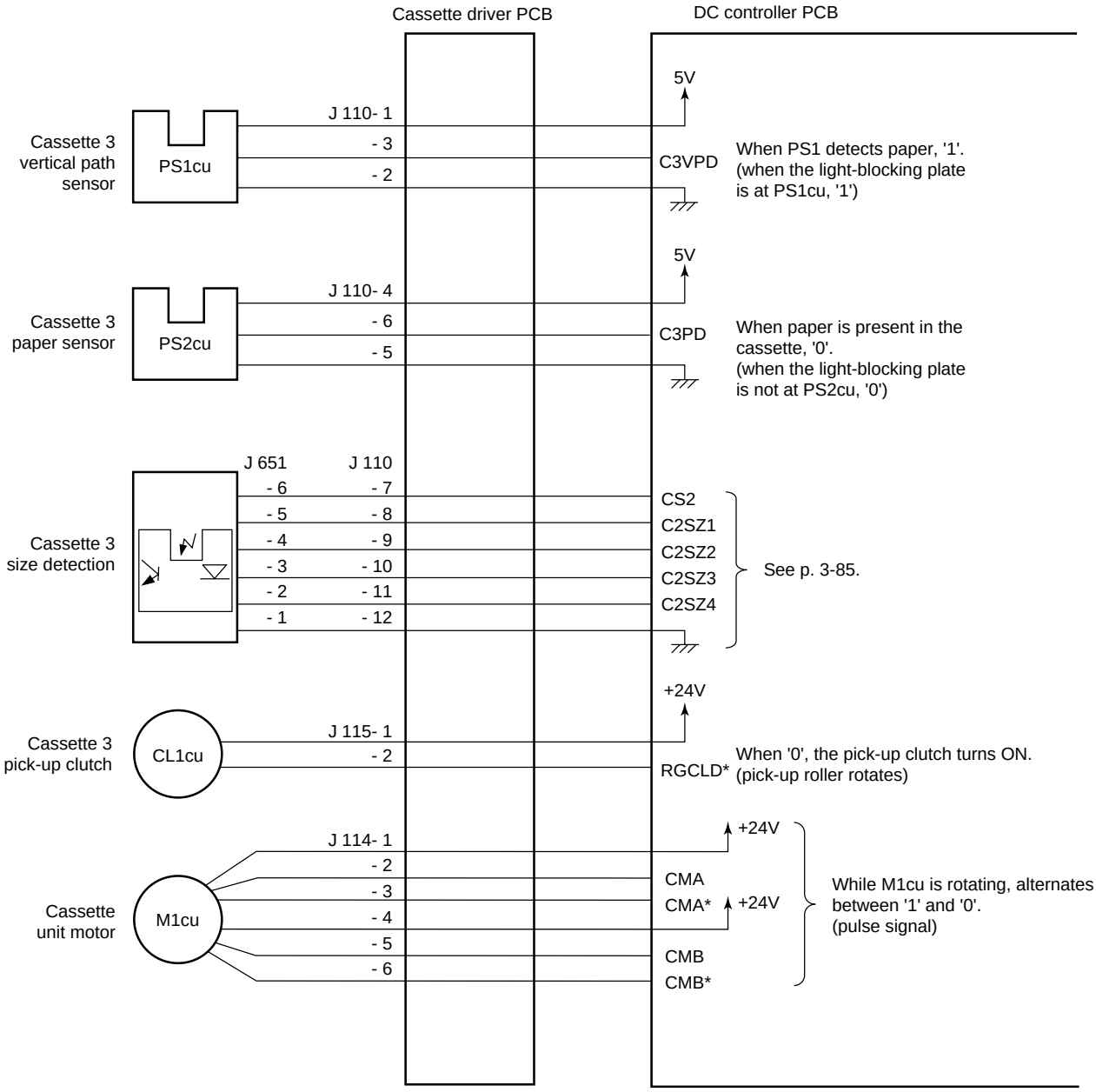

Figure 3-113

COPYRIGHT © 1998 CANON INC.
CANON NP6621 REV.0 FEB. 1998 PRINTED IN JAPAN (IMPRIME AU JAPON)

F. Inputs to and Outputs from the Cassette Feeding Module-A2 Driver PCB

1. Inputs to and Outputs from the Cassette Feeding Module-A2 Driver PCB (1/2)

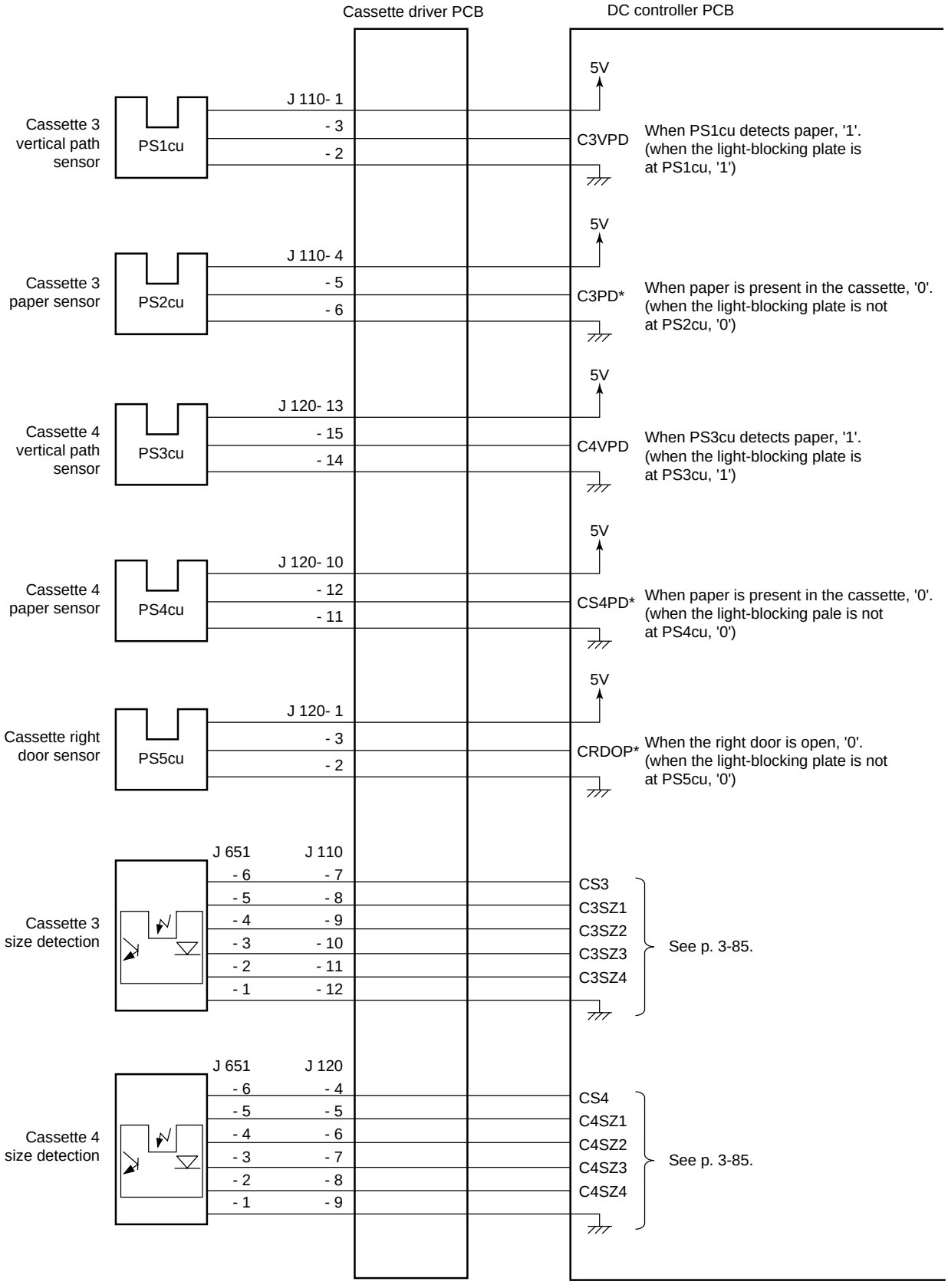

Figure 3-114

COPYRIGHT © 1998 CANON INC.
CANON NP6621 REV.0 FEB. 1998 PRINTED IN JAPAN (IMPRIME AU JAPON)

2. Inputs to and Outputs from the Cassette Feeding Module-A2 Driver PCB (2/2)

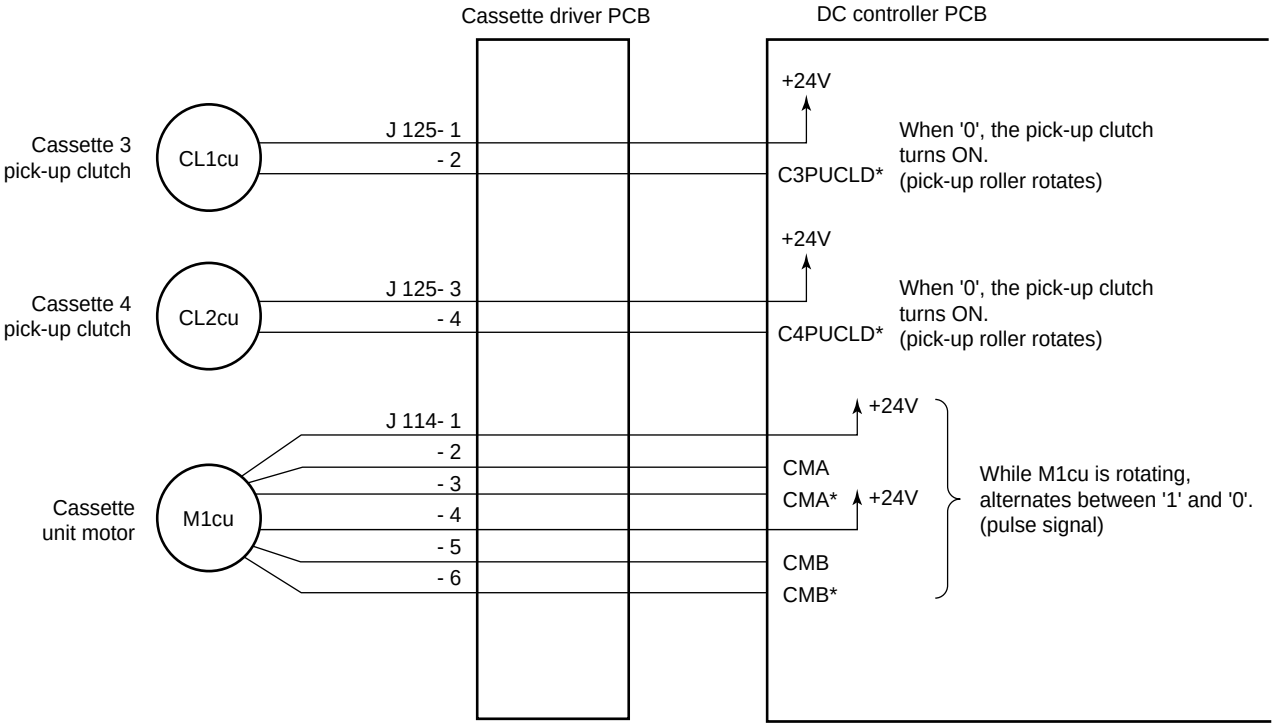

Figure 3-115

COPYRIGHT © 1998 CANON INC.
CANON NP6621 REV.0 FEB. 1998 PRINTED IN JAPAN (IMPRIME AU JAPON)

G. Inputs to and Outputs from the Cassette Feeding Unit-K1 Driver PCB

1. Inputs to and Outputs from the Cassette Feeding Unit-K1 Driver PCB (1/3)

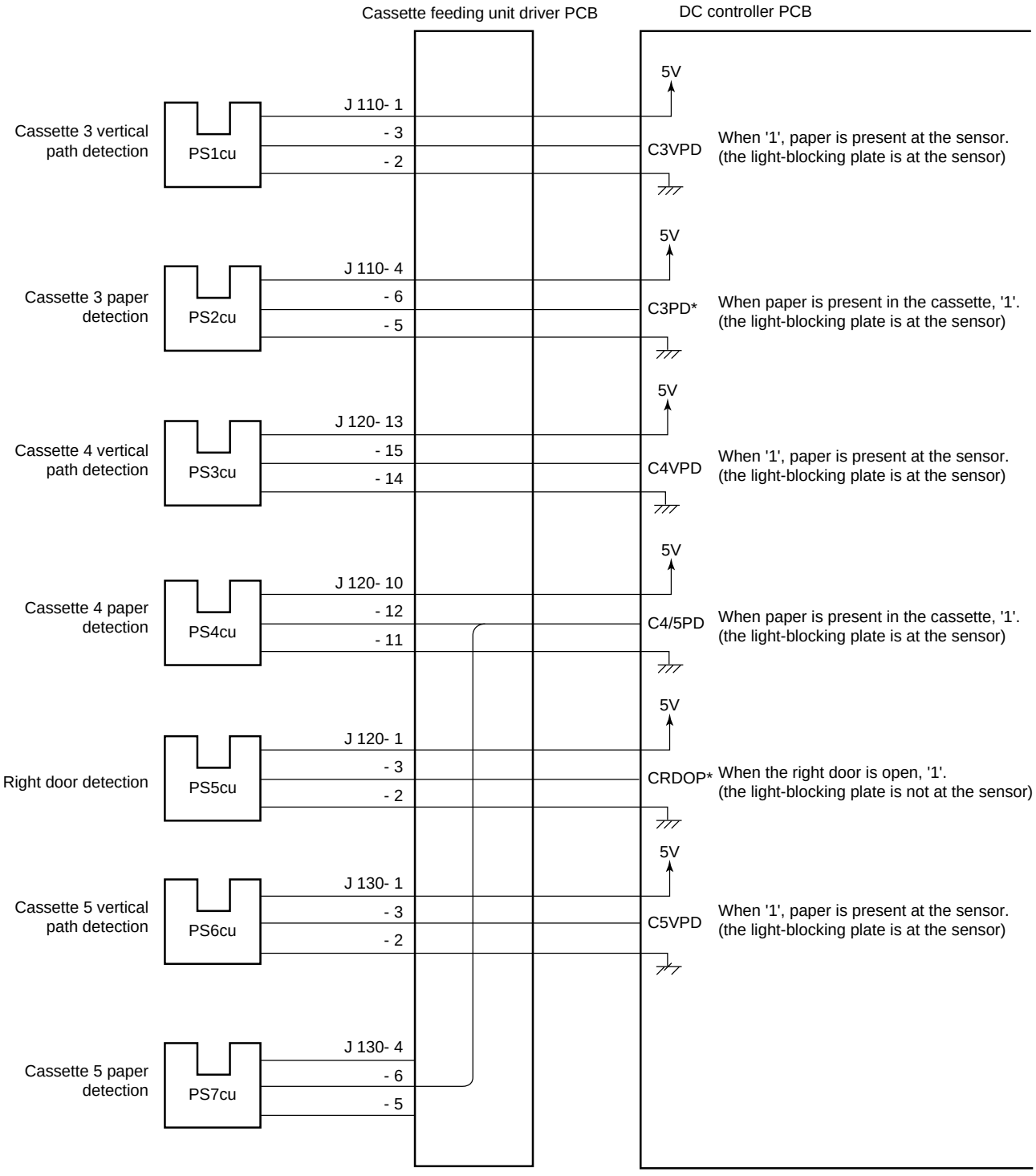

Figure 3-116

COPYRIGHT © 1998 CANON INC.
CANON NP6621 REV.0 FEB. 1998 PRINTED IN JAPAN (IMPRIME AU JAPON)

2. Inputs to and Outputs from the Cassette Feeding Unit-K1 Driver PCB (2/3)

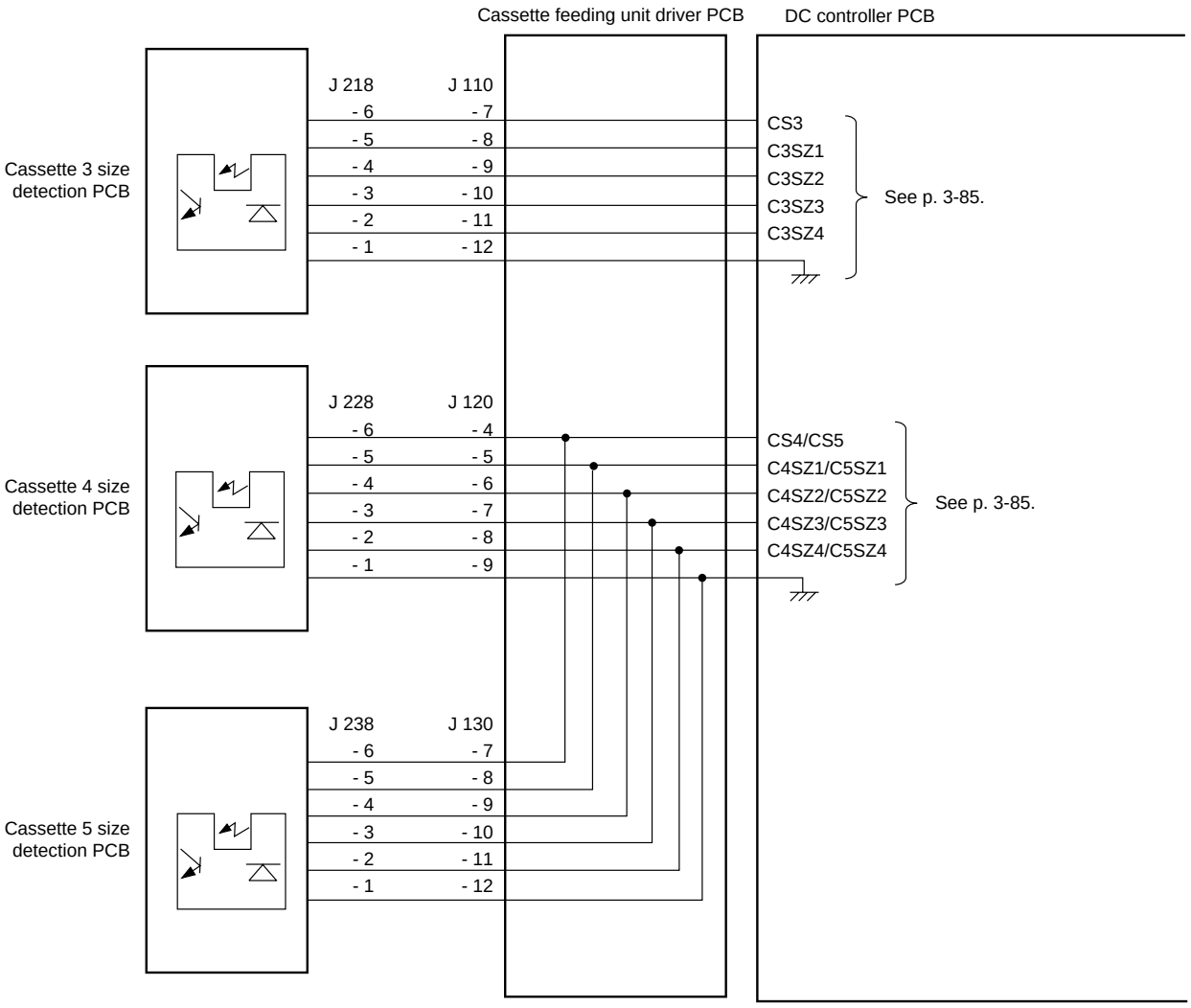

Figure 3-117

COPYRIGHT © 1998 CANON INC.
CANON NP6621 REV.0 FEB. 1998 PRINTED IN JAPAN (IMPRIME AU JAPON)

3. Inputs to and Outputs from the Cassette Feeding Unit-K1 Driver PCB (3/3)

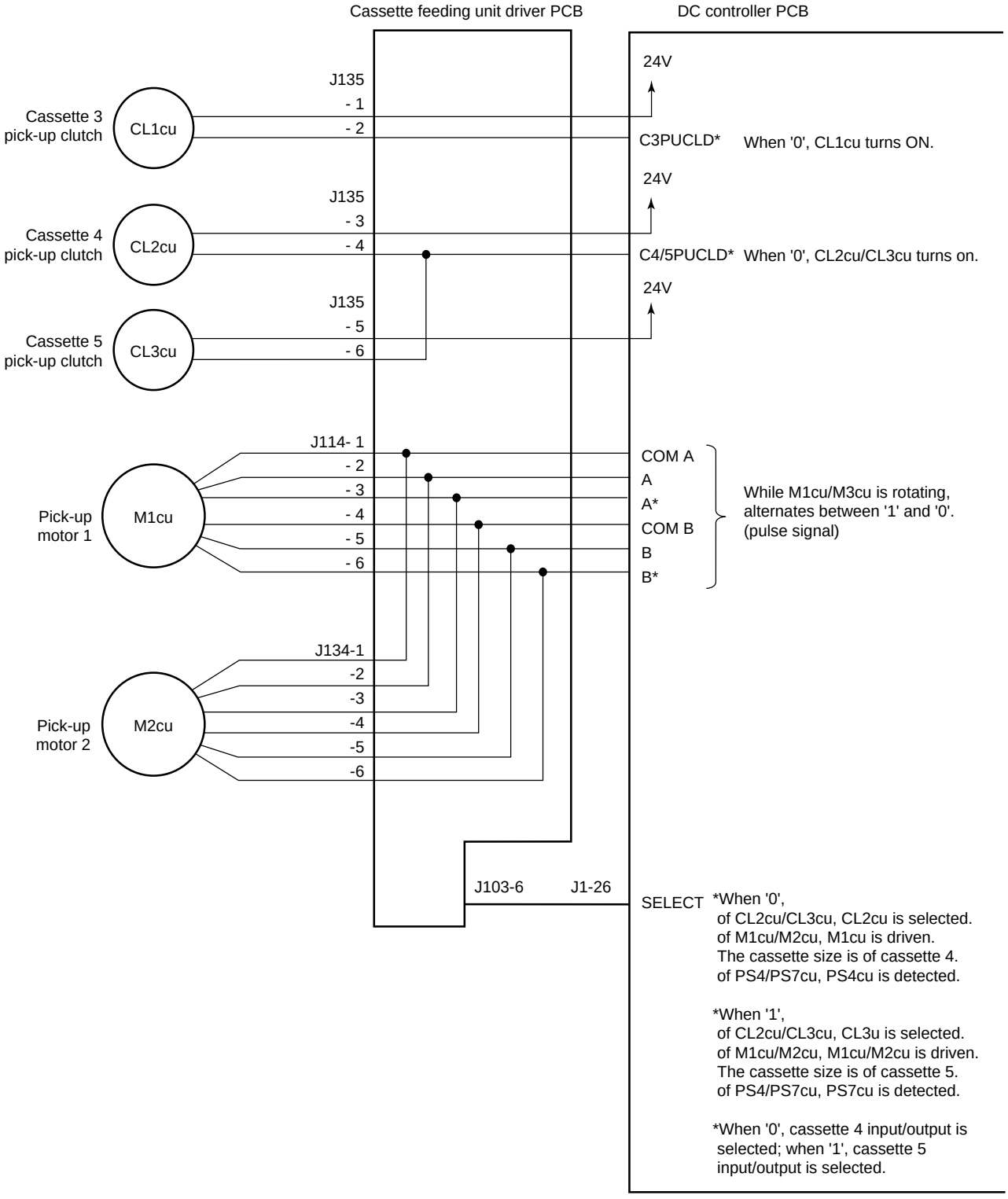

Figure 3-118

COPYRIGHT © 1998 CANON INC.
CANON NP6621 REV.0 FEB. 1998 PRINTED IN JAPAN (IMPRIME AU JAPON)

4. Inputs to Paper Deck-K1 Controller (1/2)

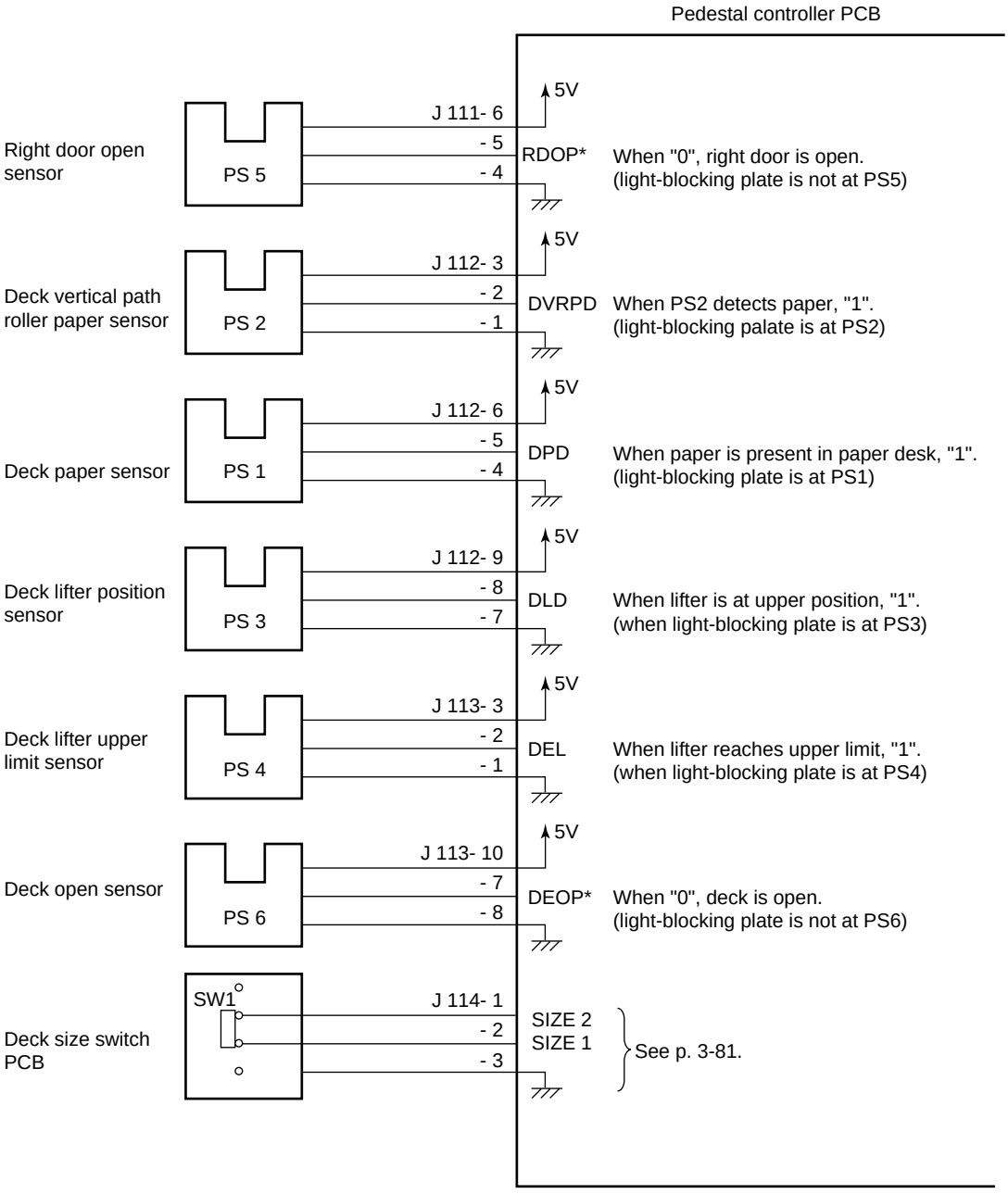

Figure 3-119

COPYRIGHT © 1998 CANON INC.

5. Outputs from Paper Deck-K1 Controller (2/2)

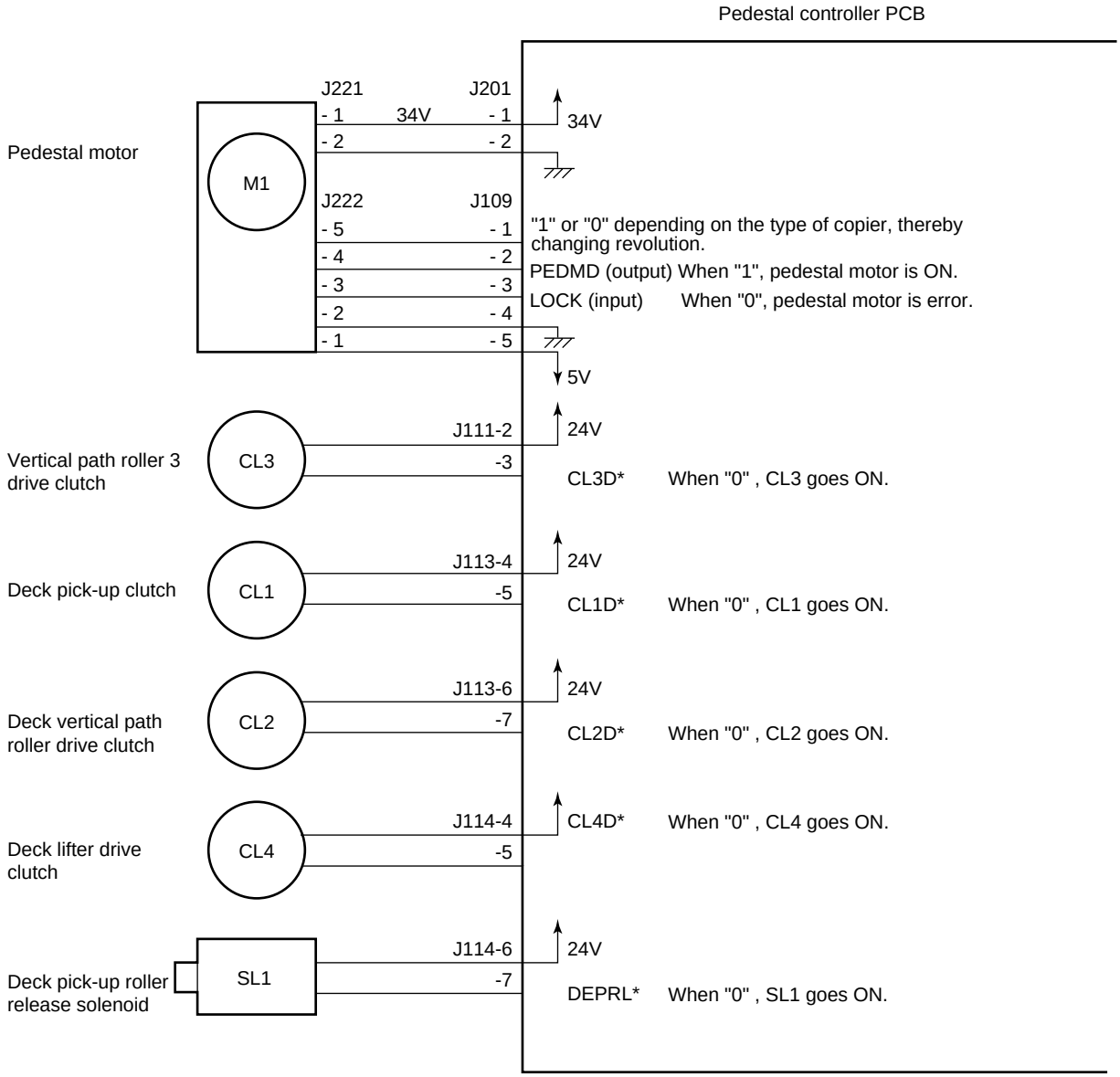

Figure 3-120

COPYRIGHT © 1998 CANON INC.
CANON NP6621 REV.0 FEB. 1998 PRINTED IN JAPAN (IMPRIME AU JAPON)

H. Main Motor Control Circuit

1. Outline

Figure 3-121 shows the circuit that controls the main motor (M1), and the circuit has the following functions:

① Turns ON/OFF the main motor.

② Controls the main motor to a specific speed.

The main motor (M1) is a DC motor equipped with a built-in clock pulse generator. When the motor rotates, clock pulse signals (MMCLK*) are generated according to the revolution of the motor. The speed control circuit controls the main motor (M1) to a specific speed by matching the phase of the frequency of the reference signal with the frequency of the clock pulses.

2. Operations

When the main motor signal (MMD) from the DC controller circuit goes '1', the motor driver drive circuit turns ON, thereby causing the main motor (M1) to rotate at a specific speed.

While the main motor is rotating at a specific speed, the motor driver PCB sends the constant speed status signal (MLOCK*0) to the DC controller PCB. If a fluctuation occurs in the rotation of the main motor for some reason, the MLOCK* signal goes '1'.

If MLOCK*=0 continues for about 1 sec while the main motor drive signal (MMD) is '1', the DC controller identifies an error condition and stops the main motor and issues 'E010' at the same time.

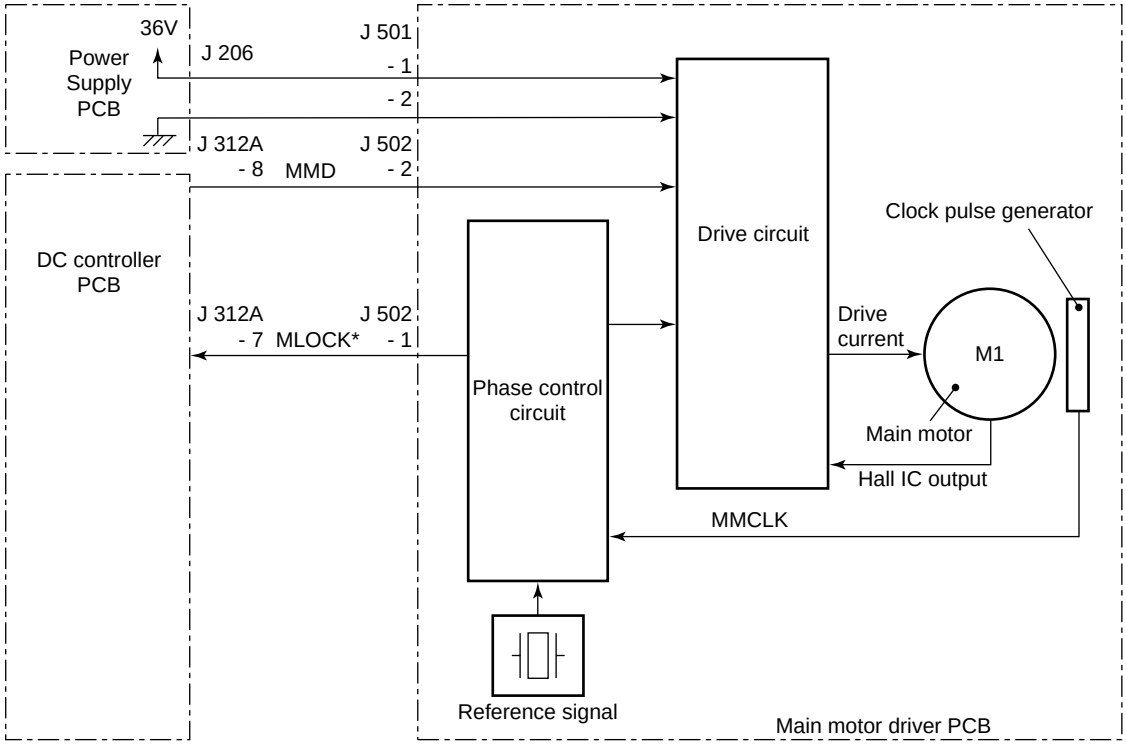

Figure 3-121

I. Basic Sequence of Operations (2 copies, continuous, AE)

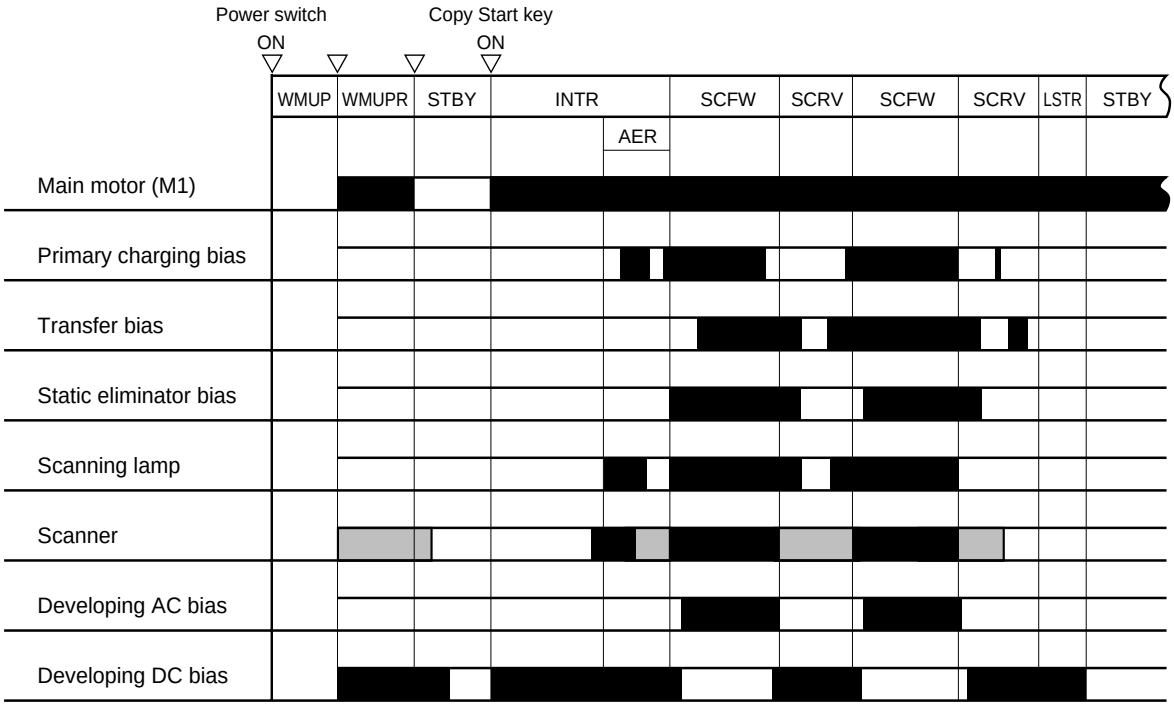

Figure 3-122

COPYRIGHT © 1998 CANON INC.
CANON NP6621 REV.0 FEB. 1998 PRINTED IN JAPAN (IMPRIME AU JAPON)

Period		Function	Remarks
WMUP (Warm-Up)	From switch on until the fixing roller temperature reaches 165°C for the black developer or 145°C for the CT Unit. (about 75 seconds at an ambient temperature of 20°C)	Allows time for fixing roller to warm up.	Warm-up time varies with fixing roller temperature at power ON. When the COPY START key is lighting green.
WMUPR (Warm-Up Rotation)	Until the fixing roller temperature reaches 175°C to 180°C for the black developer or 155°C to 160°C for the CT unit.	Keeps fixing roller temperature uniform. Stabilizes drum sensitivity to prepare for copying.	• After the WMUPR period ends, the READY/WAIT indicator changes from orange to green. • Even when the fixing roller has warmed up, it rotates for at least 3.5 seconds.
STBY (standby)	• From when LSTR ends until when the Copy Start key is pressed or the power switch is turned OFF. • From when the power switch is turned ON until the Copy Start key is pressed.	Waits for a press on an operation key (e.g., Copy Start key).	• 2 min or more after LSTR ends, the display on the control panel switches to standard mode.
INTR (initial rotation)	For at least 1 sec after the Copy Start key is pressed.	Stabilizes the drum sensitivity in preparation for copying operation.	
AER (AE rotation)		Moves the scanner forward/in reverse about 65 mm to measure the density of the original.	AE mode only.
SCFW (scanner forward)	While the scanner is moving forward. • The distance traveled forward depends on the cassette size and the reproduction ratio. • The speed for forward travel depends on the selected reproduction ratio.	Illuminates the original by the scanning lamp, and the reflected optical image is projected on the photosensitive drum through mirrors and lenses.	
SCRV (scanner reverse)	While the scanner is moving in reverse.	Returns the scanner to the home position in preparation for the next copying operation.	The registration signal is generated and the copy paper is fed to the transfer assembly.
LSTR (last rotation)	From when SCRV ends until when the copy paper moves past the delivery sensor.	Removes charges from the surface of the photosensitive drum as post copying processing.	Discharges the last copy.

Table 3-101

COPYRIGHT © 1998 CANON INC.

J. Original Size Detection Control

1. Outline

The machine offers auto paper selection, auto reproduction selection, reduction layout, and enlargement layout functions, all of which require the identification of the size of the originals being used.

To identify the size, the machine has two to four original size sensors under its copyboard glass which check the presence/absence of an original when the copyboard cover is closed and identify the original as being any of the default paper sizes.

Each original size sensor consists of a LED and a phototransistor: the LED illuminates the original, and the photodiode receives the reflected light and sends the output to the DC controller circuit.

The size of originals in the DF (option) is identified by the DF and communicated to the machine. When the DF is used, the machine executes auto paper selection, auto reproduction selection, reduction layout, and enlargement layout based on this size data.

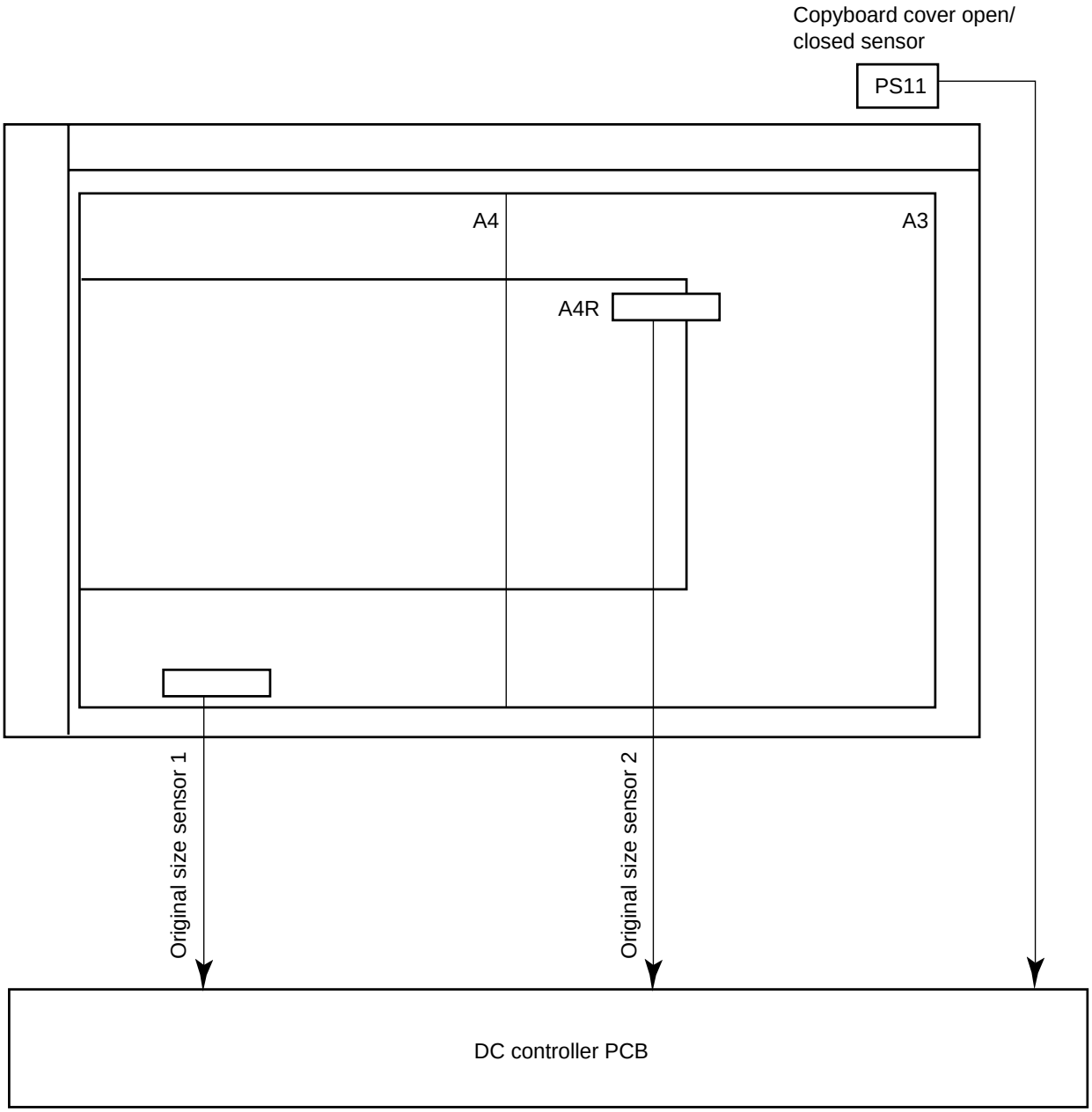

Figure 3-123 (A configuration)

COPYRIGHT © 1998 CANON INC.
CANON NP6621 REV.0 FEB. 1998 PRINTED IN JAPAN (IMPRIME AU JAPON)

2. Operations

When the copyboard cover is brought down to about 30° or less, the copyboard cover sensor (PS11) turns ON, i.e., the light-blocking plate blocks PS11.

For 15 sec after PS11 turns ON or until the Copy Start key is pressed, the machine reads the output level of each sensor at intervals of about 0.1 sec. If the output level remains unchanged during the period, the machine identifies the presence of an original at the sensor location in question, thereby identifying the size of the original according to the status combinations shown in Table 3-102.

This method enables identification of the size of a black original. However, the sensor output levels will not change in the following cases:

a. A3 black original
b. book original (the thickness tends to prevent changes in the sensor level)

Reference:

For a. or b. above, the machine can identify the size wrongly.

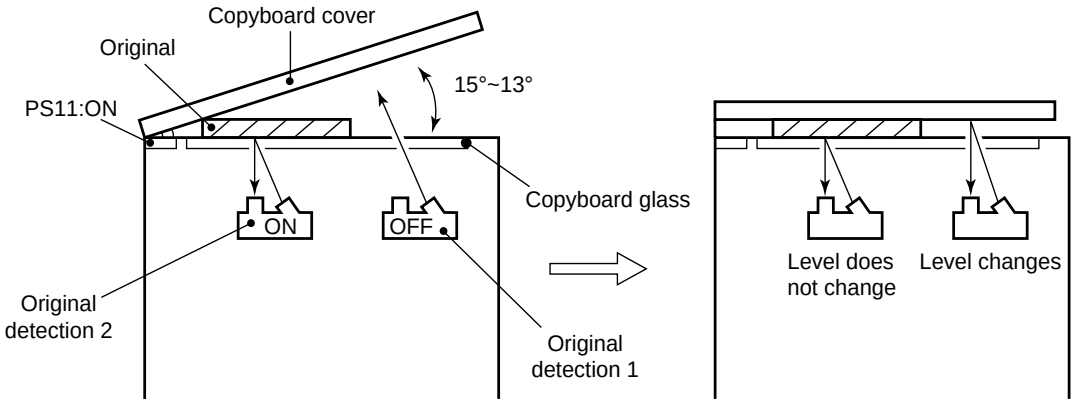

Figure 3-124

3. Original Size Detection

The size of an original is identified with reference to the presence/absence of an original at each sensor based on the sensor output combinations given in Table 3-102.

- Level Does Not Change
  The sensor output when the copyboard cover is closed to from 15° to 30° and the sensor output 15 sec thereafter are the same (detecting an original).
- Level Changes
  The sensor output when the copyboard cover is closed to from 15° to 30° and the sensor output when the copyboard cover is fully closed are different (not detecting an original).

Size	Sensor level	
	1	2
A3	Does not change	Does not change
A4R	Changes	Does not change
A4	Does not change	Changes
A5	Changes	Changes

Table 3-102 (A configuration original)

COPYRIGHT © 1998 CANON INC.
CANON NP6621 REV.0 FEB. 1998 PRINTED IN JAPAN (IMPRIME AU JAPON)

II. EXPOSURE SYSTEM

A. Varying the Reproduction Ratio

The reproduction ratio in the axial direction of the photosensitive drum is varied by the lens drive system, and that in the peripheral direction of the photosensitive drum is varied by the scanner drive system.

The lens drive system uses a zoom lens, and the reproduction ratio in the axial direction of the photosensitive drum is varied by changing both the position of the lens and the focal distance as shown in Figure 3-201.

The scanner drive system moves the No. 1 mirror faster in relation to the peripheral speed of the photosensitive drum (reduction) or slower (enlargement), thereby varying the reproduction ratio in the peripheral direction of the photosensitive drum.

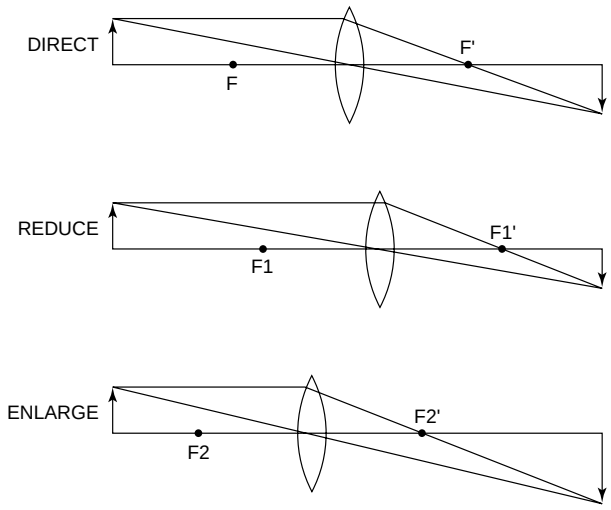

Figure 3-201

B. Lens Drive System

1. Outline

The lens drive system is driven by the lens motor (M3), and the drive generated by the lens motor is transmitted to the blanking shutter exposure unit through a relay gear. (See p. 3-53.)

To move the lens, the relay gear is engaged with the lens gear by turning ON the change solenoid (SL1). When the lens motor rotates in the direction of the arrow in this condition, the lens moves in the direction of enlargement (⬅) because of the drive coming through the relay lens gear and the lens cable.

In reduction mode, the blank exposure shutter operates according to the degree of movement of the lens, thereby blanking out both sides of the copy to suit the selected reduction ratio.

The machine's scanner lens home position sensor (PS2) is located in the middle of the scanner lens drive rail so that the scanner lens home position may be detected quickly at power-on, thereby shortening the first copy time. (Additionally, a mere press on each Ratio button causes the scanner lens to move to the appropriate position to shorten the first copy time.)

COPYRIGHT © 1998 CANON INC.
CANON NP6621 REV.0 FEB. 1998 PRINTED IN JAPAN (IMPRIME AU JAPON)

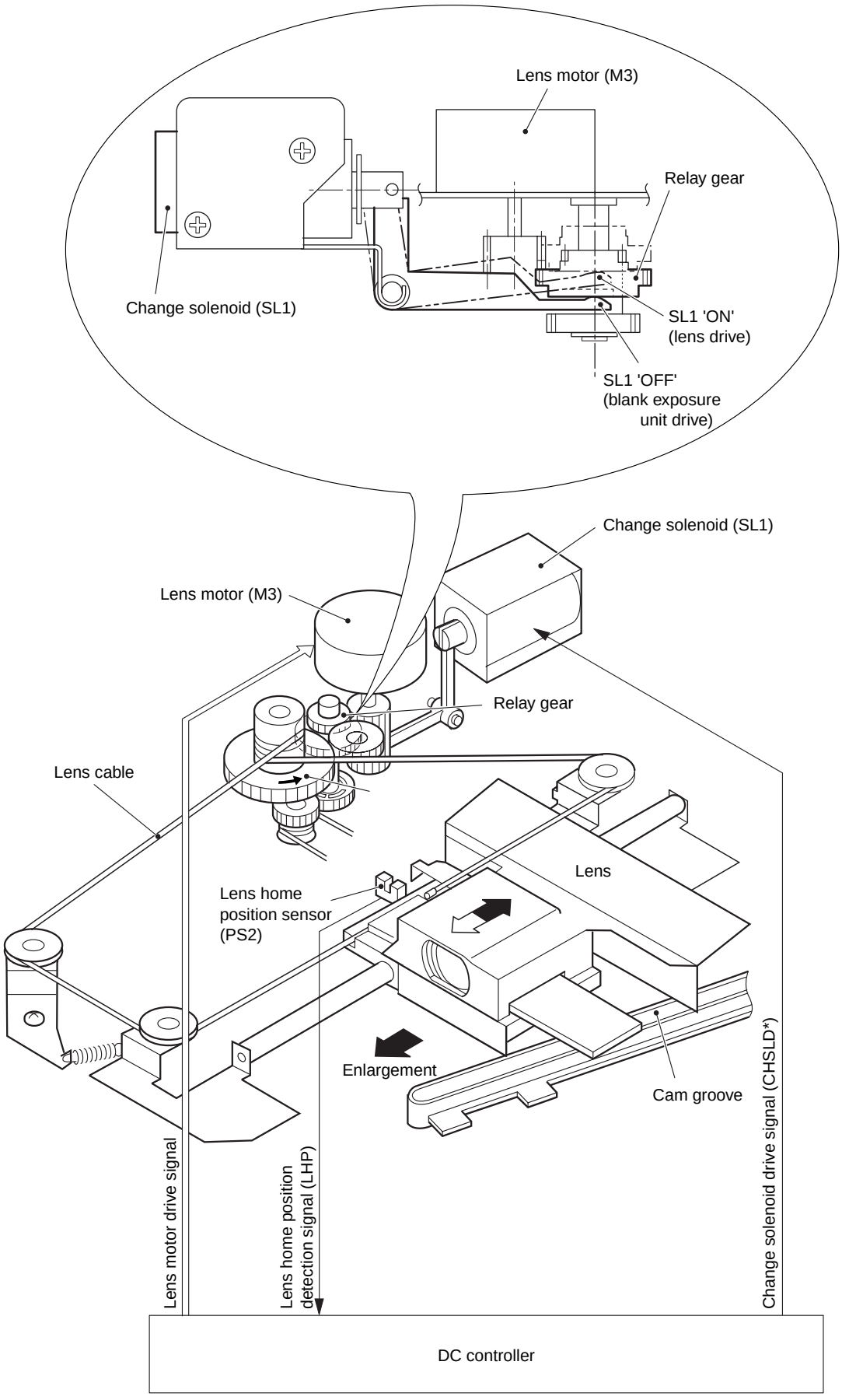

Figure 3-202

COPYRIGHT © 1998 CANON INC.
CANON NP6621 REV.0 FEB. 1998 PRINTED IN JAPAN (IMPRIME AU JAPON)

2. Lens Motor Drive Circuit

The lens motor (M3) is a stepping motor and is rotated by the drive power supply signal LNSCA/LNSCB and pulse signals LNSA/LNSA* and LNSB/LNSB*.

When the lens motor is rotating, the motor is being driven by 34 V to move the lens.

Whenever the lens motor is at rest, 5 V is applied to the motor to ensure that the lens is kept at the appropriate position.

a. Lens Motor at Rest

• LNSCA=0
LNSCB=0
└→The motor drive voltage switching circuit switches to 5 V.
└→5 V is supplied to keep the motor at rest.

In this condition, the motor is kept stationary by keeping LNSA, LNSA*, LNSB, and LNSB* all '0'.

b. Lens Motor in Operation

• LNSCA=1
LNSCB=1
└→The motor driver voltage switching circuit switches to 34 V.
└→34 V is supplied to the motor.

In this condition, the motor rotates when pulses are applied to each phase in a specific sequence.

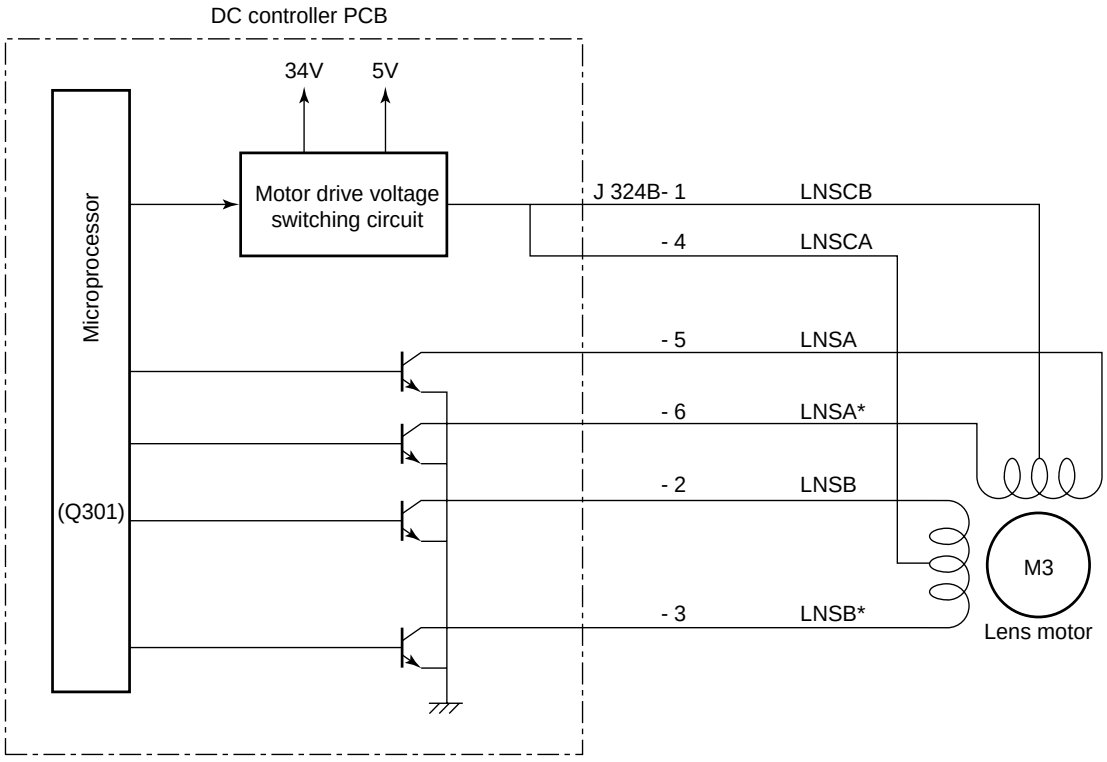

Figure 3-203

COPYRIGHT © 1998 CANON INC.

3. Basic Sequence of Operations for the Lens Drive System (enlargement/reduction)

In enlargement/reduction mode, the lens is always returned to home position first before being moved to the appropriate position for the selected reproduction ratio. This is true when the ratio is reset to DIRECT.

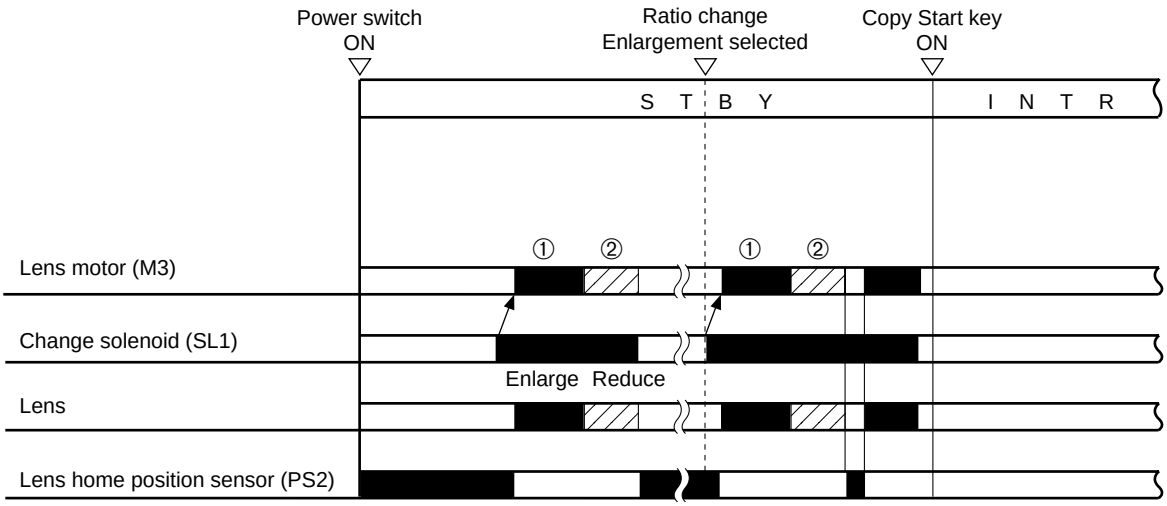

Figure 3-204

COPYRIGHT © 1998 CANON INC.
CANON NP6621 REV.0 FEB. 1998 PRINTED IN JAPAN (IMPRIME AU JAPON)

C. Scanner Drive System

1. Outline

The scanner drive system is driven by the scanner motor (M2). The scanner motor changes the direction of its rotation, and its speed changes when moving the scanner forward to suit the selected reproduction ratio. However, its speed when moving the scanner in reverse remains constant (2.5 times as fast as when moving the scanner forward) regardless of the selected reproduction ratio.

The distance traveled by the scanner varies depending on the length of the copy paper and the selected reproduction ratio.

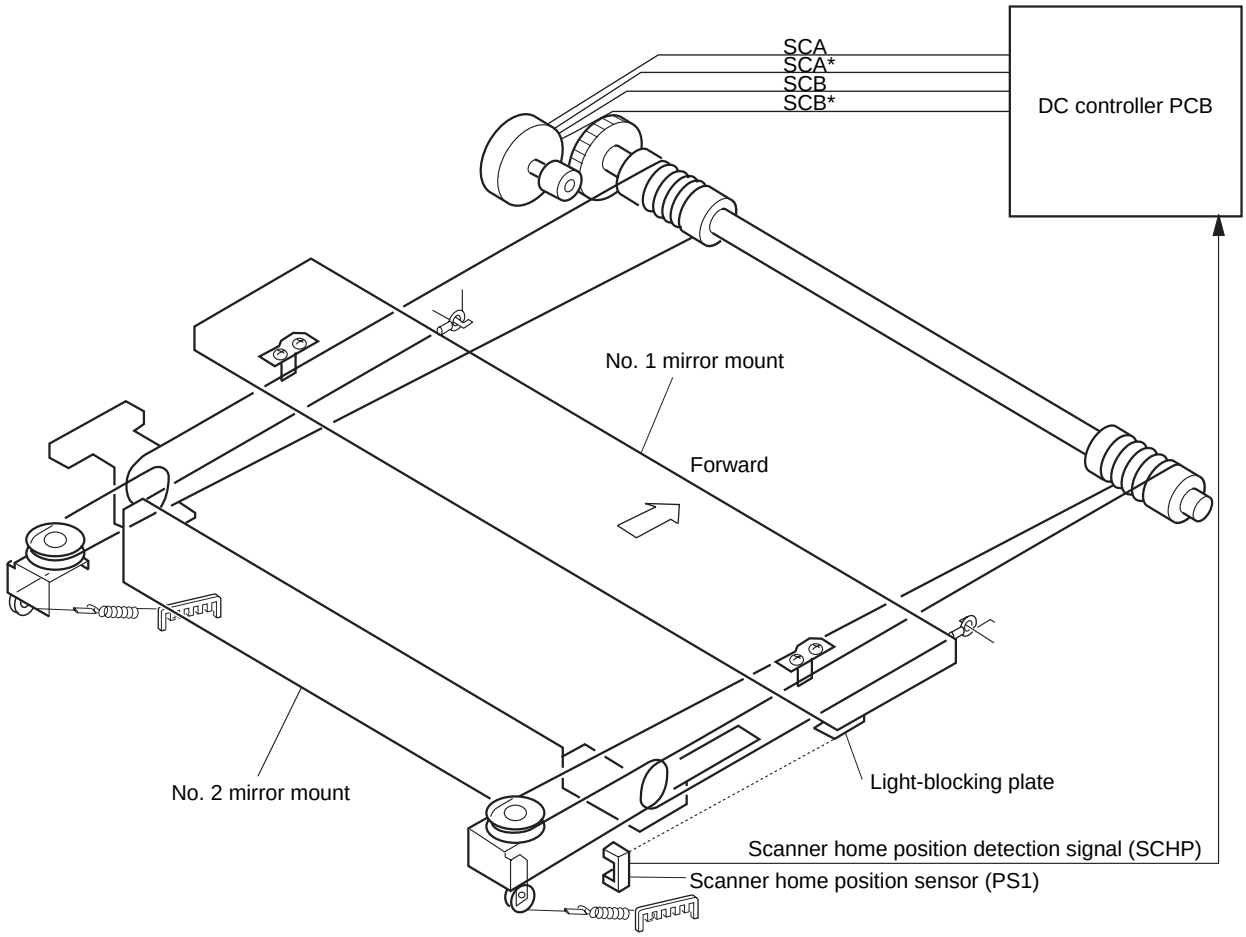

Figure 3-205

COPYRIGHT © 1998 CANON INC.

2. Relationship between Scanner Sensors and Signals

Scanner sensor	Signal	Scanner		Description
		Forward	Reverse	
PS1 Scanner home position sensor	SCHP	↓		Registration clutch ON
			↑	Scanner reverse OFF 0.1 sec later

Table 3-201

Reference:
The timing at which the registration clutch is turned ON is determined in relation to when the Copy Start key is pressed or when the scanner is moved forward.

3. Basic Sequence of Scanner Operations

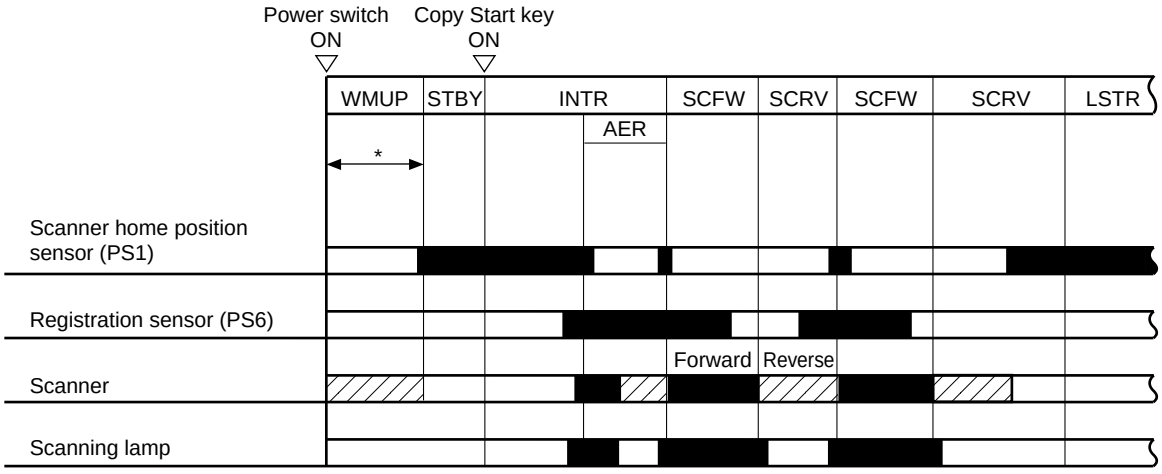

*The scanner is returned to home position at power-on whenever the scanner is not at home position.

Figure 3-206

COPYRIGHT © 1998 CANON INC.
CANON NP6621 REV.0 FEB. 1998 PRINTED IN JAPAN (IMPRIME AU JAPON)

4. Driving the Scanner Motor

a. Outline

The scanner motor is a 4-phase control stepping motor. It is turned ON/OFF and its direction and the speed of its rotation are chanceged by controlling the output timing of pulse signals SCA/A* and SCB/B*.

b. Operations

The microprocessor (Q301) on the DC controller PCB receives such information as on the selected copying mode and reproduction ratio from the control panel circuit. In response, it issues drive pulses to the scanner motor (M2) by way of the motor drive circuit.

The scanner motor is a 4-phase control stepping motor and controls the scanning direction and speed by changing the frequency and the sequence of drive pulses (SCA through SCB*).

The motor drive voltage ON/OFF switching circuit controls whether to apply power to drive the motor or to remove power to keep the motor at rest.

The current switching control circuit determines the current flowing into the motor according to the revolution of the motor, and the motor driver circuit controls the constant current according to the value determined by the circuit.

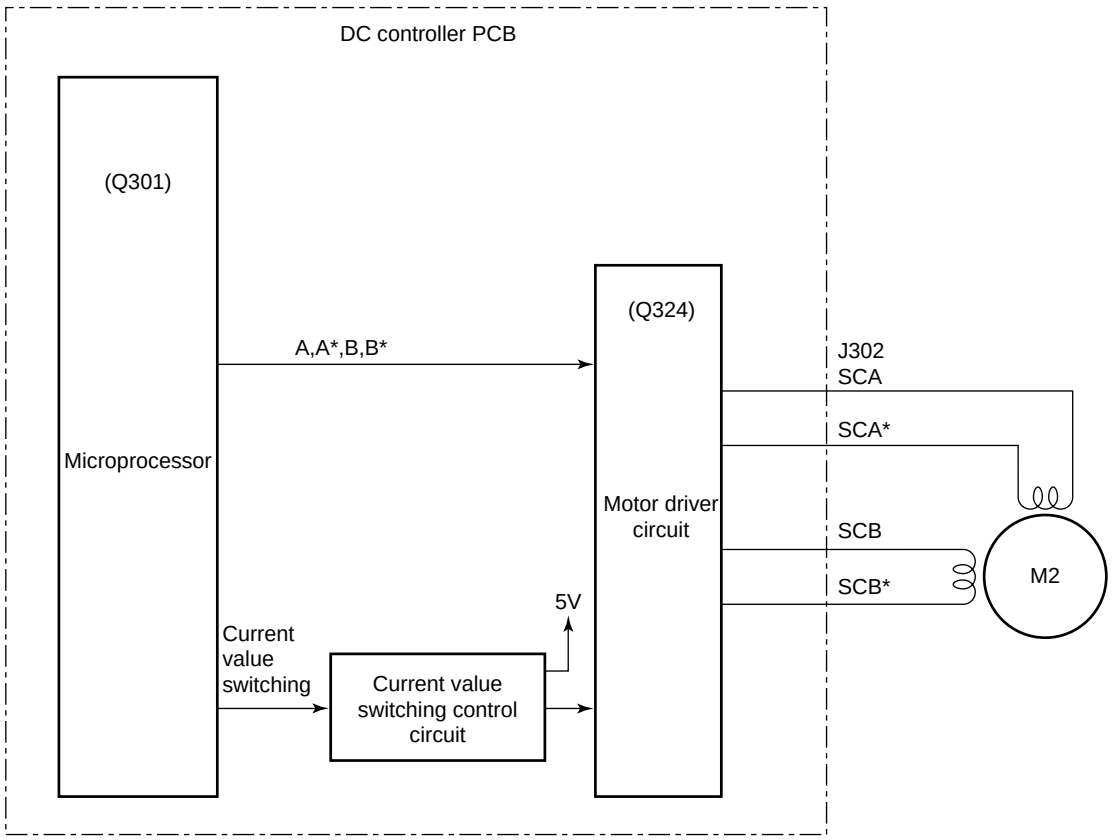

Figure 3-207

D. Operations of the Scanner in Page Separation Mode

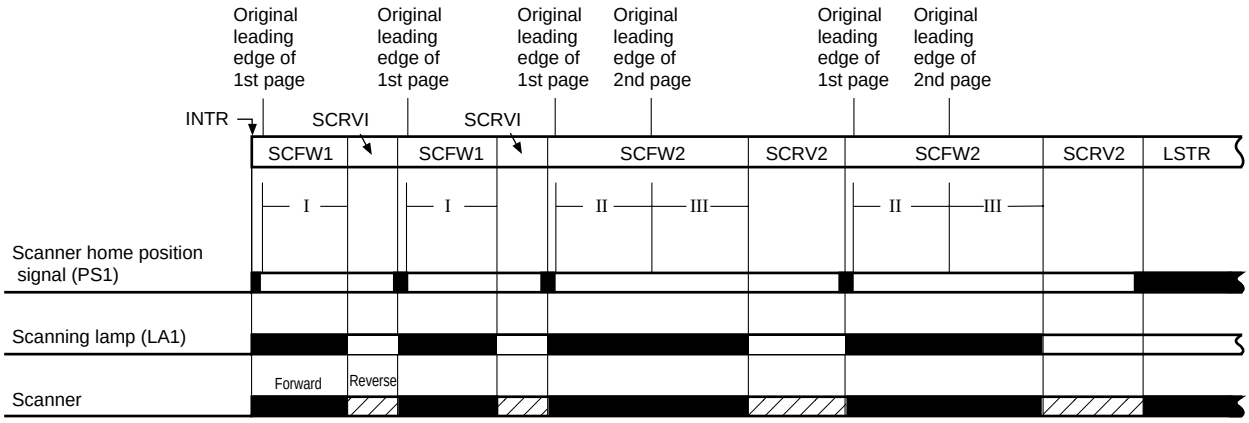

*Non-AE, page separation mode, A4, 2 copies, continuous.

Figure 3-208

I, II, and II in Figure 3-208 use the scanner home position signal (falling edge of SCHP) for the 1st page as the reference for control by the microprocessor on the DC controller PCB.

The microprocessor determines how much the scanner must travel forward to suit the selected cassette size.

I, II: The distance traveled forward is determined by the selected reproduction ratio and the cassette size.

III: If the forward travel distance during II of Figure 3-208 is in excess of about 216 mm, 216 mm is used to represent the leading edge of the second page.

COPYRIGHT © 1998 CANON INC.
CANON NP6621 REV.0 FEB. 1998 PRINTED IN JAPAN (IMPRIME AU JAPON)

III. IMAGE FORMATION SYSTEM

A. Outline

The machine's image formation system consists of the following:

- Controls the scanning lamp.
- Controls the primary charging.
- Controls the transfer charging.
- Controls the separation static eliminator.
- Controls the developing bias.
- Controls the blank exposure lamp.

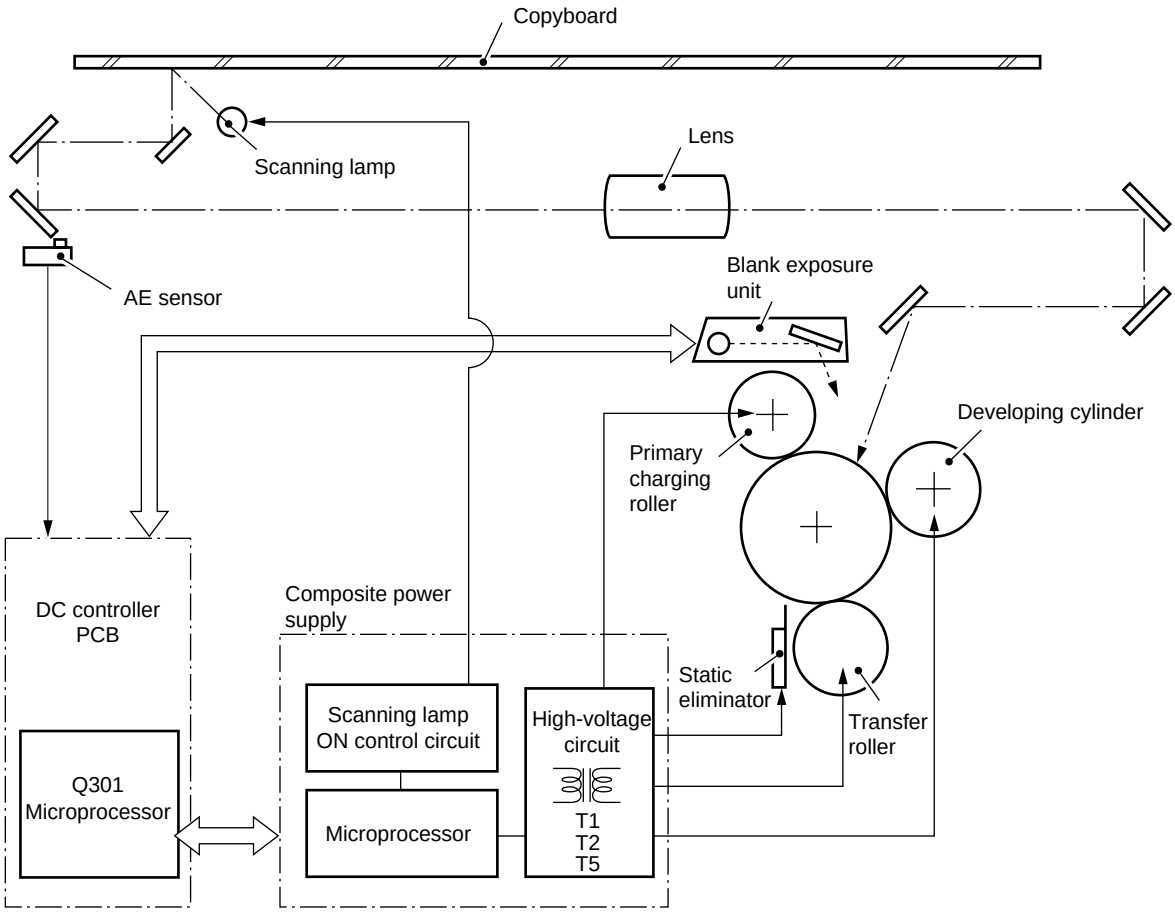

Figure 3-301

COPYRIGHT © 1998 CANON INC.

B. Sequence of Operations (image formation system)

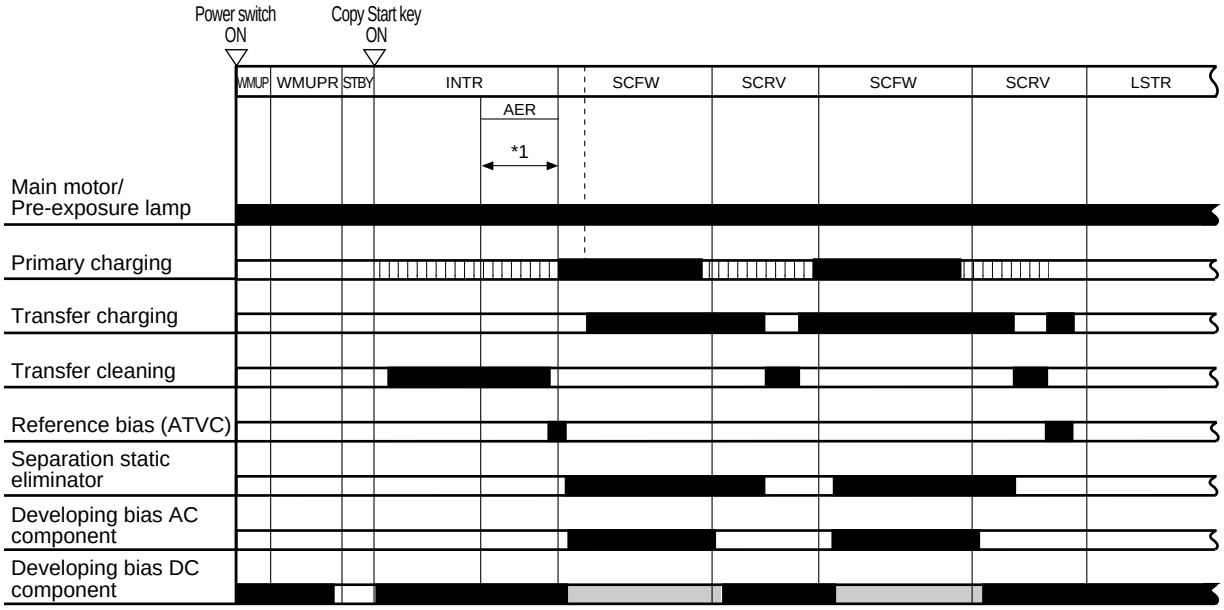

Figure 3-302

COPYRIGHT © 1998 CANON INC.
CANON NP6621 REV.0 FEB. 1998 PRINTED IN JAPAN (IMPRIME AU JAPON)

C. Controlling the Scanning Lamp

1. Outline

The scanning lamp (LA1) is controlled by the DC controller PCB; see Figure 3-303. Specifically, the DC controller:

- Turns the scanning lamp ON and OFF.
- Controls the intensity of the scanning lamp.

2. Mechanism

a. Turning the Scanning Lamp ON and OFF

The CPU (Q308) on the DC controller PCB controls the lamp regulator. The scanning lamp goes ON/OFF through serial communication interface between DC controller PCB and Composite power supply PCB.

b. Controlling the Intensity of the Scanning Lamp

The machine exerts phase control by the zero-cross signal (ZXDP) to stabilize the light intensity.

The intensity of the scanning lamp is switched controlled by the LIGHT INTENSITY CONTROL command (FLS).

During AE exposure, however, the voltage (70 V) applied to the scanning lamp remains the same.

The NP6621 adjusts the copy density using its development bias; see p. 3-26.

c. Error Protection

The condition of the scanning lamp is monitored using the LIGHT signal (LGHT).

If the LIGHT signal (LGHT) is received by the DC controler for about 20 sec, the error detection circuit generates the AC SHUTOFF signal (ACOFF) to force the relay (K1) on the AC driver OFF, thereby cutting AC power supply (p. 3-101). In this case, E220 error is displayed.

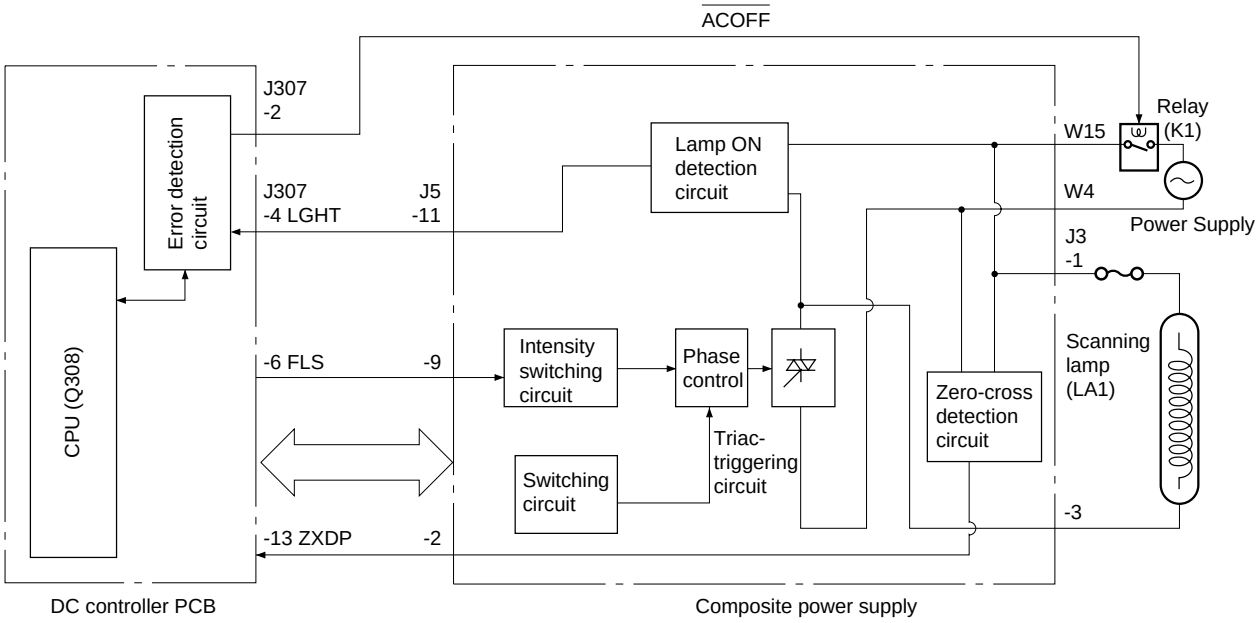

Figure 3-303

D. Controlling the Primary Charging Roller

1. Outline

Figure 3-304 shows the circuit that controls the application voltage of the primary charging roller, and the circuit has the following functions:

- Turns ON/OFF the primary charging roller bias.
- Controls the primary charging roller bias to a constant voltage.
- Switches the application voltage level of the primary charging roller bias.
- Controls the application voltage of the primary charging roller bias.
- Corrects the scanning lamp ON voltage level.

The main transformer (T1) generates the primary voltage controlled by U402.

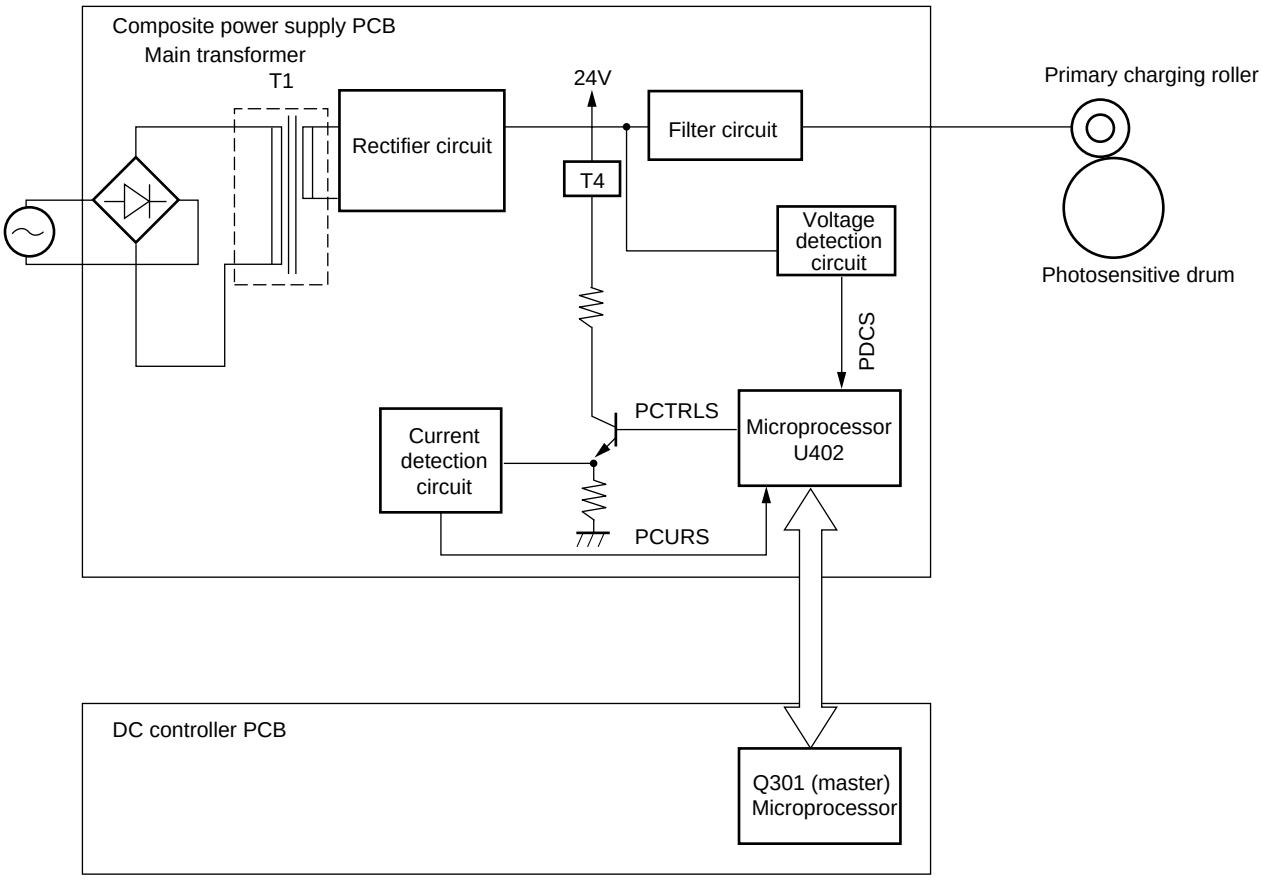

Figure 3-304

COPYRIGHT © 1998 CANON INC.
CANON NP6621 REV.0 FEB. 1998 PRINTED IN JAPAN (IMPRIME AU JAPON)

2. Turning ON/OFF the Primary Charging Roller Bias

Under the control of the microprocessor master (Q301) on the DC controller PCB, the micro-processor on the composite power supply PCB generates the PCTRLS signal (pulse signal), which causes the secondary side of the transformer (T4) to go ON and the primary charging roller bias to be applied.

3. Controlling the Primary Charging Roller Bias to a Constant Voltage

The microprocessor on the composite power supply PCB reads the PDCS signal (analog signal) from the voltage detection circuit while the bias voltage is being applied to the primary charging roller and controls the PDCPWM signal so that the output voltage remains constant.

4. Switching the Application Voltage Level for the Primary Charging Roller Bias

The machine applies a cleaning bias to the transfer roller during initial rotation (INTR), when the scanner is moving in reverse (SCRV), during last rotation, and at power-on after a jam. (See p. 3-46.)

To improve the efficiency of cleaning by the cleaning bias and to prevent residual memory on the drum by the cleaning bias, the primary charging roller bias is applied during initial rotation and while the scanner is moving in reverse.

5. Automatic Correction of the Application Voltage Level of the Primary Charging Roller Bias and the Scanning Lamp ON Voltage Level (APVC, ALVC control)

Changes in latent static images can affect the copy quality; such changes in latent static images result from

- changes in the drum sensitivity, and
- changes in the charges from the primary charging roller.

On the other hand, these changes occur because of the site of installation (temperature, humidity), deterioration of related parts, wear, or dirt.

The machine's light area potential (V_L) and dark area potential (V_D) tend to increase. To correct such an increase, the machine corrects the application voltage level of the primary charging roller (APVC control) and, at the same time, corrects the scanning lamp ON voltage level (ALVC control), thereby ensuring a specific degree of light area potential (V_L) and light area potential (V_D) at all times.

COPYRIGHT © 1998 CANON INC.
CANON NP6621 REV.0 FEB. 1998 PRINTED IN JAPAN (IMPRIME AU JAPON)

The sequence of this control mechanism is as follows during initial rotation after the power switch is turned ON:

• Flow

A specific voltage (about -1.46 kV) is applied to the primary charging roller for about 1.5 sec.

↓

The current value at this time is checked by the current detection circuit, and the result is sent to the microprocessor.

↓

In response, the microprocessor forwards the result to the microprocessor (Q301) on the DC controller, which determines the primary charging roller bias application voltage based on the result.

Caution:

You must enter the APVC value indicated on the label attached to the composite power supply PCB whenever you have replaced the composite power supply PCB in service mode No. 315 and No. 316. (See the Service Handbook.)

Caution:

You must enter the APVC correction voltage value as indicated on the label attached to the front of the drum unit whenever you have replaced the drum unit. (See the Service Handbook.)

COPYRIGHT © 1998 CANON INC.
CANON NP6621 REV.0 FEB. 1998 PRINTED IN JAPAN (IMPRIME AU JAPON)

E. Controlling the Transfer Roller Bias

1. Outline

The machine uses a direct transfer method that uses a roller; and, for this reason, it executes bias control in a way different from copiers that rely on corona charging.

The transfer roller bias may be any of three types and has the following function and output timing:

a. Transfer Bias

This bias corresponds to the transfer bias of copiers that rely on corona charging. (constant voltage of -3.5 kV to -6.0 kV DC)

b. Cleaning Bias

Since the machine uses a direct transfer method, toner from the photosensitive drum can accumulate on the transfer roller because of jams.

To remove such a build-up of toner, a positive voltage (constant, DC) is applied, thereby returning the toner from the transfer roller to the photosensitive drum. The bias is applied as follows:

- during initial rotation after the Copy Start key is pressed.
- part of the period in which the scanner is moving in reverse.
- part of last rotation.

c. Reference Bias (ATVC)

Changes in the environment or deterioration in the transfer roller can affect the resistance of the transfer roller, possibly affecting the transfer efficiency.

To suppress the changes in the image quality caused by changes in the transfer efficiency, the machine corrects the application voltage level of the transfer bias.

The transfer ATVC bias (constant current, -190 µA DC) is a bias applied each time the Copy Start key is pressed so that the aforementioned correction value may be determined.

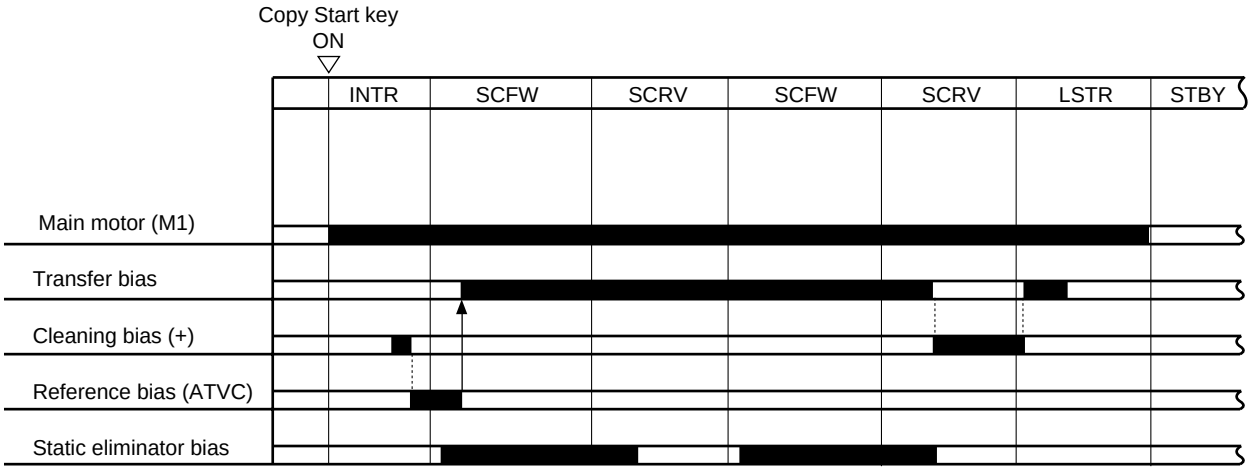

Figure 3-305

COPYRIGHT © 1998 CANON INC.

Figure 3-306 shows the circuit that controls the foregoing three types of biases, and the circuit has the following functions:

- Turns ON/OFF the transfer roller bias.
- Controls the transfer bias to a constant voltage.
- Corrects the voltage level of the transfer bias.

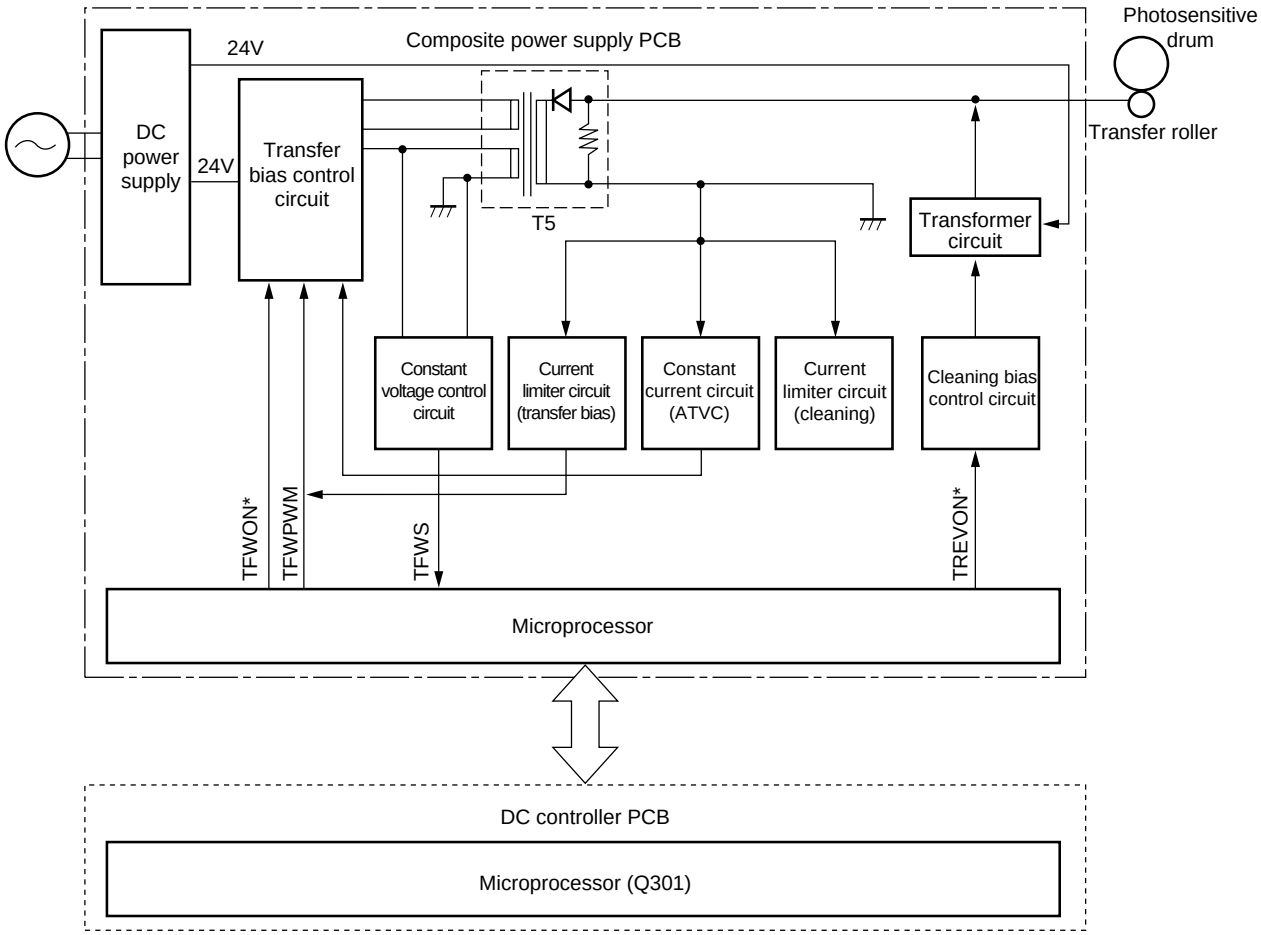

Figure 3-306

COPYRIGHT © 1998 CANON INC.
CANON NP6621 REV.0 FEB. 1998 PRINTED IN JAPAN (IMPRIME AU JAPON)

2. Turning ON/OFF the Transfer Roller Bias

The TFWON signal is generated under the control of the microprocessor on the composite power supply PCB, thereby turning ON the secondary side of the transfer transformer (T5) and applying a DC bias to the transfer roller.

Table 3-301 shows combinations of signals used to determine the transfer roller bias.

	TREVON*	TFWON*	TFWPWM
Transfer bias output	OFF	ON	ON
Cleaning bias output	ON	OFF	OFF
Reference bias output (ATVC)	OFF	ON	OFF

Table 3-301

3. Controlling the Transfer Bias Constant Voltage

The microprocessor on the composite power supply PCB reads the TFWS (analog signal) from the constant voltage control circuit while the transfer DC bias is being generated and changes the duty ratio so that the application voltage remains constant, thereby controlling the TFWPWM signal.

4. Correcting the Transfer Bias Voltage Level (ATVC control)

To compensate for changes in the transfer efficiency caused by changes in the environment or deterioration of the transfer roller, the machine automatically corrects the application voltage level of the transfer bias.

During initial rotation after the Copy Start key is pressed, a constant current (-10 µA) is sent to the transfer roller. The microprocessor on the composite power supply PCB reads the transfer roller application voltage from the constant control circuit, and the result is sent to the microprocessor (Q301) on the DC controller, which in turn determines the voltage to be applied to the transfer roller.

This control mechanism is executed once during initial rotation after the Copy Start key is pressed; therefore, the application voltage can never change during continuous copying.

5. Current Limiter Circuit (transfer bias)

If changes in the environment or the like causes an overcurrent to flow to the secondary side of the transformer (T5) while the transfer bias is being generated, the current limiter circuit starts control to make sure that no current greater than 50 µA flows.

6. Current Limiter Circuit (cleaning bias)

If changes in the environment or the like causes an overcurrent to flow to the secondary side of the transformer (T5) while the cleaning bias is being generated, the current limiter circuit starts control to make sure that no current greater than 10 µA flows.

COPYRIGHT © 1998 CANON INC.
CANON NP6621 REV.0 FEB. 1998 PRINTED IN JAPAN (IMPRIME AU JAPON)

F. Controlling the Static Eliminator Bias

1. Outline

Figure 3-307 show the circuit that controls the static eliminator bias, and the circuit has the following functions:

- Turns ON/OFF the static eliminator bias and controls it to a constant voltage.
- Switches the static eliminator bias voltage level.

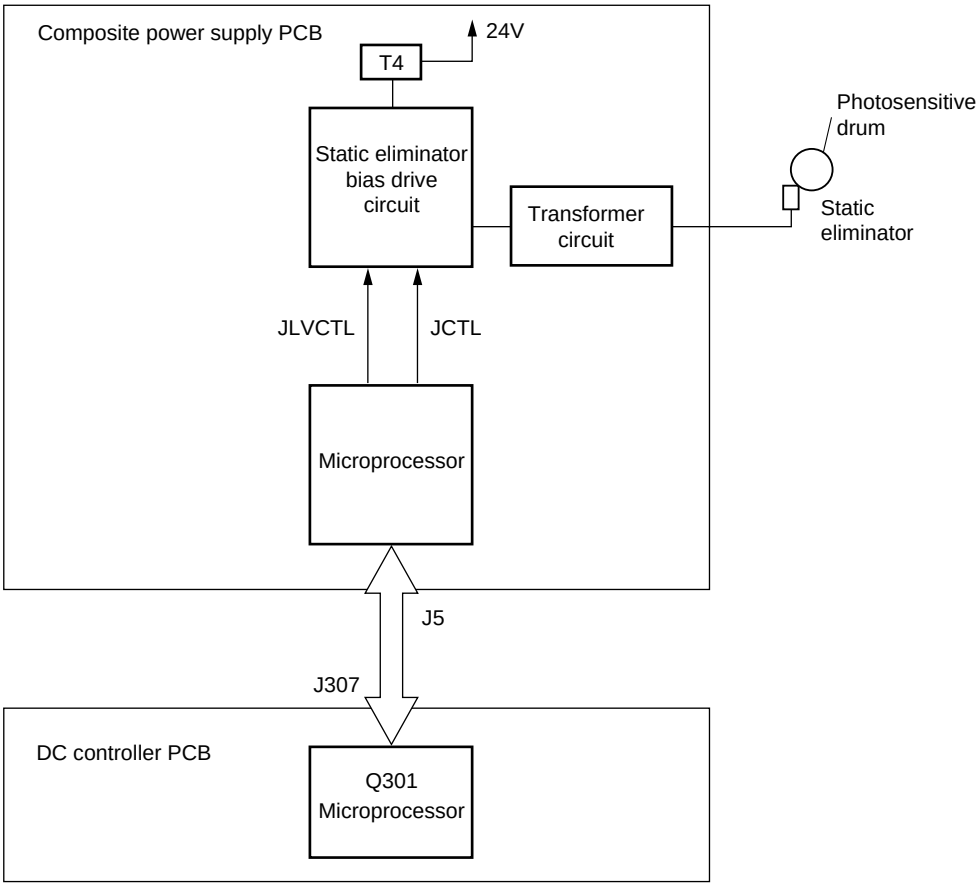

Figure 3-307

COPYRIGHT © 1998 CANON INC.
CANON NP6621 REV.0 FEB. 1998 PRINTED IN JAPAN (IMPRIME AU JAPON)

2. Switching the Voltage Level of the Static Eliminator Bias

The microprocessor on the composite power supply PCB generates the JCTL signal (analog signal) under the control of the microprocessor (Q301) on the DC controller PCB, thereby causing the secondary side of the main transformer (T4) to turn ON; the bias for the static eliminator is generated by increasing the high-voltage output from the main transformer (T4).

The JLVCTL signal is used to switch between output voltages 2.5 and 4.0 KV.

When the JCTL signal turns ON, the drive circuit turns ON to generate the static eliminator bias.

3. Ensuring Separation of Thin Paper

In certain environments, the machine can fail to separate thin paper.

If such is the case, you may keep the application voltage to the static eliminator to 4.0 kV at all times to improve separation from the drum.

Use service mode No. 506 to switch the separation static eliminator output voltage. (See p. 3-117.)

COPYRIGHT © 1998 CANON INC.
CANON NP6621 REV.0 FEB. 1998 PRINTED IN JAPAN (IMPRIME AU JAPON)

G. Controlling the Developing Bias

1. Outline

Figure 3-308 shows the circuit that controls the developing bias, and the circuit has the following functions:

- Turns ON/OFF the developing bias AC component.
- Turns ON/OFF the developing bias DC component.
- Controls the voltage level of the developing bias DC component.
- Controls the developing bias DC component to a constant voltage.

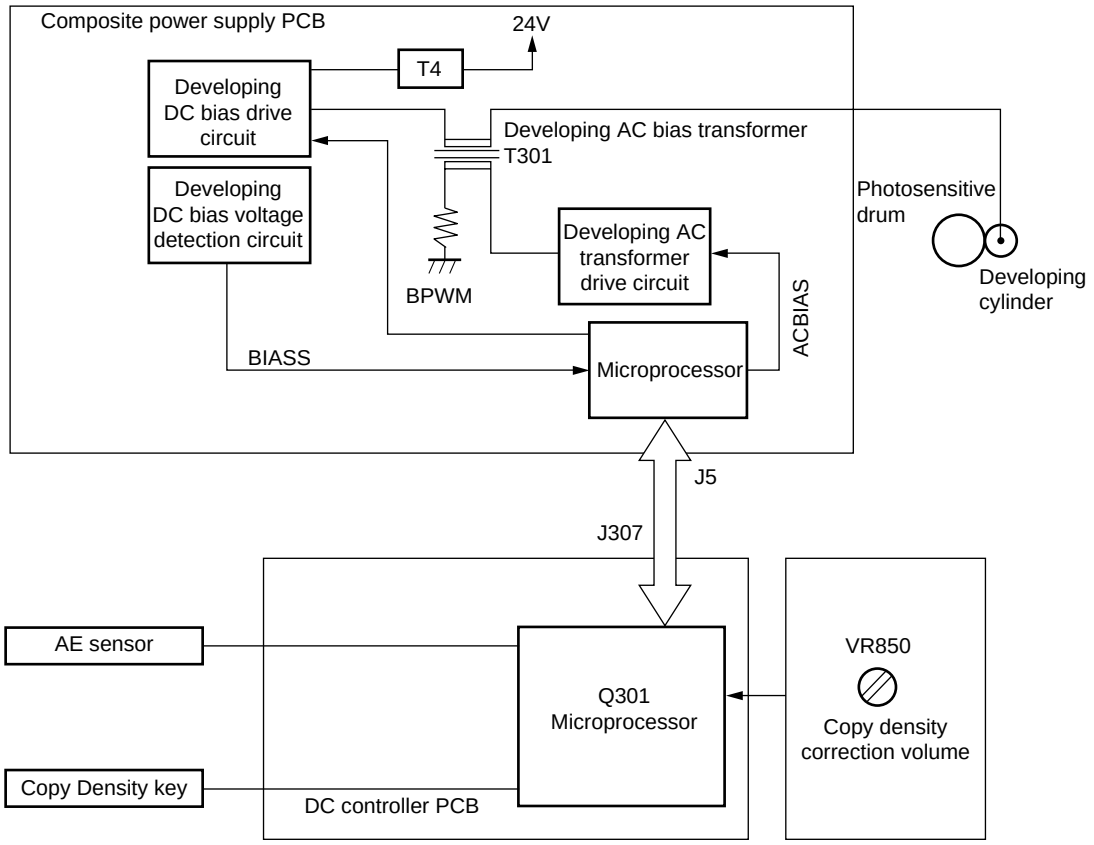

Figure 3-308

COPYRIGHT © 1998 CANON INC.
CANON NP6621 REV.0 FEB. 1998 PRINTED IN JAPAN (IMPRIME AU JAPON)

2. Turning ON/OFF the Developing Bias DC Component and Controlling to Constant Voltage

The microprocessor on the composite power supply PCB generates the BPWM signal (pulse signal) under the control of the microprocessor master (Q301) on the DC controller PCB, thereby turning ON the secondary side of the main transformer (T4) and applying the developing bias DC component.

The application voltage is read as the BIAS signal (analog signal) from the developing DC bias voltage detection circuit while the developing bias DC component is being applied and is used to control the output voltage to a constant level.

3. Turning ON/OFF the Developing Bias

The microprocessor on the composite power supply PCB generates the ACBIAS signal (pulse signal) under the control of the microprocessor master (Q301) on the DC controller PCB. The signal causes the developing bias AC component generation transformer (T3) to turn ON, and the sum of the AC component of the developing bias and the DC component is applied:

- Application frequency: about 2400 Hz
- Application voltage: about 1300 Vp-p

4. Controlling the Voltage Level of the Developing Bias DC Component

The machine changes the voltage level of the DC component of the developing bias to suit the following:

- Setting of the Copy Density key.
- Output of the AE sensor
- Setting of the copy density correction volume (VR850)

The machine exerts control so that the voltage of the developing bias DC component varies between -80 and -560 V as a result of varying the output of the BPWM signal.

To meet the increases in the light area potential (VL) caused by the deterioration of the photosensitive drum, the machine is equipped with a copy density correction volume. You may turn the volume (VR851/860) to adjust the DC bias potential for each increase in VL, thereby ensuring fogging-free images.

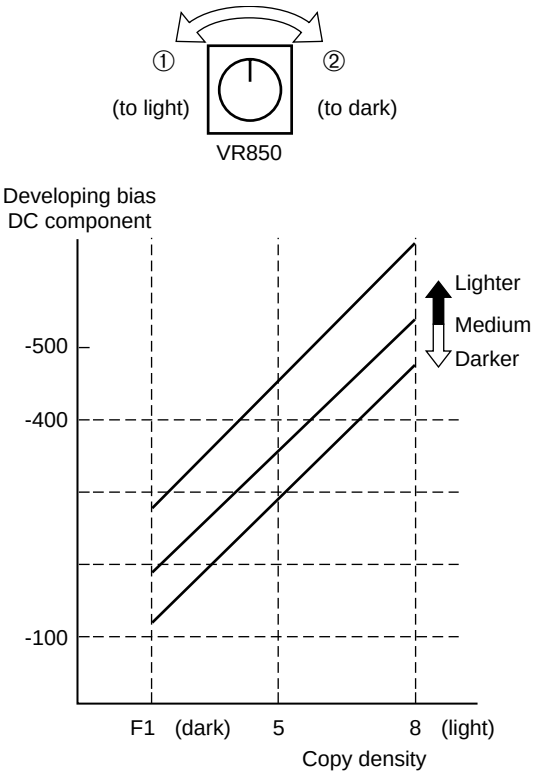

Figure 3-309

H. Copy Density Automatic Control

1. Outline

The machine is equipped with an automatic density correction (AE) function that controls the DC component of the developing bias to suit the density of the original used. As long as the original has an even density, the machine will adjust the DC component of the developing bias to generate fogging-free copies.

The DC component that has been adjusted in AE mode may be checked on the copy density indicator on the control panel.

2. Control Operations

The scanning lamp (FL1) is turned on at a specific intensity during initial rotation (INTR), and the scanner is moved forward for about 65 mm to expose the original.

In this condition, the reflected light within the area shown in Figure 3-311 is checked by the AE sensor (photodiode), and the result is sent to the DC controller PCB.

The DC controller in turn computes the optimum value for the developing bias to be used during copying based on the input it has received, and it sends the result of the computation to the composite power supply PCB. Figure 3-310 shows the changes in the DC component of the developing bias in relation to different original densities.

The graph uses the degree of exposure that provides optimum densities when a newspaper or the Test Sheet is copied to ensure fogging-free copies.

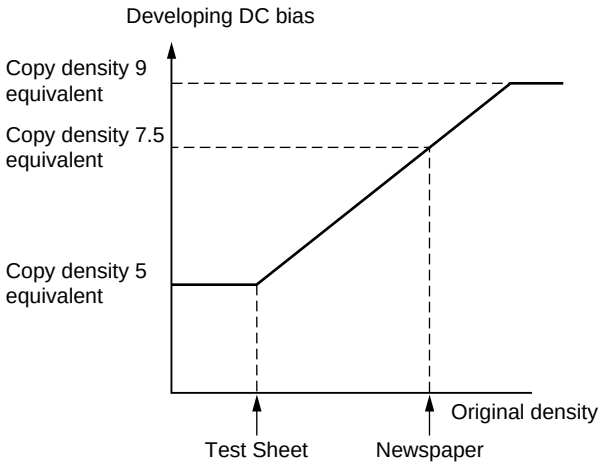

Figure 3-310

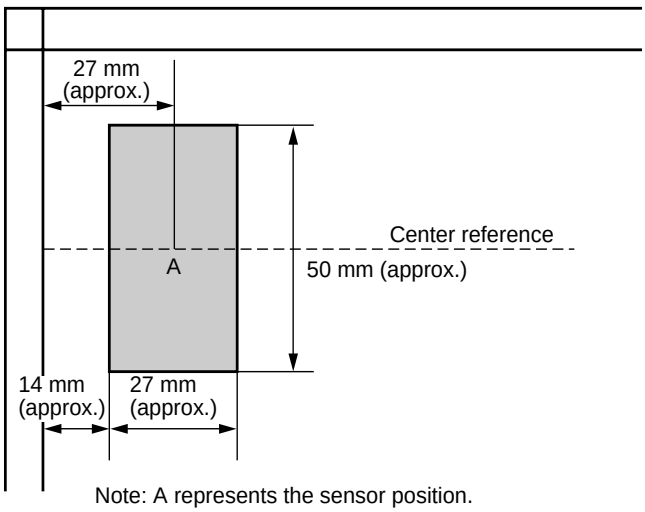

Note: A represents the sensor position.

Figure 3-311 AE Sensor Reading Area

COPYRIGHT © 1998 CANON INC.
CANON NP6621 REV.0 FEB. 1998 PRINTED IN JAPAN (IMPRIME AU JAPON)

3. AE Adjustment

The machine's AE adjustment may be performed in service mode, and it consists of the following three:

- automatic adjustment of the lamp intensity during AE scanning (No. 301)
- reference point adjustment for the copy density (developing bias) for AE mode (No. 302)
- slope adjustment for the copy density (developing bias) for AE mode (No. 303)

Item	Function	Adjustments	Remarks
No. 301	Automatic adjustment of lamp intensity during AE scanning	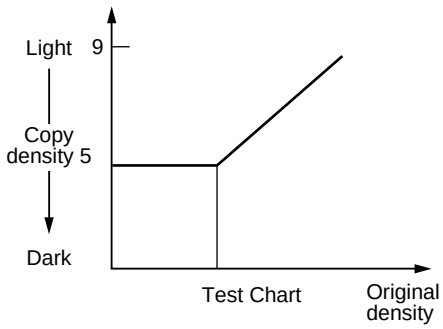	Automatically adjusted so that copy density 5 is attained when the Test Chart is copied.
No. 302	Reference point adjustment for the copy density (developing bias) for AE mode	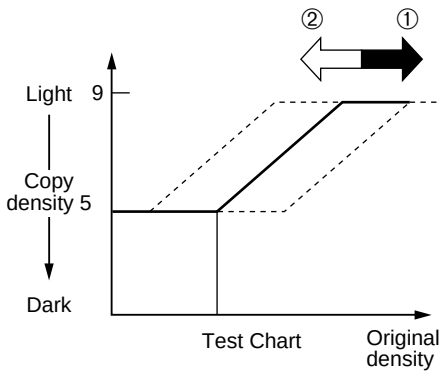	① If the setting is decreased in service mode, the AE copy will be darker. ② If the setting is increased in service mode, the AE copy will be lighter. Default: 0 Settings: -26 to +26
No. 303	Slope adjustment for the copy density (developing bias) for AE mode	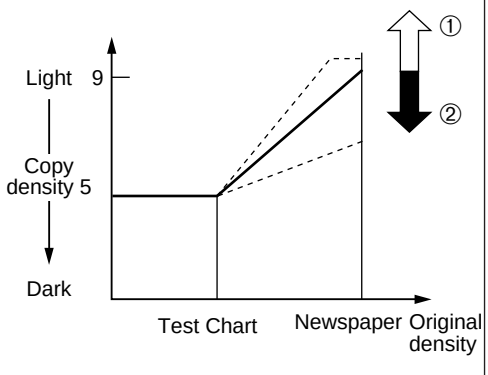	① If the setting is increased in service mode, the copies of a newspaper will be light. ② If the setting is decreased in service mode, the copies of a newspaper will be darker. Default: 0 Settings: -26 to +26

Note:
After AE adjustment with Test Chart NA3, using AE mode, density adjustment should show "5". In non-AE mode, using NA3, density "5" must be appropriate (adjusted with VR850).

Table 3-302

COPYRIGHT © 1998 CANON INC.

I. Developing/Cleaning Assembly

1. Outline

The machine's photosensitive drum, developing cylinder, No. 1 stirring rod, and No. 2 stirring blade are rotated by the drive of the main motor (M1).

The level of toner inside the developing assembly is checked by the toner sensor; if the toner level drops below a specific level, the ADD TONER message is indicated on the control panel.

The No. 1 stirring rod is used to supply toner to the developing cylinder and stir the layer of toner inside the developing chamber.

The No. 2 stirring blade is used to stir the toner inside the toner container and to supply toner to the developing chamber.

The waste toner collected by the cleaning blade is moved by the waste toner feeding blade for collection in the waste toner container.

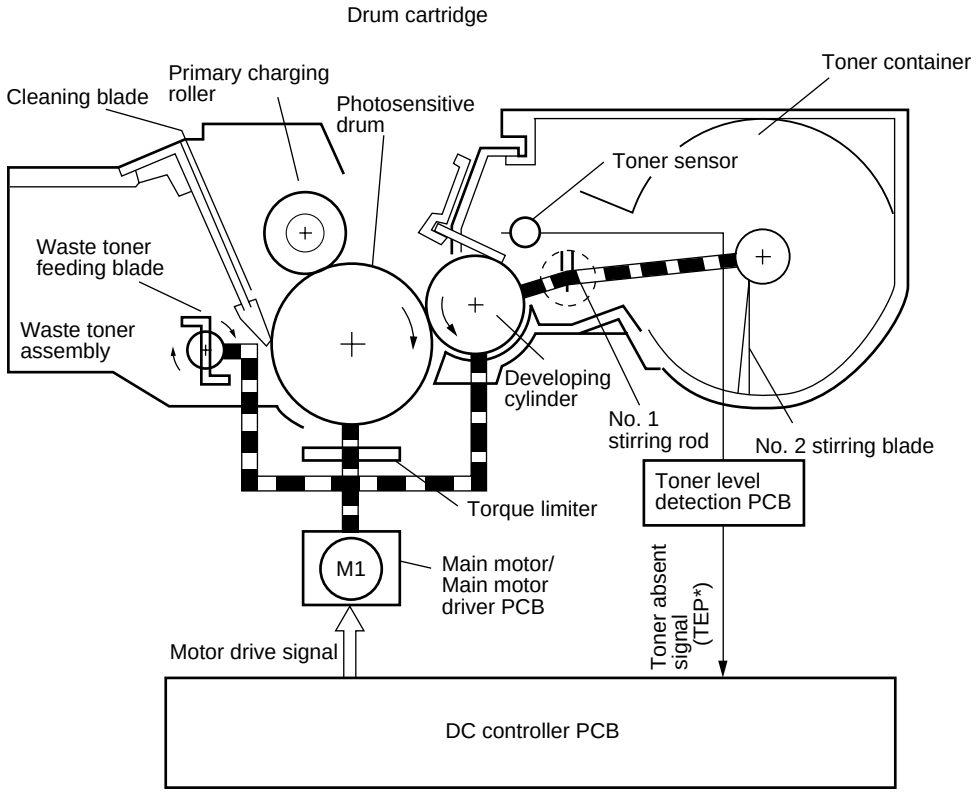

Figure 3-312

COPYRIGHT © 1998 CANON INC.
CANON NP6621 REV.0 FEB. 1998 PRINTED IN JAPAN (IMPRIME AU JAPON)

2. Toner Level Detection Control

The level of toner inside the cartridge is monitored by the antenna sensor circuit.

Inside the cartridge is the toner level sensor, and an AC bias is applied to the developing cylinder.

The developing cylinder and the toner level sensor are bonded statistically, and the amount of static charge between the two varies according to the level of toner inside the cartridge. For this reason, an AC bias which suits the level of toner is identified by the toner level sensor and communicated to the antenna sensor circuit.

The antenna sensor circuit is directly supplied with a specific, attenuated AC bias by the composite power supply for use as a reference signal.

The antenna sensor circuit compares the signal from the toner level sensor against the reference signal to find out the level of toner.

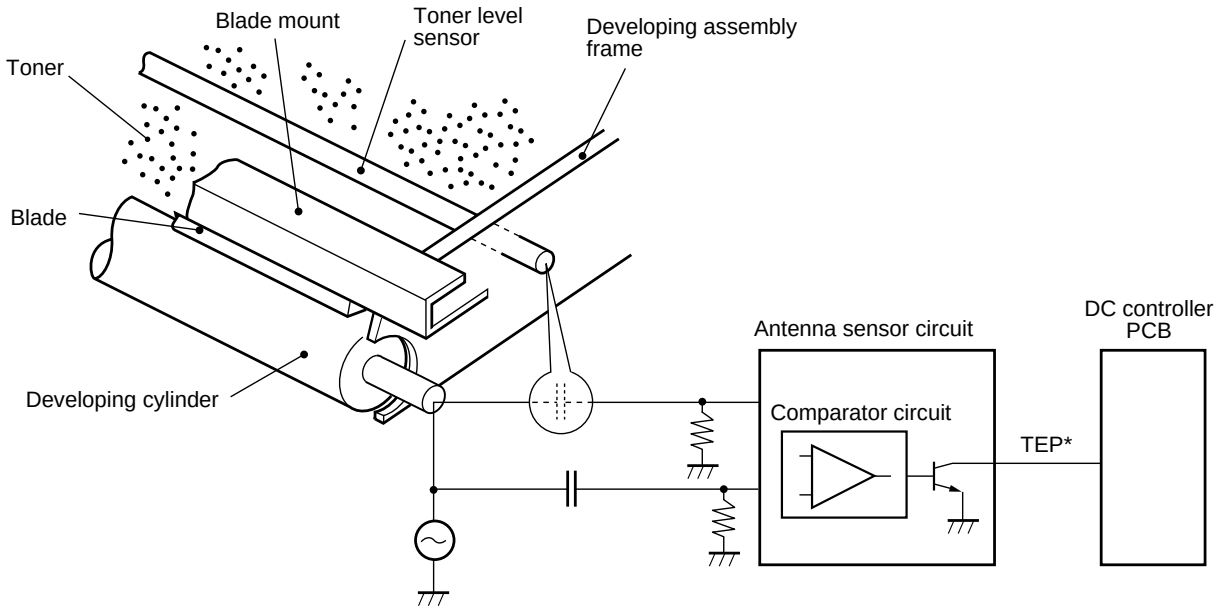

Figure 3-313

① If the toner is more than a specific level,
Since toner exists around the toner level sensor, the AC bias generated by the sensor is greater than the reference signal.
In this condition, the output of the comparator circuit goes '1' and the toner absent signal (TEP*) goes '0'.

② If toner is less than a specific level,
Since toner around the toner level sensor decreases, the AC bias generated by the sensor decreases.
On the other and, the output voltage remains high since the reference signal remains unchanged.
The difference in potential causes the output of the comparator circuit to go '0' and the toner absent signal (TEP*) to go '1'.
The microprocessor (Q301) on the DC controller circuit checks the level of toner only during copying operation (AC bias ON); if it continuously detects the toner empty signal 0 for 3 min or more, it flashes the REPLACE CARTRIDGE message on the control panel after finishing the ongoing copying run.

③ Torque Limiter
If an excess load is imposed on the photosensitive drum as when the waste toner becomes full while the photosensitive drum is rotating, the torque limiter turns on to stop the rotation of the photosensitive drum by cutting the drive from the main motor.

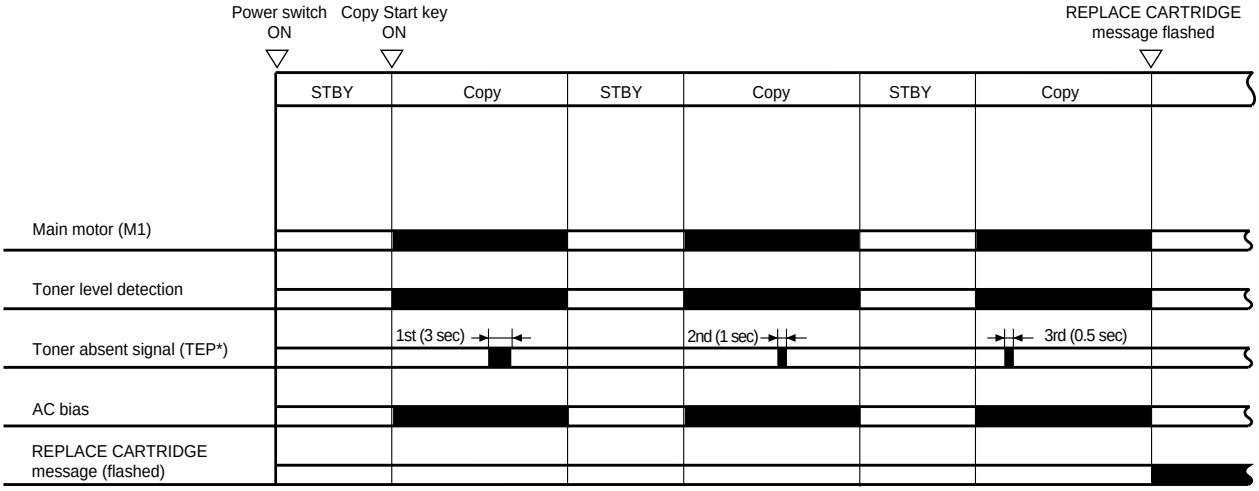

A43, AE, 3 copies, continuous.

Figure 3-314

COPYRIGHT © 1998 CANON INC.
CANON NP6621 REV.0 FEB. 1998 PRINTED IN JAPAN (IMPRIME AU JAPON)

J. Blank Exposure Control

1. Outline

The machine directs light from the pre-exposure lamp to the photosensitive drum by way of a reflecting plate for blank exposure, thereby blanking out gaps between sheets of paper and non-image areas.

The machine's blank exposure area is controlled by two slide shutters and one open/close shutter.

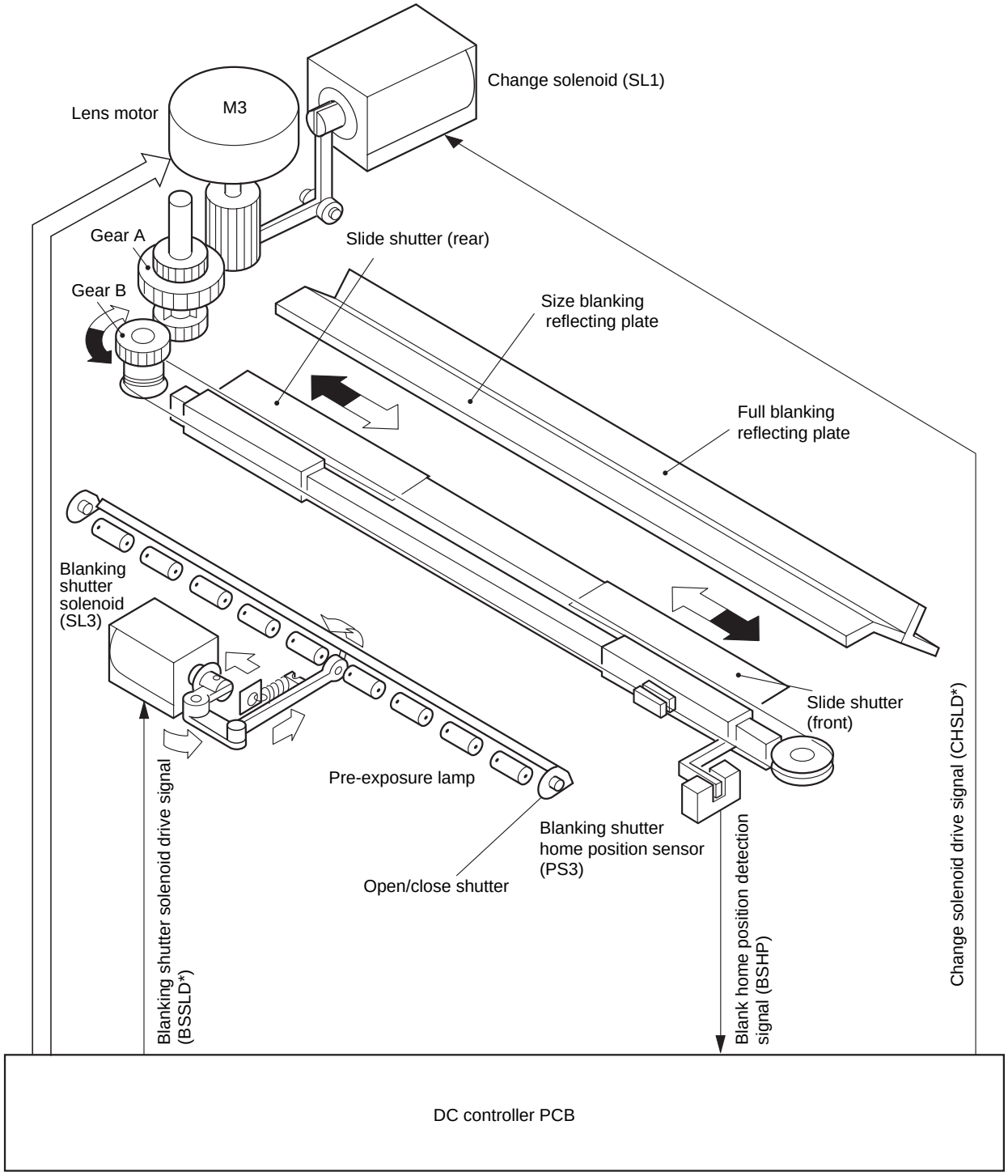

Figure 3-315

COPYRIGHT © 1998 CANON INC.

2. Blanking the Non-Image Area (reduction)

In reduction mode, the change solenoid (SL1) turns ON, and the lens is moved to suit the selected reduction ratio. At this time, turning the change solenoid (SL1) OFF allows the drive of the lens motor to be transmitted to gear A/B; the slide shutter (rear/front) moves for the distance corresponding to the selected reduction ratio. In this condition, the exposure window opens, and the light from the pre-exposure lamp is directed to the photosensitive drum through the size blanking reflecting plate.

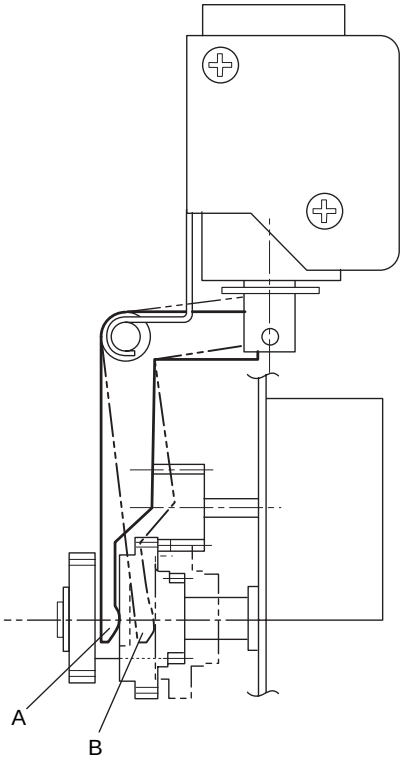

Figure 3-316

3. Blanking the Leading/Trailing Edge Margin and Sheet Gap

The microprocessor (Q301) on the DC controller turns ON/OFF the blanking shutter solenoid drive signal (BSSLD*), thereby opening/closing the open/close shutter to blank out the leading/trailing edge margin or the gap between sheets of paper.

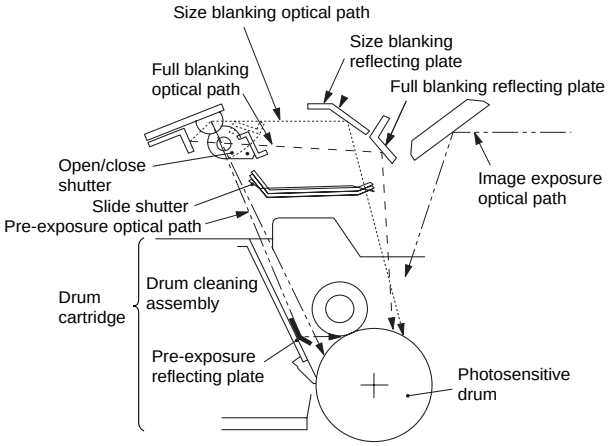

Figure 3-317

COPYRIGHT © 1998 CANON INC.
CANON NP6621 REV.0 FEB. 1998 PRINTED IN JAPAN (IMPRIME AU JAPON)

K. Primary Charging Roller Cleaning Control

1. Outline

The machine's primary charging roller is equipped with an automatic cleaning mechanism.

The automatic cleaning mechanism cleans the primary charging roller under the following conditions:

- During initial rotation (INTR) after making 250 or more copies (accumulative; i.e., after executing transfer roller locking/releasing control five times).

2. Primary Charging Roller Cleaning Operations

The microprocessor (Q301) on the DC controller PCB generates the primary charging roller cleaning solenoid (SL4) ON signal (PCLSLD), thereby forcing the cleaning pad against the roller for 2 sec. (During this period, the cleaning roller rotates about four times.)

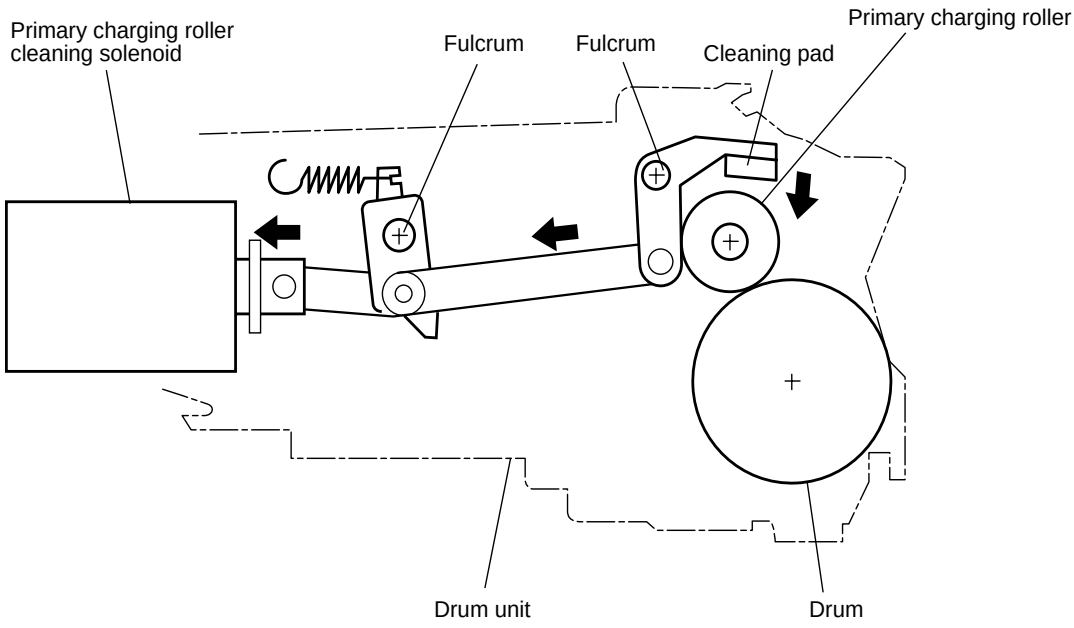

Figure 3-318

L. Transfer Roller Locking/ Releasing Control

1. Outline

The machine's transfer roller is equipped with a locking/releasing mechanism.

The locking/releasing mechanism operates to lock or release the transfer roller, thereby preventing adhesion of toner to the roller under the following condition:

- During last rotation (LSTR) after making 50 copies or more.

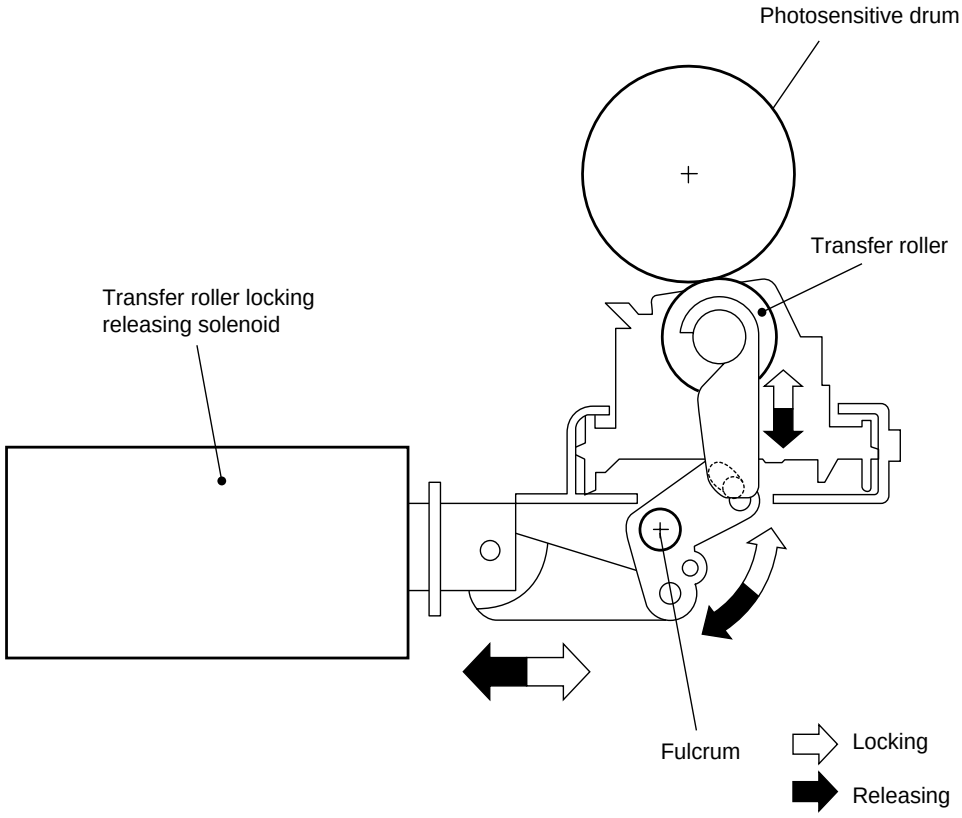

Figure 3-319

COPYRIGHT © 1998 CANON INC.
CANON NP6621 REV.0 FEB. 1998 PRINTED IN JAPAN (IMPRIME AU JAPON)

IV. PICK-UP/FEEDING SYSTEM

A. Pick-Up from the Machine

1. Outline

When the pick-up clutch (CL2, CL3, or CL5) turns ON while the main motor is rotating, the appropriate pick-up roller rotates to pick up paper. The paper is then forwarded to the registration roller by way of the vertical path roller if it is from the cassette or directly if it is from the manual feeding tray.

Copy paper is controlled by the registration roller so that its leading edge matches the image on the photosensitive drum, and it is moved through the transfer, separation, feeding, fixing, and delivery assembly to reach the copy tray.

The delivery roller is driven by the special delivery motor (M6). The set-back roller in the duplexing unit is also driven by the special duplexing motor (M7). Other motors are driven by the main motor (M1).

When two-sided or overlay copying is selected, the paper first moves through the fixing assembly and then through the duplexing unit before it reaches the registration roller once again. The paper path is provided with the following photointerrupters, and the machine identifies a jam if copy paper fails to reach or move past specific sensors within specific periods of time:

- Registration roller paper sensor
- Separation paper sensor
- Delivery paper sensor
- Vertical path roller 1 paper sensor
- Vertical path roller 2 paper sensor
- Duplexing unit outlet paper sensor
- Duplexing unit inlet paper sensor
- Duplexing unit pre-registration paper sensor

In addition, the cassette is provided with photointerrupters (PS4, PS13) and the multifeeder is equipped with yet another photointerrupter (PS5).

COPYRIGHT © 1998 CANON INC.
CANON NP6621 REV.0 FEB. 1998 PRINTED IN JAPAN (IMPRIME AU JAPON)

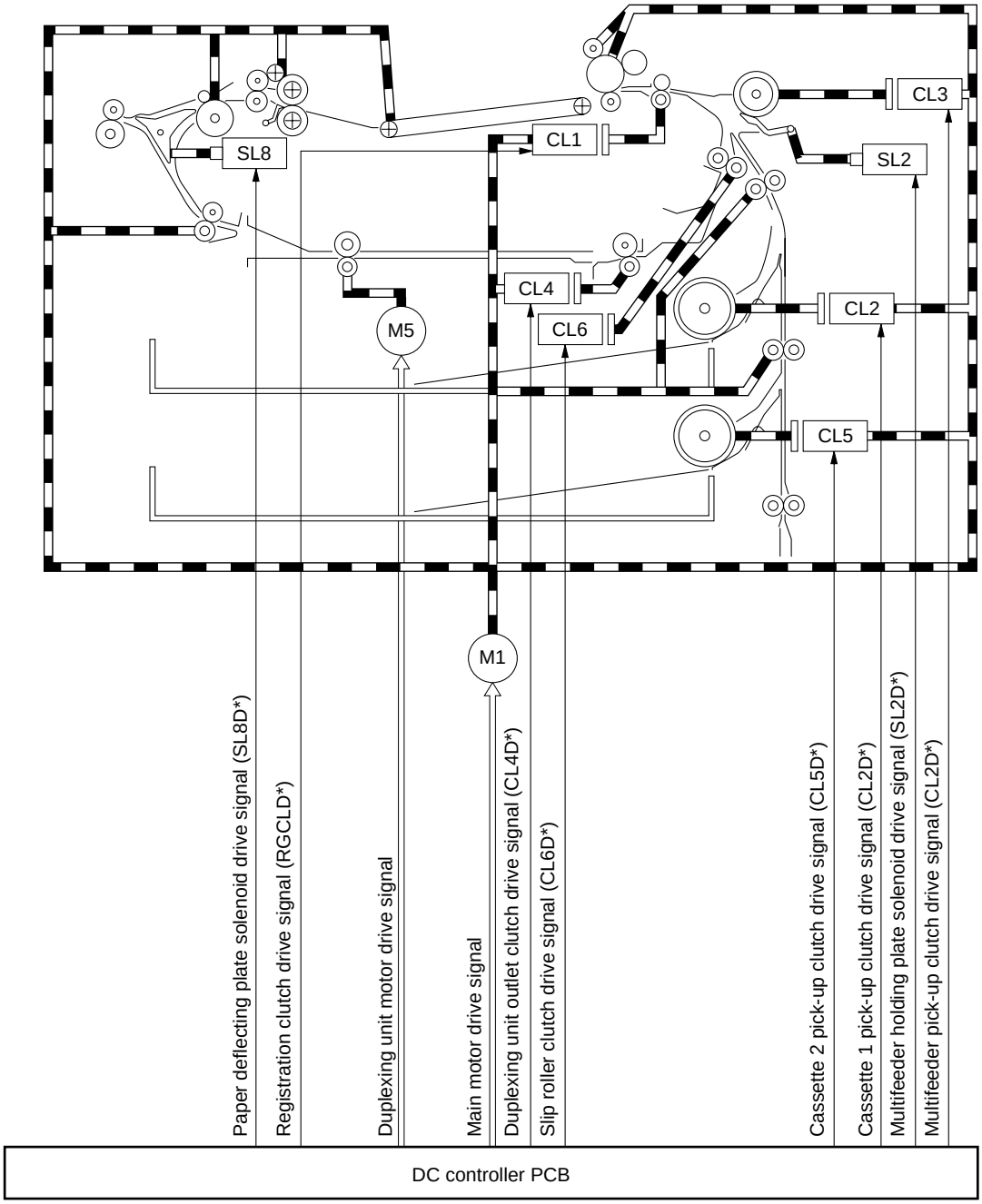

Figure 3-401

COPYRIGHT © 1998 CANON INC.
CANON NP6621 REV.0 FEB. 1998 PRINTED IN JAPAN (IMPRIME AU JAPON)

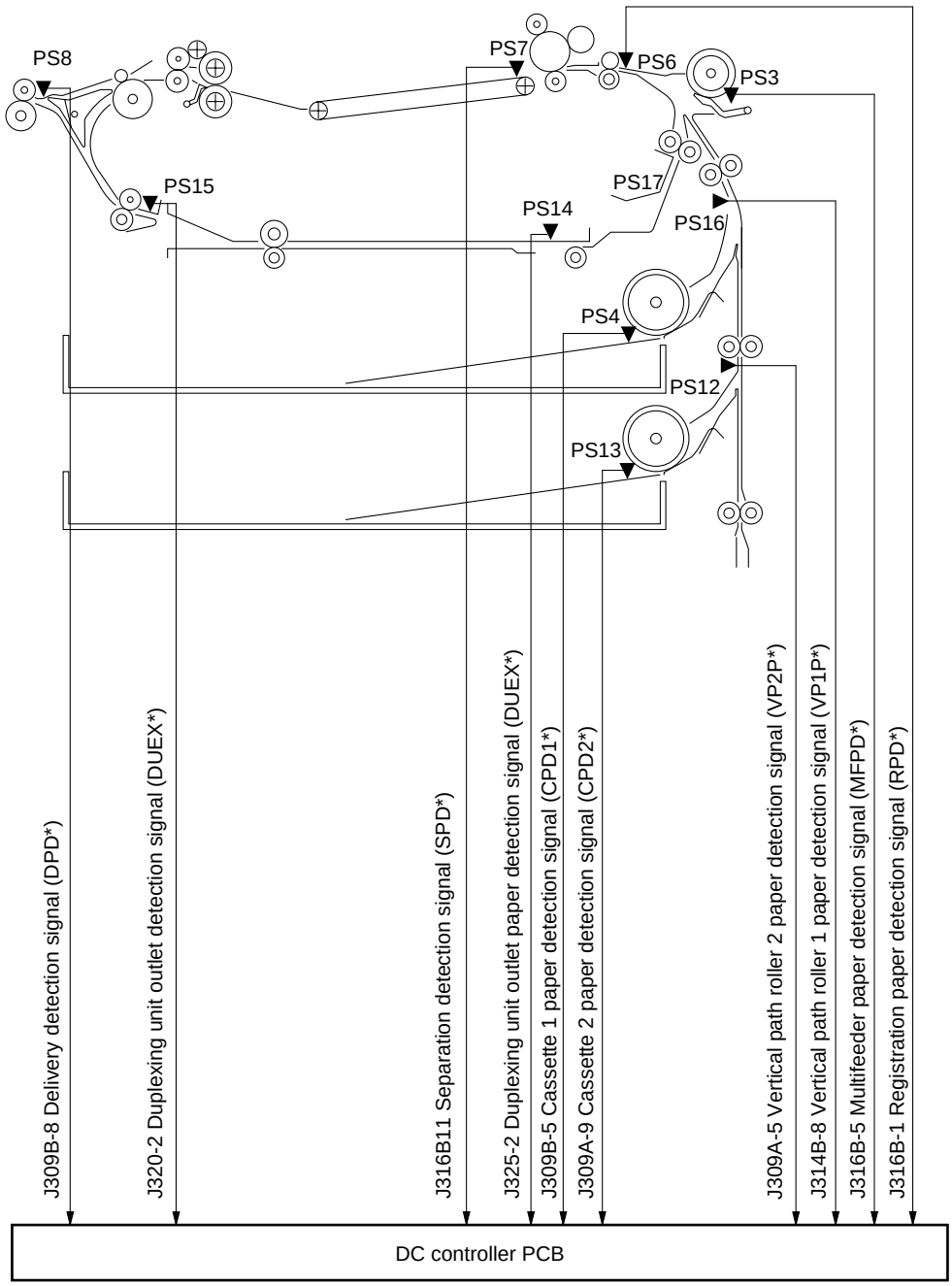

Figure 3-402

COPYRIGHT © 1998 CANON INC.
CANON NP6621 REV.0 FEB. 1998 PRINTED IN JAPAN (IMPRIME AU JAPON)

2. Sequence of Operations (pick-up/feeding system; A4, 2 copies, cassette 1)

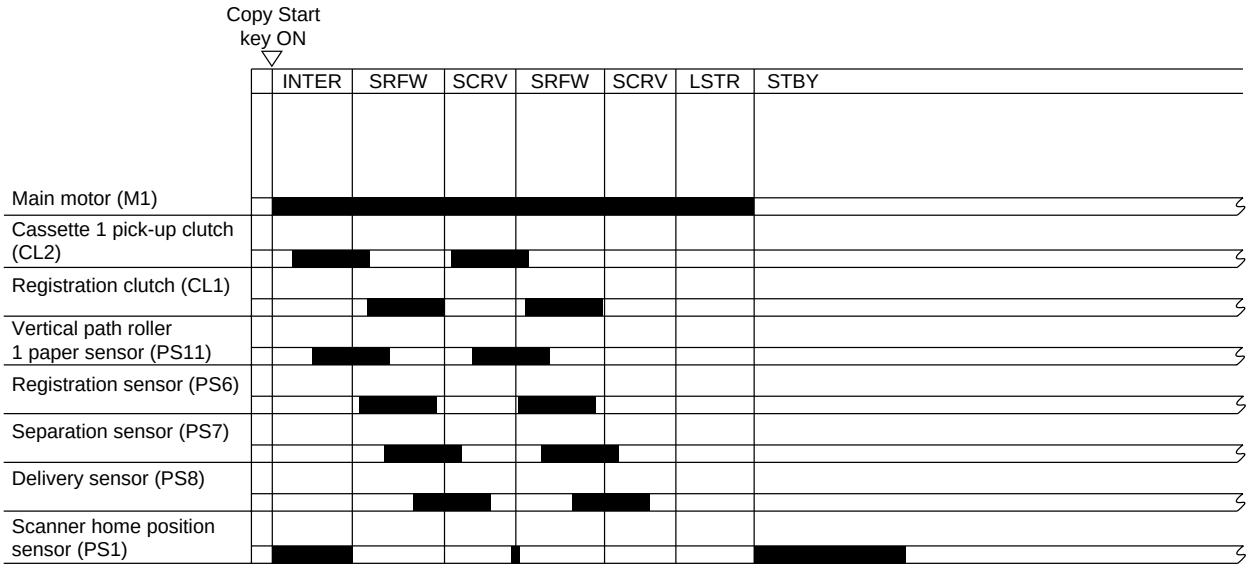

Figure 3-403

3. Sequence of Operations (pick-up/feeding system; A4, 2 copies, cassette 2)

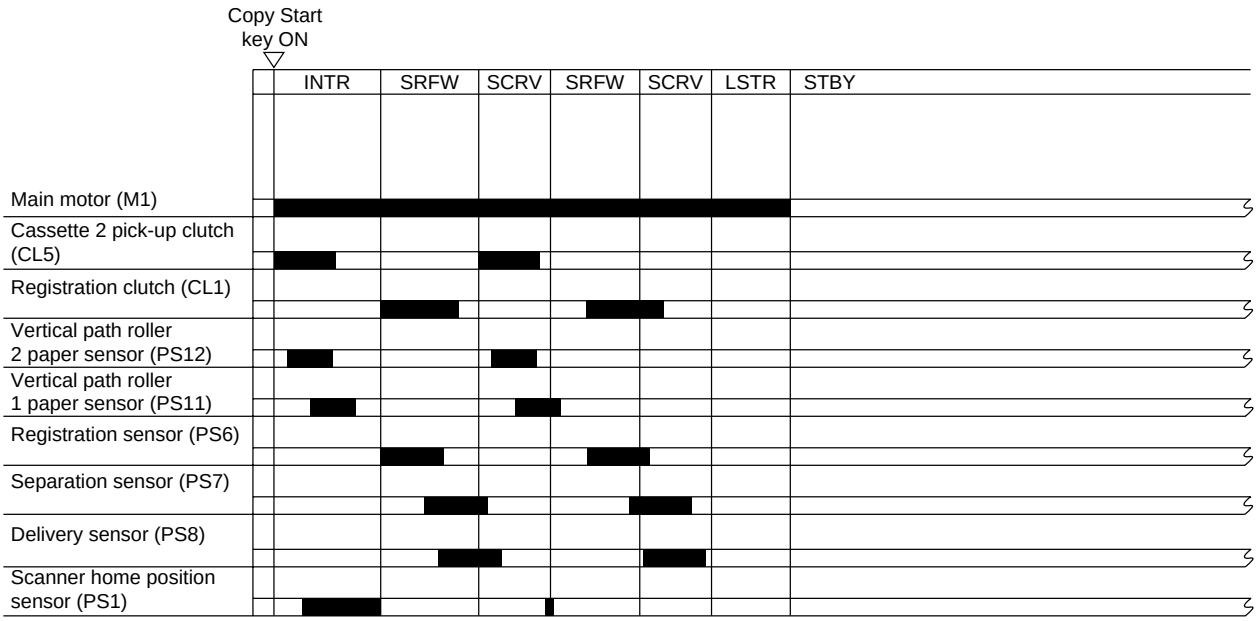

Figure 3-404

COPYRIGHT © 1998 CANON INC.
CANON NP6621 REV.0 FEB. 1998 PRINTED IN JAPAN (IMPRIME AU JAPON)

B. Making Two-Sided Copies (1 copy)

1. Outline

The copy paper takes the following path.

When copying on the first side, the delivery roller reverses after the paper from the fixing assembly has moved past the delivery sensor; the paper is then sent to the duplexing unit. The paper stops several millimeters in front of the duplexing unit outlet paper sensor (PS14) and waits for copying on the second side.

The duplexing unit is capable of accommodating 10 sheets of A4, A4R (2 sheets of A3).

Copying on the 1st Side

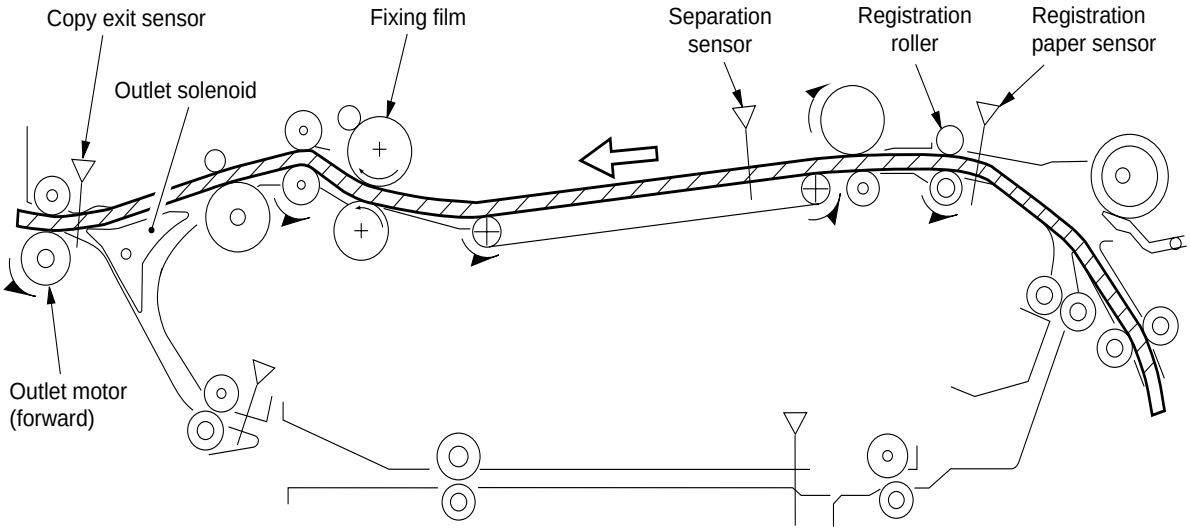

Figure 3-405

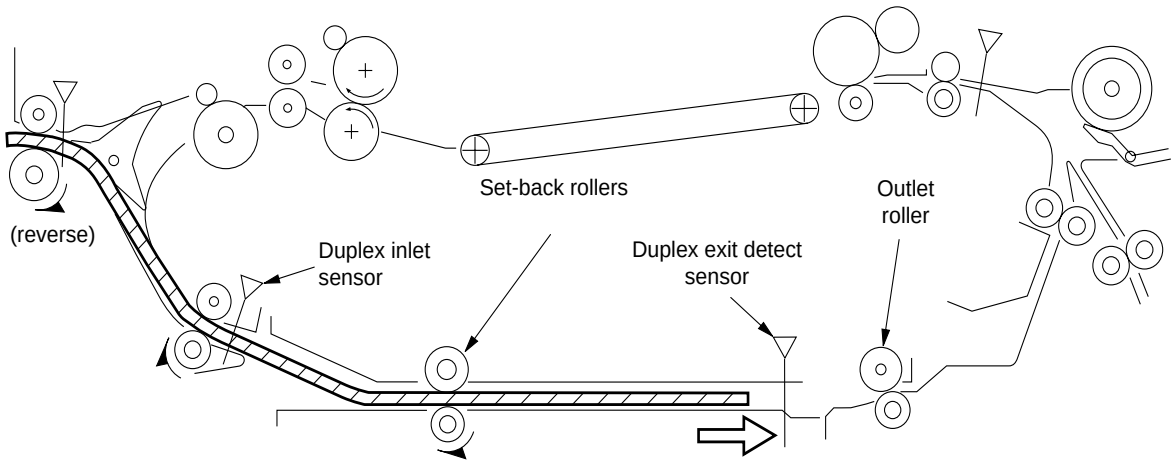

Figure 3-406

COPYRIGHT © 1998 CANON INC.

Copying on the 2nd Side

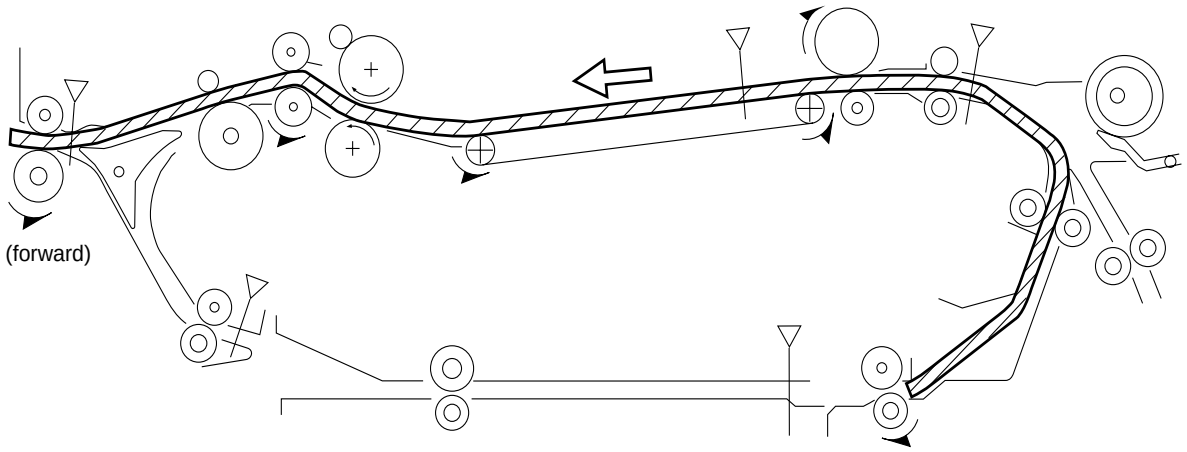

Figure 3-407

2. Sequence of Operations (two-sided; 1 copy, A4)

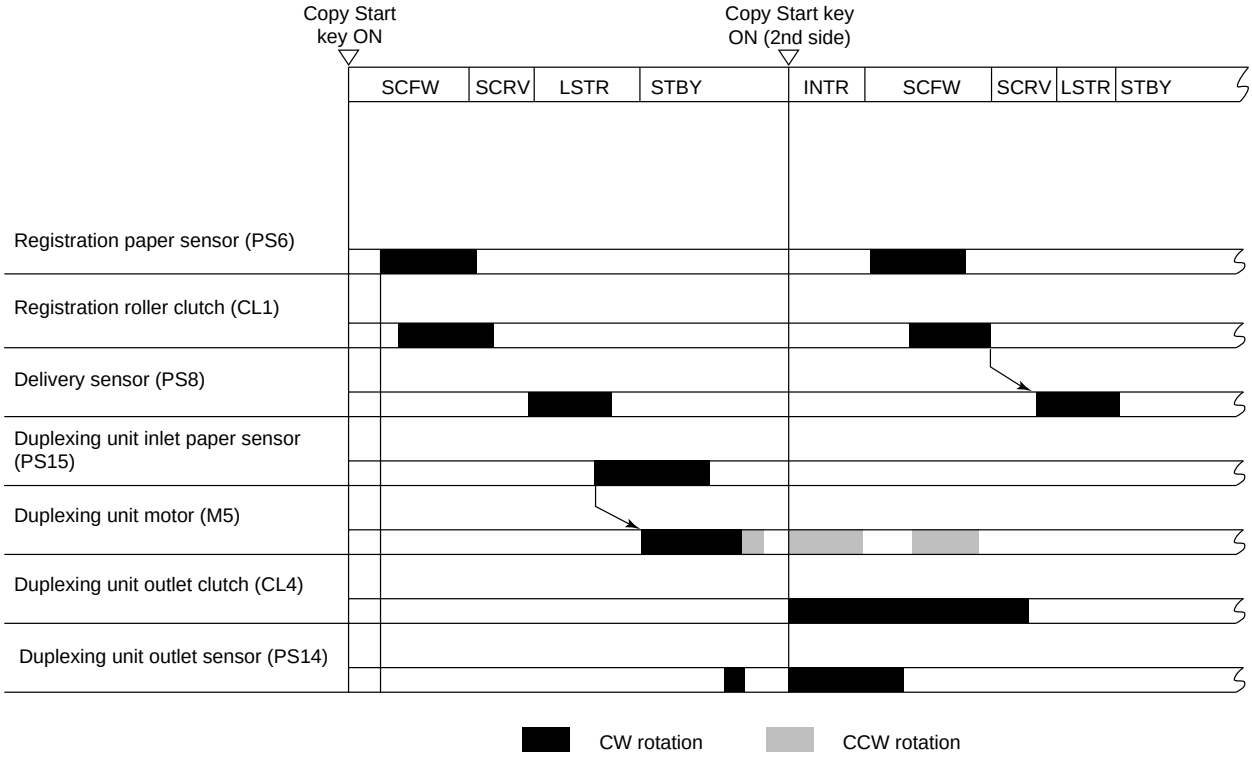

Figure 3-408

COPYRIGHT © 1998 CANON INC.
CANON NP6621 REV.0 FEB. 1998 PRINTED IN JAPAN (IMPRIME AU JAPON)

C. Duplexing Unit

1. Outline

The machine uses a set-back method and a separation flapper during continuous two-sided copying. The term *set-back* method refers to a method of preventing double feeding by stacking (tiling) sheets of paper in the limited space of the duplexing unit. The presence of the separation flapper at the outlet of the duplexing unit serves to improve separation of sheets.

The set-back mechanism is used under the following conditions:

1. Copy Paper Size
   A3, A4, A4R and A5
2. Copy Count
   Up to 10 (A4, A4R) or 2 (A3)

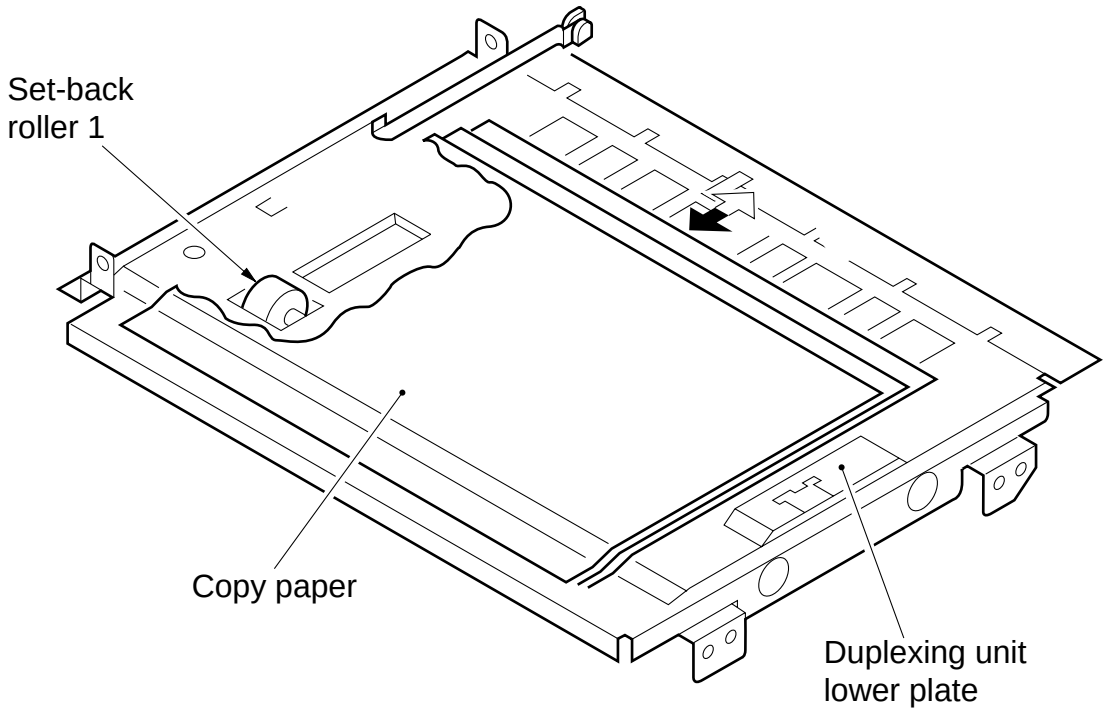

Figure 3-409

COPYRIGHT © 1998 CANON INC.
CANON NP6621 REV.0 FEB. 1998 PRINTED IN JAPAN (IMPRIME AU JAPON)

2. Set-Back Operations

The lower feeding inlet roller and the lower feeding outlet roller are driven by the main motor, and the set-back roller is driven by a special stepping motor.

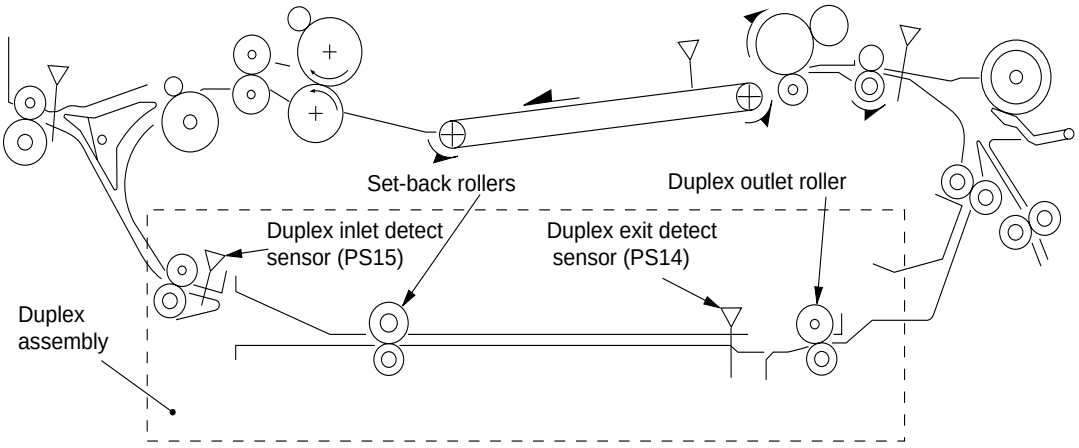

Figure 3-410

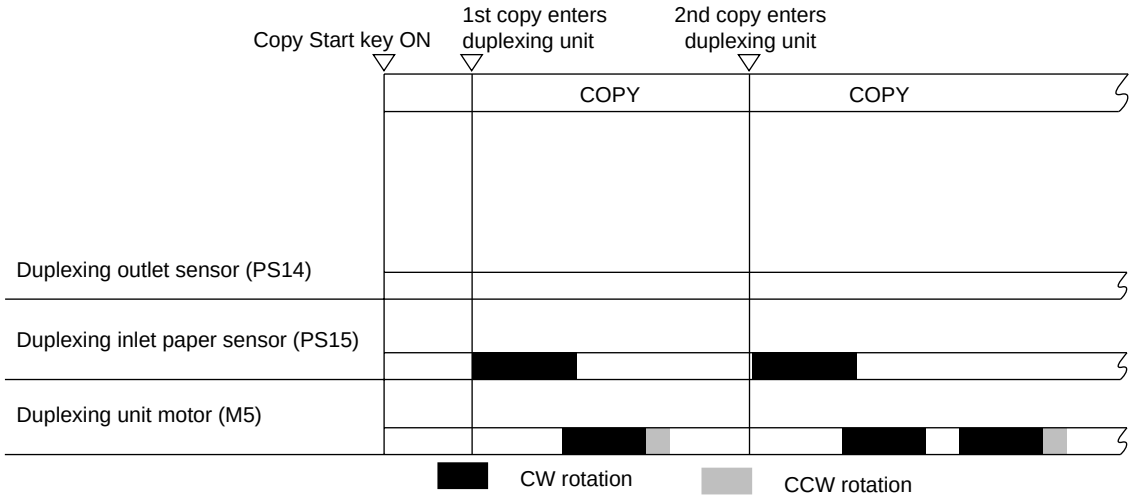

Figure 3-411

COPYRIGHT © 1998 CANON INC.
CANON NP6621 REV.0 FEB. 1998 PRINTED IN JAPAN (IMPRIME AU JAPON)

a. Set-Back Operations

1. The first copy moves from the delivery assembly to the duplexing unit.

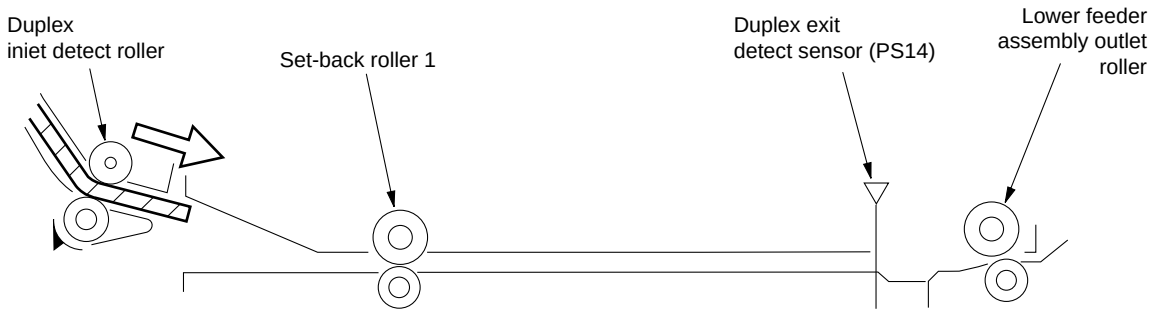

Figure 3-412

2. The leading edge of the copy paper butts against the set-back roller 1 and forms an arch.

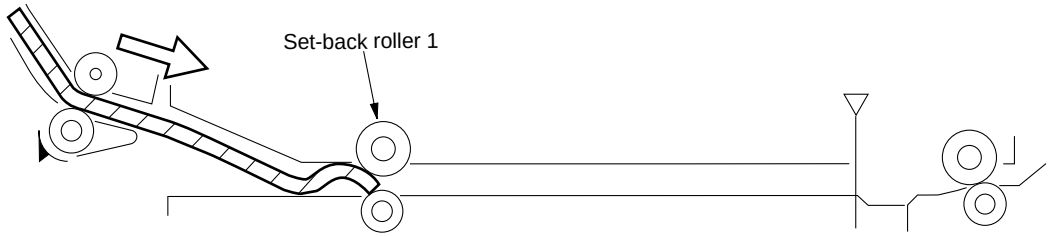

Figure 3-413

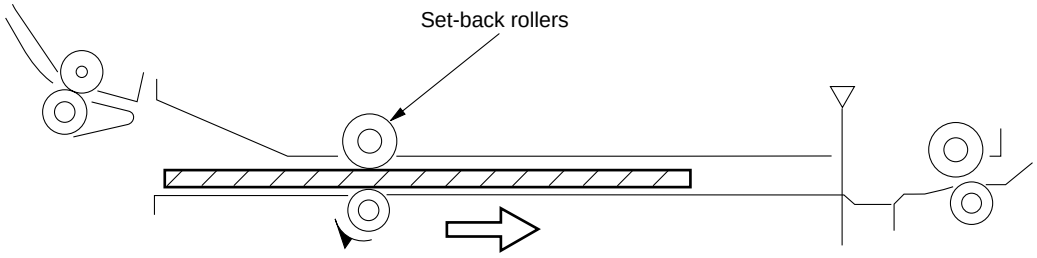

Figure 3-414

COPYRIGHT © 1998 CANON INC.

3. The set-back rollers 1 rotate counterclockwise, and the leading edge of the copy paper stops at a point about 12 mm past the set-back roller 1.

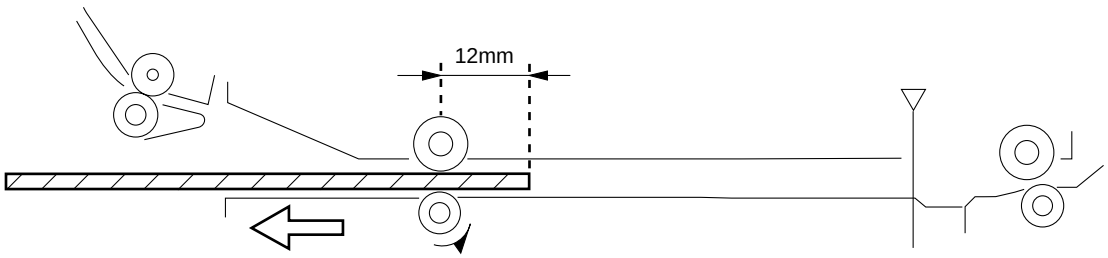

Figure 3-415

4. The second copy paper is moved to the duplexing unit.

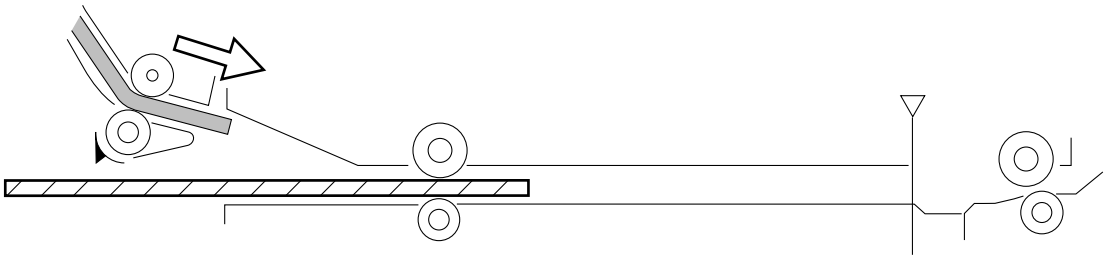

Figure 3-416

5. The leading edge of the second copy paper butts against the set-back roller 1 and forms an arch.

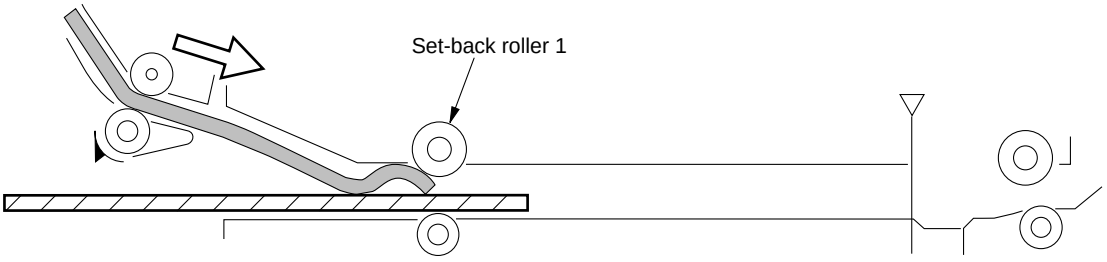

Figure 3-417

COPYRIGHT © 1998 CANON INC.
CANON NP6621 REV.0 FEB. 1998 PRINTED IN JAPAN (IMPRIME AU JAPON)

6. The set-back rollers 1 rotate clockwise, thereby pulling the trailing edge of the second copy paper out the duplexing unit inlet.

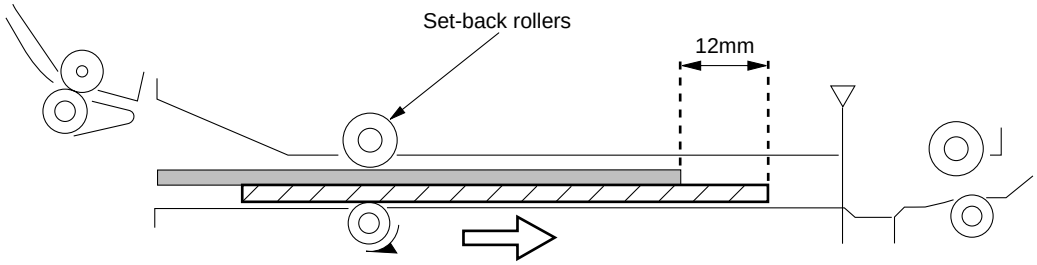

Figure 3-418

7. The set-back rollers 1 and 2 rotate counterclockwise, and the leading edge of the second copy paper stops at a point about 12 mm past the set-back roller 1.

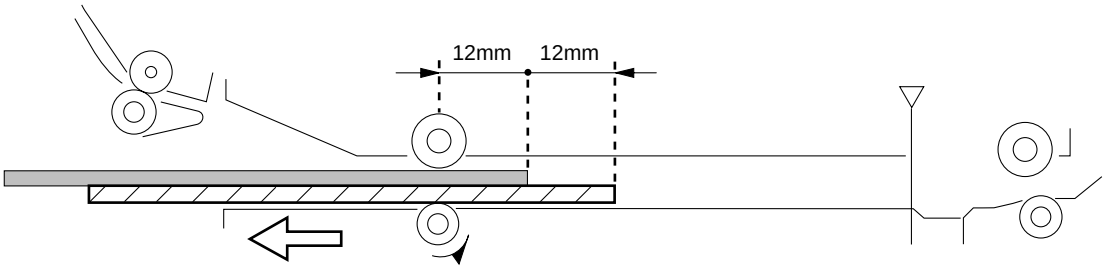

Figure 3-419

8. Operations 4 through 7 are repeated for as many times as there are copies to make, and the copies are stacked in the duplexing unit.

COPYRIGHT © 1998 CANON INC.

9. The set-back rollers 1 rotates counterclockwise, thereby stopping the trailing edge of the first copy paper 6 mm before the set-back rollers 1.

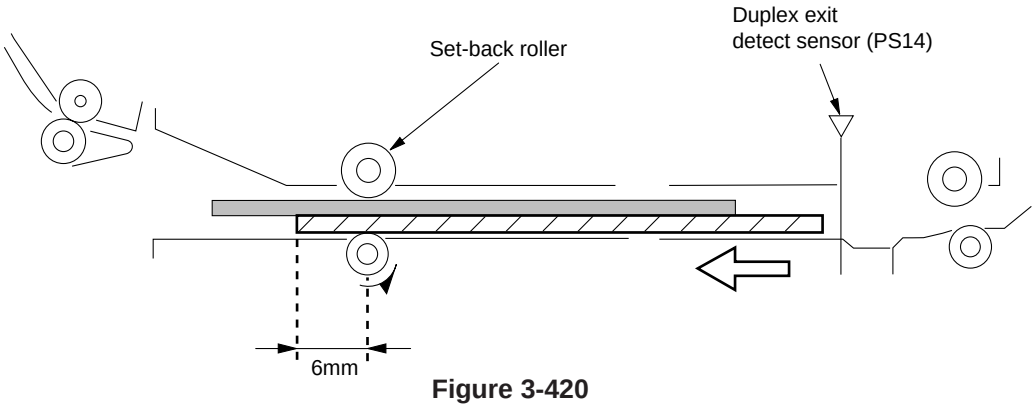

Figure 3-420

COPYRIGHT © 1998 CANON INC.
CANON NP6621 REV.0 FEB. 1998 PRINTED IN JAPAN (IMPRIME AU JAPON)

3. Re-Pick Up Operation

After copying on the first side, the copy paper stacked in the duplexing unit is picked up once again for copying on the second side.

The machine's duplexing unit outlet is equipped with a flapper to improve separation of stacked paper, and the operation is as described below.

Sequence of Operations (re-pick up; A4, 2 copies)

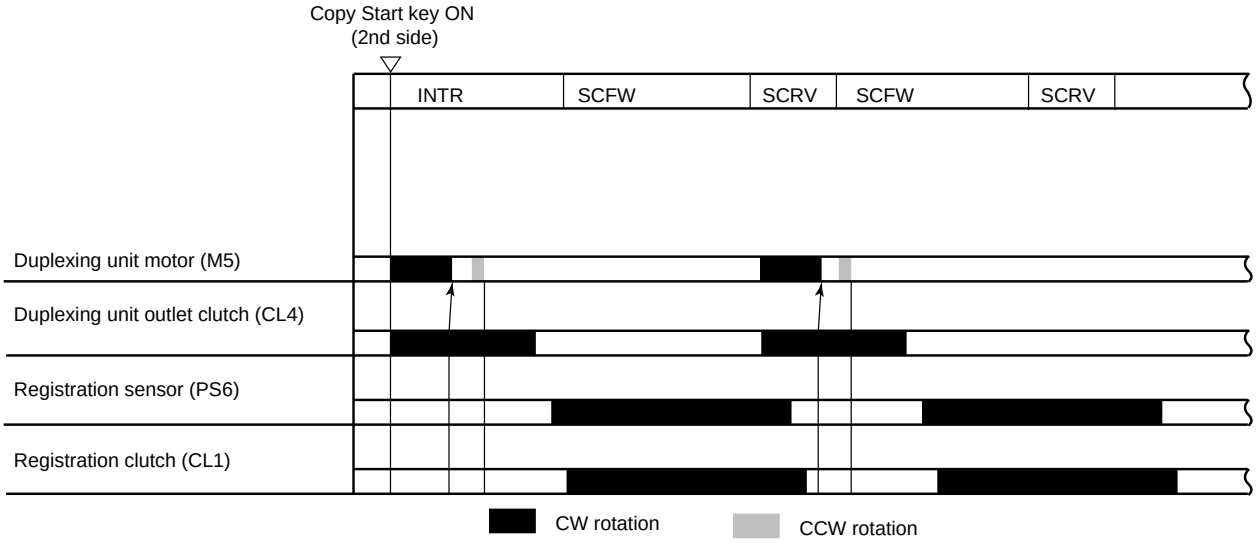

Figure 3-421

1. After the Copy Start key is pressed for the second side, the set-back roller and the duplexing unit outlet roller rotate clockwise.

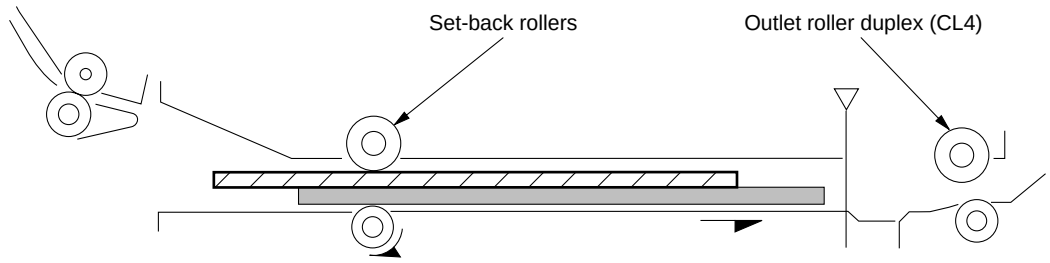

Figure 3-422

2. When the first copy paper reaches the duplexing unit outlet sensor, the set-back roller and the duplexing unit outlet roller stop; the outlet roller duplex rotates.

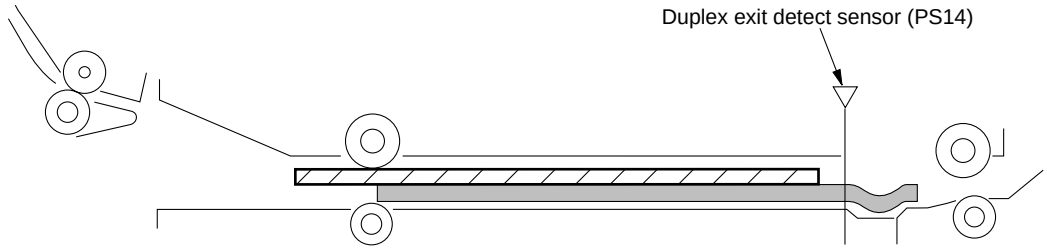

Figure 3-423

3. When the trailing edge of the first copy paper leaves the set-back roller, the set-back roller rotates counterclockwise, thereby returning the second copy paper.

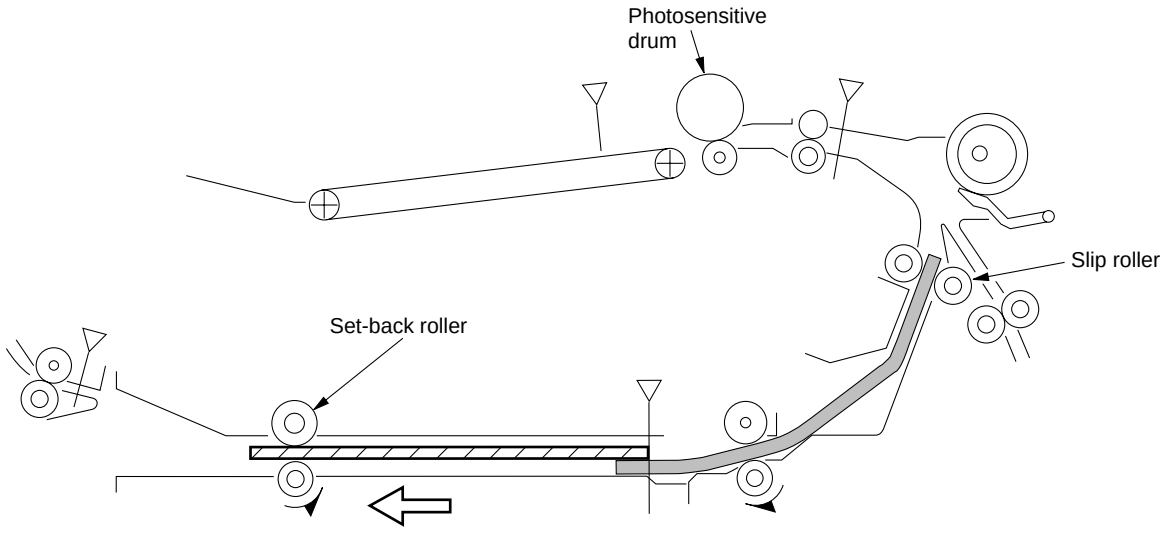

Figure 3-424

COPYRIGHT © 1998 CANON INC.
CANON NP6621 REV.0 FEB. 1998 PRINTED IN JAPAN (IMPRIME AU JAPON)

4. When the registration sensor turns ON, the set-back roller and the duplexing unit outlet roller rotate clockwise to pick up the second copy paper.

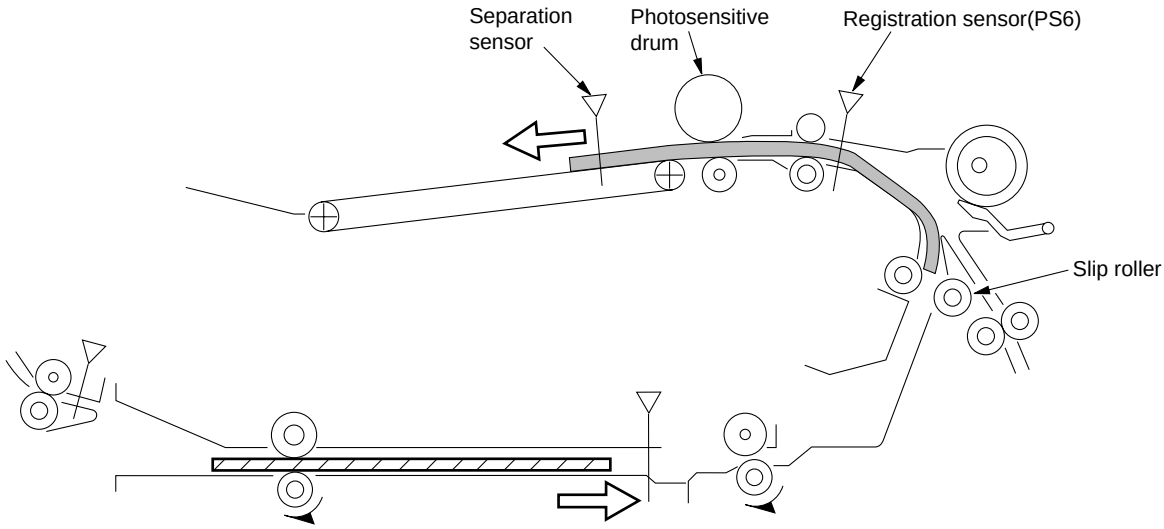

Figure 3-425

D. Pick-Up from the Cassette Feeding Module-A2

1. Pick-Up Operation

When the pick-up clutch (CL1cu, CL2cu) turns ON while the cassette unit motor (M1cu) is rotating, the pick-up roller rotates to start pick-up operation; the copy paper is sent as far as the vertical path roller after the pick-up. (The paper, thereafter, takes the same path as it would if picked up from the machine's cassette.)

The cassette unit is equipped with a pick-up sensor (PS1cu, PS3cu) to detect the arrival of copy paper and determine when to turn off the pick-up roller to suit the size of the paper.

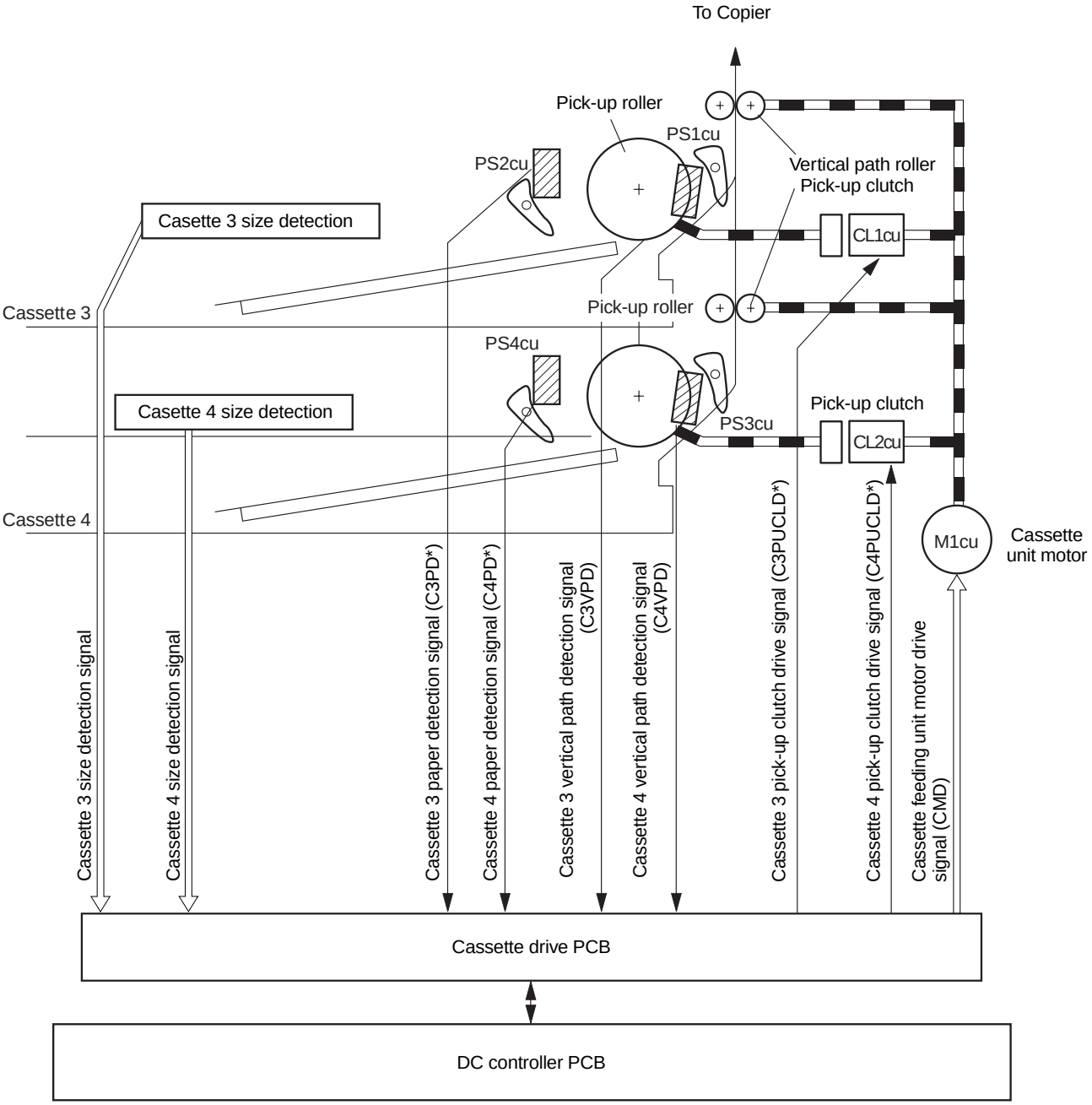

Figure 3-426

COPYRIGHT © 1998 CANON INC.
CANON NP6621 REV.0 FEB. 1998 PRINTED IN JAPAN (IMPRIME AU JAPON)

2. Sequence of Operations (cassette 3; A4, 2 copies)

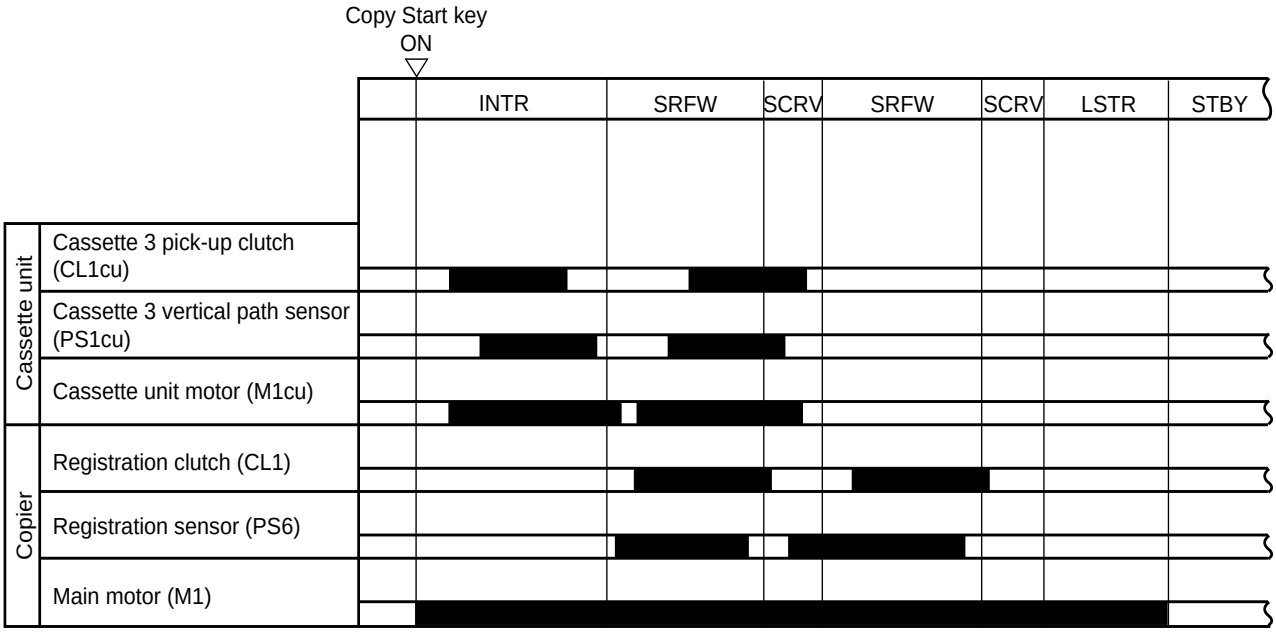

Figure 3-427

COPYRIGHT © 1998 CANON INC.

E. Pick-Up from the Cassette Feeding Unit-K1

1. Pick-Up Operation

The cassette unit motor 1 (M1cu) is used to drive the vertical path roller, and its drive is also used by the pick-up operation for cassettes 3 and 4.

The drive of the cassette unit motor 2 (M2cu) is used by the pick-up operation of cassette 5.

When the pick-up clutch (CL1cu, CL2cu, CL3cu) turns ON, the appropriate pick-up roller rotates, and the vertical path roller moves the copy paper to the copier's vertical path roller. (The copy paper then takes the same path as it would if picked up from the machine's cassette.)

The cassette unit has three vertical path sensors used to check the pick-up operation for each cassette.

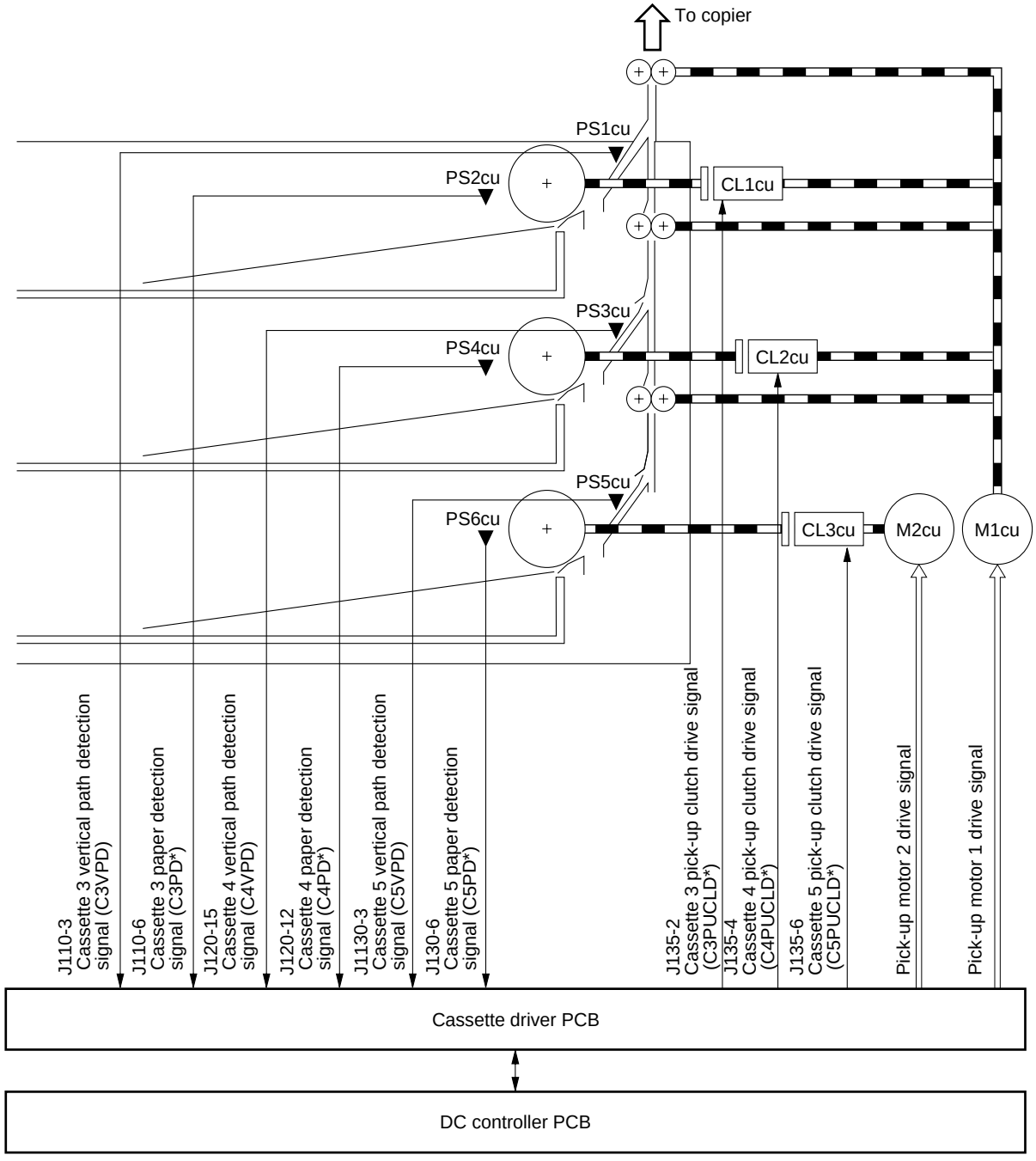

Figure 3-428

COPYRIGHT © 1998 CANON INC.
CANON NP6621 REV.0 FEB. 1998 PRINTED IN JAPAN (IMPRIME AU JAPON)

2. Sequence of Operations (pick-up/feeding system; A4, 2 copies, cassette 3)

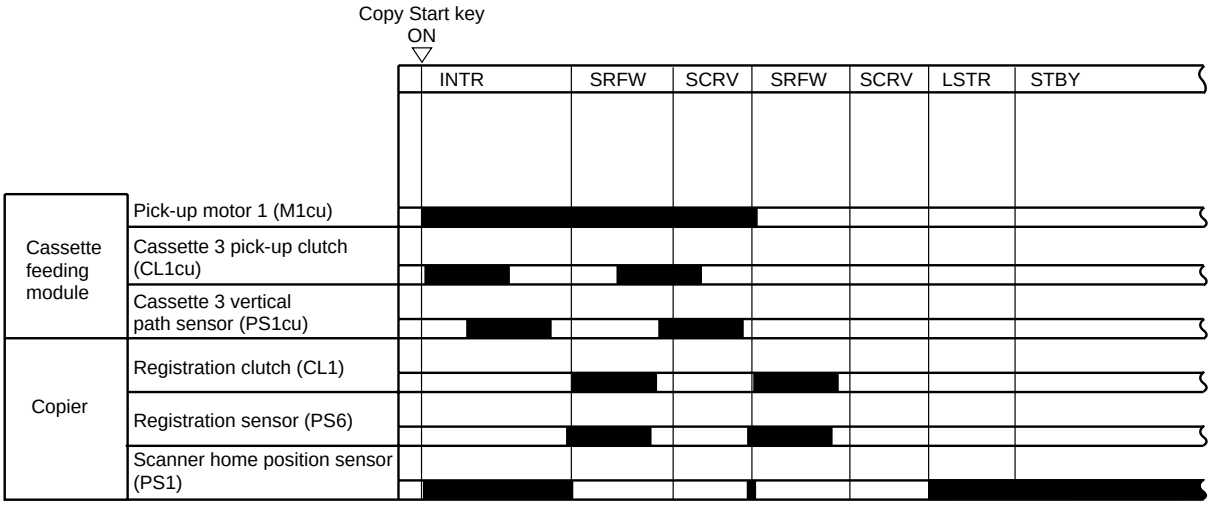

Figure 3-429

3. Sequence of Operations (pick-up/feeding system; A4, 2 copies, cassette 5)

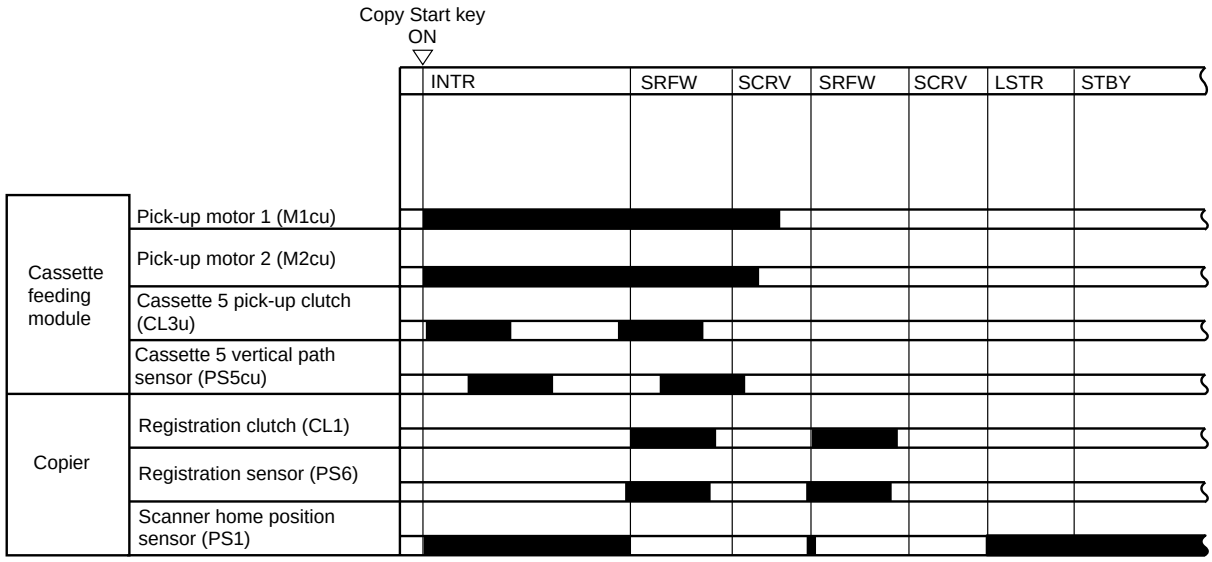

Figure 3-430

COPYRIGHT © 1998 CANON INC.

F. Paper Deck Pedestal-K1

1. Basic Construction

The paper deck unit controls the operation of each load according to the signals from the pedestal controller PCB to send paper to the copier.
Each of the loads used to pick-up and feed paper or raise the lifter is driven by the pedestal motor.

If you operated the deck size switch, the size of the inside of the deck is communicated to the copier through the pedestal controller PCB.

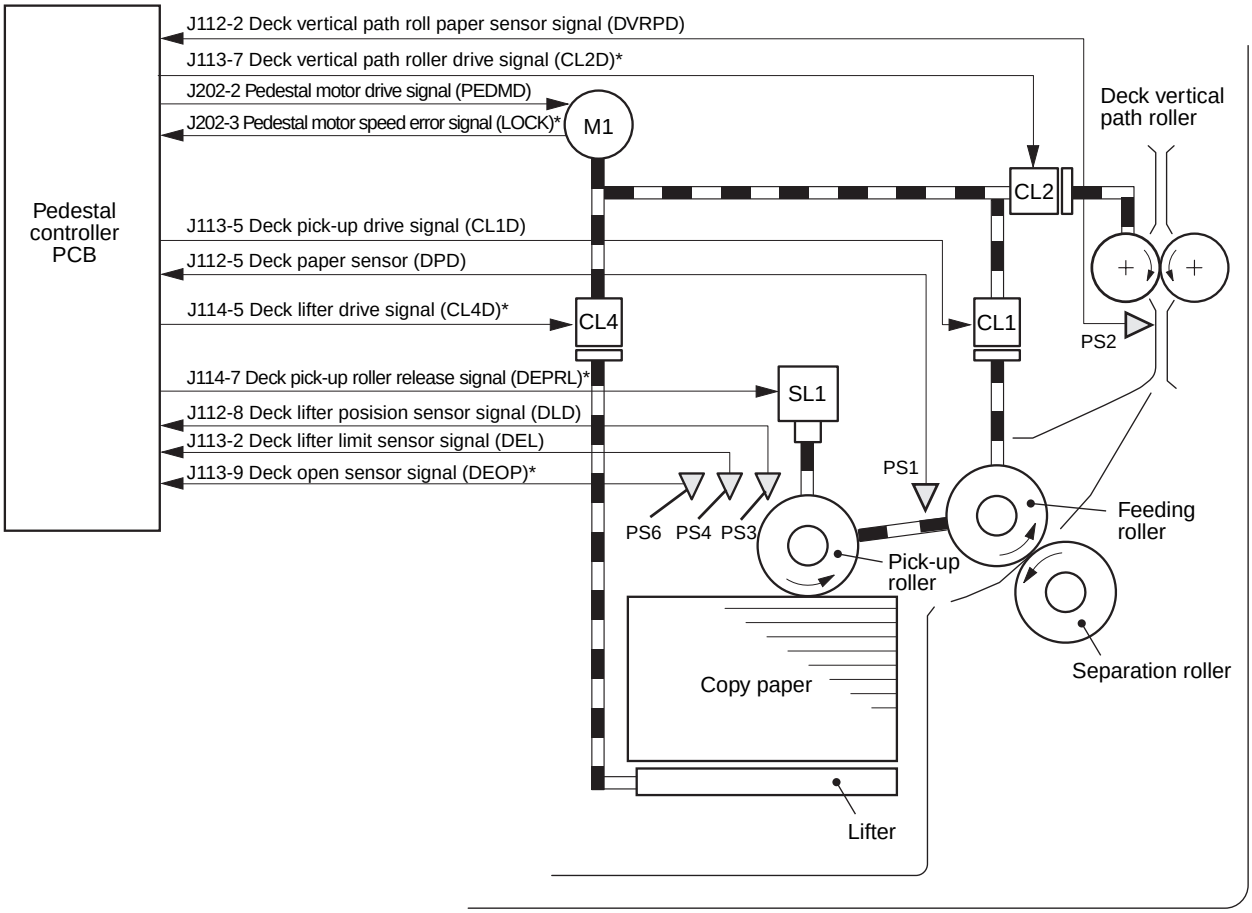

M1: Pedestal motor
CL1: Deck pick-up clutch
CL2: Deck vertical path roller drive clutch
CL4: Deck lifter drive clutch
SL1: Deck pick-up roller release solenoid
PS2: Deck vertical path roller paper sensor
PS1: Deck paper sensor
PS3: Deck lifter position sensor
PS4: Deck lifter upper limit sensor
PS6: Deck open sensor

Figure 3-431

COPYRIGHT © 1998 CANON INC.
CANON NP6621 REV.0 FEB. 1998 PRINTED IN JAPAN (IMPRIME AU JAPON)

2. Pick-Up/Feeding Operation

a. Mechanism

When the copier's COPY START key is pressed, the deck pick-up clutch (CL1) turns on to rotate the deck pick-up roller. The deck pick-up roller leaves the paper when the deck pick-up roller release solenoid (SL1) turns on after feeding the paper.

The feeding roller and the separation roller serve to make sure that no more than one sheet of paper is fed to the feeding path; after leaving both rollers, the paper is moved to the inside of the copier by the vertical path roller.

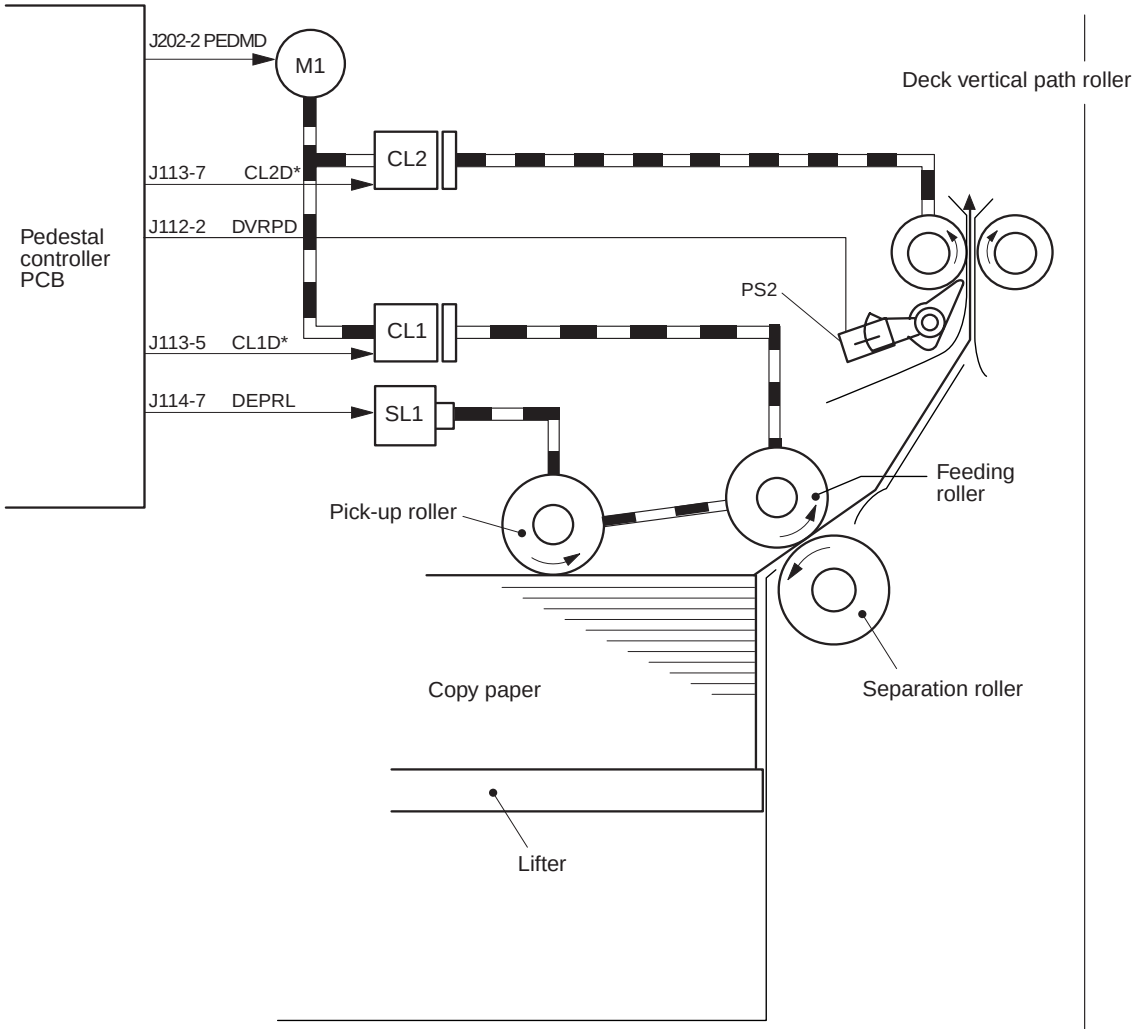

M1: Pedestal motor
CL1: Deck pick-up clutch
CL2: Deck vertical path roller drive clutch
SL1: Deck pick-up roller release solenoid
PS2: Deck vertical path roller paper sensor

Figure 3-432

b. Sequence of Pick-Up Operations (A4, 2 copies)

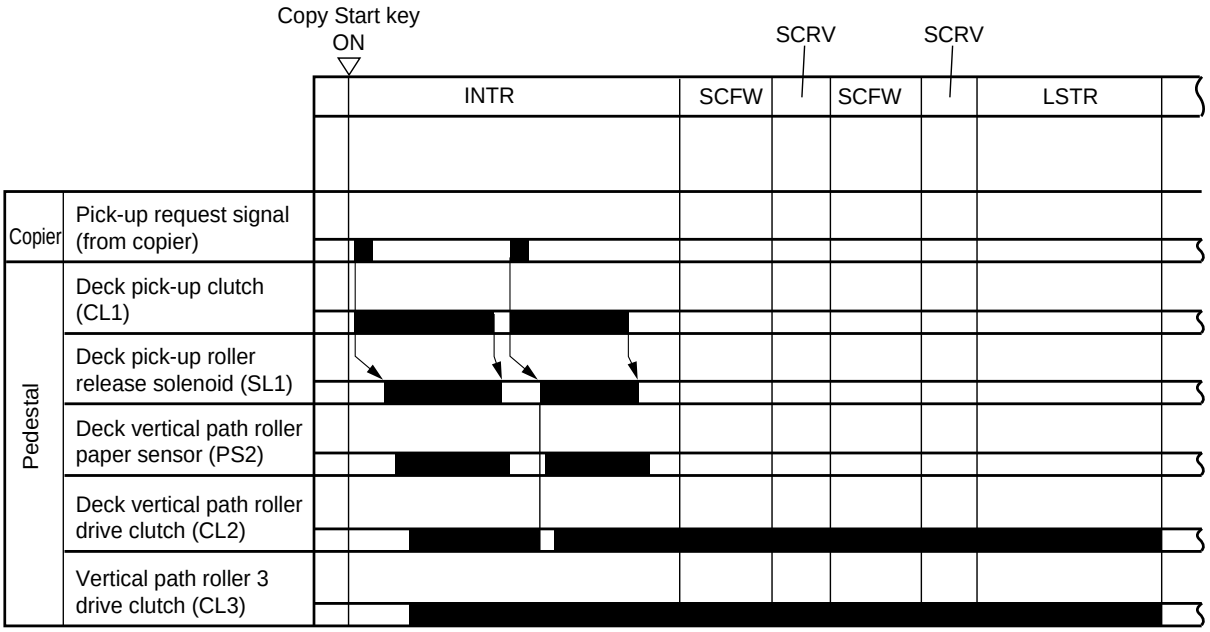

Figure 3-433

COPYRIGHT © 1998 CANON INC.
CANON NP6621 REV.0 FEB. 1998 PRINTED IN JAPAN (IMPRIME AU JAPON)

3. Lifter Operation

a. Operation

When the deck is slid inside the pedestal, the pick-up roller lowers and the light-blocking plate leaves the deck lifter position sensor (PS3). The condition causes the lifter drive clutch (CL4) to turn on, and the drive of the pedestal motor (M1) is transmitted to the cable take-up shaft, thereby raising the lifter.

The lifter keeps rising until the deck lifter position sensor (PS3) detects the top sheet of the paper stack placed on the lifter.

The deck lifter upper limit sensor (PS4) serves to stop the lifter in the event that the sensor arm should block the deck lifter position sensor (PS3) for some reason.

When the lifter has reached its upper limit, it is maintained in position by the work of one-way gear. When the deck is removed from the pedestal, the take-up gear disengages itself from the one-way gear, thereby allowing the lifter to lower in its own weight.

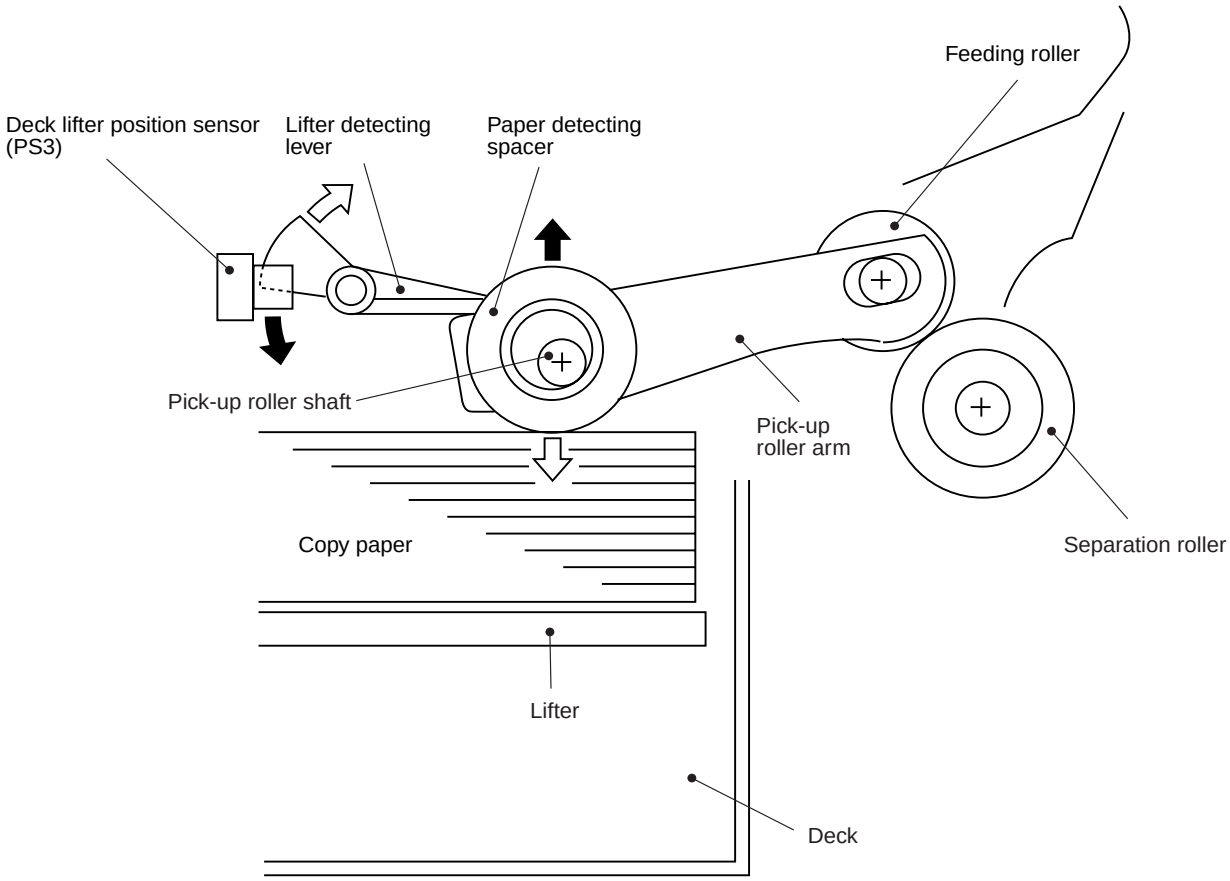

: Pick-up roller up, i.e., the light-blocking plate of the lifter detecting lever lowers to block the deck lifter position sensor (PS3)

: Pick-up roller down, i.e., the light-blocking plate of the lifter detecting lever rises to leave the deck lifter position sensor (PS3)

Figure 3-434

COPYRIGHT © 1998 CANON INC.

b. Lifter Operation

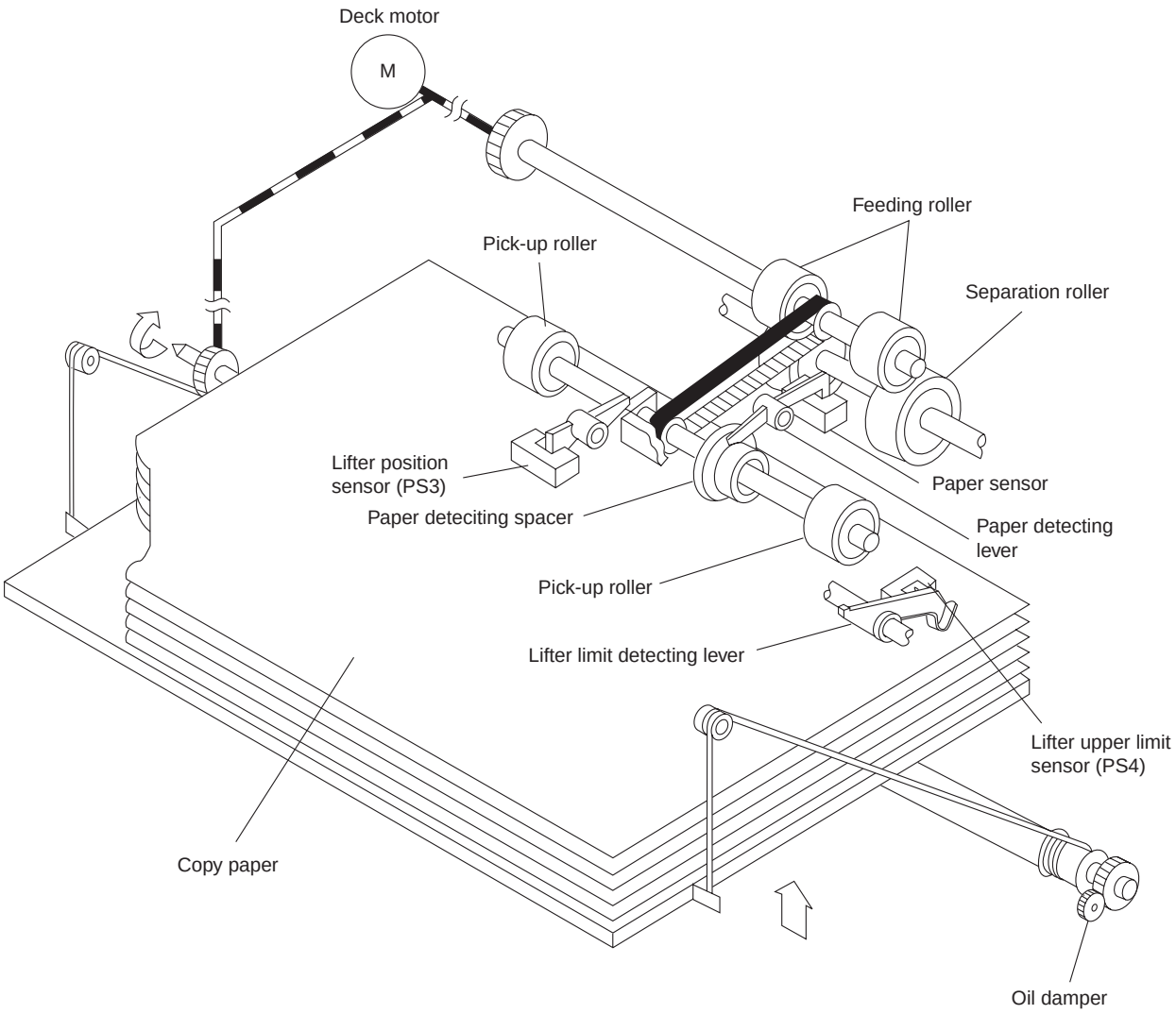

Figure 3-435

COPYRIGHT © 1998 CANON INC.
CANON NP6621 REV.0 FEB. 1998 PRINTED IN JAPAN (IMPRIME AU JAPON)

4. Detecting Paper in the Deck

a. Identifying the Size of Paper

You must set the switch (SW1) on the deck size switch PCB to suit the size of paper set inside the paper deck.

When you set the switch, the paper size signal (SIZE1 and SIZE2) sent to the pedestal controller PCB changes to '1' or '0'.

Based on the combination of these paper size signals, the pedestal controller PCB identifies the size of the paper inside the paper deck as follows:

Paper size*	SIZE 1	SIZE 2
B5 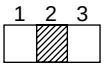	1	2
A4 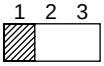	0	1
LTR 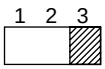	1	0

*The configuration of SW 1 represents when the switch is viewed from the front.

Table 2-401

b. Identifying the Presence/Absence of Paper

The presence and absence of copy paper inside the paper deck is identified by the deck paper sensor (PS1).

When the paper deck runs out of paper, the paper detecting spacer attached to the pick-up roller shaft drops.

As a result, the paper detecting lever leaves the deck paper sensor (PS1), causing the pedestal controller PCB to identify the absence of paper.

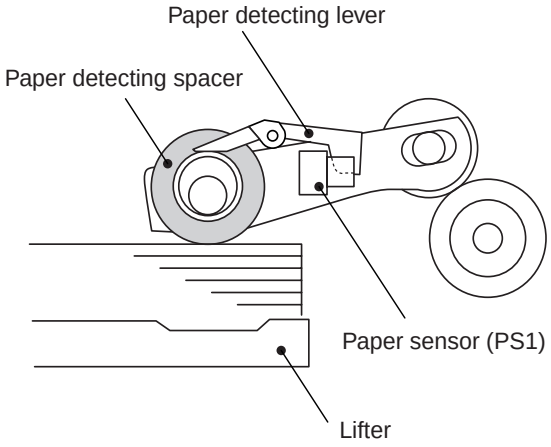

Figure 3-436

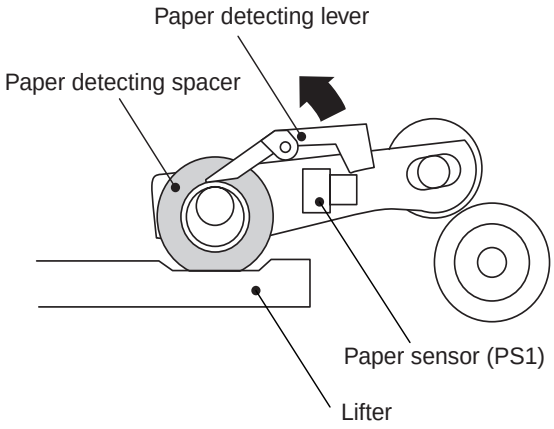

Figure 3-437

COPYRIGHT © 1998 CANON INC.

G. Multifeeder

1. Outline

The multifeeder is a mechanism which picks up paper from its tray and which is capable of continuous pick-up operation.

The copy paper on the tray is detected by the multifeeder paper sensor (PS5).

The copy paper on the tray is forced against the pick-up roller by the paper guide plate; the pick-up roller starts to rotate when it receives drive from the main motor (M1) through a clutch.

The pick-up roller and the separation pad serve to make sure that no more than a single sheet of copy paper is sent to the registration roller.

The above series of operations is executed for each pick-up.

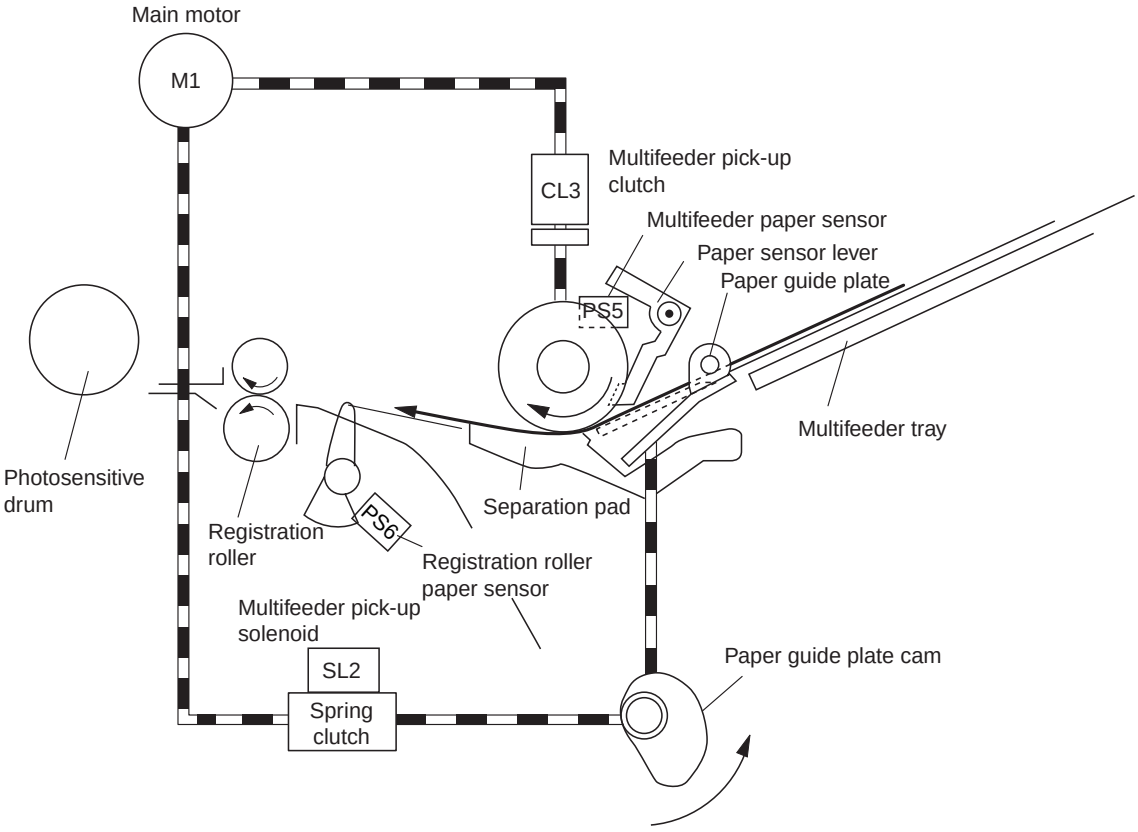

Figure 3-438

COPYRIGHT © 1998 CANON INC.
CANON NP6621 REV.0 FEB. 1998 PRINTED IN JAPAN (IMPRIME AU JAPON)

2. Identifying the Size of Paper on the Multifeeder Tray

The size of paper on the tray is identified by the variable resistor (VR1) that operates in association with the slide guide moving in relation to the slide guide moved by the user to suit the width of the paper.

The identified width of the copy paper is used to control the lens and blank exposure.

The length of paper placed on the multifeeder tray is identified in relation to how long the registration sensor (PS6) remains ON.

All this is used to control how long blank exposure should take, how long the registration roller should remain ON, and how long high voltage should remain ON.

Reference:
The maximum length of paper is Ledger (432 mm). Pages longer than this will be likely to jam.

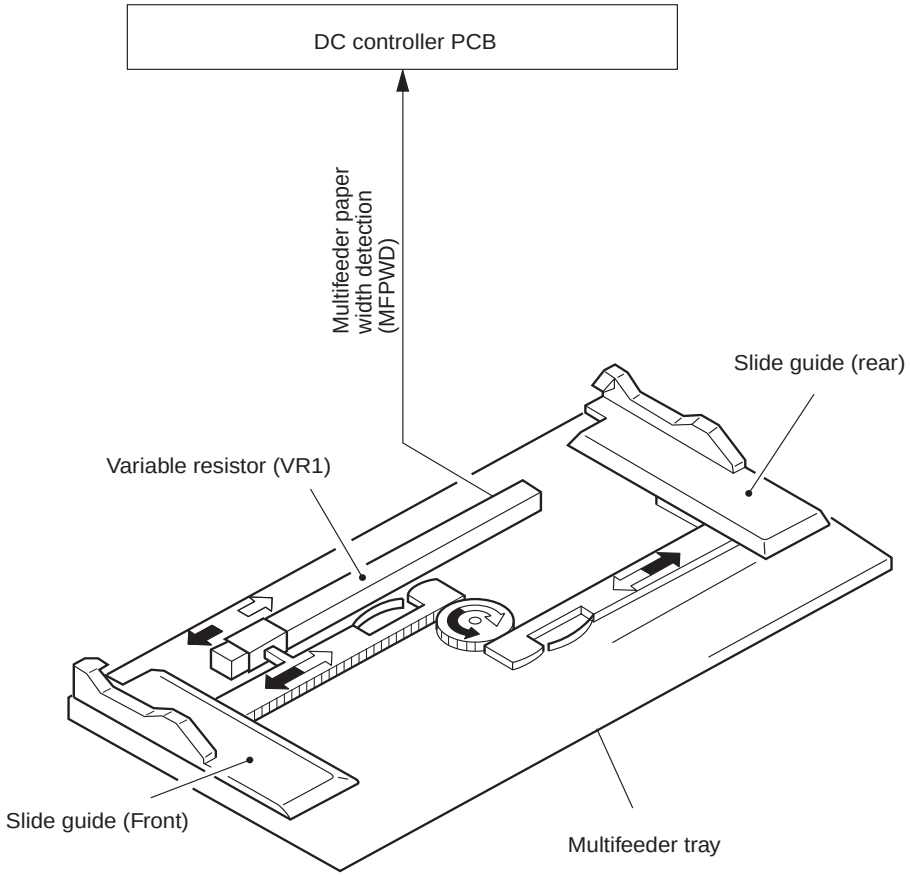

Figure 3-439

COPYRIGHT © 1998 CANON INC.

3. Sequence of Operations (multifeeder; A4, 2 copies)

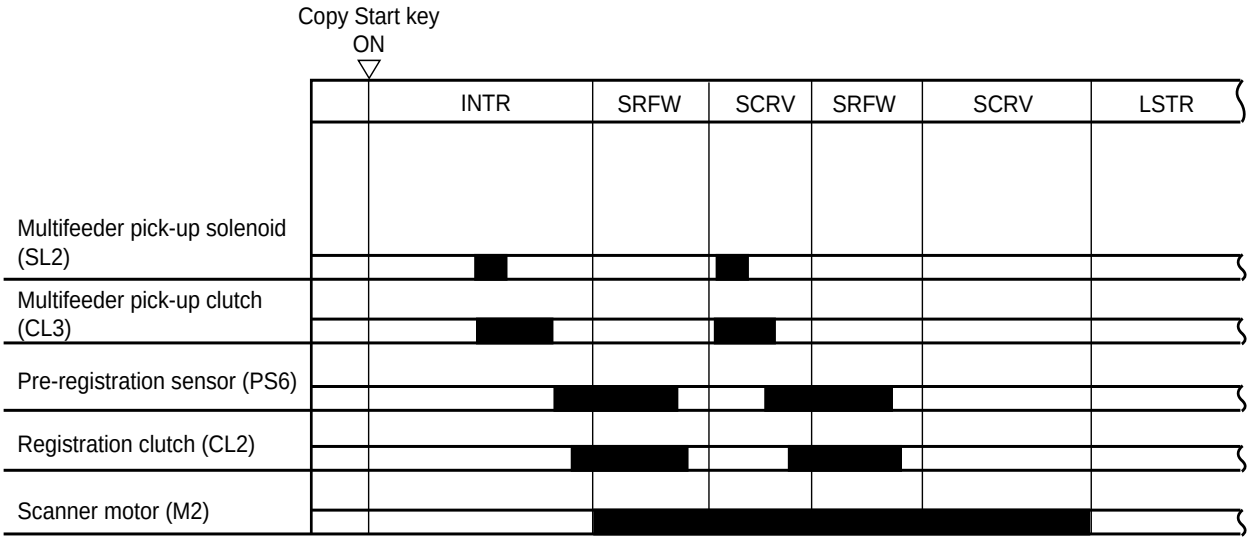

Figure 3-440

COPYRIGHT © 1998 CANON INC.
CANON NP6621 REV.0 FEB. 1998 PRINTED IN JAPAN (IMPRIME AU JAPON)

H. Identifying the Size of the Cassette

Specific photointerrupters (Q651, Q652, Q653, Q654) turn OFF or ON when a cassette is slid into a cassette holder.

Specific combinations of the states (ON/OFF) of the photointerrupters are used by the microprocessor on the DC controller PCB to identify the presence/absence of a cassette and the size of the cassette (if any) and to control scanner reversal and blank exposure. (See Table 3-402.)

Configuration / Cassette size	 Q651 (left)	 Q652	 Q653	 Q654 (right)
No cassette	0	0	0	0
B5R (182 × 257)	0	0	0	1
A4 (297 × 220)	0	0	1	0
A3 (297 × 420)	0	0	1	1
Mini (STMTR) 5.5" × 8.5" (148 × 216)	0	1	0	0
Legal 8.5" × 14" (356 × 216)	0	1	0	1
Letter 11" × 8.5" (279 × 216)	0	1	1	0
A4R (210 × 297)	0	1	1	1
Letter R 8.5" × 11" (216 × 279)	1	0	0	0
A5R (149 × 218)	1	0	0	1
A5 (218 × 149)	1	0	1	0
Mini-R (STMT) 8.5" × 5.5" (216 × 148)	1	0	1	1
B5 (257 × 182)	1	1	0	0
B4 (364 × 257)	1	1	0	1
Ledger 11" × 17" (182 × 257)	1	1	1	0
*U (182 ~ 283 × 198 ~ 354)	1	1	1	1

(unit: mm)

Table 3-402

1: Photointerrupter blocking the light.
0: Photointerrupter not blocking the light.
* Sizes may be stored in memory within dimensions given (in mm; see the Service Handbook for details).

COPYRIGHT © 1998 CANON INC.
CANON NP6621 REV.0 FEB. 1998 PRINTED IN JAPAN (IMPRIME AU JAPON)

To change the size of a cassette, move the guide plates (horizontal, vertical) inside the cassette and also move the paper size lever found at the front of the cassette to the left or right so that the arrow points to the appropriate paper size as indicated in Figure 3-441.

Caution:

A discrepancy between the size of the copy paper being used and the size selected by the paper size lever will trigger an incorrect copying sequence, leading to jamming and soiling. Advise the user so that both sizes match.

Reference:

The size of copy paper which is in wide use in a specific area may not be common in another area. Setting paper of a size different from the pre-set size will not turn on the size indication on the display. This however, will not prevent the correct copying control sequence for the paper. For instance, if you set LTR copy paper in an AB-configured machine (also setting the paper size lever to LTR size), the machine will control copying operations based on LTR size paper.

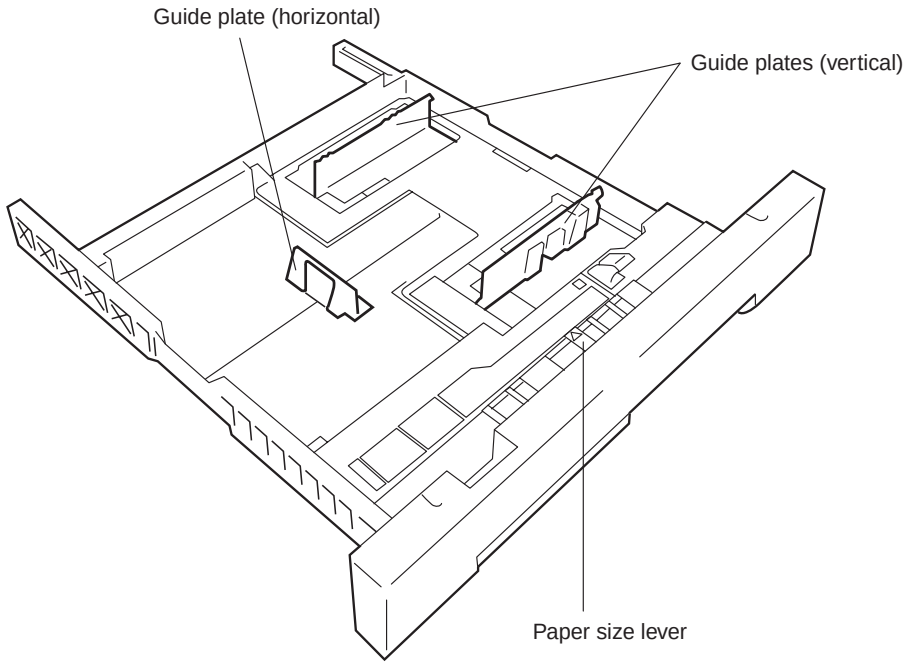

Figure 3-441

COPYRIGHT © 1998 CANON INC.
CANON NP6621 REV.0 FEB. 1998 PRINTED IN JAPAN (IMPRIME AU JAPON)

I. Fixing/Delivery Assembly

1. Controlling the Fixing Roller Temperature

The upper and lower rollers of the fixing assembly and the delivery roller of the delivery unit are driven by the main motor (M1).

The upper roller is heated by a heater (H1:900W) built in it.

The DC controller monitors the surface temperature of the upper roller by means of two thermistor (TH1, TH2) so as to control the temperature to a specific value.

The temperature of the upper fixing roller is controlled as follows (paper area):
160°C (at standby, during copy operation)
175°C (during copy operation)

To prevent drops in the temperature of the upper roller during continuous copy operation, the control temperature is as follow, measured with main thermistor (TH1) Located out of paper area.

Aux themistor (TH2) is at same position of main thermistor and is checking correct function of TH1.

COPYRIGHT © 1998 CANON INC.
CANON NP6621 REV.0 FEB. 1998 PRINTED IN JAPAN (IMPRIME AU JAPON)

Target temperatures for the following size paper:

A3 – A4
Argentine letter
Ledger – Letter
Government letter – Executive
Government Korea

Peak number	Target temperature
1	135
2	142
3	146
4	149
5	153
6	155
7	157
8	159
9	160
10	161
11	162
12	163
13	163
14	164
15	164
16	165
17	165
18	166
19	166
20	166
> 21	167

B4 – B5
Oficio Equador
Argentine Legal
Argentine Letter R
Officio – Oficio Bolivia
Foolscap – Legal – Letter R – Mini

Peak number	Target temperature
1	126
2	140
3	148
4	153
5	158
6	162
7	165
8	167
9	170
10	171
11	173
12	175
13	176
14	178
15	179
16	180
17	180
18	181
19	181
20	182
21	182
22	183
23	183
24	184
25	185
26	185
27	185
28	186
29	186
30	187
31	187
32	187
33	188
34	188
35	188
36	188
37	189
38	189
39	189
40	189
41	189
42	189
43	189
44	190
45	190
46	190
47	190
48	190
49	190
50	190
51	190
52	190
53	190
54	190
55	190
56	190
> 57	191

A4R – A5 – Folio
Australian Foolscap
Government Letter R – Government Legal
Government Korea R
Executive R

Peak number	Target temperature
1	134
2	145
3	149
4	154
5	160
6	164
7	168
8	171
9	173
10	175
11	176
12	178
13	179
14	180
15	181
16	182
17	183
18	184
19	184
20	185
21	186
22	187
23	188
24	188
25	189
26	189
27	190
28	190
29	191
30	191
31	192
32	192
33	193
> 34	194

B5R – B6
A5R – A6
Mini (STM) R
B6R
A6R
Postcard

Peak number	Target temperature
1	124
2	138
3	147
4	154
5	160
6	165
7	169
8	171
9	173
10	175
11	177
12	179
13	181
14	182
15	183
16	184
17	185
18	187
19	188
20	189
21	189
22	190
23	190
24	191
25	191
26	192
27	193
28	194
29	194
30	194
31	195
32	195
33	196
34	196
35	197
36	197
37	197
38	198
39	198
40	199
41	199
42	199
43	199
44	200
45	200
46	201
47	201
48	202
49	202
50	202
51	202
52	202
> 53	203

Table 3-403

COPYRIGHT © 1998 CANON INC.

The copier is equipped with three protection mechanisms to prevent the fixing heater from going ON at wrong timing.

- The microprocessor monitors the voltage of TH1 and indicates 'E000' or 'E001' or 'E002' or 'H003' in response to an error.
- If the voltage of TH1 and TH2 falls below about 0.9 V (equivalent of 215°C), the error detection circuit cuts off the supply power to the fixing heater regardless of the output of the microprocessor.

If the inside temperature of the thermal switch rises above 220°C, the power to the fixing heater will be off.

Note:
Once the contact of the thermoswitch (TS1) opens, the thermoswitch cannot be used unless cooled to 0°C or less; the contact will not recover at ambient temperature.

2. Oil Application Roller

The upper fixing roller is provided with an oil application roller for cleaning and application of oil. Normally, the oil application roller remains away from the fixing roller, and it comes into contact with the upper fixing roller only when copy paper passes through.

The mechanism is driven by the oil application solenoid (SL6); SL6 goes ON 1 sec after the registration roller goes ON; it then goes OFF as soon as the main motor (M1) goes OFF thereby bringing the oil application roller into contact with the upper fixing roller.

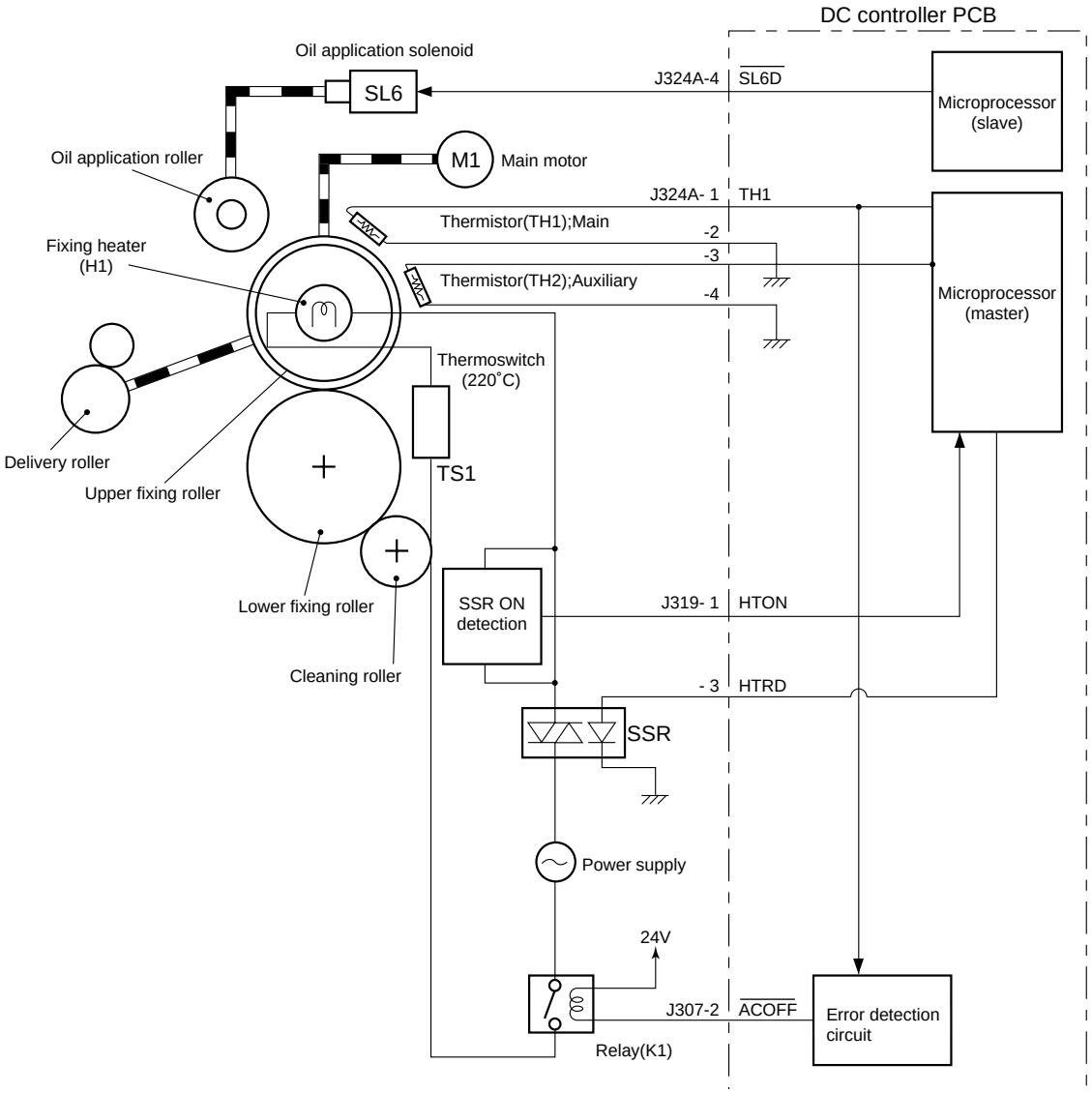

Table 3-442

3. Operation of Fixing Assembly Temperature Control System

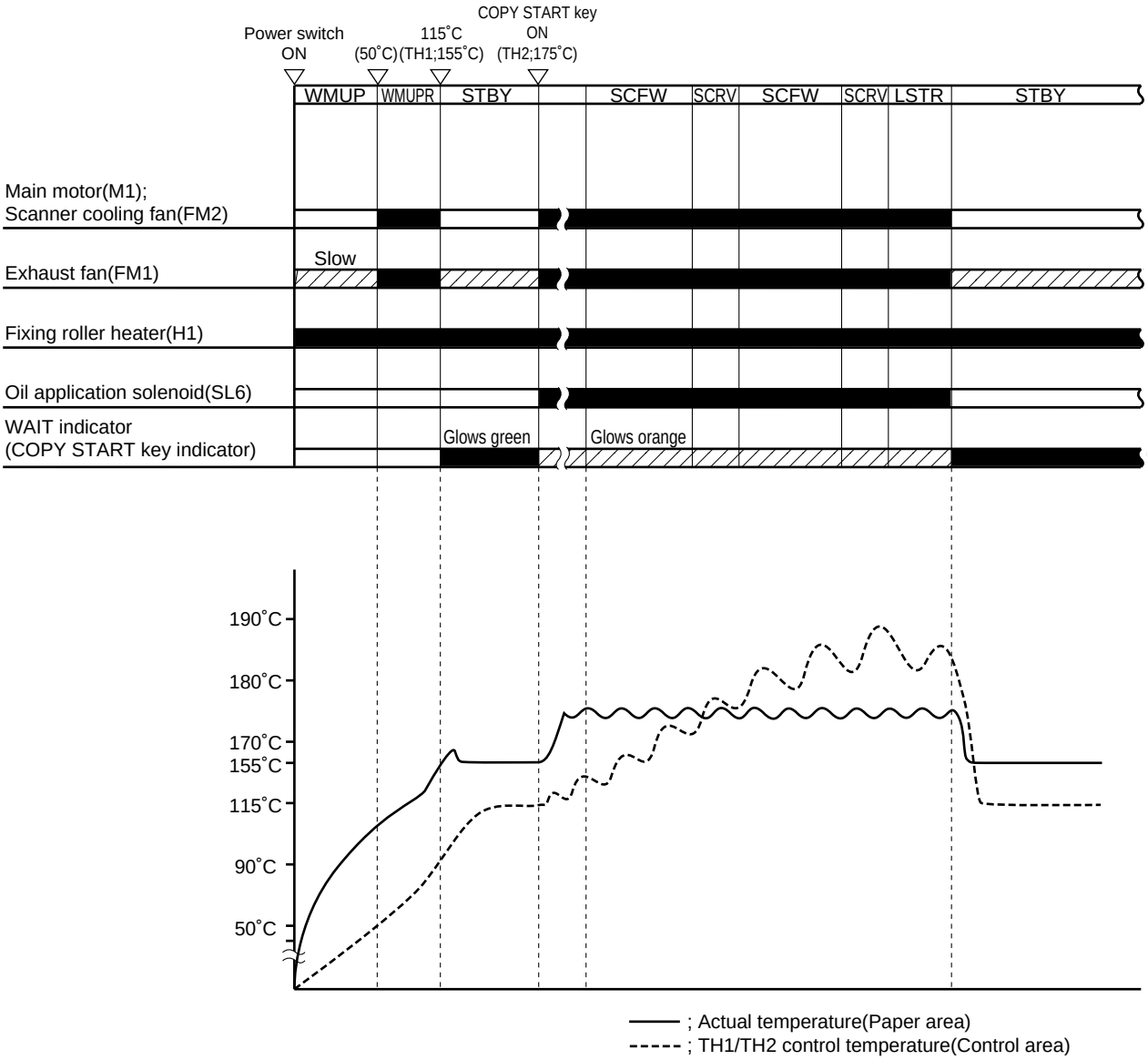

Figure 3-443

COPYRIGHT © 1998 CANON INC.
CANON NP6621 REV.0 FEB. 1998 PRINTED IN JAPAN (IMPRIME AU JAPON)

4. Detecting Overheating of the End of the Fixing Heater

The rear end of the machine's fixing heater is equipped with a sub thermistor (TH2) to detect and prevent overheating of the end of the fixing heater. This consideration is made to prevent damage to the fixing roller caused by overheating occurring as a result of overheating on the area of the fixing not covered by paper during copying operation, as when making copies smaller than B5 in continuous mode.

- If the temperature of TH2 exceeds 245°C during the first 10 copies in continuous mode, the fixing control target temperature is lowered by 5°C.

If the temperature still increases despite the increase in the sheet gap and TH2 exceeds 265°C, the ongoing copying operation is stopped and the power will be turned OFF. At this time, 'E001' data will be stored in memory.

5. Protection Mechanism

The machine is equipped with the following protection mechanisms to prevent malfunction of the fixing heater:

a. Thermistor (TH1, TH2)

1. The microprocessor on the DC controller monitors the voltage of the thermistor, and if it detects abnormally high or low temperature it will cut off the power to the heater and will turn OFF the machine's power. At this time, 'E001' through 'E003' data will be stored in memory.
2. If TH1 is 260°C or more and TH2 is 270°C or more for 0.3 sec or more, the heater error detection signal (HTNG) of the DC controller will turn OFF the relay (RK1) on the composite power supply PCB to cut off the power to the fixing heater and will turn OFF the power.

Caution:
To reset the machine, disconnect the connector (J4) from the heater, and turn ON the power while pressing SW850 on the service switch PCB.

b. Thermal Fuse (FU1)

If the temperature around the thermal fuse exceeds the fuse rating, the thermal fuse will blow to cut off the power to the fixing heater.

c. Heater ON Detection

The heater ON detection circuit detects how long the fixing heater drive signal (HTRD) remains OFF and if it finds an error, it will turn OFF the power. At this time, 'E004' data will be stored in memory.

COPYRIGHT © 1998 CANON INC.
CANON NP6621 REV.0 FEB. 1998 PRINTED IN JAPAN (IMPRIME AU JAPON)

J. Detecting Jams

As many as ten paper sensors (3 of which are in the cassette unit) are used to find out whether copy paper is moving normally.

- Vertical path roller 1 paper sensor (PS16)
- Vertical path roller 2 paper sensor (PS12)
- Registration sensor (PS6)
- Separation sensor (PS7)
- Delivery sensor (PS8)
- Cassette 3 vertical path sensor (PS1cu)
- Cassette 4 vertical path sensor (PS3cu)
- Cassette 5 vertical path sensor (PS5cu)
- Vertical path roller paper sensor (PS2; paper deck pedestal)

A jam is identified at such times as instructed by the program in the microprocessor and in relation to the presence/absence of paper at specific sensors.

The machine is equipped with a mechanism to remember how many copies remain to be made and the current copy mode, and such jam information remains even after you have opened the machine's front cover to remove jams.

The microprocessor holds the jam detection sequences discussed hereafter to check for a jam, and it identifies a jam also when a sensor detects paper at power-on.

When a jam is identified, the microprocessor immediately stops the machine operation and cuts off the power to the fixing heater (H1); it then flashes the JAM message on the control panel while flashing the jam location indicator.

The activation of the jam detection mechanism causes the copy count to remain unchanged.

COPYRIGHT © 1998 CANON INC.
CANON NP6621 REV.0 FEB. 1998 PRINTED IN JAPAN (IMPRIME AU JAPON)

1. Vertical Path Roller 1 Delay Jam

Copy paper does not reach the vertical path roller 1 paper sensor (PS16) within a specific time after the cassette 1 pick-up clutch (CL2) has turned ON.

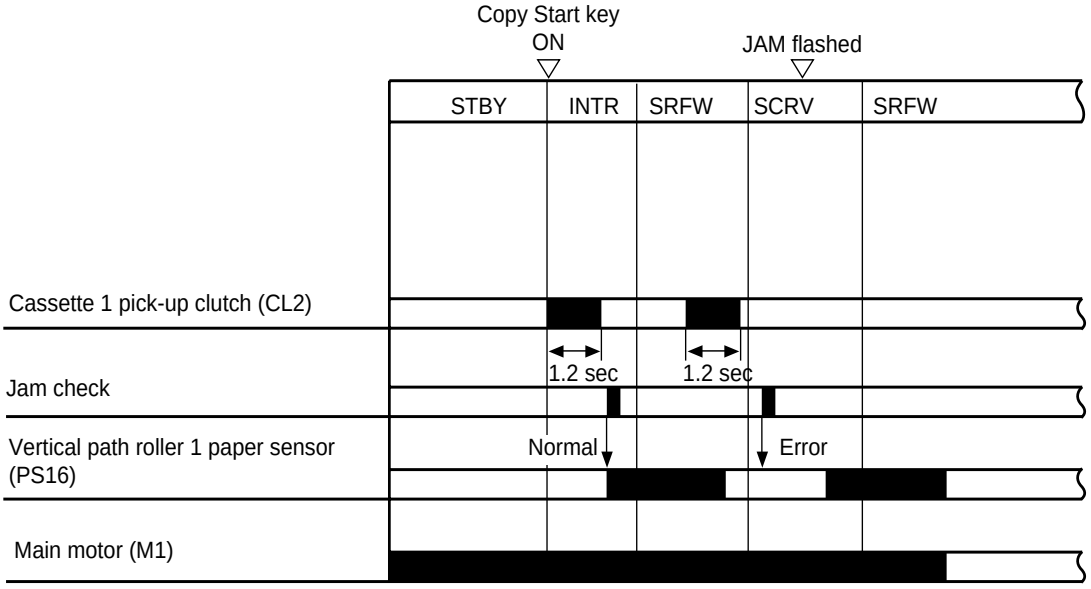

Figure 3-444 Sequence of Operations

2. Vertical Path Roller Timing Jam

Copy paper reaches the vertical path roller 1 paper sensor (PS16) before a specific time after the cassette 1 pick-up clutch (CL2) has turned ON.

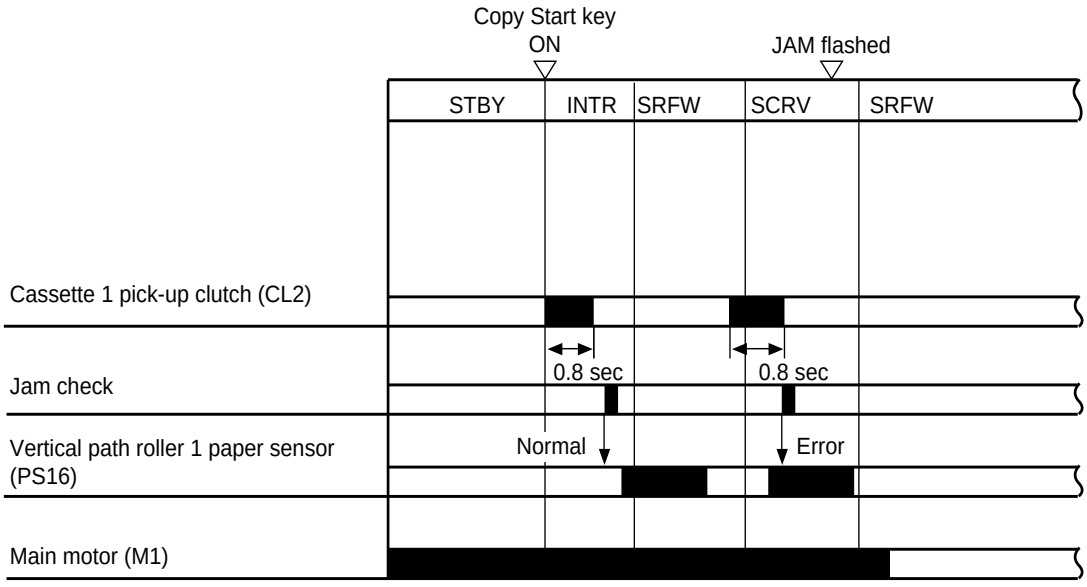

Figure 3-445 Sequence of Operations

COPYRIGHT © 1998 CANON INC.
CANON NP6621 REV.0 FEB. 1998 PRINTED IN JAPAN (IMPRIME AU JAPON)

3. Vertical Path Roller 2 Delay Jam

Paper does not reach the vertical path roller 2 paper sensor within a specific time after the cassette 2 pick-up clutch (CL5) has turned ON.

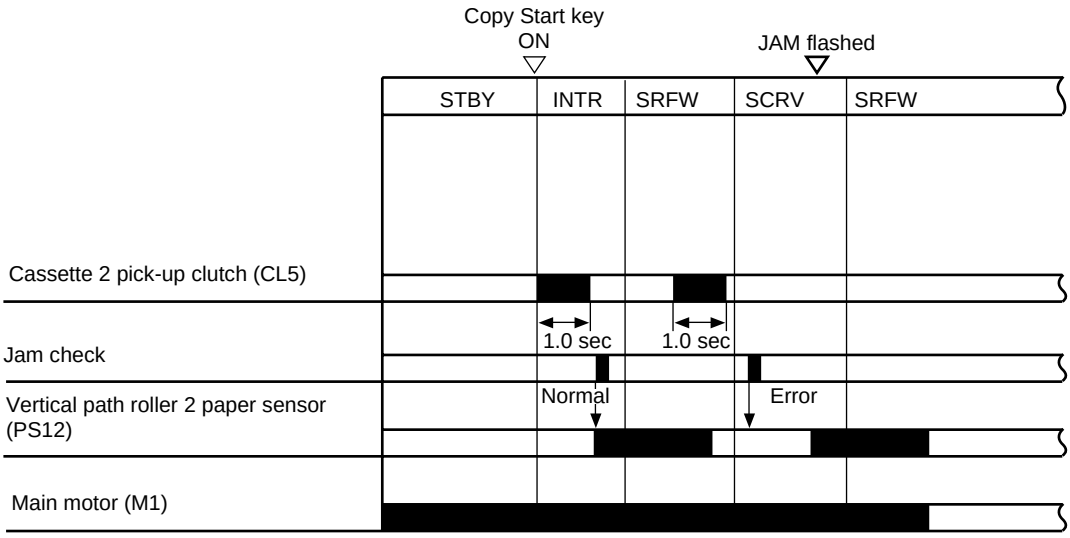

Figure 3-446 Sequence of Operations

4. Vertical Path Roller 2 Timing Jam

Copy paper reaches the vertical path roller 2 paper sensor before a specific time after the cassette 2 pick-up clutch (CL5) has turned ON.

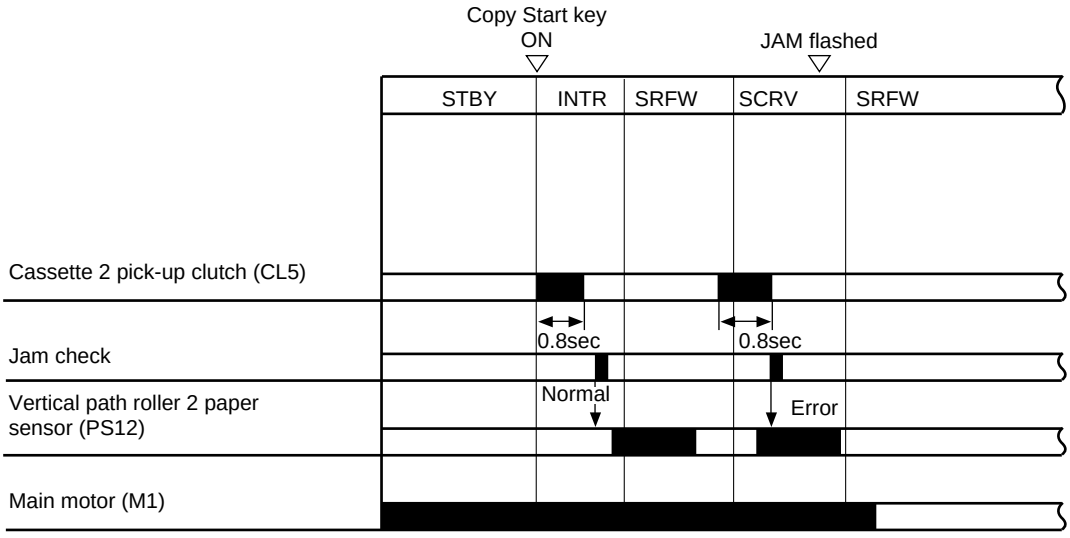

Figure 3-447 Sequence of Operations

COPYRIGHT © 1998 CANON INC.
CANON NP6621 REV.0 FEB. 1998 PRINTED IN JAPAN (IMPRIME AU JAPON)

5. Pre-Registration Delay Jam (vertical path roller)

Copy paper does not reach the pre-registration sensor (PS6) within a specific time after it has reached the vertical path roller 1 paper sensor (PS16).

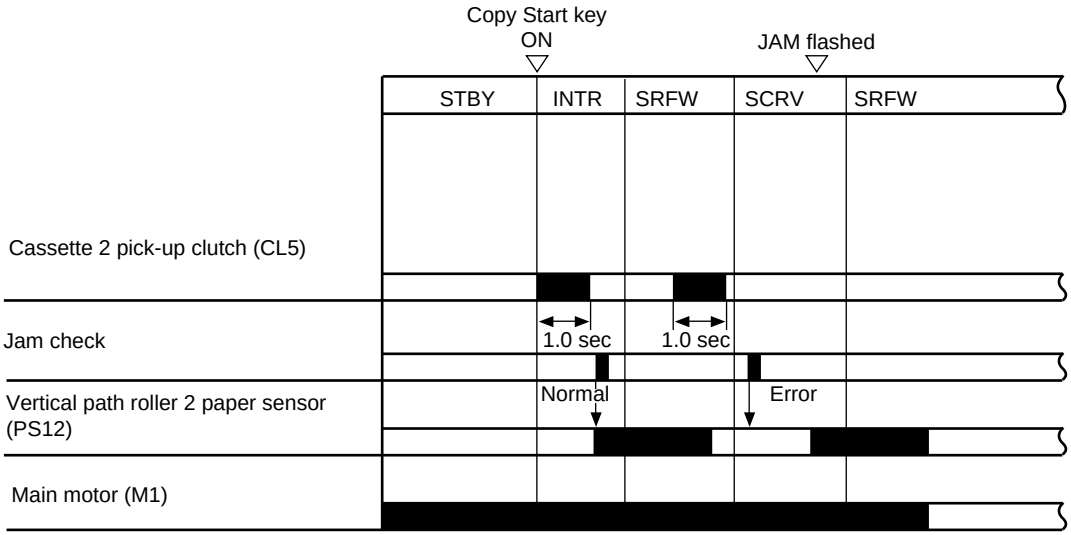

Figure 3-448 Sequence of Operations

6. Pre-Registration Timing Jam (vertical path roller)

Copy paper reaches the pre-registration sensor (PS6) before a specific time after it has reached the vertical path roller 1 paper sensor (PS16).

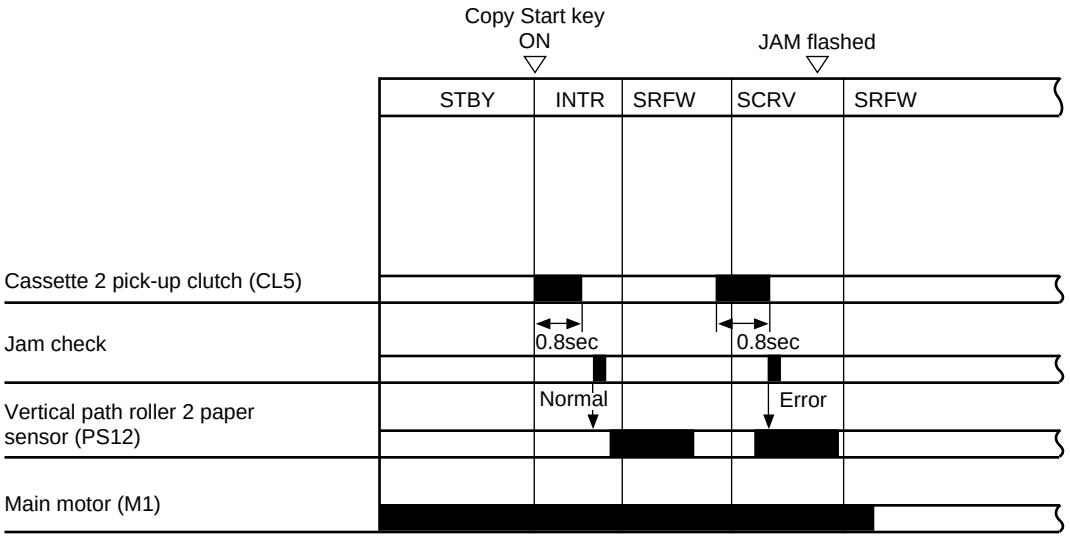

Figure 3-449 Sequence of Operations

COPYRIGHT © 1998 CANON INC.
CANON NP6621 REV.0 FEB. 1998 PRINTED IN JAPAN (IMPRIME AU JAPON)

7. Separation Delay Jam

Copy paper does not reach the separation sensor (PS7) within a specific time after the registration clutch (CL1) has turned ON.

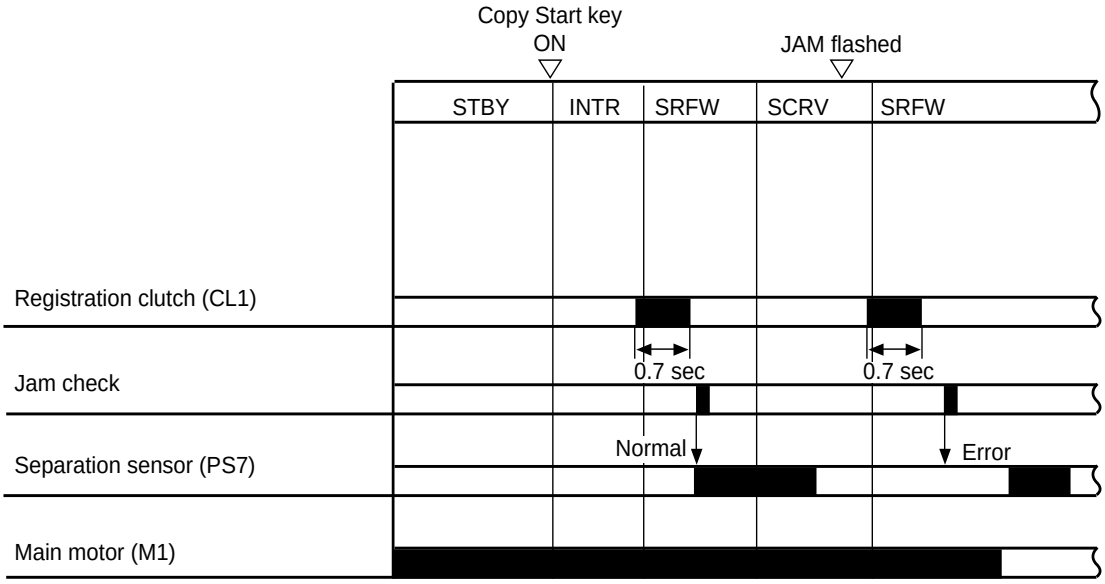

Figure 3-450 Sequence of Operations

8. Separation Timing Jam

Copy paper reaches the separation sensor (PS7) before a specific time after the registration clutch (CL1) has turned ON.

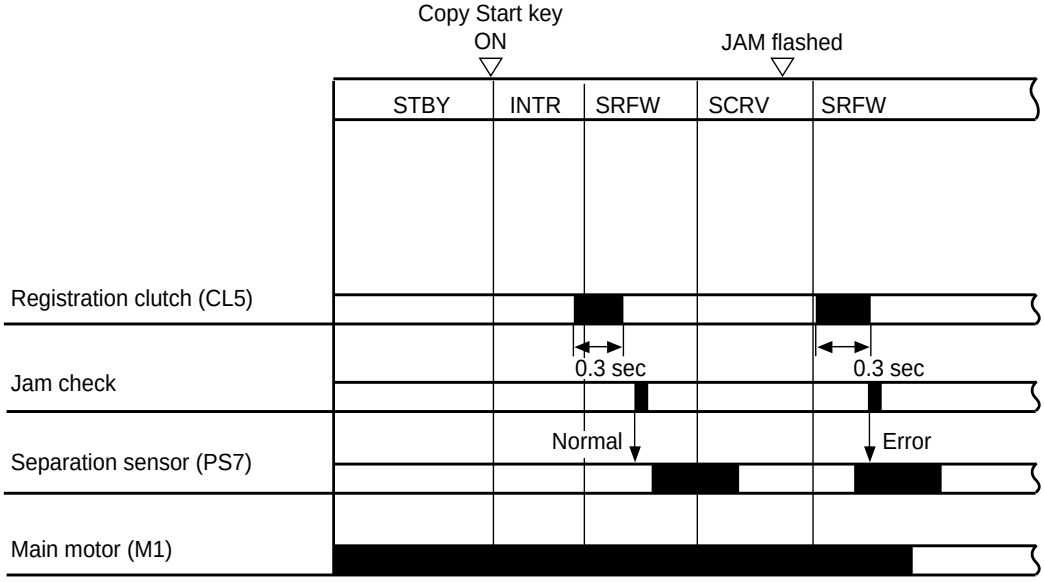

Figure 3-451 Sequence of Operations

COPYRIGHT © 1998 CANON INC.
CANON NP6621 REV.0 FEB. 1998 PRINTED IN JAPAN (IMPRIME AU JAPON)

9. Delivery Delay Jam

Copy paper does not reach the delivery sensor (PS8) within a specific time after the separation sensor (PS7) has turned ON.

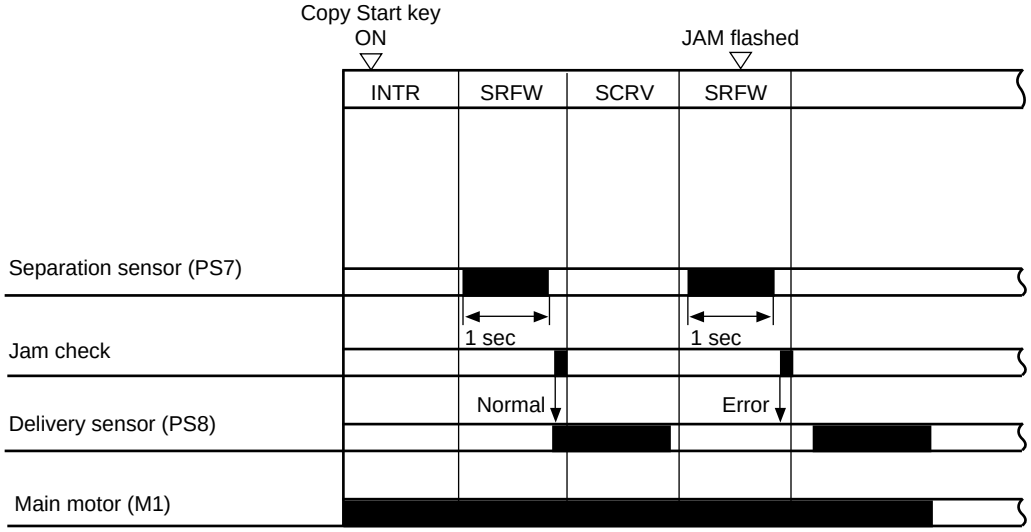

Figure 3-452 Sequence of Operations

COPYRIGHT © 1998 CANON INC.
CANON NP6621 REV.0 FEB. 1998 PRINTED IN JAPAN (IMPRIME AU JAPON)

10. Delivery Stationary Jam

Copy paper does not move past the delivery sensor (PS8) within a specific time after the delivery sensor has turned ON because of feeding faults.

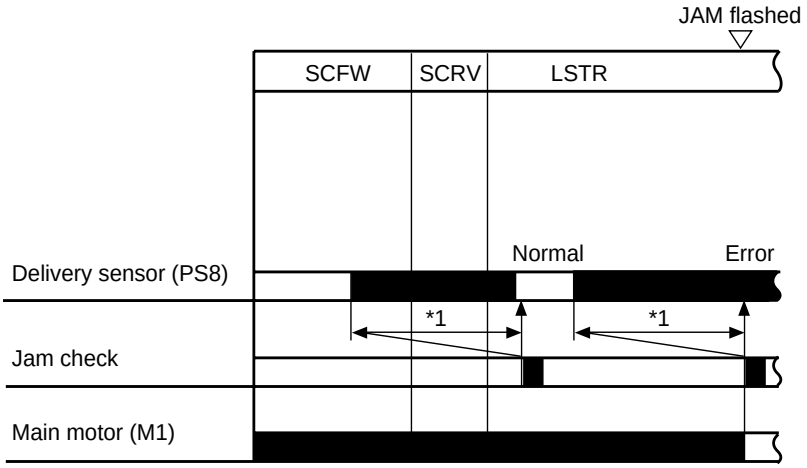

∗1 Varies depending on paper length (paper length + 40 mm).

Figure 3-453 Sequence of Operations

11. Pick-Up Stationary Jam (cassette unit)

Copy paper is over the cassette vertical path sensor (PS1cu, PS3cu, PS5cu) when the cassette pick-up clutch (CL1cu, CL2cu, CL3cu) turns ON because of feeding faults.

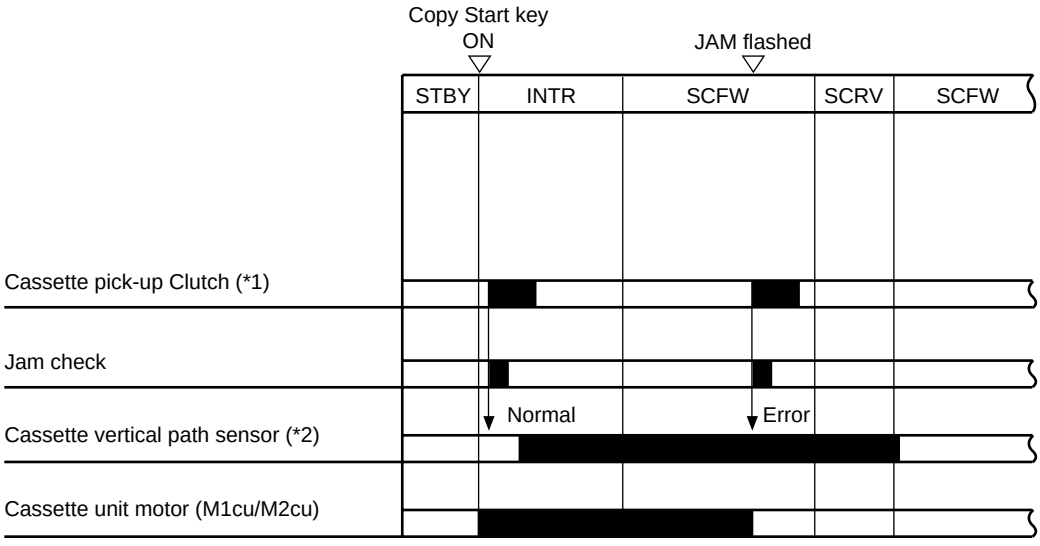

∗1 Cassette 3 pick-up clutch (CL1cu)
Cassette 4 pick-up clutch (CL2cu)
Cassette 5 pick-up clutch (CL3cu)

∗2 Cassette 3 vertical path sensor (PS1cu)
Cassette 4 vertical path sensor (PS3cu)
Cassette 5 vertical path sensor (PS5cu)

Figure 3-454 Sequence of Operations

COPYRIGHT © 1998 CANON INC.
CANON NP6621 REV.0 FEB. 1998 PRINTED IN JAPAN (IMPRIME AU JAPON)

12. Pick-Up Delay Jam (cassette unit)

Copy paper does not reach the cassette vertical path sensor (PS1cu, PS3cu, PS5cu) within a specific time after the cassette pick-up clutch (CL1cu, CL2cu, CL3cu) has turned ON because of feeding faults.

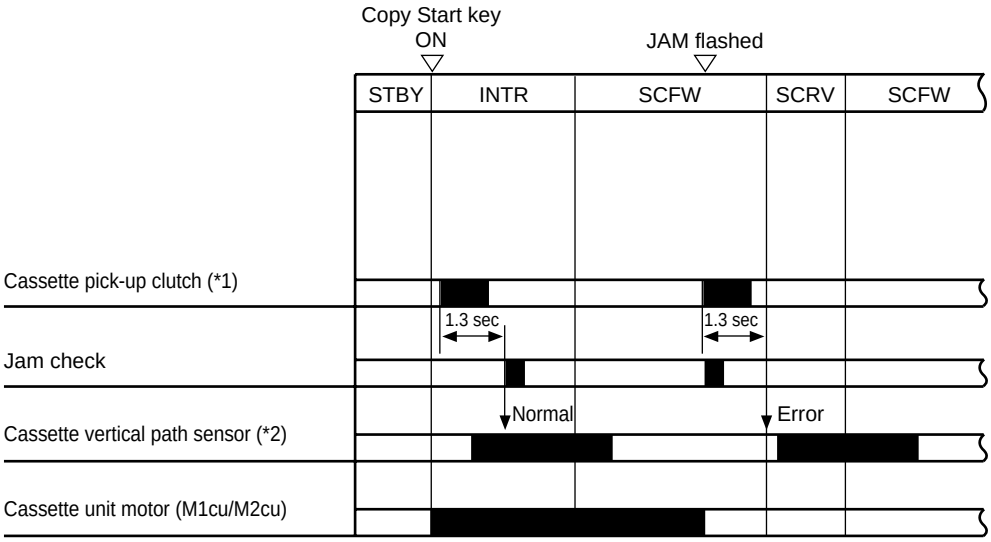

∗1 Cassette 3 pick-up clutch (CL1cu)
Cassette 4 pick-up clutch (CL2cu)
Cassette 5 pick-up clutch (CL3cu)

∗2 Cassette 3 vertical path sensor (PS1cu)
Cassette 4 vertical path sensor (PS3cu)
Cassette 5 vertical path sensor (PS5cu)

Figure 3-455 Sequence of Operations

COPYRIGHT © 1998 CANON INC.

13. Pick-Up Delay Jam (Paper Deck Pedestal-K1)

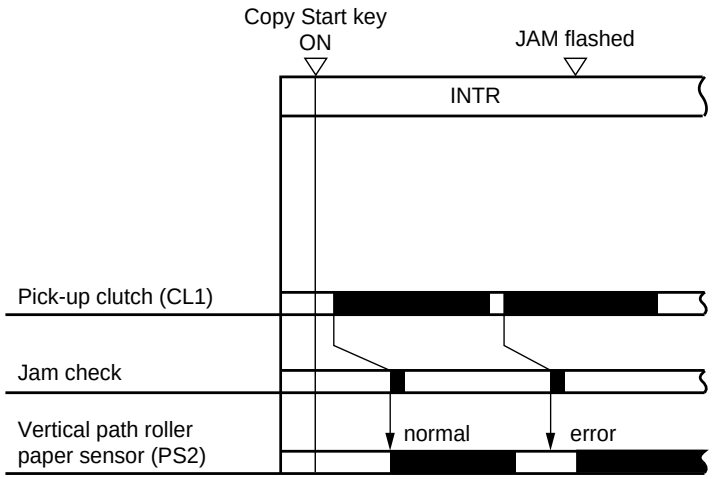

Figure 3-456

14. Pick-Up Timing Jam (Paper Deck Pedestal-K1)

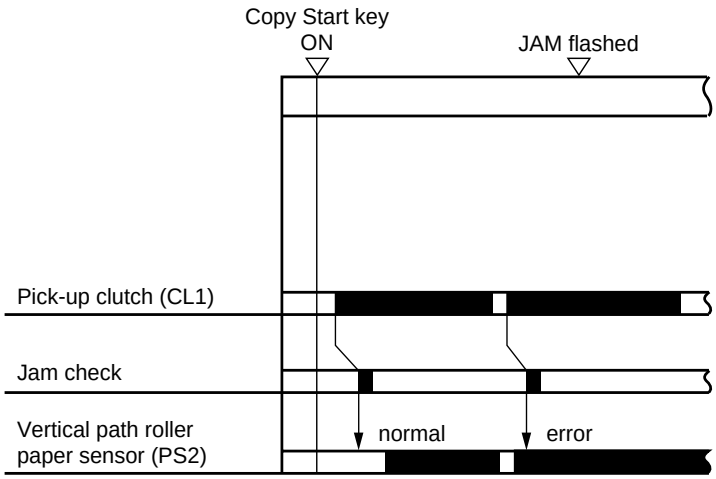

Figure 3-457

COPYRIGHT © 1998 CANON INC.
CANON NP6621 REV.0 FEB. 1998 PRINTED IN JAPAN (IMPRIME AU JAPON)

V. POWER SUPPLY

A. Outline of Power Distribution

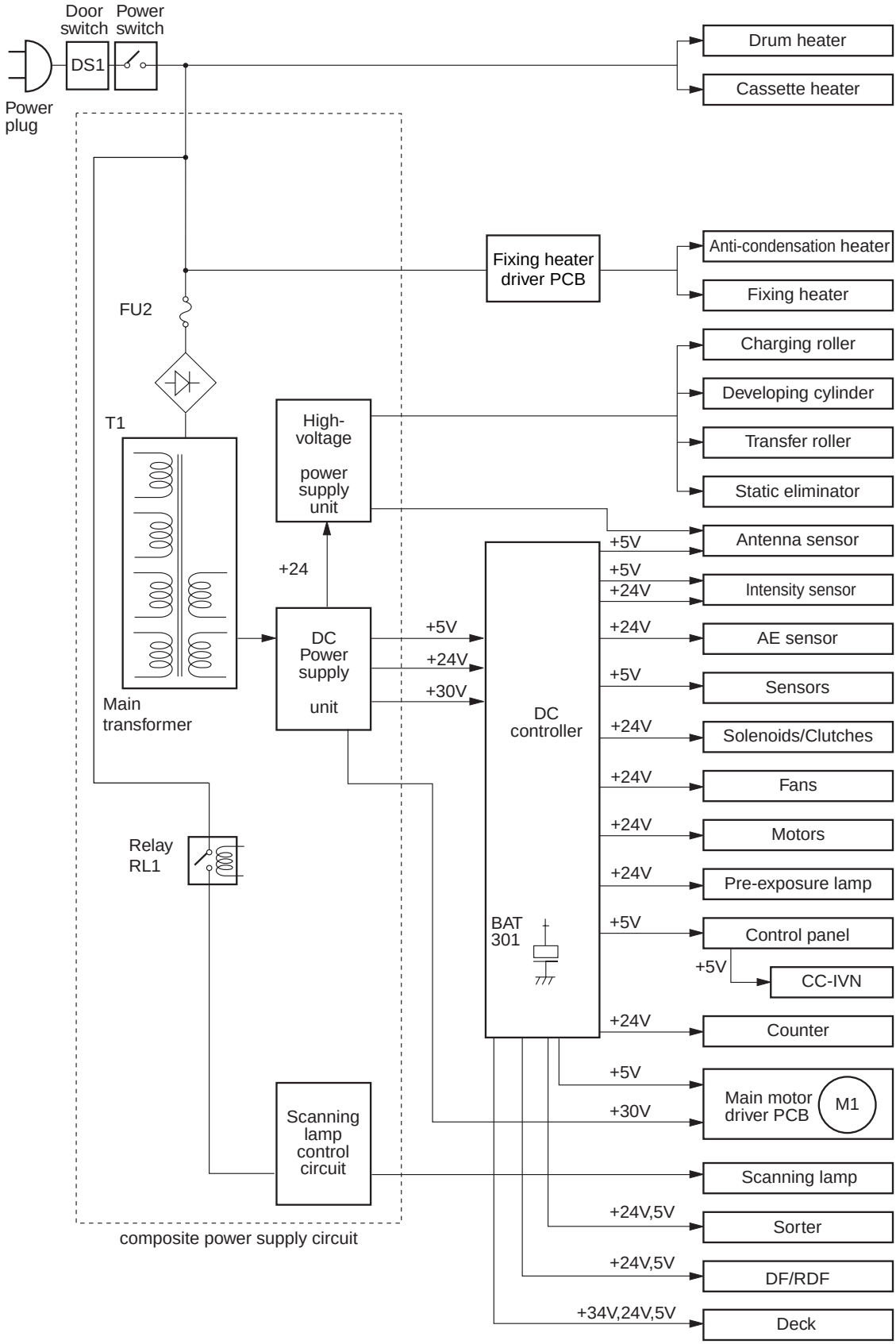

Figure 3-501

COPYRIGHT © 1998 CANON INC.

B. Power Supply Circuitry

The machine's power supply unit uses a single main transformer (T101) to supply DC power.

AC power is supplied to the DC power supply when the power switch (SW1) and the door switch are turned ON.

Since DC power to the DC controller circuit will be cut off in this condition, the machine is equipped with a lithium battery (BAT301) to back up the RAM (Q308) in the DC controller circuit.

Caution:

The AC power supply unit remains supplied with voltage even when the power is OFF.

Reference:

The tolerances of the DC voltage are as follows:

- +30 V +10%, -5%
- +24 V ±5%
- +5V ±5%

However, the above stand when the AC input inaccuracy is ±10%.

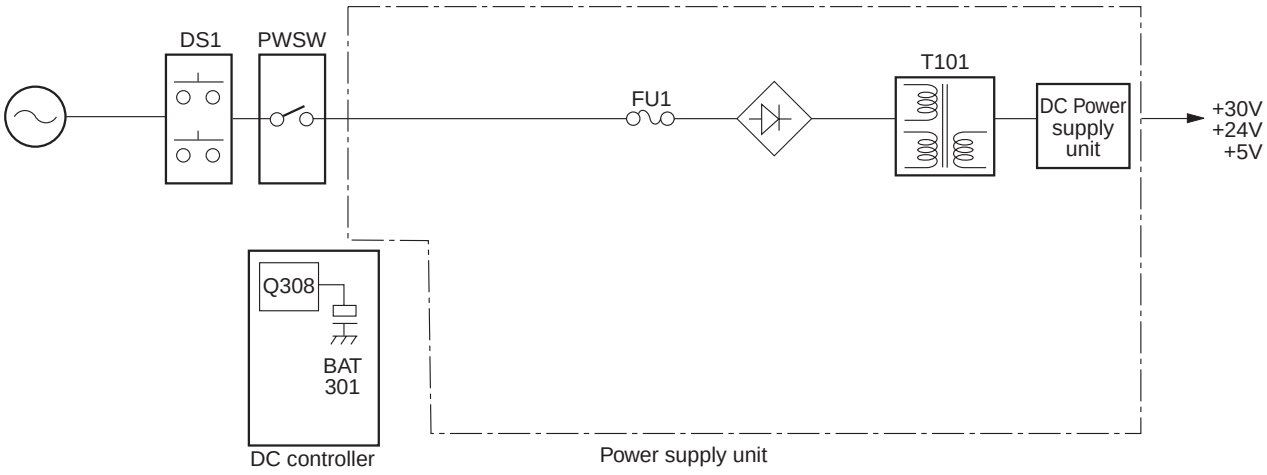

Figure 3-502

COPYRIGHT © 1998 CANON INC.
CANON NP6621 REV.0 FEB. 1998 PRINTED IN JAPAN (IMPRIME AU JAPON)

C. Detecting Errors on the Power Supply PCB

The microprocessor (U402) and LED501 on the composite power supply PCB checks for errors; if an error is identified, the microprocessor (U402) communicates with the DC controller to indicate the results of self diagnosis on the display or to flash LED501 to alert the user.

- **Communication Error between DC Controller PCB and Composite Power Supply PCB**

If an error occurs in the communication between the DC controller PCB and the composite power supply PCB, 'E240' is indicated as soon as the DC controller PCB identifies an error. In addition, LED is flashed at intervals of 5 sec when the composite power supply PCB identifies an error.

- **Data Error in the High-Voltage Output**

If the difference between the actual control value and the setting associated with the high voltage generated by the microprocessor (U402) is more than a specific value, the microprocessor (U402) communicates error data to the DC controller PCB to indicate 'E064'.

- **Detecting Overcurrent in the Low-Voltage Power Supply**

If the composite power supply PCB identifies an error in any of the DC loads or overcurrent caused by wire trapping, the LED is on fixed.

COPYRIGHT © 1998 CANON INC.
CANON NP6621 REV.0 FEB. 1998 PRINTED IN JAPAN (IMPRIME AU JAPON)

D. Protection Mechanisms for the Power Supply Circuit

The composite power supply PCB is equipped with an overcurrent detection circuit; its protection mechanism turns ON to stop the output if a short circuit occurs because of a fault in the loads.

When the output is stopped, open the front door to turn OFF the door switch, correct the load, and turn ON the door switch and the power switch to return the output.

Caution:
Be sure to disconnect the connector (J4) before performing the above work.

Do not repeat resetting short-circuits; otherwise, the built-in fuse (F2) can blow.

Note:
Replace the lithium battery only with the one listed in the Parts Catalog. Use of different battery may present a risk of fire or explosion. The battery may present a fire or chemical burn hazard if mistreated. Do not recharge, disassemble, or dispose of it in fire.
Keep the battery out of reach of children and discard any used battery promptly.

COPYRIGHT © 1998 CANON INC.
CANON NP6621 REV.0 FEB. 1998 PRINTED IN JAPAN (IMPRIME AU JAPON)

VI. SERVICE MODE

A. Outline

The machine's service mode is grouped into the following six:

No.	Description
[1]	Control display mode
[2]	I/O display mode
[3]	Adjustment mode
[4]	Operation/inspection mode
[5]	Machine settings mode
[6]	Counter mode

Table 7-601

B. Using Service Mode

1. Starting Service Mode

1) Open the front door, and insert the door switch actuator.
   - If you want to make checks as in "I/O display mode" while making copies, set the appropriate copying mode.
2) Push the service mode switch (SW850) on the service mode PCB with a hex key.
   - The copy counter display indicates '1'.
   - While in copy mode, the copy density indicator LED indicates the position of the fixing belt.
   - A press on the Reset key ends service mode.

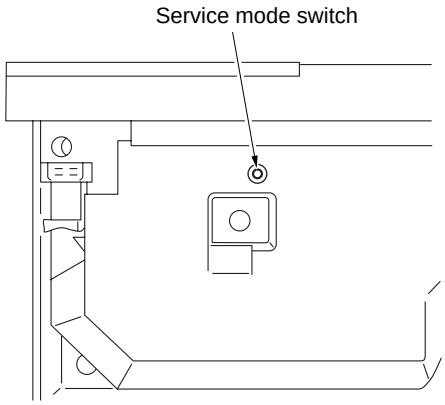

Figure 3-601

2. Selecting Service Mode Group

1) While the copy count indicator is indicating '1', press a key from '1' through '6' on the numeric keypad to select a service mode.
2) Press the AE key.
   - The machine starts the selected service mode, and the copy counter indicates '301'. '301' means that the mode is the first mode of service mode 3.

3. Selecting an Item under Each Service Mode

1) While the 100's of the number indicated on the copy mode counter ('301', for example) is flashing, press the numeric keypad to select the mode you want to execute.
   - The copy counter indicator indicates the number, flashing the 100's.
   - A press on the Clear key returns to group selection ('3', for example).
2) Press the Start key.
   - The machine starts the selected service mode.

COPYRIGHT © 1998 CANON INC.

4. Using Adjustment Mode ('3') and Machine Settings Mode ('5')

1) Press the numeric keypad to change the number.
   - The number flashes.
   - If the number is negative, '%' turns ON. To enter a negative number, press the % key and enter the number on the numeric keypad.
2) Press the AE key.
   - The machine stores the value and stops flashing the value.
   - A press on the Start key starts copying operation.
3) To change the number once again, repeat steps 1) and 2).
4) Press the Clear key to return to item selection.

5. Using Operation/Inspection Mode ('4')

1) Press the Start key to execute the selected service mode.
2) Press the Stop key to stop and return to item selection.
   - If the mode is designed to stop automatically, the machine stops and automatically returns to item selection.

6. Resetting Error Codes (back-up codes)

If 'E000', 'E001', 'E002', 'E003', or 'E004' is indicated, remove the cause of the error and reset the code that has been backed up.

1) Open the front door, and insert the door switch actuator.
2) While holding down the service mode switch (SW850) on the service PCB with a hex key, press the power switch.
3) Turn OFF/ON the power switch.

7. Recording on the Service Label

Figure 3-601 shows the label attached behind the front door. Each machine is adjusted and set at the factory, and the appropriate values are recorded on the label.

Be sure to record any new settings you entered in the field on the label. Further, if you have replaced the DC controller, be sure to enter the settings recorded on the label.

If you have replaced the drum unit or the composite power supply, be sure to enter the settings recorded on the labels attached to the drum unit or composite power supply (service parts), and record these settings on the label.

Program	Meaning	Value
302	AE curve shift	
303	AE curve slope	
304	Fixing offset temperature	
305	Register	
306	Leading edge	
307	Register B-side	
308	Leading edge B-side	
309	Trailing edge	
310	Stack-bypass tail	
311	Blank home	
312	Blank home reduction	
315	APVC voltage	
316	APVC current	
318	ATVC compensation	
319	Stack-bypass loop	
320	Main register loop	
321	C1_cl_off	
322	C2_cl_off	
323	C3_cl_off	
324	Duplex paper stack adj	
325	Duplex inversion roller	
326	Halogen lamp intensity	
327	Duplex input loop	
328	Duplex output loop	

Figure 3-602

COPYRIGHT © 1998 CANON INC.
CANON NP6621 REV.0 FEB. 1998 PRINTED IN JAPAN (IMPRIME AU JAPON)

C. Control Display Mode (‘1’)

- To select an item, press the appropriate number on the numeric keypad and then the Start key.
- To deselect an item, press the Clear key.
- A press on the Start key while a description of the selected service mode is indicated will execute appropriate copying operations.

No.	Service mode	Description
101	Jam location	Indicates the jam location on the copy counter indicator. (See the next page.)
103	Primary current buffer display	unit: µA
104	Primary charging voltage display	unit: V To obtain the actual primary charging voltage, put the indicated value into negative and subtract 1000.
105	Primary current display	unit: µA
106	Intensity display	unit: lux To obtain the actual intensity (lux), divide the indicated value by 100.
107	Jam history	See the next page.
108	Error history (E indications)	Indicates a history of the most recent ten errors. A press on the ‘1’, ‘2’, ‘3’, ‘4’, ‘5’, ‘6’, ‘7’, ‘8’, ‘9’, or ‘0’ key on the numeric keypad will indicate the either of most recent through tenth most recent error.
109	Fixing main thermistor (TH1) detection temperature	unit: °C
110	Fixing target temperature	unit: °C
112	AE sensor output	Normal if the value changes for each original when making copies in AE.
113	ROM version No.	Indicates the parts revision number of the ROM.
114	ROM release No.	Indicates the version of the program.
116	AE scan intensity display	Normal if between ‘68’ and ‘72’.
120	Jam interval	
121	Jam paper size data	
123	Jam document handler copying data	

Table 3-602

COPYRIGHT © 1998 CANON INC.
CANON NP6621 REV.0 FEB. 1998 PRINTED IN JAPAN (IMPRIME AU JAPON)

No. 101 Jam Location Display

The type of jam is indicated using the copy counter.

LED (ON)	Type of jam
J1	Pre-registration delay jam
J2	Pre-registration stationary jam
J3	Separation delay jam
J4	Separation stationary jam
J5	Delivery delay jam
J6	Delivery stationary jam
J7	Sorter jam
J8	Door open jam
J9	Cassette 3 pick-up delay jam
JA	Cassette 3 pick-up stationary jam
Jb	Cassette 4 pick-up delay jam
JC	Cassette 4 pick-up stationary jam

Table 3-603

LED (ON)	Type of jam
JD	Cassette 5 pick-up delay jam
JE	Cassette 5 pick-up stationary jam
JF	Duplexing unit inlet delay jam
J10	Duplexing unit outlet delay jam
J11	Duplexing unit registration delay jam
J12	Duplexing unit inlet stationary jam
J13	Vertical path roller 2 delay jam
J14	Vertical path roller 1 delay jam
J15	Vertical path roller 2 stationary jam
J16	Vertical path roller 1 stationary jam
J17	Deck outlet delay jam
J25	Jam due to electrical causes (IE: Main power off during copy)

Table 3-604

No. 107 Jam History

A press on the '1' through '10' on the numeric keypad indicates the most recent ten jams.
A press on '1' indicates the most recent jam.
A press on '2' indicates the second most recent jam.
A press on '3' indicates the third most recent jam.
A press on '4' indicates the fourth most recent jam.
A press on '5' indicates the fifth most recent jam.
A press on '6' indicates the sixth most recent jam.
A press on '7' indicates the seventh most recent jam.
A press on '8' indicates the eighth most recent jam.
A press on '9' indicates the ninth most recent jam.
A press on '10' indicates the tenth most recent jam.

No. 108 Error History

A press on the '1' through '10' on the numeric keypad indicates the most recent ten errors.
A press on '1' indicates the most recent error.
A press on '2' indicates the second most recent error.
A press on '3' indicates the third most recent error.
A press on '4' indicates the fourth most recent error.
A press on '5' indicates the fifth most recent error.
A press on '6' indicates the sixth most recent error.
A press on '7' indicates the seventh most recent error.
A press on '8' indicates the eighth most recent error.
A press on '9' indicates the ninth most recent error.
A press on '10' indicates the tenth most recent error.

COPYRIGHT © 1998 CANON INC.
CANON NP6621 REV.0 FEB. 1998 PRINTED IN JAPAN (IMPRIME AU JAPON)

No. 120 Jam interval indication

By pushing key	Jam interval indication 120
1	First lates jam interval.
2	Second latest jam interval.
3	Third latest jam interval.
4	Fourth latest jam interval.
5	Fifth latest jam interval.
6	Sixth latest jam interval.
7	Seventh latest jam interval.
8	Eigth latest jam interval.
9	Nineth latest jam interval.
0	Tenth latest jam interval.

Table 3-605

It displays the number of copies made (in tens: 1 to 999) between two jams occurence.

No. 121 Jam paper size data indication
No. 122 Jam drawer selection data indication
No. 123 Jam Document Handler copying data indication

By pushing key	Jam data indication
1	First lates jam data.
2	Second latest jam data.
3	Third latest jam data.
4	Fourth latest jam data.
5	Fifth latest jam data.
6	Sixth latest jam data.
7	Seventh latest jam data.
8	Eigth latest jam data.
9	Nineth latest jam data.
0	Tenth latest jam data.

Table 3-606

Service program 121 displays the paper size at jam occurrence (B5, B5R, B4, A3, A4, A4R, A5, A5R, A6R)

Service program 122 displays the drawer selection at jam occurrence:

0	Upper drawer.
1	Lower drawer.
2	Stack bypass.
3	Optional 1st drawer.
4	Optional 2nd drawer.
5	Optional 3rd drawer.
6	Optional deck.
7	Duplex unit.

Table 3-607

Service program 123 displays if Document Handler was used for copying at jam occurrence (1 = DH used)

COPYRIGHT © 1998 CANON INC.

D. I/O Mode (‘2’)

- To start I/O display mode, press ‘2’ (numeric keypad) and then the AE key.
- To select an item, press the appropriate number on the numeric keypad and then the Start key.
- To deselect an item, press the Clear key.
- A press on the Start key while a description of the selected service mode is indicated will execute appropriate copying operations.

No.	Item	Description
206	Fixing main thermistor (TH1) voltage display	Indicates the detected voltage in ‘0’ through ‘255’.
207	Fixing sub thermistor (TH2) voltage display	Indicates the detected voltage in ‘0’ through ‘255’.
208	AE sensor voltage display	Indicates the detected voltage in ‘0’ through ‘255’.
210	Multifeeder paper width sensor voltage display	Indicates the detected voltage in ‘0’ through ‘255’.
211	Light adjustment sensor voltage display	Indicates the detected voltage in ‘0’ through ‘255’.
212	Copy density correction knob	Indicates the detected voltage in ‘0’ through ‘255’.
213	Toner sensor detector	Indicates the detected voltage in ‘0’ through ‘255’.
214	Port C digit 1 display	Starting the mode causes part of the copy count indicator to turn ON, representing the I/O state of the input port.
215	Port C digit 2 display	Starting the mode causes part of the copy count indicator to turn ON, representing the I/O state of the input port.
216	Port C digit 3 display	Starting the mode causes part of the copy count indicator to turn ON, representing the I/O state of the input port.
217	Port C digit 4 display	Starting the mode causes part of the copy count indicator to turn ON, representing the I/O state of the input port.
218	Port C digit 5 display	Starting the mode causes part of the copy count indicator to turn ON, representing the I/O state of the input port.
219	Port C digit 6 display	Starting the mode causes part of the copy count indicator to turn ON, representing the I/O state of the input port.
220	Port C digit 7 display	Starting the mode causes part of the copy count indicator to turn ON, representing the I/O state of the input port.
221	Port C digit 8 display	Starting the mode causes part of the copy count indicator to turn ON, representing the I/O state of the input port.
222	Port C digit P0 display	Starting the mode causes part of the copy count indicator to turn ON, representing the I/O state of the input port.

Table 3-608

COPYRIGHT © 1998 CANON INC.
CANON NP6621 REV.0 FEB. 1998 PRINTED IN JAPAN (IMPRIME AU JAPON)

No. 214, No. 215, No. 216, No. 217, and No. 218

No.	LED	Item	Description
214	1-a	Cassette 3 paper present	ON: light-blocking plate present (paper absent)
	1-b	Cassette 3 vertical path sensor (PS1cu)	ON: light-blocking plate present (paper present)
	1-c	Cassette 5 vertical path sensor (PS3cu)	ON: light-blocking plate present (paper present)
	1-d	Reserved	–
	1-e	Total copy counter connection	ON: connected
	1-f	Auto paper selection sensor 1	ON: paper present
	1-g	Cassette 2 connection	ON: connected
215	1-a	Cassette 4/5 paper present	ON: light-blocking plate present (paper absent)
	1-b	Cassette 4 vertical path sensor (PS6cu)	ON: light-blocking plate present (paper absent)
	1-c	Deck right door open	ON: light-blocking plate present (door closed)
	1-d	Service switch	ON: pushed
	1-e	Total copy counter connection	ON: connected
	1-f	Auto paper selection sensor 2	ON: paper present
	1-g	Option counter connection	ON: connected
216	1-a	Cassette size 1 (cassette 1)	ON: light-blocking plate present
	1-b	Cassette size 2 (cassette 1)	ON: light-blocking plate present
	1-c	Cassette size 3 (cassette 1)	ON: light-blocking plate present
	1-d	Cassette size 4 (cassette 1)	ON: light-blocking plate resent
	1-e	Power switch ON/OFF	ON: ON
	1-f	Auto paper selection sensor 3	ON: paper present
	1-g	Cassette 1 paper present	ON: light-blocking plate present (paper absent)
217	1-a	Cassette size 1 (cassette 2)	ON: light-blocking plate present
	1-b	Cassette size 2 (cassette 2)	ON: light-blocking plate present
	1-c	Cassette size 3 (cassette 2)	ON: light-blocking plate present
	1-d	Cassette size 4 (cassette 2)	ON: light-blocking plate present
	1-e	Reserved	–
	1-f	Auto paper selection sensor 4	ON: paper present
	1-g	Reserved	–
218	1-a	Cassette size 1 (cassette 3)	ON: light-blocking plate present (paper absent)
	1-b	Cassette size 2 (cassette 3)	ON: light-blocking plate present (paper present)
	1-c	Cassette size 3 (cassette 3)	ON: light-blocking plate present (Paper present)
	1-d	Cassette size 4 (cassette 3)	ON: light-blocking plate present (paper present)
	1-e	Option cassette connection detection 1	See the table below.
	1-f	Option cassette connection detection 2	See the table below.
	1-g	Reserved	–

Table 3-609

COPYRIGHT © 1998 CANON INC.
CANON NP6621 REV.0 FEB. 1998 PRINTED IN JAPAN (IMPRIME AU JAPON)

No. 219, No. 220, and No. 221

No.	LED	Item	Description
219	1-a	Cassette size 1 (cassette 4/5)	ON: light-blocking plate present
	1-b	Cassette size 2 (cassette 4/5)	ON: light-blocking plate present
	1-c	Cassette size 3 (cassette 4/5)	ON: light-blocking plate present
	1-d	Cassette size 4 (cassette 4/5)	ON: light-blocking plate present
	1-e	Option cassette connection detection 3	See the table below.
	1-f	Option cassette connection detection 4	See the table below.
	1-g	Reserved	–
220	1-a	ON: connected	Option counter 1 detection
	1-b	ON: connected	Option counter 2 detection
	1-c	Reserved	–
	1-d	Reserved	–
	1-e	Reserved	–
	1-f	Right door open detection	ON: light-blocking plate present (door closed)
	1-g	Reserved	–
221	1-a	Multifeeder paper detection	ON: light-blocking plate present (paper absent)
	1-b	Delivery sensor	ON: light-blocking plate present (paper present)
	1-c	Reserved	–
	1-d	Separation sensor	ON: light-blocking plate present (paper absent)
	1-e	Control Card IV connection	ON: connected
	1-f	Reserved	–
	1-g	Reserved	–

Table 3-610

Service mode No. 218		Service mode No. 219		
LED 1-e	LED 1-f	LED 1-e	LED 1-f	
OFF	OFF	×	×	No optional feeding unit.
ON	OFF	ON	×	Optional deck feeding unit.
ON	OFF	OFF	×	1-cassette optional feeding unit.
OFF	ON	×	×	2-cassette optional feeding unit.
ON	ON	×	×	3-cassette optional feeding unit.

COPYRIGHT © 1998 CANON INC.
CANON NP6621 REV.0 FEB. 1998 PRINTED IN JAPAN (IMPRIME AU JAPON)

No. 222 Port P0 Display

LED	Item	Description
1-a	Registration sensor (PS6)	ON: paper present
1-b	Delivery sensor (PS8)	ON: paper present
1-c	Lens home position sensor (PS2)	ON: at HP
1-d	Blanking shutter home position sensor (PS3)	ON: at HP
1-e	Halogen lamp check signal	OFF: E220 error
1-f	Heater ON detection (triac short circuit detection)	ON: hater ON detected
1-g	Composite power supply ACK	ON: acknowledged

Table 3-611

COPYRIGHT © 1998 CANON INC.

E. Adjustment Mode (‘3’)

- To start the mode, press ‘3’ on the numeric keypad and press the AE key.
- To select an item, press the appropriate number on the numeric keypad and then the Start key.
- To change the value, enter the appropriate value on the numeric keypad and then press the AE key.
- To deselect an item, press the Clear key.
- A press on the Start key will execute appropriate copying operations.
- If the number is negative, ‘%’ turns ON. To enter a negative number, press the % key and enter the number on the numeric keypad.

No.	Item	Settings	Description
301	AE scan lamp intensity automatic adjustment		
302	AE mode copy density (developing bias) reference point adjustment	–26 ~ +26	default: 0
303	AE mode copy density (developing bias) slope adjustment	–26 ~ +26	See p. 3-129. default: 0
304	Fixing heater temperature off set	–50 ~ +50	default: 0
305	Leading edge margin adjustment (registration roller ON timing)	0 ~ 63	A higher setting delays the copy paper in relation to the image, thereby decreasing the margin. default: 30 unit: 0.27 mm
306	Leading edge non-image width adjustment (timing at which the blanking open/close shutter is closed)	0 ~ 63	A higher setting increases the leading edge non-image width. default: 38 unit: 0.27 mm
307	Page separation right side leading edge registration adjustment (timing at which the registration roller turns ON)	0 ~ 63	A higher setting delays the copy paper in relation to the image. default: 28 unit: 0.27 mm
308	Page separation right side leading edge margin (timing at which the blanking shutter closes)	0 ~ 63	A higher setting increases the leading edge margin. default: 38 unit: 0.27 mm
309	Trailing edge fine adjustment (timing at which the blanking open/close shutter is opened)	0 ~ 63	A higher setting decreases the trailing edge margin. default: 36 unit: 0.27 mm
310	Multifeeder trailing edge margin adjustment (timing at which the blanking open/close shutter is opened)	0 ~ 63	A higher setting decreases the trailing edge margin. default: 26 unit: 0.27 mm
311	Left/right margin adjustment (DIRECT) (home position for the blanking slide shutter)	0 ~ 15	A higher setting increases both left and right margins. default: 9 unit: 0.27 mm

Table 3-612-1

Note: A press on the Start key when in No. 305, 306, 307, or 308 makes copies in the mode that has been effective before the activation of the mode; when executing No. 307 or 308, it is recommended that page separation mode be selected before activating service mode.

COPYRIGHT © 1998 CANON INC.
CANON NP6621 REV.0 FEB. 1998 PRINTED IN JAPAN (IMPRIME AU JAPON)

No.	Item	Settings	Description
312	Left/right margin adjustment (reduction; the movement of the blanking slide shutter)	–10 ~ +10	A higher setting increases both left and right margins. default: –2 unit: 0l.27 mm
313	Primary output voltage correction (correction against the output voltage determined on APVC)	–16 ~ +16	Enter the value recorded on the label attached to the drum cartridge whenever you have replaced the drum cartridge. default: –4
314	APVC measurement current shift (correction against APVC results)	–40 ~ +40	Enter the value recorded on the label attached to the drum cartridge whenever you have replaced the drum cartridge. default: –10
315	APVC measurement voltage correction (correction against measurement voltage added for APVC)	–16 ~ +16	default: 5 unit: 16 V Execute it when replacing the composite power supply, and enter the value indicated on the label attached to the composite power supply.
316	APVC measurement current correction (correction against the current value measured during APVC)	–10 ~ +10	default: 0 Execute it when replacing the composite power supply, and enter the value indicated on the label attached to the composite power supply.
318	Transfer output voltage adjustment (correction against the transfer voltage determined by ATVC)	–4 ~ +4	Execute when replacing the composite power supply by converting the value indicated on the label attached to the composite power supply as follows: default: 0 Value on label → Input value: 1 → 0; 2 → –1; 3 → –2; 4 → –3; 5 → –4; 6 → +1; 7 → +2; 8 → +3; 9 → +4
319	Multifeeder arch adjustment (timing at which the pick-up roller is turned OFF)	0 ~ 63	A higher setting increases arching. default: 36 unit: 0.27 mm
320	Cassette 1/2 pick-up arch adjustment (timing at which the pick-up roller turns OFF)	0 ~ 63	A higher setting increases arching. default: 32 unit: 0.27 mm
321	Cassette 3 pick-up arch adjustment (timing at which the pick-up roller turns OFF)	0 ~ 63	A higher setting increases arching. default: 10 unit: 0.27 mm
322	Cassette 4 pick-up arch adjustment (timing at which the pick-up roller turns OFF)	0 ~ 63	A higher setting increases arching. default: 10 unit: 0.27 mm
323	Cassette 5 pick-up arch adjustment (timing at which the pick-up roller turns OFF)	0 ~ 63	A higher setting increases arching. default: 10 unit: 0.27 mm

Table 3-612-2

COPYRIGHT © 1998 CANON INC.

No.	Item	Settings	Description
324	Duplex paper stack timing adjustment	0 ~ 63	A higher setting delays the ON timing. unit: 0.27 mm default: 32
325	Set-back roller reversal timing adjustment	0 ~ 63	A higher setting delays the reversal timing. unit: 0.27 mm default: 32
326	Lamp intensity adjustment	40 ~ 200	For factory only. default: 125
327	Duplexing unit inlet arch adjustment	0 ~ 63	A higher setting increases the arch. default: 28 unit: 0.27 mm
328	Duplexing unit out let adjustment	0 ~ 63	A higher setting increases the arch. default: 28 unit: 0.27 mm

Table 3-612-3

COPYRIGHT © 1998 CANON INC.
CANON NP6621 REV.0 FEB. 1998 PRINTED IN JAPAN (IMPRIME AU JAPON)

F. Operation/Inspection Mode (‘4’)

- To start inspection mode, press ‘4’ (numeric keypad) and then the AE key.
- To select an item, press the appropriate number on the numeric keypad and then the Start key.
- To execute the mode, press the Start key.
- To end the mode, press the Stop key, thereby returning to item selection.
- If the mode is designed to stop automatically, the machine will automatically return to item selection after ending the mode.

No.	Item	Description
401	Developing assembly idle rotation	Execute the mode after supplying toner during installation work.
402	Primary roller cleaning	
403	Transfer roller cleaning	
406	Nip check	Use the mode when checking the nip or when adjusting the pressure of the lower fixing roller.
407	Halogen lamp intensity adjusting	Press the zoom +key or the zoom -key to change the value.
408	Scanning lamp ON check	A press on the Start key causes the lamp to turn ON for about 2.2 sec. (later E220 error happens)
409	Control panel all ON	
410	Scanner forward stop in AE	
411	Pre-exposure lamp ON	
412	APVC measuring	
412	Drum setting	
413	Cool drum setting	
414	Automatic drum setting	Factory only
415	Fixing offset adjustment	Factory only
417	Jam history clear	
418	Error history clear	
419	Scanner AP initialization	
450	Back-up RAM clear	See p. 3-133.

Table 3-613

COPYRIGHT © 1998 CANON INC.

G. Machine Settings Mode (‘5’)

- To start machine settings mode, press ‘5’ (numeric keypad) and then the AE key.
- To select an item, press the appropriate number on the numeric keypad and then the Start key.
- To change the value, enter the new value on the numeric keypad, and press the AE key.
- To deselect the item, press the Clear key.
- A press on the Start key will execute appropriate copying operations.

No.	Item	Description
501	Multifeeder paper width sensor characteristics registration	See p. 3-131.
502	Copy density notation switch (9-/17- step)	9-step: 0 17-step: 1 default: 0 (9-step)
503	Auto energy saver function deactivation	• Entering ‘1’ on the numeric keypad causes the indication to change to ‘ON’, activating the auto energy saver function. • Entering ‘0’ on the numeric keypad causes the indication to change to ‘OFF, deactivating the function. default: activated
504	Copy count upper limit set	settings: 0 to 99 default: 0 When set to ‘0’, 100 copies.
505	Universal cassette paper size storage (cassette 1)	See p. 3-132. settings: 0 to 14 default: 0
506	Separation static eliminator output voltage switch	0: 2 kV 1: 4 kV default: 0
507	Fixing forced wait	Activating the item increases the time of initial rotation. Activate it if the fixing on the first copy is poor because of a low-temperature environment. 0: deactivated 1: activated default: 0

Table 3-614-1

COPYRIGHT © 1998 CANON INC.
CANON NP6621 REV.0 FEB. 1998 PRINTED IN JAPAN (IMPRIME AU JAPON)

No.	Item	Description
509	Universal cassette paper size storage (cassette 2)	settings: 0 to 14 default: 0
510	Universal cassette paper size storage (cassette 3)	settings: 0 to 14 default: 0
511	Universal cassette paper size storage (cassette 4)	settings: 0 to 14 default: 0
512	Universal cassette paper size storage (cassette 5)	settings: 0 to 14 default: 0

Table 3-614-2

COPYRIGHT © 1998 CANON INC.

H. Counter Mode (‘6’)

- To start counter mode, press the ‘6’ key on the numeric keypad and press the AE key.
- To select an item, press the appropriate number on the numeric keypad and then the Start key.
- To deselect an item, press the Clear key.
- A press on the Start key while a description of the mode is indicated will execute appropriate copying operations.
- To obtain the actual count, multiply the indicated value by 100.

No.	Item	Description
601	Large copy counter	
602	Small copy counter	
603	Total copy counter	

Table 3-615

COPYRIGHT © 1998 CANON INC.
CANON NP6621 REV.0 FEB. 1998 PRINTED IN JAPAN (IMPRIME AU JAPON)

VII. SELF DIAGNOSIS

The microprocessor on the machine's DC controller is provided with a self diagnosis mechanism which checks the condition of the machine (sensors in particular) and indicates a code to identify the error it detects.

Detecting an error associated with 'E000' will automatically turn OFF the power. (error auto power-off)

A. Copier Self Diagnosis

Code	Possible cause	Description
E000	• Thermistor (TH1; displacement, poor contact, short circuit) • Fixing heater (H1; open circuit, cracking) • Thermal fuse (FU1; malfunction) • DC controller (faulty)	• The detection temperature of the main thermistor (TH1) does not reach 50°C 15 sec after a press on the Copy Start key.
E001	• Thermistor (TH1; short circuit) • Triac (faulty) • DC controller (faulty)	• The detection temperature of the main thermistor (TH1) exceeds 225°C during copying or stand-by.
E002	• Thermistor (TH1; displacement, poor contact, open circuit) • Fixing heater (H1; open circuit, cracking) • Thermal fuse (FU1; activation) • Triac (faulty) • DC controller (faulty)	• The detection temperature of the main thermistor (TH1) does not reach 155°C 25 sec after it has reached 50°C during copying.
E003	• Thermistor (TH1; displacement, poor contact) • Fixing heater (H1; open circuit, cracking) • Thermal fuse (FU1; activation) • Triac (faulty) • DC controller (faulty)	• The detection temperature of the main thermistor (TH1) is less than 50°C after it has reached 155°C during copying.
E004	• Triac (faulty) • Heater ON PCB (faulty)	The activation of fixing heater (HTON=1) is detected when the fixing heater drive signal is OFF (HTRD=0).
E010	• Main motor (M1; faulty) • DC controller (faulty)	The revolution of the main motor deviates from the specified value (MLOCK=0) for 1 sec or more while the main motor drive signal remains ON (MMD=1).
E030	• Counter (open circuit) • DC controller (faulty)	A check is made immediately before the counter turns ON or OFF and when starting the count. Normal if the drive signal is '0' when the counter turns ON. Normal if the drive signal is '0' when the counter is OFF. **Note:** The check is made only if the counter is installed.
E041	• Deck motor (M1dk; faulty) • Deck lifter clutch (CL4dk; faulty) • Lifter sensor (PS3dk; faulty)	The lifter does not reach the lifter sensor (PS3dk) within 40 sec after the deck lifter clutch (CL4dk) has turned ON.

COPYRIGHT © 1998 CANON INC.
CANON NP6621 REV.0 FEB. 1998 PRINTED IN JAPAN (IMPRIME AU JAPON)

Code	Possible cause	Description
E064	• Composite power supply (faulty) • DC controller (faulty)	The output value is different from the setting for the high-voltage output of the composite power supply.
E202 (control panel keys locked)	• Scanner cable (displacement, tear) • Scanner home position sensor (PS1; faulty) • Scanner motor (M2; faulty) • DC controller (faulty)	The scanner does not return to home position within 5 sec when scanning operation is started. 'E002' may be checked in service mode No. 108.
E210	• Lens cable (displacement, tear) • Lens home position sensor (PS2; faulty) • Slide shutter (faulty movement) • Blanking shutter home position sensor (PS3; faulty) • Change solenoid (SL1; faulty) • Lens motor (M3; faulty) • DC controller (faulty)	• The lens home position signal (LHP) is not generated within a specific period of time after the power switch has been turned ON. • The lens home position signal (LHP) is being generated for more than a specific period of time. • The blank shutter home position signal (BSHP) is not generated when the slide shutter is moved.
E220	• Scanning lamp (faulty) • Composite power supply (faulty) • DC controller (faulty)	• Activation of the lamp is detected during standby more than 22 sec.
E240	• DC controller (faulty) • Composite power supply (faulty)	An error is detected in the communication between the CPU (Q301) on the DC controller and the CPU (U402) on the composite power supply.
E260	• Power supply cooling fan (faulty) • DC controller (faulty)	The power supply cooling fan (FM3) remains stationary for 10 sec or more because of an error.
E261	• Power supply frequency (fluctuation) • Composite power supply (faulty)	The intervals of the zero-cross signal deviates from the tolerance.
E710	• DC controller (faulty)	Initialization of the IPC (Q311) fails at power-on.
E712	• DC controller (faulty) • DF controller(faulty) • Connector (poor contact)	An error in the communication with the DF cannot be removed.
E717	• DC controller (faulty) • ASSIST controller (faulty) • Communication with ASSIST (faulty)	• Communication with ASSIST after connection fails. • A break is detected with ASSIST.
E802	• Composite power supply (faulty) • DC controller (faulty)	The relay (KI) does not turn off when the power switch is turned off ($\overline{\text{ACOFF}}$=0).

COPYRIGHT © 1998 CANON INC.
CANON NP6621 REV.0 FEB. 1998 PRINTED IN JAPAN (IMPRIME AU JAPON)

Initializing Back-Up Error Codes

If the self-diagnosis mechanism has turned ON, you can reset the machine by turning OFF and then ON the power switch, unless the error is represented by 'E000', 'E001', 'E002', "E003', or 'E004'. This is to prevent the user from resetting the machine thereby damaging the fixing assembly.

If 'E000', 'E001', 'E002', "E003', or 'E004' is indicated, remove the cause of the error and perform the following:

1) Open the front door, and insert the door switch actuator.
2) While holding down the service mode switch (SW850) on the DC controller, turn the power switch OFF/ON.
3) When the power has been removed in about 2 sec, turn ON the power switch once again.

COPYRIGHT © 1998 CANON INC.

B. Self Diagnosis on the Cassette Feeding Unit

Code	Cause	Description
E901	• Cassette feeding unit controller (faulty) • Cassette feeding unit motor (faulty)	• The motor clock signal is not detected within 1 sec after the pedestal motor drive signal has been generated.

COPYRIGHT © 1998 CANON INC.
CANON NP6621 REV.0 FEB. 1998 PRINTED IN JAPAN (IMPRIME AU JAPON)

C. RDF/ADF Self Diagnosis

Code	Cause	Description
E400	• Data communication with copier (faulty)	• Communication breaks for 5 sec or more. (The communication is monitored at all times.)
E401	• Pick-up motor (faulty) • Pick-up roller home position sensor (faulty)	• The state of the sensor remains unchanged even after the pick-up motor has been driven for 2 sec or more.
E402	• Belt motor (faulty) • Belt motor clock sensor (S11; faulty)	• The number of belt motor clock pulses is below a specific value for 100 ms.
E403	• Feeding motor (faulty) • Slip sensor (faulty)	• The number of slip clock pulses is below a specific value for 100 ms.
E404	• Delivery motor (faulty) • Delivery motor clock sensor (faulty)	• The number of delivery motor clock pulses is below a specific value for 200 ms.
E411	• Registration sensor (faulty) • Original sensor (faulty)	• The output of each sensor in the absence of paper is more than a specific value.

Caution:

1. When the self-diagnosis mechanism has turned ON, you may reset the machine by turning OFF and then ON the copier's power switch.
2. You may make copies even while the RF remains out of order by placing originals on the copy paper.

COPYRIGHT © 1998 CANON INC.
CANON NP6621 REV.0 FEB. 1998 PRINTED IN JAPAN (IMPRIME AU JAPON)

D. Sorter Self Diagnosis

Code	Cause	Description
E500	• CPU or communication IC on sorter controller (faulty)	• An error has been detected in the communication between the sorter and the copier.
E510	• Feeding motor (fails to rotate)	• The clock signal from the motor is absent for 250 ms or more.
E530	• Staple guide bar swing motor (fails to rotate)	• The home position sensor does not turn OFF after generating the motor drive signals for 2560 pulses.
E531	• Stapler unit swing motor (fails to rotate)	• The stapler unit swing motor sensor does not turn OFF within 500 ms after the motor drive signal has been generated. • The sensor does not turn ON within 1000 ms after the stapler unit swing sensor has turned OFF.
E540	• Bin shift motor (fails to rotate)	• The lead cam home position sensor does not turn OFF within 2000 ms after the motor drive signal has been generated. • The lead cam home position sensor does not turn ON within 2000 ms after the lead cam home position sensor has turned OFF.
E541	• Bin motor (faulty) • Lead cam drive gear (displacement)	• The lead cam position sensor does not turn ON within 10 sec after the lead cam position sensor has turned OFF.

COPYRIGHT © 1998 CANON INC.
CANON NP6621 REV.0 FEB. 1998 PRINTED IN JAPAN (IMPRIME AU JAPON)

VIII. STANDARDS AND ADJUSTMENTS

A. Electrical

1 Adjustment after Replacing PCBs

You must perform the following adjustments whenever you have replaced the following PCBs:

a. DC Controller PCB

1) Start service mode (adjustment mode [3]), and enter the settings indicated on the Service Mode label attached behind the front door.
2) Perform the multifeeder paper width sensor adjustment.
3) Perform scanning lamp intensity adjustment.
4) Perform AE adjustment.

As necessary, change the settings of service mode and user mode.

Caution:

If you changed any of the settings indicated in the Service Mode label, be sure to record the new settings on the label.

b. Composite Power Supply PCB

1) Select service mode No. 315 through No. 318 (adjustment mode [3]), and enter the settings indicated on the label attached to the composite power supply PCB.

Be sure to record any new settings in the Service Mode label.

c. AE Sensor PCB

1) Perform AE adjustment.

Caution:

If you changed any of the settings indicated in the Service Mode label, be sure to record the new settings on the label.

d. Light Adjustment Sensor PCB

1) Perform scanning lamp intensity adjustment.
2) Perform AE adjustment.

Caution:

If you changed any of the settings indicated in the Service Mode label, be sure to record the new settings on the label.

2 Adjusting the Scanning Lamp Intensity

Select service mode No. 407.

1) Place the Test Sheet NA3 on the copyboard, and close the copyboard cover.
2) Turn OFF AE, and make copies in continuous mode at copy density 5 and VR850 (DC bias) at center.
3) Press the zoom + keys or zoom - key so that the optimum image is obtained.
   - If the image is too light, press the zoom + key.
   - If the image is too dark, press the zoom - key.

Reference:

1. What is referred to as optimum image is an image in which gray scale No. 8 on the copy corresponds to gray scale No. 4 through No. 7 on the Test sheet while the copy is free of fogging.
2. Turning the VR excessively can cause E220 to be displayed. If this is the case, turn the VR 301 to the center position, turn OFF/ON the power, and make adjustments once again.

Caution:

After making the adjustment, be sure to perform AE adjustment.

3 AE Adjustment

Perform AE adjustment using the following three service modes:

① AE Basic Adjustment
- No. 410 scanner forward stop
- No. 408 scanning lamp ON check
- No. 208 AE sensor voltage display
- No. 301 AE scan lamp intensity automatic adjustment

② No. 302 AE mode copy density (developing bias) reference adjustment

③ No. 303 AE mode copy density (developing bias) slope adjustment

If the copy density is not optimum after performing AE basic adjustment ① No. 410, No. 408, No. 208, and No. 301, try ② No. 302 and ③ No. 303 in sequence.

COPYRIGHT © 1998 CANON INC.
CANON NP6621 REV.0 FEB. 1998 PRINTED IN JAPAN (IMPRIME AU JAPON)

If you have replaced the AE sensor, scanning lamp, or DC controller or if you performed scanning lamp intensity adjustment (VR301), you must perform

- AE basic adjustment,
- No. 410 scanning forward stop,
- No. 408 scanning lamp ON check,
- No. 208 AE sensor voltage indication, and
- No. 301 AE scanning lamp intensity automatic adjustment.

Go through the steps that follow when making these adjustments. Table 3-801 gives a list of three service modes excluding No. 408 scanning lamp ON check and No. 208 AE sensor voltage indication.

a. AE Basic Adjustment (No. 410, No. 408, No. 208, No. 301)

In this adjustment, the intensity of the scanning lamp is read by the lamp intensity sensor, and the voltage of the AE sensor unit is adjusted using VR860/851 on the service switch PCB.

After making the adjustment, you must perform AE scan lamp intensity automatic adjustment.

1) Place the Test Sheet NA-3 on the copyboard, and close the copyboard.
   Press the service mode switch (SW850) to start service mode.
2) Press '4' on the numeric keypad, and press the AE key.
   - The display indicates '401'.
3) Press '410' on the numeric keypad.
   - The machine indicates '410'.
4) Press the Start key once.
   - The scanner moves forward.

Caution:
Each press on the Start key causes the scanner to move forward. Be sure not to press it more than once.

5) Press '408' on the numeric keypad, and press the Start key.
   - The display indicates 'ON', and the scanning lamp turns ON about 1.5 sec later.
6) Press the Clear key twice.
   - The display indicates '4'.
7) Press '2' on the numeric keypad, and press the AE key.
   - The display indicates '201'.
8) Press '208' on the numeric keypad.
   - The machine indicates '208'.
9) Press the Start key.
   - The display indicates '0' through '255'.
10) Adjust VR860/851 on the Service switch PCB so that the display indicates '100' through '105'.
11) Turn OFF/ON the power switch.
   - This turns OFF the scanning lamp and turns ON the power once again.
12) Press the service mode switch.
   - The machine starts service mode and indicates '1'.
13) Press '3' on the numeric keypad, and press the AE key.
   - The display indicates '301'.
14) Press the Start key.

Caution:
Wait until initial rotation ends.

   - After initial rotation, the AE indicator starts to flash.
15) Press the AE key so that the following takes place to perform automatic adjustment.
   - The AE indicator stops flashing and remains ON.
   - The scanner moves to the AE measurement point.
   - When the intensity has stabilized, the reading of the AE sensor is stored.
   - The lamp turns OFF, and the scanner returns.
16) After the above ends, press the Clear key twice.
   - The display indicates '3'.
17) Press '1' on the numeric keypad, and press the AE key.
   - The display indicates '1'.
18) Press '116' on the numeric keypad, and press the Start key.
   - Make sure that the display indicates '68' through '72'. If not, start with step 2) of operation/inspection mode and make adjustments once again.

b. AE Mode Copy Density (developing bias) Reference Point Adjustment (No. 302)

1) If the display does not indicate '300's', start adjustment mode of service mode as you would for No. 301.
2) Press '2' on the numeric keypad.
   - The display indicates '302'.
3) Press the Start key.
   - The display indicates the current setting.
4) Change the setting using the numeric keypad, and press the AE key.
   - To increase the setting, press the AE key.

COPYRIGHT © 1998 CANON INC.
CANON NP6621 REV.0 FEB. 1998 PRINTED IN JAPAN (IMPRIME AU JAPON)

- default: 0
  settings: –26 to +26
- If the value is negative, '%' is turned ON. To enter a negative value, press the '%' key before entering the value.
- The indication stops flashing and remains ON when the value has been stored.

5) Record the new adjustment value in the Service Mode label.
6) Press the Clear key.
   - The machine returns to item selection and indicates '302'.
   - As necessary, perform No. 303.

c. AE Mode Copy Density (developing bias) Slope Adjustment (No. 303)

1) If the display does not indicate '300's', start adjustment mode in service mode as you would for No. 301.
2) Press '3' on the numeric keypad.
   - The display indicates '303'.
3) Press the Start key.
   - The display indicates the current setting.
4) Change the value using numeric keypad, and press the AE key.
   - A higher setting produces lighter AE copies.
   - default: 0
     settings: –26 to +26
   - If the value is negative, '%' is turned ON. To enter a negative value, press the '%' key before entering the value.
   - The indication stops flashing and remains ON when the value has been stored.
5) Record any new settings in the Service Mode label.
6) Press the Reset key.
   - The machine ends service mode.

COPYRIGHT © 1998 CANON INC.
CANON NP6621 REV.0 FEB. 1998 PRINTED IN JAPAN (IMPRIME AU JAPON)

Item	Function	Description	Remarks
No. 301	Automatic lamp intensity adjustment for AE scans	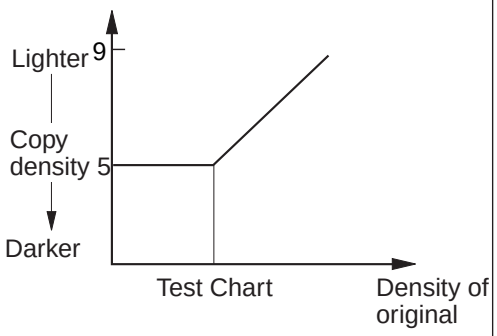	The lamp intensity is automatically adjusted so that the copies of the Test Chart will be made at density 5.
No. 302	Copy density (development bias) reference point adjustment for AE mode	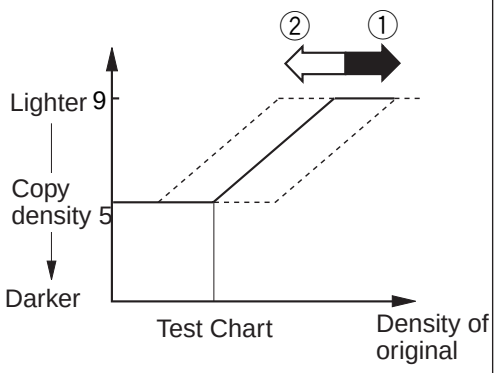	① A lower setting in service mode causes the AE copies to be darker. ② A higher settings in service mode causes the AE copies to be lighter. default: 0 range: –26 to +26 (see Note.)
No. 303	Copy density (development bias) slope adjustment for AE mode	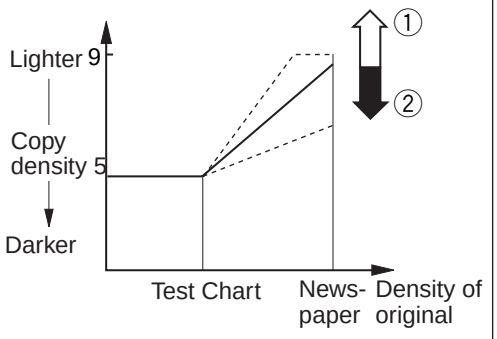	① A higher setting in service mode causes copies of a newspaper to be lighter. ② A lower setting in service mode causes copies of a newspaper to be darker. default: 0 range: –26 to +26

Table 3-801

Note: 1. After Adjustment, with test chart NA-3, using AE mode, density adjustment should show '5'.
2. In non-AE mode, using NA-3, density '5' must be appropriate (adjusted with VR850).

COPYRIGHT © 1998 CANON INC.
CANON NP6621 REV.0 FEB. 1998 PRINTED IN JAPAN (IMPRIME AU JAPON)

4 Multifeeder Paper Width Sensor Adjustment

In this adjustment, you will be storing the characteristics of the multifeeder paper width sensor using service mode No. 501.

Perform the adjustment if you have replaced the sensor or if the machine wrongly identifies paper sizes.

1) Open the front door, and insert the door switch actuator into the door switch.
2) Press the service mode switch (SW850) with a hex key.
   - The machine starts service mode and indicates '1'.
3) Press '5' on the numeric keypad.
   - The display indicates '5'.
4) Press the AE key.
   - The machine starts machine settings mode and indicates '501'.
5) Press the Start key.
   - The display indicates 'A3'.
6) Select the appropriate paper size (except CLR). (A press on the numeric keypad brings out a list shown in Table 3-802.)
   - If you select a size not stored, the display will start to flash.
   - If you press the Start key when 'CLR' is indicated, all stored settings will be cleared and returned to default settings.
7) Adjust the guide of the multifeeder to suit the size you are setting.
   - Make sure you feel a click when positioning the guide.
8) Press the AE key.
   - When the setting has been stored, the display stops flashing and remains ON.
9) Press the Reset key.
   - The machine ends service mode.

Numeric keypad	Display	Remarks
1	A3	A3
2	Ldr	Ledger
3	b4	B4
4	LGL	Legal
5	A4r	A4R
6	b5r	B5R
7	A5r	A5R
8	Sr	Statement R
9	JPC	Japanese governmental postcard (100 wide)
0	CLr	Clear (clears stored settings)

Table 3-802

Reference:

1. If you are storing the size under No. 9 (JPC), adjust the guides so that they are closest.
2. At time of shipment from the factory, A3, A4R and JPC (North America model: 11×17, LGL and Sr) are pre-stored, and the characteristic curves of these three sizes are computed and the results are used for identification of paper sizes. If you enter a size other than these three in the field, the machine will compute a characteristic curve with the addition of the data obtained from the new size. For this reason, it is best to store the sizes of the papers the user tends to use frequently.

COPYRIGHT © 1998 CANON INC.
CANON NP6621 REV.0 FEB. 1998 PRINTED IN JAPAN (IMPRIME AU JAPON)

5 Setting the Paper Size for the Universal Cassette

You will be using service mode to set the paper size that is effective when the paper size lever of the cassette is positioned for the universal cassette.

1) Open the front door, and insert the door switch actuator into the door switch.
2) Press the service mode switch (SW850) with a hex key.
   - The machine starts service mode and indicates '1'.
3) Press '5' on the numeric keypad.
   - The display indicates '5'.
4) Press the AE key.
   - The machine starts machine settings mode and indicates '501'.
5) Using the numeric keypad, select the appropriate cassette holder.
   For example, select cassette 1 by pressing '0' and '5'.
6) Press the Start key.
   - The display indicates the number corresponding to the universal cassette currently set.
7) According to Table 3-803, select the size you want to store using the numeric keypad.
8) Press the AE key to store the setting.
9) Press the Reset key.
   - The machine ends service mode.

Cassette holder	Service mode No.
Cassette 1	No. 505
Cassette 2	No. 509
Cassette 3	No. 510
Cassette 4	No. 511
Cassette 5	No. 512

Table 3-803

Numeric keypad	Paper	Size (mm)
0	Bolivian OFFICIO	355.0 × 216.0
1	Argentine OFFICIO	340.0 × 220.0
2	Argentine LEGAL	340.0 × 220.0
3	Australian FOOLSCAP	337.0 × 206.0
4	FOOLSCAP	330.2 × 215.9
5	FOLIO	330.0 × 210.0
6	Government LEGAL	330.2 × 203.2
7	Ecuadorian OFFICIO	320.0 × 220.0
8	OFFICIO	317.0 × 216.0
9	Argentine LETTER-R	280.0 × 220.0
10	Korean Government-R	268.0 × 190.0
11	Government LETTER-R	266.7 × 203.2
12	Argentine LETTER	220.0 × 280.0
13	Government LETTER	203.2 × 266.7
14	Korean Government	190.0 × 268.0

Table 3-804

COPYRIGHT © 1998 CANON INC.
CANON NP6621 REV.0 FEB. 1998 PRINTED IN JAPAN (IMPRIME AU JAPON)

6 Initializing the Back-Up RAM

1) Open the front door, and insert the door switch actuator into the door switch.
2) Press the service mode switch (SW850) with a hex key.
   - The machine enters service mode and indicates '1'.
3) Press '4' on the numeric keypad.
   - The display indicates '4'.
4) Press the AE key.
   - The machine starts operation/inspection mode and indicates '401'.
5) Press '5' and '0' on the numeric keypad.
   - The display indicates '450'.
6) Press the Start key.
   - The display changes to 'EE'.
8) Press the Start key.
   - The display returns to 'EE'.
9) Turn OFF/ON the power switch.
   - The back-up RAM is initialized and set to default settings.

Reference:

To stop initializing the RAM, press the Clear key and then the Reset key.

To stop it after performing step 8), press the start key, and press the Start key after the display has indicated 'nop'.

7 Checking the Photointerrupters

The machine's photointerrupters may be checked using a conventional meter or in service mode.

① Using a Meter
   1) Set the meter to the 12VDC range.
   2) Connect the - probe of the tester to J301-4 (GND) of the DC controller.
   3) Make checks as indicated.
      1: 5 V
      0: 0 V

② Using Service Mode
   1) Open the front door, and insert the door switch actuator into the door switch.
   2) Press the service mode switch (SW850) with a hex key.
   3) Press '2' on the numeric keypad.
      - The display indicates '2'.
   4) Press the AE key.
      - The machine enters I/O display mode and indicates '201'.
   5) Enter the appropriate number using the numeric key, and press the Start key.
      - Check each photointerrupter with reference to the copy count indicator.

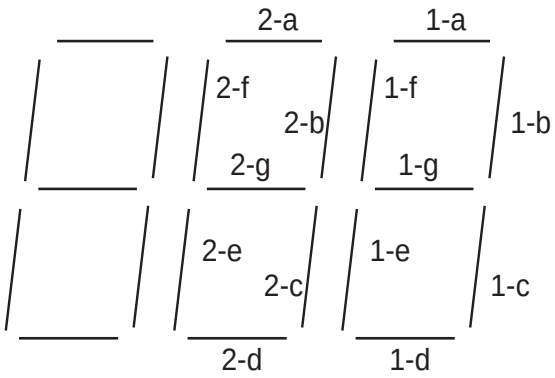

Figure 3-801

COPYRIGHT © 1998 CANON INC.
CANON NP6621 REV.0 FEB. 1998 PRINTED IN JAPAN (IMPRIME AU JAPON)

COPYRIGHT © 1998 CANON INC.
CANON NP6621 REV.0 FEB. 1998 PRINTED IN JAPAN (IMPRIME AU JAPON)

CHAPTER 4
MECHANICAL SYSTEM

1. ⚠ **Before disassembly or reassembly work, disconnect the heating (if a heater is installed) and main body power cord(s).**
2. **Group the screws by type (length and diameter) and location.**
3. **The fixing screw for the grounding wire and varistors is fitted with a washer to ensure electric continuity; be sure to use the washer for reassembly.**
4. **If possible, avoid operating the machine with any of its parts removed.**
5. **Unless otherwise noted, reassembly is the reverse of disassembly.**

I. EXTERNALS 4-1
A. External Covers 4-1
B. Control Panel 4-2
C. Removing the Display Panel 4-2
D. Fan 4-3
E. Counter 4-4
II. DRIVE SYSTEM 4-5
A. Scanner Drive System 4-5
B. Lens Drive Assembly 4-10
C. Main Motor 4-14
III. PICK-UP/FEEDING SYSTEM 4-15
A. Pick-Up Assembly 4-15
B. Multifeeder Assembly 4-17
C. Registration Roller Assembly 4-20
D. Feeding Assembly 4-22
E. Delivery Assembly 4-22
F. Duplexing Assembly 4-23
G. Cassette Unit 4-24
H. Paper Deck Pedestal-K1 4-27
IV. EXPOSURE SYSTEM 4-34
A. Illuminating Assembly 4-34
V. CHARGING SYSTEM 4-38
A. Drum Unit 4-38
B. Primary Charging Assembly 4-39
C. Transfer Charging Assembly 4-40
D. Drum Heater 4-41
VI. DEVELOPING SYSTEM 4-42
VII. FIXING SYSTEM 4-45
VIII. ELECTRICAL 4-50
A. DC Controller PCB 4-50
B. Composite Power Supply PCB 4-50
C. AE Sensor PCB 4-51

COPYRIGHT © 1998 CANON INC. CANON NP6621 REV.0 FEB. 1998 PRINTED IN JAPAN (IMPRIME AU JAPON)

COPYRIGHT © 1998 CANON INC. CANON NP6621 REV.0 FEB. 1998 PRINTED IN JAPAN (IMPRIME AU JAPON)

I. EXTERNALS

A. External Covers

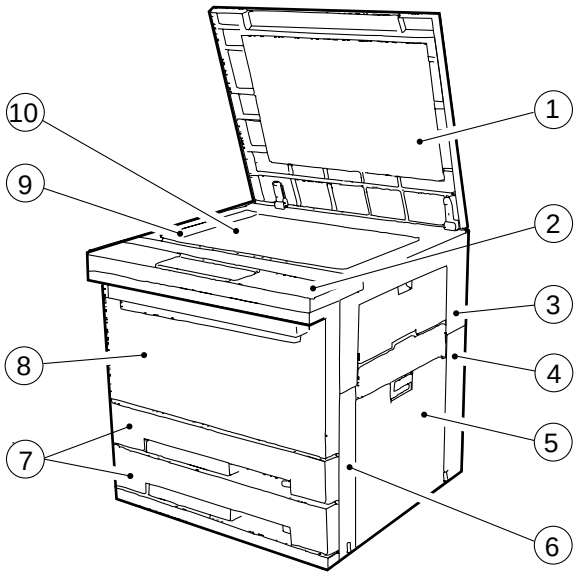

① Copyboard cover
② Control panel
③ Right cover
④ Rear right cover
⑤ Right door
⑥ Front right cover
⑦ Cassette
⑧ Front door
⑨ Size index
⑩ Copyboard glass

Figure 4-101

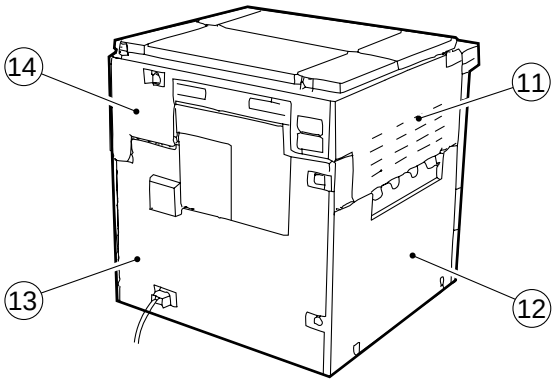

⑪ Left cover
⑫ Lower left cover
⑬ Lower rear cover
⑭ Upper rear cover

Figure 4-102

Note:
Remove the covers as necessary to clean, inspect, or repair the inside of the machine. Those covers that may be detached by merely removing their mounting screws are left out of the discussions.

When installing the copyboard glass, be sure to butt it against the vertical size plate so that no gap is left for intrusion of foreign matter.

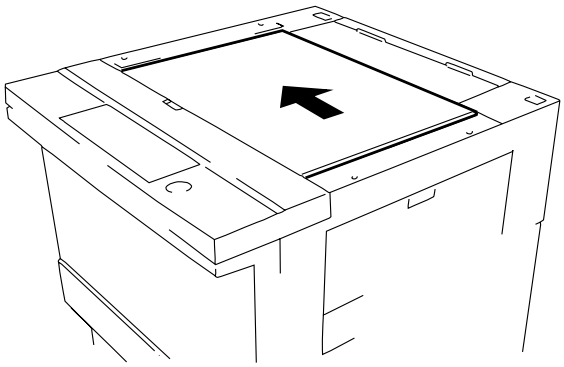

Figure 4-103

COPYRIGHT © 1998 CANON INC.

B. Control Panel

1. Removing the Control Panel

1) Remove the copyboard glass.
2) Remove the upper left cover.
3) Open the front door.
4) Pull the open/close lever, and open the body.
5) Remove the right cover.
6) Remove the left cover.
7) Remove the four screws ①, and remove the inside cover ②.

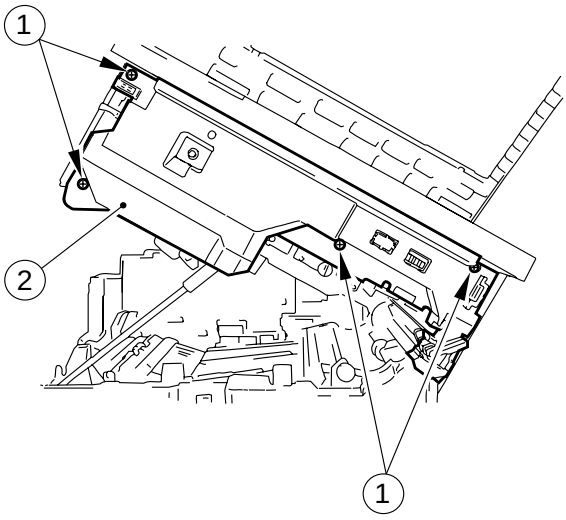

Figure 4-104

8) Remove the screw ③, and disconnect the four connectors ④ (J801, J802, J803, J804); then, remove the control panel ⑤.

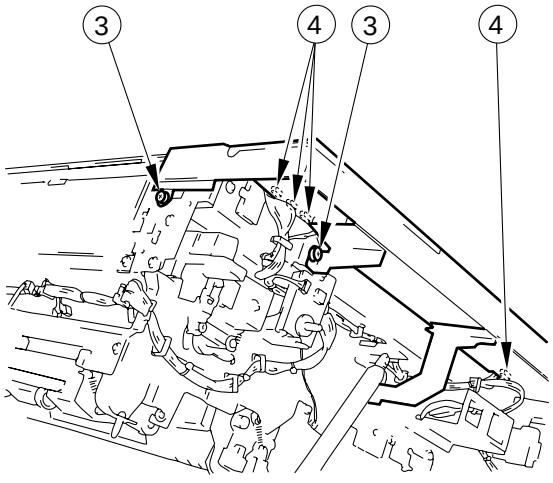

Figure 4-105

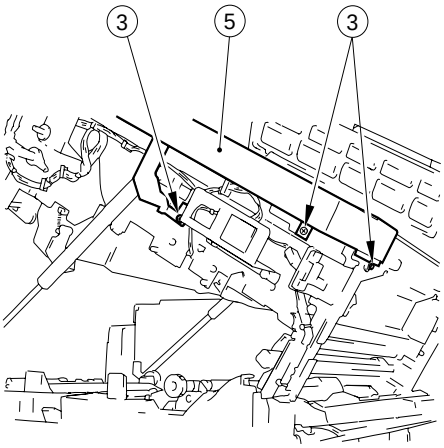

Figure 4-106

C. Removing the Display Panel

1) Remove the display panel ① using a pen or the like.

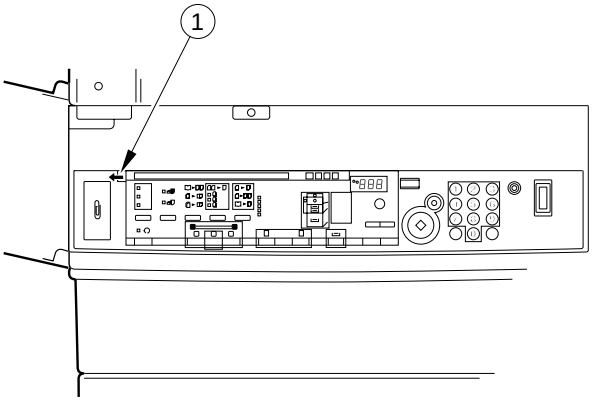

Figure 4-107

COPYRIGHT © 1998 CANON INC.
CANON NP6621 REV.0 FEB. 1998 PRINTED IN JAPAN (IMPRIME AU JAPON)

D. Fan

1. Removing the Exhaust Fan

1) Open the front door.
2) Pull the open/close door, and open the body.
3) Remove the relay connector ①.

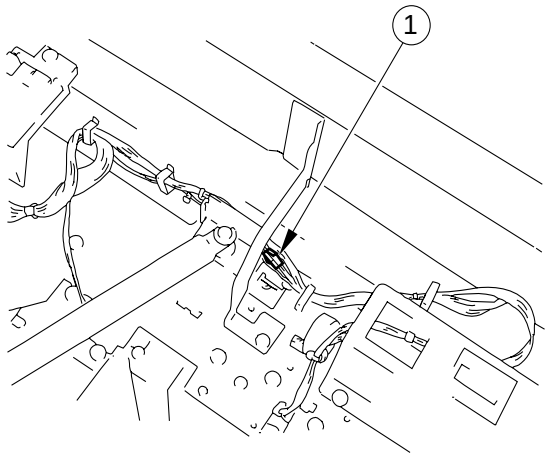

Figure 4-108

4) Remove the screw ② from the rear and the two screws from the front ③.

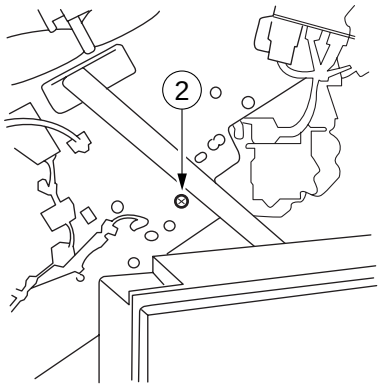

Figure 4-109

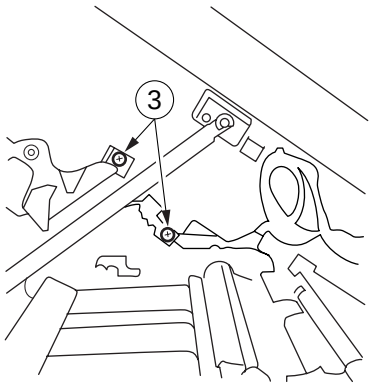

Figure 4-110

5) Holding the exhaust fan assembly ④, pull it off to the front.

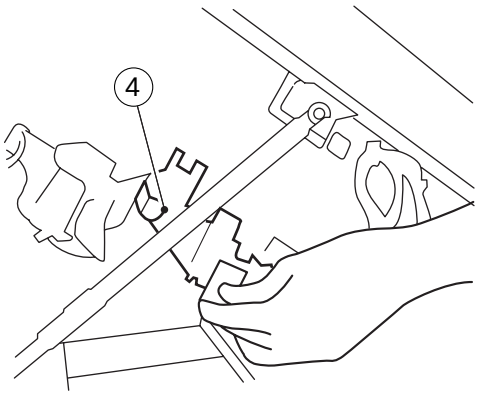

Figure 4-111

6) Remove the four screws ⑤, and remove the air conveyor ⑥,.then remove the fan ⑦ together with the two rubbers ⑧.

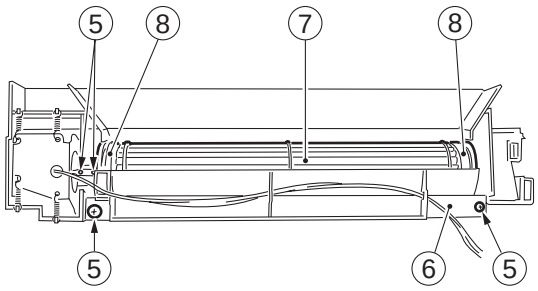

Figure 4-112

2. Removing the Scanner cooling fan

1) Open the front door.
2) Pull the open/close door, and open the body.
3) Remove the rear cover.
4) Remove the four screws ①, and remove the scanner cooling fan ②.

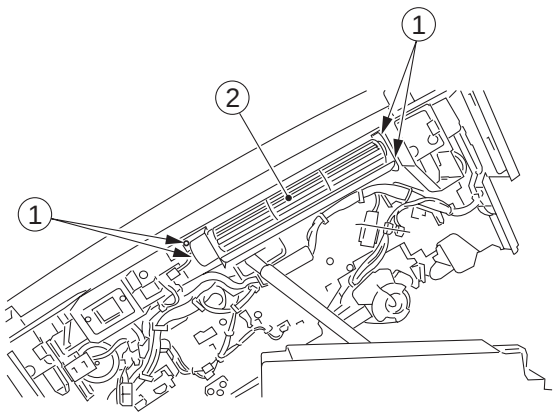

Figure 4-113

COPYRIGHT © 1998 CANON INC.
CANON NP6621 REV.0 FEB. 1998 PRINTED IN JAPAN (IMPRIME AU JAPON)

E. Counter*

* This may not be available for sale in same areas.

1. Installing the Option Counter (CNT2)

1) Open the top body.
2) Remove the inside upper cover.
3) Remove the two screws ②, and disconnect the connector ③; then, remove the counter mount ①.

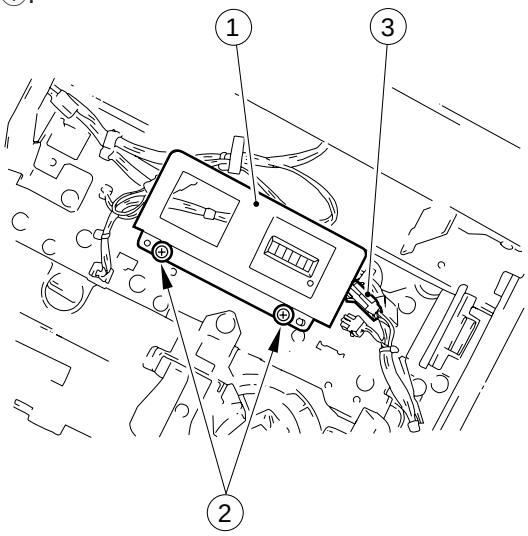

Figure 4-114

4) Put the option counter ④ in the counter mount.

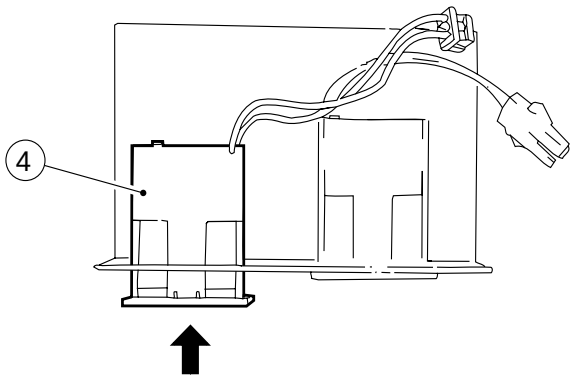

Figure 4-115

5) Install the counter mount to the copier with two screws.
6) Connect the two connectors ⑤ of the counter.

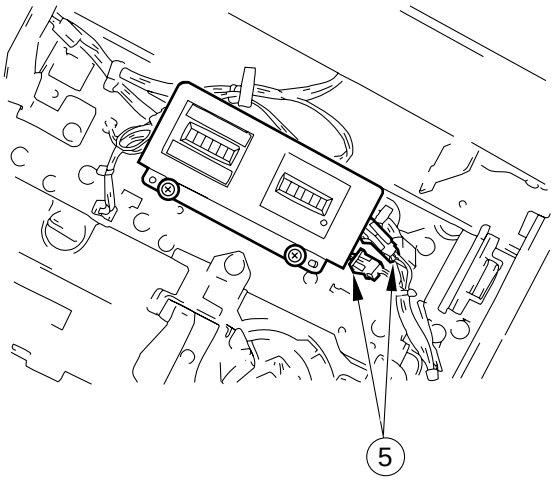

Figure 4-116

7) Set SW303 on the DC controller as indicated in Table 4-101.

SW303	Counter	Description
ON 2 1 OFF	Large size copy counter	SW303 settings determines how the option counter (CNT2) behaves.
ON 2 1 OFF	Duplexing unit counter	
ON 2 1 OFF	Small size copy counter	
ON 2 1 OFF	No counter	

Table 4-101

COPYRIGHT © 1998 CANON INC.
CANON NP6621 REV.0 FEB. 1998 PRINTED IN JAPAN (IMPRIME AU JAPON)

II. DRIVE SYSTEM

A. Scanner Drive System

1. Removing the Scanner Drive Motor

1) Remove the copy board glass.
2) Remove the spring ①, the E ring ②, the tensioner ③, and the belt ④.

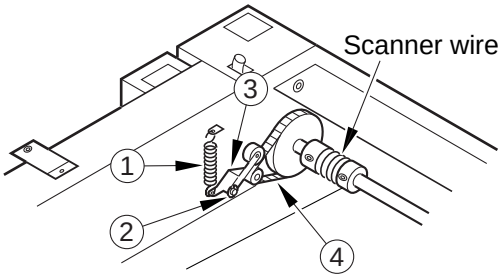

Figure 4-201

3) Remove the upper rear cover.
4) Disconnect the connector ⑤ of the motor, and remove the two screws ⑥.
5) Remove the spring ⑦ and the scanner drive motor ⑧.

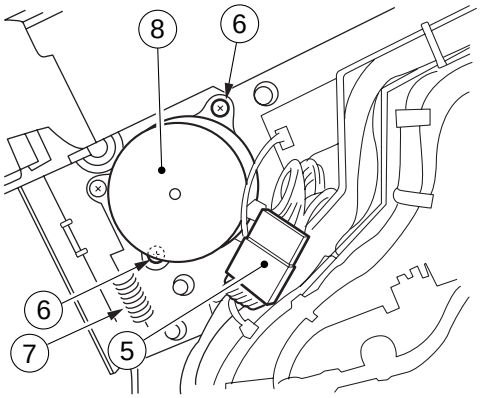

Figure 4-202

Caution:

When mounting the scanner driver motor, be sure to make the appropriate adjustments as follows:

1) Hook the spring ⑦ on the metal plate, and fix the scanner driver motor in place with screws ⑥; then, give the screws ⑥ counterclockwise half turn to free it.
2) Push the motor down, and then shift it to the left and right.
3) Where the motor stops, tighten the screws ⑥ (on the right and then left).
4) Fit the tensioner ③, and mount the spring ① and the E-ring ②.

2. Removing the Scanner Cable

1) Remove the copyboard cover, right cover, left cover, upper rear cover, and lower rear cover.
2) Remove the copyboard glass.
3) Remove the control panel.
4) Remove the copyboard cover support ①.

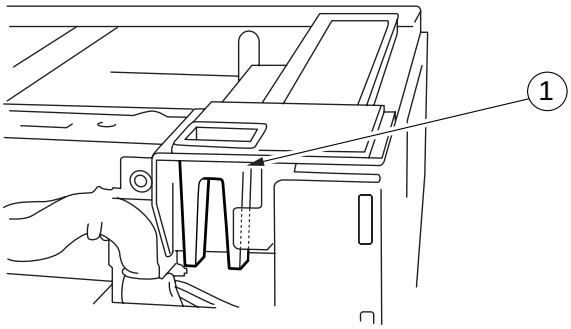

Figure 4-203

5) Remove the ten screws ②, and remove the upper left stay ③.

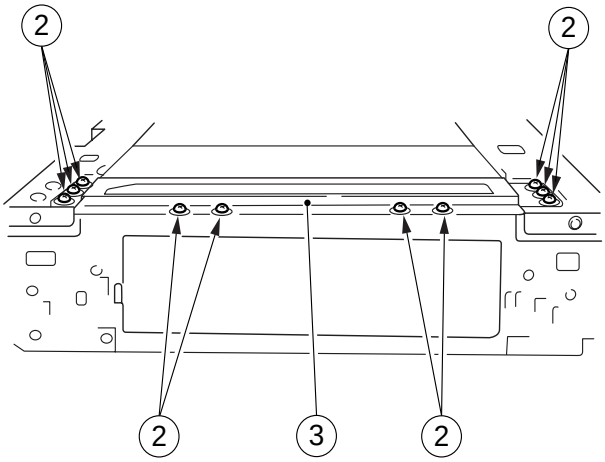

Figure 4-204

6) Fix the cable in place using cable clips (FY9-3010).



Figure 4-205

COPYRIGHT © 1998 CANON INC.
CANON NP6621 REV.0 FEB. 1998 PRINTED IN JAPAN (IMPRIME AU JAPON)

7) Loosen the two screws ④, and loosen the cable tension (both front and rear).

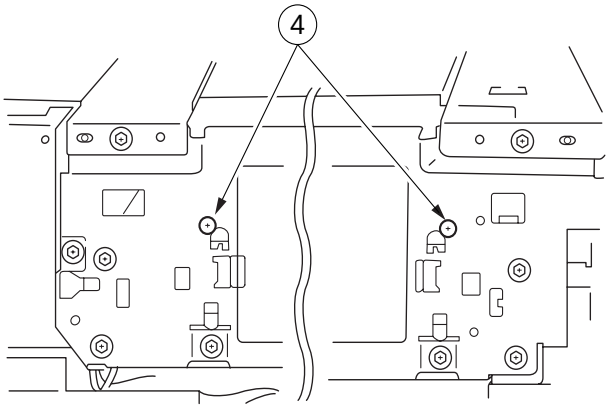

Figure 4-206

8) Move the No. 1 mirror mount in the forward direction, and match the angular hole in the front side panel and the cable fixing screw ⑤. Then, remove ⑤ to separate the No. 1 mirror mount and the scanner cable (both front and rear).

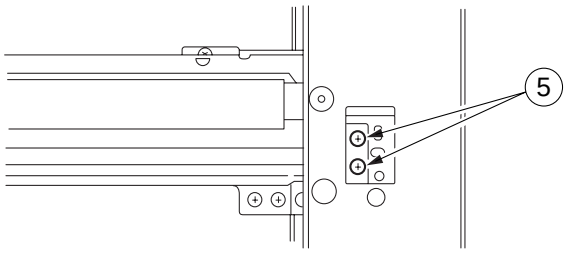

(front)

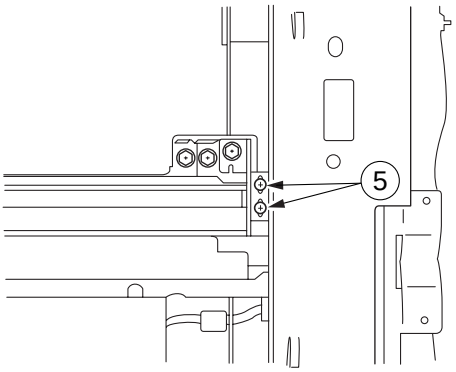

(rear)

Figure 4-207

9) Remove the pulley clip, and remove the scanner cable (both front and rear).

3. Assembling the Mirror Positioning Tool

1) Remove the screw from position B.

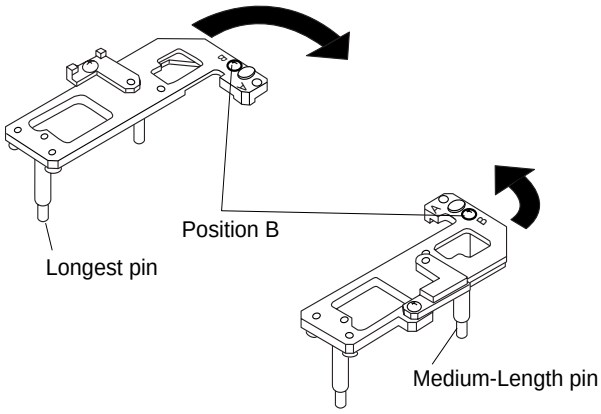

Figure 4-208

2) Put the screw removed in step 1) to position A; then, tighten it slightly.
3) Pull the arm out of the main frame, and extend it until it comes into contact with the stopper as indicated in Figure 4-209.
4) Tighten the screw.

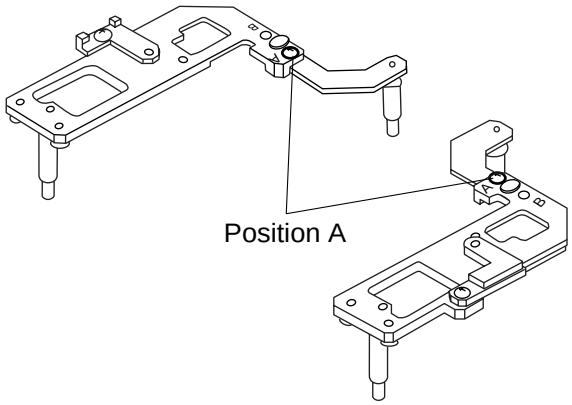

Figure 4-209

COPYRIGHT © 1998 CANON INC.
CANON NP6621 REV.0 FEB. 1998 PRINTED IN JAPAN (IMPRIME AU JAPON)

4. Routing the Scanner Cable

Caution:
You must keep the mirror positioning tool (FY9-3009) and the pulley clip (FY9-3010) near at hand when routing the scanner cable.
Assemble the mirror positioning tool according to “Assembling the Mirror Positioning Tool” in advance.

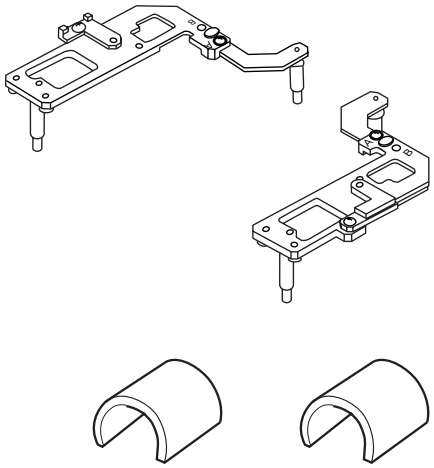

Figure 4-210

1) As in ①, put the steel ball into the hole in the pulley; then, wind the cable four times toward the flange and nine times in the opposite direction. Thereafter, fix the cable using the pulley clip.
2) As in ②, set the mirror positioning tool between the No. 1 mirror mount and the No. 2 mirror mount.
3) As in ③, loosen the screw on the mirror pulley mount, and temporarily fix it on the left stay.
4) As illustrated, route the scanning cable; hook ⑤ on the side plate, and hook ⑧ on the tension plate of the lens mount.
5) Tighten the screw loosened in ③ to fix it on the left stay.
6) As in ⑩, loosen the set screw once so that the tension on the scanner cable is even throughout; then, tighten the set screw.
7) As in ⑪, fix the No. 1 mirror mount and the scanner cable fixing in place.
8) As in ⑨, adjust the cable spring using a ruler so that its length is 34 ±1 mm.

COPYRIGHT © 1998 CANON INC.
CANON NP6621 REV.0 FEB. 1998 PRINTED IN JAPAN (IMPRIME AU JAPON)

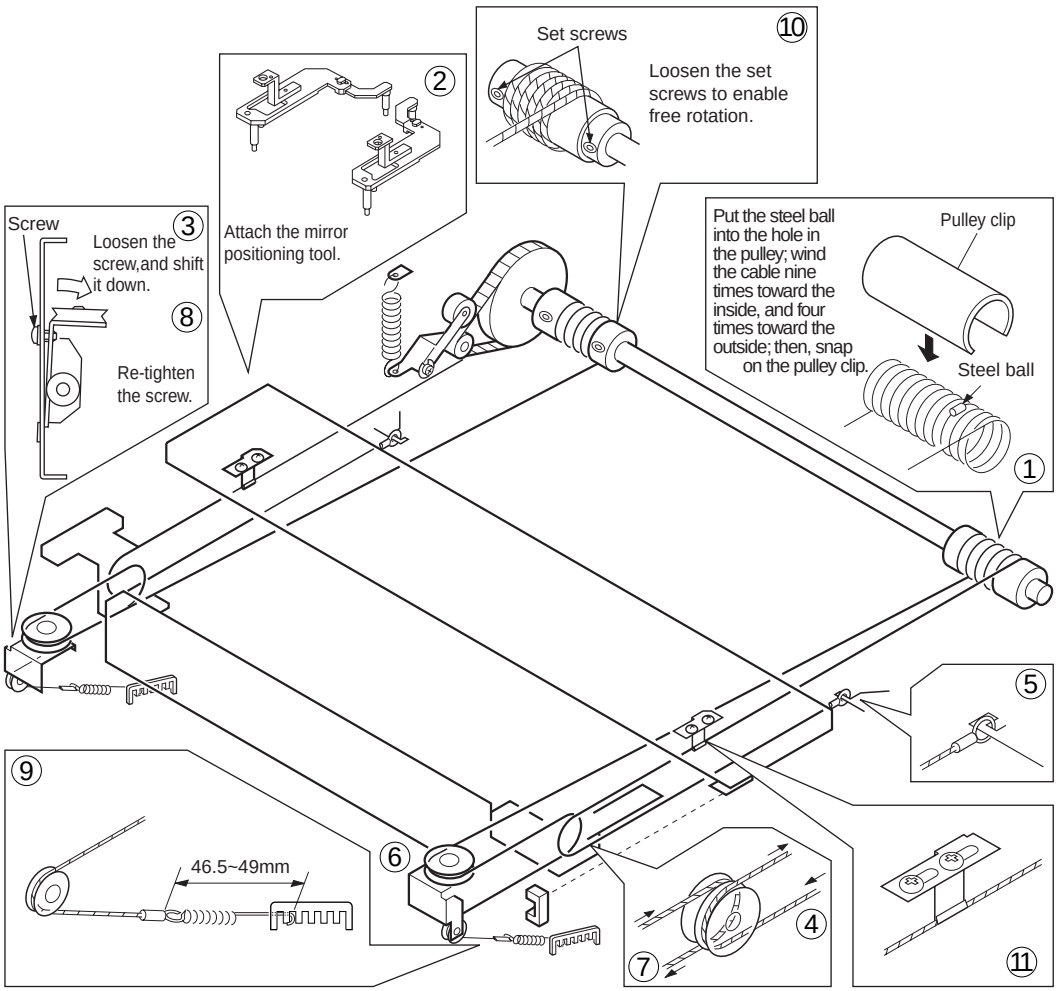

Figure 4-211

Caution:

When installing the cable spring, pay attention to the orientation of the spring. Be sure to install as indicated; if installed in the wrong direction, the hook tip of the spring can interfere with the cable.

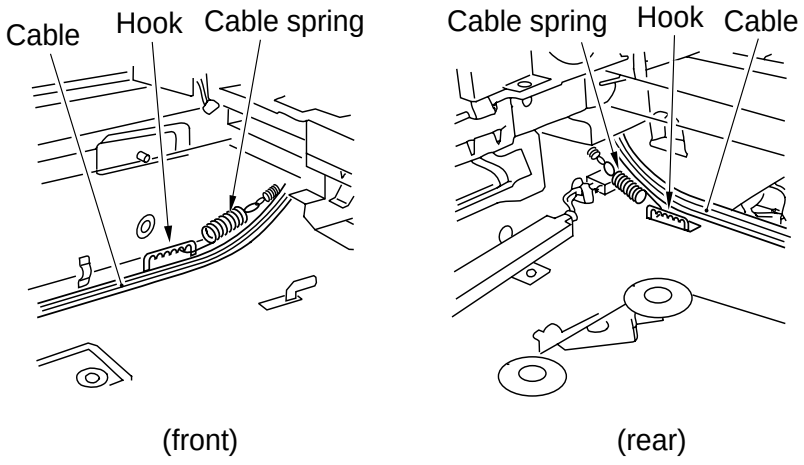

Figure 4-212

COPYRIGHT © 1998 CANON INC.
CANON NP6621 REV.0 FEB. 1998 PRINTED IN JAPAN (IMPRIME AU JAPON)

5. Adjusting the Mirror Position (optical length between No. 1 mirror and No. 2 and No. 3 mirrors)

1) Keep the mirror positioning tool near at hand. (See "Assembling the Mirror Positioning Tool.")
2) Move the No. 1 mirror mount in the forward direction, and match the angular hole in the front side plate and the cable fixing screw ①.

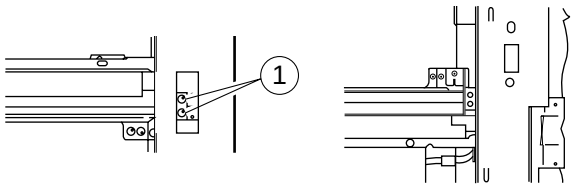

Figure 4-213

3) Loosen the set screw of the pulley.
4) Set the mirror positioning tool ② between the No. 1 mirror mount and the No. 2 mirror mount (both front and rear).

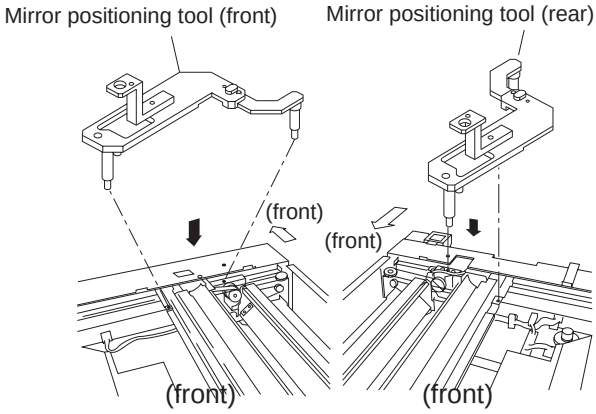

Figure 4-214

5) Install the metal fixing of the scanner cable to the No. 1 mirror mount with two screws ③ (both front and rear).

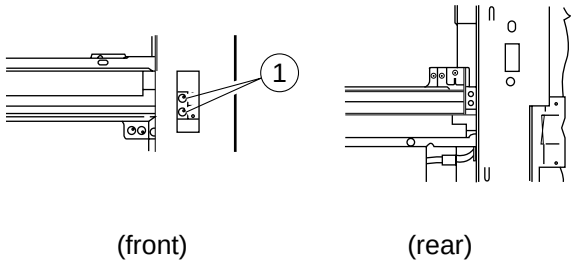

Figure 4-215

6) Tighten the set screw of the pulley.
7) Remove the tool (FY9-3009).

6. Cleaning the Scanner No. 6 Mirror

1) Open the front cover.
2) Operate the open/close lever to open the body.
3) Remove the dust-proofing glass ① and the dust-proofing mirror cover ②.

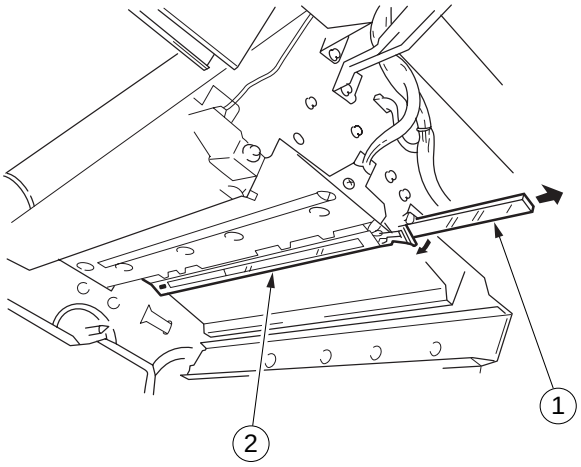

Figure 4-216

4) Using a blower brush or lint-free paper moistened with alcohol, clean the No. 6 mirror.

COPYRIGHT © 1998 CANON INC.

B. Lens Drive Assembly

1. Removing the Lens Drive Motor

1) Remove the upper rear cover and the right glass retainer.
2) Remove the copyboard glass.
3) Move the No. 1 mirror assembly ① to the left.
4) Remove the two screws ②, and remove the lens cover ③.

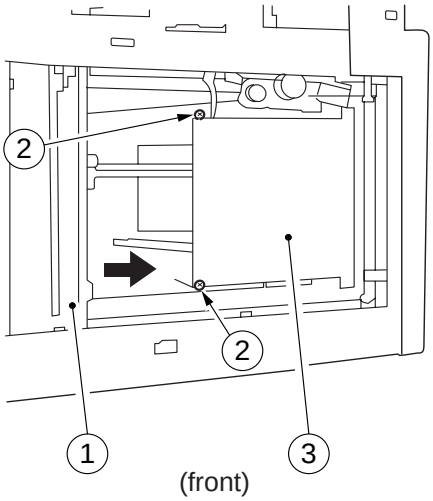

Figure 4-217

5) Loosen the tension on the spring ④, and remove the cable ⑤.

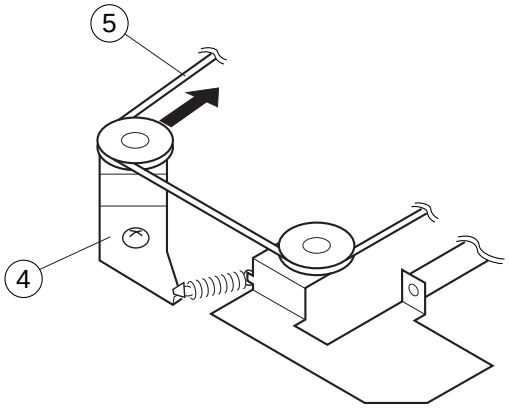

Figure 4-218

6) Disconnect the two connectors ⑥ from the rear.

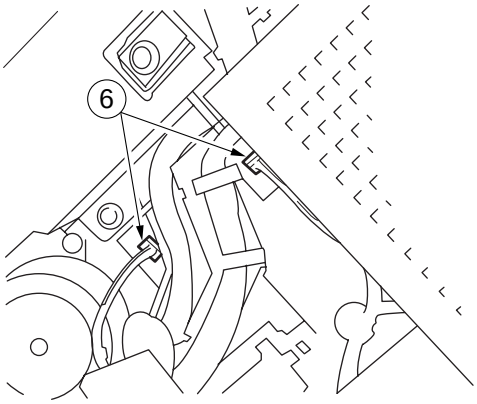

Figure 4-219

7) Remove the two screws ⑦, and remove the lens drive unit ⑧.

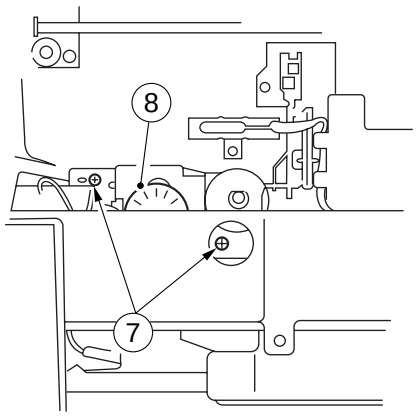

Figure 4-220

COPYRIGHT © 1998 CANON INC.
CANON NP6621 REV.0 FEB. 1998 PRINTED IN JAPAN (IMPRIME AU JAPON)

8) Remove the two screws ⑨, and disconnect the connector ⑩; then, remove the lens motor ⑪.

Caution:
When removing the screw ⑨, disconnect the connector ⑩ first to avoid contact between the harness and the driver.

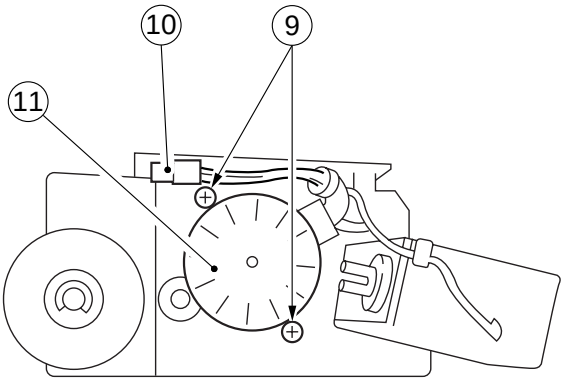

Figure 4-221

COPYRIGHT © 1998 CANON INC.

2. Routing the Lens Cable

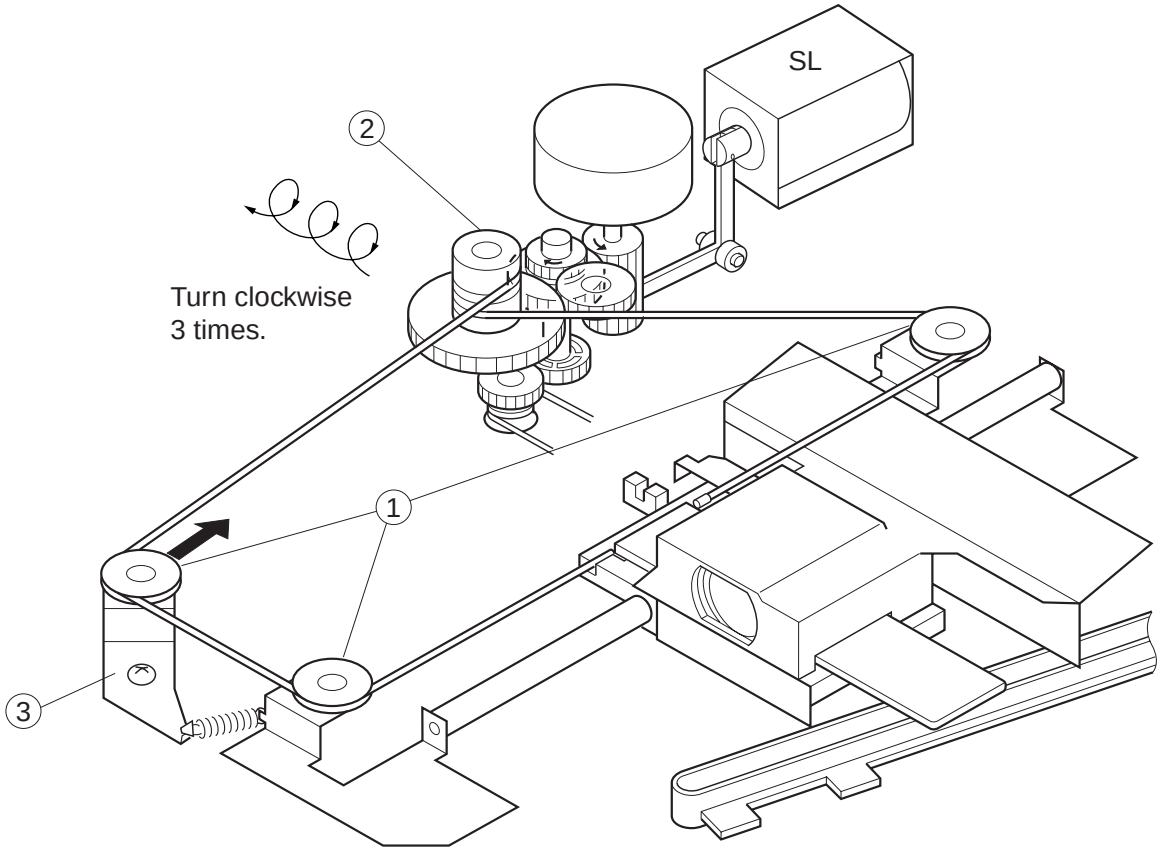

Figure 4-222 Lens Drive Assembly

1) Stop the lens cable at each pulley ①, and wind it around the pulley ②.
2) Move the tension pulley ③, and attach the cable.

COPYRIGHT © 1998 CANON INC.
CANON NP6621 REV.0 FEB. 1998 PRINTED IN JAPAN (IMPRIME AU JAPON)

3. Positioning the Change Solenoid

Loosen the two screws ⑤ to adjust so that the gear ④ moves through the arm ③ in the direction of *b* until it stops when the steel core ① of the solenoid is fully pushed in the direction of B, i.e., when the E-ring ② has come into contact with the solenoid.

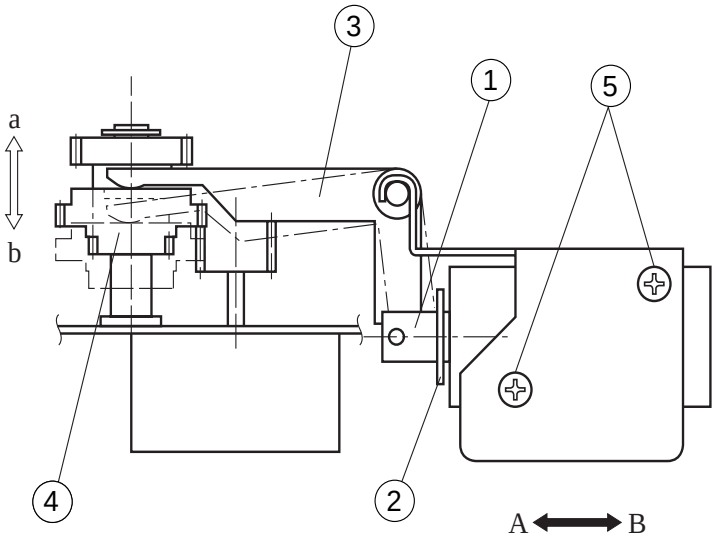

Figure 4-223

COPYRIGHT © 1998 CANON INC.

C. Main Motor

1. Removing the Main Motor Unit

1) Disconnect the two connectors ①, and remove the three mounting screws ②; then, remove the main motor unit ③.

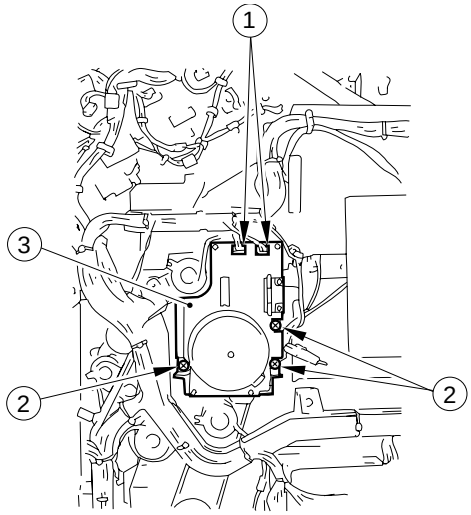

Figure 4-224

2. Routing the Drive Belt

Route the drive belt over the pulley and the tensioner as indicated.

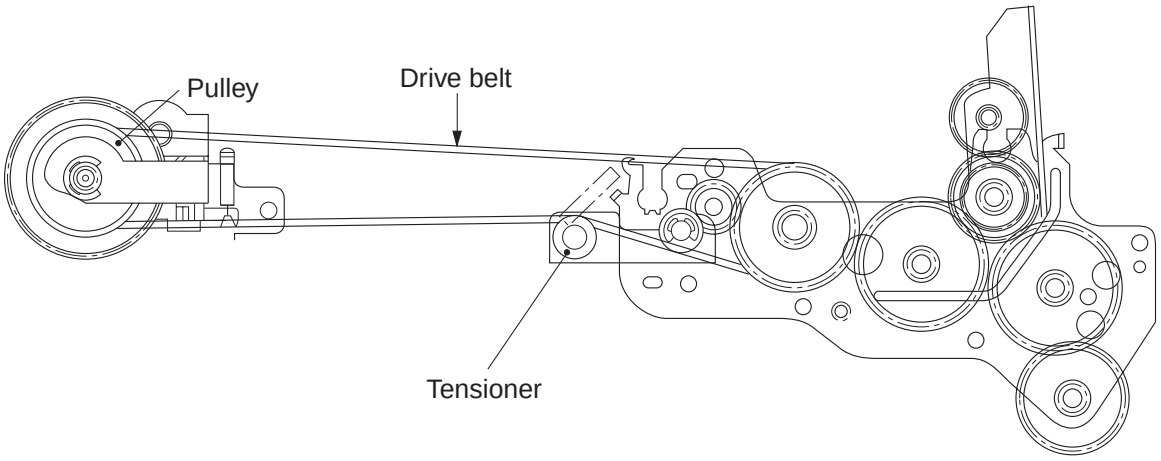

Figure 4-225

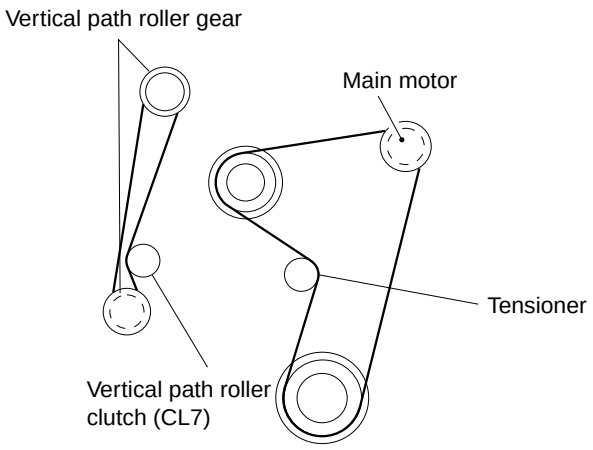

Figure 4-226

COPYRIGHT © 1998 CANON INC.
CANON NP6621 REV.0 FEB. 1998 PRINTED IN JAPAN (IMPRIME AU JAPON)

III. PICK-UP/FEEDING SYSTEM

A. Pick-Up Assembly

1. Removing the Pick-Up Roller Unit

1) Remove the lower rear cover.
2) Remove the grip ring ①, and remove the pick-up clutch ②.

Reference:
When removing the pick-up clutch, pull it off after matching the cut-off ③ in the gear of the clutch against the turn stop.

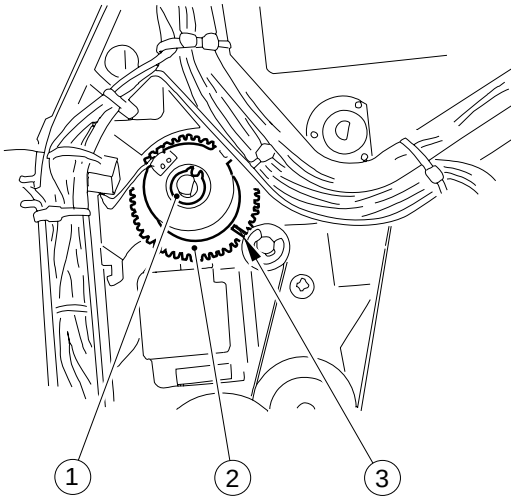

Figure 4-301

3) Pull out the cassettes.
4) Remove the E-ring ④ and the bushing ⑤; then, remove the pick-up roller unit ⑥.

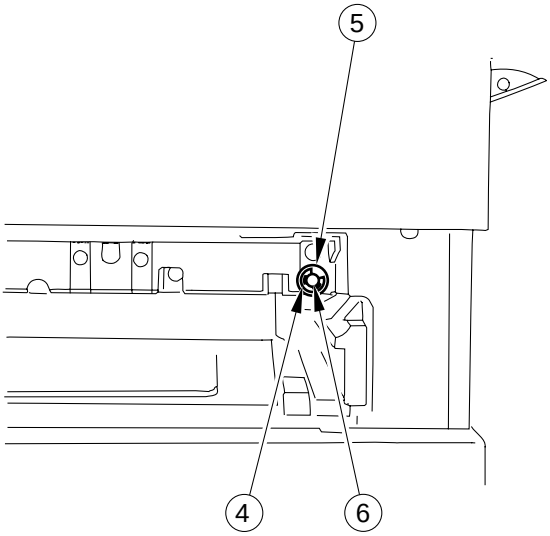

Figure 4-302

2. Removing the Pick-Up Roller

1) Remove the pick-up roller unit. (See "Removing the Pick-Up Roller Unit.")
2) Remove the E-ring ①, bushing ②, spacer 1 ③ and spacer 2 ④; then, remove the pick-up roller ⑤.

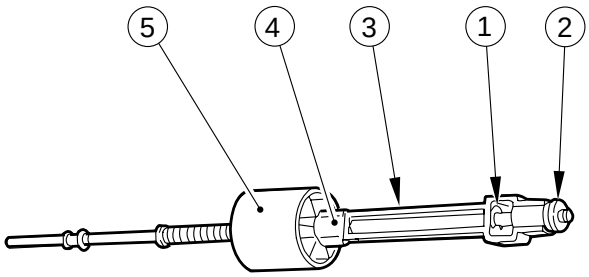

Figure 4-303

Caution:
Take care not to lose the pins from its front and rear.

3. Points to Note When Installing the Pick-Up Roller

Install the pick-up roller ① so that the marking ② shown in Figure 4-304 is at the rear. (However, the parallel pin will not fit in the groove.)

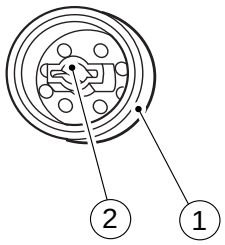

Figure 4-304

COPYRIGHT © 1998 CANON INC.

4. Removing the Separation Pad

1) Fully open the right door. (Remove the tension tape from the door.)

Caution:
Take care not to open the right door excessively.

2) Remove the front right cover.
3) Remove the vertical path guide ① (upper; four screws).

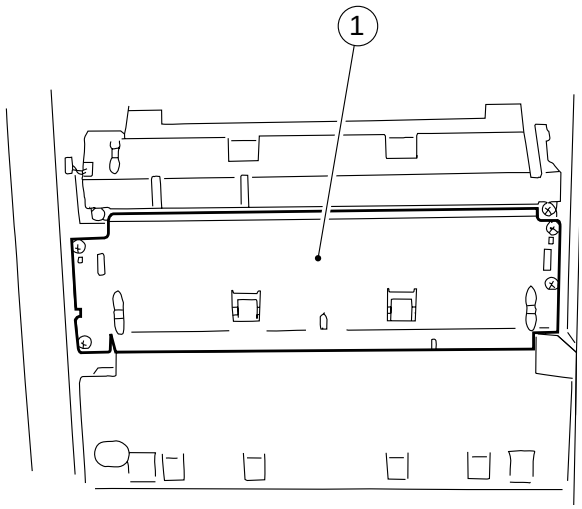

Figure 4-305

4) Remove the two screws ②, and remove the separation pad unit ③.

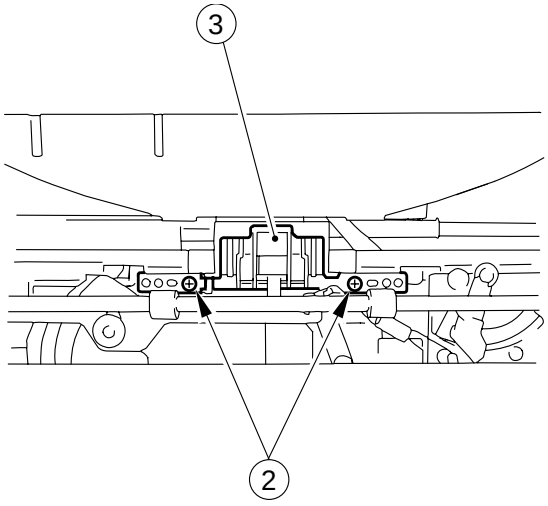

Figure 4-306

5. Adjusting the Left/Right Registration

Make adjustments so that the image position is as indicated in Figure 4-308 when the Test Sheet is copied in Direct.

a. Pick-Up from the Cassette

Turn the screw ① shown in Figure 4-307 to adjust the position of the cassette hook plate.

standards: 0 ± 1.5 mm

- CW direction: moves the paper in the direction of – in Figure 4-308
- CCW direction: moves the paper in the direction of + in Figure 4-308

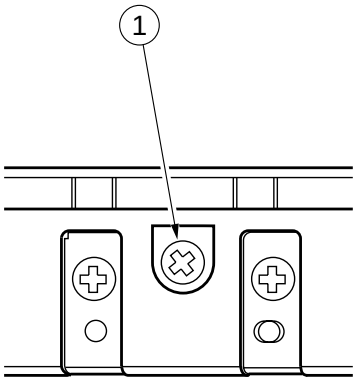

Figure 4-307

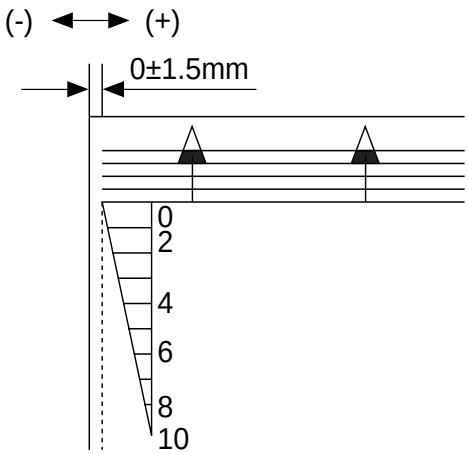

Figure 4-308

COPYRIGHT © 1998 CANON INC.
CANON NP6621 REV.0 FEB. 1998 PRINTED IN JAPAN (IMPRIME AU JAPON)

B. Multifeeder Assembly

1. Removing the Multifeeder Pick-up Roller Unit

1) Open the right door.
2) Remove the E-ring ①, and pull out the bushing ②.
3) Remove the two screws ③.

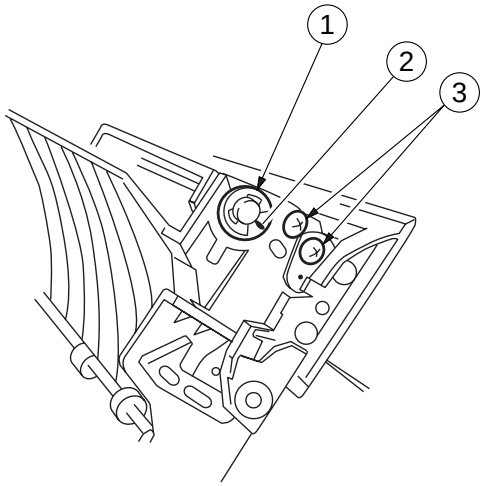

Figure 4-309

4) Remove the screw ④, and remove the roller cover ⑤.

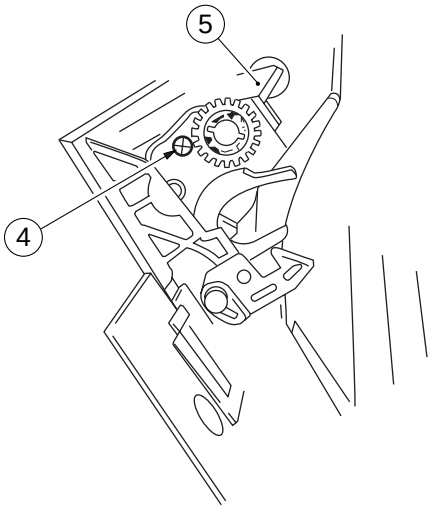

Figure 4-310

5) Shift the multifeeder pick-up roller unit ⑥ toward the rear, and remove it.

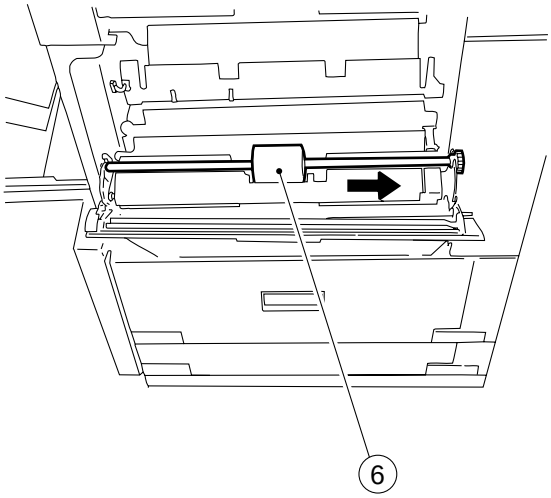

Figure 4-311

2. Removing the Multifeeder Pick-Up Roller

1) Remove the multifeeder pick-up roller unit. (See "Removing the Multifeeder Pick-Up Roller Unit.")
2) Remove the stop ring (plastic) ①, and remove the pick-up roller ② together with its collar.

Caution:
Take care not to lose the pin from the rear.

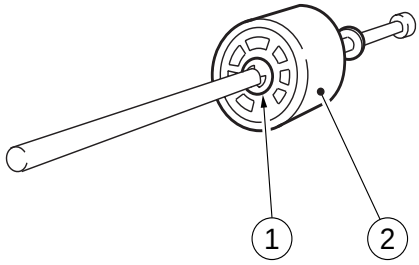

Figure 4-312

COPYRIGHT © 1998 CANON INC.

3. Points to Note When Installing the Multifeeder Pick-Up Roller

When installing the multifeeder pick-up roller ①, make sure that the side with a cross ② on the collar is toward the rear.

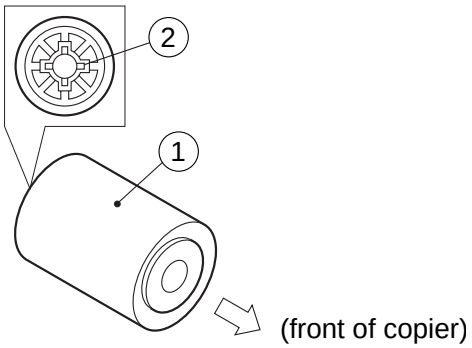

Figure 4-313

4. Removing the Separation Pad

1) Open the upper right door.
2) Remove the two screws ①, and remove the separation pad ②.

Caution:
Take care so that the spring on the separation pad assembly will not fly off.

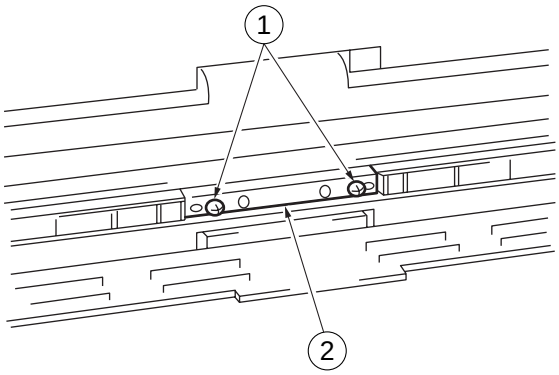

Figure 4-314

5. Removing the Multifeeder Spring Clutch

1) Remove the upper rear cover and the lower rear cover.
2) Remove the three screws ①, and shift the cord guide ②.

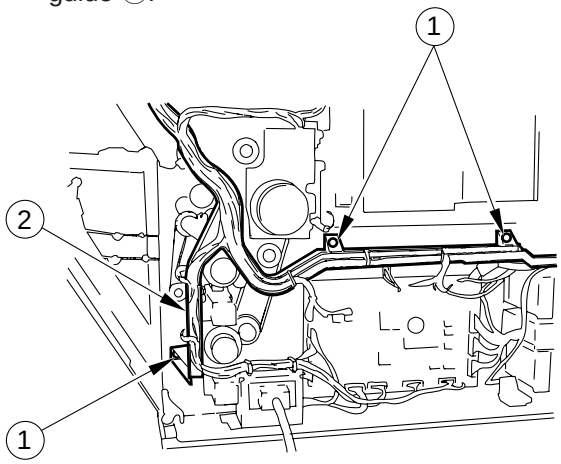

Figure 4-315

3) Remove the main motor. (See “Removing the Main Motor.”)
4) Remove the three screws ③, then, remove the clutch stop plate ⑥ and the clutche ⑦.

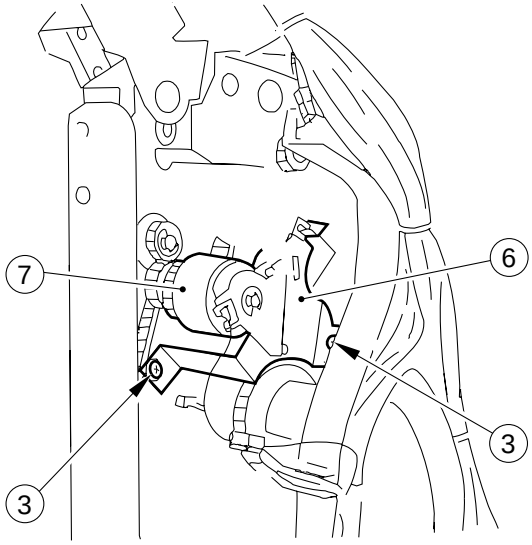

Figure 4-316

COPYRIGHT © 1998 CANON INC.
CANON NP6621 REV.0 FEB. 1998 PRINTED IN JAPAN (IMPRIME AU JAPON)

5) Remove the two E-rings ⑧, and remove the two bushings ⑨.
6) Remove the spring ⑩ of the actuator.
7) Remove the three screws ⑪, and remove the solenoid mounting plate ⑫.

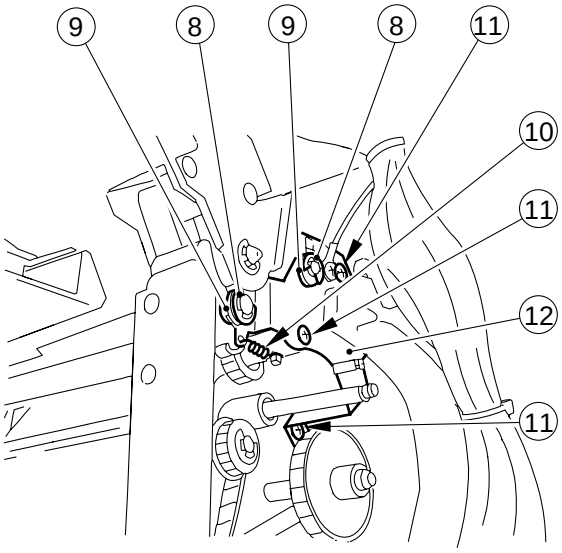

Figure 4-317

Caution:
Take care so that the plunger of the solenoid will not fall.

8) Loosen the hex nut ⑬, and remove the spring clutch ⑭.

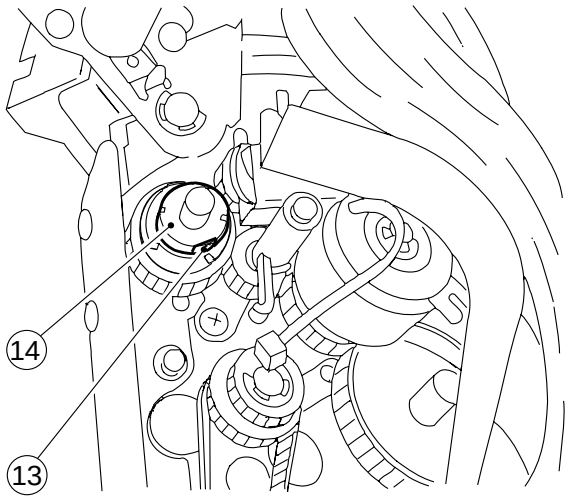

Figure 4-318

6. Positioning the Multifeeder Assembly Paper Guide Plate Cam

Temporarily fix the screw with a hex nut of the spring clutch assembly, and turn the control ring. At this time, make adjustments so that the hole in the cam and the hole (or black dot) in the multifeeder drive unit match while the claw of the control ring is in contact with the solenoid plate.

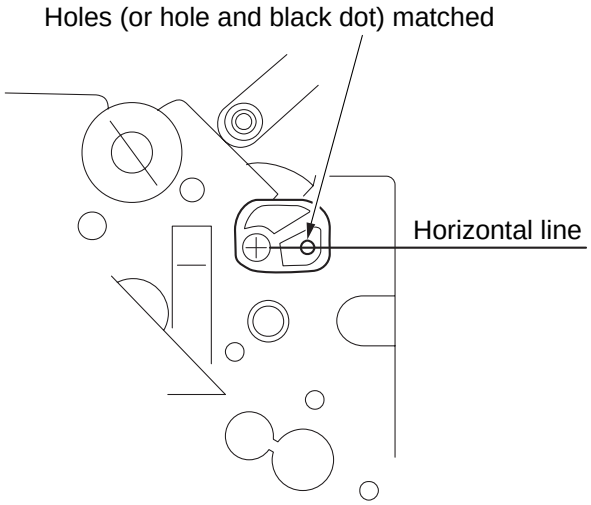

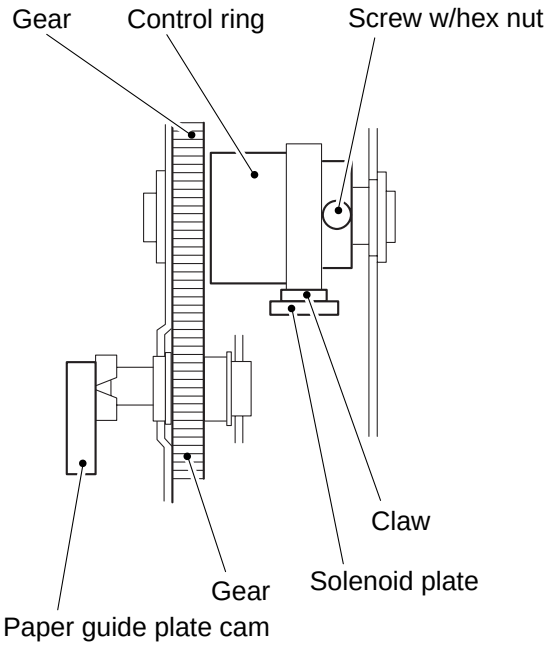

Figure 4-319

Caution:

If the adjusting hole is not furnished with a black dot for reference, make adjustments as instructed while making sure that the paper guide plate cam of the multifeeder aseembly is located as shown.

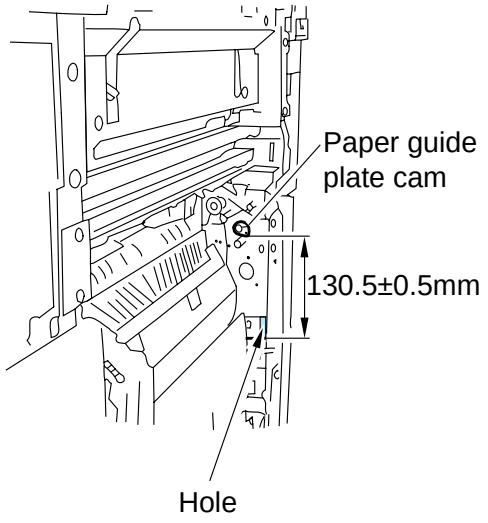

Figure 4-320

7. Adjusting the Left/Right Registration

If the left/right registration is wrong when using the multifeeder, loosen the screws ① to adjust the tray position.

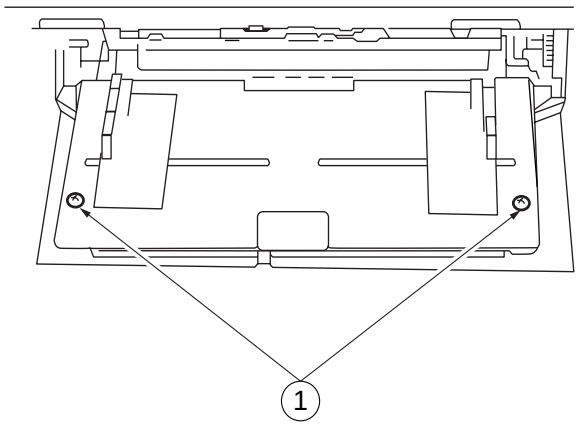

Figure 4-321

8. Points to Note When Installing the Multifeeder Assembly Rack Plate

Install the multifeeder rack plate to the pulley with both left and right rack plates fully open.

C. Registration Roller Assembly

1. Removing the Registration Clutch

1) Remove the lower rear cover.
2) Remove the clip ring ①, and disconnect the connector ②; then, remove the registration clutch ③.

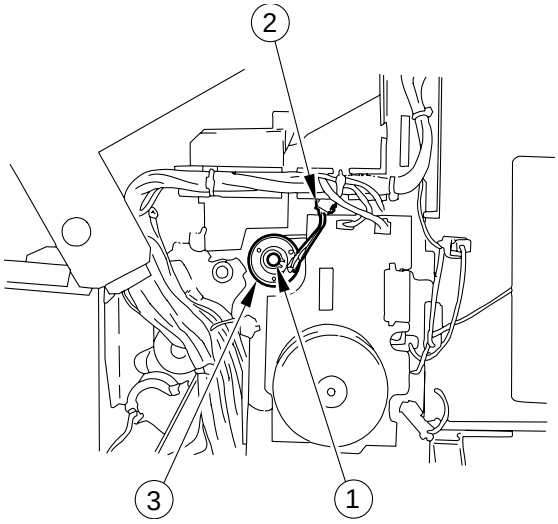

Figure 4-322

2. Removing the Upper Registration Roller

1) Remove the registration clutch. (See “Removing the Registration Clutch.”)
2) Remove the springs (front) ① and (rear) ②.

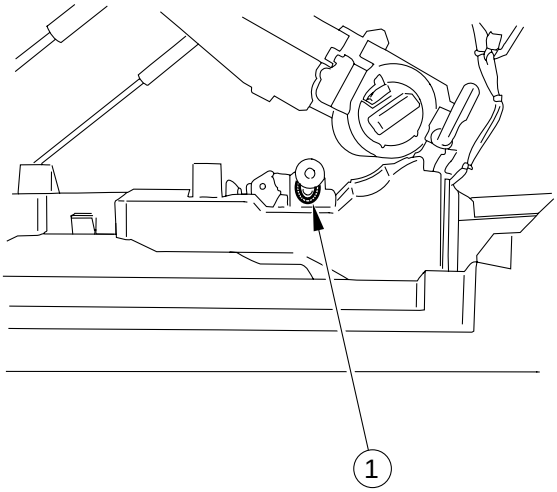

Figure 4-323

COPYRIGHT © 1998 CANON INC.
CANON NP6621 REV.0 FEB. 1998 PRINTED IN JAPAN (IMPRIME AU JAPON)

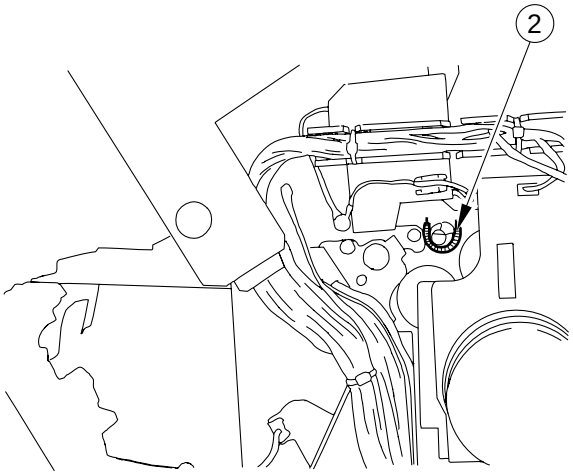

Figure 4-324

Caution:
At this time, take care so that the springs at the front and the rear will not fly away.

3) Remove the upper registration roller ③ by lifting it.

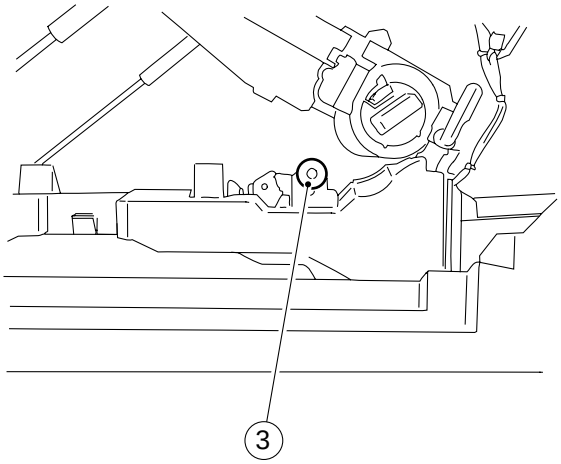

Figure 4-325

3. Removing the Lower Registration Roller

1) Remove the E-ring (front) ①, and shift the bushing ②.
2) Remove the registration roller ③.

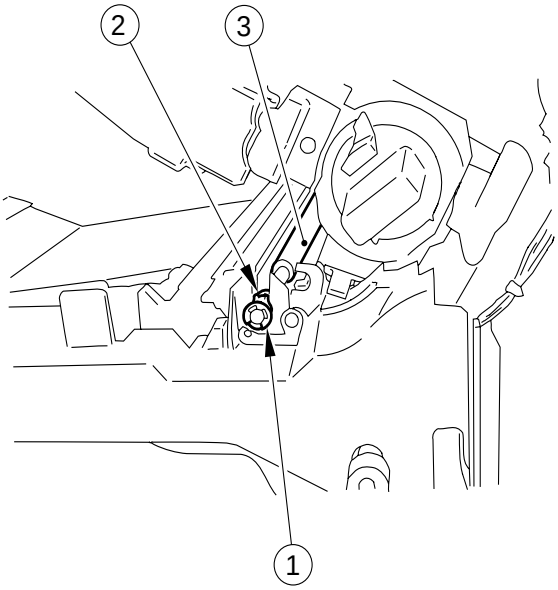

Figure 4-326

COPYRIGHT © 1998 CANON INC.

D. Feeding Assembly

1. Removing the Feeding Belt

1) Remove the mounting screw ②, and remove the feeding center guide ②.
2) Pull the feeding roll ③ toward the fixing assembly, and remove it.
3) Remove the feeding roll ④, and remove the feeding belt ⑤.

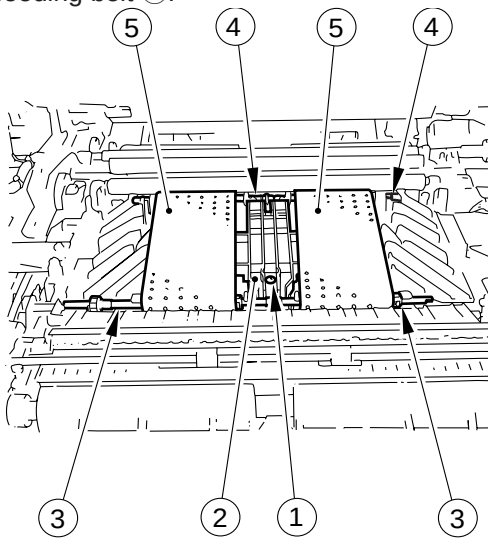

Figure 4-327

Caution:
Do not touch the transfer roller. Take care not to damage the joint between the feeding rolls.

2. Removing the Feeding Fan

1) Remove the feeding belt. (See “Removing the Feeding Belt.”)
2) Remove the three mounting screws ①, and remove the feeding fan ②.

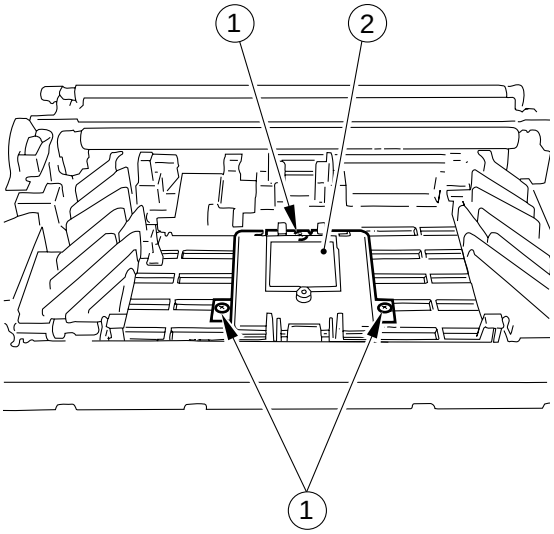

Figure 4-328

E. Delivery Assembly

1. Removing the Delivery Roller

1) Open the top body.
2) Remove the E-ring ①.
3) Shift the bushings (rear) ② and (front) ③; then, remove the delivery roller ④.

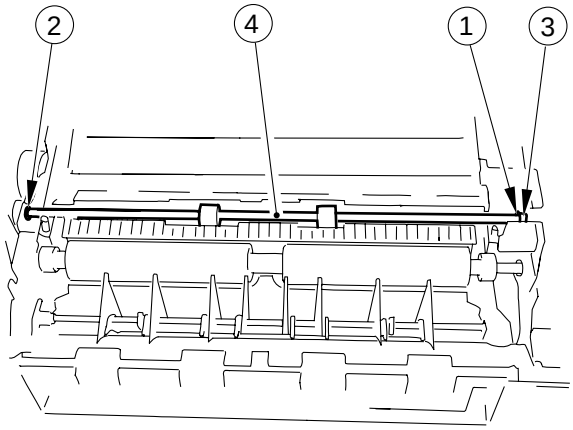

Figure 4-329

COPYRIGHT © 1998 CANON INC.
CANON NP6621 REV.0 FEB. 1998 PRINTED IN JAPAN (IMPRIME AU JAPON)

F. Duplexing Assembly

1. Removing the Duplexing Assembly Inlet Unit

1) Remove the left cover.
2) Remove the delivery roller.
3) Disconnect the connector ①, and remove the duplexing unit ② inlet unit.

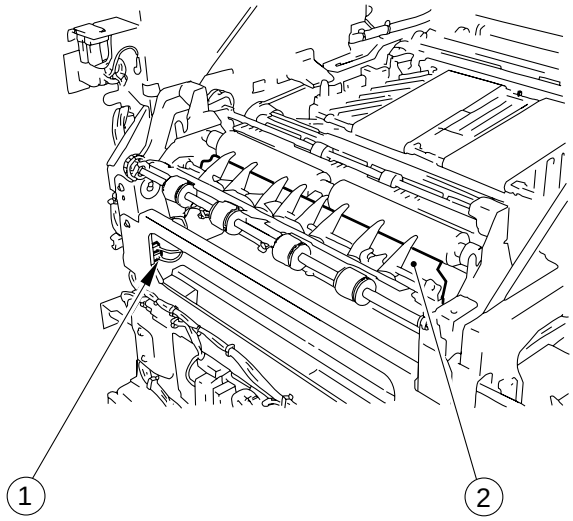

Figure 4-330

2. Removing the Duplexing Unit

1) Remove the front door, two cassettes and the front left cover.
2) Remove the three mounting screws ①, and disconnect the connector ②; then, remove the paper size detection unit 1 ③.

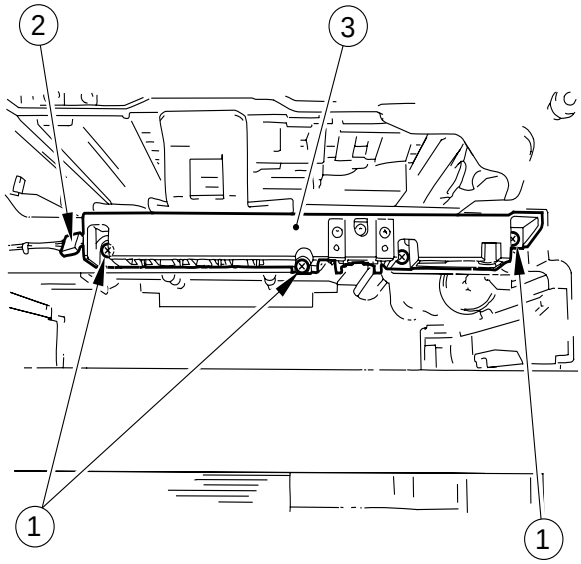

Figure 4-331

3) Remove the lower rear cover.
4) Disconnect the connectors (J325, J326) ④.

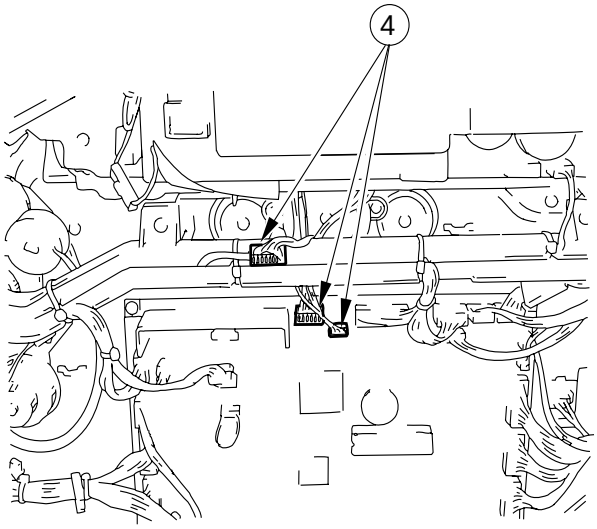

Figure 4-332

5) Remove the two mounting screws ⑤, and remove the duplexing unit ⑥.

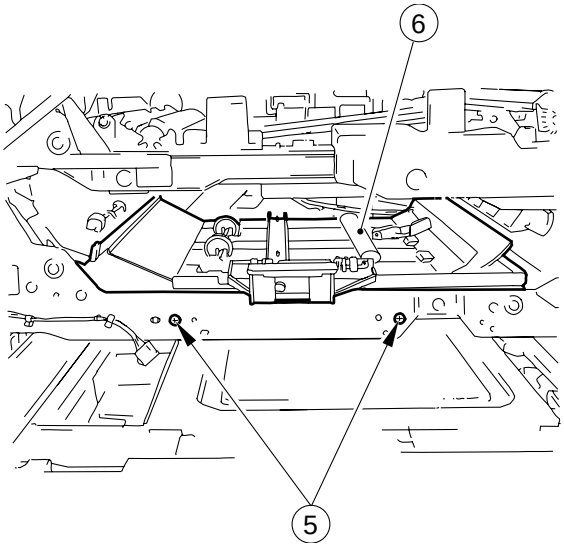

Figure 4-333

COPYRIGHT © 1998 CANON INC.

G. Cassette Unit

1. Removing the Copier from the Cassette Unit

1) Disconnect the copier's power plug.
2) Disconnect the cassette unit connector ① from the copier.

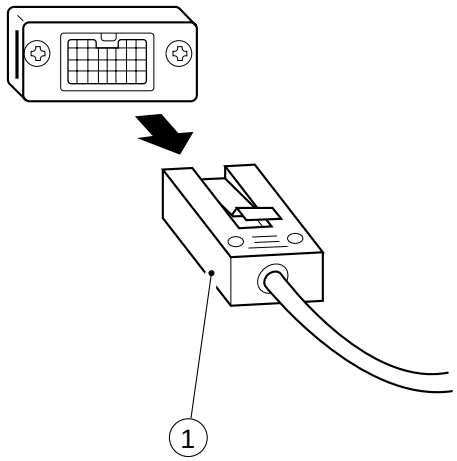

Figure 4-334

3) Holding the copier's grips, remove the copier from the cassette unit.

2. Removing the Pick-Up Roller Unit

1) Remove the cassette.
2) Remove the stop ring (plastic) ① found at the front of the pick-up roller unit.

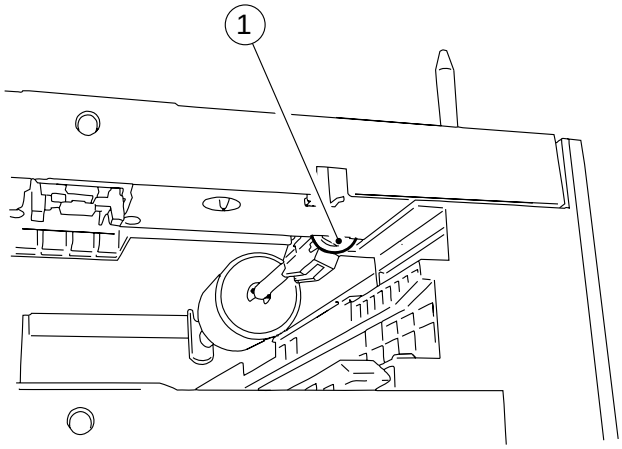

Figure 4-335

3) Remove the bushing ② of the pick-up roller unit ③ while pushing it down toward the left.

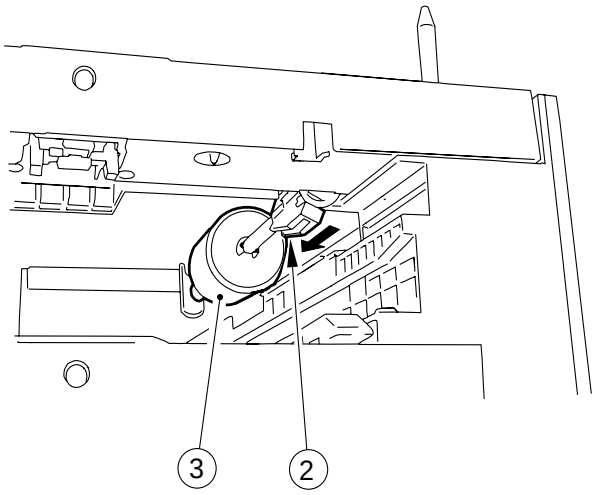

Figure 4-336

3. Removing the Pick-Up Roller

1) Remove the pick-up roller unit. (See "Removing the Pick-Up Roller Unit.")
2) Remove the E-rings ① and ②; then, remove the pick-up roller ③ together with the collar.

Caution:
Take care not to lose the pin from the rear.

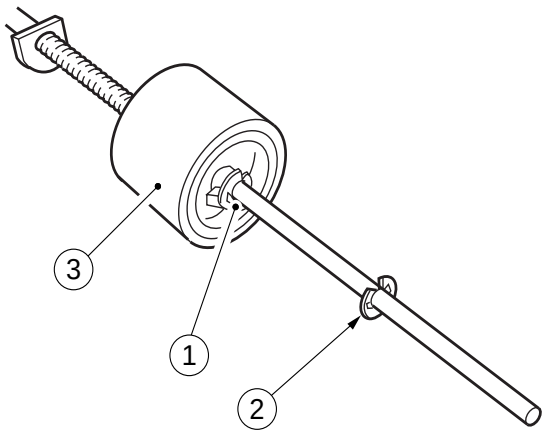

Figure 4-337

COPYRIGHT © 1998 CANON INC.
CANON NP6621 REV.0 FEB. 1998 PRINTED IN JAPAN (IMPRIME AU JAPON)

4. Points to Note When Installing the Pick-Up Roller

When installing the pick-up roller ①, install it so that the marking ② shown in Figure 4-338 is toward the rear.

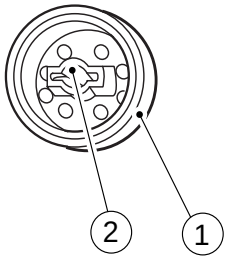

Figure 4-338

5. Removing the Pick-Up Unit

1) Remove the rear cover and the right cover.
2) Remove the screw ①.

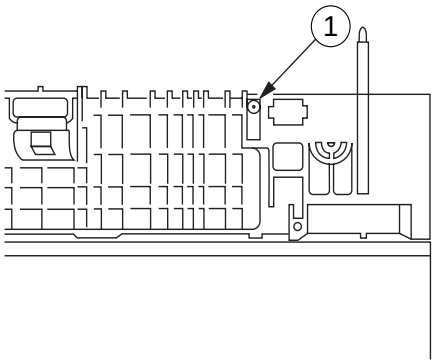

Figure 4-339

3) Remove the screw ②, and remove the harness guide ③.

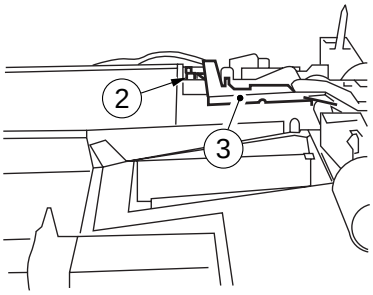

Figure 4-340

4) Remove the four screws ④, and disconnect the two connectors ⑤; then, remove the pick-up drive unit ⑥.

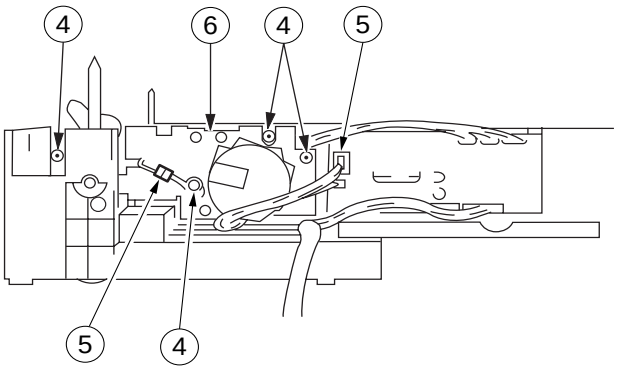

Figure 4-341

6. Removing the Cassette Motor

1) Remove the rear cover.
2) Remove the two screws ①, and disconnect the connector (J114) ②; then, remove the motor ③.

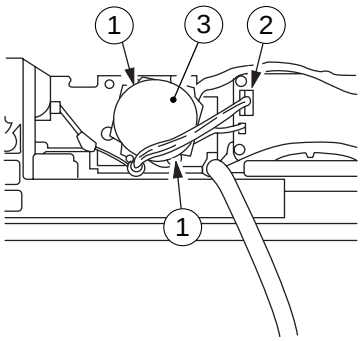

Figure 4-342

COPYRIGHT © 1998 CANON INC.

7. Removing the Pick-Up Clutch

1) Remove the pick-up drive unit. (See “Removing the Pick-Up Drive Unit.”)
2) Remove the cassette motor. (See “Removing the Cassette Motor.”)
3) Remove the three screws ① and bushing ②; then, remove the side plate ③ and the pick-up clutch ④.

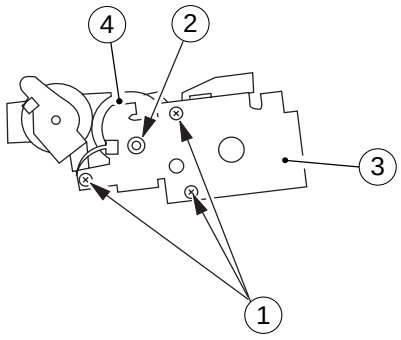

Figure 4-343

8. Removing the Cassette Driver PCB

1) Remove the rear cover.
2) Disconnect all connectors from the cassette driver PCB ①.
3) Remove the three screws ②, and remove the driver PCB ①.

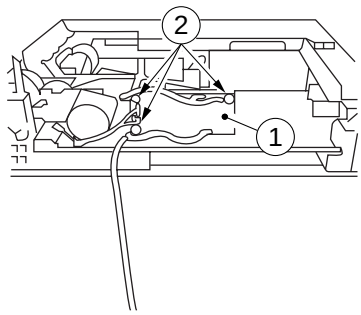

Figure 4-344

9. Removing the Pick-Up Motor (Cassette Pedestal-K1)

1) Remove the upper rear cover.
2) Remove the two screws ①, and disconnect the connector ②; then, remove the motor ③.

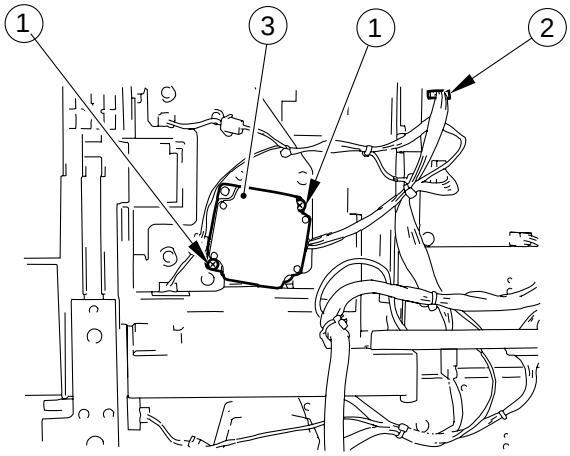

Figure 4-345

10. Removing the Pick-Up Clutch (Cassette Pedestal-K1; cassettes 3, 4)

1) Remove the upper rear cover.
2) Remove the pick-up motor.
3) Disconnect the two relay connectors ①.

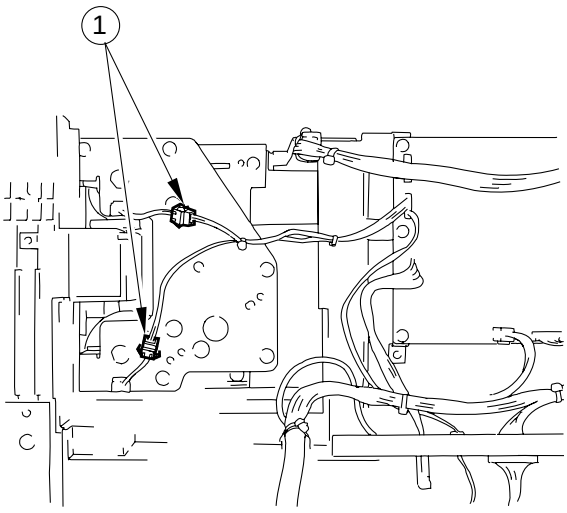

Figure 4-346

COPYRIGHT © 1998 CANON INC.
CANON NP6621 REV.0 FEB. 1998 PRINTED IN JAPAN (IMPRIME AU JAPON)

4) Remove the six screws ② and two E-rings ③; then, remove the support plate ④.
5) Remove the two pick-up clutches ⑤.

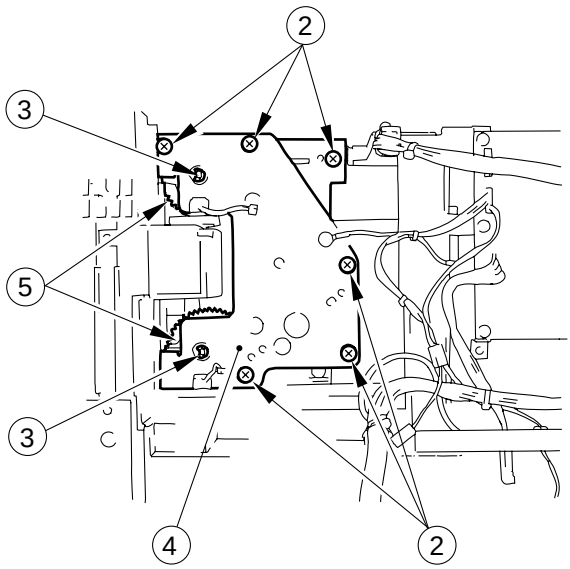

Figure 4-347

11. Removing the Driver PCB (Cassette Module-A2/Cassette Pedestal-K1)

1) Remove the rear cover/upper rear cover.
2) Disconnect all connectors from the cassette driver PCB ①.
2) Remove the four screws ②, and remove the driver PCB ①.

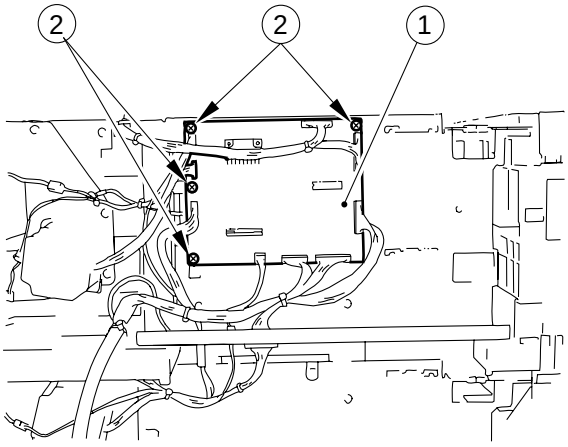

Figure 4-348

H. Paper Deck Pedestal-K1

1. Removing the Pedestal Motor Drive Assembly

1) Slide out the holding tray to the front.
2) Remove the rear cover.
3) Disconnect the four connectors ①, and remove the harness from harness guide ②.
4) Remove the three mounting screws ③, and remove the pedestal motor drive assembly. ④.

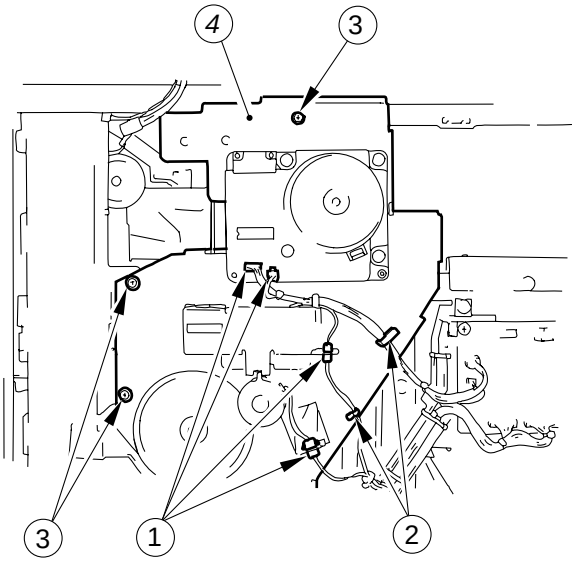

Figure 4-349

2. Removing the Paper Deck

1) Remove the front right cover and the front left cover.
2) Remove the mounting screw ①, and remove the stopper plate ② from both left and right.

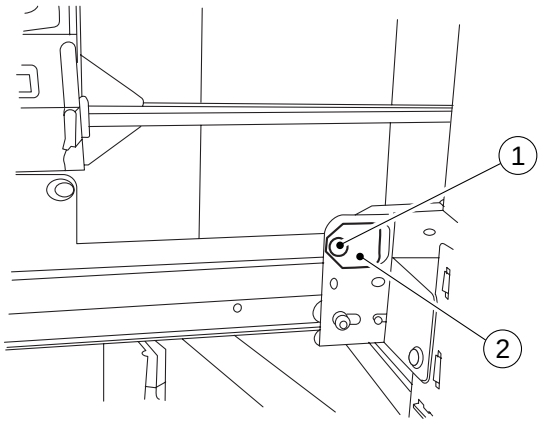

Figure 4-350 (right)

COPYRIGHT © 1998 CANON INC.

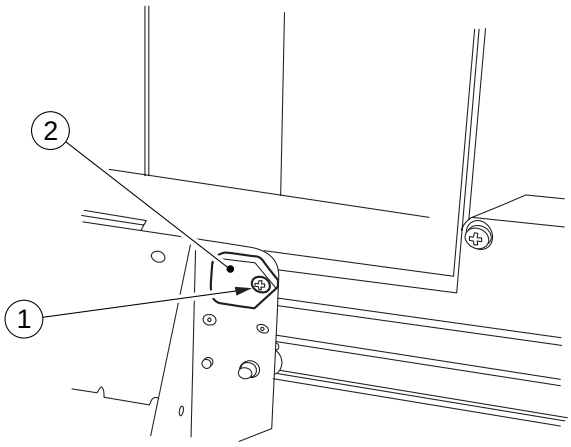

Figure 4-351 (left)

3) Slide out the paper deck slowly to the front.

3. Removing the Lifter Wire

1) Remove the paper deck.
2) Remove the deck front cover.
3) Remove the two screws ① from the inside of the deck and remove the guide plate ② from both front and rear.

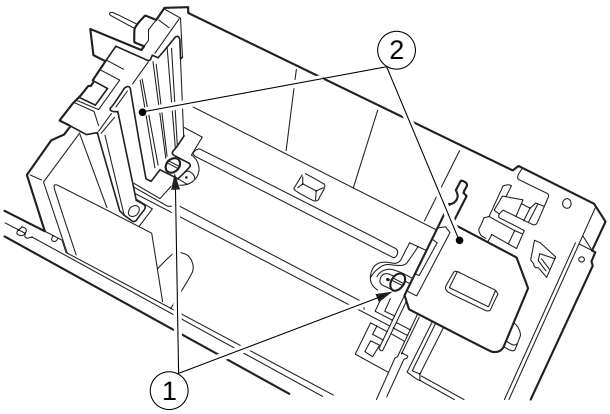

Figure 4-352

4) Mark the position of the latch assembly, and detach the latch assembly by removing the mounting screws ③ on both left and right (6 in total).

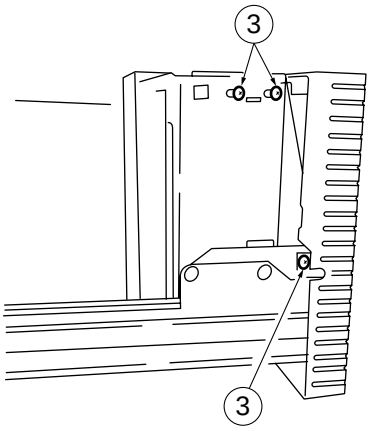

Figure 4-353a (left)

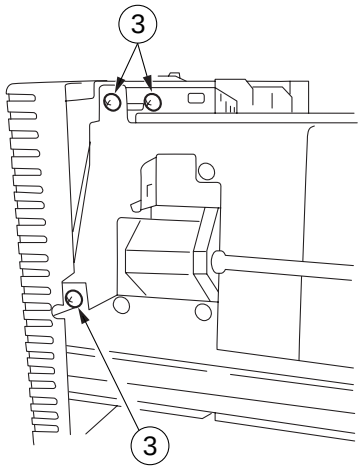

Figure 4-353b (right)

5) Remove the mounting screw ④ from the front right, and remove the gear cover ⑤.

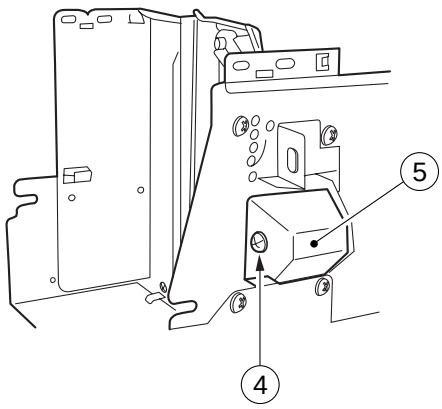

Figure 4-354

COPYRIGHT © 1998 CANON INC.
CANON NP6621 REV.0 FEB. 1998 PRINTED IN JAPAN (IMPRIME AU JAPON)

6) Remove the mounting screw ⑥ from the front, and remove the oil damper plate ⑦.

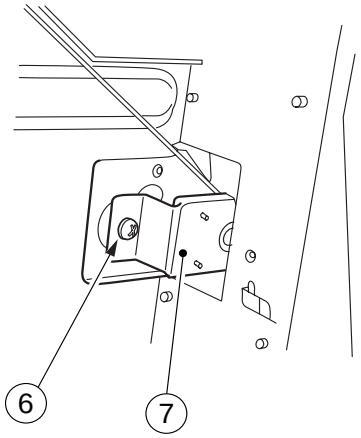

Figure 4-355

7) Remove the E-ring ⑧ from the lifter drive shaft (rear); then, remove the gear ⑨, two washers, and spring ⑩.

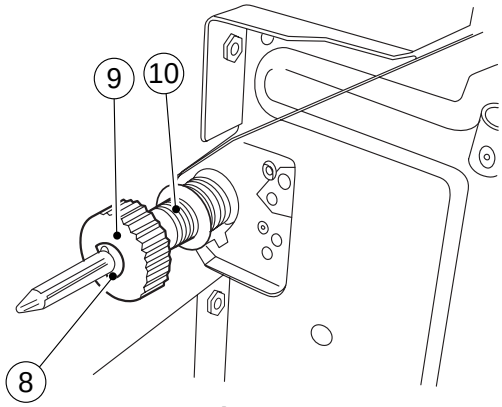

Figure 4-356

8) Remove the E-ring ⑪; then, remove the gear ⑫, parallel pin, and pulley cover (front/rear in common).

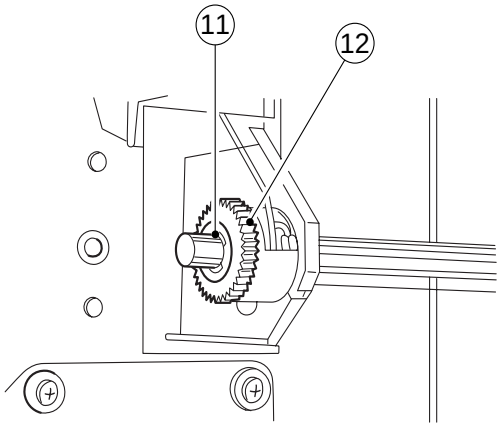

Figure 4-357

9) Remove the end of the wire from the pulley (front/rear in common).
10) Remove the fastener ⑬ from the wire relay assembly; then, remove the pulley cover, and remove the wire from the pulley (front/rear in common).

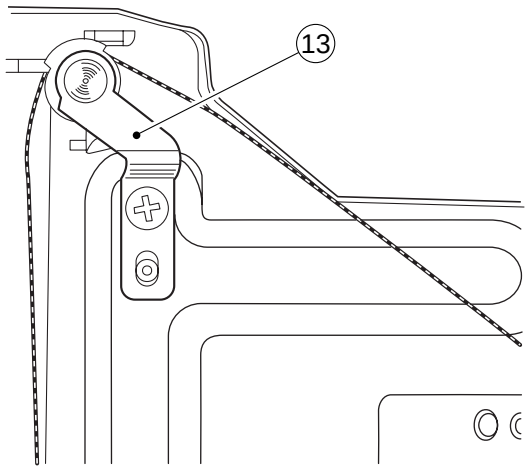

Figure 4-358

COPYRIGHT © 1998 CANON INC.

11) Remove the mounting screw ⑭, and remove the wire together with the mounting support.

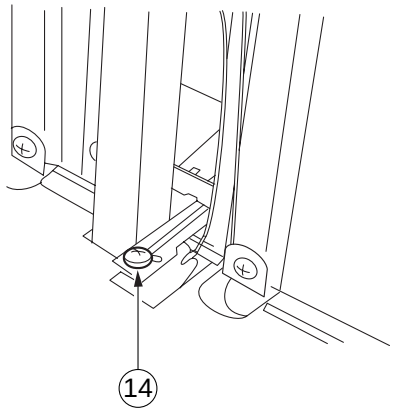

Figure 4-359

4. Removing the Pick-Up Assembly

1) Open the right door of the pedestal, and slide out the paper deck to the front about 10 cm.

Caution:
- For the paper deck pedestal, slide out only the paper deck.
- Do not try to detach the pick-up assembly without removing the paper deck from the pedestal; the lifter will make the removal of the pick-up assembly impossible.
- Do not slide out the paper deck too far toward the front; doing so would cause the pedestal to tilt to the front when the pick-up assembly is removed.

2) Remove the right cover.
3) Remove the screw ①; then, remove the stop plate.
4) Remove the eight mounting screws ②, and remove the two support plates ③.
5) Disconnect the four connectors ④.

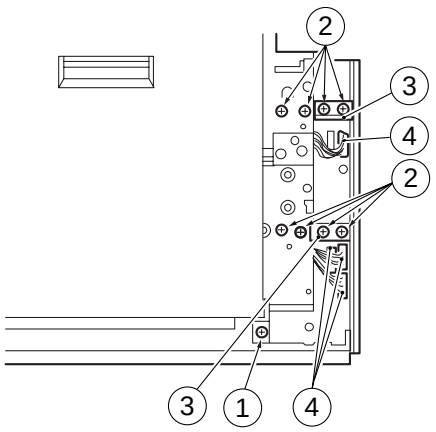

Figure 4-360

6) Remove the six mounting screws ⑤, and remove the pick-up assembly.

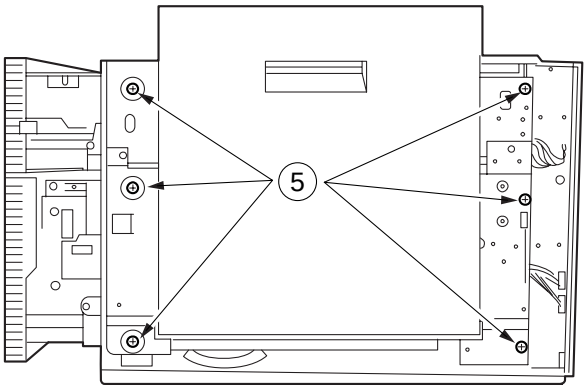

Figure 4-361

5. Removing the Pick-Up Roller

1) Remove the pick-up assembly.
2) Remove the stop ring ①, and remove the pick-up roller ② together with the roller collar.

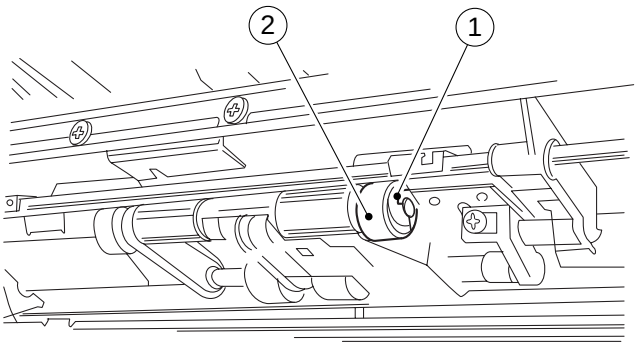

Figure 4-362

COPYRIGHT © 1998 CANON INC.
CANON NP6621 REV.0 FEB. 1998 PRINTED IN JAPAN (IMPRIME AU JAPON)

6. Points to Note

a. The collars for the pick-up roller are identified by color; use the gold collar for the front, and the silver collar for the rear.
b. Do not separate the rubber portion of the pick-up roller from the collar.

7. Removing the Feeding Roller

1) Remove the pick-up roller from the front.
2) Remove the mounting screw ①, and remove the pick-up roller arm bushing ②.

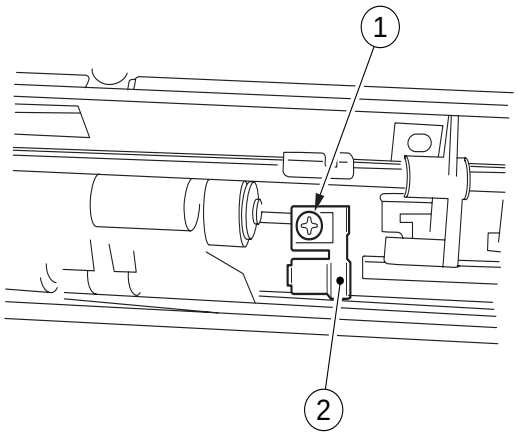

Figure 4-363

3) Remove the pick-up roller arm ③ and the weight ④ from the pick-up roller shaft.

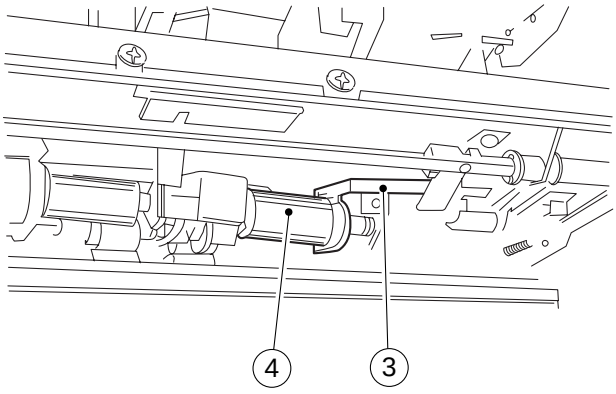

Figure 4-364

4) Remove the stop ring ⑤ from the feeding roller.

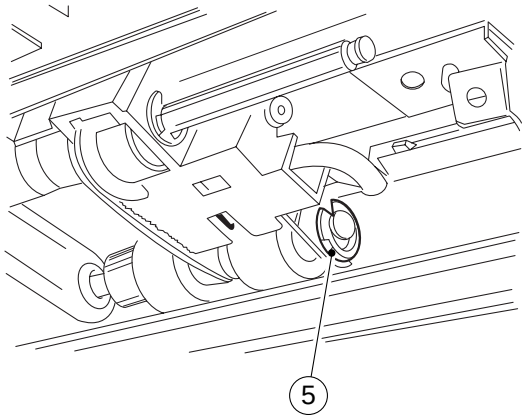

Figure 4-365

5) Remove the pick-up roller from the rear, and remove the pick-up roller shaft from the bushing at the rear.
6) Remove the drive belt ⑥ from the feeding roller ⑦, and remove the feeding roller and the roller shaft ⑧.

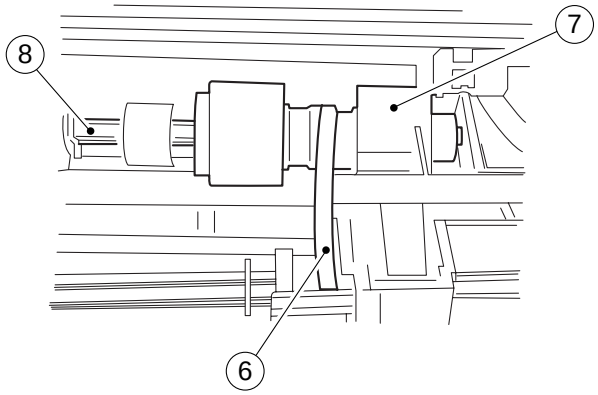

Figure 4-366

COPYRIGHT © 1998 CANON INC.

8. Points to Note

When installing the feeding roller ①, make sure that the belt pulley ② attached to the feeding roller is toward the rear of the copier.

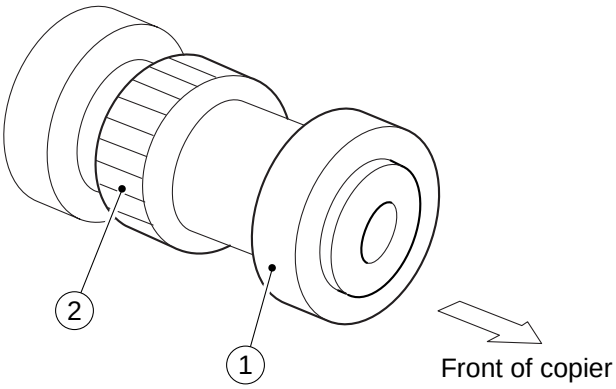

Figure 4-367

9. Removing the Separation Roller

1) Open the right door, and remove the two mounting screws ② from the separation roller assembly support plate ①; then, remove the separation roller together with the pressure arm.

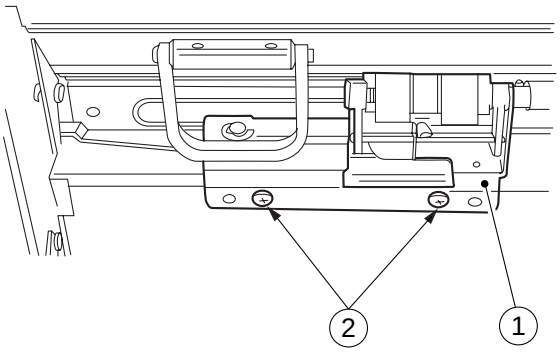

Figure 4-368

2) Remove the stop ring ③, and remove the separation roller ④.

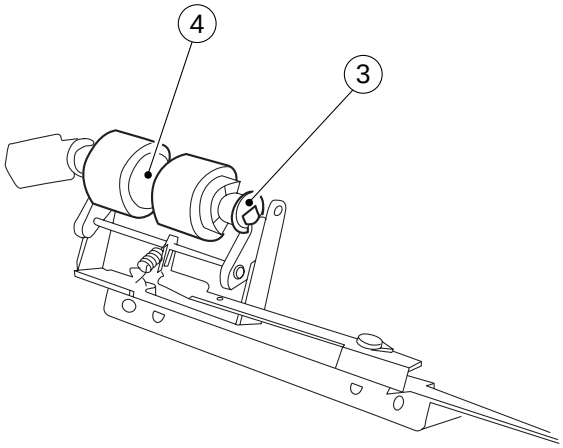

Figure 4-369

10.Points to Note

When installing the separation roller ①, make sure that the D-cut in the roller collar is toward the front of the copier.

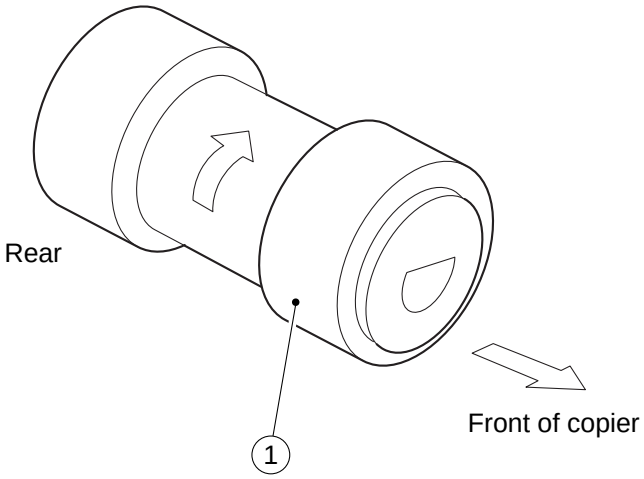

Figure 4-370

COPYRIGHT © 1998 CANON INC.
CANON NP6621 REV.0 FEB. 1998 PRINTED IN JAPAN (IMPRIME AU JAPON)

11. Adjusting the Pressure of the Separation Roller

If double feeding or pick-up failure occurs frequently during pick-up operation, adjust the position of the pressure spring for the separation roller.

① if double feeding is frequent, move the hook of the spring toward A.

② if pick-up failure is frequent, move the hook of the spring toward B.

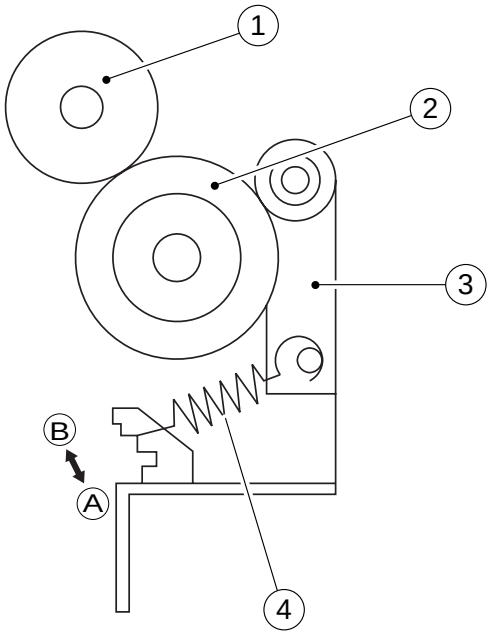

Figure 4-371

12. Position of the Pick-Up Roller Releasing Solenoid

Install the solenoid so that the pick-up roller arm ① butts against the upper stay ② when the plunger of the solenoid is pushed in.

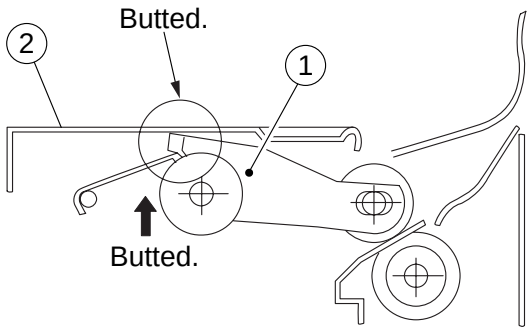

Figure 4-372

COPYRIGHT © 1998 CANON INC.

IV. EXPOSURE SYSTEM

A. Illuminating Assembly

1. Removing the Scanning Lamp/Fluorescent Heater

1) Disconnect the power plug.
2) Remove the copyboard glass.
3) Remove the upper rear cover.
4) Move the scanner unit to the center.
5) Remove the two screws ①, and remove the light-blocking plate ②.

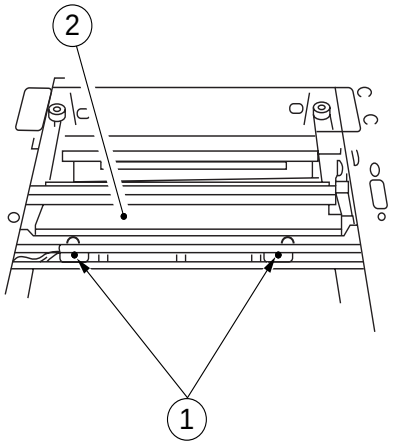

Figure 4-401

6) Remove the screw ⑤, and disconnect the connector ⑥.
7) Pull the halogen lamp ⑦ slowly toward the front to remove.

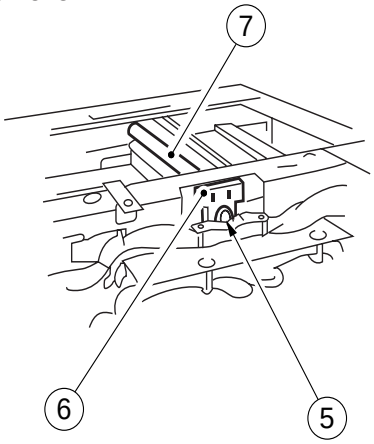

Figure 4-402

Caution:
Do not touch the halogen lamp. (If necessary, wrap lint-free paper around it.)

2. Removing the Blank Exposure Assembly

1) Open the front cover.
2) Pull the open/close lever to open the body.
3) Remove the inside cover.
4) Remove the exhaust fan and the cartridge. (See “Removing the Exhaust Fan.”)
5) Disconnect the connector (J315) ① on the DC controller PCB; then, remove the two screws ②.

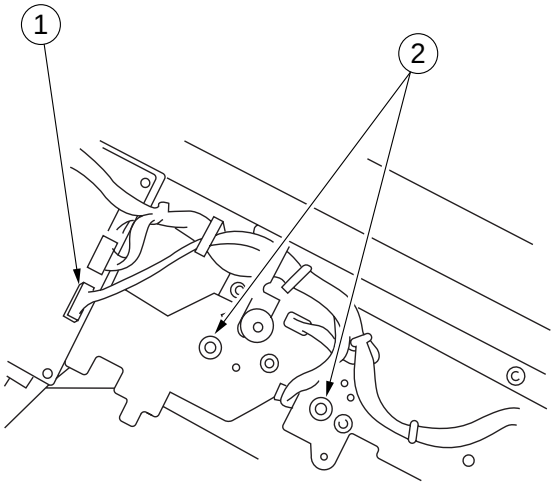

Figure 4-403

6) Push up the blank exposure assembly ③ lightly, and pull it off toward the bottom front.

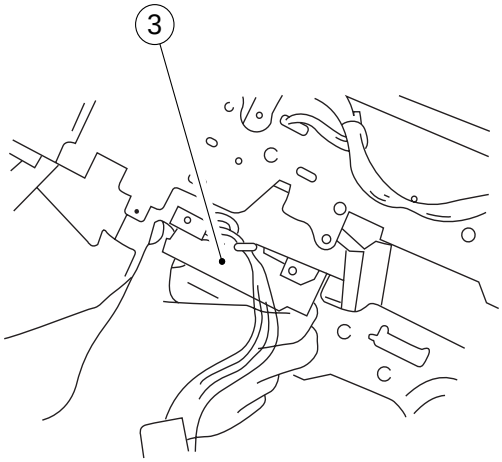

Figure 4-404

COPYRIGHT © 1998 CANON INC.
CANON NP6621 REV.0 FEB. 1998 PRINTED IN JAPAN (IMPRIME AU JAPON)

3. Removing the Blank Exposure Lamp

1) Remove the blank exposure lamp. (See "Removing the Blank Exposure Assembly.")
2) Remove the four screws ①, and disconnect the connector ②.

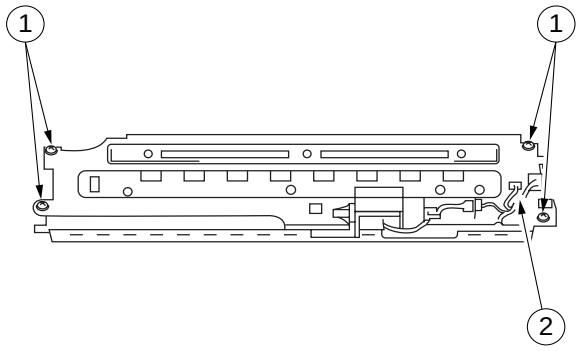

Figure 4-405

3) Disconnect the connector ③.

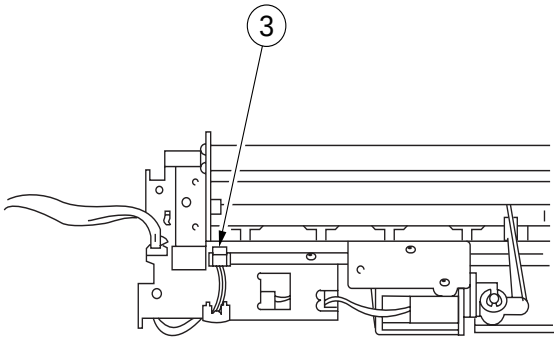

Figure 4-406

4) Remove the three screws ④, and remove the blank exposure lamp ⑤.

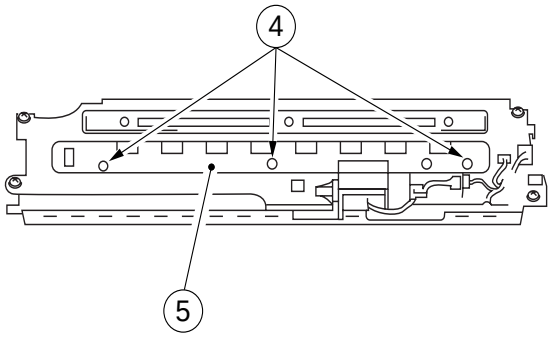

Figure 4-407

4. Removing the Blank Shutter Solenoid

1) Remove the blank exposure assembly.
2) Remove the blank top plate, and disconnect the connector ①. (See "Removing the Blank Exposure Assembly.")
3) Remove the E-ring ②, and remove the link arm ③ from the blank shutter.
4) Remove the two screws ④, and pull out the blank shutter solenoid.

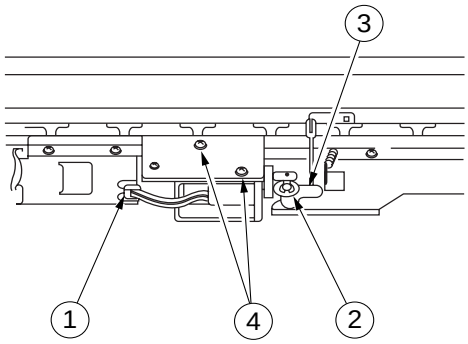

Figure 4-408

5. Positioning the Blank Shutter Solenoid

Adjust the position of the solenoid so that bottom A is 9.5 ±0.5 mm on both sides when the solenoid is moved in the direction of ON. Do not force the shutter excessively.

After the adjustment, check to make sure that the solenoid moves smoothly.

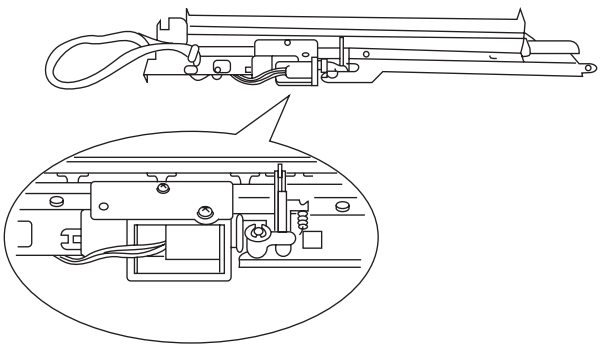

Figure 4-409a

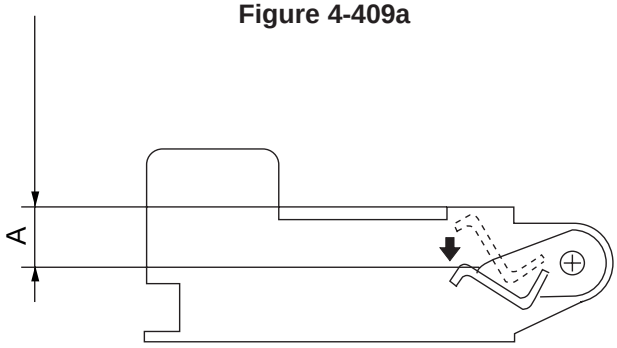

Figure 4-409b

COPYRIGHT © 1998 CANON INC.

6. Routing the Blank Shutter Cable

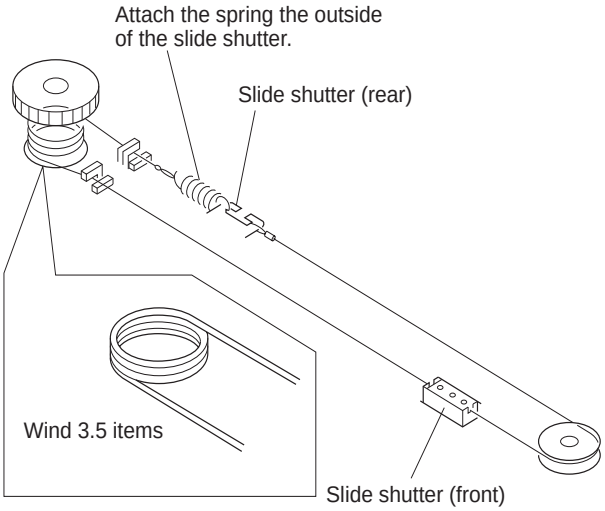

Figure 4-410

7. Adjusting the Left/Right Margin Position

Turn the blank adjusting screw on the front plate shown in Figure 4-411 so that the measurements meet the standards.

① CW turn: moves the margin to the front
② CCW turn: moves the margin to the rear
③ full turn: moves about 1 mm

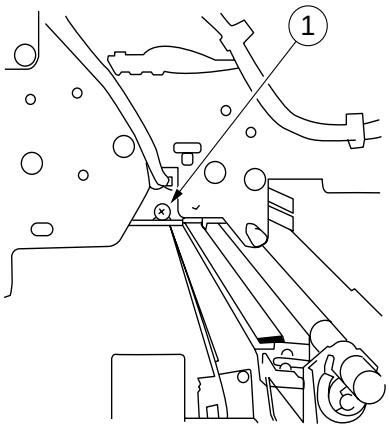

Figure 4-411

8. Installing the Mirror Heater

1) Remove the copyboard glass.
2) Install the cord clamp ① to the bottom plate of the lens mount.
3) Install the mirror heater ③ with a screw ②.

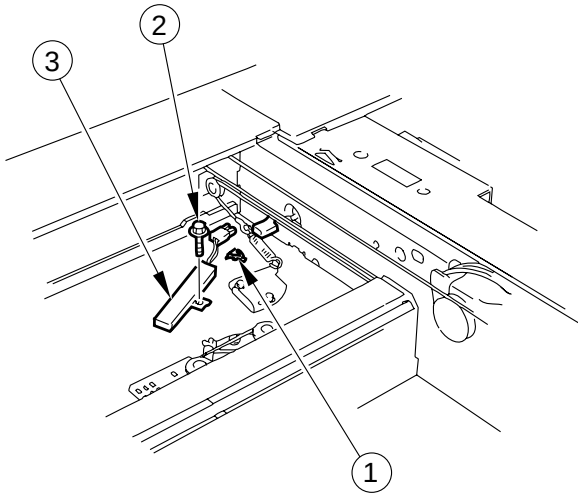

Figure 4-412

4) Connect the connector ④.
5) Set the lens heater harness ⑤ to the cord clamp.

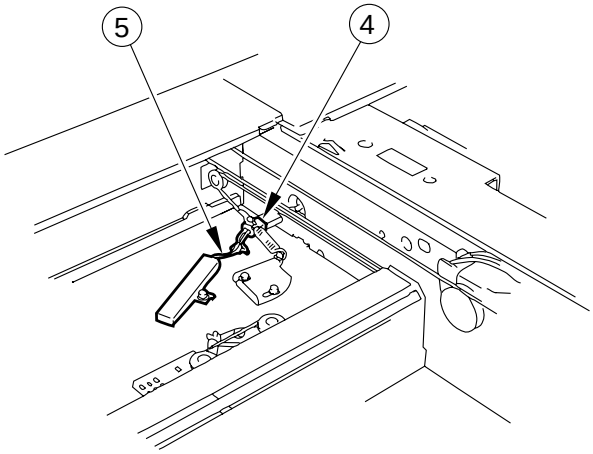

Figure 4-413

6) Install the copyboard glass.

COPYRIGHT © 1998 CANON INC.
CANON NP6621 REV.0 FEB. 1998 PRINTED IN JAPAN (IMPRIME AU JAPON)

9. Installing the Lens Heater

1) Remove the copyboard glass and the lens hood.
2) Remove the three screws, and disconnect the two connectors; then, remove the original size sensor ① together with its mount.

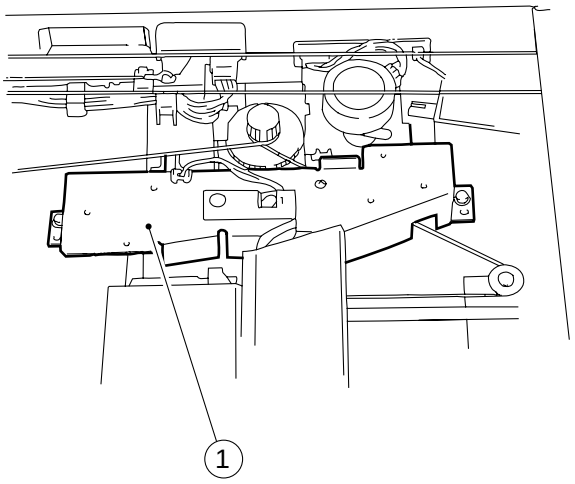

Figure 4-414

3) Install the lens heater ② with a screw ③.
4) Connect the connector ④.

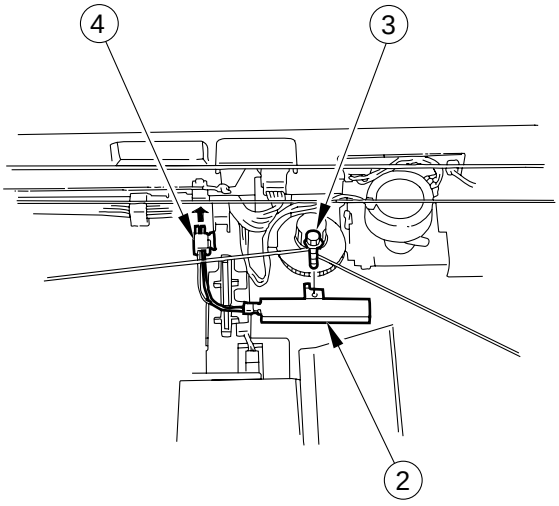

Figure 4-415

5) Set the mirror heater harness ⑤ to the cord guide.

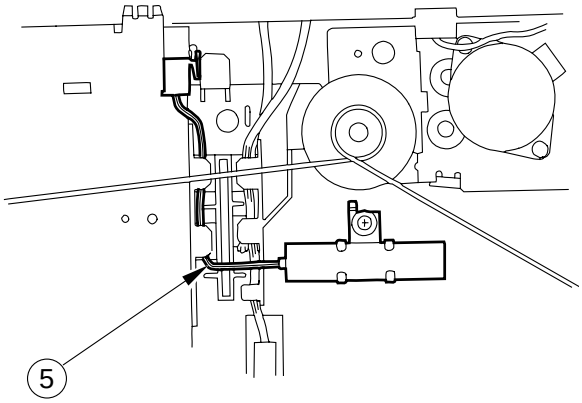

Figure 4-416

6) Install the original size sensor mount, lens hood, and copyboard glass.

COPYRIGHT © 1998 CANON INC.

V. CHARGING SYSTEM

A. Drum Unit

1. Removing the Drum Unit

1) Open the front door.
2) Pull the developing assembly releasing lever ① to the front, and turn it clockwise.

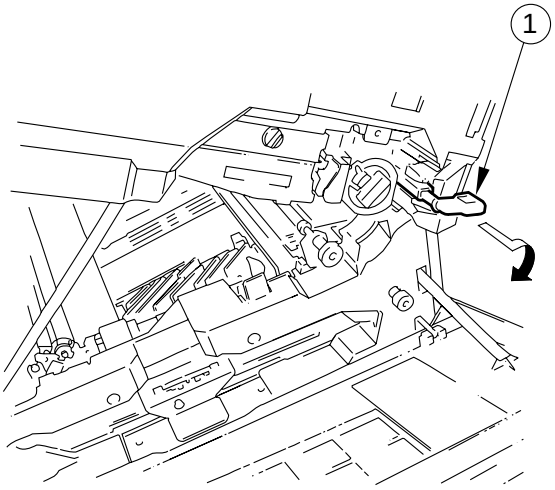

Figure 4-501

3) Open the top body.
4) Turn the knob ② counterclockwise, and remove it.
5) Pull out the drum unit ③ slowly to the front.

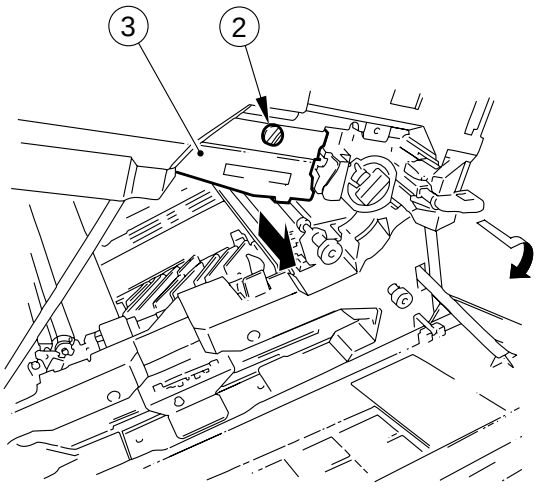

Figure 4-502

Caution:
Take extra care not to damage the photosensitive drum.

Caution:
The photosensitive drum is highly susceptible to light, and exposure even to room lighting could lead to white spots or black bands on copies.
As a rule, you must not turn on the copier with the drum unit removed; otherwise, the following can occur:
- The registration roller and the transfer guide will interfere; rotation of the registration roller during WMUPR can damage the registration roller.

2. Cleaning

If the surface of the photosensitive drum becomes soiled, wipe it with a cloth coated with toner. (Do not use paper, lint-free or otherwise.)

Caution:
You should never dry-wipe the surface of the photosensitive drum or use solvent on it.
Do not use drum cleaning powder.

COPYRIGHT © 1998 CANON INC.
CANON NP6621 REV.0 FEB. 1998 PRINTED IN JAPAN (IMPRIME AU JAPON)

B. Primary Charging Assembly

1. Removing the Primary Charging Unit

1) Remove the drum unit from the body.
2) Slide the locks ① found on the top of the drum unit in the direction of the arrows.

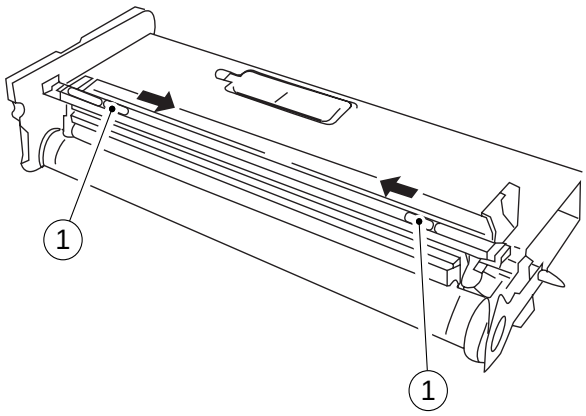

Figure 4-503

3) While rotating the primary charging unit ② in the direction of the arrow, remove it together with its holder.

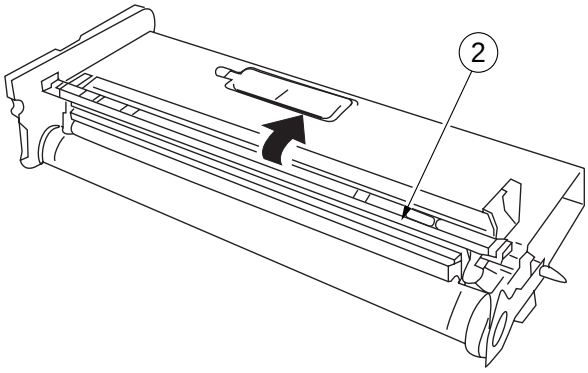

Figure 4-504

2. Cleaning the Cleaning Pad and the Primary Charging Roller

1) Remove the primary charging assembly unit.
2) As in Figure 4-505, place the primary charging assembly, and clean the cleaning pad ③ with a cotton swab ④ or folded lint-free paper.

Caution:
- Dry-wipe only. Do not use water, alcohol, solvent, or any alcohol- or solvent-related agents.
- When dry-wiping, use strokes in one direction only.

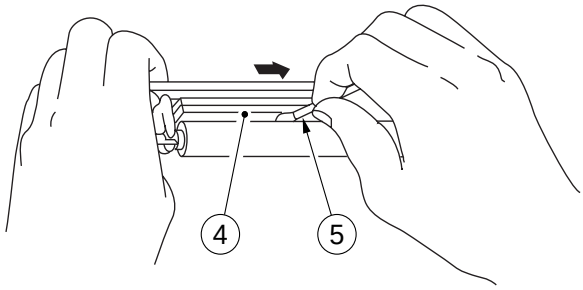

Figure 4-505

3) Then, clean the primary charging roller ⑤ with lint-free paper ⑥ while rotating the roller.

Caution:
- Dry-wipe only. Do not use water, alcohol, solvent, or any alcohol- or solvent-related agents.
- When dry-wiping, move in one direction only.

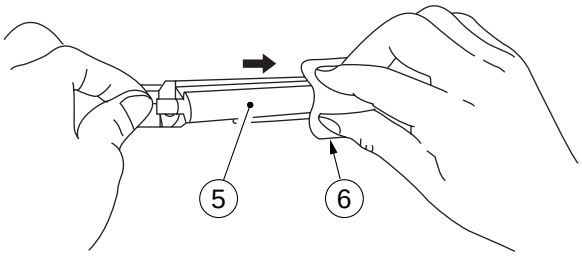

Figure 4-506

COPYRIGHT © 1998 CANON INC.

3. Positioning the Primary Charging Roller Cleaning Solenoid

Loosen the two screws used to fix the solenoid ③ in place and move the solenoid ③ in the the direction of arrow B so that the distance l in Figure 4-507 is 5.5 ±0.2 mm when the joint ① is butted against ⓐ of the solenoid support plate ②.

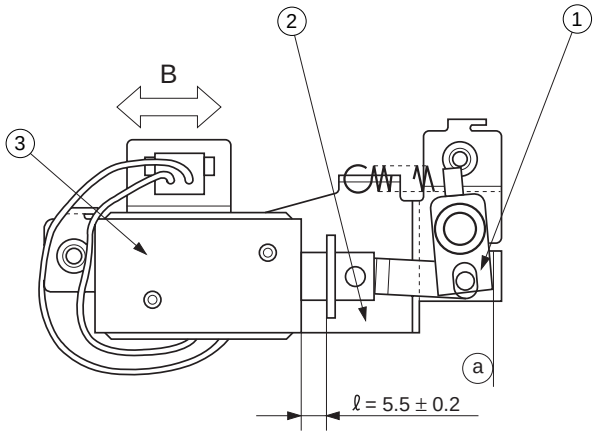

Figure 4-507

Caution:
You must always make this adjustment whenever you have replaced the solenoid.

C. Transfer Charging Assembly

1. Removing the Transfer Roller

1) Open the front door.
2) Open the top body.
3) Remove the static eliminator.
4) Remove the bushing ①, and remove the transfer roller ② by lifting it.

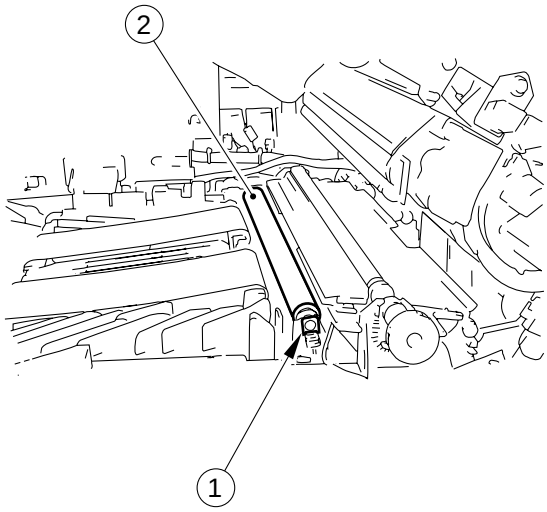

Figure 4-508

Caution:
Do not touch the surface of the roller.
Do not soil the surface of the roller.

COPYRIGHT © 1998 CANON INC.
CANON NP6621 REV.0 FEB. 1998 PRINTED IN JAPAN (IMPRIME AU JAPON)

D. Drum Heater*

* This may not be available for sale in some areas.

1. Installing the Drum Heater

1) Remove the transfer guide from the copier.
2) Install the cord clamp ② to the heater holder ①.

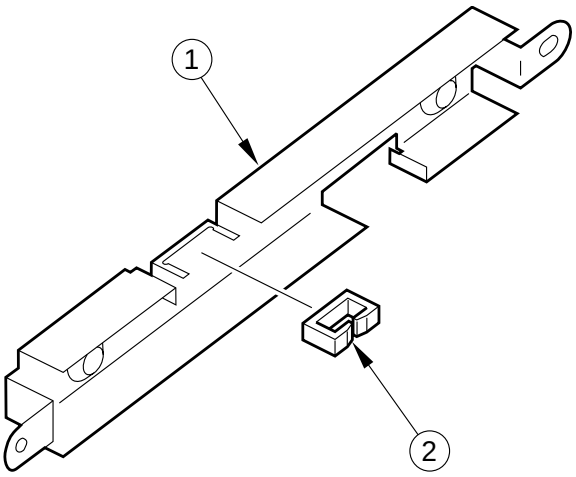

Figure 4-509

3) Put the heater unit ③ into the heater holder.

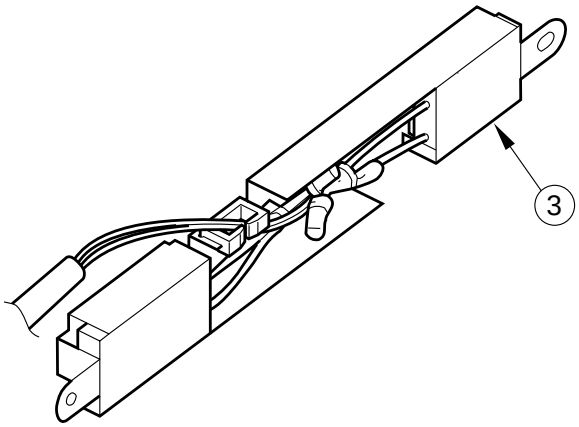

Figure 4-510

4) Install the heater holder ⑤ to the transfer guide ⑥ with two screws ④.

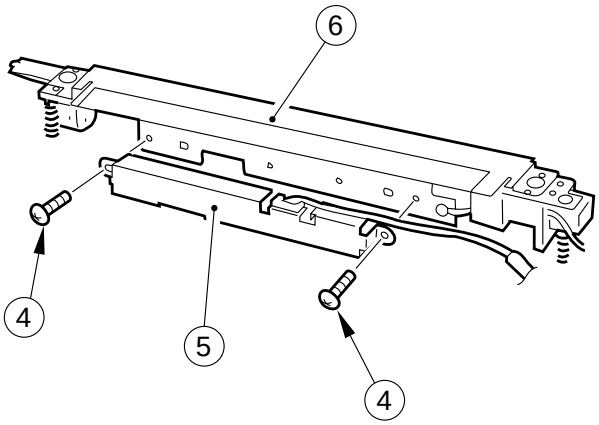

FIgure 4-511

5) Install the transfer guide to the copier.
6) Connect the connector ⑦ of the heater to the copier's connector.

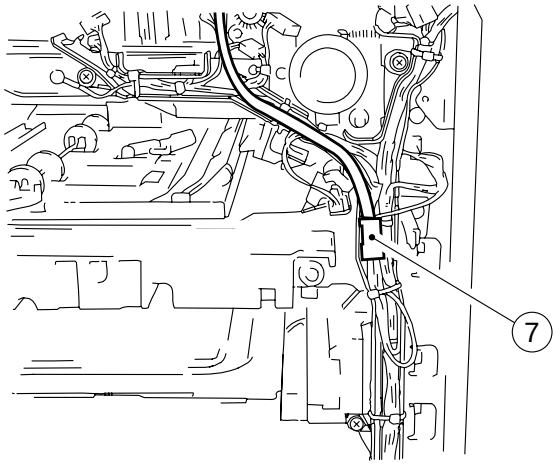

Figure 4-512

Caution:
As necessary, keep the heater harness in place on the cord guide using tie-wraps.

COPYRIGHT © 1998 CANON INC.

VI. DEVELOPING SYSTEM

1. Removing the Developing Assembly

1) Open the copier's front door.
2) Operate the open/close lever to open the top body.
3) Turn the locking lever ① clockwise to unlock the developing assembly.
4) Remove the screw ②.
5) Pull the developing assembly ③ slowly to the front.

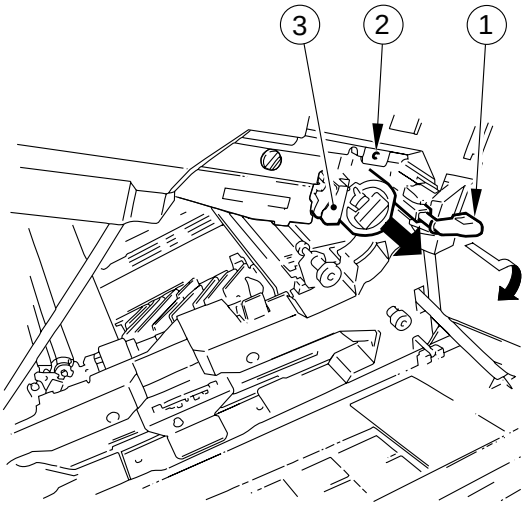

Figure 4-601

2. Removing the Blade Assembly

Caution:

In European model, there are two type of blade unit. The old type developing blade does not have spacers at front and rear side.



[Old type]

Spacers

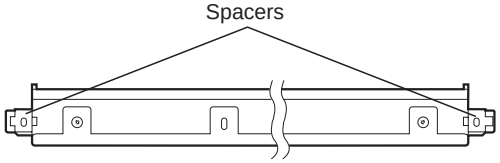

*Spacers are glued on the new type developing blade unit.

[New type]

If the developing blade unit for the developing a ssembly aith the old type is removed, the old type can't be reattached.

1) Remove the developing assembly from the copier.
2) Remove the four screws ①, and remove the developing cover ②.

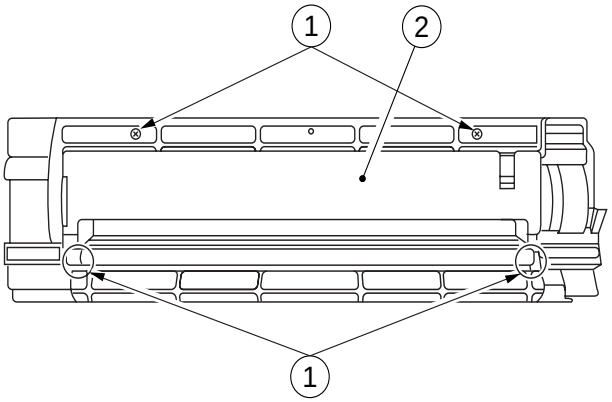

Figure 4-602

3) Place a newspaper or the like on the floor or a desk top, and pour out the toner from the developing assembly.
4) Remove the two screws ③, and remove the blade assembly* ④.

* consisting of the blade and its mount.

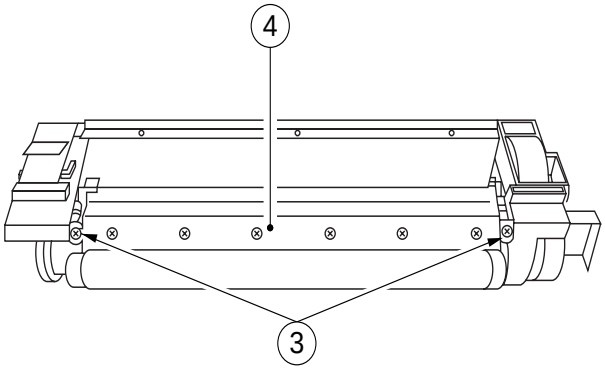

Figure 4-603

COPYRIGHT © 1998 CANON INC.
CANON NP6621 REV.0 FEB. 1998 PRINTED IN JAPAN (IMPRIME AU JAPON)

3. Removing the Developing Cylinder Side Seal

1) Remove the developing assembly from the copier.
2) Remove the blade assembly.

Caution:
In European model, there are two type of blade unit. If old type blade are attached, it can't be removed.

Caution:
The blade must be installed at high precision. Do not remove it in the field. If necessary, remove it intact on its mounting plate.

3) Remove the screw ①, and remove the front cover ②.

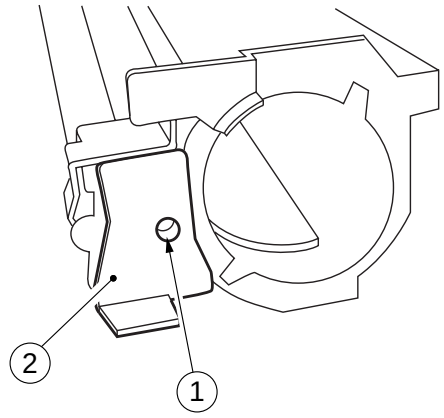

Figure 4-604

4) Remove the three screws ③, and remove the terminal ④, roll case ⑤, and roll ⑥.

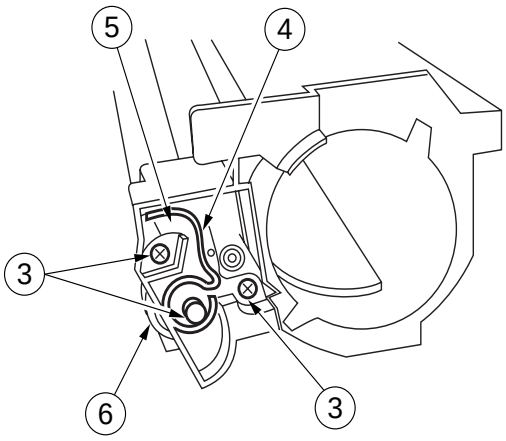

Figure 4-605

5) Remove the three E-rings ⑦, and gear ⑧, gear ⑨, and gear ⑩.

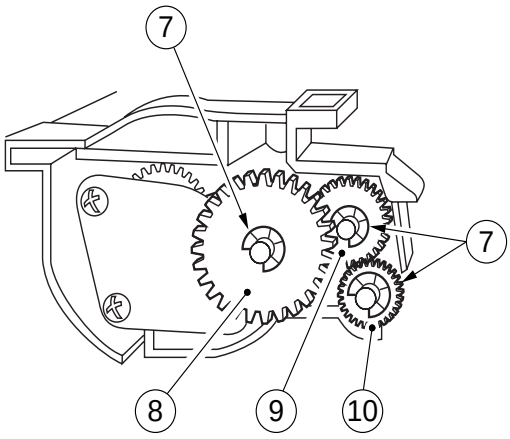

Figure 4-606

6) Remove the screw ⑪, and remove the butting roll ⑫ and roll case ⑬.

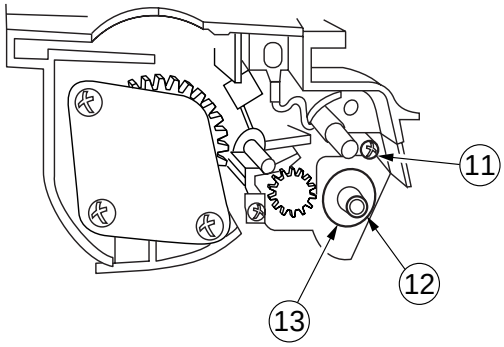

Figure 4-607

7) Remove the developing cylinder ⑭.

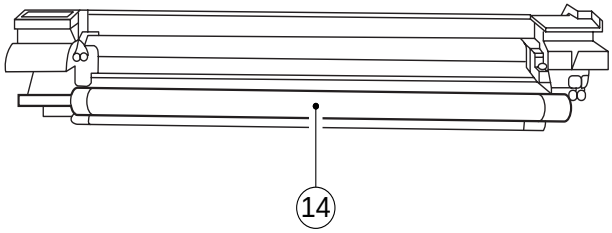

Figure 4-608

COPYRIGHT © 1998 CANON INC.
CANON NP6621 REV.0 FEB. 1998 PRINTED IN JAPAN (IMPRIME AU JAPON)

8) Remove the side seal ⑮. (both sides)

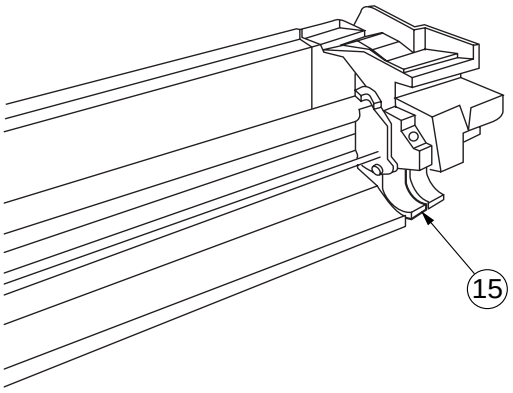

Figure 4-609

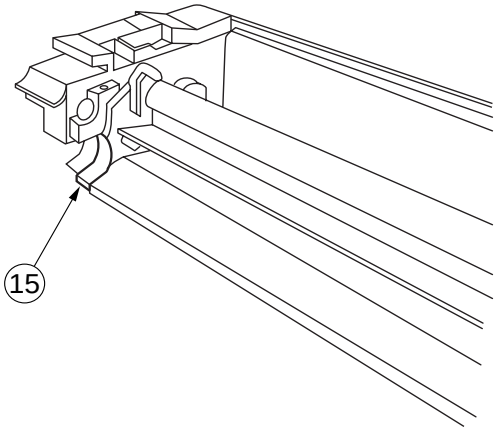

Figure 4-610

4. Installing the Side Seal and the Blade Assembly

1) Clean the area where the side seal will be installed with alcohol.
2) Attach the side seal as indicated in Figure 4-611.

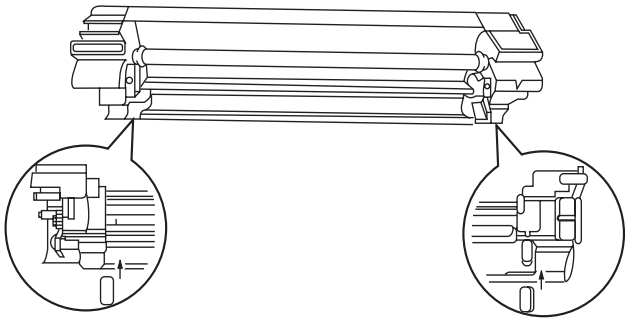

Figure 4-611

3) Check that the side seal and the container are in firm contact.
4) In European model, push the developing blade unit attachment section all the way against the upper side and secure it with the screw.

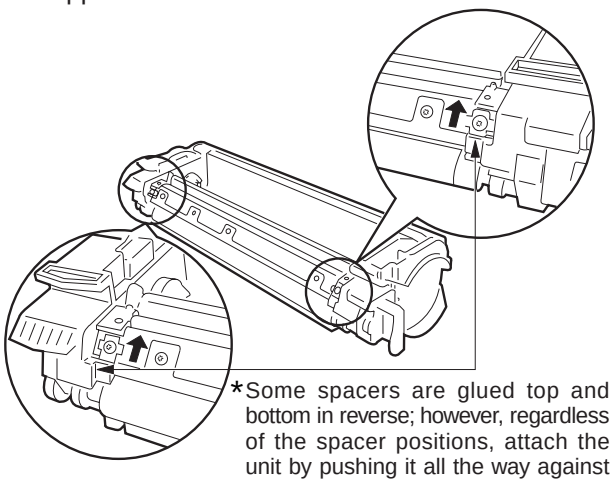

*Some spacers are glued top and bottom in reverse; however, regardless of the spacer positions, attach the unit by pushing it all the way against the Upper side.

Figure 4-612

In other model, engage both ends of the blade assembly ① with the developing aseembly, and tighten the two screws ②.

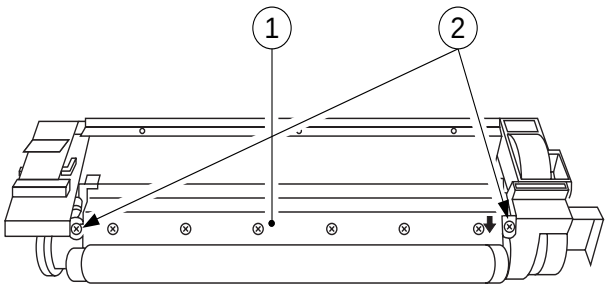

Figure 4-613

COPYRIGHT © 1998 CANON INC.
CANON NP6621 REV.0 FEB. 1998 PRINTED IN JAPAN (IMPRIME AU JAPON)

VII. FIXING SYSTEM

1. Construction

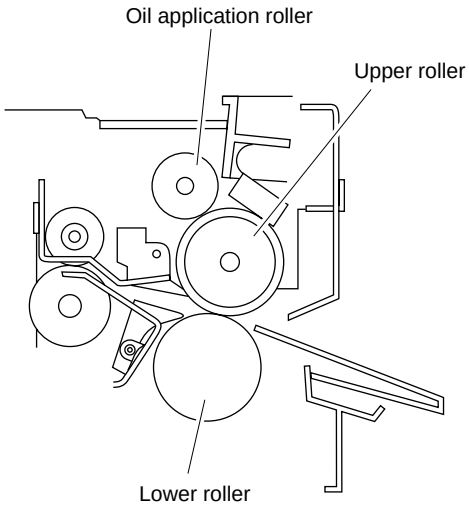

Figure 4-701

2. Removing the Upper Fixing Unit

1) Open the front cover.
2) Open the top body.
3) Remove the two screws ①, and remove the fixing assembly cover ②.

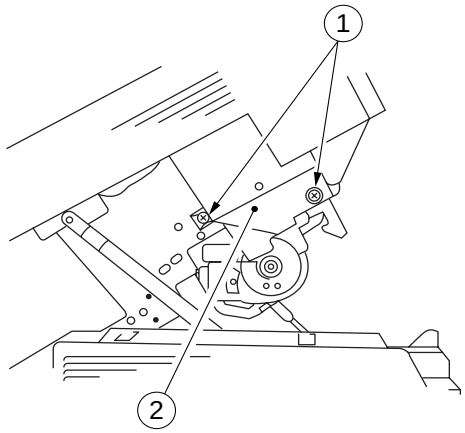

Figure 4-702

4) Disconnect the three connectors ③, and remove the screw ④.

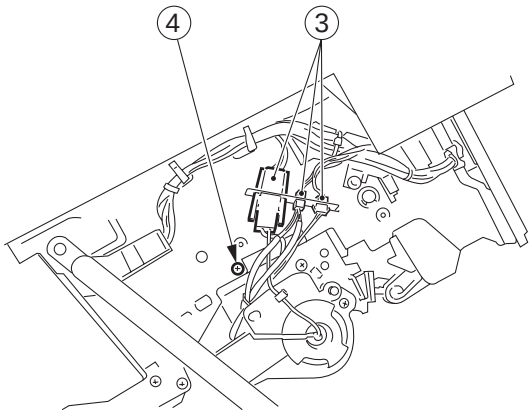

Figure 4-703

COPYRIGHT © 1998 CANON INC.

5) Open the fixing shutter ⑤ with the screw driver inserted into the hole ⑦, after lifting the fixing shutter.

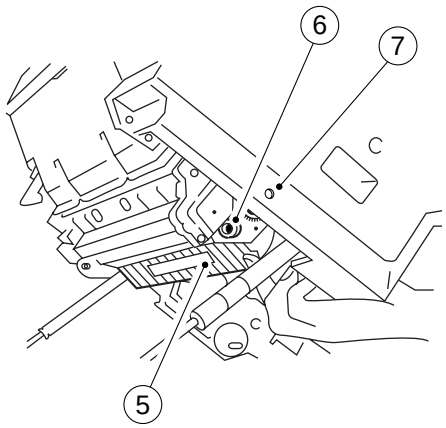

Figure 4-704

6) Pull out the upper fixing unit slowly toward the rear.

Caution:
Do not touch the fixing roller.

3. Removing the Fixing Roller

Caution:
Wait until the heater and the heater connector have cooled adequately before starting the following work:

1) Remove the upper fixing unit. (See “Removing the Upper Fixing Unit.”)
2) Remove the front and rear cover.
3) Remove the front wire (stopper).
4) Pull toward rear the fixing roller.
5) Remove the two screws ①, and pull out the cleaning roller to the front.

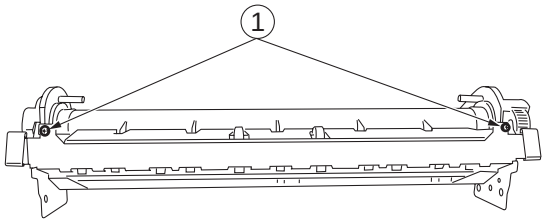

Figure 4-705

6) Remove the four screws ②, and remove the fixing cover (both front and rear).

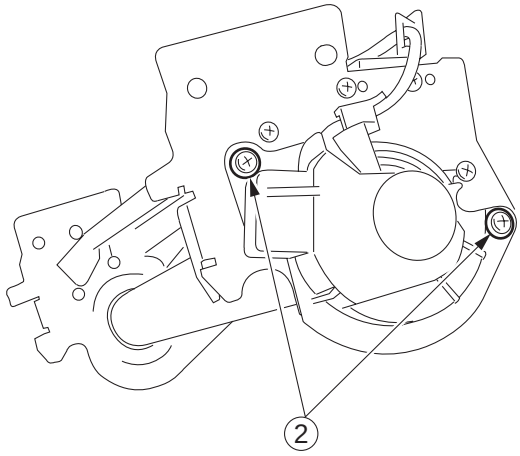

Figure 4-706(front)

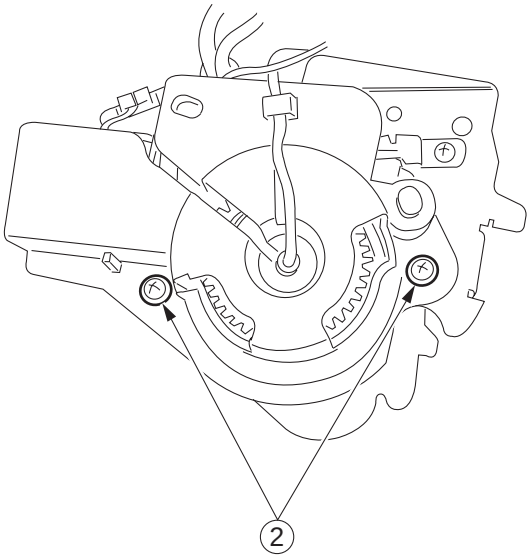

Figure 4-706(rear)

7) Open the two wire saddles ③, and remove the two fastons ④; then, remove the heater.

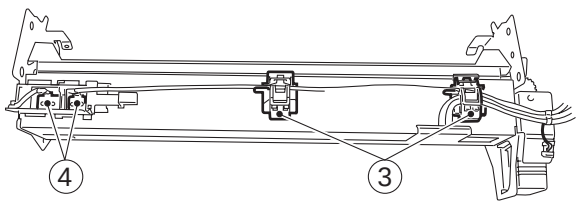

Figure 4-707

COPYRIGHT © 1998 CANON INC.
CANON NP6621 REV.0 FEB. 1998 PRINTED IN JAPAN (IMPRIME AU JAPON)

8) Push the thermal switch ⑤ in the direction of the arrow, and remove it.

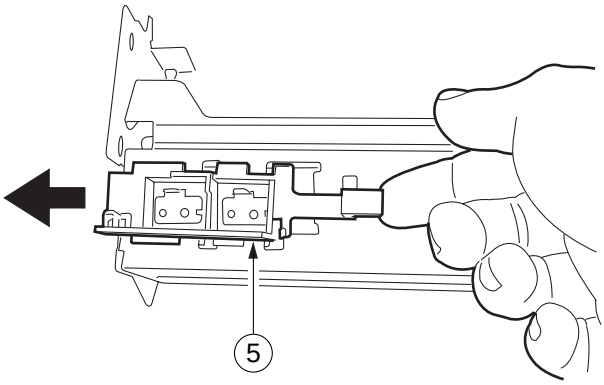

Figure 4-708

9) Remove the screw ⑥, and remove the metal plate ⑦.

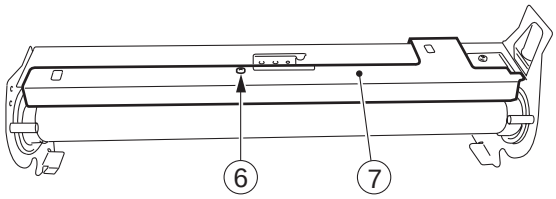

Figure 4-709

10) Remove the screw ⑧, and remove the thermistor ⑨.

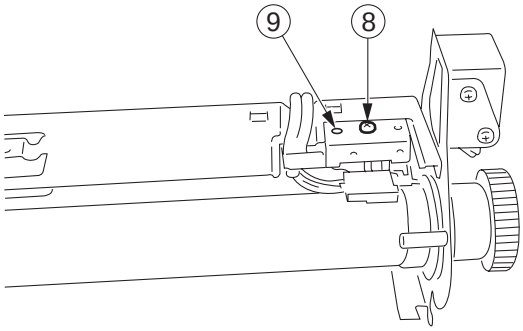

Figure 4-710

11) Remove the E-ring ⑩ at the front, and remove the bush ⑪ and the bearing ⑫; then, pull out the upper roller.

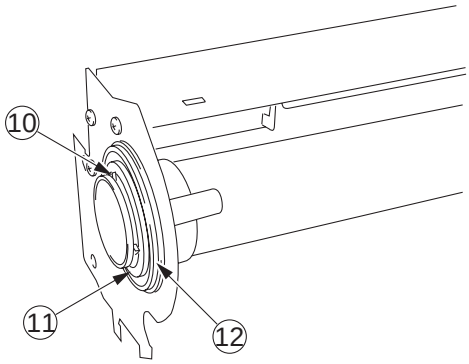

Figure 4-711

12) Remove the three E-rings ⑬ at the rear, and pull out the gear ⑭ and the bush ⑮.

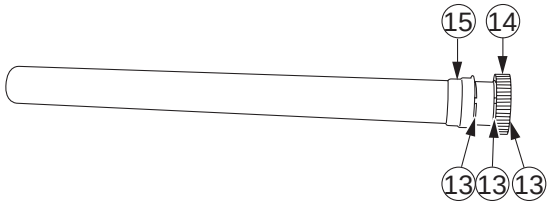

Figure 4-712

4. Points to Note after Replacing the Upper Fixing Unit

- If you have replaced the upper fixing unit, you must enter the temperature adjustment in service mode No. 304. (See the Service Handbook.)

Caution:
Do not touch the surface of the heater.

COPYRIGHT © 1998 CANON INC.

5. Removing the Lower Fixing Unit

1) Remove the E-ring ①, and remove the lower fixing unit ②.

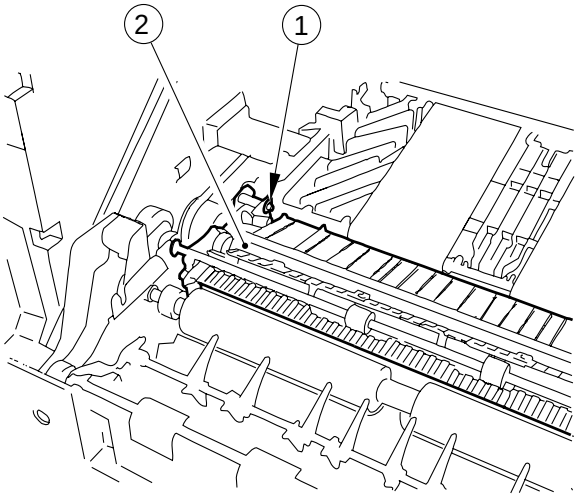

Figure 4-713

Caution:
Do not touch the surface of the fixing cleaning roller or the lower fixing roller.

6. Removing the Separation Claw/Fixing Cleaning Roller

1) Remove the front cover.
2) Remove the screw ①, and remove the separation claw unit ②.

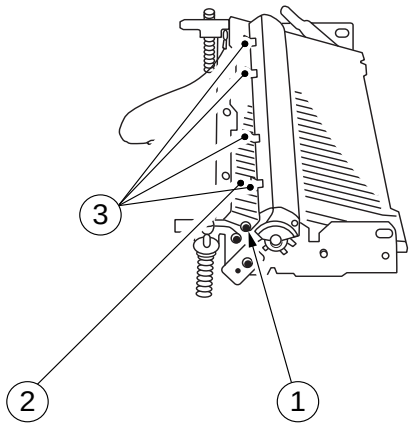

Figure 4-714

3) Remove the separation claw ③ from the separation claw unit.

Caution:
Take care so that the spring will not fly away.

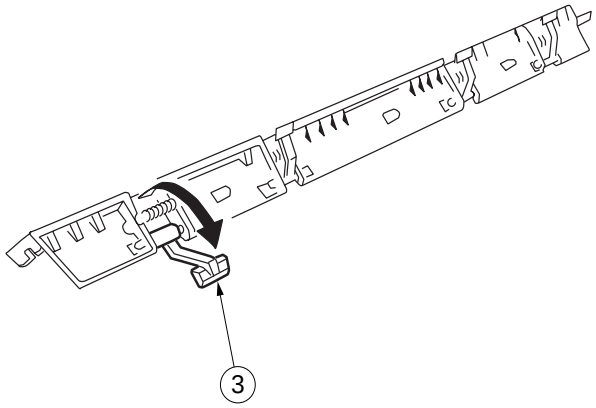

Figure 4-715

4) Remove the lower fixing roller ④ together with the bushing.

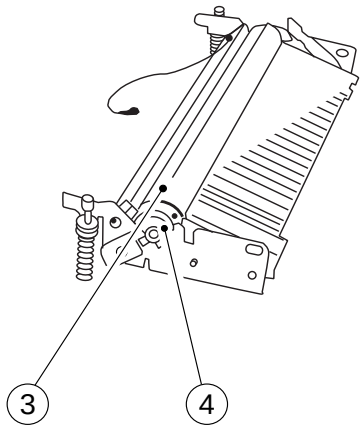

Figure 4-716

5) Remove the bushing ⑥ from the front, and remove the HOT warning cover ⑦.

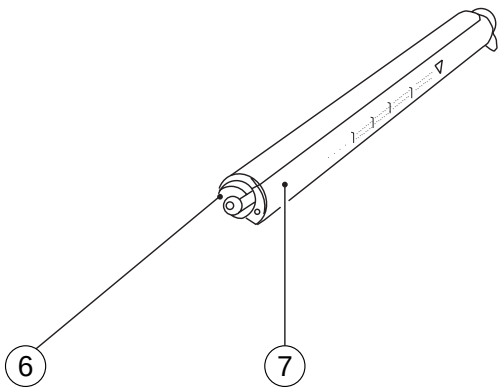

Figure 4-717

6) Remove the fixing cleaning roller by lifting it.

COPYRIGHT © 1998 CANON INC.
CANON NP6621 REV.0 FEB. 1998 PRINTED IN JAPAN (IMPRIME AU JAPON)

7. Adjusting the Lower Fixing Roller Pressure (nip)

If fixing faults are noted, make adjustments as follows:

The nip is correct if it is as indicated in Figure 4-718; otherwise, turn the bolt to adjust.

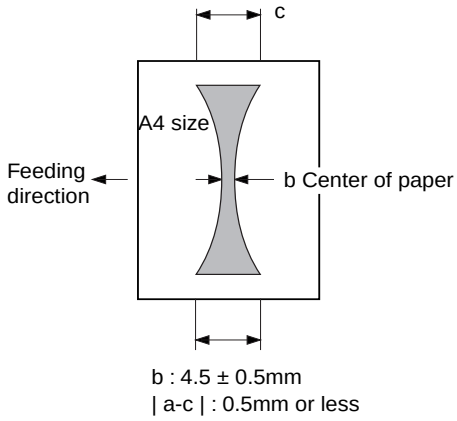

Figure 4-718

Note:
a and c represent points 10 mm from both ends of paper.

a. Measuring the Nip

Measure the nip before starting to use the copier for the day.

1) Open the copyboard cover, and make an A4 solid black copy.
2) Place the copy with its solid black facing down in the cassette.
3) Press the service mode switch (SW850) with a hex key.
   - The machine starts service mode and indicates '1'.
4) Press '4' on the numeric key pad.
   - The machine indicates '4'.
5) Press the AE key.
   - The machine starts operation/inspection mode and indicates '401'.
6) Press '6' on the numeric keypad.
   - The machine indicates '406'.
7) Press the Start key.
   - The machine picks up paper from the cassette, allows measurement as in Figure 4-718, and discharges paper.

Reference:
The paper will be stopped halfway sandwiched between the fixing rollers; it will be discharged about 10 sec later.

8) Measure the nip.

COPYRIGHT © 1998 CANON INC.

VIII. ELECTRICAL

A. DC Controller PCB

1. Removing the DC Controller PCB

1) Remove the lower rear cover.
2) Disconnect the connector from the DC controller.
3) Remove the six screws, and remove the DC controller PCB from the mounting plate.

2. Points to Note When Replacing the DC Controller

- When sending the DC controller PCB to the workshop or the factory, put it in a static conductive bag. Use a static conductive bag whose that is transparent enough in order for the face of the DC controller PCB to be visible.

  After replacement, perform the following:

  ① enter the settings recorded on the service mode label
  ② adjust the multifeeder paper width sensor
  ③ adjust the scanning lamp light intensity
  ④ adjust AE
  ⑤ enter the values recorded on the composite power supply label

B. Composite Power Supply PCB

1. Removing the Composite Power Supply PCB

1) Remove the lower rear cover and the left cover.
2) Disconnect all connectors of the composite power supply PCB.
3) Disconnect J317 and J322 ① of the DC controller PCB.

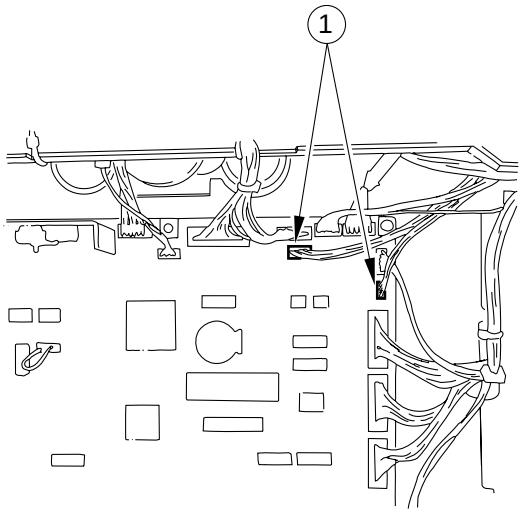

Figure 4-801

4) Disconnect the two AC connectors ②, and remove the two screws ③.

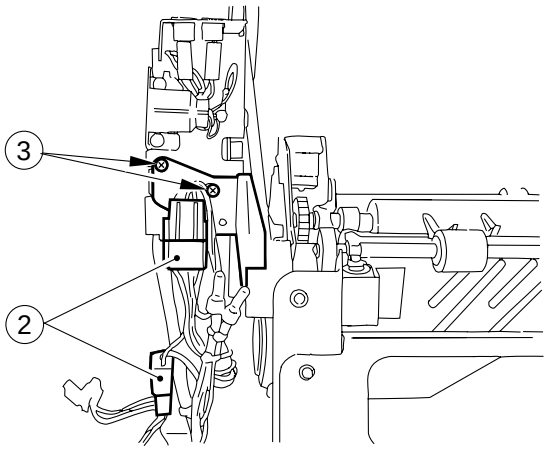

Figure 4-802

COPYRIGHT © 1998 CANON INC.
CANON NP6621 REV.0 FEB. 1998 PRINTED IN JAPAN (IMPRIME AU JAPON)

5) Remove the grounding wire ④, screw ⑤, the remaining connectors,and cord guide hook ⑥; then, remove the composite power supply PCB ⑦.

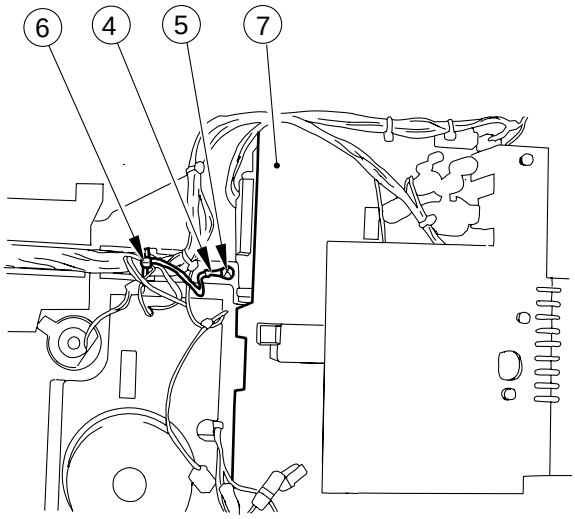

Figure 4-803

C. AE Sensor PCB

1. Points to Note When Replacing the AE Sensor

- After replacement, perform the following:
  ① adjust AE

COPYRIGHT © 1998 CANON INC.
CANON NP6621 REV.0 FEB. 1998 PRINTED IN JAPAN (IMPRIME AU JAPON)

CHAPTER 5
INSTALLATION

The machine is precisely adjusted and strictly inspected before shipment, and it is important to install the machine so that it retains its pre-shipment performance.

The service person is expected to install the machine based on a full understanding of its mechanisms and run necessary checks after installation.

I. SELECTING THE SITE 5-1
II. UNPACKING AND INSTALLING THE COPIER 5-2
  A. Unpacking and Removing Fixings 5-2
  B. Turning On the Copier 5-5
  C. Checking the Images and Operations 5-7
  D. Attaching the Drum Unit 5-8
  E. Changing the Cassette Size 5-9
III. RELOCATING THE COPIER 5-11
IV. REPLACING THE DRUM UNIT 5-12
V. INSTALLING THE CONTROL CARD IV N 5-14
VI. CASSETTE HEATER KIT 5 INSTALLATION PROCEDURE 5-16
  A. Unpacking 5-16
  B. Installation (to copying machine) 5-17
  C. Installation (to a cassette Feeding Module-A2/B2/Cassette Feeding Unit-K1) 5-20
VII. CASSETTE HEATER KIT 7 INSTALLATION PROCEDURE 5-24
  A. Unpacking 5-24
  B. Installation 5-25
  C. Attaching the Ratings Label 5-27
VIII. INSTALLING THE REMOTE DIAGNOSTIC DEVICE II 5-28
  A. Unpacking 5-28
  B. Installing to the Copier 5-28

COPYRIGHT © 1998 CANON INC. CANON NP6621 REV.0 FEB. 1998 PRINTED IN JAPAN (IMPRIME AU JAPON)

COPYRIGHT © 1998 CANON INC. CANON NP6621 REV.0 FEB. 1998 PRINTED IN JAPAN (IMPRIME AU JAPON)

I. SELECTING THE SITE

Keep the following in mind when selecting the site of installation; if possible, pay a visit to the user's before the delivery of the machine.

- The site must provide a power outlet that may be used exclusively for the machine and that meets the rating ±10%.
- The site must be 45.5° to 90.5°F (7.5° to 30°C) in temperature and 10% to 80% in humidity. In particular, avoid areas near water faucets, boilers, humidifiers, or refrigerators.
- Avoid areas near sources of fire, areas subject to dust or ammonium gas, or areas exposed to the direct rays of the sun; if necessary, provide curtains to shut out the sun.
- The site must be well ventilated.
- Make sure that the floor will remain in contact with the copier's feet and will keep the copier level.
- Make sure that there will be work space that meets the measurements shown in Figure 5-101; in other words, there must be distances A and B around the copier when measured with its front door open.

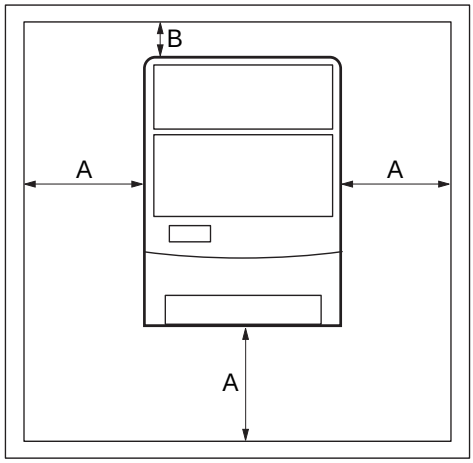

A: 19.7in./50cm
B: 3.9in./10cm

Figure 5-101

COPYRIGHT © 1998 CANON INC. CANON NP6621 REV.0 FEB. 1998 PRINTED IN JAPAN (IMPRIME AU JAPON)

II. UNPACKING AND INSTALLING THE COPIER

When a metal part is brought in from a cold to warm environment, droplets of water can develop on the surface of the part. This phenomenon is called *condensation*, and condensation in a copier can lead to faulty images. If the copier has been moved from a cold to warm place, leave it alone for about one hour or more before unpacking it.

A. Unpacking and Removing Fixings

Step	Work	Remarks
1	Unpack the copier.	
2	Detach the plastic cover, and place the copier on the pedestal holding its grips; be sure to work in a group of two. Install the Cassette Feeding Module-B2, -A2, etc. (accessory) according to its Installation Procedure if the copier is to be placed on it.	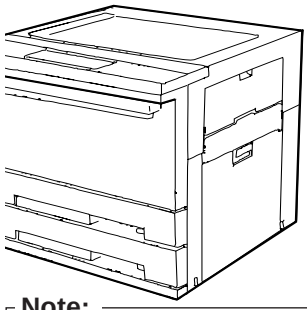 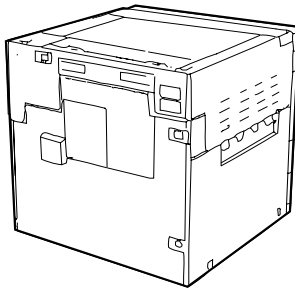 **Note:** If the A or INCH/AB configuration machine the copyboard cover is attached.
3	Open the cardboard box, and take out all the accessories.	Check that none of the following accessories is missing: • Copy tray • Cassette (Universal) × 2 • Operator's Manual • Toner • Drum unit
4	Remove all tape from the outside of the copier. Take out the cassette from the cardboard box, and remove the cushions from inside the cassette; then, slide the cassette into the copier.	Make sure that the paper size plate and size label (1 pc. each) are inside the cassette.
5	Remove the tape from the scanner fixing found on the outside of the left cover, remove the screw, and slide the fixing to the right to detach it to the front. • Keep the fixing stored for possible relocation of the machine.	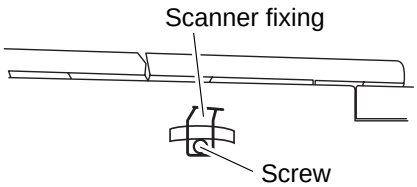

COPYRIGHT © 1998 CANON INC. CANON NP6621 REV.0 FEB. 1998 PRINTED IN JAPAN (IMPRIME AU JAPON)

Step	Work	Remarks
6	Open the front cover, and push the lever found on the left side up in the direction of the arrow to open the copier's top body.	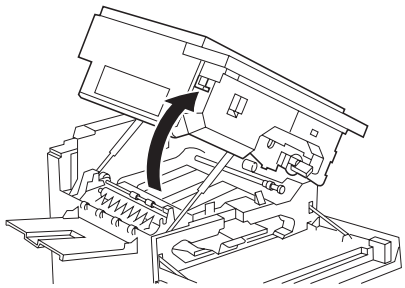
7	Pull up the spacer (front and rear, 1 pc. each) of the fixing roller until a click is heard.	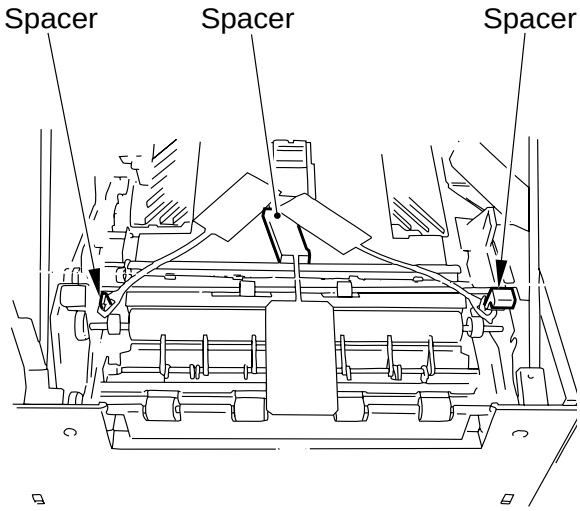
8	Remove the two pieces of cardboard (spacer) from the feeding assembly.	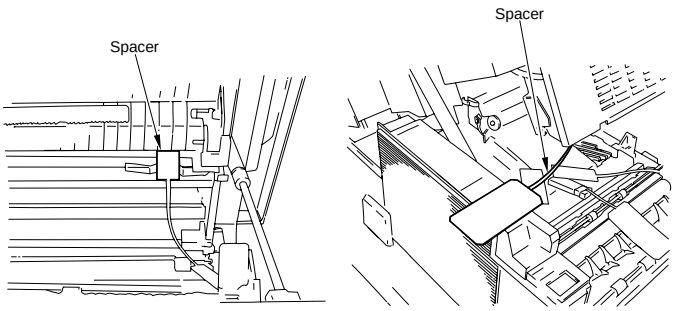

COPYRIGHT © 1998 CANON INC. CANON NP6621 REV.0 FEB. 1998 PRINTED IN JAPAN (IMPRIME AU JAPON)

Step	Work	Remarks
9	Pull the developing locking lever toward the front, and turn it clockwise to release it.	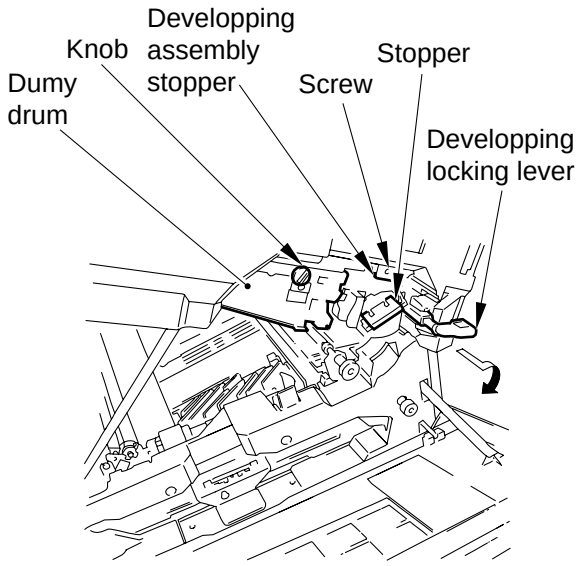
10	Remove the knob, and remove the dummy drum from the copier. (Keep the knob for later.)	
11	Remove the screw, and remove the developing assembly stopper.	
12	Remove the stopper from the developing assembly.	
13	Remove the developing assembly, and check that the developing cylinder is free of scratches or dirt.	
14	Install the developing assembly, and attach the developing assembly stopper with a screw.	
15	Engage the developing assembly.	
16	Close the copier's top unit.	

COPYRIGHT © 1998 CANON INC. CANON NP6621 REV.0 FEB. 1998 PRINTED IN JAPAN (IMPRIME AU JAPON)

B. Turning On the Copier

Step	Work	Remarks
1	Connect the power plug to the power outlet.	**Caution:** • Make sure that the power outlet is the rating ±10%.
2	Turn on the power switch.	Make sure that the Add Paper message flashes. • Press the keypad and the Clear key to make sure that the copy count indication is correct.
3	Turn off the power switch.	
4	Supply toner according to the instructions given on the toner supply label attached behind the front door.	**Caution:** When turning the toner cartridge counterclockwise to set it, you must fully turn it until it is locked; the developing assembly can cause a fault if you operate the machine without locking the cartridge.
5	Release the developing assembly by the developing assembly locking lever.	
6	Install the drum unit.	See “D. Attaching the Drum Unit.”
7	Lock the developing assembly, and close the copier’s top unit.	
8	Insert the door switch activator into the door switch, and turn on the power.	
9	In others model except European model, this procedure is not necessary. Go to step 10). Select service mode No. 313/314, and enter the settings recorded on the drum label. To select service mode, • Press the service mode switch (SW850) with a hex key. Select ‘3’ of the mode by pressing ‘3’ on the keypad and AE key; then, select ‘No. 3 xx’ by pressing ‘x’ and ‘x’ on the keypad and the start key.	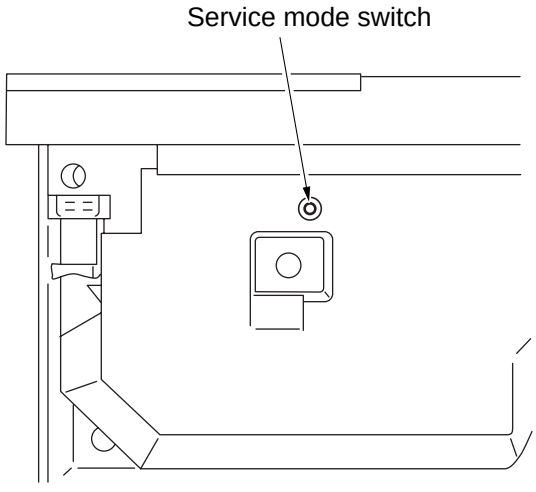 To enter settings, • Select ‘No. 313’ in service mode, and enter the setting recorded on the label (PRIMARY) using the keypad. (To enter ‘–’, press the % key before entering the setting.) Then, press the Start key to store the setting. To enter the setting for IP_OFST, select ‘No. 314’ in service mode and work in the same way.

COPYRIGHT © 1998 CANON INC. CANON NP6621 REV.0 FEB. 1998 PRINTED IN JAPAN (IMPRIME AU JAPON)

Step	Work	Remarks
10	Execute 'No. 401' in service mode. • Press the service mode switch (SW850), '4' on the keypad, AE Key, and Start key in sequence.	The copier supplies toner from the toner container to the developing assembly (about 5 min). **Caution:** • Do not turn off the power or remove the door switch actuator while the machine is operating.
11	Make sure that step 10 has been completed; then, turn off the power, and open the copier's top unit.	
12	Remove the static eliminator, and clean it with the static eliminator brush; then, set the static eliminator.	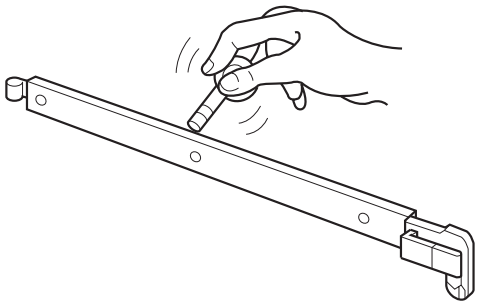
13	Turn on the power.	
14	Only the European model, in case of the other model, go to step 15. Execute 'No. 412' in service mode. • Press the service mode switch (SW850), '4' on the keypad, AE key, '1' and '2' on the keypad, and Start key in sequence.	The copier automatically sets the APVC value.
15	Set the settings for user mode and settings mode in service mode to suit the needs of the user.	
16	Tailor the cassette to suit the desired size by operating the size guide plate and size detecting lever; then, attach the size label.	See "E. Changing the Cassette Size."
17	Put copy paper in the cassette, and set the cassette in the copier.	• Make sure that the Add Paper message turns off. • Make sure that the paper indicator matches with the size of the cassette. • Press the keys on the control panel other than the Copy Start key to make sure that all respective operations are normal.
18	Attach the copy tray.	
19	Remove the door switch activator, and close the front door.	

COPYRIGHT © 1998 CANON INC. CANON NP6621 REV.0 FEB. 1998 PRINTED IN JAPAN (IMPRIME AU JAPON)

C. Checking the Images and Operations

Step	Work	Checks/Remarks
1	Place the Test Sheet on the copyboard, and check the copies.	• Make sure there is no abnormal sound. • Check the copy images for each standard reproduction ratio. • Make sure that as many copies as specified are made normally. • If the copy image is faulty, perform the “Image Adjustment Basic Procedure.”(See service Handbook P.1-5.)
2	Make copies in manual mode.	Make sure that the copying operation is normal.
3	Make sure that the external covers are free of scratches and deformations.	
4	Clean the area around the copier.	
5	Move the machine to its site of installation.	Make sure that the copier is more or less level.

COPYRIGHT © 1998 CANON INC. CANON NP6621 REV.0 FEB. 1998 PRINTED IN JAPAN (IMPRIME AU JAPON)

D. Attaching the Drum Unit

Step	Work	Checks/Remarks
1	Unpack the drum unit, and remove the light-blocking sheet.	
2	Remove the primary charging roller releasing spacer.	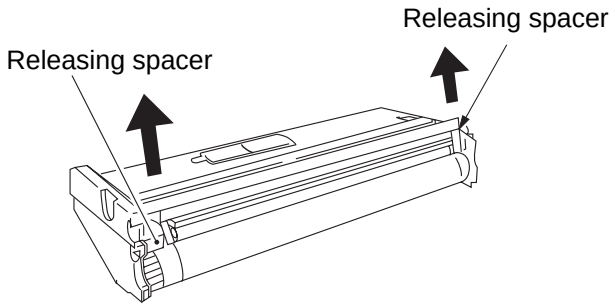 Take care not to damage the surface of the drum and not to touch the primary charging roller.
3	Set the drum unit to the copier, and fix it in position using the knob used to keep the dummy drum.	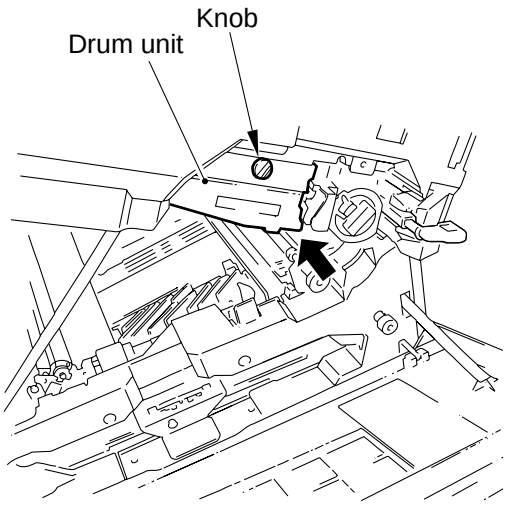 Be sure to insert the drum unit straight along the copier's rail.
4	Fill out the label, and attach it to the drum unit cover.	日付 date / date Datum カウンター counter / compteur. Zahler 備考 notes / note Notiz

COPYRIGHT © 1998 CANON INC. CANON NP6621 REV.0 FEB. 1998 PRINTED IN JAPAN (IMPRIME AU JAPON)

E. Changing the Cassette Size

Change the cassette size to suit the user's needs.

1) Slide the cassette out of the copier.
2) Move the length plate inside the cassette to suit the length of the paper size.

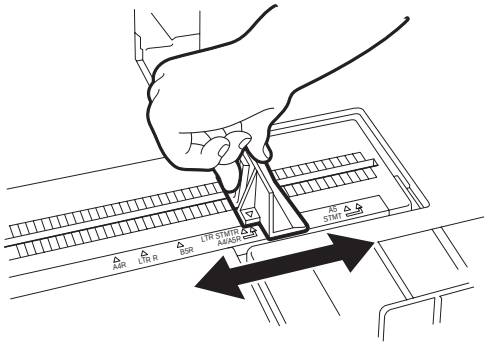

Figure 5-201

3) Move the width plate inside the cassette to suit the width of the paper to be used.

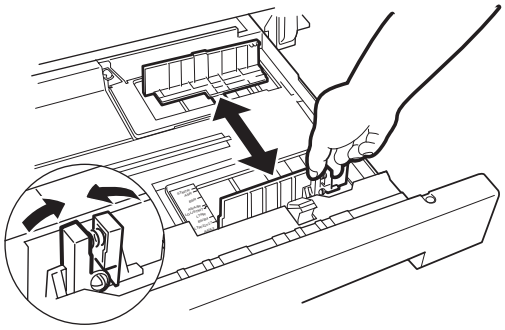

Figure 5-202

4) Move the paper size lever found toward the front of the cassette so that it is aligned with the size of the paper to be used.

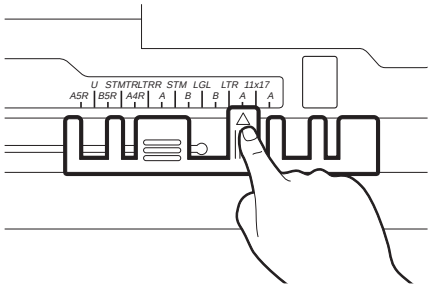

Figure 5-203

Caution:
Failure to adjust the paper size lever will lead to jams or soiling.

5) Take out the paper size plates for the cassette, and pick out the four plates representing the most frequently used sizes; attach the labels.

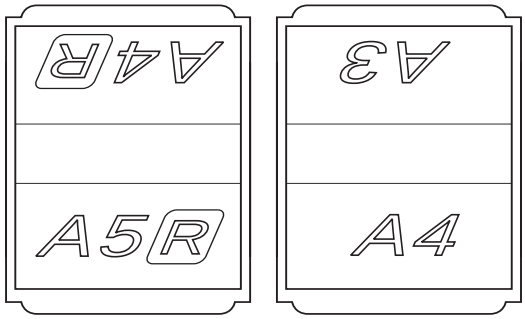

Figure 5-204

COPYRIGHT © 1998 CANON INC. CANON NP6621 REV.0 FEB. 1998 PRINTED IN JAPAN (IMPRIME AU JAPON)

6) Set the paper size plates selected in step 4).

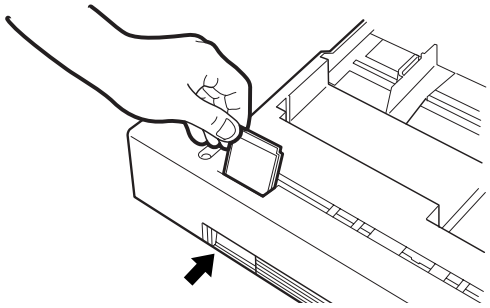

After setting the size plate, make sure it corresponds to the paper size you have selected.

Figure 5-205

Caution:

If you are setting the plate for the position representing the universal (U) cassette, you must perform the work described for “universal cassette paper size setting (505); see p. 3-131.

■ Points to Note When Handling the Photosensitive Drum after Installation

The copier’s photosensitive drum is highly susceptible to light; mere exposure to room light can affect the drum enough to produce white spots or black lines on the copies. Keep the following in mind:

- Do not spend more than 5 min when removing jams.
- After detaching the drum unit from the copier during servicing work, be sure to protect it in the light-blocking sheet that came with the drum or fresh copy paper, and place the drum in a dark place.

Do not touch the photosensitive drum or primary charging roller.

If you have soiled the surface of the drum inadvertently, wipe it using a flannel cloth coated with toner; do not use paper, lint-free or otherwise.

Do not dry wipe or use solvent to clean the drum.

COPYRIGHT © 1998 CANON INC. CANON NP6621 REV.0 FEB. 1998 PRINTED IN JAPAN (IMPRIME AU JAPON)

III. RELOCATING THE COPIER

If you must relocate the copier by truck or using other means of transportation, perform the following work:

Step	Work	Checks	Remarks
1	Move the lens to the Direct position.		*Direct position* refers to the position of the lens after warm-up initiated by power-on.
2	Take out the drum unit.	Put the drum unit in a box for transport.	
3	Fix the scanner in place.		Use the fixing removed at time of installation.
4	Tape the front door and delivery assembly in place.		
5	Place 11 × 17/A3 copy paper on the copyboard glass, and tape the copyboard cover in place.		

COPYRIGHT © 1998 CANON INC. CANON NP6621 REV.0 FEB. 1998 PRINTED IN JAPAN (IMPRIME AU JAPON)

IV. REPLACING THE DRUM UNIT

Go through the following when replacing the drum unit:

Step	Work	Remarks
1	Turn off the copier, and open the front door and the copier's top unit.	
2	Release the developing assembly, and remove the knob to remove the drum unit.	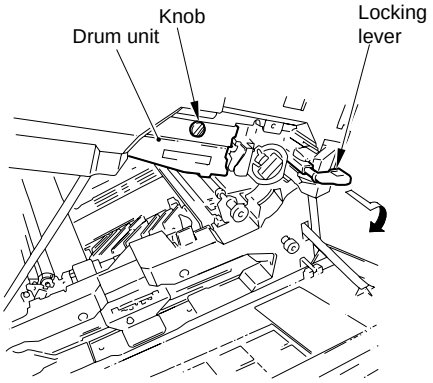
3	Unpack the new drum unit, and remove the light-blocking sheet.	
4	Remove the primary charging roller releasing spacer.	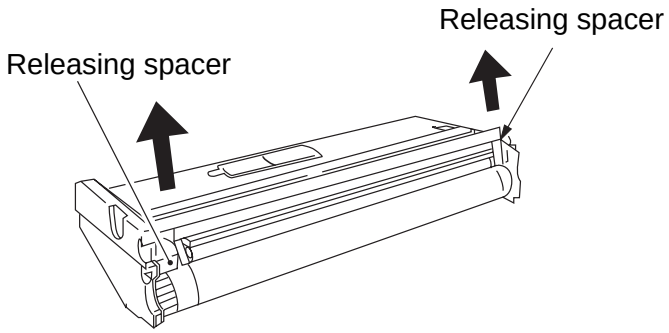 Take care not to damage the surface of the drum and not to touch the primary charging roller.
5	Set the drum unit to the copier, and attach the knob used to fix the old drum unit.	
6	Fill out the label, and attach it to the drum unit cover.	日付 date date Datum カウンター counter compteur. Zahler 備考 notes note Notiz
7	Lock the developing assembly.	

COPYRIGHT © 1998 CANON INC.
CANON NP6621 REV.0 FEB. 1998 PRINTED IN JAPAN (IMPRIME AU JAPON)

Step	Work	Remarks
8	Turn on the door switch using the door switch actuator; then, shift the power switch to 'ON'.	
9	Only the European model, in case of the other model, go to next step. Select service mode No. 313/314, and enter the settings recorded on the drum label. To select service mode, • Press the service mode switch (SW850) with a hex key. Select '3' of the mode by pressing '3' on the keypad and AE key; then, select 'No. 3 xx' by pressing 'x' and 'x' on the keypad and the Start key.	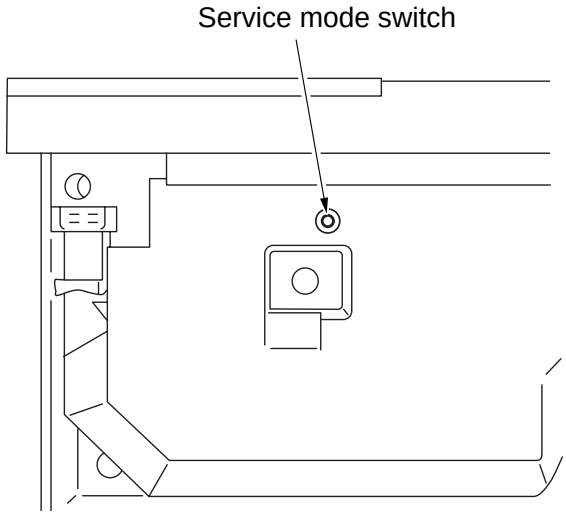 To enter settings, • Select 'No. 313' in service mode, and enter the setting recorded on the label (PRIMARY) using the keypad. (To enter '–', press the % key before entering the setting.) Then, press the Start key to store the setting. To enter the setting for IP_OFST, select 'No. 314' in service mode and work in the same way.
10	Turn off the power, and open the copier's top unit.	
11	Replace the static eliminator, and close the copier's top unit.	
12	Close the front door, and turn on the power.	
13	Only the European model, in case of the other model, go to next step. Execute 'No. 412' in service mode. • Press the service mode swicth (SW850), '4' on the keypad, AE key, '1' and '2' on the keypad, and Start key in sequence.	The copier automatically sets the APVC value; it stops in about 23 sec.
14	Remove the door switch actuator, and close the front door.	
15	Place the test sheet and check copy.	Follow image adjustment procedure. (See the Service Handbook P.1-5.)

COPYRIGHT © 1998 CANON INC. CANON NP6621 REV.0 FEB. 1998 PRINTED IN JAPAN (IMPRIME AU JAPON)

V. INSTALLING THE CONTROL CARD IV N

Caution:
Be sure to disconnect the copier's power plug before starting the installation work.

1) Open the front cover
2) Open the copier's top body by operating its open/close lever.
3) Detach the front cover.
4) Take out the cartridge.
5) Detach the inside cover.
6) Loosen the screw on the upper rear cover.
7) Loosen the two screws on the copyboard glass.
8) Detach the face plate ① from the control card cable inlet.

When detaching the face plate ①, detach it in the direction of the arrow using pliers or screwdriver.

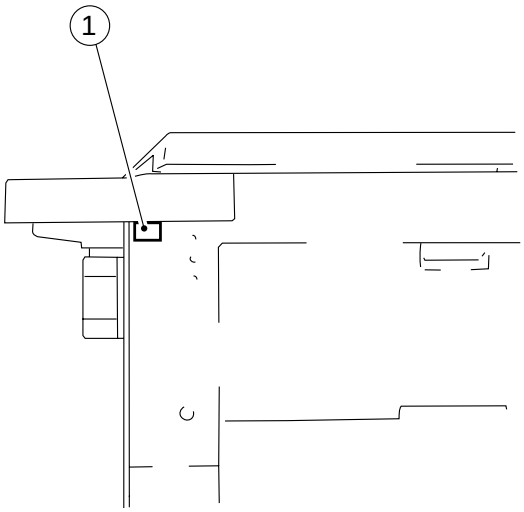

Figure 5-501

9) Fix the Control Card IV N to the copier using a screw ② (M4×12); at the time, be sure that the copier's emboss ③ is fitted in the hole in the Control Card IV N.

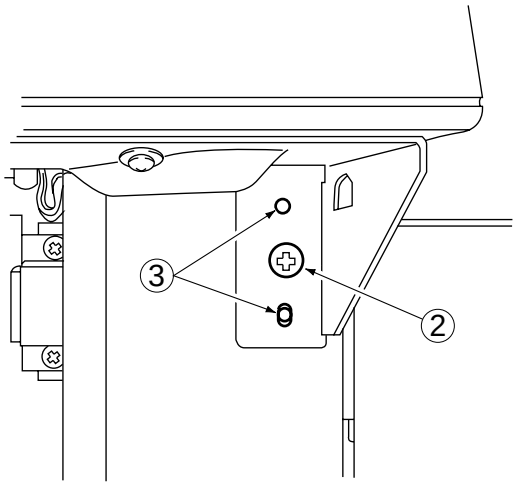

Figure 5-502

10) Disconnect the copier's dummy connector ④.

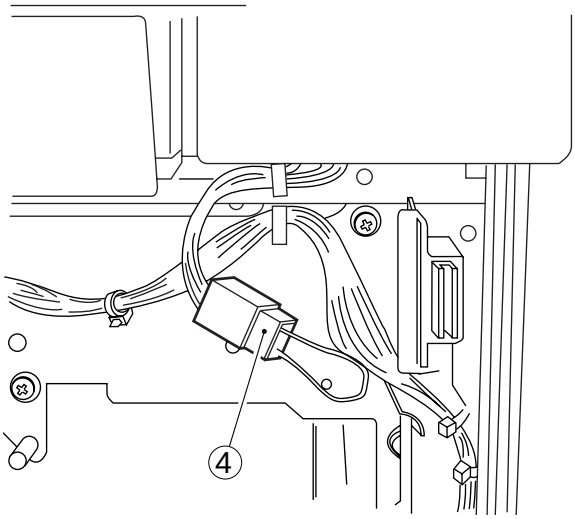

Figure 5-503

COPYRIGHT © 1998 CANON INC.
CANON NP6621 REV.0 FEB. 1998 PRINTED IN JAPAN (IMPRIME AU JAPON)

11) Connect the connector ⑤ of the Control Card IV N.

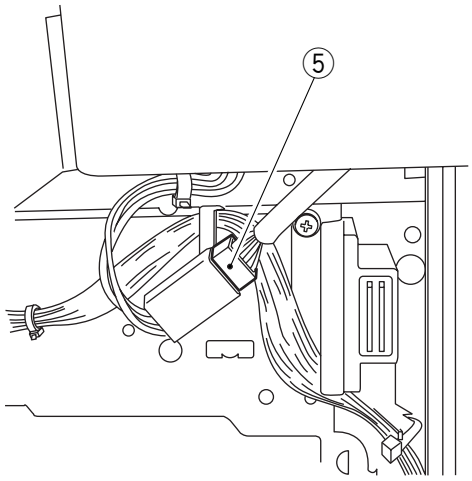

Figure 5-504

12) Connect the copier's power plug, and turn on its power switch to check the operation of the Control Card IV N.

COPYRIGHT © 1998 CANON INC. CANON NP6621 REV.0 FEB. 1998 PRINTED IN JAPAN (IMPRIME AU JAPON)

VI. CASSETTE HEATER KIT 5 INSTALLATION PROCEDURE

A. Unpacking

Open the shipping box, and check to make sure that none of the parts shown in Fig. 5-601 is missing.

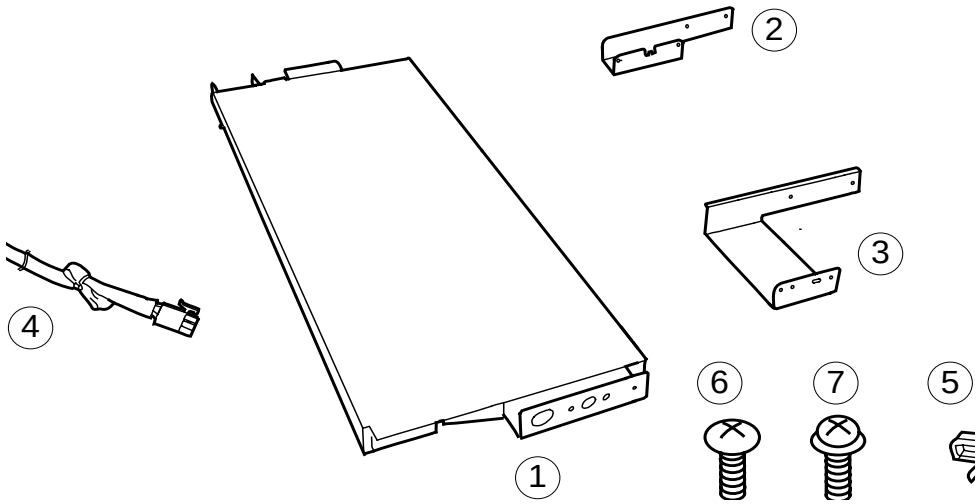

Figure 5-601

① Cassette Heater 1
② Mounting plate 1 1
③ Mounting plate 2 1
④ Relay harness 1
⑤ Cord clamp 1
⑥ Binding screw (black; M4×6) . 2
⑦ TP screw (white; M3×6) 2

COPYRIGHT © 1998 CANON INC. CANON NP6621 REV.0 FEB. 1998 PRINTED IN JAPAN (IMPRIME AU JAPON)

B. Installation (to copying machine)

1) Remove both top and bottom cassettes, and remove the front cover, front lower cover, and rear cover.

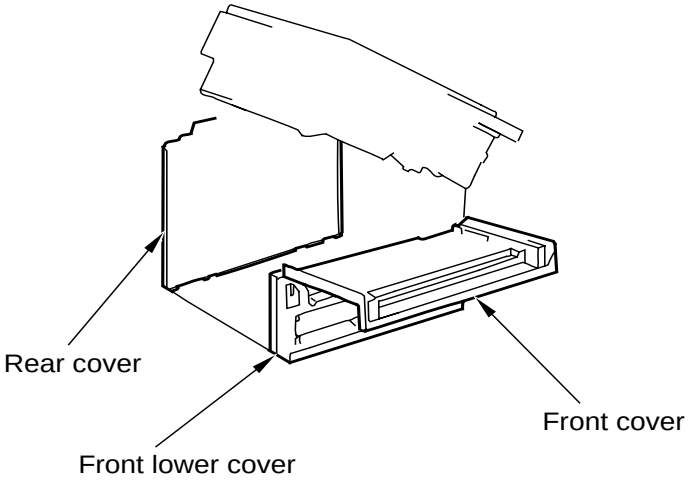

Figure 5-602

2) Disconnect the connector for the heater from the copier's rear, and remove the connector support member.

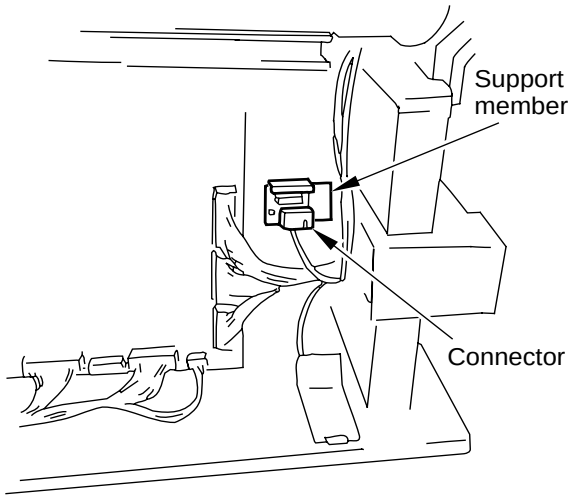

Figure 5-603

3) Install the mounting plate 1 to the cassette heater with two screws (black; M4×6).

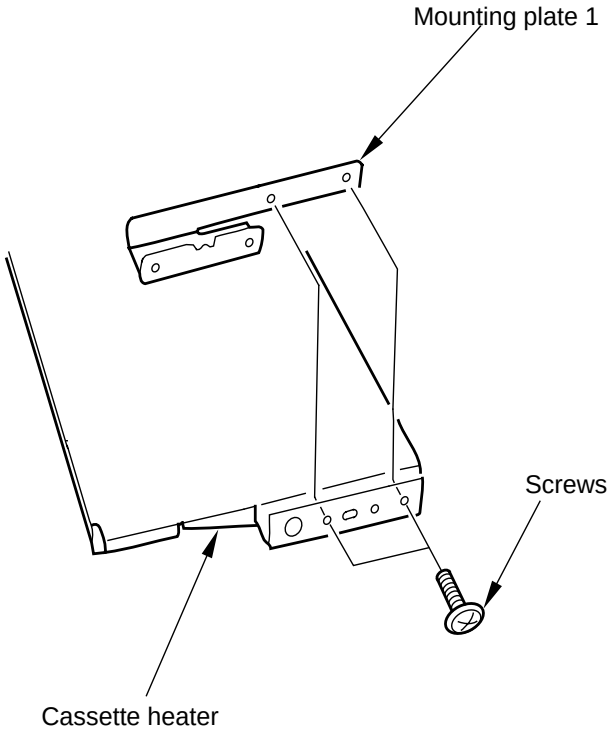

Figure 5-604

4) Remove the screw, and remove the connector cover of the cassette heater.

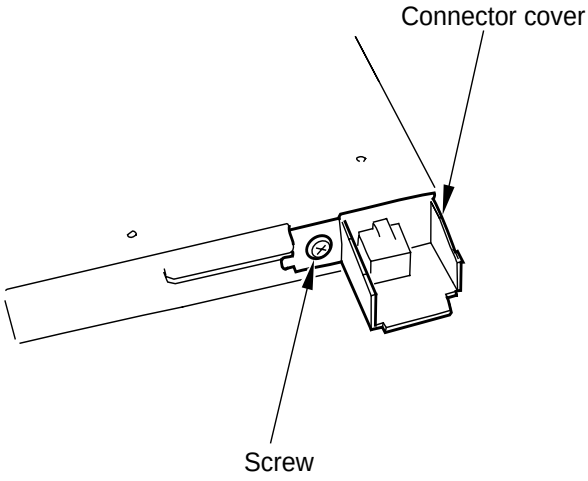

Figure 5-605

COPYRIGHT © 1998 CANON INC. CANON NP6621 REV.0 FEB. 1998 PRINTED IN JAPAN (IMPRIME AU JAPON)

5) Put the screw back, and tighten it.
6) Insert the bend found at the rear of the heater into the heater mounting hole in the copier's rear plate.

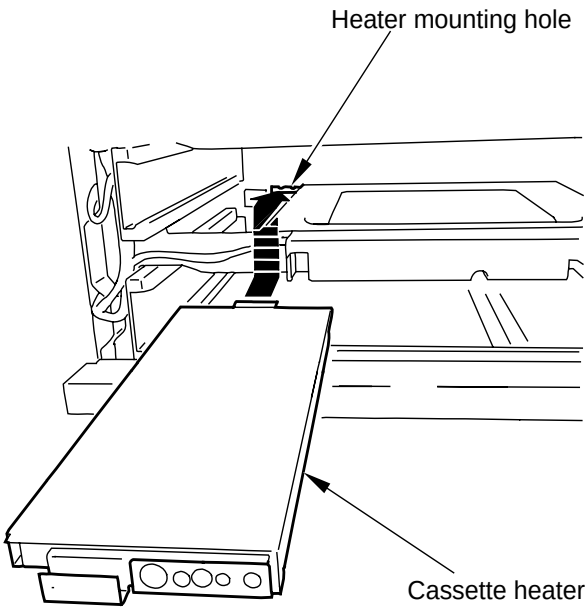

Figure 5-606

7) Fix the mounting plate 1 in place to the copier's side plate with two screws (white; M3×6).

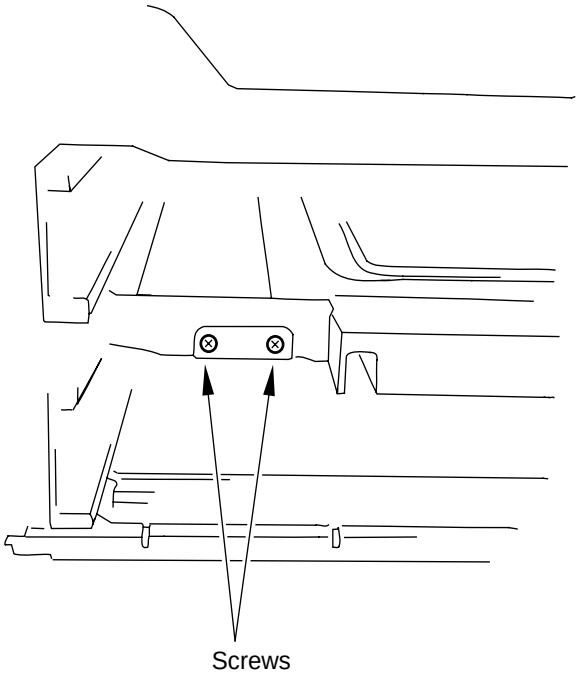

Figure 5-607

8) Connect the copier's connector to the connector on the cassette heater visible at the rear of the copier.

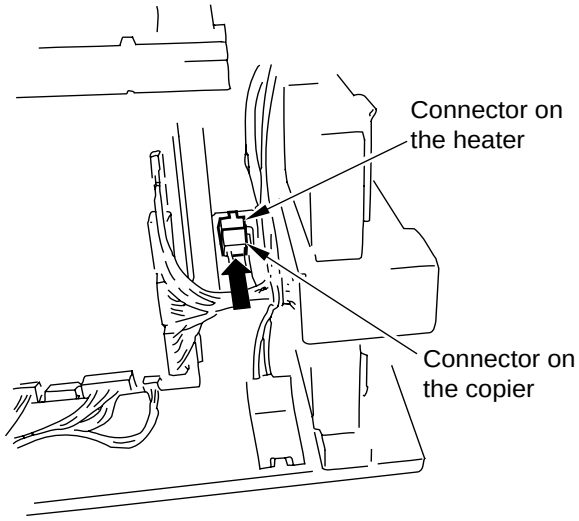

Figure 5-608

9) Install the copier's rear cover, front lower cover, and front cover.
10) Slide both top and bottom cassettes back in.
11) Open the copier's top unit.

COPYRIGHT © 1998 CANON INC. CANON NP6621 REV.0 FEB. 1998 PRINTED IN JAPAN (IMPRIME AU JAPON)

12) Turn on the copier's cassette heater switch. (Of the two switches, one at the rear; the heater will be supplied with power when the copier is switched off.)

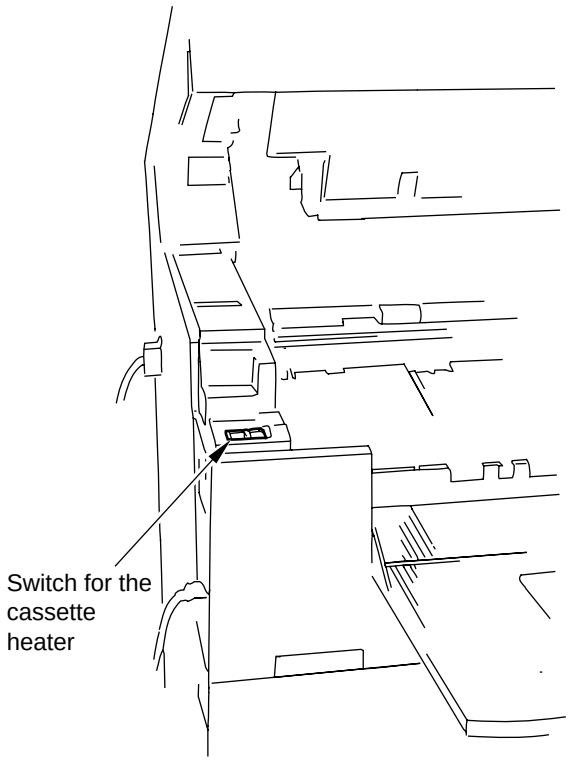

Figure 5-609

13) Close the top unit of the copier.

COPYRIGHT © 1998 CANON INC. CANON NP6621 REV.0 FEB. 1998 PRINTED IN JAPAN (IMPRIME AU JAPON)

C. Installation (to a Cassette Feeding Module-A2/B2/ Cassette Feeding Unit-K1)

1) Remove the cassettes and all rear covers from the cassette feeding unit/pedestal.
2) Remove the copier's rear cover.
3) Install the mounting plate 2 to the cassette heater with two screws (black; M4×6).

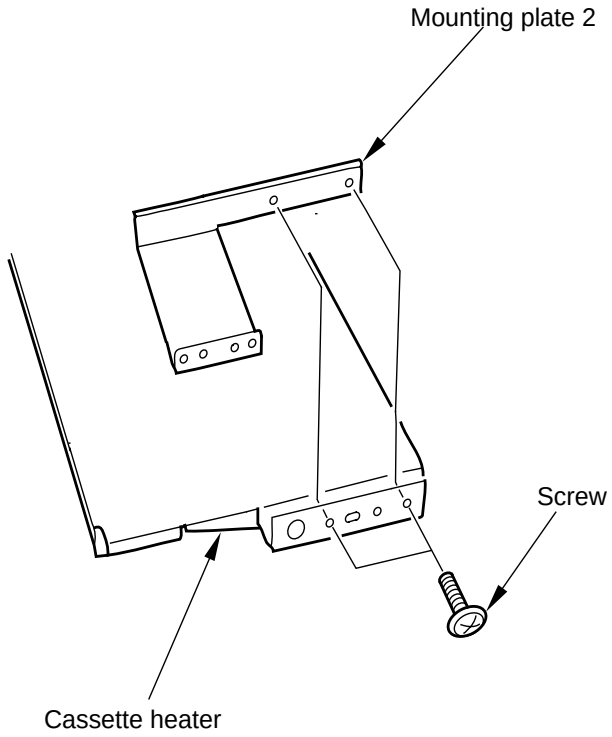

Figure 5-610

4) Insert the bend found at the rear of the heater into the heater mounting slit in the rear side plate of the cassette feeding unit/ pedestal (bottom holder).

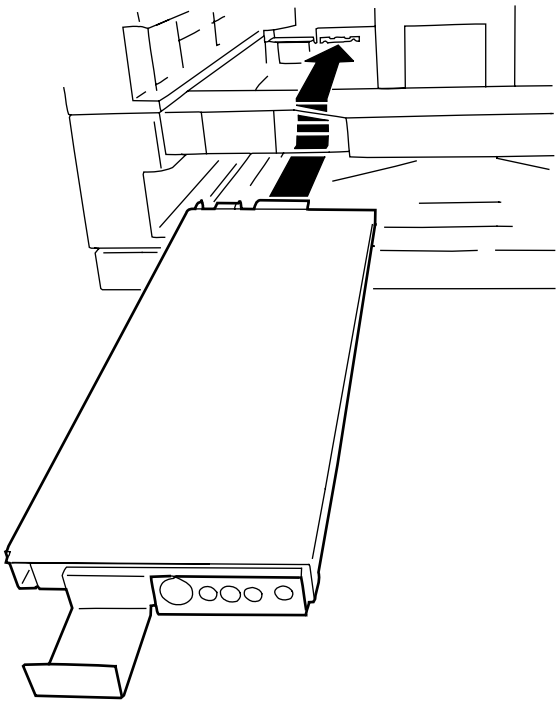

Figure 5-611

5) Open the cover on the front of the cassette feeding unit/module, and fix the mounting plate 2 in place to the front side plate with two screws (white; M3×6).

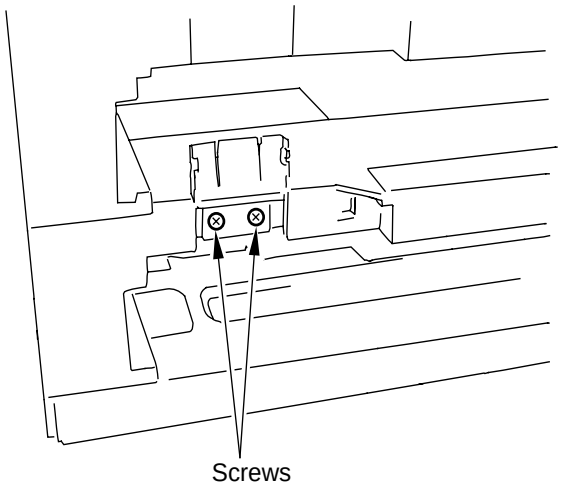

Figure 5-612

COPYRIGHT © 1998 CANON INC. CANON NP6621 REV.0 FEB. 1998 PRINTED IN JAPAN (IMPRIME AU JAPON)

6) Close the cover.
7) Connect the connector on the relay harness to the connector of the cassette heater (rear side plate of the cassette feeding unit/module). (Connect the side where the harness is bundled with a tie-wrap.)

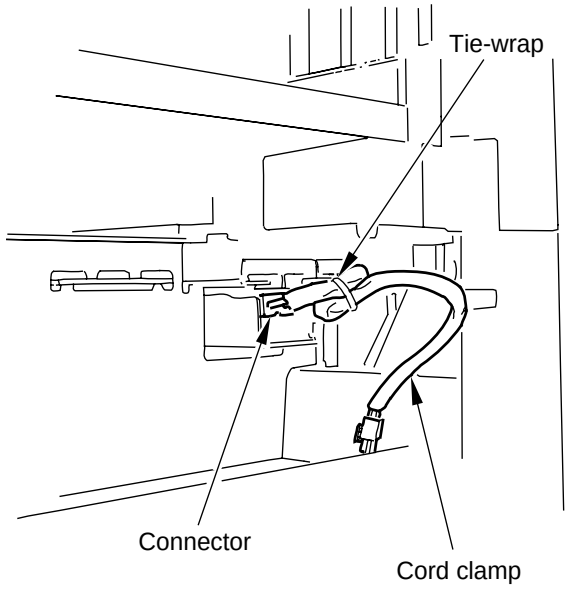

Figure 5-613

8) Install the cord clamp to the hole in the rear side plate of the cassette feeding unit/pedestal.
   - Cassette Feeding Module-A2/Cassette Feeding Unit-K1

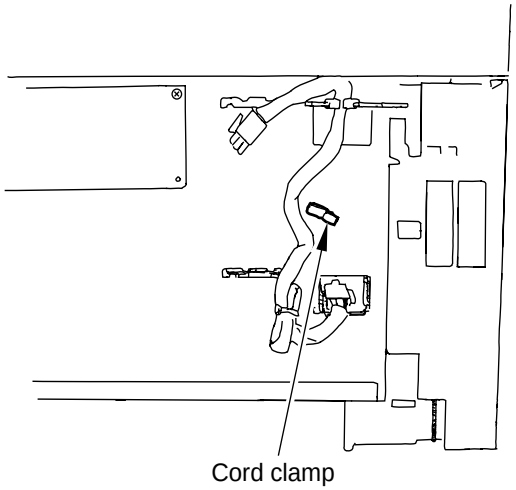

Figure 5-614

   - Cassette Feeding Module-B2

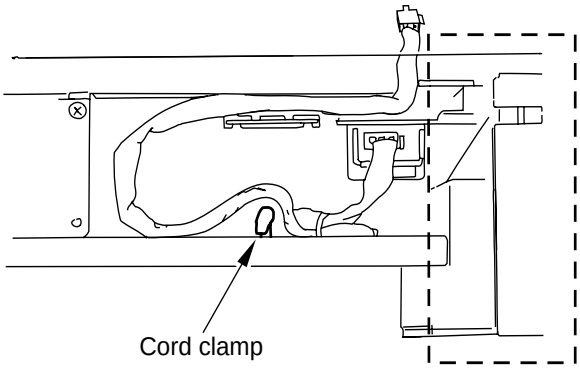

Figure 5-615

9) Arrange the relay harness on the rear side plate as indicated (Cassette Feeding Unit-K1).

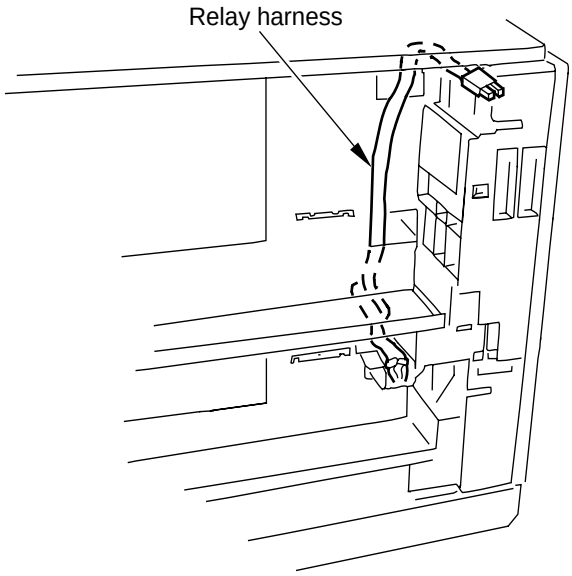

Figure 5-616

COPYRIGHT © 1998 CANON INC. CANON NP6621 REV.0 FEB. 1998 PRINTED IN JAPAN (IMPRIME AU JAPON)

10) Lead the other connector on the relay harness through the copier's bottom plate as shown.

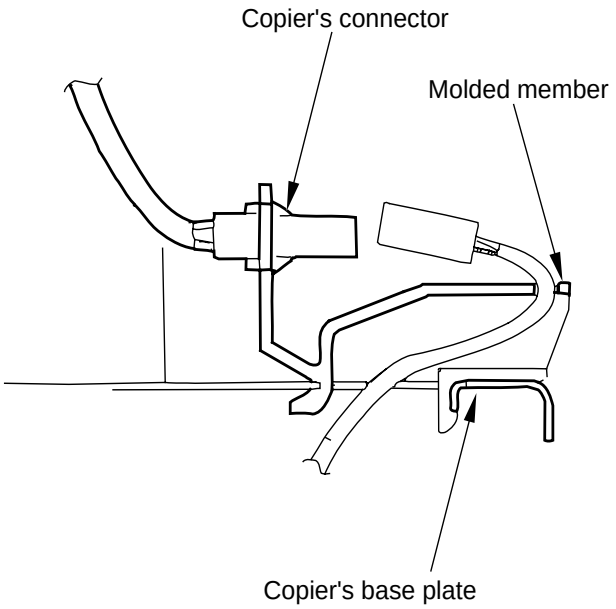

Figure 5-617

11) Connect the connector on the relay harness with the copier's connector.

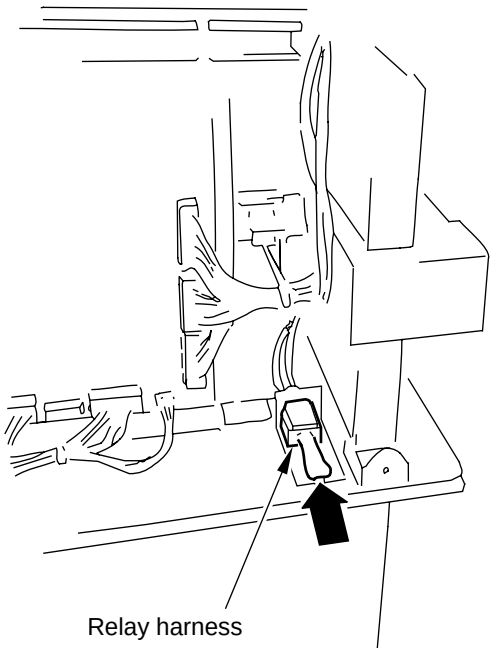

Figure 5-618

12) Fix the relay harness in place to the rear side plate with the cord clamp.
- Cassette Feeding Unit-K1

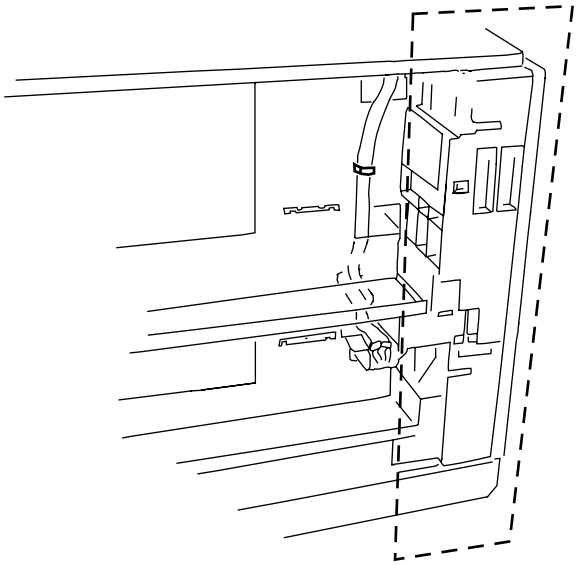

Figure 5-619

Caution:
Make sure that the relay harness is outside the are indicated by dashed lines to prevent it from interfering with the feet of the cassette.

COPYRIGHT © 1998 CANON INC. CANON NP6621 REV.0 FEB. 1998 PRINTED IN JAPAN (IMPRIME AU JAPON)

- Cassette Feeding Module-A2

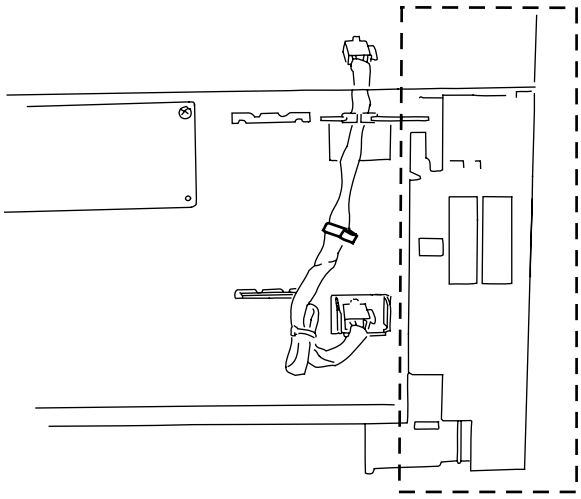

Figure 5-620

Caution:
Make sure that the relay harness is outside the area indicated by dashed lines to prevent it from interfering with the feet of the cassette.

- Cassette Feeding Module-B2

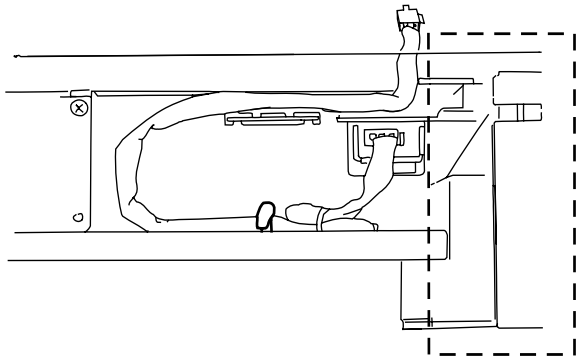

Figure 5-621

Caution:
Make sure that the relay harness is outside the area indicated by dashed lines to prevent it from interfering with the feet of the cassette.

13) Install the rear cover of the cassette pedestal and all covers.
14) Install the copier's rear cover.

COPYRIGHT © 1998 CANON INC. CANON NP6621 REV.0 FEB. 1998 PRINTED IN JAPAN (IMPRIME AU JAPON)

VII. CASSETTE HEATER KIT 7 INSTALLATION PROCEDURE

A. Unpacking

Open the shipping box, and make sure that none of the parts indicated Fig. 5-701 is missing.

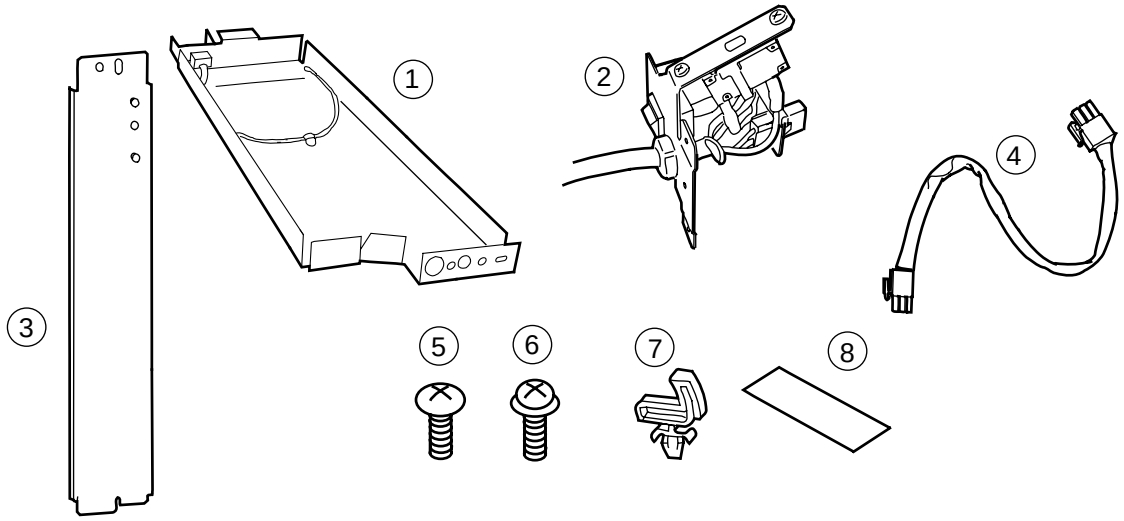

Figure 5-701

① Cassette Heater 1
② Power cord mount 1
③ Stay 1
④ Relay harness 1
⑤ Binding screw (white; M4×6) . 1
⑥ TP screw (black; M4×6) 1
⑦ Cord clamp 1
⑧ Ratings label 1

COPYRIGHT © 1998 CANON INC. CANON NP6621 REV.0 FEB. 1998 PRINTED IN JAPAN (IMPRIME AU JAPON)

B. Installation

1) Remove the copier's bottom cassette.
2) Remove the two screws, and remove the copier's front right cover; then, disengage the snap, and remove the front lower cover.

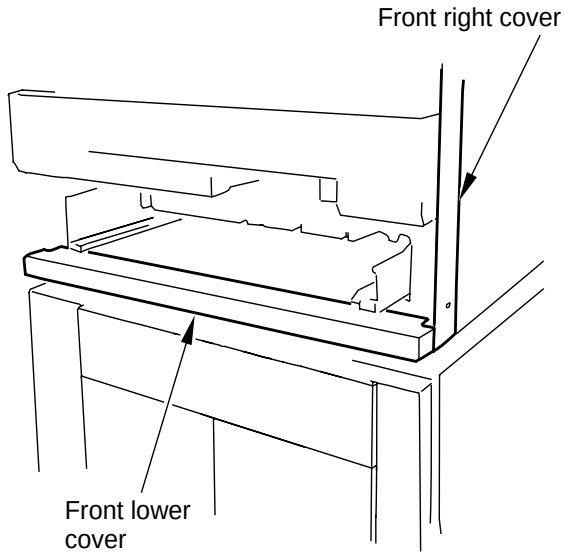

Figure 5-702

3) Remove the left cover (4 screws), front upper cover (2 screws), front left cover (3 screws), and rear cover (4 screws); then, remove the two screws, and remove the face plate.

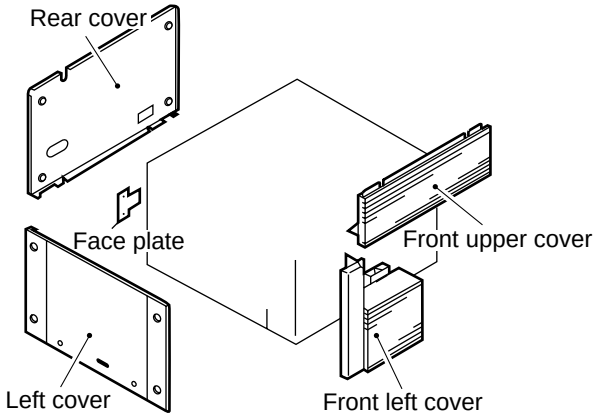

Figure 5-703

4) Remove the paper deck.
5) Install the power cord mount. (Use the mounting screw removed from the face plate.)

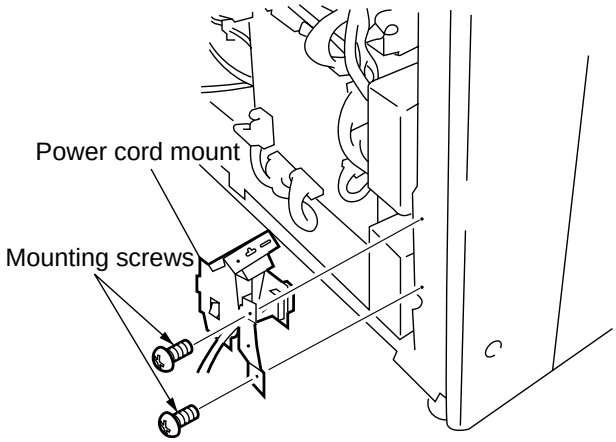

Figure 5-704

6) Install the stay with one mounting screw (white; M4×6).

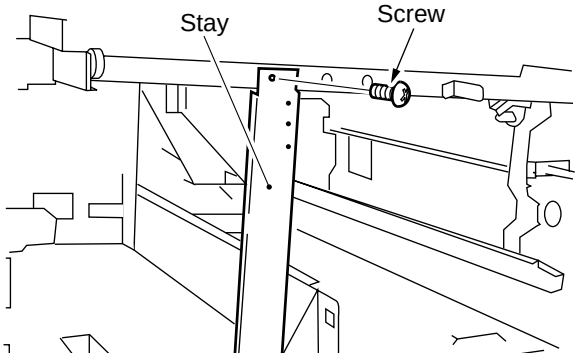

Figure 5-705

COPYRIGHT © 1998 CANON INC. CANON NP6621 REV.0 FEB. 1998 PRINTED IN JAPAN (IMPRIME AU JAPON)

7) Connect the relay harness to the heater.

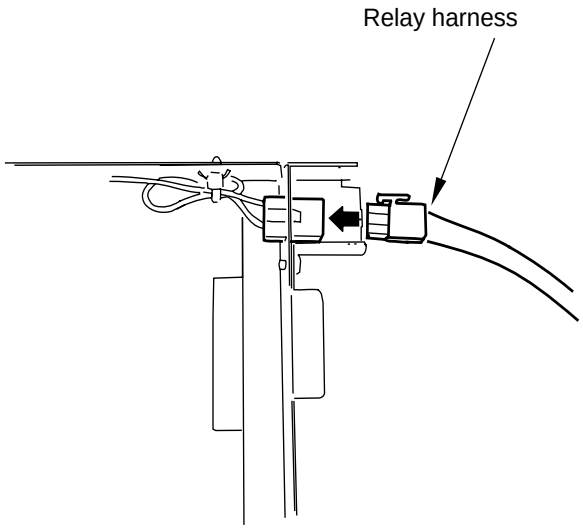

Figure 5-706

8) Install the heater to the paper deck, and fix it in place with a screw (black; M4×6).

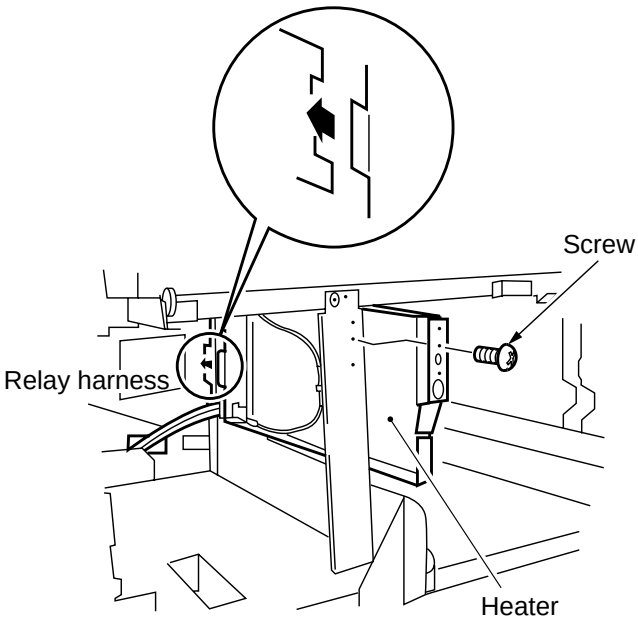

Figure 5-707

9) Connect the relay harness to the connector on the power cord mount, and keep it in place with two cord guides.

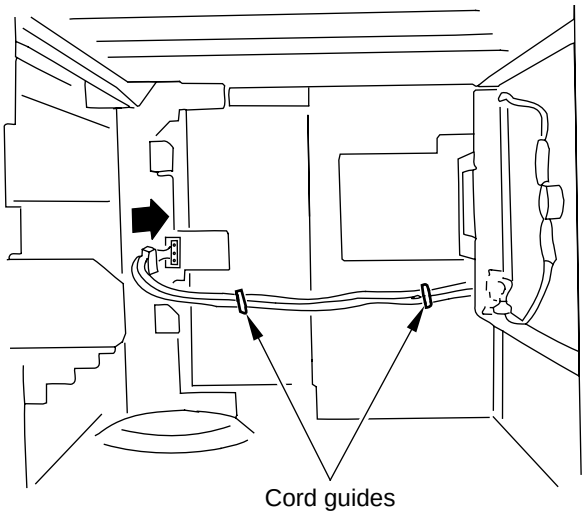

Figure 5-708

10) Install the left cover, front left cover, front upper over, and rear cover.
11) Install the copier's front lower cover and front right cover.
12) Slide in the copier's bottom cassette.

COPYRIGHT © 1998 CANON INC. CANON NP6621 REV.0 FEB. 1998 PRINTED IN JAPAN (IMPRIME AU JAPON)

C. Attaching the Ratings Label

1) Peel the backing sheet from the label, and attach the label to the rear cover of the pedestal as indicated.

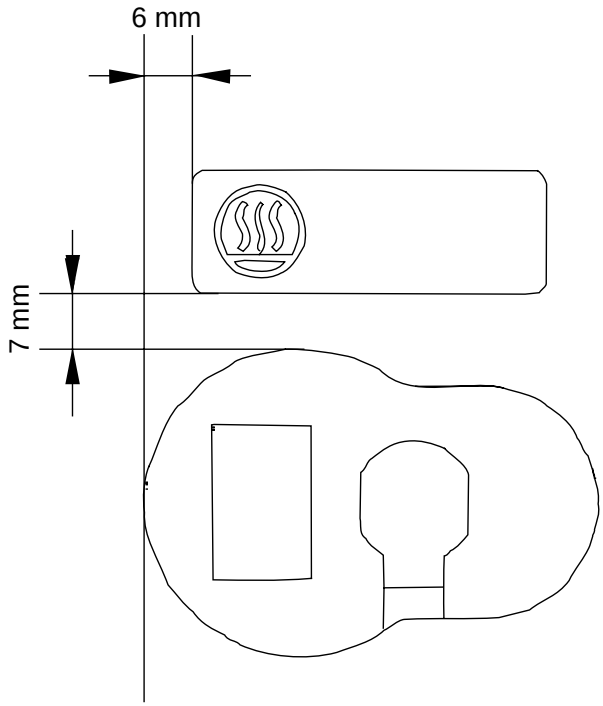

Figure 5-709

2) Connect the heater's power plug to the power outlet.
3) Turn on the heater's power switch.

COPYRIGHT © 1998 CANON INC. CANON NP6621 REV.0 FEB. 1998 PRINTED IN JAPAN (IMPRIME AU JAPON)

VIII.INSTALLING THE REMOTE DIAGNOSTIC DEVICE II

A. Unpacking

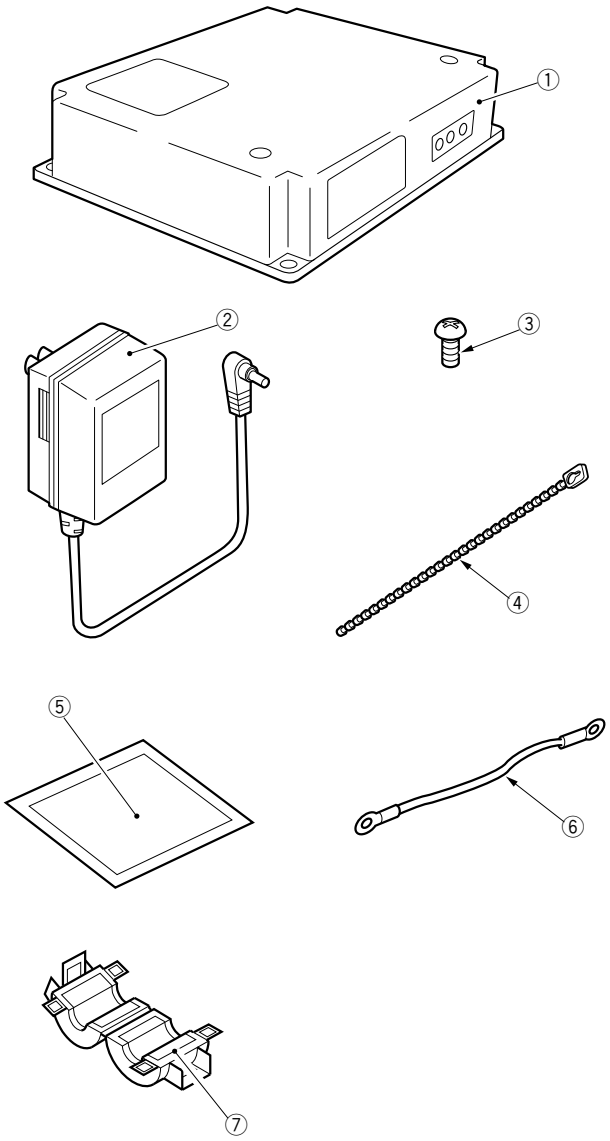

Fig. 5-801

① RDD ..... 1 unit
② Power Supply Unit ..... 1 unit
③ Screw (M4×6) ..... 4 pcs.
④ Harness band ..... 2 pcs.
⑤ Switch setting label ..... 1 pcs.
⑥ Grounding wire* ..... 1 pc.
⑦ Ferrite core ..... 1 pc.
*Not used.

B. Installation to the Copier

This model may not be available for sale in some areas.

Keep the following in mind when installing the RDD to the copier:

1. This Accessory is to be installed by a qualified personal.
2. Make sure the copier has been properly installed before starting the work.
3. Keep the copier's power cord disconnected during the work.
4. Be sure to use the appropriate screws (length, diameter).
5. Make sure the computer in the service station has been properly loaded with the RDD's settings data.

1) Remove the two screws ② to detach the RDD's top cover ①.

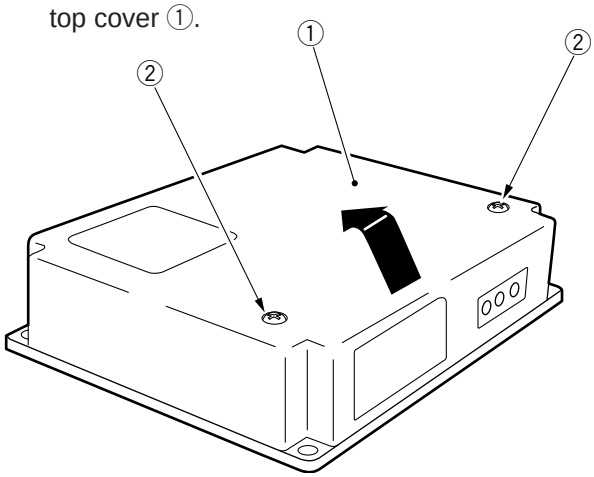

Fig. 5-802

2) Connect the Power Supply Unit's connector ③ to the RDD's connector ④ as shown.

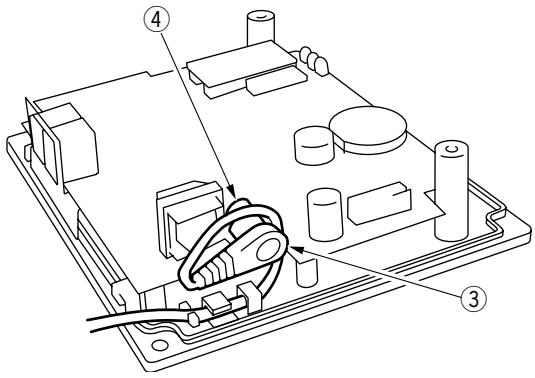

Fig. 5-803

COPYRIGHT © 1998 CANON INC.
CANON NP6621 REV.0 FEB. 1998 PRINTED IN JAPAN (IMPRIME AU JAPON)

3) Remove the two screws ⑥, and detach the face cover ⑤ from the copier's rear cover.

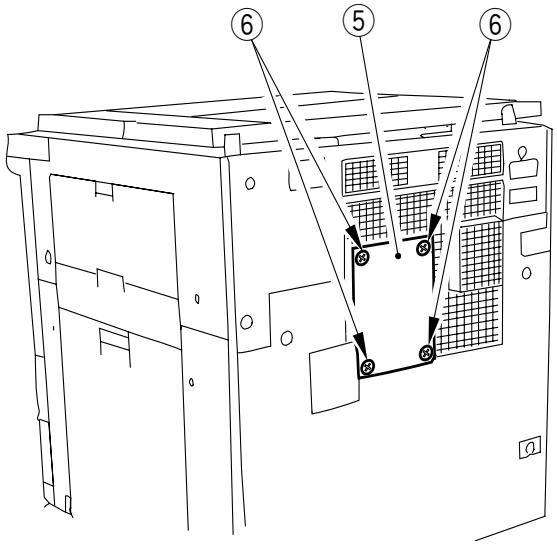

Fig. 5-804

4) Open the ferrite core ⑦, wind the RDD's cable ⑧ three times, and close the ferrite core ⑦; thereafter, connect the cable ⑨ on the copier side and the RDD's cable ⑧.

Note:
If a conversion connector is found on the cable ⑪ from the copier, remove it.

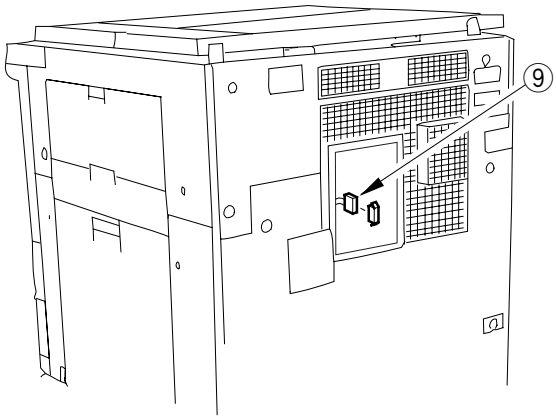

Fig. 5-805

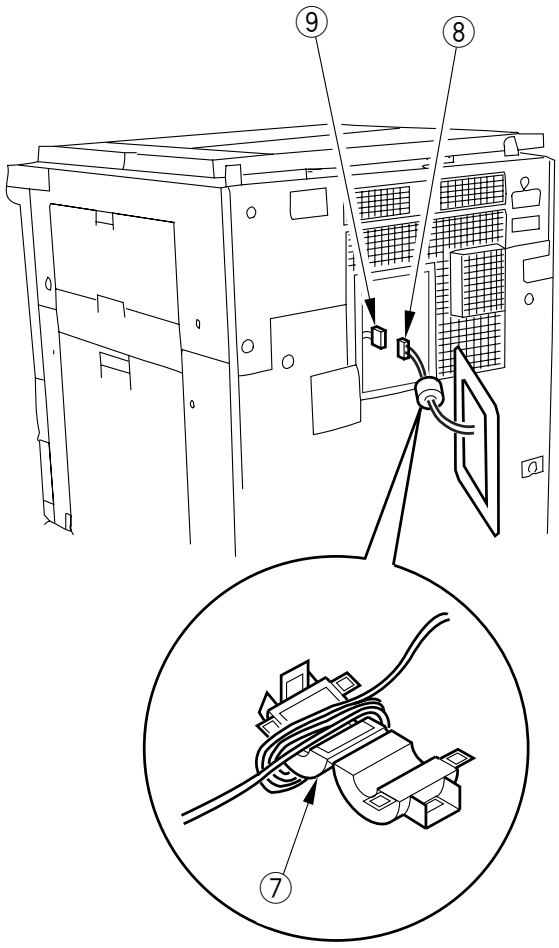

Fig. 5-806

5) Fix the RDD in place on the copier's rear cover with four screws ⑥; use the screws removed from the copier.

Modular Jack on the Right

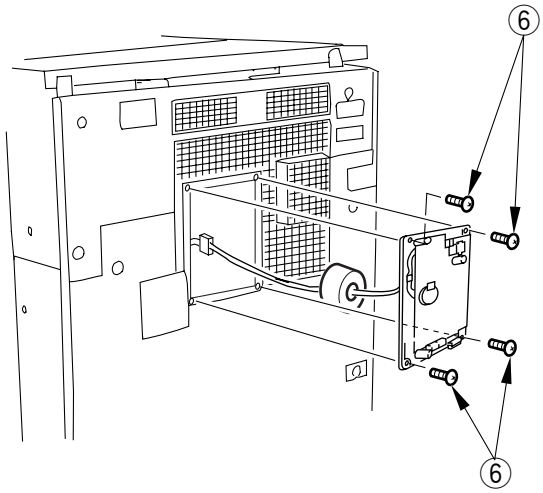

Fig. 5-807

COPYRIGHT © 1998 CANON INC. CANON NP6621 REV.0 FEB. 1998 PRINTED IN JAPAN (IMPRIME AU JAPON)

6) Remove the slack from the cable between the copier and the RDD; keep the excess cable to the RDD using the harness band ⑩.

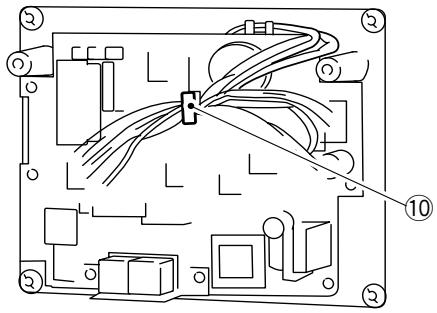

Fig. 5-808

7) Shift bit 4 of the DIP switch 2 ⑪ to ON so that the communication mode between the RDD and the copier is IPC mode.

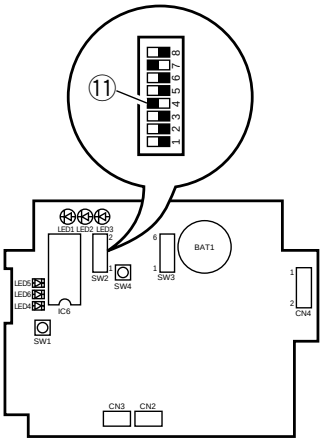

Fig. 5-809

8) If the ROM IC6 ⑫ is mounted on the RDD's PCB, shift bit 7 of the DIP switch 2 ⑬ to ON; otherwise, shift bit 7 of the DIP switch 2 to OFF.

Note:

1. If the ROM (IC6; ⑫) is not mounted, you need not mount it.
2. If you are mounting or replacing the ROM (IC6; ⑫ for upgrading the RDD, be sure to shift bit 7 of the DIP switch 2 ⑬ to ON.

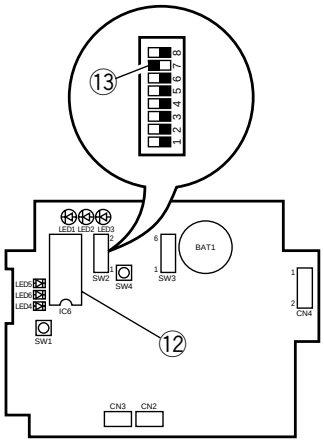

Fig. 5-810

9) Set the bits of the DIP switch 3 ⑭ on the RDD's PCB as indicated in the table.

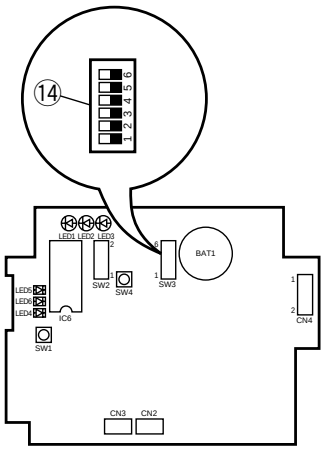

Fig. 5-811

COPYRIGHT © 1998 CANON INC. CANON NP6621 REV.0 FEB. 1998 PRINTED IN JAPAN (IMPRIME AU JAPON)

Switch	Setting	Description
SW3-1	AII	
SW3-2	OFF	
SW3-3	ON	
SW3-4	ON	selects push pulse for RDD circuit confihuration
	OFF	selscts dial pulse for RDD circuit confihuration
SW3-5	ON	sets dial pulse speed to 20 PPS
	OFF	sets dial pulse speed to 10 PPS
SW3-6	–	reserved

Table 5-801

10) Fit the Power Supply Unit into the power plug, and check that LED 1 ⑮ (green) on the RDD's PCB comes on.

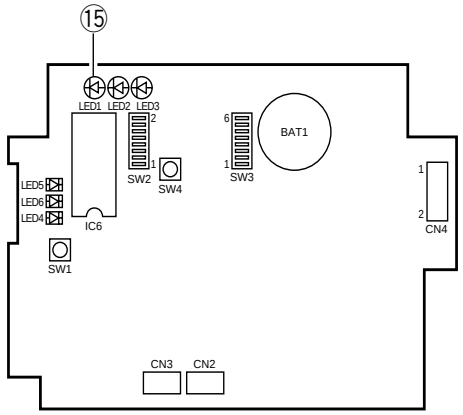

Fig. 5-812

11) Reset the RDD's RAM.
Set the bits on the DIP switch 2 ⑯ on the RDD's PCB as indicated in the table, and press the push switch 4 ⑰ to make sure that LED5 ⑱ (red) comes on.

bits on SW2	Setting
SW2-1	OFF
SW2-2	OFF
SW2-3	ON
SW2-4	ON
SW2-5	OFF
SW2-6	OFF
SW2-7	See step 9).
SW2-8	OFF

Table 5-802

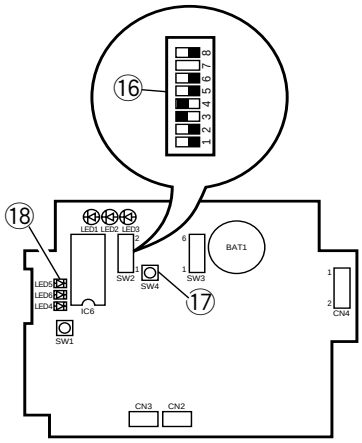

Fig. 5-813

12) After making sure that LED5 ⑱ (red) has come on, set the bits on the DIP switch 2 ⑯ on the RDD's PCB as indicated in the table, and press the push switch 4 ⑰ to make sure that LED5 ⑱ (red) goes out, indicating that the RAM has been reset.

bits on SW2	Setting
SW2-1	OFF
SW2-2	OFF
SW2-3	OFF
SW2-4	ON
SW2-5	OFF
SW2-6	ON
SW2-7	See step 9).
SW2-8	OFF

Table 5-803

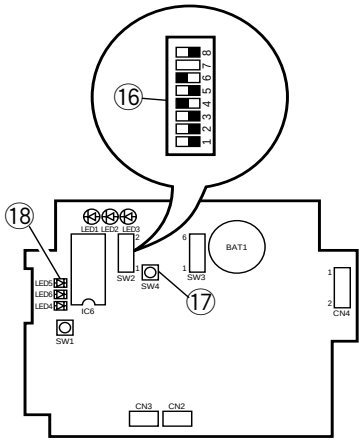

Fig. 5-814

13) Shift bit 6 of the DIP switch 2 ⑲ on the RDD's PCB to OFF.

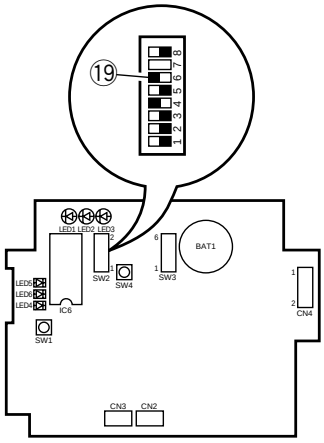

Fig. 5-815

14) Connect the RDD to the telephone line.
If you are connecting the RDD on its own, connect the modular jack cable to the RDD's connector ⑳ (LINE).
If you will be using the RDD's extra circuit, connect the existing telephone or fax machine to the RDD's connector ㉑ (TEL), and connect the telephone circuit to the RDD's connector ⑳ (LINE).

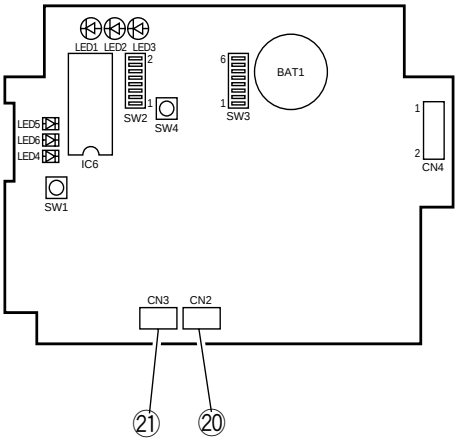

Fig. 5-816

15) Call up the service station, and request the RDD's initial settings. (LED 4 ㉒ (red) starts to flash upon receipt.)

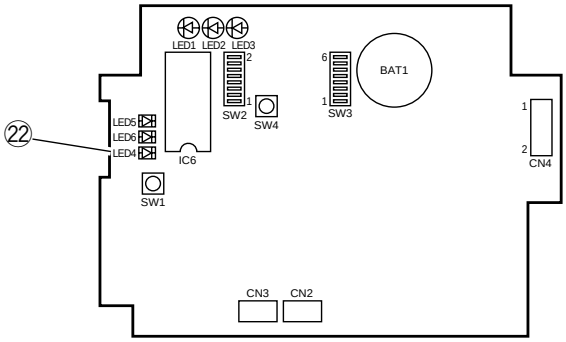

Fig. 5-817

COPYRIGHT © 1998 CANON INC. CANON NP6621 REV.0 FEB. 1998 PRINTED IN JAPAN (IMPRIME AU JAPON)

16) Call up the service station to check if the initial settings have been successfully made; if the attempt has failed, reset the RAM once again starting with step 11) through 13).

Important:
You must confirm that the RDD's settings are correct by calling the service station.

17) Check that you can place a telephone call from the RDD to the computer in the service station. Press the push switch 4 ⑰. LED6 ㉓ (red) should come on; it will go out when transmission ends successfully, or will start to flash if transmission fails.
Retransmission is executed in response to a press on the push switch 4 ⑰ while LED6 ㉓ is flashing.
Transmission is canceled in response to a press on the push switch 1 ㉔ while LED6 ㉓ is flashing.

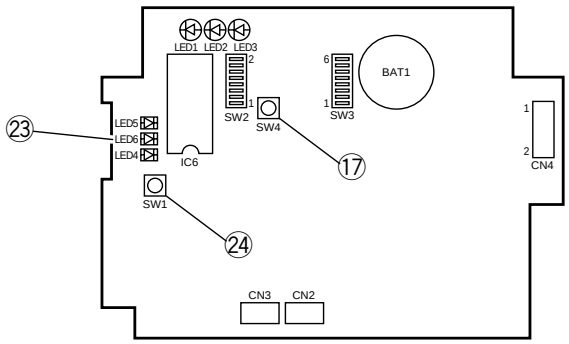

Fig. 5-818

18) Check that the communications between the RDD and the copier are executed normally.
Connect the copier's power plug, and switch it on to make sure that LED 2 ㉕ (orange) flashes.

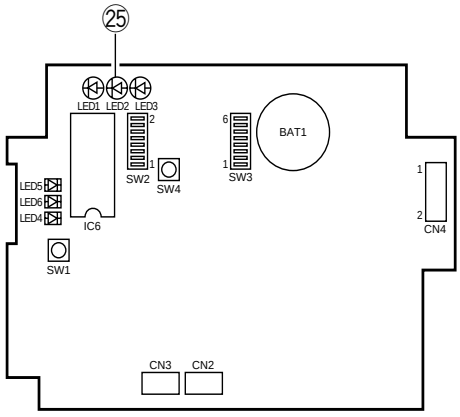

Fig. 5-819

19) Press the copier' COPY START key to make sure that LED3 ㉖ (pink) flashes each time a copy is delivered.

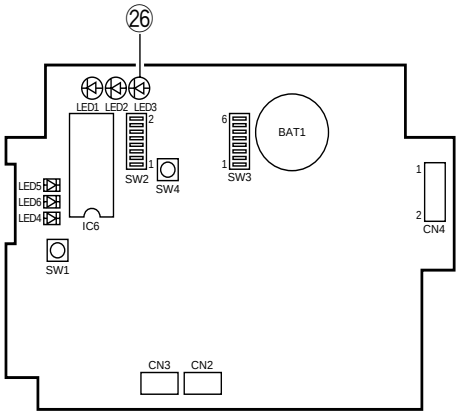

Fig. 5-820

20) Attach the Switch setting label ㉗, to the RDD's top cover ①; then, record the setting of each switch on the label.

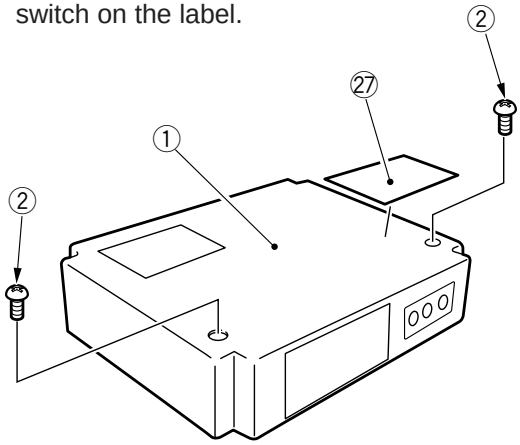

Fig. 5-821

21) Fix the RDD's top cover ① in place using two screws ②. (Make sure that the Power Unit's cable is fixed in place on the cable guide inside the RDD and is not trapped by the top cover ①.

COPYRIGHT © 1998 CANON INC.

COPYRIGHT © 1998 CANON INC.
CANON NP6621 REV.0 FEB. 1998 PRINTED IN JAPAN (IMPRIME AU JAPON)

CHAPTER 6
MAINTENANCE AND SERVICING

I. PERIODICALLY REPLACED PARTS 6-1
A. Periodically Replaced Parts 6-1
II. DURABLES AND CONSUMABLES 6-2
A. Copier 6-2
B. Cassette Feeding Module-B2, Cassette Feeding Module-A2, and Cassette Feeding Unit-K1 6-3
C. Paper Deck Pedestal-K1 6-3
III. BASIC SERVICING 6-4
IV. SERVICING CHART 6-5
A. Scheduled Maintenance Work 6-5

COPYRIGHT © 1998 CANON INC. CANON NP6621 REV.0 FEB. 1998 PRINTED IN JAPAN (IMPRIME AU JAPON)

COPYRIGHT © 1998 CANON INC. CANON NP6621 REV.0 FEB. 1998 PRINTED IN JAPAN (IMPRIME AU JAPON)

I. PERIODICALLY REPLACED PARTS

Of the parts used in the machine, those given in the table must be replaced on a periodical basis to maintain a specific level of machine performance. (You must replace them regardless of the absence of exterior wear or damage, as they significantly affect the machine performance should they fail.)

Schedule a visit so that you may replace the parts during periodical servicing.

A. Periodically Replaced Parts

As of FEB. 1998

No.	Parts name	Parts No.	Q'ty	Life	Remarks
1	Static eliminator	FG5-2912-020	1	100,000	

Note:
The above values are estimates only and subject to change based on future data.

COPYRIGHT © 1996 CANON INC.

II. DURABLES AND CONSUMABLES

Of the parts used in the machine, those given in the table may prove to require replacement once or more over the period of warranty because of wear or damage; replace them as necessary referring to the guide.

A. Copier

As of FEB. 1998

No.	Parts name	Parts No.	Q'ty	Life (copies)	Remarks
1	Pick-up roller	FB3-8771-00P	2	100,000	Actual copies made.
2	Pick-up separation pad	FG5-6792-020	2	100,000	Actual copies made.
3	Multifeeder pick-up roller	FB1-8581-000	1	100,000	Actual copies made.
4	Multifeeder separation pad	FB2-2167-000	1	100,000	Actual copies made.
5	Halogen Lamp	FB7-3271-000	1	100,000	
6	Fixing cleaning roller	FB3-4494-00P	1	100,000	
7	Oil-applying roller	FA0-0353-00P	1	60,000	
8	Transfer roller	FB2-2223-000	1	100,000	
9	Fixing upper unit	FG5-2928-140	1	200,000	
10	Lower fixing roller	FB2-2316-000	1	200,000	
11	Upper fixing separation claw	FB1-0301-000	4	200,000	
12	Lower fixing separation claw	FB1-7275-000	4	200,000	
13	Pre-exposure lamp	FG5-2891-000	1	200,000	Replace in units of 12 or 12-1 through 12-4.
14	Developing assembly	FG5-3275-04P	1	100,000	
14-1	Developing cylinder	FB2-3834-000	1	100,000	
14-2	Side seal	FB2-3825-00P	2	100,000	
14-3	Developing blade unit	FG5-7012-00P	1	100,000	
15	Scanner cooling fan filter	FC2-8902-00P	1	100,000	

Note:
The above values are estimates only and subject to change based on future data.

COPYRIGHT © 1998 CANON INC.
CANON NP6621 REV.0 FEB. 1998 PRINTED IN JAPAN (IMPRIME AU JAPON)

B. Cassette Feeding Module-B2, Cassette Feeding Module-A2, and Cassette Feeding Unit-K1

As of FEB. 1998

No.	Parts name	Parts No.	Q'ty	Life (copies)	Remarks
1	Pick-up roller	FB2-2251-000	1 through 3	100,000	Actual copies made.
2	Pick-up separation pad	FG5-3614-000	1 through 3	100,000	Actual copies made.

Note:
The above values are estimates only and subject to change based on future data.

C. Paper Deck Pedestal-K1

As of FEB. 1998

No.	Parts name	Parts No.	Q'ty	Life (copies)	Remarks
1	Pick-up roller	FF5-1220-000	1	100,000	Rear
		FF5-1221-000	1	100,000	Front
2	Feeding roller	FB1-7061-000	1	100,000	
3	Separation roller	FB1-7060-020	1	100,000	

Note:
The above values are estimates only and subject to change based on future data.

COPYRIGHT © 1996 CANON INC.
CANON NP6621 REV.0 FEB. 1998 PRINTED IN JAPAN (IMPRIME AU JAPON)

III. BASIC SERVICING

The machine does not have items to be serviced on a scheduled basis. However, it is desirable to go through the steps in the table when paying a visit to the user.

Step	Work	Items	Remarks
1	Meet the person in charge.	Check the general condition.	
2	Make test copies in DIRECT, REDUCE, ENLARGE.	Check the following: a. image density b. soiling of white background c. clarity of characters d. leading edge non-image width e. left/right margin f. fixing/registration displacement, soiled back g. abnormal noise h. counter operation	standard: 2.5 ±1.5 mm (DIRECT, one-sided) standard: 2.5 ±1.5 mm (DIRECT, one-sided)
3	Clean the static eliminator and feeding assembly.		Use the special brush (accessory) when cleaning the static eliminator.
4	Clean the fixing/delivery assembly: • paper guide plate • separation claw		Use solvent. Use solvent.
5	Perform servicing according to the number of copies made.		
6	Clean the copyboard cover and copyboard glass.		
7	Make test copies.		
8	Make sample copies.		
9	Put sample copies in order and clean up the site of installation.		
10	Record the latest counter reading.		
11	Fill out the Servicing Sheet, and report to the person in charge.		

COPYRIGHT © 1998 CANON INC.
CANON NP6621 REV.0 FEB. 1998 PRINTED IN JAPAN (IMPRIME AU JAPON)

IV. SERVICING CHART

Caution:
Do not use solvents or oils other than those indicated.

A. Scheduled Maintenance Work

△: clean ●: replace ☆: lubricate □: adjust ◎: check or clean

Unit	Parts	every 20,000	every 60,000	every 100,000	every year	Remarks
External Control	Copyboard glass	△				Use alcohol.
Pick-up assembly	Pick-up roller	△				
Scanner drive assembly	Scanning rail		☆			Use alcohol; then, apply lubricant.
Feeding assembly	Transfer guide assembly	△				Use a moist cloth.
	Feeding belt	△				
	Feeding assembly PCB	△				
Optical path	Scanning lamp reflecting plate	△				Use a blower brush; if the dirt cannot be removed, use alcohol.
	Scanning lamp side reflecting plate	△				
	No. 1 through No. 6 mirrors	△				
	Lens	△				
	Dust-proofing glass	△				
Drum kit	Clearner bottom	△				Actual number of times the drum ikit has been used.
	Drum support shaft		△			
Charging assembly	Charging roller	△				Use a cotton wad.
	Charging roller cleaner	△				
	Static eliminator	△		●		
Developing assembly	Developing roll	△				
Fixing assembly	Lower fixing roller	△				Use cleaning oil.
	Separation claw (lower, upper)	△				Use solvent..
	Fixing inlet guide	△				
Delivery assembly	Delivery guide/ tray	△				Use alcohol.
	Fixing feeding spacer	△				
	Delivery roll	△				
Duplexing unit	Set-back roller			△		Use alcohol.
	Re-pick-up roller			△		

COPYRIGHT © 1996 CANON INC.
CANON NP6621 REV.0 FEB. 1998 PRINTED IN JAPAN (IMPRIME AU JAPON)

COPYRIGHT © 1998 CANON INC.
CANON NP6621 REV.0 FEB. 1998 PRINTED IN JAPAN (IMPRIME AU JAPON)

APPENDIX

A. GENERAL TIMING CHART A-1
B. SIGNALS AND ABBREVIATIONS A-2
C. GENERAL CIRCUIT DIAGRAM A-5
D. DC CONTROLLER CIRCUIT DIAGRAM ... A-7
E. COMPOSITE POWER SUPPLY CIRCUIT DIAGRAM A-21
F. CONTROL PANEL KEYPCB A-27
G. AE SENSOR CIRCUIT DIAGRAM A-31
H. INTENSITY SENSOR CIRCUIT DIAGRAM A-32
I. TONER LEVEL DETECTION CIRCUIT DIAGRAM A-33
J. CASSETTE FEEDING MODULE-B2 GENERAL CIRCUIT DIAGRAM A-34
K. CASSETTE FEEDING MODULE-B2 DRIVER CIRCUIT DIAGRAM A-35
L. CASSETTE FEEDING MODULE-A2 GENERAL CIRCUIT DIAGRAM A-37
M. CASSETTE FEEDING MODULE-A2 DRIVER CIRSUIT DIAGRAM A-38
N. CASSETTE FEEDING UNIT-K1 GENERAL CIRCUIT DIAGRAM A-41
O. CASSETTE FEEDING UNIT-K1 ..... A-42
P. PAPER DECK PEDESTAL-K1 GENERAL CIRCUIT DIAGRAM A-45
Q. PAPER DECK PEDESTAL-K1 DRIVER CIRCUIT DIAGRAM A-46
R. SPECIAL TOOLS A-47
S. SOLVENTS/OILS A-48

COPYRIGHT © 1998 CANON INC. CANON NP6621 REV.0 FEB. 1998 PRINTED IN JAPAN (IMPRIME AU JAPON)

COPYRIGHT © 1998 CANON INC. CANON NP6621 REV.0 FEB. 1998 PRINTED IN JAPAN (IMPRIME AU JAPON)

A. GENERAL TIMING CHART

A4, 2 copies, DIRECT, cassette 1

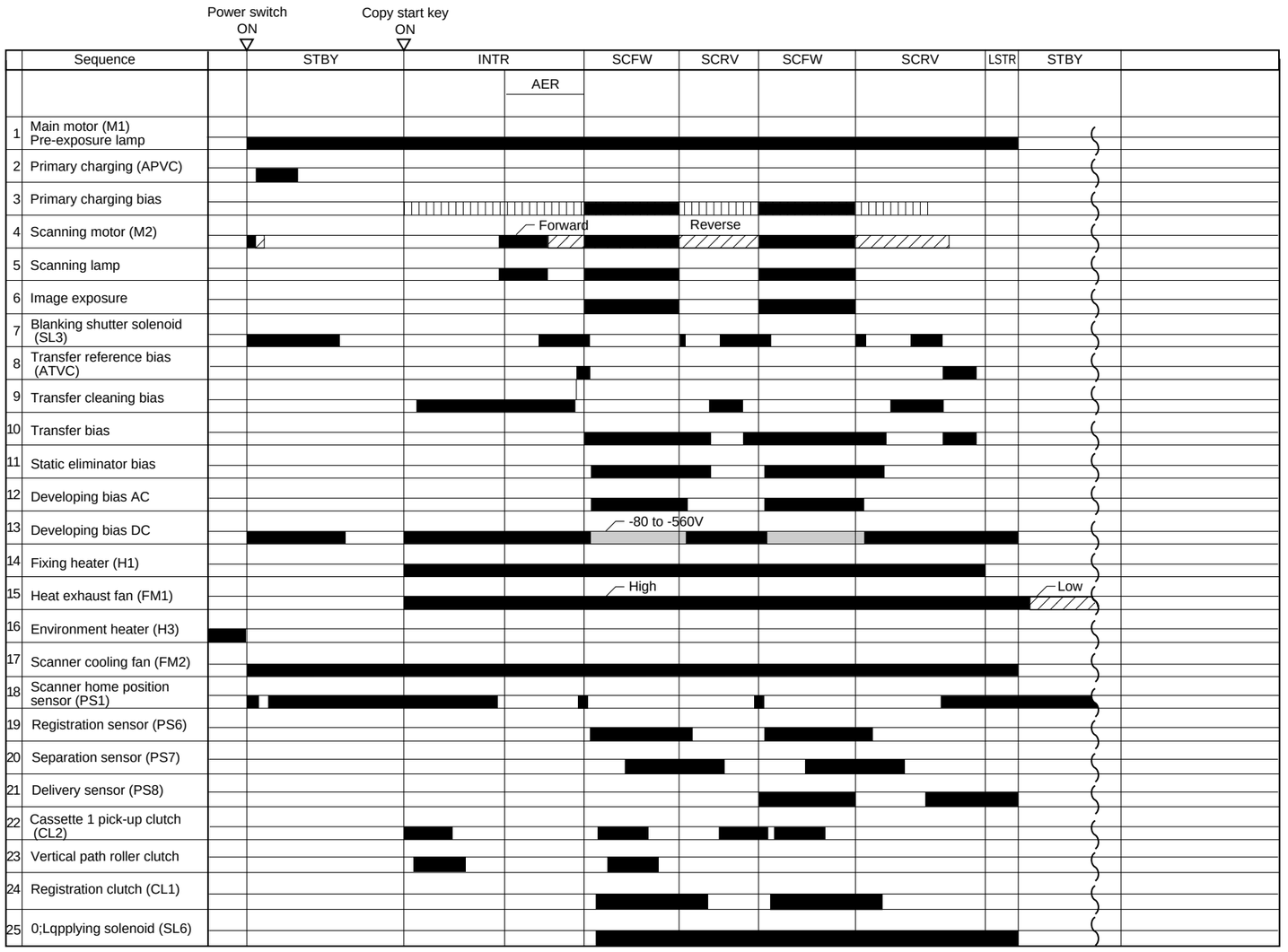

COPYRIGHT © 1998 CANON INC.
CANON NP6621 REV.0 FEB. 1998 PRINTED IN JAPAN (IMPRIME AU JAPON)

B. SIGNALS AND ABBREVIATIONS

1. Signals

A/A*	HORIZONTAL REGISTRATION / DELIVERY/ DUPLEX MOTOR PHASE A
ACBIAS	DEVELOPING AC BIAS VOLTAGE DETECTION signal
AE	AE SENSOR OUTPUT signal AE
AEREF	AE SENSOR REFERENCE signal AE
ATTH	AMBIENT TEMPERATURE THERMISTOR signal
B/B*	HORIZONTAL REGISTRATION / DELIVERY/ DUPLEX MOTOR PHASE B
BIASS	DEVELOPING DC BIAS VOLTAGE DETECTION signal
BPWM	DEVELOPING BIAS DRIVE command
BSHP	BLANKING SHUTTER HOME POSITION signal
BSSLD	BLANKING SHUTTER SOLENOID DRIVE command
C2SZ1	CASSETTE2 SIZE 1 signal
C2SZ2	CASSETTE2 SIZE 2 signal
C2SZ3	CASSETTE2 SIZE 3 signal
C2SZ4	CASSETTE2 SIZE 4 signal
C3PD	CASSETTE3 PAPER DETECTION signal
C3PUCLD	CASSETTE3 PICK-UP CLUTCH DRIVE command
C3SZ1	CASSETTE3 SIZE DETECTION1 signal
C3SZ2	CASSETTE3 SIZE DETECTION2 signal
C3SZ3	CASSETTE3 SIZE DETECTION3 signal
C3SZ4	CASSETTE3 SIZE DETECTION4 signal
C3VPD	CASSETTE3 VERTICAL PATH PAPER DETECTION signal
C4PD/C5PD	CASSETTE4/5 PAPER DETECTION 1 signal
C4PUCLD/C5PUCLD	CASSETTE4/5 PICK-UP CLUTCH DRIVE command
C4SZ1/C5SZ1	CASSETTE4/5 SIZE DETECTION 1 signal
C4SZ2/C5SZ2	CASSETTE4/5 SIZE DETECTION 2 signal
C4SZ3/C5SZ3	CASSETTE4/5 SIZE DETECTION 3 signal
C4SZ4/C5SZ4	CASSETTE4/5 SIZE DETECTION 4 signal
C4VPD	CASSETTE4 VERTICAL PAPER DETECTION 1 signal
C5VPD	CASSETTE5 VERTICAL PAPER DETECTION 1 signal
CCD	CONTROL CARD DRIVE command
CCDT	CONTROL CARD DETECTION signal
CDC	COPY DENSITY CORRECTION signal
CHSLD	CHANGE SOLENOID DRIVE command
CL1D	DECK PICK-UP ROLLER CLUTCH DRIVE command
CL2D	DECK VERTICAL PATH ROLLER CLUTCH DRIVE command
CL3D	VERTICAL PATH ROLLER 3 CLUTCH DRIVE command
CL4D	DECK LIFTER CLUTCH DRIVE command
CL5D	CASSETTE2 PICK-UP CLUTCH DRIVE command
CL6D	DUPLE XING UNIT HORIZONTAL REGISTRATION ROLLER CLUTCH DRIVE command
CL7D	VERTICAL PATH ROLLER CLUTCH DRIVE command
CMA/CMA*	CASSETTE UNIT MOTOR PULSE command A/A*
CMB/CMB*	CASSETTE UNIT MOTOR PULSE command B/B*
COMA	HORIZONTAL REGISTRATION / DELIVERY/ DUPLEX MOTOR COMMON A signal
COMB	HORIZONTAL REGISTRATION / DELIVERY/ DUPLEX MOTOR COMMON B signal
CPD1	CASSETTE PAPER1 DETECTION signal
CPD2	CASSETTE PAPER2 DETECTION signal
CRDOP	CASSETTE RIGHT DOOR OPEN DETECTION signal
CS	CASSETTE SIZE DETECTION command
CS2	CASSETTE SIZE DETECTION2 command
CS3	CASSETTE SIZE DETECTION3 command
CS4	CASSETTE SIZE DETECTION4 command
CS4PD	CASSETTE4 PAPER DETECTION signal
CSZ1	CASSETTE SIZE signal 1
CSZ2	CASSETTE SIZE signal 2
CSZ3	CASSETTE SIZE signal 3
CSZ4	CASSETTE SIZE signal 4
CVOP	CCPYBOARD COVER OPEN signal
DEL	DECK LIFTER LIMIT signal
DEOP	DECK OPEN signal
DEPRL	DECK PICK-UP ROLLER RELEASE SOLENOID DRIVE command
DLD	DECK LIFTER POSITION DETECTION signal
DPD	DELIVERY DETECTION signal
DUEX	DUPLEX PAPER EXIT DETECTION signal
DUIN	DUPLEX PAPER INLET DETECTION saignal
DUPD	DUPLEXING UNIT PRE-REGISTRATION PAPER DETECTION signal
DURG	DUPLEX REGISTRATION PAPER DETECTION signal
DVRPD	DECK VERTICAL ROLLER PAPER DETECTION signal
EHTRL	EARTH RL DRIVE command RL2
FDFD	FEEDING FAN DRIVE signal
FFA/FFA*	FUSER FILM MOTOR PULSE command A/A*
FFB/FFB*	FUSER FILM MOTOR PULSE command B/B*
FFCB/FFCA	FUSER FILM MOTOR VOLTAGE command A/B
FFD	FIXING FILM POSITION signal
FLHTOFF	FLUORESCENT LAMP HEATER OFF command
FLON	FLUORESCENT LAMP ON command
FLPRHT	FLUORESCENT LAMP PRE-HEAT command
FLS	FLUORESCENT LAMP INTENSITY signal
FLTH	FLUORESCENT LAMP THERMISTOR signal
FLTHON	FLUORESCENT LAMP HEATER ON command
FMD	FUSER FILM MOTOR DRIVE command
HEFD	HEATER EXHAUST FAN DRIVE command
HTON	HEATER ON DETECTION signal
HTRD	HEATER DRIVE command
JCTL	DISCHARGE BIAS DRIVE command
JLVCTL	DISCHARGE BIAS CHARGE command
LHP	LENS HOME POSITION DETECTION signal
LID	LIGHT INTENSITY signal
LNSA/LNSA*	LENS MOTOR PULSE command A/A*
LNSB/LNSB*	LENS MOTOR PULSE command B/B*
LNSCA	LENS MOTOR DRIVE command A
LNSCB	LENS MOTOR DRIVE command B
LOCK	PEDESTAL MOTOR ERROR signal
MFPD	MULTIFEEDER PAPER DETECTION signal
MFPUCLD	MULTIFEEDER PICK-UP CLUTCH DRIVE command
MFPWD	MULTIFEEDER PAPER WIDTH DETECTION signal
MFSLD	MULTIFEEDER SOLENOID DRIVE command
MLOCK	MAIN MOTOR SPEED STATUS signal
MMD	MAIN MOTOR DRIVE signal
MMCLK	MAIN MOTOR CLOCK signal
MPWN	MAIN PULSE command
PCLSLD	PRIMARY CORONA ROLLER CLEANING SOLENOID command
PCTRLS	PRIMARY CORONA DETECT PULSE command
PCURS	PRIMARY CORONA CURRENT BUFFER signal
PDCS	PRIMARY CORONA DETECT command
PEDMD	PEDESTAL MOTOR DRIVE command
PEXD	PRE-EXPOSURE LAMP LIT command
PUCLD1	CASSETTE1 PICK-UP CLUTCH DRIVE command

COPYRIGHT © 1998 CANON INC.

CANON NP6621 REV.0 FEB. 1998 PRINTED IN JAPAN (IMPRIME AU JAPON)

PWSW	POWER SWITCH command
RDOP	RIGHT DOOR OPEN signal
RGCLD	REGISTRATION CLUTCH DRIVE command
RGHP	DUPLEXING UNIT REGISTRATION ROLLER HOME POSITION DETECTION signal
RPD	REGISTRATION PAPER DETECTION signal
SCA/A*	SCANNER MOTOR PULSE command A/A*
SCB/B*	SCANNER MOTOR PULSE command B/B*
SCHP	SCANNER HOME POSITION DETECTION signal
SELECT	CASSETTE4/5 SELECT signal
SIZE1	ORIGINAL SIZE1 DETECTION signal
SIZE2	ORIGINAL SIZE2 DETECTION signal
SIZE3	ORIGINAL SIZE3 DETECTION signal
SIZE4	ORIGINAL SIZE4 DETECTION signal
SL6D	DUPLEXING UNIT CHANGE SOLENOID DRIVE signal
SL7D	DUPLEXING UNIT FLAPPER SOLENOID DRIVE signal
SL8D	PAPER DEFLECTING PLATE SOLENOID DRIVE signal
SPD	SEPARATION DETECTION signal
SRSW	SERVICE MODE SWITCH signal
TCNTD	TOTAL COUNTER DRIVE command
TEP	TONER EMPTY signal
TFWON	TRANSFER BIAS ON/OFF command
TFWPWN	TRANSFER BIAS LOW VOLTAGE signal
TFWS	TRANSFER BIAS PULSE command
TH1	FIXING HEATER TEMPERATURE DETECTION signal
TH2	FIXING HEATER END TEMPERATURE DETECTION signal
TREVON	TRANSFER REVERSE ON command
TRSLD	TRANSFER CHARGING ROLLER RELEASING signal
VP1P	VERTICAL PATH1 PAPER DETECTION signal
VP2P	VERTICAL PATH2 PAPER DETECTION signal

3. Abbreviations

AER	AE ROTATION
INTR	INITIAL ROTATION
LSTR	LAST ROTATION
SCFW	SCANNER FORWARD
SCRV	SCANNER REVERSE
STBY	STANDBY

COPYRIGHT © 1998 CANON INC.
CANON NP6621 REV.0 FEB. 1998 PRINTED IN JAPAN (IMPRIME AU JAPON)

COPYRIGHT © 1998 CANON INC.
CANON NP6621 REV.0 FEB. 1998 PRINTED IN JAPAN (IMPRIME AU JAPON)

C. GENERAL CIRCUIT DIAGRAM

not available

COPYRIGHT © 1998 CANON INC.
CANON NP6621 REV.0 FEB. 1998 PRINTED IN JAPAN (IMPRIME AU JAPON)

COPYRIGHT © 1998 CANON INC.
CANON NP6621 REV.0 FEB. 1998 PRINTED IN JAPAN (IMPRIME AU JAPON)

D. DC CONTROLLER CIRCUIT DIAGRAM

DC Controller (1/14)

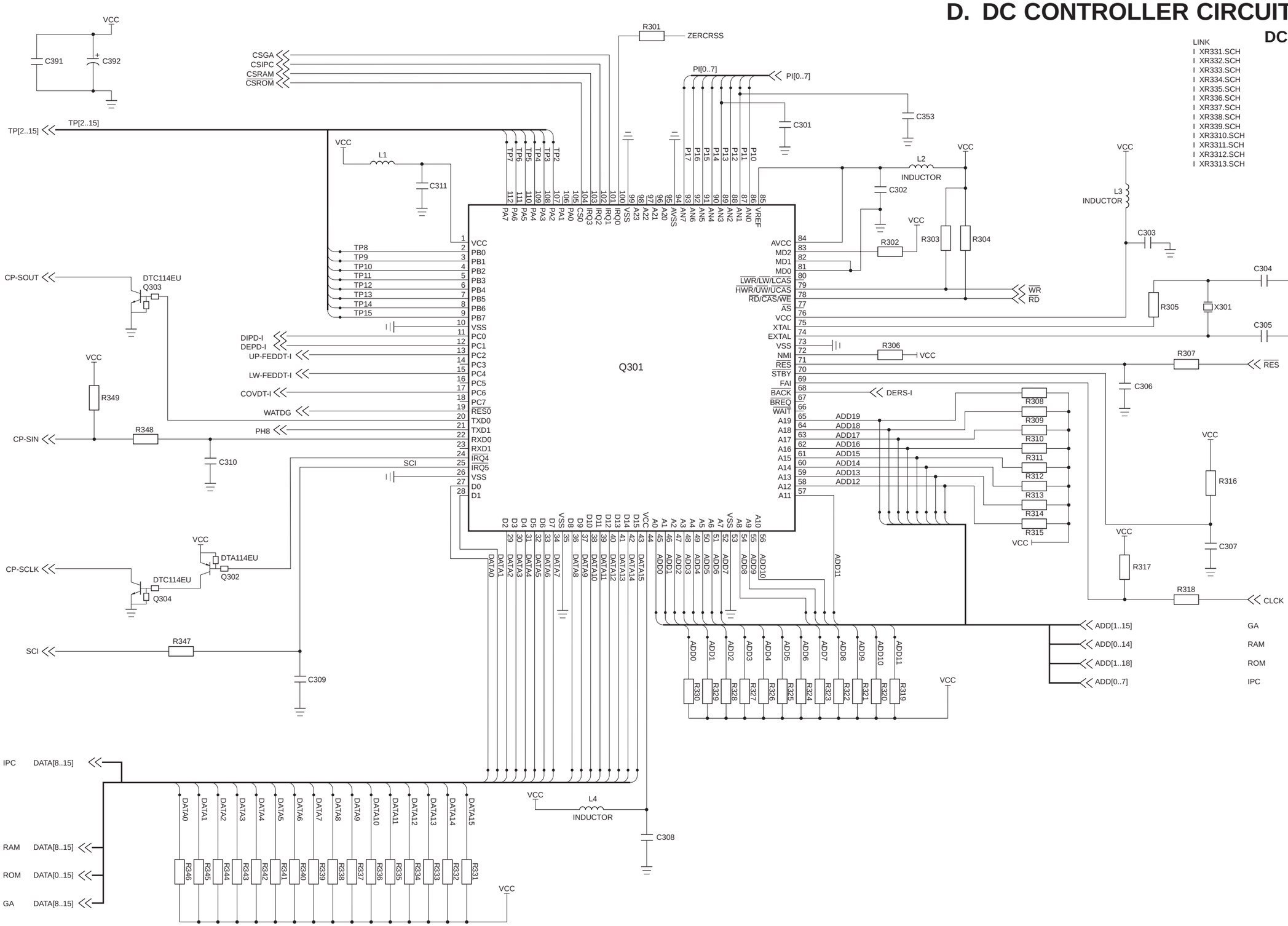

DC Controller (2/14)

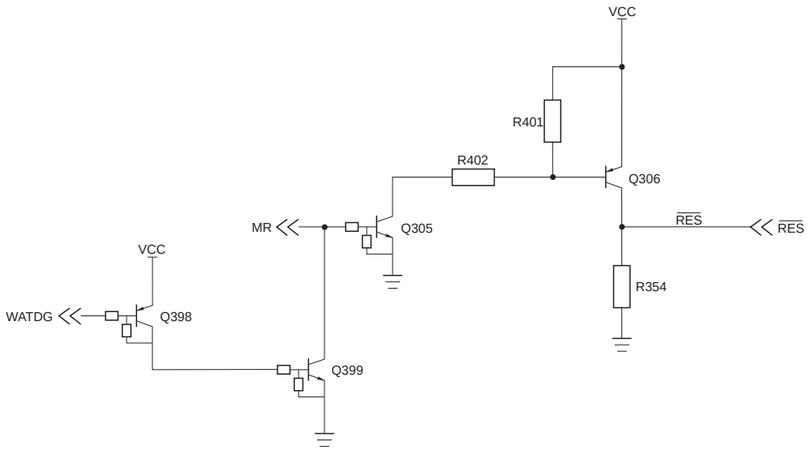

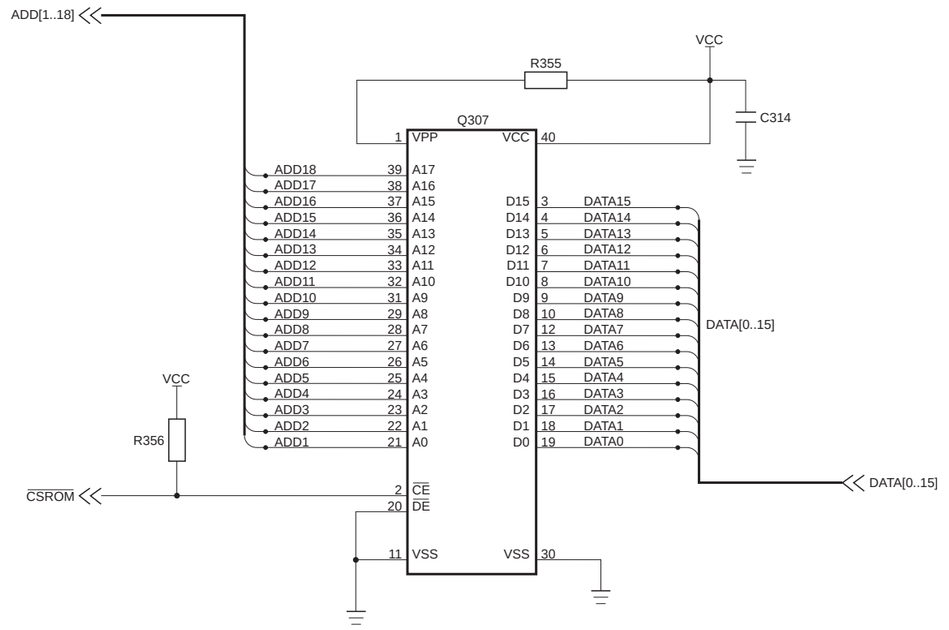

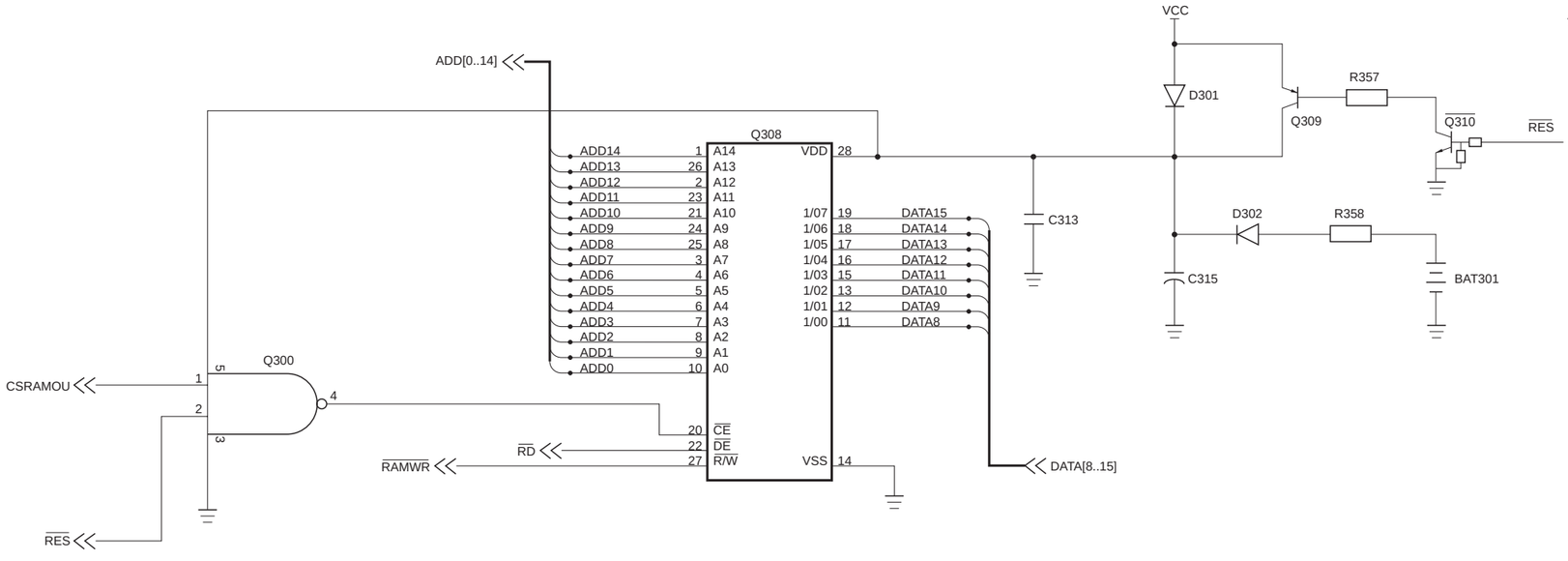

COPYRIGHT © 1998 CANON INC.

CANON NP6621 REV.0 FEB. 1998 PRINTED IN JAPAN (IMPRIME AU JAPON)

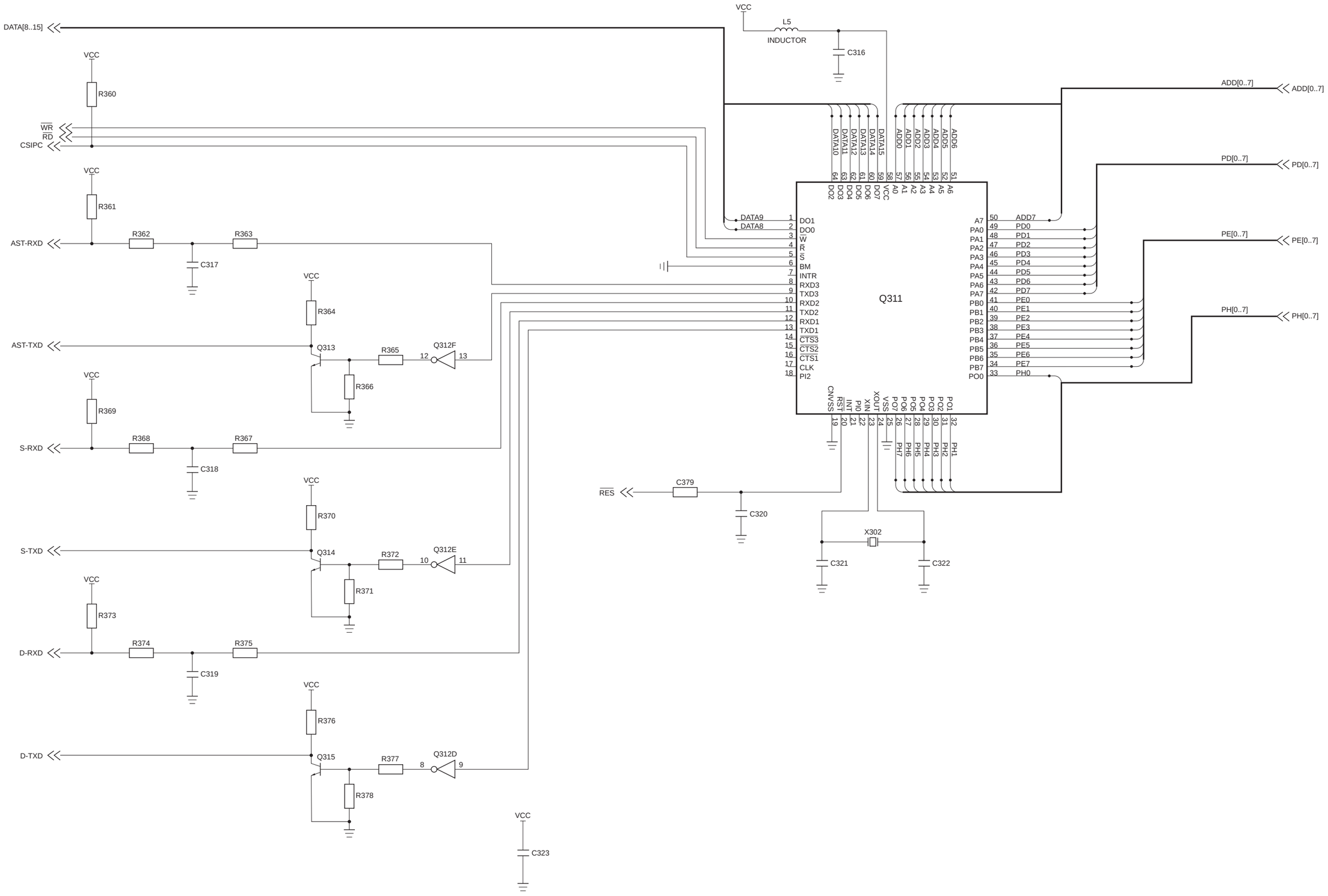

COPYRIGHT © 1998 CANON INC.
CANON NP6621 REV.0 FEB. 1998 PRINTED IN JAPAN (IMPRIME AU JAPON)

DC Controller (4/14)

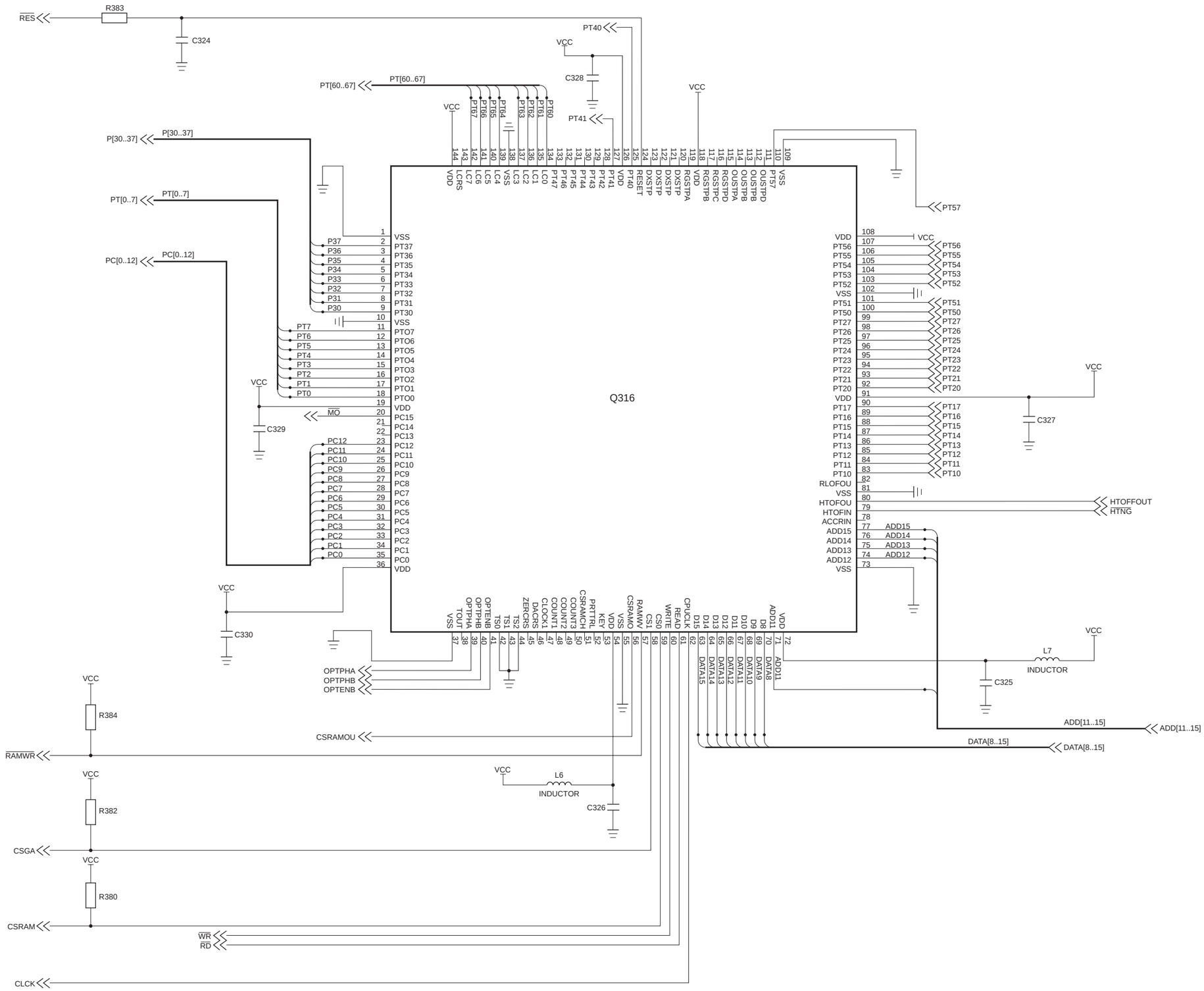

COPYRIGHT © 1998 CANON INC.

CANON NP6621 REV.0 FEB. 1998 PRINTED IN JAPAN (IMPRIME AU JAPON)

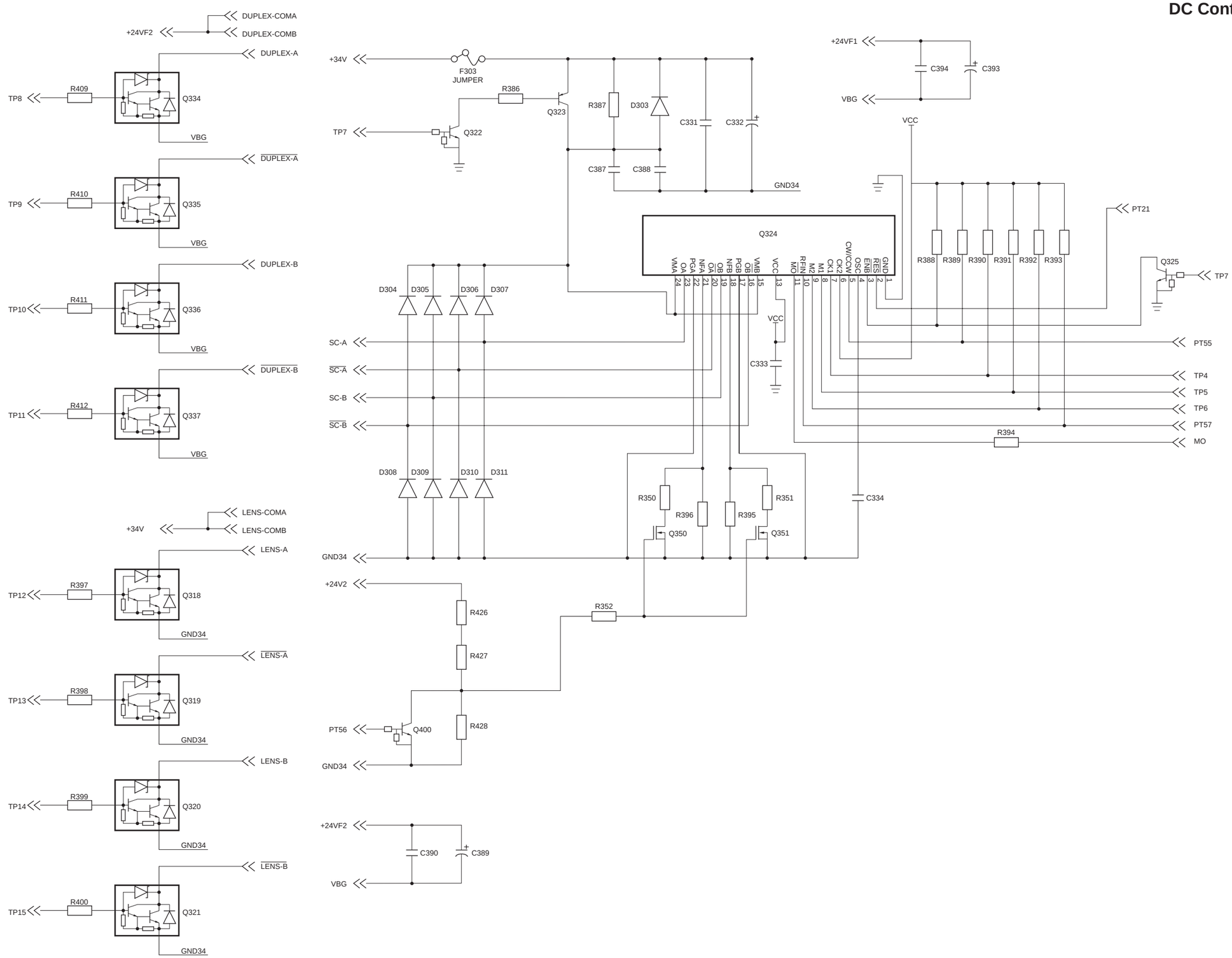

COPYRIGHT © 1998 CANON INC.
CANON NP6621 REV.0 FEB. 1998 PRINTED IN JAPAN (IMPRIME AU JAPON)

DC Controller (6/14)

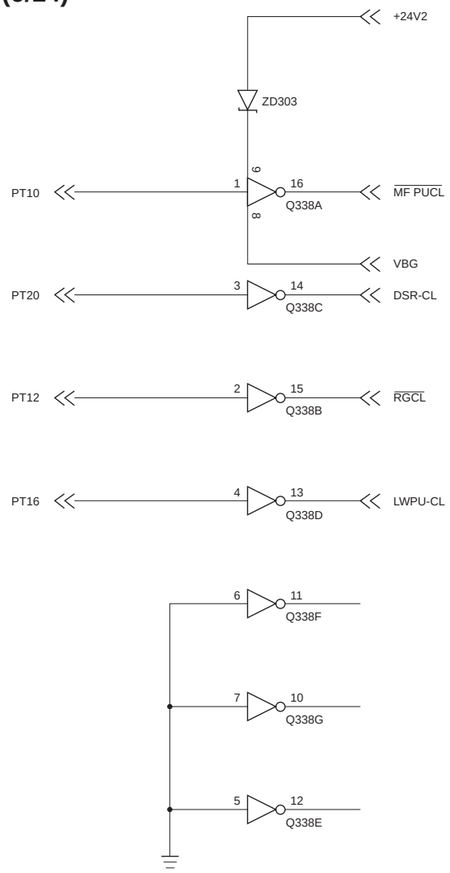

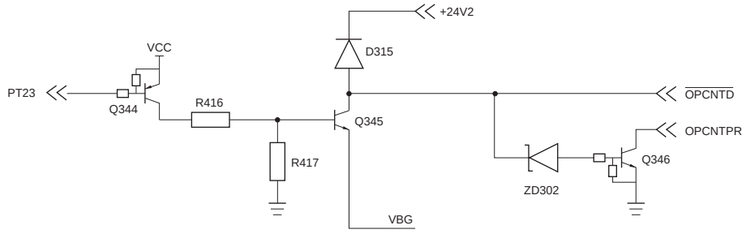

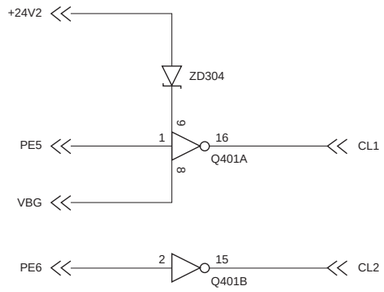

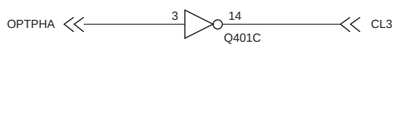

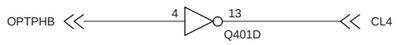

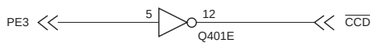

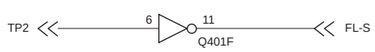

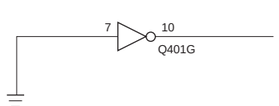

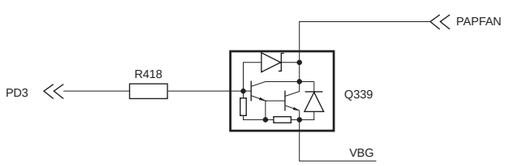

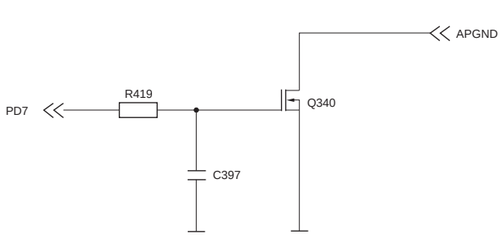

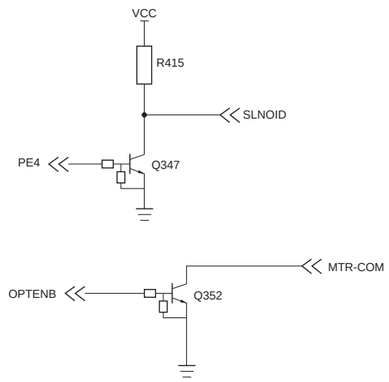

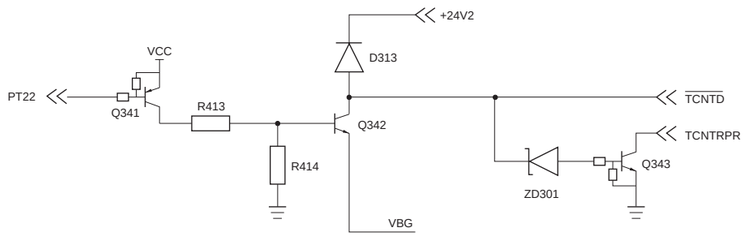

COPYRIGHT © 1998 CANON INC.

CANON NP6621 REV.0 FEB. 1998 PRINTED IN JAPAN (IMPRIME AU JAPON)

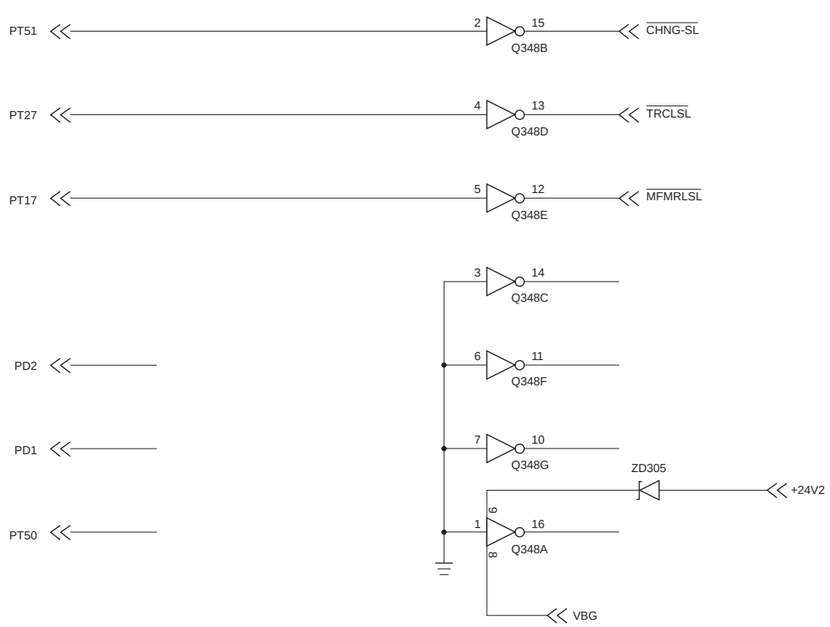

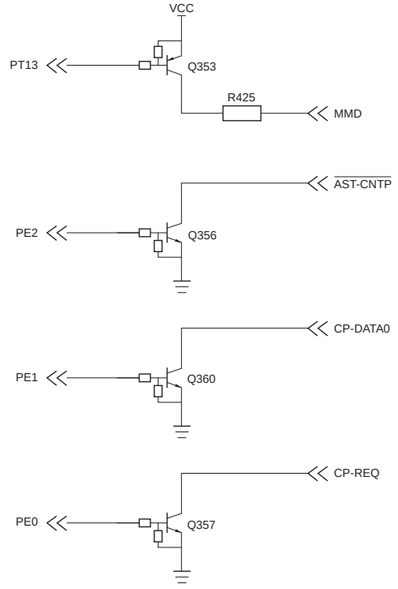

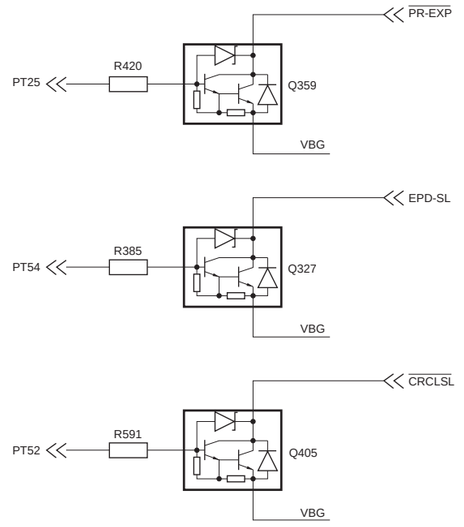

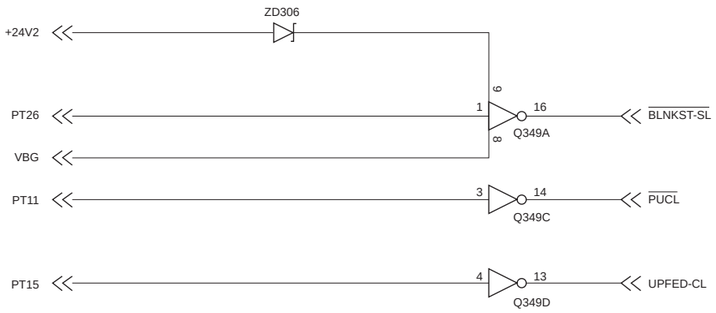

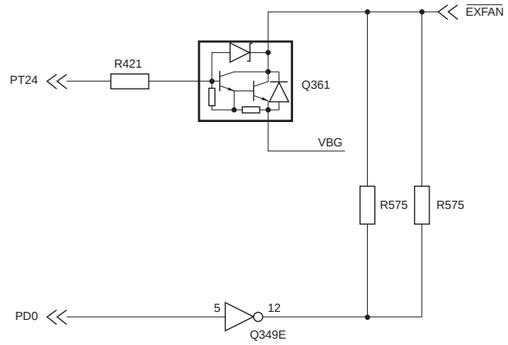

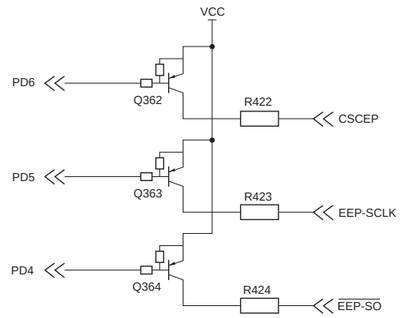

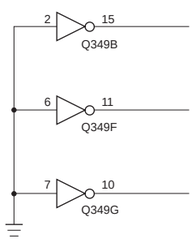

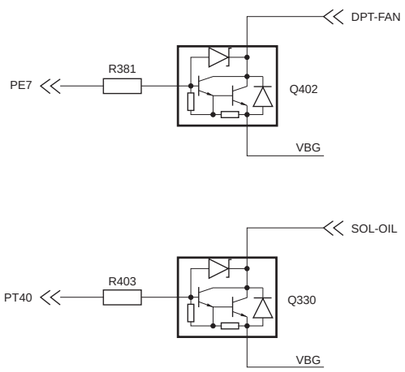

COPYRIGHT © 1998 CANON INC.
CANON NP6621 REV.0 FEB. 1998 PRINTED IN JAPAN (IMPRIME AU JAPON)

DC Controller (8/14)

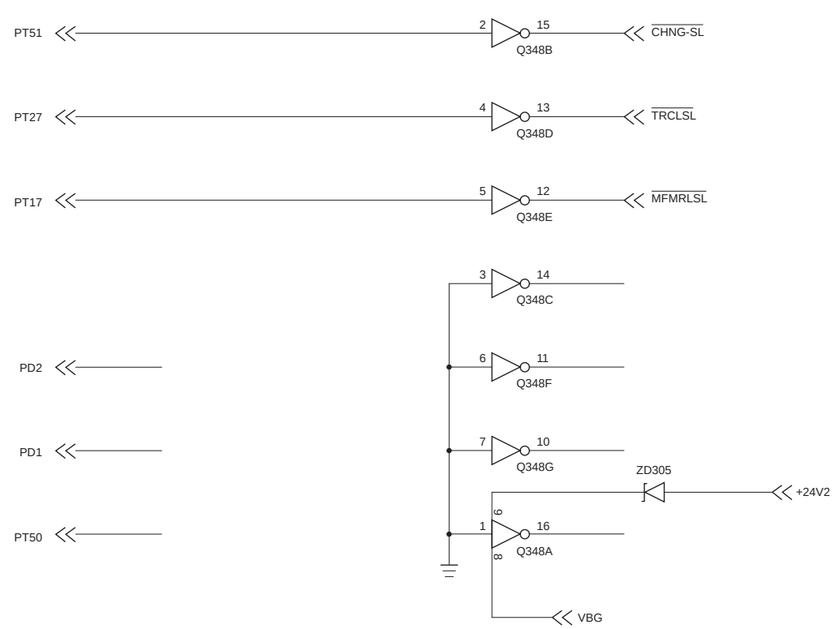

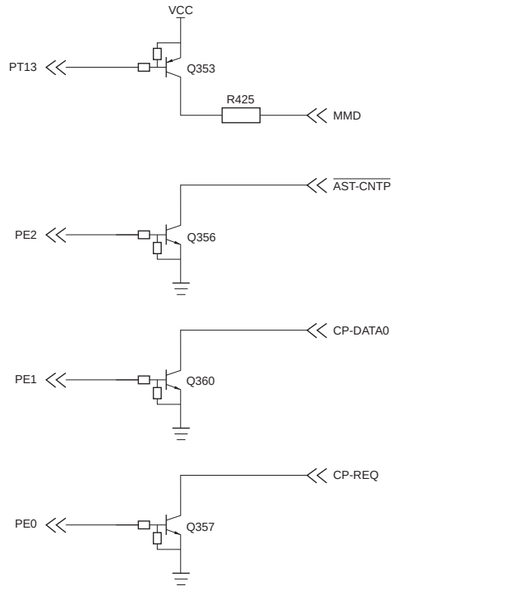

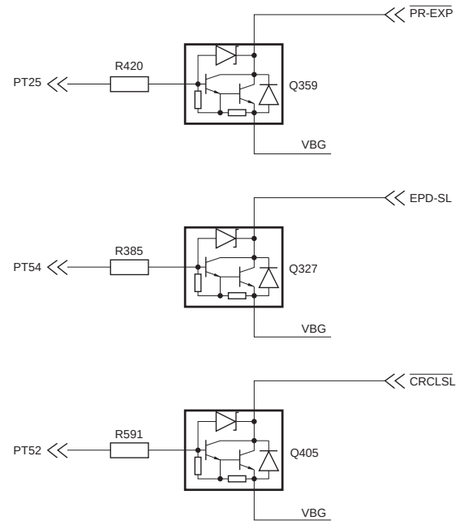

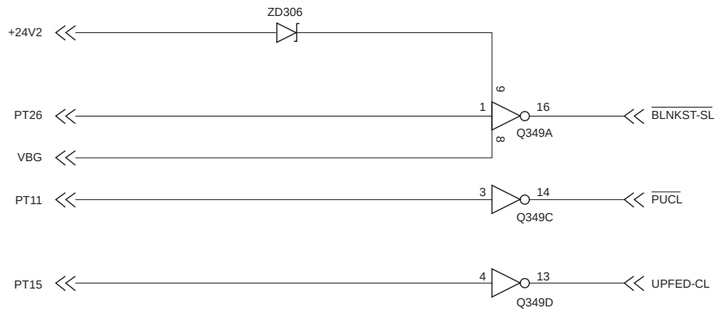

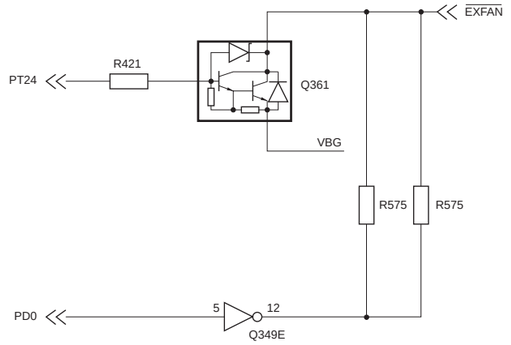

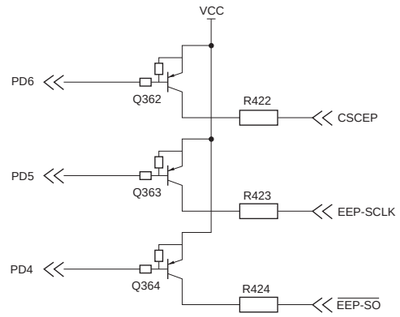

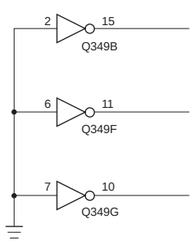

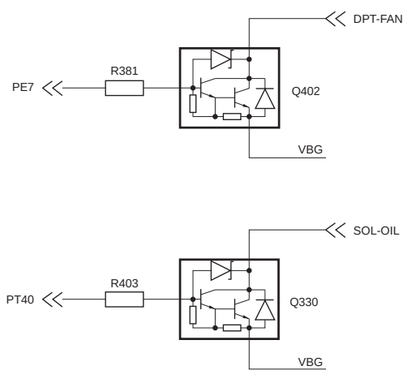

COPYRIGHT © 1998 CANON INC.

CANON NP6621 REV.0 FEB. 1998 PRINTED IN JAPAN (IMPRIME AU JAPON)

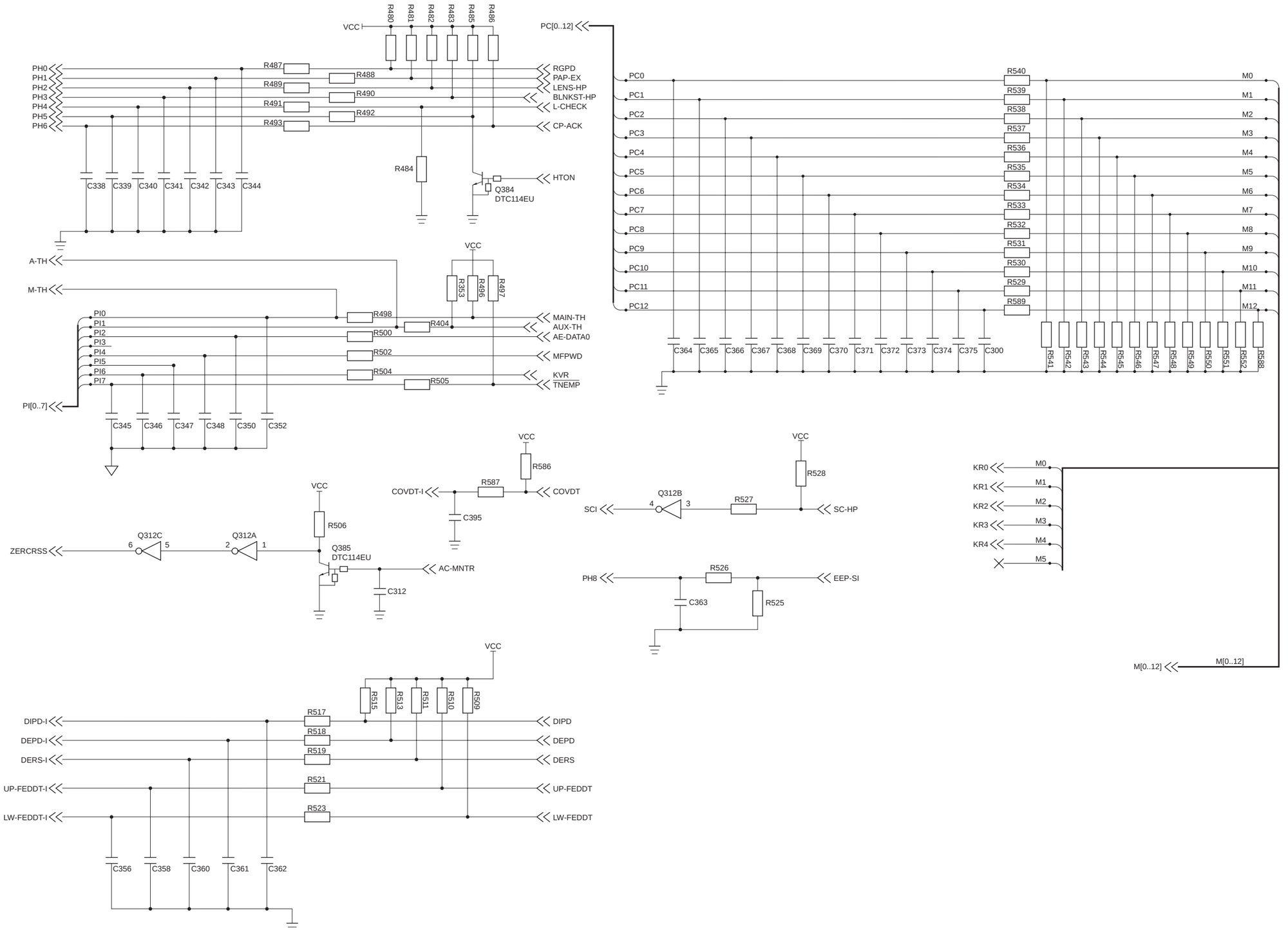

COPYRIGHT © 1998 CANON INC.
CANON NP6621 REV.0 FEB. 1998 PRINTED IN JAPAN (IMPRIME AU JAPON)

DC Controller (10/14)

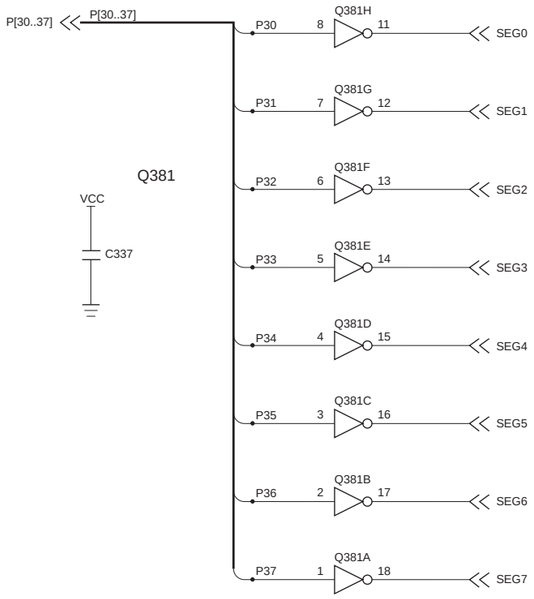

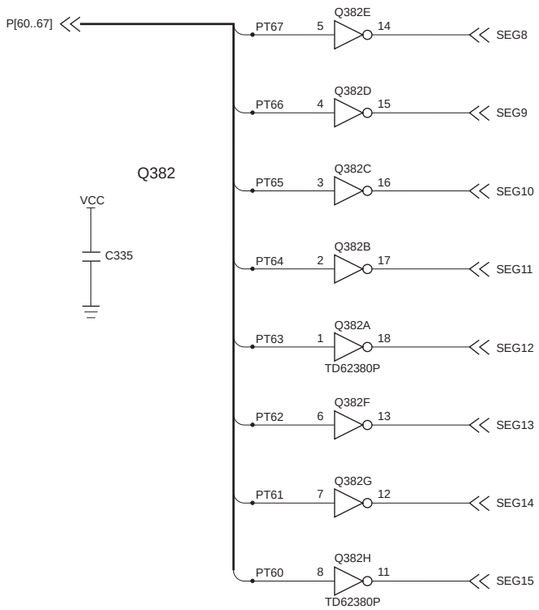

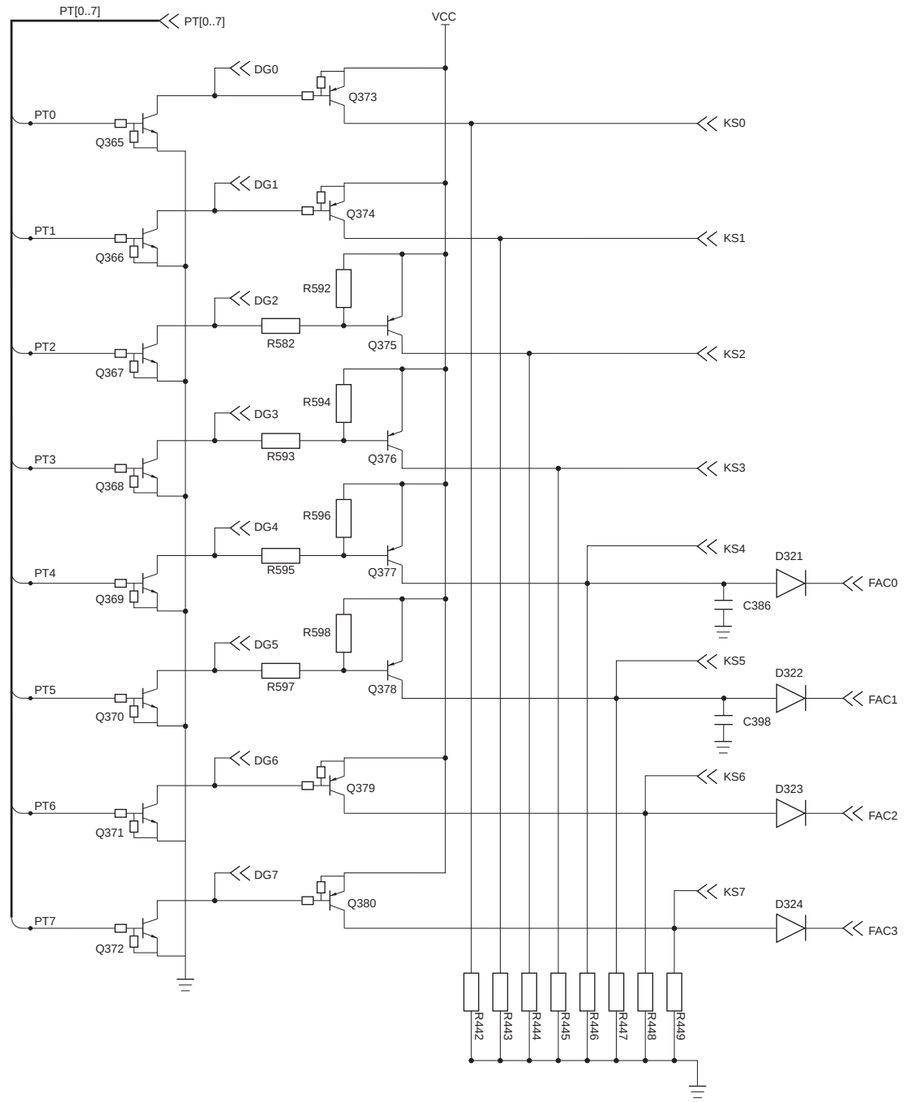

COPYRIGHT © 1998 CANON INC.

CANON NP6621 REV.0 FEB. 1998 PRINTED IN JAPAN (IMPRIME AU JAPON)

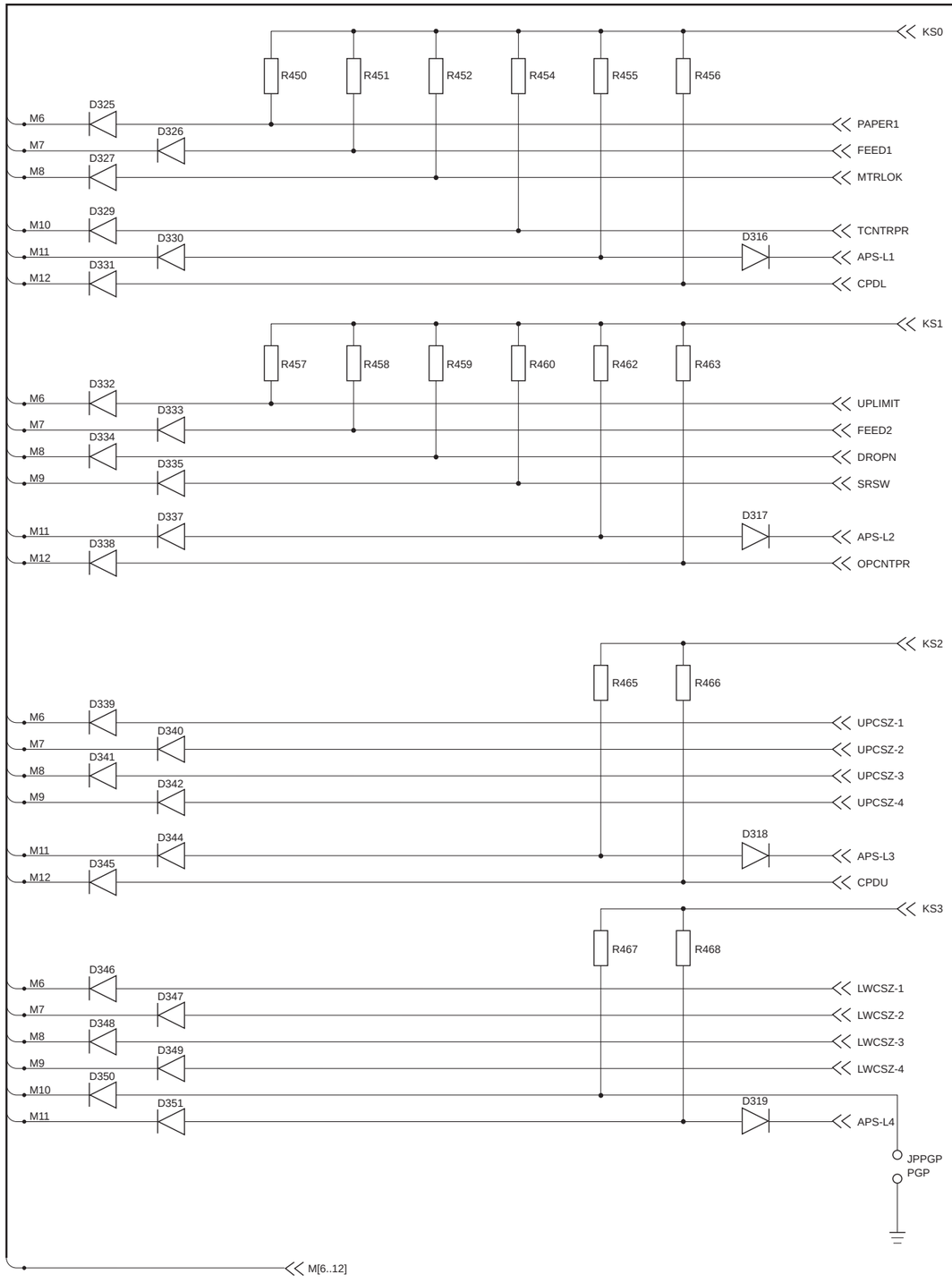



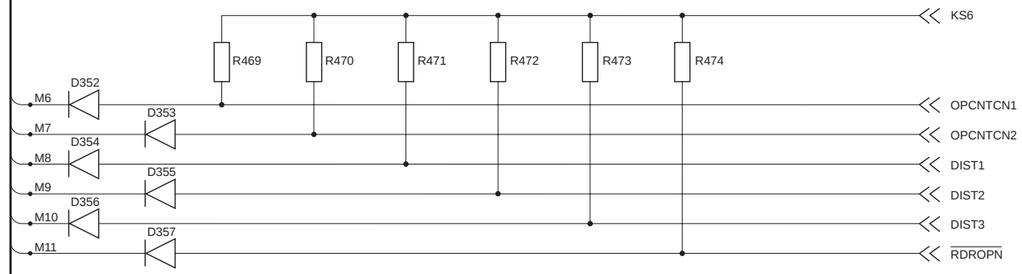

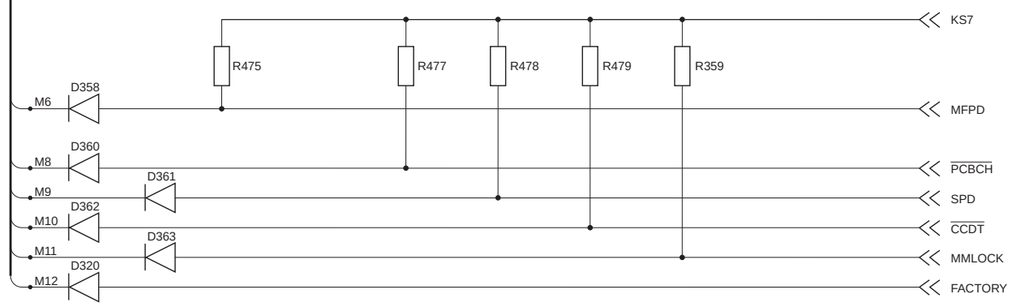

COPYRIGHT © 1998 CANON INC.
CANON NP6621 REV.0 FEB. 1998 PRINTED IN JAPAN (IMPRIME AU JAPON)

DC Controller (12/14)

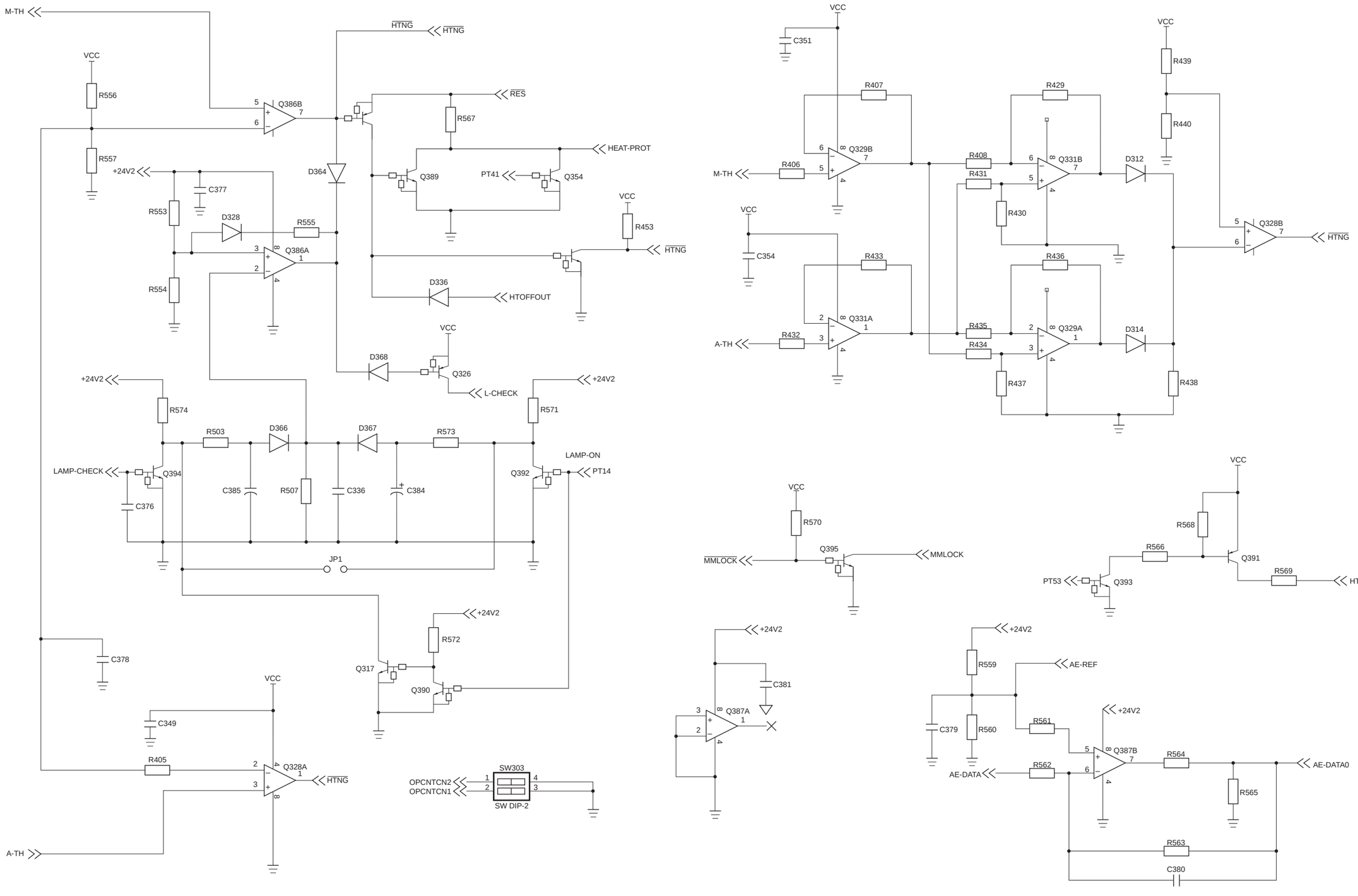

COPYRIGHT © 1998 CANON INC.

CANON NP6621 REV.0 FEB. 1998 PRINTED IN JAPAN (IMPRIME AU JAPON)

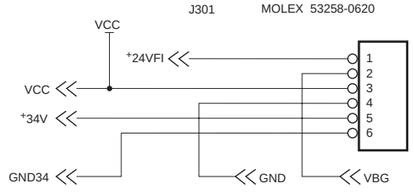

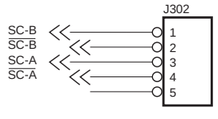

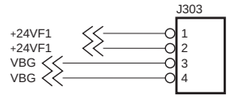

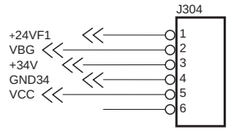

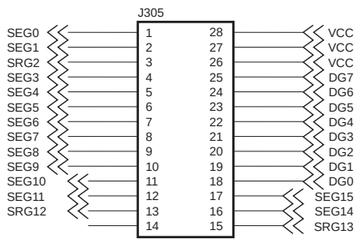

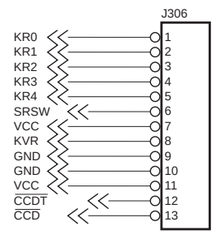

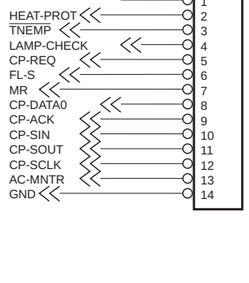

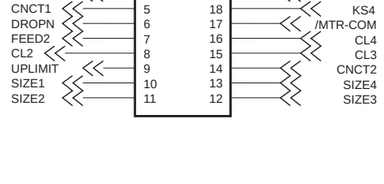

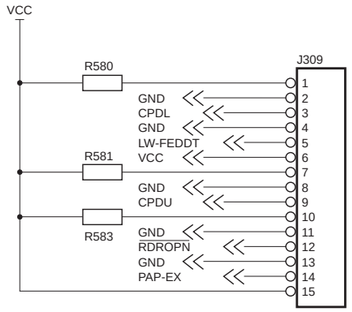

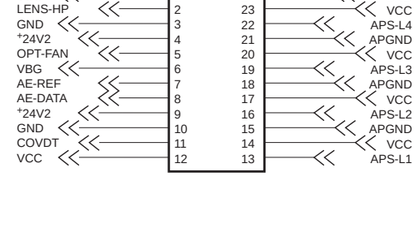

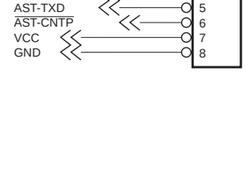

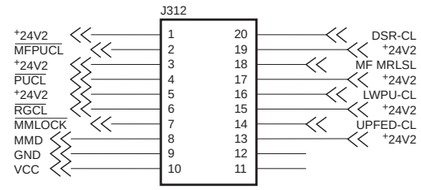

COPYRIGHT © 1998 CANON INC.
CANON NP6621 REV.0 FEB. 1998 PRINTED IN JAPAN (IMPRIME AU JAPON)

DC Controller (14/14)

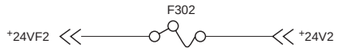

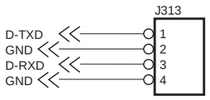

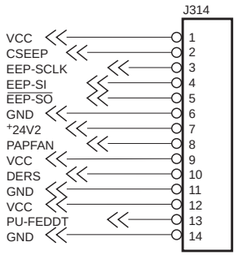

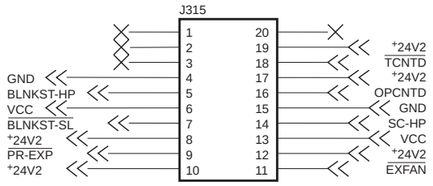

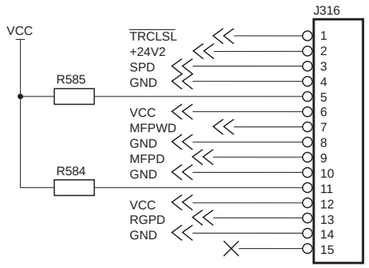

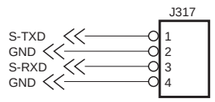

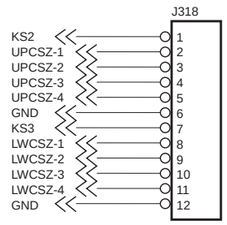

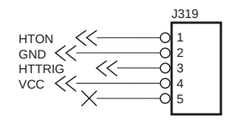

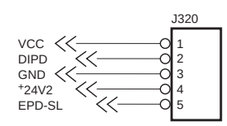

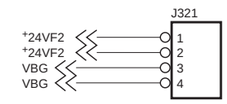

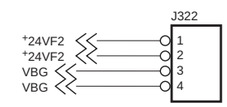

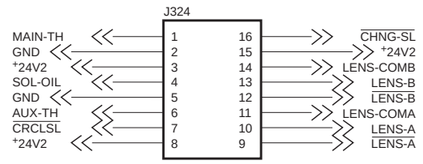

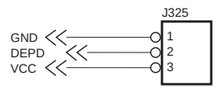

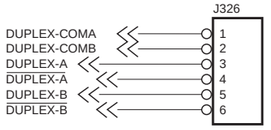

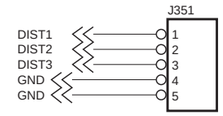

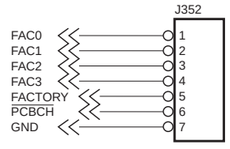

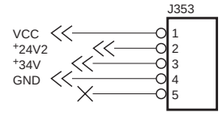

COPYRIGHT © 1998 CANON INC.

CANON NP6621 REV.0 FEB. 1998 PRINTED IN JAPAN (IMPRIME AU JAPON)

E. COMPOSITE POWER SUPPLY CIRCUIT DIAGRAM

Composite Power Supply PCB (1/6)

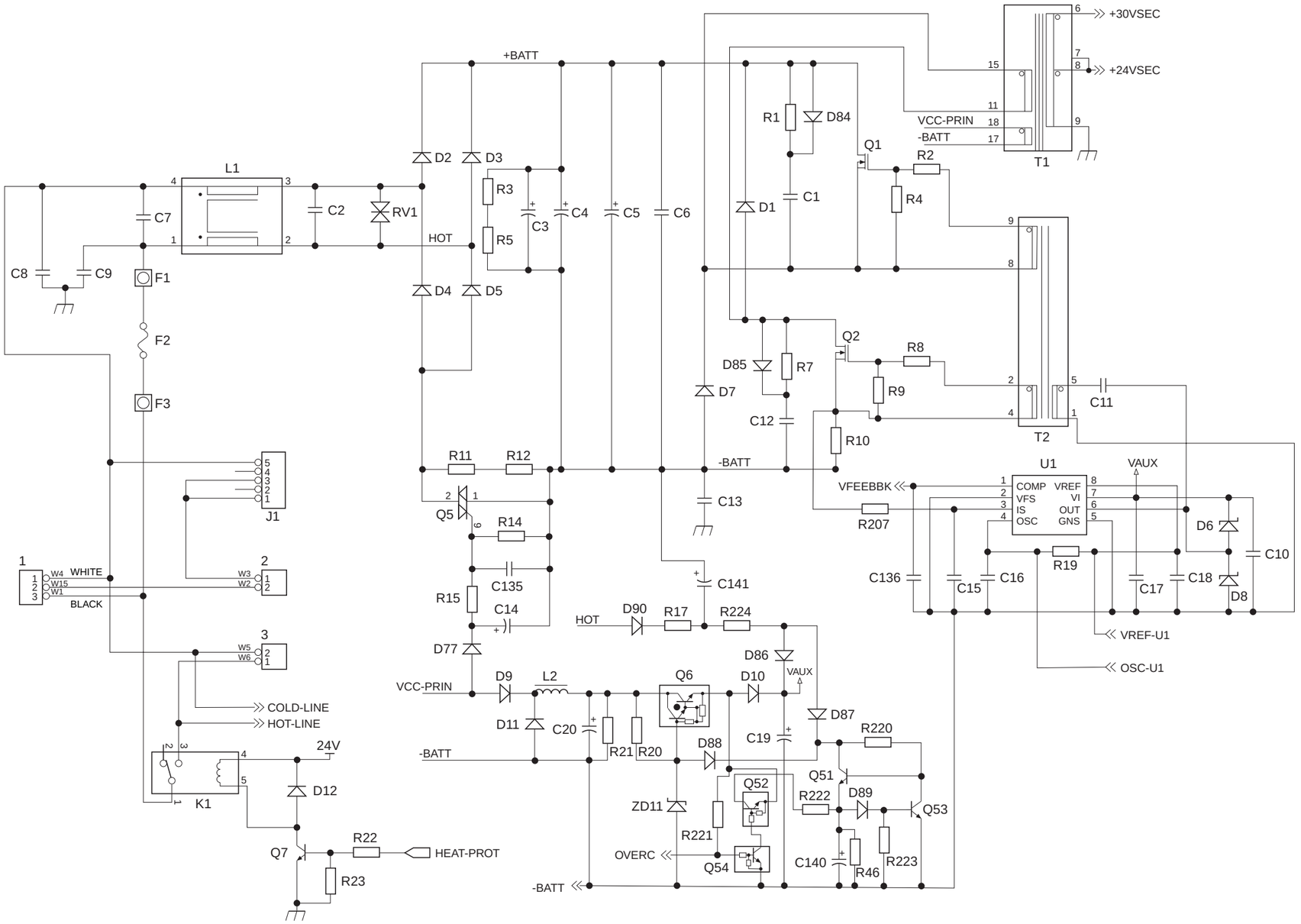

COPYRIGHT © 1998 CANON INC.

CANON NP6621 REV.0 FEB. 1998 PRINTED IN JAPAN (IMPRIME AU JAPON)

Composite Power Supply PCB (2/6)

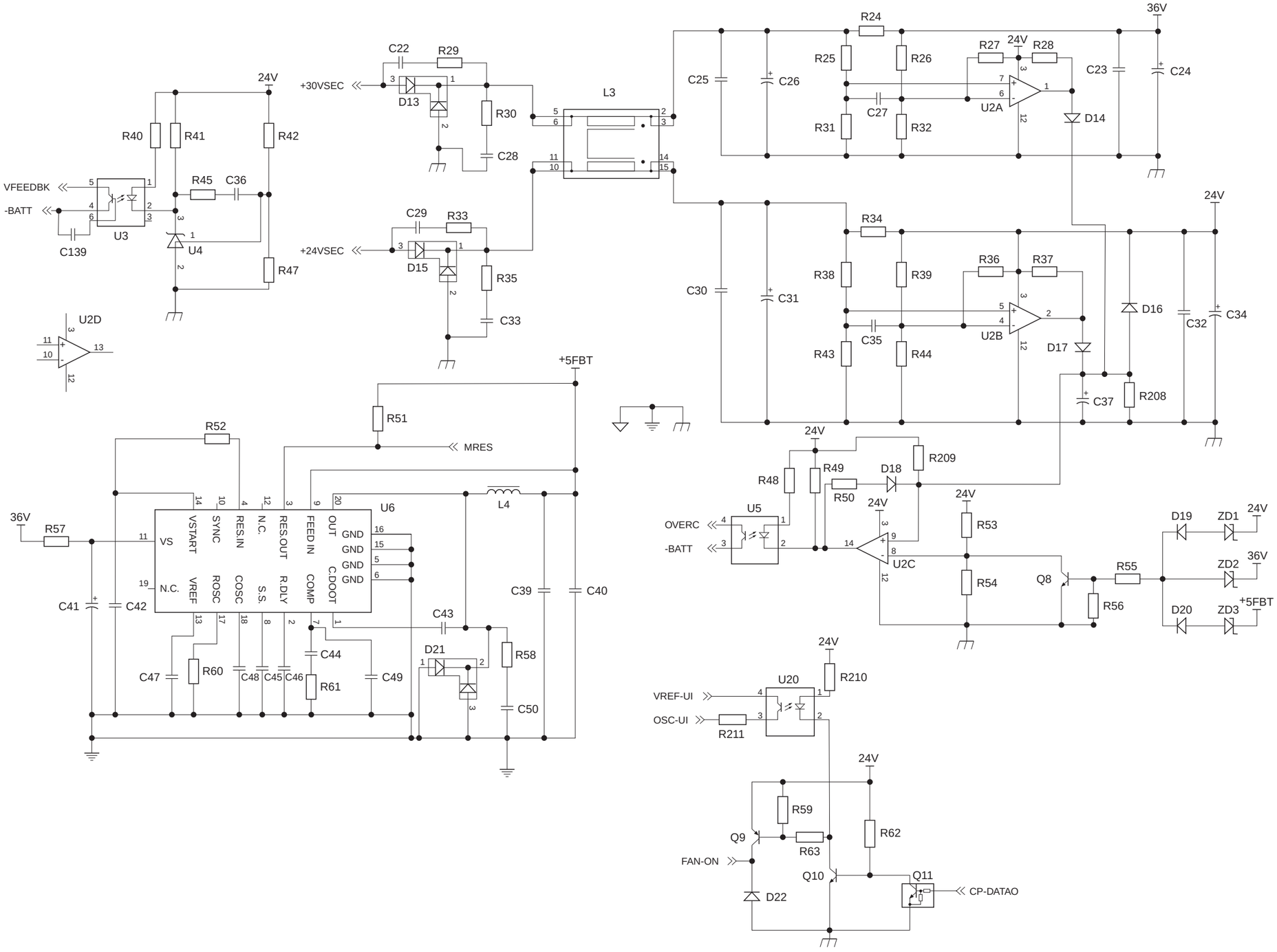

COPYRIGHT © 1998 CANON INC.

CANON NP6621 REV.0 FEB. 1998 PRINTED IN JAPAN (IMPRIME AU JAPON)

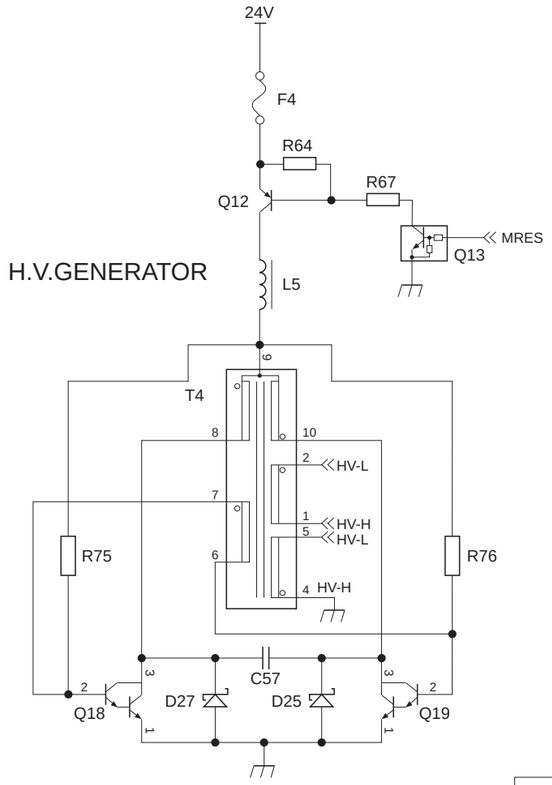

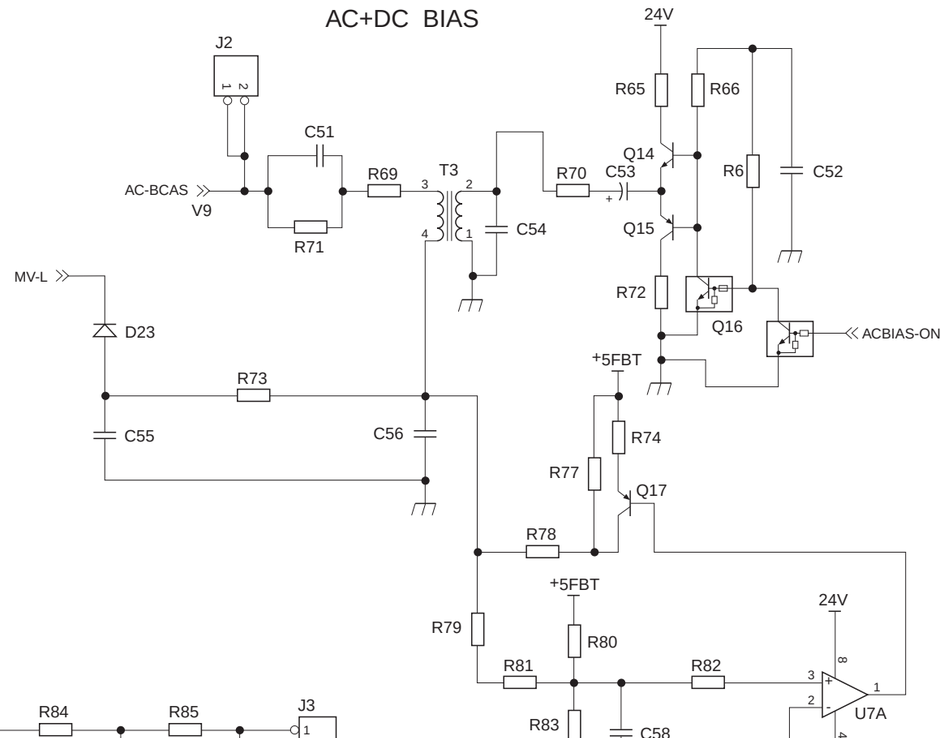

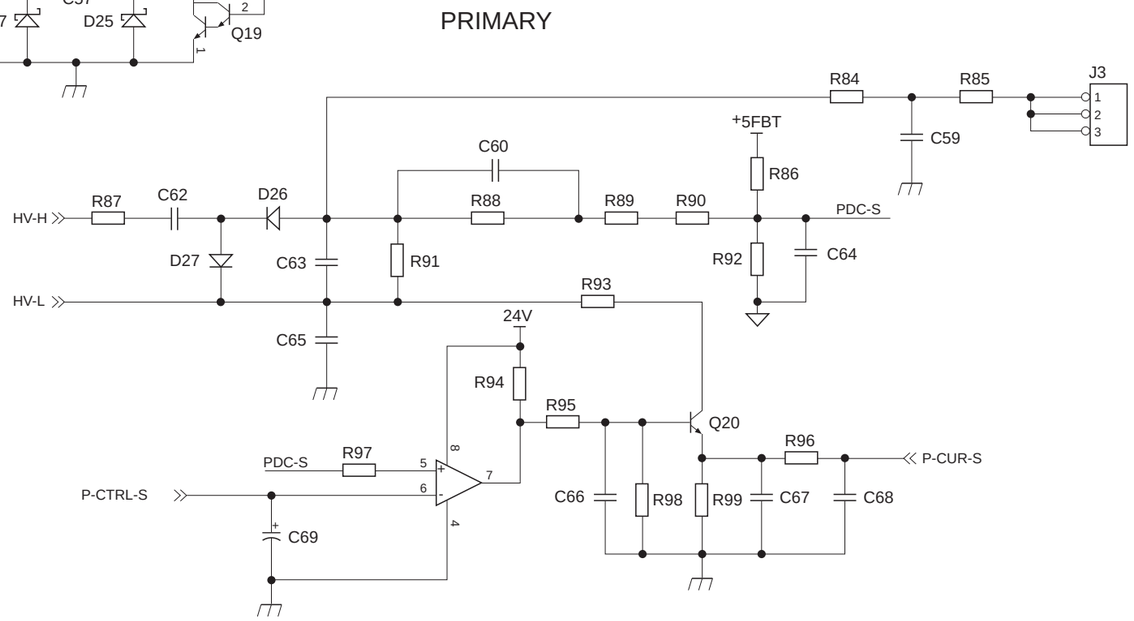

COPYRIGHT © 1998 CANON INC.
CANON NP6621 REV.0 FEB. 1998 PRINTED IN JAPAN (IMPRIME AU JAPON)

Composite Power Supply PCB (4/6)

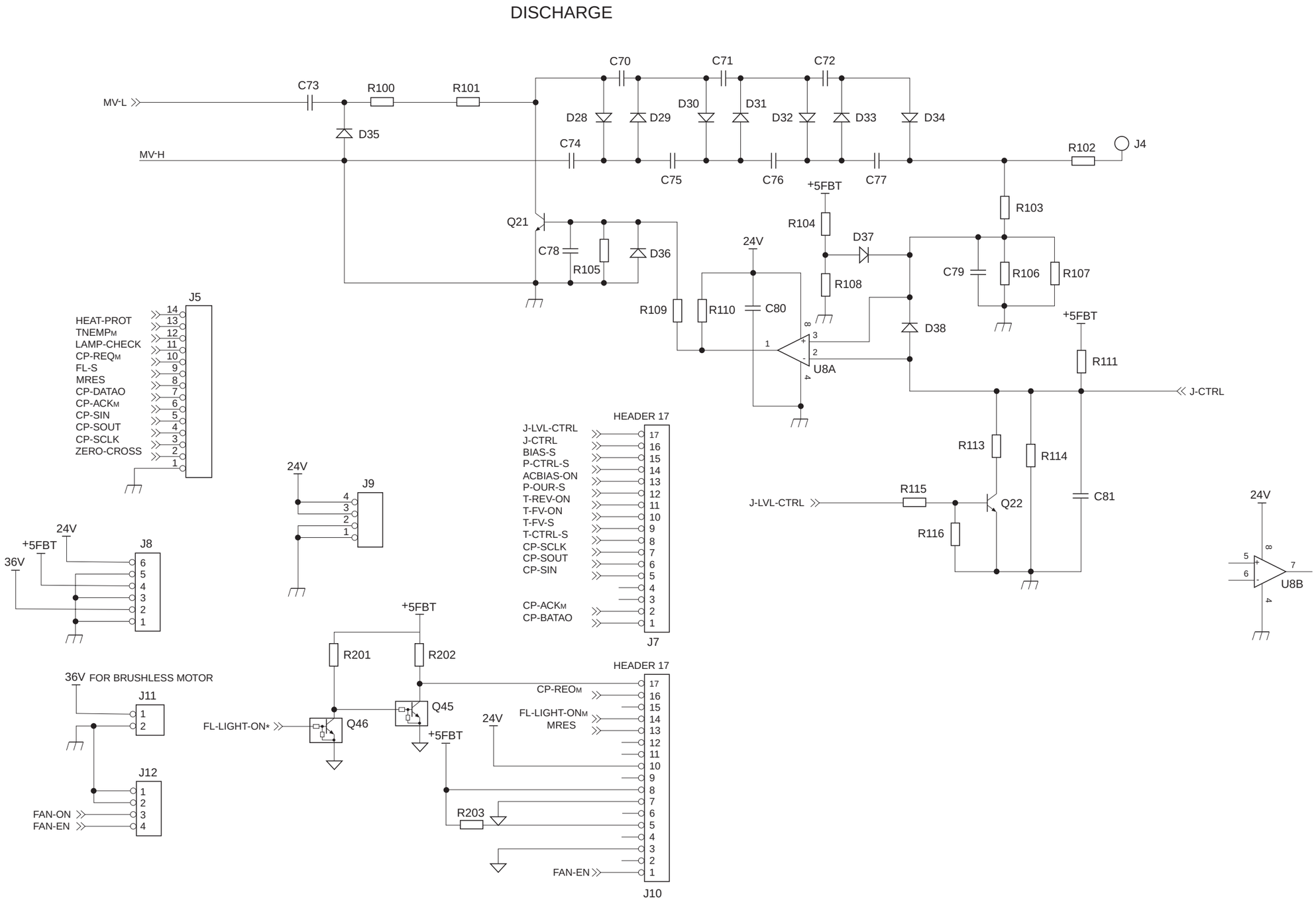

COPYRIGHT © 1998 CANON INC.

CANON NP6621 REV.0 FEB. 1998 PRINTED IN JAPAN (IMPRIME AU JAPON)

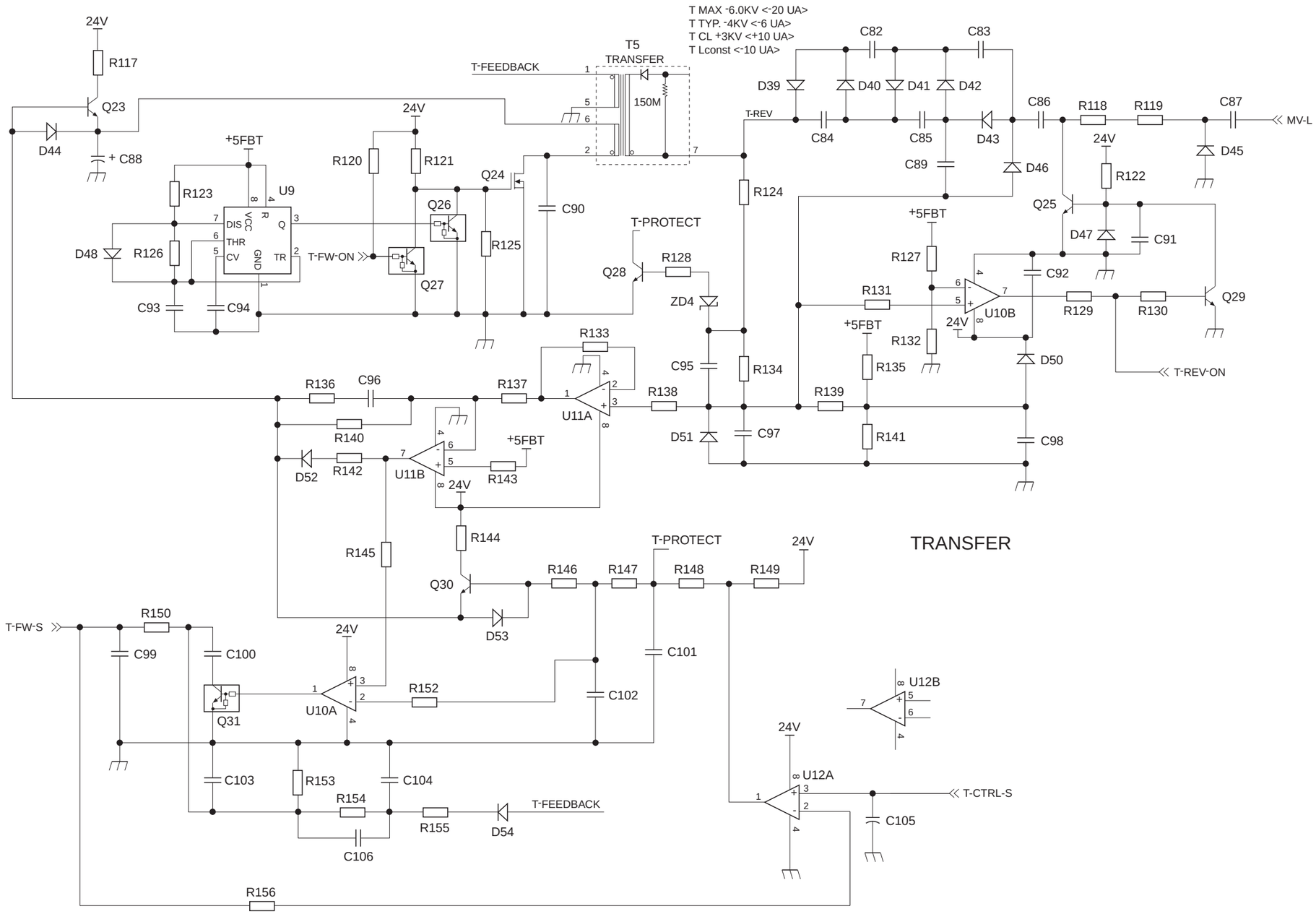

COPYRIGHT © 1998 CANON INC.

CANON NP6621 REV.0 FEB. 1998 PRINTED IN JAPAN (IMPRIME AU JAPON)

Composite Power Supply PCB (6/6)

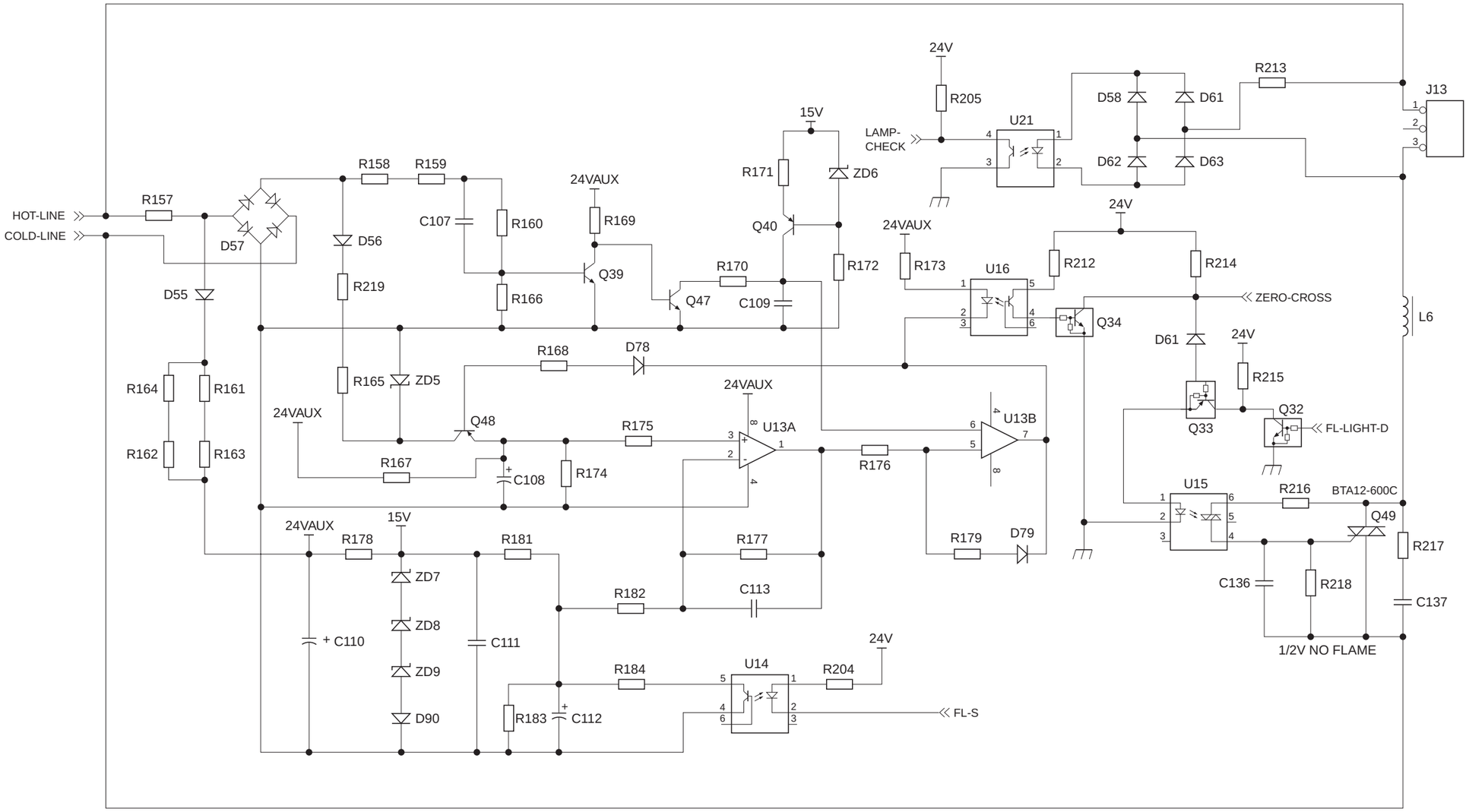

COPYRIGHT © 1998 CANON INC.

CANON NP6621 REV.0 FEB. 1998 PRINTED IN JAPAN (IMPRIME AU JAPON)

F. CONTROL PANEL KEY PCB

Control Panel Key PCB (1/3)

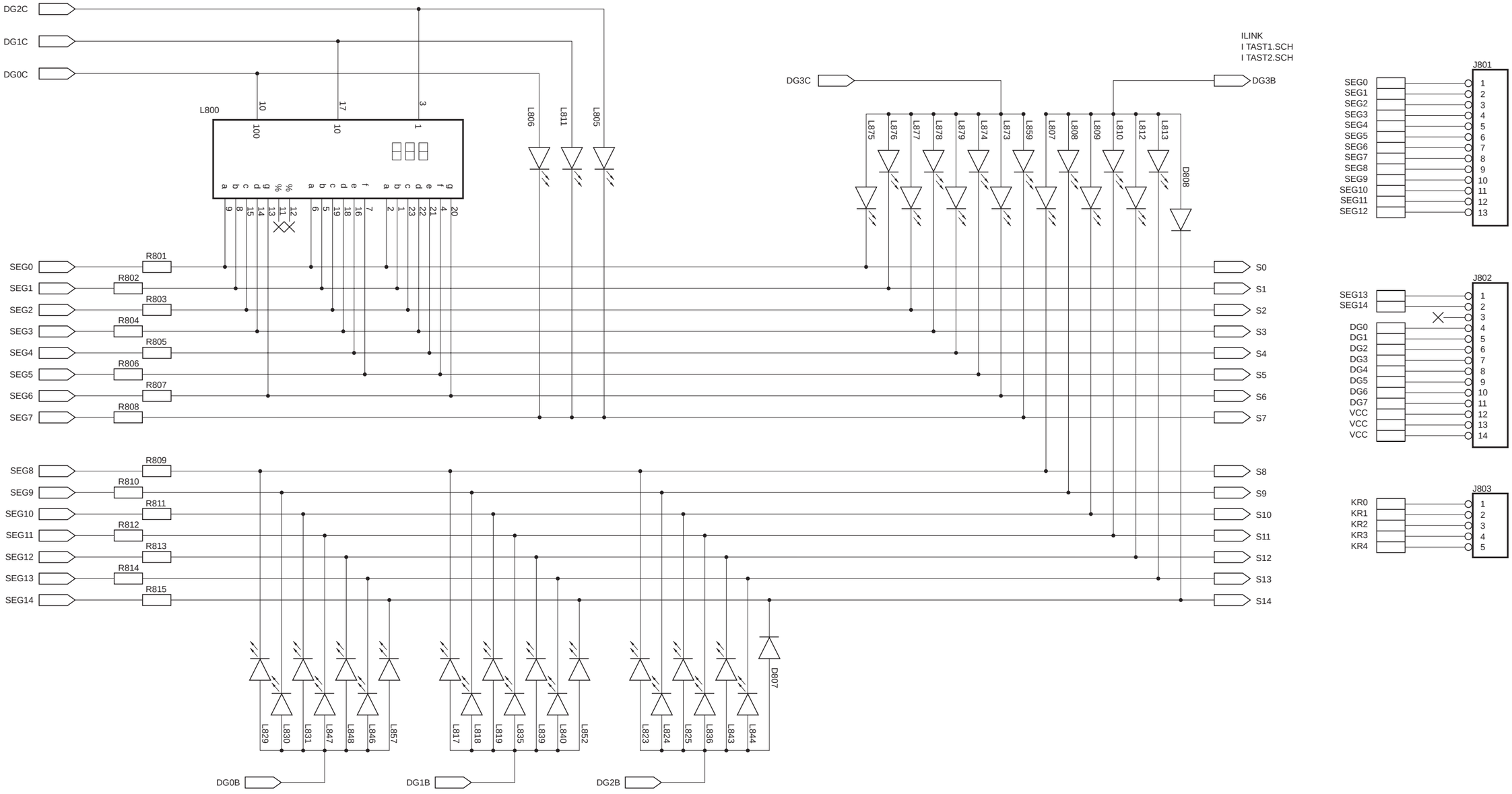

COPYRIGHT © 1998 CANON INC.

CANON NP6621 REV.0 FEB. 1998 PRINTED IN JAPAN (IMPRIME AU JAPON)

Control Panel Key PCB (2/3)

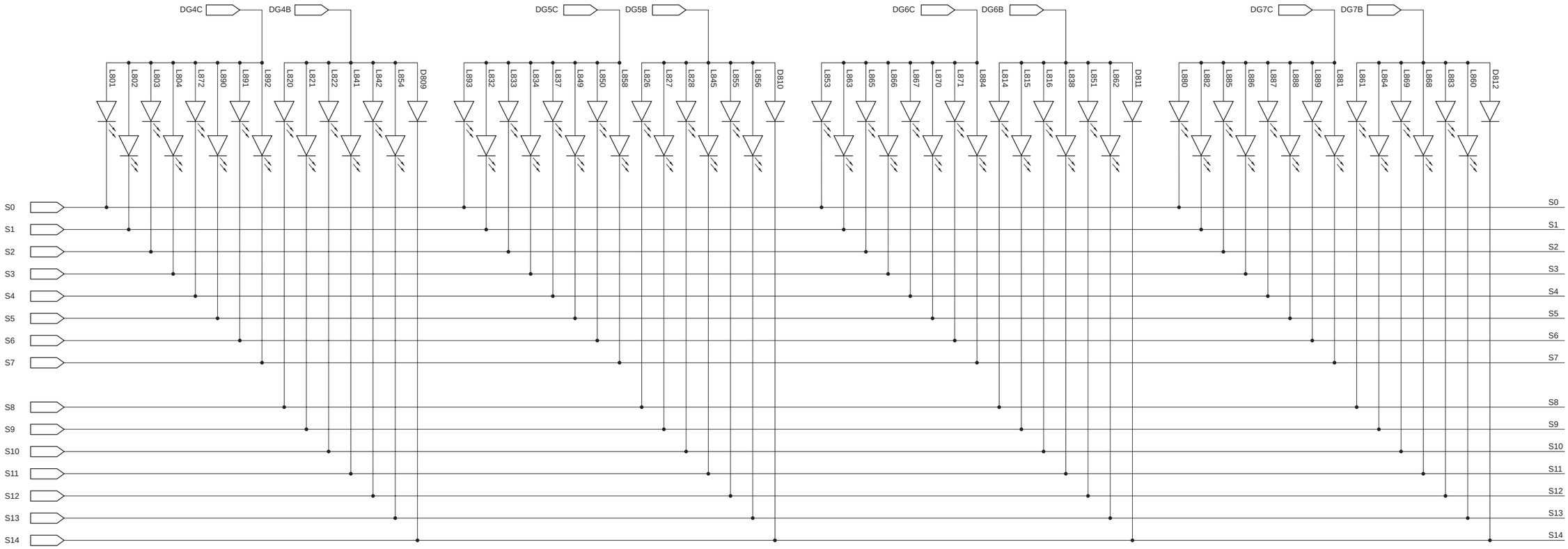

COPYRIGHT © 1998 CANON INC.

CANON NP6621 REV.0 FEB. 1998 PRINTED IN JAPAN (IMPRIME AU JAPON)

Control Panel Key PCB (3/3)

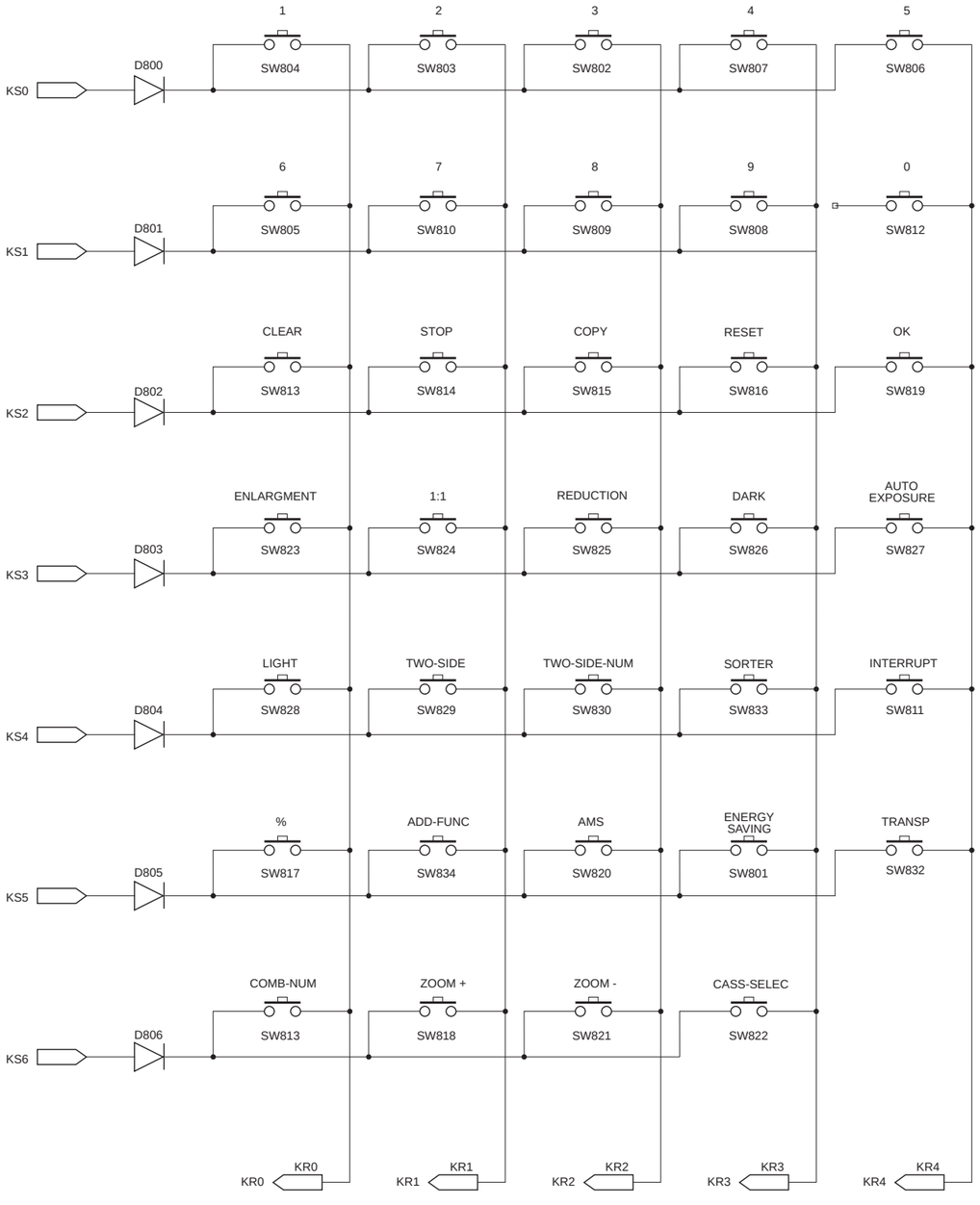

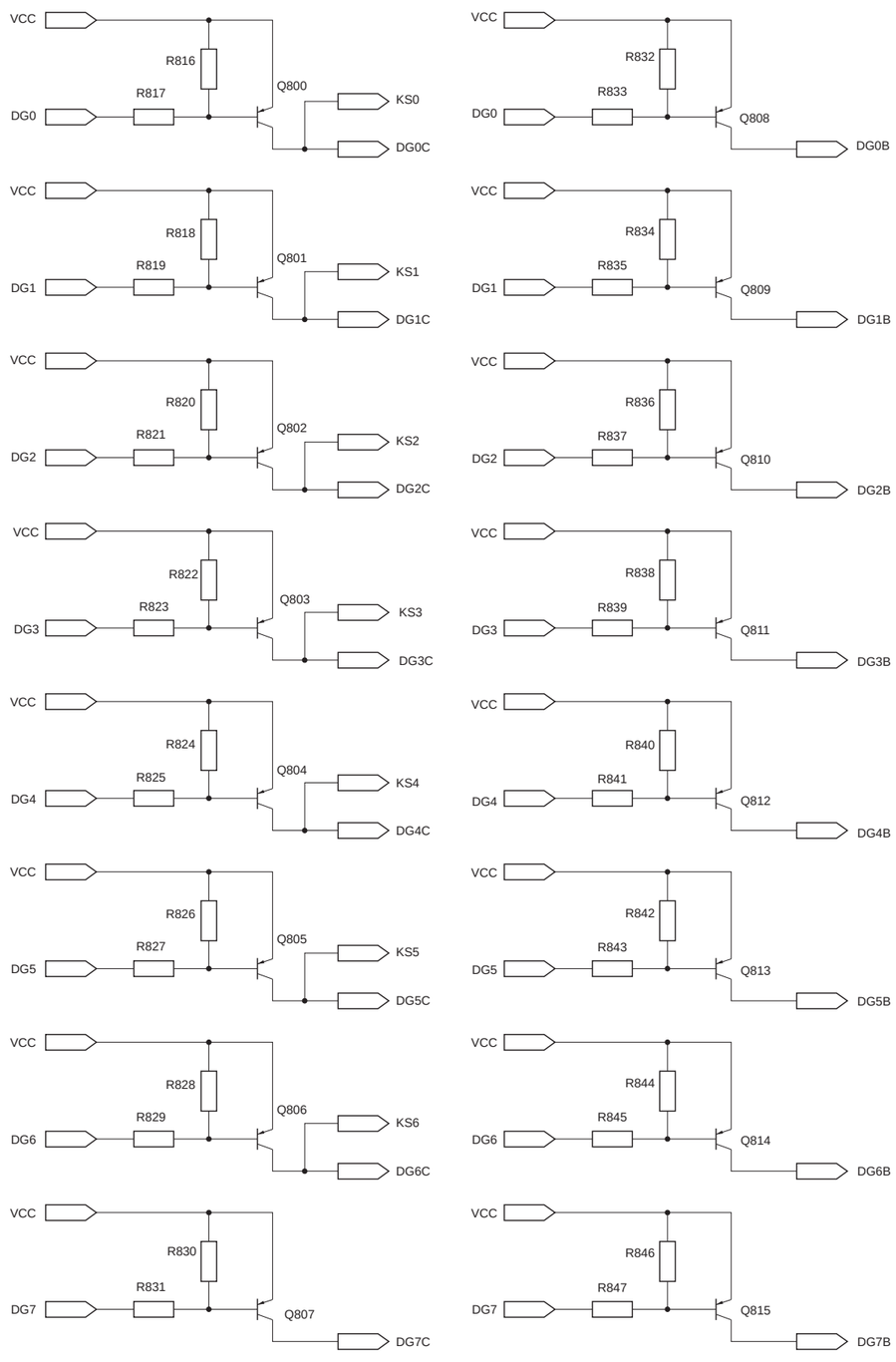

COPYRIGHT © 1998 CANON INC.
CANON NP6621 REV.0 FEB. 1998 PRINTED IN JAPAN (IMPRIME AU JAPON)

COPYRIGHT © 1998 CANON INC.
CANON NP6621 REV.0 FEB. 1998 PRINTED IN JAPAN (IMPRIME AU JAPON)

G. AE SENSOR CIRCUIT DIAGRAM

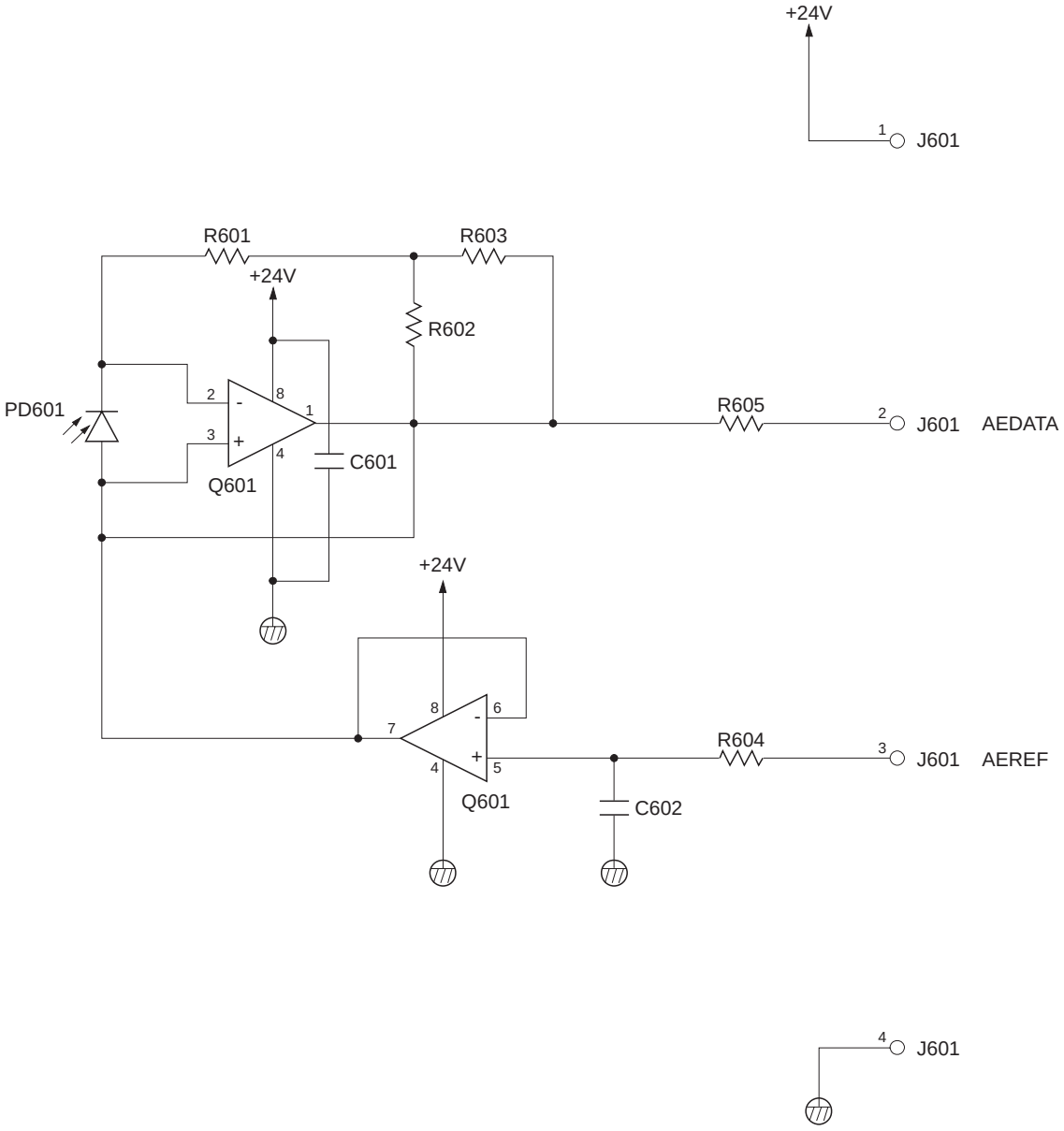

COPYRIGHT © 1998 CANON INC.

H. INTENSITY SENSOR CIRCUIT DIAGRAM

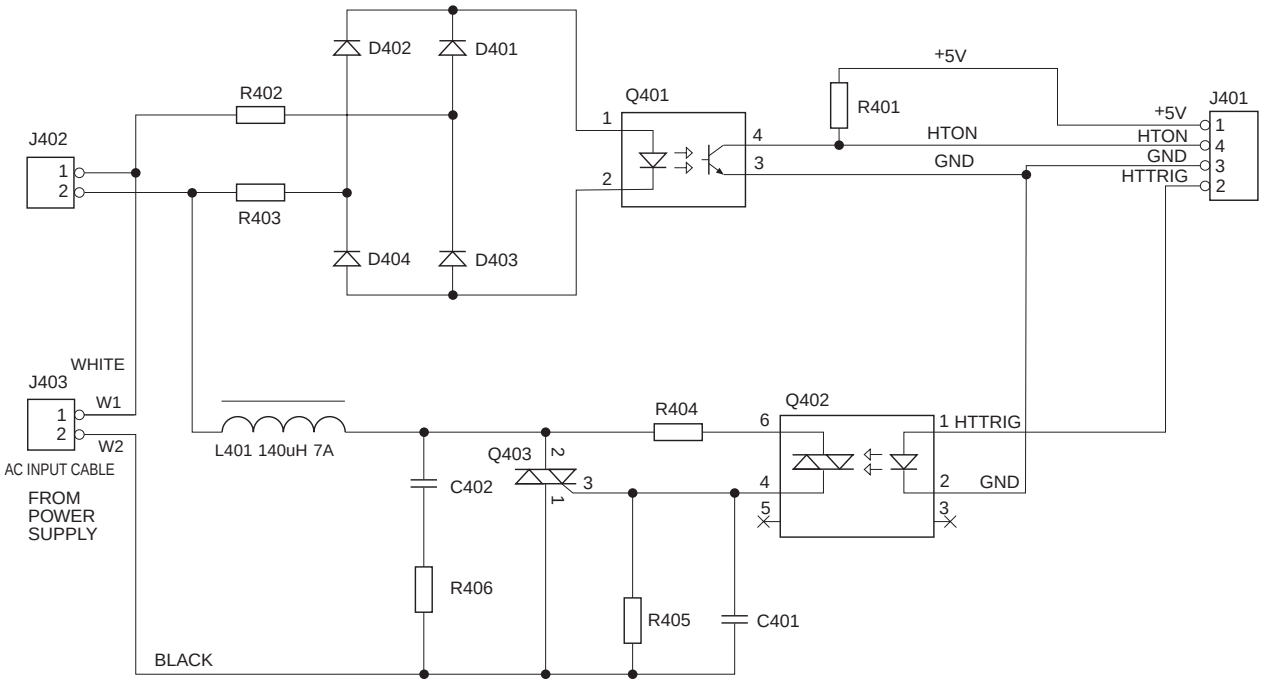

COPYRIGHT © 1998 CANON INC.
CANON NP6621 REV.0 FEB. 1998 PRINTED IN JAPAN (IMPRIME AU JAPON)

I. TONER LEVEL DETECTION CIRCUIT DIAGRAM

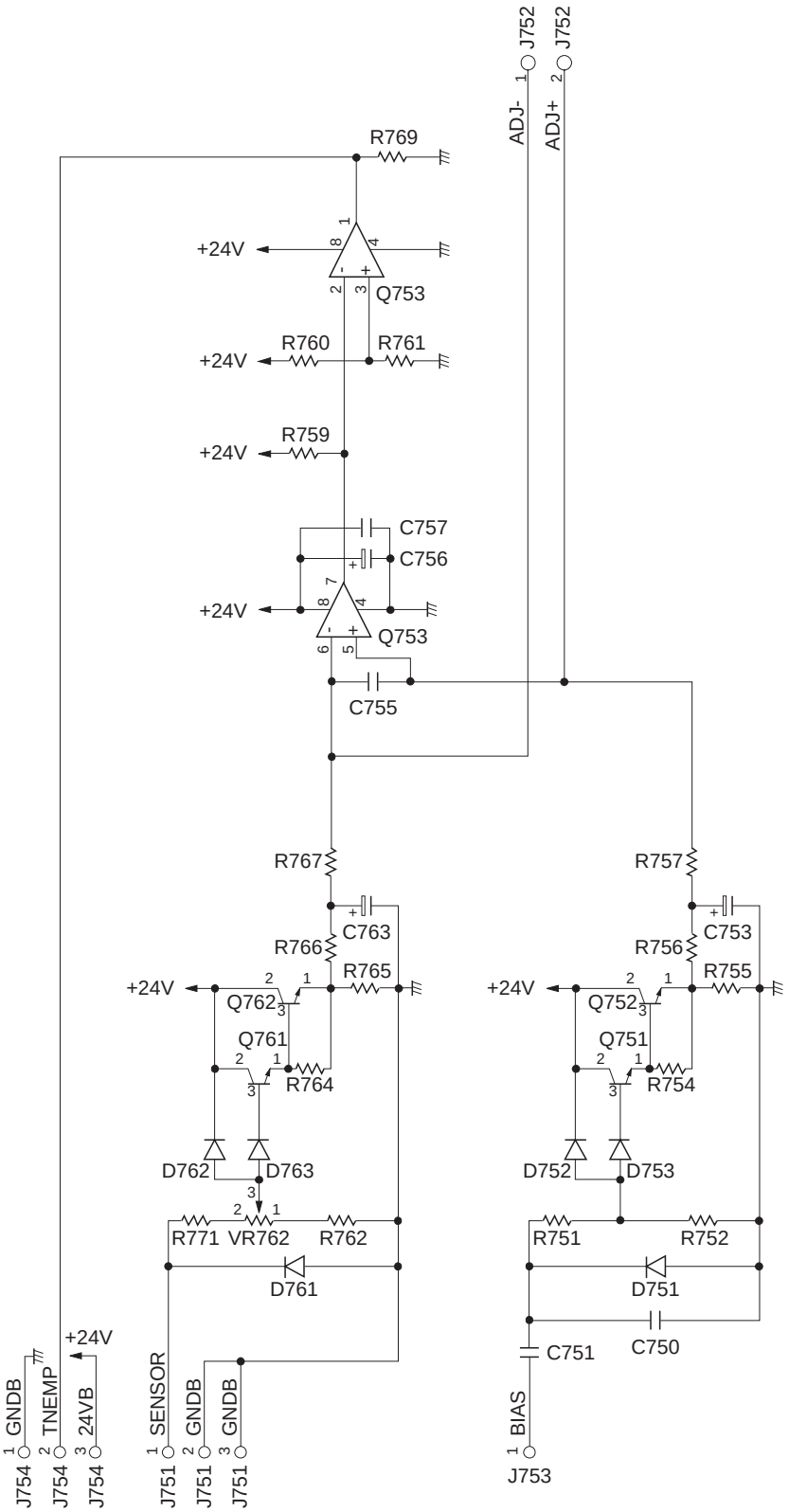

COPYRIGHT © 1998 CANON INC.

J. CASSETTE FEEDING MODULE-B2 GENERAL CIRCUIT DIAGRAM

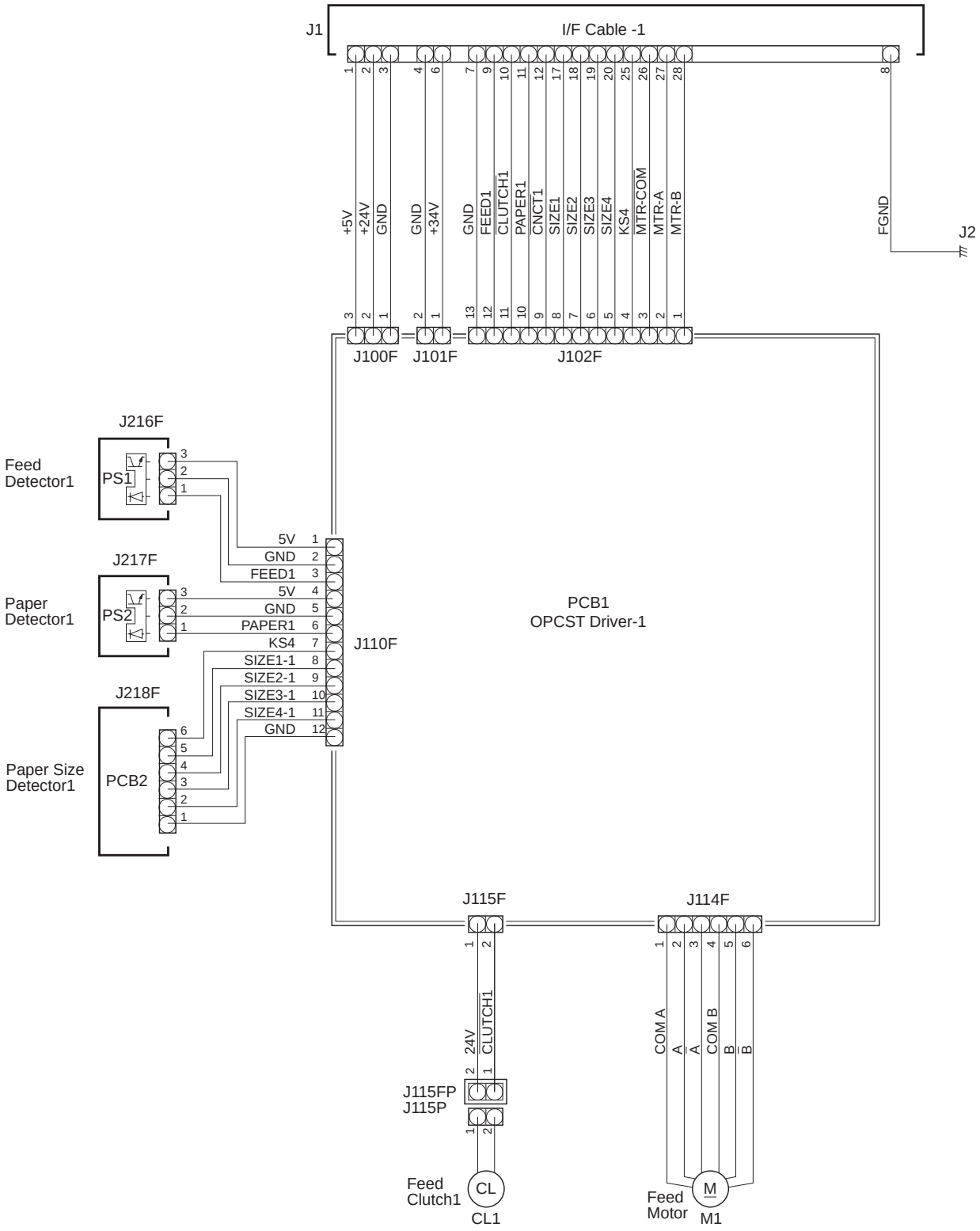

COPYRIGHT © 1998 CANON INC.
CANON NP6621 REV.0 FEB. 1998 PRINTED IN JAPAN (IMPRIME AU JAPON)

K. CASSETTE FEEDING MODULE-B2 DRIVER CIRCUIT DIAGRAM

Driver Circuit Diagram (1/2)

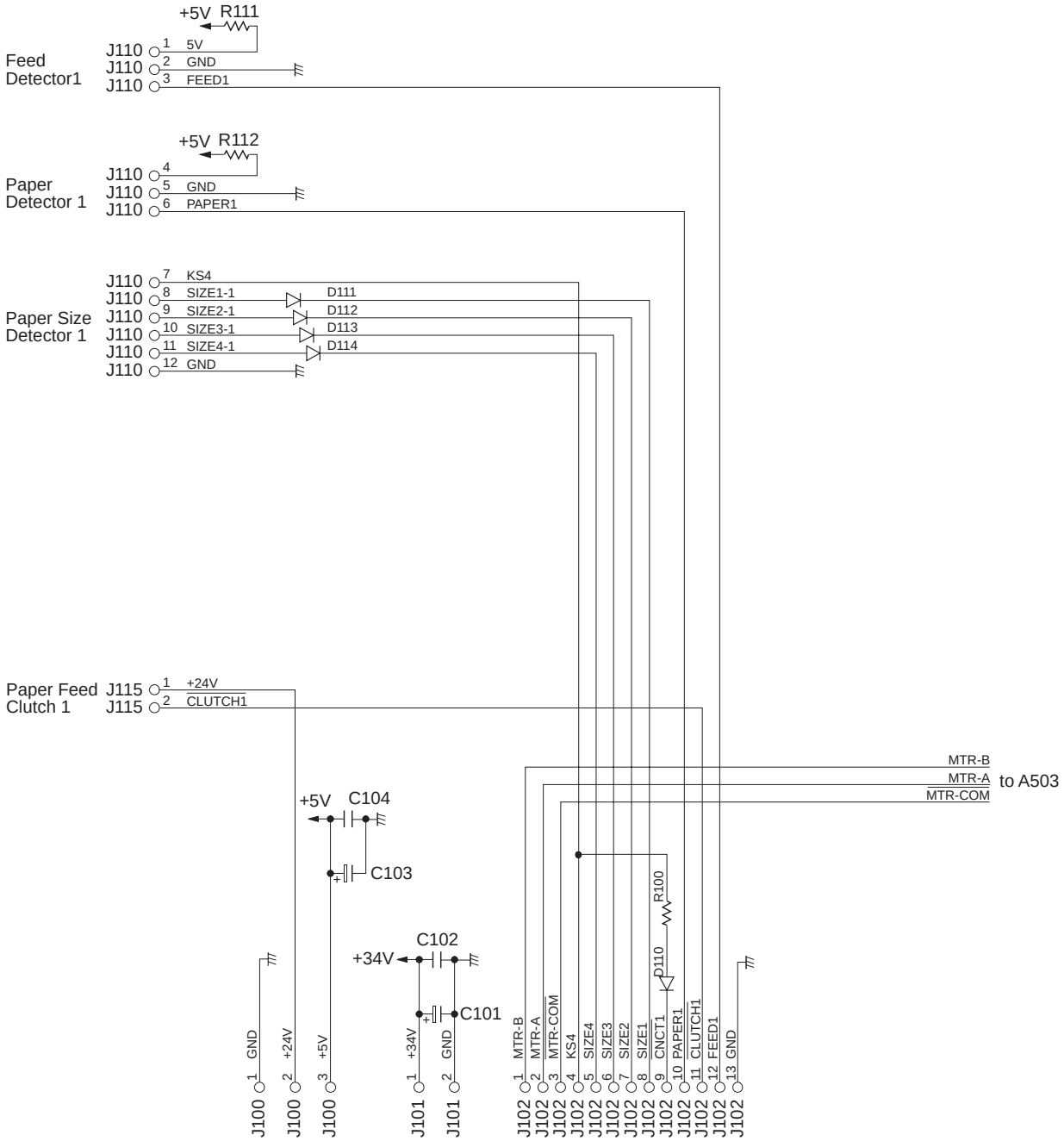

COPYRIGHT © 1998 CANON INC.

Driver Circuit Diagram (2/2)

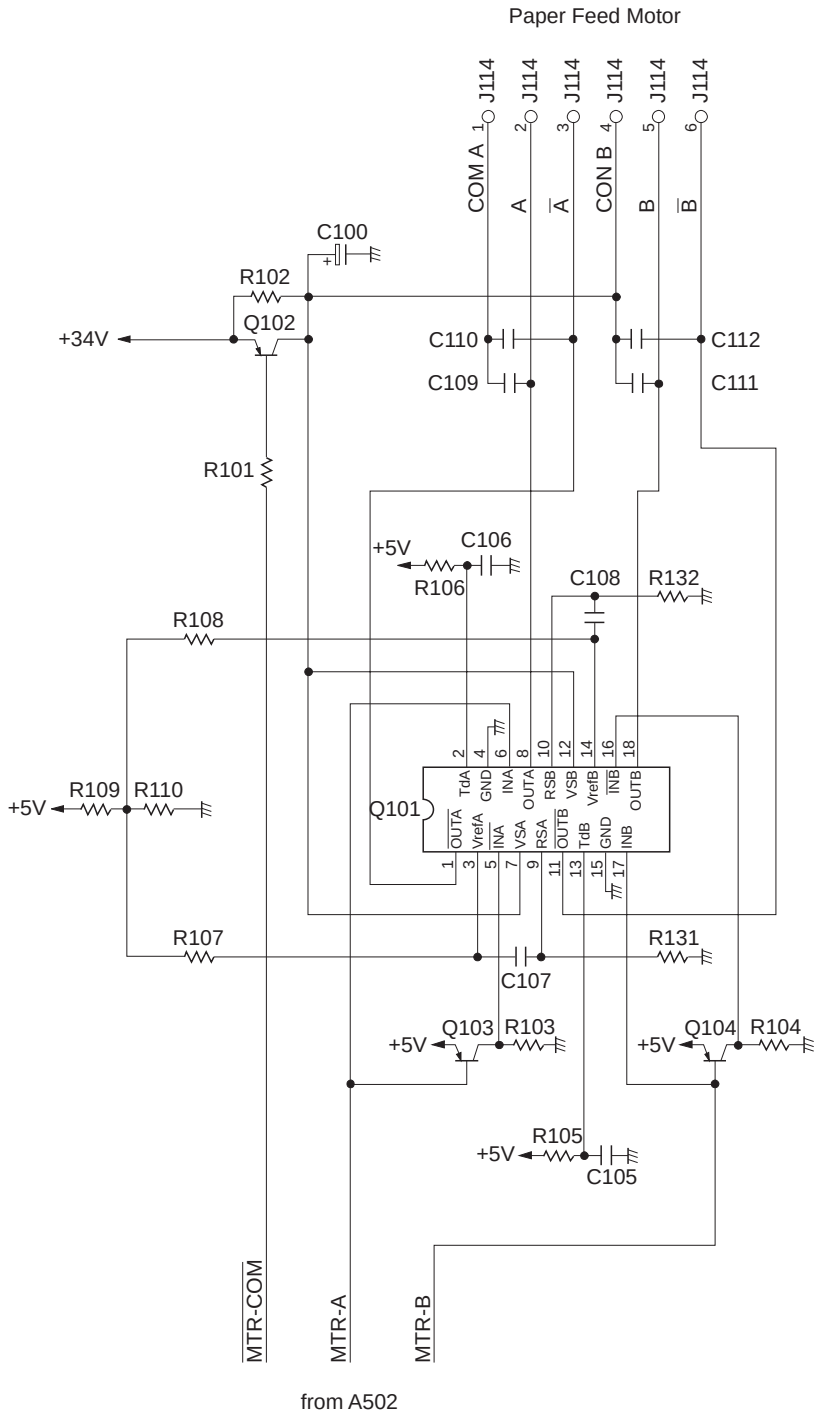

COPYRIGHT © 1998 CANON INC.
CANON NP6621 REV.0 FEB. 1998 PRINTED IN JAPAN (IMPRIME AU JAPON)

L. CASSETTE FEEDING MODULE-A2 GENERAL CIRCUIT DIAGRAM

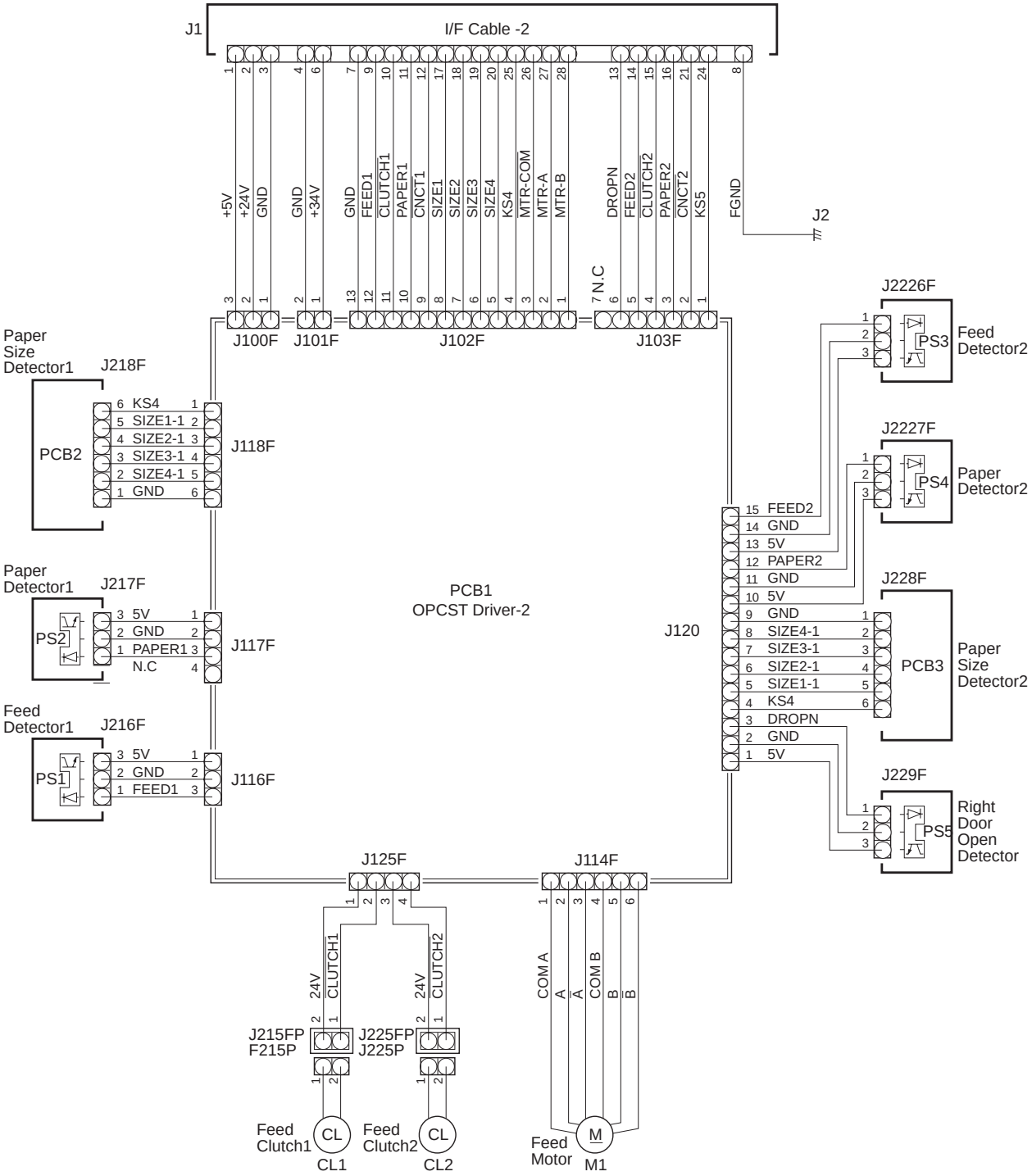

COPYRIGHT © 1998 CANON INC.
CANON NP6621 REV.0 FEB. 1998 PRINTED IN JAPAN (IMPRIME AU JAPON)

M. CASSETTE FEEDING MODULE-A2 DRIVER CIRCUIT DIAGRAM

Driver Circuit Diagram (1/2)

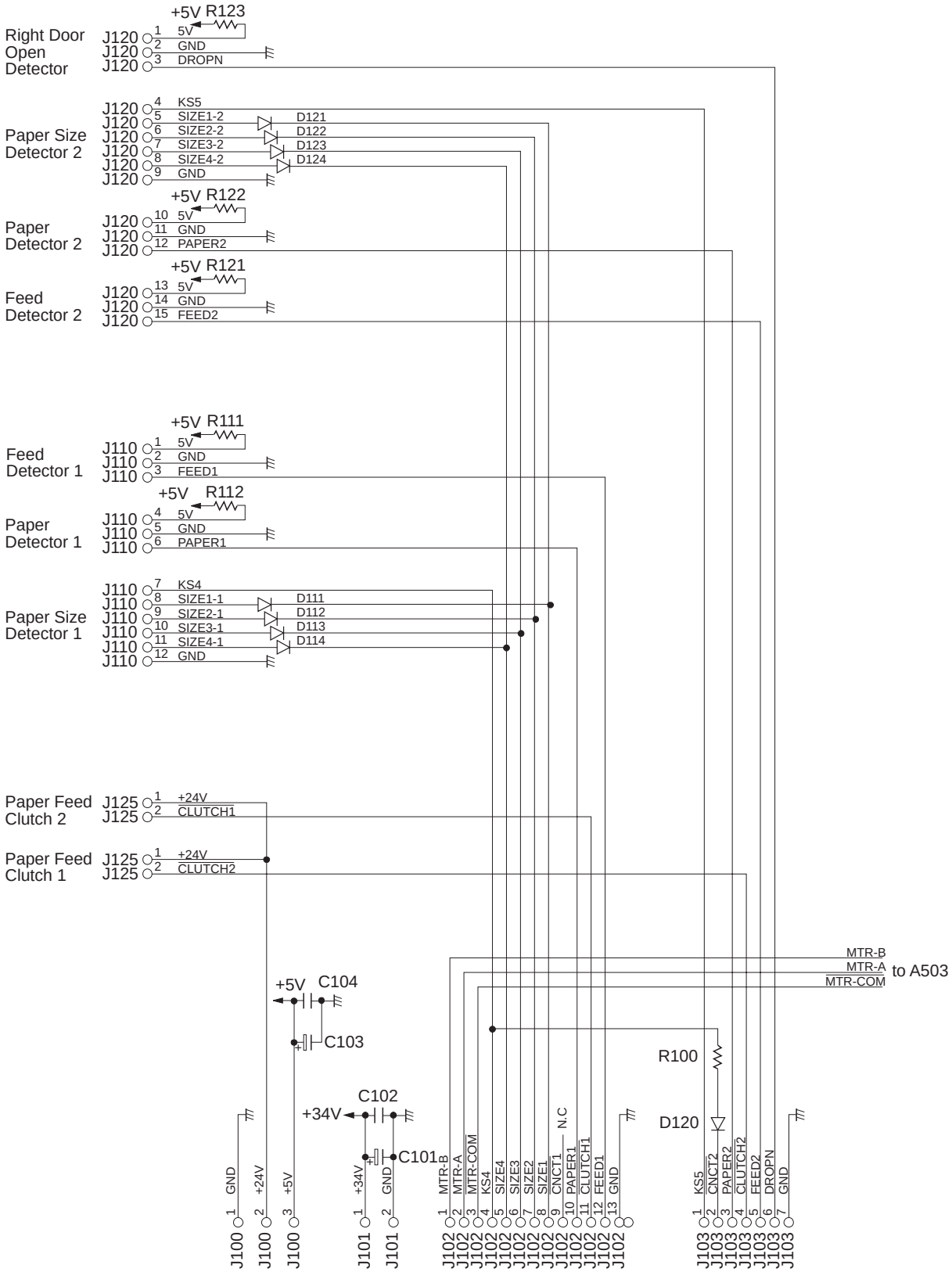

COPYRIGHT © 1998 CANON INC.
CANON NP6621 REV.0 FEB. 1998 PRINTED IN JAPAN (IMPRIME AU JAPON)

Drivcr Circuit Diagram (2/2)

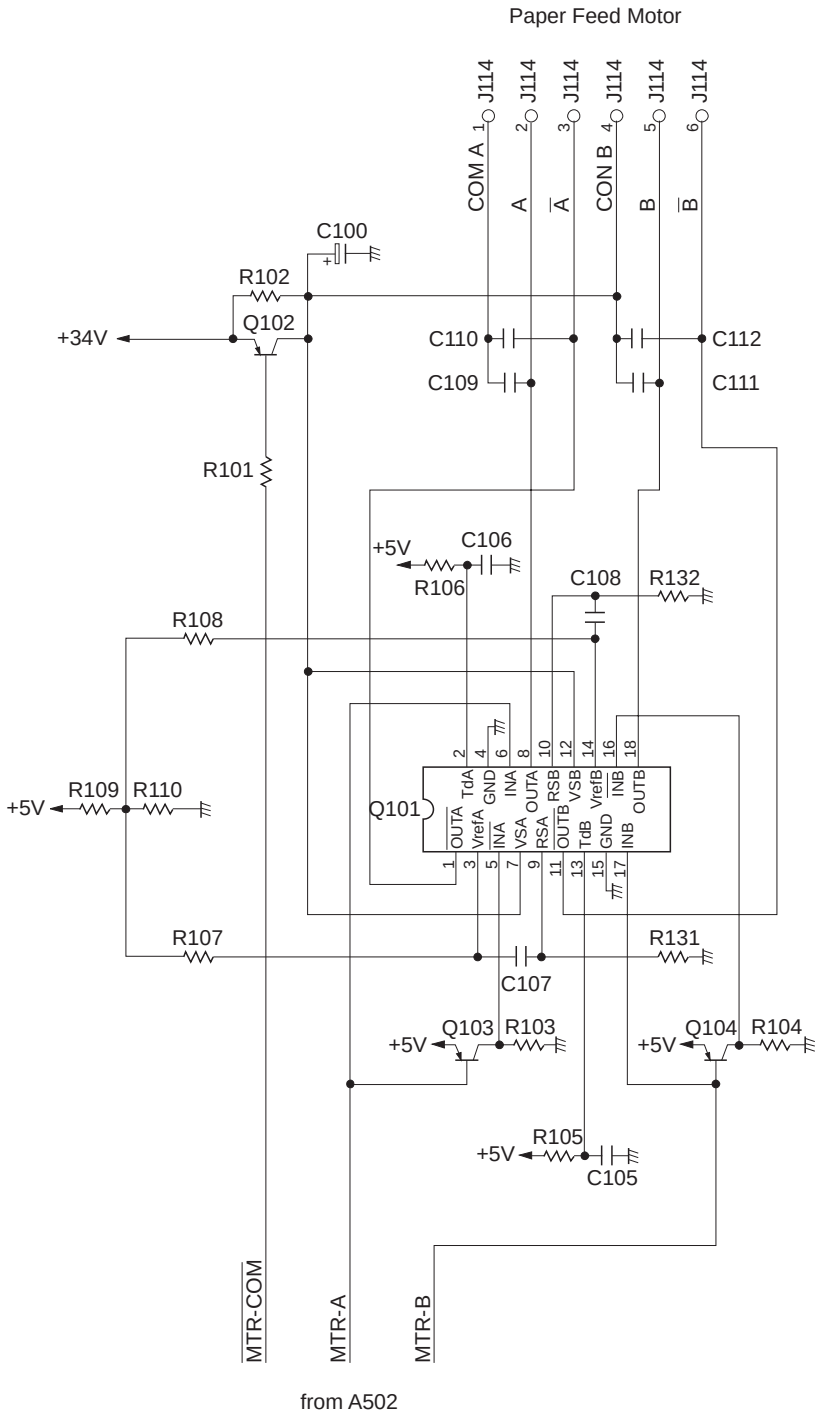

COPYRIGHT © 1998 CANON INC.
CANON NP6621 REV.0 FEB. 1998 PRINTED IN JAPAN (IMPRIME AU JAPON)

N. CASSETTE FEEDING UNIT-K1 GENERAL CIRCUIT DIAGRAM

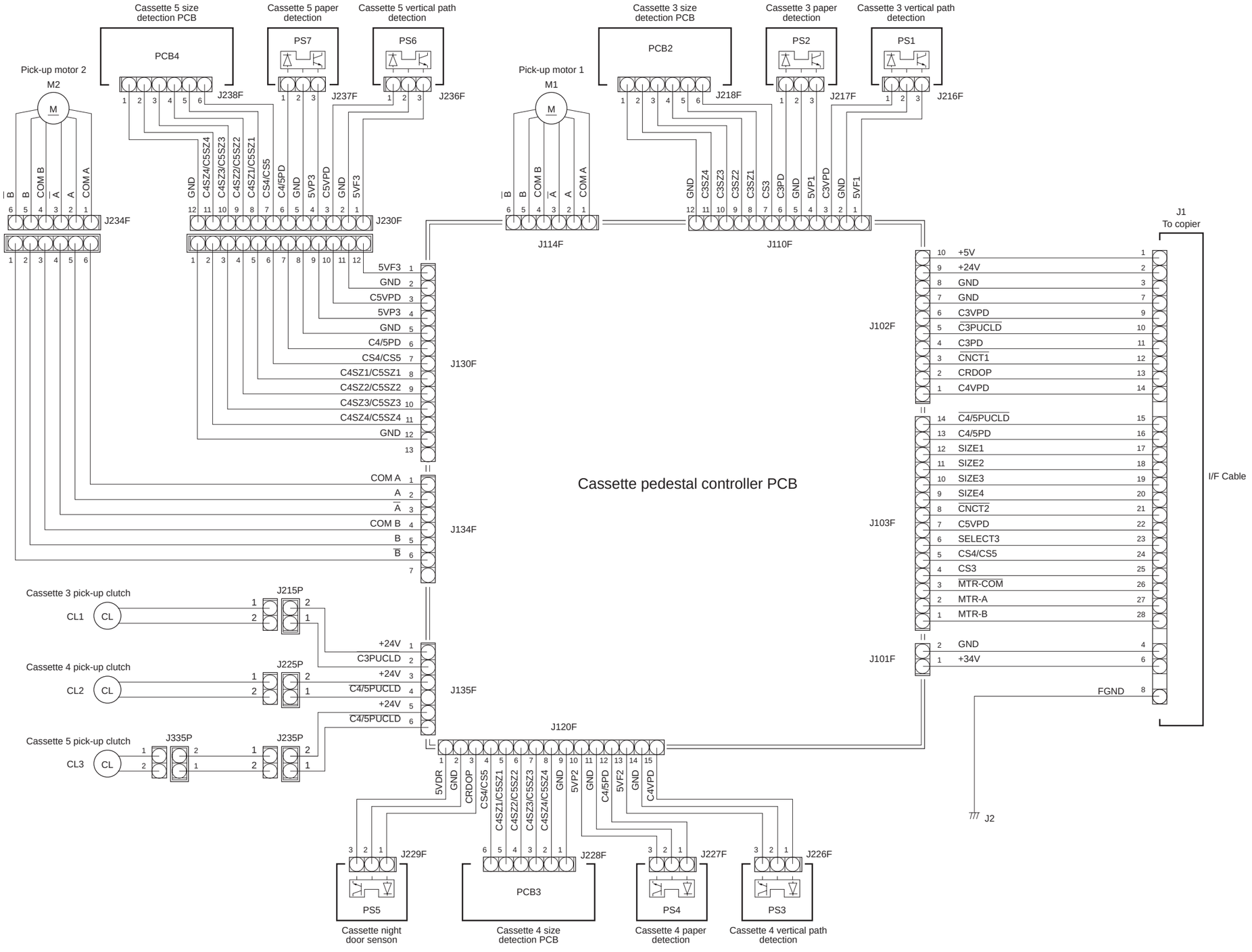

COPYRIGHT © 1998 CANON INC.

CANON NP6621 REV.0 FEB. 1998 PRINTED IN JAPAN (IMPRIME AU JAPON)

O. CASSETTE FEEDING UNIT-K1

Cassette Feeding Unit-K1 (1/3)

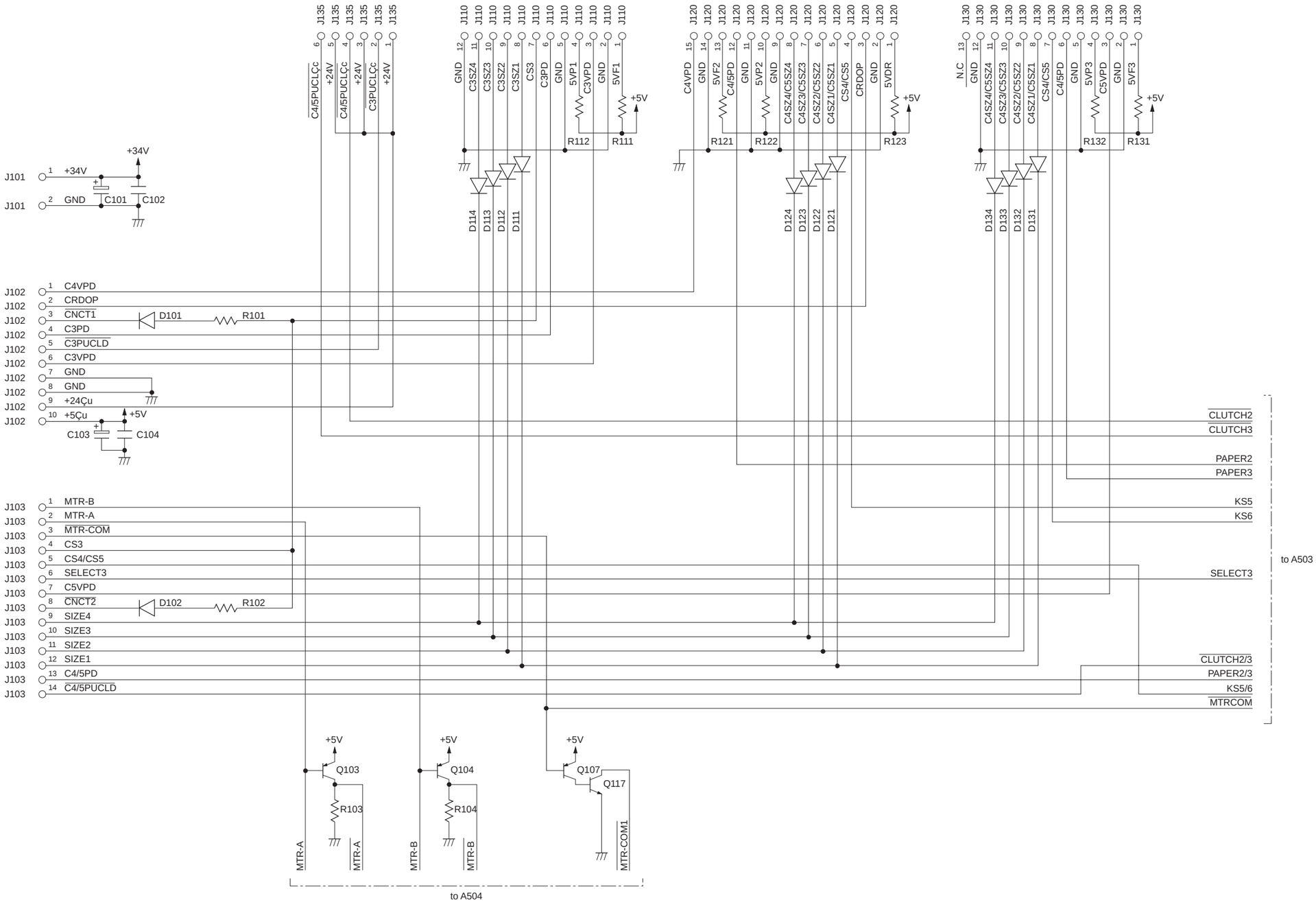

COPYRIGHT © 1998 CANON INC.

CANON NP6621 REV.0 FEB. 1998 PRINTED IN JAPAN (IMPRIME AU JAPON)

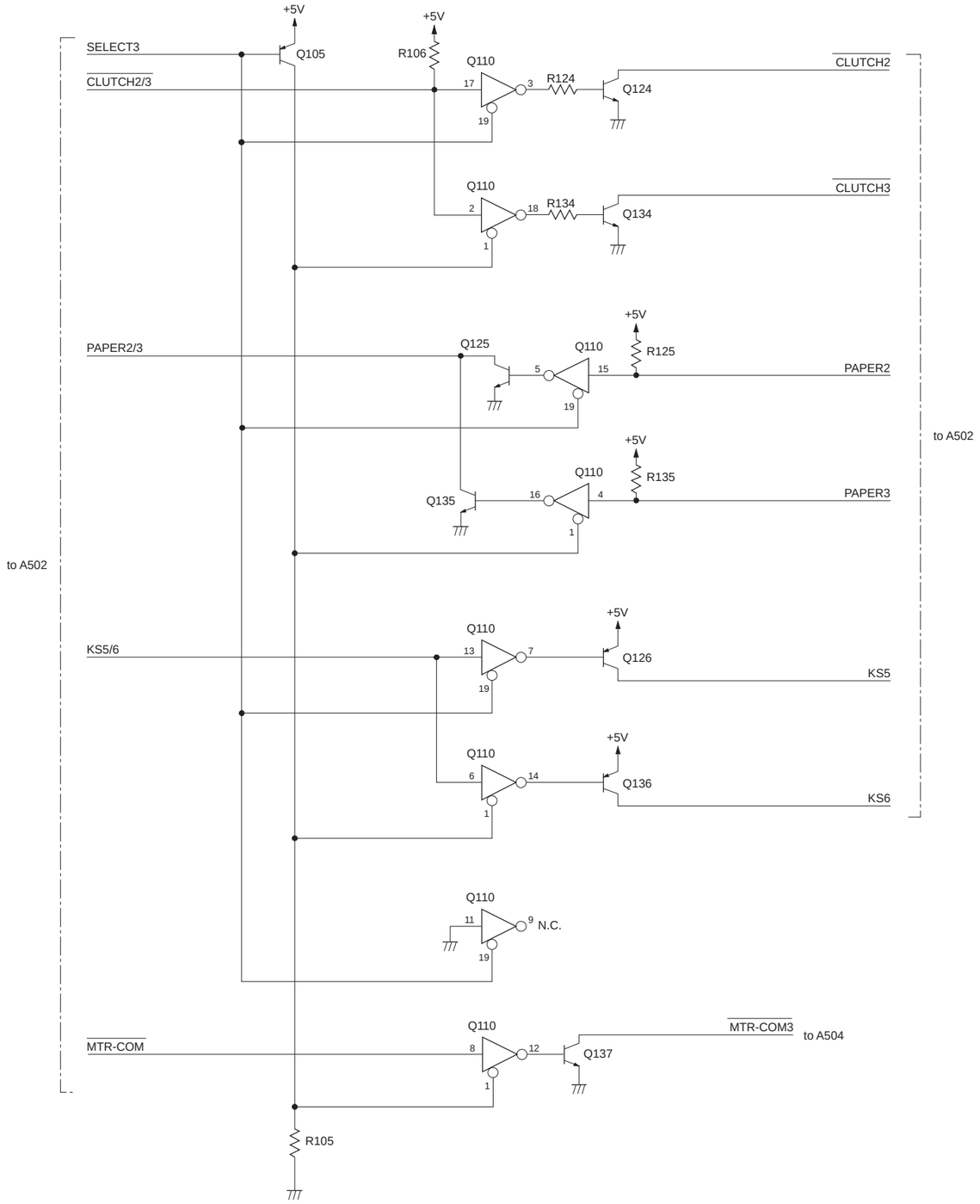

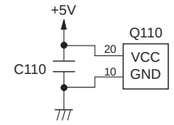

COPYRIGHT © 1998 CANON INC.
CANON NP6621 REV.0 FEB. 1998 PRINTED IN JAPAN (IMPRIME AU JAPON)

Cassette Feeding Unit-K1 (3/3)

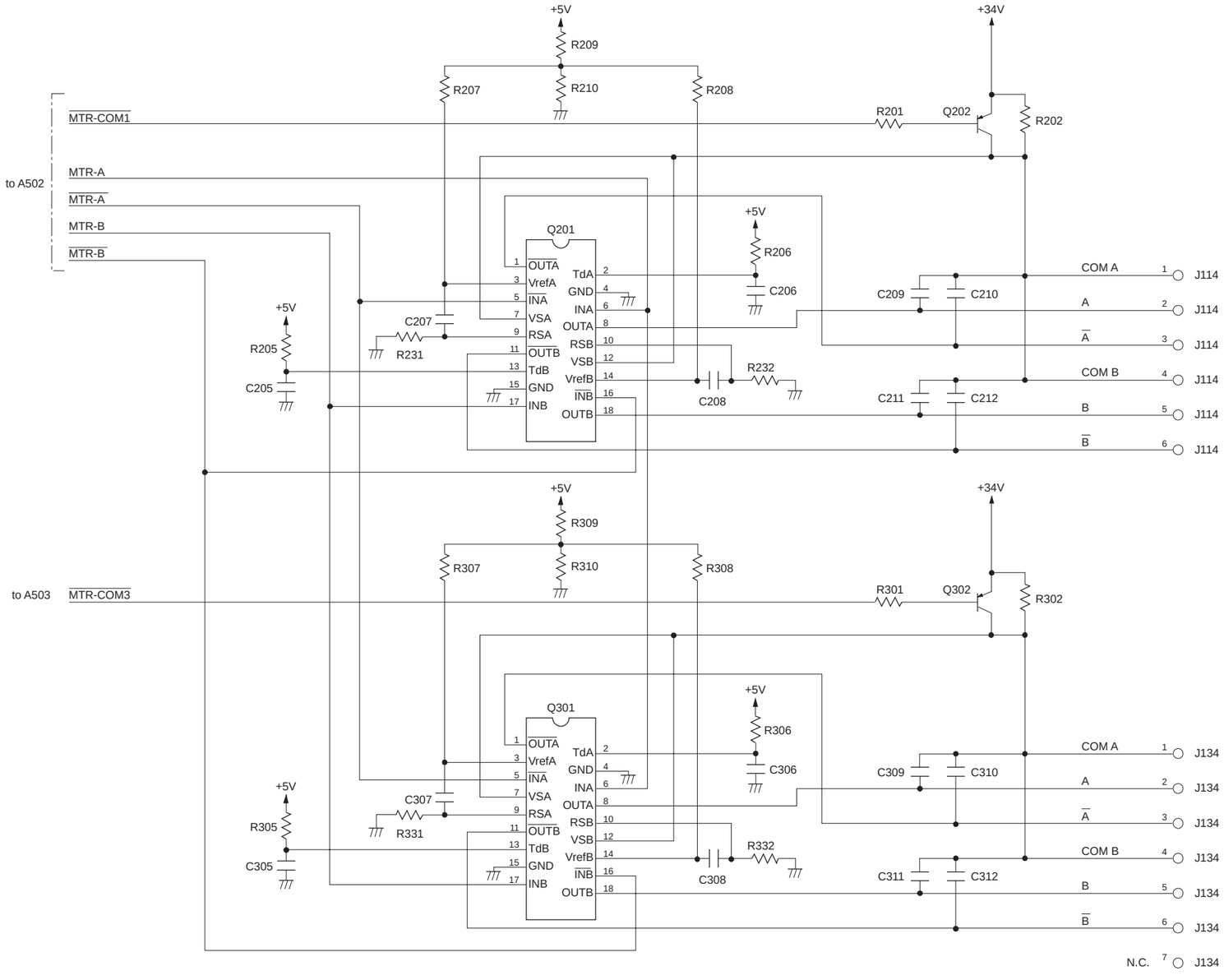

COPYRIGHT © 1998 CANON INC.

CANON NP6621 REV.0 FEB. 1998 PRINTED IN JAPAN (IMPRIME AU JAPON)

P. PAPER DECK PEDESTAL-K1 GENERAL CIRCUIT DIAGRAM

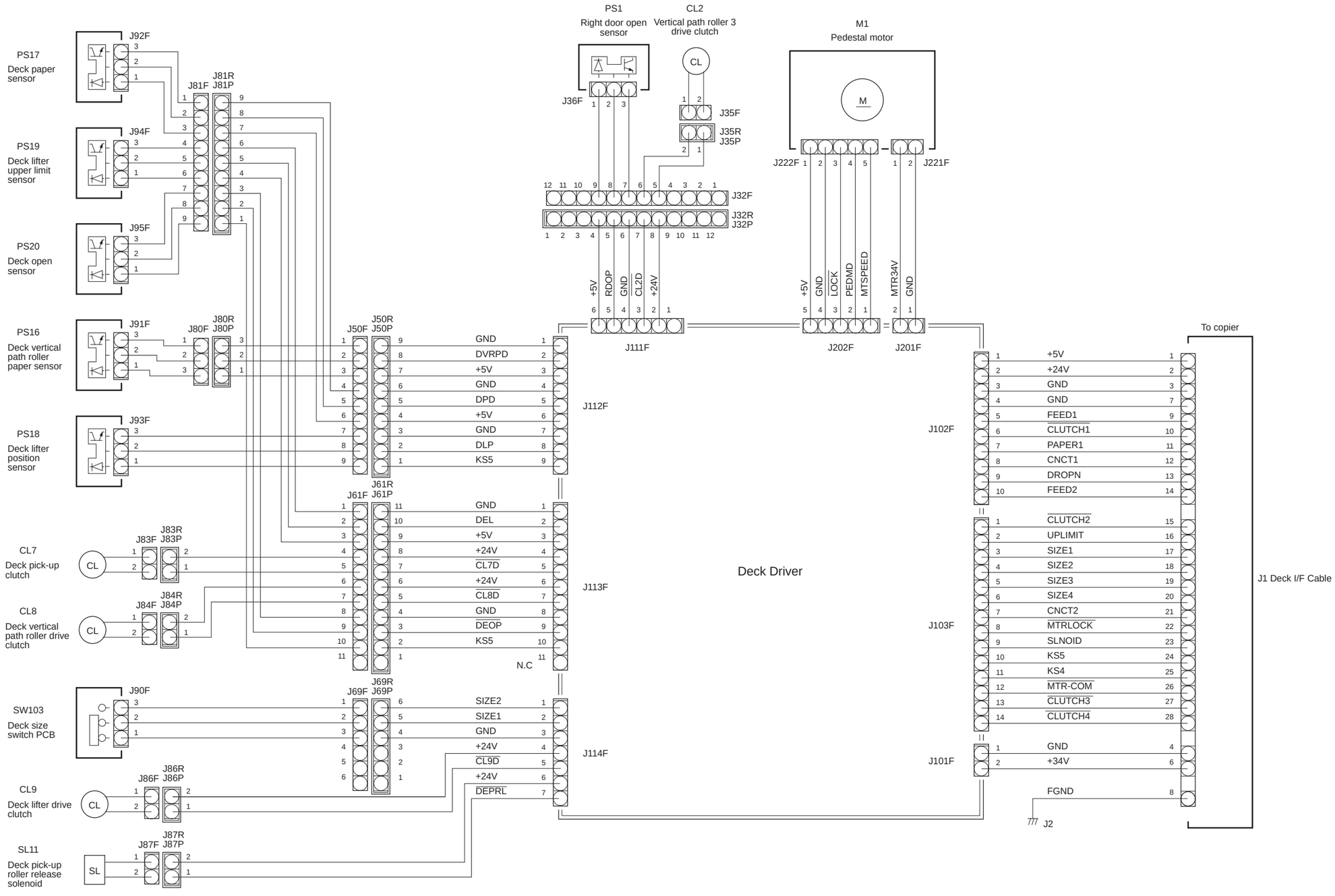

COPYRIGHT © 1998 CANON INC.

CANON NP6621 REV.0 FEB. 1998 PRINTED IN JAPAN (IMPRIME AU JAPON)

Q. PAPER DECK PEDESTAL-K1 DRIVER CIRCUIT DIAGRAM

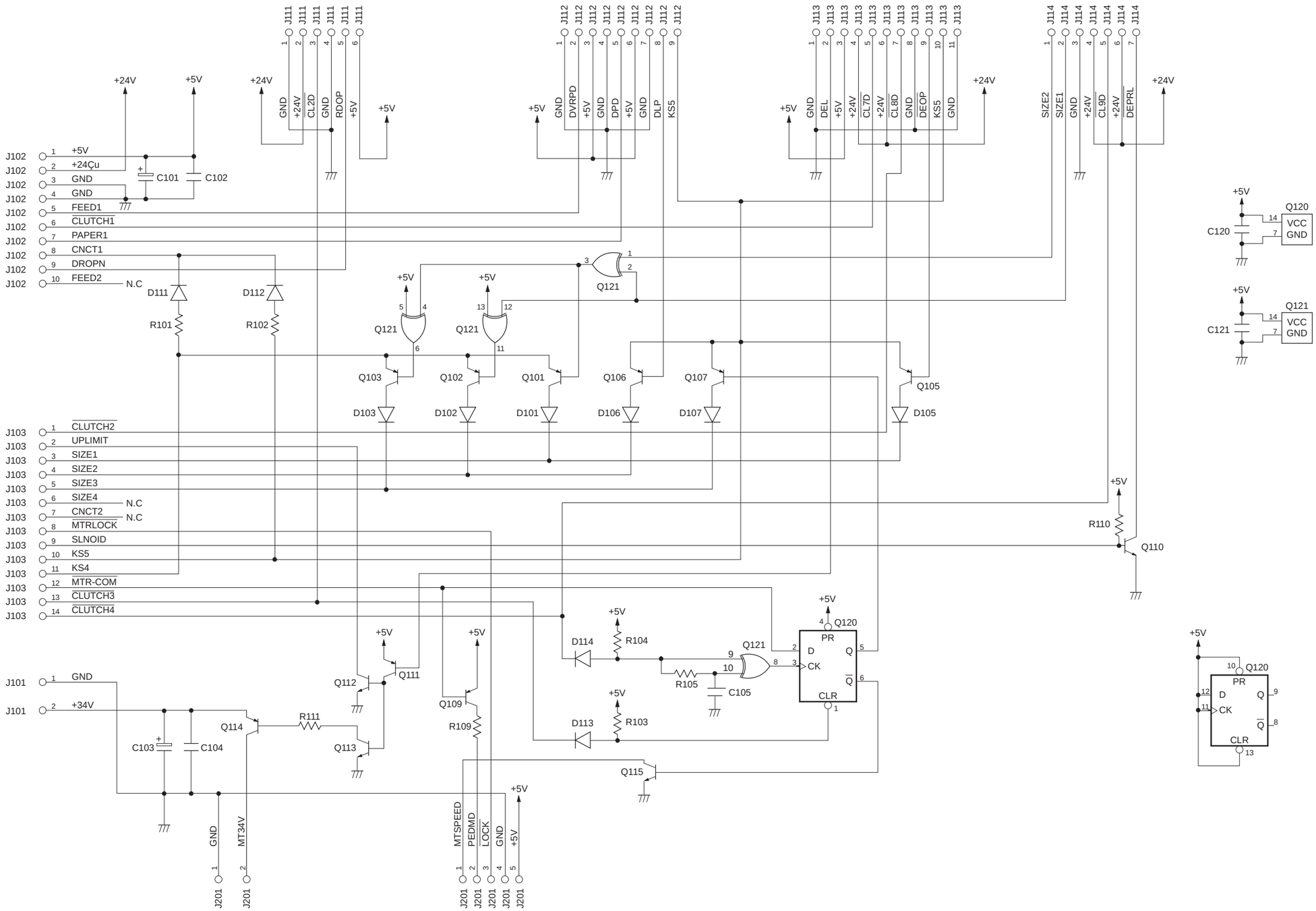

COPYRIGHT © 1998 CANON INC.

CANON NP6621 REV.0 FEB. 1998 PRINTED IN JAPAN (IMPRIME AU JAPON)

R. SPECIAL TOOLS

See the table for the special tools used to service the machine in addition to the standard tools set.

No.	Tool name	Tool No.	Shape	Rank	Remarks
1	Door switch actuator	TKN-0093-000	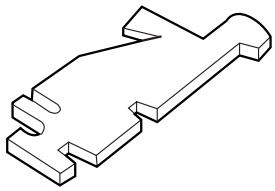	A	
2	Mirror positioning tool (comes in pairs; front, rear)	FY9-3009-040	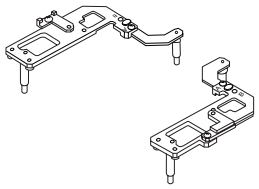	B	For adjusting the distance between No. 1 and No. 2 mirrors.
3	Pulley clip (front, rear)	FY9-3010-000	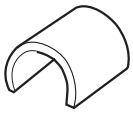	B	For fixing the scanning cable in place.

COPYRIGHT © 1998 CANON INC.
CANON NP6621 REV.0 FEB. 1998 PRINTED IN JAPAN (IMPRIME AU JAPON)

S. SOLVENTS/OILS

No.	Name	Use	Composition	Description
1	Ethyl alcohol (Ethanol) Isopropyl alcohol (Isopropanol)	Cleaning: copyboard glass, mirror, etc.	$C_2 H_5 OH$ $(CHZ_3)_2 CHOH$	• Flammable. • Use in a well-ventilated area. • Avoid breathing concentrated vapor.
2	MEK	Removing toner or oil stains	$CH_3 \bullet CO \bullet C_2H_5$ Methylethyl ketone	• Flammable. • Use in a well-ventilated area and avoid breathing concentrated vapor. • Avoid contact with eyes or skin. • Do not use for cleaning the drum, plastic molded parts, or corona wires.
3	Heat-resistant grease	Lubricating the drive mechanisms; e.g., copyboard driving gear, fixing drive gear, fixing ass'y, etc.		Tool No.: CK-0427 (500g can) (Equivqlent grease may be used, able to withstand 200°C for extended periods of time.)
4	Lubricating oil (low viscosity)	Lubrication points: Scanner rail, etc.	ISO VG 68 oil ESSO Febis K68 MOBIL Vactraoil No. 2 SHELL Tonna oil T68	Equivalent oil may be used. Tool No.: CK-0451 (100cc)
5	Lubricating oil (low viscosity)	Lubrication point: one-way clutch in pick-up control assembly	ISO VG 220 oil ESSO Febis K220 MOBIL Vactraoil No. 4	Equivalent oil may be used. Tool No.: CK-0524 (100cc).
6	Lubricating grease	Lubrication point: friction parts	Silicone oil	Tool No.: CK-0551 (20g)
7	Conductive grease		Silicone oil	Tool No.: CK-0438 (100g)

COPYRIGHT © 1998 CANON INC.
CANON NP6621 REV.0 FEB. 1998 PRINTED IN JAPAN (IMPRIME AU JAPON)

Prepared by
OFFICE IMAGING PRODUCTS TECHNICAL SUPPORT DEPARTMENT 1
OFFICE IMAGING PRODUCTS TECHNICAL SUPPORT DIVISION
CANON INC.
Printed in Japan

REVISION 0 (FEB. 1998) (31625)

5-1, Hakusan 7-chome, Toride-shi Ibaraki, 302 -0023 Japan

Canon



This publication is printed on
70% reprocessed paper.

PRINTED IN JAPAN (IMPRIME AU JAPON) 0398S1.11-1