NP7161/NP7160

SERVICE MANUAL

REVISION 0

Canon

AUG. 1998

FY8-13FB-000

COPYRIGHT © 1998 CANON INC.

CANON NP7161/NP7160 REV.0 AUG. 1998 PRINTED IN JAPAN (IMPRIME AU JAPON)

IMPORTANT

THIS DOCUMENTATION IS PUBLISHED BY CANON INC., JAPAN, TO SERVE AS A SOURCE OF REFERENCE FOR WORK IN THE FIELD.

SPECIFICATIONS AND OTHER INFORMATION CONTAINED HEREIN MAY VARY SLIGHTLY FROM ACTUAL MACHINE VALUES OR THOSE FOUND IN ADVERTISING AND OTHER PRINTED MATTER.

ANY QUESTIONS REGARDING INFORMATION CONTAINED HEREIN SHOULD BE DIRECTED TO THE COPIER SERVICE DEPARTMENT OF THE SALES COMPANY.

THIS DOCUMENTATION IS INTENDED FOR ALL SALES AREAS, AND MAY CONTAIN INFORMATION NOT APPLICABLE TO CERTAIN AREAS.

COPYRIGHT © 1998 CANON INC.

Printed in Japan
Imprimé au Japon

Use of this manual should be strictly supervised to avoid disclosure of confidential information.

Prepared by

OFFICE IMAGING PRODUCTS TECHNICAL SUPPORT DEPT. 1
OFFICE IMAGING PRODUCTS TECHNICAL SUPPORT DIV.

CANON INC.

5-1, Hakusan 7-chome, Toride-shi, Ibaraki 302-8501, Japan

Canon

SERVICE INFORMATION

Issued by Office Imaging Products Quality Assurance Center, Canon Inc.

MODEL:

All models
全機種

No. : F-04-E98007/F-04-J98005
DATE : MAY 1998

LOCATION
SUBJECT

Service Manual in New Format

This Service Manual is compiled in a new format, which differs from the past format in respect of chapter organization.
As can be learned from the following comparison, chapters 3 and 4 of the old format are divided into several chapters (Chapters 2 through 9) for more detailed descriptions.
We hope that the new format will provide you with a better understanding of the machines for servicing work.

[Old]
Chapter 1 General Introduction
Chapter 2 Coping Processes
Chapter 3 Operations and Timing
Chapter 4 Mechanical System
Chapter 5 Installation
Chapter 6 Maintenance and Inspection
Appendix



[New]
Chapter 1 General Description
Chapter 2 Basic Operation
Chapter 3 Exposure System
Chapter 4 Image Processing System
Chapter 5 Laser Formation System
Chapter 6 Image Formation System
Chapter 7 Pick-Up/Feeding System
Chapter 8 Fixing System
Chapter 9 Externals/Auxiliary Mechanisms
Chapter 10 Installation
Chapter 11 Maintenance and Servicing
Chapter 12 Troubleshooting
Appendix

新サービスマニュアルの紹介

このサービスマニュアルは、従来のサービスマニュアルの章構成を改善した新形態のサービスマニュアルとして作成しております。
新しいサービスマニュアルは、以下の章構成になっており、従来のサービスマニュアルの第３章と第４章を詳細な区分に分割（第２章～第９章）し、記載しております。新しいサービスマニュアルを従来のサービスマニュアルと同様に機械を正しく・深く理解するためにご活用下さい。

［旧］
第１章　入　門
第２章　複写プロセス
第３章　動作概略
第４章　機械系統
第５章　設　置
第６章　保守・点検
第７章　画像／作動不良対策
付　録



［新］
第１章　入　門
第２章　基本動作概略
第３章　露光系統
第４章　画像処理系統
第５章　レーザ露光系統
第６章　作像系統
第７章　給紙／搬送系統
第８章　定着系統
第９章　外装／補助制御系統
第10章　設　置
第11章　保守・点検
第12章　画像／作動不良対策
付　録

Printed in Japan
Imprimé au Japon

INTRODUCTION

This Service Manual contains basic facts and figures on the NP7161/NP7160 needed to service the machine in the field.

This copier is designed to enable full automatic copying work, and comes with the following systems accessories:

1. ADF-G1*
2. Staper Sorter-L1*
3. MS-C1*
4. Cassette Feeding Module-C1

* NP7161 only.

This Service Manual covers the copier only, and consists of the following chapters:

Chapter 1 General Description introduces the copier's features and specifications, shows how to operate the copier, and explains how copies are made.

Chapter 2 Basic Operation provides outlines of the copier's various mechanical workings.

Chapter 3 Exposure System discusses the principles of operation used for the copier's lens drive unit and scanner drive unit. It also explains the timing at which these drive units are operated, and shows how they may be disassembled/assembled and adjusted.

Chapter 4 Image Formation System discusses the principles of how images are formed. It also explains the timing at which the various units involved in image formation are operated, and shows how they may be disassembled/assembled and adjusted.

Chapter 5 Pick-Up/Feeding System explains the principles used from when copy paper is picked up to when a copy is delivered in view of the functions of electrical and mechanical units and in relation to their timing of operation. It also shows how these units may be disassembled/assembled and adjusted.

Chapter 6 Fixing System explains the principles used to fuse toner images to transfer media in view of the functions of electrical and mechanical units and in relation to their timing of operation. It also shows how these units may be disassembled/assembled and adjusted.

Chapter 7 Externals/Auxiliary Mechanisms shows the copier's external parts, and explains the principles used for the copier's various control mechanisms in view of the functions of electrical and mechanical units and in relation to their timing of operation. It also shows how these units may be disassembled/assembled and adjusted.

Chapter 8 Installation introduces requirements for the site of installation, and shows how the copier may be installed using step-by-step instructions.

Chapter 9 Maintenance and Servicing provides tables of periodically replaced parts and consumables/durables and scheduled servicing charts.

Chapter 10 Troubleshooting provides tables of maintenance/inspection, standards/adjustments, and problem identification (image fault/malfunction).

Appendix contains a general timing chart and general circuit diagrams.

COPYRIGHT © 1998 CANON INC.

The following rules apply throughout this Service Manual:

1. Each chapter contains sections explaining the purpose of specific functions and the relationship between electrical and mechanical systems with reference to the timing of operation.

   In the diagrams, ▬▬▬ represents the path of mechanical drive—where a signal name accompanies the symbol ⟶ , the arrow indicates the direction of the electric signal.

   The expression “turn on the power” means flipping on the power switch, closing the front door, and closing the delivery unit door, which results in supplying the machine with power.

2. In the digital circuits, ‘1’ is used to indicate that the voltage level of a given signal is “High,” while ‘0’ is used to indicate “Low.” (The voltage value, however, differs from circuit to circuit.)

   In practically all cases, the internal mechanisms of a microprocessor cannot be checked in the field. Therefore, the operations of the microprocessors used in the machines are not discussed: they are explained in terms of from sensors to the input of the DC controller PCB and from the output of the DC controller PCB to the loads.

The descriptions in this Service Manual are subject to change without notice for product improvement or other purposes, and major changes will be communicated in the form of Service Information bulletins.

All service persons are expected to have a good understanding of the contents of this Service Manual and all relevant Service Information bulletins and be able to identify and isolate faults in the machine.

COPYRIGHT © 1998 CANON INC.
CANON NP7161/NP7160 REV.0 AUG. 1998 PRINTED IN JAPAN (IMPRIME AU JAPON)

System Configuration

The copier is designed to accommodate the following accessories:
*NP7161 only.

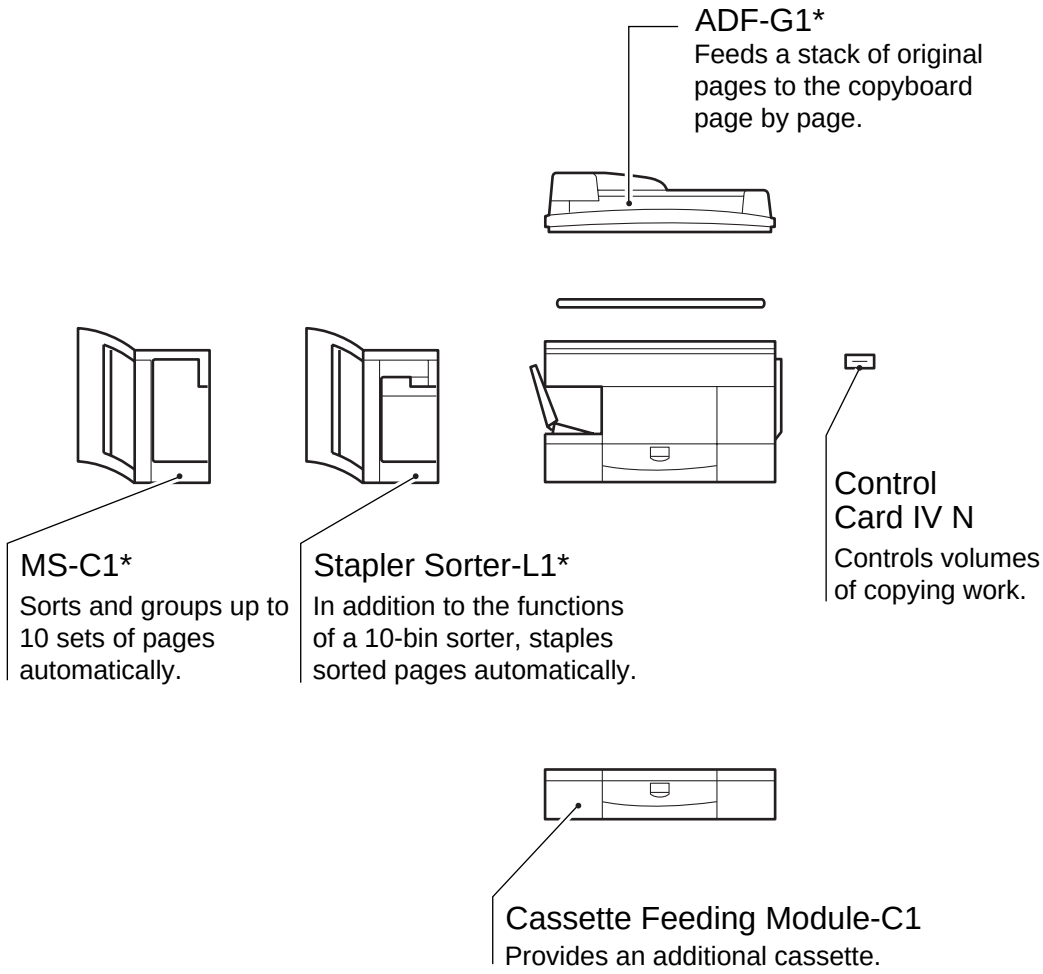

COPYRIGHT © 1998 CANON INC.

COPYRIGHT © 1998 CANON INC.
CANON NP7161/NP7160 REV.0 AUG. 1998 PRINTED IN JAPAN (IMPRIME AU JAPON)

CONTENTS

CHAPTER 1 GENERAL DESCRIPTION

I. FEATURES 1-1
II. SPECIFICATIONS 1-2
A. Copier 1-2
1. Type 1-2
2. Mechanisms 1-2
3. Performance 1-3
4. Others 1-5
III. NAMES OF PARTS 1-8
A. External View 1-8
B. Cross Section 1-9
1. Copier 1-9
IV. OPERATING THE MACHINE 1-10
A. Control Panel 1-10
B. User Mode 1-12
1. Outline 1-12
V. ROUTINE MAINTENANCE (BY THE USER) 1-14
VI. PONITS TO NOTE (BY THE USER) 1-15
VII. IMAGE FORMATION 1-16
A. Outline 1-16

CHAPTER 2 BASIC OPERATION

I. BASIC MECHANISMS 2-1
A. Functional Construction 2-1
B. Outline of the Electrical Circuitry 2-2
C. Basic Sequence of Operations 2-4
1. Basic Sequence of Operations at Power-On 2-4
2. Basic Sequence of Operations at Copy Start 2-6
D. Main Motor (M1) Control Circuitry 2-8
1. Outline 2-8
2. Operation 2-8
3. Detecting an Error 2-8
E. Inputs to the DC Controller 2-9
1. Inputs to the DC Controller (1/3) 2-9
2. Inputs to the DC Controller (2/3) 2-10
3. Inputs to the DC Controller (3/3) 2-11
F. Outputs from the DC Controller 2-12
1. Outputs from the DC Controller (1/4) 2-12
2. Outputs from the DC Controller (2/4) 2-13
3. Outputs from the DC Controller (3/4) 2-14
4. Outputs from the DC Controller (4/4) 2-15
G. Inputs to and Outputs from Accessories (1/1) 2-16

COPYRIGHT © 1998 CANON INC.

CHAPTER 3 EXPOSURE SYSTEM

I. OUTLINE OF OPERATION 3-1
A. Changing the Reproduction Ratio 3-1
II. LENS DRIVE SYSTEM 3-3
A. Driving the Lens 3-3
1. Outline 3-3
2. Motor Control Circuit 3-4
3. Moving the Lens 3-5
III. SCANNER DRIVE SYSTEM 3-6
A. Outline 3-6
B. Scanner Motor Control Circuit 3-7
C. Relationship between Scanner Sensor and Signals 3-7
D. Basic Sequence of Operations (scanner) 3-8
E. Scanner Movement in Page Separation Mode 3-9
IV. OTHERS 3-10
A. Detecting the Original Size 3-10
1. Outline 3-10
2. Detection of the Original Size by the ADF 3-10
V. DISASSEMBLY/ASSEMBLY 3-11
A. Scanner Drive Assembly 3-12
1. Removing the Scanner Motor 3-12
2. Removing the Scanner Drive Cable 3-13
3. Routing the Scanner Drive Cable 3-15
4. Adjusting the Position of the Mirror 3-16
5. Adjusting the Tension of the Scanner Drive Cable 3-17
B. Lens Drive Assembly 3-18
1. Removing the Lens Drive Motor 3-18
2. Removing the Mirror Motor 3-19

CHAPTER 4 IMAGE FORMATION SYSTEM

I. OUTLINE OF THE PROCESSES 4-1
A. Outline 4-1
B. Basic Sequence of Operations (image formation system) 4-2
C. Controlling the Intensity of the Scanning Lamp 4-3
1. Outline 4-3
2. Operation 4-4
3. Protection Mechanisms 4-5
D. Controlling the Primary/Transfer Bias 4-6
1. Outline 4-6
2. Turning On/Off the Primary/ Transfer Bias 4-6
E. Controlling the Developing/Separation Static Eliminator Bias 4-7
1. Outline 4-7
2. Turning On/Off the Developing DC Bias 4-8
3. Turning On/Off the Developing AC Bias/Separation Eliminator Bias 4-9
4. Controlling the Developing DC Bias to a Specific Voltage to Suit Copy Density 4-10
F. Controlling the Blank Exposure Lamp 4-12
1. Outline 4-12
2. Turning On the Blank Exposure Lamp in Reduce Mode 4-13
3. Turning On the Blank Exposure Lamp in Direct/Enlarge Mode 4-13
4. Turning On the Blank Exposure Lamp in Multifeeder Mode 4-13
II. DEVELOPING ASSEMBLY/DRUM CLEANER ASSEMBLY 4-14
A. Outline 4-14
B. Detecting and Controlling the Level of Toner 4-16
C. Monitoring the Waste Toner Feeding Screw 4-17
D. Monitoring the Waste Toner Box 4-18
E. Control by the Cleaner Thermistor 4-20
1. Copying Speed Down Sequence 4-20
F. Auto Density Adjustment (AE) 4-21
1. Outline 4-21
2. Measuring the Density of the Original 4-21
III. DISASSEMBLY/ASSEMBLY 4-23
A. Scanning Lamp Assembly 4-24
1. Removing the Scanning Lamp 4-24
2. Mounting the Scanning Lamp 4-25
3. Removing the Thermal Fuse 4-25
B. Exposure Assembly 4-26
1. Removing the Pre-Exposure/ Blank Exposure Lamp Assembly 4-26
2. Removing the Dust-Proofing Glass 4-26
3. Cleaning the No. 6 Mirror 4-27
C. Drum Unit 4-28

COPYRIGHT © 1998 CANON INC.
CANON NP7161/NP7160 REV.0 AUG. 1998 PRINTED IN JAPAN (IMPRIME AU JAPON)

1. Removing the Drum Unit 4-28
2. Cleaning the Photosensitive Drum 4-29
3. Removing the Cleaner Thermistor 4-29
D. Primary Charging Assembly 4-30
1. Removing the Primary Charging Assembly 4-30
E. Transfer Charging Assembly 4-31
1. Removing the Transfer Charging Assembly 4-31
F. Charging Wire 4-32
1. Outline 4-32
2. Stringing the Charging Wires 4-32
3. Adjusting the Height of the Charging Wires 4-36
G. Developing Assembly 4-37
1. Removing the Developing Assembly 4-37
2. Removing the Developing Blade 4-37
3. Removing the Developing Cylinder 4-38

CHAPTER 5 PICK-UP/FEEDING SYSTEM

I. OUTLINE OF OPERATION 5-1
II. PICK-UP FROM THE CASSETTE 5-2
A. Pick-Up Operation 5-2
B. Sequence of Operations (pick-up/feeding) 5-3
C. Operation of the Cassette Lifter 5-4
D. Detecting the Size of the Cassette 5-6
1. Outline 5-6
2. Detecting the Cassette Size 5-7
III. PICK-UP FROM THE MULTIFEEDER 5-8
A. Pick-Up Operation 5-8
B. Detecting the Size of Paper in the Multifeeder 5-9
C. Sequence of Operations (pick-up from multifeeder) 5-10
IV. CONTROLLING THE REGISTRATION CLUTCH 5-11
V. DETECTING JAMS 5-12
A. Outline 5-12
B. Sequence of Operations (jam detection) 5-13
1. Registration Delay Jam 5-13
2. Registration Stationary Jam 5-13
3. Delivery Delay Jam 5-14
4. Delivery Stationary Jam 5-14
VI. DISASSEMBLY/ASSEMBLY 5-15
A. Pick-Up Assembly 5-16
1. Removing the Pick-Up Roller 5-16
2. Mounting the Pick-Up Roller 5-16
3. Removing the Pick-Up Drive Assembly 5-17
4. Removing the Pick-Up Assembly 5-17
5. Removing the Feed Roller 5-18
6. Removing the Separation Roller .. 5-18
7. Mounting the Separation Roller ... 5-19
B. Multifeeder Assembly 5-20
1. Removing the Multifeeder Tray 5-20
2. Removing the Multifeeder Assembly 5-20
3. Removing the Multifeeder Pick-Up Roller 5-21
4. Removing the Separation Pad 5-21
5. Adjusting the Pressure of the Separation Pad 5-22
C. Registration Roller Assembly 5-23
1. Removing the Registration Roller Assembly 5-23
D. Cassette Assembly 5-24
1. Removing the Cassette Size Switch 5-24
2. Changing the Cassette Size (AB/INCH) 5-25
3. Adjusting the Left/Right Registration 5-26

COPYRIGHT © 1998 CANON INC.

CHAPTER 6 FIXING SYSTEM

I. OUTLINE OF OPERATION 6-1
A. Outline 6-1
B. Controlling the Fixing Temperature ... 6-2
C. Error Detection Circuit 6-5
1. Outline 6-5
2. Surface Temperature of the Fixing Upper Roller 6-6
3. Activation of the Fixing Heater (H1) 6-6
II. DISASSEMBLY/ASSEMBLY 6-7
A. Fixing Assembly 6-8
1. Construction 6-8
2. Locking Mechanism 6-8
3. Removing the Fixing Assembly ... 6-8
4. Removing the Fixing Heater 6-10
5. Removing the Thermal Switch Assembly 6-11
6. Removing the Main Thermistor ... 6-12
7. Removing the Sub Thermistor ... 6-12
8. Removing the Fixing Upper Roller 6-13
9. Removing the Fixing Lower Roller 6-14
10. Removing the Heat Discharge Roller 6-14
11. Adjusting the Height of the Fixing Inlet Guide 6-14
12. Adjusting the Nip 6-15
B. Delivery Assembly 6-16
1. Removing the Upper Separation Claw 6-16
2. Removing the Lower Separation Claw 6-16
3. Removing the Delivery Roller 6-17

CHAPTER 7 EXTERNALS/AUXILIARY MECHANISMS

I. FANS 7-1
II. POWER SUPPLY 7-4
A. Outline of Power Supply 7-4
B. Power Supply Circuitry 7-5
1. AC Power Supply 7-5
2. DC Power Supply 7-5
3. Mirror Heater, Cassette/ Drum Heater, and Accessory Cassette Heater 7-6
4. ADF and Sorter 7-6
C. Protection Mechanisms of the Power Supply Circuitry 7-7
III. DISASSEMBLY/ASSEMBLY 7-8
A. External Covers 7-9
1. Removing the Right Door 7-10
2. Removing the Upper Right Cover 7-10
3. Removing the Upper Left Cover 7-11
4. Removing the Delivery Lower Cover 7-11
5. Removing the Delivery Upper Cover 7-11
6. Removing the Lower Inside Cover 7-12
B. Control Panel 7-13
1. Removing the Control Panel 7-13
C. Copyboard Glass 7-14
1. Removing the Copyboard Glass 7-14
D. Fans 7-15
1. Removing the Scanner Cooling Fan 7-15
2. Removing the Exhaust Fan 7-16
3. Remove the Ozone Filter 7-17
E. Counter Assembly 7-18
1. Removing the Counter Assembly 7-18
F. Main Motor Assembly 7-18
1. Removing the Main Motor Assembly 7-18
G. DC Controller PCB 7-19
1. Removing the DC Controller PCB 7-19
2. Points to Note When Replacing the DC Controller PCB 7-19
H. Removing the Power Supply PCB ... 7-20
1. Removing the Power Supply PCB 7-20
I. Removing the High-Voltage Power Supply PCB 7-20
1. Removing the High-Voltage Power Supply PCB 7-20
J. Lamp Regulator PCB 7-21
1. Removing the Lamp Regulator PCB 7-21

COPYRIGHT © 1998 CANON INC.
CANON NP7161/NP7160 REV.0 AUG. 1998 PRINTED IN JAPAN (IMPRIME AU JAPON)

CHAPTER 8 INSTALLATION

I. SELECTING THE SITE 8-1
II. UNPACKING AND INSTALLATION 8-2
A. Unpacking 8-2
B. Removing the Metal Fixings 8-3
C. Mounting the Drum Unit 8-4
D. Cleaning the Parts and Making Checks .. 8-6
E. Checking the Images/Operations and User Mode 8-8
F. Supplying Toner 8-10
III. RELOCATING THE MACHINE 8-12
IV. INSTALLING THE CONTROL CARD IV N 8-13
V. INSTALLING THE REMOTE DIAGNOSTIC DEVICE II 8-14
VI. INSTALLING THE ACCESSORY COUNTER 8-23
VII. INSTALLING THE ACCESSORY HEATER 8-25
A. Installing the Heater Switch 8-25
B. Mounting the Cassette/Drum Heater 8-26
C. Installing the Mirror Heater 8-27

CHAPTER 9 MAINTENANCE AND SERVICING

I. PERIODICALLY REPLACED PARTS 9-1
A. Copier 9-1
II. CONSUMABLES AND DURABLES 9-2
A. Copier 9-2
III. SCHEDULED SERVICING CHART 9-3
IV. SCHEDULED SERVICING TABLE 9-5
A. Copier 9-5

CHAPTER 10 TROUBLESHOOTING

I. GUIDE TO TROUBLESHOOTING TABLES 10-1
A. Image Adjustment Basic Procedure 10-3
B. Points to Note for Scheduled Servicing . 10-4
II. STANDARDS AND ADJUSTMENTS 10-5
A. Mechanical 10-5
1. Leading Edge Non-Image Width (blank exposure lamp off timing) 10-5
2. Image Leading Edge Margin (registration on timing) 10-5
3. Left/Right Registration (cassette) 10-6
B. Exposure System 10-7
1. Routing the Scanner Drive Cable 10-7
2. Adjusting the Position of the Mirror 10-8
3. Adjusting the Tension of the Scanner Drive Cable 10-9
C. Image Formation System 10-10
1. Outline 10-10
2. Stringing the Charging Wires ... 10-10
3. Adjusting the Height of the Charging Wires 10-13
D. Pick-Up/Feeding System 10-14
1. Adjusting the Pressure of the Separation Pad 10-14
2. Changing the Cassette Size (AB/INCH) 10-14
E. Fixing System 10-16
1. Adjusting the Height of the Fixing Assembly Inlet Guide 10-16
2. Adjusting the Pressure of the Lower Roller (nip) 10-16
F. Electrical System 10-18
1. Obtaining Optimum Exposure ... 10-18
2. AE Adjustment 10-19
3. After Replacing the DC Controller PCB 10-22
4. Checking the Photointerrupters 10-23
III. IMAGE FAULTS 10-25
A. Initial Checks 10-25
1. Checking the Site Environment 10-25
2. Checking the Originals 10-25
3. Checking the Copyboard Cover and Copyboard Glass ... 10-25
4. Checking the Charging Assembly 10-26
5. Checking the Developing Assembly 10-26
6. Checking the Paper 10-26
7. Checking the Periodically Replaced Parts 10-26
8. Others 10-26

COPYRIGHT © 1998 CANON INC.

B. Image Fault Samples 10-28
C. Troubleshooting Image Faults 10-29
1. The copy is too light. (halftone area only) 10-29
2. The copy is too light. (including solid black area) 10-30
3. The copy is too light. (entirely, considerably) 10-30
4. The copy has uneven density. (front side dark) 10-31
5. The copy has uneven density. (front side light) 10-31
6. The copy is foggy. (overall) 10-32
7. The copy is foggy. (vertical) 10-33
8. The copy has black lines. (vertical, fuzzy, thick) 10-33
9. The copy has black lines. (vertical, thin) 10-33
10. The copy has white spots. (vertical) 10-34
11. The copy has white lines. (vertical) 10-34
12. The copy has white spots. (vertical) 10-35
13. The back of the copy is soiled. .. 10-36
14. The copy has faulty fixing. 10-37
15. The copy has a displaced leading edge. 10-38
16. The copy has a displaced leading edge. 10-38
17. The copy has a displaced leading edge. 10-38
18. The copy has a blurred image. .. 10-39
19. The copy is foggy. (horizontally) 10-39
20. The copy has poor sharpness. .. 10-40
21. The copy is blank. 10-41
22. The copy is solid black. 10-41

IV. TROUBLESHOOTING MALFUNCTIONS 10-42
A. Copier 10-42
1. E000 10-42
2. E001 10-43
3. E002/E003 10-44
4. E004 10-45
5. E010 10-45
6. E013 10-46
7. E030 10-46
8. E031 10-47
9. E202 (The keys on the control panel fail to operate.) 10-47
10. E208 10-48
11. E210 10-48
12. E220 10-49
13. E261 10-49
14. E710/E711 10-49
15. E712 10-50
16. E717 10-50
17. E800 10-51
18. E805 10-51
19. E821 10-51
20. AC power is absent. 10-52
21. DC power supply is absent. 10-53
22. The scanner fails to move. 10-54
23. The lens fails to move. 10-55
24. The mirror fails to move. 10-55
25. The scanning lamp fails to turn on. 10-56
26. The pre-exposure lamp fails to turn on. 10-57
27. The blank exposure lamp fails to turn on. 10-57
28. Pick-up fails. (cassette) 10-58
29. Pick-up operation fails. (multifeeder) 10-59
30. The registration roller fails to rotate. 10-59
31. The fixing heater fails to turn on. 10-60
32. The Add Toner indicator does not flash/turn on. 10-60
33. The Add Toner indicator fails to turn off. 10-61
34. The Waste Toner Box Full i ndicator fails to flash/turn on. ... 10-61
35. The Waste Toner Box Full indicator fails to turn off. 10-62
36. The Add Paper indicator fails to flash. 10-62
37. The Add Paper indicator fails to turn off. 10-63
38. The Jam indicator fails to flash. 10-63
39. The Jam indicator fails to turn off. 10-64
40. The Set Control Card indicator fails to turn on. 10-64
41. The Set Control Card indicator fails to turn off. 10-65

V. TROUBLESHOOTING FEEDING PROBLEMS 10-66
A. Copy Jams 10-66
1. Pick-Up/Feeding Assembly 10-67
2. Fixing/Delivery Assembly 10-68
B. Faulty Feeding 10-69
1. Double Feeding 10-69
2. Wrinkles 10-69

VI. ARRANGEMENT AND FUNCTIONS OF ELECTRICAL PARTS 10-70
A. Sensors and Switches 10-70
B. Motors, Fans, Clutches, and Solenoids 10-72
C. Heaters, Lamps, and Others 10-74
D. PCBs 10-76
E. Variable Resistors, Light-Emitting Diodes, and Check Pins by PCB ... 10-77

COPYRIGHT © 1998 CANON INC.

1. DC Controller PCB 10-77
2. Power Supply PCB 10-80
3. Lamp Regulator PCB 10-80
4. High-Voltage Power Supply PCB 10-81
VII. SERVICE MODE 10-82
A. Outline 10-82
B. Using Service Mode 10-82
1. Starting Service Mode 10-82
2. Selecting Service Mode 10-82
C. Using Adjust Mode and Function Mode 10-83
D. Display Mode [1] 10-84
E. I/O Display Mode [2] 10-88
F. Adjust Mode [3] 10-92
G. Function Mode [4] 10-94
H. Option Mode [5] 10-95
I. Counter Mode [6] 10-97
J. Application Mode [7] 10-98
VIII. SELF DIAGNOSIS 10-99
A. Copier 10-99
B. ADF 10-103
C. Sorter 10-104
D. Cassette Feeding Module 10-104

APPENDIX

A. GENERAL TIMING CHART A-1
B. SIGNALS AND ABBREVIATIONS A-2
C. GENERAL CIRCUIT DIAGRAM A-5
D. SPECIAL TOOLS LIST A-7
E. SOLVENTS AND OILS A-8

CHAPTER 1

GENERAL DESCRIPTION

This chapter introduces the copier's features and specifications, shows how to operate the copier, and explains how copies are made.

I. FEATURES 1-1
II. SPECIFICATIONS 1-2
A. Copier 1-2
III. NAMES OF PARTS 1-8
A. External View 1-8
B. Cross Section 1-9
IV. OPERATING THE MACHINE 1-10
A. Control Panel 1-10
B. User Mode 1-12
V. ROUTINE MAINTENANCE (BY THE USER) 1-14
VI. PONITS TO NOTE (BY THE USER) 1-15
VII. IMAGE FORMATION 1-16
A. Outline 1-16

COPYRIGHT © 1998 CANON INC. CANON NP7161/NP7160 REV.0 AUG. 1998 PRINTED IN JAPAN (IMPRIME AU JAPON)

I. FEATURES

1. The copier is designed light in weight (about 42 kg), and compact in size (566 mm wide, 541mm deep).
2. The copier turns out as many as 16 copies each minute (A4/LTR).
3. The addition of the Cassette Feeding Module-C1 (accessory) enables a source of paper capable of holding a maximum of 1,050 sheets.
4. The density may be adjusted to 33 different shades, or in automatic mode (AE).
5. The use of a photo mode promises faithful reproduction of halftone.
6. The use of an auto power-off function promises power-saving operation.

COPYRIGHT © 1998 CANON INC.

II. SPECIFICATIONS

A. Copier

1. Type

Body	Desktop
Copyboard	Fixed
Light source	Halogen lamp (120V:200W/230V:220W)
Lens	Lens array
Photosensitive material	OPC (30 dia.)

2. Mechanisms

Copying		Indirect electrostatic
Charging		Corona
Exposure		Slit (moving light source)
Copy density adjustment		Auto or manual
Development		Dry (toner projection)
Pick-up	Auto	Front cassette (1 pc.)
	Manual	Multifeeder (5 mm deep approx.; about 50 sheets of 80 g/m^2 paper)
Transfer		Corona
Separation		Curvature + static eliminator
Cleaning		Blade
Fixing		Heat roller (1000 W for 120V model; 1050 W for 230V model)

COPYRIGHT © 1998 CANON INC.
CANON NP7160/NP7161 REV.0 AUG. 1998 PRINTED IN JAPAN (IMPRIME AU JAPON)

3. Performance

Original type		Sheet, book, 3-D object (2 kg max.)
Maximum original size		A3/279 × 432 mm (11"×17")
Reproduction ratio	Direct	1:1.000
	Reduce I	1:0.5000
	Reduce II	1:0.707
	Reduce III	1:0.0816
	Reduce IV	1:0.0865
	Enlarge I	1:1.154
	Enlarge II	1:1.224
	Enlarge III	1:1.414
	Enlarge IV	1:2.000
	Zoom	1:0.500 to 2.000 (in 1% increments)
Wait time		30 sec or less (at 20°C room temperature)
First copy		5.8 sec or less (A4, Direct, non-AE, cassette)
Continuous copying		999 sheets max.
Copy size		A3/279×432 mm (11"×17") max. B5R/STMTR min.
Copy paper type	Cassette	• Plain paper (64 to 80 g/m^2) A3, B4, A4R, A4, B5R,B5, 279 × 432 mm (11"×17"), LTRR, LTR, LGL • Colored paper (recommended by Canon) B4, A4
	Multifeeder	• Plain paper (64 to 80 g/m^2) A3, B4, A4R, A4, B5R, B5, A5, 279X432 mm (11"×17"), LTRR, LTR, LGL, STMTR • Tracing paper (SM-1, GNT80) A3, B4, A4R, A4, B5R, B5, A5 • Transparency (recommended by Canon) A4/LTR • Colored paper (recommended by Canon)* B4, A4 • Label paper (recommended by Canon) A4/LTR • Heavy paper (up to 128 g/m^2)

*May be used, but may not feed properly.

COPYRIGHT © 1998 CANON INC.

Cassette	Claws	Used
	Frame	55 mm deep (500 sheets of 80 g/m^2 paper; 250 sheets if B5)
Copy tray		100 sheets approx. (plain paper ; 64 to 80 g/m^2)
Non-image width	Leading edge	Direct 2.0 ±1.0 mm
	Trailing edge	Direct 2.5 ±1.5 mm
	Left/right	Direct 2.5 ±2.0 mm
Auto clear		Provided (2 min standard; may be changed between 1 and 9 min in 1-min increments)
Auto power-off		Provided (30 min standard; may be changed between 10 and 90 min in 10-min increments)
Auto pre-heat		Provided (15 min standard; may be changed between 15 and 90 min in 15-min increments)
Accessories		• ADF-G1* • Cassette Feeding Module-C1 • MS-C1* • Stapler Sorter-L1* • Control Card IV N • Remote Diagnostic Device II

*Applies to the NP7161 only.

COPYRIGHT © 1998 CANON INC.
CANON NP7160/NP7161 REV.0 AUG. 1998 PRINTED IN JAPAN (IMPRIME AU JAPON)

4. Others

Operating conditions	Temperature	7.5° to 32.5°C/45.5° to 90.5°F	
	Humidity	5% to 80% RH	
	Atmospheric pressure	810.6 to 1013.3 hPa (0.8 to 1.0 atm)	
Power source		NP7160	NP7161
	120V	NLB xxxxx	----
	120V (UL)	----	NLD xxxxx
	127V	NLC xxxxx	----
	230V	PHQ xxxxx	PHS xxxxx
Power consumption	Maximum	1.5 kW or less	
	Standby	0.135 kWh (approx.; reference only)	
	Continuous	0.645 kWh (approx.; reference only)	
Noise	Copying	66 dB or less (sound power level by ISO method)	
	Standby	40 dB or less (sound power level by ISO method)	
Ozone (8-hr average)		0.05 ppm or less	
Dimensions	Width	566 mm/22.3 in	
	Depth	541 mm/21.3 in	
	Height	389 mm/15.3 in	
Weight		NP7160	NP7161
		42 kg/92.6 lb (approx.)	42 kg/92.6 lb (approx.)
Consumables	Copy paper	Keep wrapped, and avoid humidity.	
	Toner	Avoid direct sunlight, and store at 40°C, 85% or less.	

Specifications subject to change without notice.

COPYRIGHT © 1998 CANON INC.

Reproduction mode		Size	Copy paper	Copies/min
Direct	(100%)	A3 (297 × 420mm)	A3	9
		A4 (210 × 297mm)	A4	16
		B4 (257 × 364mm)	B4	11
		B5 (182 × 257mm)	B5	17
		A4R (297 × 210mm)	A4R	13
		B5R (257 × 182mm)	B5R	14
Reduce	I (70.7%)	A3 → A4R	A4R	11
		B4 → B5R	B5R	13
	II (81.6%)	B4 → A4R	A4R	12
	III (86.5%)	A3 → B4	B4	10
		A4 → B5	B5	17
Enlarge	I (200%)	A5R → A3	A3	8
	II (141.4%)	A4R → A3	A3	8
		B5R → B4	B4	9
	III (122.4%)	A4R → B4	B4	9
	IV (115.4%)	B4 → A3	A3	8
		B5 → A4	A4	11

Specifications subject to change without notice.

COPYRIGHT © 1998 CANON INC.
CANON NP7160/NP7161 REV.0 AUG. 1998 PRINTED IN JAPAN (IMPRIME AU JAPON)

Reproduction mode		Size	Copy paper	Copies/min
Direct	(100%)	11" × 17" (279 × 432mm)	11" × 17"	9
		LTR (297 × 216mm)	LTR	16
		LGL (216 × 356mm)	LGL	11
		LTRR (216 × 297mm)	LTRR	13
Reduce	I (64.7%)	11" × 17" → LTRR	LTRR	12
	II (73.3%)	11" × 17" → LGL	LGL	11
	III (78.6%)	LGL → LTRR	LTRR	12
Enlarge	I (200%)	STMTR → 11" × 17"	11" × 17"	8
	II (129.4%)	LTRR → 11" × 17"	11" × 17"	8
	III (121.4%)	LGL → 11" × 17"	11" × 17"	8

Specifications subject to change without notice.

COPYRIGHT © 1998 CANON INC.

III. NAMES OF PARTS

A. External View

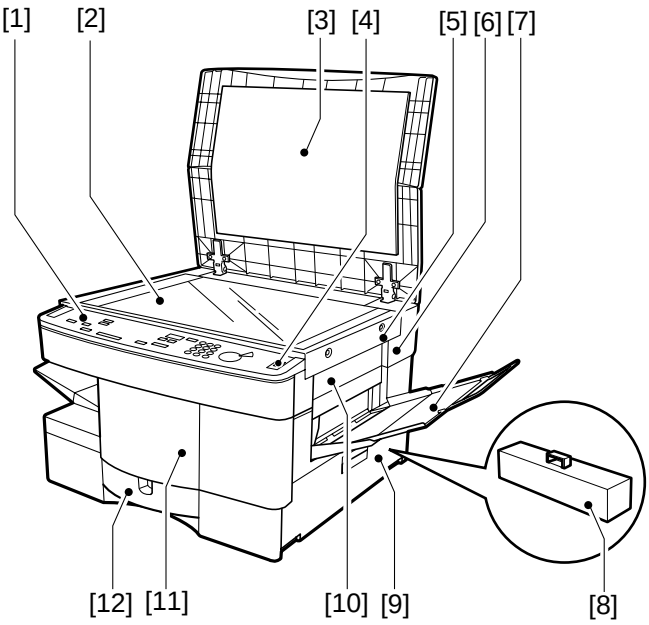

[1] Control panel
[2] Copyboard glass
[3] Copyboard cover
[4] Power switch
[5] Upper right cover
[6] Upper rear cover
[7] Multifeeder
[8] Waste toner box
[9] Right door
[10] Right cover
[11] Front door
[12] Cassette

Figure 1-301

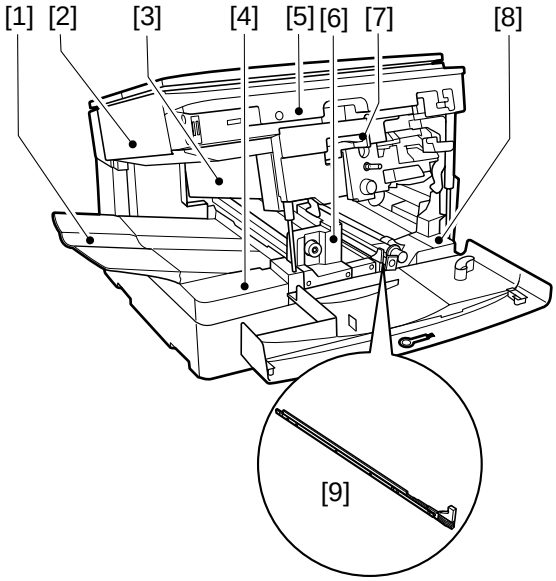

[1] Copy tray
[2] Upper left cover
[3] Upper delivery cover
[4] Lower delivery cover
[5] Front fixing cover
[6] Inside cover
[7] Open/close lever
[8] Lower inside cover
[9] Static eliminator

Figure 1-302

COPYRIGHT © 1998 CANON INC.

B. Cross Section

1. Copier

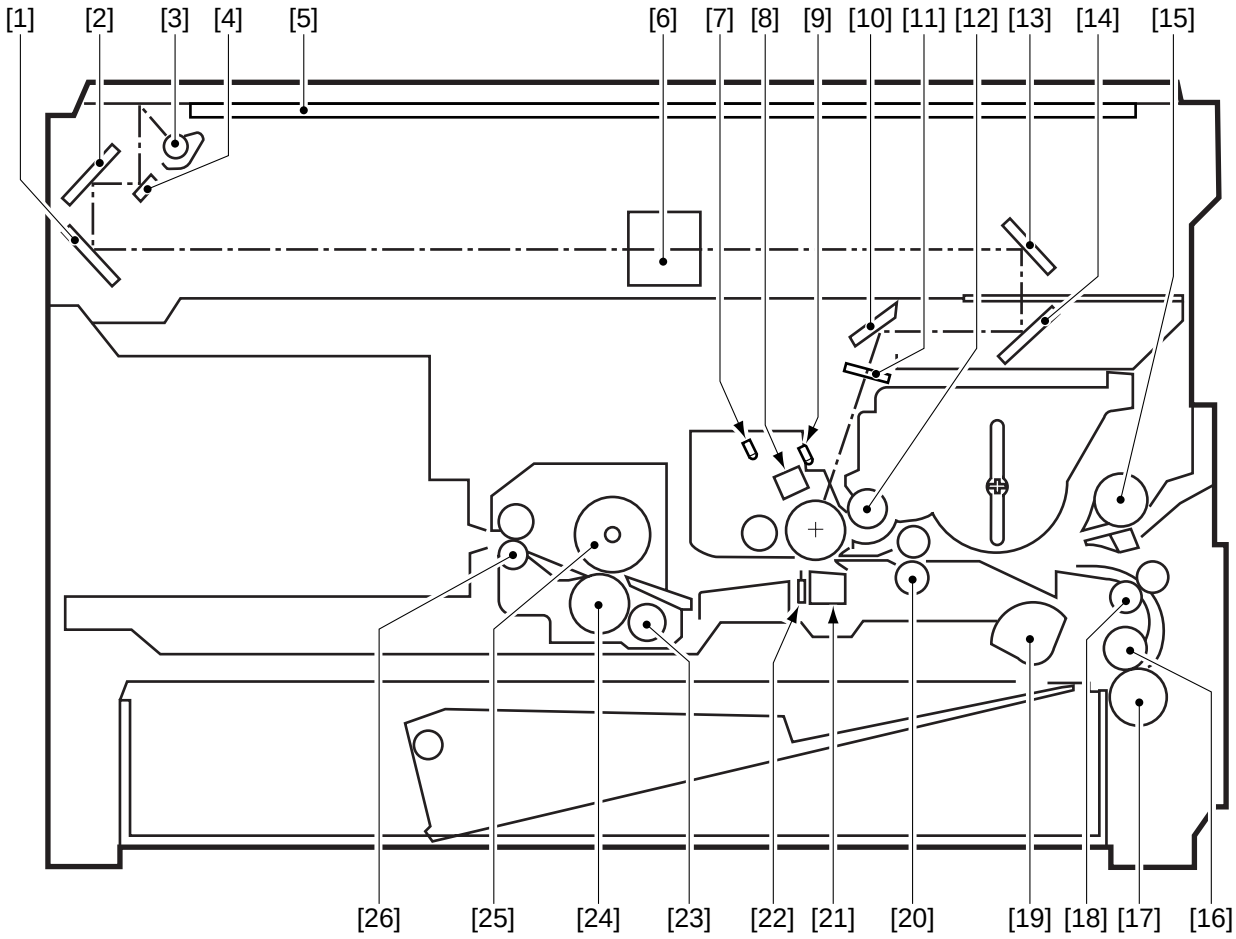

[1] No. 3 mirror
[2] No. 2 mirror
[3] Scanning lamp
[4] No. 1 mirror
[5] Copyboard glass
[6] Lens
[7] Pre-exposure lamp
[8] Primary charging assembly
[9] Blank exposure lamp
[10] No. 6 mirror
[11] Dust-proofing glass
[12] Developing cylinder
[13] No. 4 mirror
[14] No. 5 mirror
[15] Multifeeder pick-up roller
[16] Feed roller
[17] Separation roller
[18] Vertical path roller
[19] Pick-up roller
[20] Registration roller
[21] Transfer charging assembly
[22] Separation static eliminator
[23] Heat discharging roller
[24] Lower fixing roller
[25] Upper fixing roller
[26] Delivery roller

Figure 1-303

COPYRIGHT © 1998 CANON INC.

IV. OPERATING THE MACHINE

A. Control Panel

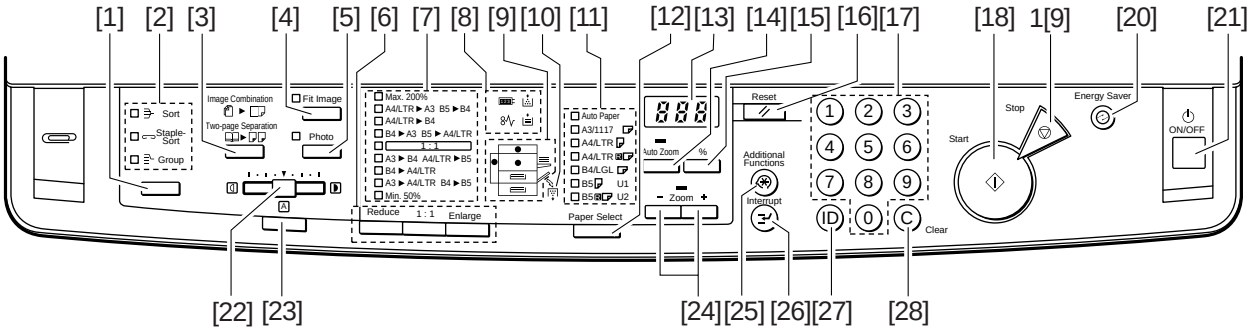

Figure 1-401

Ref.	Name	Description	Remarks
[1]	Sorter key*	Press it to select or deselect Sort, Staple Sort, or Group Sort mode.	*Requires a sorter or stapler sorter.
[2]	Sorter indicator*	Indicates the selected delivery mode. It remains off in non-sort mode.	
[3]	2-on-1*/Page Separate key	Press it to select or deselect 2-on-1 or Page Separate mode.	*Requires an ADF.
[4]	Fit Page key	Press to select or deselect Fit Page mode. Use the mode to make a copy covering all image area of the original.	
[5]	Photo key	Press it to select or deselect Photo mode.	
[6]	Reduce/Direct/ Enlarge key	Press it to select Reduce/Enlarge (default ratio) or reset any ratio to Direct.	
[7]	Default Ratio indicator	Indicates the selected default reproduction ratio.	
[8]	Control Card indicator	Flashes when the control card is not set properly.	Requires a Control Card Unit.
	Jam indicator	Flashes when a jam occurs.	
	Toner indicator	Flashes when toner is running out. It stops flashing and remains on when toner runs out completely.	
	Paper indicator	Flashes if paper runs out in the selected cassette or the manual feed tray (or, when the cassette is not set properly).	
[9]	Paper Source/Jam	Indicates the selected cassette or the manual tray; flashes the location of a jam, if any. (It also flashes when a jam occurs in the ADF or when the sorter or the right door needs to be checked.)	

* Applies to the NP7161 only

Table 1-401

 COPYRIGHT © 1998 CANON INC.

Ref.	Name	Description	Remarks
[10]	Location indicator	Flashes when the waste toner box needs to be replaced. When the case becomes full, it stops flashing and remains on.	
[11]	Paper Size indicator	Indicates the size of the paper in the cassette selected by the Paper Select key.	
[12]	Paper Select key	Press it to select Auto Paper Select*, Cassette, or Manual Feed Tray mode.	*Requires an ADF.
[13]	Copy Count/Ratio indicator	Indicates the copy count/ratio and the selected user mode.	
[14]	Auto Ratio key*	Use it to select or deselect Auto Ratio mode, in which the best reproduction ratio is automatically selected to suit the original and the selected paper.	*Requires an ADF.
[15]	% key	Press it to indicate the selected reproduction ratio.	
[16]	Reset key	Use it to reset the current copy mode to default.	
[17]	Keypad	Use it to set a copy count or to enter a numeric value.	
[18]	Start key	Press it to start copying.	
[19]	Stop key	Press it to stop continuous copying.	
[20]	Power Save key	Press it to select or deselect power save mode.	
[21]	Power switch	Press it to turn on or off the power.	
[22]	Copy Density lever	Slide it to adjust the copy density manually.	
[23]	AE key	Press it to select or deselect AE (auto density adjustment) mode.	
[24]	Zoom key	Press it to select a reproduction ratio (50% to 200%) in 1% increments. Hold it down to increase/decrease the ratio continuously.	
[25]	User Mode key	Press it to set or change user mode settings.	
[26]	Interrupt key	Press it to stop an ongoing copying run to make a copy of a different original.	
[27]	ID key	Press it after entering an appropriate ID number. Press it also after entering a number for ID registration.	
[28]	Clear key	Press it to reset the copy count to 1 or to clear any wrong input when making settings.	

* Applies to the NP7161 only

Table 1-402

COPYRIGHT © 1998 CANON INC.

B. User Mode

1. Outline

The copier provides user modes, which may be changed freely by the user. These modes provide the functions shown in the following table.

Notation	Item	Description	Factory settings (default)
U00	Resetting user mode	Use it to reset new settings made in user mode to default settings.	–
U01	Changing auto clear time	Use it to set the auto clear time length between 1 an 9 min in 1-min increments. Setting it to 0 disables the auto-clear function.	2 min
U02	Changing auto power-save time	Use it to select an appropriate auto power-save time length: 10, 15, 20, 30, 40, 50, 60, or 90 min (8 lengths).	15 min
U03	Changing auto power-off time	Use it to select an appropriate auto power-off time length: 10, 15, 20, 30, 40, 50, 60, 90 (8 lengths).	30 min
U04	Fine-adjusting Zoom	Use it to adjust vertical and horizontal reproduction ratios over ±5 grades in 0.2% increments. Rang: -1.0% to +1.0% in units of 0.2%	±0.0%
U05	Turning on/off auto cassette change	Use it to turn on/off the auto cassette change function, in which copying is continued by switching cassettes when the selected cassette runs out of paper. O N : Enable auto cassette change. OFF : Disable auto cassette change.	ON
U06	Turning on/off auto sort	Use it to turn on/off the auto sort function, in which sorting takes place when making multiple copies of multiple originals using an ADF. O N : Enable auto sort. OFF : Disable auto sort.	ON
U07	Turning on/off ADF jam recovery	Use it to turn on/off auto counting of originals in ADF jam recovery. O N : Enable auto count. OFF : Disable auto count.	OFF
U08	Cleaning feeder	Use it to clean the feeder (after placing paper in the ADF and pressing the Start key).	–

COPYRIGHT © 1998 CANON INC.

Notation	Item	Description	Factory settings (default)
U09	Changing Page Fit mode (ratio)	Use it to change the reproduction ratio used in Page Fit mode between 90% and 99% in 1% increments.	93%
U10	Changing Page Fit mode (centering)	Use it to turn on/off the centering function in Fit Page mode. O N : Enable centering. OFF : Disable centering.	ON
U11	Changing Page Fit mode (non-image width)	Use it to turn on/off the non-image width function in Page Fit mode. O N : Enable (create non-image width). OFF : Disable (do not create non-image width).	OFF
U12	Correcting density	Use it to select an appropriate standard value (F5) for manual density adjustment between -17 and +6 (24 grades).	0
U13	Setting special paper mode	Use it to select an appropriate fixing temperature control mode for special paper when pick-up is from the multifeeder. 0: Standard 1: Rough surface paper (against poor fixing) 2: Tracing paper (against high-temperature offset)	0
U14*	Drum cleaning mode	Use it to turn ON/OFF the drum cleaning function. To remove dirt from the surface of the photosensitive drum, toner is deposited on the surface after copying operation and the cleaning blade is used to collect the toner together with the dirt. (In addition, LSTR is extended by 6.5 sec) O N : Enable drum cleaning. OFF : Disable drum cleaning.	OFF

* If the drum cleaning settings in service mode No. 519 is turned ON.

COPYRIGHT © 1998 CANON INC.

V. ROUTINE MAINTENANCE (BY THE USER)

Instruct the user to clean the following parts at least once a week.

1. Copyboard Glass
   Wipe with a moist cloth (moistened with water or mild detergent solution); then, dry wipe.
2. Copyboard Cover
   Wipe it with a moist cloth (moistened with water or mild detergent solution); then, dry wipe.
3. Primary Charging Assembly
   Pull out and then push in the wire cleaner several times to clean the charging wire.
4. Transfer Charging Assembly
   Pull out and then push in the wire cleaner several times to clean the charging wire.
5. Static Eliminator
   If separation jams occur frequently, clean the static eliminator using the special brush. (Cleaning need not be as often as every week.)
6. Waste Toner Box
   If the Waste Toner Box indicator on the control panel flashes or turns on, replace the waste toner box.

COPYRIGHT © 1998 CANON INC.
CANON NP7160/NP7161 REV.0 AUG. 1998 PRINTED IN JAPAN (IMPRIME AU JAPON)

VI. POINTS TO NOTE (BY THE USER)

- Toner Cartridge
  Instruct the user to dispose of any used (empty) toner cartridge according to governmental guidelines.
- Waste Toner Box
  Instruct the user to keep any waste toner box for collection during a servicing visit.

⚠ Caution:

Do not dispose of the toner cartridge or the waste toner box into fire. Toner can catch fire, causing implosion or explosion.

COPYRIGHT © 1998 CANON INC.

VII. IMAGE FORMATION

A. Outline

The copier is constructed as shown in Figure 1-701.

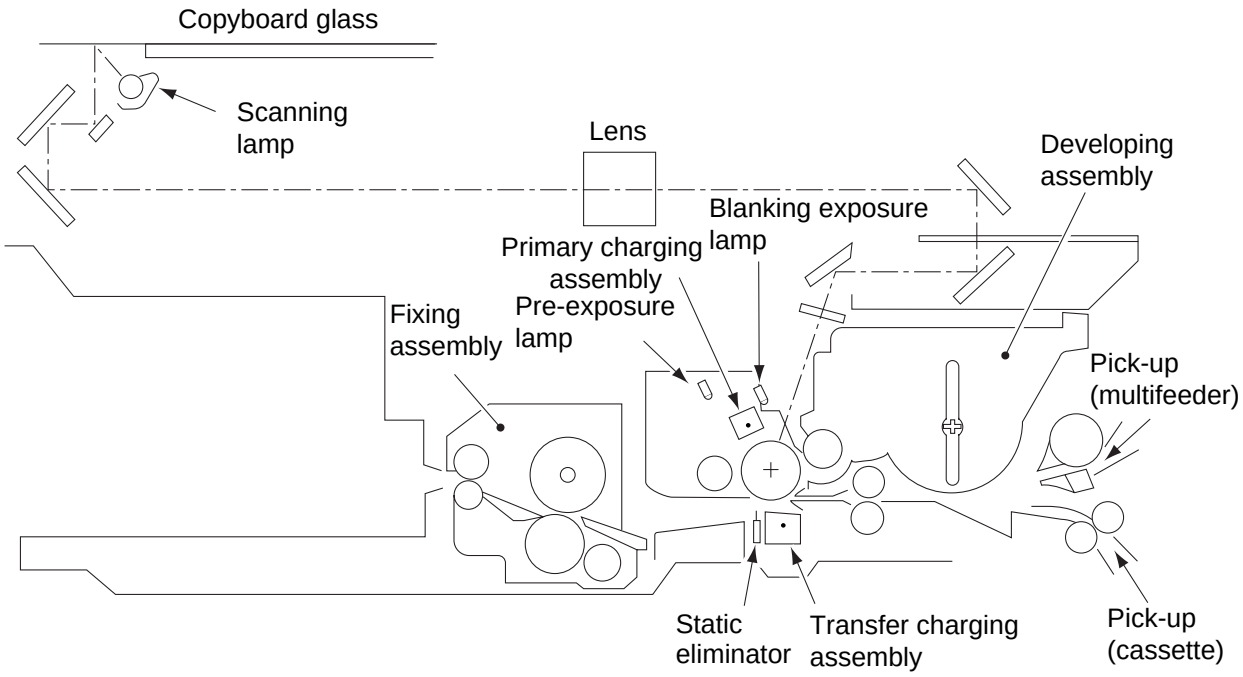

Figure 1-701

COPYRIGHT © 1998 CANON INC.

The copier's image formation processes consist of the following eight steps:

Step 1 Pre-exposure
Step 2 Primary charging (negative DC)
Step 3 Image exposure
Step 4 Development (AC + negative DC)
Step 5 Transfer (negative DC)
Step 6 Separation (curvature + static eliminator)
Step 7 Fixing
Step 8 Drum cleaning

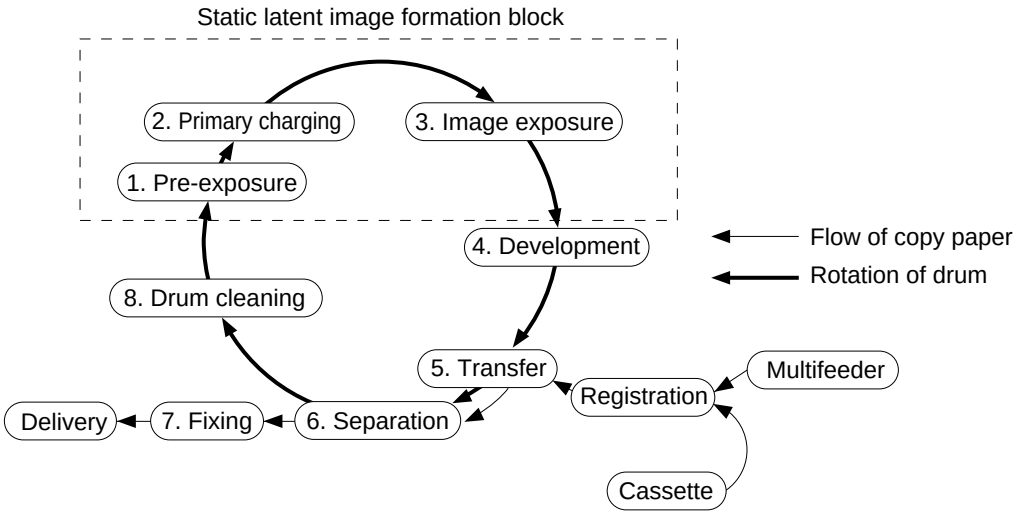

Figure 1-702

CHAPTER 2

BASIC OPERATION

This chapter provides outlines of the copier's various mechanical workings.

Process speed	105 mm/s

I. BASIC MECHANISMS 2-1
A. Functional Construction 2-1
B. Outline of the Electrical Circuitry 2-2
C. Basic Sequence of Operations 2-4
D. Main Motor (M1) Control Circuitry 2-8
E. Inputs to the DC Controller 2-9
F. Outputs from the DC Controller 2-12
G. Inputs to and Outputs from Accessories (1/1) 2-16

COPYRIGHT © 1998 CANON INC. CANON NP7161/NP7160 REV.0 AUG. 1998 PRINTED IN JAPAN (IMPRIME AU JAPON)

I. BASIC MECHANISMS

A. Functional Construction

The copier can broadly be divided into the following four functional blocks: pick-up, feeding, exposure, image formation, and control.

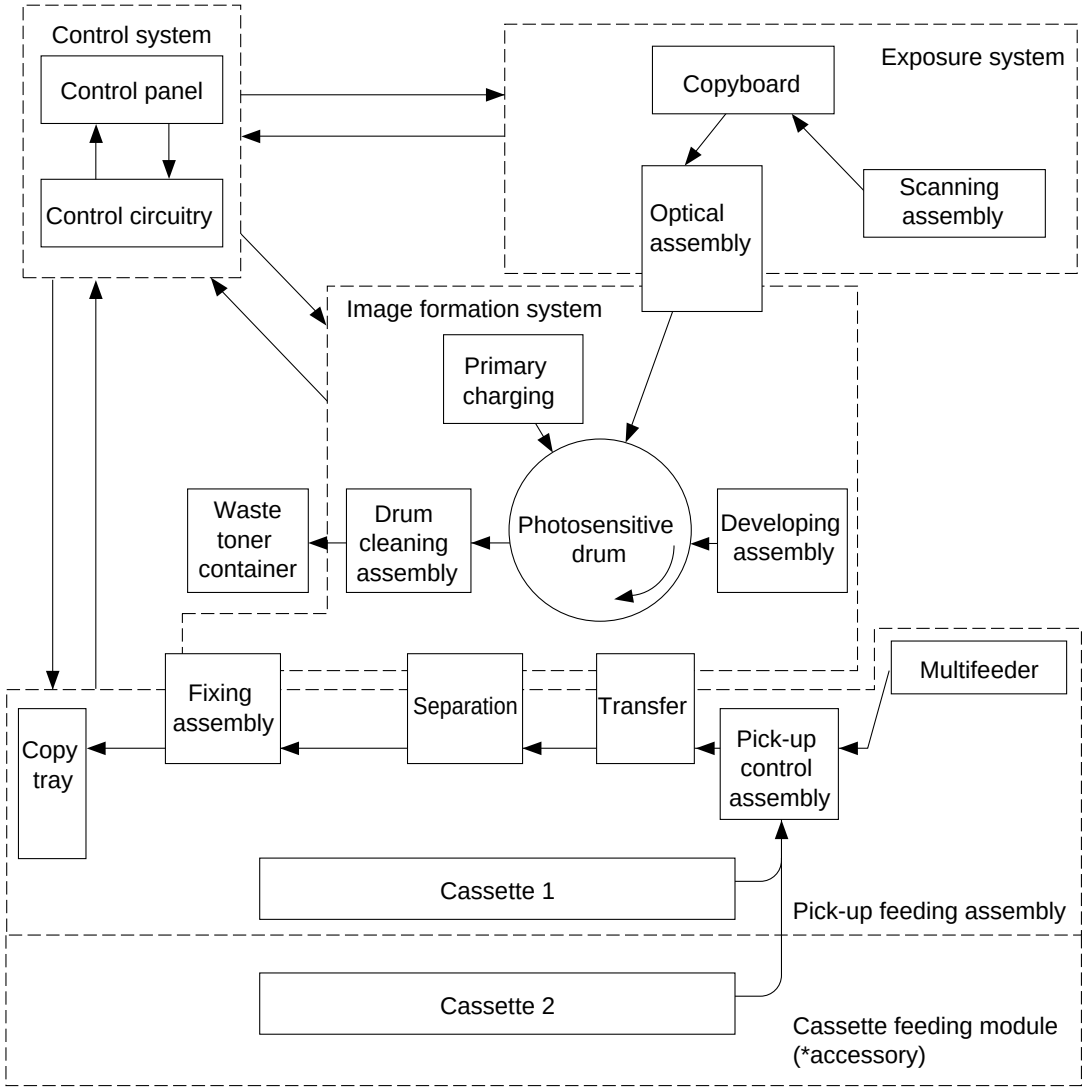

Figure 2-101

B. Outline of the Electrical Circuitry

The copier's major electrical mechanisms are controlled by the microprocessor on the DC controller PCB. The ICs on the DC controller PCB are shown below.

IC121 (ROM)
- Controls copying sequence.

JC113 (gate array)
- Controls scanning lamp (LA1) error detection.
- Controls thermistor (TH1, TH2) error detection.
- Controls triac short circuit error detection.
- Controls power at time of error.
- Turns on/off the scanning lamp (LA3).
- Controls the I/O port.

IC114 (IPC; NP7161 only)
- Controls communication with the ADF and the sorter.

JC116 (RAM)
- Records settings data (service mode, etc.).

IC117 (RESET IC)
- Resets at power-on.

Figure 2-102 is a block diagram showing the relationship between the copier's major circuits.

Reference:

The NP7161 possesses a communications IC (IPC) on its DC controller PCB. The copier communicates with the ADF and the sorter using the communications IC on each controller PCB (IPC communication) and the communications PCB on the DC controller PCB (IPC communication 2).

COPYRIGHT © 1998 CANON INC.
CANON NP7161/NP7160 REV.0 AUG. 1998 PRINTED IN JAPAN (IMPRIME AU JAPON)

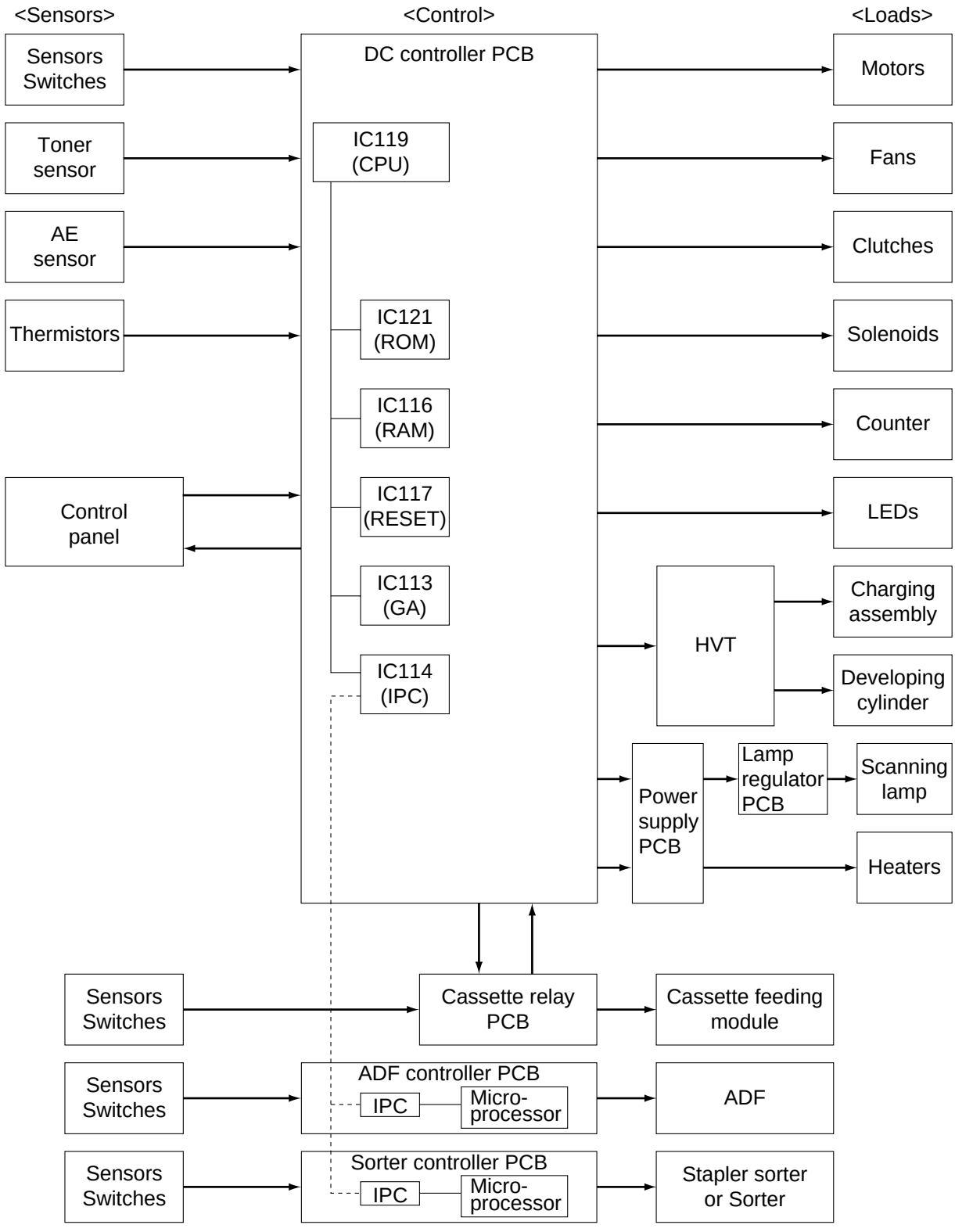

Figure 2-102

COPYRIGHT © 1998 CANON INC.

C. Basic Sequence of Operations

1. Basic Sequence of Operations at Power-On

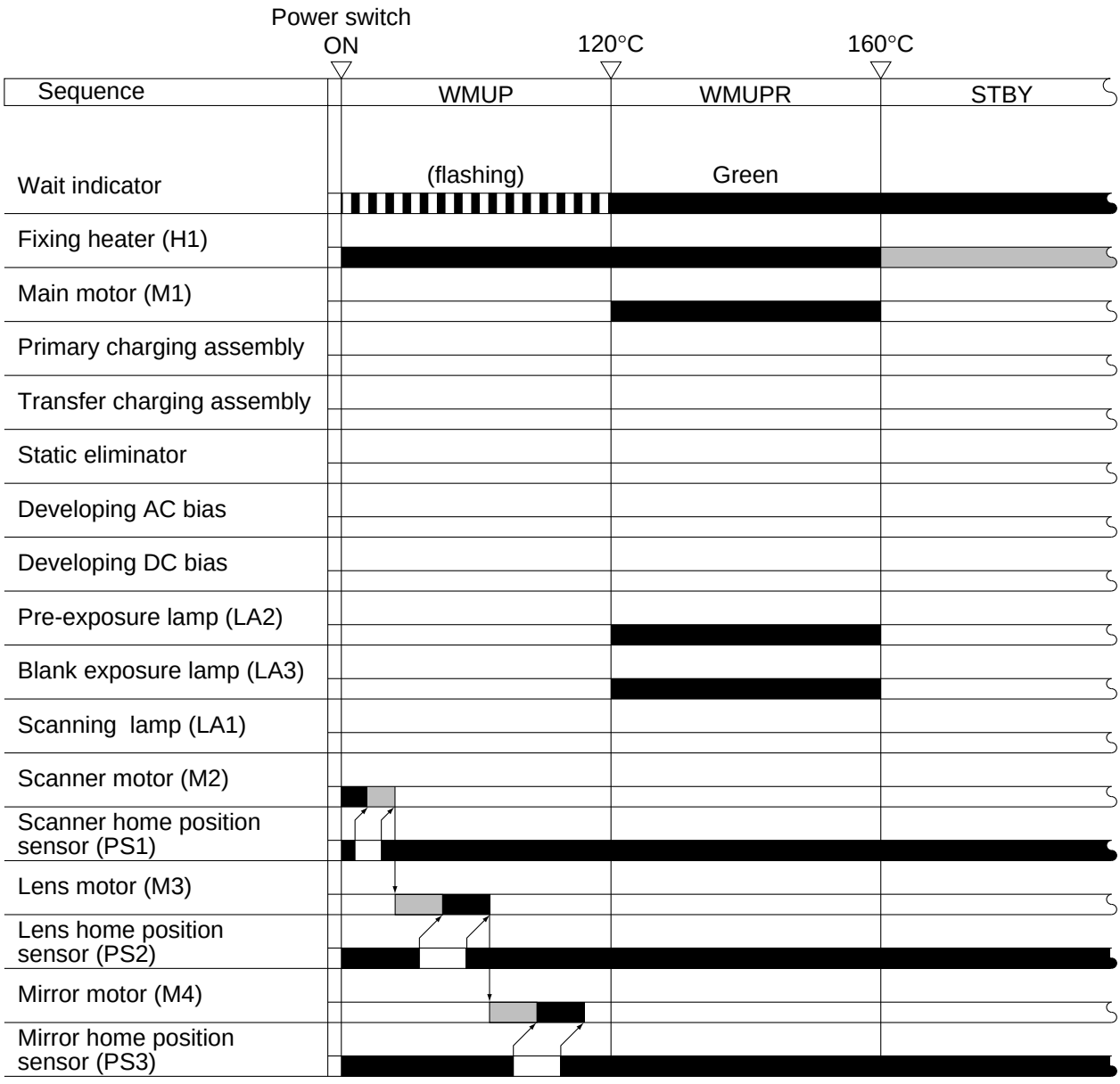

Figure 2-103

COPYRIGHT © 1998 CANON INC.
CANON NP7161/NP7160 REV.0 AUG. 1998 PRINTED IN JAPAN (IMPRIME AU JAPON)

Period		Description	Remarks
WMUP (warm-up)	From when the power switch is turned on until the surface temperature of the upper fixing roller reaches 120˚C.	Waits until the upper fixing roller warms up.	Moves the lens, mirror, and scanner to home position.
WMUPR (warm-up rotation)	From when WMUP ends until the surface temperature of the upper fixing roller reaches 160˚C.	• Evens out the surface temperature of the upper fixing roller. • Stirs the toner inside the developing assembly. • Discharges copy paper, if any, inside the copier.	Starts copying operation when the surface temperature of the upper fixing roller reaches 140˚C if Auto Start has been selected.
STBY (standby)	From when WMUPR ends until the Copy Start key is pressed. Or, from when LSTR ends until the power switch is turned off.	Waits for a press on an operation key (Start key, etc.).	Turns on Auto Clear if no operation key is pressed (i.e., resets to standard mode after a specific period of time).

Table 2-101

COPYRIGHT © 1998 CANON INC.

2. Basic Sequence of Operations at Copy Start

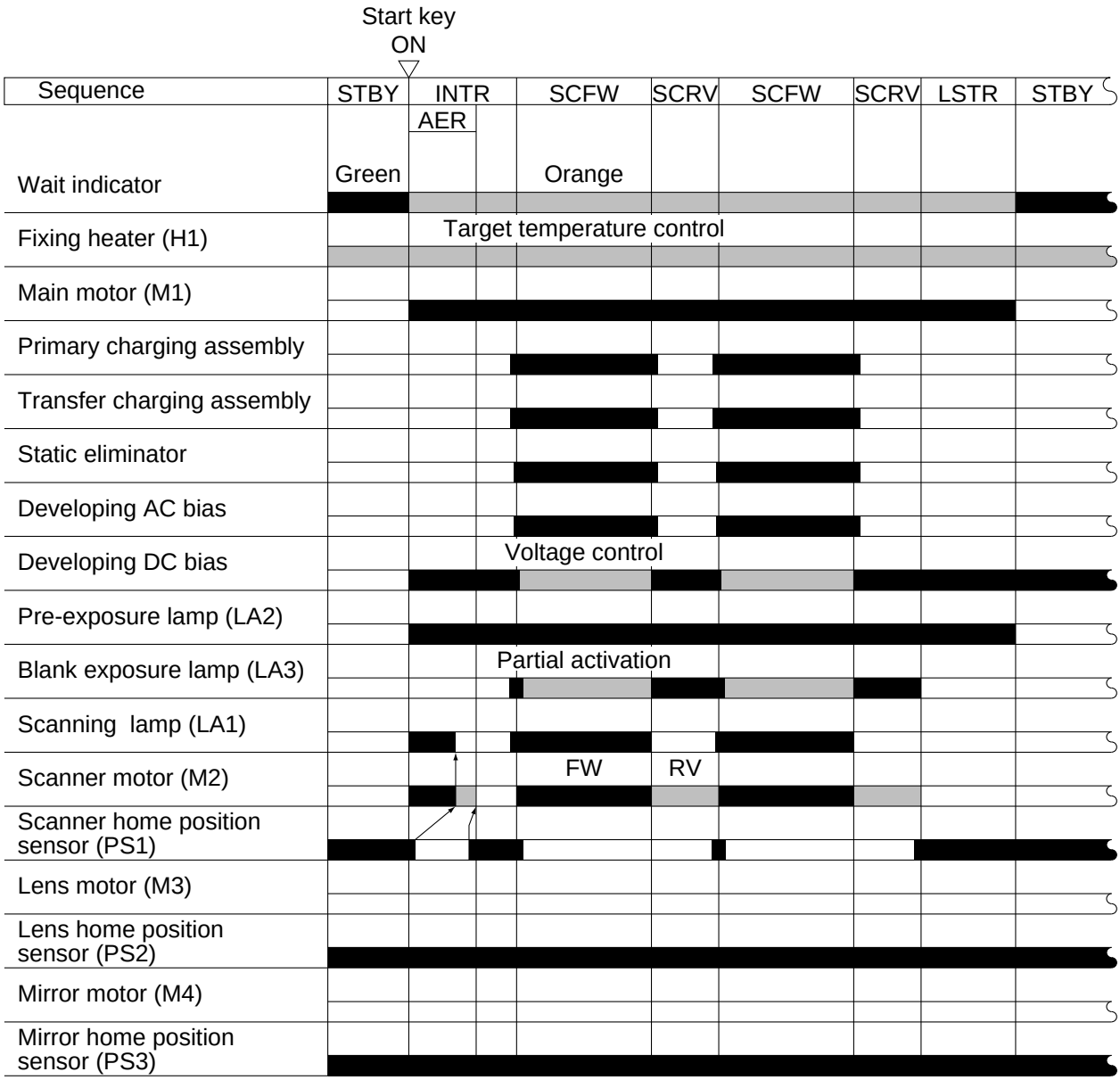

Figure 2-104

COPYRIGHT © 1998 CANON INC.
CANON NP7161/NP7160 REV.0 AUG. 1998 PRINTED IN JAPAN (IMPRIME AU JAPON)

Period		Description	Remarks
INTR (initial rotation)	From when the Start key is pressed until the scanner starts to move forward.	Stabilizes the drum sensitivity in preparation for copying operation.	
AER (AE rotation)	From when the Start key is pressed until the scanner finishes measuring densuty.	Measures the density of the original while the scanner is moving forward.	Used only in AE mode.
SCFW (scanner forward)	While the scanner is moving forward.	Uses the scanning lamp to shine the original, and directs the reflected optical image to the photosensitive drum by way of mirrors and lenses.	Generates the registration signal, and moves the copy paper to the transfer assembly.
SCRV (scanner reverse)	While the scanner is moving in reverse.	Returns the scanner to home position in preparation for the next copying operation.	
LSTR (last rotation)	From when SCRV ends until the main motor stops.	Rids the surface of the photosensitive drum of charges (surface potential) as post-copying operation.	Discharges the last copy.

Table 2-102

COPYRIGHT © 1998 CANON INC.

D. Main Motor (M1) Control Circuitry

1. Outline

Figure 2-105 shows the circuit used to control the main motor (M1), and the circuit has the following functions:

- Turning on and off the main motor.
- Controlling the rotation of the main motor.

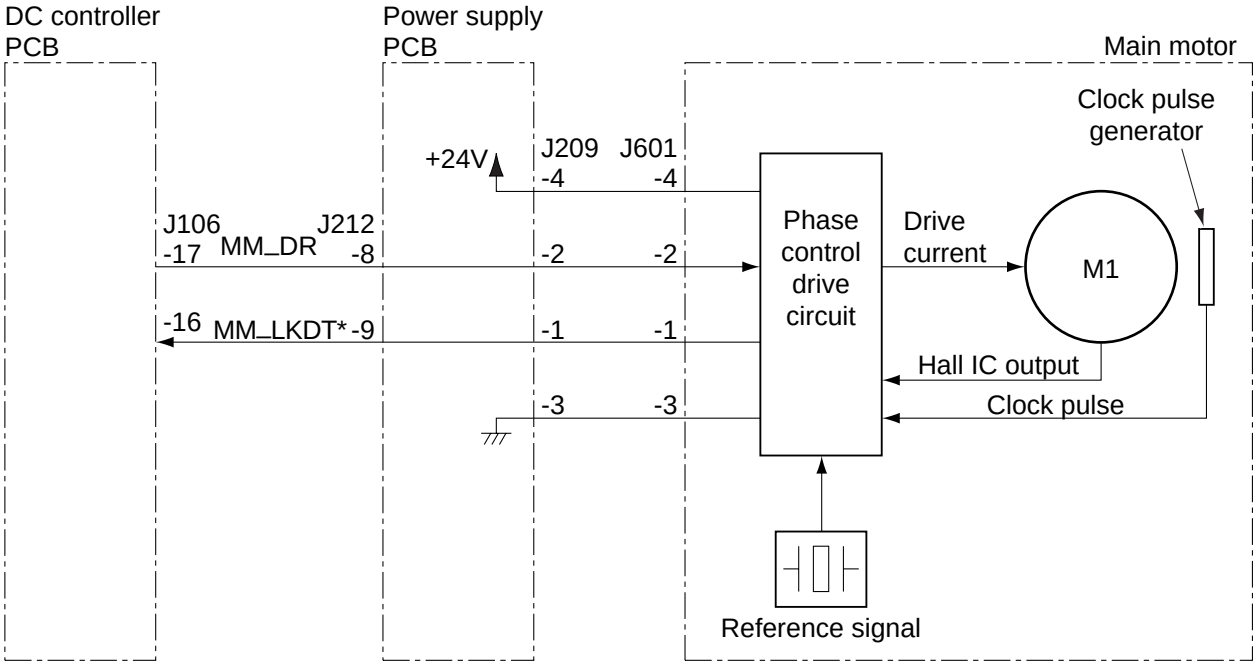

Figure 2-105

2. Operation

The main motor is a DC motor equipped with a built-in clock pulse generator, which generates clock pulses according to the rotation of the motor while the motor rotates. The phase control drive circuit matches the phases of the clock pulses and the reference signals to control the rotation of the main motor.

When the main motor drive signal (MM_DR) from the DC controller PCB goes '1', the phase control drive circuit turns on, thereby rotating the main motor at a specific speed.

3. Detecting an Error

The phase control drive circuit sends the main motor lock detection signal (MM_LKDT*)=0 to the DC controller PCB as long as the main motor is rotating at a constant speed. If the rotation of the main motor becomes irregular for some reason, MM_LKDT* goes '1'.

If MM_LKDT*=1 continues for 1 sec or more when MM_DR is '1', the DC controller PCB will identify the condition as a main motor error, and will immediately stop the main motor and indicate "E010" on the control panel.

COPYRIGHT © 1998 CANON INC.
CANON NP7161/NP7160 REV.0 AUG. 1998 PRINTED IN JAPAN (IMPRIME AU JAPON)

E. Inputs to the DC Controller

1. Inputs to the DC Controller (1/3)

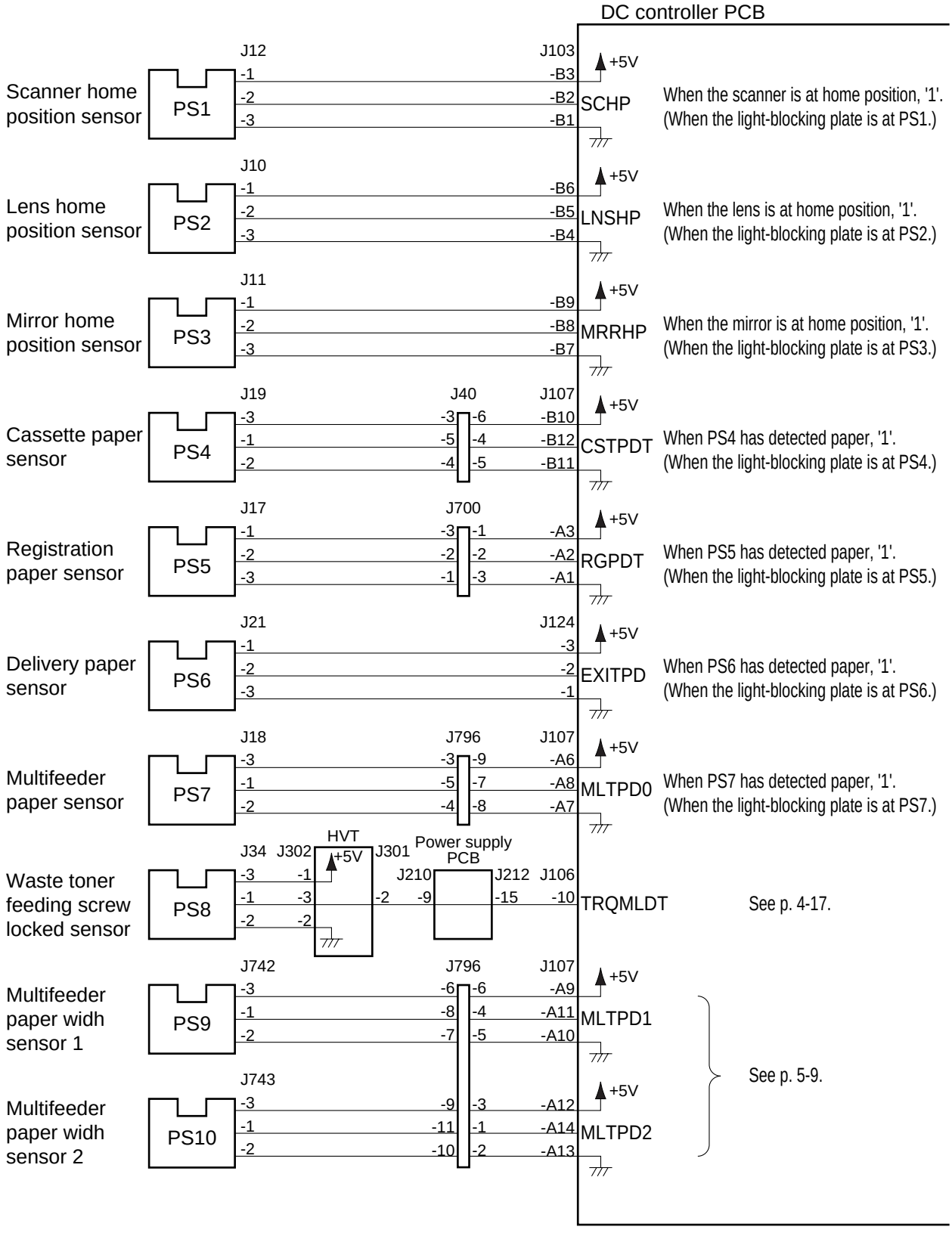

Figure 2-106

2. Inputs to the DC Controller (2/3)

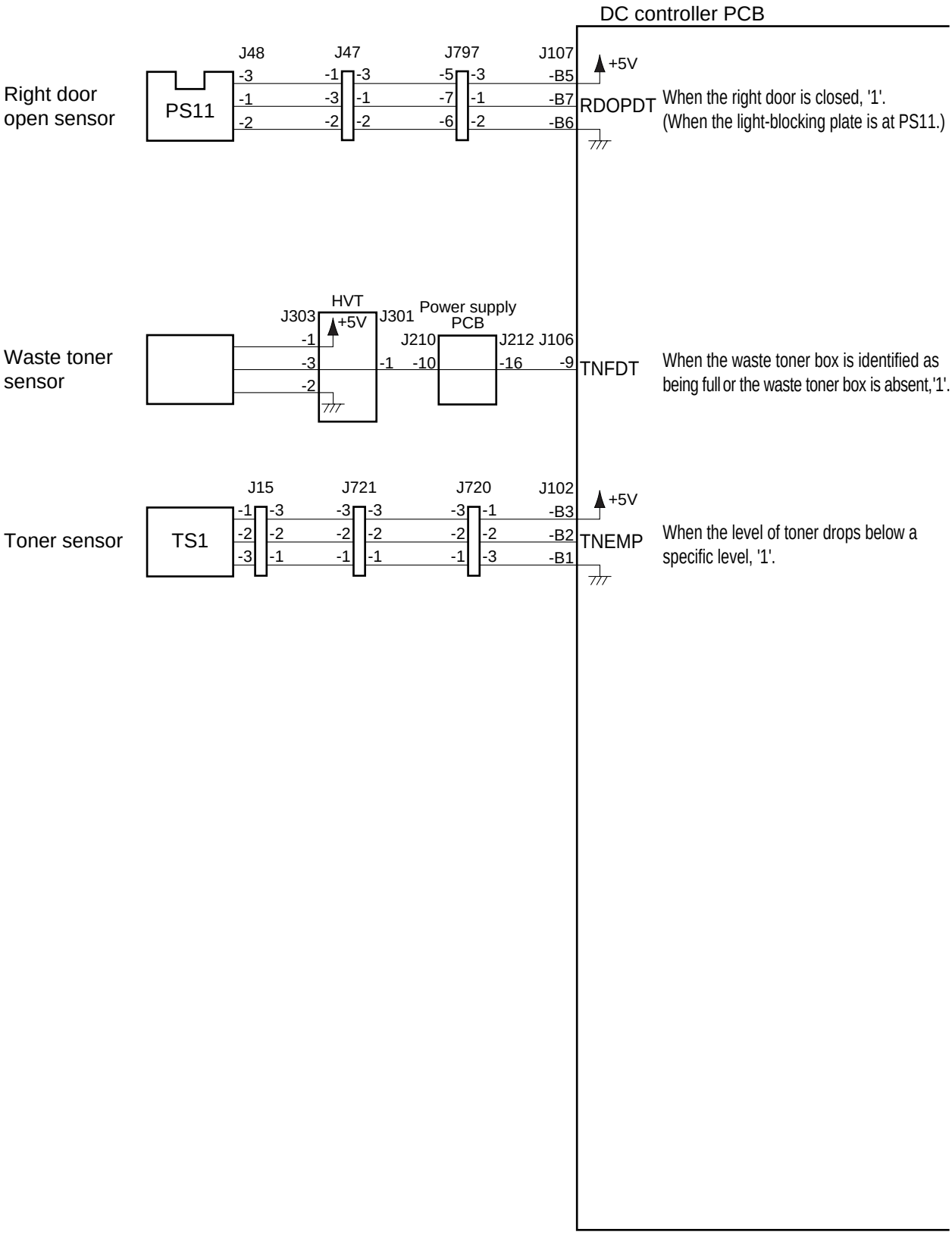

Figure 2-107

COPYRIGHT © 1998 CANON INC.

3. Inputs to the DC Controller (3/3)

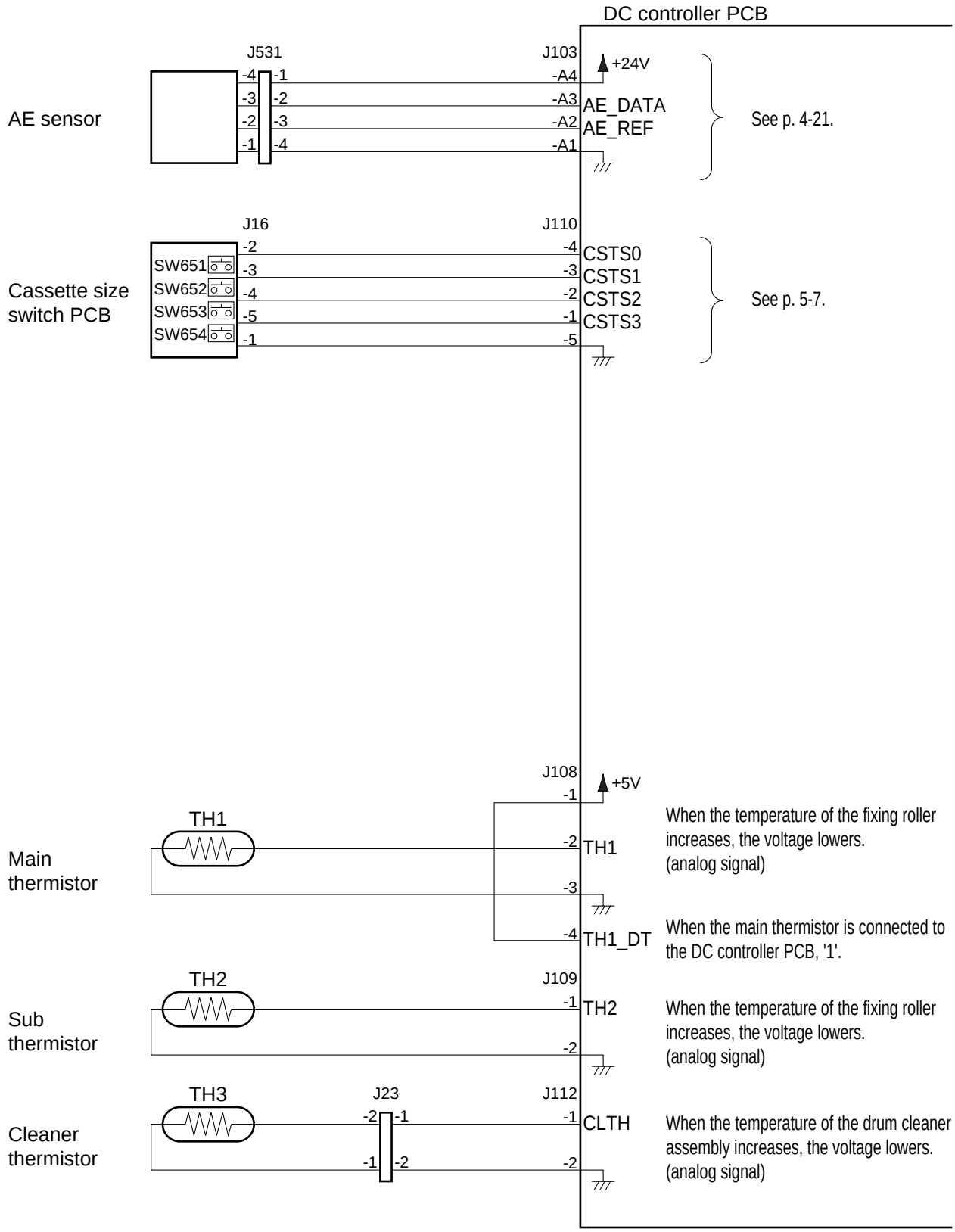

Figure 2-108

COPYRIGHT © 1998 CANON INC.

F. Outputs from the DC Controller

1. Outputs from the DC Controller (1/4)

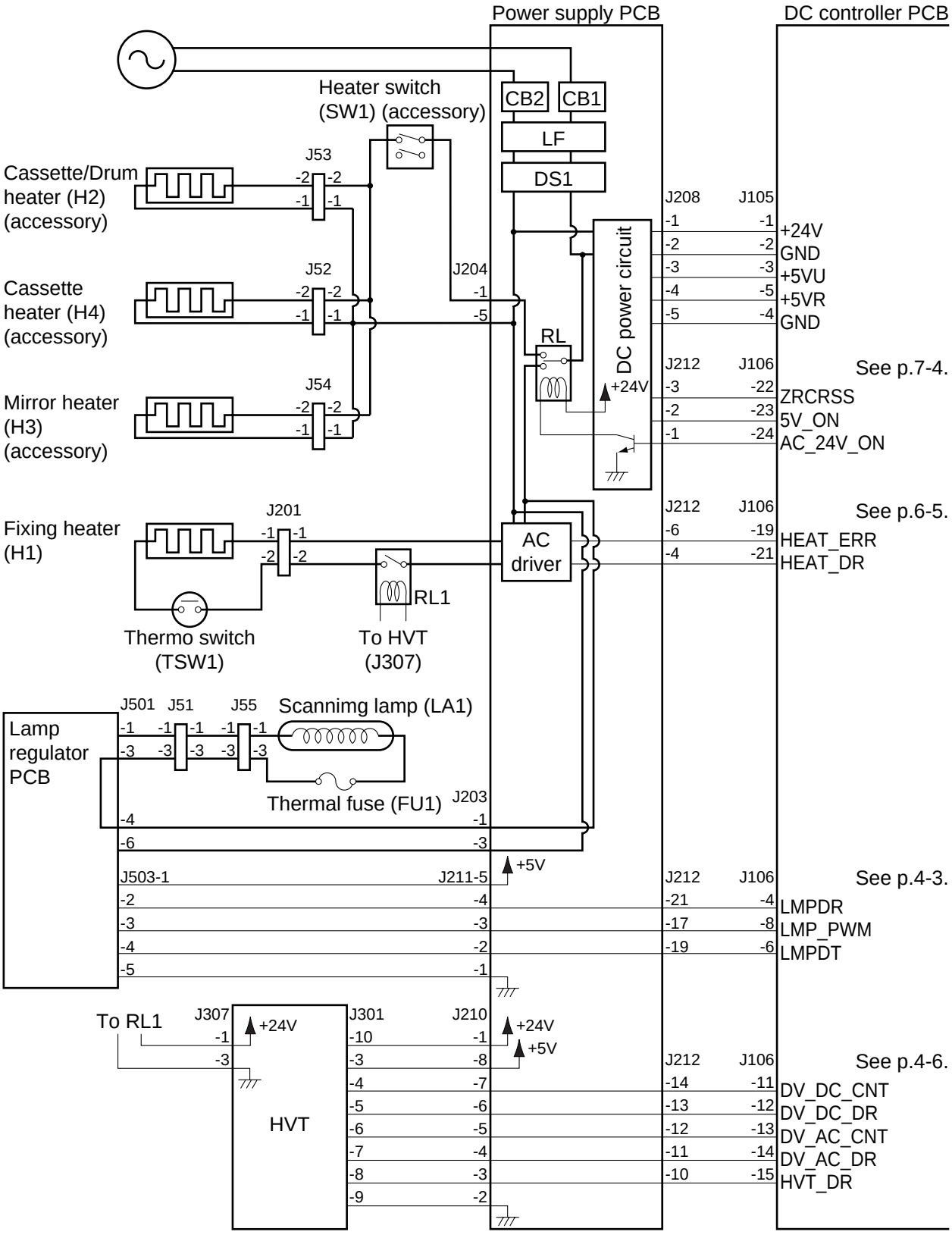

Figure 2-109

COPYRIGHT © 1998 CANON INC.
CANON NP7161/NP7160 REV.0 AUG. 1998 PRINTED IN JAPAN (IMPRIME AU JAPON)

2. Outputs from the DC Controller (2/4)

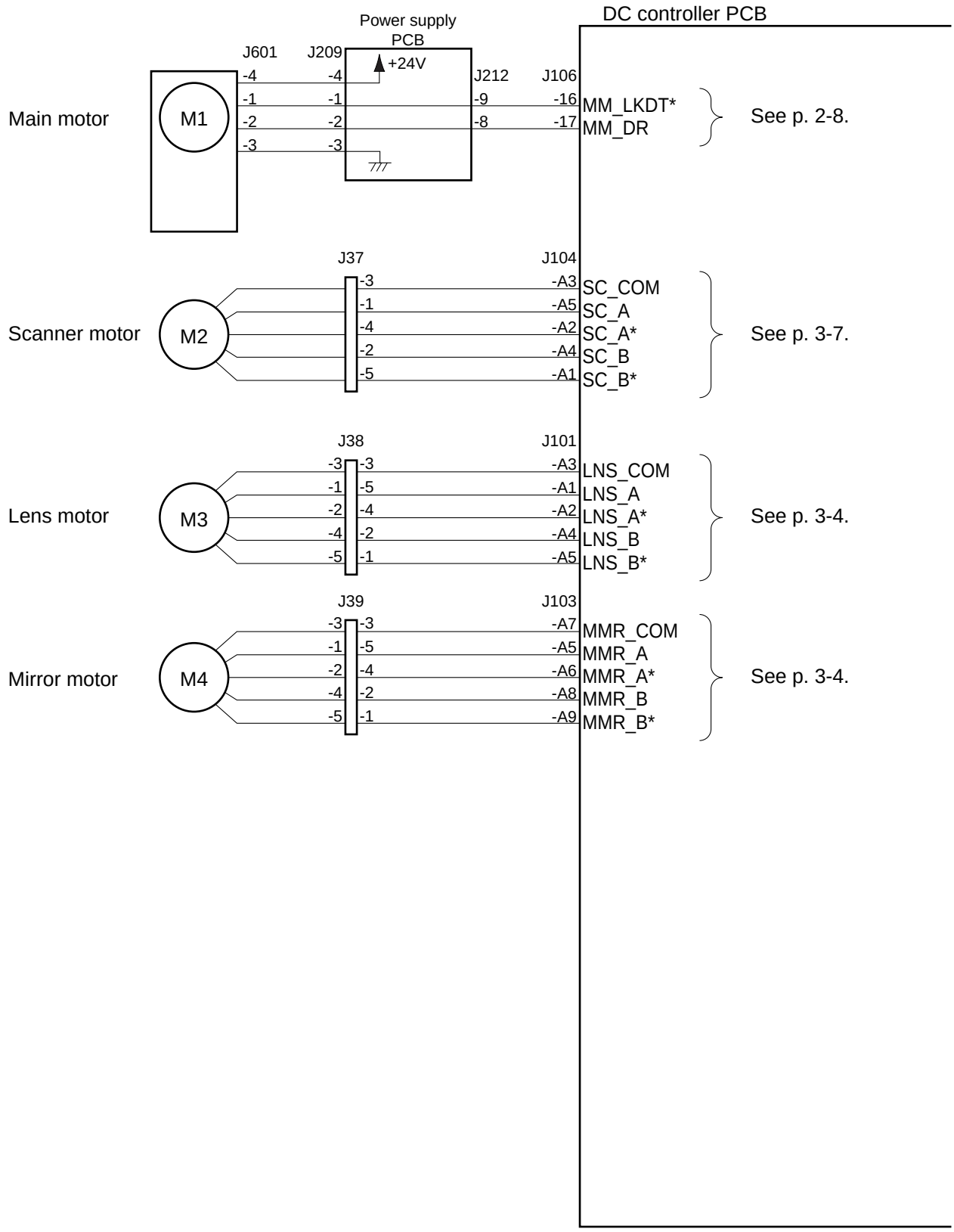

Figure 2-110

COPYRIGHT © 1998 CANON INC.

3. Outputs from the DC Controller (3/4)

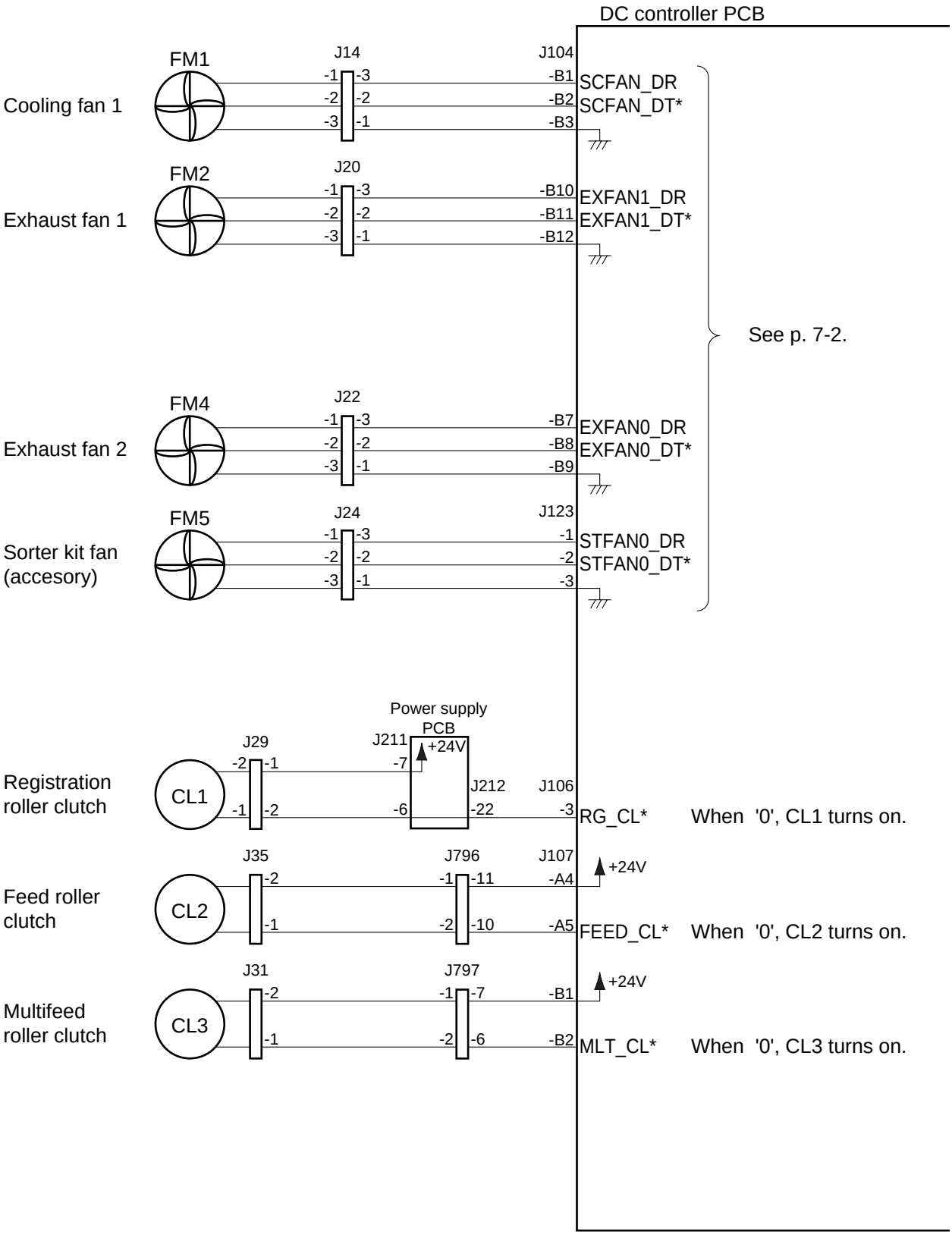

Figure 2-111

COPYRIGHT © 1998 CANON INC.
CANON NP7161/NP7160 REV.0 AUG. 1998 PRINTED IN JAPAN (IMPRIME AU JAPON)

4. Outputs from the DC Controller (4/4)

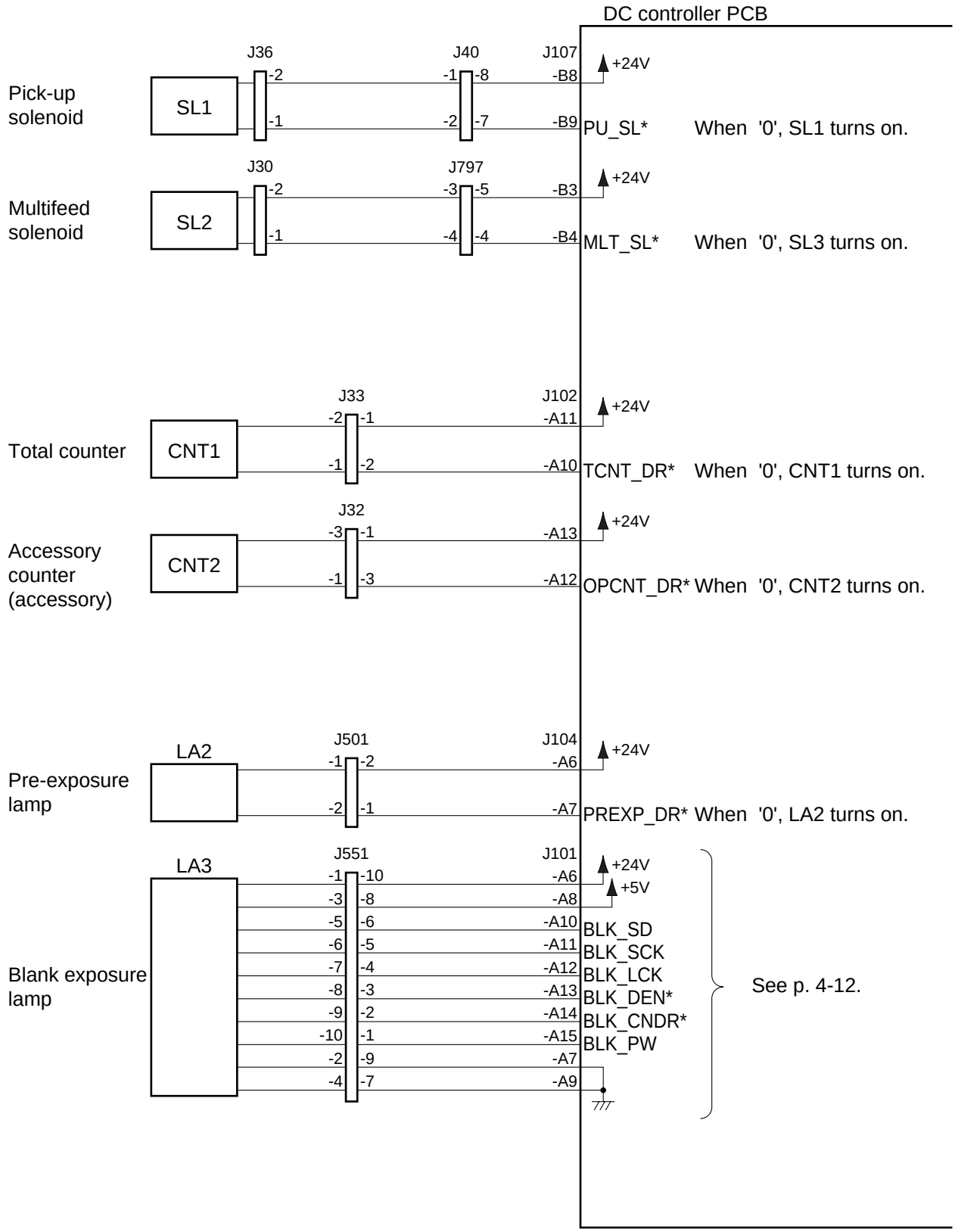

Figure 2-112

COPYRIGHT © 1998 CANON INC.

G. Inputs to and Outputs from Accessories (1/1)

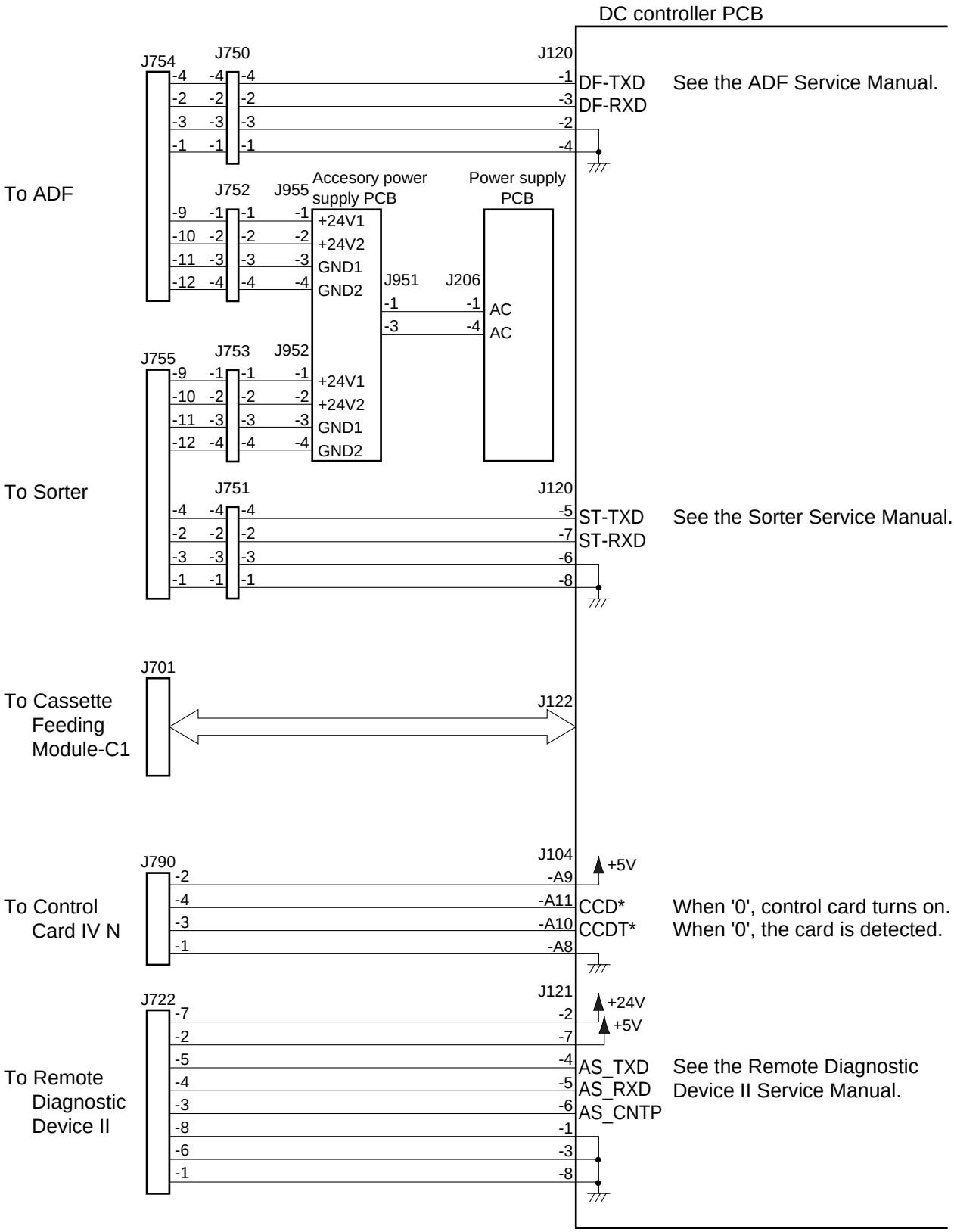

Figure 2-113

COPYRIGHT © 1998 CANON INC.

CHAPTER 3

EXPOSURE SYSTEM

This chapter discusses the principles of operation used for the copier's lens drive unit and scanner drive unit. It also explains the timing at which these drive units are operated, and shows how they may be disassembled/assembled and adjusted.

I. OUTLINE OF OPERATION 3-1
A. Changing the Reproduction Ratio 3-1
II. LENS DRIVE SYSTEM 3-3
A. Driving the Lens 3-3
III. SCANNER DRIVE SYSTEM 3-6
A. Outline 3-6
B. Scanner Motor Control Circuit 3-7
C. Relationship between Scanner Sensor and Signals 3-7
D. Basic Sequence of Operations (scanner) 3-8
E. Scanner Movement in Page Separation Mode 3-9
IV. OTHERS 3-10
A. Detecting the Original Size 3-10
V. DISASSEMBLY/ASSEMBLY 3-11
A. Scanner Drive Assembly 3-12
B. Lens Drive Assembly 3-18

COPYRIGHT © 1998 CANON INC. CANON NP7161/NP7160 REV.0 AUG. 1998 PRINTED IN JAPAN (IMPRIME AU JAPON)

I. OUTLINE OF OPERATION

A. Changing the Reproduction Ratio

The reproduction ratio in the axial direction of the photosensitive drum is varied by the lens drive system and the mirror drive system, and that in the peripheral direction of the photosensitive drum is changed by the scanner drive system.

The lens drive system uses a lens array and, as shown in Figure 3-101, the lens position and the optical length are varied to change the reproduction ratio in the axial direction of the photosensitive drum.

The optical length is varied, as shown in Figure 3-102, by changing the location of the No. 4/ No. 5 mirror unit.

The scanner drive system moves the No. 1 mirror relatively faster (in Reduce) or slower (in Enlarge) than the photosensitive drum (peripheral speed) to change the reproduction ratio in the peripheral direction of the photosensitive drum.

Note:

1. In Direct, the speed of the No. 1 mirror is made identical to the peripheral speed of the photosensitive drum.
2. In both Reduce and Enlarge, the optical length is longer than in Direct.

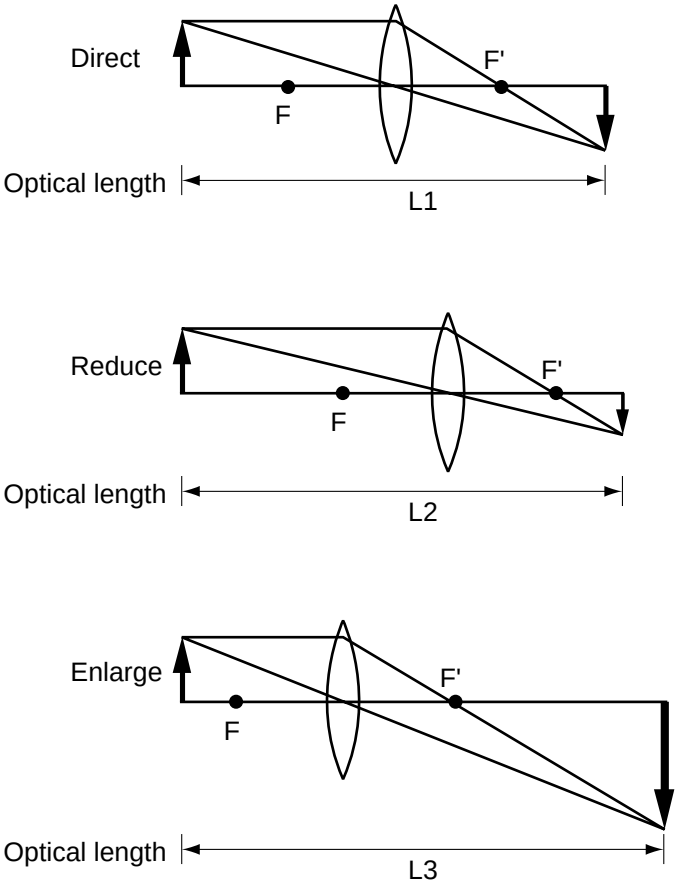

Figure 3-101

COPYRIGHT © 1998 CANON INC.

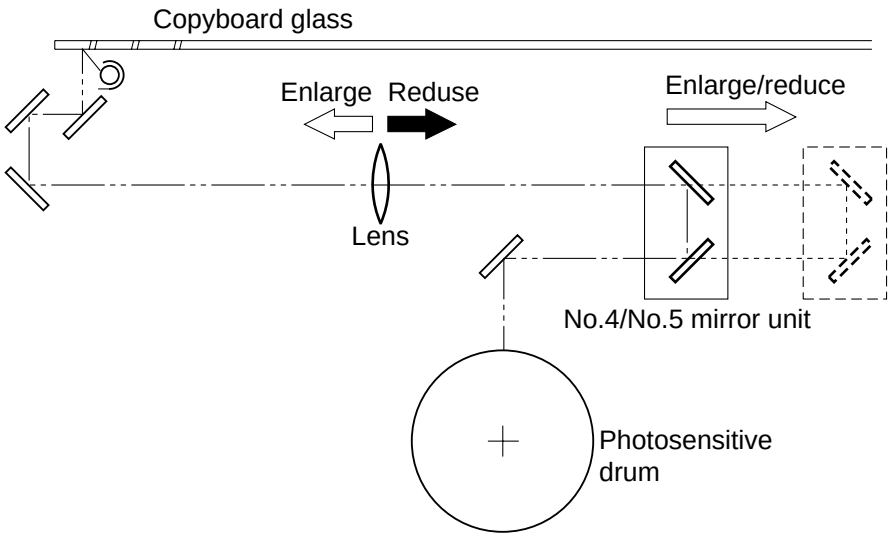

Figure 3-102

COPYRIGHT © 1998 CANON INC.
CANON NP7161/NP7160 REV.0 AUG. 1998 PRINTED IN JAPAN (IMPRIME AU JAPON)

II. LENS DRIVE SYSTEM

A. Driving the Lens

1. Outline

The lens is driven by the lens motor (M3) and the mirror motor (M4).

As shown in Figure 3-201, when the lens motor rotates in normal direction, the lens moves in the direction of Enlarge by the drive coming through gears and drive belt.

At this time, the No. 4/No. 5 mirror unit moves by the drive coming from the mirror motor in the direction of Enlarge/Reduce according to how much the lens moves (reproduction ratio), thereby varying the optical length.

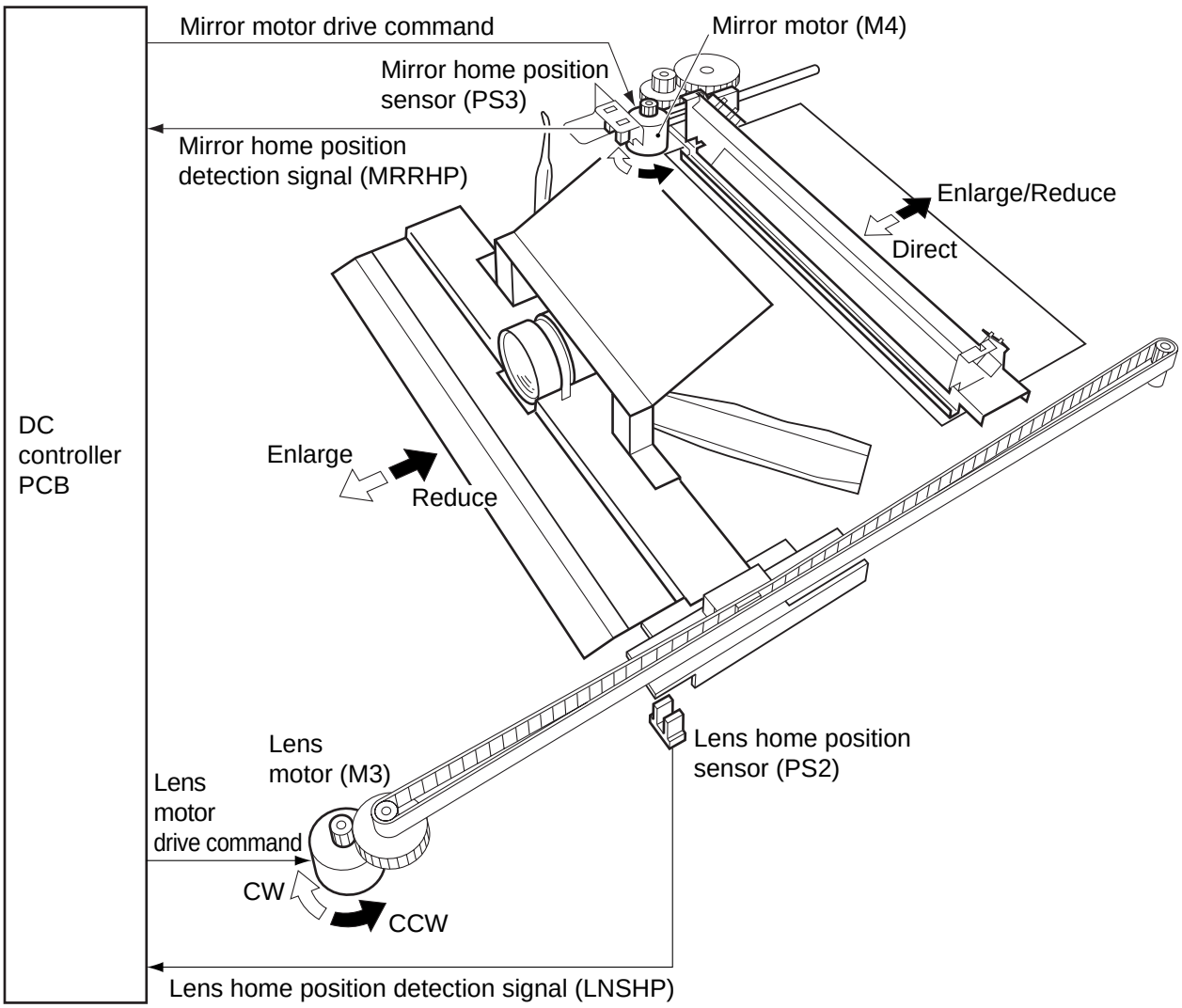

Figure 3-201

2. Motor Control Circuit

The lens motor (M3) and the mirror motor (M4) are 4-phase stepping motors, and are controlled by the motor drive power supply signal (COM) and four drive pulse signals (A, B, A*, B*) generated by the DC controller PCB.

The direction of rotation of the motor is switched by changing the timing at which the four drive pulse signals (A, B, A*, B*) are generated.

The motor drive power supply signal (COM) is used to supply +24 V when rotating each motor. It is used to provide +5 V when the motors are at rest, thereby ensuring that the lens and the No. 4/No. 5 mirror unit remain still against vibration.

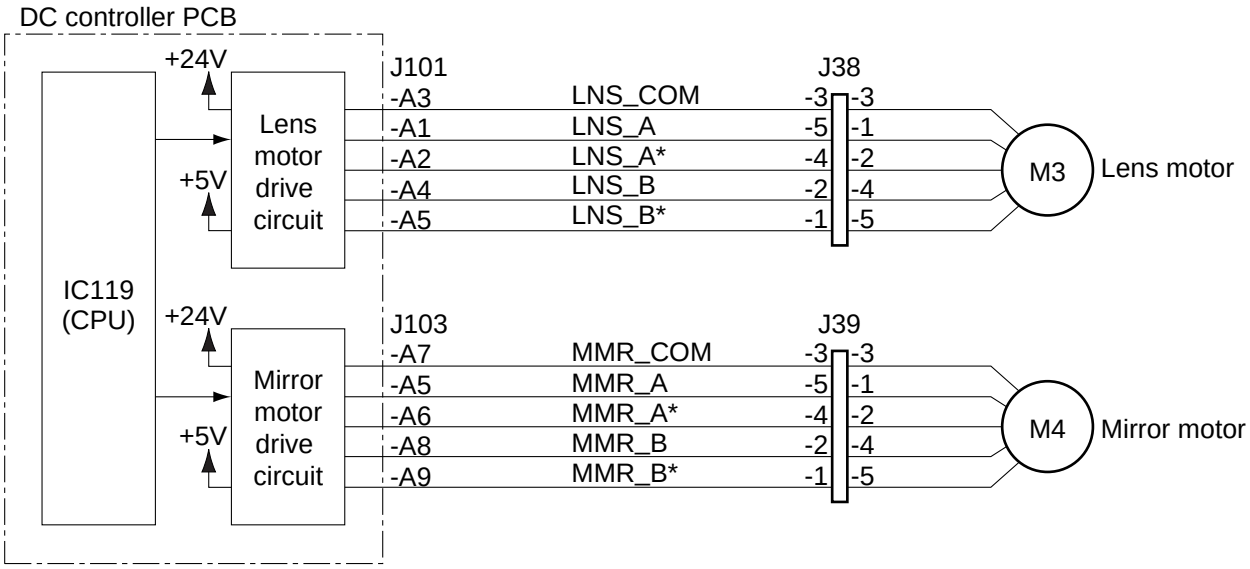

Figure 3-202

COPYRIGHT © 1998 CANON INC.
CANON NP7161/NP7160 REV.0 AUG. 1998 PRINTED IN JAPAN (IMPRIME AU JAPON)

3. Moving the Lens

The lens and the No. 4/ No. 5 mirror unit are moved with reference to the points at which the lens home position sensor (PS2) and the mirror home position sensor (PS3) turn on.

The number of pulses (indicating the positions of the lens and the No. 4/ No. 5 mirror) applied to each motor is stored in memory by the microprocessor on the DC controller PCB. When the lens and the No. 4/ No. 5 mirror unit need to be moved, the appropriate number of pulses that suits the selected reproduction ratio is generated.

When the lens and the No. 4/ No. 5 mirror unit need to be moved in the direction of reduction (e.g., from Direct to Reduce), each motor is rotated in reverse first to move the lens and the No. 4/ No. 5 mirror unit past the position found for the selected reproduction ratio. Thereafter, the motors are rotated in normal direction so as to move the lens and the No. 4/ No. 5 mirror unit to their appropriate positions. Ending the motor rotation when they are rotating in normal direction ensures accurate positioning of the lens and the No. 4/ No. 5 mirror unit.

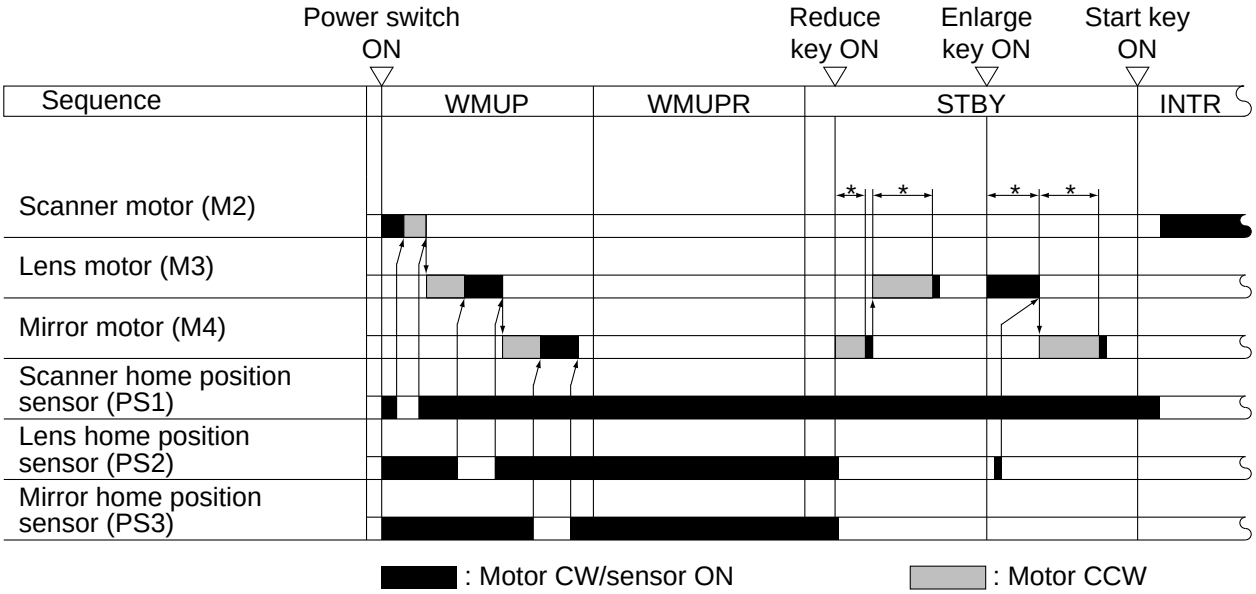

Figure 3-203

The copier enables adjustment of the lens or the No. 4/No. 5 mirror unit home position in service mode.

COPYRIGHT © 1998 CANON INC.

III. SCANNER DRIVE SYSTEM

A. Outline

The scanner is driven by the scanner motor (M2)

As shown in Figure 3-301, when the scanner motor rotates in reverse direction, the scanner moves forward by the drive coming through the gears, drive belt, and cable. The scanner motor is rotated in the opposite direction to move the scanner in reverse.

The speed of rotation of the scanner motor when the scanner is moved forward is varied according to the selected reproduction ratio. The speed when the scanner is moved in reverse, however, is the same regardless of the selected reproduction ratio—it is about 2.5 times the speed used in Direct when the scanner is moved forward.

The distance over which the scanner is moved varies according to the length of copy paper and the selected reproduction ratio.

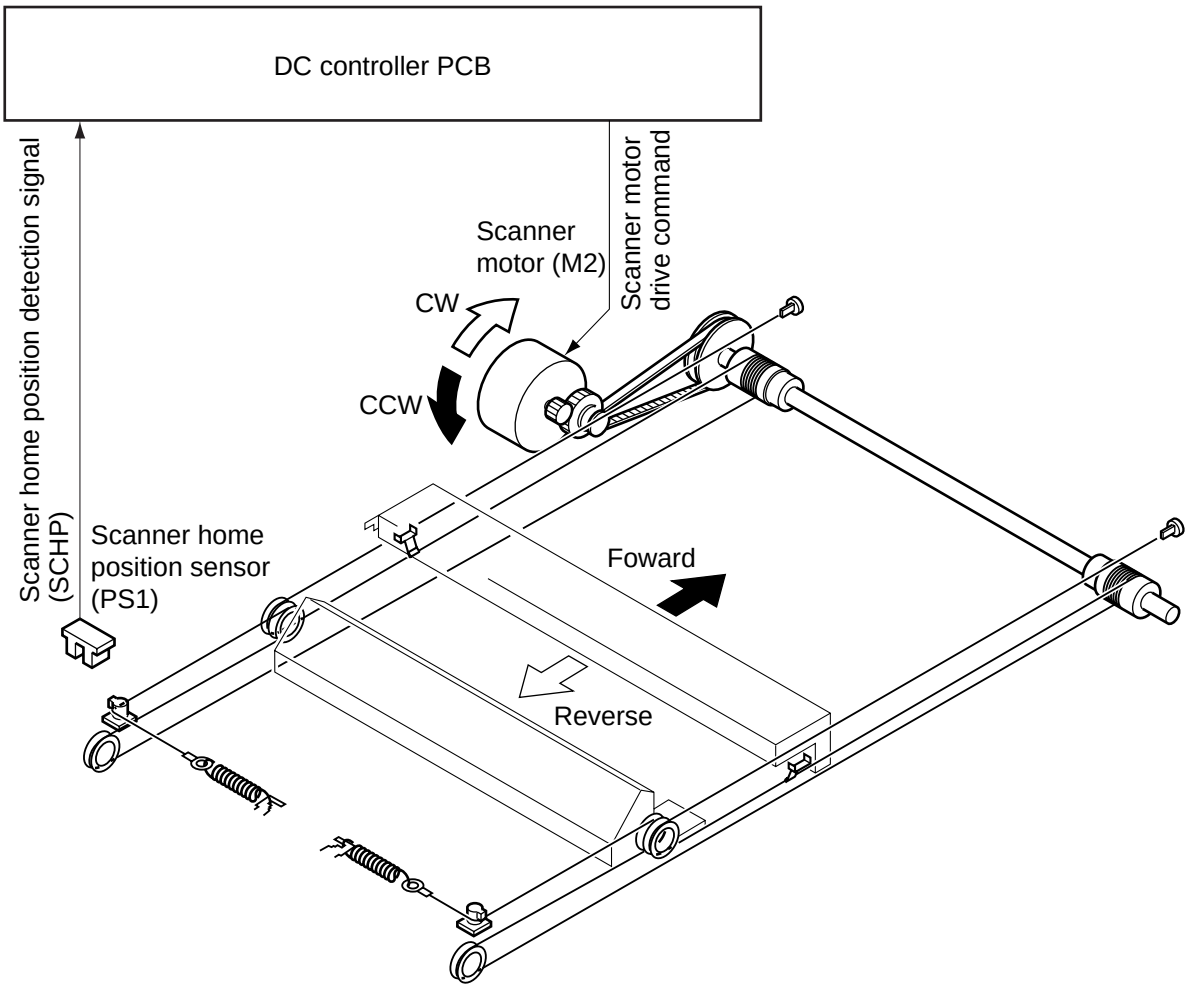

Figure 3-301

COPYRIGHT © 1998 CANON INC.
CANON NP7161/NP7160 REV.0 AUG. 1998 PRINTED IN JAPAN (IMPRIME AU JAPON)

B. Scanner Motor Control Circuit

The scanner motor (M2) is a 4-phase stepping motor, and is controlled by four pulse signals (SC_A, SC_B, SC_A*, SC_B*) generated by the DC controller PCB.

The scanner motor is turned on/off and its direction of rotation are controlled by changing the timing at which these four pulse signals are generated. The speed of rotation, on the other hand, is controlled by switching the current supplied to the scanner motor.

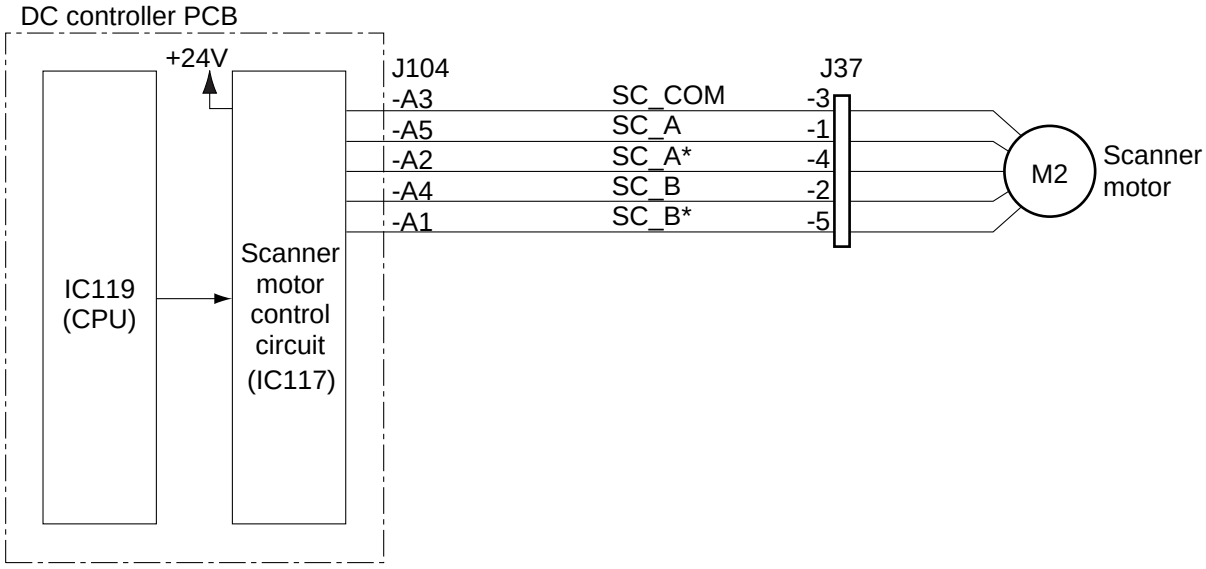

Figure 3-302

C. Relationship between Scanner Sensor and Signals

Sensor	Signal	Scanner		Description
		Foward	Reverse	
Scanner home position sensor (PS1)	SCHP			• The scanner is at home position.
			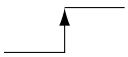	• The scanner has reached home position.

Table 3-301

COPYRIGHT © 1998 CANON INC.

D. Basic Sequence of Operations (scanner)

The scanner is moved forward over a distance determined by the microprocessor based on the selected paper size, reproduction ratio, and copying mode.

The microprocessor computes the dimensions of the original in reference to the selected paper size and reproduction ration to determine how much the scanner should be moved forward.

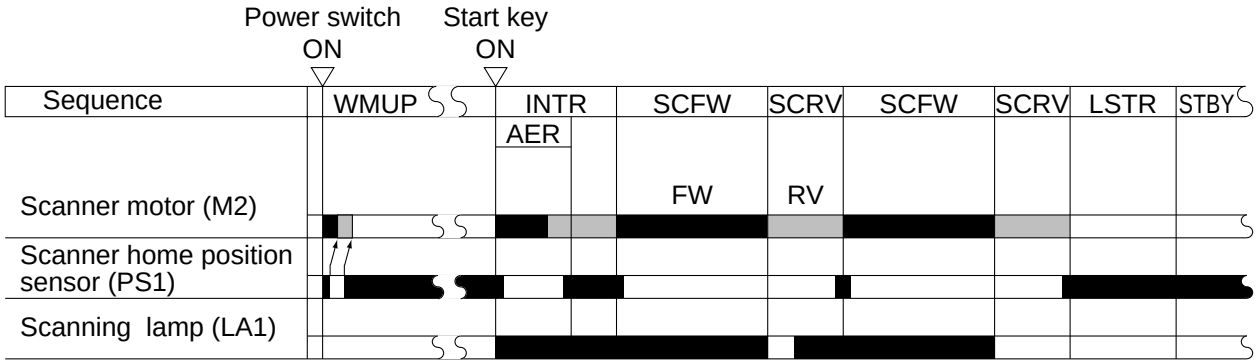

Figure 3-303

COPYRIGHT © 1998 CANON INC.

E. Scanner Movement in Page Separation Mode

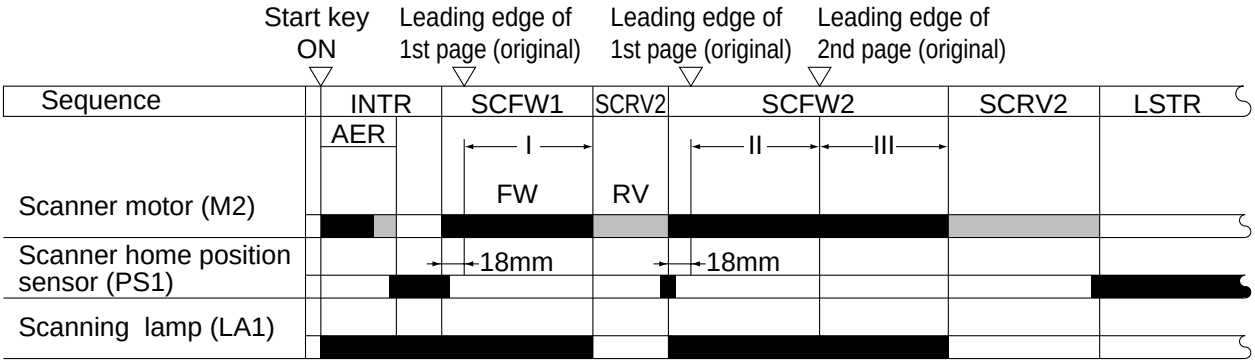

Figure 3-304

I, II, and III shown in Figure 3-304 are controlled by the microprocessor on the DC controller PCB with reference to the wait position of the scanner.

The length from wait position to the leading edge is 18 mm. The microprocessor determines how much the scanner should be moved (including the distance to the leading edge) according to the selected reproduction ratio and the original size or cassette size.

I, II : The distance over which the scanner is moved forward for the 1st page is determined according to the selected reproduction ratio and the original size or cassette size.

III : The distance over which the scanner is moved forward is determined as follows: the microprocessor divides the detected original size by 2, and assumes the result of the division to be the middle of the original (assuming the middle to be the leading edge of the 2nd page).

If original size detection is not performed, the microprocessor uses the cassette size when determining the distance over which the scanner should be moved.

Reference:

The copier does not require paper size registration for the multifeeder. For this reason, it cancels Page Separate mode if the Start key is pressed after selecting the multifeeder.

COPYRIGHT © 1998 CANON INC.

IV. OTHERS

A. Detecting the Original Size

1. Outline

The NP7161 is equipped with auto paper selection and auto reproduction selection functions, and these functions require identification of the size of originals.

To enable identification, the copier uses the following:

- original size detection by the ADF (NP7161)

2. Detection of the Original Size by the ADF

The size of originals is detected when originals are fed by the ADF. (For details, see the ADF Service Manual.)

COPYRIGHT © 1998 CANON INC.
CANON NP7161/NP7160 REV.0 AUG. 1998 PRINTED IN JAPAN (IMPRIME AU JAPON)

V. DISASSEMBLY/ASSEMBLY

The copier may be disassembled and assembled as shown here. Pay attention to the copier's mechanical characteristics along with the steps for disassembly/assembly.

Important:

1. Turn off the power and disconnect the power plug to ensure safety whenever disassembling/assembling the copier.
2. Unless otherwise noted, assemble the parts by reversing the steps used to disassemble them.
3. Identify the screws by type (length, diameter) to avoid use in the wrong location.
4. Use a washer where needed. The mounting screws used for the grounding wire and varistor come with a washer to ensure electric continuity. Do not forget to use these washers.
5. As a rule, do not operate the copier with any of its parts removed.

COPYRIGHT © 1998 CANON INC.

A. Scanner Drive Assembly

1. Removing the Scanner Motor

1) Remove the rear upper cover.
2) Disconnect the connector [1] and the two mounting screws [2].

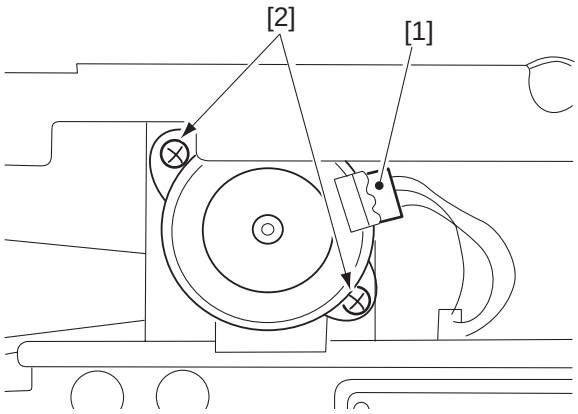

Figure 3-501

3) Slide the scanner motor [3] to the right to detach from the motor mount; then, move it to the cut-off [A] to remove.

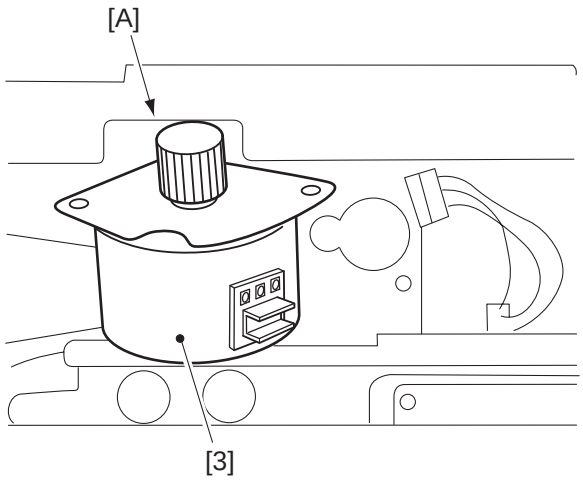

Figure 3-502

COPYRIGHT © 1998 CANON INC.

2. Removing the Scanner Drive Cable

1) In standby state, press the Reduce key so that the lens and the No.4 /No.5 mirror unit move to 70% reproduction position.
2) Turn off the power switch, and disconnect the power plug.

Caution:
Whenever you need to perform disassembly/assembly work, be sure to turn it off and disconnect its power plug.

3) Remove the lens hood. (See p. 3-20.)
4) Remove the scanner motor. (See p. 3-12.)
5) Remove the control panel (See p. 7-13.)
6) Remove the upper left cover. (See p.7-11.)
7) Remove the upper right cover. (See p.7-10.)
8) Detach the lock support [1] from the connector base [2].
9) Remove the two mounting screws [3], and pull out the connector base [2].

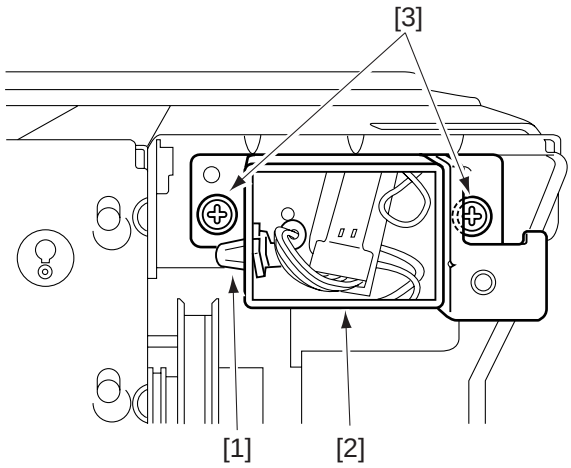

Figure 3-503

COPYRIGHT © 1998 CANON INC.

10) Remove the three mounting screws [4], and detach the motor base [5] and the timing belt [6].

Caution:
When detaching the motor base, be sure to mark its position at its four corners. When mounting it, on the other hand, be sure to refer to these markings.

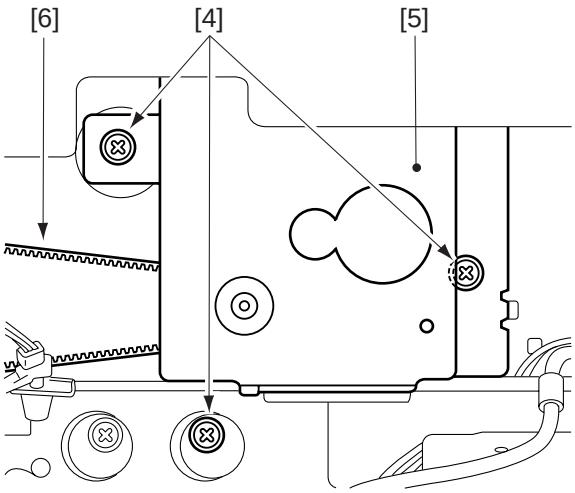

Figure 3-504

11) Holding the bent [A], pull the scanner until it reaches the hole [B]; then, remove the two screws [7].

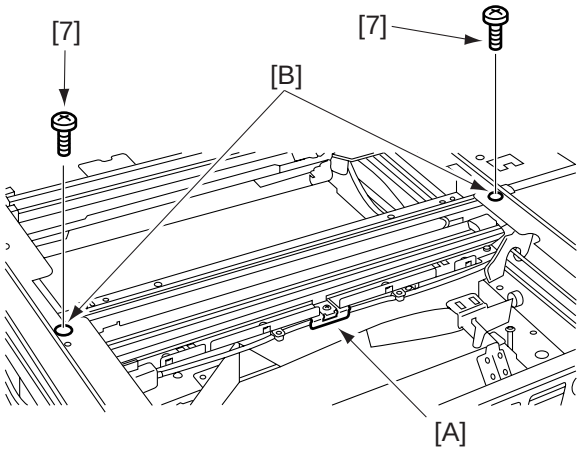

Figure 3-505

12) Remove the two tension springs [8], and detach the scanner drive cable (front) [9] and the scanner drive cable (rear) [10].

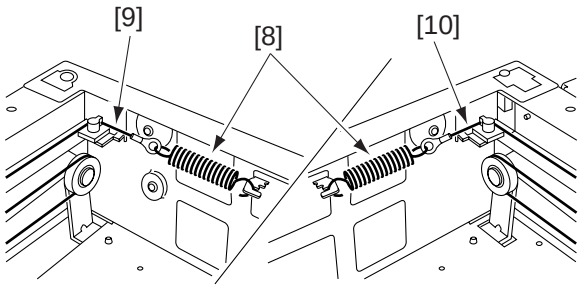

Figure 3-506

COPYRIGHT © 1998 CANON INC.

3. Routing the Scanner Drive Cable

Route the scanner drive cable following the sequence indicated in Figure 3-507, i.e., [1] through [7].

Be sure to adjust the mirror position and the tension as indicated later after routing the scanner drive cable.

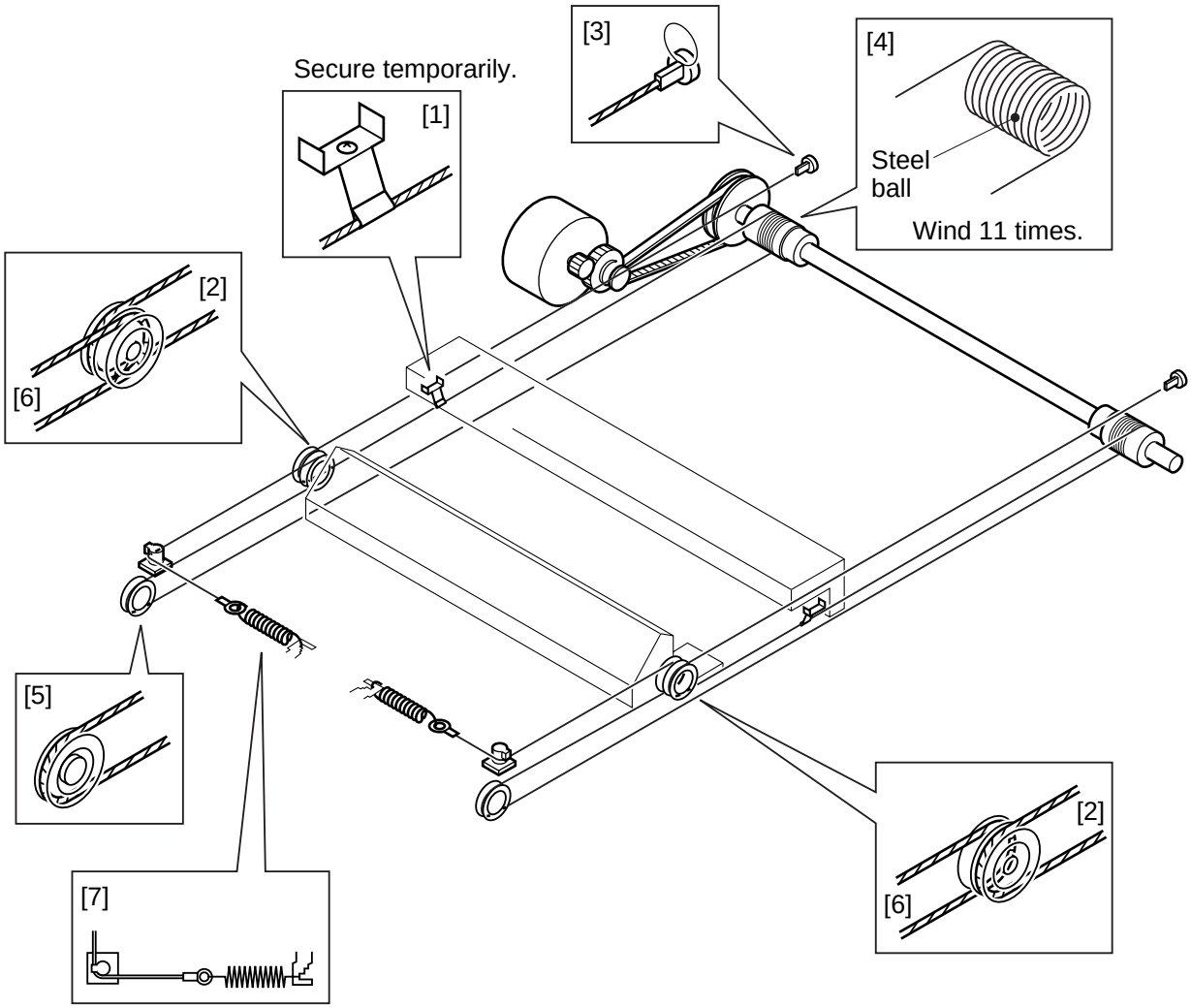

Figure 3-507

4. Adjusting the Position of the Mirror

Be sure to adjust the position of the mirror as follows after you have mounted the scanner drive cable.

1) Keep the mirror positioning tool nearby. Arrange the mirror positioning tool (FY9-3009-050) as shown to adapt it to the copier.

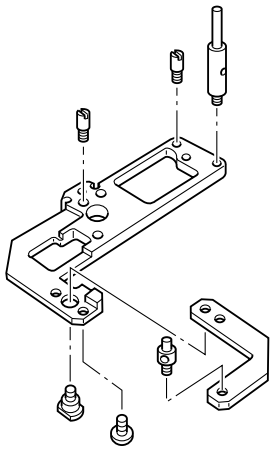

Figure 3-508a (Rear)

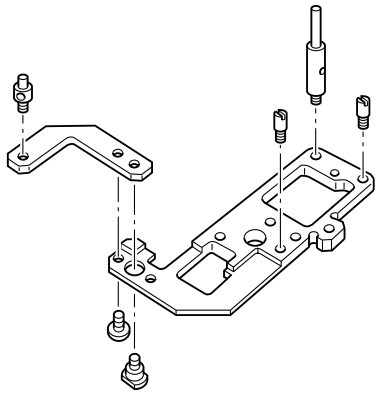

Figure 3-508b (Front)

2) Fit the mirror positioning tool [1] to the No. 1 mirror base and the No. 2 mirror base (both front and rear).
3) Tighten the mounting screw [2] on the cable metal fixing of the No. 1 mirror base (both front and rear).

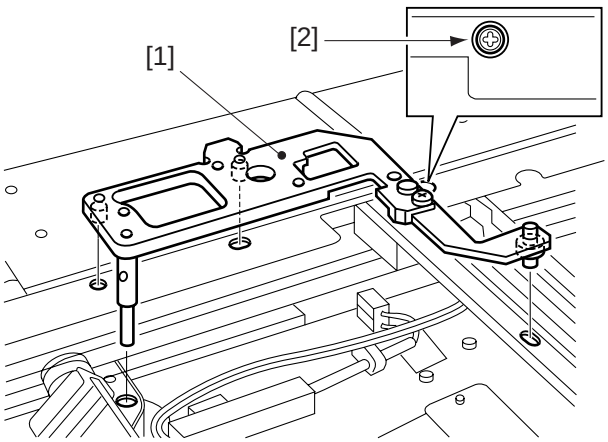

Figure 3-509a (Rear)

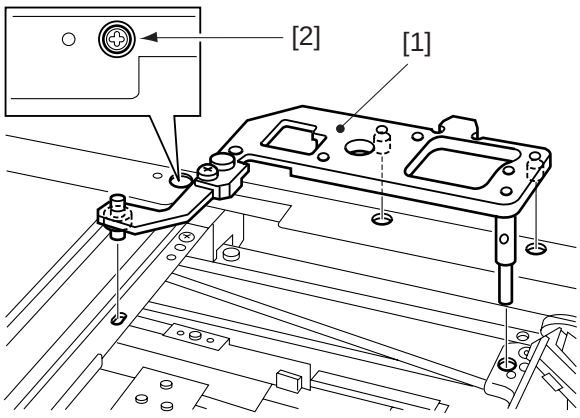

Figure 3-509b (Front)

4) Detach the mirror positioning tool.

COPYRIGHT © 1998 CANON INC.

5. Adjusting the Tension of the Scanner Drive Cable

Be sure to adjust the tension as follows after routing the scanner drive cable.

1) Move the scanner to home position.
2) Pull the center of the scanner drive cable with a spring gauge about 10 mm. At this time, adjust the position [A] of the tension spring [1] so that the reading of the spring gauge is 95 ±15 g.

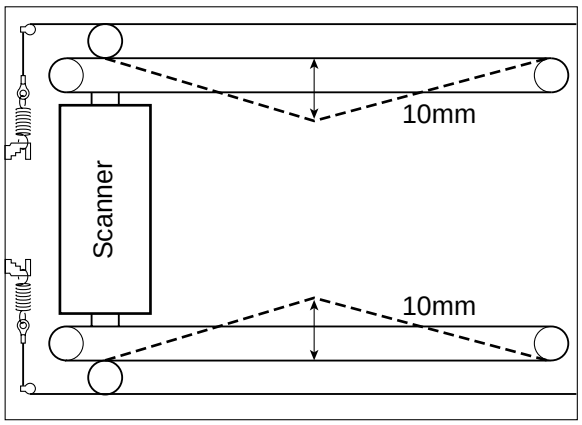

Figure 3-510

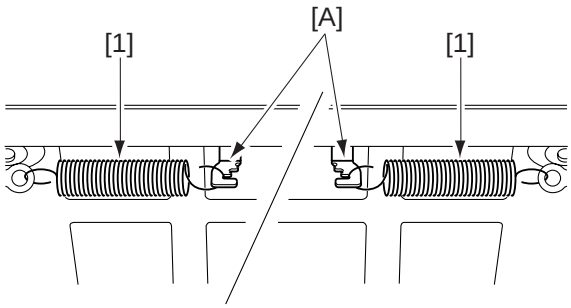

Figure 3-511

COPYRIGHT © 1998 CANON INC.

B. Lens Drive Assembly

1. Removing the Lens Drive Motor

1) Remove the copyboard glass. (See p.7-14)
2) Holding the bend [A], slide out the scanner as far as the cut-off [B].

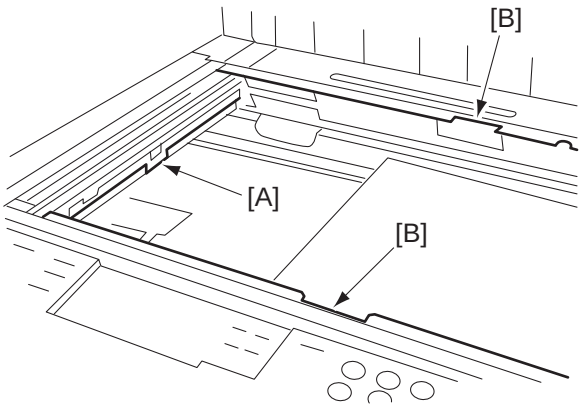

Figure 3-512

3) Remove the inside cover and the delivery upper cover. (See p.7-11)
4) Disconnect the connector [1].

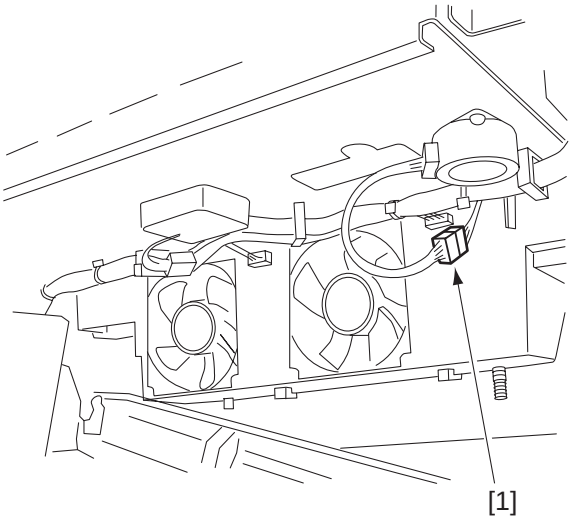

Figure 3-513

5) Remove the two screws [2], and remove the lens motor [3].

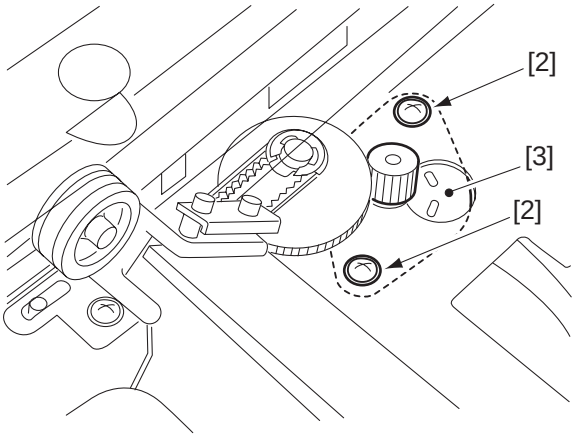

Figure 3-514

COPYRIGHT © 1998 CANON INC.
CANON NP7161/NP7160 REV.0 AUG. 1998 PRINTED IN JAPAN (IMPRIME AU JAPON)

2. Removing the Mirror Motor

1) While the copier is in standby state, press the Enlarge key to move the lens and the No. 4/No. 5 mirror unit to 200% position.
2) Turn off the power switch, and disconnect the power plug.

Caution:

Whenever you are disassembling/ assembling the copier, be sure to turn off the power switch and disconnect the power plug.

3) Remove the copyboard glass. (See p.7-14)
4) Remove the developing assembly. (See p.4-37)
5) Remove the drum unit. (See p.4-28)
6) Remove the upper right cover. (See p.7-10)
7) Disconnect the connector [1].

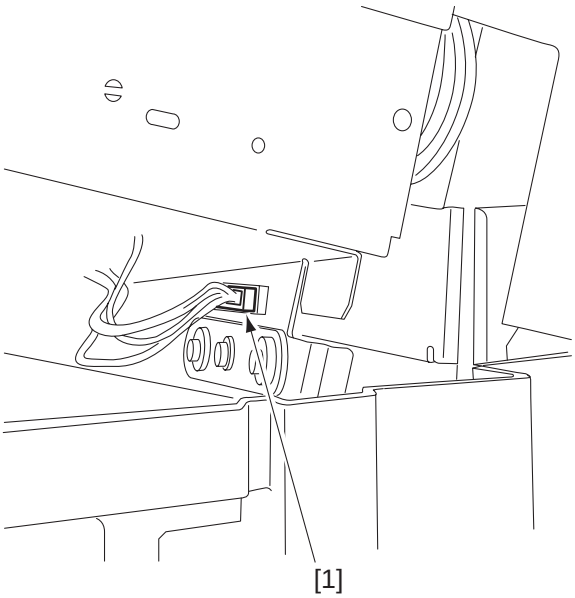

Figure 3-515

COPYRIGHT © 1998 CANON INC.

8) Remove the two mounting screws [2], and remove the lens hood [3].

Caution:
When mounting the lens hood, take care not to trap the wire.

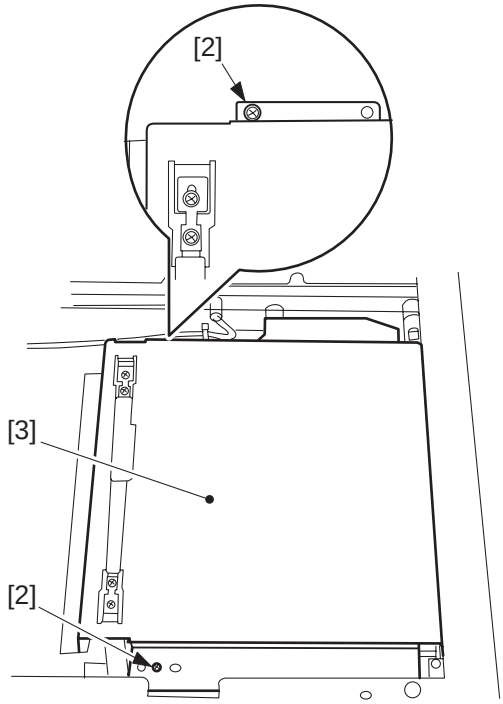

Figure 3-516

9) Remove the two mounting screws [4], and remove the mirror motor [5].

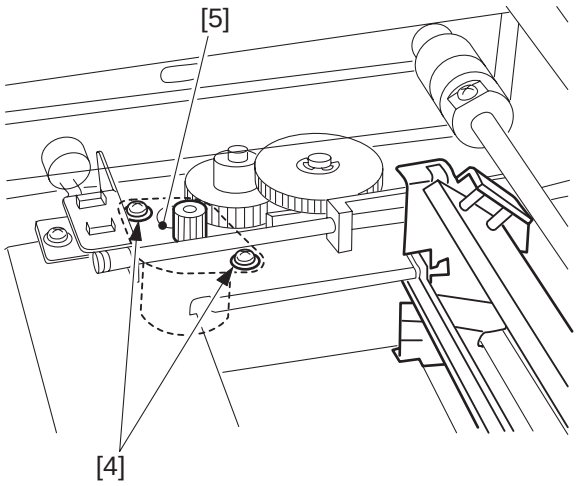

Figure 3-517

COPYRIGHT © 1998 CANON INC.

CHAPTER 4

IMAGE FORMATION SYSTEM

This chapter discusses the principles of how images are formed. It also explains the timing at which the various units involved in image formation are operated, and shows how they may be disassembled/assembled and adjusted.

I. OUTLINE OF THE PROCESSES 4-1
- A. Outline 4-1
- B. Basic Sequence of Operations (image formation system) 4-2
- C. Controlling the Intensity of the Scanning Lamp 4-3
- D. Controlling the Primary/Transfer Bias .. 4-6
- E. Controlling the Developing/Separation Static Eliminator Bias 4-7
- F. Controlling the Blank Exposure Lamp ... 4-12

II. DEVELOPING ASSEMBLY/DRUM CLEANER ASSEMBLY 4-14
- A. Outline 4-14
- B. Detecting and Controlling the Level of Toner 4-16
- C. Monitoring the Waste Toner Feeding Screw 4-17
- D. Monitoring the Waste Toner Box 4-18
- E. Control by the Cleaner Thermistor ... 4-20
- F. Auto Density Adjustment (AE) 4-21

III. DISASSEMBLY/ASSEMBLY 4-23
- A. Scanning Lamp Assembly 4-24
- B. Exposure Assembly 4-26
- C. Drum Unit 4-28
- D. Primary Charging Assembly 4-30
- E. Transfer Charging Assembly 4-31
- F. Charging Wire 4-32
- G. Developing Assembly 4-37

COPYRIGHT © 1998 CANON INC. CANON NP7161/NP7160 REV.0 AUG. 1998 PRINTED IN JAPAN (IMPRIME AU JAPON)

I. OUTLINE OF THE PROCESSES

A. Outline

Figure 4-101 shows the copier's basic construction in reference to image formation. Image formation consists of the following functions:

- Scanning lamp control
- Primary corona current control
- Transfer control current control
- Separation static eliminator bias control
- Developing bias control
- Blank exposure lamp control

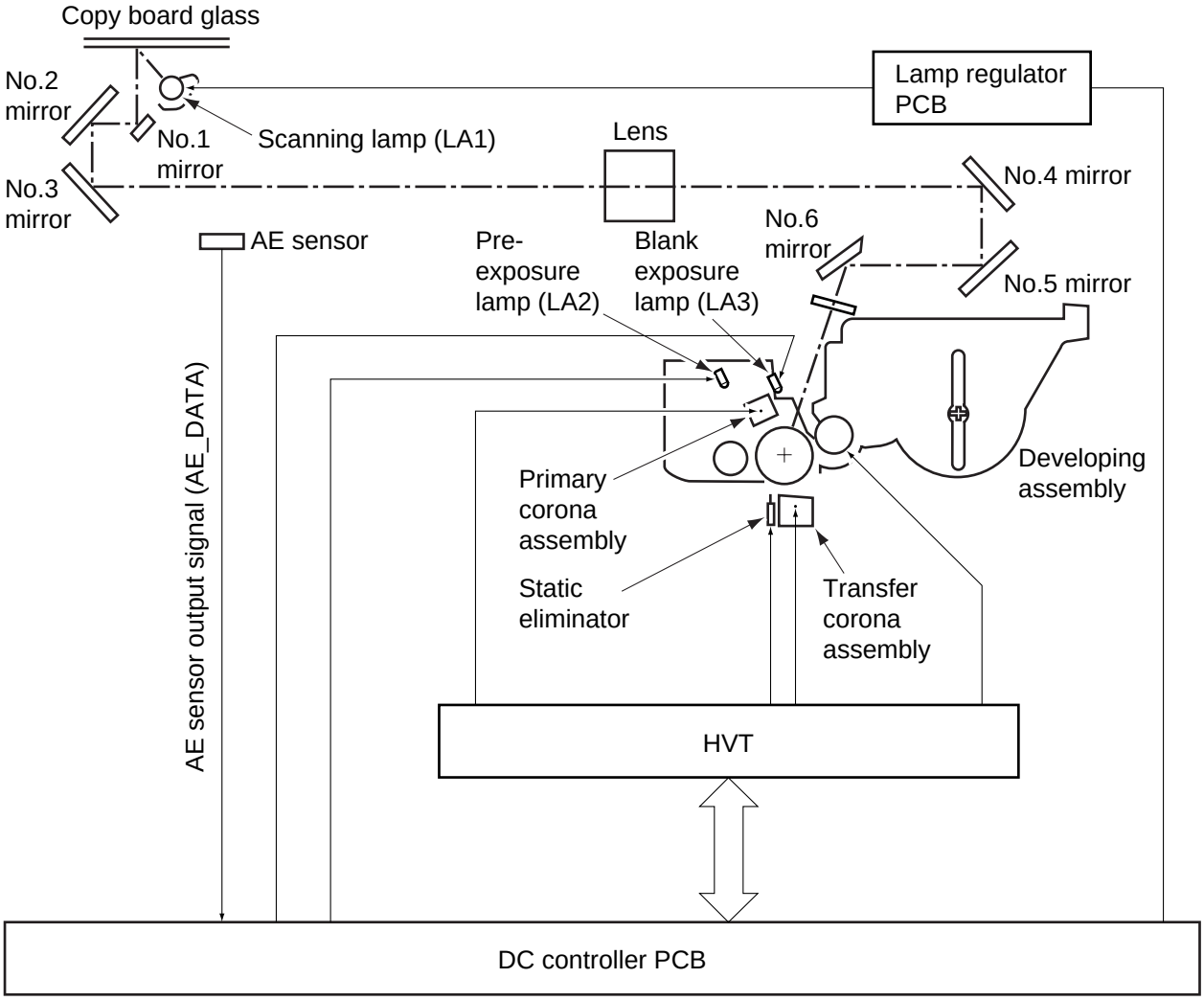

Figure 4-101

B. Basic Sequence of Operations (image formation system)

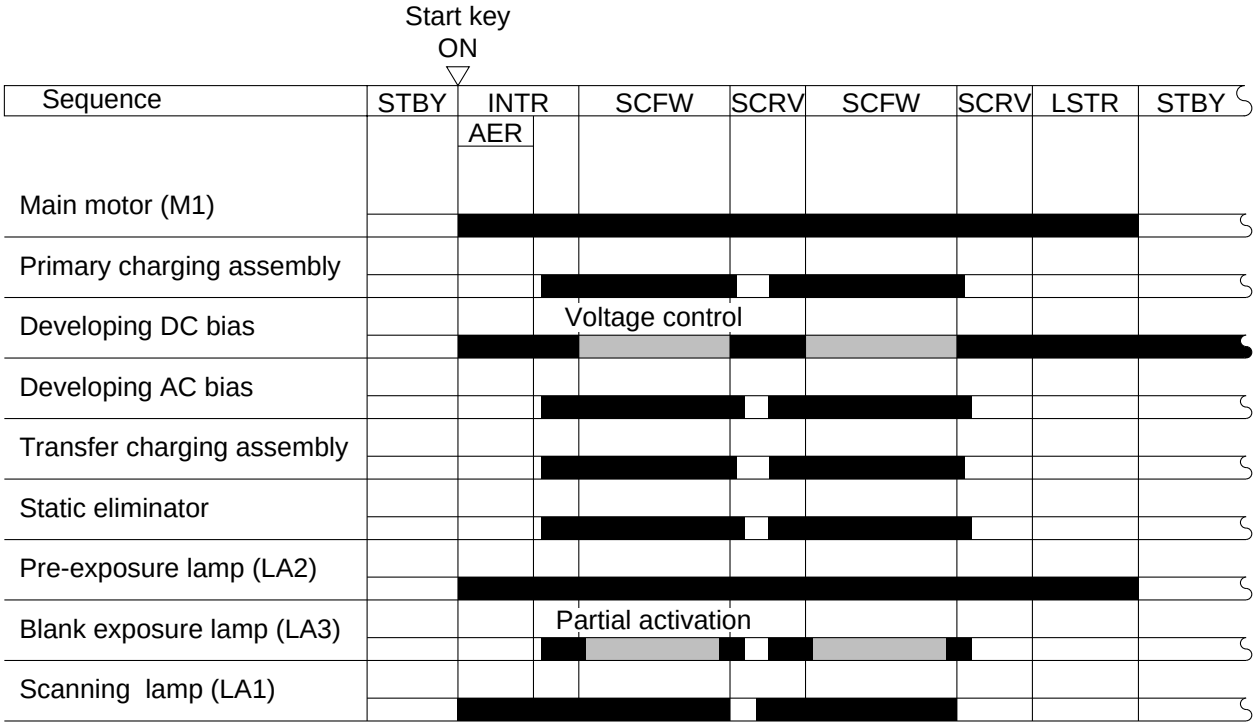

Figure 4-102

COPYRIGHT © 1998 CANON INC.
CANON NP7161/NP7160 REV.0 AUG. 1998 PRINTED IN JAPAN (IMPRIME AU JAPON)

C. Controlling the Intensity of the Scanning Lamp

1. Outline

Figure 4-103 shows the circuit used to control the intensity of the scanning lamp, and the circuit has the following functions:

1. Turning on/off the scanning lamp
2. Controlling the intensity of the scanning lamp
   - controlling the light to a specific intensity against fluctuations in power supply voltage

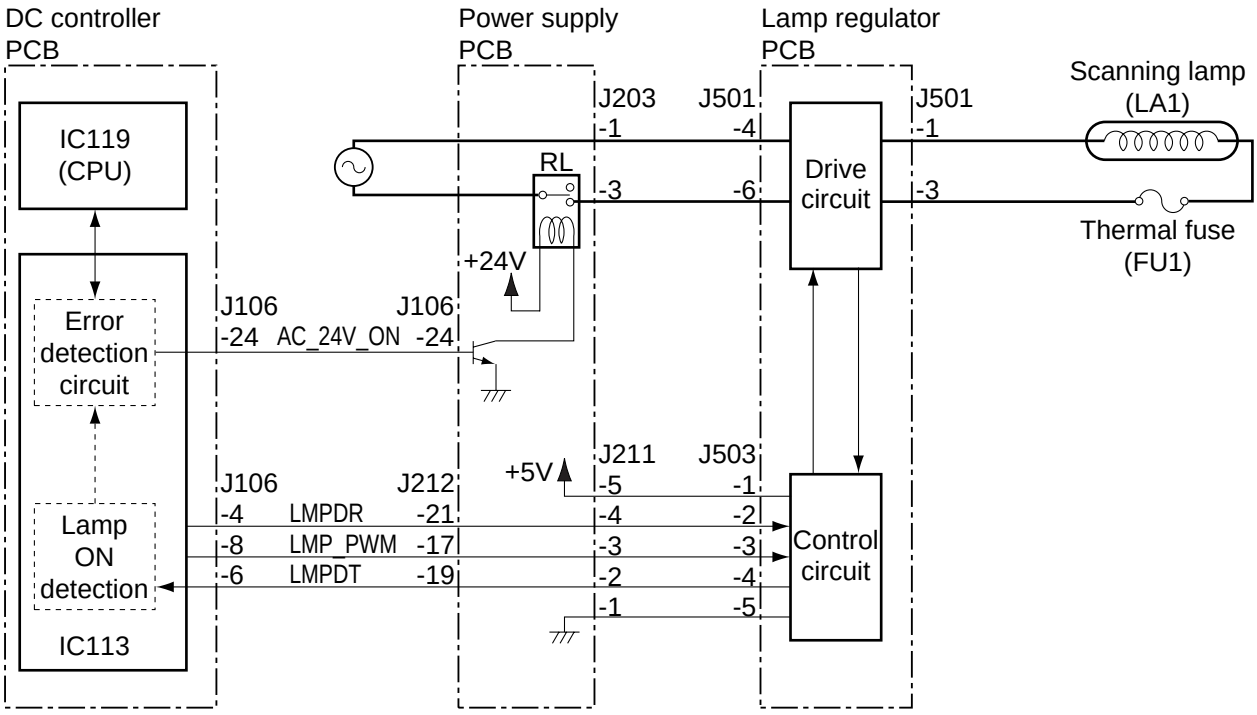

Figure 4-103

2. Operation

a. Turning On/Off the Scanning Lamp

When the scanning lamp drive signal (LMPDR) is '0', the output of the control circuit goes '0', keeping the drive circuit from turning on and therefore not supplying the scanning lamp (LA1) with AC power.

When LMPDR is '1', the output of the control circuit will be '1', turning on the drive circuit and thereby supplying the scanning lamp (LA1) with AC power.

b. Controlling the Intensity of the Scanning Lamp

The intensity of the scanning lamp is increased/decreased by controlling the voltage of the power supplied to the scanning lamp according to the level of the pulse width modulation signal (LMP_PWM) from the DC controller PCB.

LMP_PWM varies the pulse duty between 10% and 90% to suit the selected reproduction ratio so as to control the voltage of the power supplied to the scanning lamp as shown in Table 4-101 (actual value).

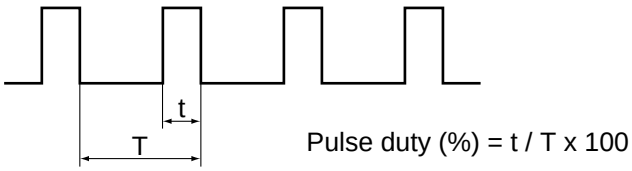

Figure 4-104

Power supply	Pulse duty	DC output
120V	10 to 90%	45 to 80V
230V	10 to 90%	98 to 175V

Table 4-101

c. Detecting the Activation of the Scanning Lamp

The control circuit on the lamp regulator PCB generates the drive detection signal (LMPDT) at all times while the scanning lamp remains on, and sends the signal to the lamp activation detection IC (IC113) on the DC controller PCB.

If the scanning lamp remains on for 21 sec or more, the error detection circuit will cause the AC_24V_ON signal to go '0', thereby cutting the supply of AC power to the lamp regulator PCB.

If an error is identified in the scanning lamp, the DC controller PCB will cut the AC power to the lamp regulator and, at the same time, will indicate 'E220' on the control panel.

COPYRIGHT © 1998 CANON INC.

3. Protection Mechanisms

To prevent malfunction of the scanning lamp (LA1), the copier is equipped with a fuse (FU1).

If the temperature around the scanning lamp increases abnormally (about 141°C or more) because of a short circuit or the like, the thermal fuse (FU1) will melt to cut the power to the scanning lamp.

COPYRIGHT © 1998 CANON INC.

D. Controlling the Primary/Transfer Bias

1. Outline

Figure 4-108 shows the circuit used to control the primary/transfer bias, and the circuit has the following functions:

1. Turning on/off the primary/transfer bias
2. Controlling the grid bias to a specific voltage
3. Controlling the primary shield current to a specific current

To eliminate the effects of changes in the environment to corona charging, the output to the primary charging assembly is controlled by controlling the shield current to a specific current.

The primary/transfer bias is turned on/off using the following signal from the DC controller PCB.

- HVT_DR (HVT drive command)

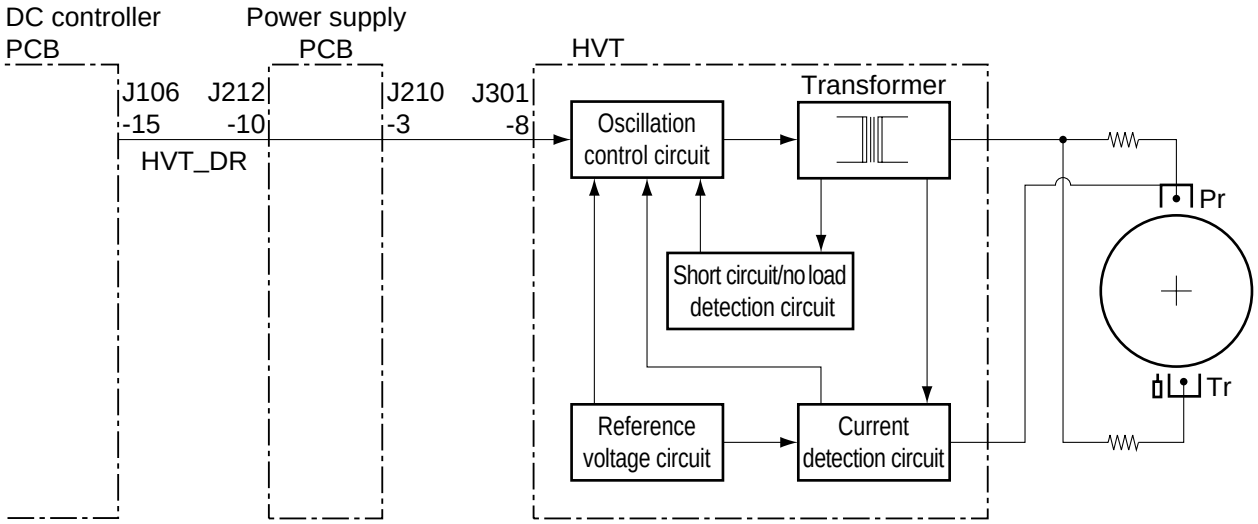

Figure 4-108

2. Turning On/Off the Primary/Transfer Bias

a. When the primary/transfer bias is off,
   - When HVT_DR is 0,
     Oscillation control circuit turns off
     Primary/transfer high-voltage transformer turns off

b. When the primary/transfer bias is on,
   - When HVT_DR is 1,
     Oscillation control circuit turns on
     Primary/transfer high-voltage transformer turns on

COPYRIGHT © 1998 CANON INC.

E. Controlling the Developing/Separation Static Eliminator Bias

1. Outline

Figure 4-109 shows the circuit used to control the developing/static eliminating bias, and the circuit has the following functions:

1. Turning on/off the developing DC bias
2. Turning on/off the developing AC bias/separation static eliminator bias
3. Controlling the developing DC bias to a specific voltage to suit copy density

The above control mechanisms are driven by the following signals:

- DV_AC_DR (developing AC bias drive signal)
- DV_AC_CNT (developing AC bias control signal)
- DV_DC_DR (developing DC bias drive signal)
- DV_DC_CNT (developing DC bias control signal)

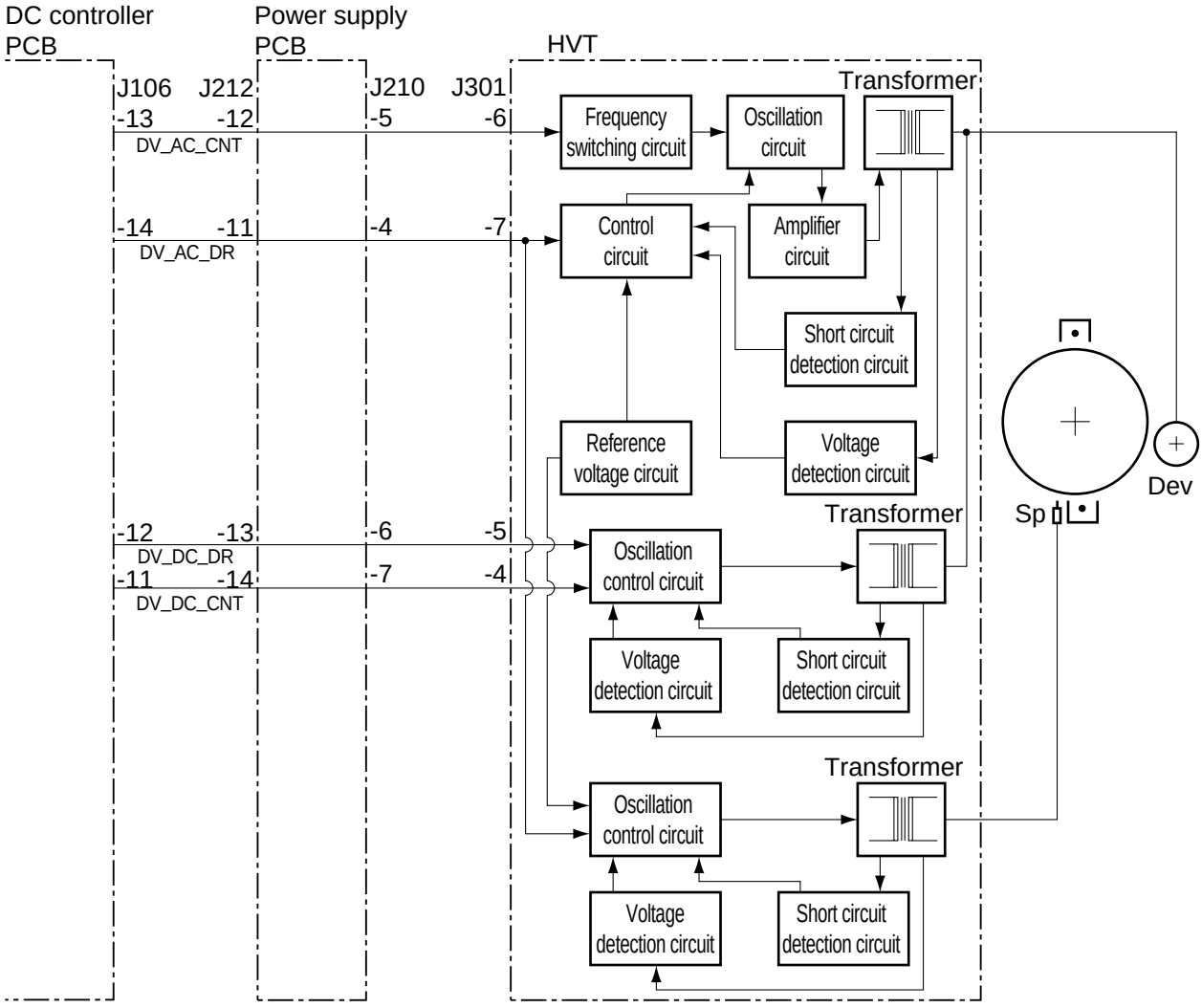

Figure 4-109

COPYRIGHT © 1998 CANON INC.

2. Turning On/Off the Developing DC Bias

a. Turning On/Off the Developing DC Bias

- When DV_DC_DR is 0,
  Oscillation control circuit turns off
  DC high-voltage transformer turns off

  The above condition deprives the developing cylinder of developing DC bias.
- When DV_DC_DR is 1,
  Oscillation control circuit turns on
  DC high-voltage transformer turns on

  The above condition supplies the developing cylinder with developing DC bias.

b. Control Timing

As shown in Figure 4-110, a specific developing DC bias (-300 V) is applied to the developing cylinder to prevent adhesion of excess toner to the photosensitive drum when copies are not being made.

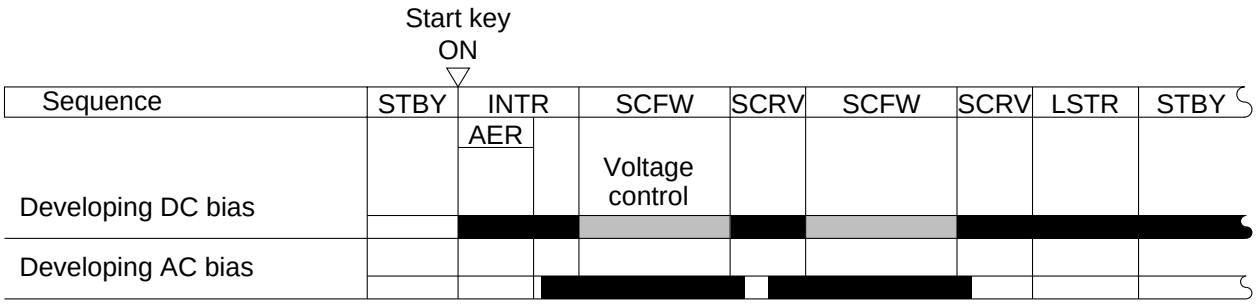

Figure 4-110

COPYRIGHT © 1998 CANON INC.
CANON NP7161/NP7160 REV.0 AUG. 1998 PRINTED IN JAPAN (IMPRIME AU JAPON)

3. Turning On/Off the Developing AC Bias/Separation Eliminator Bias

a. Turning On/Off the Developing AC Bias

- When DV_AC_DR is 0,
  control circuit turns off
  oscillation circuit turns off
  amplification circuit turns off
  AC high-voltage transformer turns off

The above condition deprives the developing cylinder of developing AC bias.

- When DV_AC_DR is 1,
  control circuit turns on
  oscillation circuit turns on
  amplification circuit turns off
  AC high-voltage transformer turns on

The above condition supplies the developing cylinder with AC bias.

b. Turning On/Off the Separation Static Eliminator

- When DV_AC_DR is 0,
  oscillation control circuit turns off
  high-voltage transformer turns off

The above condition deprives the static eliminator of separation static eliminator bias.

- When DV_AC_DR is 1,
  oscillation control circuit turns on
  high-voltage transformer turns on

The above condition supplies the static eliminator with separation static eliminator bias.

COPYRIGHT © 1998 CANON INC.

4. Controlling the Developing DC Bias to a Specific Voltage to Suit Copy Density

While copies are being made, developing AC bias and developing DC bias are applied to the developing cylinder. The developing AC bias is 1400 Vp-p, and the developing DC bias may be varied by sliding the Copy Density lever on the control panel.

When the Copy Density lever on the control panel is slid, the CPY_DNS signal will vary between 1 and 5 V. The developing DC bias will then vary between -110 and -550 V.

Normally, the optimum image is obtained when the developing DC bias is set at -270 V (CPY_DNS is 2.45V).

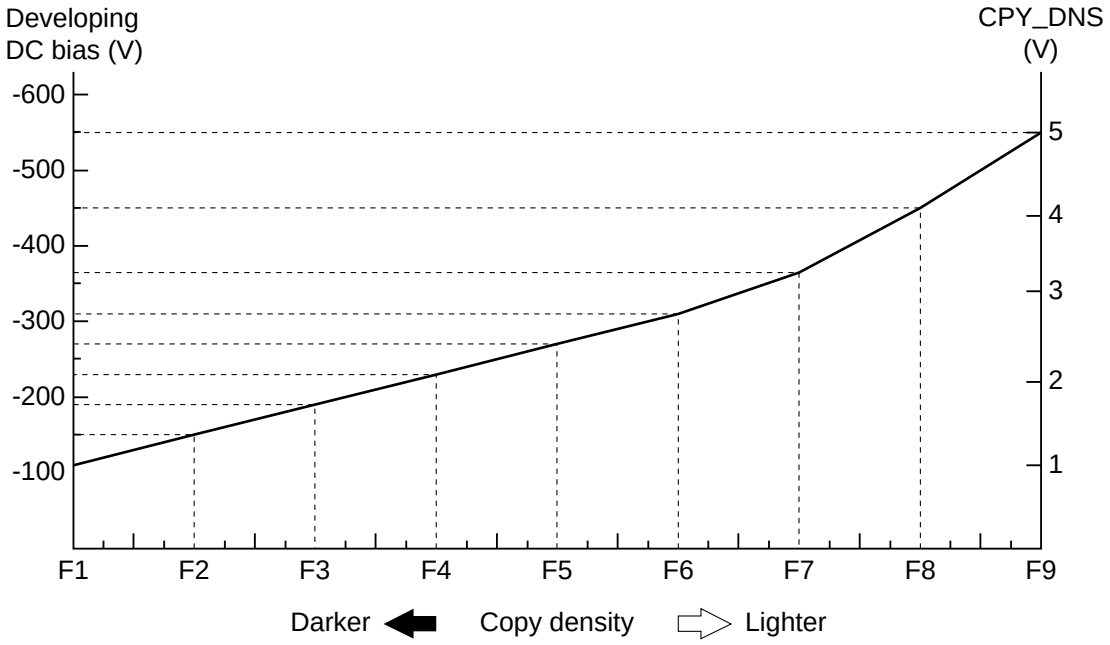

Figure 4-111

COPYRIGHT © 1998 CANON INC.
CANON NP7161/NP7160 REV.0 AUG. 1998 PRINTED IN JAPAN (IMPRIME AU JAPON)

Copy density	Developing DC bias [V]	CPY_DNS [V]
F1	-110	1.00
F1.25	-120	1.09
F1.5	-130	1.18
F1.75	-140	1.27
F2	-150	1.36
F2.25	-160	1.45
F2.5	-170	1.54
F2.75	-180	1.63
F3	-190	1.72
F3.25	-200	1.81
F3.5	-210	1.91
F3.75	-220	2.00
F4	-230	2.09
F4.25	-240	2.18
F4.5	-250	2.27
F4.75	-260	2.36
F5	-270	2.45
F5.25	-280	2.54
F5.5	-290	2.63
F5.75	-300	2.72
F6	-310	2.81
F6.25	-315	2.90
F6.5	-330	3.00
F6.75	-347.5	3.16
F7	-365	3.32
F7.25	-382.5	3.48
F7.5	-400	3.64
F7.75	-425	3.86
F8	-450	4.09
F8.25	-475	4.32
F8.5	-500	4.55
F8.75	-525	4.77
F9	-550	5.00

Table 4-102

COPYRIGHT © 1998 CANON INC.

F. Controlling the Blank Exposure Lamp

1. Outline

The blank exposure lamp is an LED array (40 built-in LEDs), and its activation is controlled by a static method.

All LEDs of the blank exposure lamp are turned on while the photosensitive drum is rotating and, in addition, the scanner is not exposing an original so as to prevent adhesion of excess toner to the photosensitive drum. (The farthest LED (each at front and rear) is kept on at all times as long as the photosensitive drum is rotating.)

The charges on the photosensitive drum are removed in appropriate widths according to reproduction ratios and paper sizes while the scanner is exposing an original, thereby preventing adhesion of unwanted toner.

The copier turns on/off the ten LEDs at the center using the blank exposure lamp center activation signal (BLK_CNDR*), and controls the 15 LEDs (each at front and rear) by means of serial data communication using the following signals:

- blank exposure lamp serial data signal (BLK_SD)
- blank exposure lamp serial data clock signal (BLK_SCK)
- blank exposure lamp serial data latch signal (BLK_LCK)
- blank exposure lamp drive enable signal (BLK_DEN*)
- blank exposure lamp power supply line (BLK_PW)

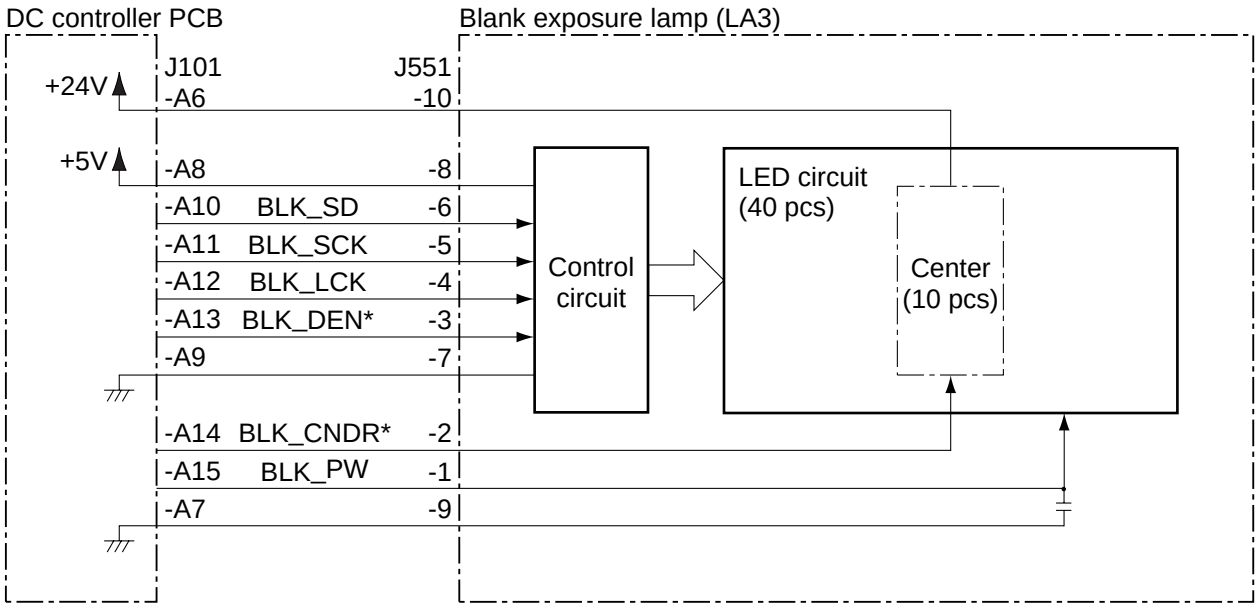

Figure 4-112

COPYRIGHT © 1998 CANON INC.
CANON NP7161/NP7160 REV.0 AUG. 1998 PRINTED IN JAPAN (IMPRIME AU JAPON)

2. Turning On the Blank Exposure Lamp in Reduce Mode

While the original is being illuminated in Reduce mode, as many LEDs (both front and rear) as suited to the selected reduction ratio are turned on to blank out the non-image widths on the photosensitive drum regardless of the selected paper size.

3. Turning On the Blank Exposure Lamp in Direct/Enlarge Mode

While the original is being illuminated in Direct/Enlarge mode, as many LEDs (both front and rear) as suited to the selected paper size (Table 4-101) are turned on to blank out the non-image widths on the photosensitive drum.

Paper size	LEDs (number of)	
	Front	Rear
A3, A4	1	1
279 × 432mm (11"×17"), LTR	3	3
B4, B5	5	5
A4R, A5, LGL, LTRR	9	9
B5R	13	13
A5R	15	15

Table 4-103

4. Turning On the Blank Exposure Lamp in Multifeeder Mode

When copies are made on paper picked up from the multifeeder, the blank exposure lamp is turned on to suit the paper width obtained by combinations of the states of the multifeeder paper width sensors 1 and 2 (PS9, 10); see p. 5-9.

COPYRIGHT © 1998 CANON INC.

II. DEVELOPING ASSEMBLY/DRUM CLEANER ASSEMBLY

A. Outline

The developing assembly and the drum cleaner are rotated by the drive from the main motor (M1) through drive gears.

The level of toner inside the developing assembly is monitored by the toner sensor (TS1); when the amount drops below a specific level, the copier turns on or flashes the Toner indicator on the control panel.

The drum cleaner assembly collects waste toner using the cleaning blade, and moves it to the waste toner case using the waste toner feeding screw. The waste toner feeding screw locked detection sensor (PS8) serves to monitor the rotation of the waste toner feeding screw.

The level of the waste toner inside the waste toner case is monitored by the waste toner sensor; when the amount of the waste toner exceeds a specific level, the copier flashes the Waste Toner indicator on the control panel.

The cleaner thermistor (TH3) serves to detect overheating of the drum cleaner assembly.

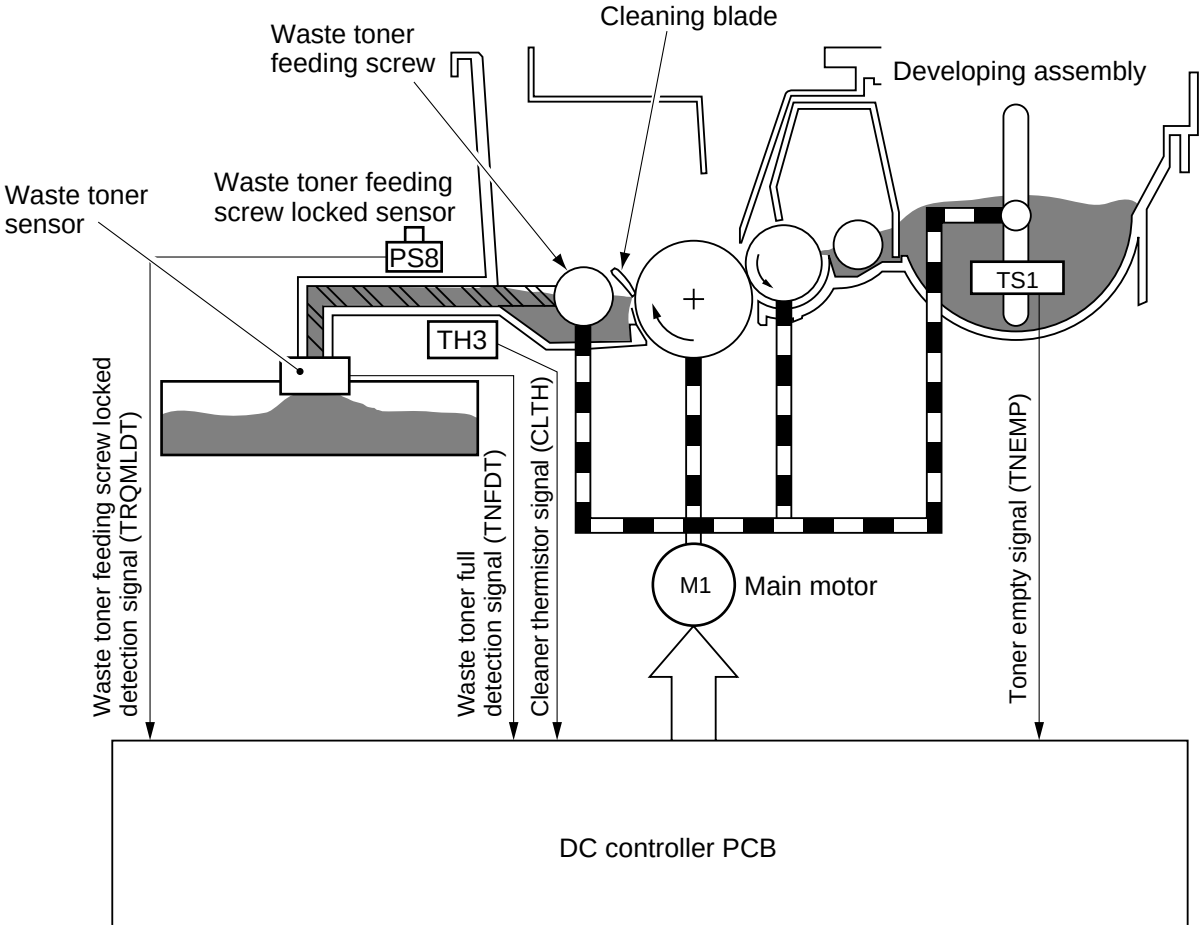

Figure 4-201

COPYRIGHT © 1998 CANON INC.

The copier is designed to collect more waste toner than existing models, and is equipped with a paddle at the bottom of the waste toner box.

The paddle is linked to the movement of the cassette, and is designed to tap on the bottom of the waste toner box to even out the toner inside it.

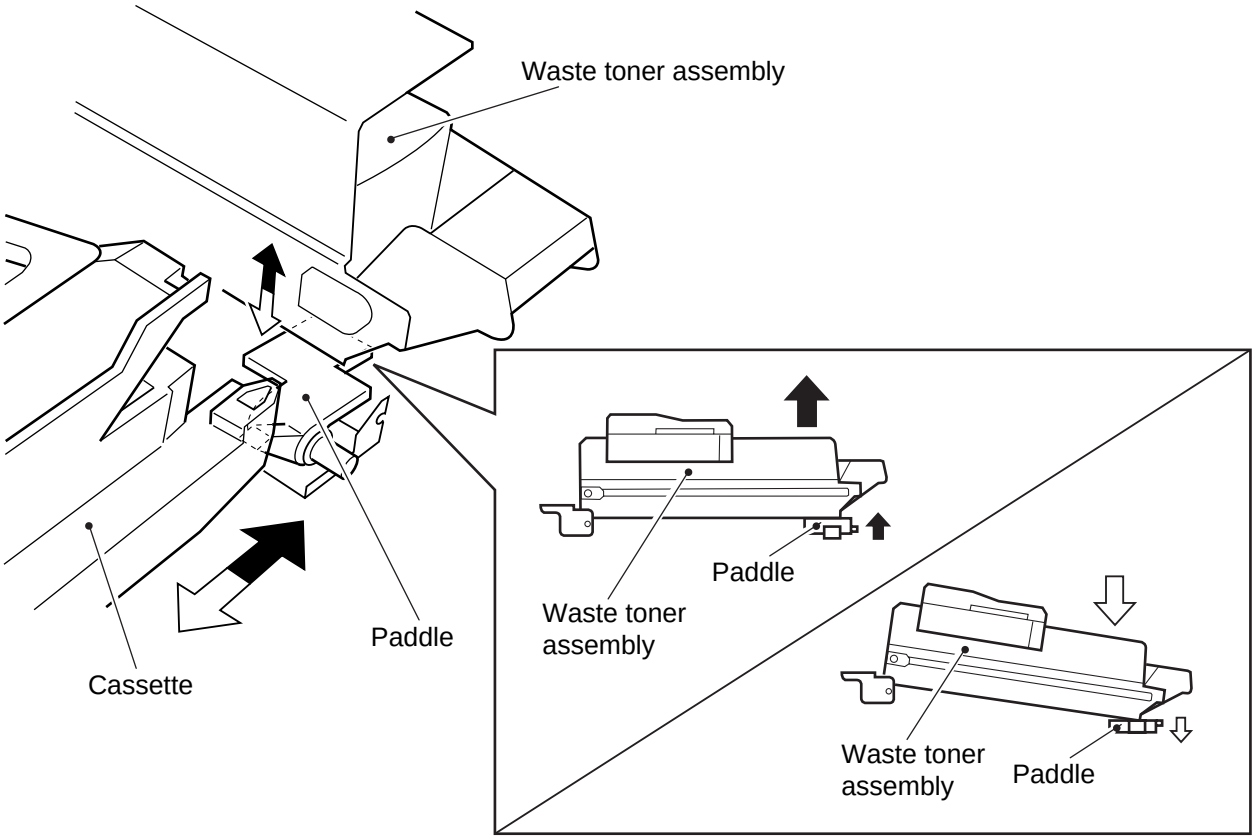

Figure 4-202

B. Detecting and Controlling the Level of Toner

The toner inside the developing assembly is monitored by the toner sensor (TS1).

The toner sensor uses a piezoelectric oscillator which oscillates in the absence of toner over the sensor at several kHz and sends an oscillation signal (TNEMP) to the DC controller PCB. In the presence of toner over the sensor, on the other hand, the weight will prevent oscillation.

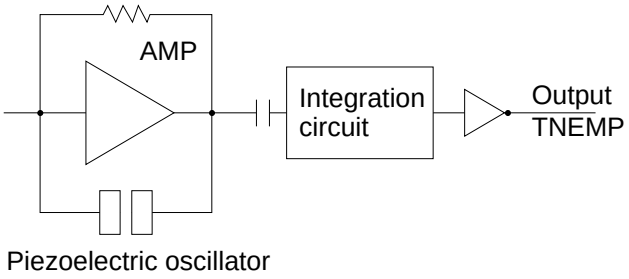

Figure 4-203

The copier detects the absence of toner in two stages.

The DC controller PCB monitors the output of the toner sensor at all times as long as the main motor is rotating. If the sum of periods of the toner absent signal is 70 sec (consecutive two periods), it will identify the condition as a condition preceding the absence of toner and will flash the Toner indicator on the control panel.

Thereafter, if the period of the toner absent signal reaches 180 sec or more, the DC controller PCB will assume the condition to be the absence of toner, and will stop flashing the Toner indicator to keep it on. At this time, the copy being made is processed as would a normal copy and discharged, and then the operation will be stopped.

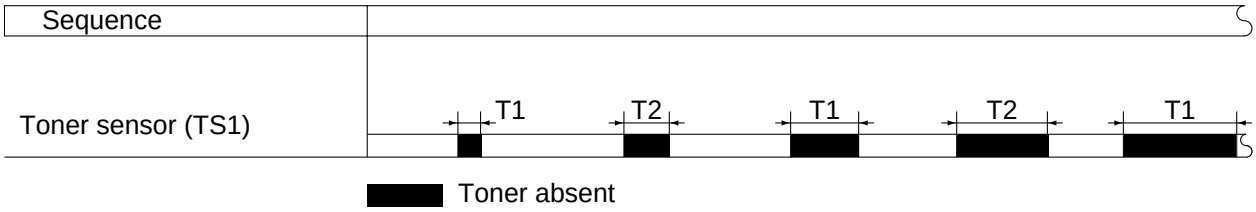

Figure 4-204

Toner indication	Conditions	Copying
Flashing	(T1+T2) or (T2+T1) ≧ 70sec	Possible
On	T1 or T2 ≧ 180sec	No possible

Table 4-201

Note:

When the DC controller identifies a condition preceding the absence of toner, there is likely to be as much as 10 g of toner inside the developing assembly. In terms of A4 copies, about 200 copies may be made without the addition of toner.

COPYRIGHT © 1998 CANON INC.

C. Monitoring the Waste Toner Feeding Screw

If the waste toner inside the drum cartridge cakes and, as a result, hinders the rotation of the waste toner feeding screw, waste toner can start to leak from the pipe. To prevent such a problem, the copier is equipped with a waste toner feeding screw detection mechanism constructed as shown in Figure 4-206.

The waste toner feeding screw is linked with a spring clutch and a flag, and is rotated by the engagement of the spring clutch with the gear A.

The rotation of the flag is monitored by the waste toner feeding screw sensor (PS8) at all times while the main motor (M1) is rotating.

When the waste toner feeding screw locks, the spring clutch is subjected to force in the axial direction and moves in the direction of the arrow, causing the flag to stop rotating. If the waste toner feeding screw lock signal (TRQMLDT) remains unchanged for 0.5 sec or more, the DC controller PCB will assume that the waste toner feeding screw became locked, and will immediately indicate 'E013' on the control panel and stop responding to a press on the Start key.

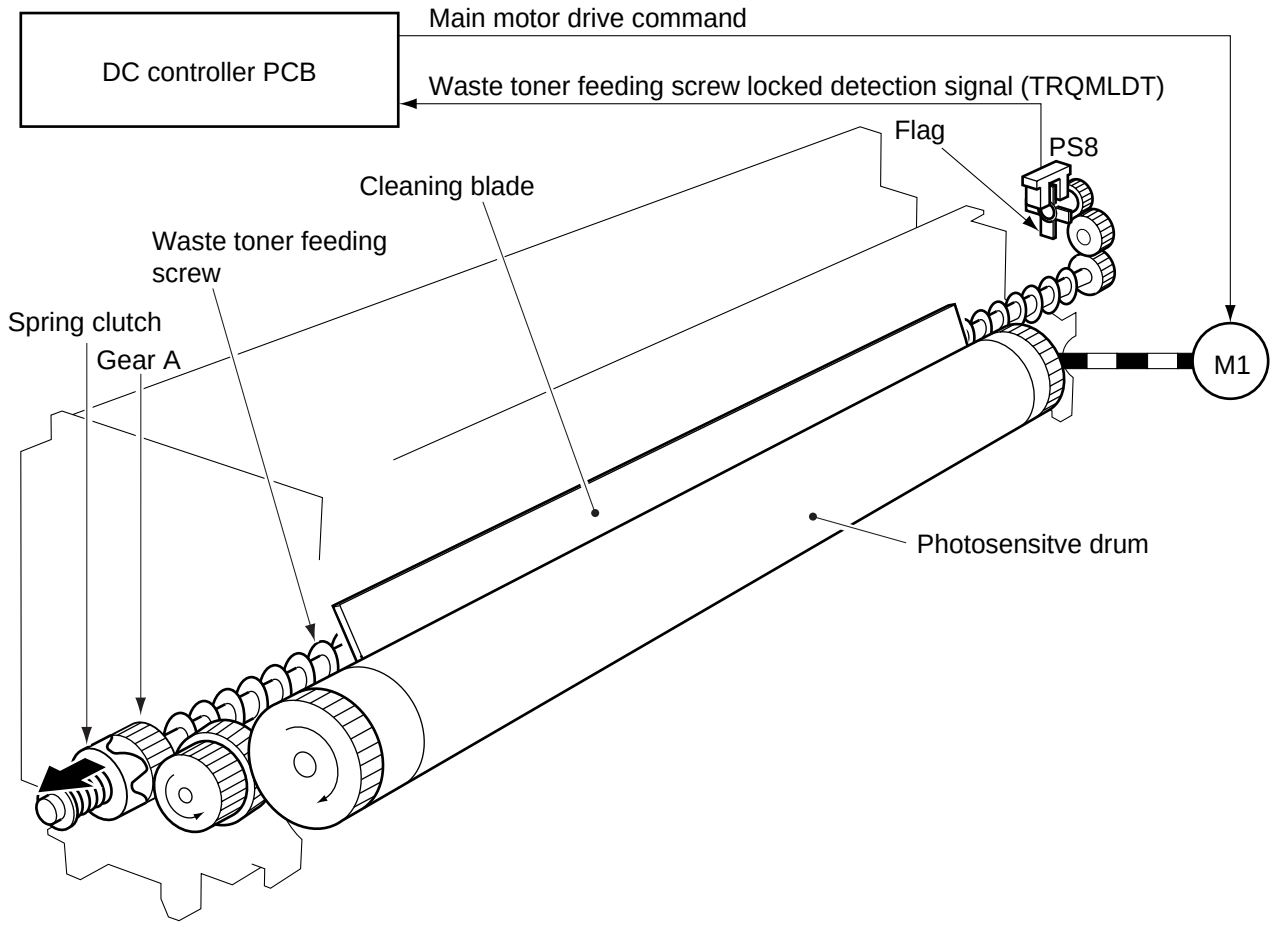

Figure 4-205

COPYRIGHT © 1998 CANON INC.

D. Monitoring the Waste Toner Box

The copier monitors the waste toner box in two levels.

The amount of waste toner inside the waste toner box is checked by the waste toner sensor. The waste toner sensor is a pair of photosensors (light-emitting cell and light-receiving cell), and is designed to generate the waste toner full detection signal (TNFDT) when waste toner blocks the light between the two photosensors.

The DC controller PCB monitors the state of the waste toner sensor at all times; when the voltage of the waste toner full detection signal (TNFDT) drops below the reference voltage, it will identify the condition as “pre-waste toner full condition” and will flash the Waste Toner indicator on the control panel.

When the waste toner box is not set, the light-blocking plate blocks the light between the photosensors, causing the copier to flash the Waste Toner indicator.

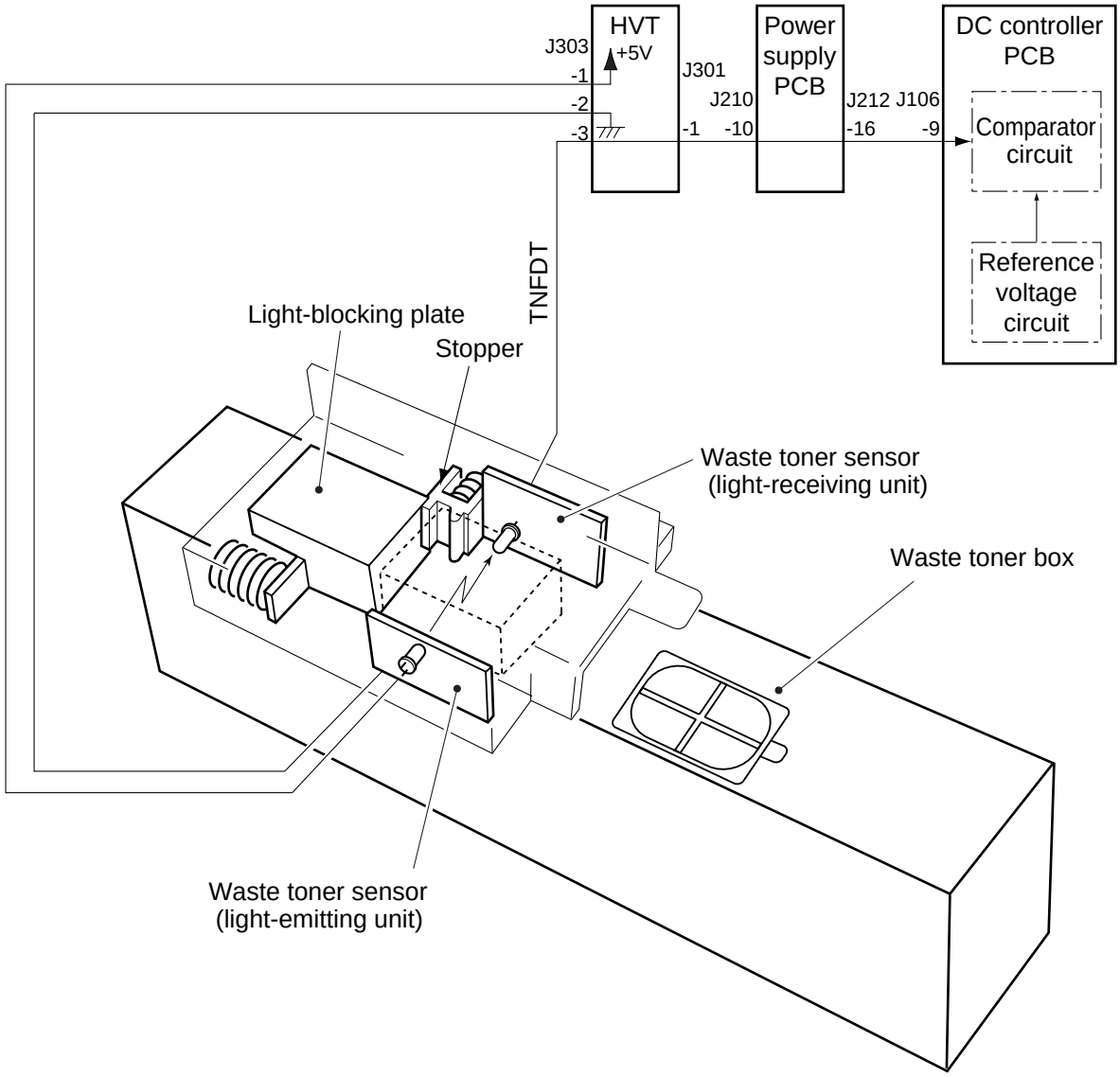

Figure 4-206

COPYRIGHT © 1998 CANON INC.

When as many as 100 copies (A4) have been made during a pre-waste toner full condition, the DC controller PCB will identify the condition as “waste toner full,” stopping to flash the Waste Toner indicator and instead keeping it on. The copier will not accept the Start key while the Waste Toner indicator remains on.

Reference:

If the DC controller PCB identifies a waste toner full condition during continuous copying, the copier will discharge copies being processed and turn on the Waste Toner indicator.

COPYRIGHT © 1998 CANON INC.

E. Control by the Cleaner Thermistor

The copier is equipped with a thermistor (cleaner thermistor TH3) used to detect overheating of the drum cleaner assembly, and is designed to perform the following according to the temperature detected by the thermistor.

- controlling the rotation of the exhaust fan (See p. 7-2.)
- controlling the copying speed down sequence

The cleaner thermistor checks for overheating of the drum cleaner at all times, and will indicate error code 'E821' on the control panel when it identifies a temperature of 55°C or more.

1. Copying Speed Down Sequence

The copier's normal copying speed is 16 cpm (A4, Direct, non-AE).

To prevent overheating of the drum cleaner assembly in continuous copying mode or overheating of the copyboard glass in enlargement mode, the copier adjusts the sheet-to-sheet distance according to the selected copy count and the reading of the cleaner thermistor (TH3).

- A4 Original, A4 Copy

Reading by cleaner thermistor (TH3)	Copy count at lower than 500			Copy count at 500 or more		
	50 to100%	101 to141%	142 to200%	50 to100%	101 to141%	142 to200%
Less than 40°C	16cpm	12cpm	12cpm	12cpm	12cpm	12cpm
40°C or more	16cpm	12cpm	8cpm	12cpm	12cpm	8cpm

Table 4-202

COPYRIGHT © 1998 CANON INC.

F. Auto Density Adjustment (AE)

1. Outline

The copier is equipped with an automatic density adjustment mechanism (AE), which controls the developing DC bias to suit the density of originals. As long as the original is of even density, the AE mechanism is capable of ensuring copies free of fogging by changing the developing DC bias to suit the density of the original.

2. Measuring the Density of the Original

In initial rotation state (INTR), the scanning lamp (LA1) is turned on at a specific intensity and the scanner is moved forward 70 mm to expose the original. When the scanner has stopped, the light reflected by the area shown in Figure 4-208 (in reference to the original butting position) is measured by the AE sensor (photodiode), whose output is sent to the DC controller PCB as the AE sensor output signal (AE_DATA).

Based on the signal, the DC controller PCB computes the optimum level of the developing DC bias for copying, and sends the result to the high-voltage power supply PCB as the developing bias control signal (DV_DC_CNT).

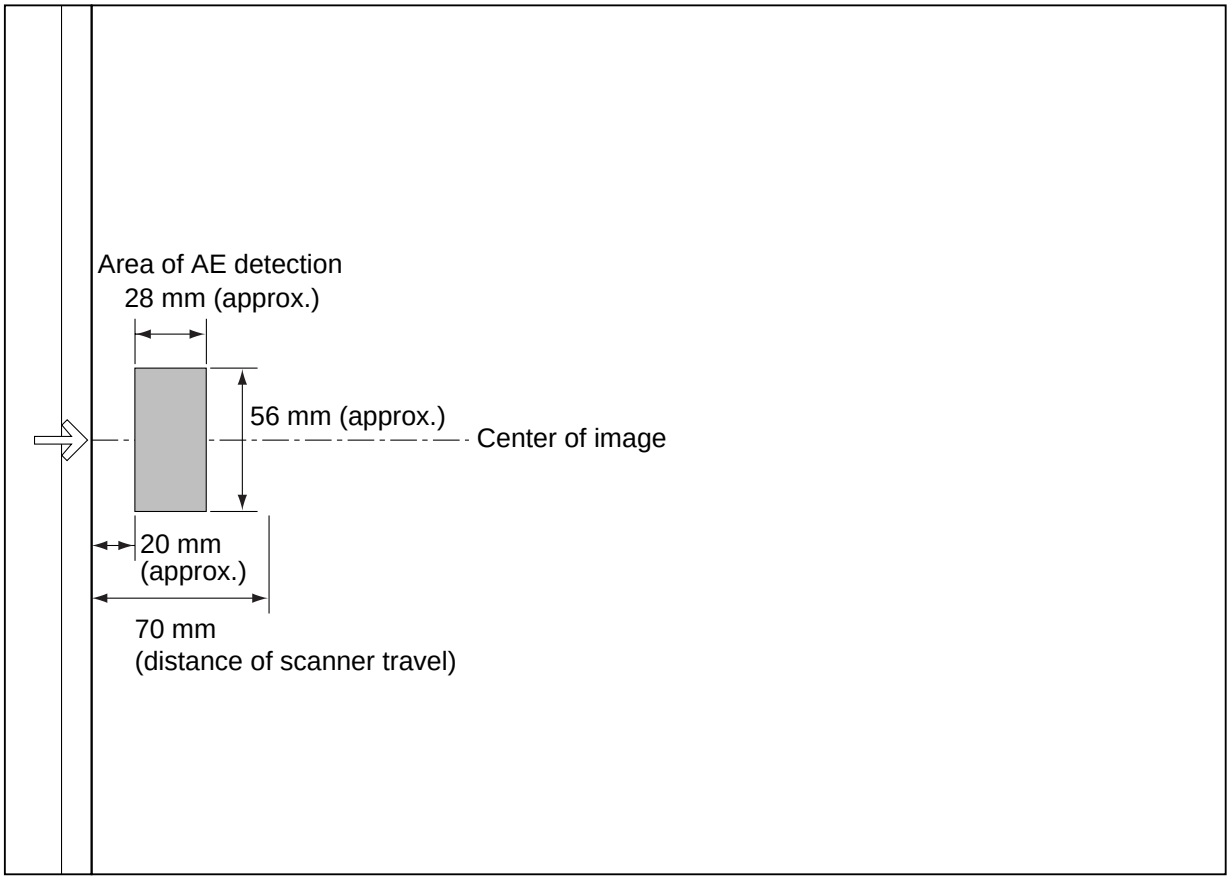

Figure 4-208

COPYRIGHT © 1998 CANON INC.

Figure 4-209 shows changes in the developing DC bias in relation to the density of different originals. If the density of the original is higher (darker) than the Test Sheet and lower (lighter) than a newspaper, the developing DC bias will vary between F5.0 and F7.5 in terms of Copy Density lever position.

If the original is lighter than the Test Sheet, copies are made at an F5.0 equivalent (-270 V); if it is darker than a newspaper, on the other hand, copies are made at an F7.5 equivalent (-400 V).

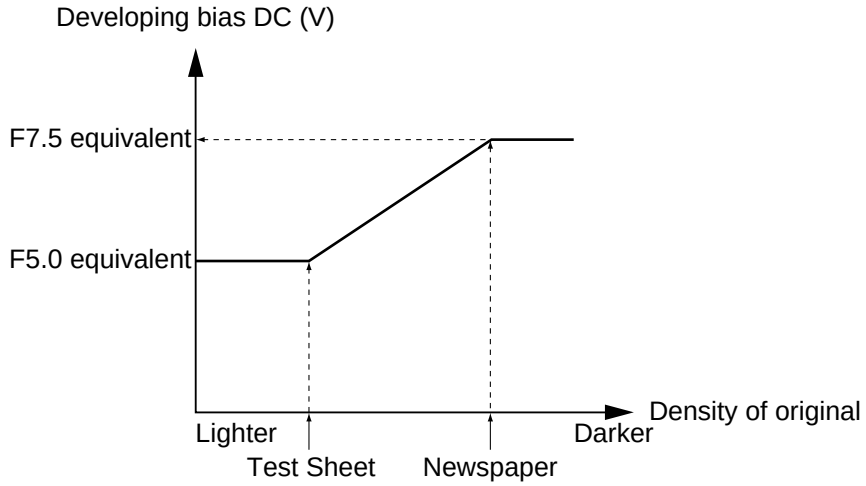

Figure 4-209

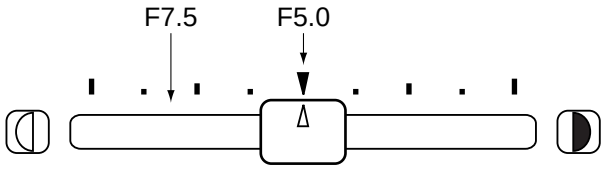

Figure 4-210

COPYRIGHT © 1998 CANON INC.

III. DISASSEMBLY/ASSEMBLY

The copier may be disassembled and assembled as shown here. Pay attention to the copier's mechanical characteristics along with the steps for disassembly/assembly.

Important:

1. Turn off the power and disconnect the power plug to ensure safety whenever disassembling/assembling the copier.
2. Unless otherwise noted, assemble the parts by reversing the steps used to disassemble them.
3. Identify the screws by type (length, diameter) to avoid use in the wrong location.
4. Use a washer where needed. The mounting screws used for the grounding wire and varistor come with a washer to ensure electric continuity. Do not forget to use these washers.
5. As a rule, do not operate the copier with any of its parts removed.

COPYRIGHT © 1998 CANON INC.

A. Scanning Lamp Assembly

1. Removing the Scanning Lamp

1) Remove the copyboard glass. (See .7-14)
2) Holding the bend [A], pull out the scanner as far as the cut-off [B].

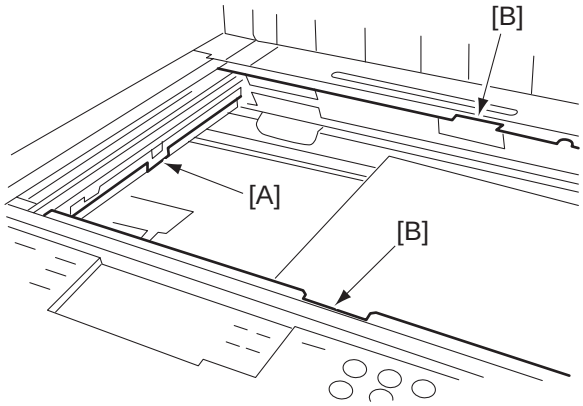

Figure 4-301

3) Remove the mounting screw [1], and remove the reflecting cover [2].

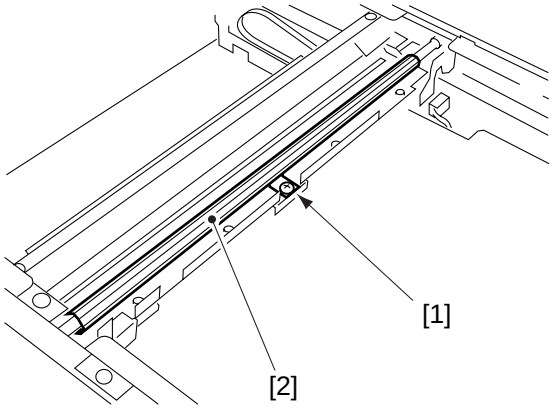

Figure 4-302

COPYRIGHT © 1998 CANON INC.

4) Wrap both ends of the scanning lamp [3] with lint-free paper. Then, remove the lamp while pushing toward the rear end.

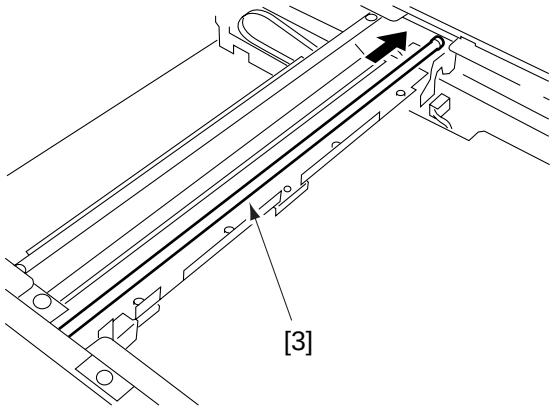

Figure 4-303

Caution:

1. Do not work if the surface of the scanning lamp is hot.
2. Do not leave fingerprints on the surface of the scanning lamp.
3. If the surface of the scanning lamp is soiled, dry wipe it.
4. Do not leave fingerprints on the reflecting cover.
5. Do not deform the reflecting cover.

2. Mounting the Scanning Lamp

Mount the scanning lamp by reversing the steps used to remove it. However, keep the following in mind:

- Orient the scanning lamp so that the side with the shorter boss-to-terminal length is toward the rear.
- Orient the scanning lamp so that the boss is at the angle indicated in Figure 4-304.

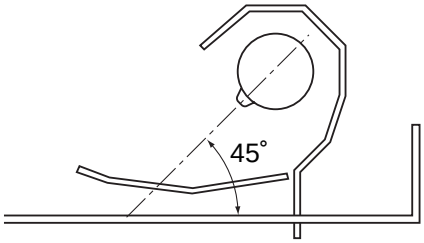

Figure 4-304

3. Removing the Thermal Fuse

1) Remove the scanning lamp.
2) Remove the two mounting screws[1], and remove the thermal fuse [2].

Caution:

Mount the thermal fuse by reversing the steps used to remove it. Be careful of the orientation of the fuse.

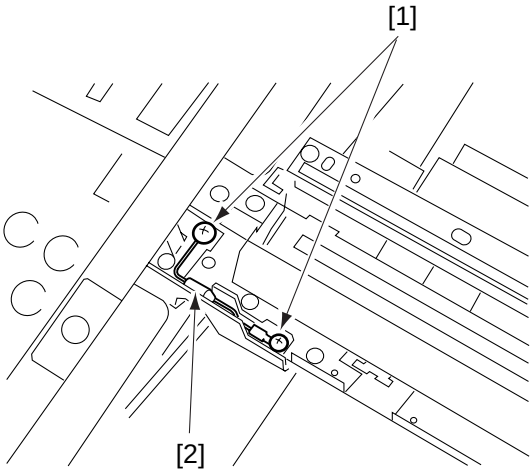

Figure 4-305

COPYRIGHT © 1998 CANON INC.

B. Exposure Assembly

1. Removing the Pre-Exposure/Blank Exposure Lamp Assembly

1) Remove the developing assembly. (See p.4-37)
2) Remove the drum unit. (See p.4-28)
3) Remove the inside over.
4) Disconnect the two connectors [1], and remove the mounting screw [2] ; then, remove the pre-exposure/blank exposure lamp assembly [3].

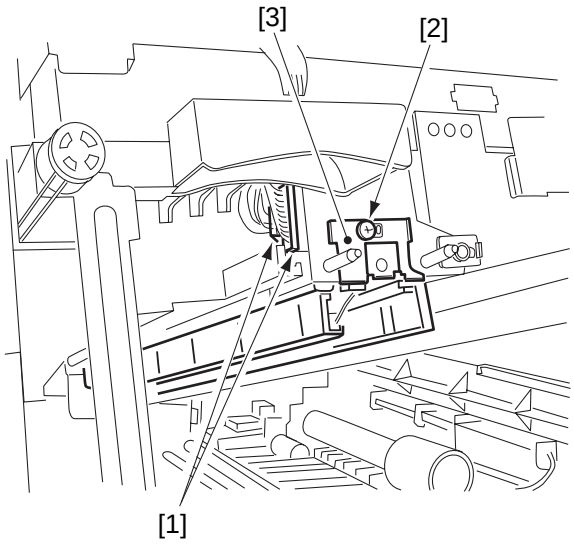

Figure 4-306

2. Removing the Dust-Proofing Glass

1) Remove the inside cover.
2) Remove the mounting screws [1], and remove the dust-proofing glass [2].

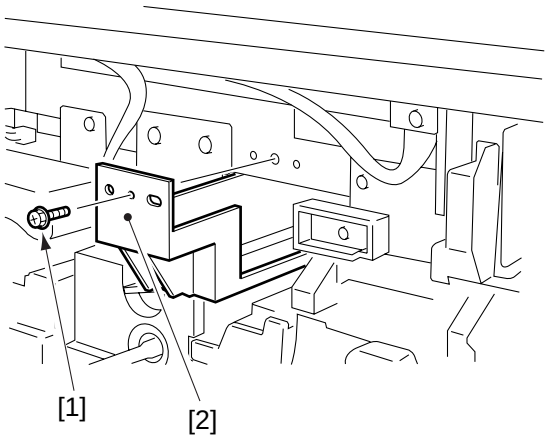

Figure 4-307

COPYRIGHT © 1998 CANON INC.

3. Cleaning the No. 6 Mirror

1) Remove the developing assembly. (See p. 4-37.)
2) Remove the drum unit. (See p. 4-28.)
3) Remove the dust-proofing glass. (See p. 4-26.)
4) Remove the mounting screw [1], and remove the developing assembly rail [2].

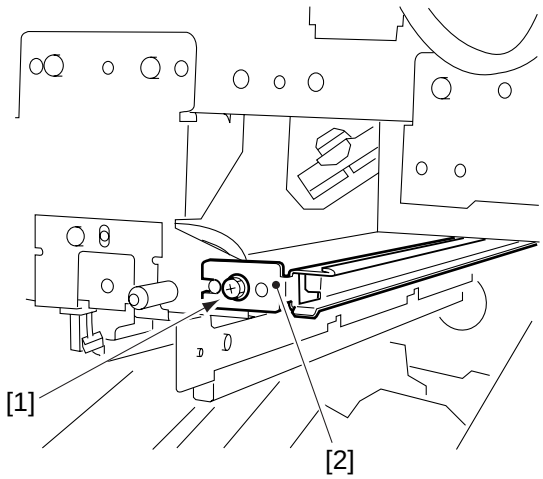

Figure 4-308

5) Clean the No. 6 mirror [3].

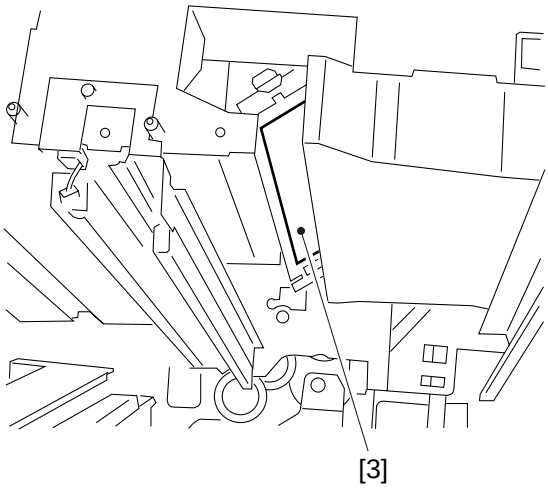

Figure 4-309

COPYRIGHT © 1998 CANON INC.

C. Drum Unit

1. Removing the Drum Unit

1) Open the top unit, release the developing assembly.
2) Remove the thumb screw [1], and slide out the drum unit [2] to the front to remove.

Caution:

- The photosensitive drum is susceptible to strong light. If it was subjected to strong light for a long time, it can cause copies to have white spots or black lines. Whenever you have taken out the drum unit from the copier, be sure to keep it in the bag used at time of installation. If the bag is not at hand, substitute several sheets of fresh copy paper to wrap the drum unit, and keep it in a dark place.
- When mounting the drum unit to the copier, be sure to slide it along the rails and work with extra care.

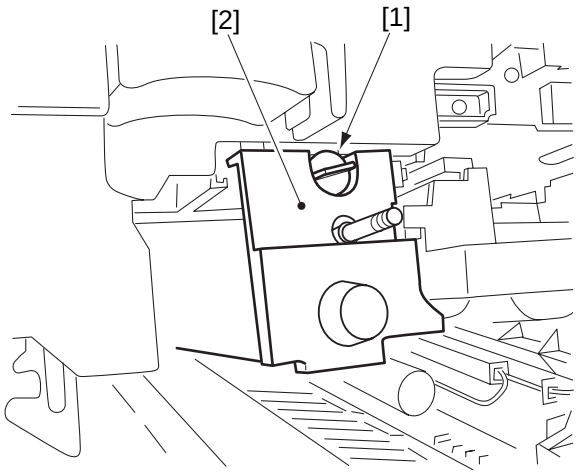

Figure 4-310

COPYRIGHT © 1998 CANON INC.
CANON NP7161/NP7160 REV.0 AUG. 1998 PRINTED IN JAPAN (IMPRIME AU JAPON)

2. Cleaning the Photosensitive Drum

If the surface of the photosensitive drum is soiled, wipe it with a flannel cloth coated with toner.

Caution:

- Do not dry wipe the surface of the photosensitive drum. Do not use solvent.
- Do not use paper, lint-free or otherwise, to avoid damaging the surface of the photosensitive drum.
- Work briskly when cleaning the photosensitive drum to avoid unnecessarily subjecting it to light and thus affecting images.
- If you must rotate the photosensitive drum, be sure to rotate it in the same direction as it would when making copies.

3. Removing the Cleaner Thermistor

1) Remove the drum unit. (See p. 4-28.)
2) Remove the fixing assembly. (See p. 6-8.)
3) Disconnect the connector [1], and remove the mounting screw [2]; then, remove the cleaner thermistor [3].

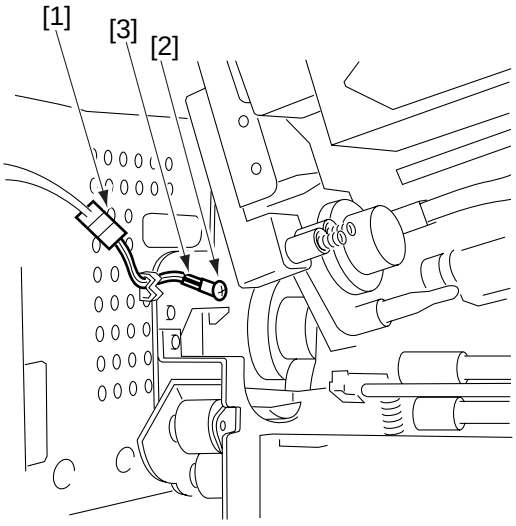

Figure 4-311

D. Primary Charging Assembly

1. Removing the Primary Charging Assembly

1) Remove the drum unit. (See p. 4-28.)
2) Pull the charging wire cleaning lever [1] slightly to the front.
3) Detach the hook [2], and detach the drum front cover [3].

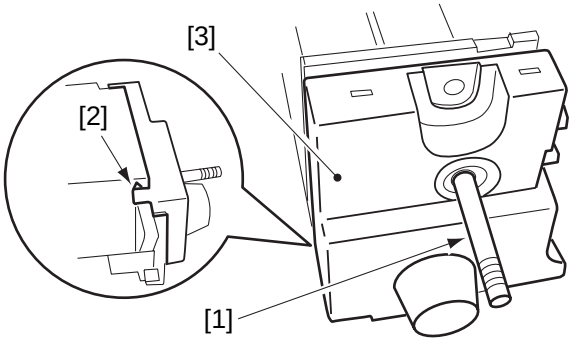

Figure 4-312

4) Remove the mounting screw [4], and remove the primary charging assembly [5].

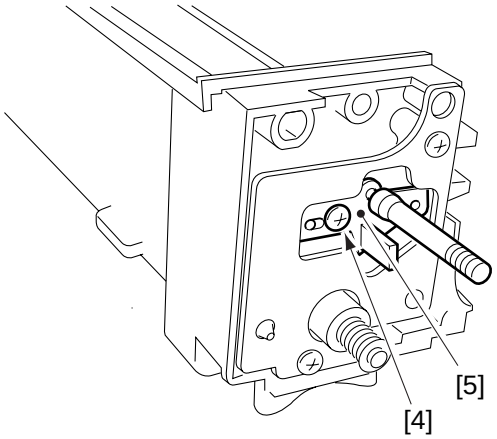

Figure 4-313

COPYRIGHT © 1998 CANON INC.

E. Transfer Charging Assembly

1. Removing the Transfer Charging Assembly

1) Open the copier top, and remove the front door.
2) Pull the charging wire cleaning lever [1] slightly to the front.
3) Remove the mounting screw [2], and lift the stopper [3] to remove.
4) Pull the transfer charging assembly [4] to the front to remove.

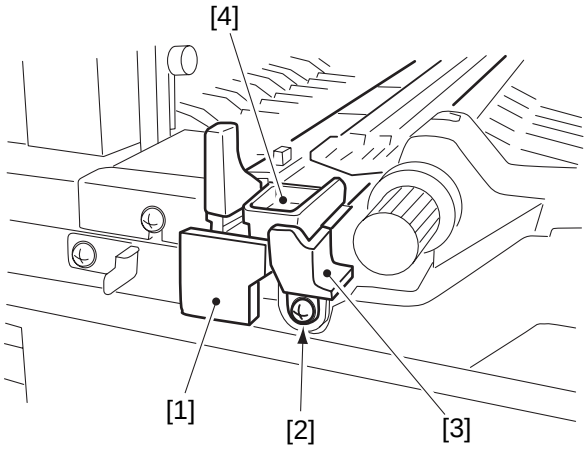

Figure 4-314

F. Charging Wire

1. Outline

As many as two charging wires are located around the photosensitive drum. (These charging wires are 0.06 mm in diameter.)

2. Stringing the Charging Wires

Basically, all charging wires are strung in the same way. (The following uses the primary charging wire as an example.)

1) Remove the mounting screw [1], and remove the stopper [2] and the grid plate [3].
   To remove the transfer charging assembly, remove the three hooks [a], and remove the guide wire plate [b].

• Primary Charging Assembly

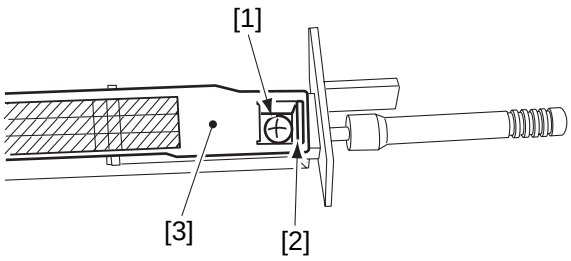

Figure 4-315a

• Transfer Charging Assembly

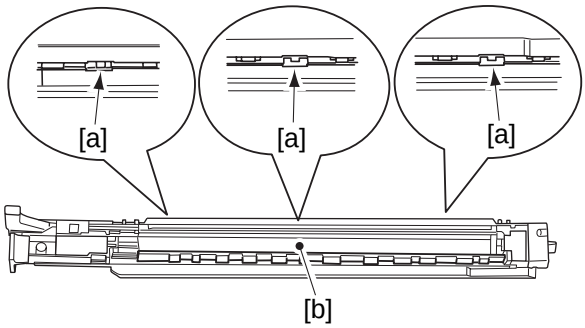

Figure 4-315b

COPYRIGHT © 1998 CANON INC.

2) Remove the sheet (front) [4] and the sheet (rear) [5].
To remove the transfer charging assembly, remove the sheet (front) [c] and the sheet (rear) [d].

• Primary Charging Assembly

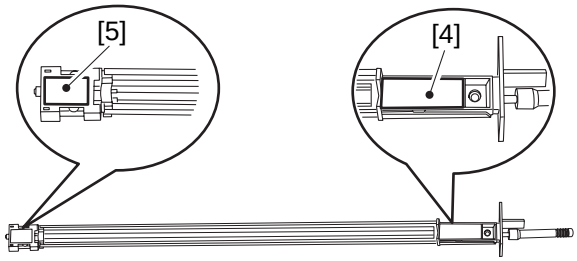

Figure 4-316a

• Transfer Charging Assembly

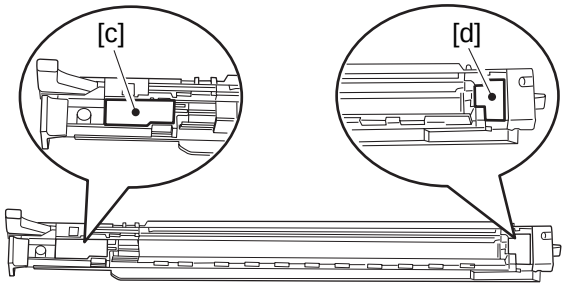

Figure 4-316b

3) Remove the spring [6], and remove the charging wire [7].
To remove the transfer charging assembly, remove the spring [e], and remove the charging wire [f].

• Primary Charging Assembly

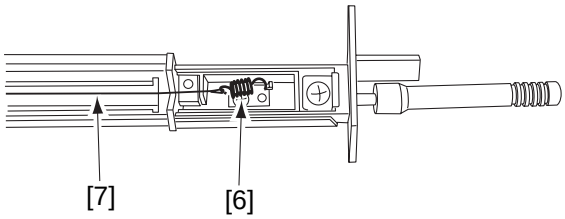

Figure 4-317a

• Transfer Charging Assembly

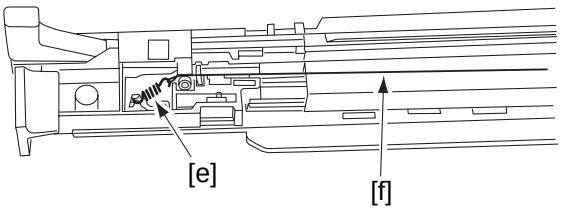

Figure 4-317b

COPYRIGHT © 1998 CANON INC.

4) Free a length of about 5 cm from the charging wire reel (0.06 mm wire).

Reference:

To form a loop, wind the charging wire around a hex key once, and turn the hex key three to four times; then, twist the charging wire.

5) Cut the end (excess) of the twisted charging wire with a nipper.
6) Hook the loop on the charging electrode at the rear.



Figure 4-318

7) Hook the charging wire on the charging wire positioner at the rear, and hook the charging wire tension spring on the charging wire by the distance A; then, twist it.

A:
Primary charging assembly : 13.0 ±0.5 mm
Transfer charging assembly : 12.0 ±0.5 mm

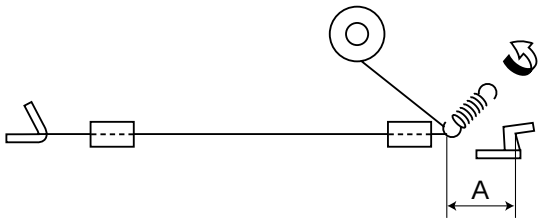

Figure 4-319

COPYRIGHT © 1998 CANON INC.

8) Cut the excess charging wire with a nipper.
9) Pick the end of the charging wire tensioning spring with tweezers, and hook it on the charging electrode.

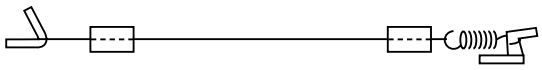

Figure 4-320

Note:

Go through the following:

- Be sure that the charging wire is free of bending and twisting, and its gold plating has not peeled.
- Be sure that the charging wire is in the V-groove of the charging wire positioner.

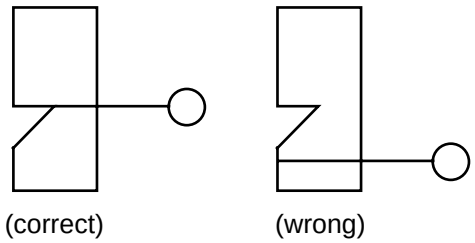

Figure 4-321

10) Wipe the charging wire with lint-free paper moistened with alcohol.

Caution:

- Do not use a cloth carrying metal powder for cleaning.
- Do not use a moist cloth for cleaning.
- Dry wipe with lint-free paper; then, mount only after making sure that alcohol has completely evaporated.

11) Mount the sheet (front) and the sheet (rear).
12) Mount the stopper and the grid plate. For the transfer charging assembly, mount the guide wire plate.

COPYRIGHT © 1998 CANON INC.

3. Adjusting the Height of the Charging Wires

To adjust each charging wire, turn its respective height adjusting screw. A full turn on the screw will change the height of the primary charging wire by about 0.5 mm and that of the transfer charging wire by about 0.7 mm.

Charging assembly	Height of charging wire (mm)	Range
Primary	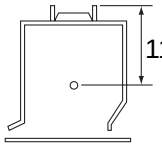	1.0mm
Transfer	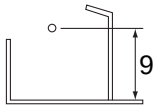	1.0mm

Figure 4-322

• Primary Charging Assembly

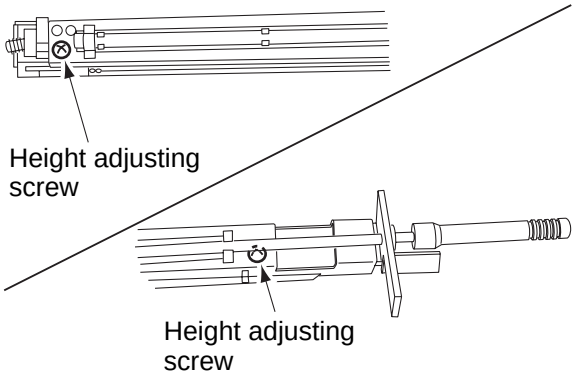

Figure 4-323a

• Transfer Charging Assembly

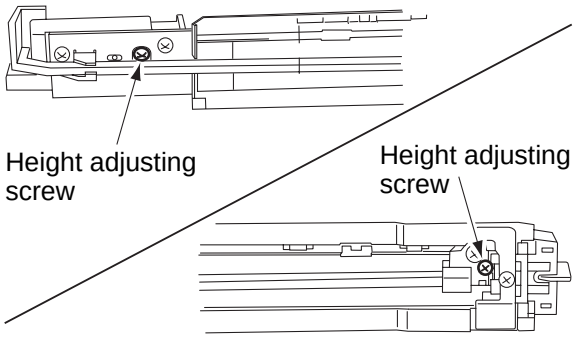

Figure 4-323b

COPYRIGHT © 1998 CANON INC.

G. Developing Assembly

1. Removing the Developing Assembly

1) Open the front door, and release the developing assembly.
2) Remove the mounting screw [1], and remove the stopper [2].
3) Pull the developing assembly [3] to remove.

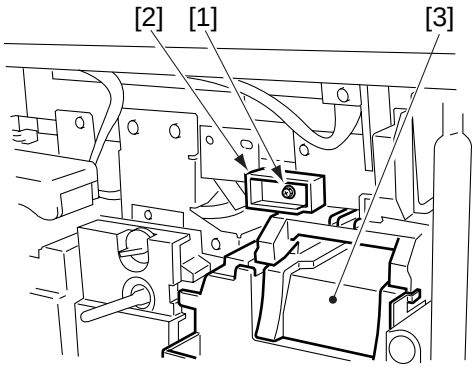

Figure 4-324

Caution:
Take care not to damage the developing cylinder.

2. Removing the Developing Blade

1) Remove the developing assembly.
2) Remove the mounting screw [1] and the three hooks [2]; then, remove the developing front cover [3].

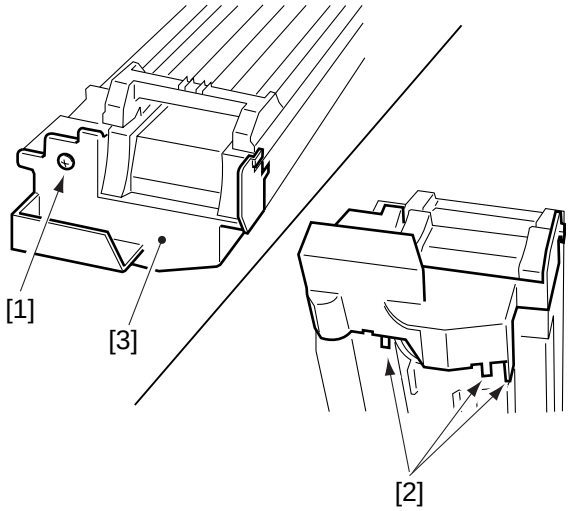

Figure 4-325

3) Remove the three mounting screws [4], and detach the developing blade cover [5].

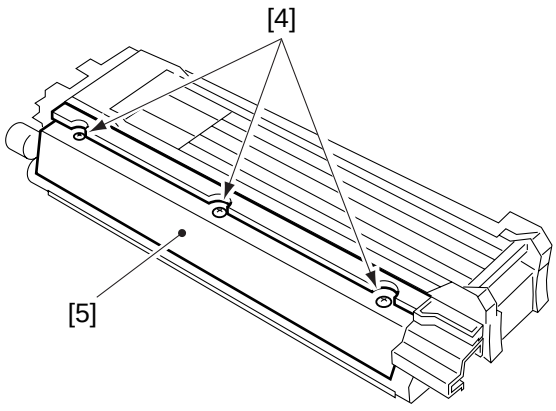

Figure 4-326

4) Lift the front of the developing upper cover [6] slightly, and slide it in the direction of the arrow to remove.

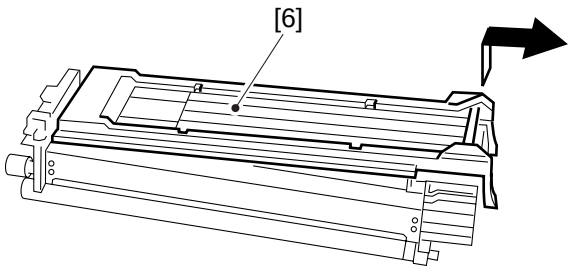

Figure 4-327

5) Place a newspaper or the like on the floor, and empty the developing assembly of toner.
6) Put copy paper between the developing blade and the developing cylinder.
7) Remove the two mounting screws [7], and remove the developing blade [8].

Caution:
When mounting the developing blade, be sure to put copy paper on the developing cylinder before mounting the developing blade so as to protect the cylinder.

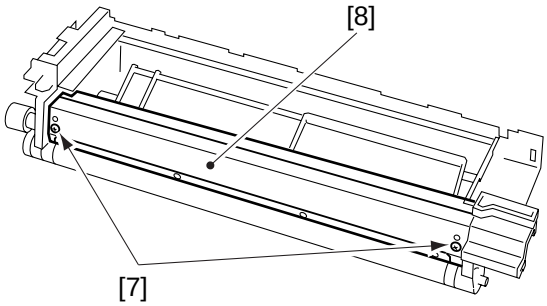

Figure 4-328

3. Removing the Developing Cylinder

1) Remove the developing blade. (See p. 4-37.)
2) Remove the mounting screw [1], and remove the magnet positioning plate [2].

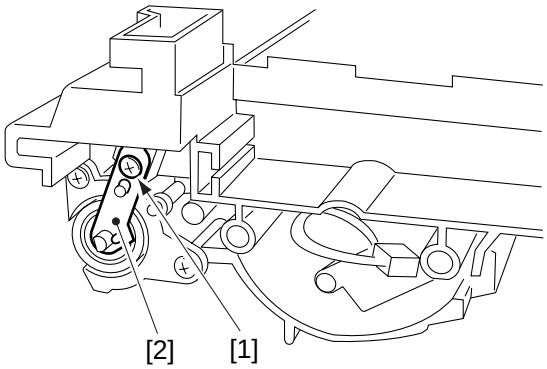

Figure 4-329

COPYRIGHT © 1998 CANON INC.

3) Remove the grip ring [3], and remove the developing roll [4].
4) Remove the two mounting screws [5], and remove the bearing holder (front) [6] and the bearing [7].

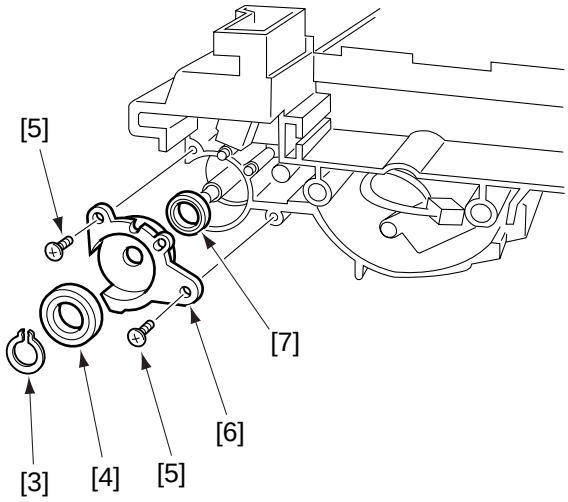

Figure 4-330

5) Remove the two mounting screws [8], and remove the gear support plate [9].

Caution:
Take extra care when removing the gear support plate. The gear will be freed.

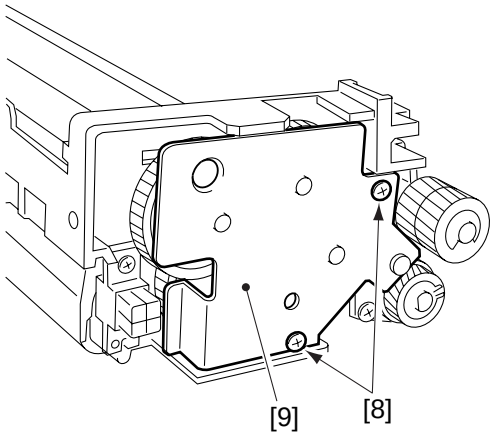

Figure 4-331

6) Remove the E-ring [10], and remove the gear [11].
7) Remove the grip ring [12], and remove the gear [13].
8) Remove the gear [14].

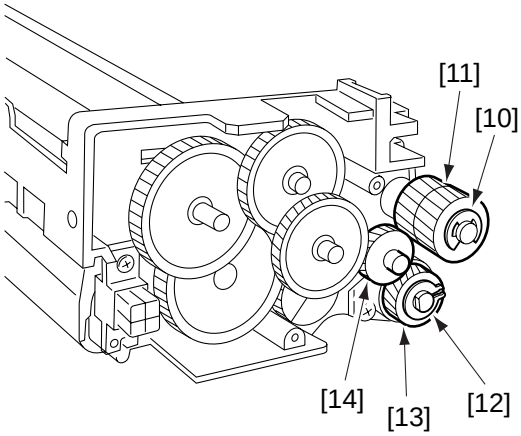

Figure 4-332

COPYRIGHT © 1998 CANON INC.

9) Remove the two mounting screws [15]; then, remove the bearing holder (rear) [16], bearing [17], and developing roll [18].

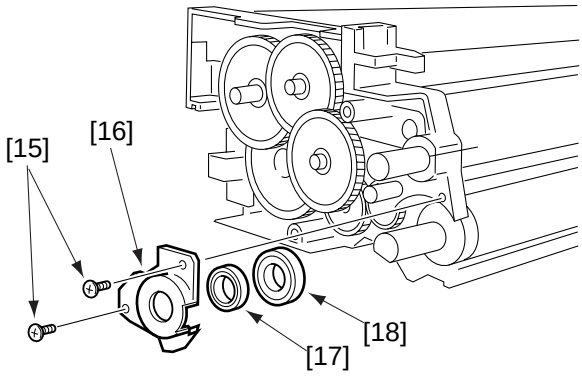

Figure 4-333

10) Remove the developing cylinder [19].

Caution

Do not leave fingerprints or oils on the surface of the developing cylinder. As necessary, dry wipe the surface with lint-free paper.

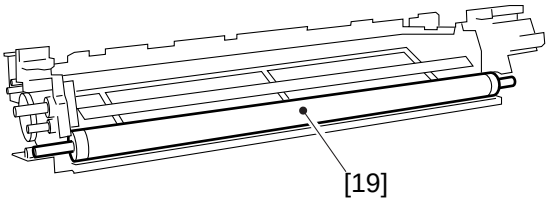

Figure 4-334

COPYRIGHT © 1998 CANON INC.

CHAPTER 5

PICK-UP/FEEDING SYSTEM

This chapter explains the principles used from when copy paper is picked up to when a copy is delivered in view of the functions of electrical and mechanical units and in relation to their timing of operation. It also shows how these units may be disassembled/assembled and adjusted.

I. OUTLINE OF OPERATION 5-1
II. PICK-UP FROM THE CASSETTE 5-2
  A. Pick-Up Operation 5-2
  B. Sequence of Operations (pick-up/feeding) 5-3
  C. Operation of the Cassette Lifter 5-4
  D. Detecting the Size of the Cassette 5-6
III. PICK-UP FROM THE MULTIFEEDER 5-8
  A. Pick-Up Operation 5-8
  B. Detecting the Size of Paper in the Multifeeder 5-9
  C. Sequence of Operations (pick-up from multifeeder) 5-10
IV. CONTROLLING THE REGISTRATION CLUTCH 5-11
V. DETECTING JAMS 5-12
  A. Outline 5-12
  B. Sequence of Operations (jam detection) 5-13
VI. DISASSEMBLY/ASSEMBLY 5-15
  A. Pick-Up Assembly 5-16
  B. Multifeeder Assembly 5-20
  C. Registration Roller Assembly 5-23
  D. Cassette Assembly 5-24

COPYRIGHT © 1998 CANON INC. CANON NP7161/NP7160 REV.0 AUG. 1998 PRINTED IN JAPAN (IMPRIME AU JAPON)

I. OUTLINE OF OPERATION

The copier uses a center reference feeding method, in which copy paper is moved along the center of the pick-up/feeding path to ensure stable movement.

The pick-up system consists of the cassette No. 1 holder and the multifeeder. Copy paper picked up from the cassette or the multifeeder is controlled by the registration roller so that it is aligned with the leading edge of the image on the photosensitive drum, and is sent through the transfer, separation, and fixing assemblies and then to the copy tray.

As many as two sensors are used to monitor the movement of the copy paper.

No.	Sensor	Description
PS5	Registration paper sensor	Detects delay/stationary jams, measures paper length.
PS6	Delivery paper sensor	Detects delay/stationary jams.

Table 5-101

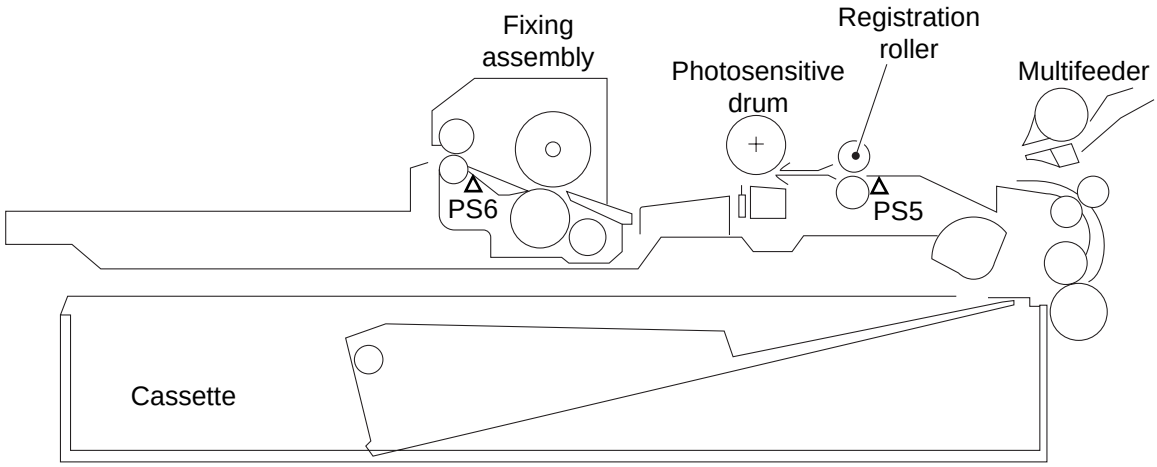

Figure 5-101

II. PICK-UP FROM THE CASSETTE

A. Pick-Up Operation

The pick-up roller and the feed roller are controlled by the pick-up solenoid (SL1).

The stack of copy paper inside the cassette is held up by the lifter, and the pick-up roller is controlled by the pick-up solenoid and is kept away from the surface of the stack.

When the pick-up solenoid turns on, the claws move away from the pick-up gear, and the drive of the main motor (M1) is transmitted to the pick-up roller and the feed roller.

A single sheet of copy paper is picked up and sent to the feed roller by the work of the pick-up roller and the separation claws. If multiple sheets should be picked up, the feed roller and the separation roller would serve to make sure that no more than a single sheet is sent forward to the vertical path roller.

The copy paper is then moved by the vertical path roller to the registration roller. In response, the registration roller controls the movement of the copy paper so that its leading edge matches the image on the photosensitive drum.

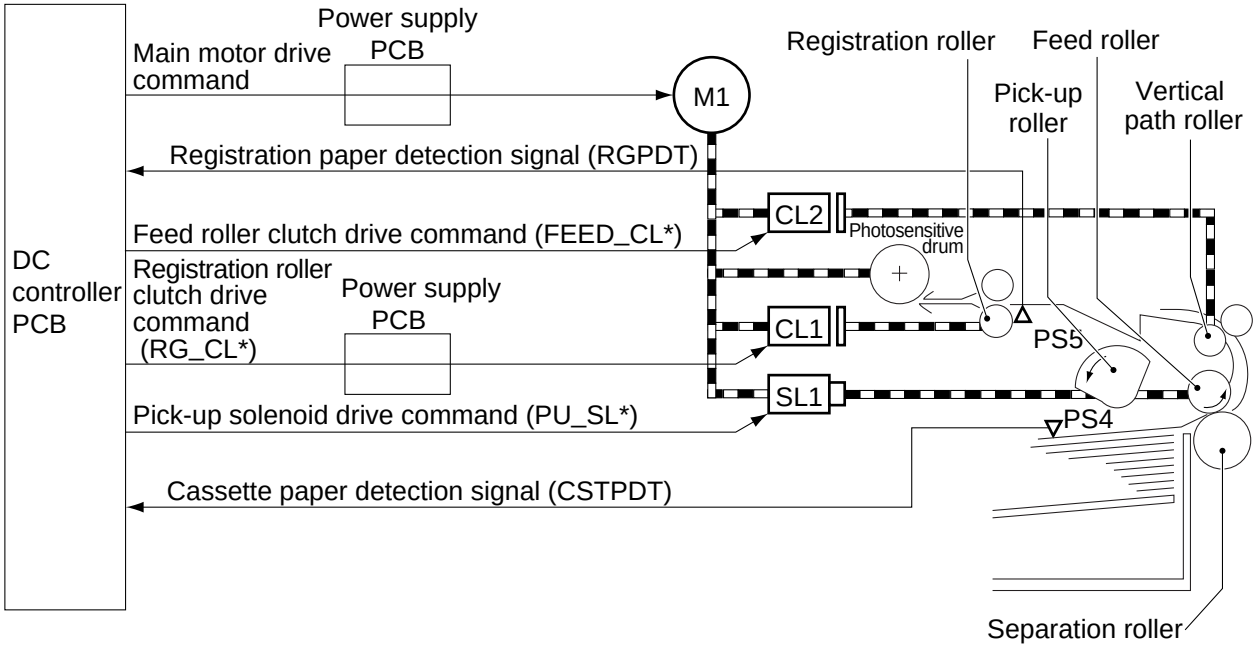

Figure 5-201

COPYRIGHT © 1998 CANON INC.
CANON NP7161/NP7160 REV.0 AUG. 1998 PRINTED IN JAPAN (IMPRIME AU JAPON)

B. Sequence of Operations (pick-up/feeding)

- **A4, 2 Copies**

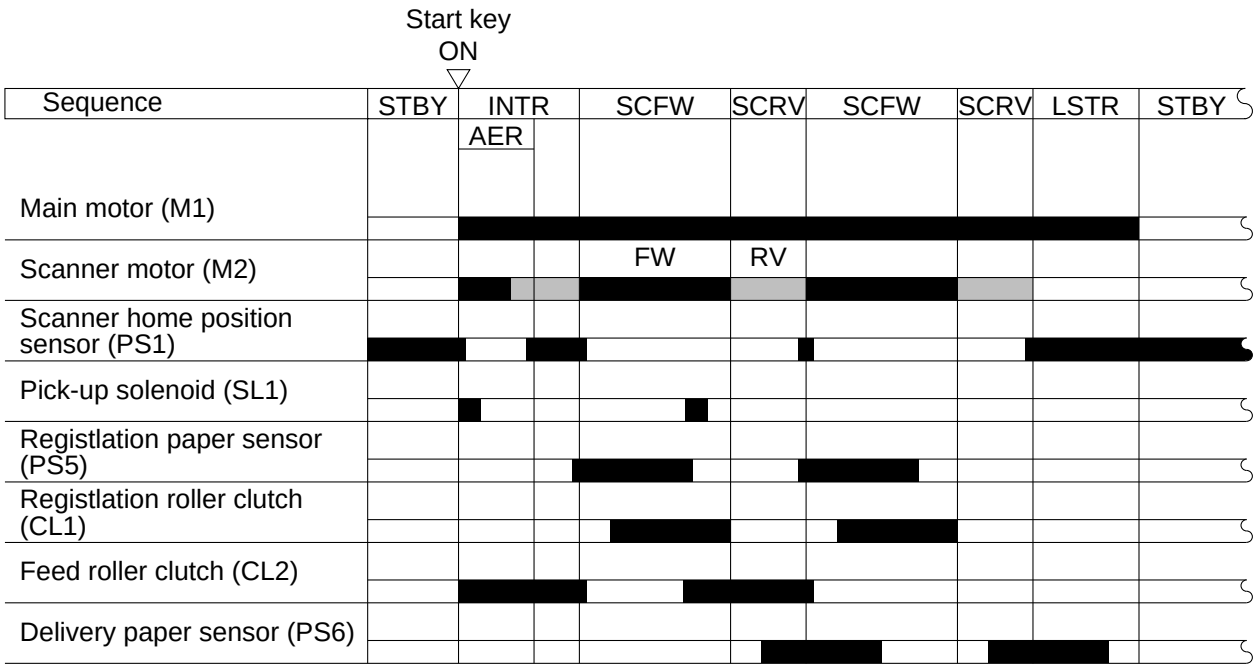

Figure 5-202

C. Operation of the Cassette Lifter

When the cassette is pushed inside the copier, the lifter stopper will be freed, and the lifter will move up by the force of a spring. At this time, the copy paper will push up the paper detecting lever of the cassette paper sensor (PS4) to enable detection of the presence/absence of copy paper.

The rear end guide plate is slid in conjunction with the upward movement of the lifter to improve pick-up performance.

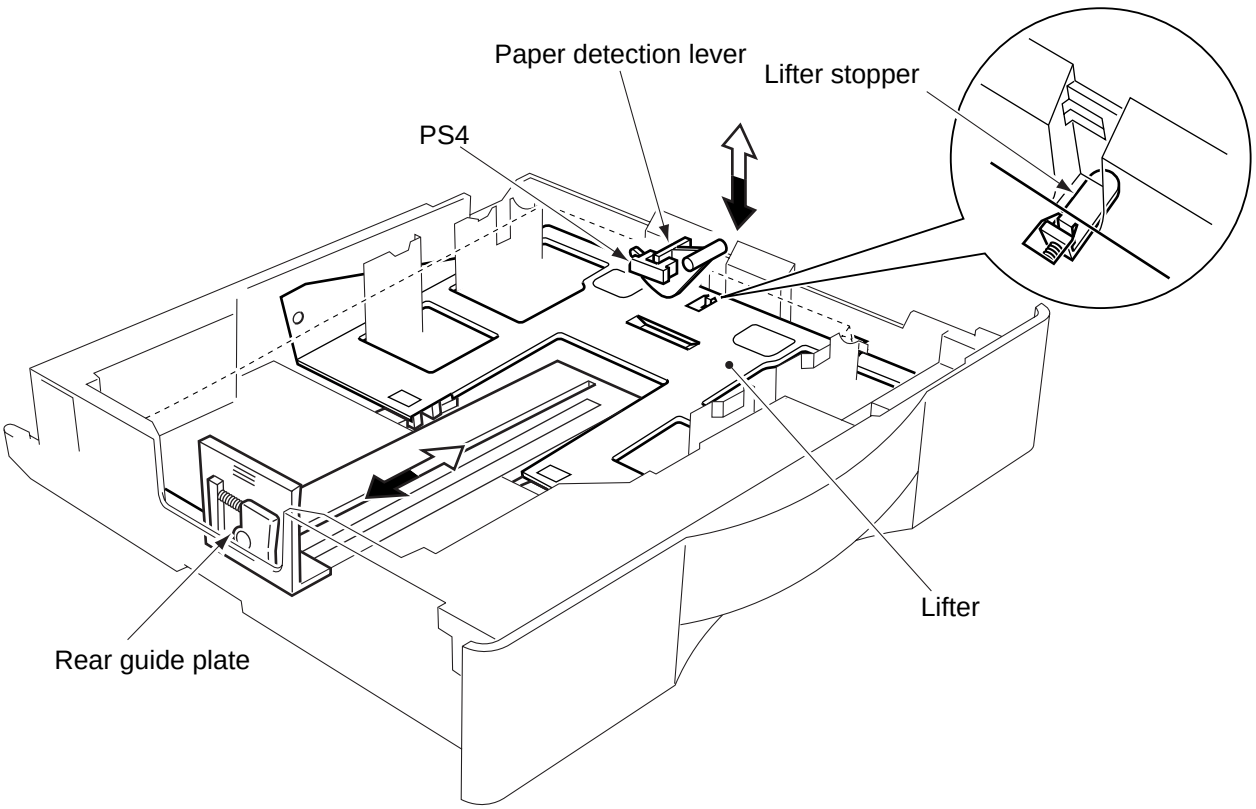

Figure 5-205

COPYRIGHT © 1998 CANON INC.
CANON NP7161/NP7160 REV.0 AUG. 1998 PRINTED IN JAPAN (IMPRIME AU JAPON)

The copier's cassette is designed to apply auxiliary pressure on paper of B4 or wider. The auxiliary tension spring acts on the lifter through the cut-off in the bottom of the cassette when the side guide plate is slid to the outside. In the case of paper narrower than B4, the spring remains slack and therefore does not act on the lifter.

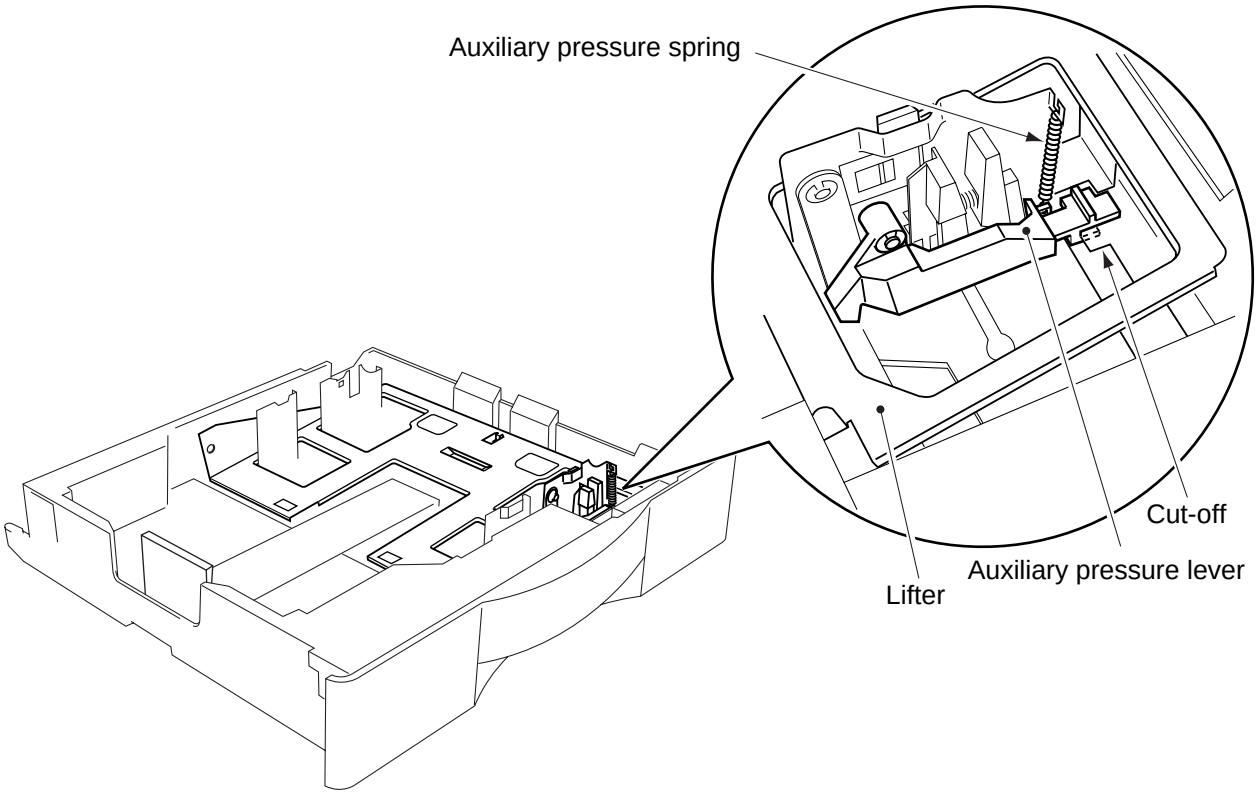

Figure 5-206

D. Detecting the Size of the Cassette

1. Outline

The presence of paper and the size of paper inside the cassette are checked by the cassette size switch PCB mounted to the left of the cassette slot.

When the cassette is set in the copier, the cassette paper size switching block and the AB/Inch switching block act on the cassette size switch PCB to enable detection of the presence/absence of a cassette and the size of paper inside it.

The cassette paper size switching block slid to the front and rear by the work of the cam linked to the cassette paper size dial, causing the cassette paper size switching block to turn on/off the cassette size switch PCB.

The AB/Inch switching block, on the other hand, turns on/off the switch on the cassette size switch PCB according to how it is positioned. (The AB and Inch size notations are switched over by sliding the AB/Inch switching lever.)

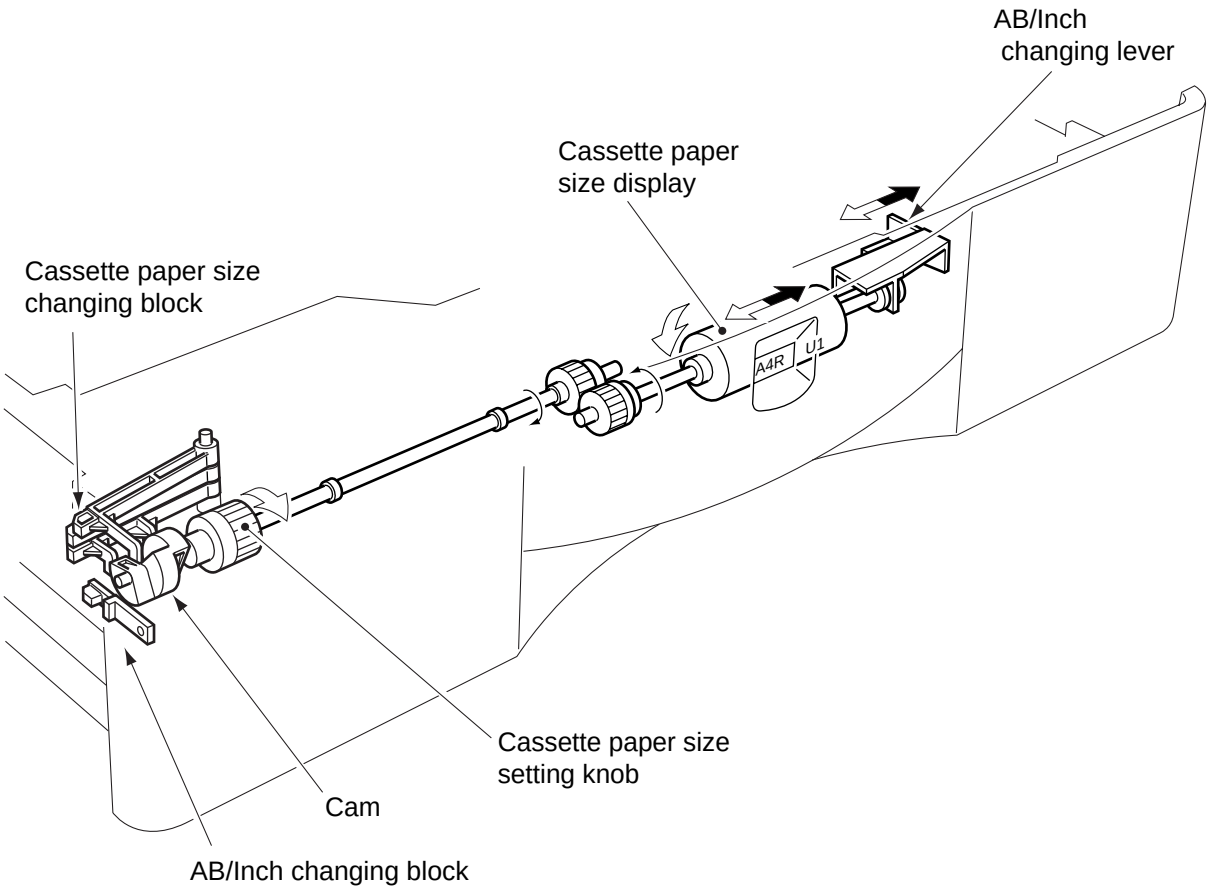

Figure 5-207

COPYRIGHT © 1998 CANON INC.

2. Detecting the Cassette Size

The AB configuration and the Inch configuration are distinguished by the switch (SW654) on the cassette switching PCB.

The size of the paper inside the cassette is identified with reference to the states (on/off) of the switches (SW651 through 653) on the cassette size switch PCB.

Table 5-201 shows the combinations used to identify specific paper sizes.

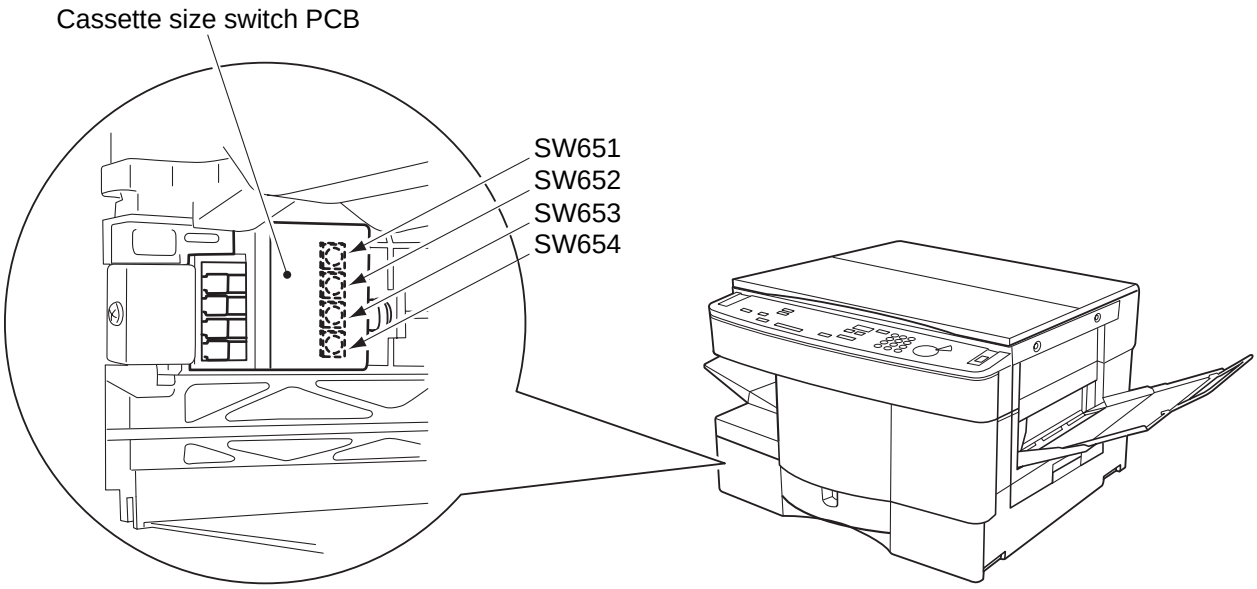

Figure 5-208

•AB size (SW654=0)

Result of detection	SW651	SW652	SW653
No cassette	0	0	0
B5	1	0	0
A4	0	1	0
A3	1	1	0
B5R	0	0	1
B4	1	0	1
A4R	0	1	1
No cassette	1	1	1

•Inch size (SW654=1)

Result of detection	SW651	SW652	SW653
No cassette	0	0	0
LGL	1	0	0
U2*	0	1	0
LDR	1	1	0
LTR	0	0	1
LTR-R	1	0	1
U1*	0	1	1
No cassette	1	1	1

*Non-AB/Inch configuration sizes may be registered (default sizes only) in service mode [5].

Table 5-201

COPYRIGHT © 1998 CANON INC.

III. PICK-UP FROM THE MULTIFEEDER

A. Pick-Up Operation

The presence/absence of copy paper in the multifeeder is detected by the multifeeder paper sensor (PS7).

When the multifeeder is selected and the Start key is pressed, the multifeeder solenoid (SL2) turns on to butt the paper guide plate against the multifeeder pick-up roller.

Then, the multifeeder roller clutch (CL3) turns on to transmit the drive of the main motor (M1) to the multifeeder pick-up roller. A single sheet of copy paper is picked up from the stack by the work of the multifeeder pick-up roller and the separation pad, and is sent to the registration roller.

This sequence of operations is repeated for each pick-up operation.

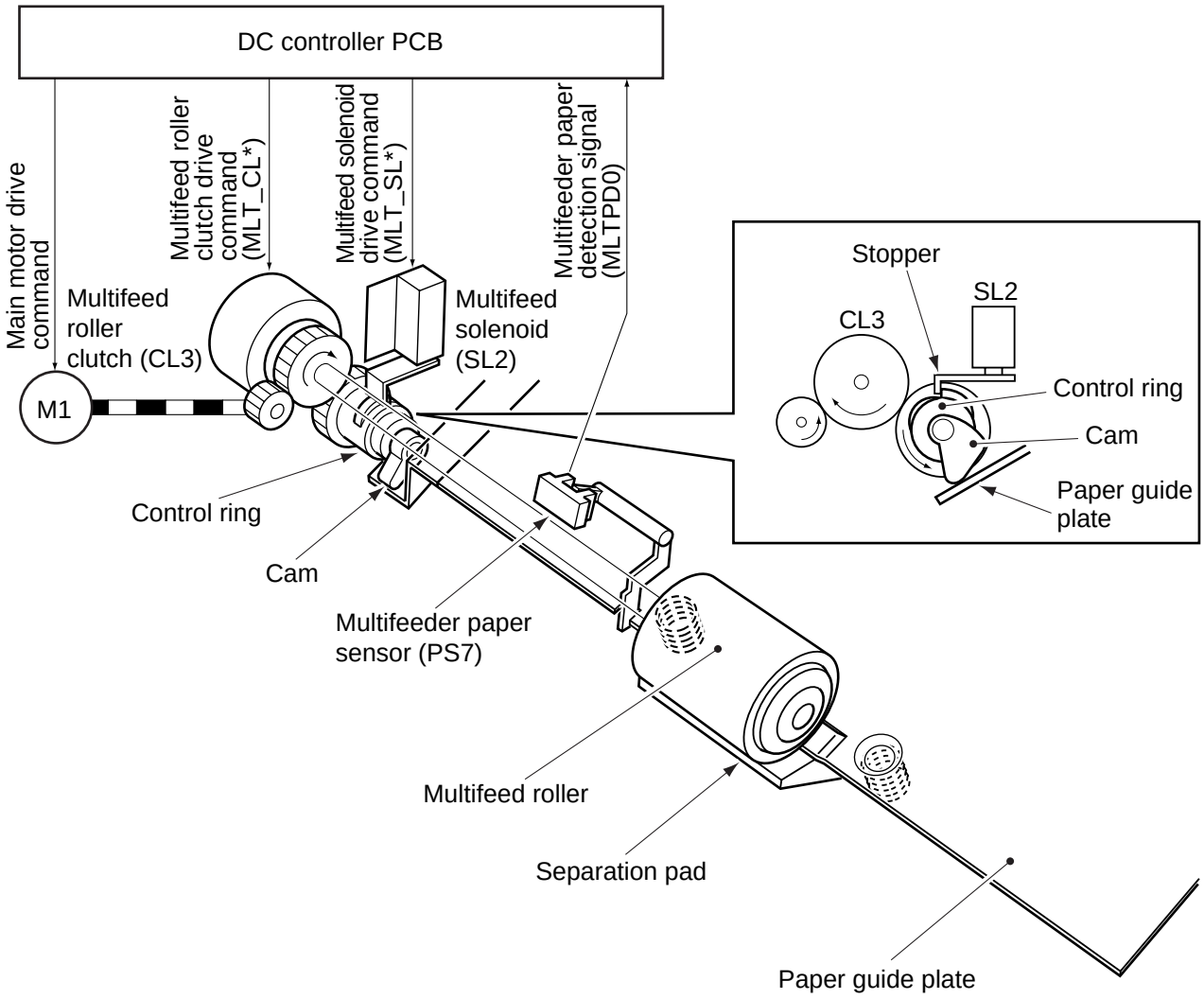

Figure 5-301

COPYRIGHT © 1998 CANON INC.

B. Detecting the Size of Paper in the Multifeeder

When the user sets the slide guide of the multifeeder to the width of copy paper, the multifeeder paper width sensor 1 (PS9) and the multifeeder paper width sensor (PS10) operating in conjunction with the movement of the side guide detect the width of the copy paper.

The identified width is used for blank exposure and fixing temperature control. The length of copy paper in multifeeder mode is detected with reference to how long the registration paper sensor (PS5) remains on.

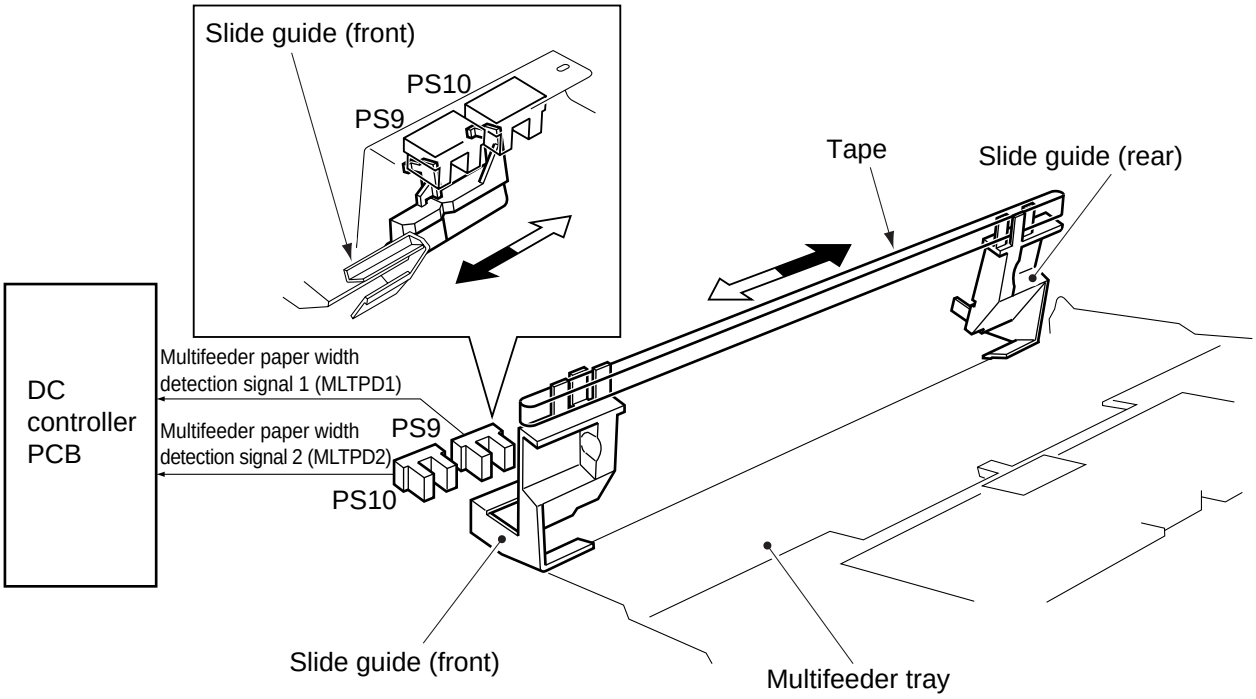

Figure 5-302

Paper width (mm)	PS9	PS10
Paper width > 257	0	1
257 ≧ Paper width > 216	1	1
216 ≧ Paper width > 182	1	0
182 ≧ Paper width	0	0

Table 5-301

COPYRIGHT © 1998 CANON INC.

C. Sequence of Operations (pick-up from multifeeder)

- **A4, 2 Copies**

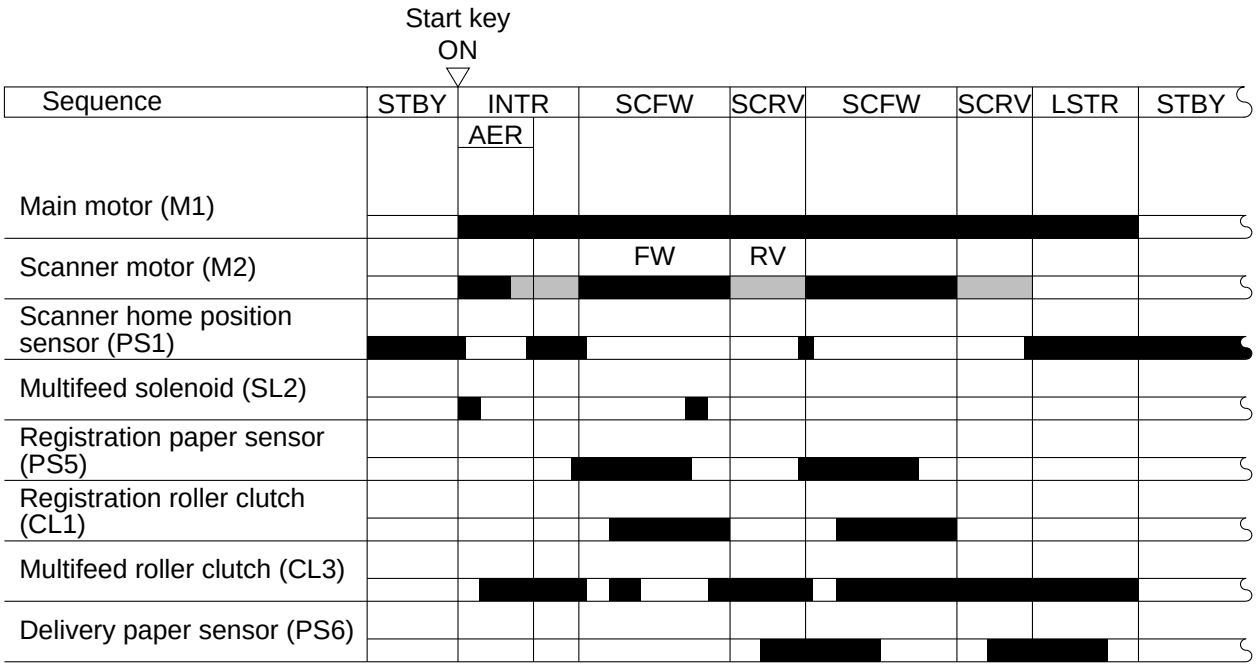

Figure 5-303

COPYRIGHT © 1998 CANON INC.
CANON NP7161/NP7160 REV.0 AUG. 1998 PRINTED IN JAPAN (IMPRIME AU JAPON)

IV. CONTROLLING THE REGISTRATION CLUTCH

The registration clutch exerts the following control so as to match copy paper with the image on the photosensitive drum at a specific location.

Selected copy mode		Control timing	Image area on copy paper	Remarks
Standard copying		A		
Page separation		A		
Fit to page	Centering OFF	A	C	The size of margin C varies to suit the selected reproduction ratio and copy paper size. The size of margin D is 21.6 mm maximum.
	Centering ON	B	D C-D	

Copy paper Image area

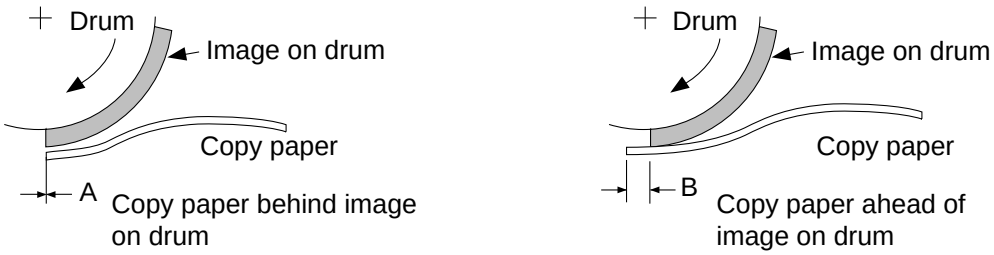

Figure 5-401

If centering is turned on in Fit Page mode, control is exerted so that half of the trailing edge C resulting in relation to the selected reproduction ratio and copy paper size will be the leading edge margin. The maximum leading edge margin in such cases, however, is 21.6 mm.

If centering is turned off in Fit Page mode, control is exerted so that the leading edge of copy paper and the leading edge of the image on the photosensitive drum match.

COPYRIGHT © 1998 CANON INC.

V. DETECTING JAMS

A. Outline

The copier is equipped with the following two sensors used to check the movement of copy paper.

- Registration paper sensor (PS5)
- Delivery paper sensor (PS6)

Jams are identified in relation to the presence/absence of copy paper over each sensor at such times as programmed in the microprocessor. As soon as a jam is identified, the microprocessor will immediately stop the operation, and flash the Jam indicator on the control panel.

The microprocessor identifies any of the following conditions as a jam:

a. Paper exists over a specific sensor at power-on, at end of warm-up, or during standby (power-on jam).
b. Paper fails to reach a specific sensor within a specific period of time (delay jam).
   1. Registration delay jam detected by the registration paper sensor (PS5).
   2. Delivery delay jam detected by the delivery paper sensor (PS6).
c. Paper does not move past a specific sensor within a specific period of time (stationary jam).
   1. Registration stationary jam detected by the registration paper sensor (PS5).
   2. Delivery paper stationary jam detected by the delivery paper sensor (PS6).

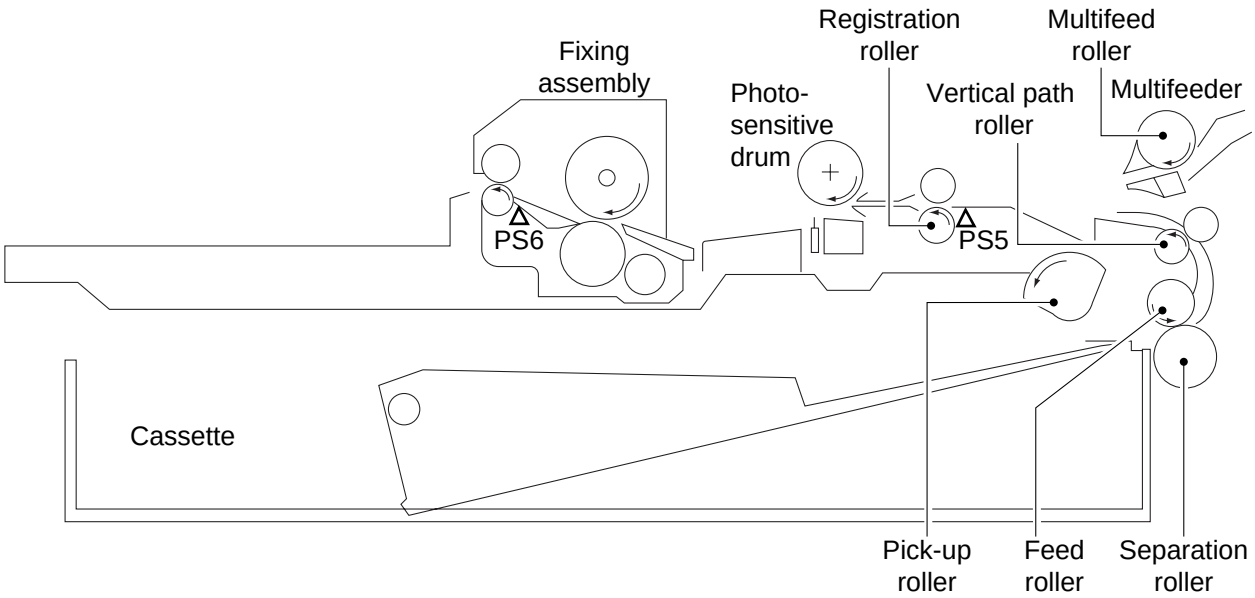

Figure 5-501

COPYRIGHT © 1998 CANON INC.
CANON NP7161/NP7160 REV.0 AUG. 1998 PRINTED IN JAPAN (IMPRIME AU JAPON)

B. Sequence of Operations (jam detection)

1. Registration Delay Jam

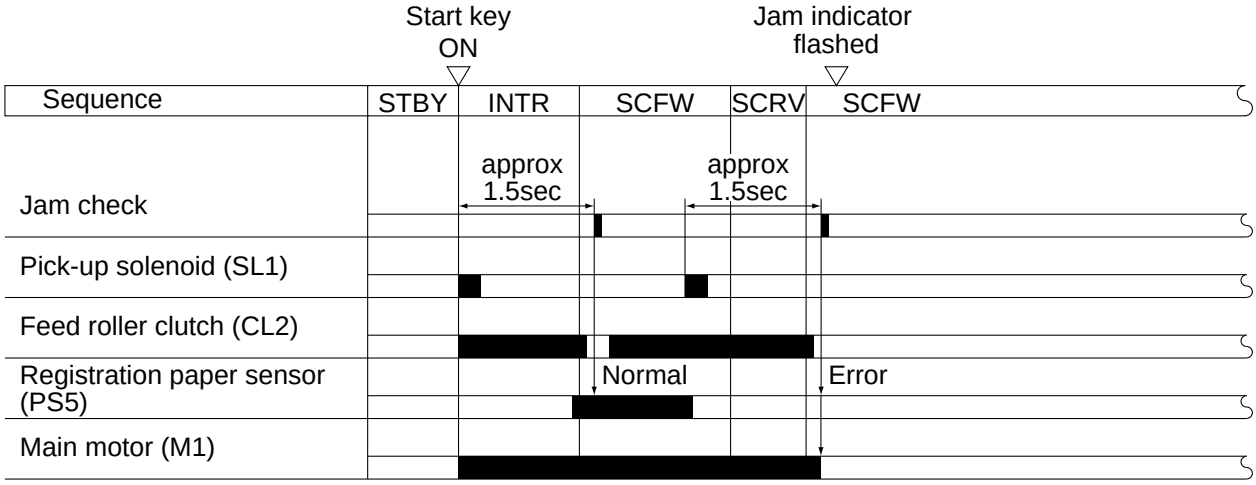

Figure 5-502

2. Registration Stationary Jam

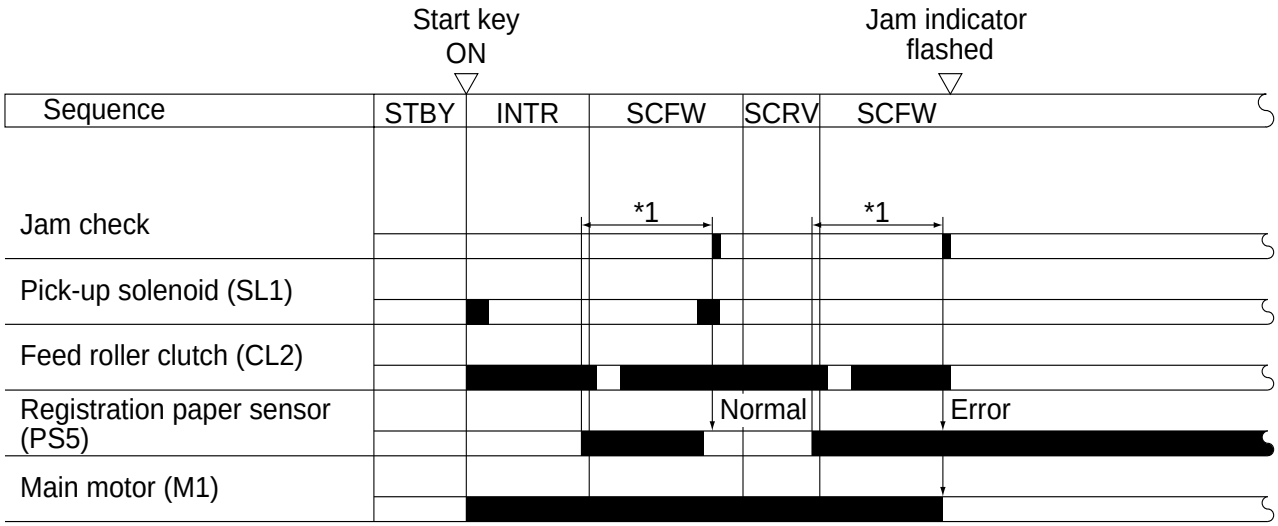

*1:Varies according to paper size.

Figure 5-503

COPYRIGHT © 1998 CANON INC.

3. Delivery Delay Jam

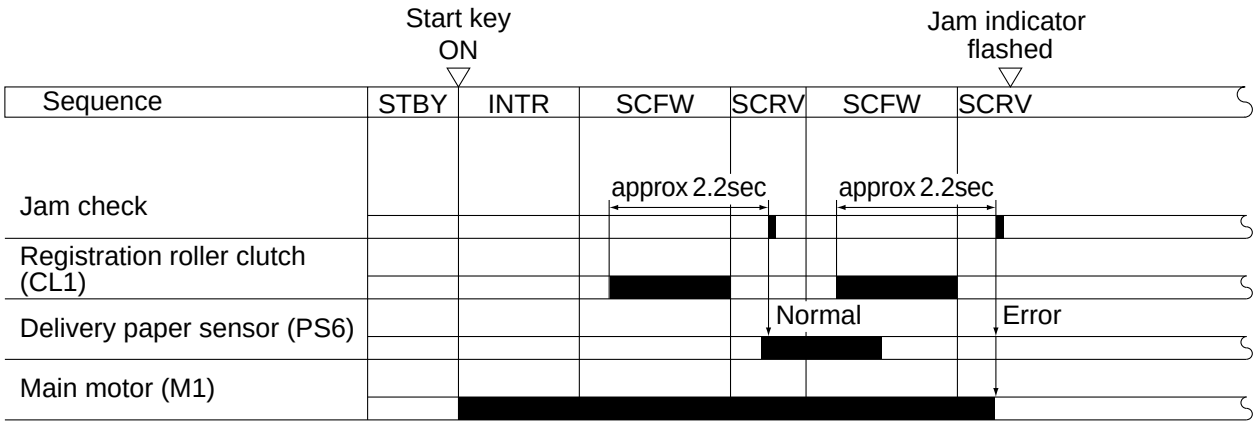

Figure 5-504

4. Delivery Stationary Jam

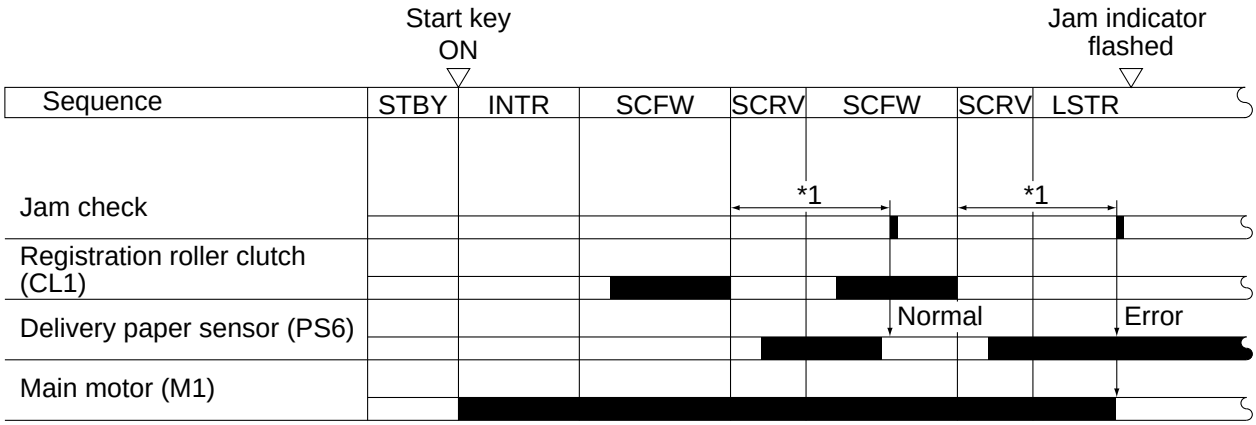

*1:Varies according to paper size.

Figure 5-505

COPYRIGHT © 1998 CANON INC.

VI. DISASSEMBLY/ASSEMBLY

The copier may be disassembled and assembled as shown here. Pay attention to the copier's mechanical characteristics along with the steps for disassembly/assembly.

Important:

1. Turn off the power and disconnect the power plug to ensure safety whenever disassembling/assembling the copier.
2. Unless otherwise noted, assemble the parts by reversing the steps used to disassemble them.
3. Identify the screws by type (length, diameter) to avoid use in the wrong location.
4. Use a washer where needed. The mounting screws used for the grounding wire and varistor come with a washer to ensure electric continuity. Do not forget to use these washers.
5. As a rule, do not operate the copier with any of its parts removed.

COPYRIGHT © 1998 CANON INC.

A. Pick-Up Assembly

1. Removing the Pick-Up Roller

1) Remove the cassette.
2) Remove the stepped screw [1], and pull the roller support plate [2] to the front to remove.
3) Remove the pick-up roller assembly [3].

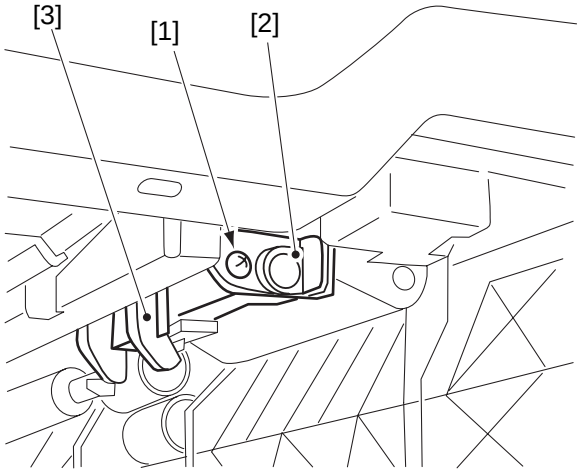

Figure 5-601

4) Push the section indicated by an arrow, and remove the two pick-up rollers [4].

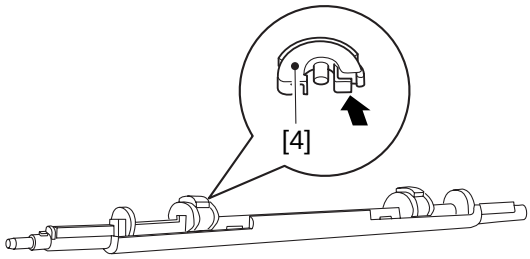

Figure 5-602

2. Mounting the Pick-Up Roller

Mount the pick-up roller by reversing the steps used to remove it and with the following in mind:

- Match the boss on the pick-up roller and the cut-off in the holder.
- Do not detach the rubber section of the pick-up roller.
- When mounting the pick-up roller assembly to the copier, be sure to position it securely face up.

COPYRIGHT © 1998 CANON INC.

3. Removing the Pick-Up Drive Assembly

1) Remove the registration roller assembly. (See p. 5-23.)
2) Remove the E-ring [1], and slide the vertical path roll [2] in the direction of the arrow.
3) Remove the bushing [3], and then vertical path roller [2] together with the gear [4].

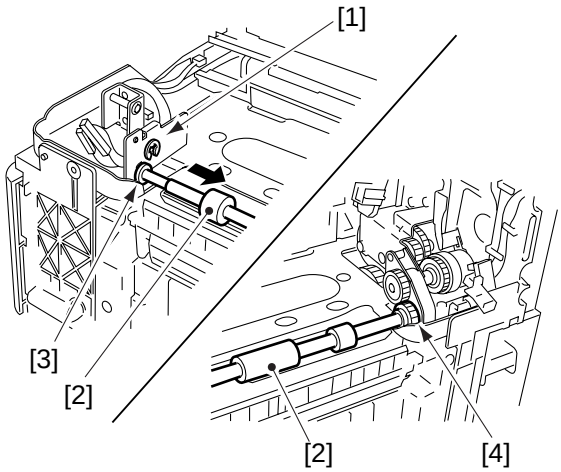

Figure 5-603

4) Remove the four mounting screws [5], and remove the pick-up drive assembly [6].

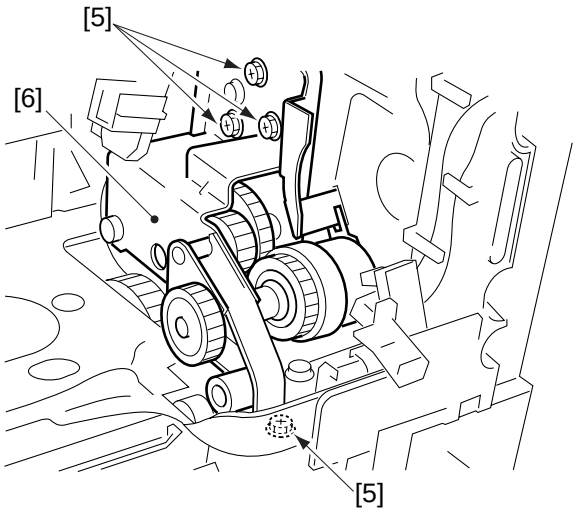

Figure 5-604

4. Removing the Pick-Up Assembly

1) Remove the separation roller assembly. (See p. 5-18.)
2) Remove the registration roller assembly. (See p. 5-23.)
3) Disconnect the connector [1], and remove the two screws [2].

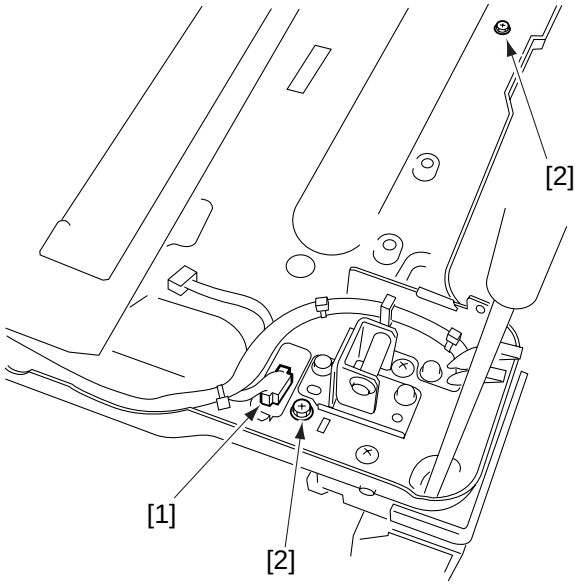

Figure 5-605

COPYRIGHT © 1998 CANON INC.

4) Slide the pick-up assembly [3] to the rear, and remove the hook.

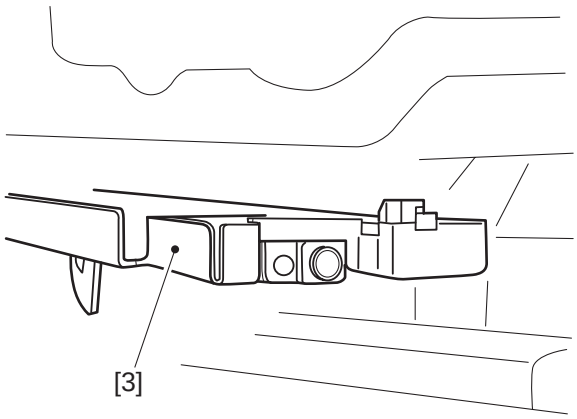

Figure 5-606

5. Removing the Feed Roller

1) Remove the separation roller assembly.
2) While holding the claw [A], move the feed roller [2] in the direction of the arrow to remove.

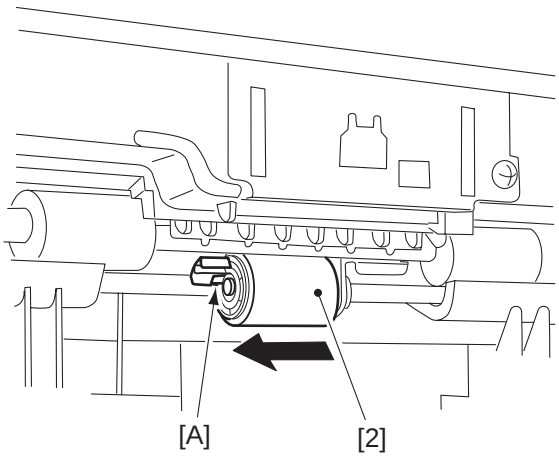

Figure 5-607

6. Removing the Separation Roller

1) Remove the cassette.
2) Remove the right door. (See p.7-10)
3) Remove the two mounting screws [1], and remove the separation roller assembly [2].

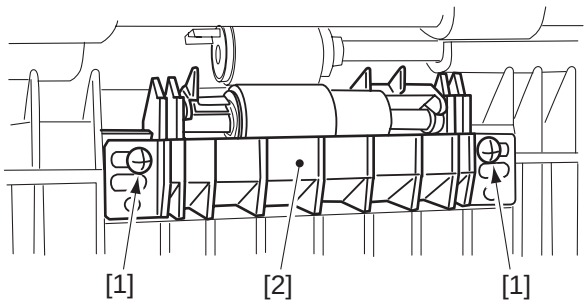

Figure 5-608

COPYRIGHT © 1998 CANON INC.

4) Remove the roller cover [3].

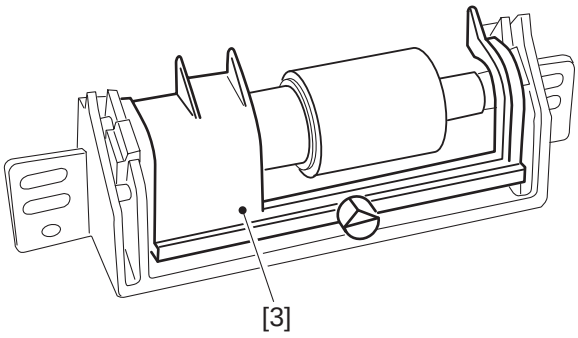

Figure 5-609

5) Remove the two bushings [4], and remove the two springs [5].

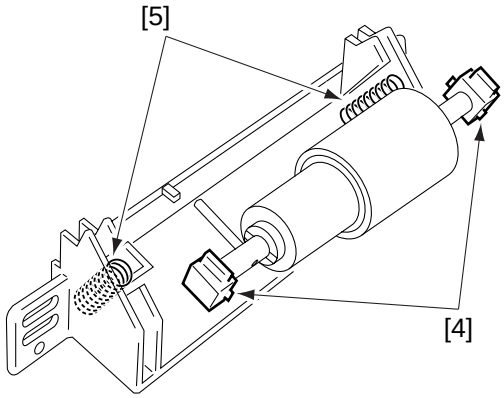

Figure 5-610

6) While pushing the claw [A] with a flat-blade screwdriver, remove the separation roller [6].

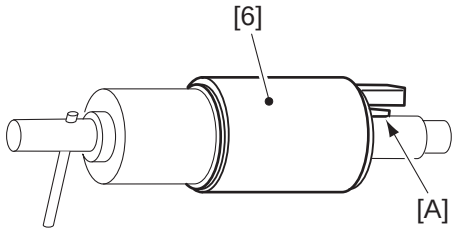

Figure 5-611

7. Mounting the Separation Roller

Mount the separation roller by reversing the steps used to remove it and with the following in mind:

- When mounting the separation roller, be sure to fit the pin [1] in the groove [2] of the holder.
- When mounting the roller cover, be sure so that the roller cover will push against the bushing.

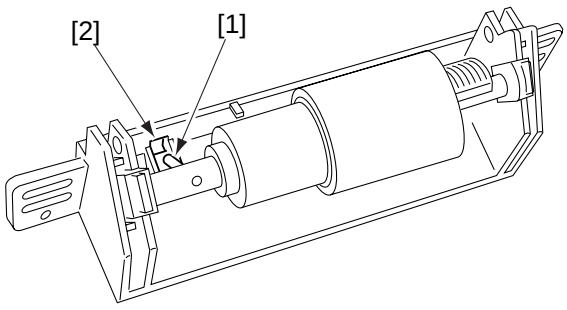

Figure 5-612

COPYRIGHT © 1998 CANON INC.

B. Multifeeder Assembly

1. Removing the Multifeeder Tray

1) Open the multifeeder tray, and remove the face cover [1] using a flat-blade screwdriver.

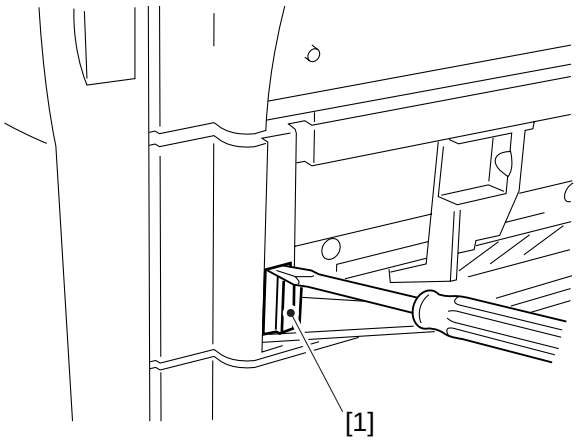

Figure 5-613

2) Remove the guide pin [2], and remove the multifeeder tray [3].

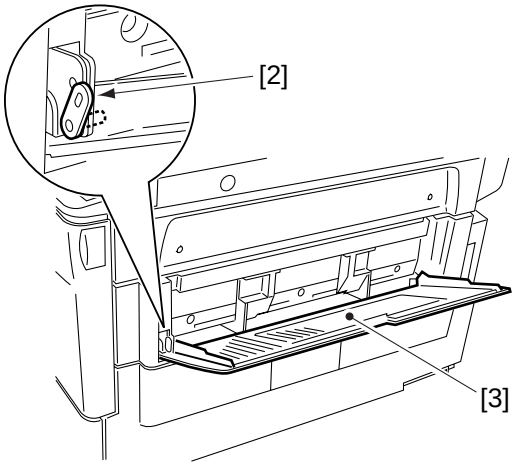

Figure 5-614

2. Removing the Multifeeder Assembly

1) Remove the rear cover, and open the right door.
2) Remove the lower inside cover. (See p.7-12.)
3) Disconnect the two connectors [1], and remove the mounting screw [2].

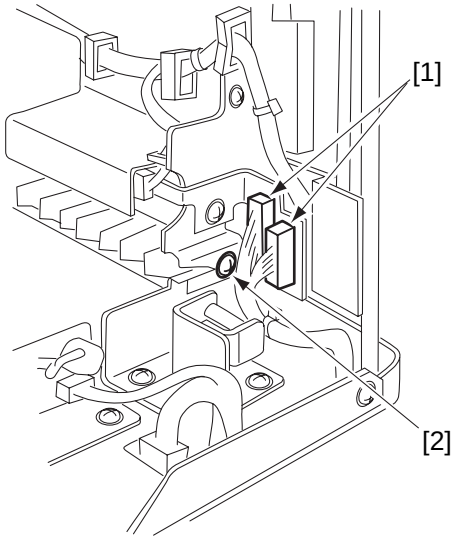

Figure 5-615

COPYRIGHT © 1998 CANON INC.

4) Disconnect the two connectors [3], and remove the three mounting screws [4]; then, detach the multifeeder assembly [5].

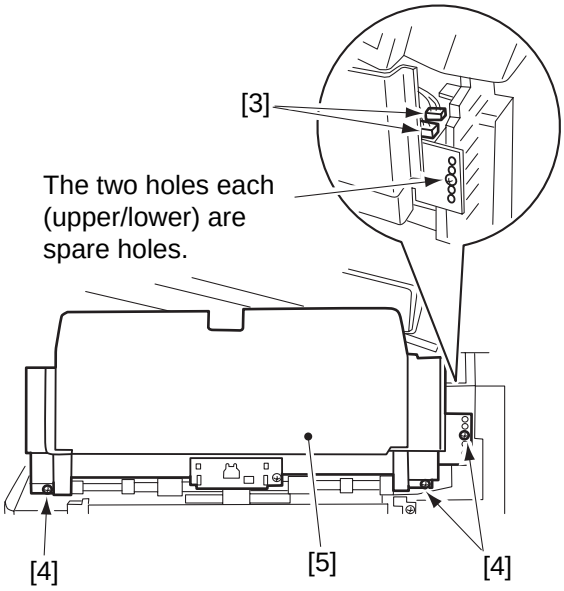

Figure 5-616

3. Removing the Multifeeder Pick-Up Roller

1) Remove the developing assembly. (See p. 4-37.)
2) Remove the drum unit. (See p. 4-28.)
3) Remove the E-ring [1]; then, while pushing down the multifeeder separation pad [2] to free it from pressure, detach the multifeeder pick-up roller [3].

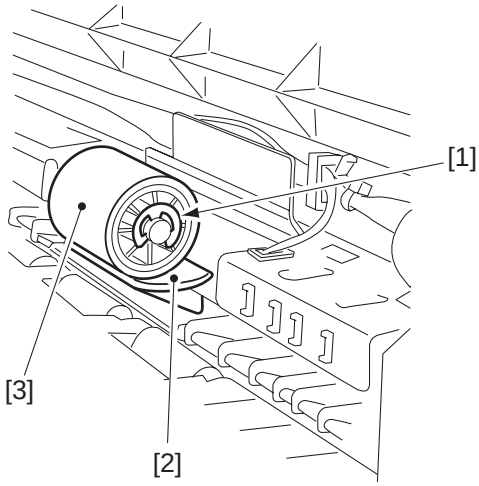

Figure 5-617

4. Removing the Separation Pad

1) Execute service mode 402 (multifeeder holding plate release) in standby state so as to lift the multifeeder holding plate [1].

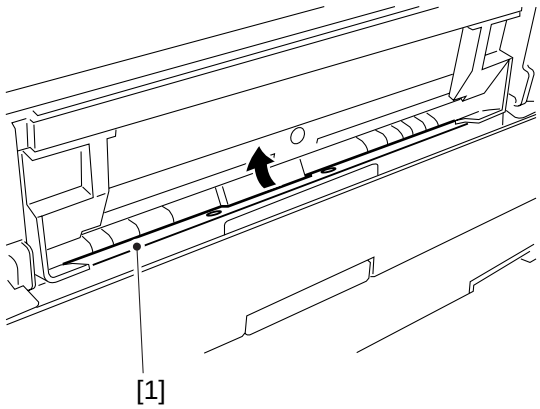

Figure 5-618

COPYRIGHT © 1998 CANON INC.

2) Turn off the copier, and disconnect the power plug.

Caution:
Whenever you need to perform disassembly/assembly work, be sure to turn off the copier and disconnect its power plug.

3) Open the right door.
4) Remove the mounting screw [2], and slide the multifeeder separation pad assembly [3] in the direction of the arrow to remove.

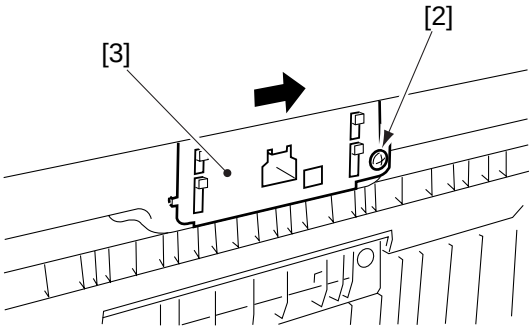

Figure 5-619

5) Detach the multifeeder separation pad [5] from the holder [4].

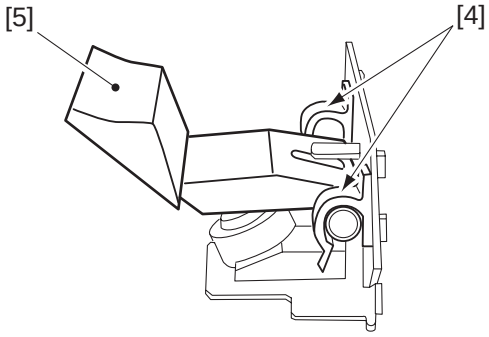

Figure 5-620

5. Adjusting the Pressure of the Separation Pad

If double feeding or pick-up failure occurs, loosen the adjusting screw [1] and relocate the holder [2] to adjust the force of the separation pad tension spring.

- If pick-up failure occurs, move the holder in the direction of [A].
- If double feeding occurs, move the holder in the direction of [B].

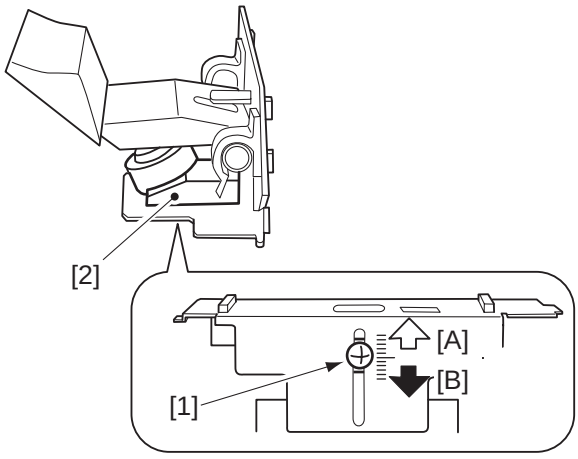

Figure 5-621

COPYRIGHT © 1998 CANON INC.

C. Registration Roller Assembly

1. Removing the Registration Roller Assembly

1) Remove the developing assembly. (See p. 4-37.)
2) Remove the drum unit. (See p. 4-28.)
3) Remove the multifeeder assembly. (See p. 5-20.)
4) Disconnect the connector [1], and remove the grip right [2]; then, detach the registration roller clutch [3].

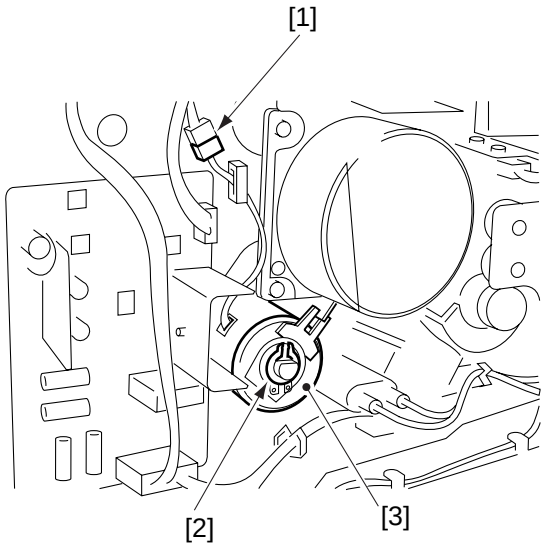

Figure 5-622

5) Disconnect the connector [4], and remove the three mounting screws [5]; then, detach the registration roller assembly [6].

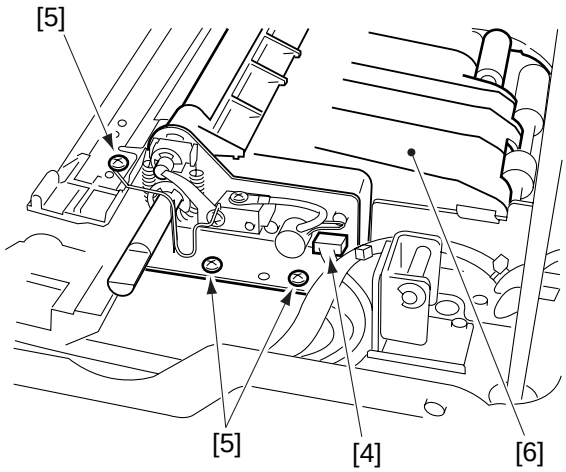

Figure 5-623

COPYRIGHT © 1998 CANON INC.

D. Cassette Assembly

1. Removing the Cassette Size Switch

1) Remove the cassette.
2) Remove the delivery lower cover. (See p.7-11)
3) Disconnect the connector [1] (J110) of the DC controller PCB, and remove the mounting screw [2] ; then, free the harness from the harness guide.

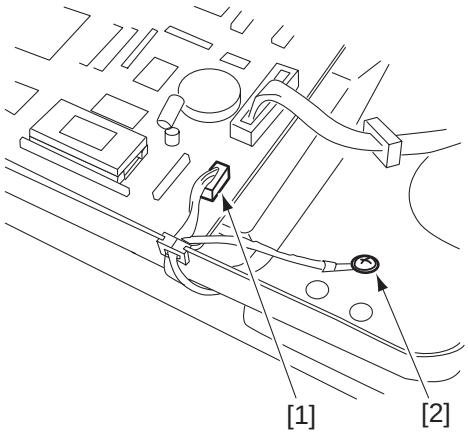

Figure 5-624

4) Remove the mounting screw [3], and remove the stopper [4].
5) Remove the cassette switch assembly [5].

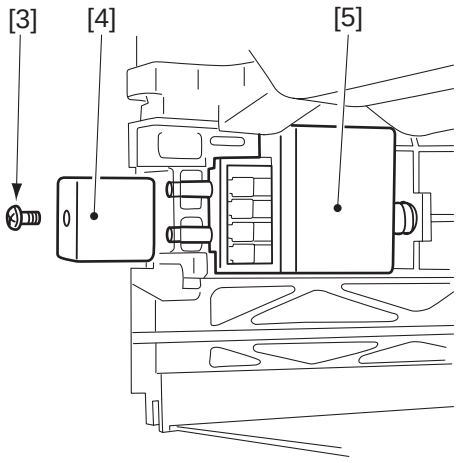

Figure 5-625

6) Remove the hook [6], and remove the cassette size switch [7].

Caution:

When mounting the cassette size switch assembly, check to make sure that the cassette size switch assembly slides normally by the work of the spring [8] pressure.

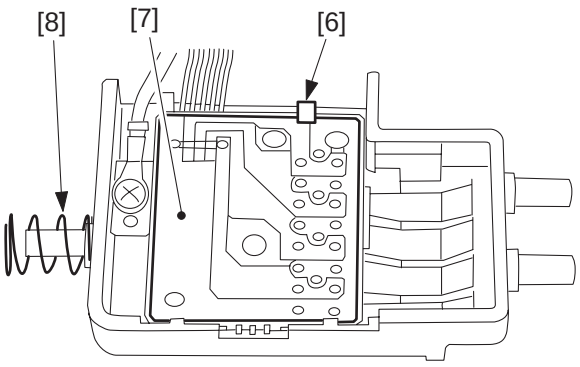

Figure 5-626

COPYRIGHT © 1998 CANON INC.

2. Changing the Cassette Size (AB/ INCH)

1) Slide out the cassette.
2) Loosen the mounting screw [1] on the left side of the cassette; then, slide the size switching block [2] to the desired size position, and fix it in place.

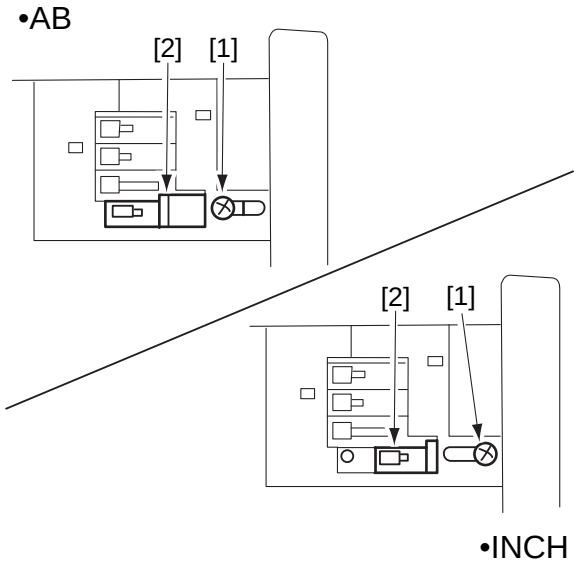

Figure 5-627

3) Remove the mounting screw [3]; then, slide the size switching lever [4] to the desired size position, and fix it in place.

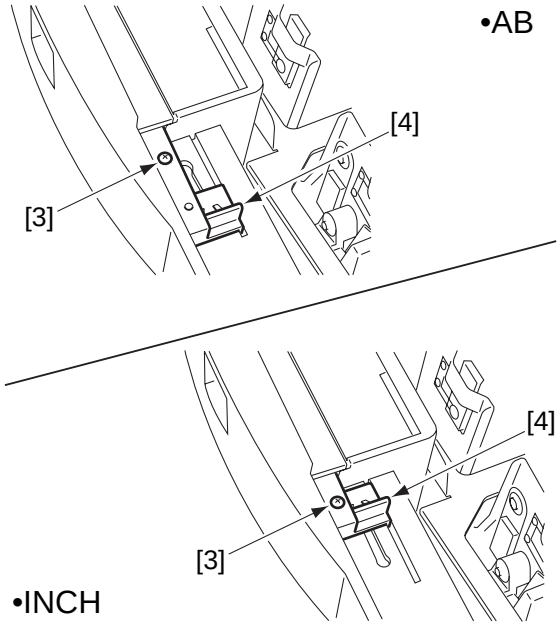

Figure 5-628

COPYRIGHT © 1998 CANON INC.

3. Adjusting the Left/Right Registration

Turn the adjusting screw [1] until the cassette locking lever plate [2] and the cassette locking lever [3] engage.

When the adjusting screw [1] is turned clockwise, the cassette locking plate moves to the front.

When the adjusting screw [1] is turned counterclockwise, the cassette locking lever plate [2] moves to the rear.

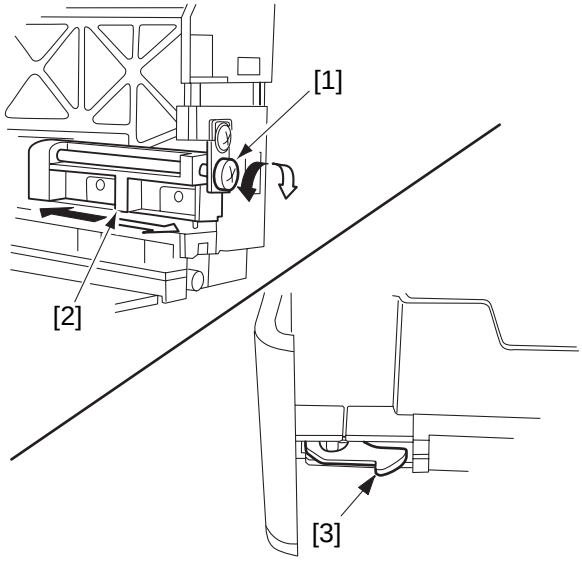

Figure 5-629

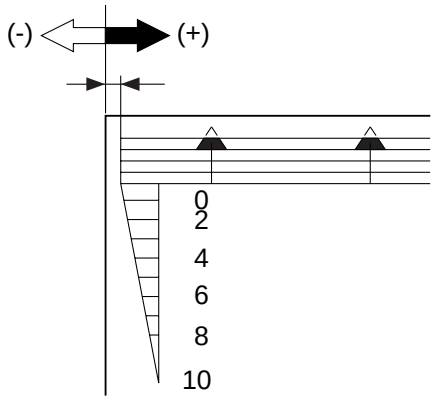

Figure 5-630

COPYRIGHT © 1998 CANON INC.

CHAPTER 6

FIXING SYSTEM

This chapter explains the principles used to fuse toner images to transfer medium in view of the functions of electrical and mechanical units and in relation to their timing of operation. It also shows how these units may be disassembled/assembled and adjusted.

I. OUTLINE OF OPERATION 6-1
A. Outline 6-1
B. Controlling the Fixing Temperature ... 6-2
C. Error Detection Circuit 6-5

II. DISASSEMBLY/ASSEMBLY 6-7
A. Fixing Assembly 6-8
B. Delivery Assembly 6-16

COPYRIGHT © 1998 CANON INC. CANON NP7161/NP7160 REV.0 AUG. 1998 PRINTED IN JAPAN (IMPRIME AU JAPON)

I. OUTLINE OF OPERATION

A. Outline

The upper roller and the lower roller of the fixing assembly and the delivery roller of the delivery assembly are operated by the drive from the main motor (M1) coming through gears.

The upper roller has a built-in heater which is kept on during WMUP after power-on at 1000 W (120 V)/1050 W (230 V). Other than WMUP, the heater is subjected to phase control, and is turned on at 805 w (120/230 V) or off.

The fixing temperature is detected with reference to the surface temperature of the upper roller rear end detected by the main thermistor (TH1) and the sub thermistor (TH2), and is communicated to the microprocessor on the DC controller PCB.

Based on the thermistor signal (TH1, TH2), the DC controller PCB turns on/off the fixing heater drive signal (HEAT_DR) to turn on/off the fixing heater (H1), thereby keeping it at the target temperature. To cut off AC power to the heater in the event of overheating, a thermal switch (TSW1) is mounted at the front of the fixing upper roller.

The copier is designed to remove toner adhering to the upper or the lower roller; for this reason, its heat discharge roller is kept in firm contact with the lower roller.

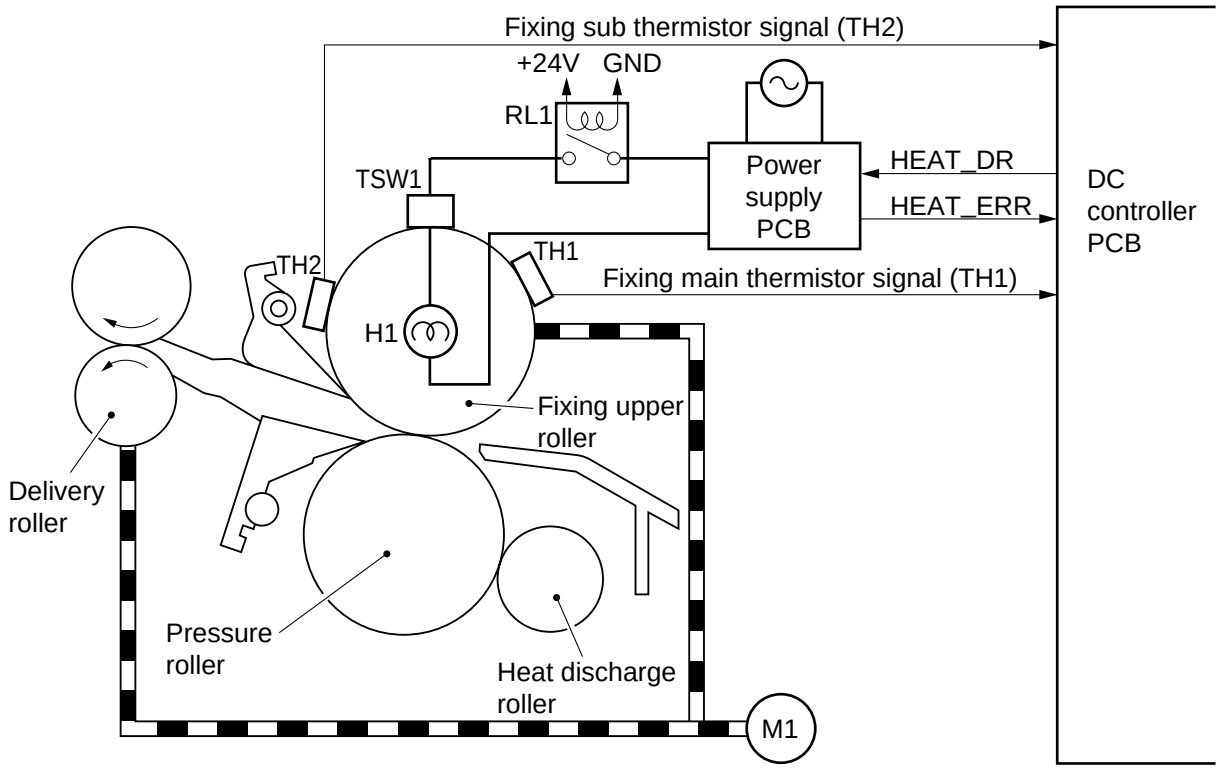

Figure 6-101

Reference:

Fixing heater: 1000 W for the 120 V model, 1050 W for the 230 V model.
Thermal switch: 230 ±10°C.

COPYRIGHT © 1998 CANON INC.

B. Controlling the Fixing Temperature

The copier uses two thermistors mounted at the rear ends of the upper roller to monitor surface temperature. When copies are made continuously using sheets of B4 or less, the temperature of the area (center) coming into contact with the paper will be lower than the temperature of the areas (ends) not coming into contact with the paper. To prevent such a problem, the target temperature is varied in steps to suit the width of copy paper and the temperature detected by the thermistor during copying operation.

To improve fixing on rough surface paper or tracing paper, a special paper mode (U13) has been added to user mode, thereby enabling a target temperature unique to these types of paper.

• Paper Width >257 mm

Temperature detected by thermistor at Start key on	Target temperature immediately after Start key on			Target temperature during continuous copying (upper limit)		
	General plain paper	Paper with rough surface	Tracing paper	General plain paper	Paper with rough surface	Tracing paper
Less than 170°C	171°C	196°C	161°C	181°C	209°C	171°C
170°C or more, less than 180°C	181°C	200°C	171°C			
180°C or more, less than 190°C	181°C	206°C	171°C			
190°C or more	181°C	209°C	171°C			

Table 6-101

• 257 mm > Paper Width > 216 mm

Temperature detected by thermistor at Start key on	Target temperature immediately after Start key on			Target temperature during continuous copying (upper limit)		
	General plain paper	Paper with rough surface	Tracing paper	General plain paper	Paper with rough surface	Tracing paper
Less than 170°C	179°C	196°C	169°C	193°C	211°C	183°C
170°C or more, less than 180°C	188°C	201°C	178°C			
180°C or more, less than 190°C	193°C	206°C	183°C			
190°C or more	193°C	211°C	183°C			

Table 6-102

• 216 mm > Paper Width > 182 mm

Temperature detected by thermistor at Start key on	Target temperature immediately after Start key on			Target temperature during continuous copying (upper limit)		
	General plain paper	Paper with rough surface	Tracing paper	General plain paper	Paper with rough surface	Tracing paper
Less than 170°C	177°C	196°C	167°C	200°C	214°C	190°C
170°C or more, less than 180°C	186°C	202°C	176°C			
180°C or more, less than 190°C	192°C	207°C	182°C			
190°C or more	200°C	214°C	190°C			

Table 6-103

COPYRIGHT © 1998 CANON INC.

• 182 mm > Paper Width

Temperature detected by thermistor at Start key on	Target temperature immediately after Start key on			Target temperature during continuous copying (upper limit)		
	General plain paper	Paper with rough surface	Tracing paper	General plain paper	Paper with rough surface	Tracing paper
Less than 170°C	175°C	196°C	165°C	200°C	215°C	190°C
170°C or more, less than 180°C	186°C	204°C	176°C			
180°C or more, less than 190°C	194°C	208°C	184°C			
190°C or more	200°C	215°C	190°C			

Table 6-104

• From Power-On to End of Copying

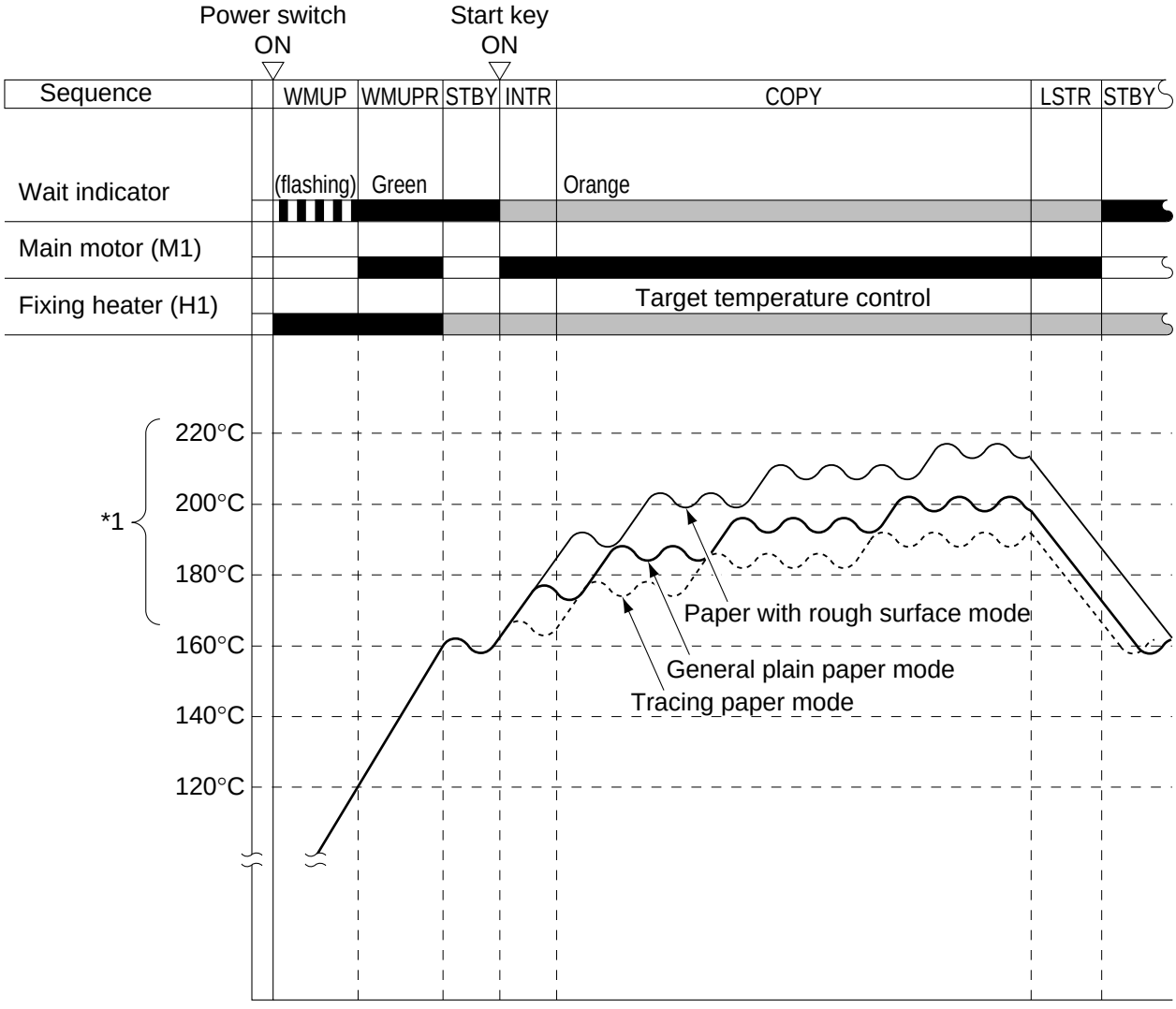

*1:Varies according to paper width.

Figure 6-102

COPYRIGHT © 1998 CANON INC.

• Power Save Key ON or Auto-Power OFF

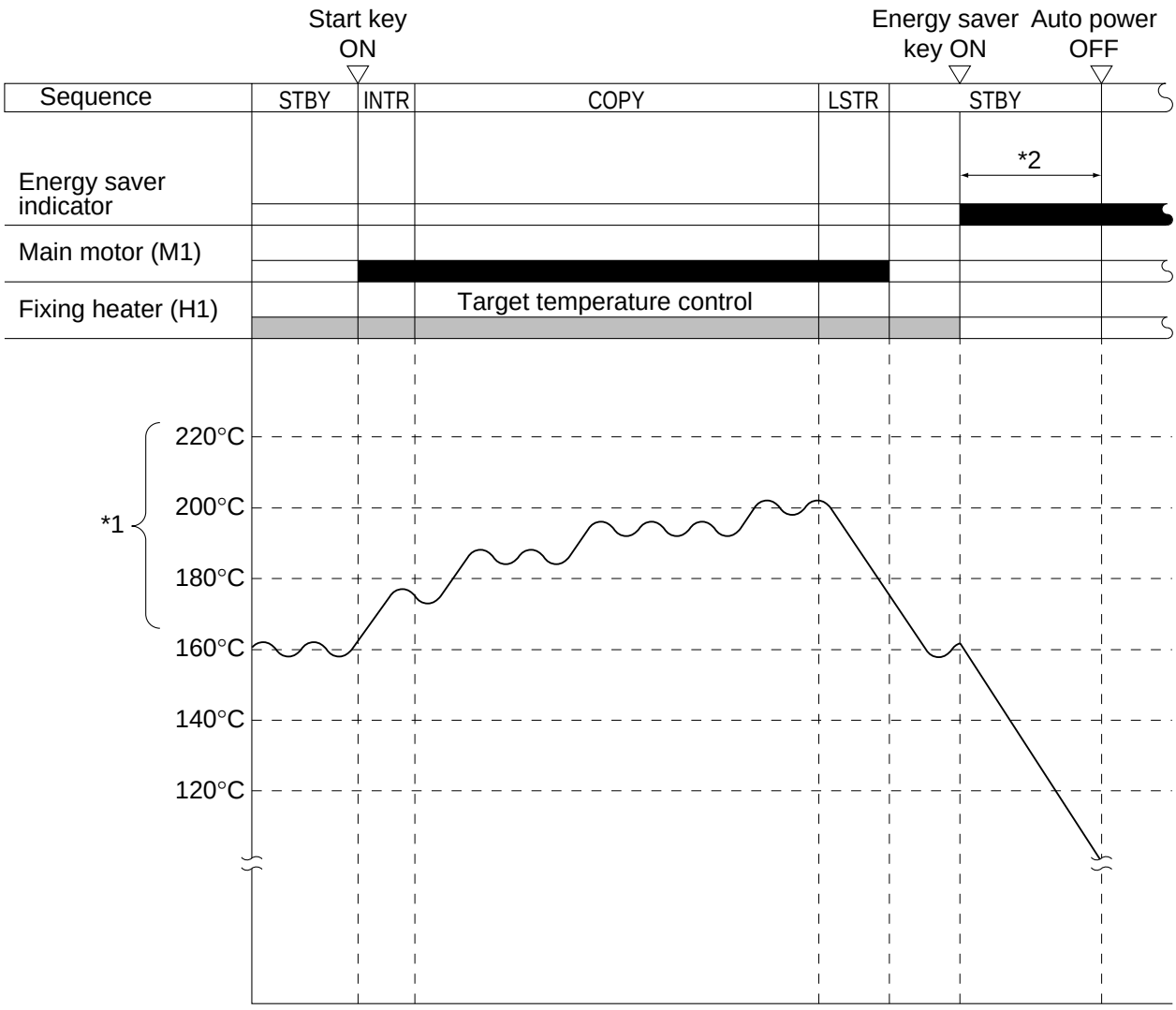

*1:Varies according to paper width. *2:May be varied in user mode.

Figure 6-103

COPYRIGHT © 1998 CANON INC.
CANON NP7161/NP7160 REV.0 AUG. 1998 PRINTED IN JAPAN (IMPRIME AU JAPON)

C. Error Detection Circuit

1. Outline

The copier's error detection circuit is constructed as shown in Figure 6-104, and monitors the following items for an error:

- Surface temperature of the upper fixing roller
- Activation of the fixing heater (H1)

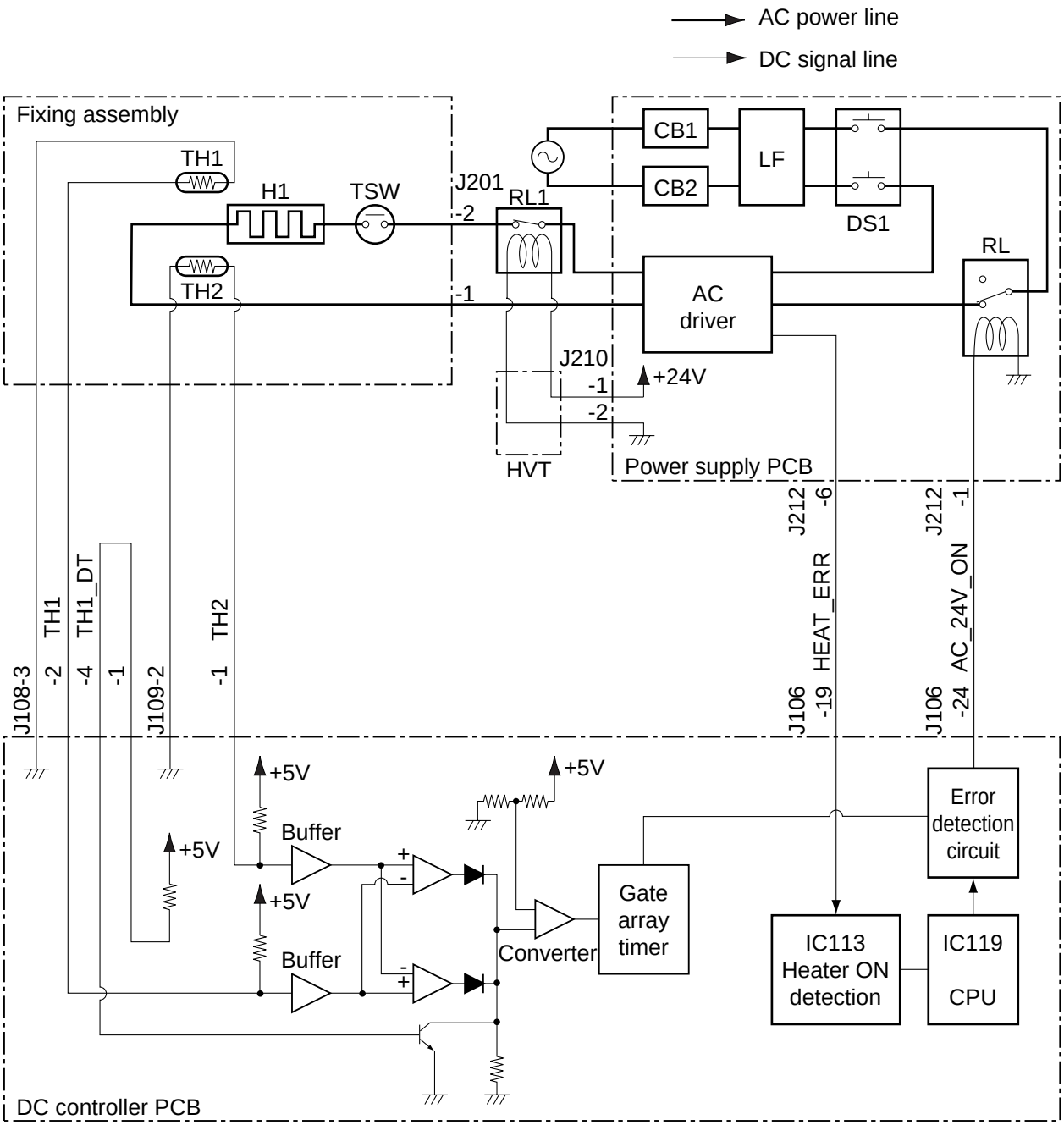

Figure 6-104

2. Surface Temperature of the Fixing Upper Roller

The main thermistor (TH1) and the sub thermistor are arranged nearby at the rear of the fixing upper roller, and are used to monitor the difference in voltage between two thermistor signals (TH1, TH2).

If either thermistor suffers an open circuit, the CW input terminal of the differential amplifier circuit will be about 5 V. At this time, the voltage of the other thermistor will decrease as the surface temperature of the fixing upper roller increases, gradually increasing the output of the differential amplifier circuit.

When the output of the differential amplifier circuit exceeds the value set on the comparator, the comparator will send a signal to the gate array. When the gate array detects the signal from the comparator for a specific period of time, the DC controller PCB will cut off 24 V and AC power supply and, at the same time, will indicate 'E000', 'E002', or 'E003'.

If the connector of the main thermistor is not connected or both thermistors suffer an open circuit, the microprocessor will not be able to detect any excess increases in the surface temperature of the fixing upper roller, causing it to indicate 'E000', 'E002', or 'E003' on the control panel.

3. Activation of the Fixing Heater (H1)

The fixing heater error signal (HEAT_ERR) from the AC drier is monitored by IC113 on the DC controller PCB, and its reading is compared against the fixing heater drive signal (HEAT_DR) to find out whether the power to the fixing heater is normal or not.

If the microprocessor on the DC controller PCB identifies the state of the fixing heater to be faulty, it will cut the power supplied to the fixing heater and, at the same time, will indicate 'E001' on the control panel.

COPYRIGHT © 1998 CANON INC.
CANON NP7161/NP7160 REV.0 AUG. 1998 PRINTED IN JAPAN (IMPRIME AU JAPON)

II. DISASSEMBLY/ASSEMBLY

The copier may be disassembled and assembled as shown here. Pay attention to the copier's mechanical characteristics along with the steps for disassembly/assembly.

Important:

1. Turn off the power and disconnect the power plug to ensure safety whenever disassembling/assembling the copier.
2. Unless otherwise noted, assemble the parts by reversing the steps used to disassemble them.
3. Identify the screws by type (length, diameter) to avoid use in the wrong location.
4. Use a washer where needed. The mounting screws used for the grounding wire and varistor come with a washer to ensure electric continuity. Do not forget to use these washers.
5. As a rule, do not operate the copier with any of its parts removed.

COPYRIGHT © 1998 CANON INC.

A. Fixing Assembly

1. Construction

[1] Upper roller
[2] Lower roller
[3] Heat discharge roller
[4] Delivery roller

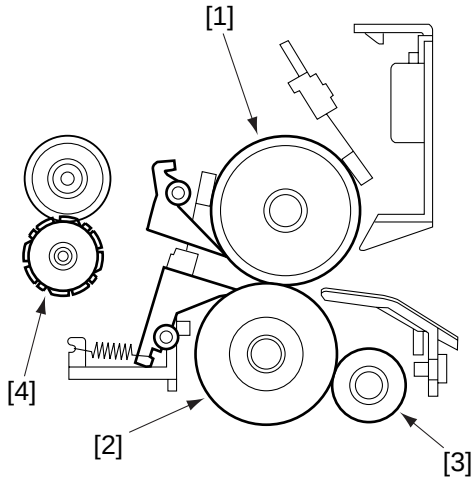

Figure 6-201

2. Locking Mechanism

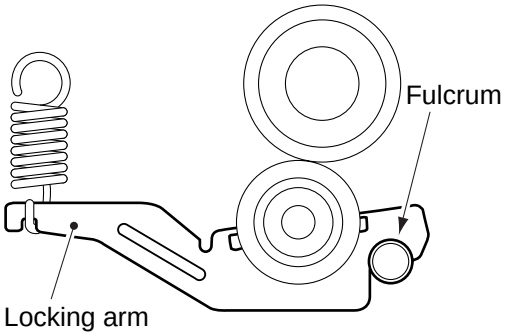

Figure 6-202

3. Removing the Fixing Assembly

1) Remove the rear cover.
2) Disconnect the connector [1].

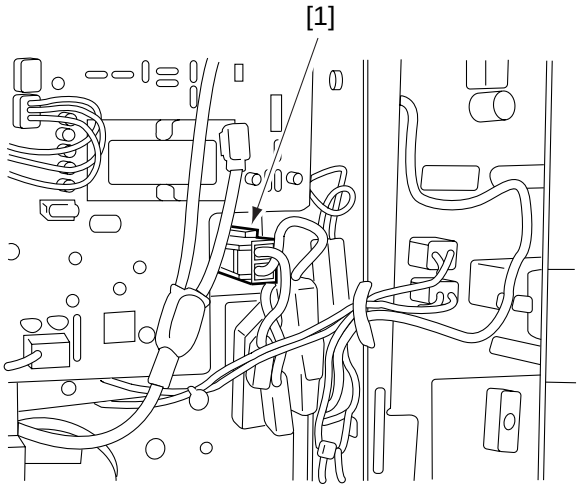

Figure 6-203

COPYRIGHT © 1998 CANON INC.
CANON NP7161/NP7160 REV.0 AUG. 1998 PRINTED IN JAPAN (IMPRIME AU JAPON)

3) Remove the drum unit. (See p. 4-28.)
4) Remove the delivery upper cover. (See p. 7-11.)
5) Remove the delivery lower cover. (See p. 7-11.)
6) Disconnect the two connectors [2] (J108, J109) on the DC controller PCB, and free the wires from the harness guide.

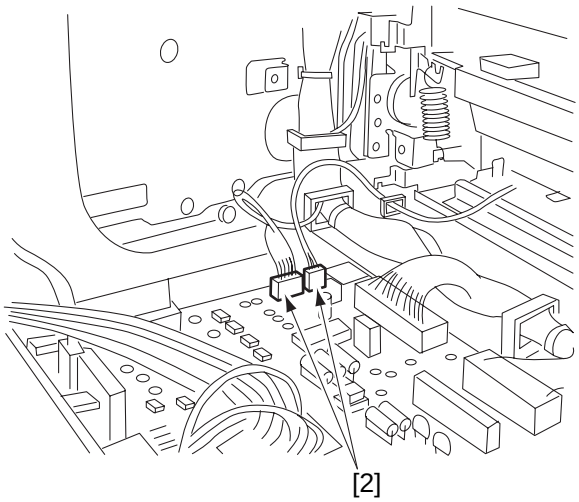

Figure 6-204

7) Remove the front door.
8) Turn the screw [3] counterclockwise, and remove the fixing knob [4].
9) Remove the two mounting screws [5], and remove the fixing front cover [6].

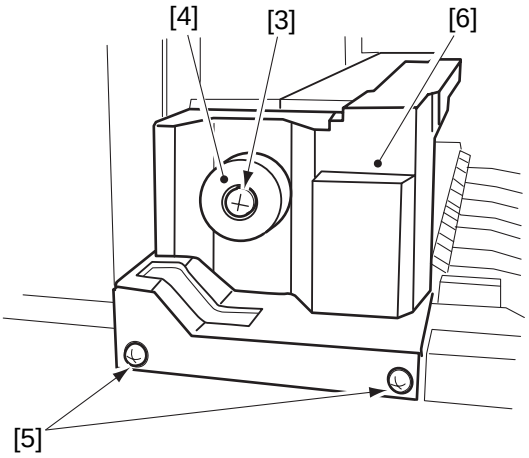

Figure 6-205

10) Disconnect the connector [7], and free the harness from the harness guide.
11) Remove the two mounting screws [8].

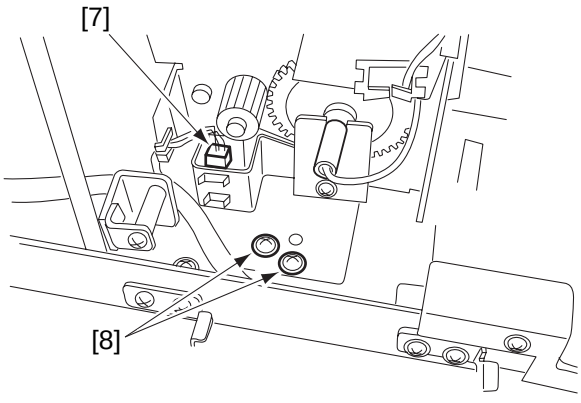

Figure 6-206

COPYRIGHT © 1998 CANON INC.

12) Lift the front of the fixing assembly [9] slightly to remove.

Caution:
When removing the fixing assembly, take care not to damage the feeding assembly.

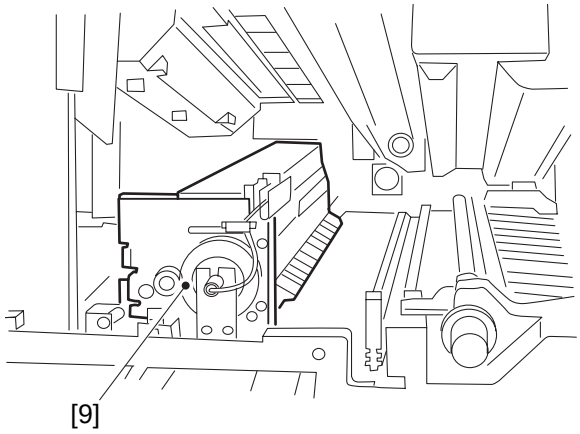

Figure 6-207

4. Removing the Fixing Heater

1) Remove the fixing assembly. (See p. 6-8.)
2) Disconnect the two connectors [1], and free the harness from the harness guide.
3) Remove the mounting screw [2], and detach the heater support plate (front) [3].

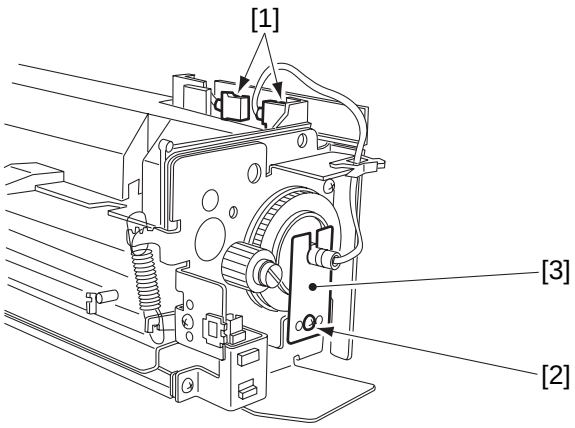

Figure 6-208

4) Remove the mounting screw [4], and free the harness from the harness guide; then, detach the connector support plate [5].
5) Disconnect all connectors [6] from the connector support plate [5].
6) Remove the mounting screw [7], and free the harness; then, detach the harness guide [8].

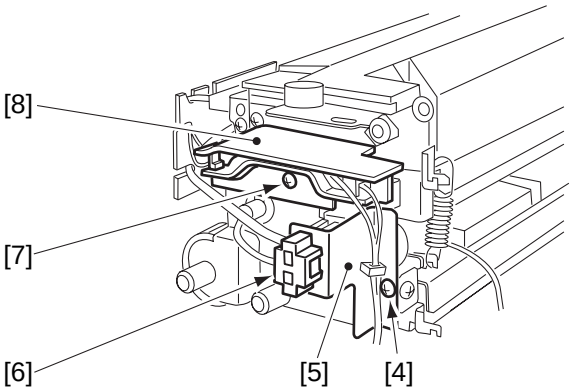

Figure 6-209

COPYRIGHT © 1998 CANON INC.
CANON NP7161/NP7160 REV.0 AUG. 1998 PRINTED IN JAPAN (IMPRIME AU JAPON)

7) Free the harness from the harness retainer [9].
8) Remove the two mounting screws [10], and detach the heater support plate (rear) [11].

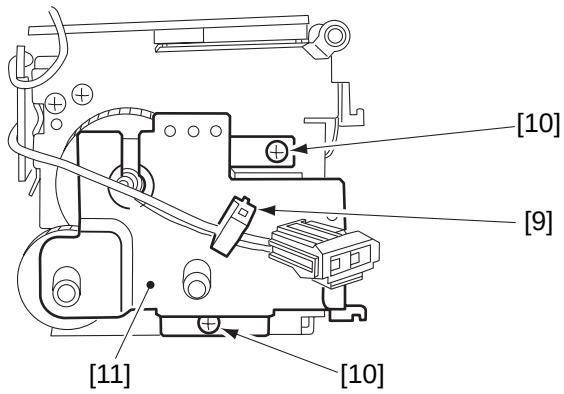

Figure 6-210

9) Free the harness from the harness guide [12], and detach the fixing heater [13].

Caution:

1. Do not start work if the surface of the fixing heater is hot.
2. Do not touch the surface of the fixing heater.
3. If the surface of the fixing heater is soiled, dry wipe it.

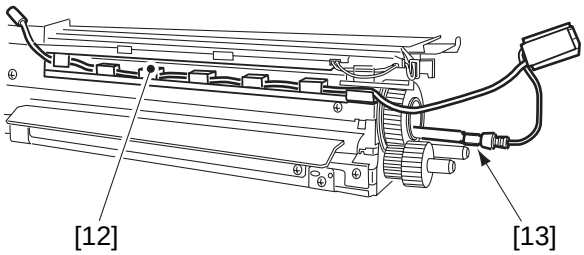

Figure 6-211

5. Removing the Thermal Switch Assembly

1) Remove the fixing assembly. (See p. 6-8.)
2) Disconnect the two connectors [1].

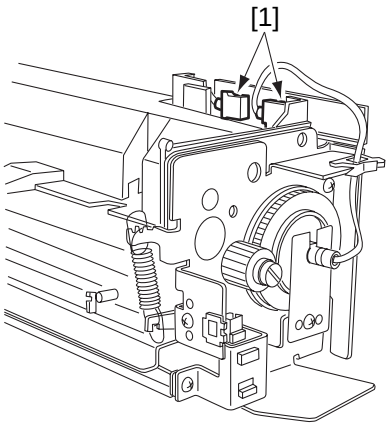

Figure 6-212

COPYRIGHT © 1998 CANON INC.

3) Remove the mounting screw [2], and detach the thermal switch assembly [3].

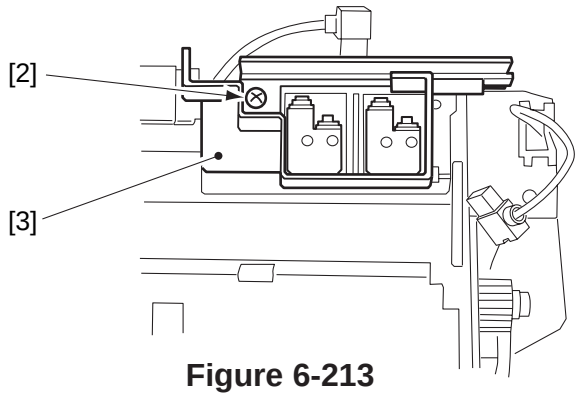

Figure 6-213

6. Removing the Main Thermistor

1) Remove the fixing assembly. (See p. 6-8.)
2) Remove the mounting screw [1], and free the harness from the harness guide; then, detach the main thermistor [2].

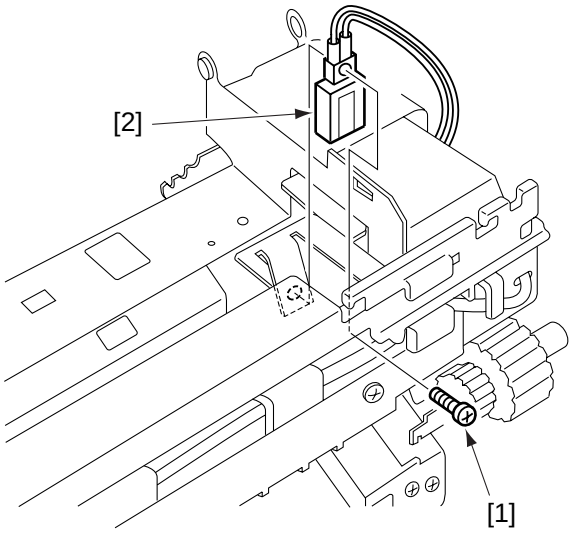

Figure 6-214

7. Removing the Sub Thermistor

1) Remove the fixing assembly. (See p. 6-8.)
2) Open the upper delivery assembly, and insert a screwdriver into the hole [A] to keep the upper delivery assembly from closing.

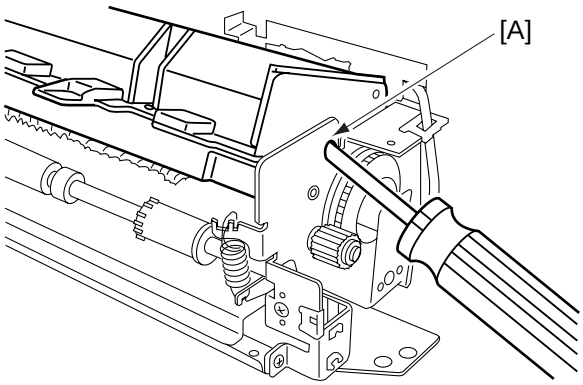

Figure 6-215

3) As shown, pick the hook assembly with pincers, and remove the tension spring [1].

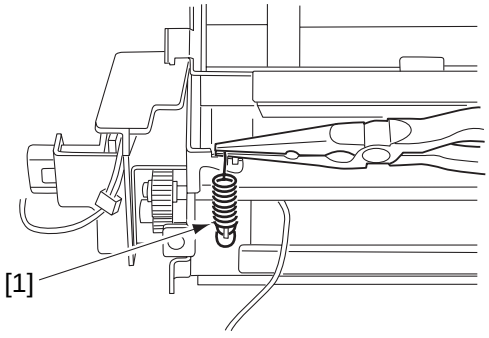

Figure 6-216

COPYRIGHT © 1998 CANON INC.

4) Remove the mounting screw [2].
5) Free the harness from the harness guide, and remove the sub thermistor [3].

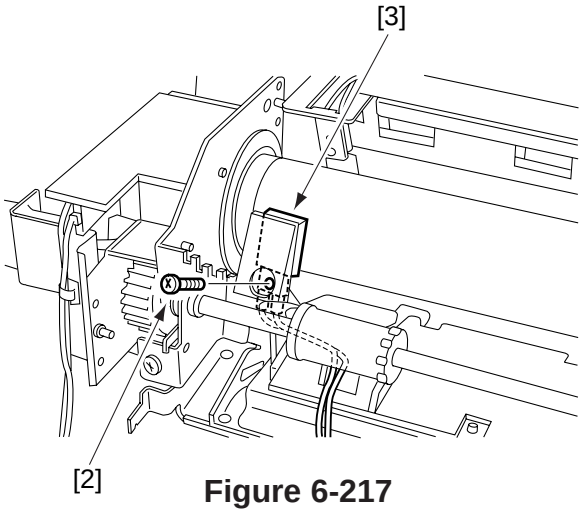

Figure 6-217

8. Removing the Fixing Upper Roller

1) Remove the fixing heater. (See p. 6-10.)
2) Remove the upper delivery assembly. (See p. 6-16.)
3) Remove the lower delivery assembly (See p. 6-17.)
4) Remove the three mounting screws [1], and remove the fixing upper inlet guide assembly [2].

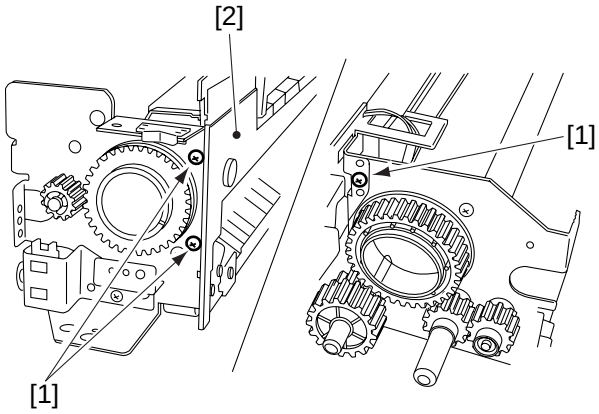

Figure 6-218

5) Remove the double gear [3] and the C-ring [4]; then, detach the gear [5] and the bushing [6].

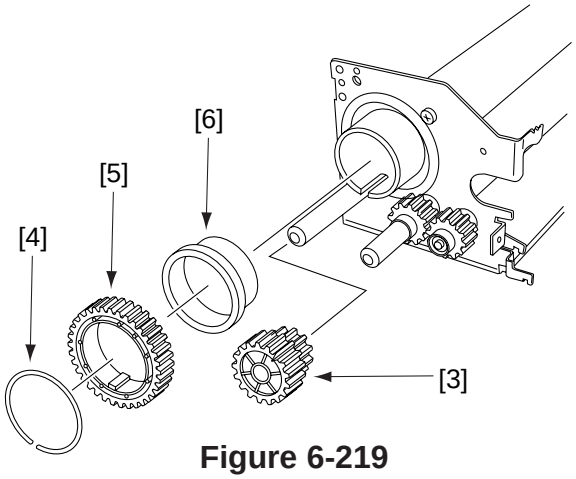

Figure 6-219

6) Remove the C-ring [7], and detach the gear [8] and the bushing [9].
7) Remove the fixing upper roller [10].

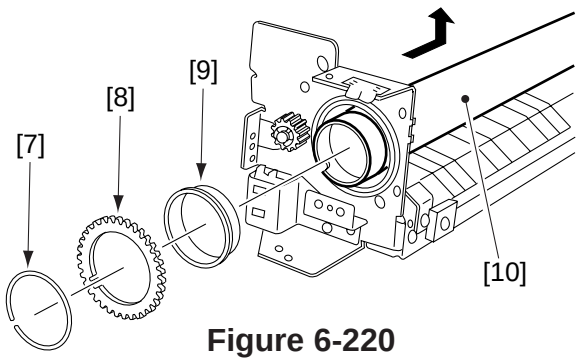

Figure 6-220

COPYRIGHT © 1998 CANON INC.

9. Removing the Fixing Lower Roller

1) Remove the fixing upper roller. (See p. 6-13.)
2) Remove the bearing [1] and the fixing lower roller [2].

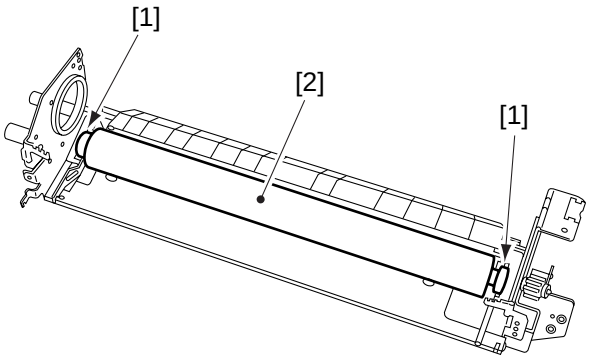

Figure 6-221

10. Removing the Heat Discharge Roller

1) Remove the fixing assembly. (See p. 6-8.)
2) Remove the two mounting screws [1], and detach the fixing inlet guide assembly [2].

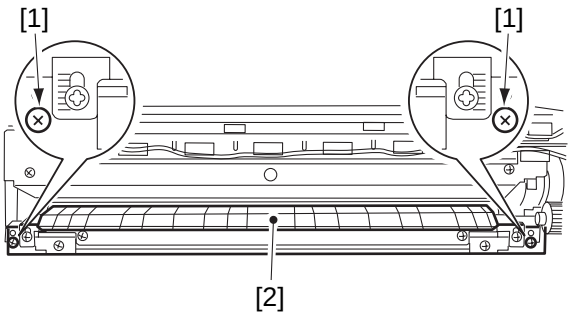

Figure 6-222

3) Remove the heat discharge roller [3].

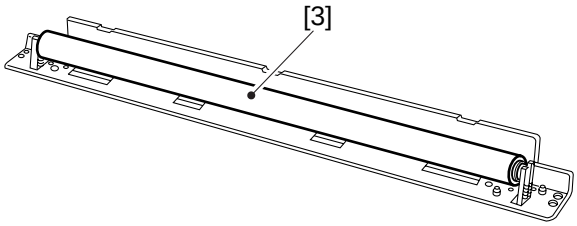

Figure 6-223

Caution:

If you have removed the height adjusting screw of the inlet guide, be sure to perform the steps under "Adjusting the Height of the Fixing Inlet Guide."

11. Adjusting the Height of the Fixing Inlet Guide

Loosen the two adjusting screws [1], and adjust the height of the fixing inlet guide [2].

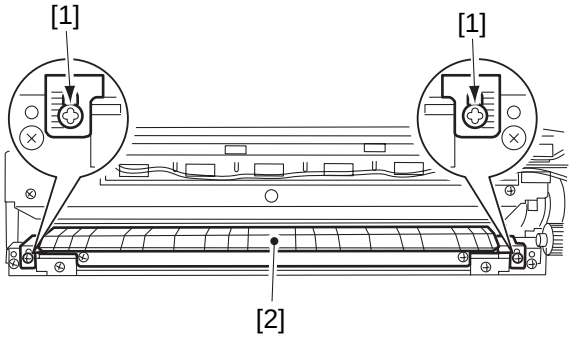

Figure 6-224

COPYRIGHT © 1998 CANON INC.

12. Adjusting the Nip

The nip is appropriate if it is as indicated in Table 6-201.

If it is not as indicated, relocate the tension spring [1].

Note:

a and c are points 10 mm from both ends of copy paper.

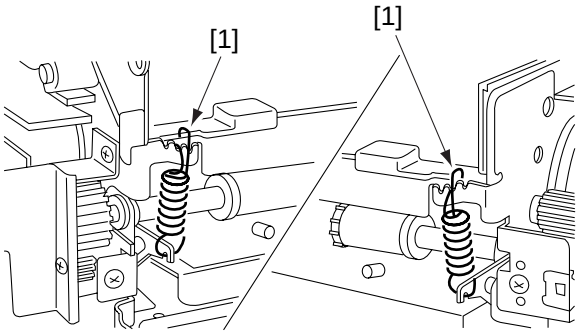

Figure 6-225

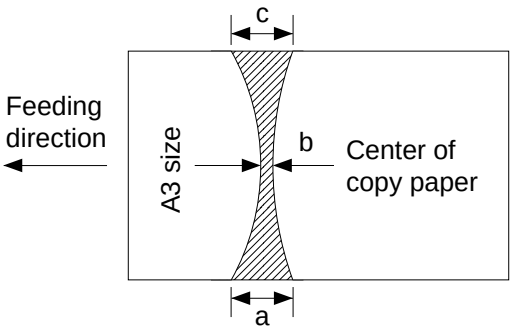

Figure 6-226

Dimensions	Measurements*
b	4.8 ± 0.3mm
l a - c l	0.5mm or less

*Be sure both upper and lower rollers are sufficiently warm before taking measurements.

Table 6-201

a. Measuring the Nip

When the copier finishes warm-up, wait for 15 minutes. Then, make 20 A4 copies before measuring the nip.

1) Place A3 copy paper in the multifeeder, and select the multifeeder as the source of paper.
2) Open the copyboard over.
3) Execute service mode 406 (fixing nip check).
   - The copy paper will be stopped when its leading edge is about 100 mm, and will automatically be discharged (See Figure 6-226).

COPYRIGHT © 1998 CANON INC.

B. Delivery Assembly

1. Removing the Upper Separation Claw

1) Remove the fixing assembly. (See p. 6-8.)
2) Remove the stepped screw [1], and detach the bend [A]); then, detach the upper delivery assembly [2].

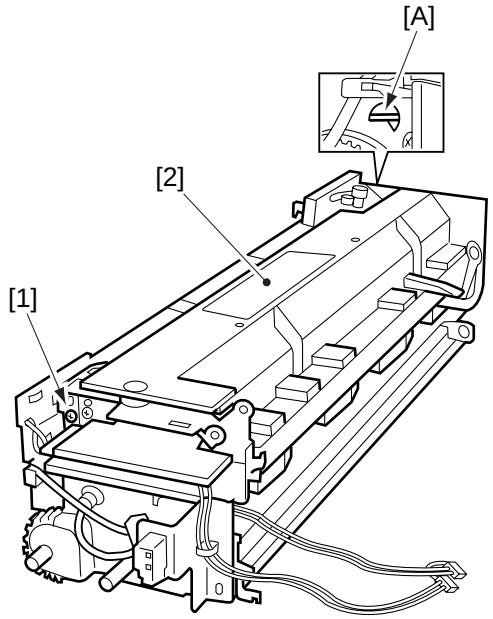

Figure 6-227

3) Remove the two stepped screws [3], and slide the upper separation claw assembly [4] in the direction of the arrow to remove.

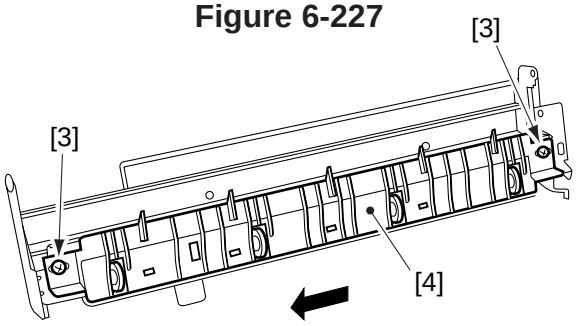

Figure 6-228

4) Detach the spring [5], and detach the upper separation claw [6].

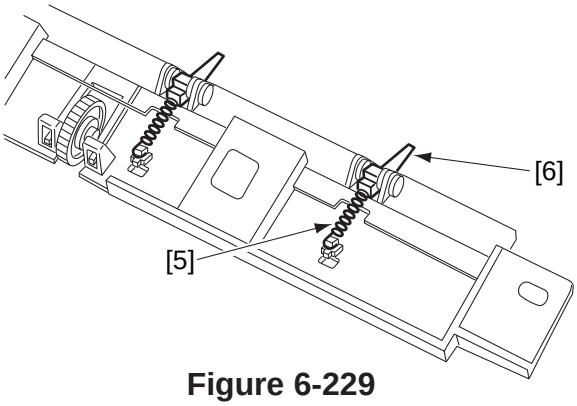

Figure 6-229

2. Removing the Lower Separation Claw

1) Remove the delivery roller. (See p. 6-17.)
2) Remove the two stepped screws [1], and free the harness; then, detach the lower separation claw assembly [2].

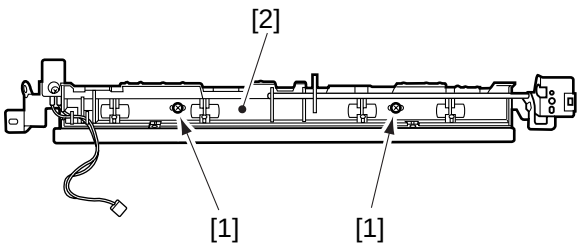

Figure 6-230

COPYRIGHT © 1998 CANON INC.

3) Detach the spring [3], and detach the lower separation claw [4].

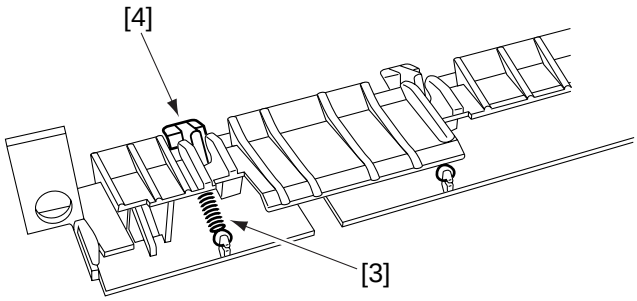

Figure 6-231

3. Removing the Delivery Roller

1) Remove the two tension springs [1] and the two mounting screws [2]; then, remove the delivery roller assembly [3].

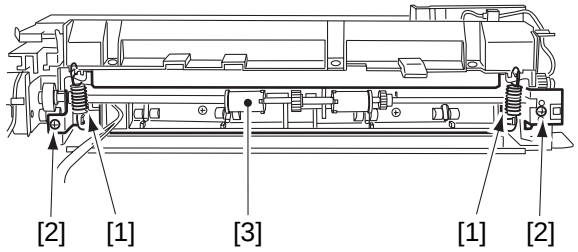

Figure 6-232

2) Remove the grip ring [4], and remove the gear [5].
3) Remove the two E-rings [6] and the two bushings [7]; then, detach the delivery roller [8].

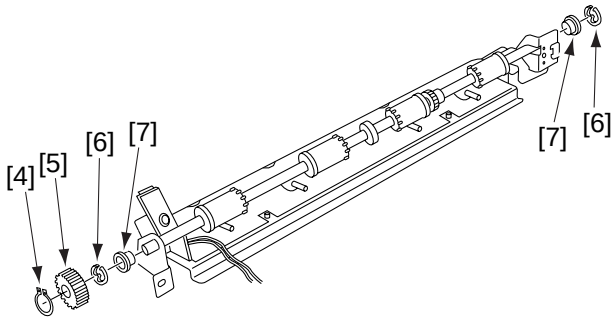

Figure 6-233

COPYRIGHT © 1998 CANON INC.

CHAPTER 7

EXTERNALS/AUXILIARY MECHANISMS

This chapter shows the copier's external parts, and explains the principles used for the copier's various control mechanisms in view of the functions of electrical and mechanical units and in relation to their timing of operation. It also shows how these units may be disassembled/assembled and adjusted.

I. FANS 7-1
II. POWER SUPPLY 7-4
A. Outline of Power Supply 7-4
B. Power Supply Circuitry 7-5
C. Protection Mechanisms of the Power Supply Circuitry 7-7
III. DISASSEMBLY/ASSEMBLY 7-8
A. External Covers 7-9
B. Control Panel 7-13
C. Copyboard Glass 7-14
D. Fans 7-15
E. Counter Assembly 7-18
F. Main Motor Assembly 7-18
G. DC Controller PCB 7-19
H. Removing the Power Supply PCB ... 7-20
I. Removing the High-Voltage Power Supply PCB 7-20
J. Lamp Regulator PCB 7-21

COPYRIGHT © 1998 CANON INC. CANON NP7161/NP7160 REV.0 AUG. 1998 PRINTED IN JAPAN (IMPRIME AU JAPON)

I. FANS

The copier is equipped with three fans for cooling and discharging ozone.

When a sorter is installed, the vent for the exhaust fan (FM2, FM4) is blocked, preventing discharge of ozone to the left of the copier. To enable discharge, use a sorter kit fan (FM5) to the front of the copier to route the ozone from the exhaust fan (FM2, FM4) to the front.

Table 7-101 shows the function of each fan and the orientation of the fan. Figure 7-102 shows the timing at which each fan turns on.

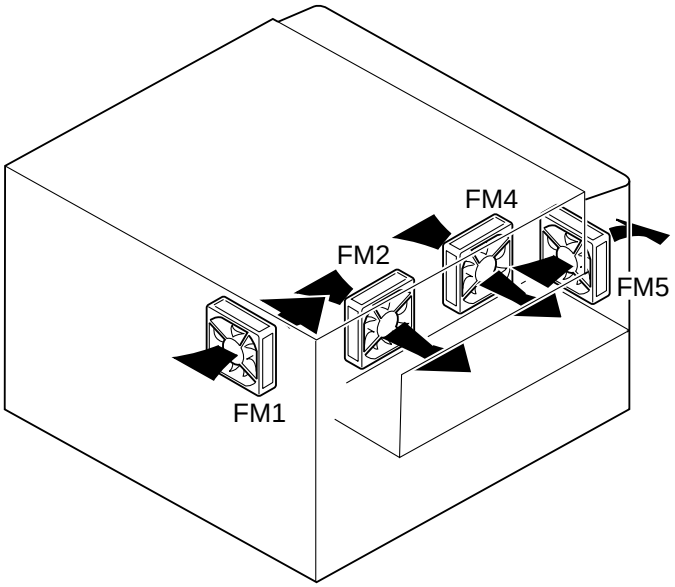

Figure 7-101

Notation	Name	Orientation	Filter	Function
FM1	Cooling fan 1	Blowing	Air	Cools the scanner.
FM2	Exhaust fan 1	Drawing	Ozone	Discharges exhaust.
FM4	Exhaust fan 2	Drawing	Ozone	
FM5 *1	Sorter kit fan	Drawing	Air	

*1:If a sorter kit is installed.

Table 7-101

COPYRIGHT © 1998 CANON INC.

The exhaust fan (FM2) and the sorter kit fan (FM5) are rotated at half speed during standby to prevent heating inside the machine. If the reading of the cleaner thermistor (TH3) is 50°C or more (38°C or more if the sorter kit is installed), all fans will be rotated at full speed.

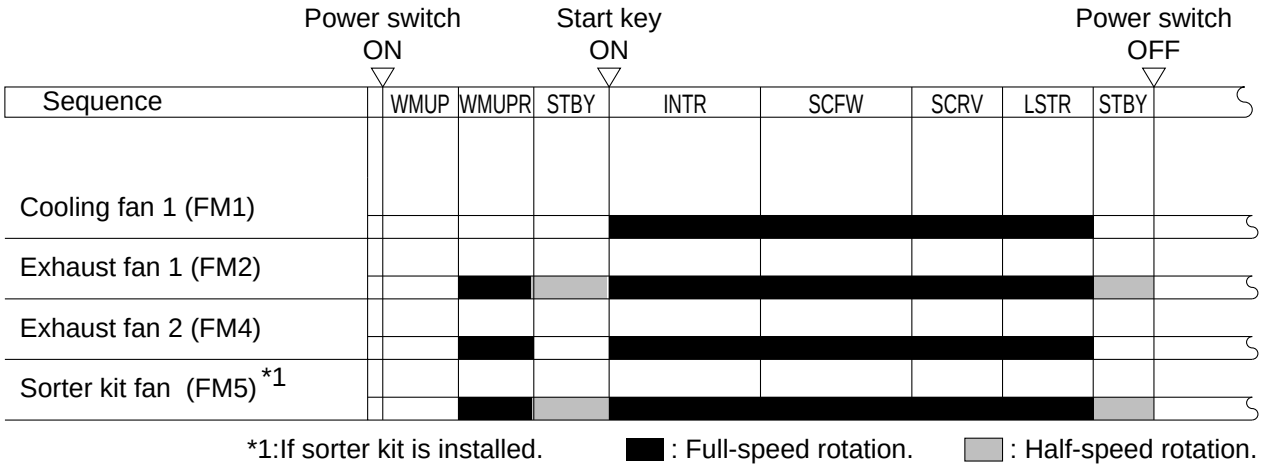

Figure 7-102

The speed of the exhaust fans is switched between full speed and half speed by switching the drive voltage of the exhaust fans as shown in Figure 7-103.

When the CPU generates FMON=1, +24 V is supplied so that the exhaust fans (FM2, FM4, FM5) rotate at full speed. In response to FMHLF=1, on the other hand, +15.4 V will be supplied so that the exhaust fans (FM2, FM5) rotate at half speed.

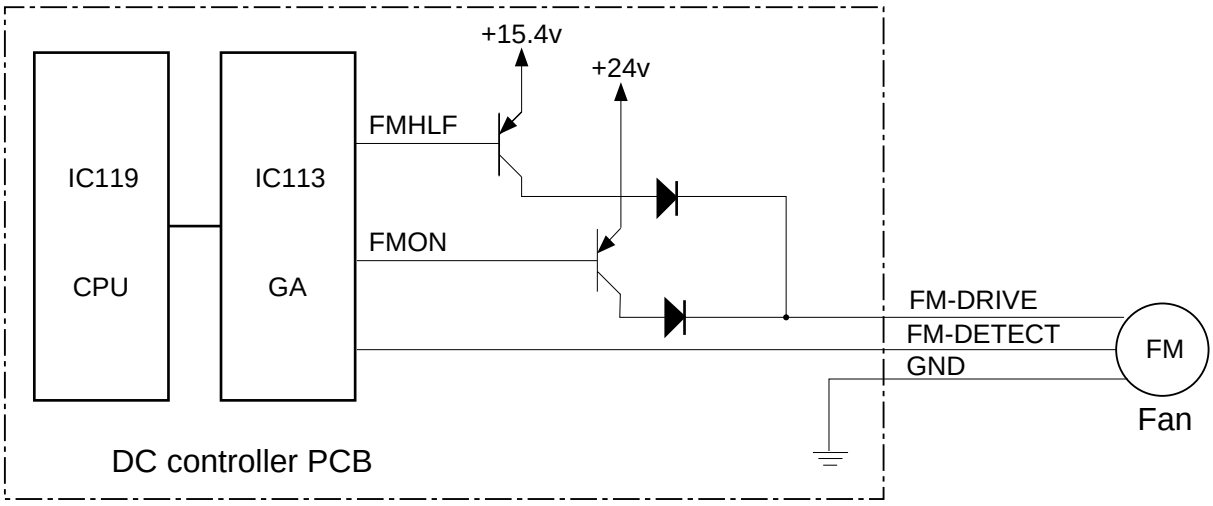

Figure 7-103

COPYRIGHT © 1998 CANON INC.
CANON NP7160/NP7161 REV.0 AUG. 1998 PRINTED IN JAPAN (IMPRIME AU JAPON)

If the heat exhaust fan rotation detection signal (FM2ROT) is not detected 0.5 sec after the exhaust fan (FM2, FM4) starts to rotate, error code E805 will be indicated on the control panel.

COPYRIGHT © 1998 CANON INC.

II. POWER SUPPLY

A. Outline of Power Supply

Figure 7-201 is a block diagram showing distribution of power inside the machine.

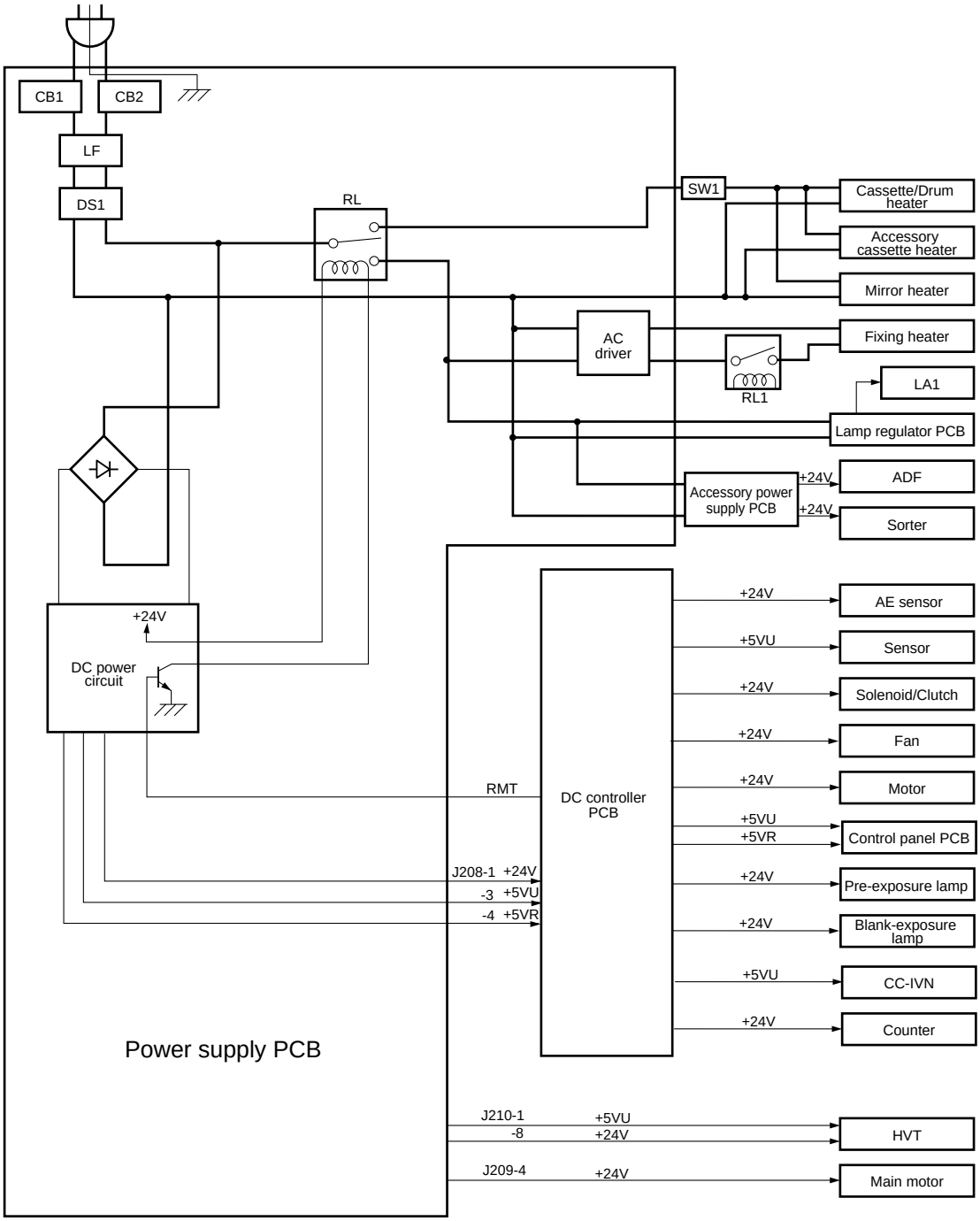

Figure 7-201

COPYRIGHT © 1998 CANON INC.
CANON NP7160/NP7161 REV.0 AUG. 1998 PRINTED IN JAPAN (IMPRIME AU JAPON)

B. Power Supply Circuitry

1. AC Power Supply

AC power is supplied to the power supply PCB when the power plug is connected and the front door switch (DS1) is turned on.

2. DC Power Supply

The power supply PCB provides three types of DC outputs: +24 V, +5 VR, and +5 VU.

When the power plug is connected and the front door switch (DS1) is turned on, the power supply PCB supplies the DC controller PCB with +5 VR.

The copier uses a soft switch as its power switch so that it continues to supply the DC controller PCB with +5 VR even when the power switch is off.

When the power switch is turned on, the CPU generates the DC power supply signal.

In response to the DC power supply signal, the power supply PCB generates +24 V and +5VU. This condition turns on the AC power supply relay (RL) on the power supply PCB, thereby making a switch-over to the fixing heater and the lamp regulator PCB.

When the power switch is turned off, the AC power supply relay (RL) on the power supply PCB switches over to the options heater.

Reference:

The tolerance of DC voltage is as follows:

- +24 V ±5%
- +5 VU +5%, -7%
- +5 VR ±5%

However, the above applies only when the inaccuracy of the AC input is limited to ±10%.

Caution:

Be sure to disconnect the power plug whenever you have to replace the DC controller PCB.

COPYRIGHT © 1998 CANON INC.

3. Mirror Heater, Cassette/Drum Heater, and Accessory Cassette Heater

The following three heaters are made available as accessories to the copier, designed to prevent condensation of the scanner and the drum and to keep paper inside the cassette dry.

Table 7-201 shows the function of each heater. Figure 7-202 shows the timing at which each heater turns on.

Notation	Name	Function
H2	Mirror heater	Prevents condensation on the scanner.
H3	Cassette/Drum heater	Prevents condensation on the drum and keeps copy paper dry.
H4	Accessory cassette heater	Keeps copy paper dry.

Table 7-201

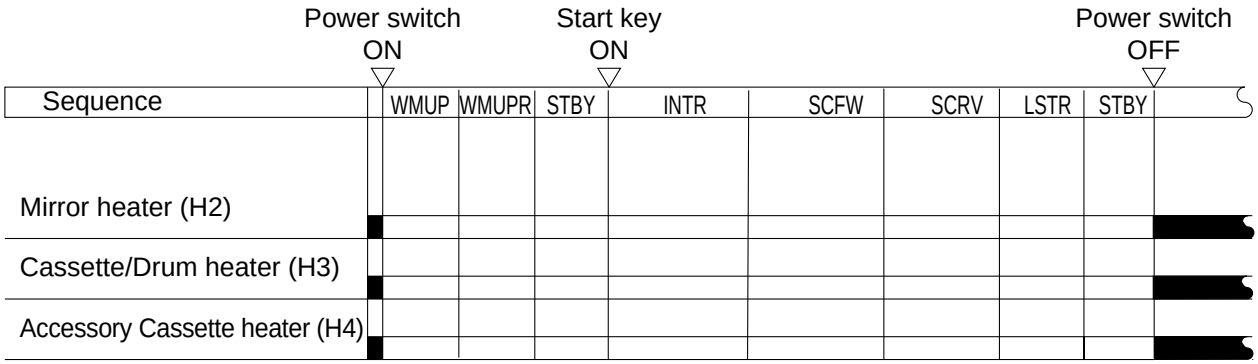

Figure 7-202

Each heater is supplied with power when the copier's power switch is turned off. The mirror heater and the cassette/drum heater and the accessory cassette heater may be deprived of power by turning off the heater switch (SW1).

4. ADF and Sorter

For the ADF and the sorter, the copier's power supply PCB supplies AC power to the accessory power supply PCB, which generates DC power.

COPYRIGHT © 1998 CANON INC.
CANON NP7160/NP7161 REV.0 AUG. 1998 PRINTED IN JAPAN (IMPRIME AU JAPON)

C. Protection Mechanisms of the Power Supply Circuitry

The copier's power supply PCB is equipped with a circuit breaker (CB1, CB2) and a fuse (FU1, FU2) on its AC input side. To protect against overcurrent and over voltage, the copier is also equipped with an overcurrent protection circuit and an over-voltage protection circuit.

When an overcurrent or an over-voltage occurs as a result of a short circuit in the power line, the respective protection mechanism will turn on to stop the output of the power supply PCB.

When the output is stopped, disconnect the copier's power plug, and turn off the AC power to the power supply PCB to reset the protection mechanism.

Caution:

Be sure to correct the cause that turned on the protection circuit before resetting. Repeated short-circuiting and resetting can cause the fuse built into the power supply PCB to melt.

COPYRIGHT © 1998 CANON INC.

III. DISASSEMBLY/ASSEMBLY

The copier may be disassembled and assembled as shown here. Pay attention to the copier's mechanical characteristics along with the steps for disassembly/assembly.

Important:

1. Turn off the power and disconnect the power plug to ensure safety whenever disassembling/assembling the copier.
2. Unless otherwise noted, assemble the parts by reversing the steps used to disassemble them.
3. Identify the screws by type (length, diameter) to avoid use in the wrong location.
4. Use a washer where needed. The mounting screws used for the grounding wire and varistor come with a washer to ensure electric continuity. Do not forget to use these washers.
5. As a rule, do not operate the copier with any of its parts removed.

COPYRIGHT © 1998 CANON INC.
CANON NP7160/NP7161 REV.0 AUG. 1998 PRINTED IN JAPAN (IMPRIME AU JAPON)

A. External Covers

[1] Front cover
[2] Right door (5)
[3] Upper right cover (2)
[4] Right cover (2)
[5] Rear cover (5)
[6] Upper rear cover (4)
[7] Upper left cover (2)
[8] Delivery lower cover (2)
[9] Delivery upper cover (2)

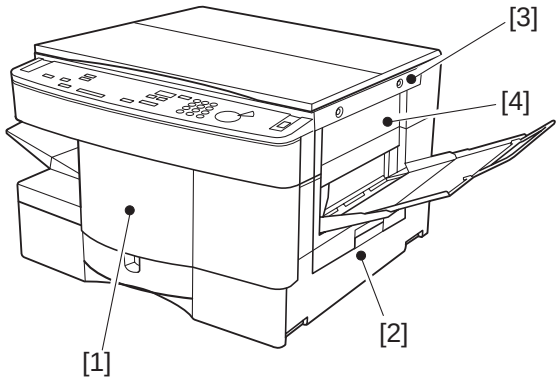

Figure 7-301

The number in parentheses indicates the number of mounting screws used.

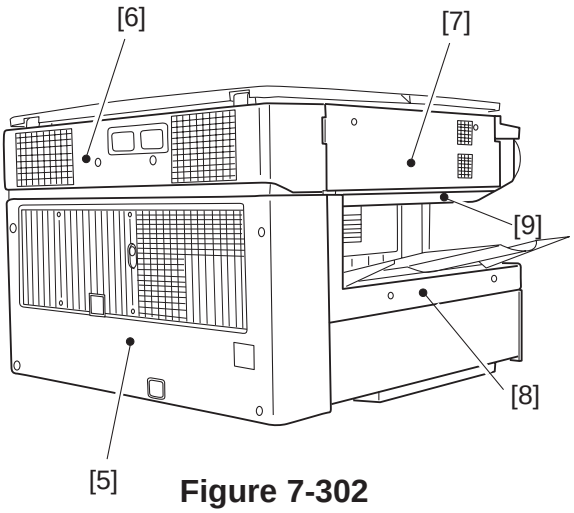

Figure 7-302

[1] Inside cover (2)
[2] Lower inside cover (3)

The number in parentheses indicates the number of mounting screws used.

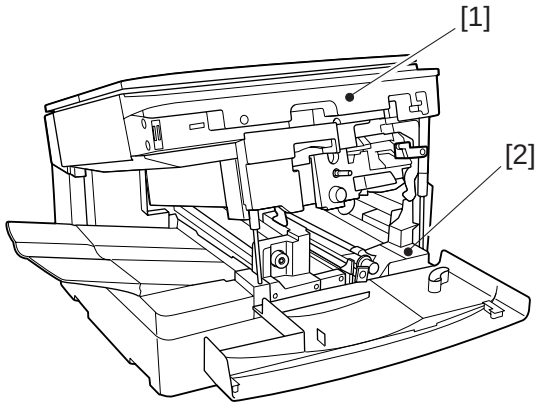

Figure 7-303

COPYRIGHT © 1998 CANON INC.

Remove the appropriate covers as follows when cleaning, checking, or repairing the inside of the copier.

Covers which may be detached by mere removal of mounting screws are omitted from the discussions.

1. Removing the Right Door

1) Open the right door.
2) Remove the four mounting screws [1], and remove the right door [2] and the paper guide [3].

Caution:

When mounting the paper guide, be sure to fit the foot of the spring [4] at the rear into its hole.

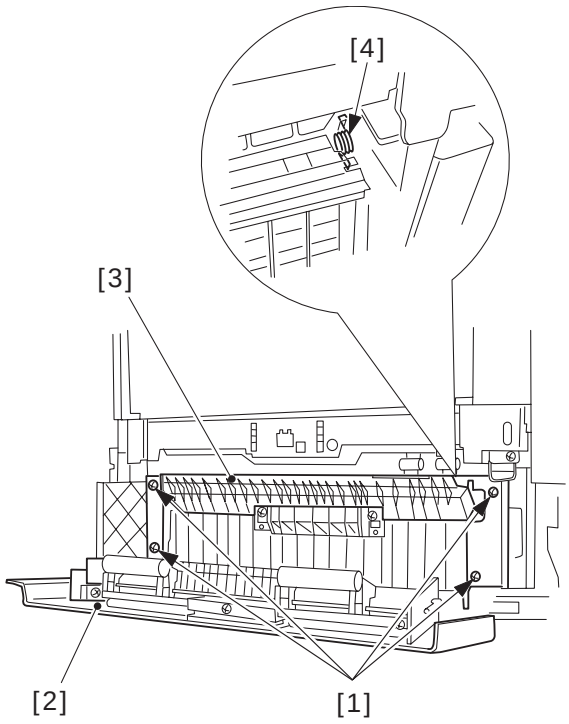

Figure 7-304

2. Removing the Upper Right Cover

1) Open the top unit.
2) Remove the two mounting screws [1], and remove the right cover [2].
3) Remove the two mounting screws [3], and remove the upper right cover [4].

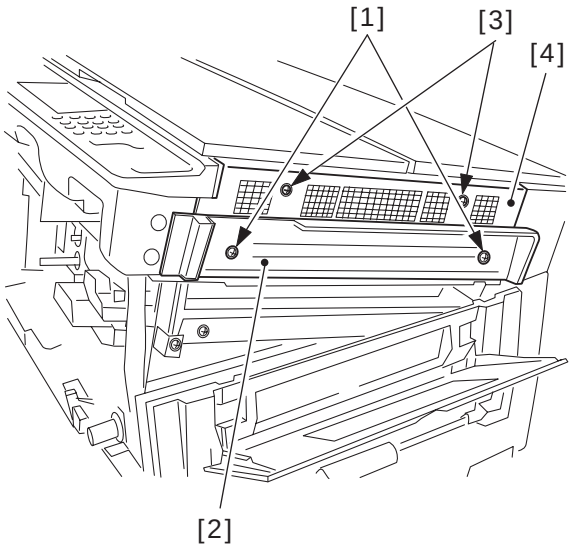

Figure 7-305

COPYRIGHT © 1998 CANON INC.
CANON NP7160/NP7161 REV.0 AUG. 1998 PRINTED IN JAPAN (IMPRIME AU JAPON)

3. Removing the Upper Left Cover

1) Remove the copyboard glass.
2) Remove the two mounting screws [1], and detach the upper left cover [2].

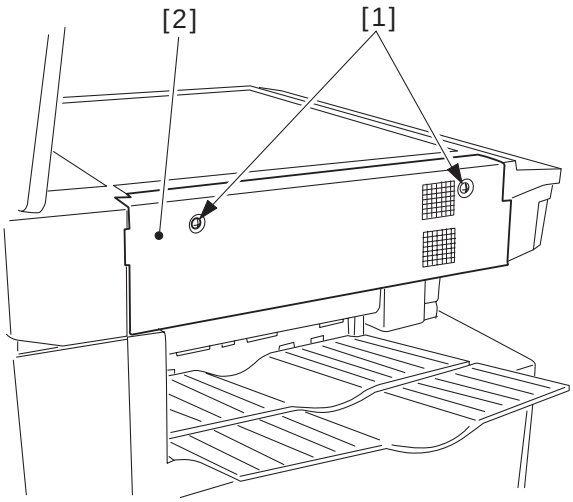

Figure 7-306

4. Removing the Delivery Lower Cover

1) Open the copier top, and remove the copy tray.
2) Remove the two mounting screws [1], and detach the delivery lower cover [2].

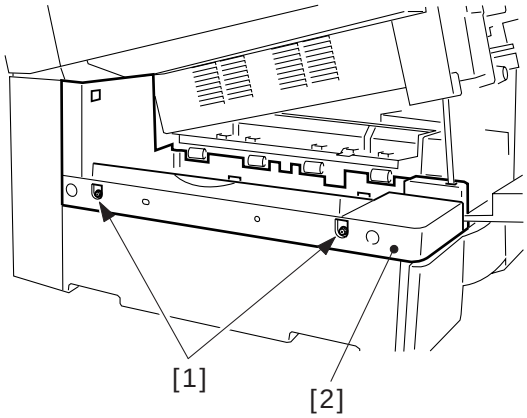

Figure 7-307

5. Removing the Delivery Upper Cover

1) Open the copier top, and remove the inside cover.
2) Remove the two mounting screws [1], and slide the delivery upper cover [2] to the front to remove.

Caution:

When mounting the delivery upper cover, be sure to engage the two cut-offs in the delivery upper cover with the copier's hooks.

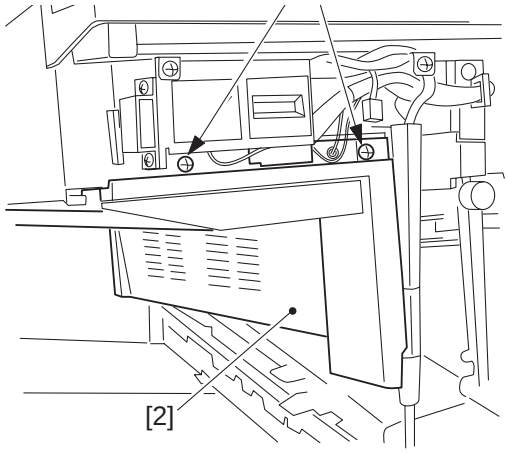

Figure 7-308

COPYRIGHT © 1998 CANON INC.

6. Removing the Lower Inside Cover

1) Remove the front door and the transfer charging assembly.
2) Slide out the registration knob [1] to the front.
3) Remove the mounting screw [2].
4) Loosen the two mounting screws [3], and remove the lower inside cover [4].

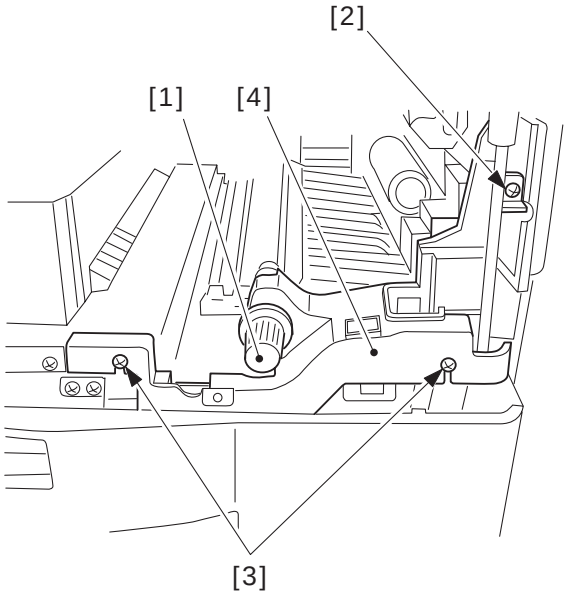

Figure 7-309

COPYRIGHT © 1998 CANON INC.

B. Control Panel

1. Removing the Control Panel

1) Open the copyboard cover, and remove the two mounting screws [1]; then, detach the two ADF metal catches [2].
2) Remove the inside cover.

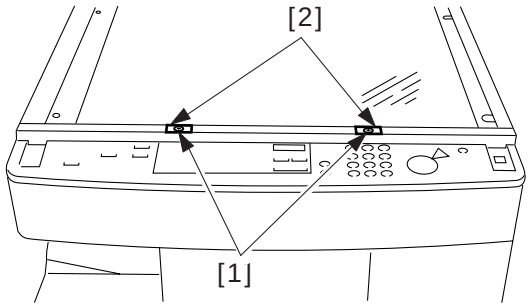

Figure 7-310

3) Remove the three mounting screws [3].
4) Slide the control panel [4] to the front to remove; then, turn over the control panel.

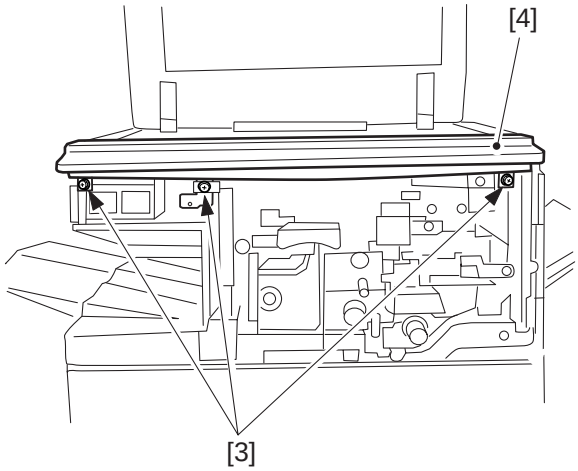

Figure 7-311

5) Disconnect the three connectors [5], and remove the control panel.

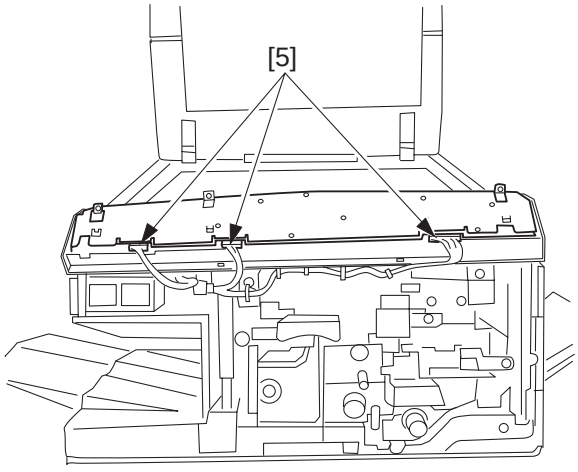

Figure 7-312

COPYRIGHT © 1998 CANON INC.

C. Copyboard Glass

1. Removing the Copyboard Glass

1) Remove the two mounting screws [1], and detach the glass retainer (right) [2].

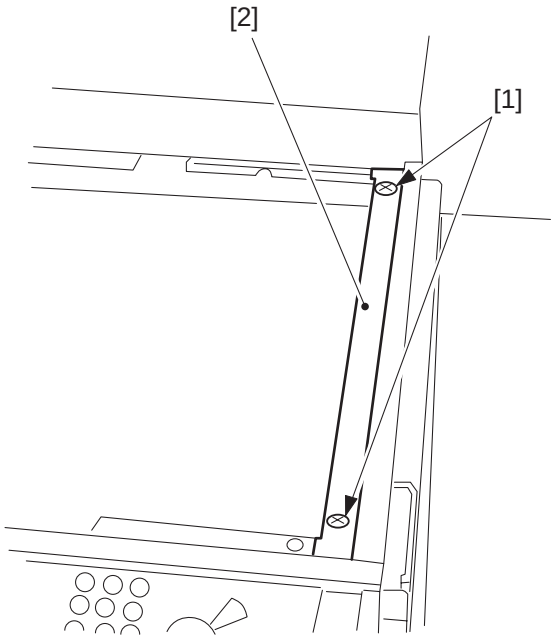

Figure 7-313

2) Slide the copyboard glass [3] to the right.
3) Remove the two mounting screws [4], and detach the glass retainer (left) [5].
4) Remove the copyboard glass [3].

Caution:

When mounting the NP7161's copyboard glass, make sure that the blue marking on the side of the glass is to the front left.

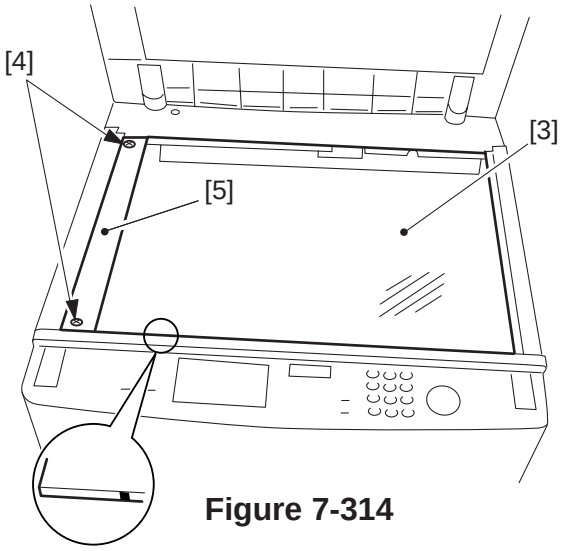

Figure 7-314

COPYRIGHT © 1998 CANON INC.

D. Fans

1. Removing the Scanner Cooling Fan

1) Remove the two mounting screws [1], and detach the filter [2].

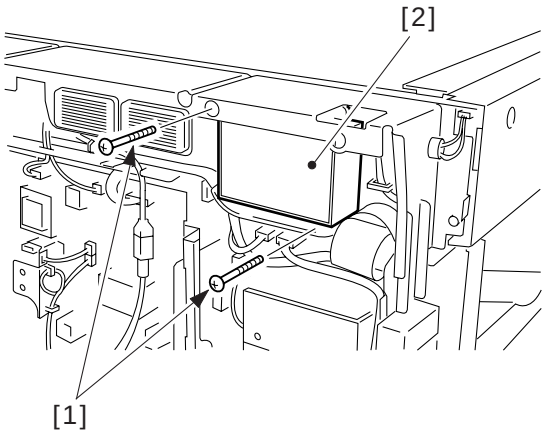

Figure 7-315

2) Disconnect the connector [3], and remove the scanner cooling fan [4].

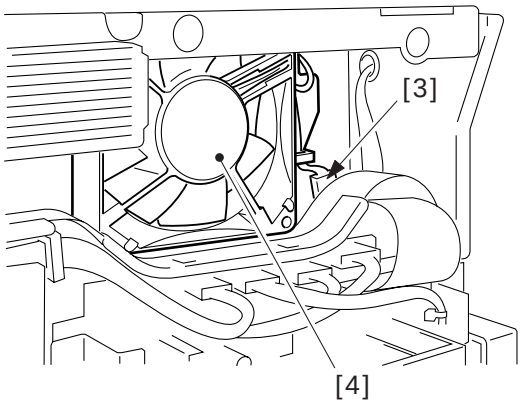

Figure 7-316

COPYRIGHT © 1998 CANON INC.

2. Removing the Exhaust Fan

1) Remove the developing assembly, drum unit, inside cover, and delivery upper cover.
2) Disconnect the two connectors [1].

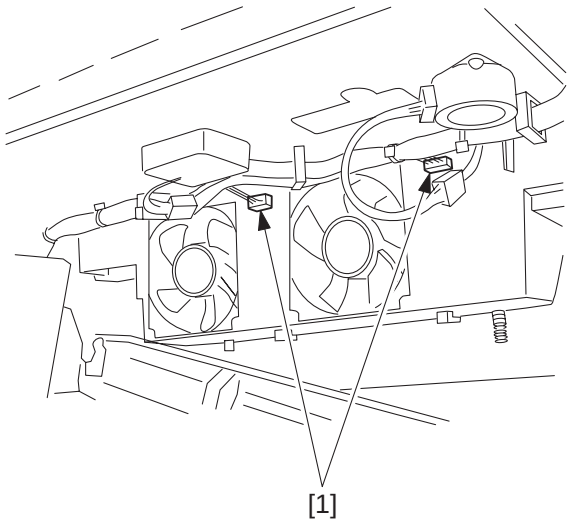

Figure 7-317

3) Remove the two mounting screws [2], and slide the exhaust fan assembly [3] to the front to remove.

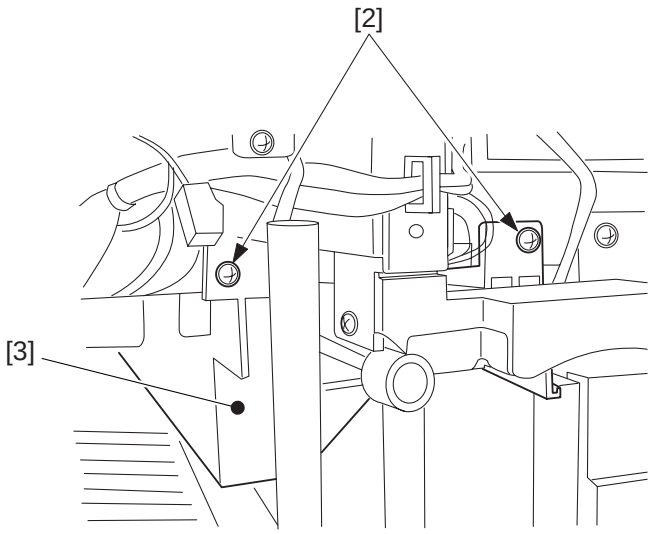

Figure 7-318

4) Disconnect the two connectors [4], and remove the two exhaust fans [5].

Caution:

When mounting the exhaust fan assembly, be sure to engage the two hooks on the exhaust fan assembly with the copier's cut-offs.

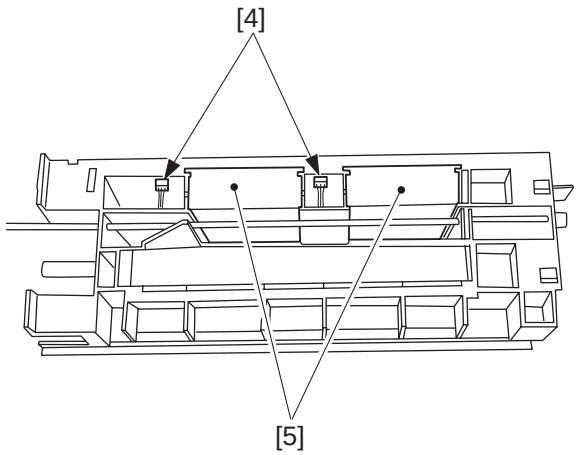

Figure 7-319

COPYRIGHT © 1998 CANON INC.

3. Remove the Ozone Filter

1) Open the top unit.
2) Shift down the lever [1], and remove the ozone filter assembly [2].

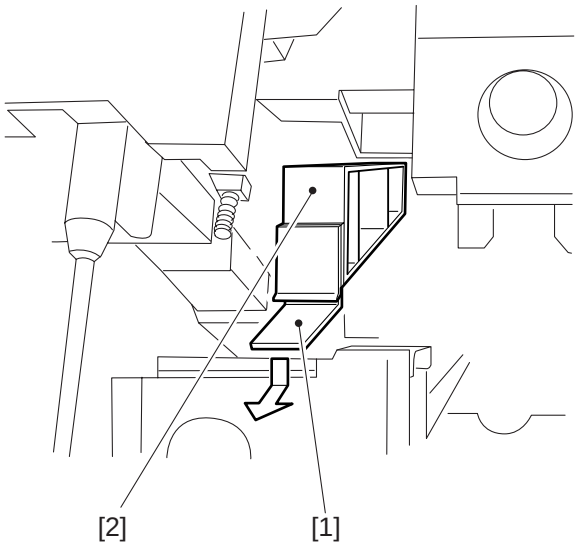

Figure 7-320

3) Remove the ozone filter [3].

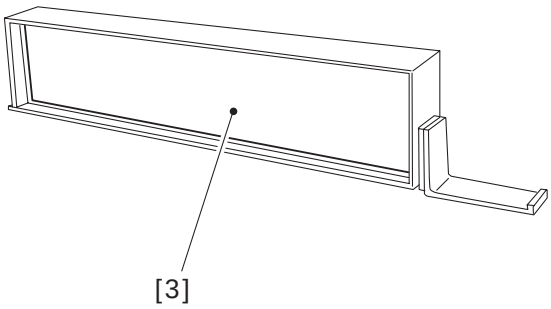

Figure 7-321

COPYRIGHT © 1998 CANON INC.

E. Counter Assembly

1. Removing the Counter Assembly

1) Remove the control panel.
2) Remove the two mounting screws [1], and remove the magnet [2].
3) Disconnect the two connectors [3], and remove the two mounting screws [4]; then, detach the counter assembly [5].

Caution:
When removing the magnet, mark its position and mount it with reference to the markings.

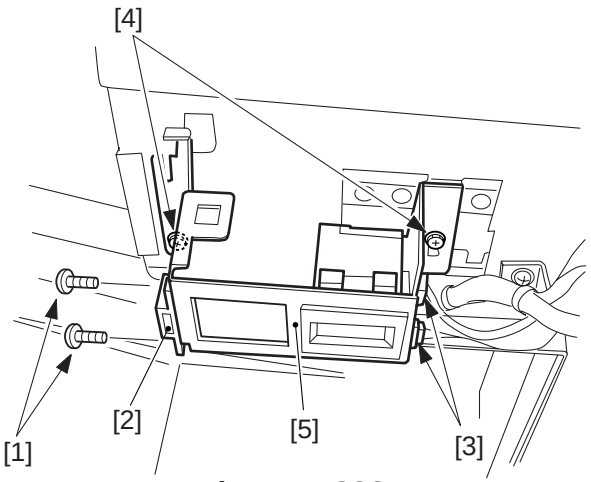

Figure 7-322

F. Main Motor Assembly

1. Removing the Main Motor Assembly

1) Remove the rear cover and the rear upper cover.
2) Disconnect the connector [1], and remove the four mounting screws [2].
3) Remove the two locking supports [3], and detach the main motor assembly [4].

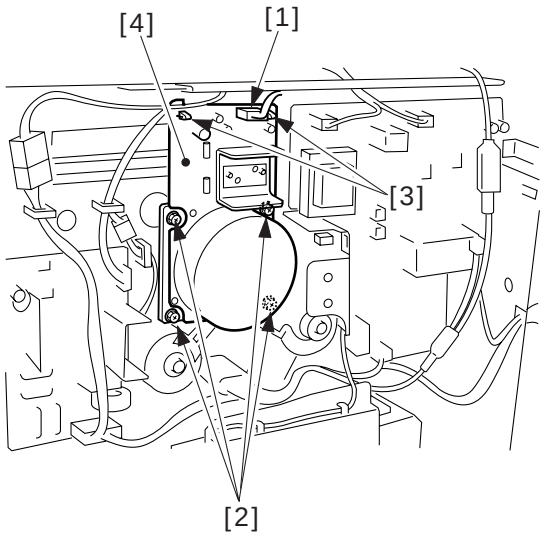

Figure 7-323

COPYRIGHT © 1998 CANON INC.
CANON NP7160/NP7161 REV.0 AUG. 1998 PRINTED IN JAPAN (IMPRIME AU JAPON)

G. DC Controller PCB

1. Removing the DC Controller PCB

1) Remove the delivery lower cover.
2) Disconnect all connectors of the DC controller PCB; then, free the harness from the harness guide.
3) Remove the six mounting screws [1], and remove the DC controller PCB [2] together with the base plate.

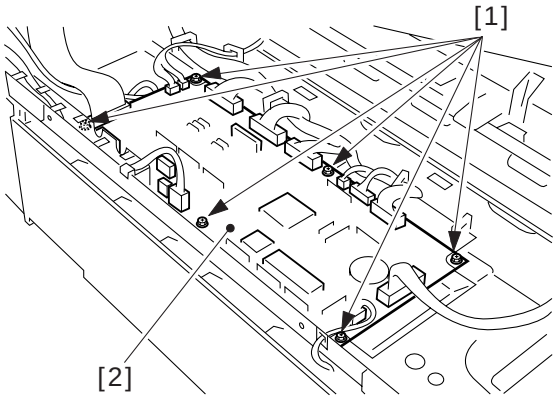

Figure 7-324

Caution:

Take extra care not to damage the harness whenever you are removing the DC controller PCB.

The DC controller PCB is equipped with a built-in battery (BAT101). Keep the following in mind to prevent its both ends from short circuiting and heating:

2. Points to Note When Replacing the DC Controller PCB

- When sending the DC controller to the workshop or the factory, put it in a conducting bag intact with its base plate.
  Use a conducting bag whose one side is transparent, and be sure that the face of the DC controller PCB shows through the transparent side.
- After replacement, make adjustments and settings in service mode and make settings in user mode once again.
- For settings in service mode, enter the values recorded in the Service Label stored behind the front door.

COPYRIGHT © 1998 CANON INC.

H. Removing the Power Supply PCB

1. Removing the Power Supply PCB

1) Remove the rear cover.
2) Disconnect the fixing heater connector [1].
3) Disconnect all connectors of the power supply PCB.
4) Free the AC harness [2] from the harness guide.
5) Remove the four mounting screws [3], and detach the power supply PCB [4].

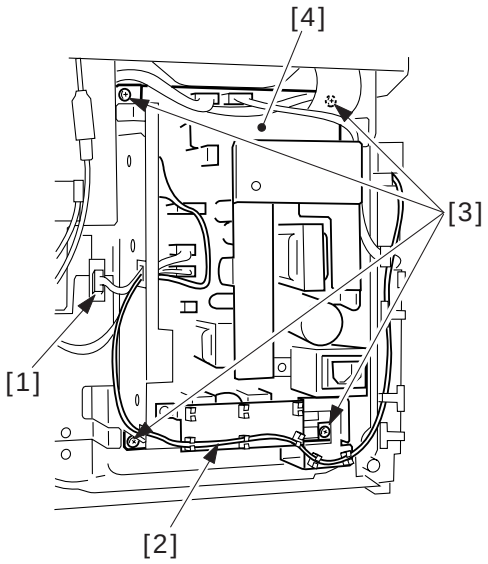

Figure 7-325

I. Removing the High-Voltage Power Supply PCB

1. Removing the High-Voltage Power Supply PCB

1) Remove the rear cover and the rear upper cover.
2) Disconnect all connectors of the high-voltage power supply PCB, and remove the faston [1] and the high-voltage harness [2].
3) Remove the mounting screw [3] and the four locking supports [4]; then, detach the high-voltage power supply PCB [5].

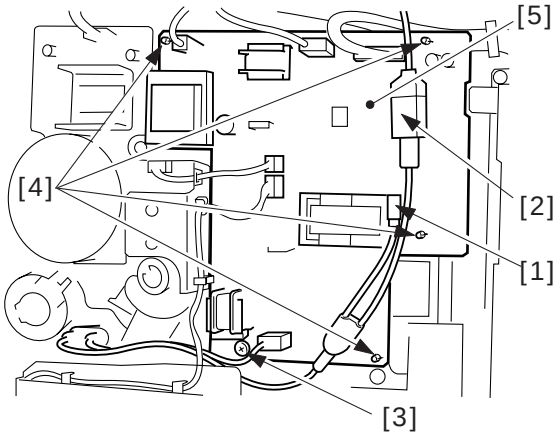

Figure 7-326

COPYRIGHT © 1998 CANON INC.

J. Lamp Regulator PCB

1. Removing the Lamp Regulator PCB

1) Remove the rear cover.
2) Disconnect the two connectors [1] of the lamp regulator PCB.
3) Remove the three locking supports [2], and detach the lamp regulator PCB [3].

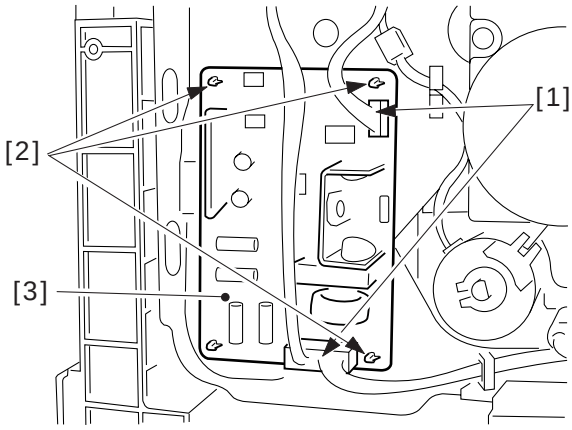

Figure 7-327

COPYRIGHT © 1998 CANON INC.

CHAPTER 8

INSTALLATION

This chapter introduces requirements for the site of installation, and shows how the copier may be installed using step-by-step instructions.

I. SELECTING THE SITE 8-1
II. UNPACKING AND INSTALLATION 8-2
  A. Unpacking 8-2
  B. Removing the Metal Fixings 8-3
  C. Mounting the Drum Unit 8-4
  D. Cleaning the Parts and Making Checks .. 8-6
  E. Checking the Images/Operations and User Mode 8-8
  F. Supplying Toner 8-10
III. RELOCATING THE MACHINE 8-12
IV. INSTALLING THE CONTROL CARD IV N 8-13
V. INSTALLING THE REMOTE DIAGNOSTIC DEVICE II 8-14
VI. INSTALLING THE ACCESSORY COUNTER 8-23
VII. INSTALLING THE ACCESSORY HEATER 8-25
  A. Installing the Heater Switch 8-25
  B. Mounting the Cassette/Drum Heater 8-26
  C. Installing the Mirror Heater 8-27

COPYRIGHT © 1998 CANON INC. CANON NP7161/NP7160 REV.0 AUG. 1998 PRINTED IN JAPAN (IMPRIME AU JAPON)

I. SELECTING THE SITE

Check the site of installation against the following requirements. If possible, visit the site in advance of the delivery of the machine.

1. There must be a dedicated power outlet for exclusive use by the copier capable of providing the rated voltage (±10%).
2. The temperature must be 7.5° to 32.5°C (45.5° to 90.5°F), and humidity must be 5% to 85% RH. (Avoid areas near a water faucet, water boiler, humidifier, and refrigerator.)
3. Avoid areas near a source of fire and areas subject to dust or ammonia gas. Avoid direct rays of the sun. As necessary, provide curtains.
4. The amount of ozone generated by the copier is of a level not affecting the health of the individuals around it. Some individuals, however, may find its smell unpleasant. Be sure that the room is properly ventilated.
5. Select a well-ventilated area. If multiple copiers are to be installed, in particular, make sure that the exhaust from one will not be drawn into the vent of another.
6. Make sure that the copier will be level.
7. Keep the copier 10 cm (3.9 in) or more away from any wall to provide adequate space for machine operation.

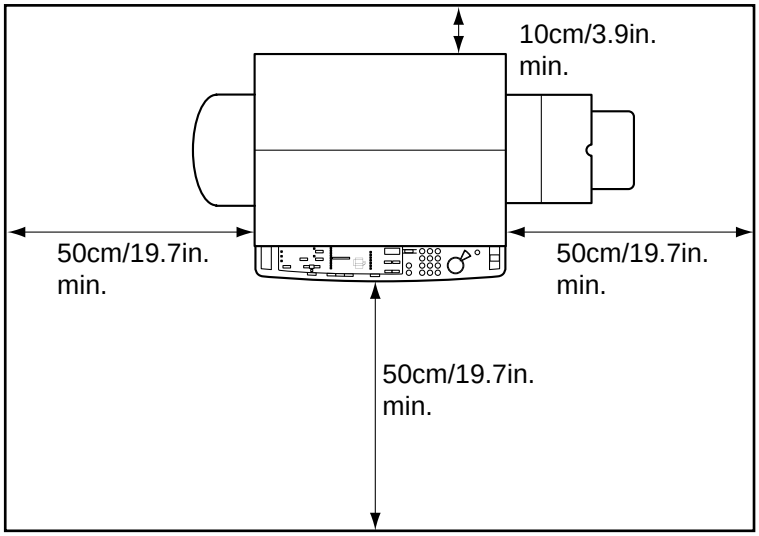

Figure 8-101

COPYRIGHT © 1998 CANON INC.

II. UNPACKING AND INSTALLATION

When a piece of metal is brought in from a cold to warm place, droplets of water tend to form on its surface. This phenomenon is known as *condensation*, and copiers suffering from condensation can generate blank copies.

If the copier has been brought in from a cold place, keep it unpacked for one hour or more before starting the installation work.

The copier weighs about 42 kg/92.4 lb. Be sure to work in a group of two when lifting it.

A. Unpacking

Step	Work	Checks/remarks
1	Open the shipping box, and take out the two cardboard boxes.	
2	Open the cardboard boxes, and take out the attachments.	Check to make sure that none of the following is missing: • copy tray • power cord • drum unit • User's Manual • waste toner case (3 pc.) • waste toner case bag (4 pc.) • top unit close label
3	Holding the grips at the bottom (both sides), move the copier to the site of installation.	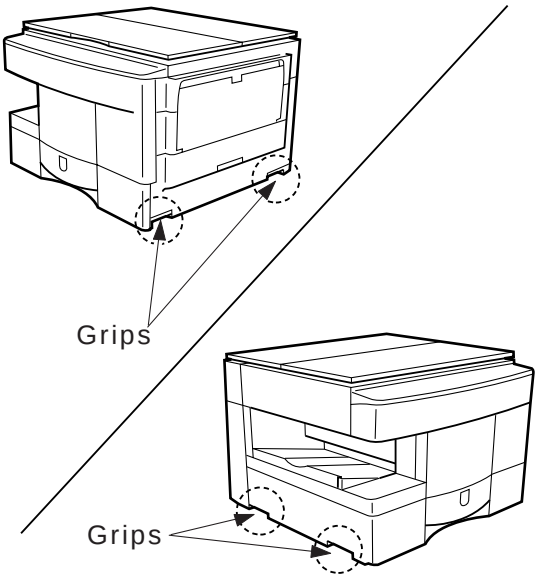

COPYRIGHT © 1998 CANON INC.
CANON NP7161/NP7160 REV.0 AUG. 1998 PRINTED IN JAPAN (IMPRIME AU JAPON)

B. Removing the Metal Fixings

Step	Work	Checks/remarks
1	Remove the packing tape, cushioning material, protective sheet of the copyboard glass, and protective sheet of the size index.	Check to make sure that the covers are free of scratches and dents.
2	Slide out the cassette, and remove the packing tape and the cushioning material from inside.	
3	Slide the cassette into the copier.	
4	Remove the two scanner fixing screws from the copier's left side. (Store away the scanner fixing screw for possible relocation of the machine.)	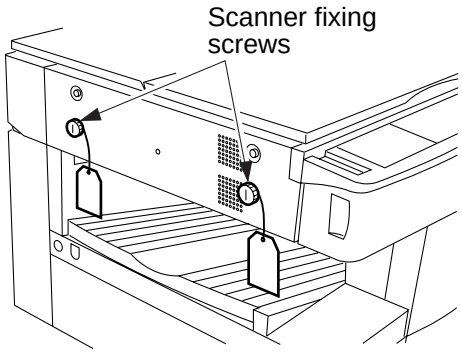
5	Open the front door, and shift up the opening/closing lever to open the copier top. Remove the metal fixing from the opening/closing hook (right). (You will not be using the removed metal fixing.)	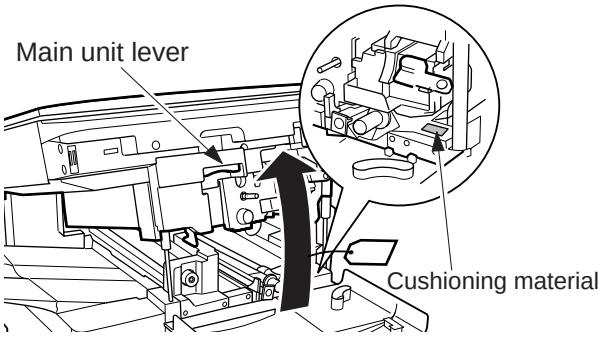
6	While opening the delivery assembly, remove the fixing assembly releasing plate (1 each at front and rear). (You will not be using the removed fixing assembly releasing plate.)	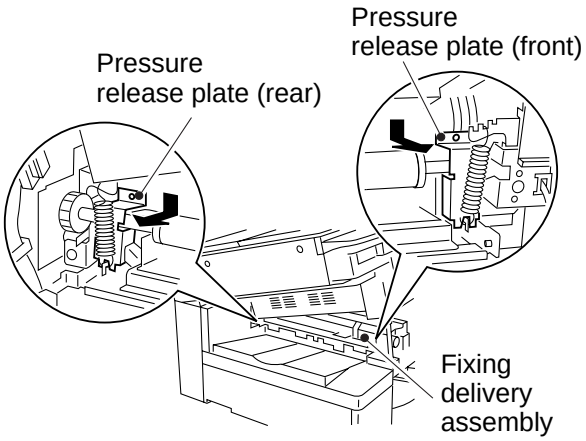

COPYRIGHT © 1998 CANON INC.

C. Mounting the Drum Unit

Step	Work	Checks/remarks
1	Turn the toner supply lever counterclockwise to unlock the developing assembly.	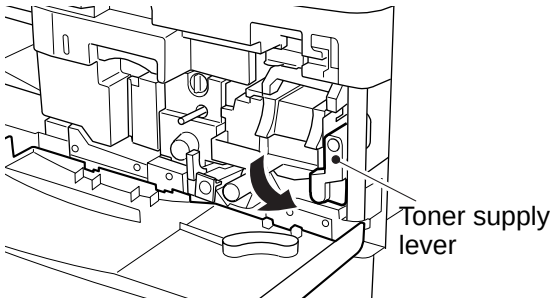
2	Remove the thumb screw, and remove the dummy drum. (You will be using the thumb screw when mounting the drum unit. Store away the dummy drum for possible relocation of the machine.)	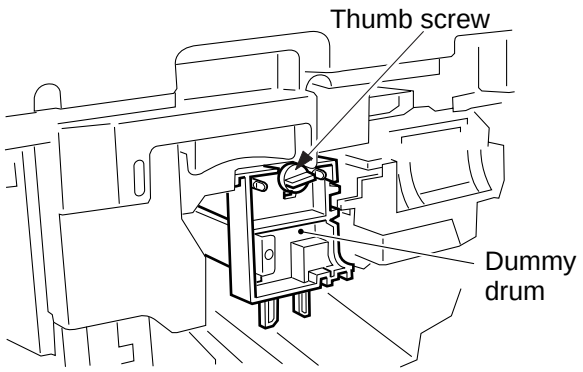
3	Take out the drum unit from the box, and remove the cushioning material and the protective sheet. **Caution:** • Take care not to damage the surface of the photosensitive drum. • Take care not to subject the photosensitive drum to light unnecessarily.	Keep the labels for later use.
4	Set the drum unit to the copier by sliding it along the rails, and secure it in place using the thumb screw used to fix the dummy drum in place.	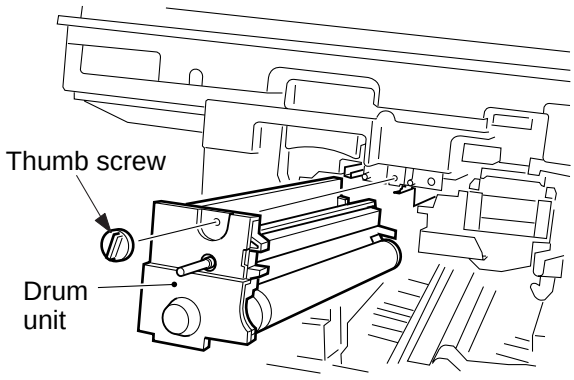

COPYRIGHT © 1998 CANON INC.
CANON NP7161/NP7160 REV.0 AUG. 1998 PRINTED IN JAPAN (IMPRIME AU JAPON)

Step	Work	Checks/remarks
5	Fill out the label that came with the drum unit, and attach the label to the front cover of the drum unit.	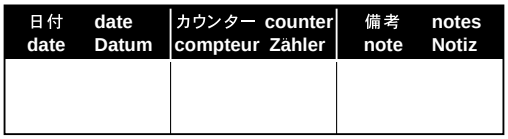
6	Turn the toner supply lever clockwise to lock the developing assembly in place; then, close the copier top.	

COPYRIGHT © 1998 CANON INC.

D. Cleaning the Parts and Making Checks

Step	Work	Checks/remarks
1	Clean the charging wire using the primary charging wire cleaning lever.	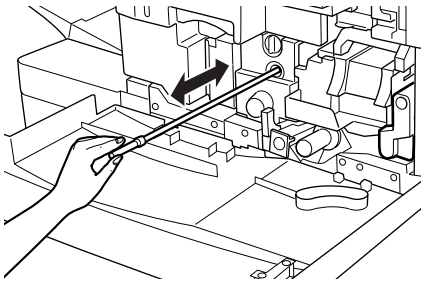
2	Clean the charging wire using the transfer charging wire leaning lever.	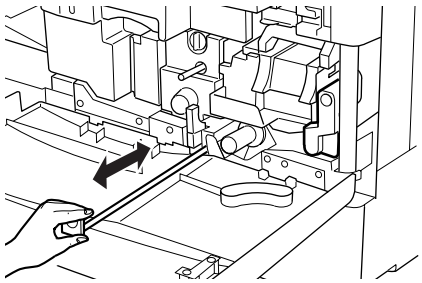
3	Take out the static eliminator, and clean it using the static eliminator cleaner stored behind the front door. Thereafter, set the static eliminator and the static eliminator cleaner back to their initial positions.	Clean as if to sweep the inside of the groove of the static eliminator. 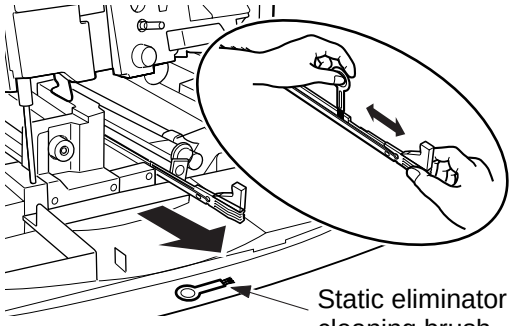
4	Remove the inside cover (2 screws).	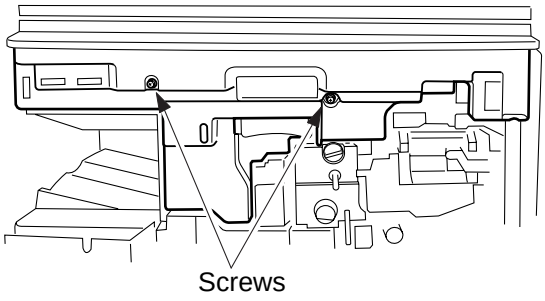

COPYRIGHT © 1998 CANON INC.

Step	Work	Checks/remarks
5	Take out the dust-proofing glass (1 screw), and dry wipe it with lint-free paper. Then, mount it back to the copier.	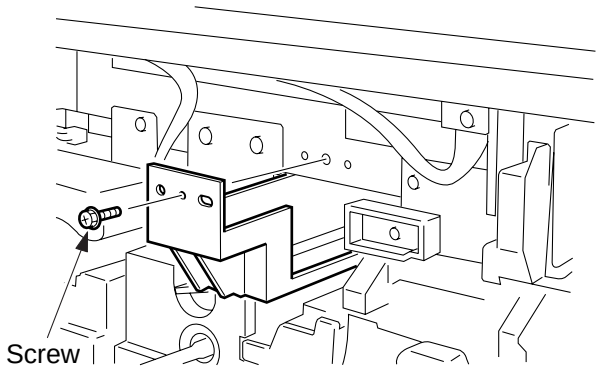
6	Mount the inside cover.	
7	Turn the toner supply lever counterclockwise to unlock the developing assembly.	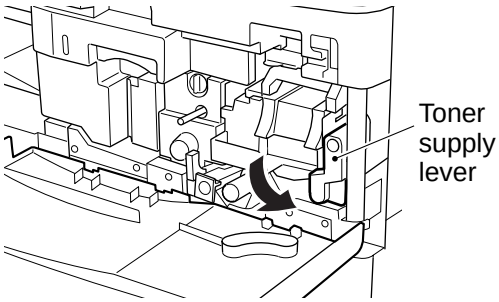
8	Remove the stopper (1 screw), and take out the developing assembly. **Caution:** • Do not touch the developing cylinder. • Take care not to damage the developing cylinder.	Check to make sure that the developing cylinder is free of soiling and scratches. 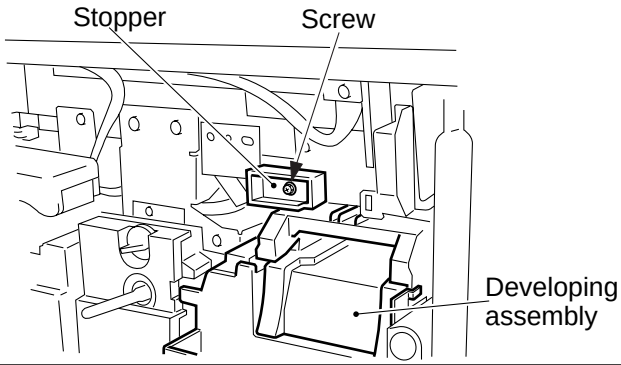
9	Set the developing assembly in the copier by sliding it along the rails; then, mount the stopper.	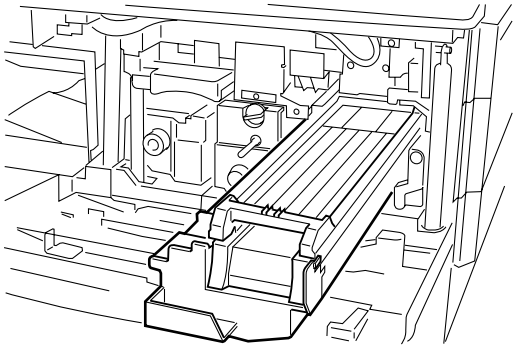
10	Turn the toner supply lever clockwise to lock the developing assembly in place.	
11	Close the front door.	

COPYRIGHT © 1998 CANON INC.

E. Checking the Images/Operations and User Mode

Step	Work	Checks/remarks
1	Connect the power cord to the copier, and connect the power plug to the outlet.	
2	Turn on the power switch.	• Check to make sure that the Paper indicator flashes. • Press the keys on the numeric keypad and the Clear key to make sure that copy counts are indicated correctly.
3	Supply toner.	See F. “Supplying Toner.”
4	In standby state, execute service mode 401 (stir toner). **Steps** 1) Press the User mode key. 2) Hold down ‘2’ and ‘8’ on the numeric keypad at the same time for 0.5 sec or more. 3) Press the user mode key. 4) Check to see that ‘1’ is indicated. 5) Press ‘4’ on the numeric keypad. 6) Check to see that ‘4’ is indicated. 7) Press the AE key. 8) Check to make sure that ‘401’ is indicated. 9) Press the Start key to start stirring toner.	• This mode lasts about 4 min. • While this mode is effective, ‘401’ is indicated; upon completion, ‘4’ of ‘401’ is flashed. **Caution:** While the mode remains on, do not turn off the power or open the front door.
5	Execute service mode 403 drum unit installation mode. **Steps** 1) Check to see that ‘401’ is indicated. 2) Press ‘3’ on the numeric keypad. 3) Check to see that ‘403’ is indicated. 4) Press the Start key to start drum unit installation mode.	• This mode lasts about 40 sec. • While this mode is effective, ‘403’ is indicated; upon completion, ‘4’ of ‘403’ is flashed. **Caution:** While the mode remains on, do not turn off the power or open the front door.

COPYRIGHT © 1998 CANON INC.

Step	Work	Checks/remarks
6	While the toner is being stirred, perform the following: 1) Set the cassette size to suit the needs of the user, and put copy paper inside the cassette. 2) Mount the copy tray to the copier.	To switch the cassette between AB and Inch, see the instructions under “Changing the Cassette Size (AB/Inch). (See p. 5-25.) 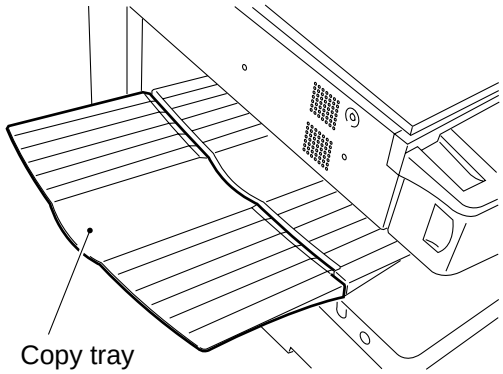
7	When drum unit installation mode has been executed, press the Reset key to end service mode.	
8	Place the Test Sheet on the copyboard glass, and make copies using each cassette. Then, check the copy images.	• Check to make sure that there is no abnormal noise. • Check to make sure that as many copies as set are made normally. • Check the copies (images) made at each default reproduction ratio. If images are not optimum, perform the “Image Adjustment Basic Procedure.” (p. 10-3) • Check to make sure that copying operation in each copying mode is normal. • Check to make sure that the counter operates normally.
9	Make user mode settings and service mode settings 5 to suit the user's needs.	
10	Clean up the area around the machine.	
11	If you are installing accessories (e.g., sorter), install them according to their respective Installation Procedures.	
12	Fill out the Service Sheet.	

COPYRIGHT © 1998 CANON INC.

F. Supplying Toner

Step	Work	Checks/remarks
1	Open the front door.	
2	Turn the toner supply lever counterclockwise to unlock the developing assembly.	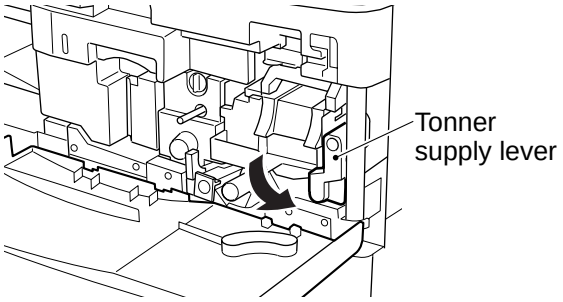
3	Holding the grip, pull the developing assembly to the front until it stops.	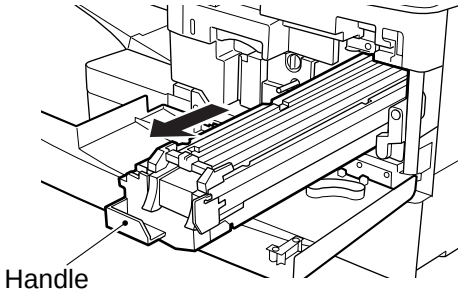
4	Holding the toner cartridge horizontal, shake it left and right several times.	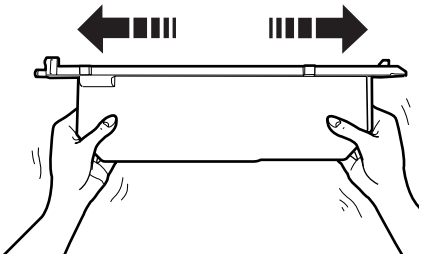
5	Put the toner cartridge over the developing assembly, and push it in fully to the rear.	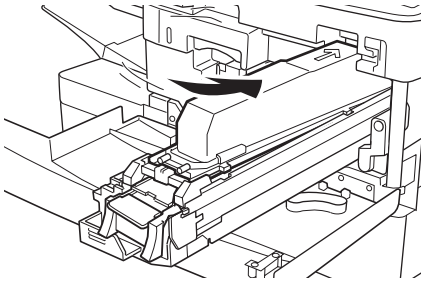

COPYRIGHT © 1998 CANON INC.

Step	Work	Checks/remarks
6	Push the toner cartridge from above to lock it to the developing assembly.	Check to make sure that the opening tab of the toner cartridge has sprung to the front. 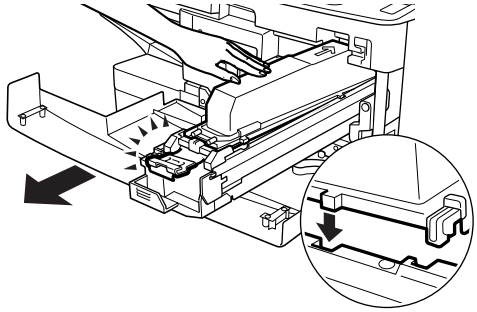
7	Pull the opening tab to the front until the STOP line is in view.	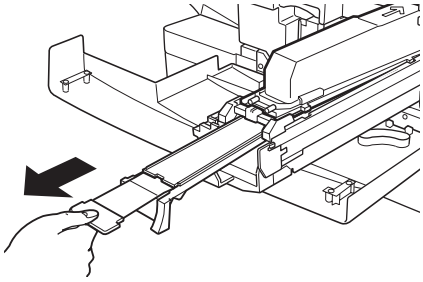
8	Tap lightly on the top of the toner cartridge so that the toner falls into the developing assembly.	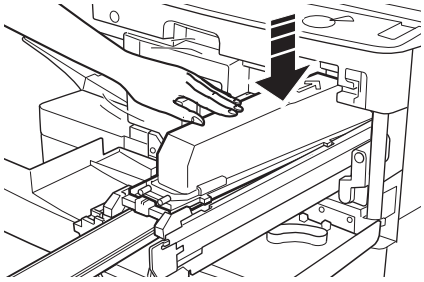
9	Push in the grip of the developing assembly so that the toner cartridge may be detached.	The toner cartridge will detach itself from the developing assembly when the grip of the developing assembly is pushed in to its initial position. 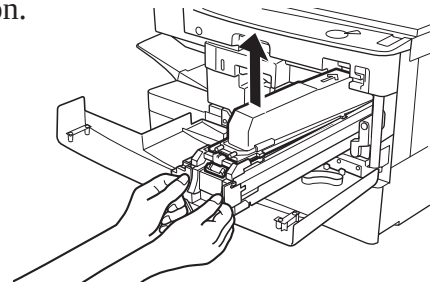
10	Slide the developing assembly into the copier, and turn the toner supply lever clockwise to lock the developing assembly in place.	
11	Close the front door.	

COPYRIGHT © 1998 CANON INC.

III. RELOCATING THE MACHINE

If you need to relocate the machine by truck or any other means of transportation, perform the following:

Step	Work	Checks	Remarks
1	Make a copy in Direct.		
2	Take out all copy paper from the cassette.		
3	Excute '403' in service mode. The scanner, lens, and No.4/No.5 mirror unit move to the position for transportation.		
4	Turn off the power switch, and disconnect the power plug from the power outlet.		
5	Secure the scanner in place using the two scanner fixing screws from the left side of the copier.		Use the screws removed during installation work.
6	Take out the drum unit, and mount the dummy drum.	The drum unit must be transported separately.	
7	Remove the copy tray.		
8	Tape the front door, multifeeder tray, and cassette in place.		
9	Place A3 copy paper on the copyboard glass, and tape the copyboard in place.		

COPYRIGHT © 1998 CANON INC.

IV. INSTALLING THE CONTROL CARD IV N

1) Remove the screw [1] from the right side of the upper rear cover, and detach the face cover [2].
2) Cut off the face plate [3].

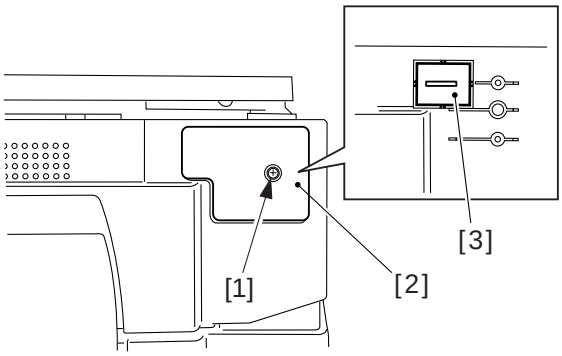

Figure 8-401

3) Lead out the harness, and disconnect the shorting connector [4]; then, connect the connector [5] of the Control Card IV N to the copier's connector [6].

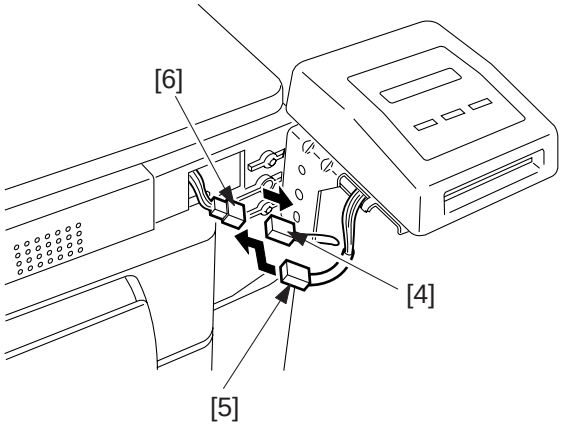

Figure 8-402

4) Push in the harness and the connector into the copier, and install the Control Card IV N to the copier using the screw [7].

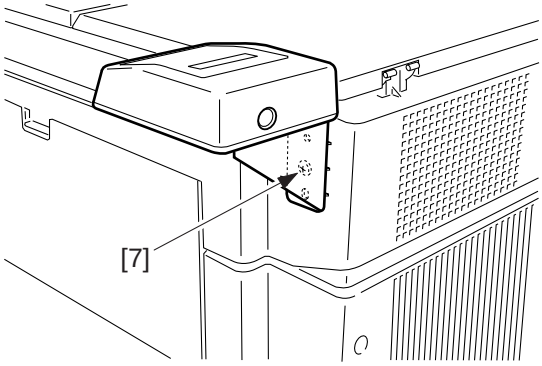

Figure 8-403

5) Connect the copier's power plug, and turn on the power switch to check the operation of the Control Card IV N.

COPYRIGHT © 1998 CANON INC.

V. INSTALLING THE REMOTE DIAGNOSTIC DEVICE II

Keep the following in mind when installing the Remote Diagnostic Device II to the copier:

1. Be sure to observe the relevant laws and regulations of the country.
2. Be sure to check that the copier has properly been installed before starting the work.
3. Be sure to keep the copier's power plug disconnected during the work.
4. Be sure to identify the screws by type (length, diameter) and location.
5. Be sure to set the settings data to the computer at the service station in advance.

COPYRIGHT © 1998 CANON INC.
CANON NP7161/NP7160 REV.0 AUG. 1998 PRINTED IN JAPAN (IMPRIME AU JAPON)

1) Remove the two screws [1], and detach the top cover [2].

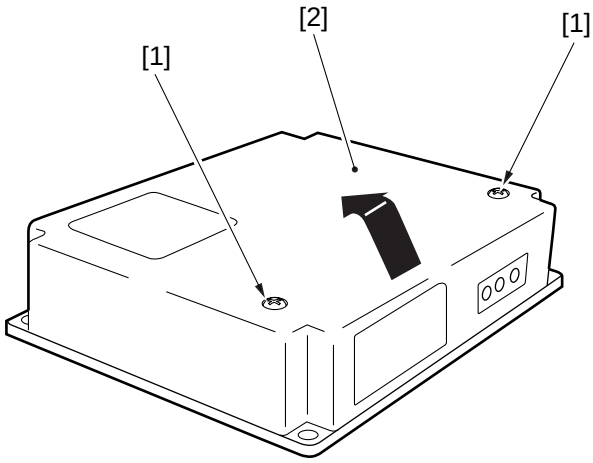

Figure 8-501

2) Connect the connector [3] of the power supply unit to the connector [4] as shown.

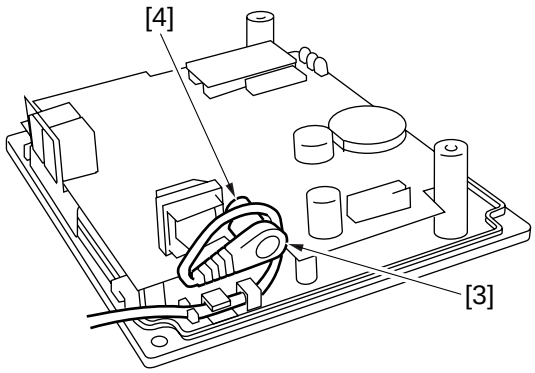

Figure 8-502

3) Remove the copier's rear cover; then, remove the sheet [5], and cut off the face plate [6].

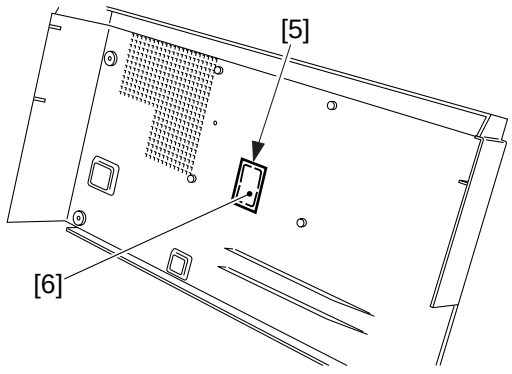

Figure 8-503

COPYRIGHT © 1998 CANON INC.

4) Lead the harness through the opening in the rear cover made by cutting off the face plate in step 3), and connect the connector [7] and the copier's connector [8] (8P). (At this time, be sure to fit the harness in the harness guide as shown.)

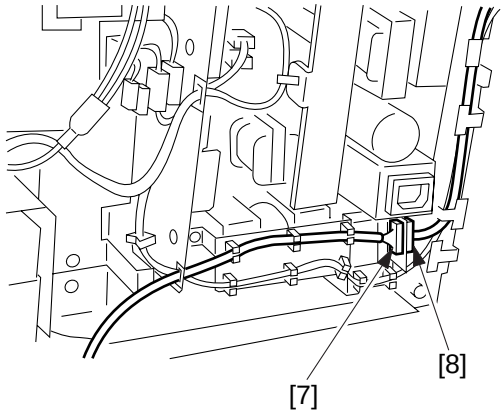

Figure 8-504

5) Mount the rear cover and the grounding wire [9] (attachment) to the copier, and secure the device to the rear cover together with the grounding wire [9] with four screws [10] (use the screws that come with the device).

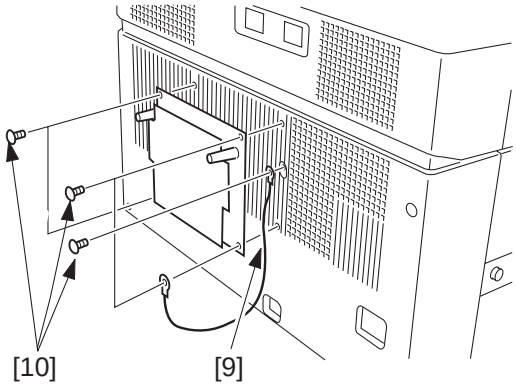

Figure 8-505

6) Remove the slack from the cable between the copier and the device, and bundle together any excess length and secure it in place with the harness band [11].

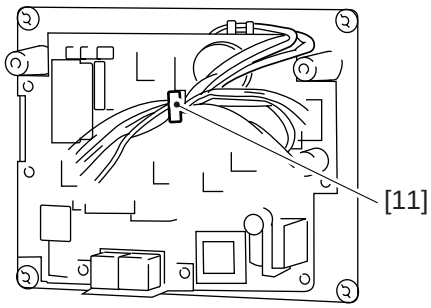

Figure 8-506

COPYRIGHT © 1998 CANON INC.

7) Shift bits 4 of the DIP switch (SW2) [12] on the device's PCB to ON (so that the communication with the copier will be IPC communication).

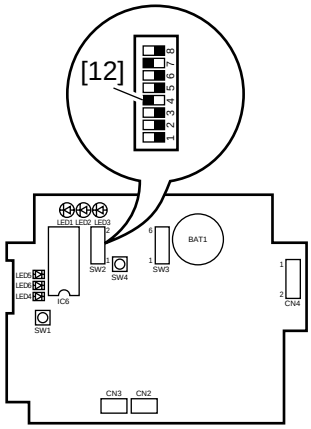

Figure 8-507

8) If IC6 [13] is mounted on the PCB, shift bit 7 of the DIP switch (SW2) to ON; otherwise, keep bit 7 at OFF.

Caution:

1. If the ROM (IC6) [13] is not mounted, you need not mount one newly.
2. If you want to mount the ROM (IC6) [13] for upgrading or replace it, be sure to shift bit 7 of the DIP switch [14] (SW2) to ON.

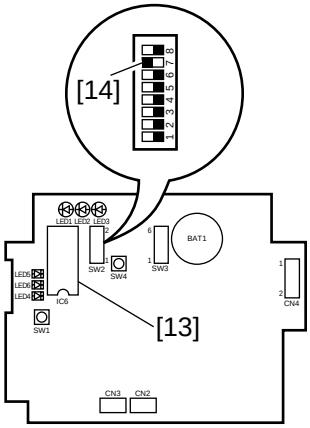

Figure 8-508

9) Set each bit of the DIP switch (SW3) [15] as indicated in Table 8-501.

Switch	Setting	Description
SW3-1 SW3-2	AII OFF	
SW3-3	ON	
SW3-4	ON	selects push pulse for RDD circuit confihuration
	OFF	selscts dial pulse for RDD circuit confihuration
SW3-5	ON	sets dial pulse speed to 20 PPS
	OFF	sets dial pulse speed to 10 PPS
SW3-6	–	reserved

Table 8-501

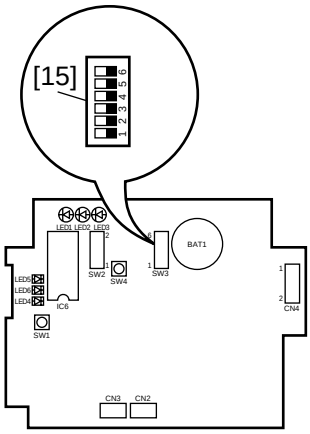

Figure 8-509

COPYRIGHT © 1998 CANON INC.

10) Connect the power supply unit to the power plug, and check to make sure that LED1 [16] (green) turns on.

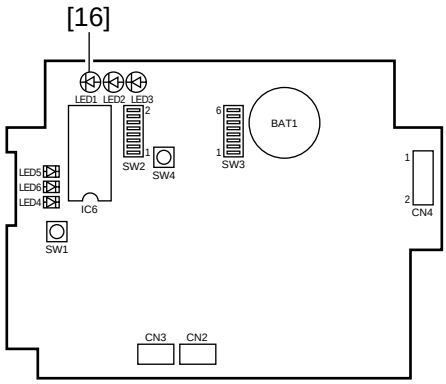

Figure 8-510

11) Execute RAM clear.
Set each bit of the DIP switch [17] (SW2) as indicated in Table 8-502, and press the push switch [18] (SW4). A press should turn on LED5 [19] (red).

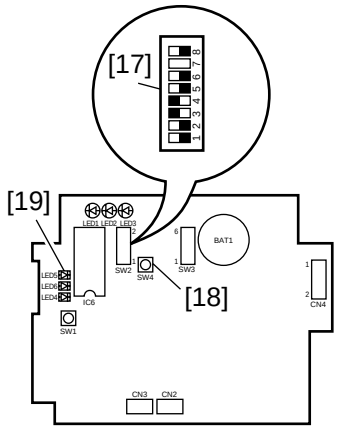

Figure 8-511

SW2 bits	Settings
SW2-1	OFF
SW2-2	OFF
SW2-3	OFF
SW2-4	ON
SW2-5	OFF
SW2-6	ON
SW2-7	See step 9).
SW2-8	OFF

Table 8-502

COPYRIGHT © 1998 CANON INC.

12) After making sure that LED5 [19] (red) has turned on, set each bit of the DIP switch [17] (SW2) as indicated in Table 8-503, and press the push switch [18] (SW4). A press should turn off LED5 [19] (red), indicating that RAM clear has ended.

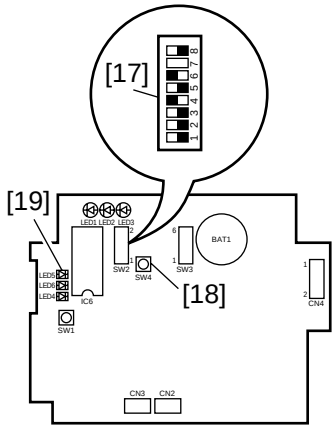

Figure 8-512

SW2 bits	Settings
SW2-1	OFF
SW2-2	OFF
SW2-3	ON
SW2-4	ON
SW2-5	OFF
SW2-6	OFF
SW2-7	See step 9).
SW2-8	OFF

Table 8-503

13) Shift bit 6 of the DIP switch [20] (SW2) to OFF.

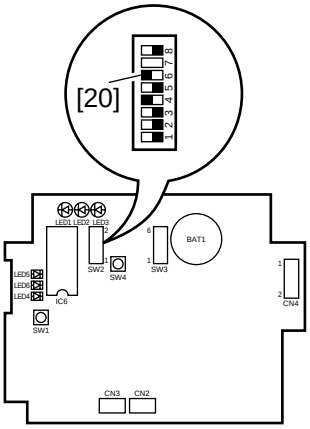

Figure 8-513

COPYRIGHT © 1998 CANON INC.

14) Connect the telephone line to the device.
If the device is connected on its own, connect the modular jack cable to the connector LINE [21].
If the extension function of the device is used, connect the existing telephone or fax to the connector TEL [22], and connect the telephone line to the connector LINE [21].

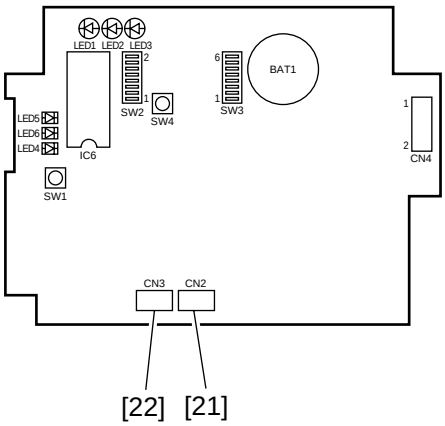

Figure 8-514

15) Call the service station, and request initial settings for the device. (Upon reception, LED4 [23] (red) will start to flash.)

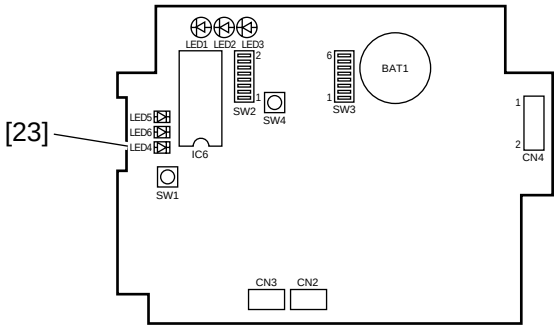

Figure 8-515

16) Call the service station to find out whether the initial settings have been successfully made. Otherwise, execute RAM clear (steps 11) through 13)) once again and start over.

Caution:

Upon completion of each try, check with the service station to make sure that the settings have been made successfully.

COPYRIGHT © 1998 CANON INC.

17) Check if the device is capable of ringing up the computer at the service station.
Press the push switch [18] (SW4).
A press will turn on LED6 [24] (red): it will turn off upon completion of transmission, and it will flash upon failure.
Another press on the push switch (SW4) [18] while LED6 [24] is flashing will initiate transmission once again.
A press on the push switch (SW1) [25] while LED 6 [24] is flashing will cancel transmission attempts.

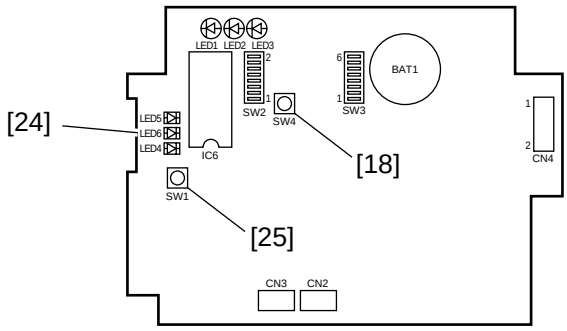

Figure 8-516

18) Check to make sure that the communication with the copier is normal.
Connect the copier's power plug, and turn on the power switch to see that LED2 [26] (orange) flashes.

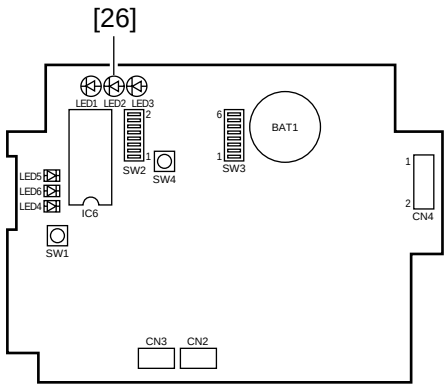

Figure 8-517

19) Press the copier's Copy Start key so that LED3 [27] (pink) flashes in response.

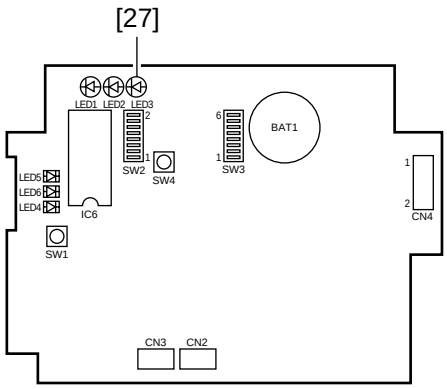

Figure 8-518

COPYRIGHT © 1998 CANON INC.

20) Attach the switch settings label [28] on the device, and record the settings of each switch.
21) Secure the top cover [29] in place with two screws [30]. At this time, check to make sure that the cable is fixed in place with the cable guide and is not trapped by the top cover [29].

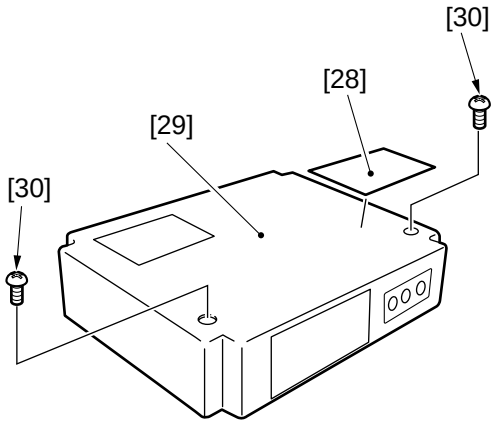

Figure 8-519

COPYRIGHT © 1998 CANON INC.

VI. INSTALLING THE ACCESSORY COUNTER

1) Open the front door; then, remove the inside cover, and cut off the face plate [1].

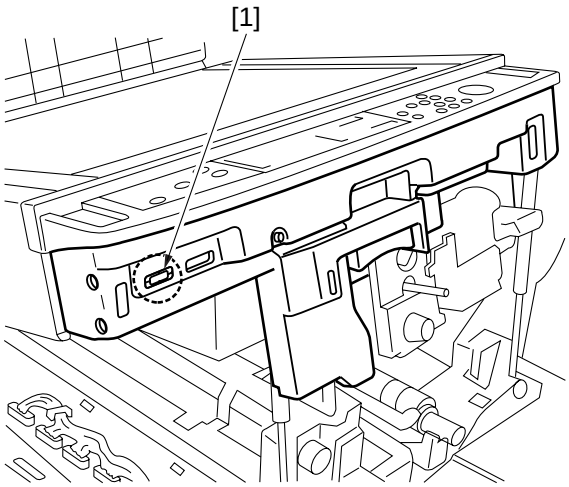

Figure 8-601

2) Remove the delivery lower cover, and mount the accessory counter [2] to the counter assembly.

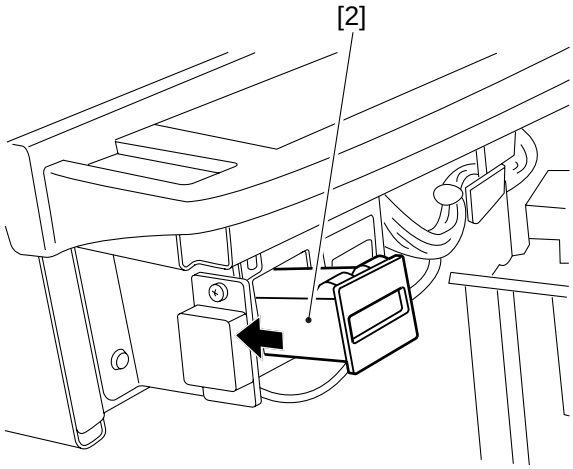

Figure 8-602

3) Connect the connector [3] of the accessory counter to the connector [4] of the counter assembly.

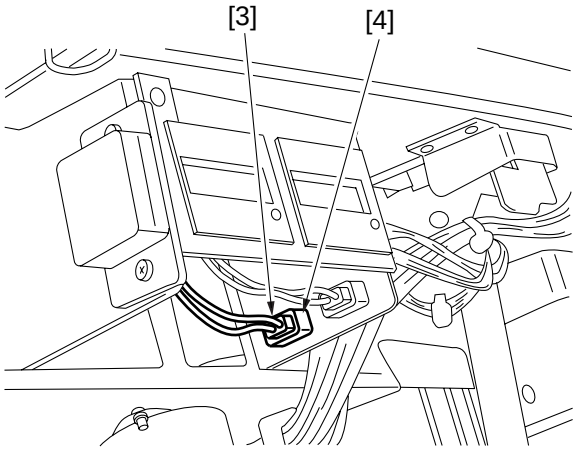

Figure 8-603

COPYRIGHT © 1998 CANON INC.

4) Remove the delivery lower cover, and set the DIP switch (SW102) on the DC controller PCB as indicated in Table 8-601.

SW102-5	SW102-6	Settings
OFF	OFF	Accessory counter not connected.
ON	OFF	Uses the accessory counter as a small-size copy counter.
OFF	ON	Uses the accessory counter as a large-size copy counter.
ON	ON	Not used

Table 8-601

5) Mount the delivery lower cover and the inside cover, and close the front door.
6) Connect the copier's power plug, and turn on the power switch to check the operation of each counter.

COPYRIGHT © 1998 CANON INC.

VII. INSTALLING THE ACCESSORY HEATER

A. Installing the Heater Switch

1) Remove the rear cover, and cut off the face plate [1].

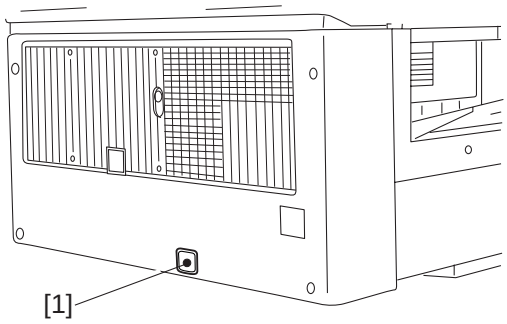

Figure 8-701

2) Mount the heater switch [2] with two screws [3].

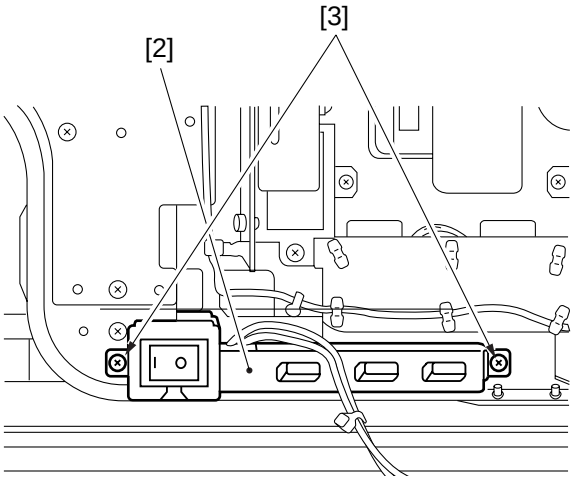

Figure 8-702

3) Lead the heater switch harness through the clamp, and connect it to the connector [4].

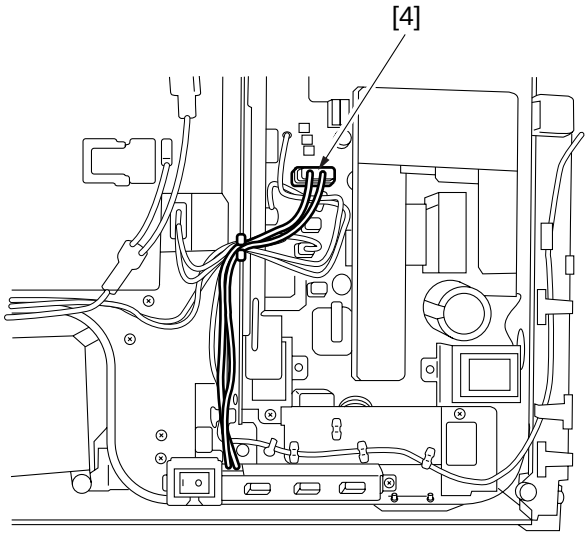

Figure 8-703

COPYRIGHT © 1998 CANON INC.

B. Mounting the Cassette/ Drum Heater

1) Remove the front door, drum unit, developing assembly, transfer charging assembly, and cassette.
2) Engage the two hooks [1] of the cassette/ drum heater on the cut-off, and slide to the rear to mount.

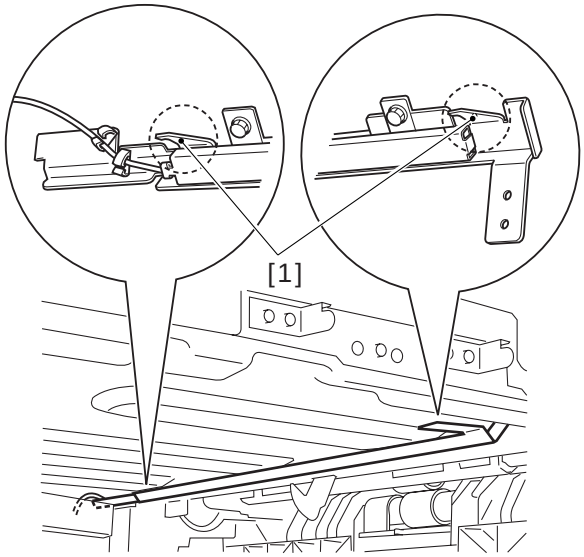

Figure 8-704

3) Secure with two mounting screws [2].

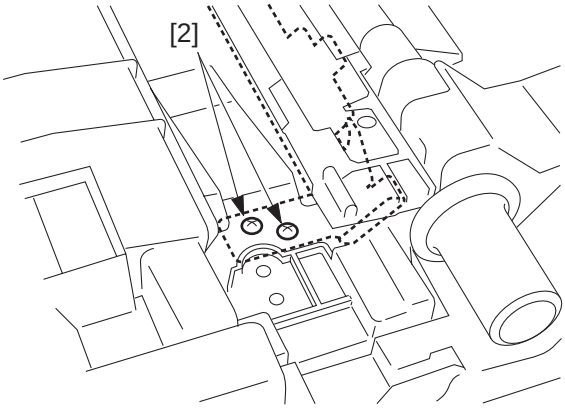

Figure 8-705

4) Lead the cassette/drum heater harness [3] through the harness guide, and connect the connector [4].

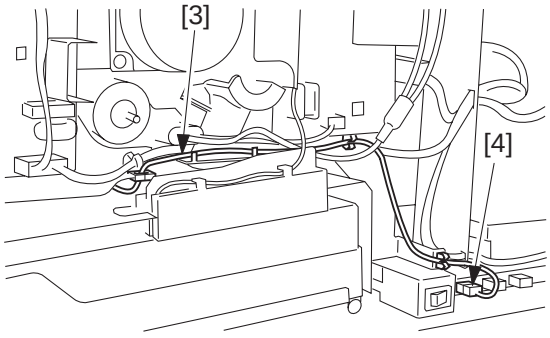

Figure 8-706

COPYRIGHT © 1998 CANON INC.

C. Installing the Mirror Heater

1) Mount the inside cover and the delivery upper cover.
2) Mount the mirror heater [1] with two screws [2].

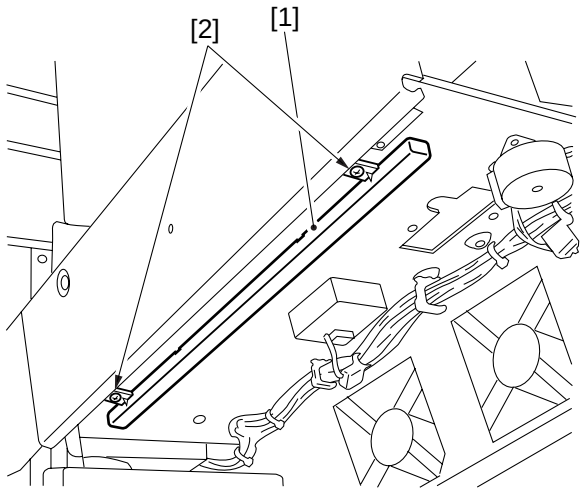

Figure 8-707

3) Lead the mirror heater harness [3] through the harness guide, and connect the connector [4].

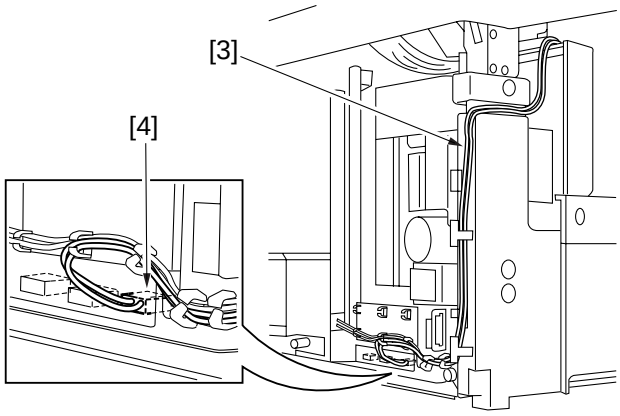

Figure 8-708

CHAPTER 9

MAINTENANCE AND SERVICING

This chapter provides tables of periodically replaced parts and consumables/durables and scheduled servicing charts.

I. PERIODICALLY REPLACED PARTS 9-1
A. Copier 9-1
II. CONSUMABLES AND DURABLES 9-2
A. Copier 9-2
III. SCHEDULED SERVICING CHART 9-3
IV. SCHEDULED SERVICING TABLE 9-5
A. Copier 9-5

COPYRIGHT © 1998 CANON INC. CANON NP7161/NP7160 REV.0 AUG. 1998 PRINTED IN JAPAN (IMPRIME AU JAPON)

I. PERIODICALLY REPLACED PARTS

Some of the parts of the copier need to be replaced on a periodical basis to ensure a specific level of performance (regardless of external appearance or presence/absence of damage).

Plan replacement so that it coincides with a scheduled servicing visit.

A. Copier

As of August 1998

No.	Parts name	Parts No.	Q'ty	Expected life (copies)	Remarks
1	Transfer charging wire	FY3-0040-000	AR	60,000	
2	Ozone filter (exhaust)	FE5-3956-000	1	60,000	Or, 1 yr.

Note:

The above values are estimates only, and are subject to change based on future data.

COPYRIGHT © 1998 CANON INC.

II. CONSUMABLES AND DURABLES

Some of the parts of the copier may need to be replaced once or more because of wear or damage over the period of machine warranty. Replace them when they fail.

A. Copier

As of August 1998

No.	Parts name	Parts No.	Q'ty	Expected life (copies)	Remarks
1	Scanning lamp	FH7-3360-000	1	120,000	120V
		FH7-3361-000	1	120,000	230V
2	Pick-up roller	FE5-4199-000	2	120,000	
3	Feed roller	RF5-2490-000	1	120,000	
4	Separation roller	RF5-2490-000	1	120,000	
5	Multifeeder pick-up roller	FB1-8581-000	1	120,000	
6	Multifeeder separation pad	FE5-4132-000	1	120,000	
7	Static eliminator	FL5-0581-000	1	60,000	Come with the packing of drum unit
8	Developing cylinder	FM5-0721-000	1	180,000	
9	Fixing upper roller	FE5-3912-000	1	180,000	
10	Fixing lower roller	FE5-3905-000	1	180,000	
11	Fixing upper separation claw	FB1-7075-000	5	180,000	
12	Fixing lower separation claw	FA2-9037-000	4	180,000	
13	Heat discharge roller	FE5-3932-000	1	120,000	
14	Delivery roller	FE5-3927-000	1	120,000	

Note:
The above values are estimates only, and are subject to change based on future data.

COPYRIGHT © 1998 CANON INC.

III. SCHEDULED SERVICING CHART

Note:

1. As a rule, provide scheduled servicing every 60,000 copies.
2. Before setting out for a visit, check the Servicing Book, and take parts for which replacement is expected.

Step	Work	Checks	Remarks
1	Report to the person in charge.	Check the general condition.	
2	Record the counter reading.	Check the faulty copies.	
3	Make test copies (in Direct, Reduce, Enlarge).	a. density of images b. soiling of the background c. clarity of characters d. margin along the leading edge e. margin on the left/right f. fixing, registration (displacement), soling of backs g. abnormal noise h. counter operation	
4	Clean the optical assembly: • canning reflecting plate • lens • No. 1/2/3/4/5/6 mirror • dust-proofing glass		Use a blower brush; if dirt is excessive, use alcohol.
5	Check the waste toner case.	Collect the waste toner case is full.	
6	Replace the transfer charging wire, clean the transfer charging guide, and clean the transfer guide: • transfer guide (upper/lower) plate • transfer/separation charging assembly guide rail		Dry wipe with lint-free paper ; if necessary use alcohol.
7	Clean the separation/feeding assembly: • separation static eliminator • feeding assembly		
8	Clean the fixing/delivery assembly: • fixing (upper/lower) roller • separation claw (upper/lower)		Lubricant
9	Provide scheduled servicing according to the number of copies made.		

COPYRIGHT © 1998 CANON INC.

Step	Work	Checks	Remarks
10	Clean the copyboard cover and the copyboard glass.		Use alcohol.
11	Make test copies.		
12	Make sample copies.		
13	Put the sample copies in order, and clean up the area around the machine.		
14	Record the latest counter reading.		
15	Fill out the Service Sheet, and report to the person in charge.		

COPYRIGHT © 1998 CANON INC.
CANON NP7161/NP7160 REV.0 AUG. 1998 PRINTED IN JAPAN (IMPRIME AU JAPON)

IV. SCHEDULED SERVICING TABLE

A. Copier

Caution:

1. Do not use solvents/oils other than those mentioned herein.
2. Keep the following in mind when cleaning/checking each charging assembly:

- Do not use a cloth having metal powder.
- Do not use a moist cloth. Dry wipe with lint-free paper, and use alcohol thereafter. Be sure that alcohol has dried completely before mounting back to the copier.

△ : Clean ● : Replace × : Lubricate □ : Adjust ◎ : Inspect

Unit	Item	Intervals				Remarks
		every 60,000	every 120,000	every 180,000	yearly	
Externals	Copyboard glass	△				
	Copyboard cover	△				
	Ozone filter	●			●	Or, 1 yr.
Scanner drive assembly	Scanner drive cable (front/rear)	□				
	Scanner rail		×		×	Use alcohol, and apply lubricant.
Optical path	Scanning lamp		●			Use a blower brush. If the dirt is excessive, use alcohol.
	No. 1 to 16 mirrors	△				
	Dust-proofing glass	△				
	Scanner reflecting cover	△				
	Scanner side reflecting plate	△				
	Lens	△				
Developing assembly	Developing assembly roll	△				
	Developing cylinder			●		
Cleaner	Waste toner box					Replaced by the user in response to an alarm.
Pick-up assembly	Pick-up roller	△	●			
	Pick-up feed roller	△	●			
	Pick-up separation roller	△	●			
	Multifeeder pick-up roller	△	●			
	Multifeeder separation pad		●			
Feeding assembly	Transfer guide	△				
Fixing assembly	Fixing upper roller	△		●		
	Fixing lower roller	△		●		
	Separation claw (upper/lower)	△		●		Look for damage on the claw tip and for soiling by toner.
	Heat roller		●			
	Delivery roller			●		

COPYRIGHT © 1998 CANON INC.

Unit	Item	Intervals				Remarks
		every 60,000	every 120,000	every 180,000	yearly	
Others	Transfer charging wire	●				
	Static eliminator	●				

COPYRIGHT © 1998 CANON INC.
CANON NP7161/NP7160 REV.0 AUG. 1998 PRINTED IN JAPAN (IMPRIME AU JAPON)

CHAPTER 10

TROUBLESHOOTING

This chapter provides tables of maintenance/inspection, standards/adjustments, and identification of problems (image fault/malfunction).

I. GUIDE TO TROUBLESHOOTING TABLES 10-1
  A. Image Adjustment Basic Procedure 10-3
  B. Points to Note for Scheduled Servicing . 10-4
II. STANDARDS AND ADJUSTMENTS 10-5
  A. Mechanical 10-5
  B. Exposure System 10-7
  C. Image Formation System 10-10
  D. Pick-Up/Feeding System 10-14
  E. Fixing System 10-16
  F. Electrical System 10-18
III. IMAGE FAULTS 10-25
  A. Initial Checks 10-25
  B. Image Fault Samples 10-28
  C. Troubleshooting Image Faults 10-29
IV. TROUBLESHOOTING MALFUNCTIONS 10-42
  A. Copier 10-42
V. TROUBLESHOOTING FEEDING PROBLEMS 10-66
  A. Copy Jams 10-66
  B. Faulty Feeding 10-69
VI. ARRANGEMENT AND FUNCTIONS OF ELECTRICAL PARTS 10-70
  A. Sensors and Switches 10-70
  B. Motors, Fans, Clutches, and Solenoids 10-72
  C. Heaters, Lamps, and Others 10-74
  D. PCBs 10-76
  E. Variable Resistors, Light-Emitting Diodes, and Check Pins by PCB ... 10-77
VII. SERVICE MODE 10-82
  A. Outline 10-82
  B. Using Service Mode 10-82
  C. Using Adjust Mode and Function Mode 10-83
  D. Display Mode [1] 10-84
  E. I/O Display Mode [2] 10-88
  F. Adjust Mode [3] 10-92
  G. Function Mode [4] 10-94
  H. Option Mode [5] 10-95
  I. Counter Mode [6] 10-97
  J. Application Mode [7] 10-98
VIII. SELF DIAGNOSIS 10-99
  A. Copier 10-99
  B. ADF 10-103
  C. Sorter 10-104
  D. Cassette Feeding Module 10-104

COPYRIGHT © 1998 CANON INC. CANON NP7161/NP7160 REV.0 AUG. 1998 PRINTED IN JAPAN (IMPRIME AU JAPON)

I. GUIDE TO TROUBLESHOOTING TABLES

The troubleshooting tables in this chapter are based on more commonly used troubleshooting flow charts.

Study the following for an idea of how you may take advantage of the tables.

EX: AC power is absent.

Cause	Step	Checks	Yes/No	Actions
Power plug	1	Is the power plug connected to the power outlet?	NO	Connect the power plug.
Covers	2	Are the front door and delivery cover closed properly?	NO	Close the door and the cover properly.
Power source	3	Is the rated voltage present at the power outlet?	NO	This is not the copier's problem. Inform the user accordingly.
	4	Is the rated voltage present between J1-1 and J1-2? (J1 is found near the power cord mount.)	YES	Go to step 6.

Rest omitted.

- If you want to find out the possible causes (faulty parts) associated with a specific problem, see the items under “Cause.”
  In the case of the above, i.e., “AC power is absent,” you may suspect the power plug, doors and covers, or power source.
- If you want to find out the checks to make or the actions to take for a specific problem, follow the instructions under “Checks” and “Actions” in sequence. Answer the question Yes or No, and if your answer matches the answer given under “Yes/No,” take the action given under “Actions”; otherwise, go to the next step and work likewise.

COPYRIGHT © 1998 CANON INC.

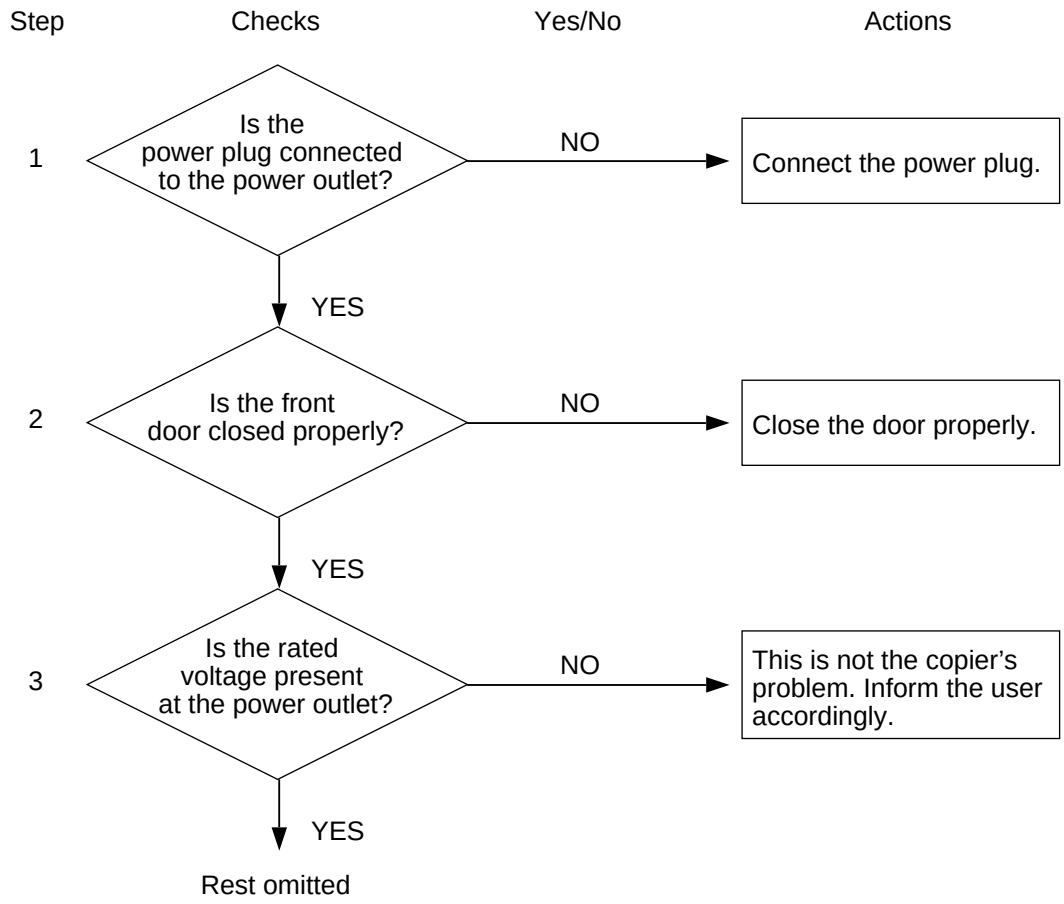

■ The instruction "Measure the voltage between J109-1 (+) and J109-2 (-) on the DC controller PCB" means you are expected to make the following connections:

Connect the positive probe of your meter to J109-1 (+), and

Connect the negative probe of your meter to J109-2 (-).

COPYRIGHT © 1998 CANON INC.
CANON NP7161/NP7160 REV.0 AUG. 1998 PRINTED IN JAPAN (IMPRIME AU JAPON)

Non-AE, Copy Density at 5

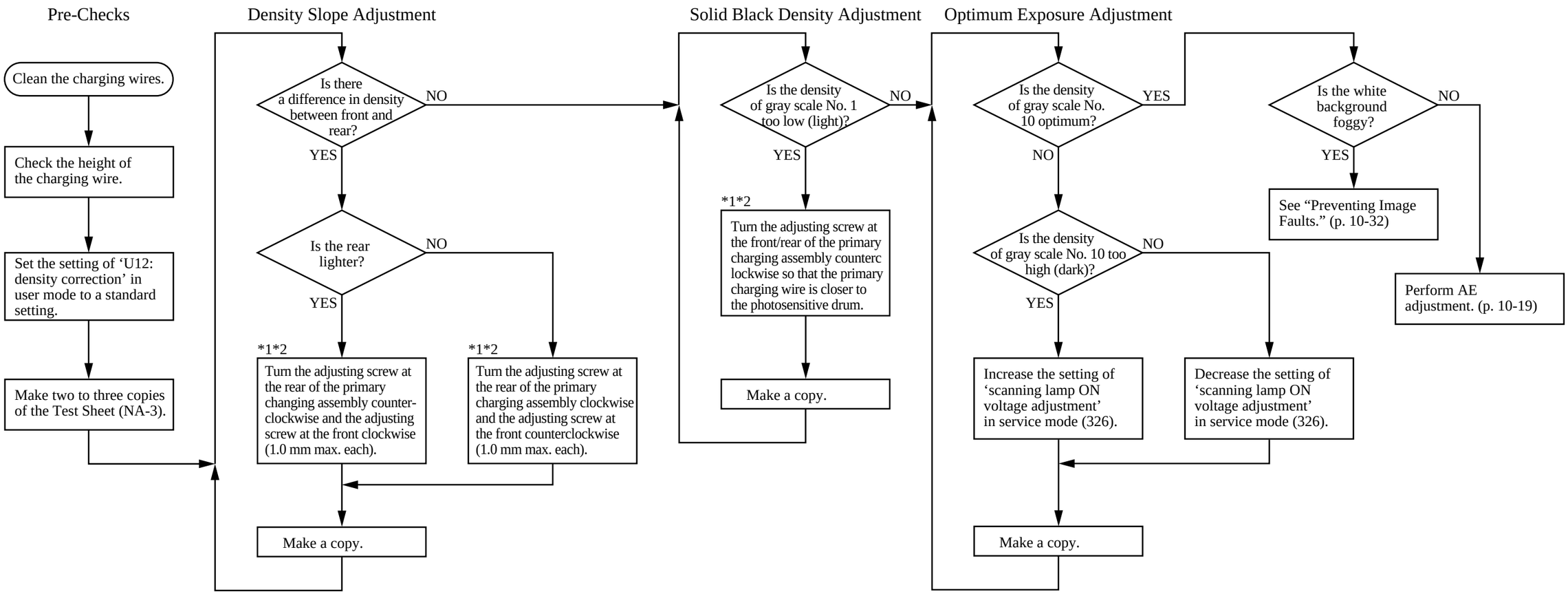

1: If there still is a difference after turning the adjusting screw 1.0 mm each*, check the charging assembly, scanning lamp, and scanner for dirt.
*A full turn causes a change of 0.5 mm.
2: When turning the adjusting screw clockwise, be careful that the height of the charging wire is not less than 10.0 mm.

COPYRIGHT © 1998 CANON INC.

B. Points to Note for Scheduled Servicing

Part	Tool/solvent	Remarks
Copyboard glass	Alcohol	Cleaning
Lens	Blower brush	Cleaning
Scanner rail	Lubricant	Lubricate
Reflecting plate	Blower brush	Cleaning
No. 1 to 3 mirrors	Blower brush; or, alcohol and lint-free paper	Cleaning with a blower brush; if excessive, cleaning with alcohol

Part	Tool/solvent	Remarks
Static eliminator	Brush (attachment)	Cleaning
Dust-proofing glass	Blower brush or alcohol and lint-free paper	Cleaning with a blower brush; if excessive, cleaning with alcohol.
No. 4 to 6 mirrors		
Charging wire	Alcohol and lint-free paper	Dry wiping; then, cleaning with lint-free paper moistened with alcohol
Developing rol		Cleaning

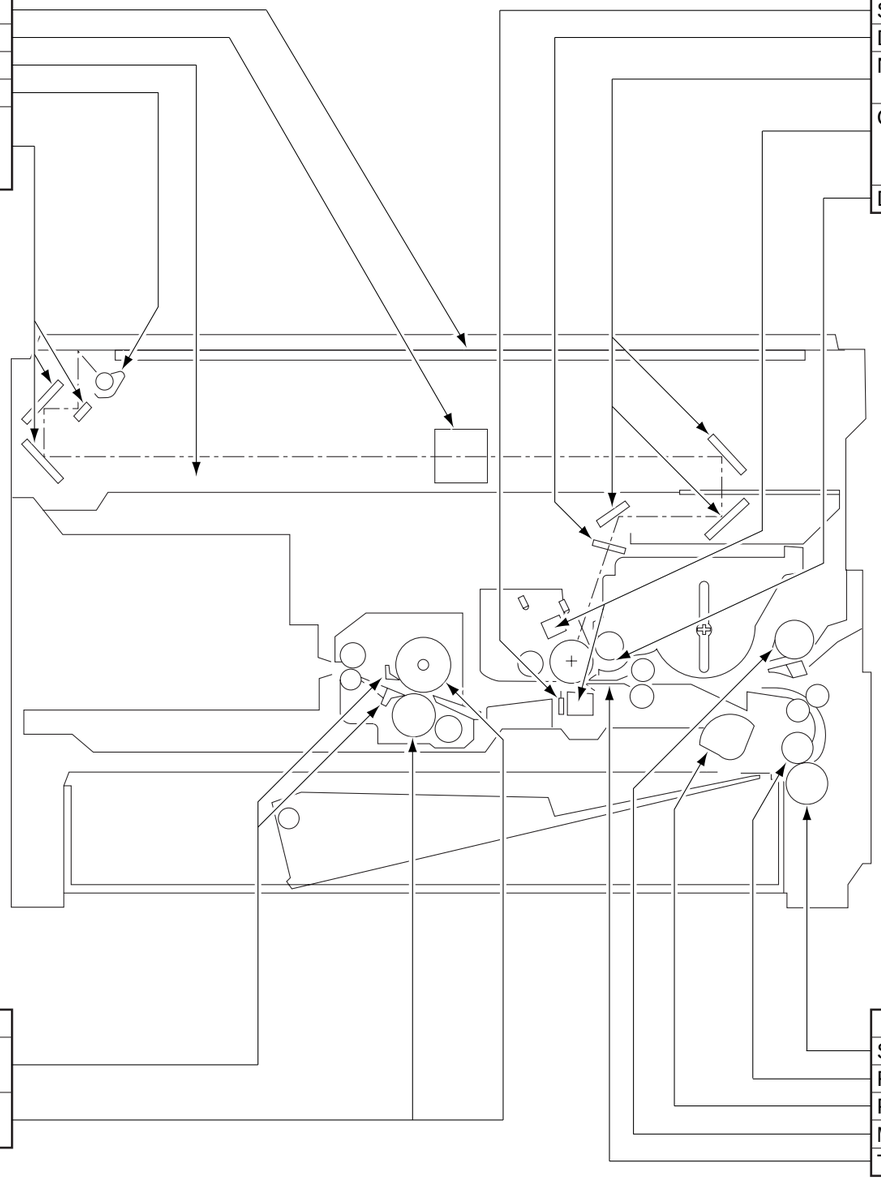

Part	Tool/solvent	Remarks
Separation claw (upper/lower)	Lubricant and lint-free paper	Cleaning
Fixing upper roller, Fixing lower roller	Lint-free paper	Dry wiping

Part	Tool/solvent	Remarks
Separation roller		Cleaning
Feed roller		
Pick-up roller		
Multifeeder pick-up roller		
Transfer guide	Moist cloth	Cleaning

Part	Tool/solvent	Remarks
Waste toner box		Checking/collecting

COPYRIGHT © 1998 CANON INC.

CANON NP7161/NP7160 REV.0 AUG. 1998 PRINTED IN JAPAN (IMPRIME AU JAPON)

II. STANDARDS AND ADJUSTMENTS

A. Mechanical

1. Leading Edge Non-Image Width (blank exposure lamp off timing)

Select No. 306 in service mode.

Make adjustments so that non-image width on copies made of the Test Sheet in Direct is 2.0 ±1.0mm.

[unit: 0.21 mm] [settings: 0 to 500]

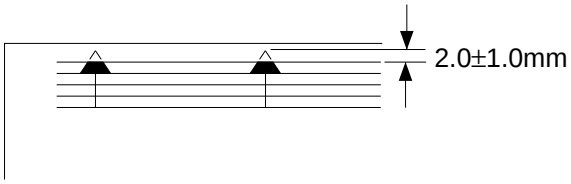

Figure 10-201

2. Image Leading Edge Margin (registration on timing)

Select No. 305 in service mode.

Make adjustments so that the image leading edge margin on copies made of the Test Sheet in Direct is 2.5 ±1.5 mm.

[unit: 0.21 mm] [settings: 0 to 500]

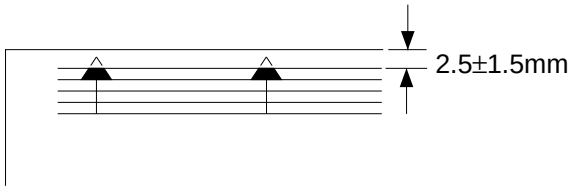

Figure 10-202

COPYRIGHT © 1998 CANON INC.

3. Left/Right Registration (cassette)

Make adjustments by moving the horizontal registration adjusting screw of the cassette so that the distance between the copy image and the copy paper is 0 ±2.0 mm on copies made of the Test Sheet in Direct.

Turn the adjusting screw [1] until the cassette locking lever plate [2] and the cassette locking lever [3] engage.

When the adjusting screw [1] is turned clockwise, the cassette locking plate moves to the front.

When the adjusting screw [1] is turned counterclockwise, the cassette locking lever plate [2] moves to the rear.

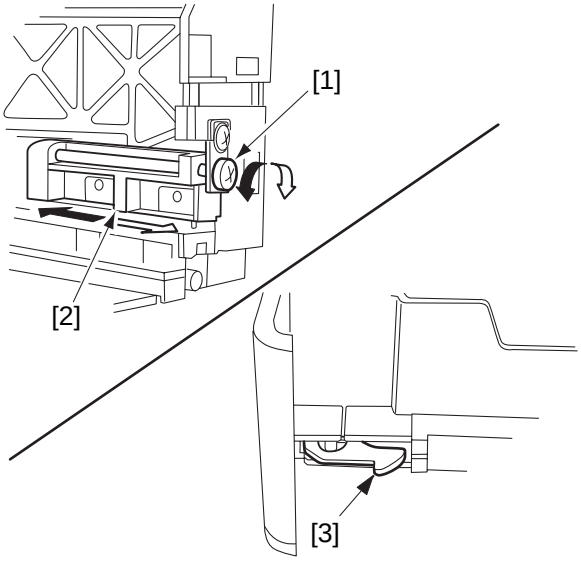

Figure 10-203

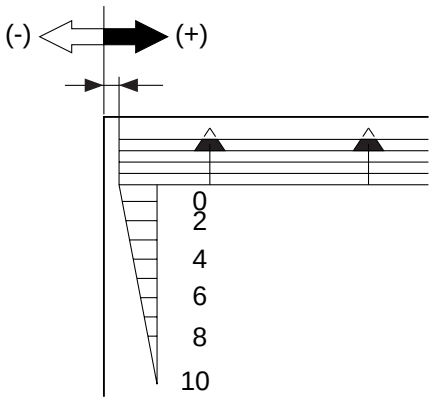

Figure 10-204

COPYRIGHT © 1998 CANON INC.

B. Exposure System

1. Routing the Scanner Drive Cable

Route the cable following steps [1] through [7], and perform the steps under “Adjusting the Tension of the Cable” and “Adjusting the Position of the Mirror.”

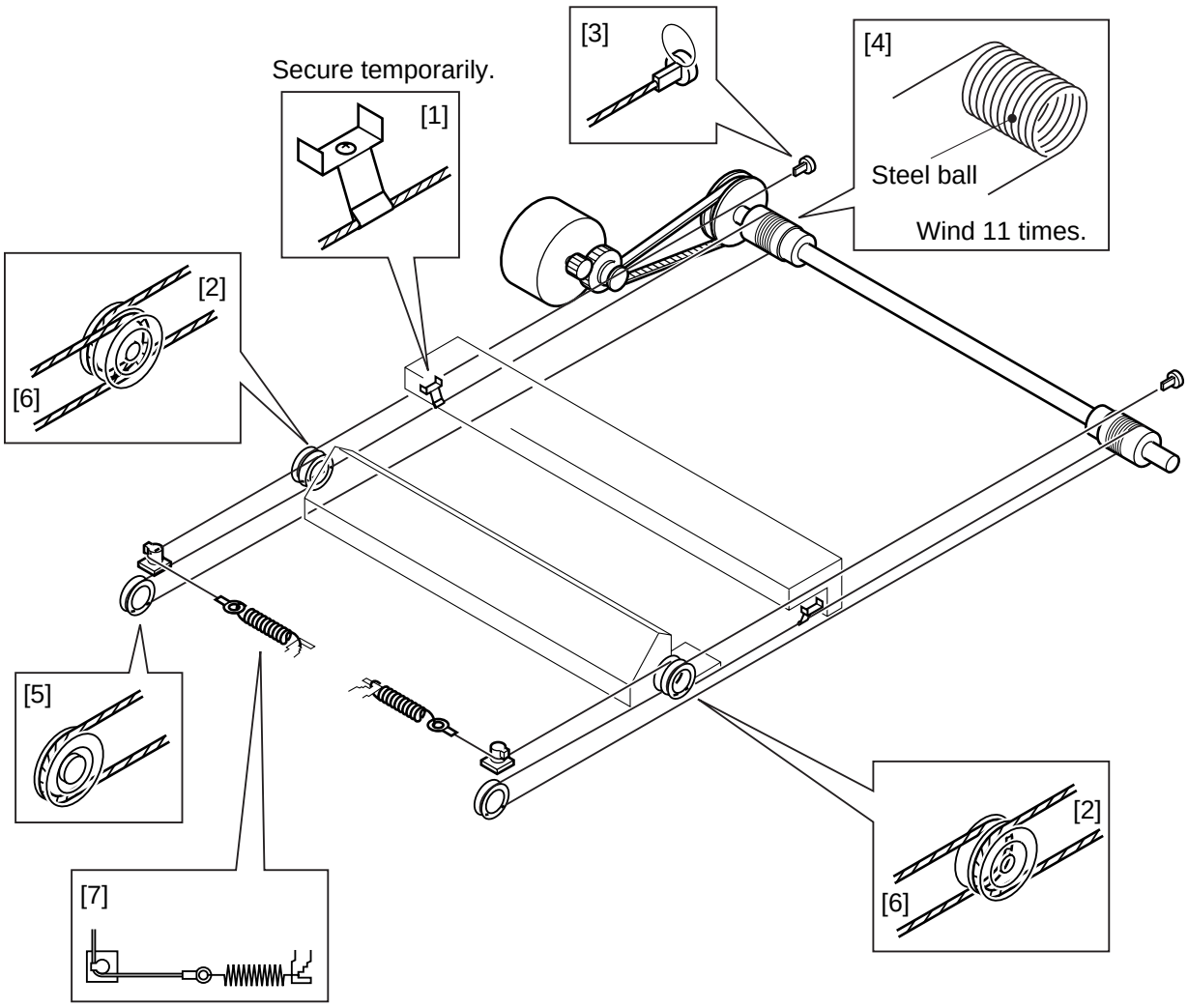

Figure 10-205

COPYRIGHT © 1998 CANON INC.

2. Adjusting the Position of the Mirror

Be sure to adjust the position of the mirror as follows after you have mounted the scanner drive cable.

1) Keep the mirror positioning tool nearby.
   Arrange the mirror positioning tool (FY9-3009-050) as shown to adapt it to the copier.

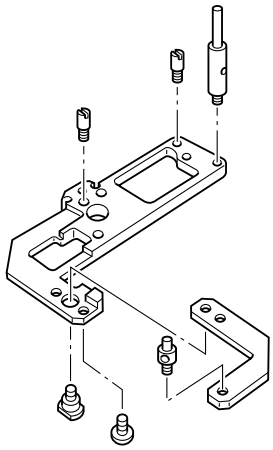

Figure 10-206a (Rear)

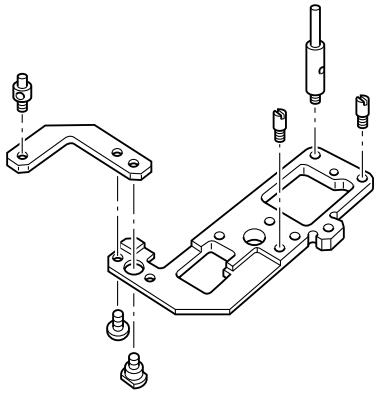

Figure 10-206b (Front)

2) Fit the mirror positioning tool [1] to the No. 1 mirror base and the No. 2 mirror base (both front and rear).
3) Tighten the mounting screw [2] on the cable metal fixing of the No. 1 mirror base (both front and rear).

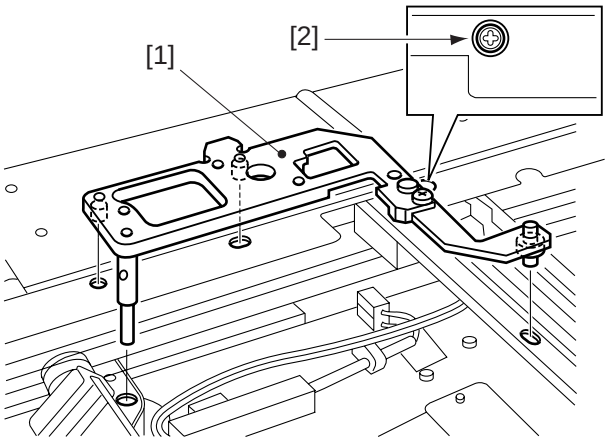

Figure 10-207a (Rear)

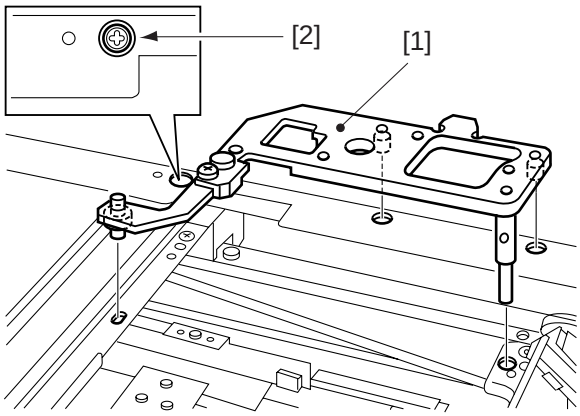

Figure 10-207b (Front)

4) Detach the mirror positioning tool.

COPYRIGHT © 1998 CANON INC.

3. Adjusting the Tension of the Scanner Drive Cable

Be sure to adjust the tension as follows after routing the scanner drive cable.

1) Move the scanner to home position.
2) Pull the center of the scanner drive cable with a spring gauge about 10 mm. At this time, adjust the position [A] of the tension spring [1] so that the reading of the spring gauge is 95 ±15 g.

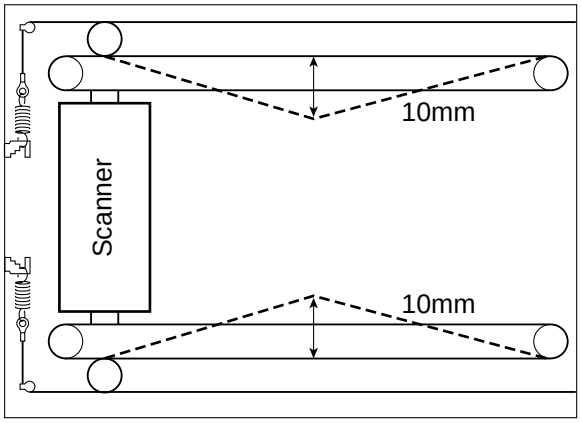

Figure 10-208

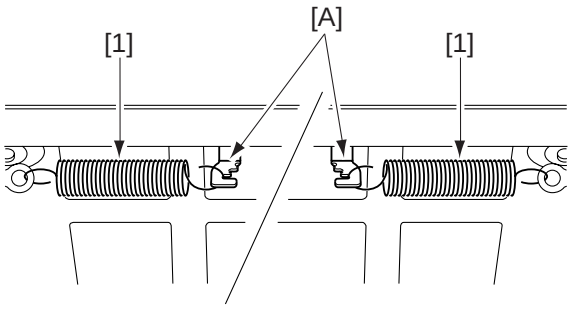

Figure 10-209

COPYRIGHT © 1998 CANON INC.

C. Image Formation System

1. Outline

As many as two charging wires are located around the photosensitive drum. (These charging wires are 0.06 mm in diameter.)

2. Stringing the Charging Wires

Basically, all charging wires are strung in the same way. (The following uses the primary charging wire as an example.)

1) Remove the mounting screw [1], and remove the stopper [2] and the grid plate [3].
   To remove the transfer charging assembly, remove the three hooks [a], and remove the guide wire plate [b].

• Primary Charging Assembly

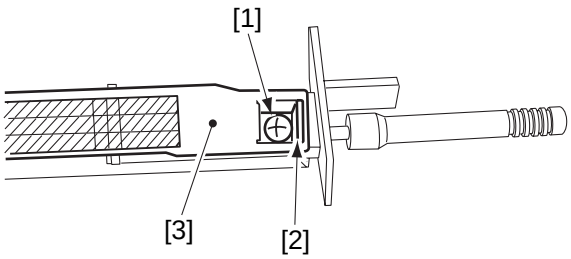

Figure 10-210a

• Transfer Charging Assembly

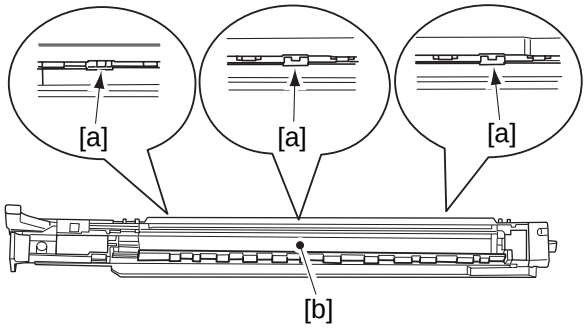

Figure 10-210b

2) Remove the sheet (front) [4] and the sheet (rear) [5].
   To remove the transfer charging assembly, remove the sheet (front) [c] and the sheet (rear) [d].

• Primary Charging Assembly

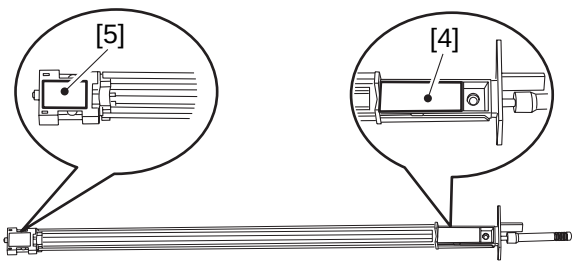

Figure 10-211a

• Transfer Charging Assembly

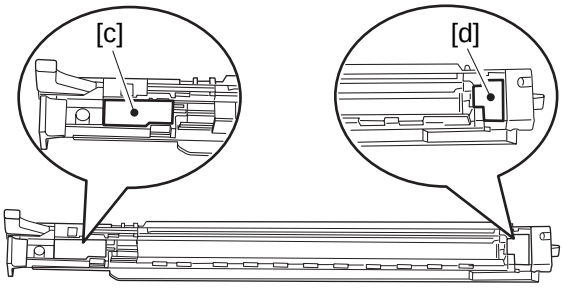

Figure 10-211b

COPYRIGHT © 1998 CANON INC.

3) Remove the spring [6], and remove the charging wire [7].
To remove the transfer charging assembly, remove the spring [e], and remove the charging wire [f].

• Primary Charging Assembly

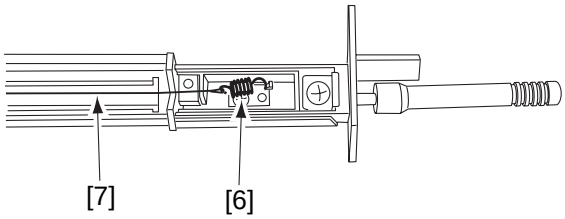

Figure10-212a

• Transfer Charging Assembly

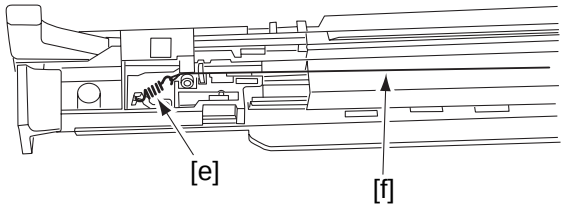

Figure 10-212b

4) Free a length of about 5 cm of charging wire (0.06-mm dia.) from the reel, and form a loop at the end (2-mm dia.).

Note:
To form a loop easily, wind the charging wire around a hex key once; then, turn the hex key three to four times, and twist the charging wire.

5) Cut the excess end of the twisted charging wire with a nipper.
6) Hook the loop on the charging electrode at the rear.



Figure 10-213

7) Hook the charging wire on the charging wire positioner at the rear; then, pull on the charging wire as indicated, and hook the charging wire tension spring on the charging wire by the distance A ; then, twist it.

A:
• Primary charging assembly : 13.0 ± 0.5 mm
• Transfer charging assembly : 12.0 ± 0.5 mm

COPYRIGHT © 1998 CANON INC.

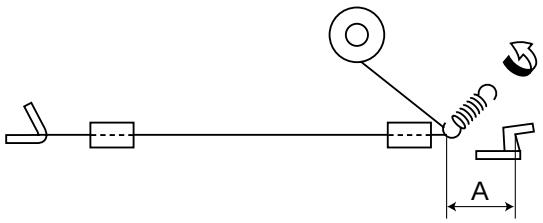

Figure 10-214

8) Cut the excess charging wire with a nipper.
9) Pick the end of the charging wire tensioning spring with tweezers, and hook it on the charging electrode.

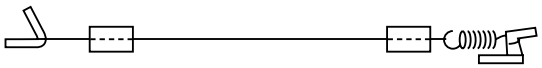

Figure 10-215

Note:

Go through the following:

- Be sure that the charging wire is free of bending and twisting, and its gold plating has not peeled.
- Be sure that the charging wire is in the V-groove of the charging wire positioner.

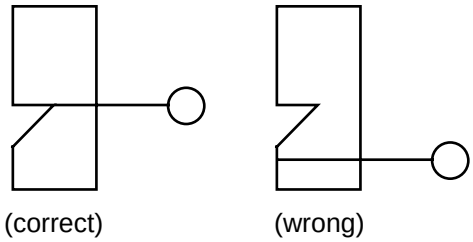

Figure 10-216

10) Wipe the charging wire with lint-free paper moistened with alcohol.

Caution:

- Do not use a cloth carrying metal powder for cleaning.
- Do not use a moist cloth for cleaning.
- Dry wipe with lint-free paper; then, mount only after making sure that alcohol has completely evaporated.

11) Mount the sheet (front) and the sheet (rear).
12) Mount the stopper and the grid plate.
For the transfer charging assembly, mount the guide wire plate.

COPYRIGHT © 1998 CANON INC.

3. Adjusting the Height of the Charging Wires

To adjust each charging wire, turn its respective height adjusting screw. A full turn on the screw will change the height of the primary charging wire by about 0.5 mm and that of the transfer charging wire by about 0.7 mm.

Charging assembly	Height of charging wire (mm)	Range
Primary	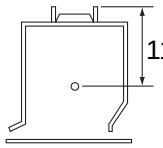	1.0mm
Transfer	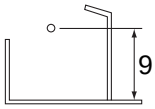	1.0mm

Figure 10-217

• Primary Charging Assembly

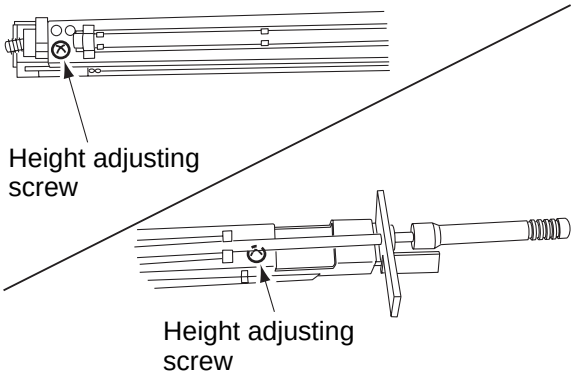

Figure 10-218a

• Transfer Charging Assembly

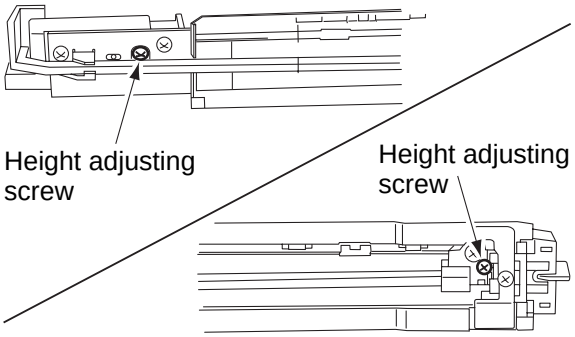

Figure 10-218b

COPYRIGHT © 1998 CANON INC.

D. Pick-Up/Feeding System

1. Adjusting the Pressure of the Separation Pad

If double feeding or pick-up failure occurs, loosen the adjusting screw [1] and relocate the holder [2] to adjust the force of the separation pad tension spring.

- If pick-up occurs, move the holder in the direction of [A].
- If double feeding failure occurs, move the holder to in the direction of [B].

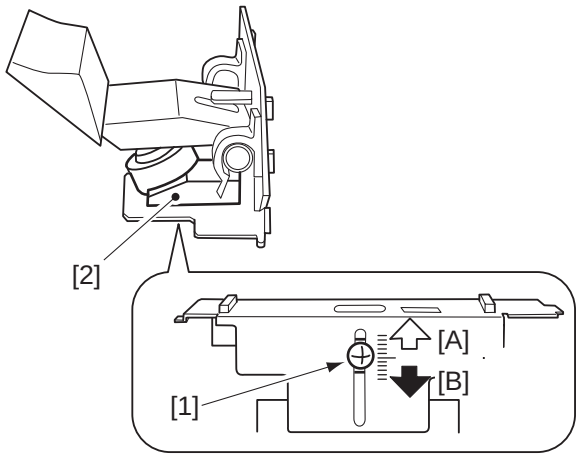

Figure 10-219

2. Changing the Cassette Size (AB/INCH)

1) Slide out the cassette.
2) Loosen the mounting screw [1] on the left side of the cassette; then, slide the size switching block [2] to the desired size position, and fix it in position.

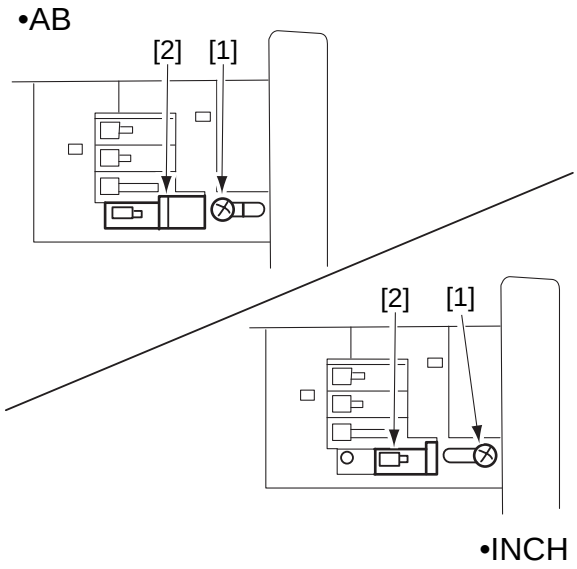

Figure 10-220

COPYRIGHT © 1998 CANON INC.
CANON NP7161/NP7160 REV.0 AUG. 1998 PRINTED IN JAPAN (IMPRIME AU JAPON)

3) Remove the mounting screw [3]; then, slide the size switching lever [4] to the desired size position, and fix it in place.

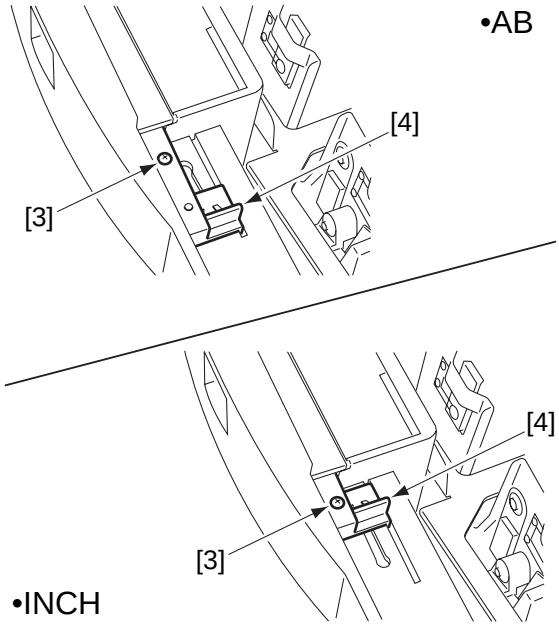

Figure 10-221

E. Fixing System

1. Adjusting the Height of the Fixing Assembly Inlet Guide

1) Loosen the two adjusting screws [1], and adjust the height of the fixing assembly inlet guides [2].

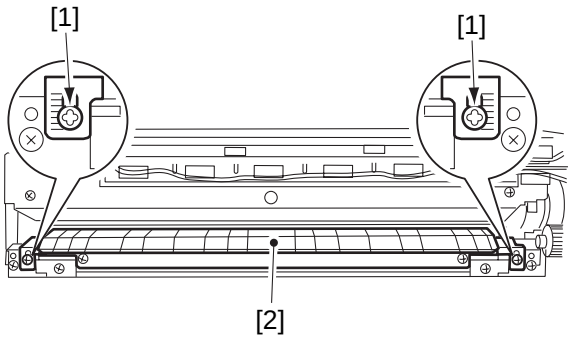

Figure 10-222

2. Adjusting the Pressure of the Lower Roller (nip)

If the nip is as indicated in Table 10-201, no adjustment is necessary.

If the nip is not as indicated, change the position of the pressure spring [1].

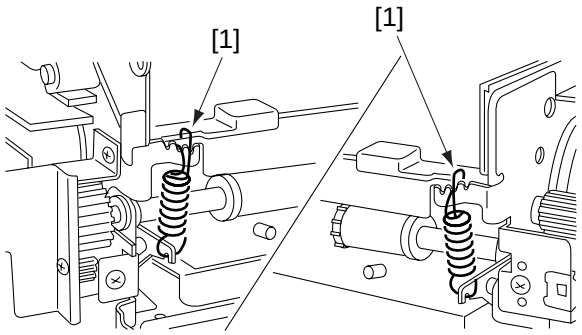

Figure 10-223

COPYRIGHT © 1998 CANON INC.

Caution:

a and c represent points 10 mm from both ends of copy paper.

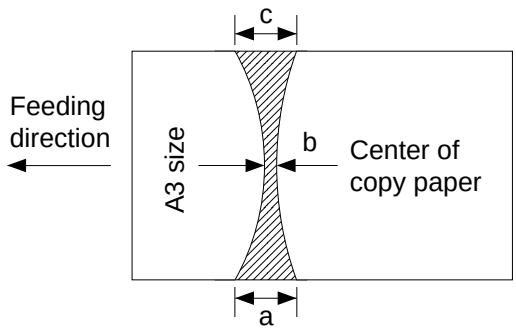

Figure 10-224

Dimensions	Measurements*
b	4.8 ± 0.3mm
l a - c l	0.5 mm or less

*Be sure both upper and lower rollers are sufficiently warm before taking measurements.

Table 10-201

a. Measuring the Nip

Before measuring the nip, wait for 15 min after the end of warm-up and make 20 A4 copies:

1) Set A3 copy paper.
2) Open the copier cover.
3) Execute nip measurement mode (service mode).

The above steps will deliver a measurement sheet like the one shown in Figure 10-224.

Note:

When you execute nip measurement mode (service mode), the copy paper will stop half way through the delivery slot. It will then be discharged fully in about 15 sec.

COPYRIGHT © 1998 CANON INC.

F. Electrical System

1. Obtaining Optimum Exposure

You can adjust the intensity of the scanning lamp (LA1) at F5 as follows (effective for both AE and manual):

1) Set the setting of 'U12' (density correction) in user mode to its initial value.
2) Place the Test Sheet (NA-3) on the copyboard, and select non-AE and Direct.
3) Select '216' (density adjusting volume voltage display) in service mode.
4) Slide the density adjusting volume until the copy count indicator indicates '245' as the F5 voltage.
5) Make a copy.
6) Check the copy image, and change the setting of '326' (scanning lamp on voltage adjustment) in service mode using the keypad.
   [1] A higher setting will increase the intensity, making the image lighter.
   [2] A lower setting will decrease the intensity, making the image darker.

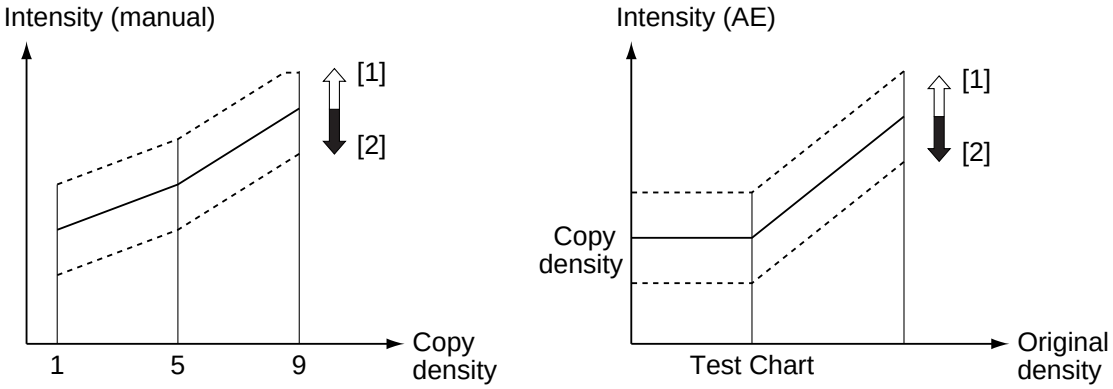

Figure 10-225

7) Press the Start key, and store the setting.
   • Repeat steps 5) through 7) until an optimum image is obtained.
8) Press the Reset key to end service mode.

COPYRIGHT © 1998 CANON INC.
CANON NP7161/NP7160 REV.0 AUG. 1998 PRINTED IN JAPAN (IMPRIME AU JAPON)

2. AE Adjustment

If copies of a newspaper are foggy or if you have replaced the scanning lamp (LA1), AE sensor, or DC controller PCB, perform the following:

(Be sure that the image is an optimum image before starting the work.)

a. AE Auto Adjustment

1. AE Scanning Intensity Auto Adjustment

1) Select '301' (AE auto adjustment) in service mode.
2) Place the Test Chart (white background original) on the copyboard glass.
3) Press '0' of the keypad so that the copy count indicator indicates '0'.
4) Press the Start key.
   - The scanner moves to the AE scan position, stops, and performs AE exposure. Then, the scanner moves in reverse to home position. (15 sec from start of forward movement and the end of reverse movement)
   - The output of the AE sensor will be indicated in the copy count indicator. Check to make sure it is 80 ±5. If not, execute '302' (AE scanning intensity adjustment) in service mode.

2. AE Slope Auto Adjustment

5) Select '301' (AE auto adjustment) in service mode.
6) Place a newspaper on the copyboard glass.
7) Press '1' of the keyboard so that the copy count indicator indicates '1'.
8) Press the Start key.
   - The scanner moves to the AE scan position, stops, and performs AE exposure. Then, the scanner moves in reverse to home position. (15 sec from start of forward movement and the end of reverse movement)
   - The output of the AE sensor will be indicated in the copy count indicator. Check to make sure it is between 0 and 255. If not, execute '303' (AE slope adjustment) in service mode.
9) Press the Reset key to end service mode.

COPYRIGHT © 1998 CANON INC.

b. AE Scanning Intensity Adjustment

If an optimum image cannot be obtained by executing '301' (AE auto adjustment) in service mode, perform the following:

1) Place a white background original on the copyboard glass, and select AE and Direct.
2) Make a copy, and check the copy image.
3) Select '302' (AE scanning intensity adjustment) in service mode.
   • The copy count indicator will indicate the present setting.
4) Change the setting using the keypad or the +/- key.
   [1] A higher setting will increase the intensity, making the copy image lighter.
   [2] A lower setting will decrease the intensity, making the copy image darker.

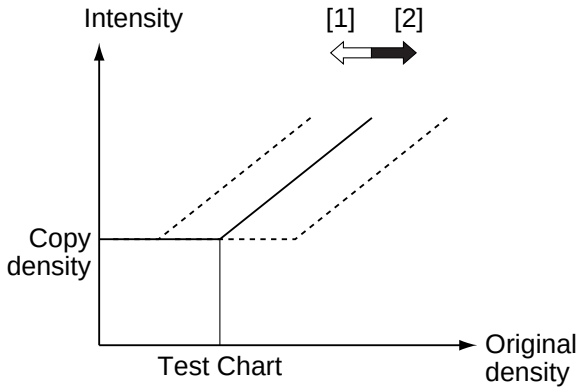

Figure 10-226

5) Press the Start key to store the new setting.
   • Repeat steps 2) through 5) until an optimum image is obtained.
6) Press the Reset key to end service mode.

COPYRIGHT © 1998 CANON INC.
CANON NP7161/NP7160 REV.0 AUG. 1998 PRINTED IN JAPAN (IMPRIME AU JAPON)

c. AE Slope Adjustment

If an optimum image cannot be obtained by executing '301' (AE auto adjustment) in service mode, perform the following:

1) Place a newspaper on the copyboard glass, and select AE and Direct.
2) Make a copy, and check the copy image.
3) Select '303' (AE slope adjustment) in service mode.
   • The copy counter will indicate the present setting.
4) Change the setting using the keypad or +/- key.
   [1] A higher setting will increase the intensity, making the copy image lighter.
   [2] A lower setting will decrease the intensity, making the copy image darker.

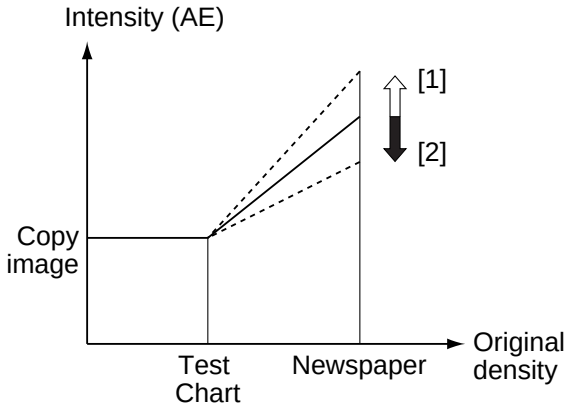

Figure 10-227

5) Press the Start key to store the new setting.
   • Repeat steps 2) through 5) until an optimum image is obtained.
6) Press the Reset key to end service mode.

COPYRIGHT © 1998 CANON INC.

3. After Replacing the DC Controller PCB

1) Set the DIP switch (SW102) on the new DC controller PCB so that its settings are the same as the old DC controller PCB.
2) Mount the new DC controller PCB.
3) Press the User Mode key, hold down '2' and '8' of the numeric keypad for 0.5 sec or more, and then press the User Mode key.
   - The copier starts service mode, and indicates '[1]' on the control panel.
4) Press '4' on the numeric keypad, and press the AE key.
   - The copier enters FUNCTION mode, and indicates '401' on the control panel.
5) Press '5' and '0' on the numeric keypad in sequence, and press the Start key.
   - The copier turns off once, and initializes the RAM (IC116).
6) Press '1' of the keypad and the Start key in sequence.
   - The power turns off, and the data in RAM (IC116) will be initialized.
7) Enter the settings of each service mode by referring to the service mode label kept behind the front door.
8) Press the Reset key to end service mode.

COPYRIGHT © 1998 CANON INC.
CANON NP7161/NP7160 REV.0 AUG. 1998 PRINTED IN JAPAN (IMPRIME AU JAPON)

4. Checking the Photointerrupters

The copier allows you to use its service mode when checking its photointerrupters. (You may also use a conventional meter.)

a. Using a Meter

1) Put the copier in standby state.
2) Set the range of the meter to 30 VDC.
3) Connect the - probe of the meter to J105-5 (GND) of the DC controller PCB.
4) Connect the + probe of the meter to the appropriate terminal on the DC controller PCB indicated in the tables that follow.
5) Make checks as instructed.

b. Using Service Mode

1) Press the User Mode key.
2) Press '2' and '8' of the keypad at the same time. (Hold them down for 0.5 sec or more.)
3) Press the User Mode key once again.
   - The copier starts service mode, and indicates '1' on the copy count indicator.
4) Press '2' and then the AE in sequence.
   - The copier starts I/O DISPLAY mode, and indicates '201'.
5) Enter the appropriate service mode No. indicated in the tables that follow, and press the Start key.
6) Make checks as instructed.
   - Refer to the state of the copy count indicator LEDs. (Tables use '1' to indicate ON, and '0' to indicate OFF.)

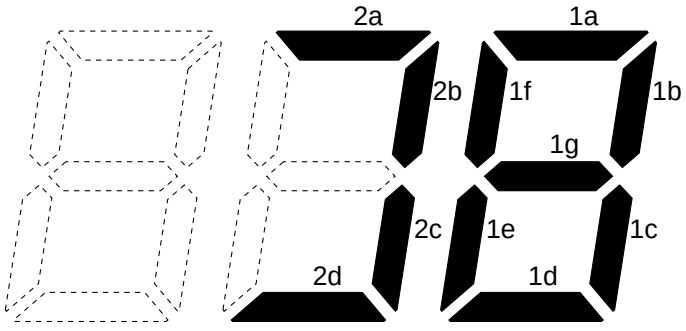

Figure 10-228

Sensor	Connector / Service mode	Checks		LED	Voltage
PS1 Scanner home position sensor	J103-B2	In standby, move the scanner by hand.	When the light-blocking plate is at PS1,	1a=1	5V
	220		When the light-blocking plate is not at PS1,	1a=0	0V
PS2 Lens home position sensor	J103-B5	In standby, move the lens by hand.	When the light-blocking plate is at PS2,	1c=1	5V
	219		When the light-blocking plate is not at PS2,	1c=0	0V
PS3 Mirror home position sensor	J103-B8	In standby, move the No. 4/No. 5 mirror by hand.	When the light-blocking plate is at PS3,	1b=1	5V
	219		When the light-blocking plate is not at PS3,	1b=0	0V
PS4 Cassette paper sensor	J107-B12	In standby, move the detecting lever by hand.	When the light-blocking plate is PS4,	1b=1	5V
	202		When the light-blocking plate is not at PS4,	1b=0	0V
PS5 Registration paper sensor	J107-A2	In standby, move the detecting lever by hand.	When the light-blocking plate is at PS5,	1g=1	5V
	222		When the light-blocking plate is not at PS5,	1g=0	0V
PS6 Delivery paper sensor	J124-2	In standby, move the detecting lever by hand.	When the light-blocking plate is at PS6,	1f=1	5V
	222		When the light-blocking plate is not at PS6,	1f=0	0V
PS7 Multi paper sensor	J107-A8	In standby, move the detection lever by hand.	When the light-blocking plate is at PS7,	2b=1	5V
	202		When the light-blocking plate is not at PS7,	2b=0	0V
PS8 Waste toner feeding screw locked sensor	J106-10	In standby, move the detecting lever by hand.	When the light-blocking plate is at PS8,	1f=1	5V
	223		When the light-blocking plate is not at PS8,	1f=0	0V
PS9 Multi wide sensor 1	J107-A11	In standby, move the slide guide by hand.	When the light-blocking plate is at PS9,	2c=1	5V
	202		When the light-blocking plate is not at PS9,	2c=0	0V
PS10 Multi wide sensor 2	J107-A14	In standby, move the slide guide by hand.	When the light-blocking plate is at PS10,	2d=1	5V
	202		When the light-blocking plate is not at PS10,	2d=0	0V
PS11 Right door open sensor	J107-B7	In standby, open the right door.	When the light-blocking plate is at PS11,	1d=1	5V
	202		When the light-blocking plate is not at PS11,	1d=0	0V
Waste toner sensor	J106-9	In standby, remove the waste toner box.	When the light-blocking plate is at sensor,	1a=1	5V
	222		When the light-blocking plate is not at sensor,	1a=0	0V

COPYRIGHT © 1998 CANON INC.

III. IMAGE FAULTS

A. Initial Checks

1. Checking the Site Environment

a. The power outlet must be exclusive, and must provide the rated voltage. (The power plug must remain connected throughout day and night.)
b. The copier must not be installed in a high-temperature/-humidity environment (near a water faucet, water boiler, humidifier), near a source of fire, or in a dusty area.
c. The copier must not be subjected to ammonium gas.
d. The copier must be kept away from direct sunshine. As necessary, provide curtains.
e. The site must be well ventilated.
f. The copier must be kept level.
g. The copier must remain powered throughout day and night.

Check to make sure that all above conditions are met.

2. Checking the Originals

Identify the problem as to its cause—original page or the copier.

a. As a rule, the Copy Density adjusting lever must be at the median graduations, and 'U12: density correction' in user mode must be set to '0'.
b. Original pages with a reddish background can cause poor contrast.

EX. Slips (invoices) made on reddish paper.

c. Diazo copies and original pages with a high transparency can produce copies mistakenly identified as "foggy" copies. Original pages prepared in light pencil, on the other hand, can produce copies mistakenly identified as "light" copies.

3. Checking the Copyboard Cover and Copyboard Glass

If soiled, clean it using a solution of mild detergent or alcohol. If scratches are found, replace it.

COPYRIGHT © 1998 CANON INC.

4. Checking the Charging Assembly

a. Check each charging assembly for soiling and a fault on its charging wire (scratches).
b. Clean the charging wire and shield plate of each charging assembly. (If dirt cannot be removed, replace it.)
c. Check the height of each charging wire.
d. Check to make sure that each charging wire is not rusted.
f. Check to make sure that the anti-vibration rubber (of each charging assembly) is not displaced.

5. Checking the Developing Assembly

a. Check to make sure that the rollers on both ends of the developing assembly are in contact with the drum.
b. Check to make sure that the surface of the developing cylinder is coated with an even layer of toner.

6. Checking the Paper

a. Check if the paper is of a type recommended by Canon.
b. Check if the paper is not moist.

Try using paper fresh out of package.

7. Checking the Periodically Replaced Parts

Replace those parts that have reached their service life as indicated in the Scheduled Servicing Chart and the Periodically Replaced Parts Table.

8. Others

Keep in mind that bringing in a copier from a cold to warm room, as during installation in winter, can cause condensation in its inside, causing various problems.

a. Condensation on the scanning system (glass, mirror, lens, etc.) can cause light images.
b. Condensation in the charging system can cause electric leakage.
c. Condensation on the pick-up/feeding guide plate can cause faulty feeding.

If condensation is noted, dry wipe the part or leave the copier powered for about one hour.

Caution:

If a discrepancy in density (between separation side and rear), light image, of fogging occurs, try to correct the problem by following the “Image Adjustment Basic Procedure.”

COPYRIGHT © 1998 CANON INC.
CANON NP7161/NP7160 REV.0 AUG. 1998 PRINTED IN JAPAN (IMPRIME AU JAPON)

COPYRIGHT © 1998 CANON INC.

B. Image Fault Samples

not available

COPYRIGHT © 1998 CANON INC.
CANON NP7161/NP7160 REV.0 AUG. 1998 PRINTED IN JAPAN (IMPRIME AU JAPON)

C. Troubleshooting Image Faults

1. The copy is too light. (halftone area only)

Cause	Step	Checks	Yes/No	Actions
	1	Perform the Image Adjustment Basic Procedure. Is the problem corrected?	YES	End.
Scanner	2	Clean the mirror, lens, and dust-proofing glass. Is the problem corrected?	YES	End.
Developing assembly	3	Are the rollers of the developing assembly in firm contact with the drum during copying operation?	NO	Check the developing assembly locking lever.
Developing assembly	4	Is the coating of toner on the developing cylinder even?	NO	Check the developing assembly.
Lamp regulator PCB	5	Replace the lamp regulator PCB. Is the problem corrected?	YES	End.
DC controller PCB			NO	Replace the DC controller PCB.

COPYRIGHT © 1998 CANON INC.

2. The copy is too light. (including solid black area)
3. The copy is too light. (entirely, considerably)

Cause		Step	Checks	Yes/No	Actions
		1	Perform the Image Adjustment Basic Procedure. Is the problem corrected?	YES	End.
		2	Turn off the power switch in the middle of copying operation. Then, open the front door, and open the top unit. Is the toner image on the photosensitive drum before transfer more or less normal?	NO	Go to step 7.
Transfer	Transfer charging assembly	3	Is the charging wire of the transfer charging assembly hooked correctly? Are its height and position normal?	NO	1. Hook the charging wire correctly. 2. Adjust the height of the charging wire.
		4	Is the transfer charging assembly set securely?	NO	1. Clean the charging wire. 2. Set the charging assembly securely.
	Copy paper	5	Try paper fresh out of package. Is the problem corrected?	YES	1. The paper may be moist. Instruct the user on the correct method of storing copy paper. 2. Inform the user that the use of paper of a type not recommended by Canon may not always bring about good results.
	Lower transfer guide/varistor	6	Measure the resistance between the lower transfer guide and the metal portion of the feeding assembly. Is it 0 Ω?	YES	1. Check to make sure that the transfer guide is not in contact with the metal area of the feeding assembly (e.g., side plate). 2. Replace the varistor.
	High-voltage cord, DC controller PCB			NO	1. Check the continuity of the high-voltage cord. 2. Check the high-voltage power supply (primary/transfer) and the DC controller PCB.
Development	Developing assembly	7	Is the developing assembly set securely? Are the rolls of the developing assembly firmly in contact with the photosensitive drum?	NO	Check the developing assembly locking lever.
	Toner sensor (TS1)	8	Is toner in the developing assembly?	NO	Check the tone sensor. Then, supply toner.
	Photosensitive drum	9	Replace the drum unit. Is the problem corrected?	YES	End.
	Developing bias control			NO	Check the control system of the developing bias.

COPYRIGHT © 1998 CANON INC.
CANON NP7161/NP7160 REV.0 AUG. 1998 PRINTED IN JAPAN (IMPRIME AU JAPON)

4. The copy has uneven density. (front side dark)
5. The copy has uneven density. (front side light)

Cause	Step	Checks	Yes/No	Actions
	1	Perform the Image Adjustment Basic Procedure. Is the problem corrected?	YES	End.
Developing assembly	2	Are the developing rolls of the developing assembly in firm contact with the photosensitive drum?	NO	Check the developing assembly locking lever.
Scanner	3	Clean the scanning lamp, reflecting plate, side reflecting plate, mirror, lens, and dust-proofing glass. Is the problem corrected?	YES	End.
Pre-scanning lamp (LA2)	4	Does the pre-exposure lamp remain on during copying?	NO	1. Replace the pre-exposure lamp. 2. Replace the DC controller PCB.
Developing assembly	5	Is the developing cylinder coated with a uniform layer of toner?	NO	1. Clean the tip of the blade of the developing assembly. (dry wiping)? 2. Clean the surface of the developing cylinder. 3. Check to make sure that the toner inside the developing assembly is not displaced to one side.
Charging assembly, Copy paper			YES	1. Clean all charging wires once again, and check the height of the charging wires once again. 2. Try replacing the copy paper.

COPYRIGHT © 1998 CANON INC.

6. The copy is foggy. (overall)

Cause	Step	Checks	Yes/No	Actions
	1	Perform the Image Adjustment Basic Procedure. Is the problem corrected?	YES	End.
Scanner	2	Clean the scanning lamp, reflecting plate, side reflecting plate, mirror, lens, and dust-proofing glass. Is the problem corrected?	YES	End.
Pre-exposure lamp (LA2), DC controller PCB	3	Does the pre-exposure lamp remain on during copying?	NO	1. Replace the pre-exposure lamp. 2. Replace the DC controller PCB.
Developing roll	4	Are the developing rolls worn?	YES	Replace the developing rolls.
Developing cylinder	5	Is the developing cylinder worn?	YES	Replace the developing cylinder.
Scanner lamp (LA1)	6	Replace the scanning lamp. Is the problem corrected?	YES	End.
High-voltage power supply PCB	7	Replace the high-voltage power supply PCB. Is the problem corrected?	YES	End.
Lamp regulator PCB	8	Replace the lamp regulator PCB. Is the problem corrected?	YES	End.
DC controller PCB			NO	Replace the DC controller PCB.

COPYRIGHT © 1998 CANON INC.

7. The copy is foggy. (vertical)
8. The copy has black lines. (vertical, fuzzy, thick)

Cause	Step	Checks	Yes/No	Actions
Primary charging assembly	1	Clean the primary charging wire, grid plate, and shielding plate. Is the problem corrected?	YES	End.
Scanner	2	Clean the scanning lamp, reflecting plate, side reflecting plate, mirror, lens, and dust-proofing glass. Is the problem corrected?	YES	End.
Pre-exposure lamp (LA2)	3	Clean the pre-exposure lamp. Is the problem corrected?	YES	End.
Developing assembly	4	Is the developing cylinder coated with a uniform layer of toner?	NO	Check and clean the edge of the blade of the developing assembly.
Fixing assembly			YES	Check the fixing assembly.

9. The copy has black lines. (vertical, thin)

Cause	Step	Checks	Yes/No	Actions
	1	Press the Copy Start key, and turn off the power switch while the copy paper is in the feeding assembly. At this time, does the copy image before it goes through the fixing assembly have black lines?	NO	Go to step 4.
Transfer guide	2	Is the transfer guide soiled (particularly the transfer upper guide)?	YES	Clean the transfer guide.
Photosensitive drum	3	Are there scratches or black lines in the peripheral direction of the surface of the photosensitive drum?	YES	Replace the drum unit. If scratches are found, be sure to find out the cause.
Developing system, Exposure system			NO	Check the developing system and the exposure system.
Fixing assembly	4	Are there scratches or black lines in the peripheral direction of the surface of the fixing upper roller?	YES	1. Replace the upper roller. 2. Check the separation claw.
			NO	Check to make sure that the fixing assembly inlet is not soiled.

COPYRIGHT © 1998 CANON INC.

10. The copy has white spots. (vertical)
11. The copy has white lines. (vertical)

Cause	Step	Checks	Yes/No	Actions
Fixing assembly	1	Press the Copy Start key with the copyboard cover open, and turn off the power switch while the copy paper is moving through the feeding assembly. At this time, does the copy image before it goes through the fixing assembly have white spots or lines?	NO	1. Clean the fixing assembly inlet guide. 2. Check the upper fixing roller. 3. Clean the separation claw.
Primary charging assembly	2	Clean the primary charging wire, grid plate, and shield plate. Is the problem corrected?	YES	Clean the part thoroughly with alcohol. If the dirt cannot be removed, remove the charging wire.
Developing assembly	3	Is the developing cylinder coated with an even layer of toner?	NO	Check the edge of the blade of the developing assembly for paper 1int.
Copy paper	4	Try copy paper fresh out of package. Is the problem corrected?	YES	The copy paper is moist. Instruct the user on the correct method of storing copy paper.
Photosensitive drum	5	Are there scratches in the peripheral direction corresponding to the developing image?	YES	Replace the drum unit. If scratches are found, be sure to identify the cause.
Blank exposure lamp (LA3), DC controller PCB	6	Is the blank exposure lamp LED corresponding to the white spot or line on the copy on while the scanner is moving forward?	YES	Check the wiring from the blank exposure lamp to the DC controller PCB: if normal, replace the DC controller PCB.
External light			NO	Check to make sure that the photosensitive drum is free of external light.
Transfer charging assembly	7	Clean the transfer charging wire and the shield plate. Is the problem corrected?	YES	End.
Separation static eliminator	8	Clean the separation static eliminator. Is the problem corrected?	YES	End.

COPYRIGHT © 1998 CANON INC.

12. The copy has white spots. (vertical)

Cause	Step	Checks	Yes/No	Actions
Developing assembly	1	Is the problem noted at intervals of about 3.2 cm? (scratch on the developing cylinder)	YES	1. Clean the developing roller. 2. Clean the surface of the developing cylinder. 3. If scratches are found on the surface of the developing cylinder, replace the developing cylinder or the developing assembly.
Photosensitive drum	2	Is the problem noted at intervals of about 9.4 cm? (scratch on the photosensitive drum)	YES	1. Clean the photosensitive drum. 2. If the scratches are found on the photosensitive drum, replace the drum unit.
Copy paper	3	Try copy paper fresh out of package. Is the problem corrected?	YES	The copy paper is moist. Instruct the user on the correct method of storing copy paper.
Scanner rail, Scanner cable	4	Is the problem noted at the same location on all copies?	YES	1. Check the scanner rail for a foreign object. 2. Adjust the tension of the scanner cable.
Charging wire			NO	Clean each charging wire.

COPYRIGHT © 1998 CANON INC.

13. The back of the copy is soiled.

Cause	Step	Checks	Yes/No	Actions
	1	Turn off the power switch while the copy paper is moving through the feeding assembly. At this time, is the back of the copy paper soiled?	NO	Go to step 3.
Developing assembly	2	Is the problem noted at intervals of about 5 cm?	YES	1. Clean the registration roller. 2. Clean the transfer guide. 3. Check the developing assembly for leakage of toner.
Drum cleaner assembly			NO	1. Clean the feeding assembly. 2. Check the drum cleaner assembly for leakage of toner.
Fixing assembly	3	Is the fixing roller (upper, lower) soiled with toner?	YES	1. Clean the fixing roller (upper, lower). 2. Check to make sure that the toner adhering to the heat discharging roller is not soiling the fixing roller. If so, replace the heat discharging roller. 3. Clean the fixing assembly inlet guide.
Delivery assembly			NO	Clean the delivery roller and the separation claw.

COPYRIGHT © 1998 CANON INC.
CANON NP7161/NP7160 REV.0 AUG. 1998 PRINTED IN JAPAN (IMPRIME AU JAPON)

14. The copy has faulty fixing.

Cause	Step	Checks	Yes/No	Actions
Fixing roller (upper/ lower)	1	Is the problem noted vertically?	YES	Check the fixing roller (upper, lower) for scratches.
Fixing heater (H1)	2	Does the fixing heater (H1) turn on immediately after power-on?	NO	See the “Fixing heater fails to turn on.”
Fixing lower heater pressure	3	Is the nip of the fixing assembly as indicated?	NO	Adjust the fixing lower roller pressure.
Copy paper			YES	Try recommended paper. If the results are good, advise the user to use recommended paper.

COPYRIGHT © 1998 CANON INC.

15.
16. The copy has a displaced leading edge.
17.

Cause	Step	Checks	Yes/No	Actions
Original page	1	Is the original page placed correctly?	NO	Place the original page correctly.
Copy paper	2	Is the paper of a type recommended by Canon?	NO	Try recommended paper. If the results are good, advise the user to use recommended paper.
	3	Make copies using the cassette and the multifeeder tray? Is the displacement on the leading edge the same regardless of the source of paper?	YES	If the results are the same, go to step 4.
			NO	Check each pick-up system.
Pick-up roller	4	Has the pick-up roller reached its life?	YES	If wear is noted on the pick-up roller, replace it.
Leading edge margin	5	Adjust the leading edge margin. Is the problem corrected?	YES	End.
Registration clutch (CL1), Registration roller	6	Set the meter range to 30 VDC, and measure the voltage between J211-7 (+) and J211-6 (-) on the power supply PCB. Does it change from 0 to 24 V while the scanner is moving forward?	YES	1. Replace the registration clutch. 2. Check the registration roller for deformation and wear.
DC controller PCB			NO	Check the wiring from J106 on the DC controller PCB to CL1; if normal, replace the DC controller PCB.

COPYRIGHT © 1998 CANON INC.

18. The copy has a blurred image.

Cause	Step	Checks	Yes/No	Actions
Scanner cable	1	Does the cable wind on the cable pulley in layers while the scanner is moving?	YES	1. Route the cable once again. 2. If the cable is twisted or frayed, replace it.
Scanner rail	2	Move the No. 1 mirror mount slowly by hand. Does it move smoothly?	NO	Clean the surface of the scanner rail with alcohol. Then, apply a small amount of lubricant.
Photosensitive drum	3	Is the problem noted at intervals of about 9.4 cm?	YES	1. Check the drum gear. 2. Check the end of the drum (in contact with the developing roller) for scratches and protrusions.
Developing gear	4	Is the problem noted at intervals of about 3.2 cm?	YES	Check the developing assembly.
Drum drive system			NO	Check the drum drive system.

19. The copy is foggy. (horizontally)

Cause	Step	Checks	Yes/No	Actions
	1	Is the problem noted at the same location on all copies made in Direct?	YES	Go to step 4.
Scanning lamp (LA1), Lamp regulator PCB	2	Does the scanning lamp flicker when the scanner is moving forward?	YES	Check the scanning lamp and the lamp regulator PCB.
Developing roller	3	Is the developing roller soiled with toner, is the roller deformed, or is the area in contact with the developing roller (photosensitive drum) soiled with toner?	YES	Clean or, if necessary, replace the developing roller.
Developing bias	4	Is the developing bias applied correctly?	NO	Remove the developing assembly, and check the wiring; then, set it once again.
Scanner	5	Make a copy in Reduce, and compare it with a copy made in Direct. Is the problem noted in a different location?	YES	Check the scanning system.
Feeding assembly			NO	Check the feeding assembly.

COPYRIGHT © 1998 CANON INC.

20. The copy has poor sharpness.

Cause	Step	Checks	Yes/No	Actions
Copyboard glass	1	Is the copyboard glass soiled with oil or the like?	YES	Clean the copyboard glass.
Mirror	2	Is the horizontal reproduction ratio in Direct as indicated?	NO	Adjust the distance between the No. 1 mirror and the No. 2 mirror.
Scanner	3	Clean the scanning lamp, reflecting plate, mirror, lens, and dust-proofing glass. Is the problem corrected?	YES	End.
Lens drive assembly, No. 4/No. 5 mirror drive assembly	4	Is there dirt or foreign object in the path of the lens and the No. 4/ No. 5 mirror? Does the part, when pushed by hand, move smoothly?	YES	Remove the dirt and foreign object. As necessary, clean and lubricate.
Photosensitive drum			NO	Replace the drum unit.

COPYRIGHT © 1998 CANON INC.
CANON NP7161/NP7160 REV.0 AUG. 1998 PRINTED IN JAPAN (IMPRIME AU JAPON)

21. The copy is blank.

Cause	Step	Checks	Yes/No	Actions
Drum unit	1	Is the drum unit set securely?	NO	Remove and set the drum unit once again.
Developing assembly	2	Is the developing assembly set securely?	NO	Remove and set the developing assembly securely.
Primary charging assembly	3	Is the primary charging wire broken?	YES	Spring the charging wire.
Developing assembly	4	Is the developing assembly locked to the drum?	NO	Check the developing assembly locking lever.
DC controller PCB	5	Does the blank exposure lamp remain off while the scanner is moving forward?	NO	Check the DC controller PCB.
Scanning lamp (LA1)	6	Does the scanning lamp remain on during copying operation?	NO	Make checks as instructed under “The scanning lamp fails to turn on.”
Connector	7	Are the connectors on each PCB connected securely?	NO	Connect the connectors securely.
High-voltage cord	8	Is there continuity between high-voltage cords connected to each charging assembly?	NO	Replace the high-voltage cord.
High-voltage power supply (primary/ transfer)			YES	Check the high-voltage power supply (primary/transfer).

22. The copy is solid black.

Cause	Step	Checks	Yes/No	Actions
	1	Does the scanning lamp remain on during copying operation?	NO	Make checks according to the instructions under “The scanning lamp fails to turns off.”

COPYRIGHT © 1998 CANON INC.

IV. TROUBLESHOOTING MALFUNCTIONS

A. Copier

1. E000

Cause	Step	Checks	Yes/No	Actions
	1	Execute service mode ‘412’ (error clear) to clear E000. Open the front door and the top unit, and let the fixing roller cool sufficiently. Turn off the power switch, and disconnect and then connect the power plug. Turn on the power switch. Does the fixing heater turn on? **Caution:** Do not repeat the steps without cooling the fixing roller sufficiently, or abnormal increase in the fixing temperature will damage the fixing roller and the separation claw.	NO	See “The Fixing heater fails to turn on.”
Main thermistor (TH1)	2	Turn off the power switch, and let the fixing roller cool sufficiently. Turn on the power switch, and select service mode ‘109’ (fixing main thermistor detection temperature display). Does the reading remain unchanged at ‘109’? (After the check, be sure to turn off the power switch.)	YES	Check the wiring on the DC controller PCB to the thermistor; if normal, replace the thermistor.
Sub thermistor (TH2)	3	Turn off the power switch, and let the fixing roller cool sufficiently. Turn on the power switch, and select service mode ‘110’ (fixing sub thermistor detection temperature display). Does the reading remain unchanged at ‘110’? (After the check, be sure to tun off the power switch.)	YES	Check the wiring from J109 on the DC controller PCB to the thermistor; if normal, replace the thermistor.
Thermistor (TH1, TH2)	4	Is the thermistor in even contact with the upper fixing assembly?	NO	Mount the thermistor correctly.
Thermistor (TH1, TH2)	5	Clean the area of contact of the thermistor. Is the problem corrected?	YES	End.
Operating environment	6	Is the operating environment as specified?	NO	• Inform the user that the operating environment does not meet the requirements. • Instruct the user not to turn on the copier before the room is warm enough.
DC controller PCB			YES	Replace the DC controller.

COPYRIGHT © 1998 CANON INC.
CANON NP7161/NP7160 REV.0 AUG. 1998 PRINTED IN JAPAN (IMPRIME AU JAPON)

2. E001

Cause	Step	Checks	Yes/No	Actions
	1	Execute service mode '412' (error clear) to clear E001. Open the front door and the top unit, and let the fixing roller cool sufficiently. Turn on the power switch. Is E001 indicated immediately after power-on?	NO	Go to step 3.
Thermistor (TH1, TH2)	2	Turn off the power switch, and disconnect J108 and J109 on the DC controller PCB. Connect the probes to J108-2 and J108-3 and then J109-1 and J109-2 on the harness side. Is the resistance about 0 Ω? (After the check, be sure to connect J108 and J109.)	YES	Replace the thermistor.
DC controller PCB			NO	Replace the DC controller PCB.
Triac	3	Replace the power supply PCB. Is the problem corrected?	YES	End.
DC controller PCB			NO	Check the wiring from the power supply PCB to the DC controller PCB; if normal, replace the DC controller PCB.

COPYRIGHT © 1998 CANON INC.

3. E002/E003

Cause	Step	Checks	Yes/No	Actions
	1	Execute service mode '412' (error clear) to clear E002 or E003. Open the front door and the top unit, and let the fixing roller cool sufficiently. Turn on the power switch. Does any of the following apply? • The fixing heater fails to turn on. • E000	YES	See the appropriate section.
Main thermistor	2	Turn off the power switch, and let the fixing roller cool sufficiently. Turn on the power switch, and select service mode '109'. (fixing main thermistor detection temperature display) Does the reading remain unchanged at '109'? (After the check, be sure to turn off the power switch.)	YES	Check the wiring from J108 on the DC controller PCB to the thermistor; if normal, replace the thermistor.
Sub thermistor (TH2)	3	Turn off the power switch, and let the fixing roller cool sufficiently. Turn on the power switch, and select service mode '110'. (fixing sub thermistor temperature display) Does the reading remain unchanged at '110'? (After the check, be sure to turn off the power switch.)	YES	Check the wiring from J109 on the DC controller PCB to the thermistor; if normal, replace the thermistor.
Thermistor (TH1, TH2)	4	Is the thermistor in even contact with the upper fixing roller?	NO	Mount the thermistor correctly.
Thermistor (TH1, TH2)	5	Clean the area of contact of the thermistor. Is the problem corrected?	YES	End.
Operating environment	6	Is the operating environment as indicated?	NO	• Inform the user that the operating environment does not meet the requirements. • Instruct the user not to turn on the copier before the room is warm enough.
DC controller PCB			YES	Replace the DC controller PCB.

COPYRIGHT © 1998 CANON INC.

4. E004

Cause	Step	Checks	Yes/No	Actions
Fixing heater (H1)	1	Execute service mode '412' (error clear) to clear E004. Turn on the power switch. Does the fixing heater turn on?	NO	See "The fixing heater fails to turn on."
Triac	2	Replace the power supply PCB. Is the problem corrected?	YES	End.
DC controller PCB			NO	Check the wiring from the power supply PCB to the DC controller PCB; if normal, replace the DC controller PCB.

5. E010

Cause	Step	Checks	Yes/No	Actions
Connector	1	Are all connectors of the main motor (M1) connected?	NO	Connect the connectors.
Power supply PCB	2	Turn on the power switch. Set the meter range to 30 VDC, and connect the probes to J209-4 (+) and J209-3 (-) on the DC controller PCB. Is the voltage about 24 V?	NO	See "DC power is absent."
Main motor (M1)	3	Replace the main motor. Is the problem corrected?	YES	End.
DC controller PCB			NO	Replace the DC controller PCB.

COPYRIGHT © 1998 CANON INC.

6. E013

Cause	Step	Checks	Yes/No	Actions
Waste toner feeding screw	1	Is the flag of the waste toner feeding screw locked sensor rotating when the main motor is rotating?	NO	Remove the drum unit, and turn the feeding screw by hand. If it rotates easily, check how it is mounted. If it does not turn, replace the drum unit, and remove the cause.
Waste toner feeding screw locked sensor (PS8)	2	Is the waste toner feeding screw locked sensor normal? (See the instructions on how to check the photointerrupters.)	NO	Check the wiring from the DC controller PCB to PS8; if normal, replace PS8.
DC controller PCB			YES	Replace the DC controller PCB.

7. E030

Cause	Step	Checks	Yes/No	Actions
Total copy counter (CNT1)	1	Turn off the power switch, and disconnect J102 from the DC controller PCB. Set the meter range to 1 KΩ, and connect the probes to J102-A11 and J102-A10. Is the resistance about 500 Ω?	NO	Check the wiring from the DC controller PCB to the counter; if normal, replace the counter.
Total copy counter (CNT1)	2	Connect J102 to the DC controller PCB, and turn on the power switch. Set the meter range to 30 VCD, and connect the probes J102-A11 (+) and J102-A10 (-) on the DC controller PCB. Does the voltage change from about 0 to about 24 and then to about 0 V when the Start key is pressed?	YES	Replace the counter.
DC controller PCB			NO	Replace the DC controller PCB.

COPYRIGHT © 1998 CANON INC.

8. E031

Cause	Step	Checks	Yes/No	Actions
Accessory counter (CNT2)	1	Turn off the power switch, and disconnect J102 from the DC controller PCB. Set the meter range to 1 KΩ, and connect the probes to J102-A13 and J102-A12. Is the resistance about 500 Ω?	NO	Check the wiring from the DC controller PCB to the counter; if normal, replace the counter.
Accessory counter (CNT2)	2	Connect J102 to the DC controller PCB, and turn on the power switch. Set the meter range to 30 VDC, and connect the probes to J102A13 (+) and J102-A12 (-) on the DC controller PCB. Does the voltage change from about 0 to about 24 and then to about 0 V when the Start key is pressed?	YES	Replace the counter.
DC controller PCB			NO	Replace the DC controller PCB.

9. E202 (The keys on the control panel fail to operate.)

Cause	Step	Checks	Yes/No	Actions
	1	Does the scanner move forward or in reverse until E202 is detected?	NO	See “The scanner fails to move.”
Scanner home position sensor (PS1)	2	Is the scanner home position sensor normal? (See the instructions on how to check the photointerrupters.)	NO	Check the wiring from the DC controller PCB to the sensor; if normal, replace the sensor.
DC controller PCB			YES	Replace the DC controller PCB.

COPYRIGHT © 1998 CANON INC.

10. E208

Cause	Step	Checks	Yes/No	Actions
	1	Does the mirror move when the power switch is turned on?	NO	See “The mirror fails to move.”
Mirror home position sensor (PS3)	2	Is the mirror home position sensor normal? (See the instructions on how to check the photointerrupters.)	NO	Check the wiring from the DC controller PCB to the sensor; if normal, replace the sensor.
DC controller PCB			YES	Replace the DC controller PCB.

11. E210

Cause	Step	Checks	Yes/No	Actions
	1	Turn on the power switch. Does the lens move?	NO	See “The lens fails to move.”
Lens home position sensor (PS2)	2	Is the lens home position sensor normal? (See the instructions on how to check the photointerrupters.)	NO	Check the wiring from the DC controller PCB to the sensor; if normal, replace the sensor.
DC controller PCB			YES	Replace the DC controller PCB.

COPYRIGHT © 1998 CANON INC.
CANON NP7161/NP7160 REV.0 AUG. 1998 PRINTED IN JAPAN (IMPRIME AU JAPON)

12. E220

Cause	Step	Checks	Yes/No	Actions
	1	Does the scanning lamp (LA1) remain off?	YES	See “The scanning lamp fails to turn on.”
Lamp regulator PCB	2	Set the meter range to 30 VDC, and connect the probes to J211-2 (+) and J211-1 (-) on the DC controller PCB. Is the voltage between the terminals when the scanning lamp turn on about 5 V?	NO	Check the wiring from the DC controller PCB to the lamp regulator PCB; if normal, replace the lamp regulator PCB.
DC controller PCB			YES	Replace the DC controller PCB.

13. E261

Cause	Step	Checks	Yes/No	Actions
Power supply PCB	1	Replace the power supply PCB. Is the problem corrected?	YES	End.
Power supply frequency			NO	If E261 is indicated often, advise the user to install a frequency stabilizer.

14. E710/E711

Cause	Step	Checks	Yes/No	Actions
Malfunction	1	Turn off and then on the power switch. Is the problem corrected?	YES	End.
DC controller PCB			NO	Replace the DC controller PCB.

COPYRIGHT © 1998 CANON INC.

15. E712

Cause	Step	Checks	Yes/No	Actions
Malfunction	1	Turn off and then on the power switch. Is the problem corrected?	YES	End.
Connector	2	Is the connector (J754) used between the ADF and the copier connected securely?	NO	Connect the connector securely.
ADF PCB	3	Replace the ADF controller PCB. Is the problem corrected?	YES	End.
DC controller PCB			NO	Replace the DC controller PCB.

16. E717

Cause	Step	Checks	Yes/No	Actions
Malfunction	1	Turn off and then on the power switch. Is the problem corrected?	YES	End.
Connector	2	Is the connector (J722) used between the Remote Diagnostic Device II and the copier connected securely?	NO	Connect the connector securely.
DC controller PCB	3	Replace the DC controller PCB. Is the problem corrected?	YES	End.
Remote Diagnostic Device II			NO	See the Service Manual of the Remote Diagnostic Device II.

COPYRIGHT © 1998 CANON INC.
CANON NP7161/NP7160 REV.0 AUG. 1998 PRINTED IN JAPAN (IMPRIME AU JAPON)

17. E800

Cause	Step	Checks	Yes/No	Actions
Malfunction	1	Turn off and then on the power switch. Is the problem corrected?	YES	End.
Power supply PCB	2	Replace the power supply PCB. Is the problem corrected?	YES	End.
DC controller PCB			NO	Check the wiring and continuity from the DC controller PCB to the control panel PCB; if normal, replace the DC controller PCB.

18. E805

Cause	Step	Checks	Yes/No	Actions
	1	Check service mode '106' (E805 details) while 'E805' is being indicated.		Make the checks in step 2 and later to identify the fan that caused the error.
Connector	2	Are the connectors from the connector on the DC controller PCB to the exhaust fan proper?	NO	Connect the connectors.
Exhaust fan (FM2, FM4, FM5)	3	Replace the exhaust fan. Is the problem corrected?	YES	End.
DC controller PCB			NO	Check the wiring from the DC controller PCB to the exhaust fan; if normal, replace the DC controller PCB.

19. E821

Cause	Step	Checks	Yes/No	Actions
Ozone filter	1	Replace the ozone filter. Is the problem corrected?	YES	End.
Cleaner thermistor (TH3)	2	Turn on the power switch, and select service mode 111 (clean thermistor detection temperature). Do the reading remain as '111'?	YES	Check the wiring from J112 on the DC controller PCB to the thermistor; if normal, replace the thermistor.
DC controller PCB			NO	Replace the DC controller PCB.

COPYRIGHT © 1998 CANON INC.

20. AC power is absent.

Cause	Step	Checks	Yes/No	Actions
Power cord	1	Is the power cord connected to the copier?	NO	Connect the cord.
Power plug	2	Is the power plug connected to the power outlet?	NO	Connect the power plug.
Main power supply	3	Is the rated AC voltage present at the power outlet?	NO	This is not the copier's problem. Inform the user accordingly.
Front door	4	Is the front door closed securely?	NO	Close the front door.
	5	Is the rated voltage present between J204-1 and J204-3 on the DC controller PCB?	YES	End.
Circuit breaker (CB1, CB2)	6	Press the button on the circuit breaker (CB1, CB2). Is AC power supplied?	YES	End.
Power cord	7	Replace the power supply cord. Is AC power supplied?	YES	End.
			NO	Check the wiring of the AC power line. Check the connector for contact.
Fuse	8	Is the fuse (FU1, FU2) on the DC power supply PCB blown? (125 V, 5 A for 120 V model; 250 V, 2 A for 230 V model)	YES	Remove the cause, and replace the fuse.
Power supply PCB	9	Set the meter range to 30 VDC, and connect the meter probes to J105-4(+) and J105-5(-) on the DC controller PCB. Is the voltage reading about 5 V?	NO	Check the wiring from J105 on the DC controller PCB to the power supply PCB; if normal, replace the power supply PCB.
Wiring	10	Is there continuity between J101-B15 on the DC controller PCB and J403-1 on the DC controller PCB?	NO	Check the wiring.
	11	Is there continuity between J212-1 on the DC power supply PCB and J106-2 on the DC controller PCB?	NO	Check the wiring.
Control panel PCB	12	Replace the control panel PCB. Is the problem corrected?	YES	End.
DC controller PCB			NO	Replace the DC power supply PCB.

COPYRIGHT © 1998 CANON INC.

21. DC power supply is absent.

<table>
<tr><th>Cause</th><th>Step</th><th>Checks</th><th>Yes/No</th><th>Actions</th></tr>
<tr><td>AC power supply</td><td>1</td><td>Is the rated voltage present between J204-1 and J204-3 on the DC power supply PCB?</td><td>NO</td><td>See “AC power is absent.”</td></tr>
<tr><td>Fuse (power supply PCB)</td><td>2</td><td>Is the fuse (FU1, FU2, FU3, FU4, FU5) on the power supply blown?</td><td>YES</td><td>Remove the cause, and replace the fuse.</td></tr>
<tr><td>Wiring, DC load</td><td rowspan="2">3</td><td rowspan="2">Turn off the power switch, and disconnect the power plug. Disconnect J208, J209, J210 on the power supply PCB. Connect the power plug, and turn on the power switch. At this time, is the voltage between the following terminals normal?
<table><tr><th>+</th><th>–</th><th>Output voltage</th></tr><tr><td>J208-1</td><td>J208-2</td><td>+24V</td></tr><tr><td>J208-3</td><td>J208-5</td><td>+5VU</td></tr><tr><td>J208-4</td><td>J208-5</td><td>+5VR</td></tr><tr><td>J209-4</td><td>J209-3</td><td>+24V</td></tr><tr><td>J210-1</td><td>J210-2</td><td>+24V</td></tr><tr><td>J210-8</td><td>J210-2</td><td>+5VU</td></tr><tr><td>J211-7</td><td>J211-1</td><td>+24V</td></tr><tr><td>J211-5</td><td>J211-1</td><td>+5VU</td></tr></table></td><td>YES</td><td>Check the wiring and the connectors of the DC power supply line.</td></tr>
<tr><td>Power supply PCB</td><td>NO</td><td>Replace the power supply PCB.</td></tr>
</table>

COPYRIGHT © 1998 CANON INC.

22. The scanner fails to move.

Cause	Step	Checks	Yes/No	Actions
Belt, Cable	1	Are the scanner drive belt and cable routed correctly?	NO	Route the belt and cable correctly, and check the pulley.
Scanner path	2	Is the scanner rail free of soiling and object, and does the scanner move smoothly when pushed by hand?	NO	Remove any dirt and object; check for an object that may come into contact with the scanner. As necessary, clean and lubricate, or repair. **Note:** If the rail is soiled, clean it with alcohol, and then apply a small amount of oil.
Scanner motor (M2)	3	Replace the scanner. Is the problem corrected?	YES	End.
DC controller PCB			NO	Check the wiring from the DC controller PCB to the scanner motor; if normal, replace the DC controller PCB.

COPYRIGHT © 1998 CANON INC.
CANON NP7161/NP7160 REV.0 AUG. 1998 PRINTED IN JAPAN (IMPRIME AU JAPON)

23. The lens fails to move.

Cause	Step	Checks	Yes/No	Actions
Bolt	1	Is the lens drive belt routed correctly?	NO	Correct the belt, and check the gears.
Lens path	2	Is the lens path free of dirt and foreign object? Does the lens move smoothly when pushed by hand?	NO	Remove any dirt and object; check for any object that may come into contact with the lens. As necessary, clean and lubricate, or repair.
Lens motor (M3)	3	Replace the lens motor. Is the problem corrected?	YES	End.
DC controller PCB			NO	Check the wiring from the DC controller PCB to the lens motor; if normal, replace the DC controller PCB.

24. The mirror fails to move.

Cause	Step	Checks	Yes/No	Actions
Mirror path	1	Turn off the power, and move the mirror assembly by hand. Does it move smoothly?	NO	Remove any dirt or foreign object in the mirror path. As necessary, clean and lubricate the path.
Mirror motor (M4)	2	Replace the mirror motor. Is the problem corrected?	YES	End.
DC controller PCB			NO	Check the wiring from the DC controller PCB to the mirror motor; if normal, replace the DC controller PCB.

COPYRIGHT © 1998 CANON INC.

25. The scanning lamp fails to turn on.

Cause	Step	Checks	Yes/No	Actions
Scanning lamp (LA1)	1	Is the scanning lamp mounted correctly?	NO	Disconnect the power plug from the power outlet, and mount the scanning lamp correctly.
Thermal fuse (FU1)	2	Disconnect the power plug from the power outlet, and remove the thermal fuse. Is there electrical continuity when the probes of the meter are connected across both terminals of the thermal fuse?	NO	Replace the thermal fuse. **Caution:** The scanning lamp may have turned on abnormally, the thermal fuse may have been mounted incorrectly, or the cooling fan may have malfunctioned. Be sure to find out the cause.
Scanning lamp (LA1)	3	Set the meter range to 'ýx1', and disconnect the connector J55. Does the meter index swing when the probes of the meter are connected across both terminals of the scanning lamp?	NO	Replace the scanning lamp.
Lamp regulator PCB	4	Replace the lamp regulator PCB. Is the problem corrected?	YES	End.
Wiring	5		NO	Check the AC harness from the power supply PCB and the lamp regulator PCB and the scanning lamp. Check the DC harness from the DC controller PCB to the lamp regulator PCB.
DC controller PCB		Set the meter range to the 30 VDC, and connect the probes of the meter to J106-4 (+) and J105-5 (-) on the DC controller PCB. Does the voltage change from about 0 to 5 V when the Start key is pressed?	NO	Replace the DC controller PCB.

COPYRIGHT © 1998 CANON INC.
CANON NP7161/NP7160 REV.0 AUG. 1998 PRINTED IN JAPAN (IMPRIME AU JAPON)

26. The pre-exposure lamp fails to turn on.

Cause	Step	Checks	Yes/No	Actions
Pre-exposure lamp (LA2)	1	Set the meter range to 30 VDC, and connect the probes to J104-A6 (+) and J104-7 (-) on the DC controller PCB. Does the voltage change from 0 to 24 V when the Start key is pressed?	YES	Check the wiring from the DC controller PCB to the pre-exposure lamp; if normal, replace the pre-exposure lamp.
DC controller PCB			NO	Replace the DC controller PCB.

27. The blank exposure lamp fails to turn on.

Cause	Step	Checks	Yes/No	Actions
Blank exposure lamp (LA3)	1	Replace the blank exposure lamp. Is the problem corrected?	YES	End.
DC controller PCB			NO	Check the wiring from the DC controller PCB to the blank exposure lamp; if normal, replace the DC controller PCB.

COPYRIGHT © 1998 CANON INC.

28. Pick-up fails. (cassette)

Cause	Step	Checks	Yes/No	Actions
Copy paper	1	Are the size of the copy paper in the cassette and the size indicated by the cassette size indicator identical?	NO	Set the cassette size indicator once again.
Right door	2	Is the right door closed securely?	NO	Close the right door securely.
	3	Is the leading edge of copy paper as far as the registration roller?	YES	See "The registration roller fails to rotate."
Pick-up roller	4	Is the pick-up roller soiled or worn?	YES	If the pick-up roller is soiled, clean it with alcohol. If it is deformed by wear, replace it.
Registration clutch (CL1), Feeding clutch (CL2)	5	Open the right door, and press the Copy Start key while holding paper over the right door open/closed sensor. Does the feeding roller or the pull-out roller rotate?	NO	Check the drive gear for damage. Check the wiring from the DC controller PCB to each clutch; if normal replace the clutch.
Pick-up solenoid (SL1)	6	Set the meter range to 30 VDC, and connect the meter probes to J107-B8(+) and J107-B9(-). Does the voltage reading change from 0 to 24 V when the Start key is pressed?	NO	Check the wiring from the DC controller PCB to SL1; if normal, replace SL1.
DC controller PCB			YES	Replace the DC controller PCB.

COPYRIGHT © 1998 CANON INC.

29. Pick-up operation fails. (multifeeder)

Cause	Step	Checks	Yes/No	Actions
	1	Is the leading edge of copy paper as far as the registration roller?	YES	See “The registration roller fails to rotate.”
Multifeeder solenoid (SL2)	2	Set the meter range to 30 VDC, and connect the probes to J107-B3 (+) and J107-B4 (-) on the DC controller PCB. Does the voltage change from 0 to 24 V when the Start key is pressed?	YES	Check the wiring from the DC controller PCB to the multifeeder solenoid; if normal, replace the solenoid.
DC controller PCB			NO	Replace the DC controller PCB.
Multifeeder roller clutch (CL3)	3	Set the meter range to 30 VDC, and connect the probes to J107-B1 (+) and J107-B2 (-). Does the voltage change from 0 to 24 V when the Start key is pressed?	YES	Check the wiring from the DC controller PCB to multifeeder roller clutch; if normal, replace the clutch.
DC controller PCB			NO	Replace the DC controller PCB.

30. The registration roller fails to rotate.

Cause	Step	Checks	Yes/No	Actions
Registration paper sensor (PS5)	1	Is the registration paper sensor normal? (See the instructions on how to check photointerrupters.)	NO	Check the wiring from the DC controller PCB to the registration paper sensor; if normal, replace the sensor.
Registration roller clutch (CL1)	2	Set the meter to the 30 VDC, and connect the probes to J211-7 (+) and J211-6 (-). Does the voltage change from 0 to 24 V when the Start key is pressed?	YES	Check the drive gear for damage. Check the wiring from the DC controller PCB to registration roller clutch; if normal, replace the clutch.
DC controller PCB			NO	Replace the DC controller PCB.

COPYRIGHT © 1998 CANON INC.

31. The fixing heater fails to turn on.

Cause	Step	Checks	Yes/No	Actions
Thermal switch (TSW1)	1	Turn off the power switch, and remove the fixing assembly. Set the meter range to "Ωx1." Does the meter index swing when the probes are connected across both terminals of the thermal switch?	NO	Replace the thermal switch.
Fixing heater (H1)	2	Turn off the power switch, and remove the fixing assembly. Is there continuity when probes are connected across both terminals of the fixing heater?	NO	Replace the fixing heater.
DC controller PCB	3	Set the meter range to 30 VDC, and connect the probes to J106-21 (+) and J105-4 (-) on the DC controller PCB. Is the resistance about 5 V?	NO	Replace the DC controller PCB.
Wiring			YES	Check the AC harness from the DC power supply PCB to the fixing heater. Check the DC harness from the DC controller PCB to the DC power supply PCB.

32. The Add Toner indicator does not flash/turn on.

Cause	Step	Checks	Yes/No	Actions
Connector	1	Are the connector J15 of the toner sensor, relay connectors J721 and J722, and the connector J102 on the DC controller PCB connected securely?	NO	Connect the connectors securely.
Toner sensor (TS1)	2	Replace the toner sensor. Is the problem corrected?	YES	End.
Control panel PCB	3	Execute service mode '409' (control panel check). Does the Add Toner indicator turn on?	NO	Check the wiring from the DC controller PC to the control panel PCB; if normal, replace the control panel PCB.
DC controller PCB			YES	Replace the DC controller PCB.

COPYRIGHT © 1998 CANON INC.

33. The Add Toner indicator fails to turn off.

Cause	Step	Checks	Yes/No	Actions
	1	Open and close the front door. Does it turn off?	YES	End.
Connector	2	Are the connector J15 of the toner sensor, relay connectors J721 and 720, and connector J102 on the DC controller PCB on the DC controller PCB connected securely?	NO	Connect the connectors securely.
Toner sensor (TS1)	3	Replace the toner sensor. Is the problem corrected?	YES	End.
DC controller PCB			NO	Replace the DC controller PCB.

34. The Waste Toner Box Full indicator fails to flash/turn on.

Cause	Step	Checks	Yes/No	Actions
Connector	1	Are the connectors up to the waste toner sensor connected securely?	NO	Connect the connectors securely.
Waste toner sensor	2	Replace the waste toner sensor. Is the problem corrected?	YES	End.
Control panel PCB	3	Execute service mode ‘409’ (control panel check). Does the Waste Toner Box Full indicator turn on?”	NO	Check the wiring from the DC controller PCB to the control panel PCB; if normal, replace the control panel PCB.
DC controller PCB			YES	Replace the DC controller PCB.

COPYRIGHT © 1998 CANON INC.

35. The Waste Toner Box Full indicator fails to turn off.

Cause	Step	Checks	Yes/No	Actions
Waste toner box	1	Is the waste toner box mounted?	NO	Install the waste toner box.
	2	Is the waste toner box full?	YES	Replace the waste toner box.
Waste toner box	3	Is the mouth of the waste toner box soiled?	YES	Clean it. If the dirt cannot be removed, replace the waste toner box.
Connector	4	Are the connectors to the waste toner sensor connected securely?	NO	Connect the connectors securely.
Waste toner sensor	5	Replace the waste toner sensor. Is the problem corrected?	YES	End.
DC controller PCB			NO	Replace the DC controller PCB.

36. The Add Paper indicator fails to flash.

Cause	Step	Checks	Yes/No	Actions
Sensor (PS4, PS7)	1	Are the following sensors normal? (See the instructions on how to check the photointerrupers.) PS4 Cassette paper sensor PS7 Multi paper sensor	NO	Check the wiring from the sensor lever and each sensor to the DC controller PCB; if normal, replace the sensor.
Control panel PCB	2	Execute service mode '409' (control panel check). Does the Add Paper indicator turn on?	NO	Check the wiring from the DC controller PCB to the control panel PCB; if normal, replace the control panel PCB.
DC controller PCB			YES	Replace the DC controller PCB.

COPYRIGHT © 1998 CANON INC.

37. The Add Paper indicator fails to turn off.

Cause	Step	Checks	Yes/No	Actions
Cassette	1	Is the cassette set correctly?	NO	Set the cassette correctly.
Sensor (PS4, PS7)	2	Are the following sensors normal? (See the instructions on how to check the photointerrupers.) PS4 Cassette paper sensor PS7 Multi paper sensor	NO	Check the wiring from the sensor lever and each sensor to the DC controller PCB; if normal, replace the sensor.
DC controller PCB			YES	Replace the DC controller.

38. The Jam indicator fails to flash.

Cause	Step	Checks	Yes/No	Actions
Sensor (PSS5, PS6)	1	Are the following sensors normal? (See the instruction on how to check the photointerrupters.) PS5 Registration paper sensor PS6 Delivery paper sensor	NO	Check the wiring from the sensor lever and each sensor to the DC controller PCB; if normal, replace the sensor.
Control panel PCB	2	Execute service mode ‘409’ (control panel check). Does the Jam indicator turn on?	NO	Check the wiring from the DC controller PCB to the control panel PCB; if normal, replace the control panel PCB.
DC controller PCB			YES	Replace the DC controller PCB.

COPYRIGHT © 1998 CANON INC.

39. The Jam indicator fails to turn off.

Cause	Step	Checks	Yes/No	Actions
	1	Has all paper been removed from inside the copier?	NO	Remove the paper.
	2	Execute service mode '101' (jam type display) to find out which sensor detected the jam. Is there paper around the sensor?	YES	Remove the paper.
Sensor	3	Is the sensor of step 2 normal? (See the instructions on how to check the photointerrupters.)	NO	Check the wiring from the sensor lever and each sensor to the DC controller PCB; if normal, replace the sensor.
DC controller PCB				Replace the DC controller PCB.

40. The Set Control Card indicator fails to turn on.

Cause	Step	Checks	Yes/No	Actions
Control Card IV N	1	Can copies be made without setting the Control Card IV N?	YES	Check the connector of the Control Card IV N for a short circuit.
Control panel PCB	2	Replace the control panel PCB. Does the indicator turn on?	YES	End.
DC controller PCB			NO	Replace the DC controller PCB.

COPYRIGHT © 1998 CANON INC.

41. The Set Control Card indicator fails to turn off.

Cause	Step	Checks	Yes/No	Actions
Control card	1	Is the Control Card set correctly?	YES	Set the control card correctly.
DC controller PCB	2	Can copies be made?	YES	Replace the DC controller PCB.
Control Card IV N			NO	Replace the Control Card IV N.

COPYRIGHT © 1998 CANON INC.

V. TROUBLESHOOTING FEEDING PROBLEMS

A. Copy Jams

The copier may be divided into the following in terms of where copy paper tends to jam.
[1] Pick-up/feeding assembly
[2] Fixing/delivery assembly

The instructions on how to remove copy paper in the following tables are organized according to location.

You may find out the location and the nature of each jam in service mode (‘107’).

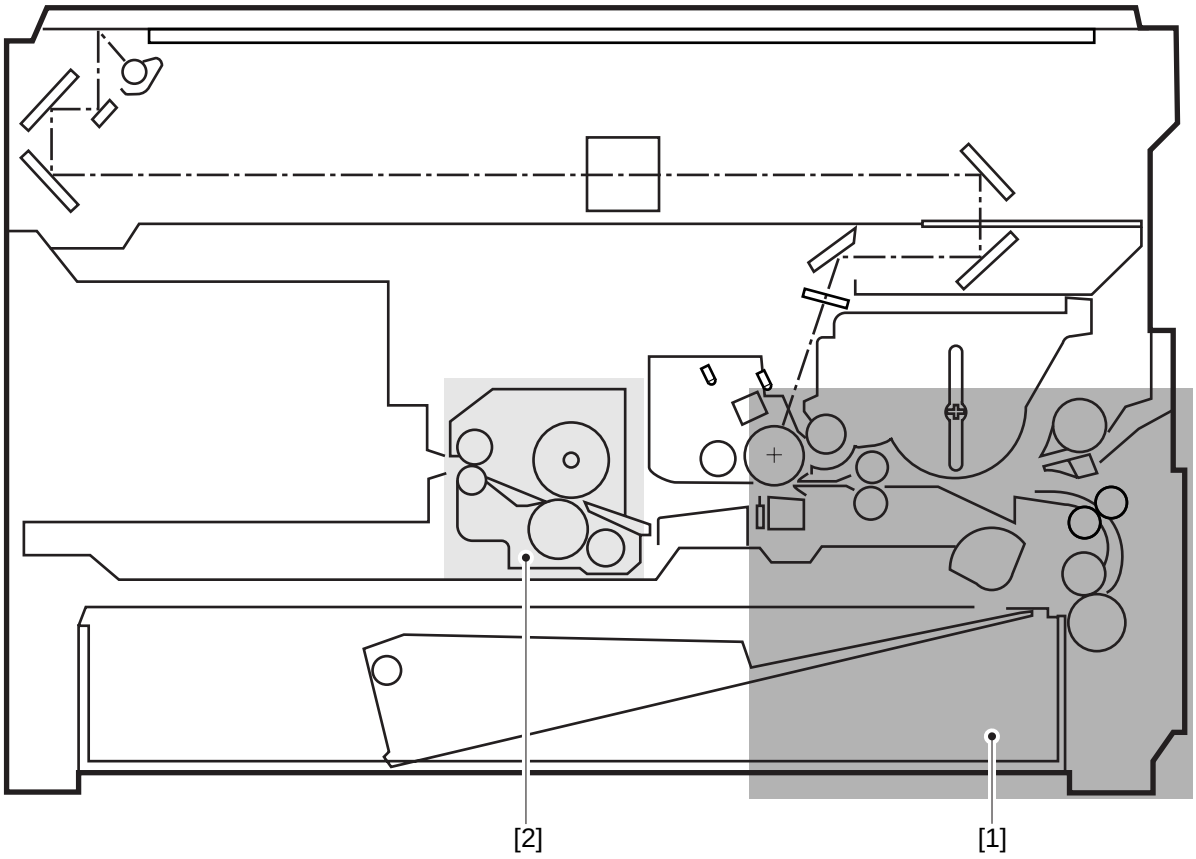

Figure 10-501

COPYRIGHT © 1998 CANON INC.
CANON NP7161/NP7160 REV.0 AUG. 1998 PRINTED IN JAPAN (IMPRIME AU JAPON)

1. Pick-Up/Feeding Assembly

Cause	Step	Checks	Yes/No	Actions
	1	Does the jam occur when paper is picked up from the cassette?	NO	Go to step 8.
Cassette	2	Is the cassette set in the copier correctly?	NO	Set the cassette correctly.
	3	Try a different cassette. Is the problem corrected?	YES	Check the inside of the cassette for foreign matter.
Copy paper	4	Is the copy paper curled, wavy, or the like?	YES	Replace the copy paper. Instruct the user on the correct method of storing copy paper.
	5	Try paper of a type recommended by Canon. Is the problem corrected?	YES	Advise the user to use recommended paper.
DC controller PCB, Pick-up clutch	6	Does the pick-up roller of the selected cassette holder rotating during copying operation?	NO	See “The pick-up operation fails.”
Pick-up roller	7	Is the pick-up roller deformed or worn?	YES	Replace the pick-up roller.
Separation roller	8	Is the separation roller deformed or worn?	YES	Replace the separation roller.
Feeding roller	9	Is the feeding roller deformed or worn?	YES	Replace the feeding roller.
Registration roller drive assembly	10	Does the registration roller operate normally?	NO	See “The registration roller fails to rotate.”
Registration roller vertical path roller	11	Is the registration roller or the vertical path roller deformed or worn?	YES	Replace the roller.
Transfer charging assembly	12	Is the transfer charging assembly set correctly?	NO	Check the transfer charging assembly.
	13	Is there foreign matter on the paper guide of the transfer charging assembly?	YES	Remove the foreign matter.
	14	Make a copy in manual mode. Does the main motor rotate?	NO	See “The pick-up operation fails.”
Copy paper	15	Try paper recommended by Canon. Is the problem corrected?	YES	Advise the user to use recommended paper.
Pick-up roller			NO	Check the pick-up roller for deformation and wear.

COPYRIGHT © 1998 CANON INC.

2. Fixing/Delivery Assembly

Cause		Step	Checks	Yes/No	Actions
Separation claw (delivery assembly)		1	Is the separation claw worn, deformed, or soiled?	YES	1. Replace the separation claw. 2. If dirt is found, clean it.
Fixing assembly	Upper/lower fixing roller, Heat discharging roller	2	Is the upper/lower fixing roller or the heat discharging roller deformed or damaged?	YES	Replace the roller.
	Paper guide	3	Is the paper guide soiled with toner or the like?	YES	Clean the paper guide.
		4	Is the height of the paper guide correct?	NO	Adjust the height.
	Nip	5	Is the lower roller pressure (nip) as indicated?	YES	Adjust it.
Delivery assembly	Delivery lever	6	Does the delivery detecting lever move smoothly?	NO	Adjust the lever so that it moves smoothly.
	Delivery paper sensor (PS06)	7	Does the delivery sensor operate normally? (See the instructions on how to check the photointerrupters.)	NO	Replace the sensor.
	Delivery roller drive assembly	8	Does the delivery roller move smoothly?	NO	Check the delivery roller drive assembly.
Leading edge margin				YES	Check the copy to see if it has a leading edge.

COPYRIGHT © 1998 CANON INC.

B. Faulty Feeding

1. Double Feeding

Cause	Step	Checks	Yes/No	Actions
Separation pad	1	Is the separation pad deformed, worn, or soiled?	YES	Replace the separation pad.
Spring			NO	Push up the separation pad, and replace the spring.
Separation roller	2	Is the separation roller deformed, worn, or soiled?	YES	Replace the separation roller.
Spring			NO	Replace the spring used to pull the separation roller.

2. Wrinkles

Cause		Step	Checks	Yes/No	Actions
Pick-up assembly		1	Turn off the power while copy paper is moving through the feeding assembly. Is the paper wrinkled? Or, is the paper askew?	YES	Check the pick-up assembly. Check the registration roller.
Copy paper		2	Try copy paper fresh out of package. Is the problem corrected?	YES	The copy paper may be moist. Instruct the user on the correct method of storing copy paper.
		3	Is the paper of a type recommended by Canon?	NO	Advise the user to use recommended paper.
Fixing assembly	Paper guide	4	Is the paper guide soiled with toner or the like?	YES	Clean it.
		5	Is the height of the paper guide correct?	NO	Adjust the height of the paper guide.
	Lower roller pressure	6	Is the lower roller (nip) as indicated?	NO	Adjust it
	Upper/lower roller			YES	Try replacing the top unit or the lower roller.

COPYRIGHT © 1998 CANON INC.

VI. ARRANGEMENT AND FUNCTIONS OF ELECTRICAL PARTS

A. Sensors and Switches

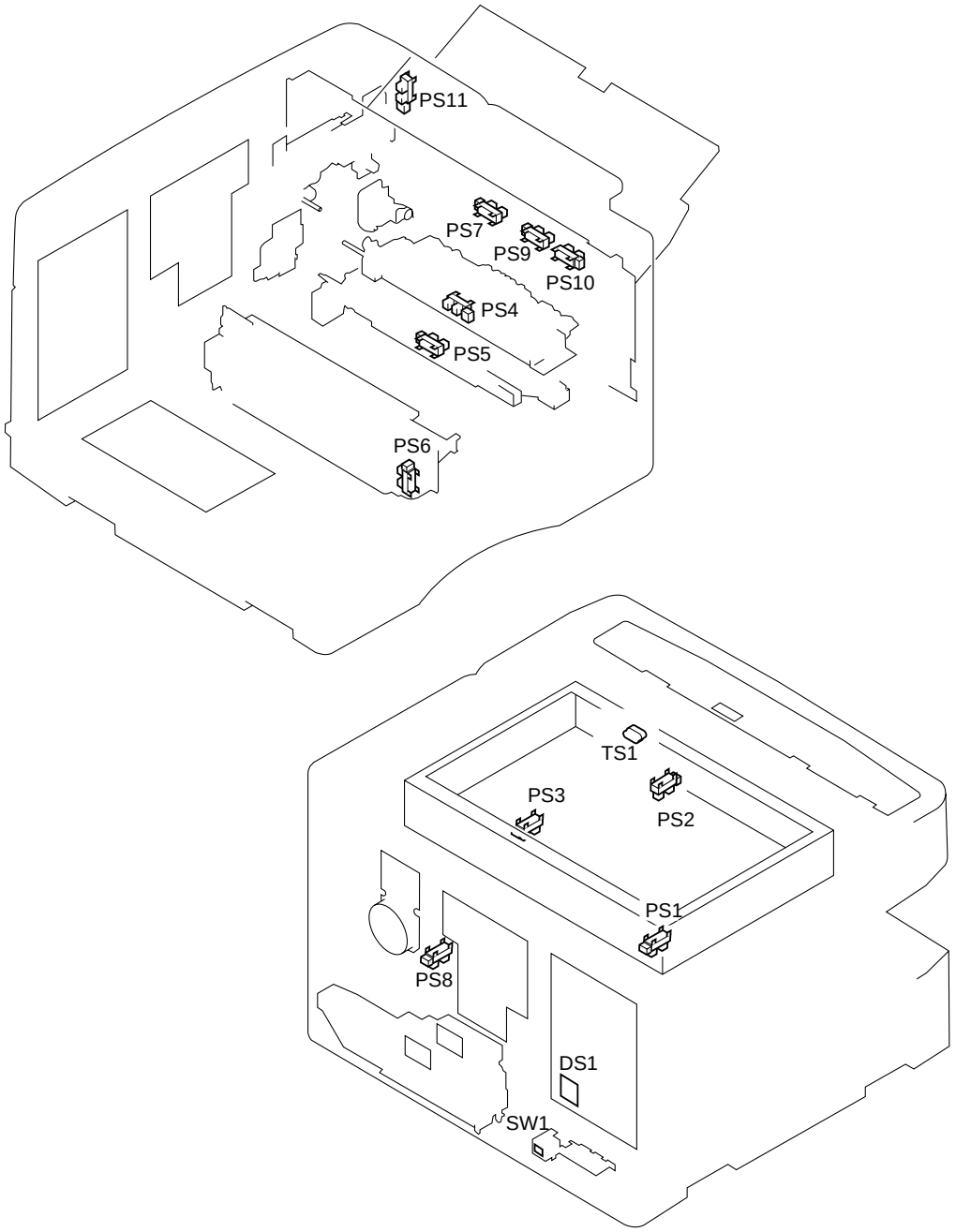

Figure 10-601

COPYRIGHT © 1998 CANON INC.

Symbol	Name	Notation	Description
	Toner sensor	TS1	Developing assembly toner level detection
	Photointerrupter	PS1 PS2 PS3 PS4 PS5 PS6 PS7 PS8 PS9 PS10 PS11	Scanner home position detection Lens home position detection Mirror home position detection Cassette paper detection Registration paper detection Delivery detection Multifeeder paper detection Waste toner feeding screw locked detection Multifeeder paper width detection 1 Multifeeder paper width detection 2 Right door open/closed detection
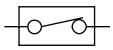	Switch	SW1 DS1	Heater switch (accessory) Front door switch

Table 10-601

COPYRIGHT © 1998 CANON INC.

B. Motors, Fans, Clutches, and Solenoids

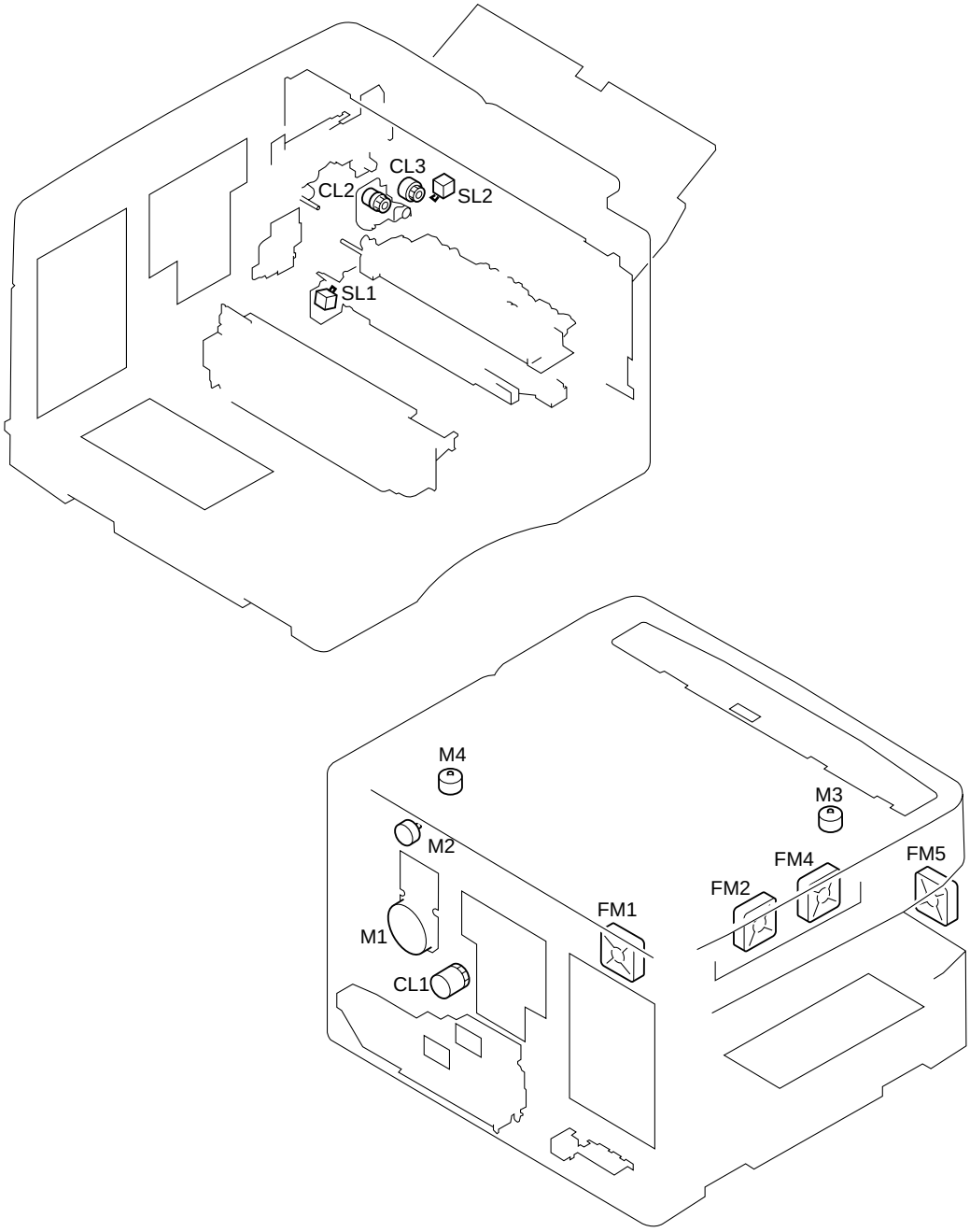

Figure 10-602

COPYRIGHT © 1998 CANON INC.
CANON NP7161/NP7160 REV.0 AUG. 1998 PRINTED IN JAPAN (IMPRIME AU JAPON)

Symbol	Name	Notation	Description
	Motor	M1 M2 M3 M4	Main drive Scanner drive Lens drive No. 4/No. 5 mirror drive
	Fan	FM1 FM2 FM4 FM5	Cooling Heat discharge Heat discharge Heat discharge (accessory)
	Clutch	CL1 CL2 CL3	Registration roller clutch Feeding clutch Multifeeder pick-up clutch
	Solenoid	SL1 SL2	Pick-up solenoid Multifeeder pick-up solenoid

Table 10-602

COPYRIGHT © 1998 CANON INC.

C. Heaters, Lamps, and Others

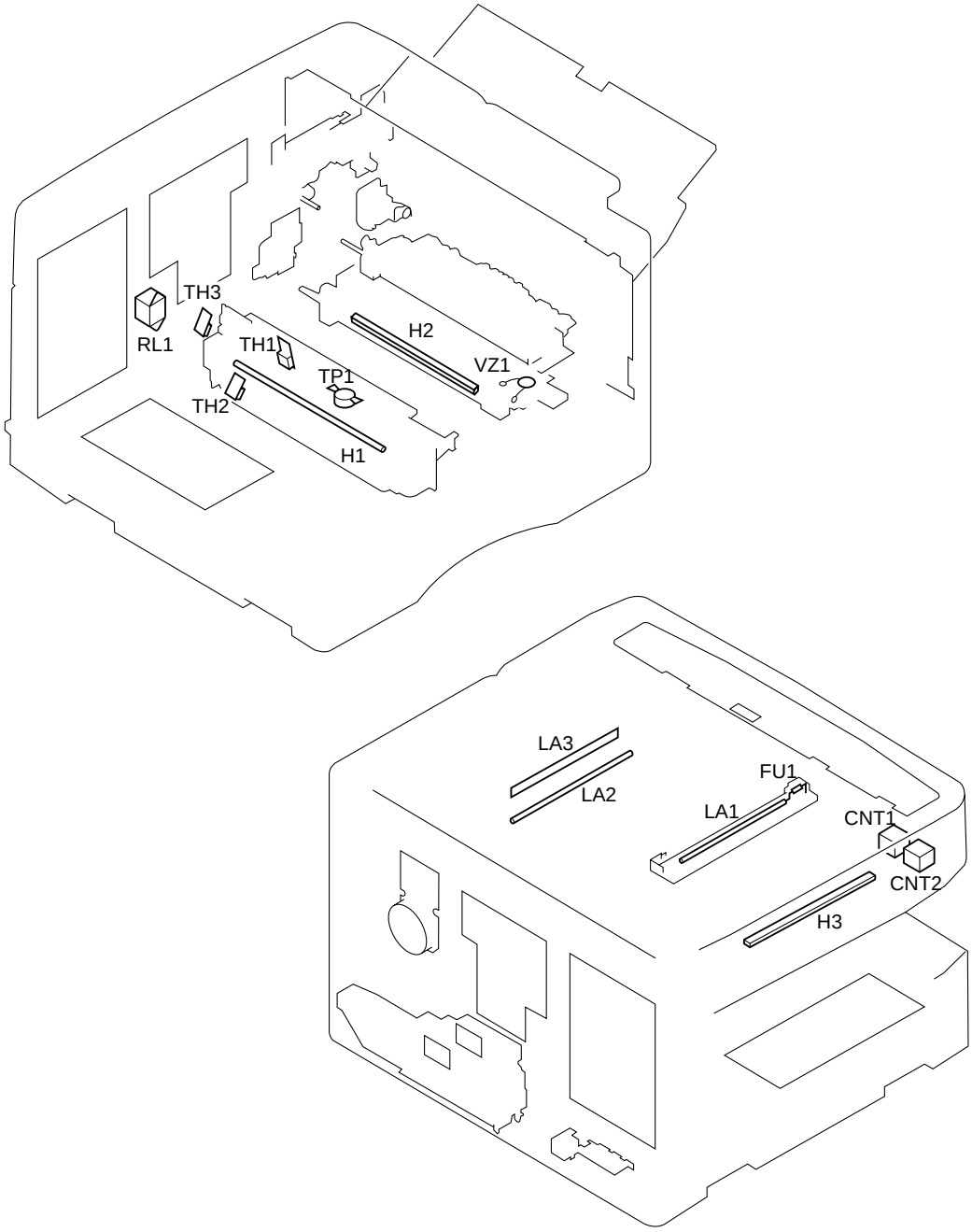

Figure 10-603

COPYRIGHT © 1998 CANON INC.
CANON NP7161/NP7160 REV.0 AUG. 1998 PRINTED IN JAPAN (IMPRIME AU JAPON)

Symbol	Name	Notation	Description
	Heater	H1 H2 H3	Fixing heater Cassette/drum heater (accessory) Mirror heater (accessory)
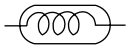	Lamp	LA1	Scanning lamp
	LED	LA2 LA3	Pre-exposure lamp Blank exposure lamp
	Counter	CNT1 CNT2	Total copy counter Accessory counter
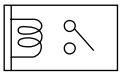	Relay	RL1	Fixing heater power supply control
	Thermal fuse	FU1	Scanning lap overheating detection
	Thermal switch	TSW1	Fixing assembly overheating detection
	Thermistor	TH1 TH2	Fixing roller surface temperature detection 1 Fixing roller surface temperature detection 2
	Cleaner thermistor	TH3	Ambient temperature detection
	Varistor	VZ1	Varistor

Table 10-603

COPYRIGHT © 1998 CANON INC.

D. PCBs

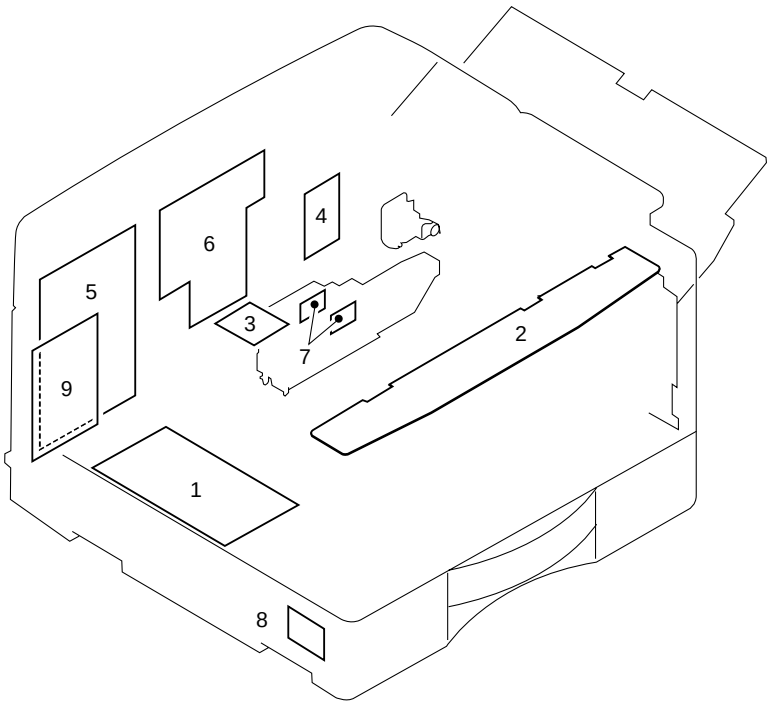

Figure 10-604

Ref.	Name	Description
[1]	DC controller PCB	Sequence control
[2]	Control panel PCB	Control key/control display
[3]	AE sensor	Original density detection
[4]	Lamp regulator PCB	Scanning lamp on voltage control
[5]	Power supply PCB	Power supply
[6]	High-voltage power supply PCB	High-voltage output
[7]	Waste toner sensor	Waste toner full detection
[8]	Cassette size switch PCB	Cassette size detection
[9]	Accessory power supply PCB	ADF and sorter DC power supply

Table 10-604

COPYRIGHT © 1998 CANON INC.

E. Variable Resistors, Light-Emitting Diodes, and Check Pins by PCB

Of the variable resistors (VR), light-emitting diodes (LD), and check pins used in the copier, those needed for servicing work in the field are discussed.

Caution:

1. Some LEDs retain current even when off and emit dim light. This is a normal condition and must be kept in mind.
2. VRs that may be used in the field .....
3. VRs that must not be used in the field .....

Caution:

Do not use the VRs or check pins not found in the tables. They are for factory use, and require special tools and high accuracy.

1. DC Controller PCB

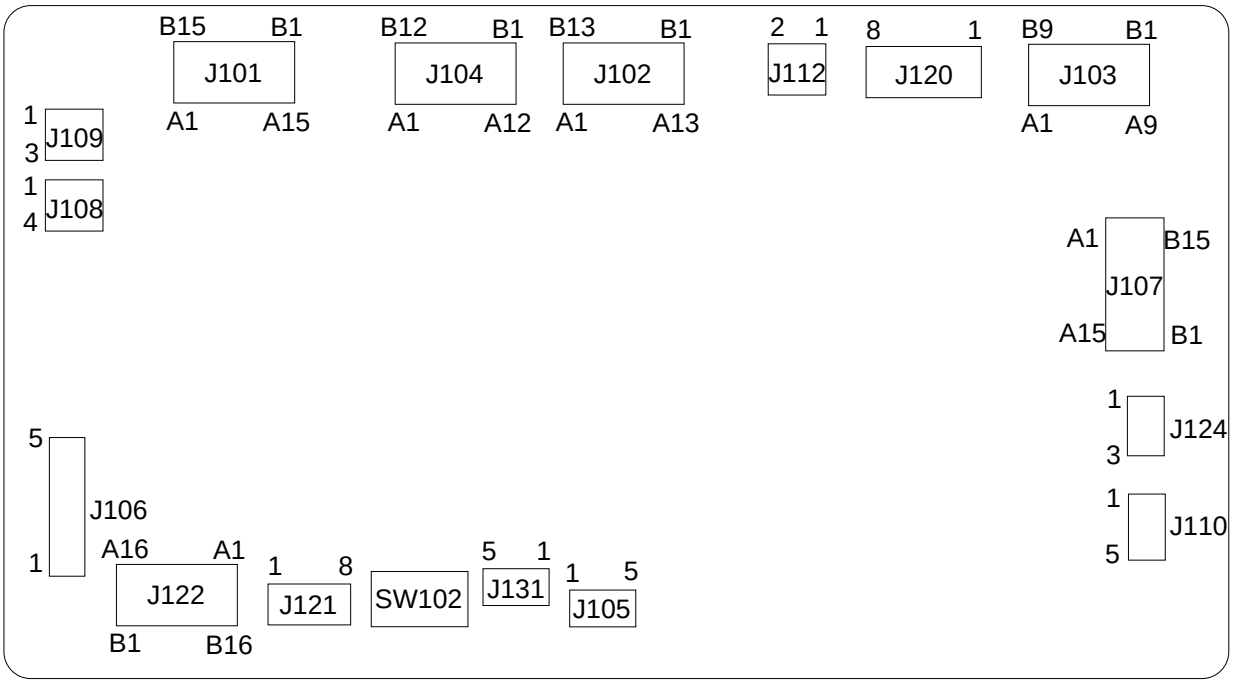

Figure 10-605

	Item	Remarks		
SW102-1	Use to change size.	Settings	SW102-1	SW102-2
		INCH	ON	ON
SW102-2		A	OFF	ON
		AB/INCH	ON	OFF
		AB	OFF	OFF
SW102-3	Use to set power supply voltage.	ON :230V	OFF : 120V	
SW102-4	—	—		
SW102-5	Use to set the accessory counter.	Settings	SW102-5	SW102-6
		No accessory counter	OFF	OFF
SW102-6		Small-size copy counter	ON	OFF
		Large-size copy counter	OFF	ON
		Not used	ON	ON
SW102-7	Large size copy counting method	ON: 2 counts	OFF: 1 count	
SW102-8	—	—		

Table 10-605

Inch-configuration (4R3E)	Ratio
200%	200.0%
LTR→11"×17"	129.4%
LGL→11"×17"	121.4%
100%	100.0%
LGL→LTR	78.6%
11"×17"→LGL	73.3%
11"×17"→LTR	64.7%
50%	50.0%

Table 10-606

A-configuration (2R2E)	Ratio
200%	200.0%
A4→A3	141.4%
100%	100.0%
A3→A4	70.7%
50%	50.0%

Table 10-607

COPYRIGHT © 1998 CANON INC.

AB/Inch-configuration (4R4E)	Ratio
200%	200.0%
A4/LTR→A3, B5→B4	141.4%
A4/LTR→B4	122.4%
B4→A3, B5→A4/LTR	115.4%
100%	100.0%
A3→B4, A4/LTR→B5	86.5%
B4→A4/LTR	81.6%
A3→A4/LTR, B4→B5	70.7%
50%	50.0%

Table 10-608

AB-configuration (4R4E)	Ratio
200%	200.0%
A4→A3, B5→B4	141.4%
A4→B4	122.4%
B4→A3, B5→A4	115.4%
100%	100.0%
A3→B4, A4→B5	86.5%
B4→A4	81.6%
A3→A4, B4→B5	70.7%
50%	50.0%

Table 10-609

COPYRIGHT © 1998 CANON INC.

2. Power Supply PCB

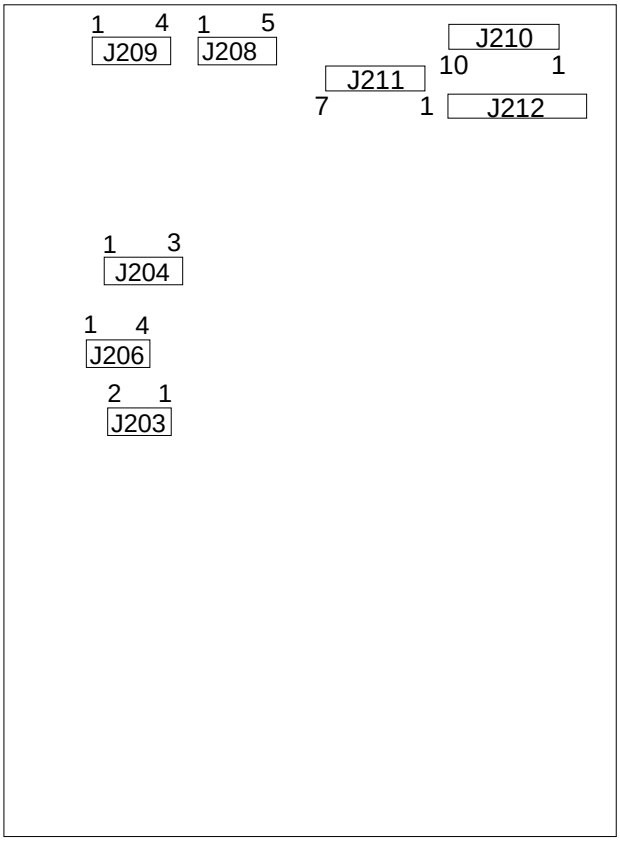

Figure 10-606

3. Lamp Regulator PCB

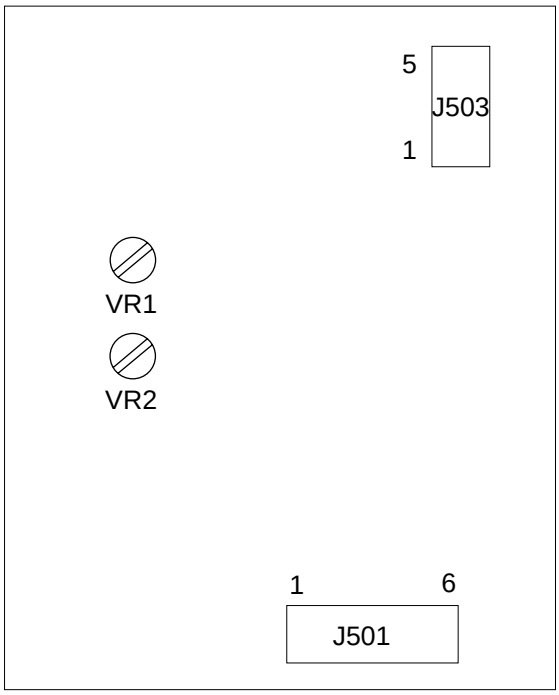

Figure 10-607

COPYRIGHT © 1998 CANON INC.

4. High-Voltage Power Supply PCB

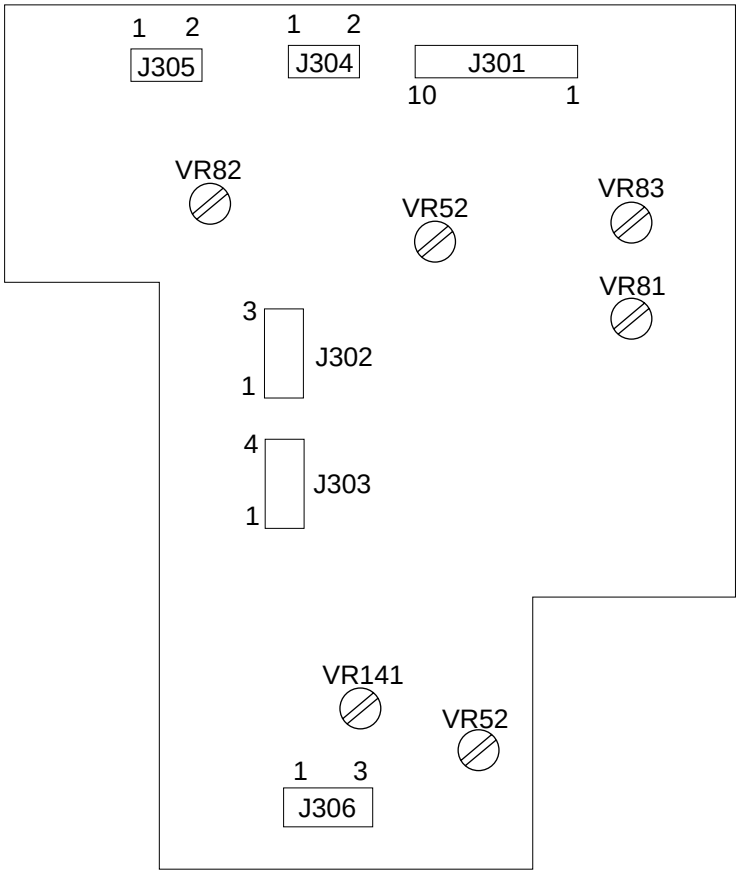

Figure 10-608

VII. SERVICE MODE

A. Outline

The copier's service mode is divided into the following seven:

No.	Description
[1]	DISPLAY
[2]	I/O DISPLAY
[3]	ADJUST
[4]	FUNCTION
[5]	OPTION
[6]	COUNTER
[7]	APPLICATION

Table 10-701

B. Using Service Mode

1. Starting Service Mode

1) Press the User Mode key.
   - If you are planning to make checks as in I/O display mode while making copies, select the appropriate copying mode before pressing the User Mode key.
2) Hold down the '2' and '8' keys on the keypad at the same time for 0.5 sec or more.
3) Press the User Mode key once again.
   - The copier will indicate '[1]' on its control panel as soon as it enters service mode.
   - The copier will end service mode in response to a press on the Reset key.

2. Selecting Service Mode

1) Select the mode you want for making checks or adjustments (Table 10-701) using the keypad.
   - The 10's place will switch to indicate the input numeral.
   - The copier will start making copies in response to a press on the Start key using the settings that were effective immediately before the start of service mode.
2) Press the AE key.
   - The copier will indicate a 3-digit number, and the 100's place will start to flash and 10' and 1's places will turn on.
3) Select the mode you want to use for making checks or adjustments using the keypad.
   - The 10's and 1's places will serve to indicate the input numerals.
   - The copier will return to the condition in step 1) above in response to a press on the AE key.
4) Press the Start key to execute the selected service mode.
   - The copier will return to the condition in step 3) in response to a press on the AE key while it is executing service mode.

COPYRIGHT © 1998 CANON INC.

C. Using Adjust Mode and Function Mode

In adjust mode and function mode, the copier stores the settings made on the control panel in the RAM on the DC controller PCB and use them to simulate the functions of conventional variable resistors and switches.

Figure 10-701 shows the information sheet stored behind the copier's front door. Each copier is adjusted at the factory, and the adjustment values are recorded in the sheet.

If you have replaced the DC controller PCB or initialized the RAM, you will have to enter the values recorded in the information sheet into the RAM on the DC controller PCB. Moreover, if you have entered any values newly in the field, be sure to record the value in this sheet.

		TYP		
301	AE_ADJ			
302	LMP_ADJ			
303	AE_SLOP			
305	REGIST			
306	LE_BLANK			
307	PG_RGST			
308	PG_BLANK			
309	TE_BLANK			
319	MF_ARCH			
320	CST1_ARCH			
321	CST2_ARCH			
326	LIGHT_5			
327	LNS_HP			
328	MIRR_HP			
329	LNS_TBL			
330	MIRR_TBL			
331	MLT_CL			
332	MLT_TMG			
519	MODEL_SW			
701	DOC_ST_L			

Figure 10-701

COPYRIGHT © 1998 CANON INC.

D. Display Mode [1]

- To select an item, use the keypad.
- To execute an item, use the Start key.
- To cancel an item, use the Clear key.

No.	Description	Remarks
101	Indicates the type of jam.	Indicates the type of jam. (See Table 10-702.)
106	E805	Indicates the code of the fan that caused E805. "01: exhaust fan at rear (FM2) "02: exhaust fan at fount (FM4) "03: sorter kit fan (FM5)
107	Indicates a history of jams.	Indicates the most recent five jams. A press on '1' through '5' keys will show the respective jams. (See Table 10-702.)
108	Indicates a history of errors.	Indicates the most recent five error codes. A press on '1' through '5' keys will show their respective error codes and the number being pressed.
109	Indicates the temperature detected by the fixing main thermistor (TH1).	unit: °C
110	Indicates the temperature detected by the fixing sub thermistor (TH2).	unit: °C
111	Indicates the temperature detected by the cleaner thermistor (TH3).	unit: °C
112	Indicates the output voltage of the AE sensor.	A press on the Start key will execute AE scanning. The output voltage of the AE sensor is indicated in decimal notation using three digits (e.g., 245 V will be indicated as '245').
113	Indicates the version of the ROM.	Indicates the version of the program.
114	Indicates the release number of the ROM.	Indicates the release number of the program.
115	Indicates the jam history of the ADF.	Indicates the history of the most recent five jams. A press on the '1' through '5' keys will indicate the type of their respective jams. (See Table 10-703.)
116	Indicates the jam history of the sorter.	Indicates the history of the most recent five jams. A press on the '1' through '5' keys will indicate the type of their respective jams. (See Table 10-705.)
117	Indicates the type of jam in the ADF.	Indicates the type of jam. (See Table 10-703.)
118	Indicates the type of warning for the ADF.	Indicates alarm codes of the ADF. (See Table 10-704.)
119	Indicates the version of the ROM of the ADF.	Indicates the version of the program.

COPYRIGHT © 1998 CANON INC.

No.	Description	Remarks
120	Indicates the release number of the ROM of the ADF.	Indicates the release number of the program.
121	Indicates the type of jam in the sorter.	Indicates the type of jam in the sorter. (See Table 10-705.)
122	Indicates the tray warning for the sorter.	Indicates the alarm code for the sorter. (See Table 10-706.)
123	Indicates the stapling alarm for the sorter.	Indicates the alarm code for the sorter. (See Table 10-707.)
124	Indicates the version of the ROM of the sorter.	Indicates the version of the program.
125	Indicates the release number of the ROM of the sorter.	Indicates the release number of the program.
126	Checks the keys on the control panel.	See p. 10-87.

Guide to Jam Types (No. 101) and Jam History (No. 107)

- The type of jam is indicated using the following codes in the 10's and 1's places. In the case of the history, the number corresponding to the keys on the keypad will be indicated in the 100's place.

Code	Description	Sensor
01	Registration delay jam	PS5
02	Registration stationary jam	
03	Registration paper sensor timing jam	
04	Delivery delay jam	PS6
05	Delivery stationary jam	
06	Right door open jam	PS11
07	Power-on jam	PS5, PS6
40	ADF jam	
50	Sorter jam	

Table 10-702

COPYRIGHT © 1998 CANON INC.

Guide to ADF Jam History (No. 115) and ADF Jam Type (No. 117)

- The type of jam is indicated using the following codes in the 10's and 1's places. In the case of the history, the number corresponding to the keys on the keypad will be indicated in the 100's place.

Code	Description
01	Separation extraction
02	Separation delay
03	Pick-up delay
04	Pick-up leading edge skew
05	Pick-up stationary
06	Pick-up double feeding
07	Pick-up trailing edge skew
08	Pick-up trailing edge retreat
09	Pick-up fault (leading edge)
41	Delivery delay
42	Delivery stationary
81	Open
82	Door open
84	Jam original page
87	Double feeding

Table 10-703

Guide to ADF Warning (No. 118)

Code	Description
02	Tray sensor off
03	Separation fault
04	Separation skew
05	Separation stopper override
11	Original pages-jam recovery pages mismatch
12	Original page in excess of 100
13	Original extraction
14	Original size error

Table 10-704

Guide to Sorter Jam History (No. 116) and Sorter Jam Type (No. 121)

- The type of jam is indicated using the following codes in the 10's and 1's places. In the case of the history, the number corresponding to the keys on the keypad will be indicated in the 100's place.

Code	Description
03	Feeding delay
04	Feeding stationary
05	Timing
06	Staple (stapler sorter only)
07	Power-on
08	Door open

Table 10-705

COPYRIGHT © 1998 CANON INC.

Guide to Sorter Tray Warning (No. 122)

Code	Description
02	Overstacking

Table 10-706

Guide to Sorter Stapling Warning (No. 123)

Code	Description
01	Stapler down
02	Staple
03	Stapler safety protection
04	Edging fault
05	Stapling overstacking
06	Staple stacking limit
07	Mixed paper sizes (breadthwise)
08	Staple unit absent
09	Paper in stapler
0A	Staple absent

Table 10-707

Checking the Control Panel Keys (No. 126)

1) While the copier is in mode No. 126, press all keys on the control panel except the Start key.
2) Press the Start key.
   - If '000' is indicated on the control panel, all keys are normal.
   - If an error key is found, the copier will indicate its respective code (Table 10-708). If multiple keys are found to be faulty, the copier will indicate the lowest-number code only.

Code	Key	Code	Key
1	Sorter key	17	Interrupt key
2	Auto Zoom key	18	Energy Saver key
3	Photo key	19	Clear key
4	Image Combination / Two-page Separation key	20	ID key
5	AE key	21	Number 0 key
6	Stop key	22	Number 1 key
7	Start key	23	Number 2 key
8	Reduce key	24	Number 3 key
9	1:1 key	25	Number 4 key
10	Enlarge key	26	Number 5 key
11	Paper Select key	27	Number 6 key
12	% key	28	Number 7 key
13	+ Zoom key	29	Number 8 key
14	- Zoom key	30	Number 9 key
15	Reset key	31	Fit Image key
16	Additional Functions key		

Table 10-708

COPYRIGHT © 1998 CANON INC.

E. I/O Display Mode [2]

- To select an item, use the keypad.
- To execute an item, use the Start key.
- To cancel an item, use the Clear key.

No.	Description	Remarks
201	Not used.	
202	Indicates digit 4.	Indicates the state of input. (See p. 10-89.)
203	Indicates digit 5.	Indicates the state of input. (See p. 10-89.)
204	Indicates digit 6.	Indicates the state of input. (See p. 10-89.)
205	Indicates digit 7.	Indicates the state of input. (See p. 10-89.)
206	Indicates the voltage of the fixing main thermistor (TH1).	Indicates the detected voltage. (e.g., 2.78 V will be indicated as '278'.)
207	Indicates the voltage of the fixing sub thermistor (TH2).	Indicates the detected voltage. (e.g., 2.78 V will be indicated as '278'.)
208	Indicates the voltage of the AE sensor.	Indicates the detected voltage. (e.g., 2.78 V will be indicated as '278'.)
209	Indicates the voltage of the cleaner thermistor (TH3).	Indicates the detected voltage. (e.g., 2.78 V will be indicated as '278'.)
216	Indicates the voltage of the density adjusting volume (VR1).	Indicates the detected voltage. (e.g., 2.78 V will be indicated as '278'.)
219	Indicates CPU port 6.	Indicates the state of input. (See p. 10-89.)
220	Indicates CPU port 8.	Indicates the state of input. (See p. 10-89.)
221	Not used.	
222	Indicates PIO1B.	Indicates the state of input. (See p. 10-89.)
223	Indicates PI03B.	Indicates the state of input. (See p. 10-89.)
224	Not used.	
225	Not used.	

COPYRIGHT © 1998 CANON INC.

Guide to Nos. 202, 203, 204, 205, 219, 220, 222, and 223

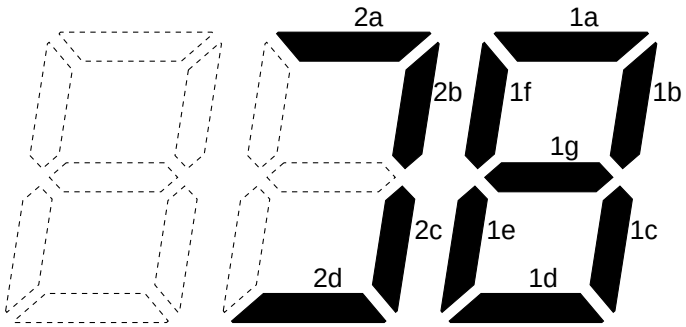

Figure 10-702

No.	LED	Description	Notation	Signal	Connector	Remarks
201	1a	–	–	–	–	–
	1b	–	–	–	–	–
	1c	–	–	–	–	–
	1d	–	–	–	–	–
	1e	–	–	–	–	–
	1f	–	–	–	–	–
	1g	–	–	–	–	–
	2a	–	–	–	–	–
	2b	–	–	–	–	–
	2c	–	–	–	–	–
	2d	–	–	–	–	–
202	1a	Detects the presence/absence of the total copy counter.	CNT1	TCNT_DR*	J102-A10	ON: present.
	1b	Detects the presence/absence of paper in cassette 1.	PS4	CSTPDT	J107-B12	ON: present.
	1c	Detects the presence/absence of a control card.	–	CCDT*	J104-A10	ON: absent.
	1d	Detects the state (open/closed) of the right door.	PS11	RDOPDT	J107-B7	ON: closed.
	1e	–	–	–	–	–
	1f	–	–	–	–	–
	1g	–	–	–	–	–
	2a	–	–	–	–	–
	2b	Detects paper in the multifeeder.	PS7	MLTPDT0	J107-A8	ON: present.
	2c	Detects the width of paper in the multifeeder (1).	PS9	MLTPDT1	J107-A11	
	2d	Detects the width of paper in the multifeeder (2).	PS10	MLTPDT2	J107-A14	

Table 10-709a

COPYRIGHT © 1998 CANON INC.

No.	LED	Description	Notation	Signal	Connector	Remarks
203	1a	–	–	–	–	–
	1b	–	–	–	–	–
	1c	Detects the presence/absence of an accessories counter.	CNT2	OPCNT_DR*	J102-A12	ON: present.
	1d	–	–	–	–	–
	1e	Detects the rotation of the scanner cooling fan (front).	FM1	SCFAN_DT*	J104-B2	ON: on.
	1f	–	–	–	–	–
	1g	Detects the rotation of the exhaust fan.	FM4	EXFAN0_DT*	J104-B8	ON: on.
	2a	Detects the rotation of the exhaust fan.	FM2	EXFAN1_DT*	J104-B11	ON: on.
	2b	–	–	–	–	–
	2c	–	–	–	–	–
	2d	–	–	–	–	–
204	1a	Cassette 1 size detection 0	SW651	CSTS0	J110-4	ON: on.
	1b	Cassette 1 size detection 1	SW652	CSTS1	J110-3	ON: on.
	1c	Cassette 1 size detection 2	SW653	CSTS2	J110-2	ON: on.
	1d	Cassette 1 size detection 3	SW654	CSTS3	J110-1	ON: on.
	1e	–	–	–	–	–
	1f	–	–	–	–	–
	1g	–	–	–	–	–
	2a	–	–	–	–	–
	2b	–	–	–	–	–
	2c	–	–	–	–	–
	2d	–	–	–	–	–
205	1a	DSW102-1 setting	–	–	–	ON: on.
	1b	DSW102-2 setting	–	–	–	ON: on.
	1c	DSW102-3 setting	–	–	–	ON: on.
	1d	DSW102-4 setting	–	–	–	ON: on.
	1e	DSW102-5 setting	–	–	–	ON: on.
	1f	DSW102-6 setting	–	–	–	ON: on.
	1g	DSW102-7 setting	–	–	–	ON: on.
	2a	DSW102-8 setting	–	–	–	ON: on.
	2b	–	–	–	–	–
	2c	–	–	–	–	–
	2d	IPC detection (presence/absence)	–	–	–	ON: absence.
219	1a	–	–	–	–	–
	1b	Mirror home position detection	PS3	MRRHP	J103-B8	OFF: at HP.
	1c	Lens home position detection	PS2	LNSHP	J103-B5	OFF: at HP.
	1d	–	–	–	–	–
	1e	–	–	–	–	–
	1f	–	–	–	–	–
	1g	–	–	–	–	–
	2a	–	–	–	–	–
	2b	–	–	–	–	–
	2c	–	–	–	–	–
	2d	–	–	–	–	–

Table 10-709b

COPYRIGHT © 1998 CANON INC.

No.	LED	Description	Notation	Signal	Connector	Remarks
220	1a	Scanner home position detection	PS1	SCHP	J103-B2	OFF: at HP.
	1b	–	–	–	–	–
	1c	–	–	–	–	–
	1d	–	–	–	–	–
	1e	–	–	–	–	–
	1f	–	–	–	–	–
	1g	–	–	–	–	–
	2a	–	–	–	–	–
	2b	–	–	–	–	–
	2c	–	–	–	–	–
	2d	–	–	–	–	–
221	1a	–	–	–	–	–
	1b	–	–	–	–	–
	1c	–	–	–	–	–
	1d	–	–	–	–	–
	1e	–	–	–	–	–
	1f	–	–	–	–	–
	1g	–	–	–	–	–
	2a	–	–	–	–	–
	2b	–	–	–	–	–
	2c	–	–	–	–	–
	2d	–	–	–	–	–
222	1a	Waste toner box full detection	–	TNFDT	J106-9	ON: full.
	1b	Main heater triac short circuit detection	H1	–	–	ON: on.
	1c	–	–	–	–	–
	1d	Scanning lamp on detection	LA1	LMPDT	J106-6	ON: on.
	1e	Toner level detection	TS1	TNEMP	J102-B2	ON: present.
	1f	Delivery detection	PS6	EXITPD	J124-2	ON: present.
	1g	Pre-registration paper detection	PS5	RGPDT	J107-A2	ON: present.
	2a	–	–	–	–	–
	2b	–	–	–	–	–
	2c	–	–	–	–	–
	2d	–	–	–	–	–
223	1a	–	–	–	–	–
	1b	–	–	–	–	–
	1c	–	–	–	–	–
	1d	–	–	–	–	–
	1e	Zero-cross direction detection	–	–	–	–
	1f	Waste toner feedscrew lock detection	PS8	TRQMLDT	J106-10	
	1g	–	–	–	–	–
	2a	Main motor (M1) lock detection	M1	MM_LKDT*	J106-16	ON: motor off.
	2b	–	–	–	–	–
	2c	–	–	–	–	–
	2d	–	–	–	–	–

Table 10-709c

COPYRIGHT © 1998 CANON INC.

F. Adjust Mode [3]

- To select an item, use the keypad.
- To execute an item, press the Start key.
- To change a setting, use the keypad or the +/- Zoom key.
- To enter a value, press the Start key.
- To remove an item, press the AE key.

No.	Description	Settings	Remarks
301	Executes AE auto adjustment.	—	Use it to perform AE adjustment. (See p. 10-19.)
302	Adjust the lamp intensity for AE mode.	450 – 750 (120V model) 0 – 590 (230V model)	A higher setting will increase the intensity of the scanning lamp (LA1), making the copies lighter. (Use it when performing AE adjustment.)
303	Adjusts the copy density (developing bias) slope for AE mode.	0 – 255	A higher setting will make the copies lighter. (Use it when performing AE adjustment.)
305	Adjust the leading edge margin (registration roller clutch CL1 activation timing).	0 – 500	A higher setting will delay pick-up of copy paper in relation to the image, thereby decreasing the leading edge margin. (unit: 0.21 mm)
306	Adjusts the leading edge non-image width (blank exposure lamp LA3 de-activation timing).	0 – 500	A higher setting will delay de-activation of the lamp, thereby increasing the leading edge non-image width. (unit: 0.21 mm)
307	Adjusts the leading edge registration on right pages in page separation (registration roller clutch CL1 activation timing).	0 – 500	A higher setting will delay pick-up of copy paper in relation to the image, thereby decreasing the leading edge margin. (unit: 0.21 mm)
308	Adjusts the leading edge margin on right pages in page separation mode (blank exposure lamp LA3 de-activation timing).	0 – 500	A higher setting will delay de-activation of the lamp, thereby increasing the leading edge non-image width. (unit: 0.21 mm)
309	Adjusts the trailing edge margin (blank exposure lamp LA3 activation timing).	0 – 500	A higher setting will advance activation of the lamp, thereby increasing the trailing edge margin. (unit: 0.21 mm)
319	Adjusts the arching in multifeeder mode (de-activation of the multifeeder pick-up roller clutch CL3).	0 – 200	A higher setting will delay deactivation of the clutch, thereby increasing arching. (unit; 0.21 mm)
320	Adjusts the arching in cassette 1 pick-up mode (de-activation of pick-up roller clutch CL2).	0 – 100	A higher setting will increase the arching. (unit: 0.42 mm)
321	Adjusts the arching in cassette 2 pick-up mode (de-activation of the pick-up roller clutch).	0 – 100	A higher setting will delay de-activation of the clutch, thereby increasing the arching. (unit: 0.42 mm)

COPYRIGHT © 1998 CANON INC.
CANON NP7161/NP7160 REV.0 AUG. 1998 PRINTED IN JAPAN (IMPRIME AU JAPON)

No.	Description	Settings	Remarks
326	Adjusts the activation voltage of the scanning lamp.	450 – 660 (120V model) 0 – 390 (230V model)	A higher setting will increase the intensity of the scanning lamp (LA1), making the copies lighter.
327	Adjusts the position of the lens (Direct at 100%).	0 – 200	A higher setting will enlarge the image. (unit:0.1 mm)
328	Adjusts mirror home position (at 100% ratio).	0 – 400	A higher setting will enlarge the image. (unit: 0.1 mm)
329	Selects a table for lens travel to suit reproduction ratio.	0 – 3	If you replaced the DC controller PCB or initialized the RAM, be sure to enter the value recorded on the Service Label stored behind the front door.
330	Selects a table for No. 4/No. 5 mirror travel to suit reproduction ratio.	0 – 3	If you replaced the DC controller PCB or initialized the RAM, be sure to enter the value recorded on the Service Label stored behind the front door.
331	Adjusts the timing of activation of the multifeeder pick-up clutch (CL3). Use this mode if double feeding or pick-up failure cannot be corrected by adjusting the pressure of the separation pad.	0 – 999	A higher setting will delay activation of the clutch. (unit: 0.02 sec) • If pick-up failure occurs, decrease the setting. • If double feeding occurs, increase the setting.
332	Adjusts activation of the multifeeder pick-up clutch (CL3) Use this mode if pick-up failure occurs when using thick paper.	0 – 999	A higher setting will delay activation of the clutch. (unit: 0.02 sec) • If thick paper is not fed as far as the registration roller, increase the setting.

COPYRIGHT © 1998 CANON INC.

G. Function Mode [4]

- To select an item, use the keypad.
- To execute an item, use the Start key.
- To stop an item, use the Stop key.
- To clear an item, use the Clear key.

Caution:

Be sure that the copier is in standby state when executing any item.

No.	Description	Remarks
401	Stirs toner.	The developing assembly (main motor) will rotate 4 min. (The pre-exposure lamp LA2 and the blank exposure lamp LA3 will turn on, and all high-voltage outputs will turn off.)
402	Releases the multifeeder holding plate.	Releases the multifeeder holding plate.
403	Drum unit installation mode. Execute this mode at the time of drum unit installation or replacement.	The drum unit and developing assembly will rotate 40 sec.
406	Checks the fixing nip.	Checks the fixing nip. (The Stop key will be disabled.)
408	Checks the activation of the scanning lamp (LA1).	The scanning lamp will turn on for 5 sec.
409	Checks all indicators on the control panel.	All LEDs on the control panel will turn on for 5 sec.
410	Checks the forward movement of the scanning lamp.	The scanner moves forward while the + key is held down. The scanner moves in reverse while the - key is held down.
411	Checks the activation of the pre-exposure lamp (LA2).	The pre-exposure lamp will turn on.
412	Initializes E000, E001, E002, E003, or E004.	Press the Start key while the error code (E000, E001, E002, E003, or E004) is indicated.
440	Moves the scanner, lens, and No. 4/No. 5 mirror unit.	Execute this mode before transporting the machine so that the scanner, lens, and No. 4/No. 5 mirror unit will be positioned for transportation.
450	Initializes the back-up RAM.	Press '1' on the keypad and the Start key in sequence. (The power will turn off, initializing all RAM data.)

COPYRIGHT © 1998 CANON INC.

H. Option Mode [5]

- To select an item, use the keypad.
- To execute an item, use the Start key.
- To change settings, use the keypad or the + and - Zoom keys.
- To store settings, use the Start key.
- To cancel an item, use the Clear key.

No.	Description	Remarks
505	Sets U1 size.	See Table 10-710.
506	Sets U2 size.	See Table 10-710.
510	Sets drum cleaning. To remove dirt from the surface of the photosensitive drum, toner is deposited on the surface after copying operation and the cleaning blade is used to collect the toner together with the dirt. (In addition, LSTR is extended by 6.5 sec.)	0: Disable drum cleaning (standard). 1: Execute drum cleaning for every 50 copies (standard in Chinese mode). 2: Execute drum cleaning for every 25 copies. 3: Execute drum cleaning for every 10 copies.
511	Sets the copying start temperature for auto start mode.	0: 140°C (standard) 1: 180°C
512	Sets the copying start temperature.	0: 160°C (standard) 1: 180°C
513	Sets the fixing target temperature for A3, A4, 279 × 432mm (11" × 17"), LTR.	0: Standard target temperature 1: Standard target temperature +10°C 2: Standard target temperature + 5°C 3: Standard target temperature - 5°C 4: Standard target temperature -10°C
514	Sets the fixing target temperature for B4, B5, and LGL.	0: Standard target temperature 1: Standard target temperature +10°C 2: Standard target temperature + 5°C 3: Standard target temperature - 5°C 4: Standard target temperature -10°C
515	Sets the fixing target temperature for A4R, A5, B5R, and LTRR.	0: Standard target temperature 1: Standard target temperature +10°C 2: Standard target temperature + 5°C 3: Standard target temperature - 5°C 4: Standard target temperature -10°C
516	Sets the fixing target temperature for A5R.	0: Standard target temperature 1: Standard target temperature +10°C 2: Standard target temperature + 5°C 3: Standard target temperature - 5°C 4: Standard target temperature -10°C

COPYRIGHT © 1998 CANON INC.

No.	Description	Remarks
517	Enables/disables retry for cassette pick-up operation. In cassette pick-up mode, pick-up operation will be executed once again without indicating the first registration delay jam.	0: Make a retry (standard). Indicates the Jam message in response to the second registration delay jam. 1: Do not make a retry. Indicates the Jam message in response to the first registration delay jam.
518	Sets the count for the control card in multifeeder pick-up.	0: Increment by 1 for all sizes (standard). 1: Increment by 2 for all sizes.
519	Selects settings to suit the site of installation. Making changes using this mode will change the settings under '510' as follows: • If '1' is selected instead of '0' in this mode, '1' will be set under '510'. • If '0' is selected instead of '1' in this mode, '0' will be set under '510'. However, '510' settings may be changed after making changes in this mode.	0: Normal (standard) 1: China The standard target temperature for fixing will be lowered by 10°C. In addition, 'U14' will be added to user mode.

Paper Sizes Available under No. 505/506

Code	Paper	Size (vertical x horizontal in mm)
0	BOLIVIA	216.0 x 355.0
1	ARGENTINE OFICIO	220.0 x 340.0
2	ARGENTINE LEGAL	220.0 x 340.0
3	AUSTRALIAN FOOLSCAP	206.0 x 337.0
4	FOOLSCAP	215.9 x 330.2
5	FOLIO	210.0 x 330.0
6	GOVERNMENT LEGAL	203.2 x 330.2
7	ECUADORAN OFICIO	220.0 x 320.0
8	OFFICIO	216.0 x 317.0
9	ARGENTINE LETTER R	220.0 x 280.0
10	KOREAN LEGAL R	190.0 x 268.0
11	GOVERNMENT LETTER R	203.2 x 266.7
12	ARGENTINE LETTER	280.0 x 220.0
13	GOVERNMENT LETTER	266.7 x 203.2
14	KOREAN LEGAL	268.0 x 190.0

Table 10-710

COPYRIGHT © 1998 CANON INC.

I. Counter Mode [6]

- To select an item, use the keypad.
- To execute an item, use the Start key.
- To cancel an item, use the Clear key.
- The result obtained by multiplying the indicated value by 100 will be the actual count.

No.	Description	Remarks
601	Large copy counter	
602	Small copy counter	
603	Total copy counter	
604	ADF large original page counter	
605	ADF small original page counter	
606	Count clear	A press on the Start key will initialize the count (601 to 605), returning it to '0' on the control panel.

COPYRIGHT © 1998 CANON INC.

J. Application Mode [7]

- To select an item, use the keypad.
- To execute an item, use the Start key.
- To change the value, use the keypad or the + and - Zoom keys.
- To store settings, use the Start key.
- To cancel an item, use the Clear key.

No.	Description	Settings	Remarks
701	Adjusts the ADF original page stop position.	1–255	A lower setting will move the original page stop position in the direction of delivery. (unit: 0.116 mm)

COPYRIGHT © 1998 CANON INC.
CANON NP7161/NP7160 REV.0 AUG. 1998 PRINTED IN JAPAN (IMPRIME AU JAPON)

VIII. SELF DIAGNOSIS

The microprocessor on the copier's DC controller PCB is equipped with a function that checks the condition of the machine (especially the condition of sensors). It runs checks at such times as programmed, and will indicate any fault it finds in the form of code.

A. Copier

Code	Cause	Description
E000	• The thermistor (TH1, TH2) has poor contact or an open circuit. • The fixing heater (H1) has an open circuit. • The thermal switch (TSW1) has turned on. • The triac is faulty. • The DC controller PCB is faulty.	• The surface temperature of the fixing upper roller does not reach 40°C within 14 sec after power-on.
E001	• The thermistor (TH1, TH2) has a short circuit. • The triac is faulty. • The DC controller PCB is faulty.	• The surface temperature of the fixing upper roller exceeded 230°C.
E002	• The thermistor (TH1, TH2) has poor contact or an open circuit. • The fixing heater (H1) has an open circuit. • The thermal switch (TSW1) has turned on. • The triac is faulty. • The DC controller PCB is faulty.	• The surface temperature of the fixing upper roller does not reach 60°C within 10 after it exceeded 40°C. • The surface temperature of the fixing upper roller does not reach 80°C within 10 sec after it exceeded 60°C. • The surface temperature of the fixing upper roller does not reach 100°C within 10 sec after it exceeded 80°C. • The surface temperature of the fixing upper roller does not reach 120°C within 10 sec after it exceeded 100°C.
E003	• The thermistor (TH1, TH2) has poor contact or an open circuit. • The fixing heater (H1) has an open circuit. • The thermal switch (TSW1) has turned on. • The triac is faulty. • The DC controller PCB is faulty.	• The surface temperature of the fixing upper roller drops to 130°C or less after it reached the target temperature (160°C) for standby.
E004	• The triac has a short circuit. • The DC controller PCB is faulty.	• The triac is identified as having a short circuit.

COPYRIGHT © 1998 CANON INC.

Code	Cause	Description
E010	• The main motor (M1) is faulty. • The DC controller PCB is faulty.	• The main motor lock detection signal (MM_LKDT*) is detected for 1 sec continuously while the main motor is being driven.
E013	• The waste toner feedscrew is locked. • The waste toner feedscrew lock sensor (PS8) is faulty. • The DC controller PCB is faulty.	• The waste toner feedscrew lock detection signal (TRQMLDT) does not switch for 0.5 sec or more while the main motor is being driven.
E030	• The total copy counter has an open circuit. • The DC controller PCB is faulty.	• The total copy counter is identified to have an open circuit when the Start key is pressed or when the counter is driven.
E031	• The accessories counter has an open circuit. • The DC controller PCB is faulty.	• The accessories counter is identified as having an open circuit when the Start key is pressed or the couter is being driven.
(E202) No code indication. Keys are disabled. (Note 2)	• The scanner home position sensor (PS1) is faulty. • The scanner motor (M2) is faulty. • The DC controller PCB is faulty.	• The scanner does not return to home position within a specific period of time when it is being moved. • The scanner home position sensor (PS1) remains on during image exposure (forward movement).
E208	• The mirror home position sensor (PS3) is faulty. • The mirror motor (M4) is faulty. • The DC controller PCB is faulty.	• The No. 4/No. 5 mirror unit does not turn on or off the mirror home position sensor (PS3) within a specific period of time while the No. 4/No. 5 mirror unit is being moved.
E210	• The lens home position sensor (PS2) is faulty. • The lens motor (M3) is faulty. • The DC controller PCB is faulty.	• The lens unit does not turn on or off the lens home position sensor (PS2) within a specific period of time when the lens unit is being moved.
E220	• The lamp regulator PCB is faulty. • The DC controller PCB is faulty.	• The scanning lamp turns on during standby. • The scanning lamp turns off during copying.
E261	• The power supply frequency is faulty. • The power supply PCB is faulty.	• The intervals of the zero-cross signals exceed the allowed intervals for 50/60 Hz.

COPYRIGHT © 1998 CANON INC.

Code	Cause	Description
E710	• The DC controller PCB is faulty.	• IC114 (IPC) on the DC controller PCB cannot be initialized at power -on.
E711	• The DC controller PCB is faulty.	• An IPC communication error has been detected twice or more within 1 sec at power-on.
E712	• The DC controller PCB is faulty. • The ADF controller PCB is fault. • The ADF cable is faulty.	• A communication error with the ADF controller PCB cannot be cleared.
E717	• The DC controller PCB is faulty. • The Remote Diagnostic Device II PCB is faulty.	• A condition in which a response from the Remote Diagnostic Device II cannot be received occurred three times continuously. • The Remote diagnostic Device II communicates an interruption of count pulses.
E800	• The auto power-off circuit has an open circuit. • The DC controller PCB is faulty.	• An open circuit is detected for 5 V or 24 V at power-on.
E805	• The exhaust fan (FM2, FM4) is faulty. • The DC controller PCB is faulty.	• The exhaust fan drive detection signal (EXFAN1_DT*, FXFAN0_DT*) cannot be detected 0.5 sec after the start of the exhaust fan (FM2, FM4).
E821	• The ozone filter is clogged. • The cleaner thermistor (TH3) has poor contact or an open circuit. • The DC controller PCB is faulty.	• The cleaner thermistor (TH3) detects 55°C or more.

COPYRIGHT © 1998 CANON INC.

Note:

1. When the diagnostic function has turned on, the copier can be reset by turning it off once. This, however, does not apply to E000, E001, E002, E003, or E004.
   This is to prevent the user from resetting the copier easily when the error is caused by an open circuit in the thermistor, otherwise overheating and damaging the fixing roller.
   Normally, the copier will automatically turn off in about 4 sec if it is turned on without clearing E000 through E004.
   To clear E000 through E004, operate as follows:
   1) Select '412' (clear E000–E004) in service mode.
      • The copier's control panel indicates the respective error code.
   2) Press the Start key.
   3) The copier will automatically turn off, clearing the error.
2. E202 may be checked using '108' in service mode (error history indication).

COPYRIGHT © 1998 CANON INC.
CANON NP7161/NP7160 REV.0 AUG. 1998 PRINTED IN JAPAN (IMPRIME AU JAPON)

B. ADF

Code	Cause	Description
E400	• Exchange of data with the copier has a fault.	• The communication is monitored at all times. This error occurs when the communication with the copier stops.
E401	• The separation motor does not rotate. • The crescent sensor is faulty.	• See the ADF Service Manual.
E402	• The belt motor does not rotate. • The belt clock is faulty.	• See the ADF Service Manual.
E403	• The feed motor does not rotate. • The feed motor clock is faulty.	• See the ADF Service Manual.
E404	• The delivery motor does not rotate. • The delivery clock is faulty.	• See the ADF Service Manual.
E411	• The sensor level is faulty.	• See the ADF Service Manual.
E431	• The auto start separation motor does not rotate. • The auto start crescent sensor is faulty. • The auto start separation clock is faulty.	• See the ADF Service Manual.

Note:

When the self diagnosis function has turned on, the ADF may be reset by turning off the copier.

To continue making copies while the ADF is out of order, disconnect the lattice connector on the ADF side, open the ADF, and place an original on the copyboard glass.

COPYRIGHT © 1998 CANON INC.

C. Sorter

Code	Cause	Description
E500	• Exchange of data with the copier is faulty.	• Communication is monitored at all times. This error occurs when the communication with the copier stops.
E510	• The feed motor does not rotate.	• See the Sorter Service Manual.
E511	• The feed motor rotates too slowly.	• See the Sorter Service Manual.
E513	• The tandem path motor does not rotate.	• See the Sorter Service Manual.
E520	• The stack motor does not rotate.	• See the Sorter Service Manual.
E530	• The alignment motor does not rotate.	• See the Sorter Service Manual.
E531	• The stapler drive motor does not rotate.	• See the Stapler Service Manual.
E540	• The shift motor does not rotate.	• See the Sorter Service Manual.
E541	• The shift motor rotates too slowly.	• See the Sorter Service Manual.
E550	• A timing jam has occurred.	• See the Sorter Service Manual.

D. Cassette Feeding Module

Code	Cause	Description
E904	• The waste toner box swing cam home position sensor is faulty. • The cassette relay PCB is faulty.	• The waste toner box swing cam does not return to home position within a specific period of time when the waste toner box swing cam is being driven.

COPYRIGHT © 1998 CANON INC.

APPENDIX

A. GENERAL TIMING CHART A-1
B. SIGNALS AND ABBREVIATIONS A-2
C. GENERAL CIRCUIT DIAGRAM A-5
D. SPECIAL TOOLS LIST A-7
E. SOLVENTS AND OILS A-8

COPYRIGHT © 1998 CANON INC. CANON NP7161/NP7160 REV.0 AUG. 1998 PRINTED IN JAPAN (IMPRIME AU JAPON)

A. GENERAL TIMING CHART

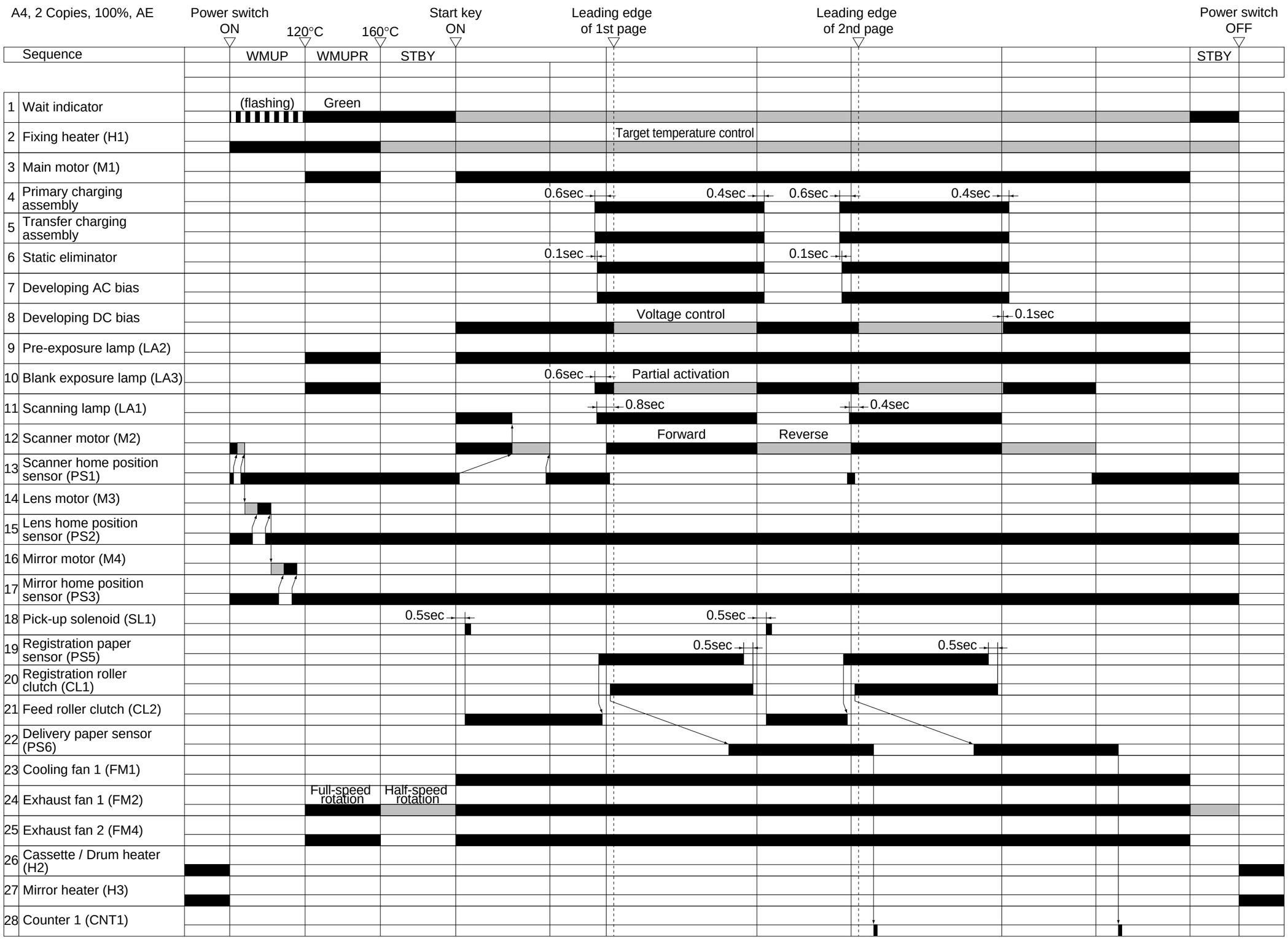

COPYRIGHT © 1998 CANON INC.

B. SIGNALS AND ABBREVIATIONS

1. Signals

5V_ON	5VU ON signal
AC_24V_ON	AC AND 24V ON signal
[AE_DATA]	AE SENSOR OUTPUT signal
[AE_REF]	AE SENSOR REFERENCE signal
BLK_CNDR*	BLANK EXPOSURE LAMP CENTER DRIVE command
BLK_DEN*	BLANK EXPOSURE LAMP DRIVE ENABLE signal
BLK_LCK	BLANK EXPOSURE LAMP SERIAL DATA LATCH signal
BLK_PW	BLANK EXPOSURE POWER line
BLK_SCK	BLANK EXPOSURE LAMP SERIAL DATA CLOCK signal
BLK_SD	BLANK EXPOSURE LAMP SERIAL DATA signal
[CLTH]	CLEANER THERMISTOR signal
[CPY_DNS]	COPY DENSITY VOLUME signal
CSTPDT	CASSETTE PAPER DETECTION signal
CSTS0	CASSETTE SIZE DETECTION 0 signal
CSTS1	CASSETTE SIZE DETECTION 1 signal
CSTS2	CASSETTE SIZE DETECTION 2 signal
CSTS3	CASSETTE SIZE DETECTION 3 signal
DV_AC_CNT	DEVELOPING AC BIAS CONTROL command
DV_AC_DR	DEVELOPING AC BIAS DRIVE command
DV_DC_CNT	DEVELOPING DC BIAS CONTROL command
DV_DC_DR	DEVELOPING DC BIAS DRIVE command
EXFAN0_DR	EXHAUST FAN 0 DRIVE command
EXFAN0_DT*	EXHAUST FAN 0 DRIVE DETECTION signal
EXFAN1_DR	EXHAUST FAN 1 DRIVE command
EXFAN1_DT*	EXHAUST FAN 1 DRIVE DETECTION signal
EXITPD	DELIVERY PAPER DETECTION signal
FEED_CL*	FEED ROLLER CLUTCH DRIVE command
HEAT_DR	FIXING HEATER DRIVE command
HEAT_ERR	FIXING HEATER ERROR DETECTION signal
HVT_DR	HVT DRIVE command
LMP_PWM	SCANNING LAMP PULSE WIDTH MODIFICATION signal
LMPDR	SCANNING LAMP DRIVE command
LMPDT	SCANNING LAMP DRIVE DETECTION signal
LNS_A	LENS MOTOR A command
LNS_A*	LENS MOTOR A* command
LNS_B	LENS MOTOR B command
LNS_B*	LENS MOTOR B* command
LNS_COM	LENS MOTOR DRIVE command
LNSHP	LENS HOME POSITION DETECTION signal
MLT_CL*	MULTIFEED ROLLER CLUTCH DRIVE command
MLT_SL*	MULTIFEED SOLENOID DRIVE command
MLTPD0	MULTIFEEDER PAPER DETECTION signal
MLTPD1	MULTIFEEDER PAPER WIDTH DETECTION signal 1
MLTPD2	MULTIFEEDER PAPER WIDTH DETECTION signal 2
MM_DR	MAIN MOTOR DRIVE command
MM_LKDT	MAIN MOTOR LOCK DETECTION signal
MMR_A	MIRROR MOTOR A command
MMR_A*	MIRROR MOTOR A* command
MMR_B	MIRROR MOTOR B command
MMR_B*	MIRROR MOTOR B* command
MMR_COM	MIRROR MOTOR DRIVE command
MRRHP	MIRROR HOME POSITION DETECTION signal
OPCNT_DR*	ACCESSORY COUNTER DRIVE command
PREXP_DR*	PRE-EXPOSURE LAMP DRIVE command
PU_SL*	PICK-UP SOLENOID DRIVE command
PW_SW	POWER SWITCH signal
RDOPDT	RIGHT DOOR OPEN DETECTION signal
RG_CL*	REGISTRATION ROLLER CLUTCH DRIVE command
RGPDT	REGISTRATION PAPER DETECTION signal
SC_A	SCANNER MOTOR A command
SC_A*	SCANNER MOTOR A* command
SC_B	SCANNER MOTOR B command
SC_B*	SCANNER MOTOR B* command
SC_COM	SCANNER MOTOR DRIVE command
SCFAN_DR	COOLING FAN DRIVE command
SCFAN_DT*	COOLING FAN DRIVE DETECTION signal
SCHP	SCANNER HOME POSITION DETECTION signal
STFAN_DR	SORTER KIT FAN DRIVE command
STFAN_DT*	SORTER KIT FAN DRIVE DETECTION signal
TCNT_DR*	TOTAL COUNTER DRIVE command
[TH1]	FIXING MAIN THERMISTOR signal
TH1_DT	FIXING MAIN THERMISTOR DETECTION signal
[TH2]	FIXING SUB THERMISTOR signal
[TNEMP]	TONER EMPTY signal
TNFDT	WASTE TONER FULL DETECTION signal
TRQMLDT	WASTE TONER FEEDING SCREW LOCKED DETECTION signal
ZRCRSS	ZERO CROSS signal

COPYRIGHT © 1998 CANON INC. CANON NP7161/NP7160 REV.0 AUG. 1998 PRINTED IN JAPAN (IMPRIME AU JAPON)

2. Abbreviations

AER	AE ROTATION
INTR	INITIAL ROTATION
LSTR	LAST ROTATION
SCFW	SCANNER FORWARD
SCRV	SCANNER REVERSE
STBY	STANDBY
WMUP	WARM-UP
WMUPR	WARM-UP ROTATION

COPYRIGHT © 1998 CANON INC.
CANON NP7161/NP7160 REV.0 AUG. 1998 PRINTED IN JAPAN (IMPRIME AU JAPON)

COPYRIGHT © 1998 CANON INC.
CANON NP7161/NP7160 REV.0 AUG. 1998 PRINTED IN JAPAN (IMPRIME AU JAPON)

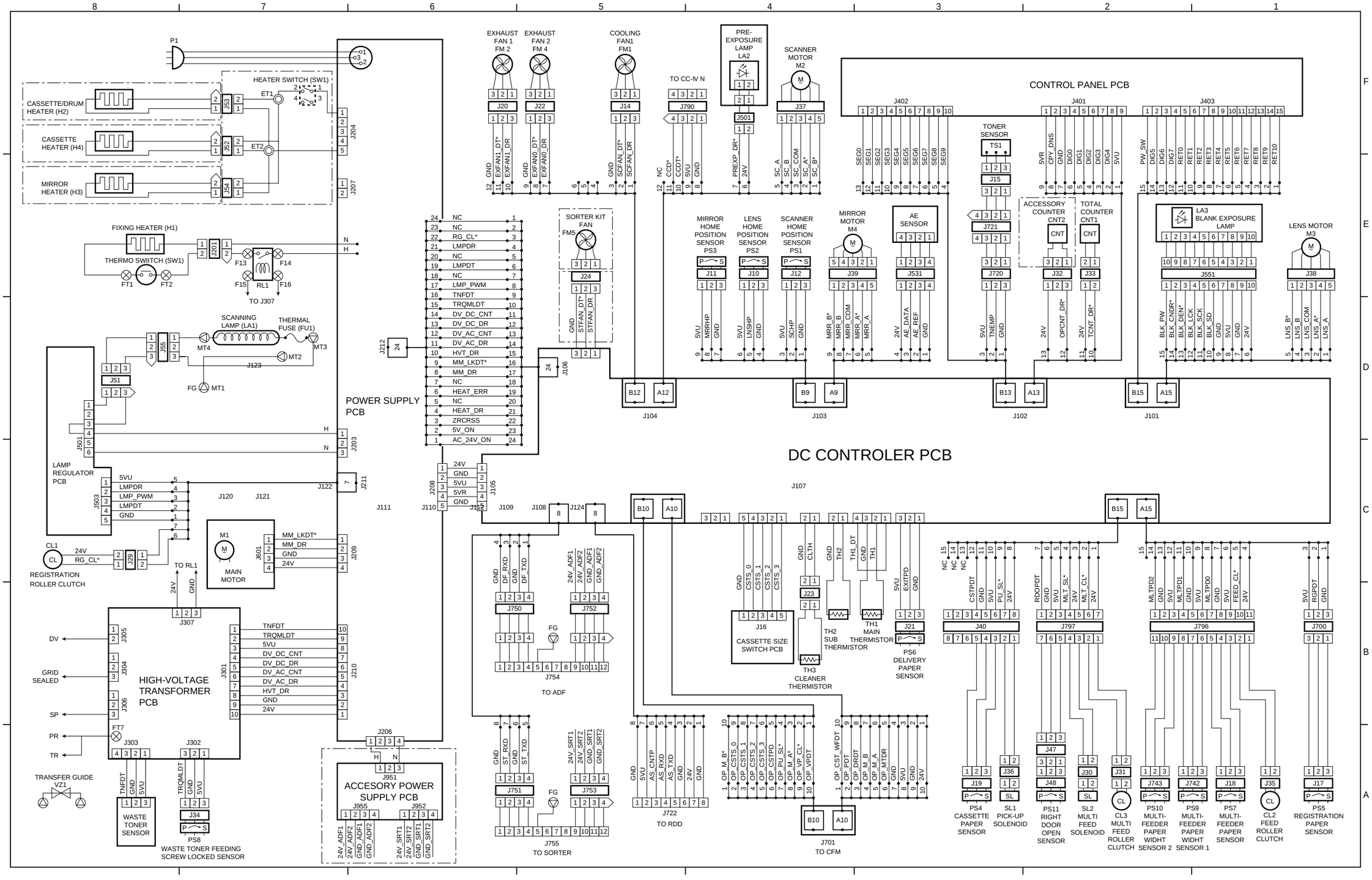
DC CONTROLER PCB
CONTROL PANEL PCB
POWER SUPPLY PCB
HIGH-VOLTAGE TRANSFORMER PCB
ACCESSORY POWER SUPPLY PCB
LAMP REGULATOR PCB
REGISTRATION ROLLER CLUTCH
MAIN MOTOR
FIXING HEATER (H1)
THERMO SWITCH (SW1)
HEATER SWITCH (SW1)
CASSETTE/DRUM HEATER (H2)
CASSETTE HEATER (H4)
MIRROR HEATER (H3)
SCANNING LAMP (LA1)
THERMAL FUSE (FU1)
TRANSFER GUIDE
WASTE TONER SENSOR
WASTE TONER FEEDING SCREW LOCKED SENSOR
EXHAUST FAN 1 FM 2
EXHAUST FAN 2 FM 4
COOLING FAN1 FM1
SORTER KIT FAN
PRE-EXPOSURE LAMP LA2
SCANNER MOTOR M2
TO CC-IV N
MIRROR HOME POSITION SENSOR PS3
LENS HOME POSITION SENSOR PS2
SCANNER HOME POSITION SENSOR PS1
MIRROR MOTOR M4
AE SENSOR
TONER SENSOR
ACCESSORY COUNTER CNT2
TOTAL COUNTER CNT1
LA3 BLANK EXPOSURE LAMP
LENS MOTOR M3
CASSETTE SIZE SWITCH PCB
TH1 MAIN THERMISTOR
TH2 SUB THERMISTOR
TH3 CLEANER THERMISTOR
PS6 DELIVERY PAPER SENSOR
TO ADF
TO SORTER
TO RDD
TO CFM
PS4 CASSETTE PAPER SENSOR
SL1 PICK-UP SOLENOID
PS11 RIGHT DOOR OPEN SENSOR
SL2 MULTI FEED SOLENOID
CL3 MULTI FEED ROLLER CLUTCH
PS10 MULTI-FEEDER PAPER WIDHT SENSOR 2
PS9 MULTI-FEEDER PAPER WIDHT SENSOR 1
PS7 MULTI-FEEDER PAPER SENSOR
CL2 FEED ROLLER CLUTCH
PS5 REGISTRATION PAPER SENSOR

COPYRIGHT © 1998 CANON INC.
CANON NP7161/NP7160 REV.0 AUG. 1998 PRINTED IN JAPAN (IMPRIME AU JAPON)

D. SPECIAL TOOLS LIST

No.	Tool description	Tool No.	Shape	Notation	Remarks
1	Door switch	TKN-0093	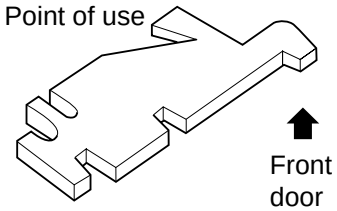	A	
2	Mirror positioning tool	FY9-3009	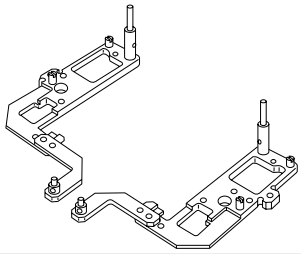	B	For adjusting the No. 1/No. 2 mirror position (front/rear as a pair)

COPYRIGHT © 1998 CANON INC.

E. SOLVENTS AND OILS

No.	Description	Use	Composition	Description
1	Ethyl alcohol (Etanol) Isopropyl alcohol (Isopropanol)	Cleaning: e.g., glass, plastic, rubber parts; external covers	C2H5O (CHZ3)2 CHOH	• Do not bring near open fire. • Procure locally. • Isopropyl alcohol may be substituted.
2	MEK	Cleaning: e.g., metal; oil or toner	CH3COC2H5	• Do not bring near fire. • Procure locally.
3	Heat-resisting grease	Lubricating; e.g., fixing drive assemblies	Lithium soap (mineral oil family) Moblybdenum bisulfide	• CK-0427 (500 g/can)
4	Lubricant oil		Mineral oil (paraffin family)	• CK-0451 (100 cc)
5	Lubricant oil		Mineral oil (paraffin family)	• CK-0524 (100 cc)
6	Lubricant oil	Lubricating: scanner rail	Slicone oil	• CK-0551 (20 g)

COPYRIGHT © 1998 CANON INC.
CANON NP7161/NP7160 REV.0 AUG. 1998 PRINTED IN JAPAN (IMPRIME AU JAPON)

Prepared by
OFFICE IMAGING PRODUCTS TECHNICAL SUPPORT DEPT. 1
OFFICE IMAGING PRODUCTS TECHNICAL SUPPORT DIV.
CANON INC.
Printed in Japan
REVISION 0 (AUG. 1998) [23715]

5-1, Hakusan 7-chome, Toride-shi, Ibaraki 302-8501, Japan

Canon

This publication is printed on
70% reprocessed paper.

PRINTED IN JAPAN (IMPRIME AU JAPON) 0998S0.7-1