Canon

SERVICE INFORMATION

Issued by Office Imaging Products Quality Assurance Center, Canon Inc.

MODEL: NP7161/NP7160/ NP7210

No. : F-04-E018
DATE : DEC., 1998

LOCATION
SUBJECT

Revised Service Handbook

We are issuing revised Service Handbook. Please go over the descriptions that follow for the handbook.
The handbook has been revised to accommodate the addition of new models NP7210.
Particulars
Name of Service Handbook : NP7161/NP7160/NP7210
Type of Revision : Full revision
Kindly replace the previous with the one being issued.

FY8-23AX-01Y

Printed in Japan
Imprimé au Japon

REVISION PAGE LIST

R: Replacement, 差し換え
S: Supplement, 追加
D: Destroyed, 焼却

MODEL : NP7161/NP7160/NP7210

CHAPTER	PAGE	REVISION							CHAPTER	PAGE	REVISION						
		AUG. 1998	DEC. 1998								AUG. 1998	DEC. 1998					
	i	0	1R						2	18	0	1R					
	ii	0	1R							19	0	1R					
										20	0	1R					
1										21	—	0S					
	1	0	1R														
	2	0	1R						3								
	3	0	1R							1	0	→					
	4	0	1R							2	0	1R					
	5	0	1R							3	0	1R					
	6	0	1R							4	0	→					
	7	0	1R							5	0	→					
										6	0	→					
2										7	0	→					
	1	0	→							8	0	1R					
	2	0	→							9	0	1R					
	3	0	1R							10	0	1R					
	4	0	1R							11	0	1R					
	5	0	1R							12	0	1R					
	6	0	1R							13	0	1R					
	7	0	→							14	—	0S					
	8	0	1R														
	9	0	→						4								
	10	0	1R							1	0	1R					
	11	0	1R							2	0	1R					
	12	0	1R							3	0	→					
	13	0	1R							4	0	1R					
	14	0	1R							5	0	→					
	15	0	1R							6	0	→					
	16	0	1R							7	0	1R					
	17	0	1R							8	0	1R					

REVISION PAGE LIST

R: Replacement, 差し換え
S: Supplement, 追加
D: Destroyed, 焼却

MODEL : NP7161/NP7160/NP7210

CHAPTER	PAGE	REVISION								CHAPTER	PAGE	REVISION							
		AUG. 1998	DEC. 1998									AUG. 1998	DEC. 1998						
4	9	0	1R							AP	9	0	1R						
	10	0	1R								10	0	1R						
	11	0	1R								11	0	1R						
	12	0	1R								12	0	1R						
	13	0	1R								13	0	1R						
	14	0	1R								14	0	1R						
	15	0	1R								15	—	0S						
	16	0	1R								16	—	0S						
	17	0	1R								17	—	0S						
	18	—	0S																
	19	—	0S																
5																			
	1	0	→																
	2	0	→																
	3	0	→																
	4	0	→																
	5	0	1R																
	6	0	1R																
	7	—	0S																
AP																			
	1	0	1R																
	2	0	1R																
	3	0	1R																
	4	0	1R																
	5	0	1R																
	6	—	—																
	7	0	1R																
	8	0	1R																

NP7161/NP7160/ NP7210

SERVICE HANDBOOK

REVISION 1

Canon

DEC. 1998

FY8-23AX-010

COPYRIGHT © 1998 CANON INC.

CANON NP7161/NP7160/NP7210 REV.1 DEC. 1998 PRINTED IN JAPAN (IMPRIME AU JAPON)

IMPORTANT

THIS DOCUMENTATION IS PUBLISHED BY CANON INC., JAPAN, TO SERVE AS A SOURCE OF REFERENCE FOR WORK IN THE FIELD.

SPECIFICATIONS AND OTHER INFORMATION CONTAINED HEREIN MAY VARY SLIGHTLY FROM ACTUAL MACHINE VALUES OR THOSE FOUND IN ADVERTISING AND OTHER PRINTED MATTER.

ANY QUESTIONS REGARDING INFORMATION CONTAINED HEREIN SHOULD BE DIRECTED TO THE COPIER SERVICE DEPARTMENT OF THE SALES COMPANY.

THIS DOCUMENTATION IS INTENDED FOR ALL SALES AREAS, AND MAY CONTAIN INFORMATION NOT APPLICABLE TO CERTAIN AREAS.

COPYRIGHT © 1998 CANON INC.

Printed in Japan
Imprimé au Japon

Use of this manual should be strictly supervised to avoid disclosure of confidential information.

Prepared by

OFFICE IMAGING PRODUCTS TECHNICAL SUPPORT DEPT. 1
OFFICE IMAGING PRODUCTS TECHNICAL SUPPORT DIV.

CANON INC.

5-1, Hakusan 7-chome, Toride-shi, Ibaraki 302-8501, Japan

CONTENTS

CHAPTER 1 MAINTENANCE AND SERVICING

A. Scheduled Servicing Table 1-1
   1. Copier 1-1
   2. Cassette Feeding Module 1-2
B. Periodically Replaced Parts 1-3
   1. Copier 1-3
   2. Cassette Feeding Module 1-3
C. Consumables and Durables 1-4
   1. Copier 1-4
   2. Cassette Feeding Module 1-5
D. Image Adjustment Basic Procedure 1-7
E. Points to Note for Scheduled Servicing ... 1-8

CHAPTER 2 STANDARDS AND ADJUSTMENTS

A. Image Adjustments 2-1
   1. Leading Edge Non-Image Width (blank exposure lamp off timing) 2-1
   2. Image Leading Edge Margin (registration on timing) 2-1
   3. Left/Right Registration (cassette) 2-2
B. Exposure System 2-3
   1. Routing the Scanner Drive Cable 2-3
   2. Adjusting the Position of the Mirror 2-4
   3. Adjusting the Tension of the Scanner Drive Cable 2-5
C. Image Formation System 2-6
   1. Outline 2-6
   2. Stringing the Charging Wires 2-6
   3. Adjusting the Height of the Charging Wires 2-9
D. Pick-Up/Feeding System 2-10
   1. Adjusting the Pressure of the Separation Pad 2-10
   2. Changing the Cassette Size (AB/INCH) 2-10
E. Fixing System 2-12
   1. Adjusting the Height of the Fixing Assembly Inlet Guide 2-12
   2. Adjusting the Pressure of the Lower Roller (nip) 2-12
F. Electrical System 2-14
   1. Obtaining Optimum Exposure 2-14
   2. AE Adjustment 2-15
   3. After Replacing the DC Controller PCB 2-18
   4. Checking the Photointerrupters 2-19

CHAPTER 3 ARRANGEMENT AND FUNCTIONS OF ELECTRICAL PARTS

A. Sensors and Switches 3-2
B. Motors, Fans, Clutches, and Solenoids ... 3-4
C. Heaters, Lamps, and Others 3-6
D. PCBs 3-8
E. Cassette Feeding Module 3-9
F. Variable Resistors, Light-Emitting Diodes, and Check Pins by PCB 3-10
   1. DC Controller PCB 3-10
   2. Power Supply PCB 3-13
   3. Lamp Regulator PCB 3-13
   4. High-Voltage Power Supply PCB 3-14
   5. Cassette Relay PCB 3-14

CHAPTER 4 SERVICE MODE

A. Outline 4-1
B. Using Service Mode 4-1
1. Starting Service Mode 4-1
2. Selecting Service Mode 4-1
C. Using Adjust Mode and Function Mode ... 4-2
D. Display Mode [1] 4-3
E. I/O Display Mode [2] 4-8
F. Adjust Mode [3] 4-12
G. Function Mode [4] 4-14
H. Option Mode [5] 4-15
I. Counter Mode [6] 4-18
J. Application Mode [7] 4-19

CHAPTER 5 SELF DIAGNOSIS

A. Copier 5-1
B. ADF 5-5
C. Sorter 5-6
D. Cassette Feeding Module 5-7

APPENDIX

A. GENERAL TIMING CHART A-1
B. SIGNALS AND ABBREVIATIONS A-3
C. GENERAL CIRCUIT DIAGRAM A-5
D. CASSETTE FEEDING MODULE CIRCUIT DIAGRAM A-7
E. SPECIFICATIONS A-9
F. SPECIAL TOOLS LIST A-16
G. SOLVENTS AND OILS A-17

CHAPTER 1 MAINTENANCE AND SERVICING

A. Scheduled Servicing Table

1. Copier

Caution:

1. Do not use solvents/oils other than those mentioned herein.
2. Keep the following in mind when cleaning/checking each charging assembly:
   - Do not use a cloth having metal powder.
   - Do not use a moist cloth. Dry wipe with lint-free paper, and use alcohol thereafter. Be sure that alcohol has dried completely before mounting back to the copier.

△ : Clean ● : Replace × : Lubricate □ : Adjust ◎ : Inspect

Unit	Item	Intervals					Remarks
		every 60,000	every 120,000	every 180,000	every 300,000	yearly	
Externals	Copyboard glass	△					
	Copyboard cover	△					
	Ozone filter	●				●	Or, 1 yr.
	Dust-proofing filter*				●		
Scanner drive assembly	Scanner drive cable (front/rear)	□					Use alcohol, and apply lubricant.
	Scanner rail		×			×	
Optical path	Scanning lamp		●				Use a blower brush. If the dirt is excessive, use alcohol.
	No. 1 to 6 mirrors	△					
	Dust-proofing glass	△					
	Scanner reflecting cover	△					
	Scanner side reflecting plate	△					
	Lens	△					
Developing assembly	Developing assembly roll	△					
	Developing cylinder			●			
Cleaner	Waste toner box						Replaced by the user in response to an alarm.
Pick-up assembly	Pick-up roller	△	●				
	Pick-up feed roller	△	●				
	Pick-up separation roller	△	●				
	Multifeeder pick-up roller	△	●				
	Multifeeder separation pad		●				
Feeding assembly	Transfer guide	△					
Fixing assembly	Fixing upper roller	△		●			
	Fixing lower roller	△		●			
	Separation claw (upper/lower)	△		●			Look for damage on the claw tip and for soiling by toner.
	Heat roller		●				
	Delivery roller			●			
	Fixing heater*				●		
Others	Transfer charging wire	●					
	Static eliminator	●					

*NP7210 only

2. Cassette Feeding Module

△ : Clean ● : Replace × : Oil □ : Adjust ◎ : Overhaul

Unit Name	Item	Regular Service					Remarks
		Every 60,000 copies	Every 120,000 copies	Every 180,000 copies	Every 300,000 copies	Every year	
Pick-up Assembly	Pick-up Rollers	△	●				[1] in Figure 1-1
	Feed Rollers	△	●				[2] in Figure 1-1
	Separation Rollers	△	●				[3] in Figure 1-1

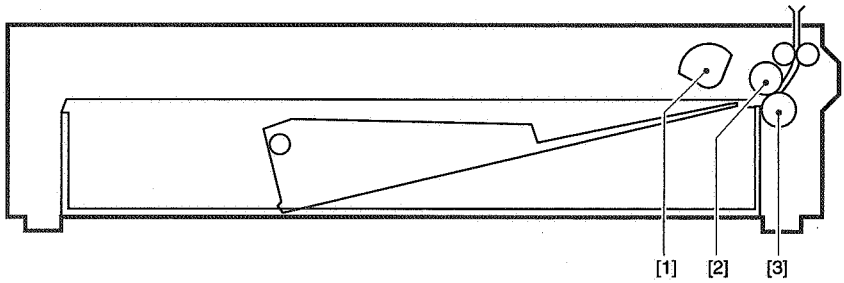

Figure 1-1

B. Periodically Replaced Parts

Some of the parts of the copier need to be replaced on a periodical basis to ensure a specific level of performance (regardless of external appearance or presence/absence of damage).

Plan replacement so that it coincides with a scheduled servicing visit.

1. Copier

As of December 1998

No.	Parts name	Parts No.	Q'ty	Expected life (copies)	Remarks
1	Transfer charging wire	FY3-0040-000	AR	60,000	
2	Ozone filter (exhaust)	FE5-3956-000	1	60,000	Or, 1 yr.

Note:
The above values are estimates only, and are subject to change based on future data.

2. Cassette Feeding Module

The cassette feeding module does not have a part to be replaced on a periodical basis.

C. Consumables and Durables

Some of the parts of the copier may need to be replaced once or more because of wear or damage over the period of machine warranty. Replace them when they fail.

1. Copier

As of December 1998

No.	Parts name	Parts No.	Q'ty	Expected life (copies)	Remarks
1	Scanning lamp	FH7-3360-000	1	120,000	120V
		FH7-3361-000	1	120,000	230V
2	Pick-up roller	FE5-4199-000	2	120,000	
3	Feed roller	RF5-2490-000	1	120,000	
4	Separation roller	RF5-2490-000	1	120,000	
5	Multifeeder pick-up roller	FB1-8581-000	1	120,000	
6	Multifeeder separation pad	FE5-4132-000	1	120,000	
7	Static eliminator	FL5-0581-000	1	60,000	
8	Developing cylinder	FM5-0721-000	1	180,000	
9	Fixing upper roller	FE5-3912-000	1	180,000	
10	Fixing lower roller	FE5-3905-000	1	180,000	
11	Fixing upper separation claw	FB1-7075-000	5	180,000	
12	Fixing lower separation claw	FA2-9037-000	4	180,000	
13	Heat discharge roller	FE5-3932-000	1	120,000	
14	Delivery roller	FE5-3927-000	1	120,000	
15*	Dust-proofing filter	FE5-4237-000	1	300,000	
16*	Fixing heater	FH7-3366-000	1	300,000	120V
		FH7-3367-000	1	300,000	230V

*NP7210 only

Note:
The above values are estimates only, and are subject to change based on future data.

2. Cassette Feeding Module

As of December 1998

No.	Parts name	Parts No.	Q'ty	Expected life (copies)	Remarks
1	Pick-up roller	FE5-4199-000	4	120,000	
2	Feed roller	RF5-2490-000	1	120,000	
3	Separation roller	RF5-2490-000	1	120,000	

Note:
The above values are estimates only, and are subject to change based on future data.

D. Image Adjustment Basic Procedure

Non-AE, Copy Density at 5

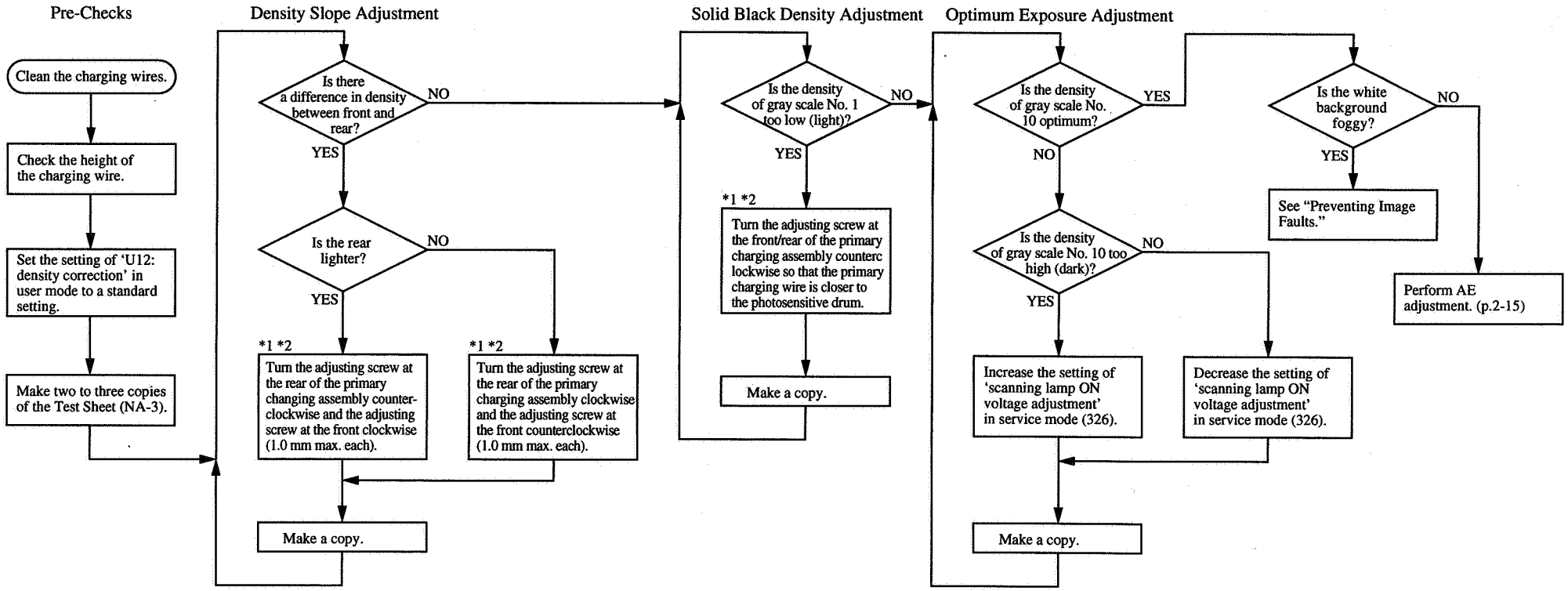

1: If there still is a difference after turning the adjusting screw 1.0 mm each, check the charging assembly, scanning lamp, and scanner for dirt.
*A full turn causes a change of 0.5 mm.
*2: When turning the adjusting screw clockwise, be careful that the height of the charging wire is not less than 10.0 mm.

E. Points to Note for Scheduled Servicing

Part	Tool/solvent	Remarks
Copyboard glass	Alcohol	Cleaning
Lens	Blower brush	Cleaning
Scanner rail	Lubricant	Lubricate
Reflecting plate	Blower brush	Cleaning
No. 1 to 3 mirrors	Blower brush; or, alcohol and lint-free paper	Cleaning with a blower brush; if excessive, cleaning with alcohol

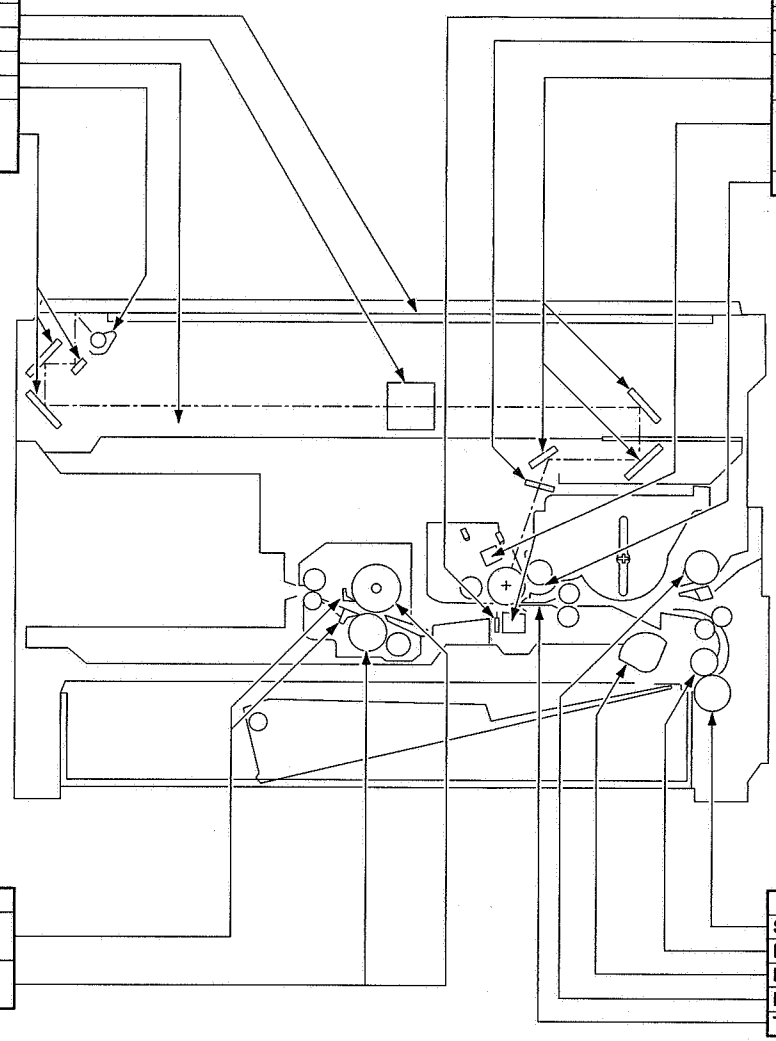

Part	Tool/solvent	Remarks
Static eliminator	Brush (attachment)	Cleaning
Dust-proofing glass	Blower brush or alcohol and lint-free paper	Cleaning with a blower brush; if excessive, cleaning with alcohol.
No. 4 to 6 mirrors		
Charging wire	Alcohol and lint-free paper	Dry wiping; then, cleaning with lint-free paper moistened with alcohol
Developing roller		Cleaning

Part	Tool/solvent	Remarks
Separation claw (upper/lower)	Lubricant and lint-free paper	Cleaning
Fixing upper roller, Fixing lower roller	Lint-free paper	Dry wiping

Part	Tool/solvent	Remarks
Separation roller		Cleaning
Feed roller		
Pick-up roller		
Multifeeder pick-up roller		
Transfer guide	Moist cloth	Cleaning

Part	Tool/solvent	Remarks
Waste toner box		Checking/collecting

CHAPTER 2 STANDARDS AND ADJUSTMENTS

A. Image Adjustments

1. Leading Edge Non-Image Width (blank exposure lamp off timing)

Select No. 306 in service mode.

Make adjustments so that non-image width on copies made of the Test Sheet in Direct is 2.0 ±1.0mm.

[unit: 0.21 mm] [settings: 0 to 500]

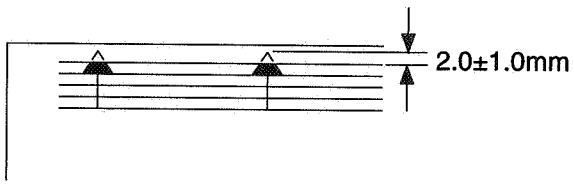

Figure 2-1

2. Image Leading Edge Margin (registration on timing)

Select No. 305 in service mode.

Make adjustments so that the image leading edge margin on copies made of the Test Sheet in Direct is 2.5 ±1.5 mm.

[unit: 0.21 mm] [settings: 0 to 500]

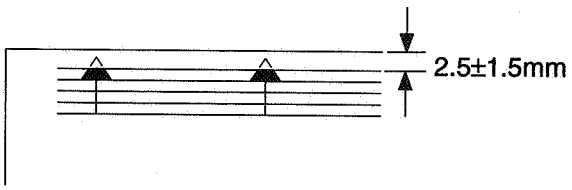

Figure 2-2

3. Left/Right Registration (cassette)

Make adjustments by moving the horizontal registration adjusting screw of the cassette so that the distance between the copy image and the copy paper is 0 ±2.0 mm on copies made of the Test Sheet in Direct.

Turn the adjusting screw [1] until the cassette locking lever plate [2] and the cassette locking lever [3] engage.

When the adjusting screw [1] is turned clockwise, the cassette locking plate moves to the front.

When the adjusting screw [1] is turned counterclockwise, the cassette locking lever plate [2] moves to the rear.

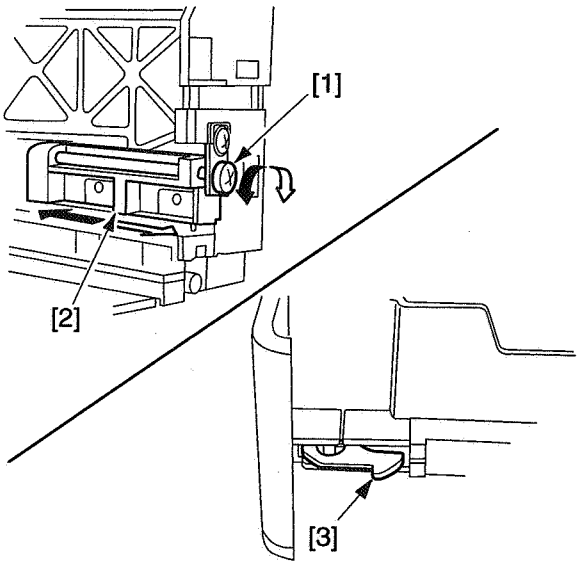

Figure 2-3

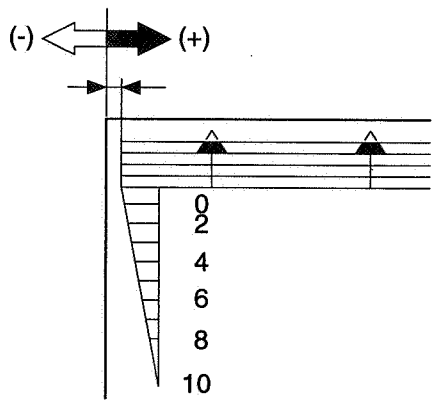

Figure 2-4

B. Exposure System

1. Routing the Scanner Drive Cable

Route the cable following steps [1] through [7], and perform the steps under "Adjusting the Tension of the Cable" and "Adjusting the Position of the Mirror."

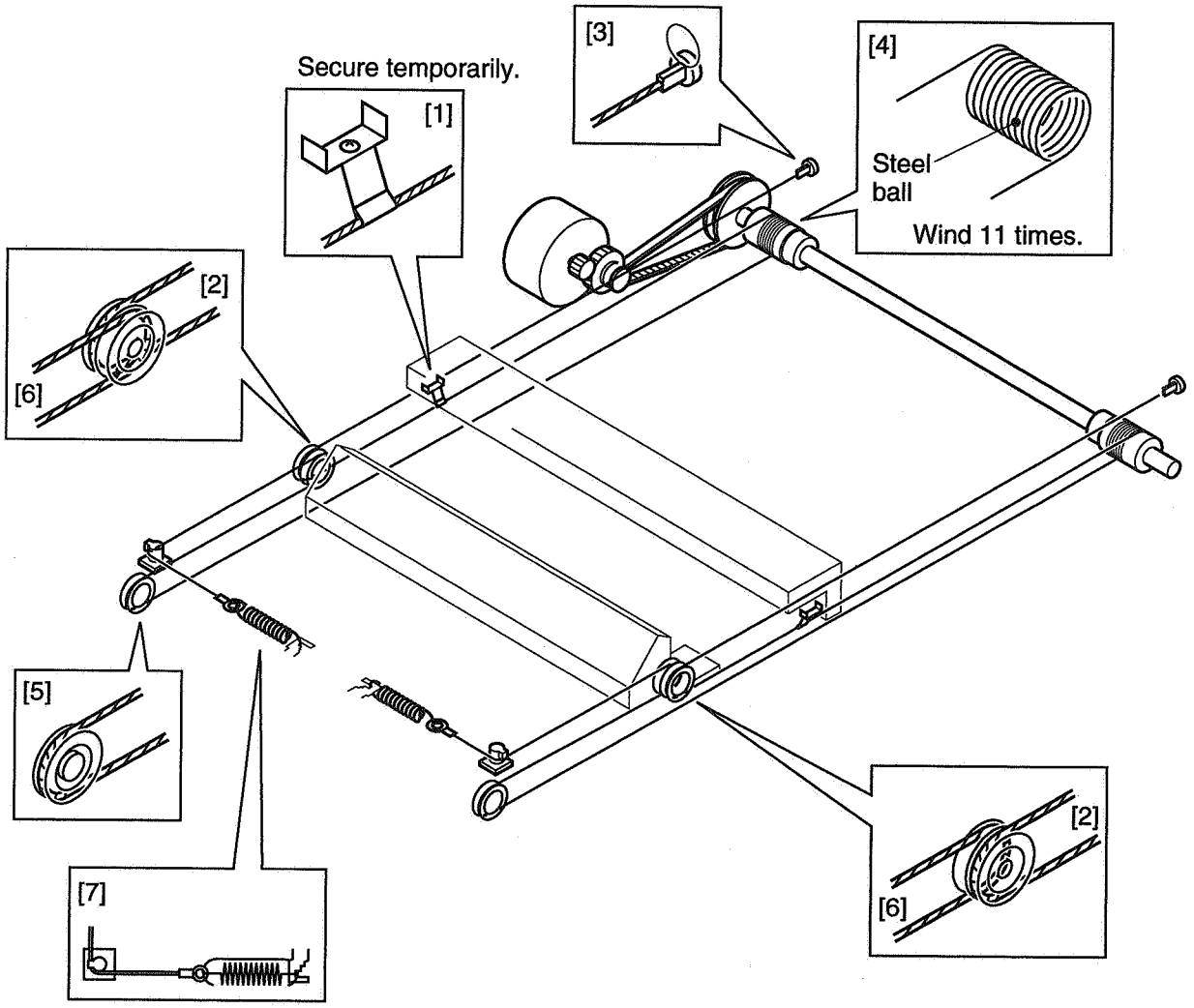

Figure 2-5

2. Adjusting the Position of the Mirror

Be sure to adjust the position of the mirror as follows after you have mounted the scanner drive cable.

1) Keep the mirror positioning tool nearby.
   Arrange the mirror positioning tool (FY9-3046-000) as shown to adapt it to the copier.

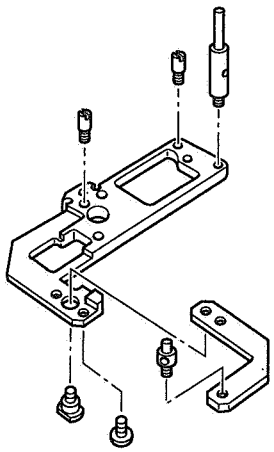

Figure 2-6a (Rear)

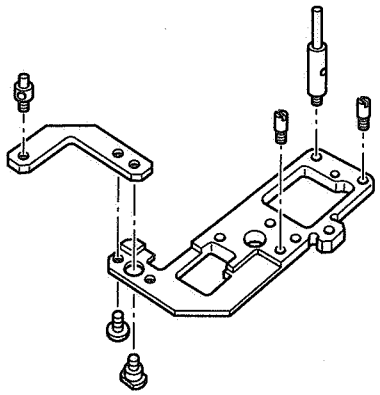

Figure 2-6b (Front)

2) Fit the mirror positioning tool [1] to the No. 1 mirror base and the No. 2 mirror base (both front and rear).
3) Tighten the mounting screw [2] on the cable metal fixing of the No. 1 mirror base (both front and rear).

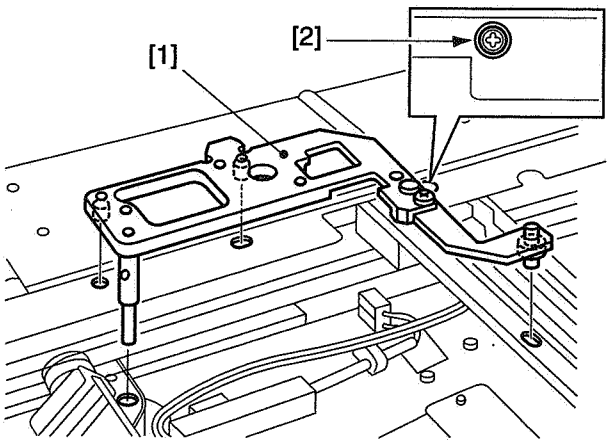

Figure 2-7a (Rear)

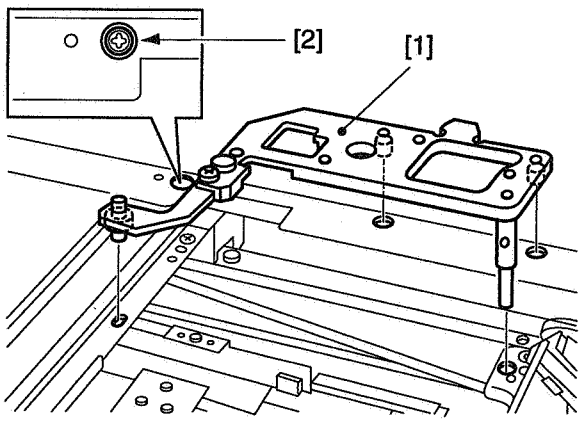

Figure 2-7b (Front)

4) Detach the mirror positioning tool.

3. Adjusting the Tension of the Scanner Drive Cable

Be sure to adjust the tension as follows after routing the scanner drive cable.

1) Move the scanner to home position.
2) Pull the center of the scanner drive cable with a spring gauge about 10 mm. At this time, adjust the position [A] of the tension spring [1] so that the reading of the spring gauge is 95 ±15 g.

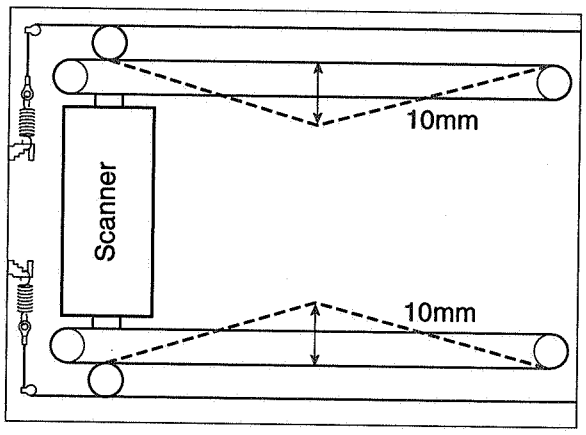

Figure 2-8

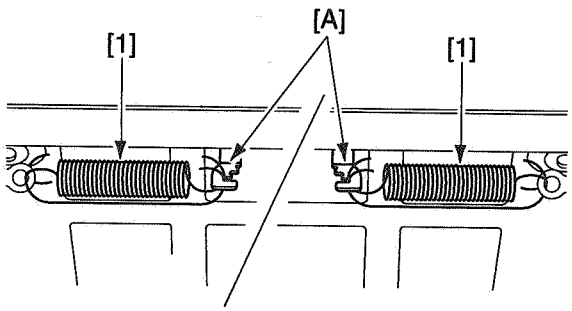

Figure 2-9

C. Image Formation System

1. Outline

As many as two charging wires are located around the photosensitive drum. (These charging wires are 0.06 mm in diameter.)

2. Stringing the Charging Wires

Basically, all charging wires are strung in the same way. (The following uses the primary charging wire as an example.)

1) Remove the mounting screw [1], and remove the stopper [2] and the grid plate [3].
   To remove the transfer charging assembly, remove the three hooks [a], and remove the guide wire plate [b].

• Primary Charging Assembly

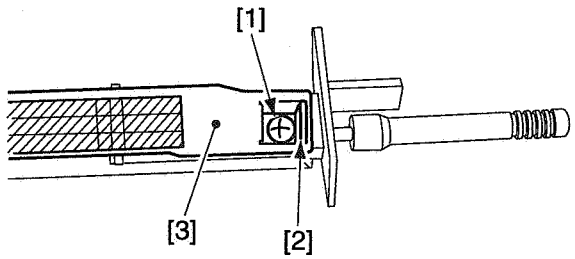

Figure 2-10a

• Transfer Charging Assembly

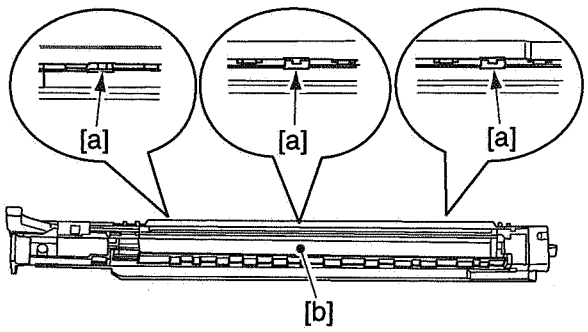

Figure 2-10b

2) Remove the sheet (front) [4] and the sheet (rear) [5].
   To remove the transfer charging assembly, remove the sheet (front) [c] and the sheet (rear) [d].

• Primary Charging Assembly

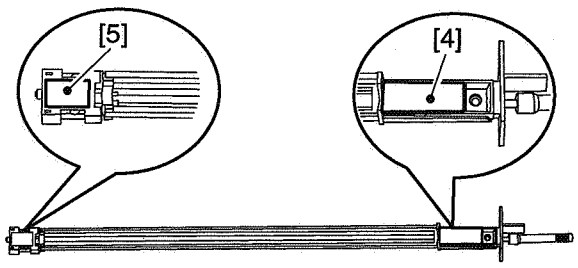

Figure 2-11a

• Transfer Charging Assembly

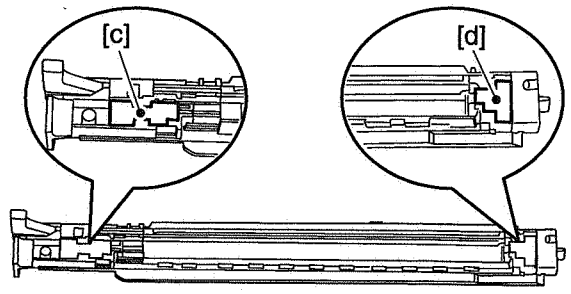

Figure 2-11b

3) Remove the spring [6], and remove the charging wire [7].
To remove the transfer charging assembly, remove the spring [e] and the cushioning rubber [f], and remove the charging wire [g].

• Primary Charging Assembly

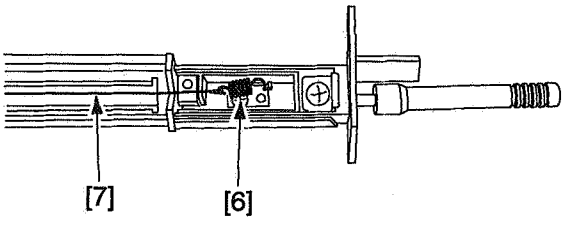

Figure 2-12a

• Transfer Charging Assembly

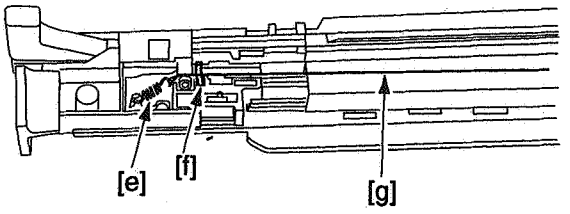

Figure 2-12b

4) Free a length of about 5 cm of charging wire (0.06-mm dia.) from the reel, and form a loop at the end (2-mm dia.).

Note:
To form a loop easily, wind the charging wire around a hex key once; then, turn the hex key three to four times, and twist the charging wire.

5) Cut the excess end of the twisted charging wire with a nipper.
6) Hook the loop on the charging electrode at the rear.



Figure 2-13

7) Hook the charging wire on the charging wire positioner at the rear; then, pull on the charging wire as indicated, and hook the charging wire tension spring on the charging wire by the distance A ; then, twist it.

A:
• Primary charging assembly : 13.0 ± 0.5 mm
• Transfer charging assembly : 12.0 ± 0.5 mm

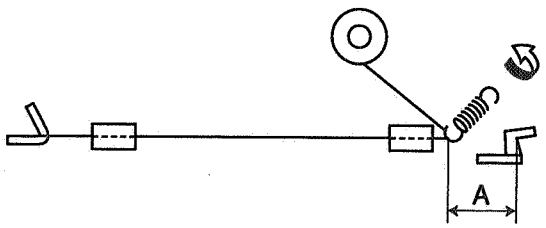

Figure 2-14

8) Cut the excess charging wire with a nipper.
9) Pick the end of the charging wire tensioning spring with tweezers, and hook it on the charging electrode.
   To install the transfer charging assembly, install the cushioning rubber.



Figure 2-15

Note:
Go through the following:
- Be sure that the charging wire is free of bending and twisting, and its gold plating has not peeled.
- Be sure that the charging wire is in the V-groove of the charging wire positioner.

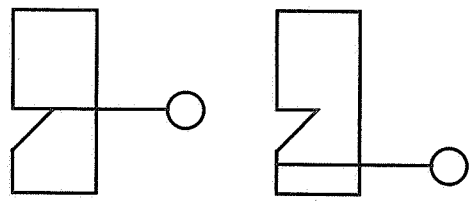

Figure 2-16

10) Wipe the charging wire with lint-free paper moistened with alcohol.

Caution:
- Do not use a cloth carrying metal powder for cleaning.
- Do not use a moist cloth for cleaning.
- Dry wipe with lint-free paper; then, mount only after making sure that alcohol has completely evaporated.

11) Mount the sheet (front) and the sheet (rear).
12) Mount the stopper and the grid plate.
    For the transfer charging assembly, mount the guide wire plate.

3. Adjusting the Height of the Charging Wires

To adjust each charging wire, turn its respective height adjusting screw. A full turn on the screw will change the height of the primary charging wire by about 0.5 mm and that of the transfer charging wire by about 0.7 mm.

Charging assembly	Height of charging wire (mm)	Range
Primary	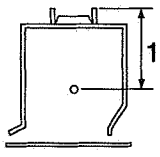	±1.0mm
Transfer	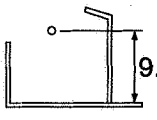	±1.0mm

Figure 2-17

• Primary Charging Assembly

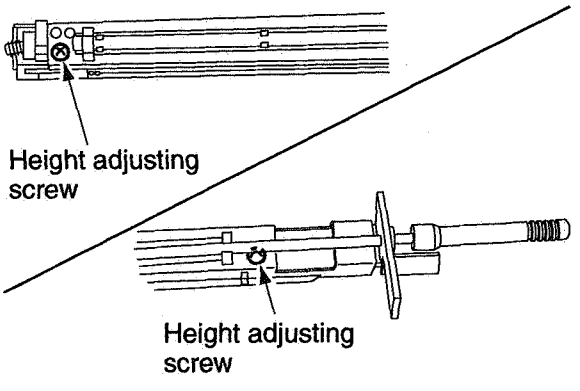

Figure 2-18a

• Transfer Charging Assembly

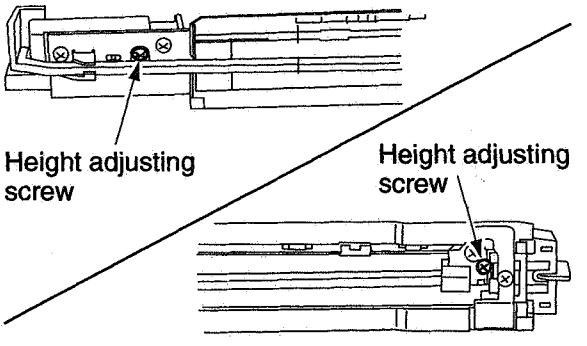

Figure 2-18b

D. Pick-Up/Feeding System

1. Adjusting the Pressure of the Separation Pad

If double feeding or pick-up failure occurs, loosen the adjusting screw [1] and relocate the holder [2] to adjust the force of the separation pad tension spring.

- If pick-up occurs, move the holder in the direction of [A].
- If double feeding failure occurs, move the holder to in the direction of [B].

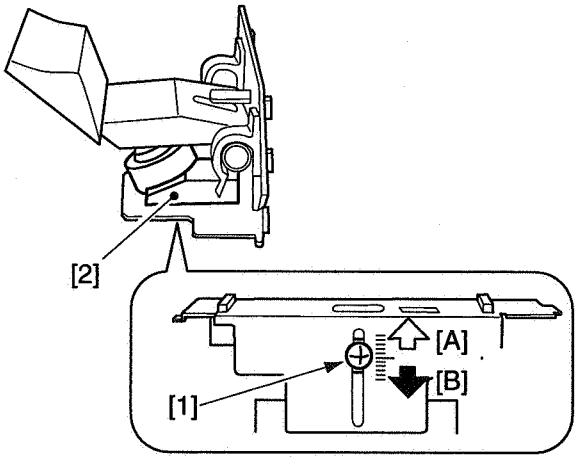

Figure 2-19

2. Changing the Cassette Size (AB/INCH)

1) Slide out the cassette.
2) Loosen the mounting screw [1] on the left side of the cassette; then, slide the size switching block [2] to the desired size position, and fix it in position.

• AB

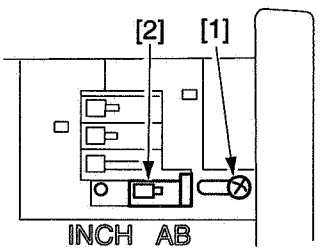

Figure 2-20a

• INCH

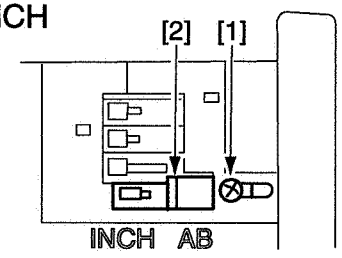

Figure 2-20b

3) Remove the mounting screw [3]; then, slide the size switching lever [4] to the desired size position, and fix it in place.

• AB

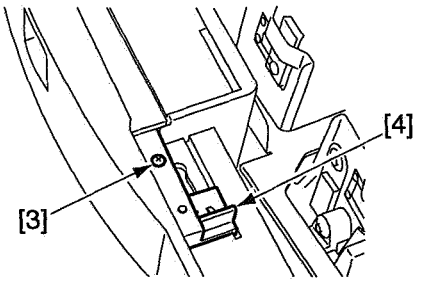

Figure 2-21a

• INCH

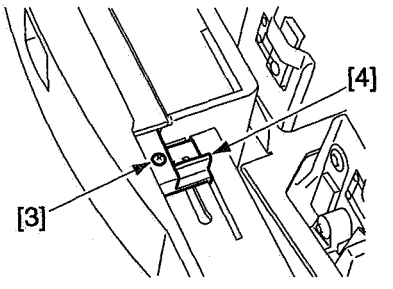

Figure 2-21b

4) Remove the mounting screw [5]; then, change the mount position of side guide block [6] to the desired size position, and fix it in place.

• AB

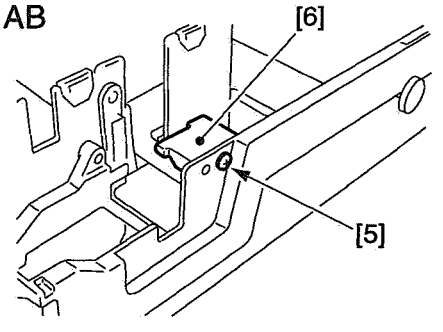

Figure 2-22a

• INCH

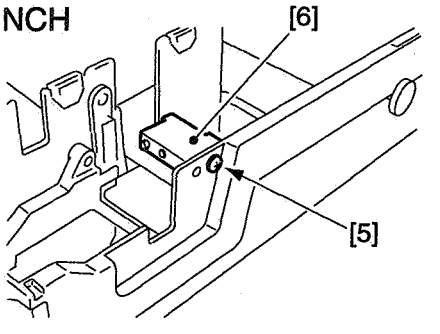

Figure 2-22b

E. Fixing System

1. Adjusting the Height of the Fixing Assembly Inlet Guide

1) Loosen the two adjusting screws [1], and adjust the height of the fixing assembly inlet guides [2].

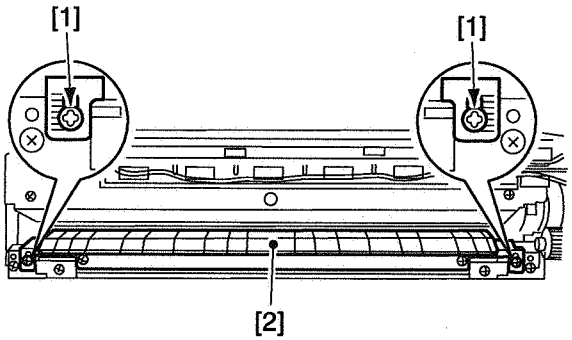

Figure 2-23

2. Adjusting the Pressure of the Lower Roller (nip)

If the nip is as indicated in Table 2-1, no adjustment is necessary.
If the nip is not as indicated, change the position of the pressure spring [1].

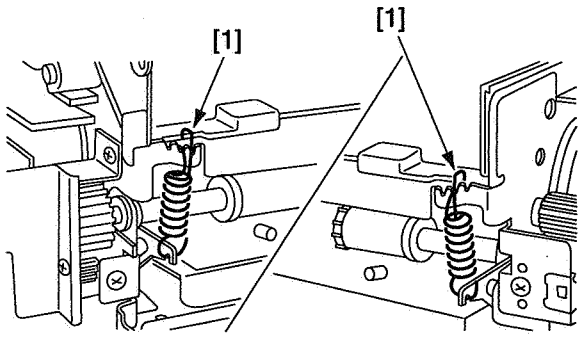

Figure 2-24

Caution:
a and c represent points 10 mm from both ends of copy paper.

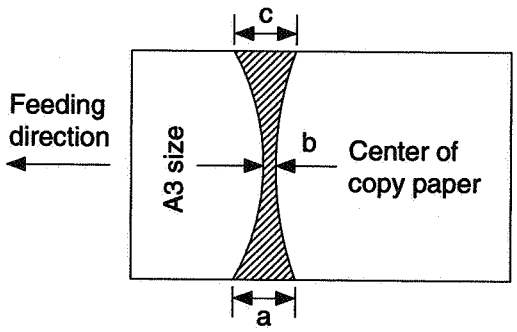

Figure 2-25

Dimensions	Measurements*
b	4.8 ± 0.3mm
l a - c l	0.5 mm or less

*Be sure both upper and lower rollers are sufficiently warm before taking measurements.

Table 2-1

a. Measuring the Nip

Before measuring the nip, wait for 15 min after the end of warm-up and make 20 A4 copies:

1) Open the copy board cover, and make a solid black copy on A3 copy paper.
2) Place the copy paper made at step 1) in the multifeeder, and select the multifeeder as the source of paper.
3) Execute nip measurement mode (service mode).
   - The above steps will deliver a measurement sheet like the one shown in Figure 2-25.

F. Electrical System

1. Obtaining Optimum Exposure

You can adjust the intensity of the scanning lamp (LA1) at F5 as follows (effective for both AE and manual):

1) Set the setting of 'U12' (density correction) in user mode to its initial value.
2) Place the Test Sheet (NA-3) on the copyboard, and select non-AE and Direct.
3) Select '216' (density adjusting volume voltage display) in service mode.
4) Slide the density adjusting volume until the copy count indicator indicates '245' as the F5 voltage.
5) Make a copy.
6) Check the copy image, and change the setting of '326' (scanning lamp on voltage adjustment) in service mode using the keypad.
   [1] A higher setting will increase the intensity, making the image lighter.
   [2] A lower setting will decrease the intensity, making the image darker.

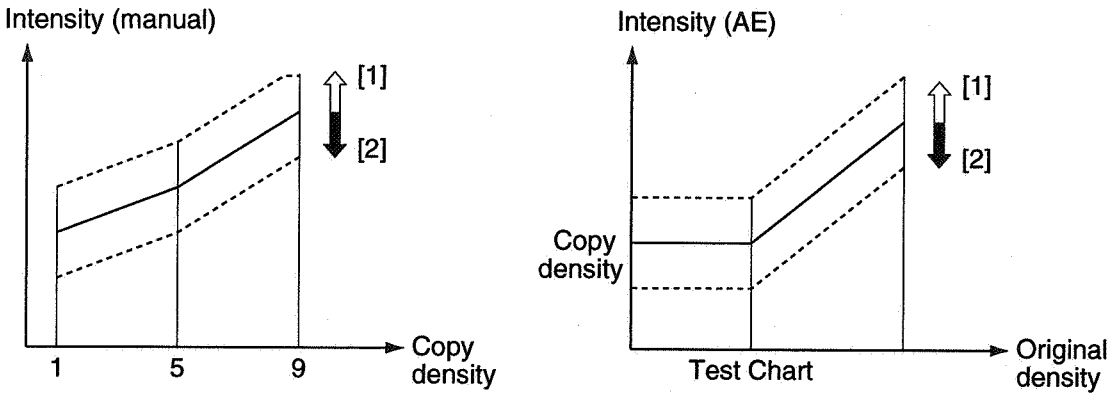

Figure 2-26

7) Press the Start key, and store the setting.
   • Repeat steps 5) through 7) until an optimum image is obtained.
8) Press the Reset key to end service mode.

2. AE Adjustment

If copies of a newspaper are foggy or if you have replaced the scanning lamp (LA1), AE sensor, or DC controller PCB, perform the following:

(Be sure that the image is an optimum image before starting the work.)

a. AE Auto Adjustment

1. AE Scanning Intensity Auto Adjustment

1) Select '301' (AE auto adjustment) in service mode.
2) Place the Test Chart (white background original) on the copyboard glass.
3) Press '0' of the keypad so that the copy count indicator indicates '0'.
4) Press the Start key.
   - The scanner moves to the AE scan position, stops, and performs AE exposure. Then, the scanner moves in reverse to home position. (15 sec from start of forward movement and the end of reverse movement)
   - The output of the AE sensor will be indicated in the copy count indicator. Check to make sure it is 80 ±5. If not, execute '302' (AE scanning intensity adjustment) in service mode.

2. AE Slope Auto Adjustment

5) Select '301' (AE auto adjustment) in service mode.
6) Place a newspaper on the copyboard glass.
7) Press '1' of the keyboard so that the copy count indicator indicates '1'.
8) Press the Start key.
   - The scanner moves to the AE scan position, stops, and performs AE exposure. Then, the scanner moves in reverse to home position. (15 sec from start of forward movement and the end of reverse movement)
   - The output of the AE sensor will be indicated in the copy count indicator. Check to make sure it is between 0 and 255. If not, execute '303' (AE slope adjustment) in service mode.
9) Press the Reset key to end service mode.

b. AE Scanning Intensity Adjustment

If an optimum image cannot be obtained by executing '301' (AE auto adjustment) in service mode, perform the following:

1) Place a white background original on the copyboard glass, and select AE and Direct.
2) Make a copy, and check the copy image.
3) Select '302' (AE scanning intensity adjustment) in service mode.
   • The copy count indicator will indicate the present setting.
4) Change the setting using the keypad or the +/- key.
   [1] A lower setting will increase the intensity, making the copy image lighter.
   [2] A higher setting will decrease the intensity, making the copy image darker.

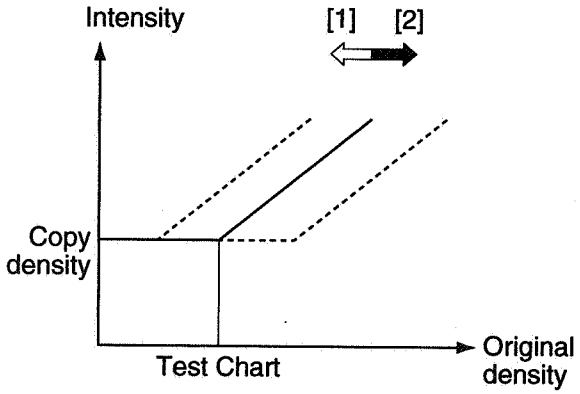

Figure 2-27

5) Press the Start key to store the new setting.
   • Repeat steps 2) through 5) until an optimum image is obtained.
6) Press the Reset key to end service mode.

c. AE Slope Adjustment

If an optimum image cannot be obtained by executing '301' (AE auto adjustment) in service mode, perform the following:

1) Place a newspaper on the copyboard glass, and select AE and Direct.
2) Make a copy, and check the copy image.
3) Select '303' (AE slope adjustment) in service mode.
   • The copy counter will indicate the present setting.
4) Change the setting using the keypad or +/- key.
   [1] A lower setting will increase the intensity, making the copy image lighter.
   [2] A higher setting will decrease the intensity, making the copy image darker.

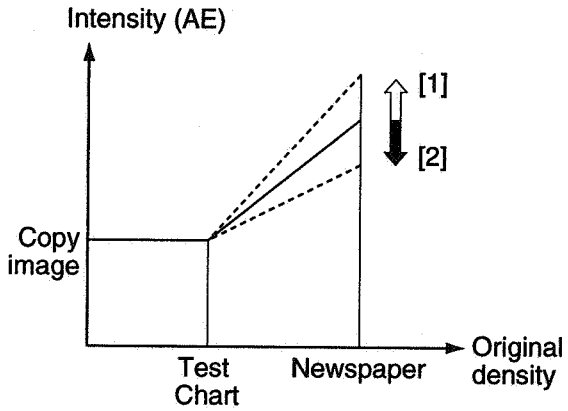

Figure2-28

5) Press the Start key to store the new setting.
   • Repeat steps 2) through 5) until an optimum image is obtained.
6) Press the Reset key to end service mode.

3. After Replacing the DC Controller PCB

1) Set the DIP switch (SW102) on the new DC controller PCB so that its settings are the same as the old DC controller PCB.
2) Mount the new DC controller PCB.
3) Press the User Mode key, hold down '2' and '8' of the numeric keypad for 0.5 sec or more, and then press the User Mode key.
   - The copier starts service mode, and indicates '[1]' on the control panel.
4) Press '4' on the numeric keypad, and press the AE key.
   - The copier enters FUNCTION mode, and indicates '401' on the control panel.
5) Press '5' and '0' on the numeric keypad in sequence, and press the Start key.
   - The copier turns off once, and initializes the RAM (IC116).
6) Press '1' of the keypad and the Start key in sequence.
   - The power turns off, and the data in RAM (IC116) will be initialized.
7) Turn on the power, and selected the service mode.
8) Enter the settings of each service mode by referring to the service mode label kept behind the front door.
9) Press the Reset key to end service mode.

4. Checking the Photointerrupters

The copier allows you to use its service mode when checking its photointerrupters. (You may also use a conventional meter.)

a. Using a Meter

1) Put the copier in standby state.
2) Set the range of the meter to 30 VDC.
3) Connect the - probe of the meter to J105-5 (GND) of the DC controller PCB.
4) Connect the + probe of the meter to the appropriate terminal on the DC controller PCB indicated in the tables that follow.
5) Make checks as instructed.

b. Using Service Mode

1) Press the User Mode key.
2) Press '2' and '8' of the keypad at the same time. (Hold them down for 0.5 sec or more.)
3) Press the User Mode key once again.
   - The copier starts service mode, and indicates '1' on the copy count indicator.
4) Press '2' and then the AE in sequence.
   - The copier starts I/O DISPLAY mode, and indicates '201'.
5) Enter the appropriate service mode No. indicated in the tables that follow, and press the Start key.
6) Make checks as instructed.
   - Refer to the state of the copy count indicator LEDs. (Tables use '1' to indicate ON, and '0' to indicate OFF.)

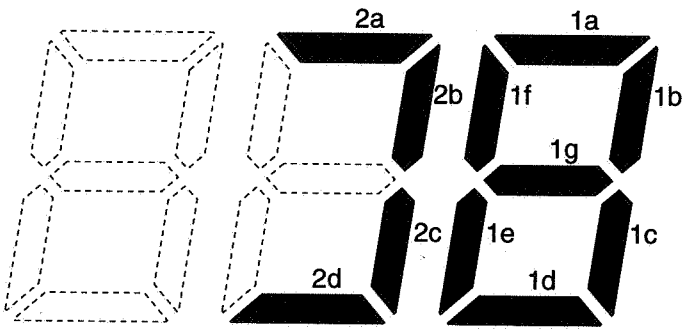

Figure 2-29

• Copier

Sensor	Connector / Service mode	Checks		LED	Voltage
PS1 Scanner home position sensor	J103-B2	In standby, move the scanner by hand.	When the light-blocking plate is at PS1,	1a=1	5V
	220		When the light-blocking plate is not at PS1,	1a=0	0V
PS2 Lens home position sensor	J103-B5	In standby, move the lens by hand.	When the light-blocking plate is at PS2,	1c=1	5V
	219		When the light-blocking plate is not at PS2,	1c=0	0V
PS3 Mirror home position sensor	J103-B8	In standby, move the No. 4/No. 5 mirror by hand.	When the light-blocking plate is at PS3,	1b=1	5V
	219		When the light-blocking plate is not at PS3,	1b=0	0V
PS4 Cassette paper sensor	J107-B12	In standby, move the detecting lever by hand.	When the light-blocking plate is PS4,	1b=1	5V
	202		When the light-blocking plate is not at PS4,	1b=0	0V
PS5 Registration paper sensor	J107-A2	In standby, move the detecting lever by hand.	When the light-blocking plate is at PS5,	1g=1	5V
	222		When the light-blocking plate is not at PS5,	1g=0	0V
PS6 Delivery paper sensor	J124-2	In standby, move the detecting lever by hand.	When the light-blocking plate is at PS6,	1f=1	5V
	222		When the light-blocking plate is not at PS6,	1f=0	0V
PS7 Multi paper sensor	J107-A8	In standby, move the detection lever by hand.	When the light-blocking plate is at PS7,	2b=1	5V
	202		When the light-blocking plate is not at PS7,	2b=0	0V
PS8 Waste toner feeding screw locked sensor	J106-10	In standby, move the detecting lever by hand.	When the light-blocking plate is at PS8,	1f=1	5V
	223		When the light-blocking plate is not at PS8,	1f=0	0V
PS9 Multi wide sensor 1	J107-A11	In standby, move the slide guide by hand.	When the light-blocking plate is at PS9,	2c=1	5V
	202		When the light-blocking plate is not at PS9,	2c=0	0V
PS10 Multi wide sensor 2	J107-A14	In standby, move the slide guide by hand.	When the light-blocking plate is at PS10,	2d=1	5V
	202		When the light-blocking plate is not at PS10,	2d=0	0V

Sensor	Connector / Service mode	Checks		LED	Voltage
PS11 Right door open sensor	J107-B7	In standby, open the right door.	When the light-blocking plate is at PS11,	1d=1	5V
	202		When the light-blocking plate is not at PS11,	1d=0	0V
PS12* Copyboard cover open/ close sensor	J125-2	In standby, move the detecting lever by hand.	When the light-blocking plate is at PS12,	1g=1	5V
	223		When the light-blocking plate is not at PS12,	1g=0	0V
PS13* Vertical path paper sensor	J107-15	In standby, move the detecting lever by hand.	When the light-blocking plate is at PS13,	1e=1	5V
	202		When the light-blocking plate is not at PS13,	1e=0	0V
Waste toner sensor	J106-9	In standby, remove the waste toner box.	When the light-blocking plate is at sensor,	1a=1	5V
	222		When the light-blocking plate is not at sensor,	1a=0	0V

*NP7210 only

- Cassette feeding module

Sensor	Connector / Service mode	Checks		LED	Voltage
PS101 Cassette paper sensor	J122-B5	In standby, move the detecting lever by hand.	When the light-blocking plate is at PS101,	1b=1	5V
	203		When the light-blocking plate is not at PS101,	1b=0	0V
PS102 Vertical path paper sensor	J122-A10	In standby, move the detecting lever by hand.	When the light-blocking plate is at PS102,	1f=1	5V
	202		When the light-blocking plate is not at PS102,	1f=0	0V
PS103 Door open sensor	J122-A8	In standby, move the detecting lever by hand.	When the light-blocking plate is at PS103,	1a=1	5V
	203		When the light-blocking plate is not at PS103,	1a=0	0V
PS104 Swing cam home position sensor	J122-B1	In standby, move the detecting lever by hand.	When the light-blocking plate is at PS104,	2a=1	5V
	222		When the light-blocking plate is not at PS104,	2a=0	0V

CHAPTER 3 ARRANGEMENT AND FUNCTIONS OF ELECTRICAL PARTS

A. Sensors and Switches

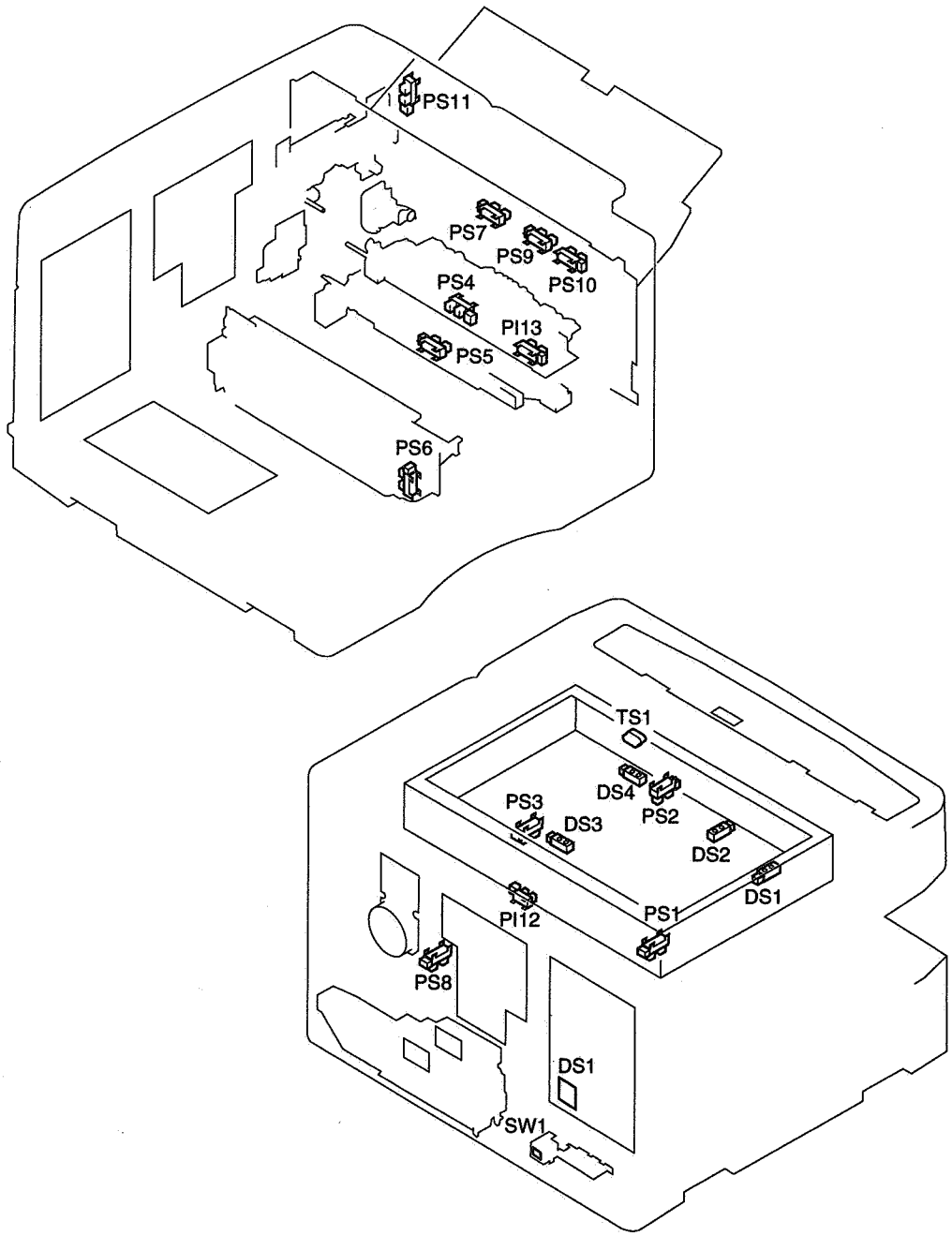

Figure 3-1

Symbol	Name	Notation	Description
	Toner sensor	TS1	Developing assembly toner level detection
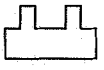	Photointerrupter	PS1	Scanner home position detection
		PS2	Lens home position detection
		PS3	Mirror home position detection
		PS4	Cassette paper detection
		PS5	Registration paper detection
		PS6	Delivery detection
		PS7	Multifeeder paper detection
		PS8	Waste toner feeding screw locked detection
		PS9	Multifeeder paper width detection 1
		PS10	Multifeeder paper width detection 2
		PS11	Right door open/closed detection
		PS12*	Copy board cover open/close sensor
		PS13*	Vertical path paper sensor
		DS1*	Document size detection sensor 1
		DS2*	Document size detection sensor 2
		DS3*	Document size detection sensor 3
		DS4*	Document size detection sensor 4
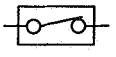	Switch	SW1	Heater switch (accessory)
		DS1	Front door switch

*NP7210 only

Table 3-1

B. Motors, Fans, Clutches, and Solenoids

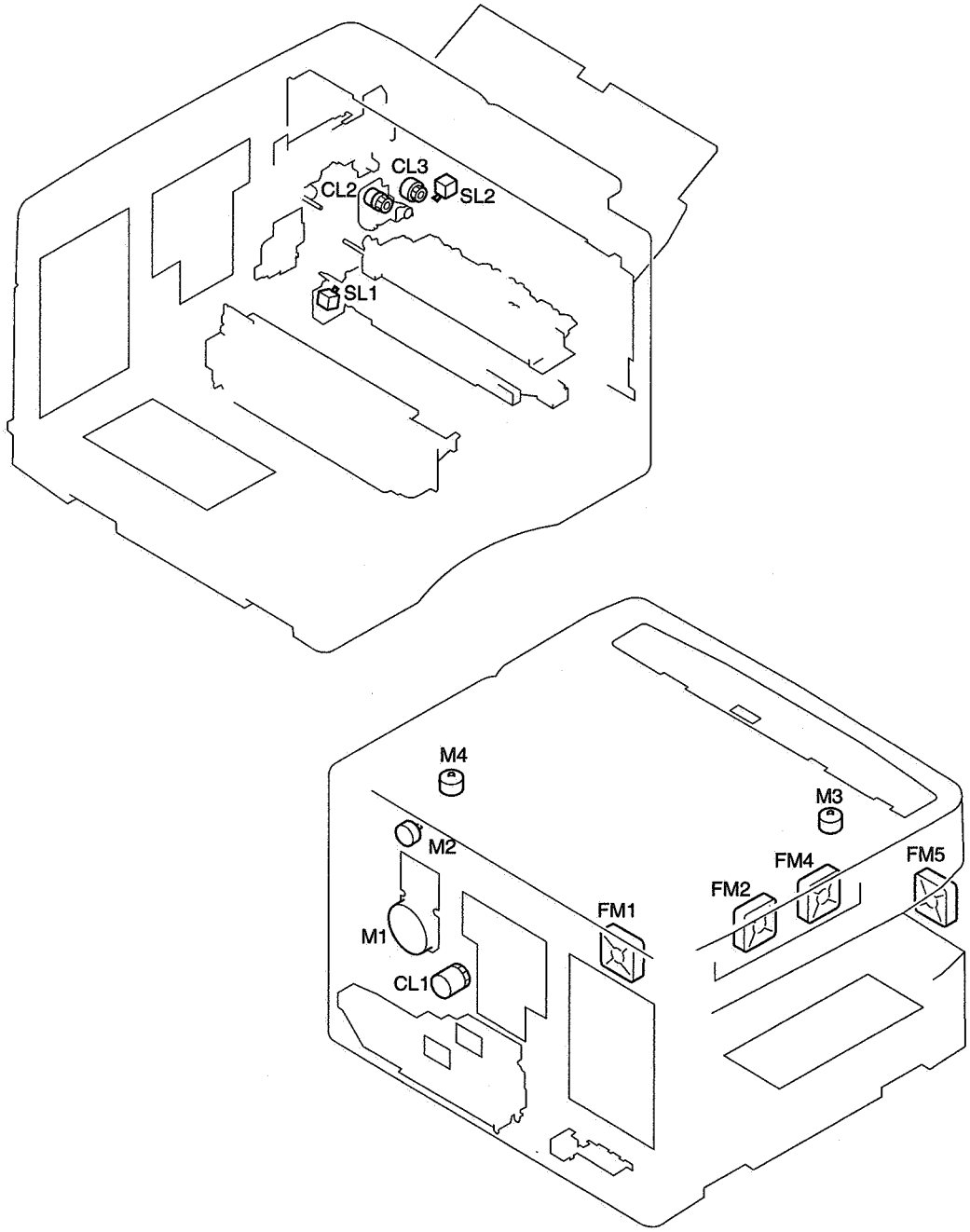

Figure 3-2

Symbol	Name	Notation	Description
	Motor	M1 M2 M3 M4	Main drive Scanner drive Lens drive No. 4/No. 5 mirror drive
	Fan	FM1 FM2 FM4 FM5	Cooling Heat discharge Heat discharge Heat discharge (accessory)
	Clutch	CL1 CL2 CL3	Registration roller clutch Feeding clutch Multifeeder pick-up clutch
	Solenoid	SL1 SL2	Pick-up solenoid Multifeeder pick-up solenoid

Table 3-2

C. Heaters, Lamps, and Others

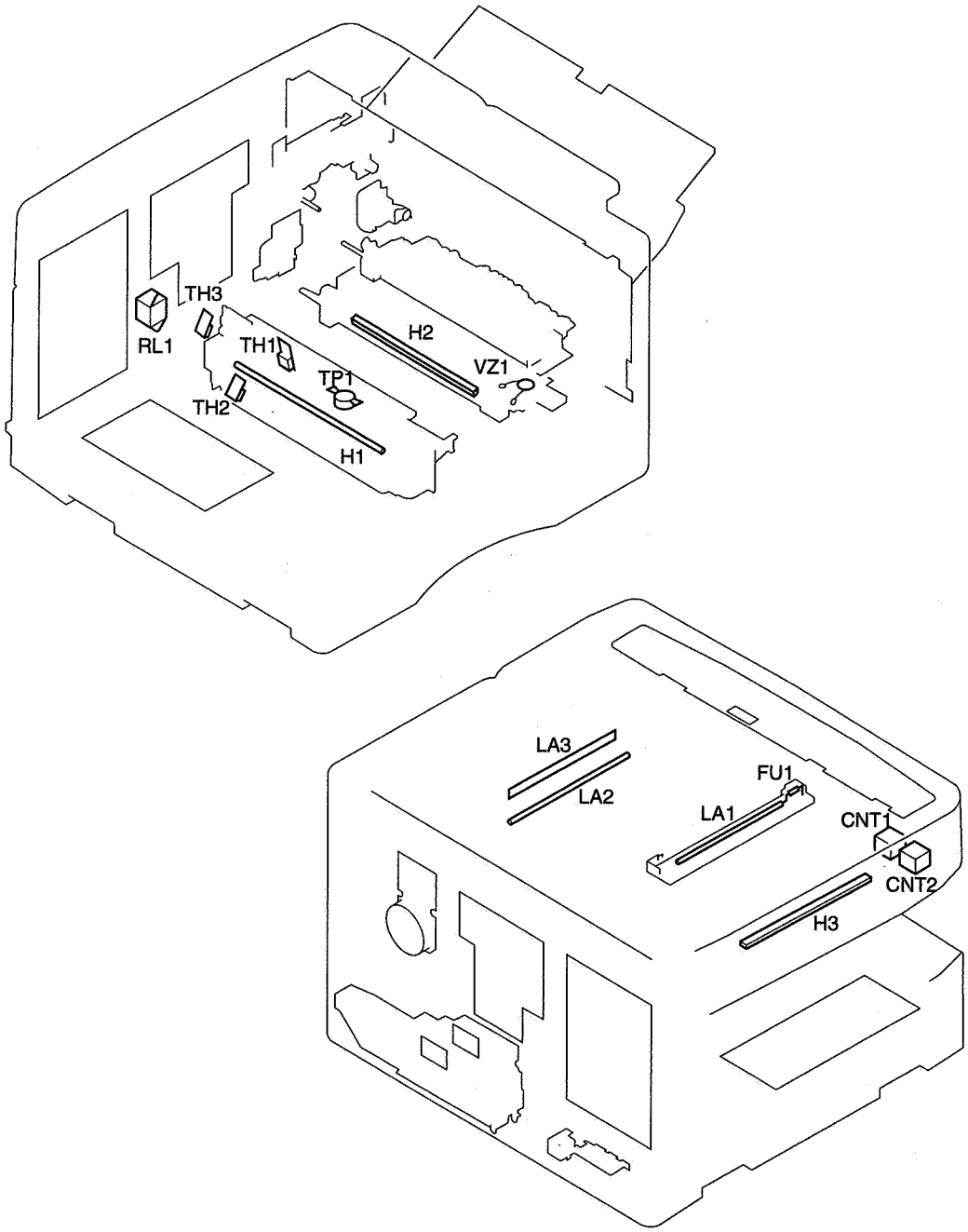

Figure 3-3

Symbol	Name	Notation	Description
	Heater	H1 H2 H3	Fixing heater Cassette/drum heater (accessory) Mirror heater (accessory)
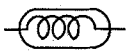	Lamp	LA1	Scanning lamp
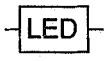	LED	LA2 LA3	Pre-exposure lamp Blank exposure lamp
	Counter	CNT1 CNT2	Total copy counter Accessory counter
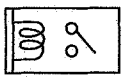	Relay	RL1	Fixing heater power supply control
	Thermal fuse	FU1	Scanning lap overheating detection
	Thermal switch	TSW1	Fixing assembly overheating detection
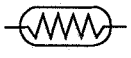	Thermistor	TH1 TH2	Fixing roller surface temperature detection 1 Fixing roller surface temperature detection 2
	Cleaner thermistor	TH3	Ambient temperature detection
	Varistor	VZ1	Varistor

Table 3-3

D. PCBs

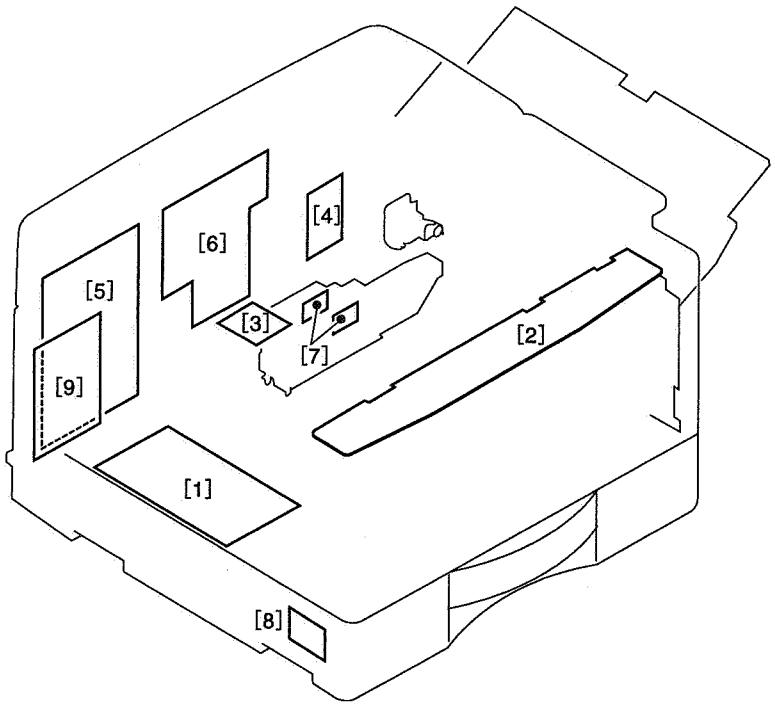

Figure 3-4

Ref.	Name	Description
[1]	DC controller PCB	Sequence control
[2]	Control panel PCB	Control key/control display
[3]	AE sensor	Original density detection
[4]	Lamp regulator PCB	Scanning lamp on voltage control
[5]	Power supply PCB	Power supply
[6]	High-voltage power supply PCB	High-voltage output
[7]	Waste toner sensor	Waste toner full detection
[8]	Cassette size switch PCB	Cassette size detection
[9]	Accessory power supply PCB	ADF and sorter DC power supply

Table 3-4

E. Cassette Feeding Module

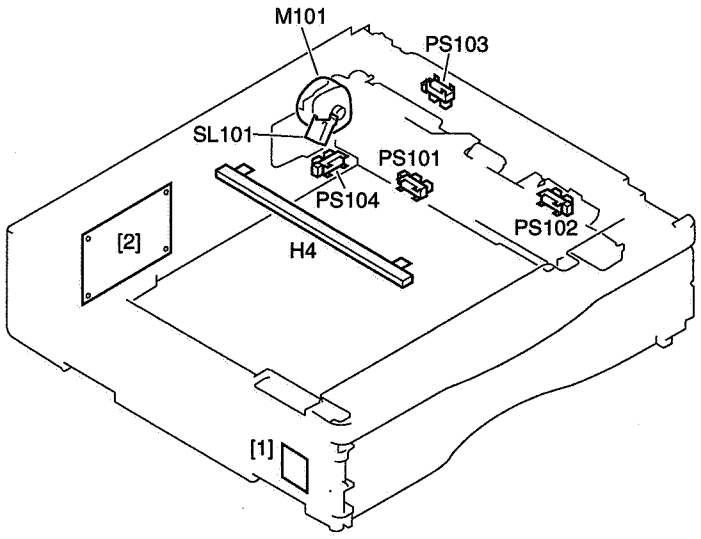

Figure 3-5

Symbol	Name	Notation	Description
	Photointerrupter	PS101 PS102 PS103 PS104	Cassette paper detection Vertical path paper detection Door open detection Swing cam home position detection
M	Motor	M101	Caseette motor drive
SL	Solenoid	SL101	Cassette pick-up solenoid
	Heater	H4	Cassette heater
	PCB	[1] [2]	Cassette size switch PCB Cassette relay PCB

Table 3-5

F. Variable Resistors, Light-Emitting Diodes, and Check Pins by PCB

Of the variable resistors (VR), light-emitting diodes (LD), and check pins used in the copier, those needed for servicing work in the field are discussed.

Caution:

1. Some LEDs retain current even when off and emit dim light. This is a normal condition and must be kept in mind.
2. VRs that may be used in the field.....
3. VRs that must not be used in the field.....

Caution:

Do not use the VRs or check pins not found in the tables. They are for factory use, and require special tools and high accuracy.

1. DC Controller PCB

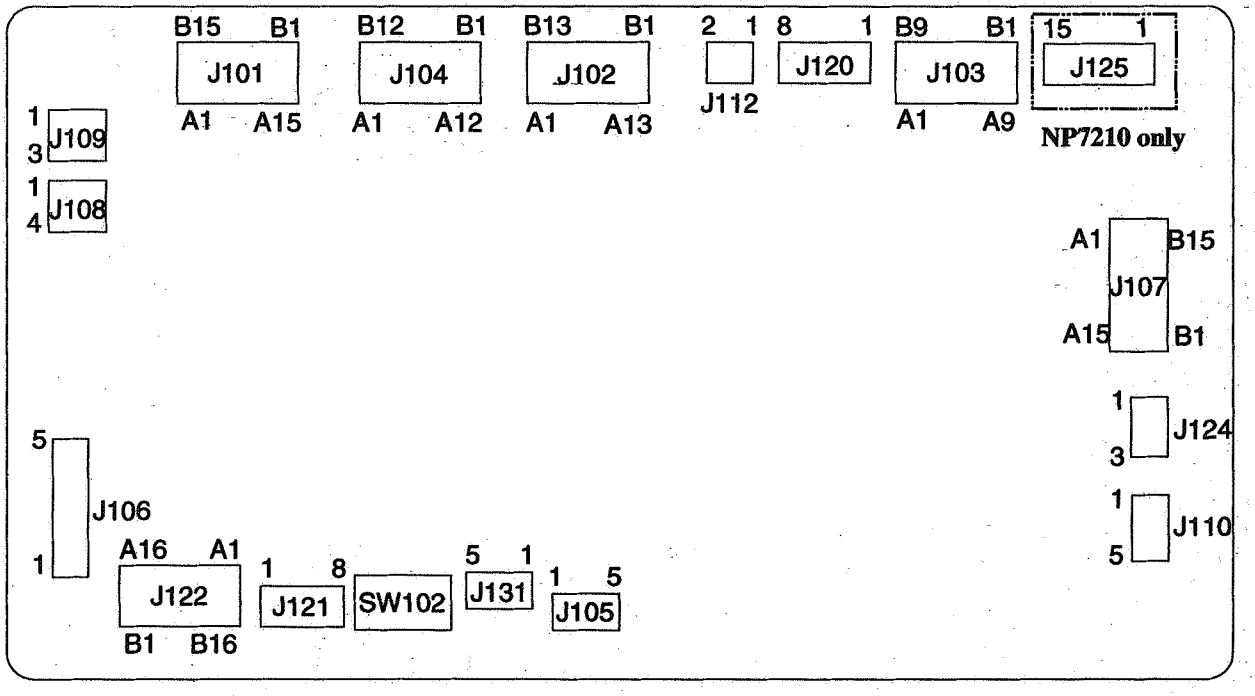

Figure 3-6

	Item	Remarks		
SW102-1	Use to change size.	Settings	SW102-1	SW102-2
		INCH	ON	ON
SW102-2		A	OFF	ON
		AB/INCH	ON	OFF
		AB	OFF	OFF
SW102-3	Use to set power supply voltage.	ON :230V	OFF : 120V	
SW102-4	—	—		
SW102-5	Use to set the accessory counter.	Settings	SW102-5	SW102-6
		No accessory counter	OFF	OFF
SW102-6		Small-size copy counter	ON	OFF
		Large-size copy counter	OFF	ON
		Not used	ON	ON
SW102-7	Large size copy counting method	ON: 2 counts	OFF: 1 count	
SW102-8	—	—		

Table 3-6

Inch-configuration (4R3E)	Ratio
200%	200.0%
LTR→11"×17"	129.4%
LGL→11"×17"	121.4%
100%	100.0%
LGL→LTR	78.6%
11"×17"→LGL	73.3%
11"×17"→LTR	64.7%
50%	50.0%

Table 3-7

A-configuration (2R2E)	Ratio
200%	200.0%
A4→A3	141.4%
100%	100.0%
A3→A4	70.7%
50%	50.0%

Table 3-8

AB/Inch-configuration (4R4E)	Ratio
200%	200.0%
A4/LTR→A3, B5→B4	141.4%
A4/LTR→B4	122.4%
B4→A3, B5→A4/LTR	115.4%
100%	100.0%
A3→B4, A4/LTR→B5	86.5%
B4→A4/LTR	81.6%
A3→A4/LTR, B4→B5	70.7%
50%	50.0%

Table 3-9

AB-configuration (4R4E)	Ratio
200%	200.0%
A4→A3, B5→B4	141.4%
A4→B4	122.4%
B4→A3, B5→A4	115.4%
100%	100.0%
A3→B4, A4→B5	86.5%
B4→A4	81.6%
A3→A4, B4→B5	70.7%
50%	50.0%

Table 3-10

2. Power Supply PCB

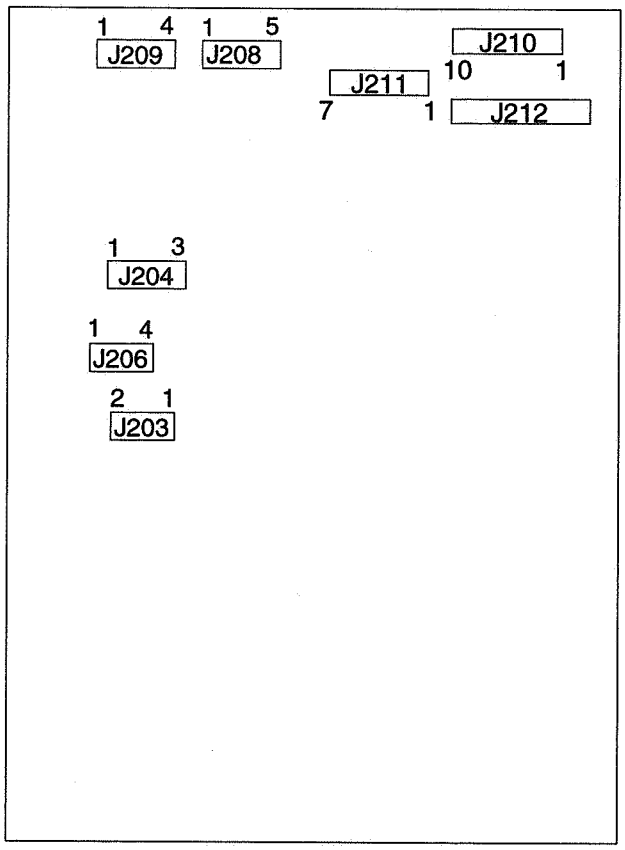

Figure 3-7

3. Lamp Regulator PCB

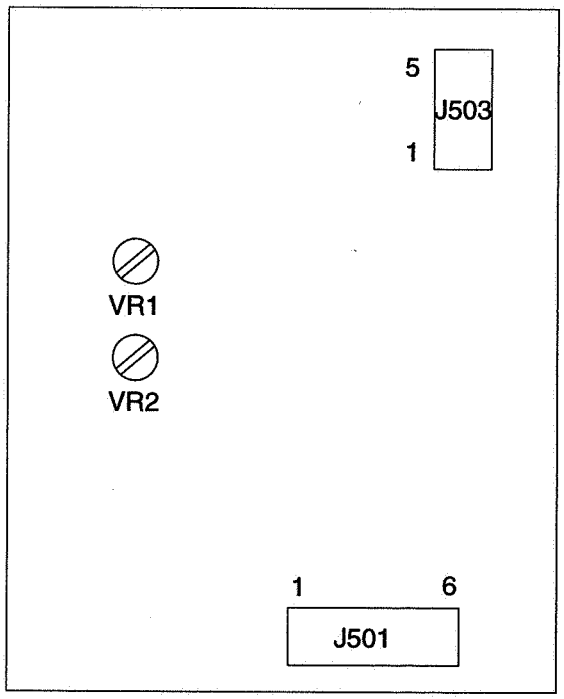

Figure 3-8

4. High-Voltage Power Supply PCB

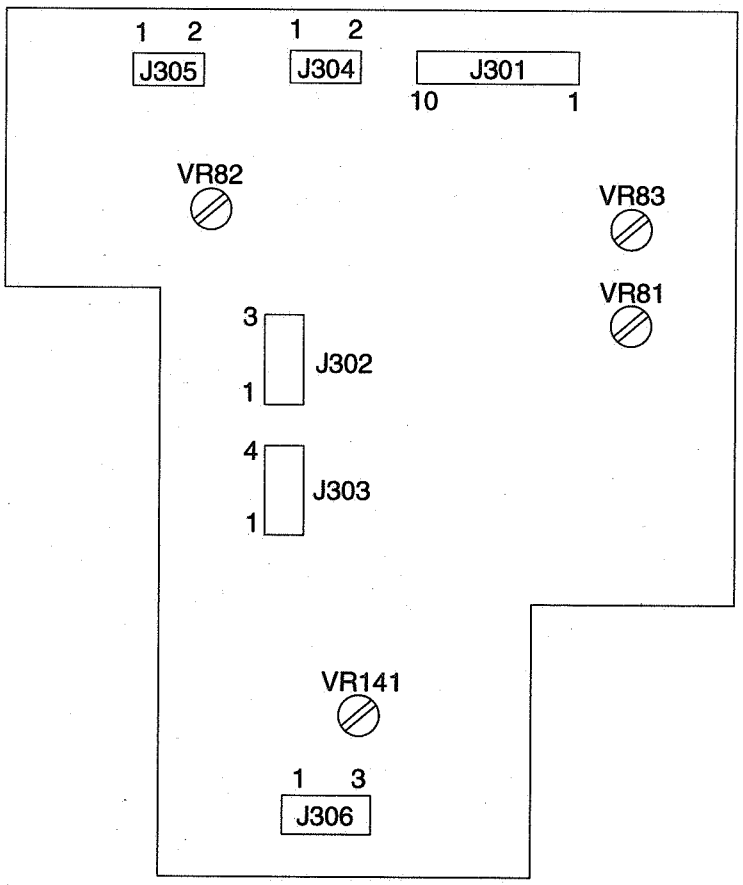

Figure 3-9

5. Cassette Relay PCB

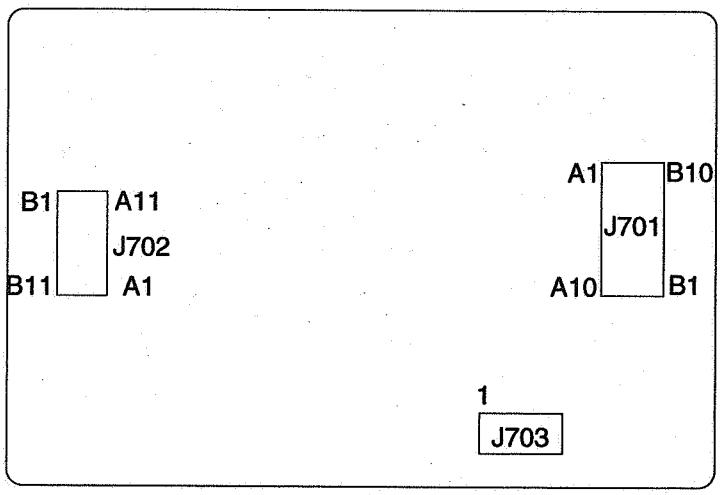

Figure 3-10

CHAPTER 4 SERVICE MODE

A. Outline

The copier's service mode is divided into the following seven:

No.	Description
[1]	DISPLAY
[2]	I/O DISPLAY
[3]	ADJUST
[4]	FUNCTION
[5]	OPTION
[6]	COUNTER
[7]	APPLICATION

Table 4-1

B. Using Service Mode

1. Starting Service Mode

1) Press the User Mode key.
   - If you are planning to make checks as in I/O display mode while making copies, select the appropriate copying mode before pressing the User Mode key.
2) Hold down the '2' and '8' keys on the keypad at the same time for 0.5 sec or more.
3) Press the User Mode key once again.
   - The copier will indicate '[1]' on its control panel as soon as it enters service mode.
   - The copier will end service mode in response to a press on the Reset key.

2. Selecting Service Mode

1) Select the mode you want for making checks or adjustments (Table 4-1) using the keypad.
   - The 10's place will switch to indicate the input numeral.
   - The copier will start making copies in response to a press on the Start key using the settings that were effective immediately before the start of service mode.
2) Press the AE key.
   - The copier will indicate a 3-digit number, and the 100's place will start to flash and 10' and 1's places will turn on.
3) Select the mode you want to use for making checks or adjustments using the keypad.
   - The 10's and 1's places will serve to indicate the input numerals.
   - The copier will return to the condition in step 1) above in response to a press on the AE key.
4) Press the Start key to execute the selected service mode.
   - The copier will return to the condition in step 3) in response to a press on the AE key while it is executing service mode.

C. Using Adjust Mode and Function Mode

In adjust mode and function mode, the copier stores the settings made on the control panel in the RAM on the DC controller PCB and use them to simulate the functions of conventional variable resistors and switches.

Figure 4-1 shows the label affixed to the back of the toner supply sheet (stored inside front door).

If you have replaced the DC controller PCB or initialized the RAM, you will have to enter the values recorded in the label into the RAM on the DC controller PCB. Moreover, if you have entered any values newly in the field, be sure to record the value in this label.

No.		TYP		
301	AE_ADJ			
302	LMP_ADJ			
303	AE_SLOP			
305	REGIST			
306	LE_BLANK			
307	PG_RGST			
308	PG_BLANK			
309	TE_BLANK			
319	MF_ARCH			
320	CST1_ARCH			
321	CST2_ARCH			
326	LIGHT_5			

No.		TYP		
327	LNS_HP			
328	MIRR_HP			
329	LNS_TBL			
330	MIRR_TBL			
331	MLT_CL			
332	MLT_TMG			
513	FIX_CNT1			
514	FIX_CNT2			
515	FIX_CNT3			
516	FIX_CNT4			
519	MODEL_SW			

No.		TYP		
701	DOC_ST_L			

	FRONT	REAR
P.(mm)		
T.(mm)		

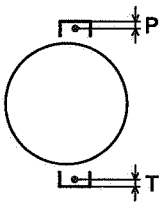

Figure 4-1

D. Display Mode [1]

- To select an item, use the keypad.
- To execute an item, use the Start key.
- To cancel an item, use the Clear key.

No.	Description	Remarks
101	Indicates the type of jam.	Indicates the type of jam. (See Table 4-2.)
106	E805	Indicates the code of the fan that caused E805. 01: exhaust fan at rear (FM2) 02: exhaust fan at fount (FM4) 03: sorter kit fan (FM5)
107	Indicates a history of jams.	Indicates the most recent five jams. A press on '1' through '5' keys will show the respective jams. (See Table 4-2.)
108	Indicates a history of errors.	Indicates the most recent five error codes. A press on '1' through '5' keys will show their respective error codes and the number being pressed.
109	Indicates the temperature detected by the fixing main thermistor (TH1).	unit: °C
110	Indicates the temperature detected by the fixing sub thermistor (TH2).	unit: °C
111	Indicates the temperature detected by the cleaner thermistor (TH3).	unit: °C
112	Indicates the output voltage of the AE sensor.	A press on the Start key will execute AE scanning. The output voltage of the AE sensor is indicated in decimal notation using three digits (e.g., 245 V will be indicated as '245').
113	Indicates the version of the ROM.	Indicates the version of the program.
114	Indicates the release number of the ROM.	Indicates the release number of the program.
115	Indicates the jam history of the ADF.	Indicates the history of the most recent five jams. A press on the '1' through '5' keys will indicate the type of their respective jams. (See Table 4-3.)
116	Indicates the jam history of the sorter.	Indicates the history of the most recent five jams. A press on the '1' through '5' keys will indicate the type of their respective jams. (See Table 4-5.)
117	Indicates the type of jam in the ADF.	Indicates the type of jam. (See Table 4-3.)
118	Indicates the type of warning for the ADF.	Indicates alarm codes of the ADF. (See Table 4-4.)
119	Indicates the version of the ROM of the ADF.	Indicates the version of the program.

No.	Description	Remarks
120	Indicates the release number of the ROM of the ADF.	Indicates the release number of the program.
121	Indicates the type of jam in the sorter.	Indicates the type of jam in the sorter. (See Table 4-5.)
122	Indicates the tray warning for the sorter.	Indicates the alarm code for the sorter. (See Table 4-6.)
123	Indicates the stapling alarm for the sorter.	Indicates the alarm code for the sorter. (See Table 4-7.)
124	Indicates the version of the ROM of the sorter.	Indicates the version of the program.
125	Indicates the release number of the ROM of the sorter.	Indicates the release number of the program.
126	Checks the keys on the control panel.	See p. 4-6.
127*	Document Size Indicator	Indicates codes for document sizes detected by document size sensor. (See Table 4-9)

*NP7210 only

Guide to Jam Types (No. 101) and Jam History (No. 107)

- The type of jam is indicated using the following codes in the 10's and 1's places. In the case of the history, the number corresponding to the keys on the keypad will be indicated in the 100's place.

Code	Description	Sensor
01	Registration delay jam	PS5
02	Registration stationary jam	
03	Registration paper sensor timing jam	
04	Delivery delay jam	PS6
05	Delivery stationary jam	
06	Right door open jam	PS11
07	Power-on jam	PS5, PS6
40	ADF jam	
50	Sorter jam	

Table 4-2

Guide to ADF Jam History (No. 115) and ADF Jam Type (No. 117)

- The type of jam is indicated using the following codes in the 10's and 1's places. In the case of the history, the number corresponding to the keys on the keypad will be indicated in the 100's place.

Code	Description
01	Separation extraction
02	Separation delay
03	Pick-up delay
04	Pick-up leading edge skew
05	Pick-up stationary
06	Pick-up double feeding
07	Pick-up trailing edge skew
08	Pick-up trailing edge retreat
09	Pick-up fault (leading edge)
41	Delivery delay
42	Delivery stationary
81	Open
82	Door open
84	Jam original page
87	Double feeding

Table 4-3

Guide to ADF Warning (No. 118)

Code	Description
02	Tray sensor off
03	Separation fault
04	Separation skew
05	Separation stopper override
11	Original pages-jam recovery pages mismatch
12	Original page in excess of 100
13	Original extraction
14	Original size error

Table 4-4

Guide to Sorter Jam History (No. 116) and Sorter Jam Type (No. 121)

- The type of jam is indicated using the following codes in the 10's and 1's places. In the case of the history, the number corresponding to the keys on the keypad will be indicated in the 100's place.

Code	Description
03	Feeding delay
04	Feeding stationary
05	Timing
06	Staple (stapler sorter only)
07	Power-on
08	Door open

Table 4-5

Guide to Sorter Tray Warning (No. 122)

Code	Description
02	Overstacking

Table 4-6

Guide to Sorter Stapling Warning (No. 123)

Code	Description
01	Stapler down
02	Staple
03	Stapler safety protection
04	Edging fault
05	Stapling overstacking
06	Staple stacking limit
07	Mixed paper sizes (breadthwise)
08	Staple unit absent
09	Paper in stapler
0A	Staple absent

Table 4-7

Checking the Control Panel Keys (No. 126)

1) While the copier is in mode No. 126, press all keys on the control panel except the Start key.
2) Press the Start key.
   - If '000' is indicated on the control panel, all keys are normal.
   - If an error key is found, the copier will indicate its respective code (Table 4-8).
     If multiple keys are found to be faulty, the copier will indicate the lowest-number code only.

Code	Key	Code	Key
1	Sorter key	17	Interrupt key
2	Auto Zoom key	18	Energy Saver key
3	Photo key	19	Clear key
4	Image Combination / Two-page Separation key	20	ID key
5	AE key	21	Number 0 key
6	Stop key	22	Number 1 key
7	Start key	23	Number 2 key
8	Reduce key	24	Number 3 key
9	1:1 key	25	Number 4 key
10	Enlarge key	26	Number 5 key
11	Paper Select key	27	Number 6 key
12	% key	28	Number 7 key
13	+ Zoom key	29	Number 8 key
14	- Zoom key	30	Number 9 key
15	Reset key	31	Fit Image key
16	Additional Functions key		

Table 4-8

How to Read No. 127 Document Size Indicator (*NP7210 only)

- The document size detected by the document size sensor is indicated by the following codes in single and double figures.

Code	Document size
1	B5
3	A4
4	B5R
5	B4
6	A4R
7	A3
11	LTR
13	LGL
14	LTRR
15	11"X17"
255	Undetected or no document

Table 4-9

E. I/O Display Mode [2]

- To select an item, use the keypad.
- To execute an item, use the Start key.
- To cancel an item, use the Clear key.

No.	Description	Remarks
201	Not used.	
202	Indicates digit 4.	Indicates the state of input. (See p. 4-9.)
203	Indicates digit 5.	Indicates the state of input. (See p. 4-9.)
204	Indicates digit 6.	Indicates the state of input. (See p. 4-9.)
205	Indicates digit 7.	Indicates the state of input. (See p. 4-9.)
206	Indicates the voltage of the fixing main thermistor (TH1).	Indicates the detected voltage. (e.g., 2.78 V will be indicated as '278'.)
207	Indicates the voltage of the fixing sub thermistor (TH2).	Indicates the detected voltage. (e.g., 2.78 V will be indicated as '278'.)
208	Indicates the voltage of the AE sensor.	Indicates the detected voltage. (e.g., 2.78 V will be indicated as '278'.)
209	Indicates the voltage of the cleaner thermistor (TH3).	Indicates the detected voltage. (e.g., 2.78 V will be indicated as '278'.)
216	Indicates the voltage of the density adjusting volume (VR1).	Indicates the detected voltage. (e.g., 2.78 V will be indicated as '278'.)
219	Indicates CPU port 6.	Indicates the state of input. (See p. 4-9.)
220	Indicates CPU port 8.	Indicates the state of input. (See p. 4-9.)
221*	Not used.	
222	Indicates PIO1B.	Indicates the state of input. (See p. 4-9.)
223	Indicates PI03B.	Indicates the state of input. (See p. 4-9.)
224	Not used.	
225	Not used.	

*NP7210 only

Guide to Nos. 202, 203, 204, 205, 219, 220, 221, 222, and 223

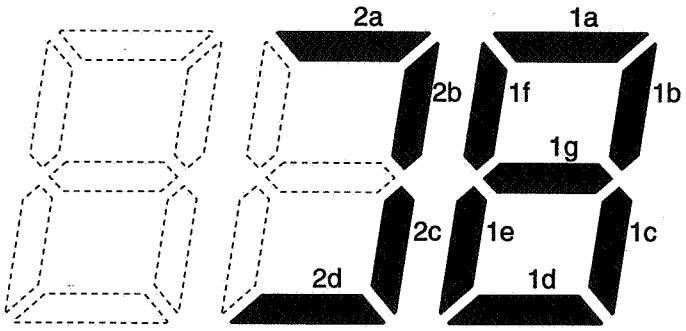

Figure 4-2

No.	LED	Description	Notation	Signal	Connector	Remarks
201	1a	–	–	–	–	–
	1b	–	–	–	–	–
	1c	–	–	–	–	–
	1d	–	–	–	–	–
	1e	–	–	–	–	–
	1f	–	–	–	–	–
	1g	–	–	–	–	–
	2a	–	–	–	–	–
	2b	–	–	–	–	–
	2c	–	–	–	–	–
	2d	–	–	–	–	–
202	1a	Detects the presence/absence of the total copy counter.	CNT1	TCNT_DR*	J102-A10	ON: present.
	1b	Detects the presence/absence of paper in cassette 1.	PS4	CSTPDT	J107-B12	ON: present.
	1c	Detects the presence/absence of a control card.	–	CCDT*	J104-A10	ON: absent.
	1d	Detects the state (open/closed) of the right door.	PS11	RDOPDT	J107-B7	ON: closed.
	1e*	Cassette 1 vertical path paper detection.	PS13	VPDT	J107-B15	ON: absent.
	1f	Cassette 2 vertical path paper detection.	PS102	OP_VPDT	J122-A10	ON: absent.
	1g	–	–	–	–	–
	2a	–	–	–	–	–
	2b	Detects paper in the multifeeder.	PS7	MLTPDT0	J107-A8	ON: present.
	2c	Detects the width of paper in the multifeeder (1).	PS9	MLTPDT1	J107-A11	
	2d	Detects the width of paper in the multifeeder (2).	PS10	MLTPDT2	J107-A14	

*NP7210 only

Table 4-10a

No.	LED	Description	Notation	Signal	Connector	Remarks
203	1a	Detects the state (open/closed) of the cassette 2 right door.	PS103	OP_DRDT	J122-A8	ON: closed.
	1b	Detects the presence/absence of paper in cassette 2.	PS101	OP_PDT	J122-B5	ON: present.
	1c	Detects the presence/absence of an accessories counter.	CNT2	OPCNT_DR*	J102-A12	ON: present.
	1d	Detects the presence/absence of the cassette 2.	–	OP_DT*	J122-A9	ON: absent.
	1e	Detects the rotation of the scanner cooling fan.	FM1	SCFAN_DT*	J104-B2	ON: on.
	1f	–	–	–	–	–
	1g	Detects the rotation of the exhaust fan.	FM4	EXFAN0_DT*	J104-B8	ON: on.
	2a	Detects the rotation of the exhaust fan.	FM2	EXFAN1_DT*	J104-B11	ON: on.
	2b	–	–	–	–	–
	2c	–	–	–	–	–
	2d	–	–	–	–	–
204	1a	Cassette 1 size detection 0	SW651	CSTS0	J110-4	ON: on.
	1b	Cassette 1 size detection 1	SW652	CSTS1	J110-3	ON: on.
	1c	Cassette 1 size detection 2	SW653	CSTS2	J110-2	ON: on.
	1d	Cassette 1 size detection 3	SW654	CSTS3	J110-1	ON: on.
	1e	Cassette 2 size detection 0	SW651	OP_CSTS0	J122-B9	ON: on.
	1f	Cassette 2 size detection 1	SW652	OP_CSTS1	J122-B8	ON: on.
	1g	Cassette 2 size detection 2	SW653	OP_CSTS2	J122-B7	ON: on.
	2a	Cassette 2 size detection 3	SW654	OP_CSTS3	J122-B6	ON: on.
	2b	–	–	–	–	–
	2c	–	–	–	–	–
	2d	–	–	–	–	–
205	1a	DSW102-1 setting	–	–	–	ON: on.
	1b	DSW102-2 setting	–	–	–	ON: on.
	1c	DSW102-3 setting	–	–	–	ON: on.
	1d	DSW102-4 setting	–	–	–	ON: on.
	1e	DSW102-5 setting	–	–	–	ON: on.
	1f	DSW102-6 setting	–	–	–	ON: on.
	1g	DSW102-7 setting	–	–	–	ON: on.
	2a	DSW102-8 setting	–	–	–	ON: on.
	2b	–	–	–	–	–
	2c	–	–	–	–	–
	2d	IPC detection (presence/absence)	–	–	–	ON: absence.
219	1a	–	–	–	–	–
	1b	Mirror home position detection	PS3	MRRHP	J103-B8	OFF: at HP.
	1c	Lens home position detection	PS2	LNSHP	J103-B5	OFF: at HP.
	1d	–	–	–	–	–
	1e	–	–	–	–	–
	1f	–	–	–	–	–
	1g	–	–	–	–	–
	2a	–	–	–	–	–
	2b	–	–	–	–	–
	2c	–	–	–	–	–
	2d	–	–	–	–	–

Table 4-10b

No.	LED	Description	Notation	Signal	Connector	Remarks
220	1a	Scanner home position detection	PS1	SCHP	J103-B2	OFF: at HP.
	1b	–	–	–	–	–
	1c	–	–	–	–	–
	1d	–	–	–	–	–
	1e	–	–	–	–	–
	1f	–	–	–	–	–
	1g	–	–	–	–	–
	2a	–	–	–	–	–
	2b	–	–	–	–	–
	2c	–	–	–	–	–
	2d	–	–	–	–	–
221	1a	–	–	–	–	–
	1b	–	–	–	–	–
	1c*	Document size detection sensor power	–	–	–	ON: power on
	1d	–	–	–	–	–
	1e*	Document size detection 0	DS1	DSZ0*	J125-6	ON: absence
	1f*	Document size detection 1	DS2	DSZ1*	J125-12	ON: absence
	1g*	Document size detection 2	DS3	DSZ2*	J125-9	ON: absence
	2a*	Document size detection 3	DS4	DSZ3*	J125-15	ON: absence
	2b	–	–	–	–	–
	2c	–	–	–	–	–
	2d	–	–	–	–	–
222	1a	Waste toner box full detection	–	TNFDT	J106-9	ON: full.
	1b	Main heater triac short circuit detection	H1	–	–	ON: on.
	1c	–	–	–	–	–
	1d	Scanning lamp on detection	LA1	LMPDT	J106-6	ON: on.
	1e	Toner level detection	TS1	TNEMP	J102-B2	ON: present.
	1f	Delivery detection	PS6	EXITPD	J124-2	ON: present.
	1g	Pre-registration paper detection	PS5	RGPDT	J107-A2	ON: present.
	2a	Swing cam home position detection	PS104	OP_CAMHP	J122-B1	ON: at HP.
	2b	–	–	–	–	–
	2c	–	–	–	–	–
	2d	–	–	–	–	–
223	1a	–	–	–	–	–
	1b	–	–	–	–	–
	1c	–	–	–	–	–
	1d	–	–	–	–	–
	1e	Zero-cross direction detection	–	–	–	–
	1f	Waste toner feedscrew lock detection	PS8	TRQMLDT	J106-10	
	1g*	Copyboard cover closed detection	PS12	CBCCDT	J125-2	ON: closed
	2a	Main motor (M1) lock detection	M1	MM_LKDT*	J106-16	ON: motor off.
	2b	–	–	–	–	–
	2c	–	–	–	–	–
	2d	–	–	–	–	–

*NP7210 only

Table 4-10c

F. Adjust Mode [3]

- To select an item, use the keypad.
- To execute an item, press the Start key.
- To change a setting, use the keypad or the +/- Zoom key.
- To enter a value, press the Start key.
- To remove an item, press the AE key.

No.	Description	Settings	Remarks
301	Executes AE auto adjustment.	—	Use it to perform AE adjustment. (See p. 2-15.)
302	Adjust the lamp intensity for AE mode.	450 – 750 (120V model) 0 – 590 (230V model)	A lower setting will increase the intensity of the scanning lamp (LA1), making the copies lighter. (Use it when performing AE adjustment.)
303	Adjusts the copy density (developing bias) slope for AE mode.	0 – 255	A lower setting will make the copies lighter. (Use it when performing AE adjustment.)
305	Adjust the leading edge margin (registration roller clutch CL1 activation timing).	0 – 500	A higher setting will delay pick-up of copy paper in relation to the image, thereby decreasing the leading edge margin. (unit: 0.21 mm)
306	Adjusts the leading edge non-image width (blank exposure lamp LA3 de-activation timing).	0 – 500	A higher setting will delay de-activation of the lamp, thereby increasing the leading edge non-image width. (unit: 0.21 mm)
307	Adjusts the leading edge registration on right pages in page separation (registration roller clutch CL1 activation timing).	0 – 500	A higher setting will delay pick-up of copy paper in relation to the image, thereby decreasing the leading edge margin. (unit: 0.21 mm)
308	Adjusts the leading edge margin on right pages in page separation mode (blank exposure lamp LA3 de-activation timing).	0 – 500	A higher setting will delay de-activation of the lamp, thereby increasing the leading edge non-image width. (unit: 0.21 mm)
309	Adjusts the trailing edge margin (blank exposure lamp LA3 activation timing).	0 – 500	A lower setting will advance activation of the lamp, thereby increasing the trailing edge margin. (unit: 0.21 mm)
319	Adjusts the arching in multifeeder mode (de-activation of the multifeeder pick-up roller clutch CL3).	0 – 200	A higher setting will delay deactivation of the clutch, thereby increasing arching. (unit; 0.21 mm)
320	Adjusts the arching in cassette 1 pick-up mode (de-activation of pick-up roller clutch CL2).	0 – 100	A higher setting will increase the arching. (unit: 0.42 mm)
321	Adjusts the arching in cassette 2 pick-up mode (de-activation of the pick-up roller clutch).	0 – 100	A higher setting will delay de-activation of the clutch, thereby increasing the arching. (unit: 0.42 mm)

No.	Description	Settings	Remarks
326	Adjusts the activation voltage of the scanning lamp.	450 – 660 (120V model) 0 – 390 (230V model)	A higher setting will increase the intensity of the scanning lamp (LA1), making the copies lighter.
327	Adjusts the position of the lens (Direct at 100%).	0 – 200	A higher setting will enlarge the image. (unit:0.1 mm)
328	Adjusts mirror home position (at 100% ratio).	0 – 400	A higher setting will enlarge the image. (unit: 0.05 mm)
329	Selects a table for lens travel to suit reproduction ratio.	0 – 3	If you replaced the DC controller PCB or initialized the RAM, be sure to enter the value recorded on the Service Label stored behind the front door.
330	Selects a table for No. 4/No. 5 mirror travel to suit reproduction ratio.	0 – 3	If you replaced the DC controller PCB or initialized the RAM, be sure to enter the value recorded on the Service Label stored behind the front door.
331	Adjusts the timing of activation of the multifeeder pick-up clutch (CL3). Use this mode if double feeding or pick-up failure cannot be corrected by adjusting the pressure of the separation pad.	0 – 999	A higher setting will delay activation of the clutch. (unit: 2m sec) • If pick-up failure occurs, decrease the setting. • If double feeding occurs, increase the setting.
332	Adjusts activation of the multifeeder pick-up clutch (CL3) Use this mode if pick-up failure occurs when using thick paper.	0 – 999	A higher setting will delay activation of the clutch. (unit: 2m sec) • If thick paper is not fed as far as the registration roller, increase the setting.

G. Function Mode [4]

- To select an item, use the keypad.
- To execute an item, use the Start key.
- To stop an item, use the Stop key.
- To clear an item, use the Clear key.

Caution:
Be sure that the copier is in standby state when executing any item.

No.	Description	Remarks
401	Stirs toner.	The developing assembly (main motor) will rotate 4 min. (The pre-exposure lamp LA2 and the blank exposure lamp LA3 will turn on, and all high-voltage outputs will turn off.)
402	Releases the multifeeder holding plate.	Releases the multifeeder holding plate.
403	Drum unit installation mode. Execute this mode at the time of drum unit installation or replacement.	The drum unit and developing assembly will rotate 40 sec.
406	Checks the fixing nip.	Checks the fixing nip. (The Stop key will be disabled.)
408	Checks the activation of the scanning lamp (LA1).	The scanning lamp will turn on for 5 sec.
409	Checks all indicators on the control panel.	All LEDs on the control panel will turn on for 5 sec.
410	Checks the forward movement of the scanning lamp.	The scanner moves forward while the + key is held down. The scanner moves in reverse while the - key is held down.
411	Checks the activation of the pre-exposure lamp (LA2).	The pre-exposure lamp will turn on.
412	Initializes E000, E001, E002, E003, or E004.	Press the Start key while the error code (E000, E001, E002, E003, or E004) is indicated.
440	Moves the scanner, lens, and No. 4/No. 5 mirror unit.	Execute this mode before transporting the machine so that the scanner, lens, and No. 4/No. 5 mirror unit will be positioned for transportation.
450	Initializes the back-up RAM.	Press '1' on the keypad and the Start key in sequence. (The power will turn off, initializing all RAM data.)

H. Option Mode [5]

- To select an item, use the keypad.
- To execute an item, use the Start key.
- To change settings, use the keypad or the + and - Zoom keys.
- To store settings, use the Start key.
- To cancel an item, use the Clear key.

No.	Description	Remarks
505	Sets U1 size.	See Table 4-11.
506	Sets U2 size.	See Table 4-11.
510	Sets drum cleaning. To remove dirt from the surface of the photosensitive drum, toner is deposited on the surface after copying operation and the cleaning blade is used to collect the toner together with the dirt. (If '1' is setting of '519', in addition, LSTR is extended by 6.5 sec.)	0: Disable drum cleaning (standard). 1: Execute drum cleaning for every 50 copies (standard in Chinese mode). 2: Execute drum cleaning for every 10 copies. 3: Execute drum cleaning for every 25 copies.
511	Sets the copying start temperature for auto start mode.	0: 140°C (NP7161/NP7160, standard) 155°C (NP7210, standard) 1: 160°C
512	Sets the copying start temperature.	0: 160°C (standard) 1: 180°C
513	Sets the fixing target temperature for paper width > 257mm (A3, A4, 11" × 17", LTR)	0: Standard target temperature 1: Standard target temperature +10°C 2: Standard target temperature + 5°C 3: Standard target temperature - 5°C 4: Standard target temperature -10°C
514	Sets the fixing target temperature for 257mm ≧ paper width > 216mm (B4, B5)	0: Standard target temperature 1: Standard target temperature +10°C 2: Standard target temperature + 5°C 3: Standard target temperature - 5°C 4: Standard target temperature -10°C
515	Sets the fixing target temperature for 216mm ≧ paper width > 182mm (A4R, A5, LGL, LTRR)	0: Standard target temperature 1: Standard target temperature +10°C 2: Standard target temperature + 5°C 3: Standard target temperature - 5°C 4: Standard target temperature -10°C
516	Sets the fixing target temperature for 182mm ≧ paper width (B5R, A5R, STMTR)	0: Standard target temperature 1: Standard target temperature +10°C 2: Standard target temperature + 5°C 3: Standard target temperature - 5°C 4: Standard target temperature -10°C

No.	Description	Remarks
517	Enables/disables retry for cassette pick-up operation. In cassette pick-up mode, pick-up operation will be executed once again without indicating the first registration delay jam.	0: Make a retry (standard). Indicates the Jam message in response to the second registration delay jam. 1: Do not make a retry. Indicates the Jam message in response to the first registration delay jam.
518	Sets the count for the control card in multifeeder pick-up.	0: Increment by 1 for all sizes (standard). 1: Increment by 2 for all sizes.
519	Selects settings to suit the site of installation. Making changes using this mode will change the settings under '510' as follows: • If '1' is selected instead of '0' in this mode, '1' will be set under '510'. • If '0' is selected instead of '1' in this mode, '0' will be set under '510'. However, '510' settings may be changed after making changes in this mode.	0: Normal (standard) 1: China The standard target temperature for fixing will be lowered by 10°C. In addition, 'U14' will be added to user mode.
520*	Switching document size detection (AB/INCH) When the set sizes of the dip switch (SW102) on the DC controller PCB are AB and INCH, switch the detection size of the document size sensor in this mode.	0 : AB (standard) 1 : INCH
523*	Paper size settings for copy speed reducing sequence	0 : For paper less than 216mm wide (standard) 1 : For paper less than 257mm wide
524*	257mm≧paper width>216mm (B4, B5) standard copy speed reducing settings This mode is only effective when "523" is set on 1.	0 : No reduction in copy speed (standard) 1 : Copy speed is same as for NP7161/NP7160
526*	A4R standard copy speed reducing settings	0 : No reduction in copy speed (standard) 1 : Copy speed is same as for NP7161/NP7160

*NP7210 only

Paper Sizes Available under No. 505/506

Code	Paper	Size (vertical x horizontal in mm)
0	BOLIVIA	216.0 x 355.0
1	ARGENTINE OFICIO	220.0 x 340.0
2	ARGENTINE LEGAL	220.0 x 340.0
3	AUSTRALIAN FOOLSCAP	206.0 x 337.0
4	FOOLSCAP	215.9 x 330.2
5	FOLIO	210.0 x 330.0
6	GOVERNMENT LEGAL	203.2 x 330.2
7	ECUADORAN OFICIO	220.0 x 320.0
8	OFFICIO	216.0 x 317.0
9	ARGENTINE LETTER R	220.0 x 280.0
10	KOREAN LEAGAL R	190.0 x 268.0
11	GOVERNMENT LETTER R	203.2 x 266.7
12	ARGENTINE LETTER	280.0 x 220.0
13	GOVERNMENT LETTER	266.7 x 203.2
14	KOREAN LEAGAL	268.0 x 190.0

Table 4-11

I. Counter Mode [6]

- To select an item, use the keypad.
- To execute an item, use the Start key.
- To cancel an item, use the Clear key.
- The result obtained by multiplying the indicated value by 100 will be the actual count.

No.	Description	Remarks
601	Large copy counter	
602	Small copy counter	
603	Total copy counter	
604	ADF large original page counter	
605	ADF small original page counter	
606	Count clear	A press on the Start key will initialize the count (601 to 605), returning it to '0' on the control panel.

J. Application Mode [7]

- To select an item, use the keypad.
- To execute an item, use the Start key.
- To change the value, use the keypad or the + and - Zoom keys.
- To store settings, use the Start key.
- To cancel an item, use the Clear key.

No.	Description	Settings	Remarks
701	Adjusts the ADF original page stop position.	1–255	A lower setting will move the original page stop position in the direction of delivery. (unit: 0.116 mm)

CHAPTER 5 SELF DIAGNOSIS

The microprocessor on the copier's DC controller PCB is equipped with a function that checks the condition of the machine (especially the condition of sensors). It runs checks at such times as programmed, and will indicate any fault it finds in the form of code.

A. Copier

Code	Cause	Description
E000	• The thermistor (TH1, TH2) has poor contact or an open circuit. • The fixing heater (H1) has an open circuit. • The thermal switch (TSW1) has turned on. • The triac is faulty. • The DC controller PCB is faulty.	• The surface temperature of the fixing upper roller does not reach 40°C within 14 sec after power-on.
E001	• The thermistor (TH1, TH2) has a short circuit. • The triac is faulty. • The DC controller PCB is faulty.	• The surface temperature of the fixing upper roller exceeded 230°C.
E002	• The thermistor (TH1, TH2) has poor contact or an open circuit. • The fixing heater (H1) has an open circuit. • The thermal switch (TSW1) has turned on. • The triac is faulty. • The DC controller PCB is faulty.	• The surface temperature of the fixing upper roller does not reach 60°C within 10 after it exceeded 40°C. • The surface temperature of the fixing upper roller does not reach 80°C within 10 sec after it exceeded 60°C. • The surface temperature of the fixing upper roller does not reach 100°C within 10 sec after it exceeded 80°C. • The surface temperature of the fixing upper roller does not reach 120°C within 10 sec after it exceeded 100°C.
E003	• The thermistor (TH1, TH2) has poor contact or an open circuit. • The fixing heater (H1) has an open circuit. • The thermal switch (TSW1) has turned on. • The triac is faulty. • The DC controller PCB is faulty.	• The surface temperature of the fixing upper roller drops to 130°C or less after it reached the target temperature (160°C) for standby.
E004	• The triac has a short circuit. • The DC controller PCB is faulty.	• The triac is identified as having a short circuit.

Code	Cause	Description
E010	• The main motor (M1) is faulty. • The DC controller PCB is faulty.	• The main motor lock detection signal (MM_LKDT*) is detected for 1 sec continuously while the main motor is being driven.
E013	• The waste toner feedscrew is locked. • The waste toner feedscrew lock sensor (PS8) is faulty. • The DC controller PCB is faulty.	• The waste toner feedscrew lock detection signal (TRQMLDT) does not switch for 0.5 sec or more while the main motor is being driven.
E030	• The total copy counter has an open circuit. • The DC controller PCB is faulty.	• The total copy counter is identified to have an open circuit when the Start key is pressed or when the counter is driven.
E031	• The accessories counter has an open circuit. • The DC controller PCB is faulty.	• The accessories counter is identified as having an open circuit when the Start key is pressed or the couter is being driven.
(E202) No code indication. Keys are disabled. (Note 2)	• The scanner home position sensor (PS1) is faulty. • The scanner motor (M2) is faulty. • The DC controller PCB is faulty.	• The scanner does not return to home position within a specific period of time when it is being moved. • The scanner home position sensor (PS1) remains on during image exposure (forward movement).
E208	• The mirror home position sensor (PS3) is faulty. • The mirror motor (M4) is faulty. • The DC controller PCB is faulty.	• The No. 4/No. 5 mirror unit does not turn on or off the mirror home position sensor (PS3) within a specific period of time while the No. 4/No. 5 mirror unit is being moved.
E210	• The lens home position sensor (PS2) is faulty. • The lens motor (M3) is faulty. • The DC controller PCB is faulty.	• The lens unit does not turn on or off the lens home position sensor (PS2) within a specific period of time when the lens unit is being moved.
E220	• The lamp regulator PCB is faulty. • The DC controller PCB is faulty.	• The scanning lamp turns on during standby. • The scanning lamp turns off during copying.
E261	• The power supply frequency is faulty. • The power supply PCB is faulty.	• The intervals of the zero-cross signals exceed the allowed intervals for 50/60 Hz.

Code	Cause	Description
E710	• The DC controller PCB is faulty.	• IC114 (IPC) on the DC controller PCB cannot be initialized at power -on.
E711	• The DC controller PCB is faulty.	• An IPC communication error has been detected twice or more within 1 sec at power-on.
E712	• The DC controller PCB is faulty. • The ADF controller PCB is fault. • The ADF cable is faulty.	• A communication error with the ADF controller PCB cannot be cleared.
E717	• The DC controller PCB is faulty. • The Remote Diagnostic Device II PCB is faulty.	• A condition in which a response from the Remote Diagnostic Device II cannot be received occurred three times continuously. • The Remote diagnostic Device II communicates an interruption of count pulses.
E800	• The auto power-off circuit has an open circuit. • The DC controller PCB is faulty.	• An open circuit is detected for 5 V or 24 V at power-on.
E805	• The exhaust fan (FM2, FM4) is faulty. • The DC controller PCB is faulty.	• The exhaust fan drive detection signal (EXFAN1_DT*, FXFAN0_DT*) cannot be detected 0.5 sec after the start of the exhaust fan (FM2, FM4).
E821	• The ozone filter is clogged. • The cleaner thermistor (TH3) has poor contact or an open circuit. • The DC controller PCB is faulty.	• The cleaner thermistor (TH3) detects 55°C or more.

Note:

1. When the diagnostic function has turned on, the copier can be reset by turning it off once. This, however, does not apply to E000, E001, E002, E003, or E004.
   This is to prevent the user from resetting the copier easily when the error is caused by an open circuit in the thermistor, otherwise overheating and damaging the fixing roller.
   Normally, the copier will automatically turn off in about 4 sec if it is turned on without clearing E000 through E004.
   To clear E000 through E004, operate as follows:
   1) Select '412' (clear E000–E004) in service mode.
      • The copier's control panel indicates the respective error code.
   2) Press the Start key.
   3) The copier will automatically turn off, clearing the error.
2. E202 may be checked using '108' in service mode (error history indication).

B. ADF

Code	Cause	Description
E400	• The communication cable to the copier has a fault. • The ADF controller PCB has a fault.	• While the ADF is in standby, the communication with the copier is interrupted for 5 sec or more. • While the ADF is in operation, the communication with the copier is interrupted for 0.5 sec or more.
E401	• The separation motor does not rotate. • The crescent sensor is faulty.	• See the ADF Service Manual.
E402	• The main motor (M1) fails to rotate. • The main motor clock sensor (PI3) is faulty.	When the main motor is being driven, no feeding clock pulse is detected after a period of time equivalent of a feed length of 30 mm.
E403	• The feed motor does not rotate. • The feed motor clock is faulty.	• See the ADF Service Manual.
E404	• The delivery motor does not rotate. • The delivery clock is faulty.	• See the ADF Service Manual.
E411	• The width sensor (Q504) is faulty. • The registration sensor (Q502) is faulty.	The output of each sensor drops below the standard 2.00 V in the absence of paper.
E431	• The auto start separation motor does not rotate. • The auto start crescent sensor is faulty. • The auto start separation clock is faulty.	• See the ADF Service Manual.

Note:
When the self diagnosis function has turned on, the ADF may be reset by turning off the copier.
To continue making copies while the ADF is out of order, disconnect the lattice connector on the ADF side, open the ADF, and place an original on the copyboard glass.

C. Sorter

Code	Cause	Description
E500	• Exchange of data with the copier is faulty.	• Communication is monitored at all times. This error occurs when the communication with the copier stops.
E510	• The feed motor does not rotate.	• See the Sorter Service Manual.
E511	• The feed motor rotates too slowly.	• See the Sorter Service Manual.
E513	• The tandem path motor does not rotate.	• See the Sorter Service Manual.
E520	• The stack motor does not rotate.	• See the Sorter Service Manual.
E530	• Guide bar motor (M3) does not rotate.	• The input signal of the guide bar home position sensor (PI6) does not change within the specified time after the motor drive signal has been generated (when returning the guide bar to home position). • The output signal of the guide bar home position sensor (PI6) does not change within the specified time after the motor drive signal has been generated (when moving the guide bar from home position).
E531	• Stapler unit swing motor (M1) does not rotate.	• The stapler unit home position switch (SW1) remains the same for a specific time after the motor drive signal has been generated.
E540	• Bin shift motor (M4) does not rotate.	• The output signal of the lead cam home position sensor (PI1) does not change within the specified time after the motor drive signal has been generated. • While the motor is being driven, the intervals of the output signals of the lead cam home positions sensor (PI1) does not change the specified time. • While the motor is being driven, the overload detecting switch (SW3) turns on. In this case, the bin unit is moved by a single bin and an error is issued.
E541	• The shift motor rotates too slowly.	• See the Sorter Service Manual.
E550	• A timing jam has occurred.	• See the Sorter Service Manual.

D. Cassette Feeding Module

Code	Cause	Description
E904	• The waste toner box swing cam home position sensor (PS104) is faulty. • The cassette motor (M101) is faulty. • The cassette relay PCB is faulty. • The DC controller PCB is faulty.	• The waste toner box swing cam does not return to home position within a specific period of time when the waste toner box swing cam is being driven.

A. GENERAL TIMING CHART

1. NP7161/NP7160

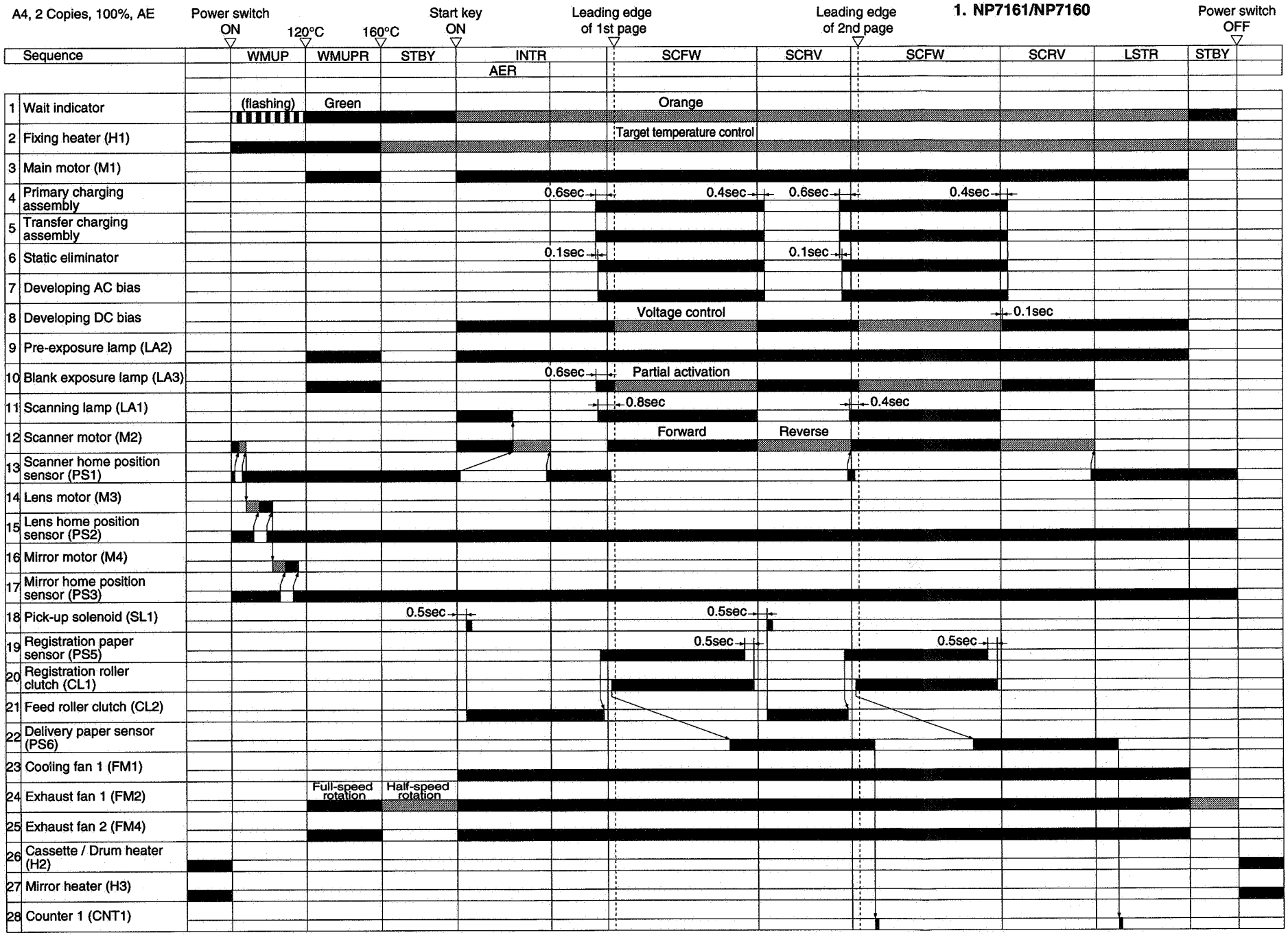

2. NP7210

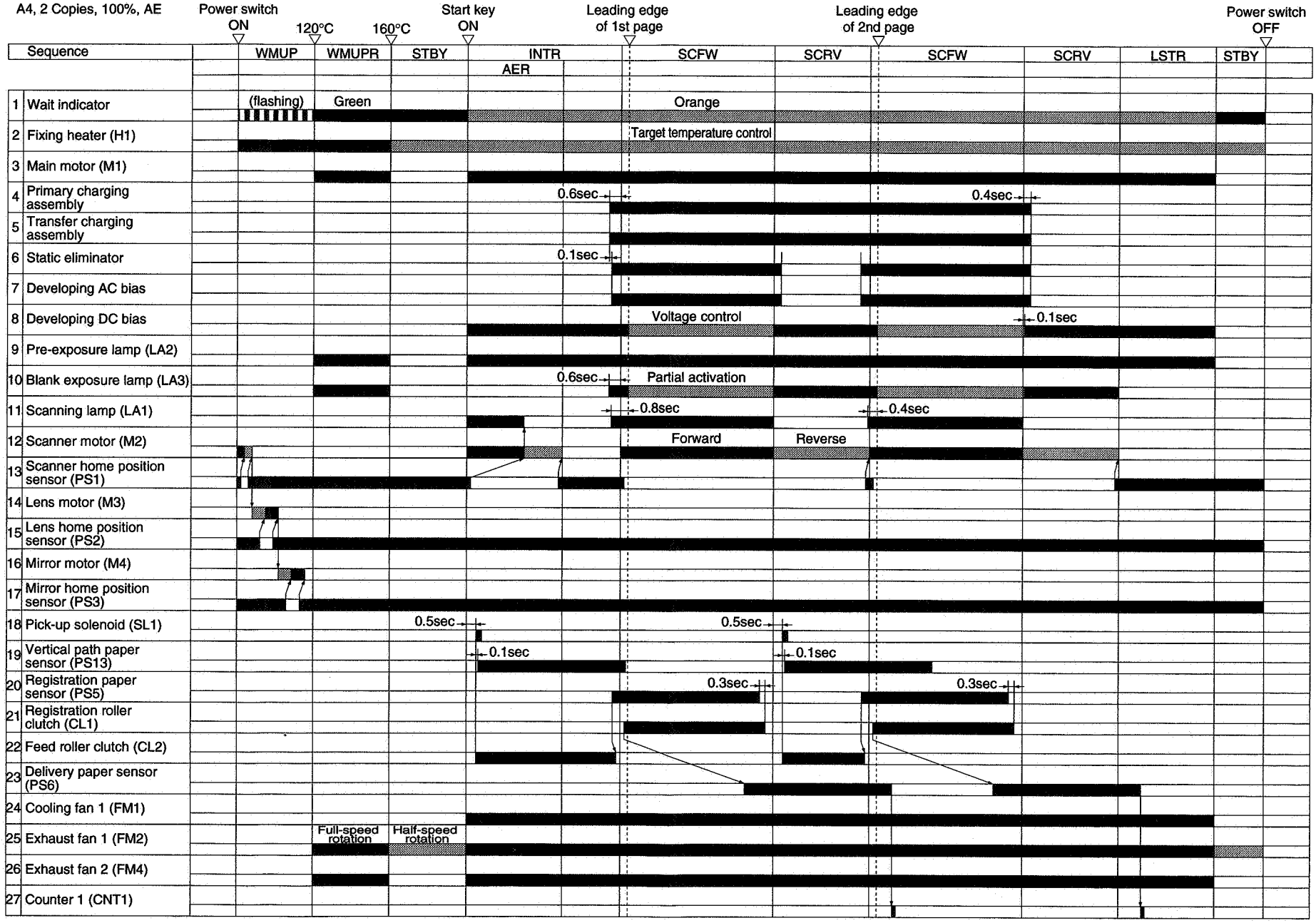
A4, 2 Copies, 100%, AE
Power switch ON
120°C
160°C
Start key ON
Leading edge of 1st page
Leading edge of 2nd page
Power switch OFF
Sequence
WMUP
WMUPR
STBY
INTR
AER
SCFW
SCRV
SCFW
SCRV
LSTR
STBY
1 Wait indicator
(flashing)
Green
Orange
2 Fixing heater (H1)
Target temperature control
3 Main motor (M1)
4 Primary charging assembly
0.6sec
0.4sec
5 Transfer charging assembly
6 Static eliminator
0.1sec
7 Developing AC bias
8 Developing DC bias
Voltage control
0.1sec
9 Pre-exposure lamp (LA2)
10 Blank exposure lamp (LA3)
0.6sec
Partial activation
11 Scanning lamp (LA1)
0.8sec
0.4sec
12 Scanner motor (M2)
Forward
Reverse
13 Scanner home position sensor (PS1)
14 Lens motor (M3)
15 Lens home position sensor (PS2)
16 Mirror motor (M4)
17 Mirror home position sensor (PS3)
18 Pick-up solenoid (SL1)
0.5sec
0.5sec
19 Vertical path paper sensor (PS13)
0.1sec
0.1sec
20 Registration paper sensor (PS5)
0.3sec
0.3sec
21 Registration roller clutch (CL1)
22 Feed roller clutch (CL2)
23 Delivery paper sensor (PS6)
24 Cooling fan 1 (FM1)
25 Exhaust fan 1 (FM2)
Full-speed rotation
Half-speed rotation
26 Exhaust fan 2 (FM4)
27 Counter 1 (CNT1)

B. SIGNALS AND ABBREVIATIONS

1. Signals

5V_ON	5VU ON signal
AC_24V_ON	AC AND 24V ON signal
[AE_DATA]	AE SENSOR OUTPUT signal
[AE_REF]	AE SENSOR REFERENCE signal
BLK_CNDR*	BLANK EXPOSURE LAMP CENTER DRIVE command
BLK_DEN*	BLANK EXPOSURE LAMP DRIVE ENABLE signal
BLK_LCK	BLANK EXPOSURE LAMP SERIAL DATA LATCH signal
BLK_PW	BLANK EXPOSURE POWER line
BLK_SCK	BLANK EXPOSURE LAMP SERIAL DATA CLOCK signal
BLK_SD	BLANK EXPOSURE LAMP SERIAL DATA signal
CBCCDT	COPYBOARD COVER CLOSE DETECTION signal
[CLTH]	CLEANER THERMISTOR signal
[CPY_DNS]	COPY DENSITY VOLUME signal
CSTPDT	CASSETTE PAPER DETECTION signal
CSTS0	CASSETTE SIZE DETECTION 0 signal
CSTS1	CASSETTE SIZE DETECTION 1 signal
CSTS2	CASSETTE SIZE DETECTION 2 signal
CSTS3	CASSETTE SIZE DETECTION 3 signal
DSZ0*	DOCUMENT SIZE DETECTION 0 signal
DSZ1*	DOCUMENT SIZE DETECTION 1 signal
DSZ2*	DOCUMENT SIZE DETECTION 2 signal
DSZ3*	DOCUMENT SIZE DETECTION 3 signal
DV_AC_CNT	DEVELOPING AC BIAS CONTROL command
DV_AC_DR	DEVELOPING AC BIAS DRIVE command
DV_DC_CNT	DEVELOPING DC BIAS CONTROL command
DV_DC_DR	DEVELOPING DC BIAS DRIVE command
EXFAN0_DR	EXHAUST FAN 0 DRIVE command
EXFAN0_DT*	EXHAUST FAN 0 DRIVE DETECTION signal
EXFAN1_DR	EXHAUST FAN 1 DRIVE command
EXFAN1_DT*	EXHAUST FAN 1 DRIVE DETECTION signal
EXITPD	DELIVERY PAPER DETECTION signal
FEED_CL*	FEED ROLLER CLUTCH DRIVE command
HEAT_DR	FIXING HEATER DRIVE command
HEAT_ERR	FIXING HEATER ERROR DETECTION signal
HVT_DR	HVT DRIVE command
LMP_PWM	SCANNING LAMP PULSE WIDTH MODIFICATION signal
LMPDR	SCANNING LAMP DRIVE command
LMPDT	SCANNING LAMP DRIVE DETECTION signal
LNS_A	LENS MOTOR A command
LNS_A*	LENS MOTOR A* command
LNS_B	LENS MOTOR B command
LNS_B*	LENS MOTOR B* command
LNS_COM	LENS MOTOR DRIVE command
LNSHP	LENS HOME POSITION DETECTION signal
MLT_CL*	MULTIFEED ROLLER CLUTCH DRIVE command
MLT_SL*	MULTIFEED SOLENOID DRIVE command
MLTPD0	MULTIFEEDER PAPER DETECTION signal
MLTPD1	MULTIFEEDER PAPER WIDTH DETECTION signal 1
MLTPD2	MULTIFEEDER PAPER WIDTH DETECTION signal 2
MM_DR	MAIN MOTOR DRIVE command
MM_LKDT	MAIN MOTOR LOCK DETECTION signal
MMR_A	MIRROR MOTOR A command
MMR_A*	MIRROR MOTOR A* command
MMR_B	MIRROR MOTOR B command
MMR_B*	MIRROR MOTOR B* command
MMR_COM	MIRROR MOTOR DRIVE command
MRRHP	MIRROR HOME POSITION DETECTION signal
OPCNT_DR*	ACCESSORY COUNTER DRIVE command
OP_CAMHP	SWING CAM HOME POSITION DETECTION signal
OP_DRDT*	CASSETTE 2 RIGHT DOOR OPEN DETECTION signal
OP_DT*	CASSETTE 2 DETECTION signal
OP_CSTS_0	CASSETTE 2 SIZE DETECTION 0 signal
OP_CSTS_1	CASSETTE 2 SIZE DETECTION 1 signal
OP_CSTS_2	CASSETTE 2 SIZE DETECTION 2 signal
OP_CSTS_3	CASSETTE 2 SIZE DETECTION 3 signal
OP_MTDR	CASSETTE 2 MOTOR DRIVE command
OP_M_COM	CASSETTE 2 MOTOR DRIVE command
OP_M_A	CASSETTE 2 MOTOR A command
OP_M_A*	CASSETTE 2 MOTOR A* command
OP_M_B	CASSETTE 2 MOTOR B command
OP_M_B*	CASSETTE 2 MOTOR B* command
OP_PDT	CASSETTE 2 PAPER DETECTION signal
OP_PU_SL*	CASSETTE 2 PICK-UP SOLENOID DRIVE command
OP_VPDT	CASSETTE 2 VERTICAL PATH PAPER DETECTION signal
PREXP_DR*	PRE-EXPOSURE LAMP DRIVE command
PU_SL*	PICK-UP SOLENOID DRIVE command
PW_SW	POWER SWITCH signal
RDOPDT	RIGHT DOOR OPEN DETECTION signal
RG_CL*	REGISTRATION ROLLER CLUTCH DRIVE command
RGPDT	REGISTRATION PAPER DETECTION signal
SC_A	SCANNER MOTOR A command
SC_A*	SCANNER MOTOR A* command
SC_B	SCANNER MOTOR B command
SC_B*	SCANNER MOTOR B* command

SC_COM	SCANNER MOTOR DRIVE command
SCFAN_DR	COOLING FAN DRIVE command
SCFAN_DT*	COOLING FAN DRIVE DETECTION signal
SCHP	SCANNER HOME POSITION DETECTION signal
STFAN_DR	SORTER KIT FAN DRIVE command
STFAN_DT*	SORTER KIT FAN DRIVE DETECTION signal
TCNT_DR*	TOTAL COUNTER DRIVE command
[TH1]	FIXING MAIN THERMISTOR signal
TH1_DT	FIXING MAIN THERMISTOR DETECTION signal
[TH2]	FIXING SUB THERMISTOR signal
[TNEMP]	TONER EMPTY signal
TNFDT	WASTE TONER FULL DETECTION signal
TRQMLDT	WASTE TONER FEEDING SCREW LOCKED DETECTION signal
VPDT	VERTICAL PATH PAPER DETECTION signal
ZRCRSS	ZERO CROSS signal

2. Abbreviations

AER	AE ROTATION
INTR	INITIAL ROTATION
LSTR	LAST ROTATION
SCFW	SCANNER FORWARD
SCRV	SCANNER REVERSE
STBY	STANDBY
WMUP	WARM-UP
WMUPR	WARM-UP ROTATION

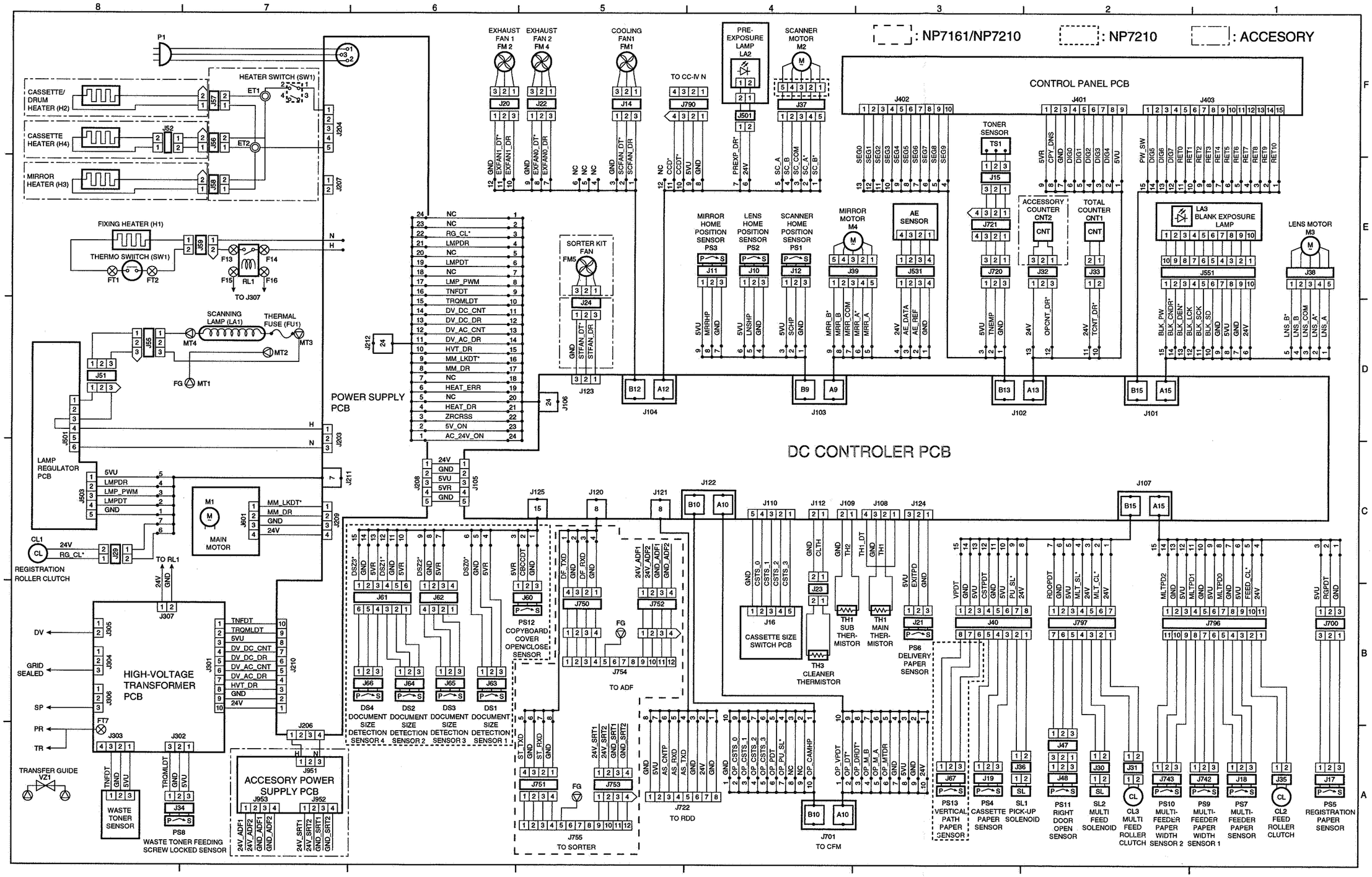
: NP7161/NP7210
: NP7210
: ACCESORY
DC CONTROLER PCB
POWER SUPPLY PCB
CONTROL PANEL PCB
HIGH-VOLTAGE TRANSFORMER PCB
ACCESORY POWER SUPPLY PCB
LAMP REGULATOR PCB
CASSETTE/ DRUM HEATER (H2)
CASSETTE HEATER (H4)
MIRROR HEATER (H3)
HEATER SWITCH (SW1)
FIXING HEATER (H1)
THERMO SWITCH (SW1)
SCANNING LAMP (LA1)
THERMAL FUSE (FU1)
EXHAUST FAN 1 FM 2
EXHAUST FAN 2 FM 4
COOLING FAN1 FM1
PRE-EXPOSURE LAMP LA2
SCANNER MOTOR M2
SORTER KIT FAN FM5
MIRROR HOME POSITION SENSOR PS3
LENS HOME POSITION SENSOR PS2
SCANNER HOME POSITION SENSOR PS1
MIRROR MOTOR M4
AE SENSOR
TONER SENSOR
ACCESSORY COUNTER CNT2
TOTAL COUNTER CNT1
LA3 BLANK EXPOSURE LAMP
LENS MOTOR M3
MAIN MOTOR
REGISTRATION ROLLER CLUTCH
TRANSFER GUIDE VZ1
WASTE TONER SENSOR
PS8 WASTE TONER FEEDING SCREW LOCKED SENSOR
DS4 DOCUMENT SIZE DETECTION SENSOR 4
DS2 DOCUMENT SIZE DETECTION SENSOR 2
DS3 DOCUMENT SIZE DETECTION SENSOR 3
DS1 DOCUMENT SIZE DETECTION SENSOR 1
PS12 COPYBOARD COVER OPEN/CLOSE SENSOR
TO ADF
TO SORTER
TO RDD
TO CFM
CASSETTE SIZE SWITCH PCB
TH1 SUB THER-MISTOR
TH1 MAIN THER-MISTOR
TH3 CLEANER THERMISTOR
PS6 DELIVERY PAPER SENSOR
PS13 VERTICAL PATH PAPER SENSOR
PS4 CASSETTE PAPER SENSOR
SL1 PICK-UP SOLENOID
PS11 RIGHT DOOR OPEN SENSOR
SL2 MULTI FEED SOLENOID
CL3 MULTI FEED ROLLER CLUTCH
PS10 MULTI-FEEDER PAPER WIDTH SENSOR 2
PS9 MULTI-FEEDER PAPER WIDTH SENSOR 1
PS7 MULTI-FEEDER PAPER SENSOR
CL2 FEED ROLLER CLUTCH
PS5 REGISTRATION PAPER SENSOR

D. CASSETTE FEEDING MODULE CIRCUIT DIAGRAM

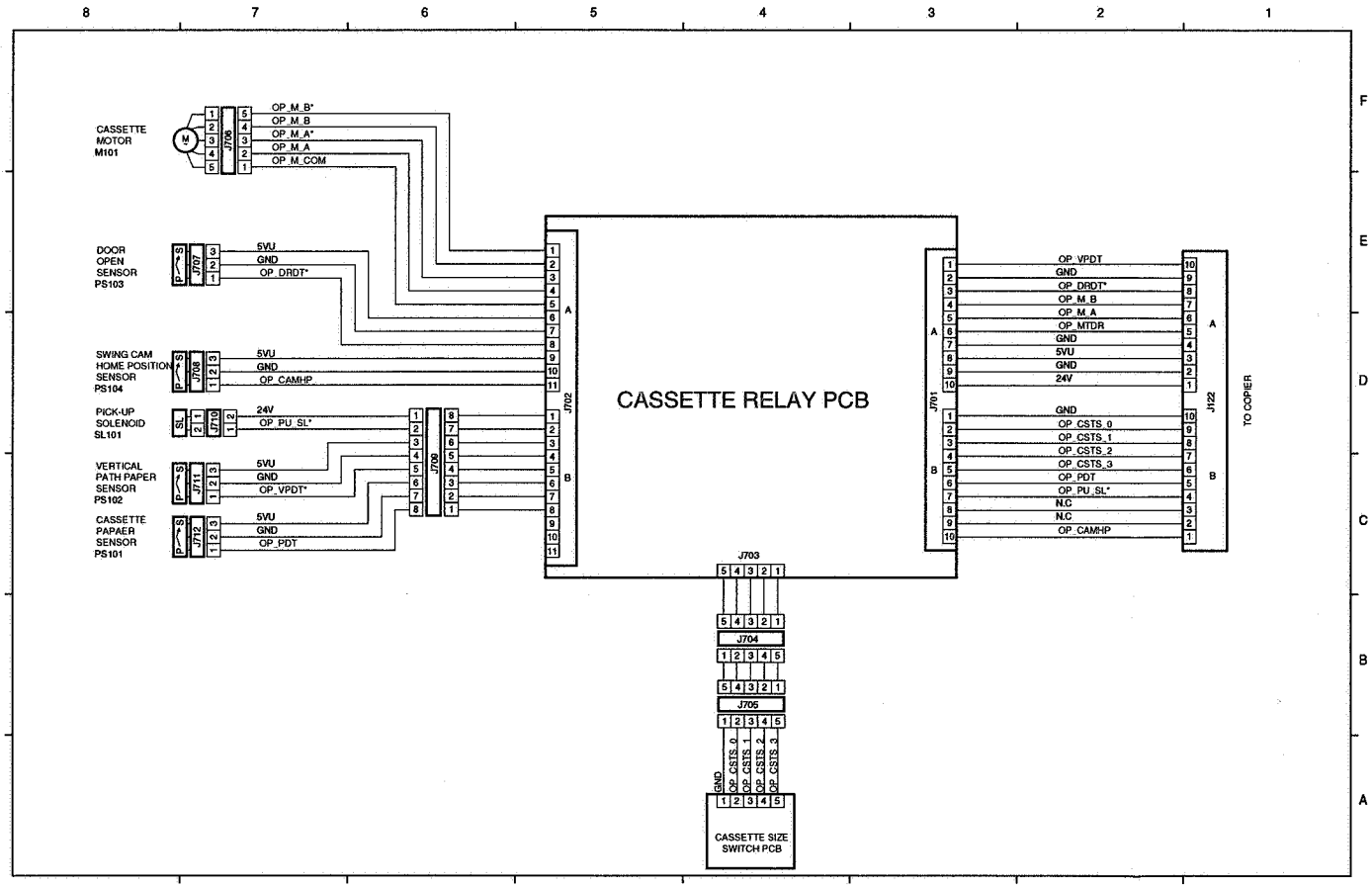

E. SPECIFICATIONS

1. Copier

a. Type

Body	Desktop
Copyboard	Fixed
Light source	Halogen lamp (200W for 120V model ; 220W for 230V model)
Lens	Lens array
Photosensitive material	OPC (30 dia.)

b. Mechanisms

Copying		Indirect electrostatic
Charging		Corona
Exposure		Slit (moving light source)
Copy density adjustment		Auto or manual
Development		Dry (toner projection)
Pick-up	Auto	Front cassette (1 pc.)
		Front cassette (2 pcs.) *
	Manual	Multifeeder (5 mm deep approx.; about 50 sheets of 80 g/m^2 paper)
Transfer		Corona
Separation		Curvature + static eliminator
Cleaning		Blade
Fixing		Heat roller (1000 W for 120V model; 1050 W for 230V model)

* In case the Cassette Feeding Module installed.

c. Performance

Original type		Sheet, book, 3-D object (2 kg max.)
Maximum original size		A3/279 × 432 mm (11"×17")
Reproduction ratio	Direct	1:1.000
	Reduce I	1:0.5000
	Reduce II	1:0.707
	Reduce III	1:0.0816
	Reduce IV	1:0.0865
	Enlarge I	1:1.154
	Enlarge II	1:1.224
	Enlarge III	1:1.414
	Enlarge IV	1:2.000
	Zoom	1:0.500 to 2.000 (in 1% increments)
Wait time		30 sec or less (at 20°C room temperature)
First copy		5.8 sec or less (A4, Direct, non-AE, cassette)
Continuous copying		999 sheets max.
Copy size		A3/279×432 mm (11"×17") max. B5R/STMTR min.
Copy paper type	Cassette	• Plain paper (64 to 80 g/m²) A3, B4, A4R, A4, B5R,B5, 279 × 432 mm (11"×17"), LTRR, LTR, LGL • Colored paper (recommended by Canon) B4, A4
	Multifeeder	• Plain paper (64 to 80 g/m²) A3, B4, A4R, A4, B5R, B5, A5, 279X432 mm (11"×17"), LTRR, LTR, LGL, STMTR • Tracing paper (SM-1, GNT80) A3, B4, A4R, A4, B5R, B5, A5 • Transparency (recommended by Canon) A4/LTR • Colored paper (recommended by Canon)* B4, A4 • Label paper (recommended by Canon) A4/LTR • Heavy paper (up to 128 g/m²)

*May be used, but may not feed properly.

Cassette	Claws	Used
	Frame	55 mm deep (500 sheets of 80 g/m² paper; 250 sheets if B5)
Copy tray		100 sheets approx. (plain paper ; 64 to 80 g/m²)
Non-image width	Leading edge	Direct 2.0 ±1.0 mm
	Trailing edge	Direct 2.5 ±1.5 mm
	Left/right	Direct 2.5 ±2.0 mm
Auto clear		Provided (2 min standard; may be changed between 1 and 9 min in 1-min increments)
Auto power-off		Provided (30 min standard; may be changed between 10 and 90 min in 10-min increments)
Auto pre-heat		Provided (15 min standard; may be changed between 15 and 90 min in 15-min increments)
Accessories		• ADF-G1* • MS-C1* • Control Card IV N • Cassette Feeding Module-C1 • Stapler Sorter-L1* • Remote Diagnostic Device II

*Applies to the NP7161/NP7210 only.

d. Others

Operating conditions	Temperature	7.5° to 32.5°C/45.5° to 90.5°F		
	Humidity	5% to 80% RH		
	Atmospheric pressure	810.6 to 1013.3 hPa (0.8 to 1.0 atm)		
Power source		NP7160	NP7161	NP7210
	120V 120V 120V (UL) 127V 230V 230V 230V	NLB xxxxx ---- ---- NLC xxxxx PHQ xxxxx ---- ----	---- ---- NLD xxxxx ---- PHS xxxxx RCU xxxxx PHU xxxxx	NML xxxxx NNM xxxxx ---- ---- PKT xxxxx PKV xxxxx PKW xxxxx
Power consumption	Maximum	1.5 kW or less		
	Standby	0.135 kWh (approx.; reference only)		
	Continuous	0.645 kWh (approx.; reference only)		
Noise	Copying	NP7160/NP7161 : 66 dB or less NP7210 : 67.5 dB or less (sound power level by ISO method)		
	Standby	40 dB or less (sound power level by ISO method)		
Ozone (8-hr average)		0.05 ppm or less		
Dimensions	Width	566 mm/22.3 in (566 mm/22.3 in)*1		
	Depth	541 mm/21.3 in (541 mm/21.3 in)*1		
	Height	389 mm/15.3 in (526 mm/20.7 in)*1		
Weight		Approx. 42 kg/92.6 lb (Approx. 53.8 kg/118.5 lb)*1		
Consumables	Copy paper	Keep wrapped, and avoid humidity.		
	Toner	Avoid direct sunlight, and store at 40°C, 85% or less.		

*1 In case Cassette Feeding Module installed.

Specifications subject to change without notice.

Reproduction mode		Size	Copy paper	Copies/min	
				NP7161/NP7160	NP7210
Direct	(100%)	A3 (297 × 420mm)	A3	9	11
		A4 (297 × 210mm)	A4	16	21
		B4 (257 × 364mm)	B4	11	13
		B5 (257 × 182mm)	B5	17	21
		A4R (210 × 297mm)	A4R	13	16
		B5R (182 × 257mm)	B5R	14	17
Reduce	I (70.7%)	A3 → A4R	A4R	11	14
		B4 → B5R	B5R	13	17
	II (81.6%)	B4 → A4R	A4R	12	15
	III (86.5%)	A3 → B4	B4	10	13
		A4 → B5	B5	17	21
Enlarge	I (200%)	A5R → A3	A3	8	10
	II (141.4%)	A4R → A3	A3	8	11
		B5R → B4	B4	9	13
	III (122.4%)	A4R → B4	B4	9	13
	IV (115.4%)	B4 → A3	A3	8	11
		B5 → A4	A4	11	21

Specifications subject to change without notice.

Reproduction mode		Size	Copy paper	Copies/min	
				NP7161/NP7160	NP7210
Direct	(100%)	11" × 17" (279 × 432mm)	11" × 17"	9	11
		LTR (297 × 216mm)	LTR	16	21
		LGL (216 × 356mm)	LGL	11	13
		LTRR (216 × 297mm)	LTRR	13	16
Reduce	I (64.7%)	11" × 17" → LTRR	LTRR	12	15
	II (73.3%)	11" × 17" → LGL	LGL	11	13
	III (78.6%)	LGL → LTRR	LTRR	12	15
Enlarge	I (200%)	STMTR → 11" × 17"	11" × 17"	8	10
	II (129.4%)	LTRR → 11" × 17"	11" × 17"	8	11
	III (121.4%)	LGL → 11" × 17"	11" × 17"	8	13

Specifications subject to change without notice.

2. Cassette Feeding Module-C1

Item	Specifications
Type of Paper	Corresponding to copier model
Cassette Specifications	Corresponding to copier model
Power supply	24V DC, 5V DC (supplied from copier)
Dimensions	563(W) x 541(D) x 166(H) mm/22.1(W) x 21.3(D) x 6.5(H) in.
Weight	Approx. 11.2 kg/24.7 lb

Specifications subject to change without notice.

F. SPECIAL TOOLS LIST

No.	Tool description	Tool No.	Shape	Notation	Remarks
1	Door switch	TKN-0093	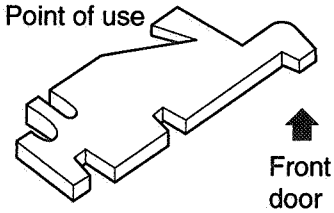	A	
2	Mirror positioning tool	FY9-3046	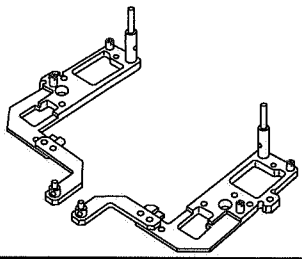	B	For adjusting the No. 1/No. 2 mirror position (front/rear as a pair)

G. SOLVENTS AND OILS

No.	Description	Use	Composition	Description
1	Ethyl alcohol (Etanol) Isopropyl alcohol (Isopropanol)	Cleaning: e.g., glass, plastic, rubber parts; external covers	C2H5O (CHZ3)2 CHOH	• Do not bring near open fire. • Procure locally. • Isopropyl alcohol may be substituted.
2	MEK	Cleaning: e.g., metal; oil or toner	CH3COC2H5	• Do not bring near fire. • Procure locally.
3	Heat-resisting grease	Lubricating; e.g., fixing drive assemblies	Lithium soap (mineral oil family) Moblybdenum bisulfide	• CK-0427 (500 g/can)
4	Lubricant oil		Mineral oil (paraffin family)	• CK-0451 (100 cc)
5	Lubricant oil		Mineral oil (paraffin family)	• CK-0524 (100 cc)
6	Lubricant oil	Lubricating: scanner rail	Slicone oil	• CK-0551 (20 g)

Prepared by
OFFICE IMAGING PRODUCTS TECHNICAL SUPPORT DEPT. 1
OFFICE IMAGING PRODUCTS TECHNICAL SUPPORT DIV.
CANON INC.
Printed in Japan
REVISION 0 (AUG. 1998) [23715]
REVISION 1 (DEC. 1998) [23715]

5-1, Hakusan 7-chome, Toride-shi, Ibaraki 302-8501, Japan

Canon

This publication is printed on
70% reprocessed paper.

PRINTED IN JAPAN (IMPRIME AU JAPON) 0199S0.85-2