SmartBase PC1200s/ iR1200s

SERVICE MANUAL

REVISION 0

Canon

DEC. 2001 **HY8-10AU-000**

COPYRIGHT © 2001 CANON INC.

Application

This manual has been issued by Canon Inc. for qualified persons to learn technical theory, installation, maintenance, and repair of products. This manual covers all localities where the products are sold. For this reason, there may be information in this manual that does not apply to your locality.

Corrections

This manual may contain technical inaccuracies or typographical errors due to improvements or changes in products. When changes occur in applicable products or in the contents of this manual, Canon will release technical information as the need arises. In the event of major changes in the contents of this manual over a long or short period, Canon will issue a new edition of this manual.

The following paragraph does not apply to any countries where such provisions are inconsistent with local law.

Trademarks

The product names and company names used in this manual are the registered trademarks of the individual companies.

Copyright

This manual is copyrighted with all rights reserved. Under the copyright laws, this manual may not be copied, reproduced or translated into another language, in whole or in part, without the written consent of Canon Inc.

COPYRIGHT © 2001 CANON INC.

Caution

Use of this manual should be strictly supervised to avoid disclosure of confidential information.

1 Symbols Used

This documentation uses the following symbols to indicate special information:

Symbol	Description
	Indicates an item of a non-specific nature, possibly classified as Note, Caution, or Warning.
	Indicates an item requiring care to avoid electric shocks.
	Indicates an item requiring care to avoid combustion (fire).
	Indicates an item prohibiting disassembly to avoid electric shocks or problems.
	Indicates an item requiring disconnection of the power plug from the electric outlet.
	Indicates an item intended to provide notes assisting the understanding of the topic in question.
	Indicates an item of reference assisting the understanding of the topic in question.
	Provides a description of a service mode.
	Provides a description of the nature of an error indication.
	Refers to the Copier Basics Series for a better understanding of the contents.

COPYRIGHT © 2001 CANON INC.

2 Outline of the Manual

This Service Manual provides basic facts and figures needed to service the SmartBase PC1200 Series/iR1200 Series products in the field, and it consists of the following chapters:

Chapter 1	Product Outline:	specifications, names of parts, safety and warnings
Chapter 2	Using the Machine:	control panel, user mode, service mode
Chapter 3	Installation:	site requirements, installation procedure, work for relocation
Chapter 4	Operation:	mechanical system by function, principles of operation of electrical systems
Chapter 5	Mechanical System:	mechanical construction, disassembly/assembly
Chapter 6	Maintenance and Inspection:	periodically replaced parts, durables (life), basic servicing chart, cleaning
Chapter 7	Troubleshooting:	standards/adjustments, troubleshooting image faults, troubleshooting malfunctions
Appendix:		general timing chart, general circuit diagrams

COPYRIGHT © 2001 CANON INC.

The descriptions in this Service Manual are based on he following rules:

1. In each chapter, the uses of the function in question and its relationship to electrical and mechanical systems are discussed and the timing of operation of its associated parts is explained by means of outlines and diagrams.
   In the diagrams, the symbol ▬▮▮▮▬ represents a mechanical path, while the symbol ⟶ with a name next to it indicates the flow of an electric signal.
   The expression “turn on the power” means turning on the power switch, closing the front cover, and closing the delivery cover so that the machine will be supplied with power.
2. In circuit diagrams (digital), a signal whose level is High is expressed as being ‘1’, while a single whose level is Low is expressed as being ‘0’; the level of voltage, however, varies from circuit to circuit.
   The machine uses CPUs, whose internal mechanisms cannot be checked in the field, and, therefore, are not explained. In addition, the machine’s PCBs are not intended for repairs at the user’s and, therefore, are explained by means of block diagrams: two types are used, i.e., between sensors and inputs of PCBs equipped with a control or drive function and between outputs equipped with a control or drive function and loads; in addition, functional block diagrams are used at times.

Changes made to the machine for product improvement are communicated in the form of a Service Information bulletin as needed. All service persons are expected to go through all service documentation including the bulletins and be equipped to respond to the needs of the field (as by being able to identify possible causes of problems).

COPYRIGHT © 2001 CANON INC.

This service manual covers the models shown in the following table. Be sure to have a good understanding of the difference from model to model before referring to this manual.

Model	Type code	ADF function	Printer function	Fax function	Counter function	Default ratio	Cassette	Copying speed (cpm) at Direct
iR1210G	UJA		√		√	2R2E	250 sheets	12cpm/A4
iR1230G	UKA	√	√		√	2R2E	250 sheets	12cpm/A4
PC1210D	UGA/ UUK		√			2R2E	250 sheets	12cpm/A4
PC1230D	UHA/ UUM	√	√			2R2E	250 sheets	12cpm/A4
PC1270D	UIA	√	√	√		2R2E	250 sheets	12cpm/A4

The notation "√" indicates that the item in question is available.

 COPYRIGHT © 2001 CANON INC.

Contents

CHAPTER 1 PRODUCT OUTLINE

1 Specifications 1-1
1.1 Type 1-1
1.2 Mechanisms 1-1
1.3 Functions 1-2
1.4 Others 1-3
1.5 Copying Speed 1-4
1.6 ADF (if equipped with ADF functions) 1-5
1.7 FAX (if equipped fax functions) 1-6
1.7.1 Communications specifications 1-6
1.7.2 Scanner section specifications 1-7
1.7.3 Printer section specifications 1-7
1.7.4 Functions 1-8
2 Names of Parts 1-12
2.1 External View 1-12
2.1.1 Body (ADF type) 1-12
2.1.2 Body (copyboard type) 1-13
2.1.3 ADF (if equipped with ADF functions) 1-15
2.2 Cross Section 1-16
2.2.1 Body 1-16
2.2.2 ADF (if equipped with ADF functions) 1-17
3 Safety and Warnings 1-18
3.1 ⚠ Safety of Laser Light 1-18
3.1.1 Safety of the Laser Unit 1-18
3.1.2 CDRH Requirements 1-18
3.1.3 Handling the Laser Unit 1-19
3.2 Safety of the Toner 1-20
3.3 Storing and Handling the Cartridge 1-20
3.3.1 Storing a Cartridge Before Unpacking 1-20
3.3.2 Storing or Handling the Cartridge After Unpacking 1-21
3.3.2.1 Storing After Unpacking 1-21
3.3.2.2 Points to Note When Handling the Cartridge . 1-22

CHAPTER 2 USING THE MACHINE

1 Using the Machine 2-1
1.1 Control Panel 2-1
2 User Mode 2-5
2.1 User Mode Menu 2-5
2.2 User Report 2-17
2.2.1 Manually Generating a Report 2-17
2.2.2 Automatically Generating Reports (if equipped with fax functions) 2-18
2.2.2.1 Memory Clear List 2-19
3 Service Mode 2-20
3.1 Outline 2-20
3.2 Using Service Mode 2-22
3.3 List of Service Mode Menus ... 2-23
3.4 Bit Switch Settings (#1 SSSW) 2-31
3.5 Menu Switch Settings (#2 MENU) 2-44
3.6 Numeric Parameter Setting (#3 NUMERIC Param.) 2-46
3.7 SPECIAL Setting (#4A SPECIAL) 2-49
3.8 NCU Setting (#4B NCU) 2-49

COPYRIGHT © 2001 CANON INC.

3.9 ISDN Setting (#4C ISDN) 2-49
3.10 Country/Region of Installation (#5 TYPE) 2-49
3.11 Setting the Original Reading Functions (#6 SCANNER) 2-50
3.12 Setting the Printer Parameters (#7 PRINTER) 2-51
3.12.1 #1 SSSW Setting 2-51
3.12.2 #2 NUMERIC Param. Setting 2-52
3.12.3 #3 PRINT COUNT 2-52
3.12.4 #4 PRINT RESET 2-52
3.12.5 #5 MLT CLEANING 2-52
3.13 PDL (#8 PDL) 2-52
3.14 Counter (#9 COUNTER) 2-53
3.14.1 Counter 2-53
3.14.2 Clearing the Counter Readings 2-54
3.15 Generating a Report (#10 REPORT) 2-54
3.16 Downloading (#11 DOWNLOAD) 2-54
3.17 Clearing (#12 CLEAR) 2-55
3.18 ROM Indication (#13 ROM) ... 2-55
3.19 Resetting the Contact Sensor Position (#14 CS SET) 2-55
3.20 Service Mode Default Setting .. 2-56
3.21 Test Mode (TEST MODE) 2-66
3.21.1 Outline 2-66
3.21.2 List of Test Mode Items 2-67
3.21.3 D-RAM Test (1: DRAM) .. 2-74
3.21.4 CCD Test (2: CCD TEST) . 2-75
3.21.5 PRINT Test (3: PRINT) 2-76
3.21.6 MODEM NCU Test (4: MODEM NCU) 2-77
3.21.6.1 Relay Test 2-77
3.21.6.2 Frequency Test 2-78
3.21.6.3 G3 Signal Transmission Test 2-78
3.21.6.4 DTMF Signal Transmission Test 2-79
3.21.6.5 Tonal/DTMF Signal Reception Test 2-79
3.21.7 AGING Test (5: AGING TEST) 2-80
3.21.8 FACULTY (function) Test (6: FACULTY TEST) 2-80
3.21.9 BOOK Read Test (8: BOOK TEST) 2-86
3.22 Service Report 2-87
3.22.1 Manually Generating Reports 2-87
3.22.1.1 SYSTEM (SERVICE) DATA LIST 2-87
3.22.1.2 SYSTEM DUMP LIST 2-88
3.22.1.3 KEY HISTORY REPORT 2-90
3.22.1.4 COUNTER REPORT ... 2-91
3.22.1.5 PRINT SPEC REPORT 2-92
3.22.2 Automatically Generated Reports 2-92
3.22.2.1 Error TX Report (for service) 2-93
3.22.2.2 RX Report (for service) 2-94

CHAPTER 3 INSTALLATION

1 Selecting the Site 3-1
2 Unpacking and Installing the Machine 3-2
2.1 Before Starting 3-2
2.2 Installation Procedure 3-2
2.3 Unpacking 3-3
2.4 Fitting the Cartridge 3-5
2.5 Putting Paper in the Cassette 3-7
2.6 Putting Paper in the Manual Feed Tray 3-8
2.7 Connecting the Interface Cable .. 3-9
2.8 Connecting the Modular Cable (if equipped with fax functions) 3-9
2.9 Connecting the Power Cord 3-10

 COPYRIGHT © 2001 CANON INC.

2.10 Fitting the Delivery Tray 3-10
2.11 Checking the Copy Images 3-10
2.12 Setting the Printer Functions ... 3-11
2.13 Setting Fax Functions (if equipped with fax functions) 3-12
2.13.1 Setting the Date/Time (user mode) 3-12
2.13.2 Setting the Dial Type 3-13
2.13.3 Executing Communications Testing 3-13
3 When Relocating the Machine 3-14

CHAPTER 4 OPERATION

1 Basic Operation 4-1
1.1 Reproduction Processes 4-1
1.1.1 Outline 4-1
1.2 Functional Construction 4-4
1.3 Outline of the Electrical Circuitry 4-5
1.3.1 Functional Block Diagram .. 4-5
1.3.2 Outlines of Functions 4-6
1.3.2.1 Image Processor PCB 4-6
1.3.2.2 DC Controller PCB 4-7
1.3.2.3 Control Panel PCB 4-8
1.3.2.4 Power Supply PCB 4-8
1.3.2.5 Analog Processor PCB ... 4-9
1.3.2.6 Sensor PCB 4-9
1.3.2.7 Laser Driver/BD PCB 4-9
1.3.2.8 Main Motor/Scanner Motor Driver 4-9
1.3.2.9 Printer Controller PCB ... 4-9
1.3.2.10 NCU PCB (if equipped with fax functions) 4-10
1.3.2.11 Modular Jack PCB (if equipped with fax functions) 4-10
1.4 Power-On Sequence 4-11
1.5 Controlling the Main Motor 4-12
1.5.1 Outline 4-12
2 Image Reading/Processing System ... 4-13
2.1 Outline 4-13
3 Laser Exposure System 4-14
3.1 Outline 4-14
4 Image Formation System 4-16
4.1 Outline 4-16
5 Pickup/Feeding/Delivery System 4-17
5.1 Outline 4-17
5.2 Pickup Operation 4-18
5.2.1 Pickup from the Cassette ... 4-18
5.2.1.1 Outline 4-18
5.2.1.2 Retry Pickup 4-19
5.2.1.3 Detecting the Size of Paper 4-19
5.2.2 Pickup from the Manual Feed Tray 4-20
5.2.2.1 Outline 4-20
5.2.2.2 Retry Pickup 4-21
5.2.2.3 Detecting the Size of Paper 4-21
5.3 Feeding Operation/Delivery Operation 4-22
5.3.1 Outline 4-22
5.3.2 Auto Delivery Control 4-22
5.4 Reducing the Copying Speed .. 4-23
5.4.1 Outline 4-23
5.5 Detecting Jams 4-24
5.5.1 Outline 4-24
5.5.2 Types of Jams 4-24
6 Fixing System 4-26
6.1 Outline 4-26
6.2 Controlling the Fixing Operation 4-27
6.2.1 Controlling the Fixing Temperature 4-27
6.2.2 Controlling the Fixing Film Bias 4-29
6.2.3 Fixing Heater Safety Mechanism 4-29
6.2.4 Detecting a Fault in the Fixing Assembly 4-29

COPYRIGHT © 2001 CANON INC.

7 Power Supply System 4-31
7.1 Low Voltage Circuit 4-31
7.1.1 Low Voltage Power Supply Circuit 4-31
7.1.2 Protective Functions 4-33
7.2 High-Voltage Power Supply Circuit 4-33
7.3 Controlling the ESS Mechanism 4-33
7.3.1 Outline 4-33
7.3.2 Operation 4-33
8 Others 4-34
8.1 Fan 4-34
8.1.1 Outline 4-34
8.2 Back-Up Batteries 4-35
8.2.1 Back-Up Function 4-35
8.2.1.1 Outline 4-35
8.2.1.2 Lithium Battery (BAT1) 4-35
8.2.1.3 Vanadium Lithium Secondary Battery (BAT2) 4-37
8.2.2 Back-Up Data 4-38
8.2.2.1 Types of Data 4-38
8.2.2.2 Printing the Backup Data List 4-40
9 ADF (if equipped with ADF functions) 4-41
9.1 Outline 4-41
9.2 Picking Up and Moving Originals 4-42
9.2.1 Outline 4-42
9.2.2 Moving Down the Original Pickup Roller and Moving Up the Original Stopper 4-43
9.3 Detecting an Original Jam 4-44
9.3.1 Outline 4-44
9.3.2 Types of Jams 4-44

CHAPTER 5 MECHANICAL SYSTEM

1 Points to Note When Disassembling/Assembling the Machine 5-1
2 Disassembly 5-3
2.1 Externals/Auxiliary System 5-3
2.1.1 External Covers 5-3
2.1.1.1 Removing the Left Cover/Rear Cover 5-4
2.1.1.2 Removing the Right Cover 5-4
2.1.1.3 Removing the Front Cover 5-5
2.1.1.4 Removing the Delivery Cover 5-5
2.1.1.5 Removing the Delivery Upper Cover/Delivery Rear Cover 5-6
2.1.1.6 Removing the Cartridge Cover 5-6
2.1.1.7 Removing the Upper Cover 5-7
2.1.1.8 Removing the Right Door 5-8
2.1.2 Removing the Control Panel 5-8
2.1.3 Removing the Copyboard Glass 5-10
2.1.4 Removing the Main Motor Unit 5-10
2.1.5 Remove the Fan 5-14
2.1.6 Removing the Reader Unit Slide Detecting Switch 5-16
2.2 PCBs 5-17
2.2.1 Removing the Image Processor PCB 5-17
2.2.2 Removing the Analog Processor PCB 5-17
2.2.3 Removing the Sensor PCB 5-20
2.2.4 Removing the DC Controller PCB/Power Supply PCB ... 5-21
2.2.5 Removing the Printer Controller PCB 5-25

 COPYRIGHT © 2001 CANON INC.

2.2.6 Removing the NCU PCB (if equipped with fax functions) 5-25
2.2.7 Removing the Modular Jack PCB 5-26
2.3 Original Reading/Processing System 5-27
2.3.1 Removing the Contact Sensor 5-27
2.3.2 Removing the Reader Motor Drive Unit 5-28
2.3.3 Removing the Reader Unit 5-30
2.4 Laser Exposure System 5-32
2.4.1 Removing the Laser Scanner Unit 5-32
2.5 Image Formation System 5-34
2.5.1 Removing the Transfer Charging Roller 5-34
2.6 Pickup/Feeding System 5-35
2.6.1 Removing the Cassette Pickup Roller 5-35
2.6.2 Removing the Cassette Pickup Solenoid 5-37
2.6.3 Removing the Manual Feed Tray (upper) 5-39
2.6.4 Removing the Manual Feed Tray (lower) 5-39
2.6.5 Removing the Manual Feed Pickup Roller 5-40
2.6.6 Removing the Separation Pad 5-41
2.6.7 Removing the Manual Feed Pickup Solenoid/Manual Feed Tray Paper Sensor 5-41
2.6.8 Removing the Vertical Path Roller 5-42
2.6.9 Removing the Registration Roller Unit 5-42
2.7 Fixing System 5-44
2.7.1 Removing the Fixing Assembly 5-44
2.7.2 Removing the Fixing Film Unit/ Fixing Pressure Roller 5-46
2.7.3 Removing the Delivery Sensor 5-47
2.8 ADF System (if equipped with ADF functions) 5-48
2.8.1 Externals/Auxiliary Control System 5-48
2.8.1.1 Removing the ADF 5-48
2.8.1.2 Removing the ADF Drive Unit 5-50
2.8.1.3 Removing the ADF Motor Unit 5-51
2.8.1.4 Removing the Slide Guide (front, rear) 5-52
2.8.1.5 Mounting the Slide Guide (front, rear) 5-53
2.8.2 Pickup System 5-54
2.8.2.1 Removing the Separation Roller Unit 5-54
2.8.2.2 Removing the Original Pickup roller/Original Separation roller 5-56
2.8.2.3 Removing the Original Sensor/Registration Sensor 5-56
2.8.2.4 Removing the Separation Pad 5-57
2.8.2.5 Removing the ADF Registration Roller 5-58
2.8.3 Feeding System 5-60
2.8.3.1 Removing the White Roller 5-60
2.8.3.2 Removing the Feeding Outside Guide 5-61
2.8.3.3 Removing the Feed Roll 5-62
2.8.3.4 Removing the Original Feed Roller 5-63
2.8.4 Delivery System 5-64
2.8.4.1 Removing the Delivery Stacking Tray/Original Delivery Roller 5-64
2.8.4.2 Removing the Original Delivery Sensor 5-65

COPYRIGHT © 2001 CANON INC.

CHAPTER 6 MAINTENANCE AND INSPECTION

1 Periodically Replaced Parts 6-1
2 Durables 6-1
3 Scheduled Servicing Chart 6-1
4 Cleaning 6-2
4.1 Cleaning by the User (machine) 6-2
4.1.1 Cleaning the Fixing Pressure Roller 6-2
4.1.2 Other Cleaning 6-2
4.2 Cleaning by the User (ADF) 6-3
4.2.1 Cleaning the White Roller ... 6-3
4.2.2 Other Cleaning 6-3
4.3 Cleaning at Time of a Service Visit (machine) 6-4
4.3.1 Selfoc Lens Array of the Contact Sensor 6-4
4.3.2 Cassette Pickup Roller 6-5
4.3.3 Manual Feed Pickup Roller 6-5
4.3.4 Separation Pad 6-5
4.3.5 Registration Roller 6-5
4.3.6 Transfer Guide 6-5
4.3.7 Transfer Charging Roller 6-5
4.3.8 Separation Static Eliminator 6-5
4.3.9 Paper Path 6-5
4.3.10 Fixing Inlet Guide 6-5
4.3.11 Fixing Pressure Roller 6-5
4.3.12 Delivery Roller 6-6
4.3.13 Back of Copyboard Glass (Back of Shading Plate) 6-6
4.4 Cleaning at Time of a Service Visit (ADF) 6-7
4.4.1 Original Pickup Roller 6-7
4.4.2 Original Separation Roller ... 6-7
4.4.3 Original Separation Pad 6-7
4.4.4 ADF Registration Roller 6-7
4.4.5 Original Feed Roller 6-7
4.4.6 Original Delivery Roller 6-7
4.4.7 Copyboard Glass (Original Reading Area) 6-8

CHAPTER 7 TROUBLESHOOTING

1 Standards and Adjustments 7-1
1.1 Checking Against the Standards 7-1
1.1.1 Checking the Pressure (nip) of the Fixing Pressure Roller ... 7-1
1.2 Making Adjustments 7-3
1.2.1 Making Adjustments When Replacing Major Parts 7-3
1.2.2 Preparing a Test Sheet for Adjustment 7-4
1.2.3 Adjusting the Mechanical Systems 7-5
1.2.4 Adjusting the Electrical Systems 7-5
1.2.4.1 Contact Sensor LED Intensity Auto Adjustment 7-5
1.2.4.2 Leading Edge Read Start Position Adjustment 7-6
1.2.4.3 Left/Right Edge Read Start Position Adjustment 7-7
1.3 Making Adjustments (ADF) 7-8
1.3.1 Items of Adjustment and Sequence of Work 7-8
1.3.2 Preparing a Test Sheet for Adjustment 7-8
1.3.3 Adjusting the Mechanical Systems 7-9
1.3.3.1 Removing the Skew 7-9
1.3.3.2 Left/Right Registration Adjustment 7-10
1.3.4 Adjusting the Electrical Systems 7-12
1.3.4.1 Registration Arch Auto Adjustment 7-12
1.3.4.2 Original Read Position Adjustment 7-12

 COPYRIGHT © 2001 CANON INC.

1.3.4.3 Original Speed Adjustment 7-13
1.3.4.4 Leading Edge Read Start Position Adjustment 7-14
1.3.4.5 Trailing Edge Read End Position Adjustment 7-15
1.4 When Replacing a Component 7-16
1.4.1 When Replacing the Image Processor PCB 7-16
1.4.1.1 Before Starting the Work 7-16
1.4.1.2 After Finishing the Work 7-17
1.4.2 When Replacing the NCU PCB 7-17
2. Troubleshooting 7-18
2.1 Making Initial Checks 7-18
2.1.1 Site Environment 7-18
2.1.2 Checking the Cartridge 7-18
2.1.3 Checking the Paper 7-18
2.1.4 Others 7-18
2.2 Troubleshooting Flow Chart 7-19
2.3 Making Checks in Response to an Image Fault 7-20
2.3.1 Checking the Originals Against the Symptom 7-20
2.3.2 Copyboard Glass and White Sheet 7-20
3 Troubleshooting Image Faults 7-21
3.1 Troubleshooting Procedure for Image Faults 7-21
3.1.1 The output is too light. 7-22
3.1.2 The output is too dark. 7-24
3.1.3 The output is foggy vertically. 7-25
3.1.4 The output has fuzzy, black vertical lines. 7-25
3.1.5 The output is foggy horizontally. 7-26
3.1.6 The output has fuzzy, black horizontal lines. 7-26
3.1.7 The output has black lines (vertical). 7-27
3.1.8 The output has black lines (horizontal). 7-27
3.1.9 The output has white spots (vertical). 7-27
3.1.10 The output has white lines (vertical). 7-27
3.1.11 The output has white spots (horizontal). 7-28
3.1.12 The output has white lines (horizontal). 7-28
3.1.13 The output is soiled. 7-29
3.1.14 The back of the output is soiled. 7-30
3.1.15 The output has a fixing fault. 7-31
3.1.16 The output has left/right displacement. 7-32
3.1.17 The output has a blurry image. 7-32
3.1.18 The output has poor sharpness (out of focus). 7-33
3.1.19 The output is blank. 7-34
3.1.20 The output is solid black. .. 7-36
4 Troubleshooting Malfunctions 7-37
4.1 Troubleshooting Malfunctions (service error) 7-37
4.2 Troubleshooting Malfunctions (other than service error) 7-41
4.2.1 Power is absent. 7-41
4.2.2 The LCD fails to operate. .. 7-41
4.2.3 The contact sensor fails to move. 7-42
4.2.4 The contact sensor LED fails to go ON. 7-42
4.2.5 The speaker fails to generate sound. 7-43
4.2.6 The message “INSTALL CARTRIDGE” fails to go OFF. 7-43
4.2.7 The message “SUPPLY REC. PAPER” fails to go OFF. (cassette) 7-44

COPYRIGHT © 2001 CANON INC.

4.2.8 The message “SUPPLY REC. PAPER” fails to go OFF. (manual feed tray) 7-44
4.2.9 The message “REC. PAPER JAM” fails to go OFF. 7-45
4.2.10 The message “PLATEN IS OPEN CLOSE THE PLATEN Unit” fails to go OFF. 7-46
4.3 Troubleshooting Malfunctions (if equipped with ADF functions) 7-47
4.3.1 Original pickup fails. 7-47
4.4 Troubleshooting Malfunctions (printer functions) 7-48
4.4.1 Printing fails to start 7-48
4.4.2 Printing stops in the middle 7-48
4.5 Troubleshooting (faults unique to models equipped with fax functions) 7-50
4.5.1 Troubleshooting Communication Faults 7-50
4.5.2 Service Error Code Output 7-52
4.5.3 Error Codes 7-52
4.5.3.1 Transmission Level (ATT): No.07 of Service Soft Switch #2 MENU 7-52
4.5.3.2 NL Equalizer: No.05 of Service Soft Switch #2 MENU 7-52
4.5.3.3 Transmission Page Timer: SW12 of Service Soft Switch #1 SSSW 7-52
4.5.3.4 T0 Timer: No.10 of Service Soft Switch #3 NUMERIC param. 7-52
4.5.3.5 T1 Timer: No.11 of Service Soft Switch #3 NUMERIC param. 7-53
4.5.3.6 RTN Signal Transmission Condition: No. 02, 03, and 04 of Service Soft Switch #3 NUMERIC param. 7-53
4.5.3.7 Echo Remedy 7-53
4.5.3.8 Echo Protect Tone: SW03 bit 1 of Service Soft Switch #1 SSSW 7-53
4.5.3.9 Number of Final Flag Sequences: SW04 bit 2 of Service Soft Switch #1 SSSW 7-53
4.5.3.10 Subaddress 7-54
4.5.3.11 Password 7-54
4.5.3.12 Signals 7-54
4.5.3.13 Timer 7-55
4.5.4 HOW TO RECORD THE PROTOCOL 7-56
4.5.5 Causes and Remedies for User Error Codes 7-57
4.5.6 Causes and Remedies for Service Error Codes 7-62
4.5.7 Common Faults 7-82
5 Troubleshooting Feeding Faults 7-83
5.1 Outline 7-83
5.2 Paper Jams 7-84
5.2.1 Pickup Assembly (cassette) 7-84
5.2.2 Pickup Assembly (manual feed tray) 7-86
5.2.3 Feeding Assembly 7-88
5.2.4 Fixing Delivery Assembly 7-90
5.2.5 Checking the Rotation of the Rollers and Gears 7-91
5.2.5.1 Checking the Rotation of the Cassette Pickup Roller and the Vertical Path Roller 7-91
5.2.5.2 Checking the Rotation of the Registration Roller and the Gear for the Photosensitive Drum 7-91
5.3 Original Jams (if equipped with ADF functions) 7-92
5.4 Feeding Faults 7-93
5.4.1 Double Feeding 7-93
5.4.2 Wrinkles 7-94

 COPYRIGHT © 2001 CANON INC.

5.5 Faulty Feeding of Originals (if equipped with ADF functions) 7-95
5.5.1 Double Feeding 7-95
5.5.2 Skew 7-95
6 Arrangement of the Electrical Parts .. 7-96
6.1 Checking the Photointerrupters 7-96
6.2 Arrangement and Functions of Electrical Components 7-98
6.2.1 Solenoids, Motors, Fans 7-98
6.2.1.1 Body 7-98
6.2.1.2 ADF (if eqquiped with ADF functions) 7-99
6.2.2 Sensors 7-100
6.2.2.1 Body 7-100
6.2.2.2 ADF (if eqquiped with ADF functions) 7-101
6.2.3 Others 7-102
6.2.4 PCBs 7-104
6.3 Variable Resistors, Light Emitting Diodes (LED), and Check Pins by PCB 7-106
6.3.1 Image Processor PCB 7-106
6.3.2 DC Controller PCB 7-107

APPENDIX

1 General Timing Chart A-1
2 General Circuit Diagram A-3
3 List of Special Tools A-5
4 List of Solvents and Oils A-6

CHAPTER 1
PRODUCT OUTLINE

COPYRIGHT © 2001 CANON INC.

1 Specifications

1.1 Type

Item	Specifications
Body	Desk top (ADF standard type, copyboard standard type)
Copyboard glass	Fixed
Light source	LED
Lens	CIS (contact sensor)
Photosensitive medium	OPC drum (30-mm dia.)

1.2 Mechanisms

Item	Specifications
Reproduction	Indirect electrostatic
Charging	Roller contact
Exposure	Semiconductor laser
Copy density adjustment	Auto or manual
Development	Dry, 1-component toner projection
Pickup	Cassette: 1 cassette Multifeeder: 1 feeder
Transfer	Roller transfer
Separate	Static (static eliminator) + curvature
Cleaning	Rubber blade
Fixing	SURF (on-demand)

COPYRIGHT © 2001 CANON INC.

1.3 Functions

Item	Specifications
Original type	Sheet, book, 3-D object (2 kg max.)
Maximum original size	A4 (297 × 210 mm / 11.7" × 8.3"), LGL (356 × 216 mm / 14.0" × 8.5")
Reproduction ratio	2R2E
Direct	1:1.000
Reduce I	1:0.500
Reduce II	1:0.707
Enlarge I	1:1.414
Enlarge II	1:2.000
Zoom	50% to 200% (1% increments)
Wait time	8.5 sec (after plug in) / 1.0 sec (after pressing Energy Saver key)
First copy time	21.5 sec (after plug in) 18 sec (after pressing Energy Saver key)
Continuous reproduction	99 pages max.
Reproduction size	
250-sheet cassette	A4
Manual feed tray	Width: 76.2 to 216 mm (3.0" to 8.5") Length: 127 to 356 mm (5.0" to 14.0") Weight: 56 to 128 g/m^2
Paper type	
250-sheet cassette	Plain paper (64 to 80 g/m^2)
Manual feed tray	Transparency, label, tracing paper, postcard, thick paper (to 128 g/m^2), envelope
Cassette	Claw separation, front loading
Manual feed tray capacity	10 mm deep, (about 100 sheets of 80 g/m^2 paper)
Delivery tray capacity	100 sheets max.
Non-image width	Leading edge: 3.0 ± 2.0 mm (0.12" ± 0.08"), left/right edge: 2.5 ± 1.5 mm (0.10" ± 0.06")
AE	Yes
Image mode	Yes (text, text/photo, photo)
Toner save mode	Yes
Special mode	Yes: Tracing paper mode, transparency mode, special paper1 mode, special paper2 mode
Auto power-off	No
Power save mode	Yes (manually ON/OFF, auto OFF after specific time, auto ON after fax reception/print data reception)
N-on-1	Yes (in some functions, 2-on-1)
1-on-N memory copy	Yes
Auto copy start	Yes
Jam recovery	Yes
Auto clear	Yes
Date/time set	Yes

 COPYRIGHT © 2001 CANON INC.

1.4 Others

Item	Specifications
Weekly timer	Yes
Toner level detection	Yes
Cassette paper level detection	Yes
LGL size detection	Yes
Operating environment	
Temperature range	0° to 35°C / 32° to 95°F
Humidity range	35% to 85%
Atmospheric pressure range	0.61 to 1.01 hPa (0.6 to 1 atm)
Power supply	230V (50/60Hz)
Serial number	UGAxxxx UKAxxxx UHAxxxx UUKxxxx UIAxxxx UUMxxxx UJAxxxx
Power consumption	
Maximum	780 W or less
Standby	16 Wh (approx.; reference only)
Operation	280 Wh (approx.; reference only)
Noise	
Standby	Copyboard type: 40 dB or less (impulse mode) ADF type: 40 dB or less (impulse mode: reference)
Copying	Copyboard type: 66 dB or less (fast mode) ADF type: 69 dB or less (fast mode: reference)
Ozone (after 50000 pages)	0.05 ppm (Ave.)
Dimensions	
Width	Copyboard type: 475 mm (18.7"), ADF type: 475 mm (18.7")
Depth	Copyboard type: 442 mm (17.4"), ADF type: 442 mm (17.4")
Height	Copyboard type: 295 mm (11.6"), ADF type: 352 mm (13.9")
Weight	Copyboard type: 20.5 kg ADF type: 22.6 kg
Consumables storage	
Paper	Keep wrapped to avoid humidity.
Toner	Avoid direct sunshine, and store between 0° and 35°C / 32° and 95°F, between 35% and 85%.

COPYRIGHT © 2001 CANON INC.

1.5 Copying Speed

Ratio	Size	Paper size	copies/min	
			Cassette	Manual feed tray*1
Direct	A4 (210 × 297mm / 8.3" × 11.7")	A4	12	12
	A5 (149 × 210mm / 5.9" × 8.3")	A5	-	13
Reduce I (50.0%)	A4R → postcard	postcard	-	13
II (70.7%)	A4R → A5R	A5	-	13
Enlarge I (141.4%)	A5R → A4R	A4	12	12
II (200.0%)	postcard → A4R	A4	12	12

*1: If the manual feed tray is in use, the copying speed is indicated assuming that the paper size setting is correct.

The machine performs 3-step copying speed reduction control designed to prevent cracking of the fixing heater, otherwise possibly occurring as a result overheating of the ends of the fixing assembly. (See 5.4 of Chapter 4.)

 COPYRIGHT © 2001 CANON INC.

1.6 ADF (if equipped with ADF functions)

Items	Specifications
Pickup	Auto pickup/delivery (top separation by double-pad)
Original type	Single-sided sheet (50 to 128 g/m^2)
Original size	A4R, B5R, A5R, B6, LGL, LTRR, STMTR Length: 128 to 356 mm (5" to 14"), width: 139 to 216 mm (5.5" to 8.5")
Original orientation	Face-down
Original position	Center reference
Original processing mode	From single-sided to single-sided
Original reading	Stream reading
Stack	30 sheets or less (if A4/LTR or smaller) 15 sheets or less (if LGL)
Mixed original sizes	Yes (only if of the same paper configuration)
Original AE detection	No
Original size recognition	No
Stamp	No
Power supply	From host (5 VDC and 24 V)
Operating environment	Same as host

The machine may not be able to handle the following types of originals:

- original with a carbon back
- original made of multiple layers (pasted, bound)
- original with a cut-off, 5 or more holes, or tear
- original with a clip, adhesive tape, or glue
- original with curling, wrinkling, or appreciable bending
- transparency

Advise the user to remove as much curling as possible, if any, and place the original in the original tray so that the side with the curling is the trailing edge.

COPYRIGHT © 2001 CANON INC.

1.7 FAX (if equipped fax functions)

1.7.1 Communications specifications

Applicable lines

Analog line (one line)

- PSTN (Public Switched Telephone Network)

Transmission method

Half-duplex

Transmission control protocol

ITU-T T.30 binary protocol/ECM protocol

Modulation method

G3 image signals	ITU-T V.27ter (2.4kbps, 4.8kbps)
	ITU-T V.29 (7.2kbps, 9.6kbps)
	ITU-T V.17 (14.4kbps, 12kbps, TC9.6kbps, TC7.2kbps)
G3 procedure signals	ITU-T V.21 (No.2) 300bps

Transmission speed

14.4k, 12k, TC9.6k, TC7.2k, 9.6k, 7.2k, 4.8k, 2.4kbps
With automatic fallback function

Coding

MH, MR, MMR, JBIG

Error correction

ITU-T ECM

Canon express protocol

None

Transmission output level

from 0 to -15 dBm

Minimum receive input level

-43 dBm

Modem IC

CONEXANT FM214

 COPYRIGHT © 2001 CANON INC.

1.7.2 Scanner section specifications

Scanning method
Contact sensor scanning method

Scanning line density
Horizontal:	
Standard/Fine/Superfine	203.2 dpi (8 dots/mm)
Ultrafine	406.4 dpi (16 dots/mm) (Interpolated)
Vertical:	
Standard	97.79 dpi (3.85 lines/mm)
Fine	195.58 dpi (7.7 lines/mm)
Superfine/Ultrafine	391.16 dpi (15.4 lines/mm)

Scanning density adjustment
Light, Standard, Dark: The density level of each mode can be selected by the user mode menu.

Half tone
64-gradation error diffusion system

1.7.3 Printer section specifications

Printing resolution
600dpi × 600dpi

Reduction for reception
Fixed reduction (75%, 90%, 95%, 97%)
Auto reduction (70~100%)

COPYRIGHT © 2001 CANON INC.

1.7.4 Functions

STAMP
None

FAX/TEL switching
Method	CNG detection
Message	None
Pseudo CI	None

Answering machine connection
Yes (Telephone answering priority type)
CNG detection

DPRD
Yes

Polling
Polling transmission
None

Polling reception
Receives from a fax in automatic transmission mode
One touch locations Max. 12

Confidential reception
None

Confidential transmission
None

Remote reception
Method	ID call# (ID input method)
Remote ID (with ID call#)	2 digits (Default : 25)

Memory reception
Yes

 COPYRIGHT © 2001 CANON INC.

Auto dialing

Telephone number digits	Average 39 digits
One-touch dial	Max. 12
Coded speed dial	Max. 100
Group dial	Max. 111 (One-touch : 11, Coded speed dial : 100)
Redial	Numeric button redial function (max. 120 digits)

Delayed transmission

Locations	Max. 122 (One-touch : 12, Coded speed dial : 100) Numeric button: 10)
No. of reseruation	Max. 20

Broadcast transmission

Locations	Max. 122 (One-touch : 12, Coded speed dial : 100) Numeric button: 10)
Group button addresses	Max. 111 (One-touch : 11, Coded speed dial : 100)

Relay broadcasting originating

None

Relay broadcasting

None

Closed network

None

Direct mail prevention

None

Dual access

File No. of reservation	Max. 21 files

COPYRIGHT © 2001 CANON INC.

Activity management

a) User report
- Activity report
- (Every 20 transactions)
- TX/RX report
- 1-touch spd dial list
- Coded speed dial list
- Group dial list
- Memory clear list
- User data list
- Multi activity report
- Document memory list

b) Service report
- System data list
- System dump list
- Key history report
- Counter report
- Print spec report

Transmitting terminal identification

Items	Time, telephone No. (max 20 digits), senders ID, address, number of transmitted pages (max 3 digits)
Address	Can be registered with one-touch/ coded speed dial keys (16 characters)
Senders ID	20 characters (1 name)

Program key

None

Redial

Interval	2 min. (from 2 to 99 min. can be selected in user data)
Count	2 times (from 1 to 10 times can be selected in user data)

Memory backup

Backup contents	dial registration data, user data, service data, time
Backup IC	128 Kbyte SRAM
Backup battery	Lithium battery 3.0 V DC / 560 mAh
Battery life	Approx. 5 years

 COPYRIGHT © 2001 CANON INC.

Image data backup

Backup contents	Memory reception, delayed transmission and broadcast transmission image data, activity management report
Backup IC	8 Mbyte SDRAM
Backup coding method	JBIG
Backup battery	Rechargeable vanadium lithium battery 3.0V DC/ 50 mAh
Battery life	40 cycles with 100% discharge (Temperature 77°F (25°C))

Time

precision	±60 sec per month

The foregoing specifications are subject to change for product improvement.

COPYRIGHT © 2001 CANON INC.

2 Names of Parts

2.1 External View

2.1.1 Body (ADF type)

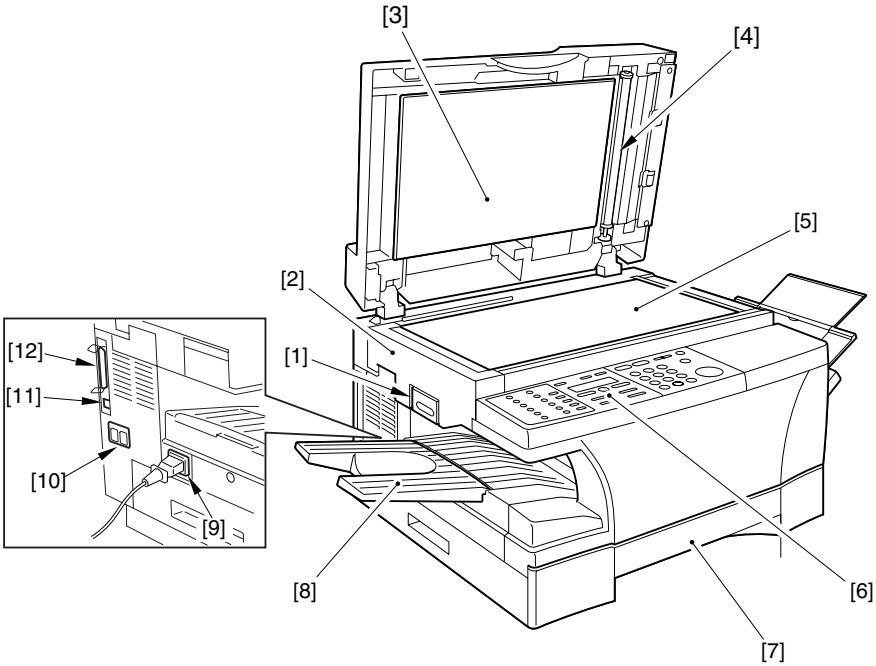

F01-201-01

[1] Reader unit slide lever
[2] Reader unit
[3] White sheet
[4] White roller
[5] Copyboard glass
[6] Control panel
[7] Cassette
[8] Delivery tray
[9] Power cord connector assembly
[10] Modular cable connector assembly*1
[11] USB cable connector assembly
[12] Parallel interface cable connector assembly

*1: If equipped with fax functions.

 COPYRIGHT © 2001 CANON INC.

2.1.2 Body (copyboard type)

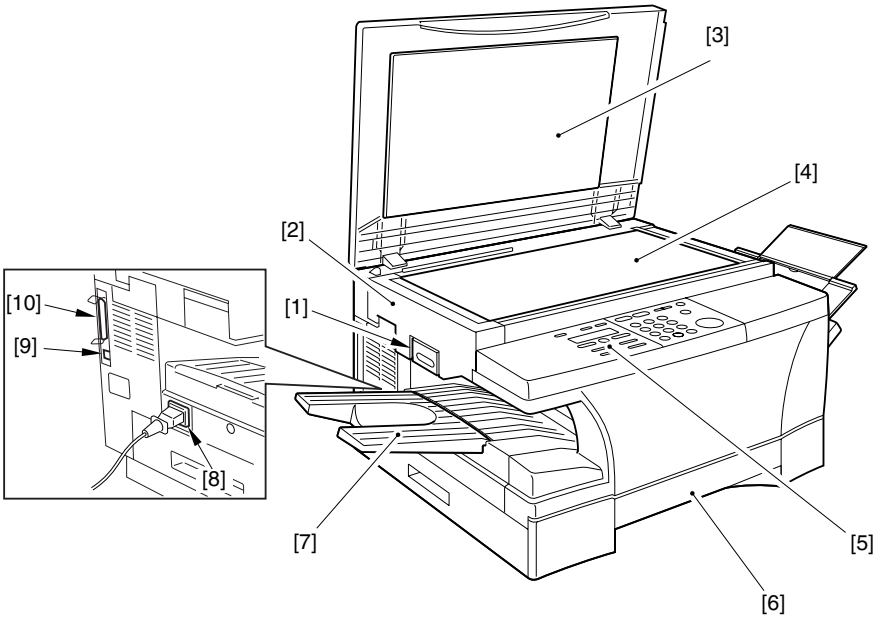

F01-201-02

[1] Reader unit slide lever
[2] Reader unit
[3] Copyboard cover
[4] Copyboard glass
[5] Control panel
[6] Cassette
[7] Delivery tray
[8] Power cord connector assembly
[9] USB cable connector assembly
[10] Parallel interface cable connector assembly

COPYRIGHT © 2001 CANON INC.

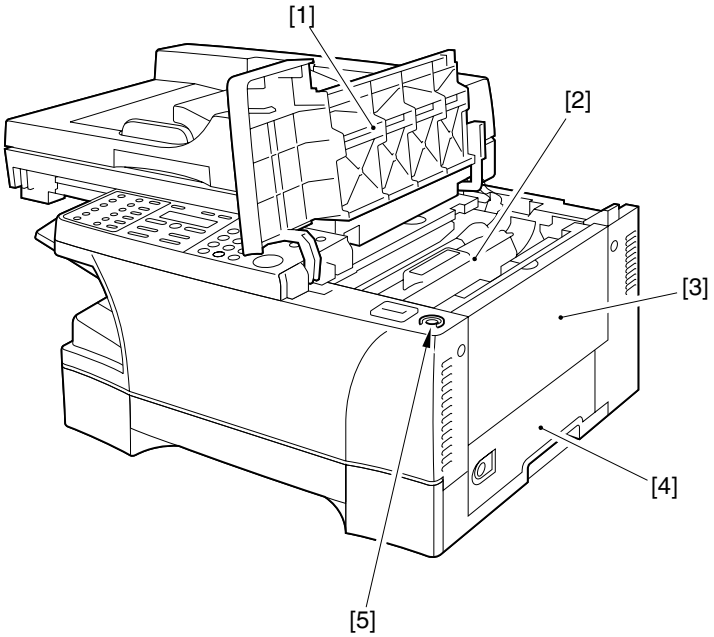

F01-201-03

[1] Cartridge cover
[2] Cartridge
[3] Manual feed tray
[4] Right door
[5] Shipping screw slot

 COPYRIGHT © 2001 CANON INC.

2.1.3 ADF (if equipped with ADF functions)

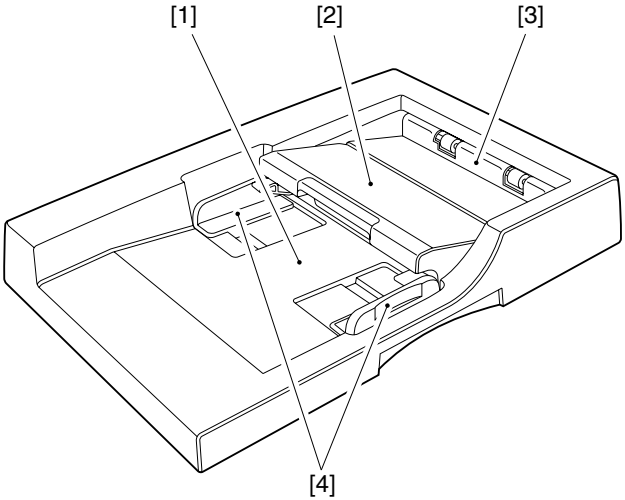

F01-201-04

[1] Original placement area
[2] Open/close cover
[3] Delivery slot
[4] Slide guide

2.2 Cross Section

2.2.1 Body

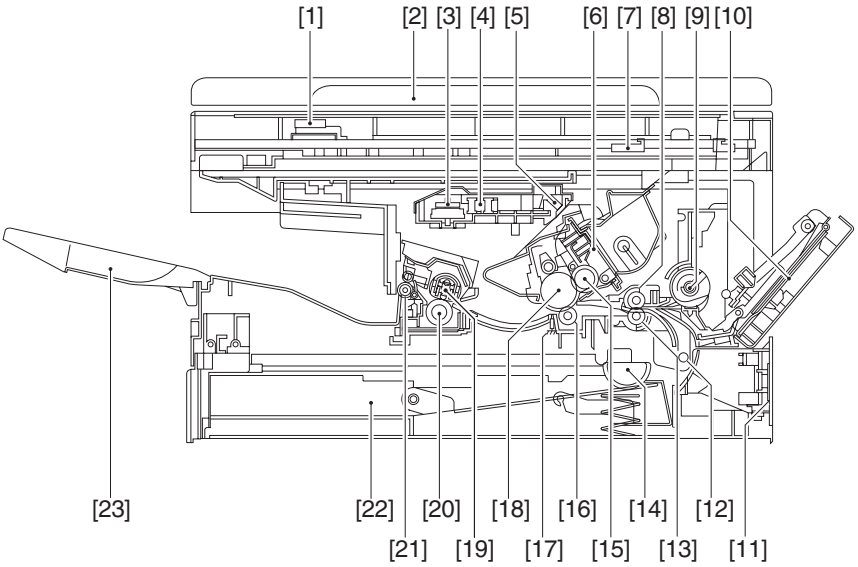

F01-202-01

[1] Contact sensor
[2] Copyboard
[3] Laser scanner motor unit
[4] Laser unit
[5] Reflecting mirror
[6] Cartridge
[7] Reader unit
[8] Registration shutter
[9] Manual feed pickup roller
[10] Manual feed tray
[11] Right door
[12] Vertical path roller
[13] Registration roller
[14] Cassette pickup roller
[15] Developing cylinder
[16] Transfer charging roller
[17] Separation static eliminator
[18] Photopositive drum
[19] Fixing film unit
[20] Fixing pressure roller
[21] Delivery roller
[22] Cassette
[23] Delivery tray

 COPYRIGHT © 2001 CANON INC.

2.2.2 ADF (if equipped with ADF functions)

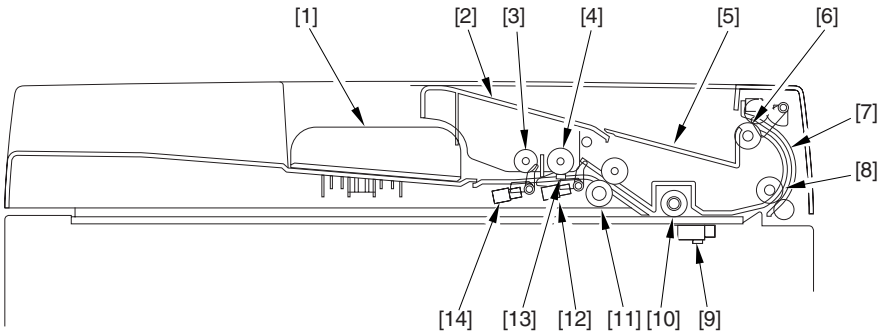

F01-202-02

[1] Slide guide
[2] Open/close cover
[3] Original pickup roller
[4] Original separation roller
[5] Original delivery tray
[6] Original delivery roller
[7] Delivery external guide
[8] Original feed roller
[9] Contact sensor (body)
[10] White roller
[11] ADF registration roller
[12] Registration sensor
[13] Original separation pad
[14] Original sensor

COPYRIGHT © 2001 CANON INC.

3 Safety and Warnings

3.1 ⚠Safety of Laser Light

3.1.1 Safety of the Laser Unit

The radiation from a laser until can be harmful to the human body. The machine's laser optical unit is sealed by means of a protective housing and external covers, so that the light it produces will not escape outside, ensuring the safety of the user as long as the machine is used under normal conditions.

3.1.2 CDRH Requirements

The Center for Devices and Radiological Health (CDRH) of the US Department of Health and Human Services put into force a set of requirements with a view to regulating laser-related products on August 2, 1976. The requirements apply to laser products produced on August 1, 1996, or later, and all laser products must comply with them if they are to be marketed in the US. The following is the label that indicates the compliance with the CDRH requirements, and it must be attached to all laser products that are sold in the US.

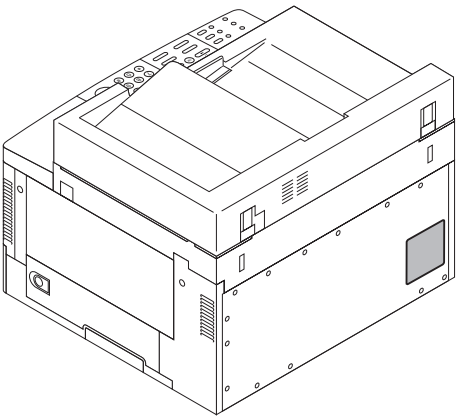

F01-301-01

The text may differ from product to product or from model to model.

 COPYRIGHT © 2001 CANON INC.

3.1.3 Handling the Laser Unit

When servicing the area around the machine's laser optical unit, take full care not to put any tool with a high reflectance (e.g., screwdriver) into the laser path. Be sure also to remove any watch, ring, or the like, as they can reflect the laser beam to damage your eye. The machine's laser light is red, and its covers that can reflect the laser beam are identified using the following label. The laser scanner unit of this model cannot be adjusted in the field.

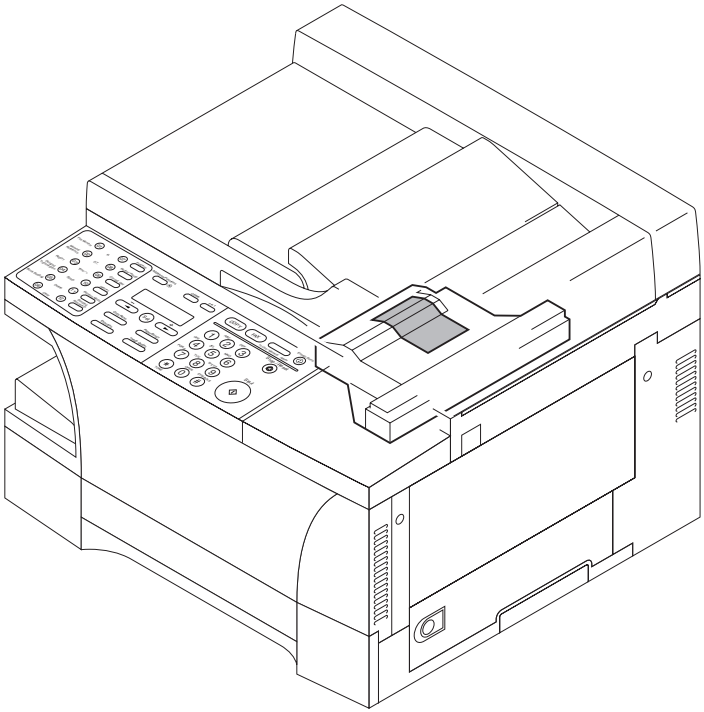

F01-301-02

The label is attached to covers inside the machine used to block out laser radiation.

3.2 Safety of the Toner

The machine's toner is a non-toxic material consisting of plastic, iron, and small amounts of dye. If toner came into contact with your skin or clothes, remove as much of it as possible with dry tissue, and wash with water. Do not use hot water, as it will turn the toner into a jelly and cause it to permanently fuse with the fibers of the clothes. Also, do not bring toner into contact with vinyl material, as they are likely to react against each other.



Do not throw toner into fire. It may explode.

3.3 Storing and Handling the Cartridge

Whether it is left packed or unpacked, or is fitted to the machine, the cartridge is subject to the effects of the environment, and will deteriorate over time. The speed of deterioration depends on the site or storage condition, and cannot be generalized. Take full care when storing or handing it.

3.3.1 Storing a Cartridge Before Unpacking

If the cartridge is to be stored in a storeroom or a workshop, be sure to refer to T01-303-01, and keep the following in mind:

- Avoid direct sunshine.
- Avoid vibration.
- Avoid impact. (Take care not to drop it.)

 COPYRIGHT © 2001 CANON INC.

Temperature	Normal (9/10 of total storage period)		0~35˚C/32~95˚F
	Severe (1/10 of total storage period)	High	35~40˚C/95~104˚F
		Low	-20~0˚C/-4~32˚F
Change in temperature (within about 3 min)			40~15˚C/104~59˚F -20~25˚C/-4~77˚F
Humidity	Normal (9/10 of total storage period)		35~85%RH
	Severe (1/10 of total storage time)	High	85~95%RH
		Low	10~35%RH
Atmospheric pressure			0.61~1.01hpa
Effective period of cartridge			2.5 yr (approx.)

T01-303-01

3.3.2 Storing or Handling the Cartridge After Unpacking

The photosensitive medium is made of organic photo-conducting material (OPC), and will deteriorate if exposed to strong light. It is also used to hold toner inside it. Be sure to advise the user to be fully careful when storing and handling the cartridge. (The cartridge must always be put inside a protective bag for storage.)

3.3.2.1 Storing After Unpacking

a. Use a protective bag for storage.
b. Avoid areas subject to direct sunshine (e.g., near a window). Do not leave it alone inside a card, as the temperature can rise to an extremely high level. (These are also true even if the cartridge is put in a protective bag.)
c. Avoid areas subject to high temperature/humidity or low temperature/humidity, areas subject to rapid changes in temperature or humidity, or areas subject to condensation (e.g., near an air conditioner).
d. Avoid areas exposed to corrosive gas (e.g., insecticide) or salty air.
e. Avoid areas subject to dust, ammonium gas, or organic solvent gas.

COPYRIGHT © 2001 CANON INC.

f. Avoid areas near a CRT display, disk drive, and floppy disk. (The magnetism from the cartridge can destroy the data.)
g. Keep it out of reach of children.
h. Keep the temperature between 0° and 35°C (32° and 95°F).

3.3.2.2 Points to Note When Handling the Cartridge

a. When fitting the cartridge to the machine, on if white spots start to occur in copy images caused by decreasing toner, hold the cartridge level as shown in F01-303-01, and rock it about 90° to both sides 5 to 6 times, thereby evening out the toner inside it. Do not shake the cartridge in ways not indicated; otherwise, toner can start to leak from the cleaner assembly.

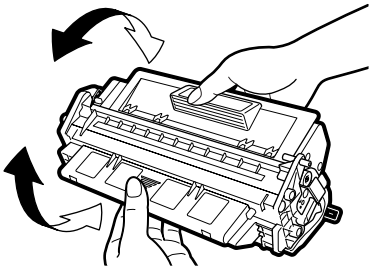

F01-303-01

To fully prevent soling of output images caused by toner leakage, be sure to make 3 to 5 test copies after fitting the cartridge in the machine.

 COPYRIGHT © 2001 CANON INC.

b. Do not place the cartridge on its end or upside down as shown in F01-303-02. Also, do not swing it.

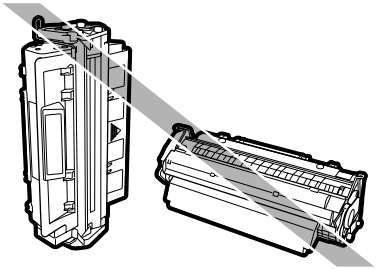

F01-303-02

c. Do not open the shutter for the photosensitive drum found under the cartridge and touch the surface of the drum.
d. Do not disassemble the cartridge.
e. Do not subject the cartridge to unnecessary vibration or impact. In particular, do not force down on the photosensitive drum through the shutter found under the cartridge.
f. Do not keep the cartridge inside the machine when moving the machine. Be sure to put the cartridge in its protective bag, or wrap it in thick cloth to avoid light.
g. Do not place the cartridge near a CRT display, disk drive, or floppy disk, as the magnetism from the cartridge can destroy the data.
h. Keep the cartridge out of reach of children.
i. The photosensitive drum is susceptible to light, thus the presence of a shutter under the cartridge. If exposed to strong light for a long time, the copies may start to develop white spots or vertical bands. These faults may disappear if the machine is left at rest for some time, or the memory (cause of the faults) may remain permanently.



If you must take out the cartridge from the machine, be sure to put it in its protective bag, or cover it. Never leave it alone unprotected.

j. Advise the user to send all used cartridges to the designated place.



Do not throw a cartridge (used or not used) into fire. It may burst or explode.



If the photosensitive drum is exposed to 1500 lux (general light) for 5 min and then left alone for 5 min in a dark place, it may recover to a level that will not cause practical problems. Nevertheless, avoid direct sunshine by all means, which is as strong as 10000 to 30000 lux.

 COPYRIGHT © 2001 CANON INC.

CHAPTER 2

USING THE MACHINE

COPYRIGHT © 2001 CANON INC.

1 Using the Machine

The functions and LEDs found in the machine's control panel are as follows:

1.1 Control Panel

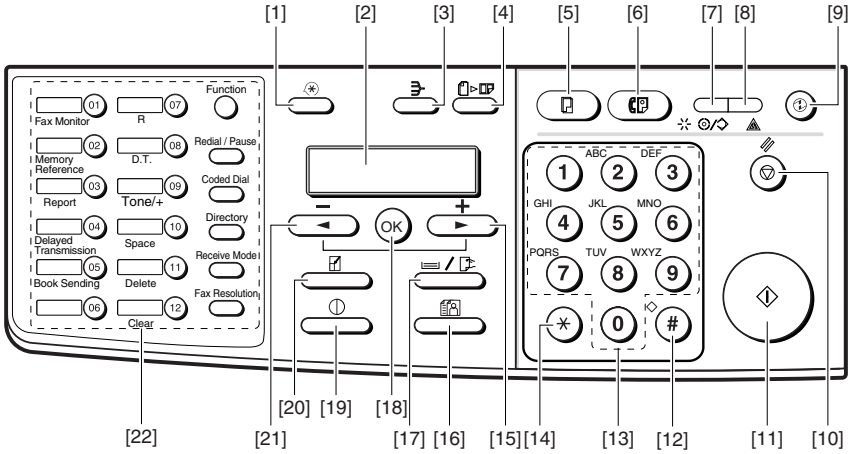

F02-101-01

[1] Additional Functions Key
Press it to bring up the user mode menu for making various settings and registering items. The key flashes when the machine is in user mode menu, and goes OFF in response to a press.

[2] LCD
Use it to refer to the Copy/Fax basic screen, various Settings screens, and error messages.

[3] Collate Key
Press it to select sorting. The key remains ON when the machine is in sort mode, and goes OFF in response to a press.

[4] 2 on 1 Key
Press it to reduce 2 originals automatically and on a single sheet.

[5] Copy Key*1
Press it when using a copier function. The key remains ON when the machine is in copier mode.

*1: If equipped with fax functions.

[6] Fax Key*1
Press it when using a fax function. The key remains ON when the machine is in fax mode.

[7] In Use/Memory Lamp*1
It goes ON when an original has been read, a delayed fax transmission has been selected, or memory reception has been used. Further, it flashes while fax transmission is under way.

[8] Alarm Lamp
It flashes when a fault has occurred in the machine (e.g., paper jam).

[9] Energy Saver Key
Press it to manually select or deselect energy save mode. It remains ON when the machine is in energy save mode, and goes OFF when the machine leaves the mode.

[10] Stop/Reset Key
Press it to stop making copies or transmitting a fax. Or, press it to reset the machine white making mode settings (i.e., to return copier/fax mode to standard mode).

[11] Start Key
Press it to start making a copy or sending a fax.

[12] # Key
Press it to enter a "symbol" when registering fax/telephone number or when entering a fax telephone number.

[13] Keypad
Use it to enter a copy count or a value for Zoom, or when entering a fax telephone number.

[14] * Key
Press it to generate a tone signal from a dial (pulse) circuit when using a fax function.

[15] Right Arrow/+ Key
Press it to add a value when making various settings or to indicate the next setting or an item.

[16] Image Quality Key
Press it to select a copy image quality type (text, text/photo, photo).

[17] Paper Select Key
Press it to select a source of paper (cassette, manual feed).

[18] OK Key
Press it to store various selections or settings.

[19] Exposure Key
Press it to change the copy density. (auto, or manual from 9 steps)

[20] Enlarge/Reduce Key
Press it to select a default Enlarge/Reduce ratio or Zoom.

[21] Left Arrow/- Key
Press it to subtract a value when making various settings or to indicate the previous setting or an item.

[22] One-Touch/Fax Function Key (after a press on the Function key)*1
Press it to dial a pre-registered telephone number. A press on the Function key will cause it to serve as the Fax Function key.

*1: If equipped with fax functions.

 COPYRIGHT © 2001 CANON INC.

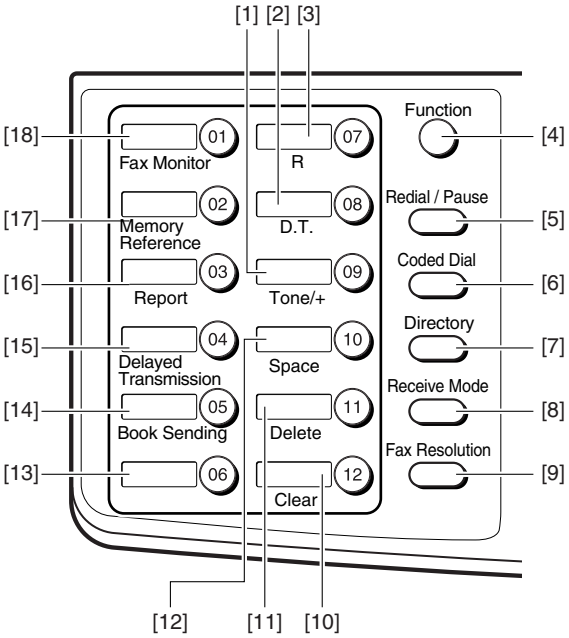

F02-101-02

[1] Tone/+ Key*1

Press it to generate a tone from a dial circuit. Press it to enter a + symbol when registering a telephone number.

[2] D.T. Key*1

Press it to use a D.T. function.

[3] R Key*1

Press it to use an R function.

[4] Function Key*2

Press it to use the function key. A press on the Function key will cause the key to go ON, and another press will cause it to go OFF.

[5] Redial/Pause Key*1

Press it to redial a number that has been dialed using the keypad (as in fax wait). When entering a telephone number, it services as a Pause key.

*1: If equipped with fax functions; or only when the Function key is ON.
*2: If equipped with fax functions.

COPYRIGHT © 2001 CANON INC.

[6] Coded Dial Key*1
Press it to use speed dialing.
[7] Directly Key*1
Use it to search for a one-touch or speed number using a name.
[8] Receive Mode Key*1
Press it to change the reception mode (auto, manual).
[9] FAX Resolution Key*1
Use it to change the transmission resolution (standard, fine, halftone, super fine, ultra fine).
[10] Clear Key*2
Press it to clear various settings that have been registered or made. Also, press it to delete all telephone number/text input.
[11] Delete Key*2
Use it to delete a single character input.
[12] Space Key*2
Press it to put a space in a telephone number or a string of characters.
[13] M or E Key*2
Press it to use a function/service (after selecting 'yes' for the M/E key in user mode; this is effective only if the country is set to "U.K." or "SPAIN".
[14] Book Send Key*2
Press it to transmit multiple originals using the copyboard glass.
[15] Delayed Transmission Key*2
Press it to set a transmission time.
[16] Report Key*2
Press it to print out a communication-related report, dial list, user data list, or document memory list.
[17] Memory Reference Key*2
Press it to check the file that has been processed by memory transmission or memory reception.
[18] Fax Monitor Key*2
Press it to check the state of a fax communication.

*1: If equipped with fax functions; or only when the Function key is ON.
*2: Enabled only if the machine is equipped with fax functions. Also, it is enabled only while the Function key is lit.

 COPYRIGHT © 2001 CANON INC.

2 User Mode

2.1 User Mode Menu

A press on the Additional Functions key in the control panel brings up the user mode menu. On the user mode menu, press the left/right arrow key to make menu settings or increase/decrease a value; press the OK key to store the selected input.

The user mode menu is constructed as follows:

1. COMMON SETTINGS

- 1.DEFAULT SETTINGS*1
  - COPY
  - FAX
- 2.SW AFTER AUTO CLR*1
  - DEFAULT MDOE
  - CURRENT MODE
- 3.VOLUME CONTROL*1
  - 1.KEYPAD VOLUME
    - ON
      - VOLUME1~3
    - OFF
  - 2.ALARM VOLUME*1
    - ON
      - VOLUME1~3
    - OFF
  - 3.TX DONE TONE
    - ON
      - VOLUME1~3
    - ERROR ONLY
      - VOLUME1~3
    - OFF
  - 4.RX DONE TONE
    - ON
      - VOLUME1~3
    - ERROR ONLY
      - VOLUME1~3
    - OFF

*1: Only if equipped with fax functions.

COPYRIGHT © 2001 CANON INC.

1. COMMON SETTINGS

- 3.VOLUME CONTROL*1
  - 5.PRINTING END TONE
    - ON
      - VOLUME1~3
    - ERROR ONLY
      - VOLUME1~3
    - OFF
  - 6.SCANNING END TONE
    - ON
      - VOLUME1~3
    - ERROR ONLY
      - VOLUME1~3
    - OFF
  - 7.CALLING VOLUME
    - ON
      - VOLUME1~3
    - OFF
  - 8.LINE MONITOR VOL.
    - ON
      - VOLUME1~3
    - OFF
- 4.MP TRAY PAPERSIZE
  - OFF
    - MP PAPERSIZE
      - FREE SIZE
      - SET ON LOADING
  - ON
    - MP PAPERSIZE
      - A4
      - B5
      - A5
      - LGL
      - LTR
      - STMT
      - CUSTOM PAER SIZE
        - 1.VERTICAL SIZE 76~216mm
        - 2.HORIZONTAL SIZE 127~356mm

*1: Only if equipped with fax functions.

 COPYRIGHT © 2001 CANON INC.

1. COMMON SETTINGS

5.CAS.PAPER SIZE
- A4
- LTR/LGL
- B5
- FOLIO
- FOOLSCAP

6.PRINT EXPOSURE
- 5 settings

7.MP PAPERTYPE
- PLAIN PAPER
- TRACING PAPER
- TRANSPARENCY
- SPECIAL PAPER 1
- SPECIAL PAPER 2

8.HIGH COPY MODE
- ON
- OFF

9.TONER SAVER MODE
- ON
- OFF

10.PRT FEED INTERVAL
- LONG INTERVAL
- NORMAL INTERVAL

11.DISPLAY LANGUAGE[*1]
- ENGLISH
- FRENCH
- SPANISH
- GERMAN
- ITALIAN
- DUTCH
- FINNISH
- PORTUGUESE
- NORWEGIAN
- SWEDISH
- DANISH
- CZECH
- HUNGARIAN
- RUSSIAN

COPYRIGHT © 2001 CANON INC.

2. COPY SETTINGS

1.STD. IMAGEQUALITY
- TEXT ORIGINAL
- TEXT/PHOTO
- PHOTO

2.STANDARD EXPOSURE
- AUTO
- MANUAL
  - 9 settings

3.STD ZOOM RATIO
- 50~200%

4.STANDARD COPY QTY
- 01~99

5.AUTO SORT
- ON
- OFF

6.MAX. SCAN LENGTH
- 330mm
- 365mm

7.PAPER SIZE GROUP
- INCH
- A
- AB

8. SHARPNESS
- 1~9

 COPYRIGHT © 2001 CANON INC.

3.FAX SETTINGS*1

- 1.USER SETTINGS
  - 1.TEL LINE SETTINGS
    - 1.USER TEL NO.
    - 2.TEL LINE TYPE
      - TOUCH TONE
      - ROTARY PULSE
    - 3.TX START SPEED
      - 14400bps
      - 9600bps
      - 7200bps
      - 4800bps
      - 2400bps
    - 4.RX START SPEED
      - 14400bps
      - 9600bps
      - 7200bps
      - 4800bps
      - 2400bps
  - 2.UNIT NAME

*1: Only if equipped with fax functions.

COPYRIGHT © 2001 CANON INC.

3.FAX SETTINGS*1

- 1.USER SETTINGS
  - 3.TX TERMINAL ID
    - ON
      - 1.TTI POSITION
        - OUTSIDE IMAGE
        - INSIDE IMAGE
      - 2.TEL NUMBER MARK
        - FAX
        - TEL
    - OFF
  - 4.DENSITY CONTROL
    - LIGHT
    - STANDARD
    - DARK
  - 5.PROG. 1-TOUCH KEY
    - 01~12
      - USE
      - DO NOT USE
  - 6.OFFHOOK ALARM
    - ON
    - OFF
  - 7.R-KEY SETTING
    - PSTN
    - PBX
      - HOOKING
      - EARTH CONNECTION
      - PREFIX
  - 8.M-KEY SETTING/E-KEY SETTING*2
- 2.REPORT SETTINGS
  - 1.TX REPORT
    - OUTPUT NO
    - PRINT ERROR ONLY
      - REPORT WITH TX IMAGE
        - ON
        - OFF
    - OUTPUT YES
      - REPORT WITH TX IMAGE
        - ON
        - OFF

*1: Only if equipped with fax functions.
*2: “M-KEY SETTING” is usable only when #5 TYPE in service mode is set to “U.K.”
“E-KEY SETTING” is usable only when #5 TYPE in service mode is set to “SPAIN.”

 COPYRIGHT © 2001 CANON INC.

3.FAX SETTINGS*1

- 2.REPORT SETTINGS
  - 2.RX REPORT
    - OUTPUT NO
    - PRINT ERROR ONLY
    - OUTPUT YES
  - 3.ACTIVITY REPORT
    - ON
    - OFF
- 3.TX SETTINGS
  - 1.ECM TX
    - ON
    - OFF
  - 2.PAUSE TIME
    - 01~15SEC
  - 3.AUTO REDIAL
    - ON
      - 1.REDIAL TIMES
        - 01~10TIMES
      - 2.REDIAL INTERBAL
        - 02~99MIN.
      - 3.TX ERROR RESEND
        - ON
          - RESEND TX FROM
            - ERROR & 1 PG
            - ERROR PAGE
            - ALL PAGES
        - OFF
    - OFF
  - 4.ERASE FAILED TX
    - OFF
    - ON
  - 5.TIME OUT
    - ON
    - OFF

*1: Only if equipped with fax functions.

COPYRIGHT © 2001 CANON INC.

3.FAX SETTINGS*1

- 4.RX SETTINGS
  - 1.ECM RX
    - ON
    - OFF
  - 2.FAX/TEL OPT. SET
    - 1.RING START TIME
      - 01~30SEC
    - 2.F/T RING TIME
      - 015~300SEC
    - 3.F/T SWITCH ACTION
      - RECEIVE
      - DISCONNECT
  - 3.INCOMING RING
    - OFF
    - ON
      - RING COUNT
        - 01~99TIMES
  - 4.MAN/AUTO SWITCH
    - OFF
    - ON
      - F/T RING TIME
        - 01~99SEC
  - 5.REMOTE RX
    - ON
      - REMOTE RX ID
        - 00~99
    - OFF

*1: Only if equipped with fax functions.

 COPYRIGHT © 2001 CANON INC.

3.FAX SETTINGS*1

- 5.PRINTER SETTINGS
  - 1.RX REDUCTION
    - ON
      - 1.RX REDUCTION
        - AUTO SELECTION
        - FIXED REDUCTION
          - 97%
          - 95%
          - 90%
          - 75%
      - 2.SELECT REDUCE DIR
        - VERTICAL ONLY
        - HORIZ & VERTICAL
    - OFF
  - 2.TONER SUPPLY LOW
    - KEEP PRINTING
    - RX TO MEMORY
- 6. SYSTEM SETTINGS
  - 1.FAX DEFAULT
    - 1.RESOLUTION
      - OFF
      - STANDARD
      - FINE
      - PHOTO
      - SUPER FINE
      - ULTRA FINE
    - 2.BOOK TX SCAN SIZE
      - A4
      - A5
      - SHEET
  - 2.LOCKPHONE
    - ON
    - OFF

*1: Only if equipped with fax functions.

COPYRIGHT © 2001 CANON INC.

4.ADRS REGISTRATION*1

- 1.1-TOUCH SPD DIAL
  - 01~12
    - 1.TEL NUMBER ENTRY
    - 2.NAME
    - 3.OPTIONAL SETTING
      - ON
        - 1.TX TIME SETTING
        - 2.TX TYPE
          - REGULAR TX
          - SUBADDRESS TX
          - POLLING RX
      - OFF
- 2.CODED SPD DIAL
  - *00~*99
- 3.GROUP DIAL
  - 01~12
    - 1.TEL NUMBER ENTRY
    - 2.NAME
    - 3.TX TIME SETTING
      - 1~5

*1: Only if equipped with fax functions.

 COPYRIGHT © 2001 CANON INC.

5.TIMER SETTINGS

1.DATE/TIME SETTING
2.AUTO CLEAR
    ON
        AUTO CLEAR TIME
            1~9MIN.
    OFF
3.ENERGY SAVER
    ON
        ENERGY SVR TIME
            03~30MIN.
    OFF
4.DAILY TIMER SET
    1.SUN
    2.MON
    3.TUE
    4.WED
    5.THU
    6.FRI
    7.SAT
5.DATE SETUP
    YYYY MM/DD
    MM/DD YYYY
    DD/MM YYYY

6.ADJUST./CLEAN

1.ROLLER CLEANING
2.CLEAN ADF ROLLER*1
3.RESTART PRINTER

*1: Only if equipped with ADF functions.

COPYRIGHT © 2001 CANON INC.

7.PRINT LISTS

1.USER DATA
2.SPEED DIAL LIST*1
- 1.1-TOUCH LIST
  - SORT
  - NO SORT
- 2.CODED DIAL LIST
  - SORT
  - NO SORT
- 3.1-TOUCH(DETAIL)
  - SORT
  - NO SORT
- 4.CODED(DETAIL)
  - SORT
  - NO SORT
- 5.GROUP DIAL LIST

3.CANCEL REPORT

*1: Only if equipped with fax functions.

 COPYRIGHT © 2001 CANON INC.

2.2 User Report

2.2.1 Manually Generating a Report

The user can generate any of the following report manually:

Name of report	Operation
User data list 1-touch spd dial list*1 1-touch dial spd dial list (detail)*1 Coded speed dial list*1 Coded speed dial list (detail)*1 Group dial list*1	Select a report in the user mode menu (2.1 of Chapter 2). Or, select fax mode. Press Function key and Report key in this order. Use the Left or Right Arrow key to select a list to print, then press OK key.
Docement memory list*1 Activity report*1	Select fax mode. Press Function key and Report key in this order. Use the Left or Right Arrow key to select a list to print, then press OK key.

*1: Only if equipped with fax functions.

T02-202-01

2.2.2 Automatically Generating Reports (if equipped with fax functions)

The user can make appropriate settings in user mode so that the following reports may be generated automatically.

Name of report	Settings
TX report Error TX report RX report Activity report	Make output settings for auto generation under '2. REPORT SETTINGS' in '3. FAX SETTINGS' of the user mode menu.
Multiple activity report	First, enable '2. TX REPORT' under '2. REPORT SETTINGS' of '3. FAX SETTINGS' on the user mode menu; a report will be generated if a broadcast transmission is used (instead of a TX report).
Memory clear list	If the machine remains without power for a specific period of time (about 2 hr or more) while an image exists in its memory, the power of the vanadium lithium secondary battery (BAT2) will become exhausted. A report will automatically be generated when the machine is turned on.

T02-202-02

 COPYRIGHT © 2001 CANON INC.

2.2.2.1 Memory Clear List

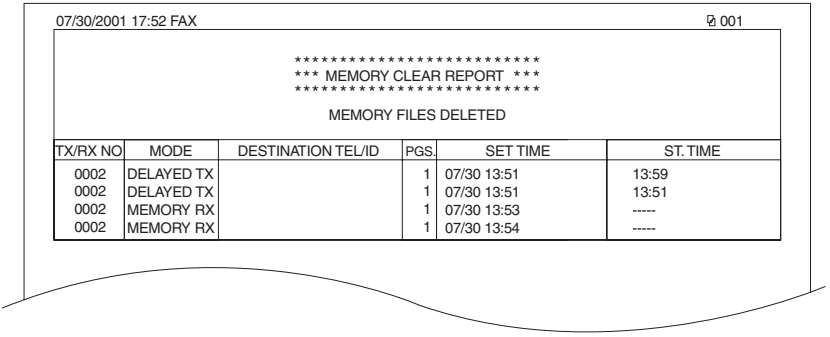

07/30/2001 17:52 FAX 001

****
*** MEMORY CLEAR REPORT ***
****

MEMORY FILES DELETED

TX/RX NO	MODE	DESTINATION TEL/ID	PGS.	SET TIME	ST. TIME
0002	DELAYED TX		1	07/30 13:51	13:59
0002	DELAYED TX		1	07/30 13:51	13:51
0002	MEMORY RX		1	07/30 13:53	-----
0002	MEMORY RX		1	07/30 13:54	-----

F02-202-01

TX/RX NO : date/time (in 24-hr notation)
MODE : start of storage (in 24-hr notation)
DESTINATION TEL/ID :
PGS. :
SET TIME :
ST. TIME :
4-digit indication
transmission, delayed transmission, or reception
one-touch dial/speed dial number, abbreviation of other party
number of pages stored

COPYRIGHT © 2001 CANON INC.

3 Service Mode

3.1 Outline

The following items may be checked or set in the machine's service mode, which consists of those found in existing fax machines. You may use them as you would on a fax machine.

The machine's service mode items are grouped into the following 15 blocks:

#1 SSSW: service soft switch
Use it to register/set basic fax functions (e.g., error control, echo remedy, communication error correction).

#2 MENU: menu switch settings
Use it to register/set items related to functions needed at time of installation (e.g., NL equalizer, transmission level).

#3 NUMERIC param: numerical parameter settings
Use it to enter a numerical parameter for various functions related to the FAX/TEL switch-over.

#4A SPECIAL: Do not change.

#4B NCU: Do not change.
This item is set in conjunction with the setting of #5 TYPE so that the settings will comply with the communications standards of a specific country/region.

#4C ISDN: not used

#5 TYPE: country/region setting
Use it to select a country/region from the list so that the setting of #1 through #4 will comply with the communications standards of the selected country/region.

#6 SCANNER: partially available for service
Do not change the settings except '7: CCD', used to adjust the image position; otherwise, the read image quality can adversely be affected.

#7 PRINTER: printer function settings
Use it to register/set items related to printer basic service functions (e.g., conditions for reducing received images).

#8 PDL: not used

#9 COUNTER: counter information
Use it to check various counter information.

 COPYRIGHT © 2001 CANON INC.

#10 REPORT: report output
Use it to generate a report on various service data.

#11 DOWNLOAD: not used

#12 CLEAR: data initialization mode setting
Use it to initialize various data by selecting a specific item.

#13 ROM: ROM control
Use it to indicate information related to the ROM on the LCD (e.g., ROM version, checksum).

#14 CS SET: not used

TEST MODE: Use it to execute various testings.

COPYRIGHT © 2001 CANON INC.

3.2 Using Service Mode

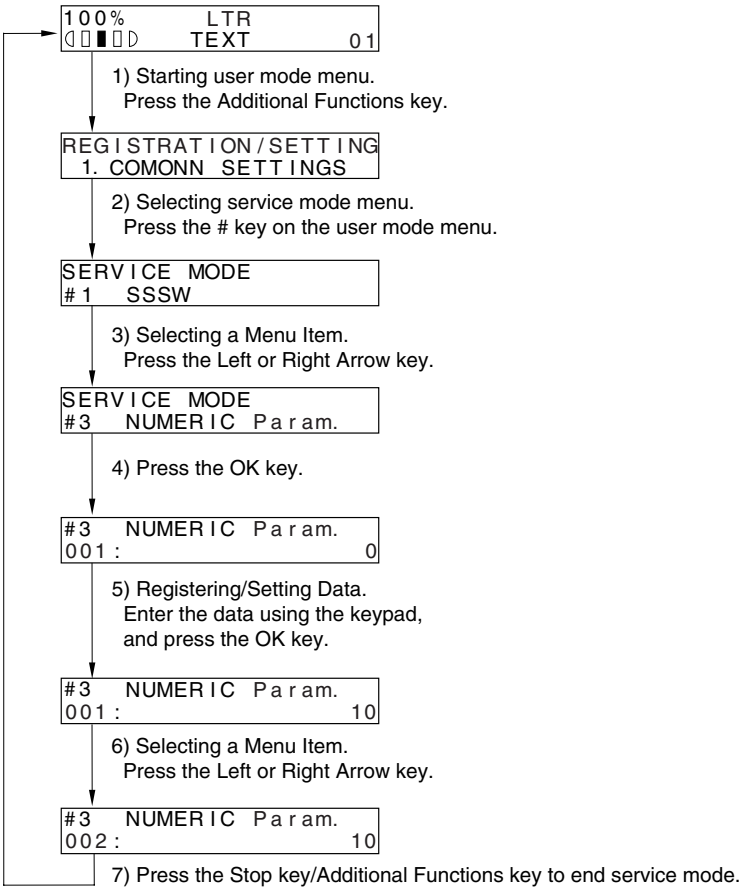

F02-302-01

 COPYRIGHT © 2001 CANON INC.

3.3 List of Service Mode Menus

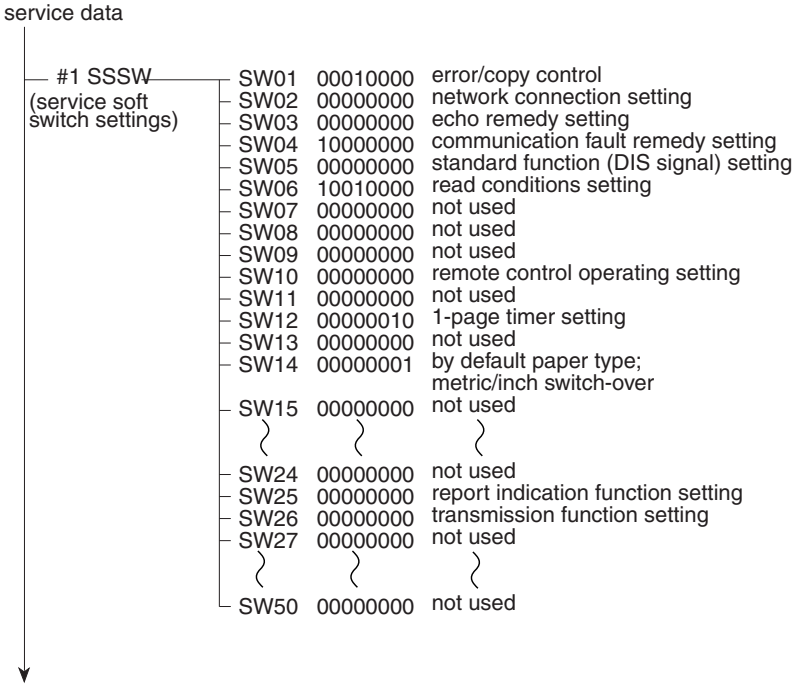

F02-303-01

Memo

To select the SW number in #1 SSSW, use Paper Select key and Enlarge/ Reduce key. To select a bit, use the Left or Right Arrow key.

Do not change the following, reserved for the future; SW7 through 9, 11, 13, 15 through 24, 27 through 50.

COPYRIGHT © 2001 CANON INC.

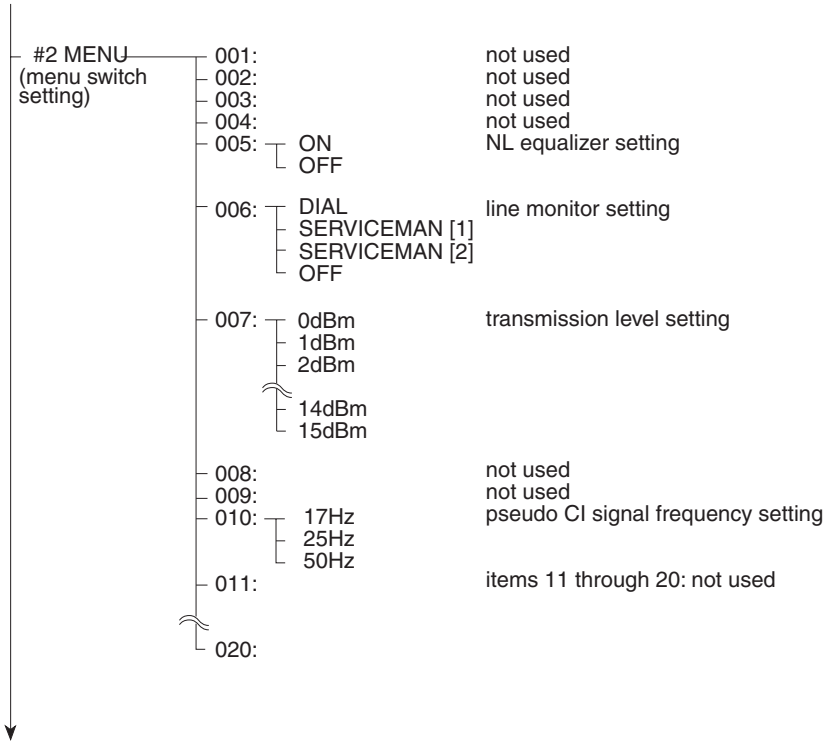

F02-303-02

Do to change the following, reserved for the future: No. 01 through 04, 8 through 9, 11 through 20.

 COPYRIGHT © 2001 CANON INC.

		Initial setting	Range of setting	
#3 NUMERIC Param. (numerical parameter setting)	001:			not used
	002:	10 (10%)	(1~99)	RTM signal transmission condition (1) setting
	003:	15 (15times)	(2~99)	RTM signal transmission condition (2) setting
	004:	12 (12lines)	(1~99)	RTM signal transmission (3) setting
	005:	4 (4sec)	(0~60)	NCC pause time (pre-ID code) setting
	006:	4 (4sec)	(0~60)	NCC pause time (post-ID code) setting
	007:			not used
	008:			not used
	009:	6(6 digits)	(0~20)	direct mail prevention function: telephone number cross-check, number of digits
	010:	5500 (55sec)	(0~9999)	T0 timer
	011:	3500 (35sec)	(0~9999)	TS1 timer
	012:			not used
	013:	1300 (13sec)	(500~3000)	T30 E0L timer
	014:			not used
	015:	120 (1200ms)	(0~999)	hooking detection time setting
	016:	4 (4sec)	(0~9)	fax/tel switch-over function: between line acquisition and pseudo RBTtransmission
	017:	100 (1000ms)	(0~999)	pseudo RBT signal pattern: ON time setting
	018:	0 (0ms)	(0~999)	pseudo RBT signal pattern: OFF time (short) setting
	019:	200 (2000ms)	(0~999)	pseudo RBT signal pattern: OFF time (long) setting
	020:	100 (1000ms)	(0~999)	pseudo CI signal pattern: ON time setting
	021:	0 (0ms)	(0~999)	pseudo CI signal pattern: OFF time (short) setting
	022:	200 (2000ms)	(0~999)	pseudo CI signal pattern: OFF time (long) setting
	023:			not used
	024:	20 (-20dBm)	(0~20)	pseudo RBT signal transmission l evel setting
	025:	60 (60sec)	(0~999)	answering phone connection function: signal monitor length setting
	026:			not used
	027:	3 (30ms)	(0~99)	V21 low-speed flag preamble detection length setting
	028:	3 (3s)	(0~60)	menu pop-up time setting
	029:			not used
	⌇			⌇
	080:			not used

F02-303-03

COPYRIGHT © 2001 CANON INC.

Do not use the following, reserved for the future: No. 001, 007, 008, 012, 014, 023, 026, 029 through 080.

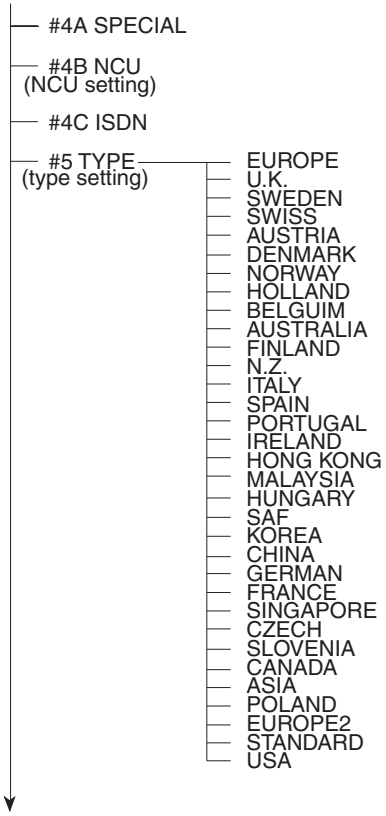

F02-303-04

#4A SPECIAL

Do not change the setting.

#4B NCU (NCU setting)

The settings under this item are collectively and automatically set in conjunction with #5 TYPE to suit the communications standards of a specific country/region.

Not used. (Do not change the setting.)

 COPYRIGHT © 2001 CANON INC.

#4C ISDN

Not used.

#5 TYPE

Use it to select a specific country/region from the list so that the settings under #1 through #4 will comply with the communications standards of the selected country/region.



When changing the TYPE setting, be sure not to select a country/region which is not the country/region of installation.

COPYRIGHT © 2001 CANON INC.

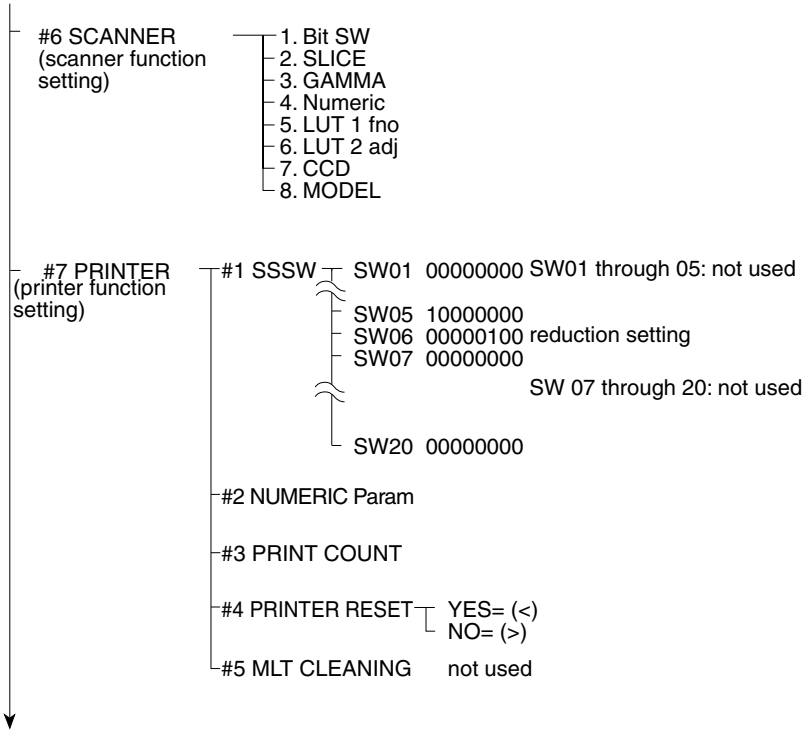

F02-303-05

Memo

To select the SW number in #1 SSSW of #7 PRINTER, use Paper Select key and Enlarge/Reduce key. To select a bit, use the Left or Right Arrow key.

#6 SCANNER (scanner function setting);
The setting of this item can affect the read image quality. A change may be made to '7. CCD' when adjusting the image position; otherwise, do not use this item.
Do not change the settings, as they are not in use: #7 PRINTER (printer function setting); #1 SSSW: SW01 through 05, 07 through 20. Also, do not change the setting of '#2 NUMBER Param'.

 COPYRIGHT © 2001 CANON INC.

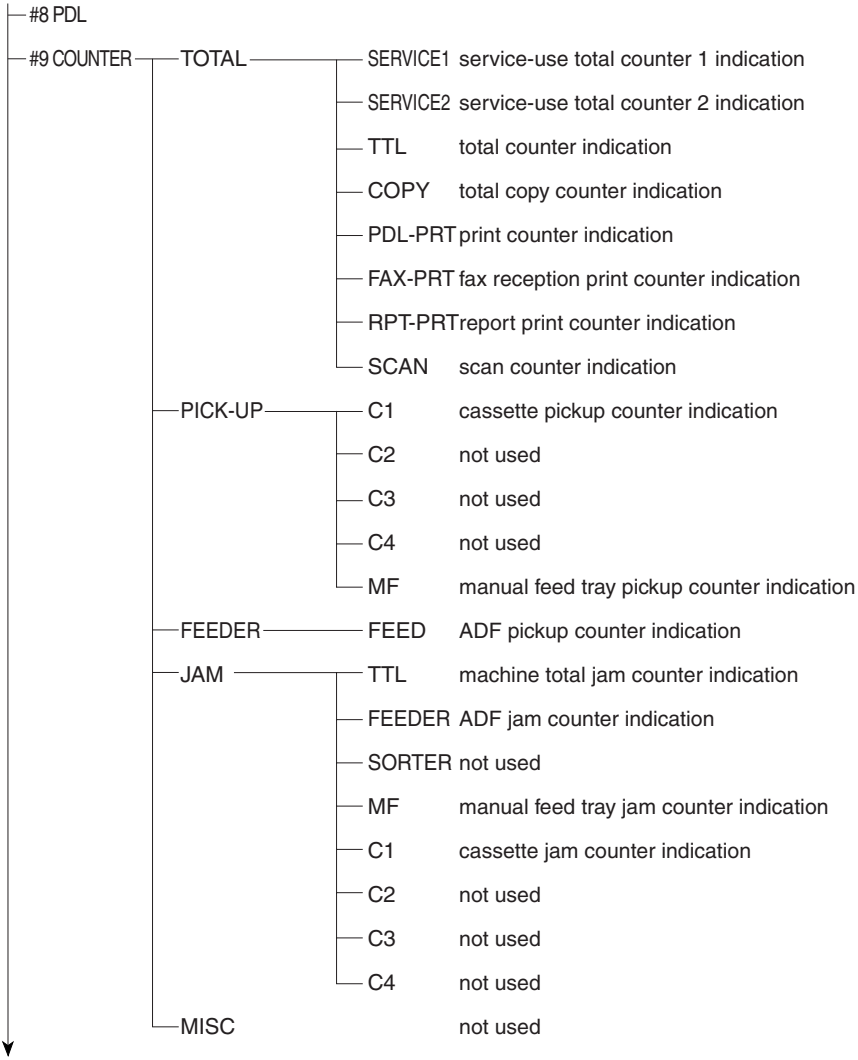

F02-303-06

#8 PDL

Not used.

COPYRIGHT © 2001 CANON INC.

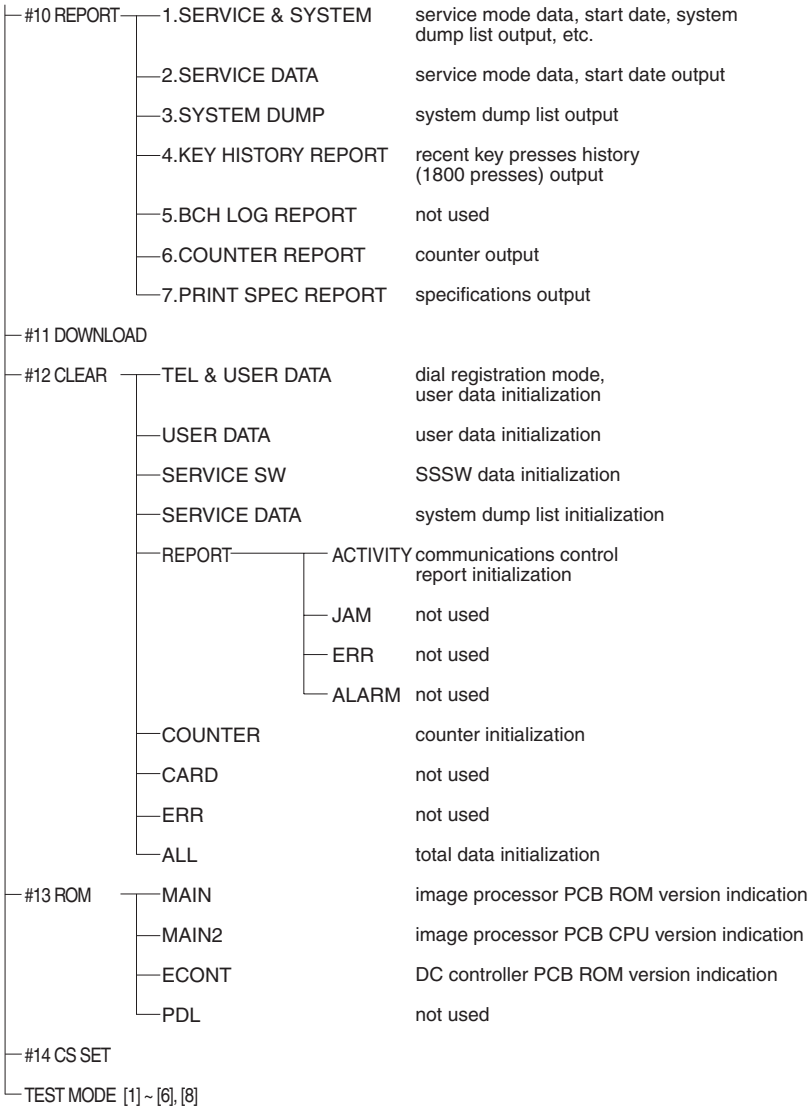

F02-303-07

#11 DOWNLOAD
Not used.

#14 CS SET
Not used.

 COPYRIGHT © 2001 CANON INC.

3.4 Bit Switch Settings (#1 SSSW)

A bit switch consists of 8 bits, used for registering/setting an item. The switch is configured as follows, and each bit is always either '0' or '1':

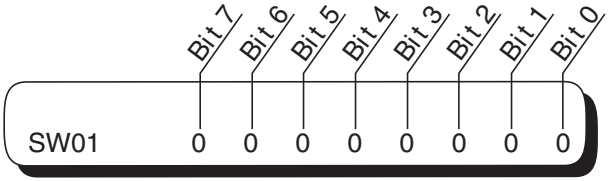

F02-304-01

Do not change service data marked "not used" for its initial setting.

#SSSW-SW01: error/copy control

Bit	Function	1	0	Factory setting
0	service error code	output	do not output	0
1	error dump list	output	do not output	0
2	not used	-	-	
3	not used	-	-	
4	not used	-	-	
5	not used	-	-	
6	not used	-	-	
7	user setting restriction	do not impose	impose	0

[Bit 0]

Use it to specify whether or not to generate a service error code. If set to '1', a service error code will be indicated on the report.

[Bit 1]

Use it to specify whether or not to generate an error dump list. When set to '1', an error dump list will be attached to an error TX report or a RX report generated in the event of an error.

[Bit 7]

Use it to impose or not impose restrictions on user settings. If set to '0', certain items cannot be set by the user, depending on the country setting. If set to '1', on the other hand, all items may be set by the user, regardless of the country setting.

COPYRIGHT © 2001 CANON INC.

#SSSW-SW02: network connection conditions setting

Bit	Function	1	0	Factory setting
0	start-up at memory clear list output fault	prohibit	do not prohibit	0
1	not used	-	-	
2	not used	-	-	
3	not used	-	-	
4	not used	-	-	
5	not used	-	-	
6	not used	-	-	
7	not used	-	-	

[Bit 0]

Use it to specify whether or not to put the machine in standby state if the memory clear list is not generated when the power is turned on after an error has occurred (e.g., running out of paper).

If set to '1', the machine will generate a memory clear list and enters standby state when the image data is cleared and the power is turned on.

If set to '1', moreover, the following takes place:

1. The alarm sounds, and the machine waits for correction; specifically,
   a. The LCD indicates 'CHECK PRINTER'.
   b. The machine will not start reception operation in response to arrival of data.
2. When an appropriate correction is made, the machine will automatically generate a memory clear list. If an error (e.g., jam) occurs during output, the machine goes back to 1. above.

If set to '0', on the other hand, the machine will sound the alarm and enters standby state.

 COPYRIGHT © 2001 CANON INC.

#1 SSW-SW03: echo remedy setting

Bit	Function	1	0	Factory setting
0	not used	-	-	0
1	echo product tone in high-speed transmission	transmit	do not transmit	0
2	not used	-	-	
3	not used	-	-	
4	not used	-	-	
5	not used	-	-	
6	not used	-	-	
7	tonal signal before transmission of CED signal	transmit	do not transmit	0

[Bit 1]

Use it to specify whether or not to transmit an echo protection tone for high-speed transmission V.29 (9600 or 7200 bps; modem signal).

If an error occurs often because of a line condition at time of transmission, set it to '1'. If set to '1', unmodulated carrier will be transmitted as a sync signal before transmission of an image for about 200 msec.



The following error codes are associated with a line condition at time of transmission:
##100, ##104, ##281, ##282, ##283, ##750, ##755, ##760, ##765

[Bit 7]

Use it to specify whether or not to transmit a 1080-Hz total signal before transmission of the CED signal. Set it to '1' if an error occurs often because of an error at time of reception.



The following error codes are associated with an echo at time of reception:
##005, ##101, ##106, ##107, ##114, ##200, ##201, ##790

COPYRIGHT © 2001 CANON INC.

#1 SSSW-SW04: communication fault remedy setting

Bit	Function	1	0	Factory setting
0	Monitor loop current	Yes	No	0
1	Check CI frequency	Yes	No	0
2	number of last flag sequence for procedure signal	2	1	0
3	reception mode after transmission of CFR signal	high-speed	high-speed/ low-speed	0
4	length of time during which to ignore low-speed signal after transmission of CFFR signal	1500ms	700ms	0
5	not used	-	-	
6	not used	-	-	
7	CED signal at time of manual reception	do not transmit	transmit	1

[Bit 0]

Selects whether or not to monitor loop current. When 'Yes' is selected, if loop current cannot be detected before dialing, or if the loop current is cut during or transmission, the line is released.

[Bit 1]

In automatic recieving, CI frequency check can be selected. If 'Yes' is selected, the upper and lower limits of the CI frequency are checked, and automatic recieving can only go ahead if both values meet German regulations.

[Bit 2]

Use it to specify the number of last flag sequences for the procedure signal (300 bps). Select '2' if the other party fails to receive the procedure signal transmitted by the machine normally.



The following error code are associated with transmission:
##100, ##280, ##281, ##750, ##753, ##754, ##755, ##758, ##759, ##760, ##763, ##764, ##765, ##768, ##769, ##770, ##773, ##775, ##778, ##780, ##783, ##785, ##788,

[Bit 3]

Use it to select reception to use after transmission of the CFR signal.

If an error occurs often because of the line condition at time of reception, set it to '1' and, at the same time, set 'ECM RX' to 'OFF' for user data.

 COPYRIGHT © 2001 CANON INC.

Memo

The following error codes are associated with the line condition at time of reception:
##107, ##114, ##201
Be sure to change bit 4 before changing this bit; resort to this bit only if an error still occurs.
When set to '1', only high-speed (image) signals will be received after the transmission of the CFR signal.

[Bit 4]

Use it to select the length of time during which low-speed signals are ignored after transmission of the CFR signal.

Select '1500 msec' if reception of image signals is not good because of a poor line condition.

[Bit 7]

Use it to specify whether or not to send the CED signal at time of manual reception.

Set it to 'transmit' if the other party does not start transmission when manual reception is initiated.

COPYRIGHT © 2001 CANON INC.

#1 SSSW-SW05: standard function (DIS signal) setting

Bit	Function	1	0	Factory setting
0	not used	-	-	
1	execute inch/metric conversion (text mode)	execute	do not execute	0
2	execute inch/meter conversion (text/photo mode)	execute	do not execute	0
3	transmit bit 33 and thereafter for DIS signal	prohibit	do not prohibit	0
4	not used	-	-	
5	LTR/LGL declaration for DIS	do not declare	declare	0
6	not used	-	-	
7	not used	-	-	

[Bit 1]

Use it to specify inch/meter conversion in sub scanning direction for images read in text mode.

[Bit 2]

Use it to specify inch/meter conversion in sub scanning direction for images read in text/photo mode.

[Bit 3]

Use it specify whether or not to transmit bit 33 and thereafter for the DIS signal.



If 'prohibit' is selected, Super Fine reception from a non-Canon machine can no longer be used.

[Bit 5]

Use it to disable LTR/LGL declaration as a remedy to communication fault when using LTR or LGL size paper. Selecting "Declare" sends the LTR or LGL declaration by the DIS signal when an attempt is made to print using LTR or LGL size paper.

 COPYRIGHT © 2001 CANON INC.

#1 SSSW-SW06: read condition setting

Bit	Function	1	0	Factory setting
0	not used	-	-	
1	not used	-	-	
2	not used	-	-	
3	not used	-	-	
4	original read width	LTR	A4	1
5	not used	-	-	
6	not used	-	-	
7	not used	-	-	

[Bit 4]

Use it to select a read width for originals.

If 'LTR' is selected, the machine will read LTR originals at LTR width (212 mm).

#1 SSSW-SW10: remote control setting

Bit	Function	1	0	Factory setting
0	not used	-	-	
1	not used	-	-	
2	not used	-	-	
3	No. of remote reception ID digits	3digits	2digits	0
4	not used	-	-	
5	not used	-	-	
6	not used	-	-	
7	not used	-	-	

[Bit 3]

Use it to select the number of digits for remote reception IDs; 2 digits or 3 digits.

COPYRIGHT © 2001 CANON INC.

#1 SSSW-SW12: page timer setting

Bit	Function	1	0	Factory setting
0	1-page time-out length for transmission/reception	1	0	0
1		1	0	1
2	1-page time-out length for transmission (HT transmission)	1	0	0
3		1	0	0
4	1-page time-out length for reception	1	0	0
5		1	0	0
6	not used	-	-	
7	page timer setting by transmission/reception	set	do not set	0

The machine is designed to stop communication when transmission/reception of a single page takes 32 min or more. To set a time-out length, refer to the next page.

If '1' is selected for bit 7, the 1-page time-out length will be as set by bit 0 and bit 1.

 COPYRIGHT © 2001 CANON INC.

Time-Out Length for Transmission/Reception

Bit / time-out length	7	6	5	4	3	2	1	0
8 min	0	*	*	*	*	*	0	0
16 min	0	*	*	*	*	*	0	1
32 min	0	*	*	*	*	*	1	0
64 min	0	*	*	*	*	*	1	1

Time-Out Length for Transmission (text mode)

Bit / time-out length	7	6	5	4	3	2	1	0
8 min	1	*	*	*	*	*	0	0
16 min	1	*	*	*	*	*	0	1
32 min	1	*	*	*	*	*	1	0
64 min	1	*	*	*	*	*	1	1

Time-Out Length for Transmission (image mode other than text mode)

Bit / time-out length	7	6	5	4	3	2	1	0
8 min	1	*	*	*	0	0	*	*
16 min	1	*	*	*	0	1	*	*
32 min	1	*	*	*	1	0	*	*
64 min	1	*	*	*	1	1	*	*

Time-Out Length for Reception

Bit / time-out length	7	6	5	4	3	2	1	0
8 min	1	*	0	0	*	*	*	*
16 min	1	*	0	1	*	*	*	*
32 min	1	*	1	0	*	*	*	*
64 min	1	*	1	1	*	*	*	*

COPYRIGHT © 2001 CANON INC.

#1 SSSW-SW14: inch/meter resolution setting

Bit	Function	1	0	Factory setting
0	paper size identification	1	0	0
1	paper size identification	1	0	0
2	inch/meter resolution conversion scanning direction	main/sub scanning	sub scanning only	1
3	not used	-	-	
4	declare inch resolution	declare	do not declare	0
5	not used	-	-	
6	not used	-	-	
7	not used	-	-	

[Bit 0, 1]

Use a combination of bit 0 and bit 1 to set the size of paper (default side).

- if 0 and 0, A/B-configured paper.
- if 0 and 1, inch-configured paper
- if 1 and 0, A-configured paper
- if 1 and 1, A/B-configured paper

[Bit 2]

Use it to specify whether to convert an inch resolution into a metric resolution for images read at time of G3 transmission only in sub scanning direction or in both main and sub scanning direction.

The setting made here is effective only if bit 1 of SW05 of #1 SSSW is set to '1'.

[Bit 4]

Use it to specify whether or not to declare an inch resolution to the other party at time of G3 communication.

If set to '1', a declaration will be made using the DIS, DCS, or DTC signal to the effect that the machine is designed to read and record images at an inch resolution.



The type of image and the direction of scanning for inch/meter resolution conversion are determined by combinations of bits 1 and 2 of SW05 and bit 2 of SW14 of #1 SSSW as well as the type of dialing used.

 COPYRIGHT © 2001 CANON INC.

- When One-Touch Dial/Coded Dial and Keypad/Redial Key Is in Use

SW05		SW14		Image and scanning direction subject to inch/meter conversion
bit1	bit2	bit2	bit3	
0	0	0	-	do not execute inch/meter conversion
0	0	1	-	
0	1	0	-	
0	1	1	-	
1	0	0	-	text image/sub scanning
1	0	1	-	text image/main scanning and sub scanning
1	1	0	-	text and photo image/sub scanning
1	1	1	-	text and photo image/main and sub scanning

COPYRIGHT © 2001 CANON INC.

#1 SSSW-SW25: report indication function setting

Bit	Function	1	0	Factory setting
0	transmission telephone number indicated on report	number of other party	number of caller	0
1	not used	-	-	
2	not used	-	-	
3	not used	-	-	
4	not used	-	-	
5	not used	-	-	
6	not used	-	-	
7	not used	-	-	

[Bit 0]

Use it to select the number to be indicated on the report, generated at the end of transmission.

Number of caller: Select it to indicate the telephone number of the caller on the report.

Number of other party: Select it to indicate the telephone number sent by the other party (CSI signal data).



If a change is made using a means other than one-touch dialing or speed dialing, the telephone number sent by the other party (CSI signal data) will be indicated on the report even when 'number of caller' is selected.

 COPYRIGHT © 2001 CANON INC.

#1 SSSW-S26: transmission function setting

Bit	Function	1	0	Factory setting
0	not used	-	-	
1	not used	-	-	
2	broadcast transmission confirmation	ask	do not ask	0
3	broadcast transmission prohibition	ask	do not ask	0
4	not used	-	-	
5	not used	-	-	
6	other party at time of broadcast transmission suspension	single party	all parties	0
7	error TX report at time of transmission suspension	do not generate	generate	0

[Bit 2]

Use it to specify whether or not to indicate a confirm message to prevent the user from making a broadcast by mistake when entering an address for a broadcast transmission.

[Bit 3]

Use it to specify whether or not to use broadcast transmission to prevent the user from making a broadcast by mistake when entering an address for a broadcast transmission.

[Bit 6]

Use it to specify whether or not to suspend a communication to all parties when a broadcast transmission is suspended.

[Bit 7]

Use it to specify whether or not to generate an error TX report when a transmission is suspended by pressing the Stop key.

COPYRIGHT © 2001 CANON INC.

3.5 Menu Switch Settings (#2 MENU)

No.	Item	Selection	Initial setting
005	NL equalizer	ON, OFF	OFF
006	telephone line monitor	DIAL/SERVICEMAN [1]/SERVICEMAN[2]/OFF	DIAL
007	transmission level (ATT)	0 through 15 (ex:15=-15dBm)	10
010	pseudo CI signal frequency	50Hz, 25Hz, 17Hz	25Hz

005 NL equalizer

Use it to turn on/off the NL equalizer.

Turn on the NL equalizer if an error occurs often because of the line condition at time of communication.



The following error codes are associated with the line condition at time of transmission.
##100, ##101, ##102, ##104, ##201, ##281, ##282, ##283, ##750, ##755, ##765, ##774, ##779, ##784, ##789
The following error codes are associated with the line condition at time of reception
##103, ##107, ##114, ##201, ##790, ##793

006 telephone line monitor

Use it to set telephone line motor functions:

DIAL:	Select it to generate a monitor sound for the telephone line from the start of transmission to DIS.
SERVICEMAN [1]:	Select it to generate a monitor sound of the telephone line from the start of a communication to its end.
SERVICEMAN [2]:	not used
OFF:	Select it to mute the monitor sound for the telephone line for the speaker.

 COPYRIGHT © 2001 CANON INC.

007 ATT transmission level

Use it to set the transmission level (ATT).

Increase the transmission level if an error occurs often because of the line condition at time of a communication.


Memo

The following error codes are associated with the line condition at time of transmission:
##100, ##101, ##102, ##104, ##201, ##280, ##281, ##282, ##283, ##284, ##750, ##752, ##754, ##755, ##757, ##759, ##760, ##762, ##764, ##765, ##767, ##769, ##770, ##772, ##774, ##775, ##777, ##779, ##780, ##782, ##784, ##785, ##787, ##789
The following error codes are associated with the line condition at time of reception:
##103, ##106, ##107, ##201, ##793

010 pseudo CI signal

Use it to set a frequency for the pseudo CI signal.

At times, certain types of external telephones fail to ring while fax/tel switch-over takes place. If so, change the frequency of the pseudo CI signal.

COPYRIGHT © 2001 CANON INC.

3.6 Numeric Parameter Setting (#3 NUMERIC Param.)

No.	Item	Range of settings	Initial setting
02	RTN transmission condition (1)	1 to 99%	10
03	RTN transmission condition (2)	2 to 99 times	15
04	RTN transmission condition (3)	1 to 99 lines	12
05	NCC pause length (pre-ID code)	0 to 60 sec	4
06	NCC pause length (post-ID code)	0 to 60 sec	4
09	number of digits of telephone numbers in comparison between transmitting and receiving machine	0 to 20 digits	6
10	line connection identification time length	0 to 9999 (10ms)	5500
11	T.30 T1 timer (for reception)	0 to 9999 (10ms)	3500
13	T30.EOL timer	500 to 3000 (10ms)	1300
15	hooking detection time length	0 to 999 (10ms)	120
16	time to tentative response at time of fax/tel switch-over	0 to 9 sec	4
17	pseudo RBT signal pattern ON length	0 to 999 (10ms)	100
18	pseudo RBT signal pattern OFF time length (short)	0 to 999 (10ms)	0
19	pseudo RBT signal pattern OFF time length (long)	0 to 999 (10ms)	200
20	pseudo CI signal pattern ON time length	0 to 999 (10ms)	100
21	pseudo CI signal pattern OFF time length (short)	0 to 999 (10ms)	0
22	pseudo CI signal pattern OFF time length (long)	0 to 999 (10ms)	200
24	fax/tel switch-over pseudo RBT transmission level	0 to 20 dBm	20
25	answer telephone CNG motor time length	0 to 999 sec	60
27	V.21 low-speed flag preamble detection time length	1 to 99 (10ms)	3
28	menu selection screen display time length	1 to 60 sec	3

 COPYRIGHT © 2001 CANON INC.

[No. 02. 03, 04]

Use it to set conditions for RTN signal transmission. If an error occurs often when the RTN signal is transmitted at time of reception, increase the parameters to loosen the RTN signal transmission conditions.


Memo

The following error codes are associated with the transmission of the RTN signal at time of reception:
##104, ##107, ##114, ##201
The RTN signal transmission condition (1) is the ratio of the number of error lines in relation to the total number of lines per page of reception images.
The RTN signal transmission condition (2) is the reference value*2 for burst errors*1.
The RTN signal transmission condition (3) is the number of errors not reaching the reference value for burst errors.
*1: transmission errors spanning several lines.
*2: If set to '15', a transmission error spanning 5 consecutive lines is identified as a burst error.
If any of these conditions is detected while an image signal is being revised, the RTN signal will be transmitted after receiving the procedure signal from the transmitting machine. A higher parameter will make the transmission of the RTN signal more difficult.

[No. 05]

Use it to set the length of item (pause) automatically put between the access code an the ID code when a number is dialed on an NCC (new common carrier) line.

[No. 06]

Use it to set the length of time (pause) automatically put between the ID code and the telephone number of the other party when a number is dialed on an NCC (new common carrier) line.

[No. 09]

Use it to set the number of TSI comparison digits (last XX digits) for a telephone number cross check.

[No. 10]

Use it to set the length of time for line connection identification. If an error occurs often because of the line condition at time of a communication, increase the parameter.

COPYRIGHT © 2001 CANON INC.

Memo

The line condition detection time length refers to the length between when the dial signal is transmitted and when the line condition is cut in relation to the transmitting side, while it is the length between when the DIS signal is transmitted and when the line is cut in relation to the receiving side.

[No. 11]
The setting of the T1 timer varies from country to country (PTT). The T1 timer is variable.

[No. 13]
If the length of data for a single line is too long (e.g., computer fax), increase the 1-line transmission time for possible reception to prevent a reception error.

[No. 15]
Use it to set the hooking detection time.

[No. 16]
Use it to set the time length between when the line is acquired and when the pseudo RBT is transmitted when making a fax/tel switch-over.

[No. 17, 18, 19]
Use it to set a pattern of the pseudo RBT signal transmitted when making a fax/tel switch-over.

[NO. 20, 21, 22]
Use it to set the pattern of the pseudo CI signal transmitted when making a fax/tel switch-over.

[No. 24]
Use it to set the pseudo RBT transmission level used when making a fax/tel switch-over.

[No. 25]
Use it to set the length of time during which the absence of sound on the line, 2nd NSS signal, or CNG signal transmitted by the other party is monitored after the answering phone acquires the telephone line when answering machine mode is selected.

[No. 27]
Use it to change the detection evaluation time. (Command analysis is started when the V.21 low-speed command preamble is detected continuously for a specific period of time.)

[No. 28]
Use it to set the length of time during which the Menu Select screen is indicated on the LCD.

 COPYRIGHT © 2001 CANON INC.

3.7 SPECIAL Setting (#4A SPECIAL)



Do not change the setting; otherwise, the machine may malfunction.

3.8 NCU Setting (#4B NCU)



The settings of this item are collectively set in relation to the setting of #5 TYPE so that all values will comply with the communications standards of a specific country/region.

3.9 ISDN Setting (#4C ISDN)

Not used.

3.10 Country/Region of Installation (#5 TYPE)

When a country/region is selected for the indicated list, the data under #4 NCU will be set to suit the communication standards of the county/region.



Be sure not to select a different country/region from the country/region of installation.

COPYRIGHT © 2001 CANON INC.

3.11 Setting the Original Reading Functions (#6 SCANNER)

Item	Description
1.Bit SW 2. SLICE 3. GAMMA 4. Numeric 5. LUT 1 fno 6. LUT 2 adj	Do not change the setting; otherwise, the read image quality can be lost.
7. CCD	partially hanged
8. MODEL	not used

7. CCD Settings

No.	Item	Unit of adjustment
0 to 18	Do not change.	-
19	shading position adjustment*1	1 unit = 0.1 mm
21	left/right edge read start position adjustment (book mode)	1 unit = 0.03 mm
23	leading edge read start position adjustment (book mode)	1 unit = 0.1 mm
24	leading edge read start position (ADF mode)	1 unit = 0.1 mm
25	trailing edge read end position adjustment (ADF mode)	1 unit = 0.1 mm
26 to 33	Do not change.	-
34	original feed speed adjustment (ADF mode)	1 unit = approx. 0.5 mm

*1: Make adjustments only When white lines occur. (See 3.1.12 of Chapter 7.)

The factory settings of these adjustments differ from machine to machine. For instructions on adjustment, see 1.2.4 of Chapter 7 or 1.3.4 of Chapter 7.

 COPYRIGHT © 2001 CANON INC.

3.12 Setting the Printer Parameters (#7 PRINTER)

3.12.1 #1 SSSW Setting

#7 PRINTER-#1 SSSW-SW06 (reduction setting)

Bit	Function	1	0	Factory setting
0	reduction at time of image division	prohibit	do not prohibit	0
1	not used	-	-	
2	not used	-	-	
3	not used	-	-	
4	not used	-	-	
5	not used	-	-	
6	not used	-	-	
7	not used	-	-	

[bit 0]

Use it to specify whether or not to reduce the received image of an extra-long original if it can be printed in divisions after reducing to the maximum reduction ratio (70%).

prohibit:

select it to divide and print on the next page (Direct).

For instance, if an extra-length original as long as 2.5 A4R original is received, it will be divided into 3 A4R sheets for printing; the image will be in Direct.

do not prohibit:

select it to print the image by reducing it to fit a single page (in divided print mode).

For instance, if an extra-length original as long as 2.5 A4R originals is received, it will be reduced to 70% to print on 2 A4R sheets.

COPYRIGHT © 2001 CANON INC.

3.12.2 #2 NUMERIC Param. Setting



Do not change the setting; otherwise, the machine may malfunction.

3.12.3 #3 PRINT COUNT

Use it to indicate the number of prints.

3.12.4 #4 PRINT RESET

Use it to reset the printer; or, use it to clear service error 'E000'.

3.12.5 #5 MLT CLEANING

Not used.

3.13 PDL (#8 PDL)

Not used.

 COPYRIGHT © 2001 CANON INC.

3.14 Counter (#9 COUNTER)

3.14.1 Counter

The machine is equipped with various counters, whose readings may be used to obtain an idea of when to replace specific parts.

The COUNTER items are as follows:

Level 1 item	Level 2 item	Level 3 item	Description
COUNTER			
	TOTAL (total-orientated counter)		
		SERVICE1	service-use total counter 1
		SERVICE2	service-use total counter 2
		TTL	total counter
		COPY	total copy counter
		PDL-PRT	print counter
		FAX-PRT	fax reception print counter
		RPT-PRT	report print counter
		SCAN	scan counter
	PICK-UP (pickup-related counter)*1		
		C1	cassette pickup counter
		C2	not used
		C3	not used
		C4	not used
		MF	manual feed tray pickup counter
	FEEDER (ADF-related counter)		
		FEED	ADF pickup counter
	JAM (jam counter)		
		TTL	machine total jam counter
		FEEDER	ADF jam counter
		SORTER	not used
		MF	manual feed tray jam counter
		C1	cassette jam counter
		C2	not used
		C3	not used
		C4	not used
	MISC		not used

*1: Not incremented at time of printing from the PC.

COPYRIGHT © 2001 CANON INC.

3.14.2 Clearing the Counter Readings

Start service mode, and select [#11 CLEAR]; then, press the OK key. Thereafter, select [COUNTER], and press the OK key to clear all counter readings.



Generating a Counter Report
Start service mode, and select [#10 REPORT]; then, press the OK key. Thereafter, select [COUNTER REPORT], and press the OK key to obtain a counter report.

3.15 Generating a Report (#10 REPORT)

The following is a list of the reports that may be generated, showing particulars of each:

Item	Description
SERVICE&SYSTEM	service data list, system dump print list
SERVICE DATA	service mode #1 through #7, #13; start date
SYSTEM DUMP	number of communications, number of receptions, number of recording sheets, number of errors
KEY HISTORY REPORT	1800 most recent key presses
BCH LOG REPORT	not used
COUNTER REPORT	counter readings
PRINT SPEC REPORT	TYPE setting, printing speed, memory size, ROM indication, adjustment data

3.16 Downloading (#11 DOWNLOAD)

Not used.

 COPYRIGHT © 2001 CANON INC.

3.17 Clearing (#12 CLEAR)

Item	Level 2 item	Description
TEL & USER		Use it to clear all areas under user registration/setting.
DATA		Use it to clear the tel registration data* and user data. *One-touch dial, speed dial, and group dial numbers.
USER DATA		Use it to clear user data. SSSW and TEL registration data are not cleared.
SERVICE SW		Use it to clear the settings under SSSW. The user data is not cleared.
SERVICE DATA		Use it to clear the counters (numerator), date, and start data form the system dump list.
REPORT	ACTIVITY	Use it to clear the contents of the communications control report.
	JAM	not used.
	ERR	not used.
	ALARM	not used.
COUNTER		Use it clear the counter data.
CARD		not used.
ERR		not used.
ALL		Use it to clear all settings/registration data excluding the counter readings (denominator, numerator) from the system dump list and #5.

3.18 ROM Indication (#13 ROM)

The following is a list of the items/particulars for ROM indication mode:

Item	Description
MAIN	Use it to indicate the version of the ROM on the image processor PCB.
MAIN2	Use it to indicate the version of the CPU on the image processor PCB.
ECONT	Use it to indicate the version of the ROM on the DC controller PCB.
PDL	Use it to indicate the version of the ROM on the printer controller PCB.

3.19 Resetting the Contact Sensor Position (#14 CS SET)

Not used.

COPYRIGHT © 2001 CANON INC.

3.20 Service Mode Default Setting

TYPE	EUROPE	U.K.	SWEDEN	SWISS	AUSTRIA	DENMARK	NORWAY
#1 SSSW							
SW01	00010000	00010000	00010000	00010000	00010000	00010000	00010000
SW02	00000000	00000000	00000000	00000000	00000000	00000000	00000000
SW03	00000000	00000000	00000000	00000000	00000000	00000000	00000000
SW04	00000000	00000000	00000000	00000000	00000000	00000000	00000000
SW05	00000000	00000000	00000000	00000000	00000000	00000000	00000000
SW06	10000000	10000000	10000000	10000000	10000000	10000000	10000000
SW07	00000000	00000000	00000000	00000000	00000000	00000000	00000000
SW08	00000000	00000000	00000000	00000000	00000000	00000000	00000000
SW09	00000000	00000000	00000000	00000000	00000000	00000000	00000000
SW10	00000000	00000000	00000000	00000000	00000000	00000000	00000000
SW11	00000000	00000000	00000000	00000000	00000000	00000000	00000000
SW12	00000010	00000010	00000010	00000010	00000010	00000010	00000010
SW13	00000000	00000000	00000000	00000000	00000000	00000000	00000000
SW14	00000010	00000010	00000010	00000010	00000010	00000010	00000010
SW15	00000000	00000000	00000000	00000000	00000000	00000000	00000000
SW16	00000011	00000011	00000011	00000011	00000011	00000011	00000011
SW17	00000000	00000000	00000000	00000000	00000000	00000000	00000000
SW18	00000000	00000000	00000000	00000000	00000000	00000000	00000000
SW19	00000000	00000000	00000000	00000000	00000000	00000000	00000000
SW20	00000000	00000000	00000000	00000000	00000000	00000000	00000000
SW21	00000000	00000000	00000000	00000000	00000000	00000000	00000000
SW22	00000000	00000000	00000000	00000000	00000000	00000000	00000000
SW23	00000000	00000000	00000000	00000000	00000000	00000000	00000000
SW24	00000000	00000000	00000000	00000000	00000000	00000000	00000000
SW25	00000000	00000000	00000000	00000000	00000000	00000000	00000000
SW26	10000000	10000000	10000000	10000000	10000000	10000000	00000000
SW27	00000000	00000000	00000000	00000000	00000000	00000000	00000000
SW28	00000000	00000000	00000000	00000000	00000000	00000000	00000000
SW29	00000000	00000000	00000000	00000000	00000000	00000000	00000000
SW30	00000000	00000000	00000000	00000000	00000000	00000000	00000000
#2 MENU							
05:	OFF	OFF	OFF	OFF	OFF	OFF	OFF
06:	DIAL	DIAL	DIAL	DIAL	DIAL	DIAL	DIAL
07:	10	10	10	10	10	10	10
10:	25Hz	25Hz	25Hz	25Hz	25Hz	25Hz	25Hz

 COPYRIGHT © 2001 CANON INC.

TYPE	HOLLAND	BELGUIM	AUSTRALIA	FINLAND	N.Z.	ITALY	SPAIN
#1 SSSW							
SW01	00010000	00010000	00010000	00010001	00010000	00010000	00010000
SW02	00000000	00000000	00000000	00000000	00000000	00000000	00000000
SW03	00000000	00000000	00000000	00000000	00000000	00000000	00000000
SW04	00000000	00000000	00000000	00000000	00000000	00000000	00000000
SW05	00000000	00000000	00000000	00000000	00000000	00000000	00000000
SW06	10000000	10000000	10000000	10000000	10000000	10000000	10000000
SW07	00000000	00000000	00000000	00000000	00000000	00000000	00000000
SW08	00000000	00000000	00000000	00000000	00000000	00000000	00000000
SW09	00000000	00000000	00000000	00000000	00000000	00000000	00000000
SW10	00000000	00000000	00000000	00000000	00000000	00000000	00000000
SW11	00000000	00000000	00000000	00000000	00000000	00000000	00000000
SW12	00000010	00000010	00000010	00000010	00000010	00000010	00000010
SW13	00000000	00000000	00000000	00000000	00000000	00000000	00000000
SW14	00000010	00000010	00000000	00000010	00000000	00000010	00000010
SW15	00000000	00000000	00000000	00000000	00000000	00000000	00000000
SW16	00000011	00000011	00000011	00000011	00000011	00000011	00000011
SW17	00000000	00000000	00000000	00000000	00000000	00000000	00000000
SW18	00000000	00000000	00000000	00000000	00000000	00000000	00000000
SW19	00000000	00000000	00000000	00000000	00000000	00000000	00000000
SW20	00000000	00000000	00000000	00000000	00000000	00000000	00000000
SW21	00000000	00000000	00000000	00000000	00000000	00000000	00000000
SW22	00000000	00000000	00000000	00000000	00000000	00000000	00000000
SW23	00000000	00000000	00000000	00000000	00000000	00000000	00000000
SW24	00000000	00000000	00000000	00000000	00000000	00000000	00000000
SW25	00000000	00000000	00000000	00000000	00000000	00000000	00000000
SW26	10000000	10000000	10000000	10000000	10000000	10000000	10000000
SW27	00000000	00000000	00000000	00000000	00000000	00000000	00000000
SW28	00000000	00000000	00000000	00000000	00000000	00000000	00000000
SW29	00000000	00000000	00000000	00000000	00000000	00000000	00000000
SW30	00000000	00000000	00000000	00000000	00000000	00000000	00000000
#2 MENU							
05:	OFF	OFF	OFF	OFF	OFF	OFF	OFF
06:	DIAL	DIAL	DIAL	DIAL	DIAL	DIAL	DIAL
07:	10	6	10	10	10	10	10
10:	25Hz	25Hz	25Hz	25Hz	25Hz	25Hz	25Hz

COPYRIGHT © 2001 CANON INC.

TYPE	PORTUGAL	IRELAND	HONG KONG	MALAYSIA	HUNGARY	SAF	KOREA
#1 SSSW							
SW01	00010000	00010000	00010000	00010000	00010000	00010000	00010000
SW02	00000000	00000000	00000000	00000000	00000000	00000000	00000000
SW03	00000000	00000000	00000000	00000000	00000000	00000000	00000000
SW04	00000000	00000000	00000000	00000000	00000000	00000000	10000000
SW05	00000000	00000000	00000000	00000000	00000000	00000000	00000000
SW06	10000000	10000000	10000000	10000000	10000000	10000000	10000000
SW07	00000000	00000000	00000000	00000000	00000000	00000000	00000000
SW08	00000000	00000000	00000000	00000000	00000000	00000000	00000000
SW09	00000000	00000000	00000000	00000000	00000000	00000000	00000000
SW10	00000000	00000000	00000000	00000000	00000000	00000000	00000000
SW11	00000000	00000000	00000000	00000000	00000000	00000000	00000000
SW12	00000010	00000010	00000010	00000010	00000010	00000010	00000010
SW13	00000000	00000000	00000000	00000000	00000000	00000000	00000000
SW14	00000010	00000010	00000000	00000000	00000010	00000010	00000010
SW15	00000000	00000000	00000000	00000000	00000000	00000000	00000000
SW16	00000011	00000011	00000011	00000011	00000011	00000011	00000011
SW17	00000000	00000000	00000000	00000000	00000000	00000000	00000010
SW18	00000000	00000000	00000000	00000000	00000000	00000000	00000000
SW19	00000000	00000000	00000000	00000000	00000000	00000000	00000000
SW20	00000000	00000000	00000000	00000000	00000000	00000000	00000000
SW21	00000000	00000000	00000000	00000000	00000000	00000000	00000000
SW22	00000000	00000000	00000000	00000000	00000000	00000000	00000000
SW23	00000000	00000000	00000000	00000000	00000000	00000000	00000000
SW24	00000000	00000000	00000000	00000000	00000000	00000000	00000000
SW25	00000000	00000000	00000000	00000000	00000001	00000000	00000000
SW26	10000000	10000000	10000000	10000000	10000000	10000000	10000000
SW27	00000000	00000000	00000000	00000000	00000000	00000000	00000000
SW28	00000000	00000000	00000000	00000000	00000000	00000000	00000000
SW29	00000000	00000000	00000000	00000000	00000000	00000000	00000000
SW30	00000000	00000000	00000000	00000000	00000000	00000000	00000000
#2 MENU							
05:	OFF	OFF	OFF	OFF	OFF	OFF	OFF
06:	DIAL	DIAL	DIAL	DIAL	DIAL	DIAL	DIAL
07:	6	10	10	10	10	10	10
10:	25Hz	25Hz	25Hz	25Hz	25Hz	25Hz	25Hz

 COPYRIGHT © 2001 CANON INC.

TYPE	CHINA	GERMAN	FRANCE	SINGAPORE	CZECH	SLOVENIA	CANADA
#1 SSSW							
SW01	00010000	00010000	00010000	00010000	00010000	00010000	00010000
SW02	00000000	00000000	00000000	00000000	00000000	00000000	00000000
SW03	00000000	00000000	00000000	00000000	00000000	00000000	00000000
SW04	00000000	00000000	00000000	00000000	00000000	00000000	10000000
SW05	00000000	00000000	00000000	00000000	00000000	00000000	00000000
SW06	10000000	10000000	10000000	10000000	10000000	10000000	10010000
SW07	00000000	00000000	00000000	00000000	00000000	00000000	00000000
SW08	00000000	00000000	00000000	00000000	00000000	00000000	00000000
SW09	00000000	00000000	00000000	00000000	00000000	00000000	00000000
SW10	00000000	00000000	00000000	00000000	00000000	00000000	00000000
SW11	00000000	00000000	00000000	00000000	00000000	00000000	00000000
SW12	00000010	00000010	00000010	00000010	00000010	00000010	00000010
SW13	00000000	00000000	00000000	00000000	00000000	00000000	00000000
SW14	00000000	00000010	00000010	00000000	00000010	00000010	00000001
SW15	00000000	00000000	00000000	00000000	00000000	00000000	00000000
SW16	00000011	00000011	00000011	00000011	00000011	00000011	00000011
SW17	00000000	00000000	00000000	00000000	00000000	00000000	00000010
SW18	00000000	00000000	00000000	00000000	00000000	00000000	00000000
SW19	00000000	00000000	00000000	00000000	00000000	00000000	00000000
SW20	00000000	00000000	00000000	00000000	00000000	00000000	00000000
SW21	00000000	00000000	00000000	00000000	00000000	00000000	00000000
SW22	00000000	00000000	00000000	00000000	00000000	00000000	00000000
SW23	00000000	00000000	00000000	00000000	00000000	00000000	00000000
SW24	00000000	00000000	00000000	00000000	00000000	00000000	00000000
SW25	00000000	00000100	00000000	00000000	00000000	00000000	00000000
SW26	10000000	10000000	10000000	10000000	10000000	10000000	00000000
SW27	00000000	00000000	00000000	00000000	00000000	00000000	00000000
SW28	00000000	00000000	00000000	00000000	00000000	00000000	00000000
SW29	00000000	00000000	00000000	00000000	00000000	00000000	00000000
SW30	00000000	00000000	00000000	00000000	00000000	00000000	00000000
#2 MENU							
05:	OFF	OFF	OFF	OFF	OFF	OFF	OFF
06:	DIAL	DIAL	DIAL	DIAL	DIAL	DIAL	DIAL
07:	13	10	10	10	10	10	10
10:	25Hz	25Hz	25Hz	25Hz	25Hz	25Hz	25Hz

COPYRIGHT © 2001 CANON INC.

TYPE	ASIA	POLAND	EUROPE2
#1 SSSW			
SW01	00010000	00010000	00010000
SW02	00000000	00000000	00000000
SW03	00000000	00000000	00000000
SW04	00000000	00000000	00000000
SW05	00000000	00000000	00000000
SW06	10000000	10000000	10000000
SW07	00000000	00000000	00000000
SW08	00000000	00000000	00000000
SW09	00000000	00000000	00000000
SW10	00000000	00000000	00000000
SW11	00000000	00000000	00000000
SW12	00000010	00000010	00000010
SW13	00000000	00000000	00000000
SW14	00000010	00000010	00000010
SW15	00000000	00000000	00000000
SW16	00000011	00000011	00000011
SW17	00000000	00000000	00000000
SW18	00000000	00000000	00000000
SW19	00000000	00000000	00000000
SW20	00000000	00000000	00000000
SW21	00000000	00000000	00000000
SW22	00000000	00000000	00000000
SW23	00000000	00000000	00000000
SW24	00000000	00000000	00000000
SW25	00000000	00000000	00000000
SW26	10000000	10000000	10000000
SW27	00000000	00000000	00000000
SW28	00000000	00000000	00000000
SW29	00000000	00000000	00000000
SW30	00000000	00000000	00000000
#2 MENU			
05:	OFF	OFF	OFF
06:	DIAL	DIAL	DIAL
07:	10	10	10
10:	25Hz	25Hz	25Hz

 COPYRIGHT © 2001 CANON INC.

TYPE	EUROPE	U.K.	SWEDEN	SWISS	AUSTRIA	DENMARK	NORWAY
#3							
NUMERIC							
Param							
02:	10	10	10	10	10	10	10
03:	15	15	15	15	15	15	15
04:	12	12	12	12	12	12	12
05:	4	4	4	4	4	4	4
06:	4	1	4	4	4	4	4
09:	6	6	6	6	6	6	6
10:	5500	5500	5500	5500	5500	5500	5500
11:	3500	3500	3500	3500	3500	3500	3500
13:	1300	1300	1300	1300	1300	1300	1300
15:	120	120	120	120	120	120	120
16:	2	2	2	2	2	2	2
17:	100	100	100	100	100	100	100
18:	0	0	0	0	0	0	0
19:	400	400	400	400	400	400	400
20:	100	40	100	100	100	100	30
21:	0	20	0	0	0	0	30
22:	400	200	400	400	400	400	400
24:	10	10	10	10	10	10	10
25:	60	60	60	60	60	60	60
27:	0	0	0	0	0	0	0
28:	3	3	3	3	3	3	3
#5 TYPE	EUROPE	U.K.	SWEDEN	SWISS	AUSTRIA	DENMARK	NORWAY

COPYRIGHT © 2001 CANON INC.

TYPE	HOLLAND	BELGUIM	AUSTRALIA	FINLAND	N.Z.	ITALY	SPAIN
#3							
NUMERIC							
Param							
02:	10	10	10	10	10	10	10
03:	15	15	15	15	15	15	15
04:	12	12	12	12	12	12	12
05:	4	4	4	4	4	4	15
06:	4	4	4	4	4	4	3
09:	6	6	6	6	6	6	6
10:	5500	5500	5500	5500	5500	5500	5500
11:	3500	3500	3500	3500	3500	3500	3500
13:	1300	1300	1300	1300	1300	1300	1300
15:	120	120	120	120	120	120	120
16:	2	2	2	2	2	2	2
17:	100	100	100	100	40	100	100
18:	0	0	0	0	20	0	0
19:	400	400	400	400	200	400	400
20:	100	100	100	100	100	100	100
21:	0	0	0	0	0	0	0
22:	400	300	400	400	400	400	400
24:	10	10	10	10	10	10	10
25:	60	60	60	60	60	60	60
27:	0	0	0	0	0	0	0
28:	3	3	3	3	3	3	3
#5 TYPE	HOLLAND	BELGUIM	AUSTRALIA	FINLAND	N.Z.	ITALY	SPAIN

 COPYRIGHT © 2001 CANON INC.

TYPE	PORTUGAL	IRELAND	HONG KONG	MALAYSIA	HUNGARY	SAF	KOREA
#3							
NUMERIC							
Param							
02:	10	10	10	10	10	10	10
03:	15	15	15	15	15	15	15
04:	12	12	12	12	12	12	12
05:	4	4	4	4	4	4	4
06:	4	4	1	4	4	4	4
09:	6	6	6	6	6	6	6
10:	5500	5500	5500	5500	5500	3500	5500
11:	3500	3500	3500	3500	3500	3500	3500
13:	1300	1300	1300	1300	1300	1300	1310
15:	120	120	120	120	120	120	120
16:	2	2	2	2	2	2	2
17:	100	100	40	100	100	100	100
18:	0	0	20	0	0	0	0
19:	400	400	200	400	400	400	400
20:	100	100	100	100	100	100	100
21:	0	0	0	0	0	0	0
22:	400	400	400	400	400	400	400
24:	10	10	10	10	10	10	10
25:	60	60	60	60	60	60	60
27:	0	0	0	0	0	0	0
28:	3	3	3	3	3	3	3

#5 TYPE	PORTUGAL	IRELAND	HONG KONG	MALAYSIA	HUNGARY	SAF	KOREA

COPYRIGHT © 2001 CANON INC.

TYPE	CHINA	GERMAN	FRANCE	SINGAPORE	CZECH	SLOVENIA	CANADA
#3							
NUMERIC							
Param							
02:	10	10	10	10	10	10	10
03:	15	15	15	15	15	15	15
04:	12	12	12	12	12	12	12
05:	4	4	4	4	4	4	4
06:	4	4	4	4	4	4	4
09:	6	6	6	6	6	6	6
10:	4500	9000	5500	5500	5500	5500	5500
11:	3500	3500	3500	3500	3500	3500	3500
13:	1300	1300	1300	1300	1300	1300	1300
15:	120	120	120	120	120	120	120
16:	2	2	2	2	2	2	2
17:	100	100	100	100	100	100	100
18:	0	0	0	0	0	0	0
19:	400	400	400	400	400	400	200
20:	100	100	150	100	100	100	100
21:	0	0	0	0	0	0	0
22:	400	400	300	400	400	400	200
24:	10	10	10	10	10	10	20
25:	60	60	60	60	60	60	60
27:	0	0	0	0	0	0	0
28:	3	3	3	3	3	3	3
#5 TYPE	CHINA	GERMAN	FRANCE	SINGAPORE	CZECH	SLOVENIA	CANADA

 COPYRIGHT © 2001 CANON INC.

TYPE	ASIA	POLAND	EUROPE2
#3			
NUMERIC			
Param			
02:	10	10	10
03:	15	15	15
04:	12	12	12
05:	4	4	4
06:	4	4	4
09:	6	6	6
10:	5500	5500	5500
11:	3500	3500	3500
13:	1300	1300	1300
15:	120	120	120
16:	2	2	2
17:	100	100	100
18:	0	0	0
19:	400	400	400
20:	100	100	100
21:	0	0	0
22:	400	400	400
24:	10	10	10
25:	60	60	60
27:	0	0	0
28:	3	3	3
#5 TYPE	ASIA	POLAND	EUROPE2

COPYRIGHT © 2001 CANON INC.

3.21 Test Mode (TEST MODE)

3.21.1 Outline

When using test mode, be sure to execute items according to the menu indicated on the display. The menu items in test mode are grouped into 7 blocks.

1. D-RAM Test (1: D-RAM)

Use it to be sure that data is properly written to and read from the D-RAM.

2. CCD Test (2: CCD TEST)

Use it to execute auto adjustment (contact sensor LED intensity or original read position) or to initialize the CCD read position parameter.

3. PRINT Test (3: PRINT)

Use it to generate a test pattern for service.

4. MODEM NCU Test (4: MODEM NCU)

Use it to execute a relay operation test or modem DTMF and total signal transmission/reception tests.

5. AGING Test (5: AGING TEST)

Not used.

6. FACULTY Test (6: FACULTY TEST)

Use it to check the operation of microswitches, sensors, speakers, and ADF.

7. BOOK Test (8: BOOK TEST)

Use it to turn on the contact sensor or to initialize the book reading position parameter.

 COPYRIGHT © 2001 CANON INC.

3.21.2 List of Test Mode Items

To use test mode, press the Additional Functions key and # key; then, select 'SERVICE MODE' and select 'TEST MODE' using the Left or Right Arrow key, and press the OK key.

To end test mode, press the Stop key and then the Additional Functions key.

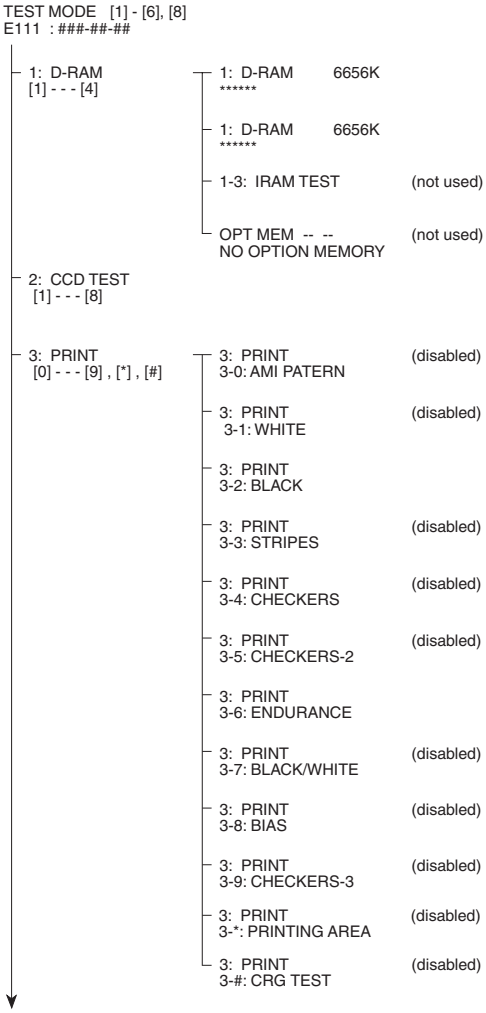

F02-321-01

COPYRIGHT © 2001 CANON INC.

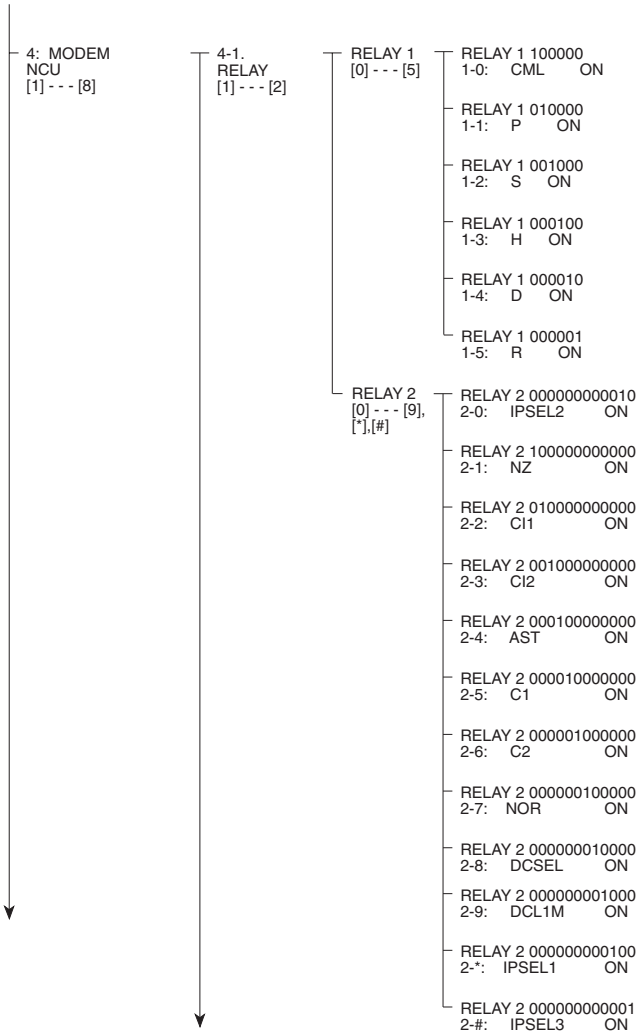

F02-321-02

 COPYRIGHT © 2001 CANON INC.

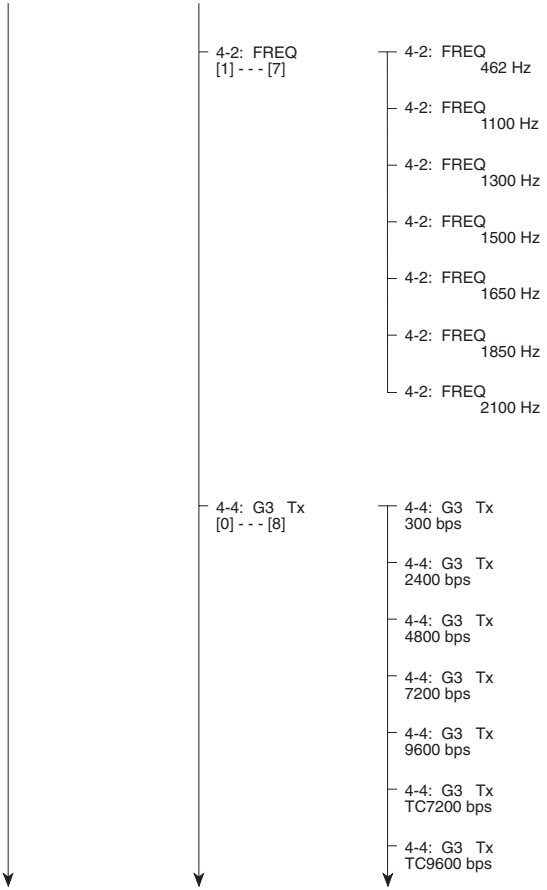

F02-321-03

COPYRIGHT © 2001 CANON INC.

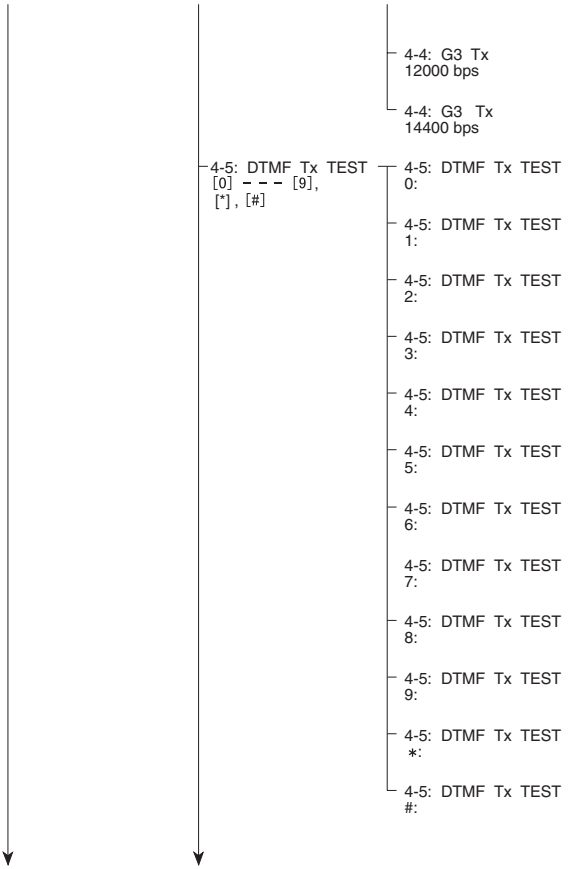

F02-321-04

 COPYRIGHT © 2001 CANON INC.

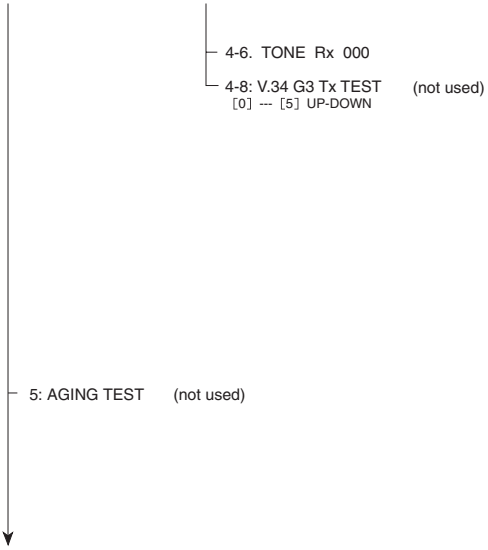
4-6. TONE Rx 000
4-8: V.34 G3 Tx TEST (not used)
[0] --- [5] UP-DOWN
5: AGING TEST (not used)

F02-321-05

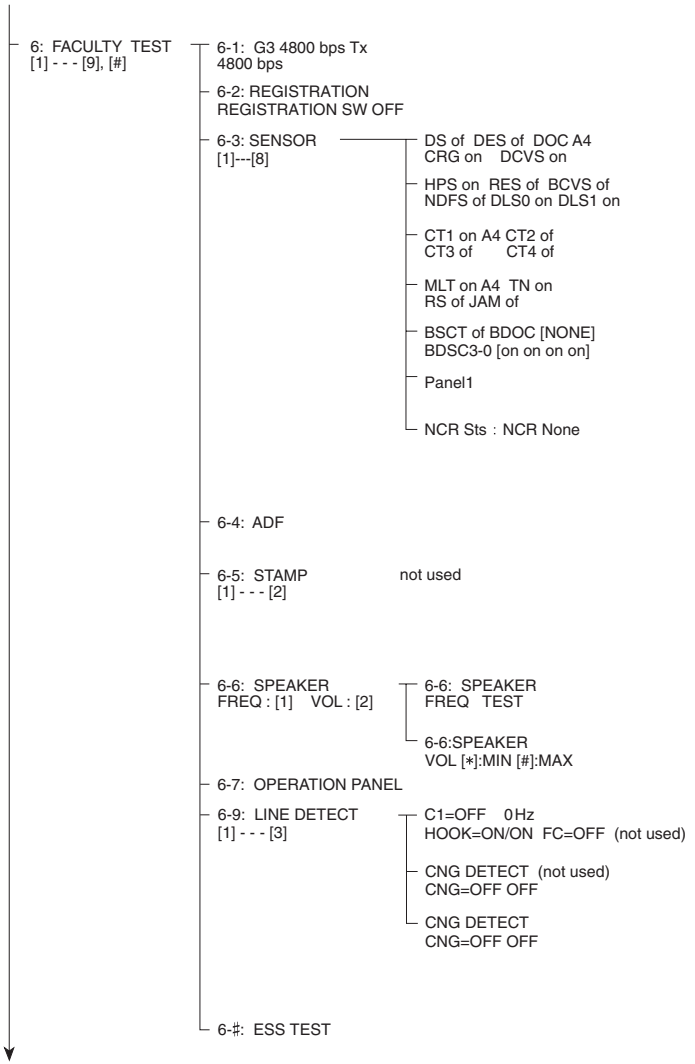

F02-321-06

 COPYRIGHT © 2001 CANON INC.

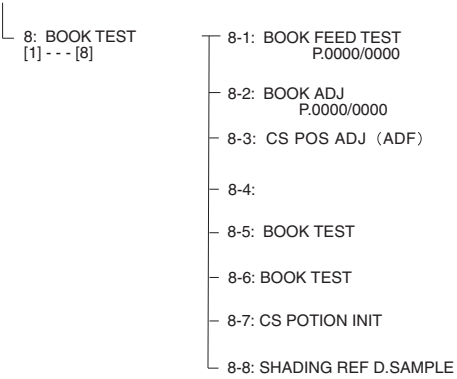

F02-321-07

COPYRIGHT © 2001 CANON INC.

3.21.3 D-RAM Test (1: D-RAM)

Press '1' on the keypad on the Test Mode menu to select D-RAM (SDRAM) Test mode. Thereafter, press '1' or '2' on the keypad to execute the following:

'1' on Keypad

Press it to execute a data write/read check for the entire area of the D-RAM (SDRAM). If an error occurs during the check, the machine will stop the check and indicate an error on the LCD.

'2' on Keypad

Press it to execute a data read check for the entire area of the D-RAM (SDRAM). If an error occurs during the check, the machine will stop the check and indicate an error on the LCD.

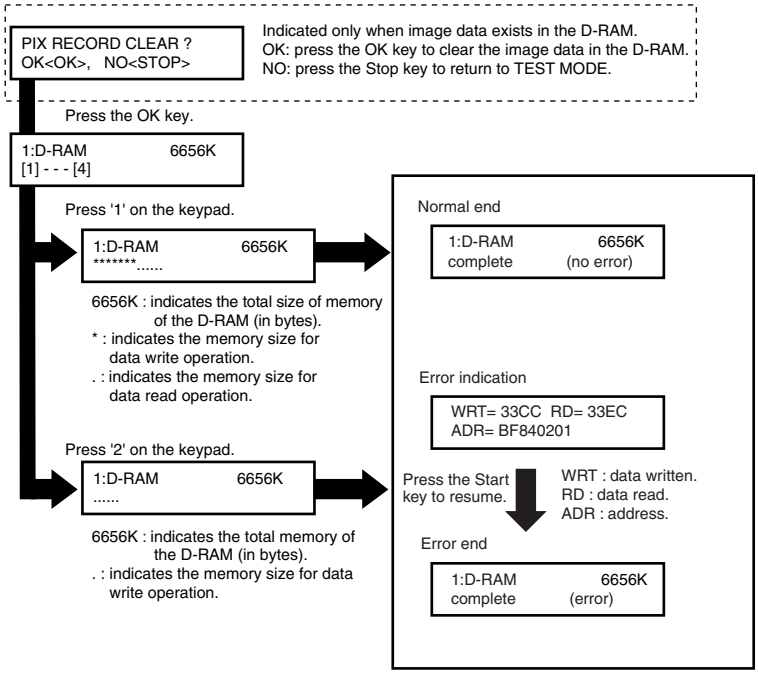

F02-321-08

 COPYRIGHT © 2001 CANON INC.

3.21.4 CCD Test (2: CCD TEST)

A press on '2' on the keypad on the Test Mode menu will select CCD Test mode. Press '3', '7', or '8' on the keypad to execute the following:

'3' on Keypad

Press it to execute original read position auto adjustment (if equipped with ADF) so as to adjust the contact sensor position used for reading with the ADF in use automatically. (See 1.3.4.2 of Chapter 7.

'7' on Keypad

Press it to initialize the contact sensor parameters, including those that are not initialized by 'all clear' in service mode.

'8' on Keypad

Press it to execute contact sensor LED intensity auto adjustment so that the contact sensor output correction is made and contact sensor parameters are automatically set. (See 1.2.4.1 of Chapter 7.)

COPYRIGHT © 2001 CANON INC.

3.21.5 PRINT Test (3: PRINT)

Press '3' on the keypad from the Test Mode menu to select Print Test mode. A press on '2' or '6' on the keypad during the test will generate any of the following 2 types of test patterns. Do not use the others, as they are especially designed for use by the factory and R&D.

'2' on Keypad

3-2: Press it to generate BLACK, which is a solid black print.

'6' on Keypad

3-6: Press it to generate ENDURANCE, which is a black band.

To stop test printing, press the Stop key.

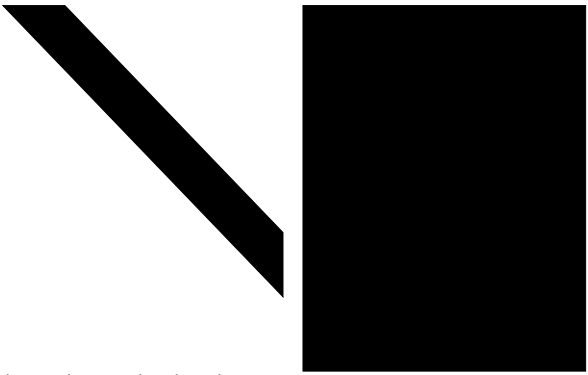

F02-321-09

 COPYRIGHT © 2001 CANON INC.

3.21.6 MODEM NCU Test (4: MODEM NCU)

Use it to execute a transmission test for MODEM NCU. In a modem test, you can make sure that the signals from the modem are transmitted normally by listening to the sound of signals from the speaker.

You can also use it to make sure that the received total signal and DTMF signal are correctly detected by the modem. To end the test, press the Stop key.

Type	Description
Relay test	Use it to turn on/off a selected relay to execute a switch-over test.
G3 signal transmission test	Use it to generate the G3 signal coming from the modem using the telephone line terminal and the speaker.
DTMF signal reception test	Use it to generate the DTMF signal coming from the modem using the telephone line terminal and the speaker.
Total signal reception test	Use it to monitor a specific frequency and the DTMF signal received from the telephone line terminal by causing them to be indicated on the LCD (i.e., the presence/absence as detected). The reception signal is generated by the speaker.

3.21.6.1 Relay Test

Press '1' on the keypad on the Modem NCU Test menu to select relay test mode. Use the keypad to operate the various relays of the NCU.

The LCD is turned on or off in relation to the transmission of the relay operation signal as is operated on the keypad; for this reason, you cannot use the LCD to check a fault on a single relay.

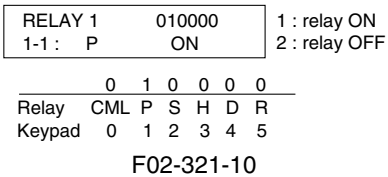

F02-321-10

3.21.6.2 Frequency Test

A press on '2' on the keypad from the MODEM NCU Test menu selects the frequency test. In this test, signals of the following frequencies from the modem are transmitted using the telephone line terminal and the speaker. To select a different frequency, use the keypad.

Keypad	Frequency
1	462 Hz
2	1100 Hz
3	1300 Hz
4	1500 Hz
5	1650 Hz
6	1850 Hz
7	2100 Hz



The frequency and the output level of individual frequencies are in keeping with the output level set in service mode.

3.21.6.3 G3 Signal Transmission Test

A press on '4' on the keypad from the MODEM NCU Test menu selects the G3 signal transmission test. In this test, the following G3 signals from the modem are transmitted using the telephone line terminal and the speaker. To select a different transmission speed, use the keypad.

Keypad	Transmission speed
0	300 bps
1	2400 bps
2	4800 bps
3	7200 bps
4	9600 bps
5	TC7200 bps
6	TC9600 bps
7	12000 bps
8	14400 bps



The output level of individual signals is in keeping with the setting made in service mode.

 COPYRIGHT © 2001 CANON INC.

3.21.6.4 DTMF Signal Transmission Test

A press on '5' on the MODEM NCU Test menu selects the DTMF signal transmission test. In the test, the following DTMF signals from the modem are transmitted using the telephone line terminal and the speaker. The number pressed on the keypad selects a specific DTMF signal.

Memo

The output level of individual signals is in keeping with the setting made in service mode.

3.21.6.5 Tonal/DTMF Signal Reception Test

A press on '6' on the keypad from the MODEM NCU Test menu selects the tonal signal/DTMF signal reception 0 test. In this signal, the tonal signal/DTMF signal received from the telephone line terminal can be checked to find out if it was detected by the modem.

Tonal signal reception test

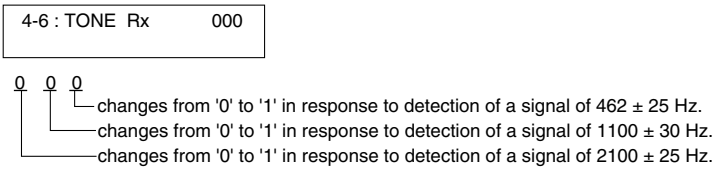

DTMF signal reception test

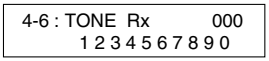

The received DTMF signals are indicated starting from the right using the 2nd character of the display.

F02-321-11

3.21.7 AGING Test (5: AGING TEST)

Not used.

3.21.8 FACULTY (function) Test (6: FACULTY TEST)

A press on '6' on the keypad from the TEST MODE menu selects the FACULTY test. A press on the keypad (1 through 7, 9, #) during the test will bring up the following menu:

Keypad	Item	Description
1	G3 Signal Transmission Test	Transmits a G3 signal at 4800 bps to the telephone line and the speaker.
2	not used	
3	Sensor Test	Executes an operation test on a specific sensor.
4	ADF Test	Executes an operation test on the ADF.
5	not used	
6	Speaker Test	Executes an operation test on the speaker.
7	Control Panel Test	Executes an operation test on the LCD/LED/control panel keys.
9	Live Connection Reception Test	Executes an operation test on the signal sensor on the NCU board and the frequency counter.
#	ESS Test	Executes an operation test on the ESS function.

G3 Signal Transmission Test (6-1: G3 4800 bps Tx)

A press on '1' on the keypad on the FACULTY TEST menu selects the G3 transmission test. In this test, a G3 signal is transmitted using the telephone line terminal and the speaker at 4800 bps.

Sensor Test (6-3: SENSOR)

This mode is used to check the state of a specific sensor of the machine on the LCD. A press on '3' on the keypad from the FACULTY TEST menu selects the sensor test. The LCD indication changes as the sensor goes ON and OFF.

 COPYRIGHT © 2001 CANON INC.

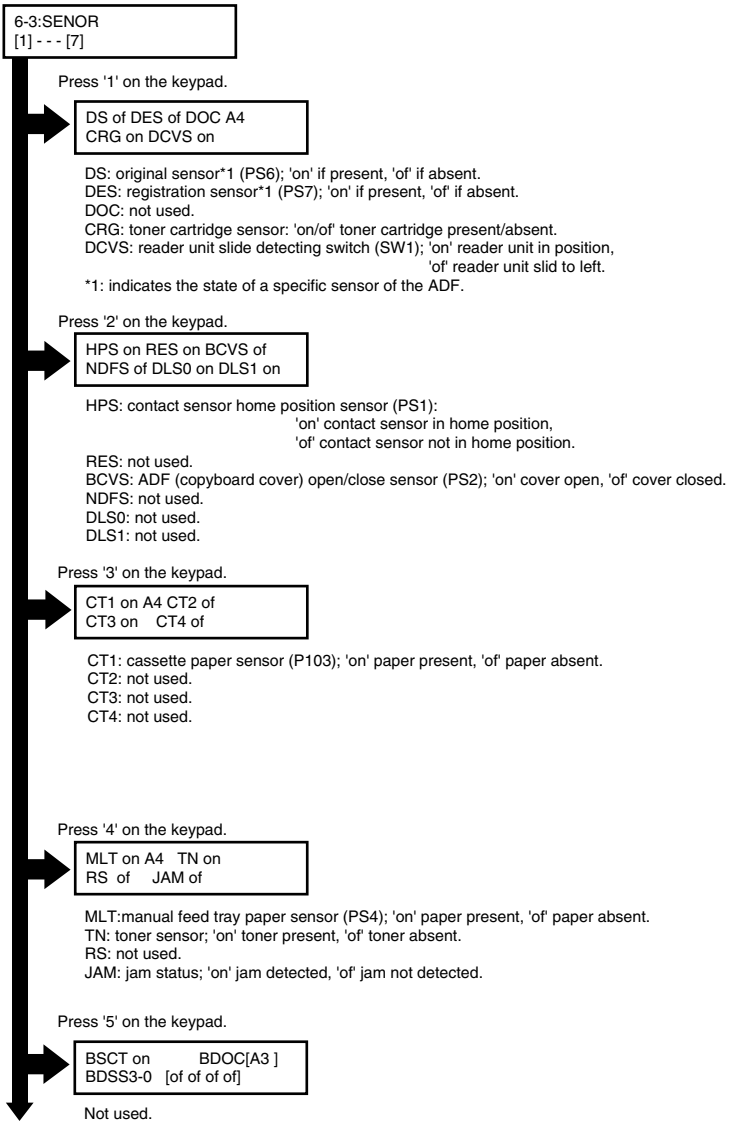
6-3:SENOR
[1] - - - [7]
Press '1' on the keypad.
DS of DES of DOC A4
CRG on DCVS on
DS: original sensor*1 (PS6); 'on' if present, 'of' if absent.
DES: registration sensor*1 (PS7); 'on' if present, 'of' if absent.
DOC: not used.
CRG: toner cartridge sensor: 'on/of' toner cartridge present/absent.
DCVS: reader unit slide detecting switch (SW1); 'on' reader unit in position,
'of' reader unit slid to left.
*1: indicates the state of a specific sensor of the ADF.
Press '2' on the keypad.
HPS on RES on BCVS of
NDFS of DLS0 on DLS1 on
HPS: contact sensor home position sensor (PS1):
'on' contact sensor in home position,
'of' contact sensor not in home position.
RES: not used.
BCVS: ADF (copyboard cover) open/close sensor (PS2); 'on' cover open, 'of' cover closed.
NDFS: not used.
DLS0: not used.
DLS1: not used.
Press '3' on the keypad.
CT1 on A4 CT2 of
CT3 on CT4 of
CT1: cassette paper sensor (P103); 'on' paper present, 'of' paper absent.
CT2: not used.
CT3: not used.
CT4: not used.
Press '4' on the keypad.
MLT on A4 TN on
RS of JAM of
MLT:manual feed tray paper sensor (PS4); 'on' paper present, 'of' paper absent.
TN: toner sensor; 'on' toner present, 'of' toner absent.
RS: not used.
JAM: jam status; 'on' jam detected, 'of' jam not detected.
Press '5' on the keypad.
BSCT on BDOC[A3]
BDSS3-0 [of of of of]
Not used.

F02-321-12

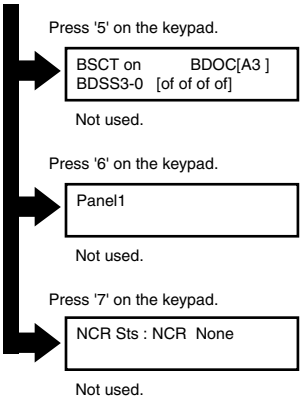

F02-321-13

ADF Test (6-4: ADF)

Use it to check the operation of the ADF.

Press ‘4’ on the keypad while the FACULTY TEST menu is indicated to select ADF test. Place an original in the original placement area, and press the Start key so that the original will be moved at a specific speed.

Select this item, press 10 originals in the ADF, and press ‘8’ on the keypad to execute registration arch auto adjustment (only if equipped with ADF functions). (See 1.3.4 of Chapter 7.)

Speaker test (6-6: SPEAKER)

Use it to check the operation of the speaker.

Press ‘6’ on the keyboard while the FACULTY TEST menu is indicated to select speaker test. In the test, tonal signal sounds of between 200 Hz to 5 kHz at 100-Hz intervals are generated white changing the volume. Check to see if the speaker generates these signals.

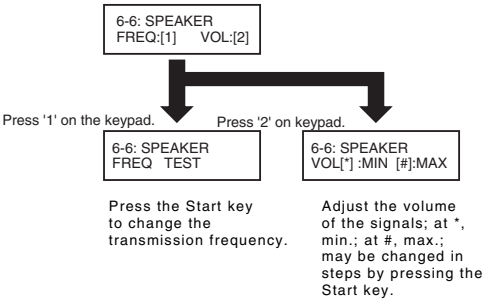

F02-321-14

 COPYRIGHT © 2001 CANON INC.

Control Panel Test (6-7: OPERATION PANEL)

This test is used to check the operation of the control panel.

A press on '7' on the keypad from the control panel selects the OPERATION PANEL Test menu, enabling the following tests:

- LCD Test

  A press on the Start key under OPERATION PANEL test will start LCD test, in which the screen will be filled with the character H; another press will cause the screen to turn totally black.
- LED Lamp Test

  A press on the Start key after the LCD test selects the LED lamp test, turning all lamps in the control panel to go ON.
- Control Key Test

  A press on the Start key after the LED lamp selects control key test 1. Press the key indicated on the LCD; if it goes out, the operation is normal.

  When all characters have gone out, control key test 2 (if equipped with fax functions) is started. As in the case of operation key test 1, press the key indicated on the LCD; the operation is correct if it goes out.

Key Correspondence for Control Key Test 1 (if not equipped with fax functions)

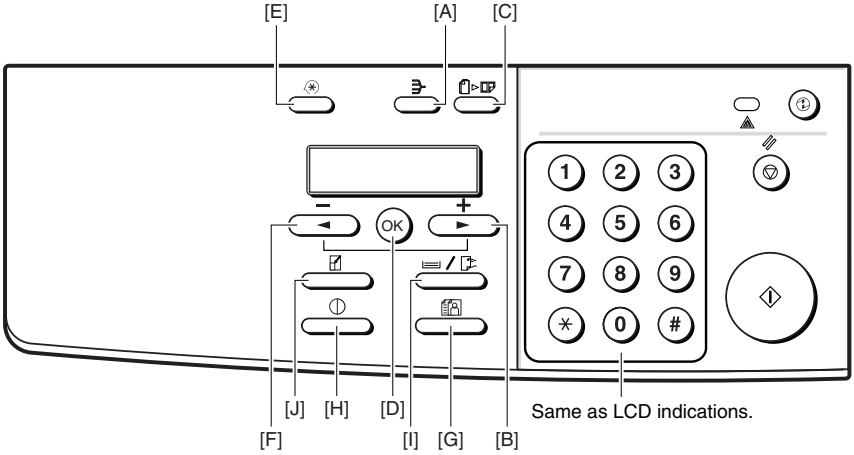

F02-321-15

Key Correspondence for Control Key Test 1 (if equipped with fax functions)

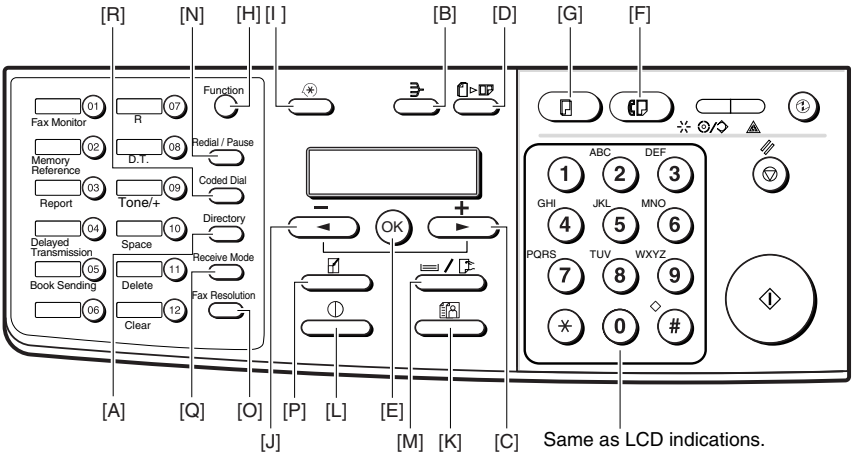

F02-321-16

Key Correspondence for Control Key Test 2 (if equipped with fax functions)

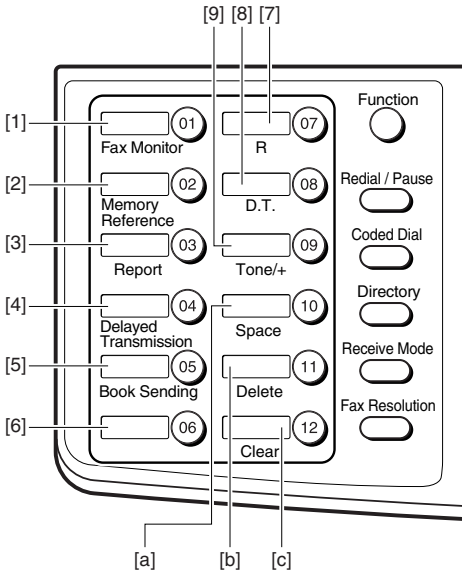

F02-321-17

 COPYRIGHT © 2001 CANON INC.

The following is the flow of work for the control panel test:

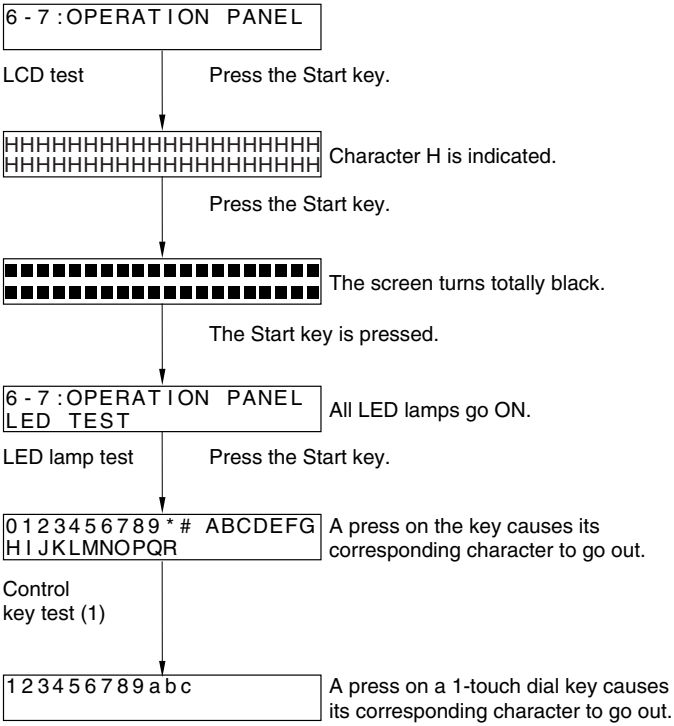

F02-321-18

Line Connection Reception Test (6-9: LINE DETECT)

A press on '9' on the keypad from the FACULTY TEST menu selects the LINE DETECT test. On Test Menu 1, you can check C1, FC, state of hooking of the eternal telephone, and the detection of signals by the NCU package.

Test Menu 1

A press on '1' on the keypad from the LINE DETECT menu selects test menu 1. In this test, the LCD indication changes from 'OFF' to 'ON' when C1, FC, or off-set of the external telephone is detected in relation to the telephone line.

Test Menu 3

A press on '3' on the keypad from the LINE DETECT menu selects test menu 3. In this test, the LCD indication changes from 'OFF' to 'ON' when CNG is detected in relation to the telephone terminal.

ESS Test (6-#: ESS TEST)

A press on the # key from the FACULTY TEST menu executes the ESS (Energy Save Stanby: hereafter, ESS) test. In the course of execution, the test causes the machine to be in ESS mode, causing all LEDs except the Energy Saver key in the control panel to go OFF. The machine ends ESS mode for the following:

- The Energy Saver key is pressed.
- Print data arrives from the PC.
- A fax arrives.*1
- Off-hook set is detected.*1
- The report output time arrives.*1
- The timer call time arrives.*1

*1: If equipped with fax functions.

3.21.9 BOOK Read Test (8: BOOK TEST)

A press on '8' on the keypad from the TEST MODE menu selects the BOOK test. A press on '4' or '6' on the keypad during this test initializes the corresponding parameter as described below:

'4' on the Keypad

The book read position parameter (#6 SCANNER 7: CCD 21, 23) is initialized.

'6' on the Keypad

The BOOK read parameter (#6 SCANNER 7: CCD 18*1, 19, 21, 23) is initialized.

*1: The term "CCD18 setting" refers to the setting for original read position adjustment executed by a press on '3' of the keypad under 'CCD TEST' of 'TEST MODE'.

 COPYRIGHT © 2001 CANON INC.

3.22 Service Report

3.22.1 Manually Generating Reports

The following reports may be generated manually in service mode:

Type of report	Operation
SYSTEM (SERVICE) DATA LIST SYSTEM DUMP LIST KEY HISTORY REPORT COUNTER REPORT PRINT SPEC REPORT	Select an item under [#10 REPORT] from the service mode menu, and press the OK key. Or, press Function key and Report key in this order in service mode. Then select the list to output, and press OK key.

T02-322-01

3.22.1.1 SYSTEM (SERVICE) DATA LIST

The following shows the service soft switch settings and the service parameter settings:

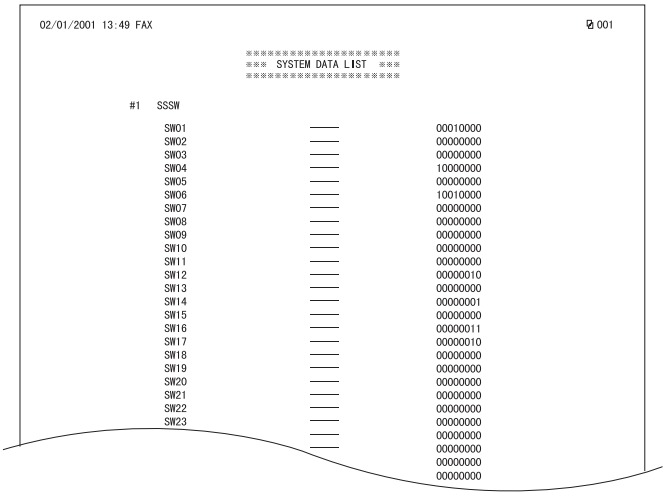

F02-322-01

3.22.1.2 SYSTEM DUMP LIST

The following shows a record of communications and error communications:

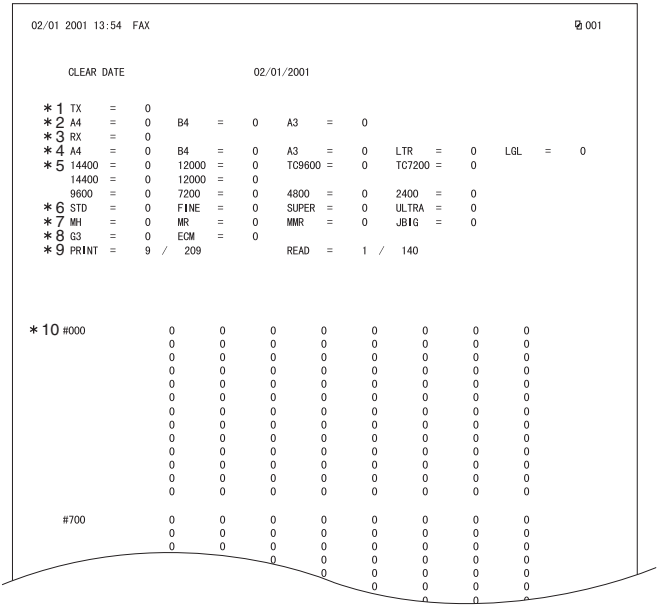

F02-322-02

*1: TX; total number of transmitted pages.
*2: Number of transmitted pages by original size.
*3: RX; total number of received pages.
*4: Number of received pages by original size.
*5: Number of transmitted/received pages by modem speed.
*6: Number of transmitted/received pages by mode (Standard, Fine, Super Fine, Ultra Fine).
*7: Number of transmitted/received pages by coding method.
*8: Number of transmissions/receptions by mode.
*9: Number of prints, total number of prints; number of pages read, total number of pages read.
*10: Number of occurrences of specific error codes.

Guide to Indication

##000	1	7	3	0	0
	Number of ##000 errors	Number of ##001 errors	Number of ##002 errors		

 COPYRIGHT © 2001 CANON INC.

The report indicates the most recent 3 communication errors:

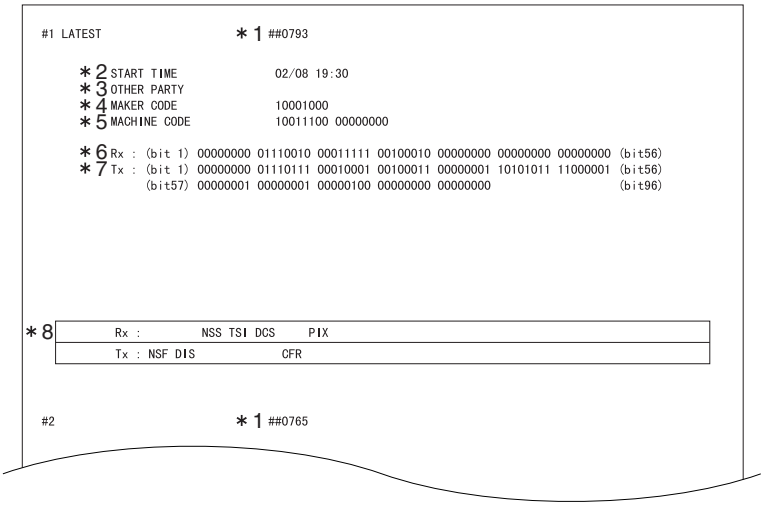

F02-322-03

*1: Service error code.
*2: START TIME: date and time (in 24-hr notation).
*3: OTHER PARTY; telephone number sent by other party.
*4: MAKER CODE; manufacturer code.
*5: MACHINE CODE: code by model.
*6: Bit 1 through 48 of DIS, DCS, or DTC received.
*7: Bit 1 through 48 of DIS, DCS, or DTC transmitted.
*8: RX: received procedure signal.
TX: transmitted procedure signal.

COPYRIGHT © 2001 CANON INC.

3.22.1.3 KEY HISTORY REPORT

The report indicates the most recent 1800 key presses:

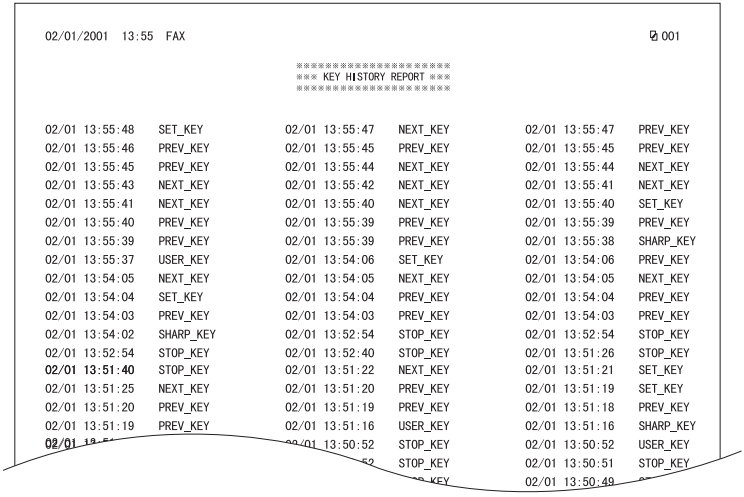

02/01/2001 13:55 FAX 001

****
*** KEY HISTORY REPORT ***
****

02/01 13:55:48 SET_KEY	02/01 13:55:47 NEXT_KEY	02/01 13:55:47 PREV_KEY
02/01 13:55:46 PREV_KEY	02/01 13:55:45 PREV_KEY	02/01 13:55:45 PREV_KEY
02/01 13:55:45 PREV_KEY	02/01 13:55:44 NEXT_KEY	02/01 13:55:44 NEXT_KEY
02/01 13:55:43 NEXT_KEY	02/01 13:55:42 NEXT_KEY	02/01 13:55:41 NEXT_KEY
02/01 13:55:41 NEXT_KEY	02/01 13:55:40 NEXT_KEY	02/01 13:55:40 SET_KEY
02/01 13:55:40 PREV_KEY	02/01 13:55:39 PREV_KEY	02/01 13:55:39 PREV_KEY
02/01 13:55:39 PREV_KEY	02/01 13:55:39 PREV_KEY	02/01 13:55:38 SHARP_KEY
02/01 13:55:37 USER_KEY	02/01 13:54:06 SET_KEY	02/01 13:54:06 PREV_KEY
02/01 13:54:05 NEXT_KEY	02/01 13:54:05 NEXT_KEY	02/01 13:54:05 NEXT_KEY
02/01 13:54:04 SET_KEY	02/01 13:54:04 PREV_KEY	02/01 13:54:04 PREV_KEY
02/01 13:54:03 PREV_KEY	02/01 13:54:03 PREV_KEY	02/01 13:54:03 PREV_KEY
02/01 13:54:02 SHARP_KEY	02/01 13:52:54 STOP_KEY	02/01 13:52:54 STOP_KEY
02/01 13:52:54 STOP_KEY	02/01 13:52:40 STOP_KEY	02/01 13:51:26 STOP_KEY
02/01 13:51:40 STOP_KEY	02/01 13:51:22 NEXT_KEY	02/01 13:51:21 SET_KEY
02/01 13:51:25 NEXT_KEY	02/01 13:51:20 PREV_KEY	02/01 13:51:19 SET_KEY
02/01 13:51:20 PREV_KEY	02/01 13:51:19 PREV_KEY	02/01 13:51:18 PREV_KEY
02/01 13:51:19 PREV_KEY	02/01 13:51:16 USER_KEY	02/01 13:51:16 SHARP_KEY
02/01 13:50:52 STOP_KEY	02/01 13:50:52 USER_KEY	
STOP_KEY	02/01 13:50:51 STOP_KEY	
KEY	02/01 13:50:49	

F02-322-04

 COPYRIGHT © 2001 CANON INC.

3.22.1.4 COUNTER REPORT

The various counter readings are indicated (3.14.1 of Chapter 2):

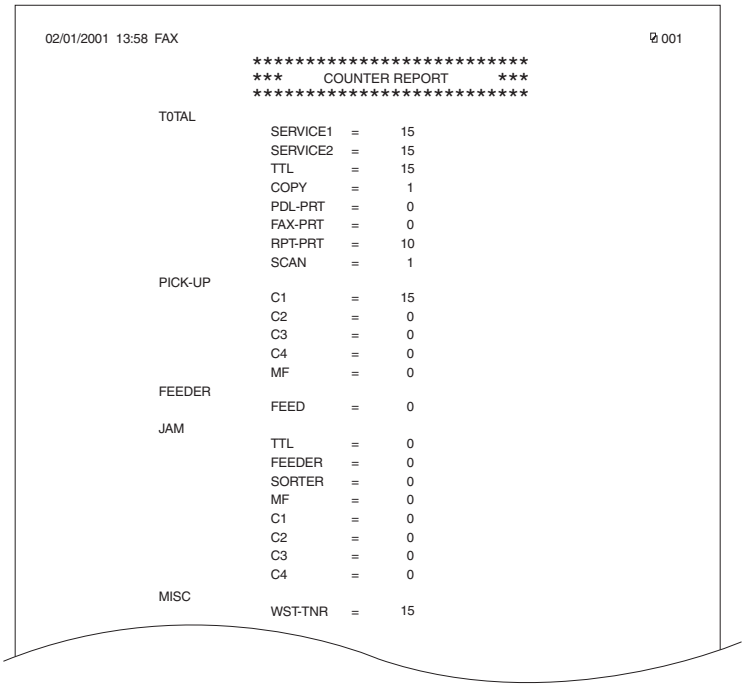

F02-322-05

3.22.1.5 PRINT SPEC REPORT

The report indicates the TYPE settings, printing speed, memory size, ROM version, and adjustment data.

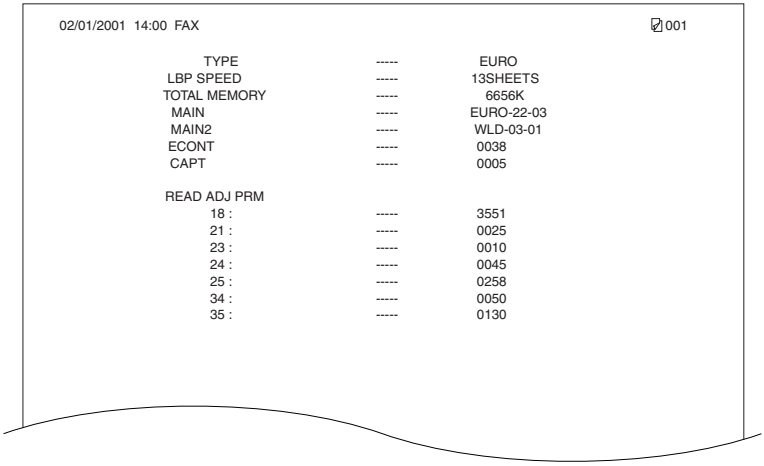

F02-322-06

3.22.2 Automatically Generated Reports

The following reports are generated automatically:

Type of report	Operation
Error TX report (w/ error code list, dump list)	Enable automatic generation on the report settings menu in user mode menu (i.e., use bits 0 and 1 of SW01 of service data #1 SSSW).
RX report (w/ error code list, dump list)	Enable automatic generation on the report settings menu in user mode menu (i.e., use bits 0 and 1 of SW01 of service data #1 SSSW).

T03-322-02

 COPYRIGHT © 2001 CANON INC.

3.22.2.1 Error TX Report (for service)

A service error code list and an error dump list may be attached to the error TX report. To do so, use service SSSW-SW01 in service mode.

If 'attach' is selected for 'transmission image' under 'transmission result report' of [REPORT SETTING] in user mode, a part of the 1st page of the transmission image will be attached when memory transmission is used.

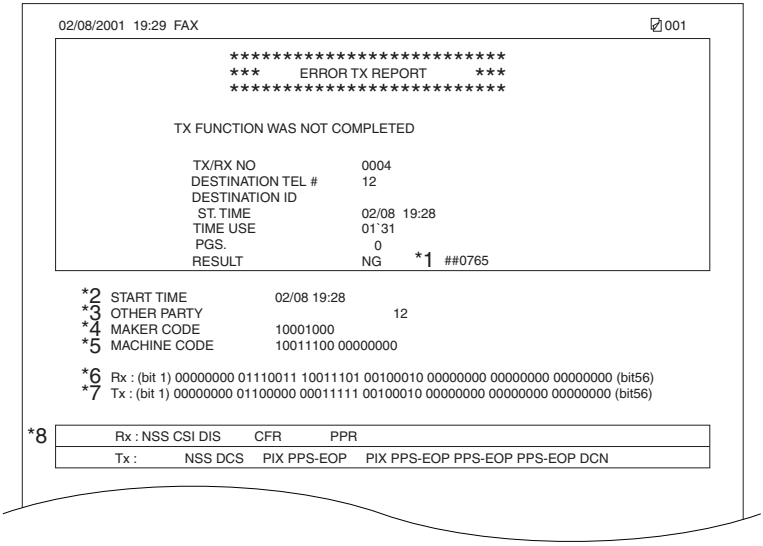

F02-322-07

*1: Service error code.
*2: START TIME; date and time (in 24-hr notation).
*3: OTHER PARTY; telephone number sent from other party.
*4: MAKER CODE; manufacture code.
*5: MACHINE CODE; model code.
*6: Bits 1 through 48 of received DIS, DCS, or DTC.
*7: Bits 1 through 48 of received DIS, DCS, or DTC.
*8: RX: received procedure signal.
TX: transmitted procedure signal.

COPYRIGHT © 2001 CANON INC.

3.22.2.2 RX Report (for service)

A service error code list and an error dump list may be attached to the RX report in response to an error reception. To attach, use SSSW-SW01 in service mode.

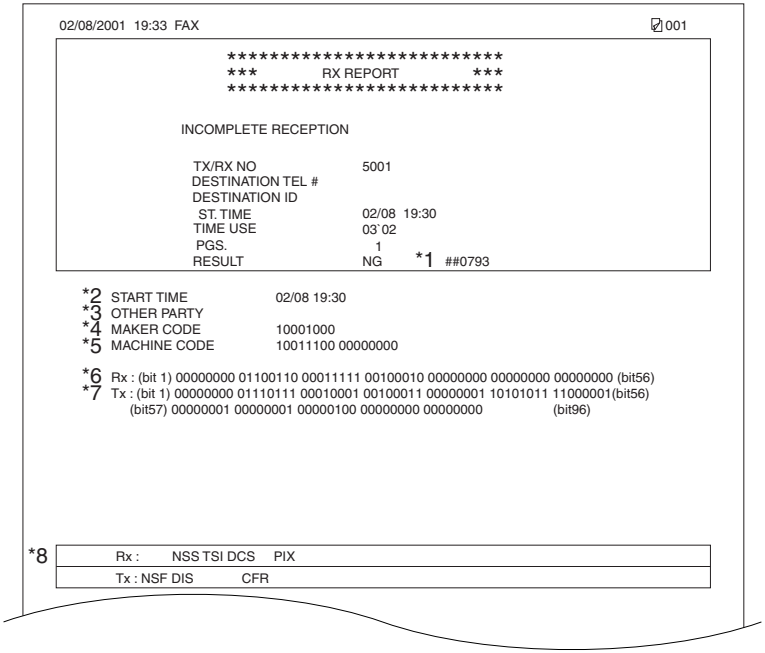

F02-322-08

*1: Service error code.
*2: START TIME; date and time (in 24-hr notation).
*3: OTHER PARTY; telephone number sent from other party.
*4: MAKER CODE; manufacture code.
*5: MACHINE CODE; model code.
*6: Bits 1 through 48 of received DIS, DCS, or DTC.
*7: Bits 1 through 48 of received DIS, DCS, or DTC.
*8: RX: received procedure signal.
TX: transmitted procedure signal.

 COPYRIGHT © 2001 CANON INC.

CHAPTER 3

INSTALLATION

COPYRIGHT © 2001 CANON INC.

1 Selecting the Site

The site must meet the following requirements; if possible, visit the user's before the machine is delivered:

1. The site must offer a power outlet whose rating is as indicated 230 volts (±10%) and which may be used exclusively for the machine.

2. The site temperature must be between 0° and 35°C (32° and 95°F) and between 35% and 85% humidity. Avoid an area near a water faucet, water boiler, humidifier, and refrigerator.

3. The site must not be near a source of fire, or must not be subject to dust or ammonium gas. Also, avoid areas exposed to direct rays of the sun; if necessary, provide curtains.

4. The level of ozone generated by the machine while in use will not affect the health of the human body. However, some individuals may find its odor unpleasant. Be sure to ventilate the room well to provide a good working environment.

5. The machine will have to be at least 10cm/3.9" from any wall, offering enough space for its use.

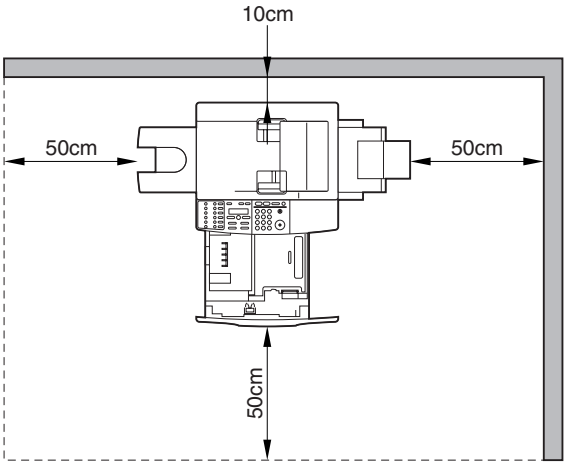

F03-101-01

6. The machine will have to be placed in a well-ventilated area of the room. Do not, however, place it near the inlet of air.

2 Unpacking and Installing the Machine

2.1 Before Starting

Go through the following before starting to install the machine:



If the machine is moved from a cold to a warm place for installation, condensation can develop in its pickup/feeding assembly, causing image faults. To avoid the condensation, leave the machine unpacked for 1 hr or more so that it will be fully used to the room temperature.
(The term *condensation* refers to the development of drops of water on a mental surface when it is brought from a cold to warm place. This occurs as a result of rapid cooling of vapor in the air.)

2.2 Installation Procedure

Install the machine in the following order; for details, see the appropriate sections that follow; after installation, be sure to clean up the area around the machine:

1. unpacking
2. fitting the cartridge
3. putting paper in the cassette
4. putting paper in the manual feed tray
5. connecting the interface cable
6. connecting the modular cable (if equipped with fax functions)
7. connecting the power cord
8. fitting the delivery tray
9. checking the copy images
10. setting the printer functions
11. setting the fax functions (if equipped with fax functions)

 COPYRIGHT © 2001 CANON INC.

2.3 Unpacking

Actions	Checks/remarks
1) Unpack the machine, and take out the attachments.	Check to see that none of the following is missing: • cassette • delivery tray • cartridge • power cord • Quick Start Guide • Reference Guide • CD-ROM • Warranty card • EWS pamphlet (for PC1200s only) • Modular cable (Specific country/region models only.) • Fax Guide (if eqquipped with fax functions)
2) Holding the grips on the left and right of the machine, lift it out of the box.	
3) Remove the packing material: plastic sheets, securing members, and tape.	
4) Remove the shipping screw.	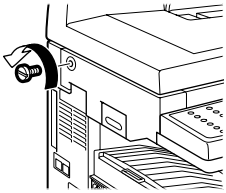

COPYRIGHT © 2001 CANON INC.

Actions	Checks/remarks

5) While pulling on the reader unit slide lever, slide out the reader unit to the left.

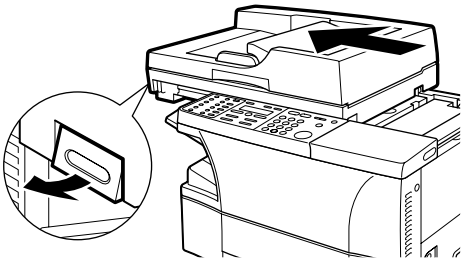

6) Open the cartridge cover.

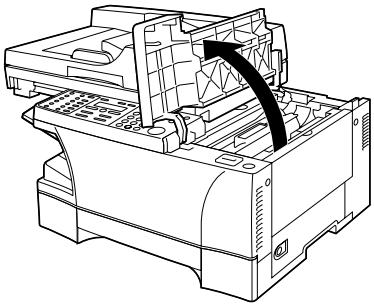

7) Store away the securing member removed in step 4 in the shipping screw slot.

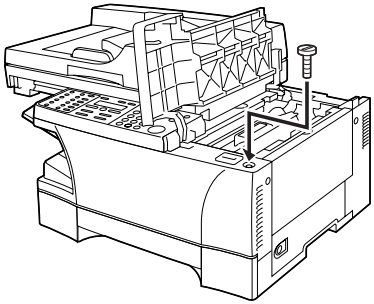

 COPYRIGHT © 2001 CANON INC.

2.4 Fitting the Cartridge

Actions	Checks/remarks
1) Unpack the cartridge, and take it out without removing its wrappings. 2) Rock the cartridge left and right about 5 to 6 times to even out the toner inside.	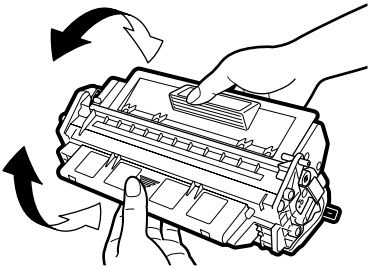
3) Detach the tab and pull out the tape slowly. When doing so, be sure to place the cartridge on a level surface, and hold it firmly in place. However, take care not to push down on the photopositive drum through the shutter.	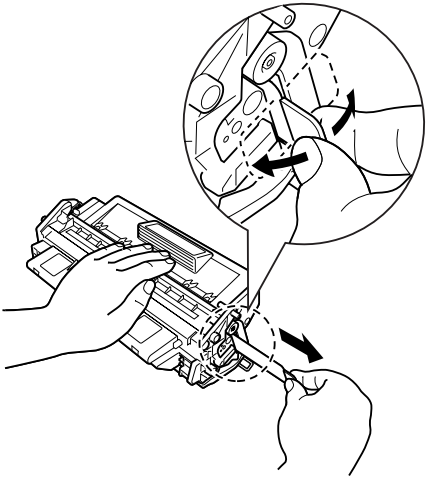

Actions	Checks/remarks
4) Fully insert the cartridge in the direction of the arrow as indicated.	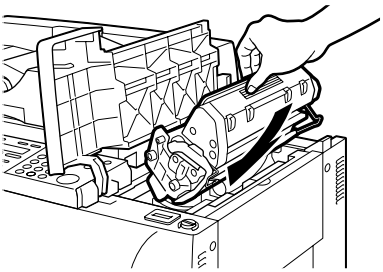
5) Close the cartridge cover, and put back the reader unit.	

 COPYRIGHT © 2001 CANON INC.

2.5 Putting Paper in the Cassette

Actions	Checks/remarks
1) Lift the paper cassette slightly, and pull it out until it stops.	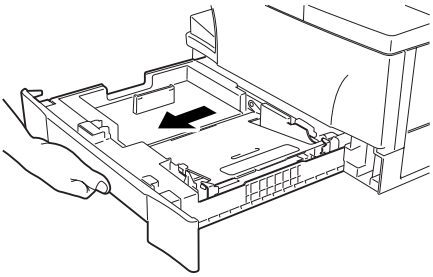
2) Put paper in the cassette, under the claw must indicate what [1] and [2] are.	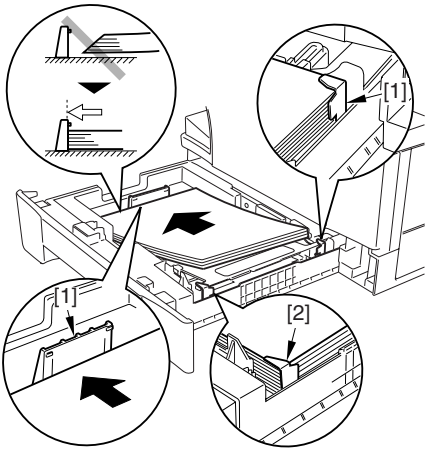
3) Slide in the cassette until it stops.	

2.6 Putting Paper in the Manual Feed Tray

Actions	Checks/remarks
1) Open the manual feed tray.	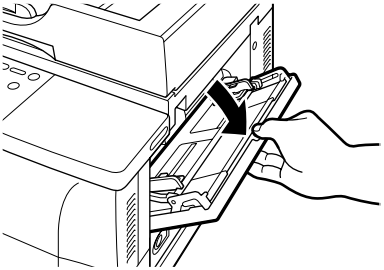
2) Slid out the auxiliary tray.	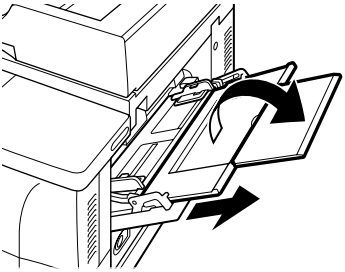
3) Place the paper (with the side to be copied onto facing up).	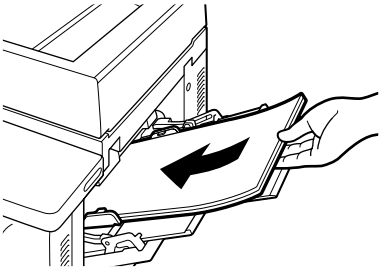
4) Adjust the slide guide to suit the width of the paper.	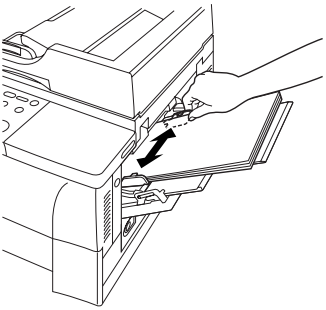

 COPYRIGHT © 2001 CANON INC.

2.7 Connecting the Interface Cable

Actions	Checks/Remarks
1) Connect the cable to the USB port if a USB cable is to be used, or to the parallel port if a parallel interface cable is to be used. Be sure also to connect the cable to the PC.	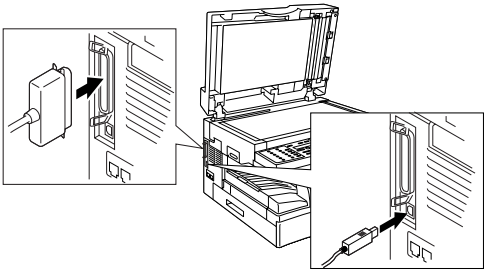

Use interface cables that comply with specifications of the machine.
USB cable specifications: 5 m or shorter.
Parallel interface cable specifications: 3 m or shorter (Compliant to IEEE1284, for bi-directional communication)

2.8 Connecting the Modular Cable (if equipped with fax functions)

Actions	Checks/Remarks
1) Connect one end of the modular cable to the terminal [L], and the other end to the socket of the telephone. If both telephone and fax are to be used, connect the modular cable from the telephone (or answering machine) to the [telephone] terminal.	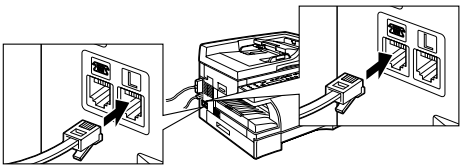

COPYRIGHT © 2001 CANON INC.

2.9 Connecting the Power Cord

Actions	Checks/remarks
1) Connect the power cord	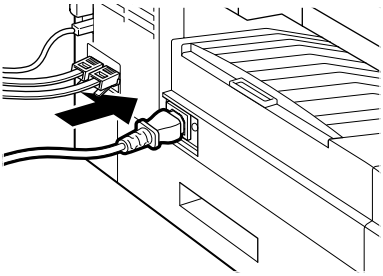

2.10 Fitting the Delivery Tray

Actions	Checks/remarks
1) Mount the delivery tray.	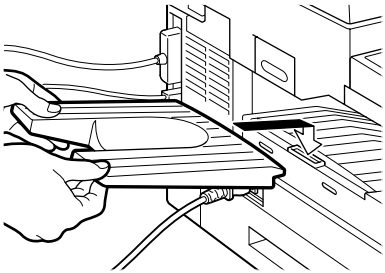

2.11 Checking the Copy Images

Actions	Checks/remarks
1) Place an original on the copyboard glass or in the ADF and select the cassette or the manual feed tray as the source of paper; then, check the copied images.	

 COPYRIGHT © 2001 CANON INC.

2.12 Setting the Printer Functions

Actions	Checks/Remarks
1) Install printer drivers, and perform test printing from the PC to check the images.	



Be sure that the PC environment meets the requirements of the machine before installing the printer drivers.
For details, refer to Quick Start Guide.

COPYRIGHT © 2001 CANON INC.

2.13 Setting Fax Functions (if equipped with fax functions)

2.13.1 Setting the Date/Time (user mode)

Actions	Checks/remarks
1) Press the Additional Functions key. 2) Press the Left/Right Arrow key, to select '5. TIMER SETTING'. 3) Press the OK key. 4) Check to make sure that '1. DATE/ TIME SETTING' is indicated and press the OK key. 5) Enter the current date and time. Press the Left/Right Arrow key to move the cursor to the character to enter and enter a number using the keypad. 6) Press the OK key so that the date/time will be stored.	

 COPYRIGHT © 2001 CANON INC.

2.13.2 Setting the Dial Type

Actions	Checks/remarks
1) Press the Additional Functions key. 2) Press the Left/Right Arrow key to select '3. FAX SETTING'. 3) Press the OK key. 4) Check to see that '1. USER SETTING' is indicated and press the OK key. 5) Check to see that '1. TEL LINE SETTING' is indicated and press the OK key. 6) Press the Left/Right key to select '2. TEL LINE TYPE'. 7) Press the OK key. 8) Press the Left/Right key to select 'TOUCH TONE' or 'ROTARY PULSE'. 9) Press the OK key so that the selected line type is stored.	

2.13.3 Executing Communications Testing

Actions	Checks/remarks
1) Press the Fax key in the control panel so that the machine will be in fax mode. 2) Try sending and receiving an original and check the operation and the images.	

3 When Relocating the Machine

If the machine must be moved by truck or other means of transportation, be sure to go through the following:

1. If the machine is equipped with fax function and the move will take 2 hours or more, the fax image data, if any, will be lost. Advise the user on this and, if necessary, print out the image data.
2. Be sure no communication is under way with an external device.
3. Check that the contact sensor is in home position and disconnect the power cord.
4. Disconnect the interface cable and modular cable.
5. Remove the delivery tray.
6. Slide the reader unit to the left, and open the cartridge cover.
7. Take out the shipping screw that have been stored away inside the machine.

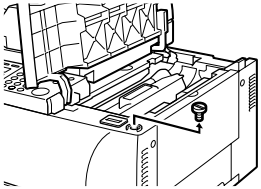

F03-301-01

8. Take out the cartridge from inside of the machine and put it in a protective bag or the like to avoid direct rays of the sun.
9. Close the cartridge cover and put back the reader unit.
10. Fit the shipping screw you removed in step 7 and secure the contact sensor in place.

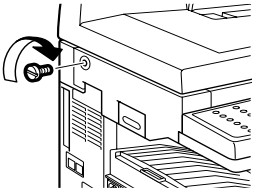

F03-301-02

 COPYRIGHT © 2001 CANON INC.

11. Open the ADF (copyboard cover) and place A4 (LTR) sheet on the copyboard glass then, close the ADF (copyboard cover).
12. Tape the machine's covers in place so that it will not open in transit.
13. Pack the machine and start the relocation.



Take full care to avoid severe vibration during the relocation.

CHAPTER 4
OPERATION

COPYRIGHT © 2001 CANON INC.

1 Basic Operation

1.1 Reproduction Processes

1.1.1 Outline

The machine uses an indirect electrostatic method, and is constructed as shown in F04-101-01:

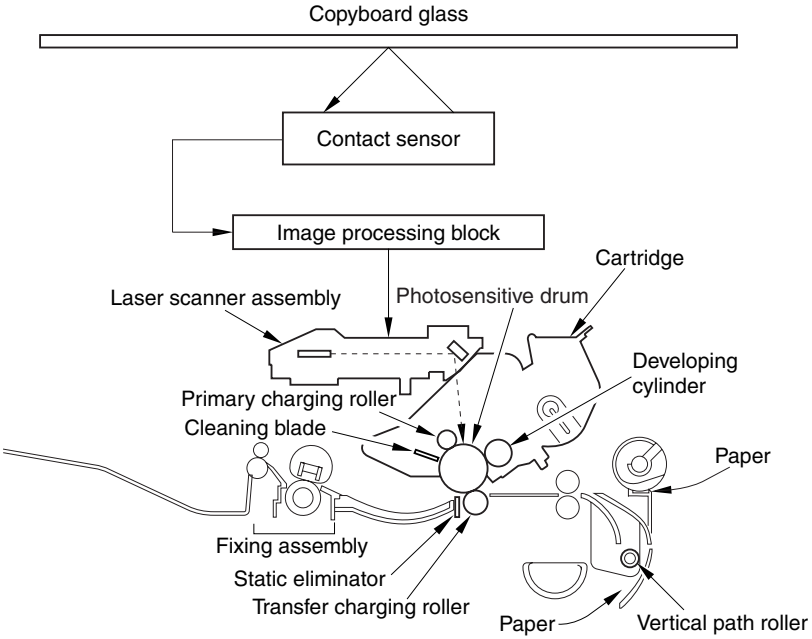

F04-101-01

The machine has a cartridge construction, in which the drum, toner housing, primary charging assembly, developing cylinder, and cleaning blade are designed as a single entity (items serving as the core of image formation).

It uses SURF as its fixing method, in which a fluorine-coated film is heated by a heater, and paper is moved between the film and the fixing pressure roller (the image is fused by the work of heat and pressure.)

The machine's image formation processes are as follow:

Step 1 Primary charging (AC and negative DC)
Step 2 Laser exposure
Step 3 Development (AC and negative DC)
Step 4 Transfer (positive DC)
Step 5 Separation
Step 6 Fixing
Step 7 Drum cleaning

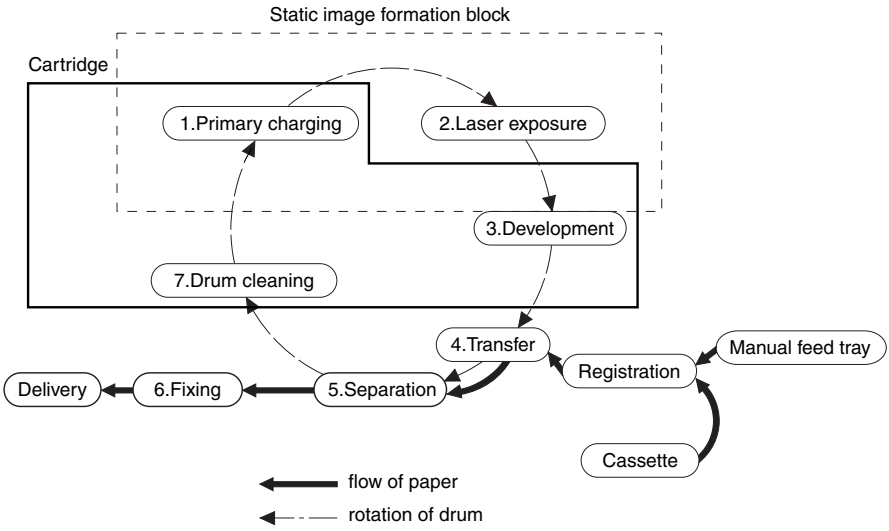

F04-101-02

The machine's sequence of operation is controlled by the CPU on the image processor PCB and the CPU on the DC controller PCB. F04-101-03 shows the sequential flow, and T04-101-01 provides descriptions of the periods involved. For a timing chart, see Appendix.

 COPYRIGHT © 2001 CANON INC.

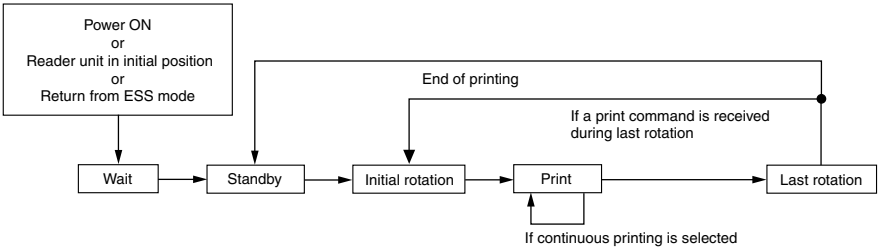

F04-101-03

Period	Definition	Purpose	Remarks
WAIT (wait)	From when the power is turned on until when the application of the primary charging AC bias is started and stopped.	The machine's mechanical and electrical states are checked.	A check is made on the presence/absence of a cartridge and for paper remaining inside the machine. The machine also shifts the WAIT state when the reader unit is returned to the home position while power is on, or after returning from ESS mode.
STBY (standby)	After the end of WAIT, unit the Start key is pressed.	The machine is ready for a print command.	If a shift is from last rotation of printing on LTR or larger, the fixing heater is subjected to rest heating temperature control for 5 sec.
INTR (initial rotation)	After a press on the Start key, until the leading edge is detected by the paper leading edge sensor.	The machine starts up process conditions and picks up paper for printing.	The fixing heater is subjected to temperature control (start-up temperature control, paper passage temperature control); scanner rotation speed adjustment and ATVC control are executed.
PRINT (print)	From when the paper leading edge sensor detects the leading edge of paper to 1.5 sec after it detects the trailing edge of paper.	The DC controller PCB generates the BD0* signal, and the image processor PCB sends VD0* signal and VD0 signal, thereby forming a latent image on the photosensitive drum and turning it into a toner image.	
LSTR (last rotation)	From when printing ends until the main motor stops.	The drum surface is made free of potential and the transfer charging roller is cleaned.	After last rotation, the machine shifts to standby to wait for a print command, in response to which it immediately shifts to initial rotation.

T04-101-01

COPYRIGHT © 2001 CANON INC.

1.2 Functional Construction

The machine may broadly be divided into the following 7 functional blocks:

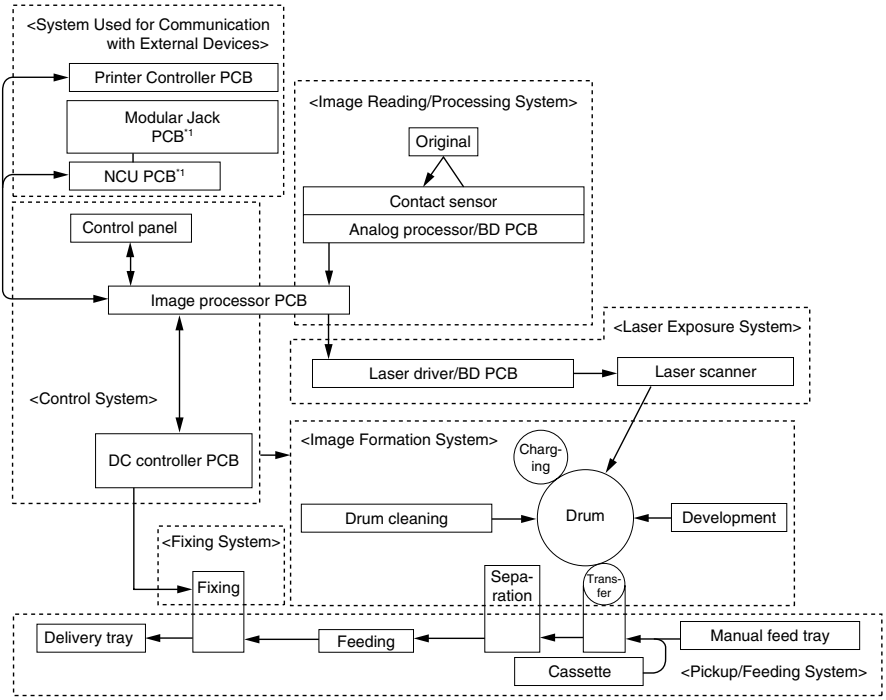

*1 : If equipped with fax functions.

F04-102-01

 COPYRIGHT © 2001 CANON INC.

1.3 Outline of the Electrical Circuitry

1.3.1 Functional Block Diagram

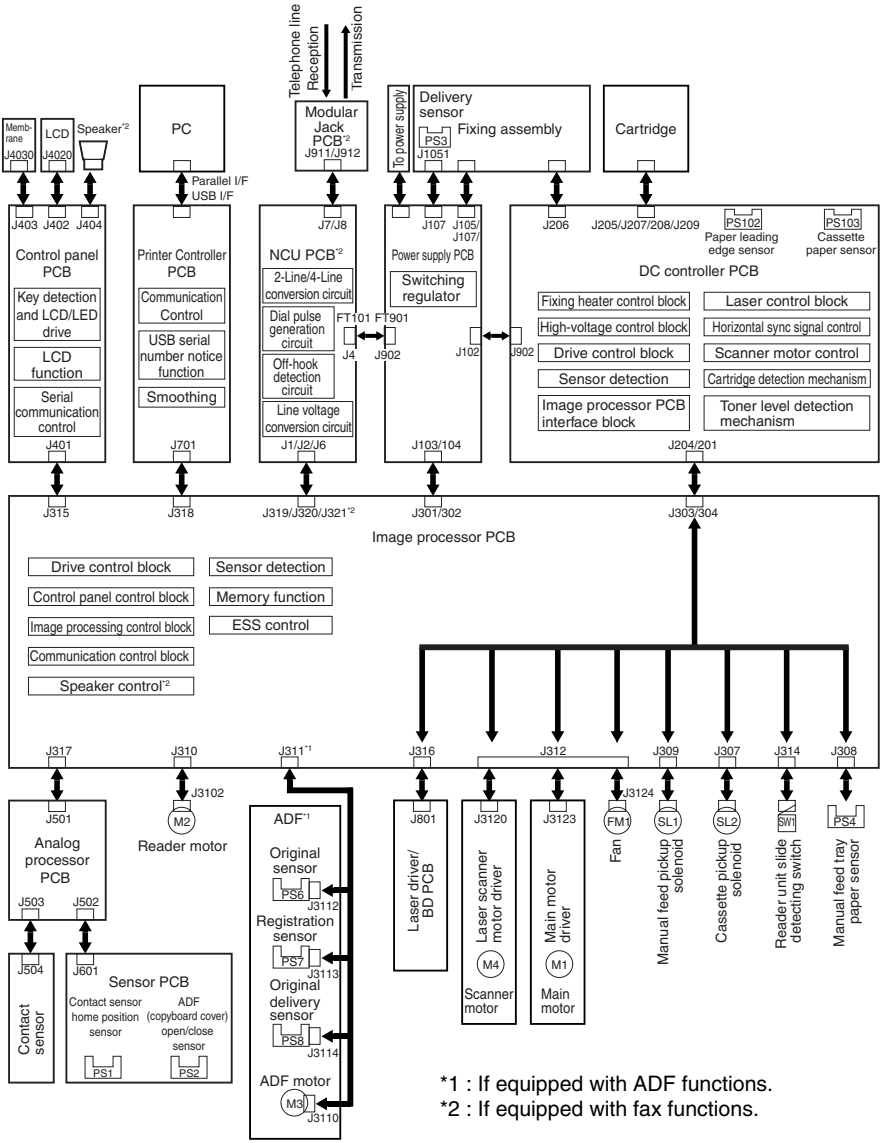

*1 : If equipped with ADF functions.
*2 : If equipped with fax functions.

F04-103-01

1.3.2 Outlines of Functions

1.3.2.1 Image Processor PCB

It controls the machine as a whole, and communicates directly with all PCBs except the sensor PCB and modular jack PCB.

Drive Control Block

The drive control mechanism acts on the reader motor and the ADF motor by the work of the ASIC and motor drive IC.

Control Panel Control Block

The control panel control block receives the state of control keys while sending/receiving data in serial communication with the control IC of the control panel PCB. Also, it sends LED and LCD signals to the control panel PCB.

Image Processing Control Block

The image processing control block has the following functions:

- It subjects the digital image data from the analog processor PCB to enlargement/reduction processing, shading correction, smoothing, and other image processing, thereby converting it to 600x600-dpi image signals (VD0, VD0*).
- It converts the analog image data from fax communication into 600x600-dpi image signals (VD0, VD0*).
- It uses a horizontal sync signal (BD0*) as a trigger to send image signals (VD0, VD0*) to the laser unit.
- The image data from the contact sensor is re-arranged, and the intensity of the contact sensor LED is controlled.

Sensor Detection

It detects the state of each sensor of the rear unit and the ADF.

ESS Control

It controls the ESS function used to reduce the power consumption while the machine is in standby state.

Memory Function

The 8MB (as mounted) SDRAM used for the storage of image data is capable of storing about 79 pages in fax reception made of Canon Fax Standard Chart No.1. The image data is backed up by a vanadium lithium secondary battery (BAT2), so that it remains intact for about 2 hr after the machine is deprived of power. The 128-KB SRAM is used to store user data and service data, and is backed up by a lithium battery (BAT1) so that the data may be retained for about 5 yr after the machine is deprived of power.

 COPYRIGHT © 2001 CANON INC.

Speaker Control (if equipped with fax functions.)

It turns on/off or control the volume of the error sound, key sound, and line monitor sound generated by the speaker.



The volume of the line monitor or the sound of the key sound or the error sound is adjusted in user mode.

Communication Control Block (if equipped with fax functions)

The communication control block detects line signals (CNG, DTMF). The 14.4-kps modem is controlled by the main CPU on the image processor PCB for modulation and demodulation of transmission/reception data. It also is used to send the DTMF signal.

1.3.2.2 DC Controller PCB

Fixing Heater Control Block

The fixing heater control block monitors the temperature reading of the thermistor to ensure that the temperature of the heater reaches a specific level. If an error is detected in the temperature of the heater, it stops the power to the heater.

High-Voltage Control Block

The high-voltage control block controls the high voltage for the primary charging roller, developing cylinder of the cartridge, transfer charging roller, and fixing film.

Drive Control Block

The drive control block controls the main motor, pickup solenoid, and fan.

Sensor Detection

It detects the state of the sensors in the pickup assemblies and the printer block, thereby monitoring the drive assembly.

Image Processor PCB Interface block

The image processor PCB interface block sends the horizontal sync signal (BD0*) to the image processor PCB. It also returns a state signal in response to a command signal (serial) from the image processor PCB, thereby communicating the state of the printer block to the image processor PCB.

Laser Control Block

The laser control block controls the drive of the laser diode of the laser scanner unit according to the image signals (VD0, VD0*) from the image processor PCB. Also, it controls the intensity of the laser diode (auto power control) for each line of print data.

COPYRIGHT © 2001 CANON INC.

Horizontal Sync Signal Control

When the laser beam reaches the horizontal print start position, the laser beam detection signal (BDI*) from the laser scanner unit is detected, and the horizontal sync signal (BD0*) is sent to the image processor PCB. Also, the horizontal sync signal (BD*) is monitored for frequency of output.

Scanner Motor Control

The scanner motor is controlled so that the horizontal resolution of the print image is 600 dpi. Also, the laser beam detection signal (BDI*) from the laser scanner unit is detected to monitor the rotation of the scanner motor.

Cartridge Detection Mechanism

In wait state, the CPU on the DC controller PCB measures the voltage level of the cartridge detection signal (CRGSNS) a specific number of times to check the presence/absence of the cartridge when an AC bias is applied to the primary charging roller.

Toner Level Detection Mechanism

While the machine is in wait state, the toner level detection signal (ADDTNR; based on the comparison of the developing bias output and the antenna output inside the cartridge) occurring when the developing AC bias is detected during normal rotation to monitor the toner level inside the cartridge.

1.3.2.3 Control Panel PCB

Key Detection and LCD/LED Drive

The keys are monitored, and the LCD and LEDs are driven.

LCD Function

The LCD consisting of 2 lines of 20 characters is controlled according to the display signals from the image processor PCB.

Serial Communication Control

The state of the control keys is monitored based on serial communications with the image processor PCB. LCD and LED drive data are received.

1.3.2.4 Power Supply PCB

Switching Regulator

The following is generated using power from the power outlet for loads: +24 DC, +12 VDC, +5 VSDC, +5 VDC, +3.3 VSDC, +3.3 VDC.

 COPYRIGHT © 2001 CANON INC.

1.3.2.5 Analog Processor PCB

The analog image data read by the contact sensor is converted into digital image data and sent to the ASIC of the image processor PCB.

1.3.2.6 Sensor PCB

The signals from the ADF (copyboard cover) open/close sensor and the contact sensor home position sensor are sent out to the image processor PCB via the analog processor PCB.

1.3.2.7 Laser Driver/BD PCB

The image signals (VD0, VD0*) from the image processor PCB is converted into data used for laser adjustment (to cause the laser diode to emit a laser beam). Also, the generated laser beam is detected, and the laser beam detection signal (BDI*) is sent to the DC controller PCB.

1.3.2.8 Main Motor/Scanner Motor Driver

The main motor/scanner motor is driven according to the drive signals from the DC controller PCB.

1.3.2.9 Printer Controller PCB

The communications with the PC are controlled. The image data from the PC is converted into print data for the machine, and is sent to the image processor PCB.

Communication Control

Communications with the PC are controlled using a bi-directional parallel interface (IEEE std 1284-1994) or USB (Ver. 1.1). The communication protocols used for bi-directional communications include: Nibble, ECP, Rapid Port.

The communication with the image processor PCB by means of a video interface are also controlled.

USB Serial Number Notice Function

The USB serial number is communicated to the PC.

Smoothing

The 300 x 300-dpi image data from the PC is converted into image data equivalent of 1200 x 600 dpi; or, 600 x 600-dpi image data is converted into data equivalent of 2400 x 600-dpi.

1.3.2.10 NCU PCB (if equipped with fax functions)

2-Line/4-Line Conversion Circuit

Signals from a 2-line telephone line are converted into 4-line signals (transmission signals and reception signals). Also, the transmission signals from the image processor PCB are prevented from entering the reception circuit.

Dial Pulse Generation Circuit

The dial pulse generation circuit generates dial pulses by turning on and off the relay inside it according to the control signals from the image processor PCB. It then sends the dial signals to the telephone line by way of the modular jack PCB.

Off-Hook Detection Circuit

An off-hook state is detected with reference to the direct current flowing into the circuit, occurring when the telephone connected to the telephone terminal of the modular jack PCB is off the hook.

Line Voltage Conversion Circuit

The primary side of the NCU PCB is controlled using a line voltage of +48 VDC. In light of this, the DC component is cut by the capacitor, and only the audio signals are converted into voltages suited to the modem level.

1.3.2.11 Modular Jack PCB (if equipped with fax functions)

The signals from the 2 modular jacks (for telephone line and telephone connection) are communicated to the line voltage conversion circuit of the NCU PCB, and the signals from the fax are communicated to the telephone line.

 COPYRIGHT © 2001 CANON INC.

1.4 Power-On Sequence

The following is the flow of operation occurring from when the machine is turned on until it enters standby state:

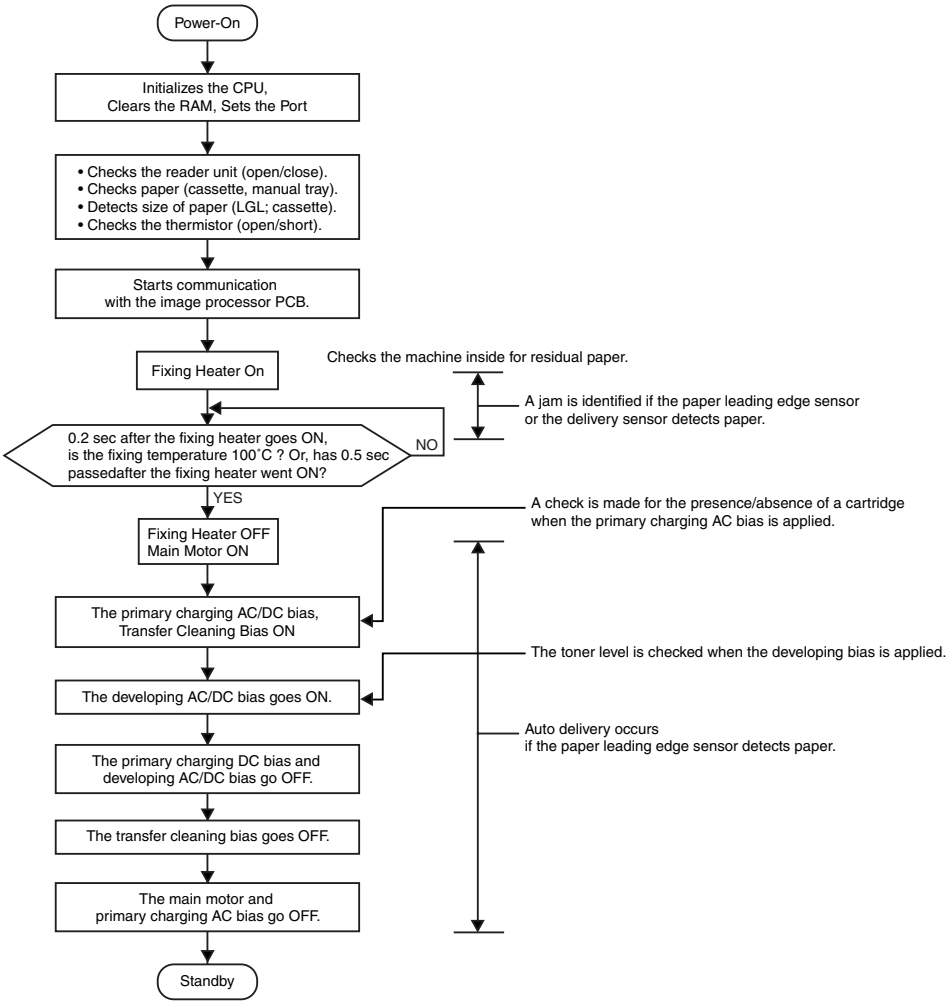

F04-104-01

1.5 Controlling the Main Motor

1.5.1 Outline

The rotation of the machine's main motor (M1) is controlled by the drive signal (MON) generated by the DC controller PCB.

The machine keeps the following ON at all times using the drive of the main motor, thereby moving paper at the selected printing speed:

- vertical path roller
- registration roller
- primary charging roller
- developing cylinder
- photosensitive drum
- transfer charging roller
- fixing pressure roller
- delivery roller

The machine uses the activation of the cassette pickup solenoid or the manual feed pickup solenoid as a trigger (occurring when the main motor is ON) to drive the following pickup rollers for a specific period of time:

- cassette pickup roller
- manual feed pickup roller

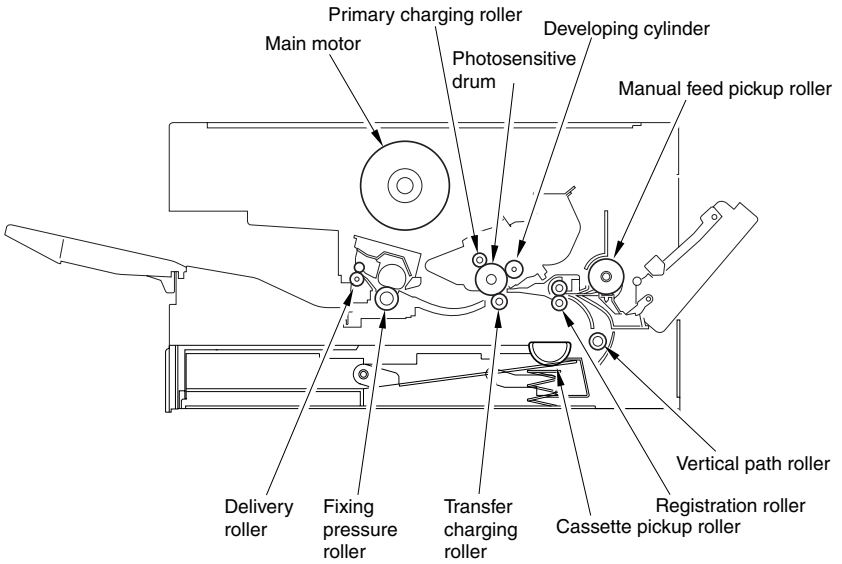

F04-105-01

 COPYRIGHT © 2001 CANON INC.

2 Image Reading/Processing System

2.1 Outline

The image reading/processing system consists of the following major components:

- contact sensor used to read originals
- reader motor, drive pulley, drive belt, carriage, and carriage rail used to move the contact sensor
- The analog processor PCB is used to convert the analog image data colleted by the contact sensor into digital image data.

The image reading mechanism is controlled based on the drive signals from the image processor PCB, thereby moving the contact sensor to read the original placed on the copyboard glass. (F04-201-01)

When the ADF is used, the contact sensor is moved to stream reading position, and the originals are read when they are moved by the ADF.

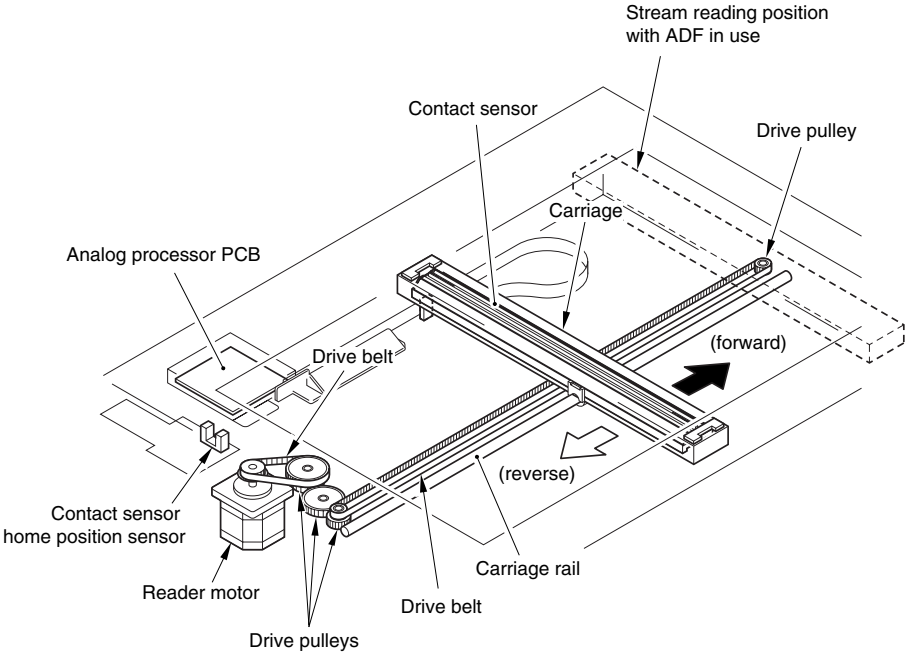

F04-201-01

3 Laser Exposure System

3.1 Outline

The laser scanner unit consists of the following major components:

- laser unit, which serves as the source of laser beam.
- laser scanner motor, equipped with a 4-face mirror for laser scanning.
- laser driver/BD PCB used to detect laser beam or to control emission of laser beam.

The laser beam generated by the laser unit based on the signals from the DC controller PCB moves through the collimator lens (inside the laser unit) and the cylindrical lens to reach a 4-face polygon mirror rotating at a constant speed.

When reflected by the 4-face polygon mirror, the laser beam moves through the imaging lens, and is bent by the reflecting mirror to reach the photosensitive drum. At this time, the laser beam also is directed to the BD circuit of the laser driver/BD PCB. (F04-301-01)

As the 4-face polygon mirror rotates at a constant speed, the laser beam scans the surface of the photosensitive drum at a constant speed, thereby removing charges and forming static images.

 COPYRIGHT © 2001 CANON INC.

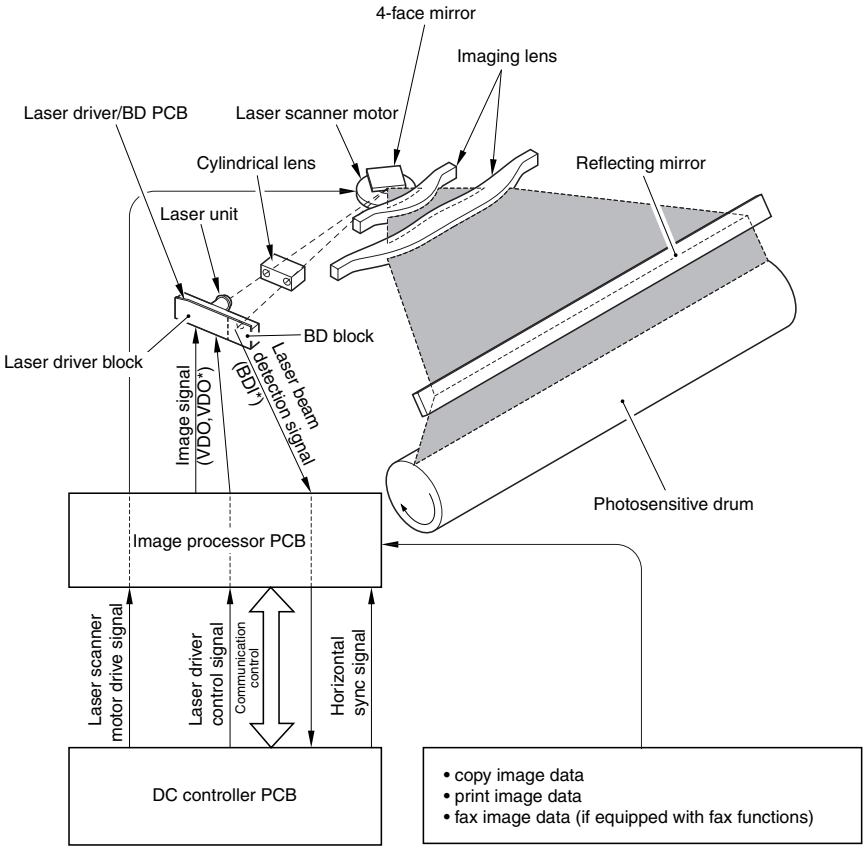
4-face mirror
Imaging lens
Laser driver/BD PCB
Laser scanner motor
Cylindrical lens
Reflecting mirror
Laser unit
BD block
Laser driver block
Image signal (VDO,VDO*)
Laser beam detection signal (BDI*)
Photosensitive drum
Image processor PCB
Laser scanner motor drive signal
Laser driver control signal
Communication control
Horizontal sync signal
DC controller PCB
• copy image data
• print image data
• fax image data (if equipped with fax functions)

F04-301-01

4 Image Formation System

4.1 Outline

F04-401-01 shows the construction of the image formation system.

The machine is a cartridge type, in which the core of its image formation components are constructed as a signal entity: photosensitive drum, primary charging roller, developing cylinder, cleaning blade, and toner housing.

The DC controller PCB has a built-in high-voltage output assembly, and generates high voltage for charging at such times as necessary.

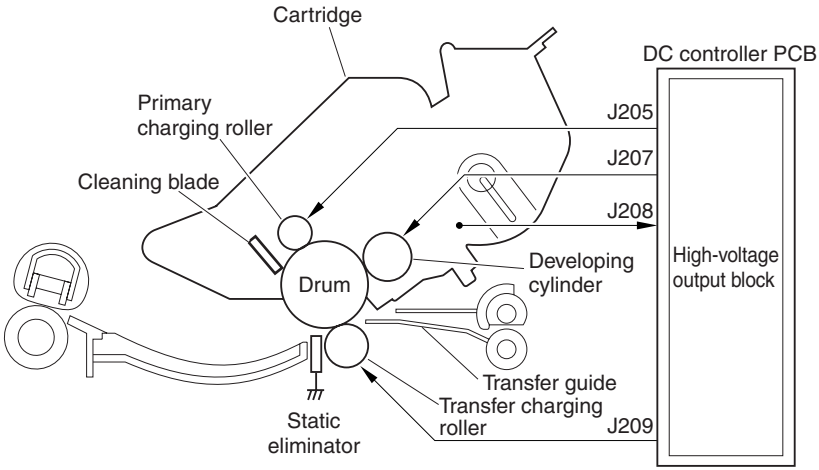

F04-401-01

 COPYRIGHT © 2001 CANON INC.

5 Pickup/Feeding/Delivery System

5.1 Outline

The machine is not equipped with a paper width detection mechanism. It uses center reference, in which paper moves centered through the pickup/feeding/delivery path.

The source of paper may be from any of two: cassette and manual feed tray. Once picked from the cassette or the manual feed tray, the paper is corrected so that any skew is removed by the registration shutter and is sent as far as the registration roller. Thereafter, the paper is controlled so that its leading edge matches the leading edge of the image on the photosensitive drum by means of the paper leading edge sensor (PS102); it then is moved through the transfer, separation, feeding, and fixing assemblies to reach the delivery tray.

The machine is equipped with 5 sensors to monitor the movement of paper; the names and the functions of these sensors are as follows:

Notation	Name	Function
PS3	Delivery sensor	Detects the state of paper in the delivery assembly.
PS4	Manual feed tray paper sensor	Detects the presence/absence of paper in the manual feed tray.
PS101	LGL paper sensor	Detects paper inside the cassette to see if it is of LGL size.
PS102	Paper leading edge sensor	Detects the leading edge and trailing edge of paper to measure its length. Also, it controls the timing of activation of the laser.
PS103	Cassette paper sensor	Detects the presence/absence of paper in the cassette.

T04-501-01

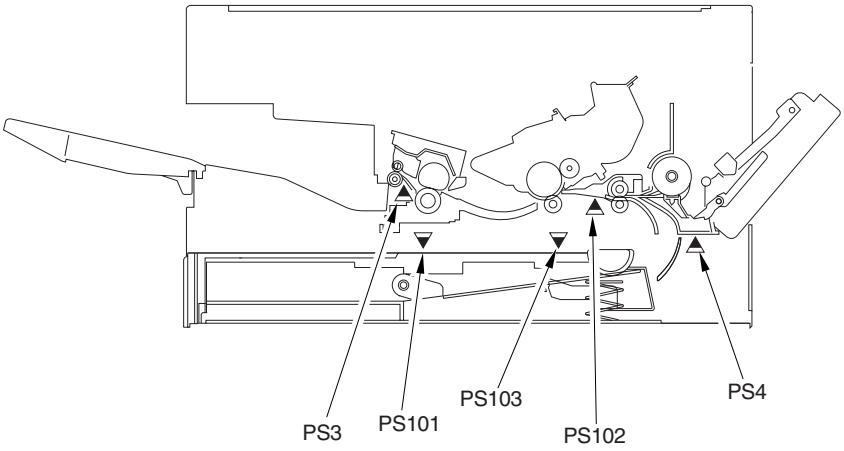

F04-501-01

5.2 Pickup Operation

5.2.1 Pickup from the Cassette

5.2.1.1 Outline

Paper is picked up from the cassette under the control of the CPU on the DC controller PCB and using the drive of the main motor (M1). When the cassette pickup solenoid (SL2) goes ON, the drive of the main motor (M1) is transmitted to the cassette pickup roller assembly to rotate the cassette pickup roller.

When the cassette pickup roller rotates, a single sheet of paper is separated from the stack by the separation claws of the cassette, and is sent as far as the registration shutter by way of the vertical path roller.

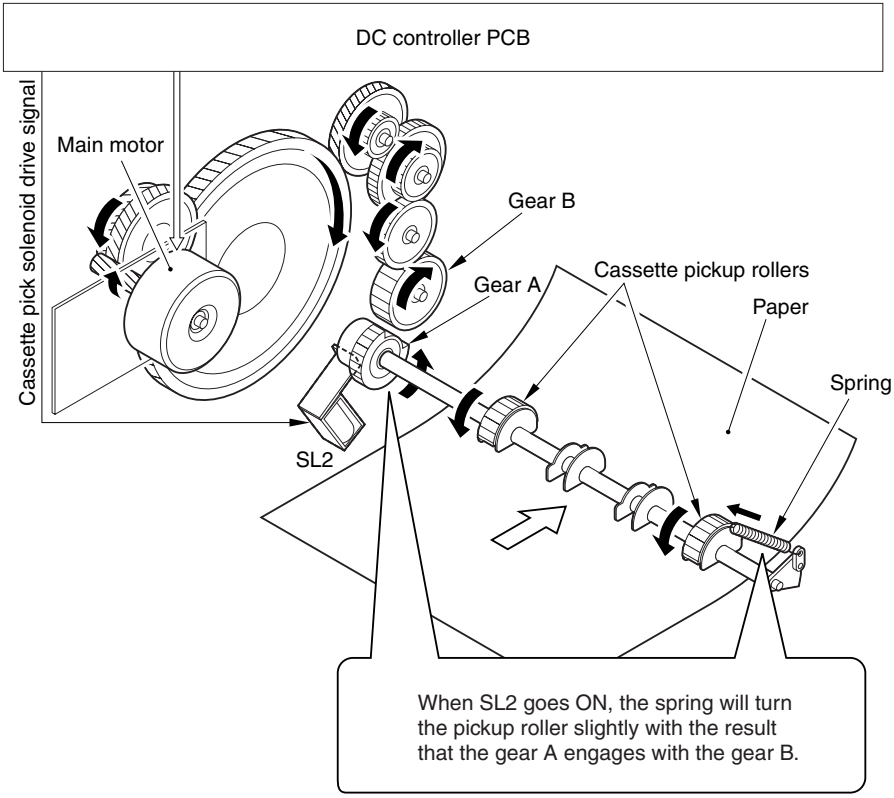

F04-502-01

 COPYRIGHT © 2001 CANON INC.

5.2.1.2 Retry Pickup

If the paper leading edge sensor (PS102) does not detect paper within a specific period of time after the cassette pickup roller has started to rotate, the machine will start to rotate the cassette pickup roller once again to execute a retry pickup operation.

If the paper leading edge sensor (PS102) still does not detect paper within a specific period of time after the machine executes a retry pickup operation once, the machine will identify the condition as a jam and will indicate a jam message on the LCD.

5.2.1.3 Detecting the Size of Paper

The machine detects the size of paper in the cassette in any of two ways: LGL size detection and non-LGL size detection.

LGL detection is performed by means of a LGL paper sensor (PS101). The LGL size detection mechanism is used to prevent picking up a subsequent sheet of paper before the trailing edge of paper leaves the cassette, otherwise occurring if the pickup was let to occur at the same time using other sizes when picking up LGL paper.

Non-LGL detection is performed using the paper leading edge sensor (PS102) based on the length of paper. In fax mode, if paper of a size different from the size selected from the control panel is placed, the DC controller will identify a paper size mismatch at the end of printing and indicate a message on the LCD.

COPYRIGHT © 2001 CANON INC.

5.2.2 Pickup from the Manual Feed Tray

5.2.2.1 Outline

Paper is picked up from the manual feed tray under the control of the CPU on the DC controller PCB and using the drive of the main motor (M1). When the manual feed pickup solenoid (SL1) goes ON, the drive of the main motor (M1) is transmitted as far as the manual feed pickup roller assembly to rotate the manual feed pickup roller.

The sheets of paper stacked in the manual feed tray are lifted by the work of a spring and forced against the manual feed pickup roller. Thereafter, a single sheet of paper is separated by the work of the manual feed pickup roller and the separation pad, and is moved as far as the registration shutter.

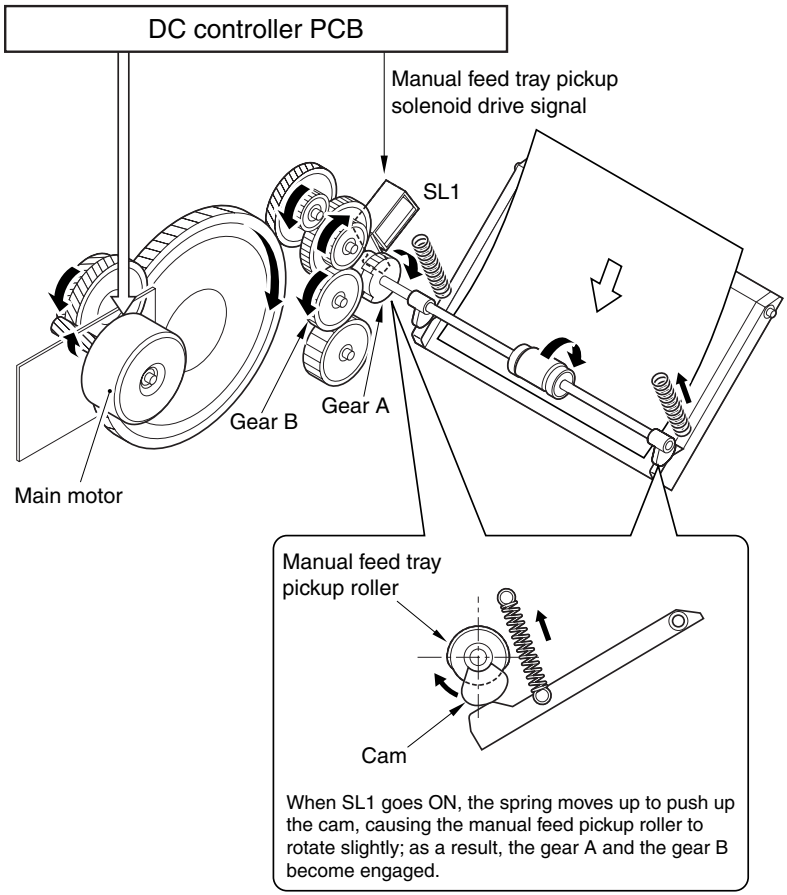

F04-502-02

 COPYRIGHT © 2001 CANON INC.

5.2.2.2 Retry Pickup

If the paper leading edge sensor (PS102) does not detect paper within a specific period of time after the manual feed pickup roller starts to rotate, the machine will rotate the manual feed pickup roller once again to execute a retry pickup operation. If the paper leading edge sensor (PS102) still does not detect the leading edge of paper after the machine executes a retry pickup operation once, the machine will identify the condition as a jam and will indicate a jam message on the LCD.

5.2.2.3 Detecting the Size of Paper

The size of paper in the manual feed tray is detected using the paper leading edge sensor (PS102) with reference to the length of paper. In fax mode, if paper of a size different from the size selected from the control panel is placed, the DC controller will identify a paper size mismatch at the end of printing and indicate a message on the LCD.

COPYRIGHT © 2001 CANON INC.

5.3 Feeding Operation/Delivery Operation

5.3.1 Outline

The machine uses the following to feed/deliver paper:

- registration roller
- photosensitive drum
- transfer charging roller
- fixing pressure roller
- delivery roller

The paper moved as far as the registration shutter by the work of the various pick operations is corrected for skew movement when it is butted against the registration roller.

When the paper moves past the registration assembly, the paper leading edge sensor (PS102) detects its leading edge, thereby ensuring that the leading edge of the paper will match the leading edge of the image on the photosensitive drum. Thereafter, the paper is moved past the photosensitive drum and then is moved over the transfer charging roller, fixing pressure roller, and delivery roller.

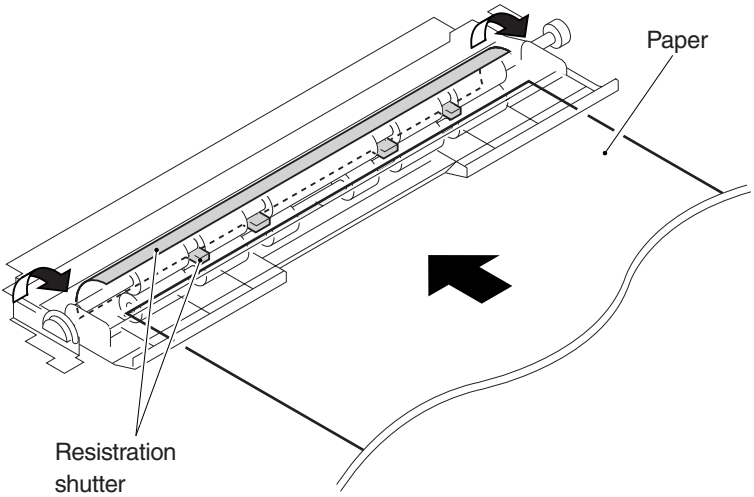

F04-503-01

5.3.2 Auto Delivery Control

The machine drives the main motor (M1) for a specific period of time to feed/delivery roller when the power is turned on, when the reader unit is returned to its initial position, or when it shifts from ESS mode, in addition to the following:

a. after starting the main motor (M1), the paper leading edge sensor (PS102) detects paper.
b. the size of the paper delivered last is B5 or smaller, and the delivery sensor (PS3) detects paper after the main motor (M1) is started.

 COPYRIGHT © 2001 CANON INC.

5.4 Reducing the Copying Speed

5.4.1 Outline

The machine is not equipped with a paper width detection mechanism; for this reason, if paper with a limited width is used in continuous printing, the ends of the fixing heater would overheat. To prevent overheating, the machine switches among 3 copying speeds with reference to the readings of the sub thermistor.

1. Normally, the machine reduces the speed to 4 ppm when the reading of the sub thermistor reaches 245°C/473°F or higher.
2. The machine will further reduce the copying speed to 3 ppm if the reading of the sub thermistor reaches 255°C/491°F or higher after it has reduced it to 4 ppm.
3. The machine will further reduce the copying speed to 2 ppm if the reading of the sub thermistor reaches 260°C/500°F or higher after it has reduced it to 3 ppm.

COPYRIGHT © 2001 CANON INC.

5.5 Detecting Jams

5.5.1 Outline

The machine is equipped with 6 sensors used to detect jams.

The presence/absence of paper is checked with reference to the state of each sensor at such times as stored in the CPU on the DC controller PCB. When the machine detects a jam, it will turn off the main motor (M1) and will indicate a jam message on the LCD.

5.5.2 Types of Jams

The machine groups jams into 8 types. When a jam occurs, be sure to remove it, and start over the operation.

a. Pickup Delay Jam

After execution of a pickup retry, the paper leading edge sensor (PS102) does not detect the leading edge of paper within a specific period of time, or no paper exists at time of a pickup retry.

b. Paper Leading Edge Sensor Stationary Jam

After the paper leading edge sensor (PS102) has detected the leading edge of paper, the paper leading edge sensor (PS102) does not detect the trailing edge of paper within a specific period of time.

c. Delivery Sensor Leading Edge Delay Jam

After the paper leading edge sensor (PS102) has detected the leading edge of paper, the delivery sensor (PS3) does not detect the trailing edge of paper within a specific period of time.

d. Fixing Wrap Jam

After the delivery sensor (PS3) has detected the leading edge of paper, the delivery sensor (PS3) detects the absence of paper before a specific period of time.

e. Delivery Sensor Trailing Edge Delay Jam

After the delivery sensor (PS3) has detected the leading edge of paper, the delivery sensor (PS3) does not detect the trailing edge of paper within a specific period of time.

f. Delivery Sensor Stationary Jam

- As part of operation after a pickup delay jam, the delivery sensor (PS3) detects the trailing edge of paper; however, the delivery sensor (PS3) once again detects the trailing edge of paper, the laser is forced OFF, and a specific period of time passes.
- As part of operation after a pickup delay jam, the delivery sensor (PS3) detects paper, the laser is forced OFF, and a specific period of time passes.
- At time of cleaning the fixing pressure roller, the trailing edge of paper does not move past the delivery sensor (PS3; i.e., the sensor does not go OFF) within a specific period of time.

 COPYRIGHT © 2001 CANON INC.

g. Auto Delivery Jam

- When the fixing heater is started, the paper leading edge sensor (PS102) detects the presence of paper.
- The paper group is not known or the paper last subjected to length detection is identified as being LTR or larger; under either of these conditions, the delivery sensor (PS3) detects paper within 2 sec after the fixing heater starts.
- The size of the paper last subjected to length detection is identified as being LTR or larger, and the delivery sensor (PS3) detects paper within 2 sec after the main motor starts.
- While auto delivery is under way, the machine identifies the absence of a cartridge.

h. Door Open Jam

During printing, the reader unit slide detecting switch (SW1) has detected movement (sliding) for the reader unit.

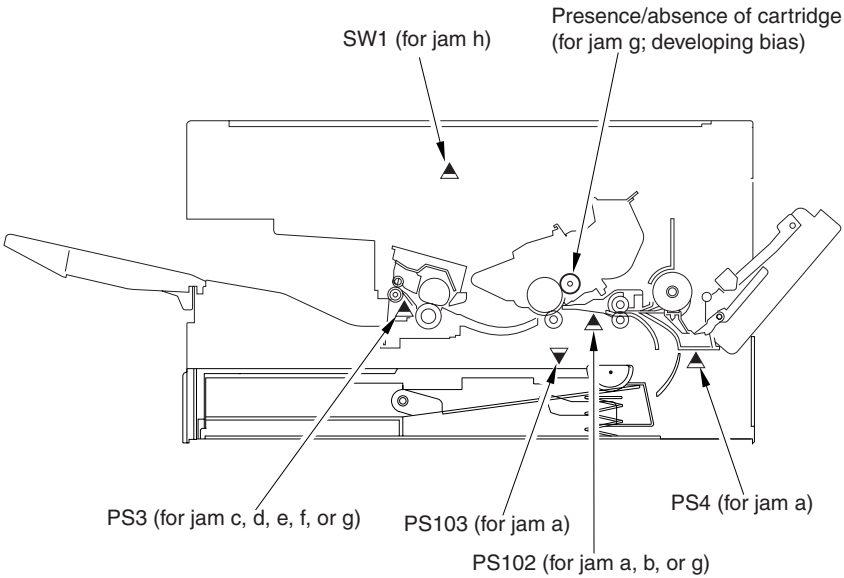

F04-505-01

6 Fixing System

6.1 Outline

The fixing pressure roller and the delivery roller are driven by the main motor.

The paper separated from the photosensitive drum is moved to the inside of the fixing assembly; the paper is then moved outside it after the toner is fused to the paper by the work of the fixing film and the fixing pressure roller.

The delivery sensor (PS3) is used to detect paper coming out of the fixing assembly.

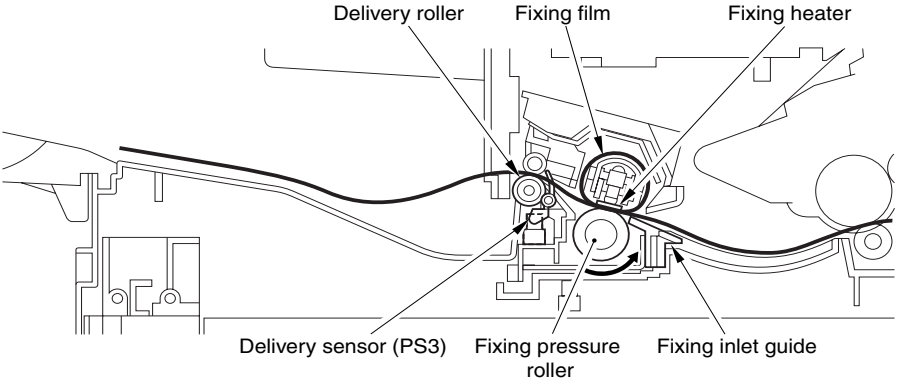

F04-601-01

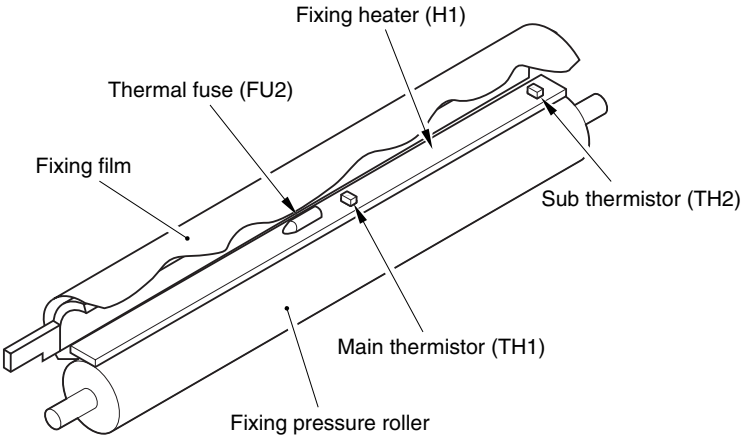

F04-601-02

 COPYRIGHT © 2001 CANON INC.

6.2 Controlling the Fixing Operation

6.2.1 Controlling the Fixing Temperature

The fixing film unit has a plate-shaped fixing heater built into it for heating the fixing film.

The fixing heater is equipped with 2 thermistor: a main thermistor in the middle and a sub thermistor at the end. The main thermistor is used to control the temperature of the fixing heater and to detect its overheating, while the sub thermistor is used to detect an error temperature on the end of the fixing heater.

The CPU on the DC controller PCB monitors the main thermistor signal (FSRTH) and the sub thermistor signal (SUBTH) from the thermistors for control of the fixing heater drive signal (FSRD0) and the relay drive signal (RLYD), thus varying the supply of power to the heater and, ultimately, controlling the temperature of the fixing heater.

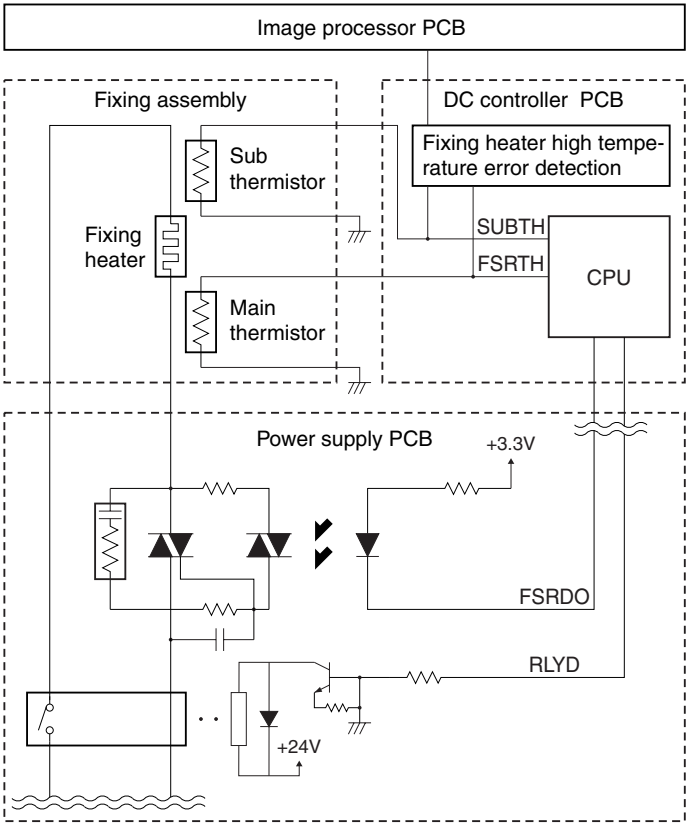

F04-602-01

The CPU on the DC controller PCB executes the following 4 types of fixing temperature control:

- Start-Up Temperature Control

In response to a print command from the image processor PCB, the temperature of the fixing heater is started up to a level 15°C/59°F lower than paper passage control temperature target.

- Paper Passage Temperature Control

While printing is taking place, the fixing heater temperature is controlled so that it is identical with the paper passage control temperature target.

- Sheet-to-Sheet Temperature Control

To prevent overheating of areas not covered by paper (between sheets), the fixing heater temperature is controlled to a level relatively lower than the paper passage control temperature target.

- Rest Heating Temperature Control

While the machine is at rest, the fixing pressure roller is heated so that the toner collecting on it is melted and moved to the fixing film, thereby ridding the roller of toner.

The rest heating control mechanism is used to control the temperature of the fixing heater to a level lower than the paper passage target level when LTR or larger paper is used for printing.

The control temperature targets are switched in reference to the following 4 conditions:

- paper type (as indicated by a command during printing)
- type of control (cover paper or between sheets)
- change in fixing temperature control (OFF → start-up → paper passage, etc.)
- count of prints in continuous mode

 COPYRIGHT © 2001 CANON INC.

6.2.2 Controlling the Fixing Film Bias

The machine is equipped with a fixing film bias control mechanism which is controlled by the CPU on the DC controller PCB. The fixing film bias is used to prevent displacement of toner deposits; i.e., when the primary charging roller DC bias is applied, a bias of the same polarity as the toner is applied to the fixing film so as to create a magnetic field between the paper and the film.

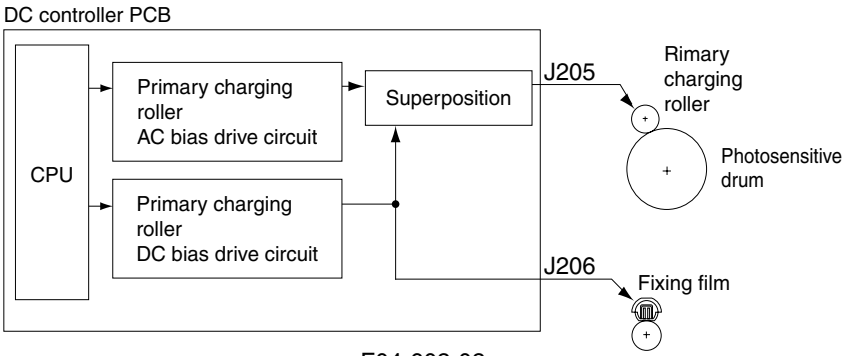

F04-602-02

6.2.3 Fixing Heater Safety Mechanism

The fixing heater safety circuit is part of the DC controller PCB, and is used to monitor the fixing temperature for an error at all times. If the output voltage for the main thermistor or the sub thermistor reaches about 0.37 V or lower (about 310°C/590°F), the relay will be turned off regardless of the state of the relay drive signal (RLYD) from the CPU to shut the power to the fixing heater.

If the temperature of the fixing heater increases abnormally, on the other hand, to exceed about 230°C/446°F, the thermal fuse will melt to cut the power to the fixing heater.

6.2.4 Detecting a Fault in the Fixing Assembly

The CPU on the DC controller PCB will identify a fault in the fixing assembly if any of the following conditions (a through f) occurs; as a result,

- it will cut the power to the fixing heater.
- it will cause the relay drive signal (RYLD) to go '1' to turn off the relay and, at the same time, will communicate the presence of a fault to the image processor PCB.

COPYRIGHT © 2001 CANON INC.

a. Overheating 1 (all conditions)

The CPU will identify overheating 1 if the main thermistor detects 230°C/446°F for 1 sec or more continuously.

b. Start-Up Error 1 (start-up)

The CPU will identify start-up error 1 if a level of temperature lower than 120°C/248°F is detected for 1 sec or more continuously 10 sec after the heater is supplied with power.

c. Start-Up Error 2 (startup/paper passage)

The CPU will identify start-up error 2 if a level of temperature 15°C/59°F lower than the paper passage temperature control target is not detected at all 75 sec after the heater is supplied with power.

d. Temperature Control Low Temperature Error (paper passage/sheet-to-sheet/rest heating/temperature control)

The CPU will identify a temperature control low condition error if a level of temperature lower than 120°C/248°F is detected for 1 sec or more continuously in paper passage, sheet-to-sheet, rest heating, or temperature control state.

e. Main thermistor Open Circuit (all conditions)

The CPU will identify main thermistor open circuit if the A/D conversion value of the output voltage from the main thermistor is in excesss of a specific value for 1 sec or more.

f. Overheating 2 (all conditions)

The CPU will identify overheating 2 if the sub thermistor detects 300°C/572°F or higher for 0.2 sec over more continuously.

g. Sub Thermistor Error Low Temperature 1 (warm-up)

The CPU will identify sub thermistor error low temperature 1 if the temperature reading is lower than 75°C/167°F for 1 sec or more 10 sec after the heater is first supplied with power.

h. Sub Thermistor Error Low Temperature 2 (cool-down)

The CPU will identify sub thermistor error low temperature 2 if all the following conditions exit when the heater is off after printing ends and the trailing edge of the paper moves past the delivery sensor.

- the thermistor reading is lower than 75°C/167°F when the heater is off.
- printing has not been cancelled in the middle.
- no error has occurred during printing.
- the thermistor reading is lower than 75°C/167°F before the trailing edge of the paper moves past the delivery sensor.

 COPYRIGHT © 2001 CANON INC.

7 Power Supply System

7.1 Low Voltage Circuit

7.1.1 Low Voltage Power Supply Circuit

The machine's DC power supply is generated by the power supply PCB.

The AC power arriving at the power supply PCB is converted into the following for supply to loads: +3.3 VDC, +3.3 VSDC, +5 VDC, +5 VSDC, +12 VDC, +24 VDC.

See the following for an outline of the DC power supply:

Output voltage	Output voltage value
+3.3V	+3.4V ± 3%
+3.3VS*1	+3.4V ± 3%
+5.1V	+5.1V ± 3%
+5.1VS*1	+5.1V ± 3%
+12V	+12V ± 3%
+24V	+24V ± 3%

*1: Also supplied during ESS mode.

T04-701-01

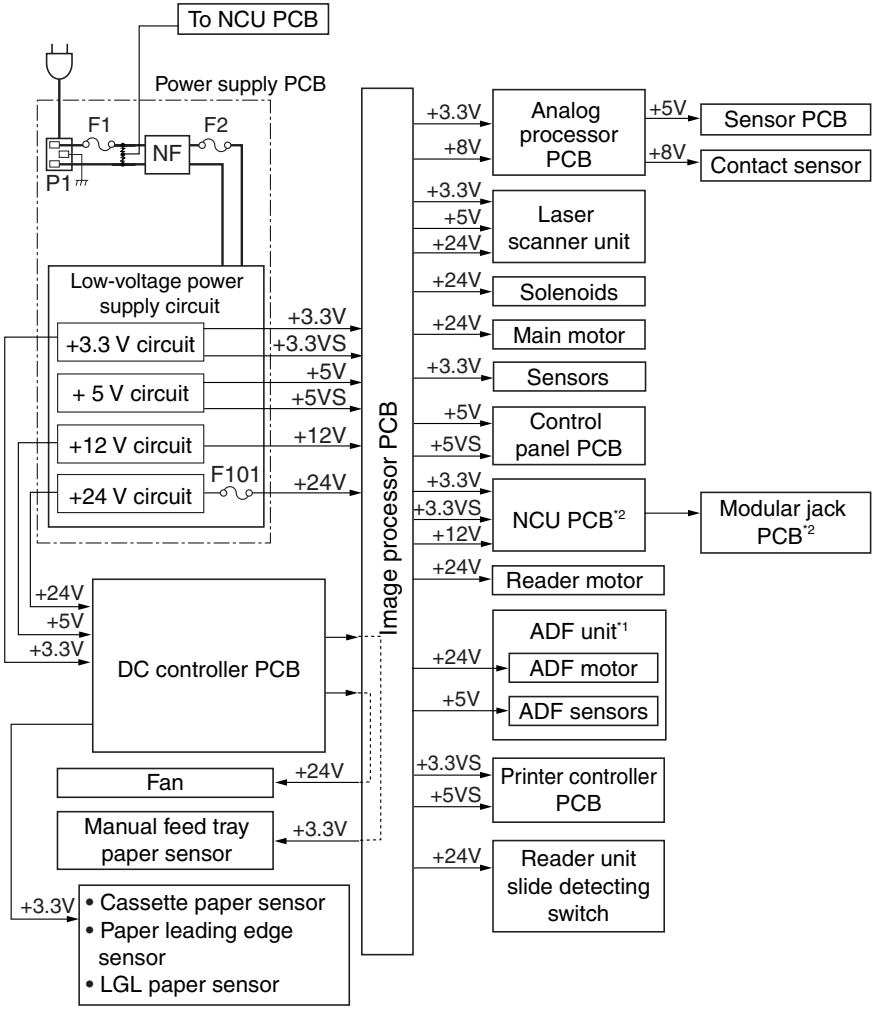

*1 : Only if equipped with ADF functions.
*2 : Only if equipped with fax functions.

F04-701-01

 COPYRIGHT © 2001 CANON INC.

7.1.2 Protective Functions

The power supply PCB is equipped with an over-current/over-voltage protection mechanism to prevent damage to the power circuit in the event of an over-current or over-voltage, as caused by a short circuit or the like on the load side. If the over-current/over-voltage protective mechanism has gone ON, disconnect the power cord, and correct the fault; then, connect the power cord once again to reset the machine. If short circuiting and resetting are repeated, the internal fuse (F1, F2, F101) can melt.

7.2 High-Voltage Power Supply Circuit

The high voltage output circuit is built into the DC controller PCB.

The CPU on the DC controller PCB sends instructions for the generation of the following high voltages at specific timing:

- primary charging roller bias (AC voltage + DC negative voltage)
- developing bias (AC voltage + DC negative voltage)
- transfer charging roller bias (DC positive voltage or DC negative voltage)

7.3 Controlling the ESS Mechanism

7.3.1 Outline

The machine is equipped with an ESS mechanism to limit the consumption of power in standby as much as possible. The ESS function is controlled by the image processor PCB, and the machine shifts to ESS mode when the Energy Saver key in the control panel is pressed or the machine remains in standby state for a specific period of time.

The standby period after which the ESS mode is started is set in user mode: 3 to 30 min (factory default: 5 min).

7.3.2 Operation

While the machine remains in ESS mode, all in the control panel except the LED indicator of the Energy Saver key will remain OFF. The machine will not shift to ESS mode under any of the following conditions:

- The shift to ESS mode is not enabled in user mode.
- A jam or a service error occurred, and the Alarm lamp is ON. (In the case of the absence of toner or paper, the machine shifts to ESS mode in the absence of paper.)
- The image memory contains image data.*1

While the machine is in ESS mode, it will shift out of the state in response to a press on the Energy Saver key; in addition, it will automatically shift out of the state under any of the following conditions:

- Print data arrives from the PC.
- A fax arrives.*1
- Off-hook state is detected.*1
- A report output time occurs.*1
- A timer call time occurs.*1

*1: Only if equipped with fax functions.

8 Others

8.1 Fan

8.1.1 Outline

The machine is equipped with a single fan at the rear of the delivery assembly to cool the laser scanner unit, to discharge heat from around the fixing assembly, to cool the elements of the PCBs, and to discharge ozone.

The fan is controlled by the CPU on the DC controller PCB for the following:

- full-speed rotation while the main motor is in operation.
- full-speed rotation for 30 sec and half-speed rotation for 60 sec after the main motor stops.
- full-speed rotation for 30 sec and half-speed rotation for 60 sec during WAIT.

The CPU on the DC controller PCB generates the fan drive signal (FANON) based on the state of the fan stop signal (FANSTOP; 0: reset, 1: rotate) and the full-speed/half-speed switch signal (FANHALF; 0: half-speed, 1: full-speed) to control the fan rotation to any of three: rest, half-speed, full-speed.

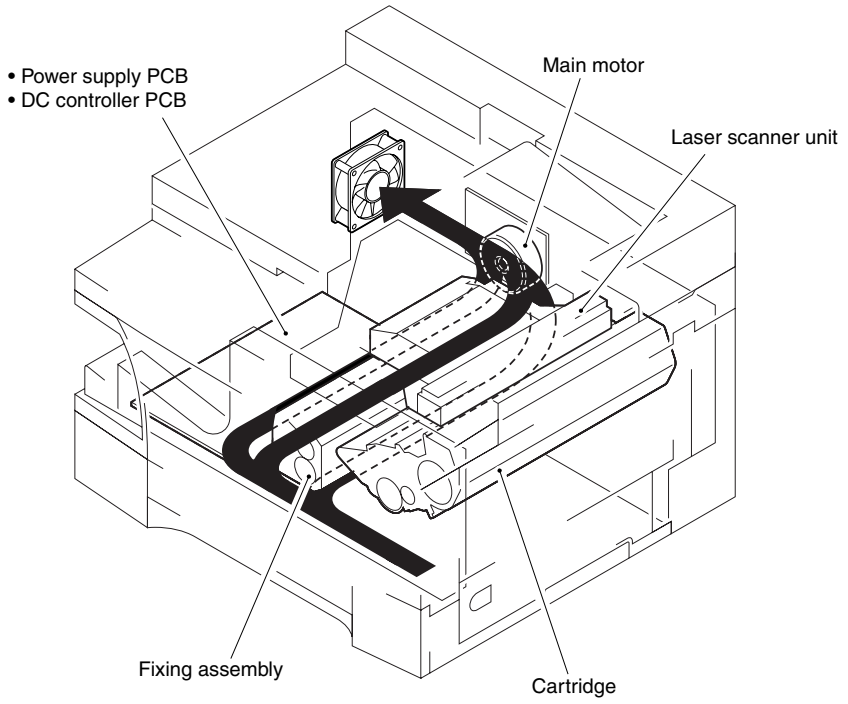

F04-801-01

 COPYRIGHT © 2001 CANON INC.

8.2 Back-Up Batteries

8.2.1 Back-Up Function

8.2.1.1 Outline

The machine's image processor PCB is equipped with a lithium battery (BAT1) and a vanadium lithium secondary battery (BAT2) for back-up of the data in the SRAM and the SDARM in consideration of a power outage or when the power is turned off.



The lithium battery (BAT1) and the vanadium lithium secondary battery (BAT2) contain combustible material (lithium, organic solvent), and can burst or burn in flames if thrown into fire.
Take full care in handling the batteries, as taking them apart can cause the organic solvent to leak to damage the skin. To dispose, be sure to separate them from other items and observe appropriate rules.

8.2.1.2 Lithium Battery (BAT1)

The data backed up in the SRAM by the lithium battery (BAT1) contains user data for fax functions, communications control data, and service mode settings.

Battery life: about 5 yr

The LCD will indicate 'DATA ERROR' when the power is tuned on after the lithium battery (BAT1) has reached the end of its life. If such a condition has occurred, be sure to replace the image processor PCB according to the instructions given in 1.4.1 of Chapter 7.



If you disconnect the jumper plug (JP1) of the image processor PCB and turn off the power, all control data will be reset to default settings. Do not disconnect the jumper plug (JP1) to prevent the loss of data.



The pin of the jumper plug (JP1) is displaced on the image processor PCB available as a service part so as to prevent exhaustion of the lithium battery (BAT1).

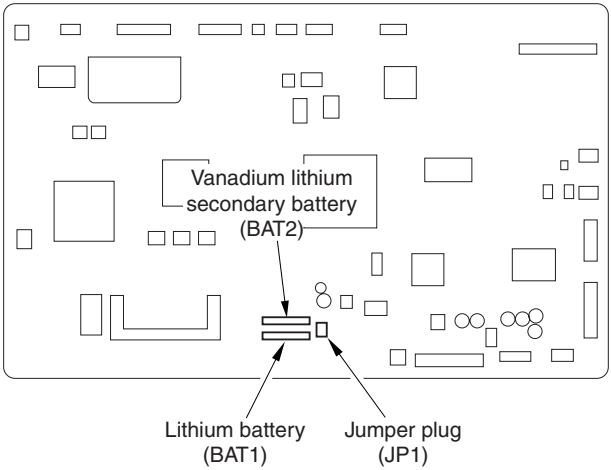

F04-802-01

 COPYRIGHT © 2001 CANON INC.

8.2.1.3 Vanadium Lithium Secondary Battery (BAT2)

The data backed up by the vanadium lithium secondary battery (BAT2) is image data used for fax transmission/reception, and it does not include the image data for memory copying.

Back-up time: about 2 hr (assuming that the machine is kept ON for 5 day or more under normal temperature/pressure conditions)

Battery life: about 5 yr or after repeating charging and discharging 40 times at 100%

If the backup data cannot be stored longer than half the indicated period (even after the machine has been powered for 5 day or longer under normal temperature and atmospheric conditions), suspect that the battery has reached the end of its life.

If the foregoing back-up time is exceeded, the image data stored in SDRAM will be lost. To prevent loss of image data for service work or relocation, be sure to print out the image data stored in SDRAM before starting the work.

Memo

Memory Clear List

If the memory clear list is automatically printed when the machine is turned on, the image data indicated on the list is the data that was lost without back-up. After the list is printed, the image data storage and the control information will automatically be deleted. The following is a sample of the memory clear list:

07/30/2001 17:52 FAX 001

****
*** MEMORY CLEAR REPORT ***
****

MEMORY FILES DELETED

TX/RX NO	MODE	DESTINATION TEL/ID	PGS.	SET TIME	ST. TIME
0002	DELAYED TX		1	07/30 13:51	13:59
0002	DELAYED TX		1	07/30 13:51	13:51
0002	MEMORY RX		1	07/30 13:53	-----
0002	MEMORY RX		1	07/30 13:54	-----

F04-802-02

8.2.2 Back-Up Data

8.2.2.1 Types of Data

The types of data backed up by the data back-up lithium batteries (BAT1, BAT2) on the image processor PCB are as follows: a, b, and c are stored in the SRAM (backed up by BAT1), while d is the data stored in the SDRAM (backed up by BAT2).

a. User Data

Item		Description
register/set	1. data register	(various settings of reception/transmission mode)
	2. telephone number register	(one-touch dial, etc)

T04-802-01

b. Service Mode Data

Item		Description
#1.	SSSW	error control, echo remedy, etc.
#2.	MENU	NL equalizer, transmission level, etc.
#3.	NUMERIC Param	FAX/TEL switch parameter, etc.
#4A.	SPECIAL	not used normally
#4B.	NCU	not used normally
#4C.	ISDN	not used normally
#5.	TYPE	not used normally
#6.	SCANNER	image position adjustment, etc.
#7.	PRINTER	reduction, etc.
#8.	PDL	malfunction
#9.	COUNTER	reading counter, print counter, etc.
#10.	REPORT	system dump list, key history report output, etc.
#11.	DOWN LOAD	malfunction
#12.	CLEAR	various data initialization, etc.
#13.	ROM	version No., checksum, etc.
#14.	CS SET	malfunction

T04-802-02

 COPYRIGHT © 2001 CANON INC.

c. Control Data

Item	Description
communication control record	most recent 20 communications (reception/transmission)
system dump record	past communications state, error communication history, etc.

T04-802-03

d. Data Backed Up by BAT2

Item	Description
Transmission image	transmission (memory transmission, broadcast) timer transmission timer broadcast
reception image	memory reception

T04-802-04

COPYRIGHT © 2001 CANON INC.

8.2.2.2 Printing the Backup Data List

The data baked up in control memory may be printed in the form of a list.



If you are replacing the image processor PCB, be sure to print out the list in advance. For the method of printing, see 2.2 or 3.21 of Chapter 2.

a. User Data

Item	List
register mode	user data list
dial register mode	1-touch spd dial list
	1-touch spd dail list (detail)
	coded speed dial list
	coded speed dial list (detail)
	group dial list

T04-802-05

b. Service Mode Data

Item	List
service mode data	system data list

T04-802-06

c. Control Data

Item	List
communication control record	activity report
system dump record	system dump list

T04-802-07

 COPYRIGHT © 2001 CANON INC.

9 ADF (if equipped with ADF functions)

9.1 Outline

The ADF is a feeding device used exclusively for stream reading, and its series of operations (original pickup, feeding, delivery) is performed using the drive of the ADF motor (M3).

An original picked from the original placement assembly is controlled so that its movement will match the read start timing of the host machine's contact sensor. Then, the original is moved as far as stream reading position, read by the contact sensor (for collection of analog image data), and sent to the delivery assembly.

The ADF has 3 sensors to monitor the state of the original. The names and the functions of the sensors are as follows:

Symbol	Sensor	Function
PS6	Original sensor	Detects the presence/absence of an original in the original placement assembly.
PS7	Registration sensor	Detects the timing at which the leading edge of an original is made to arch at the ADF registration roller.
PS8	Original delivery sensor	Monitors the movement of the original in the original delivery assembly.

T04-901-01

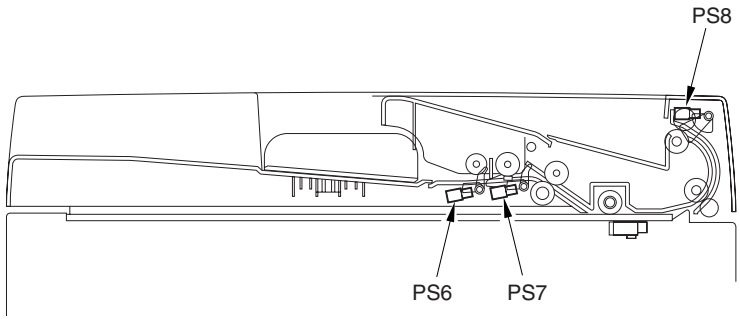

F04-901-01

9.2 Picking Up and Moving Originals

9.2.1 Outline

The ADF picks up and moves originals under the control of the CPU on the host machine's image processor PCB and using the drive of the ADF motor (M3).

When the host machine's Start key is pressed, with an original placed in the original tray, the ADF motor starts to rotate counterclockwise and the pickup roller moves down to move up the original stopper. At the same time, the original pickup roller and the original separation roller start to rotate.

When the original pickup roller and the original separation roller rotate, a single original is separated by the work of the original separation roller and the original separation pad, and its leading edge is detected by the registration sensor. The original is then sent as far as the ADF registration roller; a specific period of time after the registration sensor detects the leading edge, the ADF motor starts to rotate clockwise to move up the original pickup roller and move down the original stopper.

The ADF motor rotates clockwise to rotate the ADF registration roller, white roller, original feed roller, and original delivery roller to move and deliver the original.

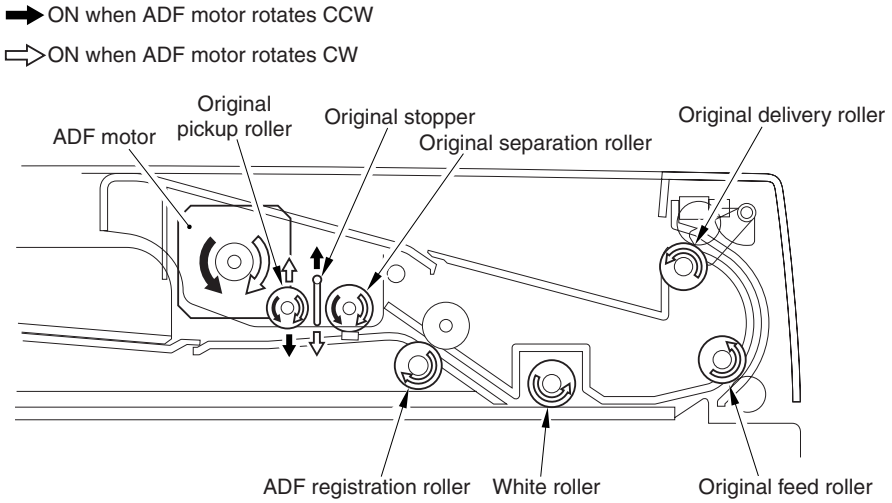

F04-902-01

 COPYRIGHT © 2001 CANON INC.

9.2.2 Moving Down the Original Pickup Roller and Moving Up the Original Stopper

The original pickup roller is kept in up position during standby, thereby ensuring a gap used to accommodate a stack of originals. The original stopper is kept in down position during standby to prevent the original from sliding too far inside the machine when it is placed.

When the ADF motor (M3) rotates counterclockwise to start original pickup operation, the drive of the timing belt moves down the original pickup roller and, at the same time, the original stopper starts to move up, causing an original to be picked up and sent inside the machine.

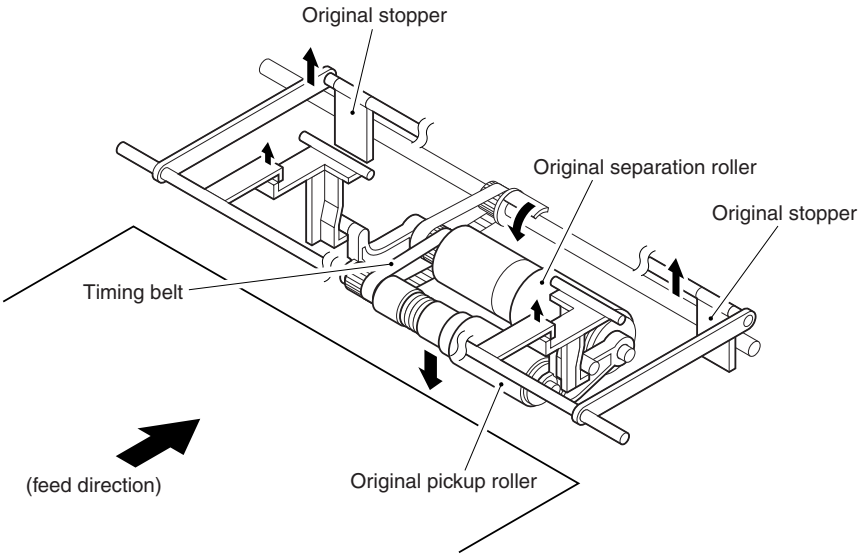

F04-902-02

9.3 Detecting an Original Jam

9.3.1 Outline

The ADF is equipped with 2 sensors to detect original jams. The CPU on the host machine's image processor PCB checks the presence of paper over the sensor at such times as stored in advance; if it identifies a jam, it turns off the ADF motor (M3) and indicates a jam message on the LCD.

9.3.2 Types of Jams

The machine identifies a jam as one of 6 types. When a jam has occurred, be sure to remove it, open and then close the ADF, place the original once again, and start over.

a. Registration Sensor Delay Jam

After separation is started, the registration sensor (PS7) does not detect the leading edge of paper within a specific period of time.

b. Registration Sensor Stationary Jam

After the registration sensor (PS7) detects the leading edge of paper, it detects the trailing edge of paper before a specific period of time.

d. Original Delivery Sensor Delay Jam

After the registration sensor (PS7) detects the leading edge of paper, the original delivery sensor (PS8) does not detect the leading edge of paper within a specific period of time.

e. Delivery Sensor Stationary Jam

After the registration sensor (PS7) detects the trailing edge of paper, the original delivery sensor (PS8) does not detect the trailing edge of paper within a specific period of time.

f. ADF Open Jam

While an original is being moved, the host machine's ADF (copyboard cover) open/close sensor (PS2) detects a condition indicating that the ADF is open.

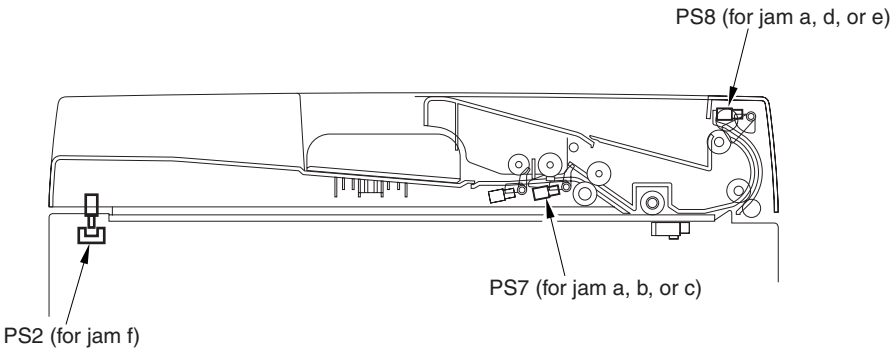

F04-903-01

 COPYRIGHT © 2001 CANON INC.

CHAPTER 5

MECHANICAL SYSTEM

COPYRIGHT © 2001 CANON INC.

1 Points to Note When Disassembling/Assembling the Machine

The mechanical characteristics and sequences of operation are described together with explanations of how the machine may be disassembled and assembled; keep the following in mind when disassembling/assembling the machine:

1. ⚠ Disconnect the power plug and the modular cable in advance for safety. Be sure also to disconnect all cables used to connector the machine to the PC.
2. Reverse the steps used to disassemble the machine when assembling the machine, i.e., unless otherwise stated.
3. Identify the screws by type (length, diameter) and location.
4. The mounting screws for the grounding wire and varistors come with a toothed washer to ensure electrical continuity. Be sure not to leave out the washers.
5. Do not, as a rule, operate the machine with any of its parts removed.
6. Touch a metal portion of the machine before handling PCBs and contact sensor, thereby protecting PCBs against static damage.

COPYRIGHT © 2001 CANON INC.

7. Take care not to touch the light guide assembly of the contact sensor.
8. Take care not to lose the spacer of the contact sensor during the work. Moreover, be sure to fit it correctly at the end of the work.

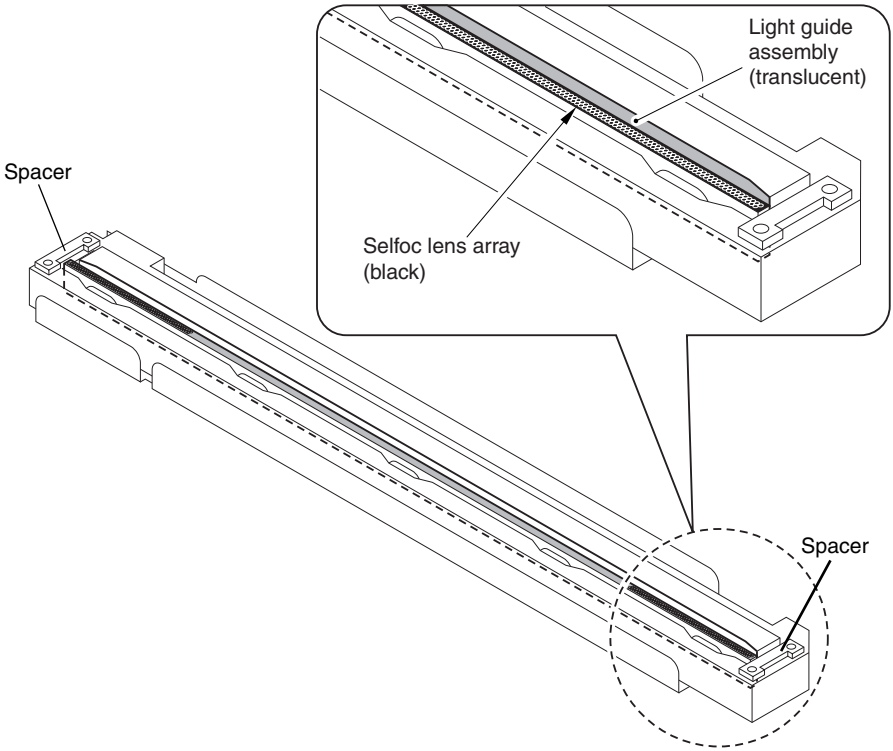

F05-101-01

9. ⚠ Do not throw the cartridge into fire; it may explode.
10. As needed, take out the cartridge, and keep it in a protective bag
11. Keep the fixing screws separately; they tend to fall inside the machine.
12. If you have removed the read unit, check to make sure that the reader unit moves. smoothly.

 COPYRIGHT © 2001 CANON INC.

2 Disassembly

2.1 Externals/Auxiliary System

2.1.1 External Covers

[1] ADF (copyboard cover)
[2] Cartridge cover
[3] Front cover
[4] Delivery cover
[5] Delivery upper cover
[6] Delivery rear cover
[7] Left cover

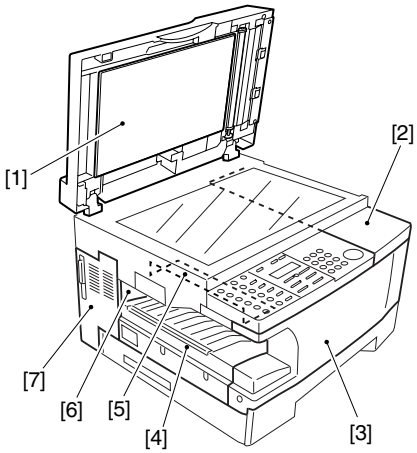

F05-201-01

[8] Right door
[9] Manual feed tray
[10] Rear cover

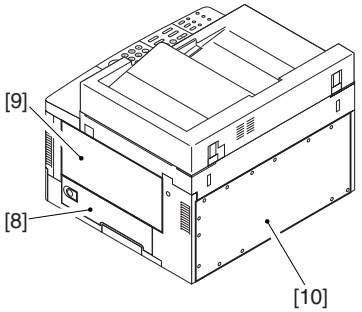

F05-201-02

COPYRIGHT © 2001 CANON INC.

2.1.1.1 Removing the Left Cover/Rear Cover

1) Remove the screw [1], and detach the left cover [2].
2) Remove the 13 screws [3], and detach the rear cover [4].

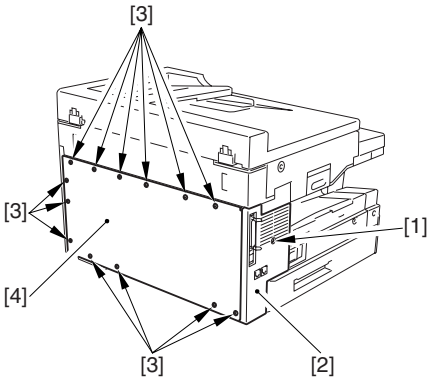

F05-201-03

2.1.1.2 Removing the Right Cover

1) Slide the reader unit, and open the cartridge cover.
2) Open the manual feed tray.
3) Remove the 2 screws [1], and detach the right cover [2].

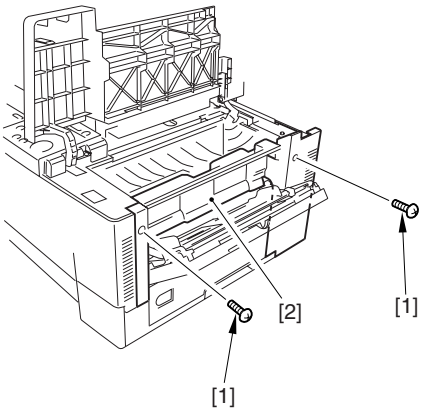

F05-201-04

 COPYRIGHT © 2001 CANON INC.

2.1.1.3 Removing the Front Cover

1) Remove the right cover. (See 2.1.1.2)
2) Remove the control panel. (See 2.1.2)
3) Remove the cassette.
4) Remove the screw [1].
5) Free the 5 hooks [2], and detach the front cover [3].

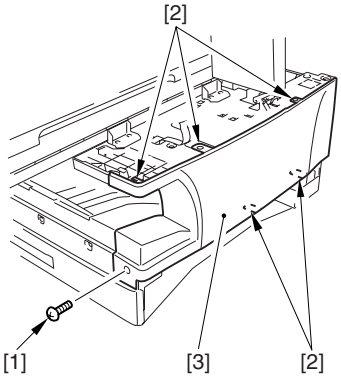

F05-201-05

2.1.1.4 Removing the Delivery Cover

1) Remove the left cover. (See 2.1.1.1)
2) Remove the 3 screws [1], and detach the delivery cover [2].

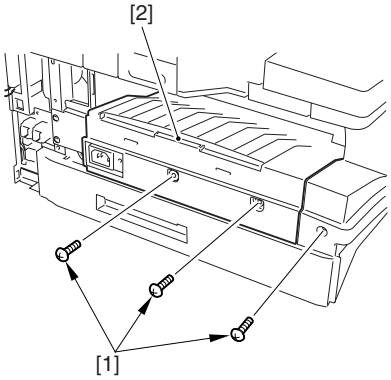

F05-201-06

2.1.1.5 Removing the Delivery Upper Cover/Delivery Rear Cover

1) Remove the delivery cover. (See 2.1.1.4)
2) Slide the reader unit.
3) Remove the screw [1], and detach the delivery upper cover [2].
4) Remove the delivery rear cover [3].

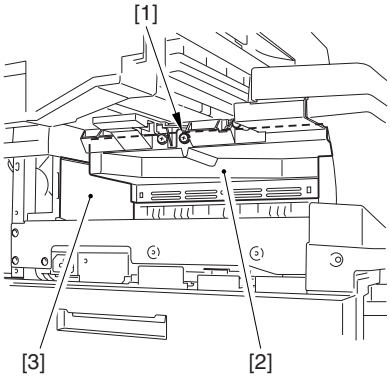

F05-201-07

2.1.1.6 Removing the Cartridge Cover

1) Remove the reader unit. (See 2.3.3)
2) Free the hook [1].
3) Remove the 2 ribs [2], and detach the cartridge cover [3].

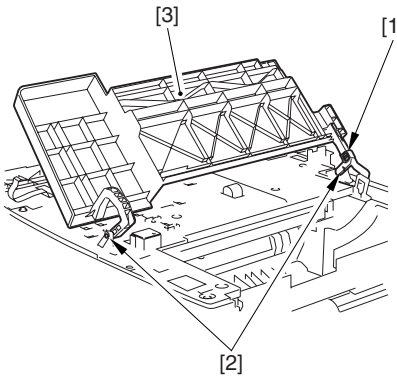

F05-201-08

 COPYRIGHT © 2001 CANON INC.

2.1.1.7 Removing the Upper Cover

1) Remove the front cover. (See 2.1.1.3)
2) Remove the cartridge cover. (See 2.1.1.6)
3) Disconnect the 2 connectors [1].

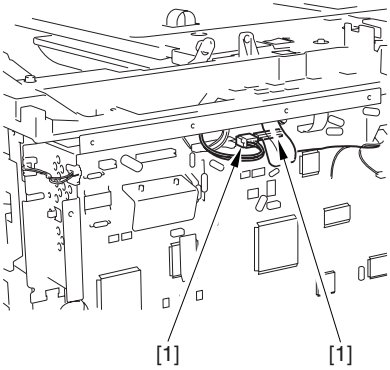

F05-201-09

4) Remove the 11 screws [2], and detach the plate [3] and the upper cover [4].

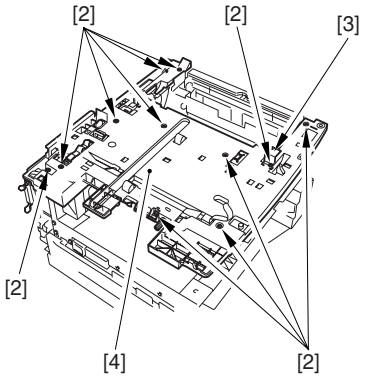

F05-201-10

2.1.1.8 Removing the Right Door

1) Remove the manual feed tray (lower). (See 2.6.4)
2) Remove the screw [1], and detach the right door [2].

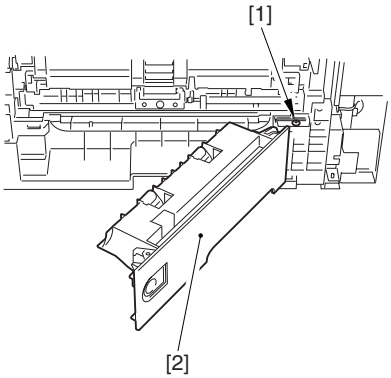

F05-201-11

2.1.2 Removing the Control Panel

1) Slide the reader unit, and open the cartridge cover.
2) Remove the screw [1], and slide the control panel [2] to the left.

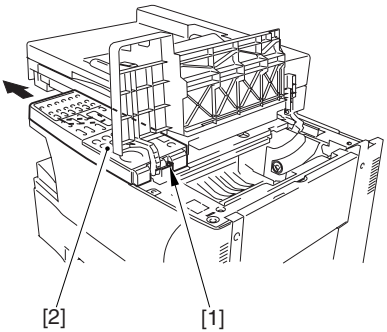

F05-201-12

 COPYRIGHT © 2001 CANON INC.

3) Close the cartridge cover.
4) Disconnect the connector [3], and detach the control panel [2].

To prevent damage to the flexible cable, be sure to lift the control panel slightly as shown when disconnecting the connector [3].

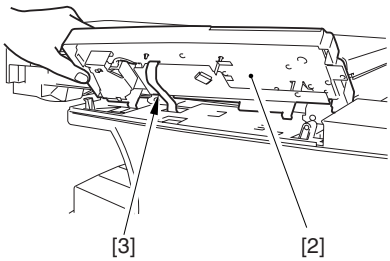

F05-201-13

Memo

To mount the control panel, turn it over as shown in F05-201-14, and connect the connector [4]; then, turn back over [5] the control panel to facilitate the work.

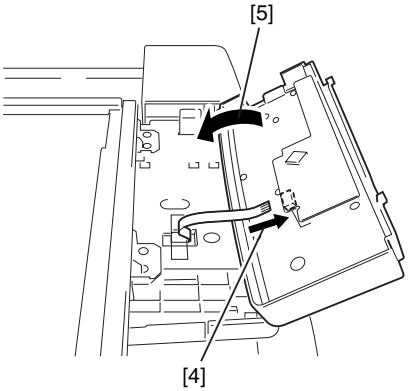

F05-201-14

2.1.3 Removing the Copyboard Glass

1) Open the ADF (copyboard cover).
2) Remove the 2 screws [1], and detach the copyboard glass retainer [2].
3) Remove the copyboard glass [3].

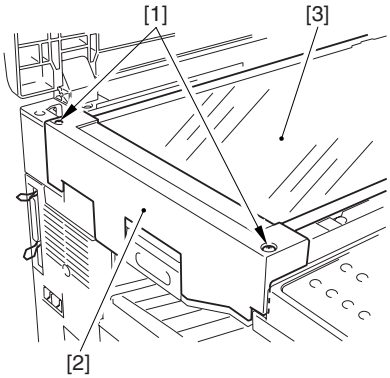

F05-201-15

2.1.4 Removing the Main Motor Unit

1) Remove the upper cover. (See 2.1.1.7)
2) Remove the image processor PCB. (See 2.2.1)
3) Remove the NCU PCB. (if equipped with fax functions; See 2.2.5)
4) Remove the modular jack PCB. (if equipped with fax functions; See 2.2.6)
5) Remove the plastic film [1].

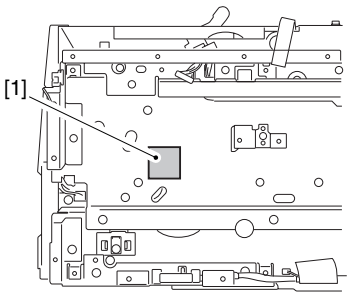

F05-201-16

 COPYRIGHT © 2001 CANON INC.

6) Pick the hook [2] with long nose pliers or the like, and detach the registration roller gear [3].

Take care not to break the claw when removing the gear.

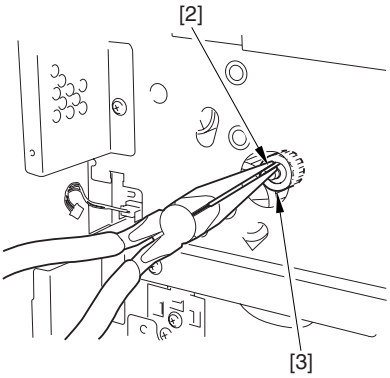

F05-201-17

7) Remove the 6 screws [4], and detach the plate [5].

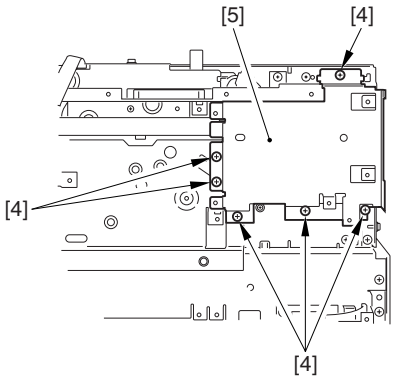

F05-201-18

8) Remove the 5 screws [6], and detach the plate [7].

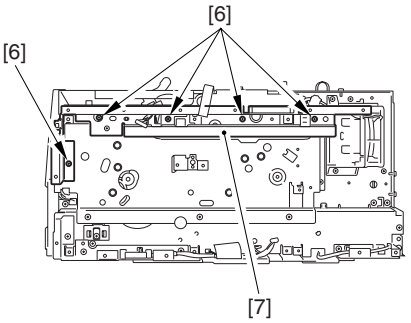

F05-201-19

9) Free the 3 hooks [8].
10) Disconnect the 3 connectors [9], and detach the harness [10].

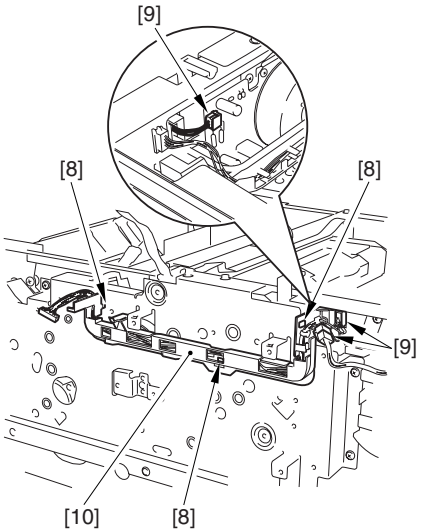

F05-201-20

 COPYRIGHT © 2001 CANON INC.

11) Remove the 7 screws [11], and detach the main motor unit [12].

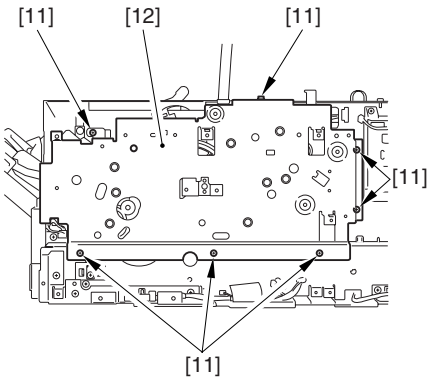

F05-201-21

2.1.5 Remove the Fan

1) Remove the upper cover (See 2.1.1.7)
2) Remove the printer controller PCB. (See 2.2.5)
3) Remove the NCU PCB. (if equipped with fax functions; See 2.2.6)
4) Remove the modular jack PCB. (if equipped with fax functions; See 2.2.7)
5) Remove the 6 screws [1], and detach the plate [2].

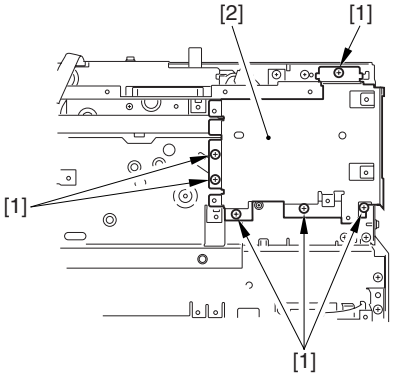

F05-201-22

6) Remove the 5 screws [3], and detach the image processor PCB base [4].

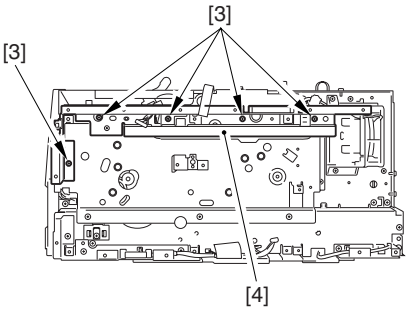

F05-201-23

 COPYRIGHT © 2001 CANON INC.

7) Disconnect the connector [5].
8) Remove the 2 screws [6], and detach the fan unit [7].
9) Remove the 2 screws [8], and detach the fan [9].

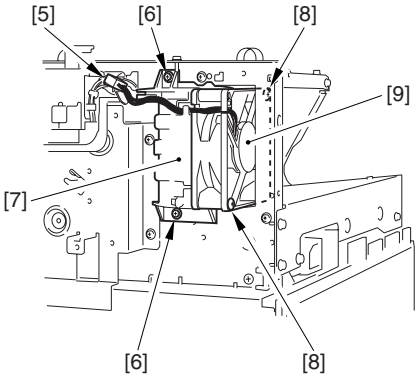

F05-201-24

When mounting the fan, pay attention to the direction of its current.

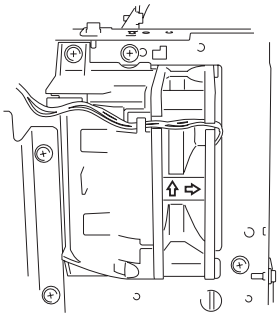

F05-201-25

2.1.6 Removing the Reader Unit Slide Detecting Switch

1) Remove the upper cover. (See 2.1.1.7)
2) Free the 2 hooks [1], and detach the reader unit slide detecting switch [2].

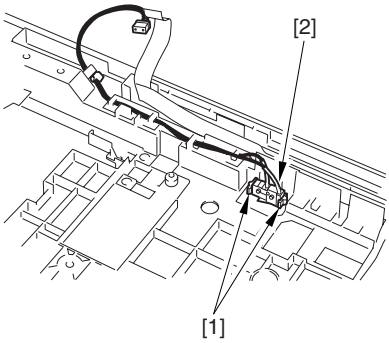

F05-201-26

 COPYRIGHT © 2001 CANON INC.

2.2 PCBs

2.2.1 Removing the Image Processor PCB

1) Remove the rear cover. (See 2.1.1.1)
2) Remove the printer controller PCB.(See 2.2.5)
3) Disconnect all connectors from the image processor PCB [1].
4) Remove the 6 screws [2], and detach the image processor PCB [1].

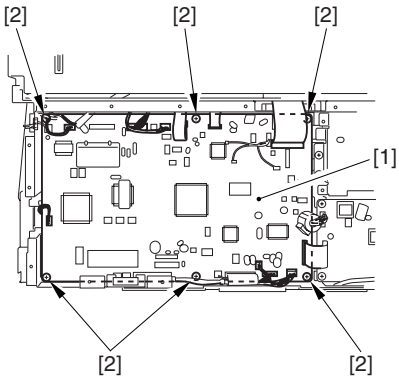

F05-202-01

2.2.2 Removing the Analog Processor PCB

1) Remove the copyboard glass. (See 2.1.3)
2) Move the contact sensor to the center.
3) Free the hook [1], and detach the cover [2].
4) Disconnect the 2 connectors [3].
5) Remove the 2 screws [4], and detach the grounding plate [5].

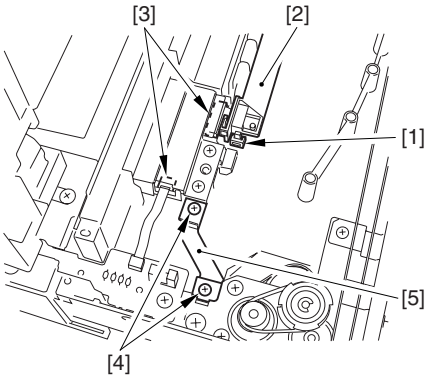

F05-202-02

6) Slide the reader unit.
7) Remove the screw [6] from under the reader unit.
8) Remove the 2 screws [7] from under the reader unit, and detach the cover [8].

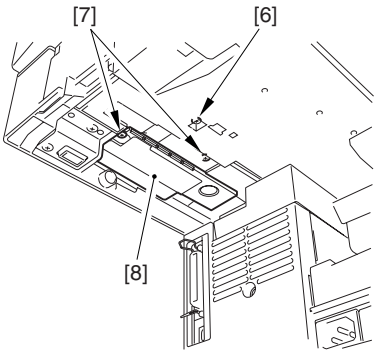

F05-202-03

9) Remove the grounding plate [9], and detach the analog processor PCB unit [10].

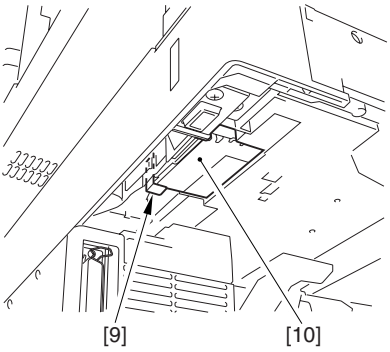

F05-202-04

 COPYRIGHT © 2001 CANON INC.

10) Disconnect the connector [11], and remove the 2 screws [12].

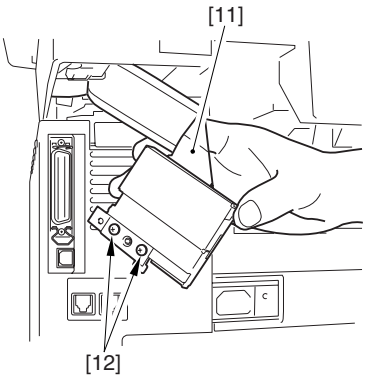

F05-202-05

11) Remove the cover [13], and detach the analog processor PCB [14].

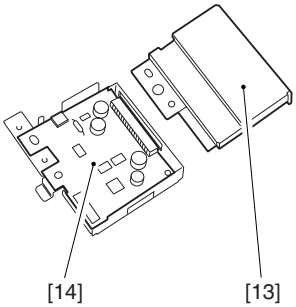

F05-202-06

COPYRIGHT © 2001 CANON INC.

2.2.3 Removing the Sensor PCB

1) Remove the ADF (copyboard cover). (ADF; See 2.8.1.1)
2) Remove the copyboard glass. (See 2.1.3)
3) Move the contact sensor to the center.
4) Remove the 2 screws [1], and detach the left upper cover [2].

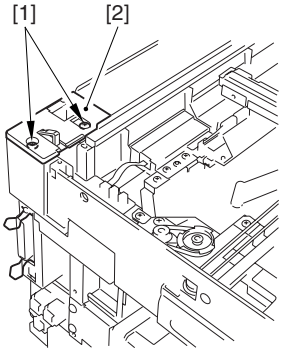

F05-202-07

5) Remove the sensor flag [3] and the spring [4].
6) Disconnect the connector [5].
7) Remove the 2 screws [6], and detach the sensor PCB [7].

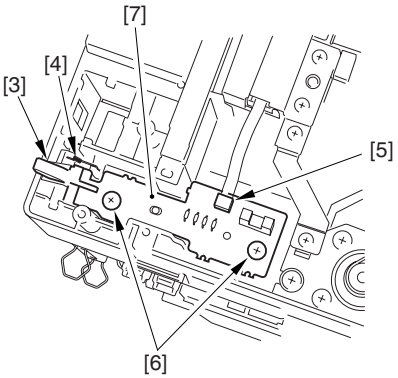

F05-202-08

 COPYRIGHT © 2001 CANON INC.

2.2.4 Removing the DC Controller PCB/Power Supply PCB

1) Remove the rear cover. (See 2.1.1.1)
2) Remove the delivery cover. (See 2.1.1.4)
3) Disconnect the 4 connectors [1] used to connect the image processor PCB and the power supply unit.
4) Disconnect the connector [2] used to connect the NCU PCB and the power supply unit.
5) Disconnect the connector [3], and free the harness [4] from the harness guide [5].

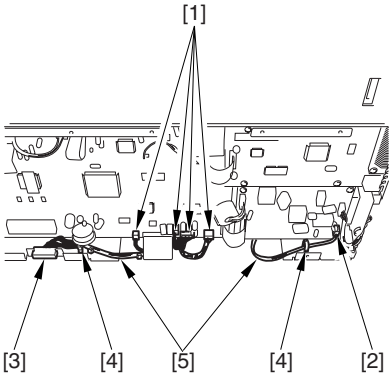

F05-202-09

6) Disconnect the 3 connectors [6].

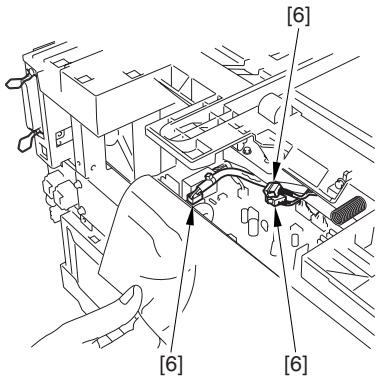

F05-202-10

7) Remove the ADF (copyboard cover). (ADF: See 2.8.1.1)
8) Remove the cassette.
9) Place the machine so that its pickup side is at the bottom.

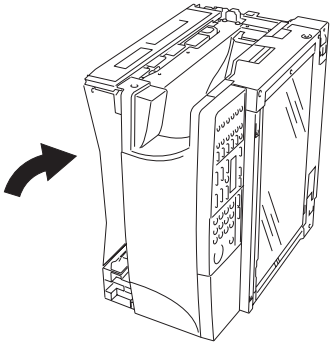

F05-202-11

10) Remove the 8 screws [7], and detach the bottom plate [8].

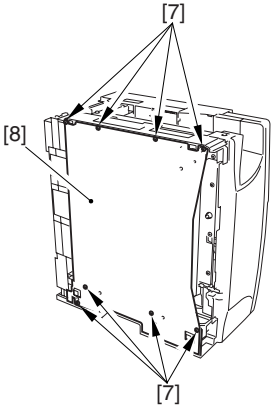

F05-202-12

 COPYRIGHT © 2001 CANON INC.

11) Remove the 2 screws [9], and detach the cassette rear cover [10].

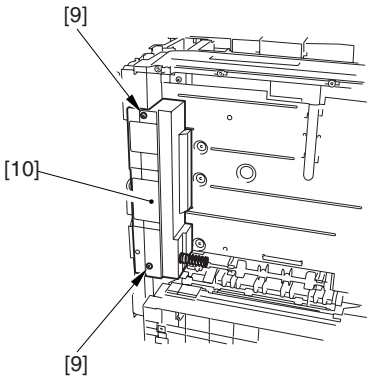

F05-202-13

12) Free the harness [11] from the harness guide [12].
13) Remove the 7 screws [13], and detach the power supply unit [14].

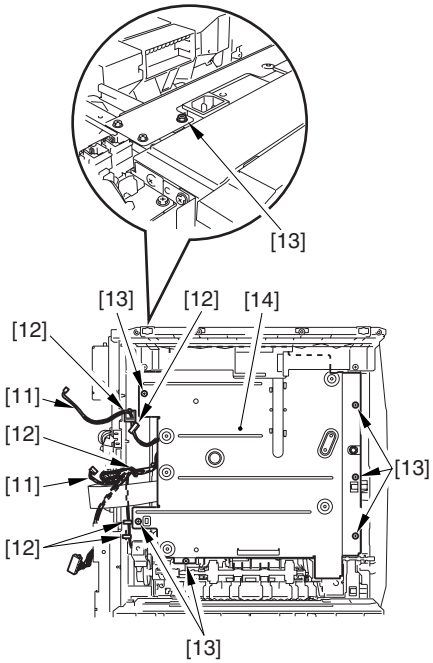

F05-202-14

14) Disconnect the 3 connectors [15].
15) Remove the 4 screws [16], and detach the DC controller PCB [17].
16) Remove the 5 screws [18], and detach the power supply PCB [19].

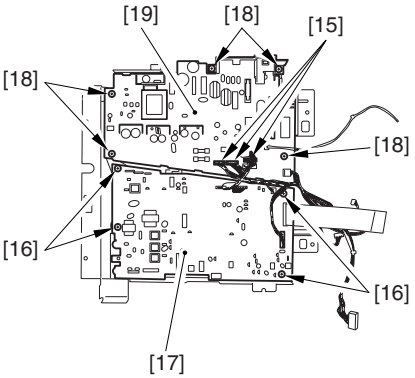

F05-202-15

When mounting the power supply unit, be sure not to leave out the sensor flag [20] of the LGL paper sensor from the rear of the sensor plate [21].

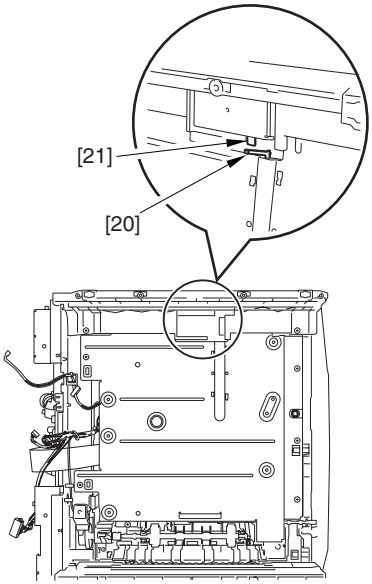

F05-202-16

 COPYRIGHT © 2001 CANON INC.

2.2.5 Removing the Printer Controller PCB

1) Remove the rear cover. (See 2.1.1.1)
2) Disconnect the connector [1].
3) Remove the 5 screws [2], and detach the printer controller PCB [3].

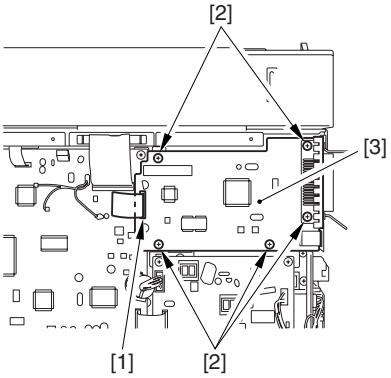

F05-202-17

2.2.6 Removing the NCU PCB (if equipped with fax functions)

1) Remove the rear cover. (See 2.1.1.1)
2) Disconnect all connectors form the NCU PCB.
3) Remove the 4 screws [2], and detach the NCU PCB [1].

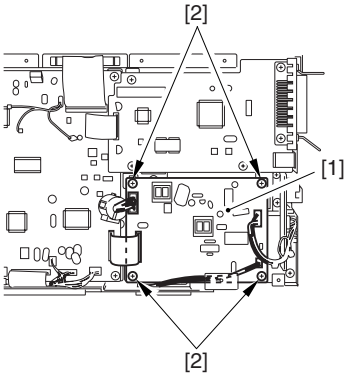

F05-202-18

2.2.7 Removing the Modular Jack PCB

1) Remove the rear cover. (See 2.1.1.1)
2) Disconnect the connector [1].
3) Remove the screw [2], and detach the modular jack PCB [3].

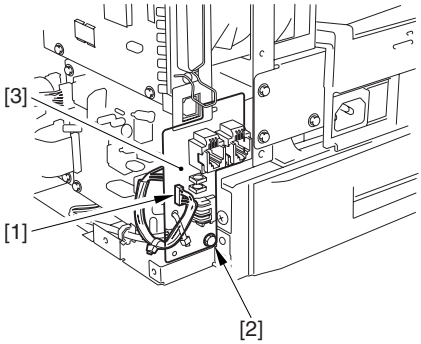

F05-202-19

 COPYRIGHT © 2001 CANON INC.

2.3 Original Reading/Processing System

2.3.1 Removing the Contact Sensor

1) Remove the copyboard glass. (See 2.1.3)
2) Remove the 2 spacer [1].

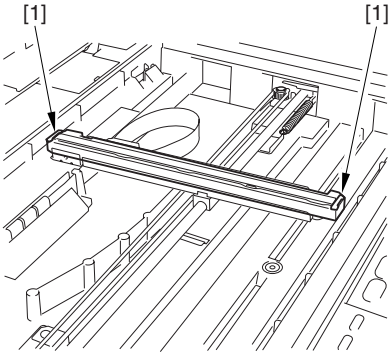

F05-203-01

3) Shift up the contact sensor [2], and disconnect the connector [3].
4) Remove the contact sensor [2].

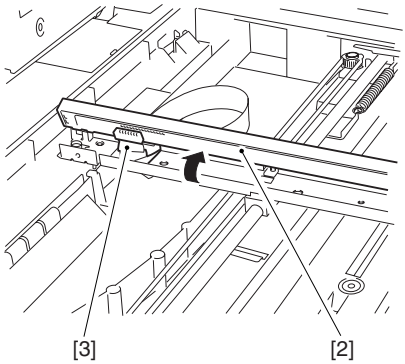

F05-203-02

2.3.2 Removing the Reader Motor Drive Unit

1) Remove the copyboard glass. (See 2.1.3)
2) Free the contact sensor [1] from the drive belt [2].

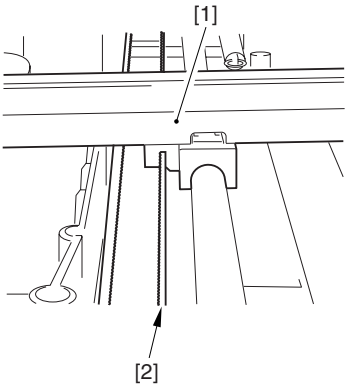

F05-203-03

3) Using a flat-blade screwdriver, remove the cover [3], and remove the screw [4].

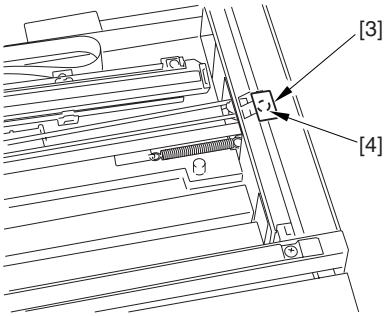

F05-203-04

 COPYRIGHT © 2001 CANON INC.

4) Slide the reader unit to the left.
5) Remove the 4 screws [5], and detach the 2 grounding plates [6].
6) Disconnect the connector [7].
7) While paying attention to the rib [8], lift the rear motor drive unit [9] toward the right to detach.

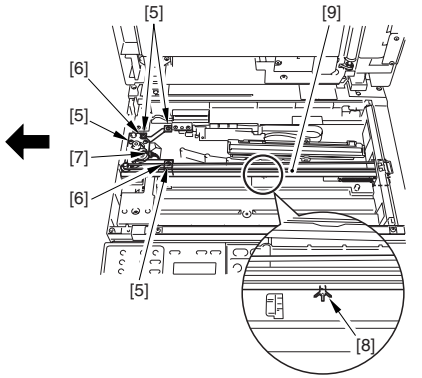

F05-203-05

2.3.3 Removing the Reader Unit

1) Remove the rear cover. (See 2.1.1.1)
2) Remove the ADF (copyboard cover). (ADF; See 2.8.1.1)
3) Disconnect the 2 connectors [1], and remove the harness retainer [2].

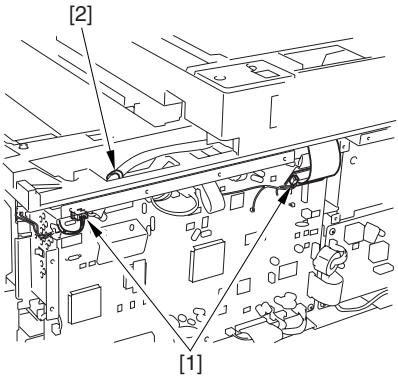

F05-203-06

4) Remove the control panel. (See 2.1.2)
5) Remove the 4 screws [3], and detach the 2 reader stoppers [4].

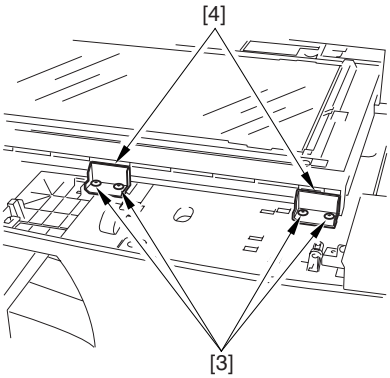

F05-203-07

 COPYRIGHT © 2001 CANON INC.

6) Slide the reader unit [5] as shown, and detach the reader unit [5] from the front side.

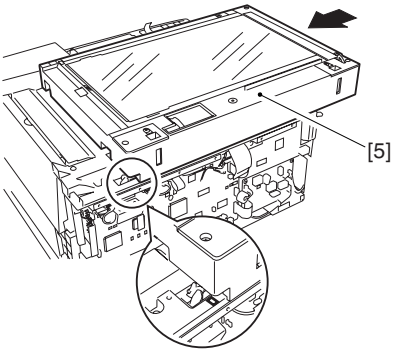

F05-203-08

2.4 Laser Exposure System

2.4.1 Removing the Laser Scanner Unit

The laser scanner unit cannot be adjusted in the field. Do not disassemble it.

1) Remove the upper cover. (See 2.1.1.7)
2) Disconnect the connector [1].

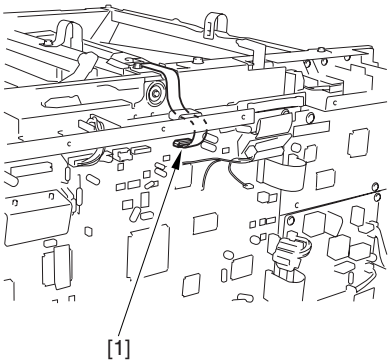

F05-204-01

3) Disconnect the 2 connectors [2].
4) Remove the 2 screws [3], and detach the plate [4].

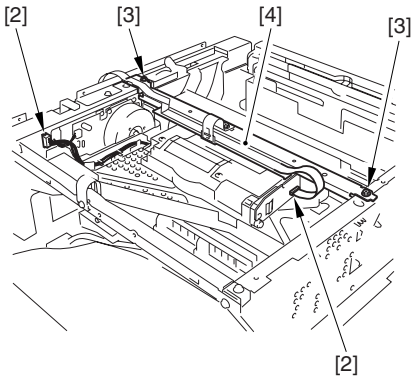

F05-204-02

 COPYRIGHT © 2001 CANON INC.

5) Remove the 4 screws [5], and detach the laser scanner unit [6].

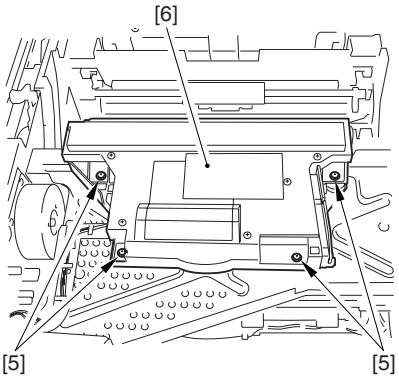

F05-204-03

2.5 Image Formation System

2.5.1 Removing the Transfer Charging Roller

1) Slide the reader unit, and open the cartridge cover.
2) Free the 2 hooks [1], and detach the transfer charging roller [2].

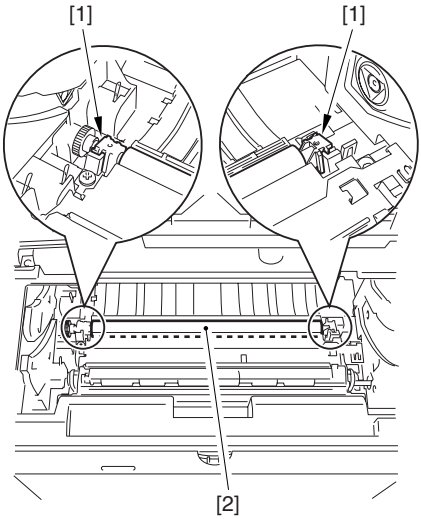

F05-205-01

 COPYRIGHT © 2001 CANON INC.

2.6 Pickup/Feeding System

2.6.1 Removing the Cassette Pickup Roller

1) Remove the ADF (copyboard cover). (ADF; See 2.8.1.1)
2) Remove the cassette.
3) Place the machine so that its pickup side is at the bottom.

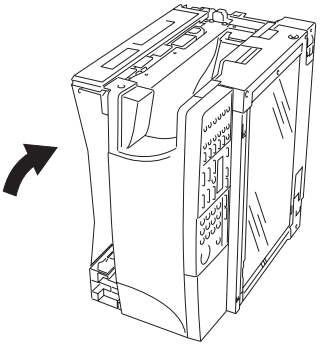

F05-206-01

4) Remove the 8 screws [1], and detach the bottom plate [2].

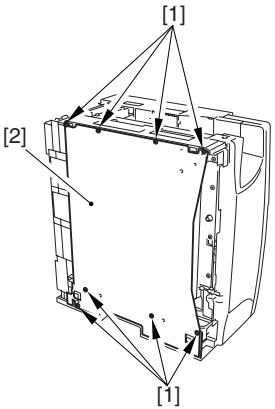

F05-206-02

COPYRIGHT © 2001 CANON INC.

5) Remove the spring [3], and detach the cassette pickup roller unit [4].

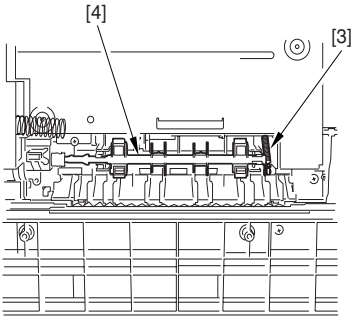

F05-206-03

6) Free the hook [5], and detach the cassette pickup roller [6].

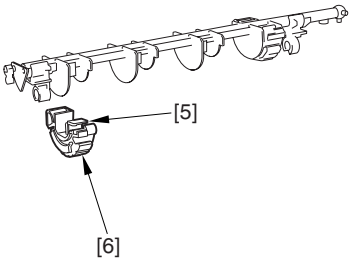

F05-206-04

 COPYRIGHT © 2001 CANON INC.

2.6.2 Removing the Cassette Pickup Solenoid

1) Remove the image processor PCB. (See 2.1.1)
2) Remove the ADF (copyboard cover). (ADF; See 2.8.1.1)
3) Remove the cassette.
4) Place the machine so that its pickup side is at the bottom.

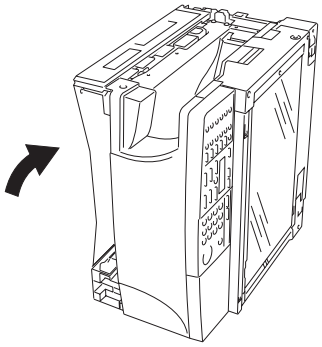

F05-206-05

5) Remove the 8 screws [1], and detach the bottom plate [2].

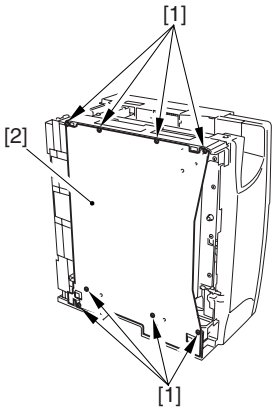

F05-206-06

COPYRIGHT © 2001 CANON INC.

6) Remove the 2 screws [3], and detach the cassette rear cover [4].

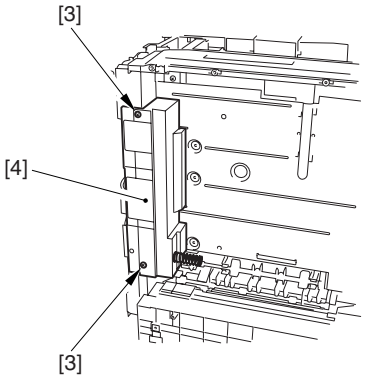

F05-206-07

7) Free the harness [5] from the harness guide [6].
8) Remove the screw [7], and detach the cassette pickup solenoid [8].

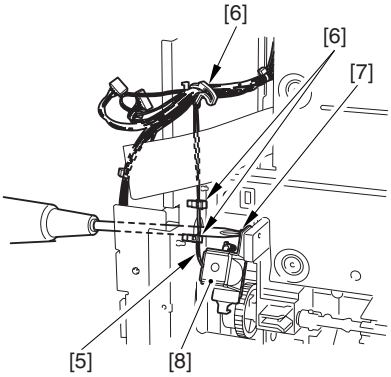

F05-206-08

 COPYRIGHT © 2001 CANON INC.

2.6.3 Removing the Manual Feed Tray (upper)

1) Remove the right cover. (See 2.1.1.2)
2) Remove the 4 ribs [1].
3) Remove the 2 springs [2], and slide the manual feed tray (upper) [3] to detach.

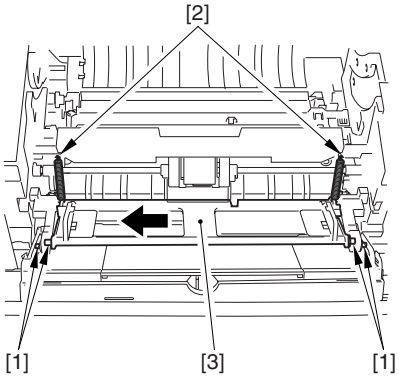

F05-206-09

2.6.4 Removing the Manual Feed Tray (lower)

1) Remove the right cover. (See 2.1.1.2)
2) Remove the 2 ribs [1], and slide the manual feed tray (lower) [2] to detach.

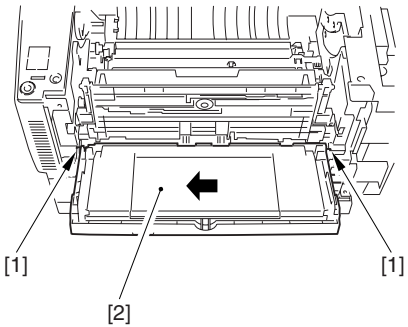

F05-206-10

2.6.5 Removing the Manual Feed Pickup Roller

1) Remove the right cover. (See 2.1.1.2)
2) Free the 2 hooks [1], and slide the 2 manual feed pickup roller retainers [2] to the left and right.

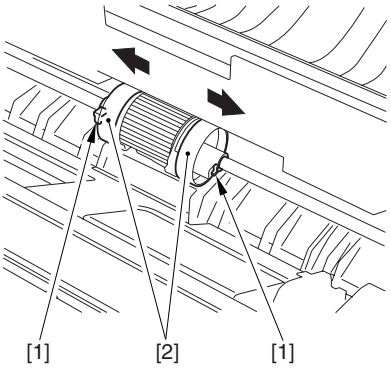

F05-206-11

3) Free the hook [3], and slide the manual feed pickup roller [4] to the right to detach.

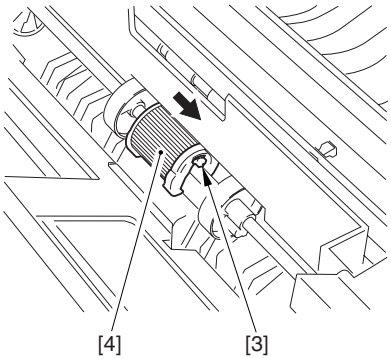

F05-206-12

 COPYRIGHT © 2001 CANON INC.

2.6.6 Removing the Separation Pad

1) Remove the manual feed tray (upper). (See 2.6.3)
2) Remove the manual feed tray (lower). (See 2.6.4)
3) Open the right door.
4) Remove the screw [1], and detach the separation pad [2].

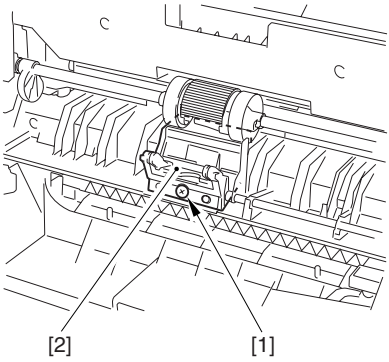

F05-206-13

2.6.7 Removing the Manual Feed Pickup Solenoid/Manual Feed Tray Paper Sensor

1) Remove the main motor unit. (See 2.1.4)
2) Remove the screw [1], and detach the manual feed pickup solenoid [2].
3) Free the 2 hooks [3], and detach the manual feed tray paper sensor [4].

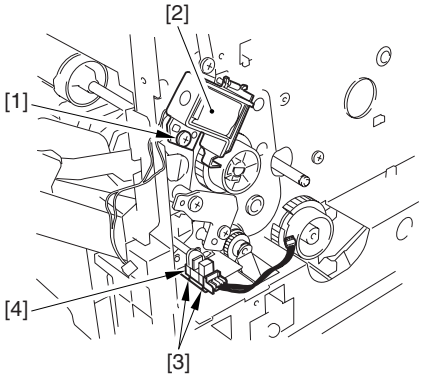

F05-206-14

2.6.8 Removing the Vertical Path Roller

1) Remove the cassette.
2) Open the right door.
3) Slide the vertical path roller [1] to the front to detach.

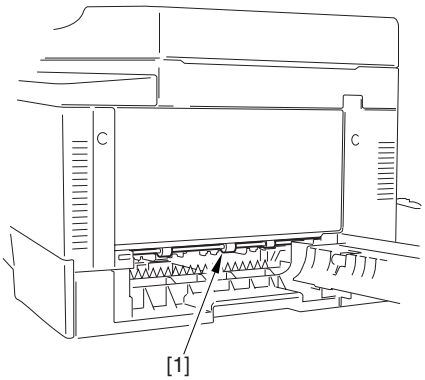

F05-206-15

2.6.9 Removing the Registration Roller Unit

1) Remove the image processor PCB. (See 2.2.1)
2) Remove the plastic film [1].

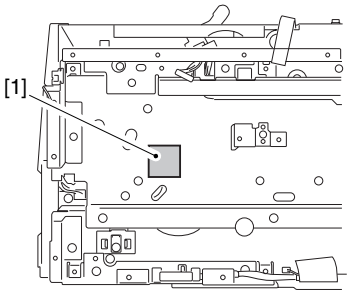

F05-206-16

 COPYRIGHT © 2001 CANON INC.

3) Using long nose pliers or the like, pick the hook [2], and detach the registration roller gear [3].



When removing the gear, be sure to take care not to break the claw.

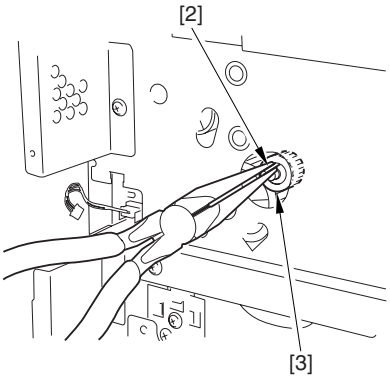

F05-206-17

4) Slide the reader unit, and open the cartridge cover.
5) Remove the 6 screws [4], and detach the registration roller unit [5].

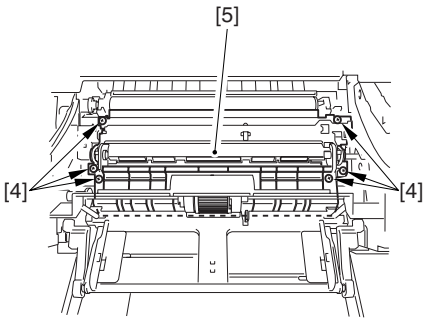

F05-206-18

2.7 Fixing System

2.7.1 Removing the Fixing Assembly

1) Remove the reader unit. (See 2.3.3)
2) Remove the delivery upper cover/rear cover. (See 2.1.1.5)
3) Disconnect the 3 connectors [1].

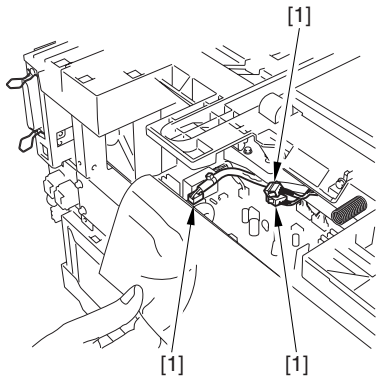

F05-207-01

4) Remove the 3 screws [2], and detach the fixing assembly [3].

Memo

To remove the screw [2] used to secure the fixing assembly in place, try removing the screws from above the upper cover using a long screwdriver (i.e., make use of the opening above the screws to facilitate the work).

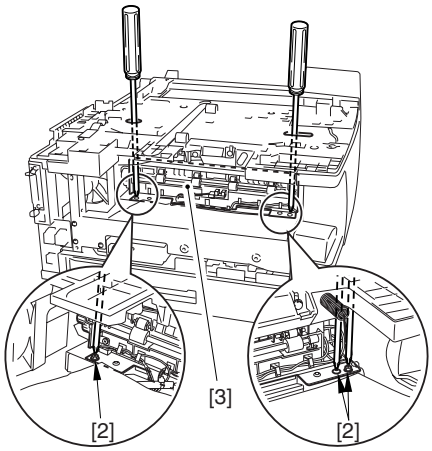

F05-207-02

 COPYRIGHT © 2001 CANON INC.

When mounting the fixing assembly, be sure to engage the gear of the fixing assembly and the gear on the main motor side by shifting up the lever as shown.

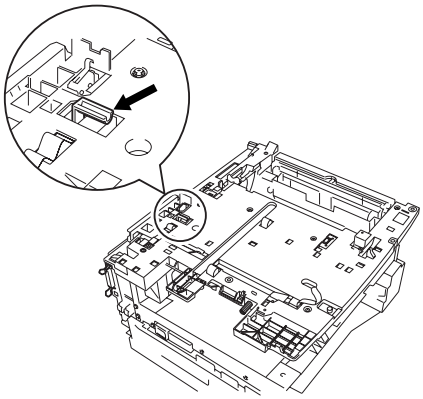

F05-207-03

2.7.2 Removing the Fixing Film Unit/Fixing Pressure Roller

1) Remove the fixing assembly. (See 2.7.1)
2) Remove the fixing upper cover [1]
3) Remove the 2 screws [2].
4) Remove the 2 hooks [3], and detach the plate [4].

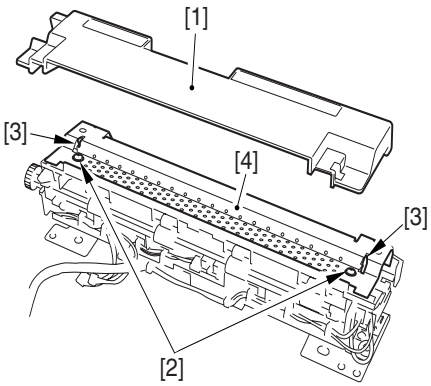

F05-207-04

5) Remove the 2 ribs [5], and detach the delivery roll unit [6].

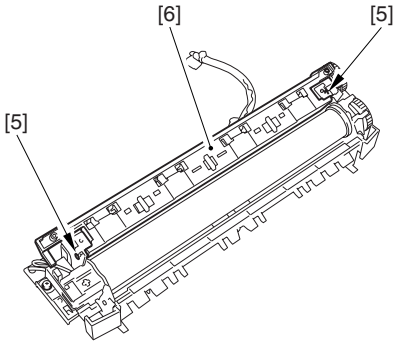

F05-207-05

 COPYRIGHT © 2001 CANON INC.

6) Free the harness [7] from the harness guide [8], and detach the fixing film unit [9].
7) Remove the fixing pressure roller [10].

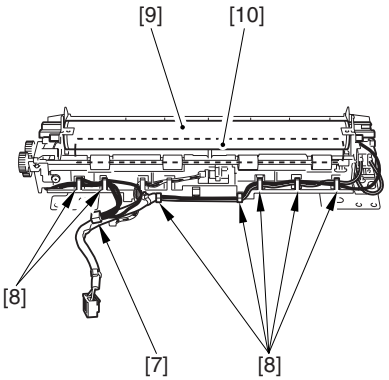

F05-207-06

2.7.3 Removing the Delivery Sensor

1) Remove the fixing assembly. (See 2.7.1)
2) Disconnect the connector [1].
3) Free the 2 hooks [2], and detach the delivery sensor [3].

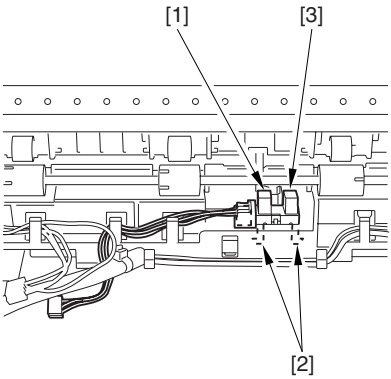

F05-207-07

2.8 ADF System (if equipped with ADF functions)

2.8.1 Externals/Auxiliary Control System

2.8.1.1 Removing the ADF

1) Remove the rear cover. (See 2.1.1.1)
2) Remove the right cover. (See 2.1.1.2)
3) Remove the screw [1], and detach the ADF harness cover [2].

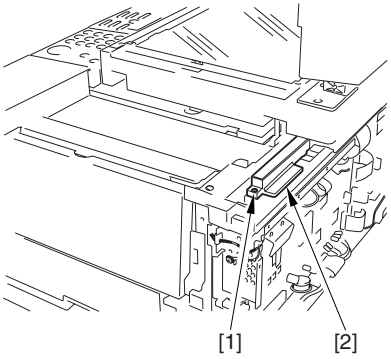

F05-208-01

4) Remove the harness retainer [3].
5) Remove the screw [4], and disconnect the connector [5].

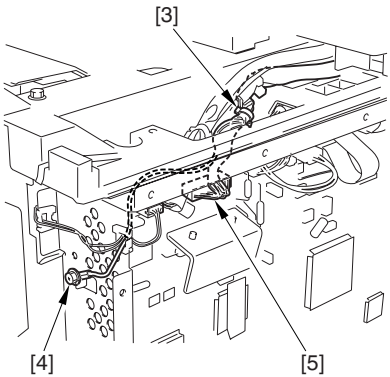

F05-208-02

 COPYRIGHT © 2001 CANON INC.

6) Using a flat-blade screwdriver or the like, remove the 2 covers [6]; then, using long nose pliers or the like, remove the 2 pins [7].

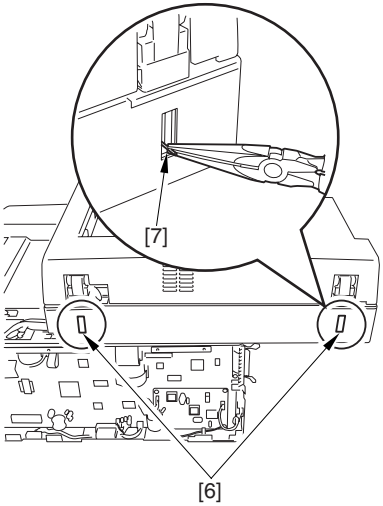

F05-208-03

7) Return the reader unit to its initial position.
8) Open the ADF.
9) Using a flat-blade screwdriver, remove the cover [8].
10) Detach the ADF [9] from the host machine.

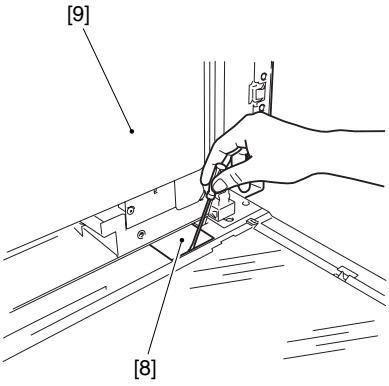

F05-208-04



Take care so that no part will become trapped by harness of the ADF.

2.8.1.2 Removing the ADF Drive Unit

1) Remove the ADF from the host machine. (See 2.8.1.1)
2) Holding the tab [1], detach the white plate [2].

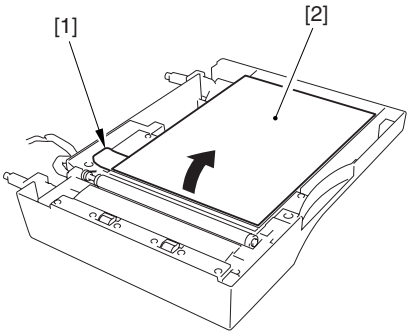

F05-208-05

3) Remove the 4 screws [3], and detach the ADF drive unit [4].

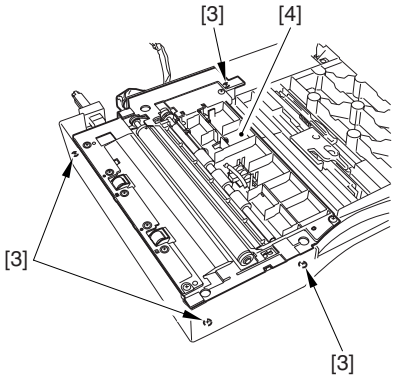

F05-208-06

 COPYRIGHT © 2001 CANON INC.

2.8.1.3 Removing the ADF Motor Unit

1) Remove the white roller. (See 2.8.3.1)
2) Disconnect the 3 connectors [1].
3) Remove the E-ring [2] and the bushing [3].
4) Remove the 3 screws [4], and detach the ADF motor unit [5].



The ADF motor is positioned using a special tool and, therefore, cannot be adjusted in the field. Do not remove the ADF motor from the motor base.

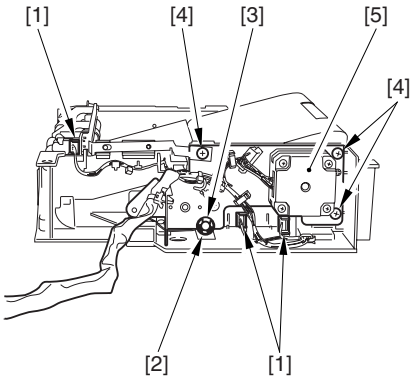

F05-208-07

2.8.1.4 Removing the Slide Guide (front, rear)

1) Open the ADF.
2) Pick the tab [1], and detach the white plate [2].

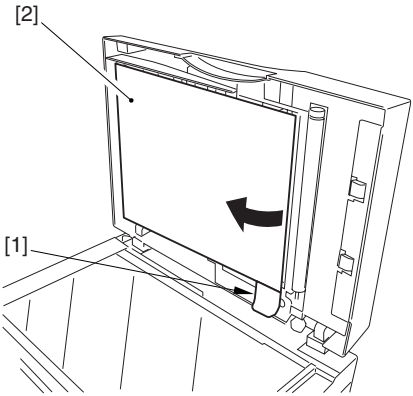

F05-208-08

3) Remove the screw [3], slide plate [4], and gear [5]; then, detach the slide guide (front, rear) [6].

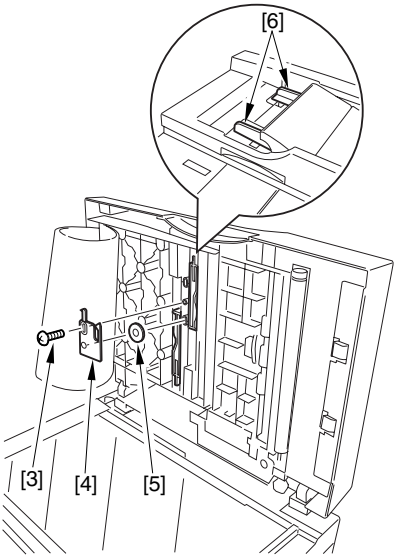

F05-208-09

 COPYRIGHT © 2001 CANON INC.

2.8.1.5 Mounting the Slide Guide (front, rear)

1) Mount the gear [3] while trying to match the 2 cut-offs [1] and the marking [2] on the slide guide (front, rear).

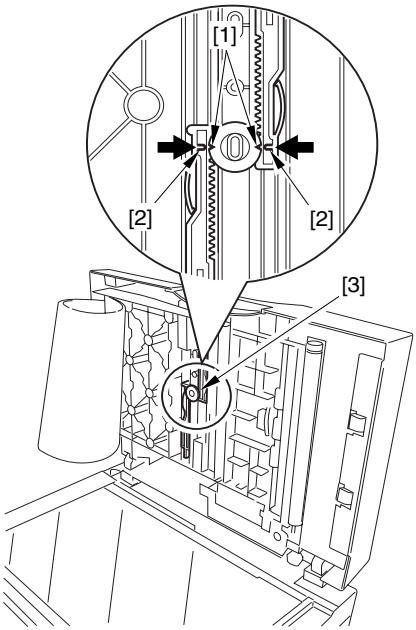

F05-208-10

2) While holding down the gear to keep it in place, mount the slide plate [4] and tighten the screw [5] to secure the plate in place.

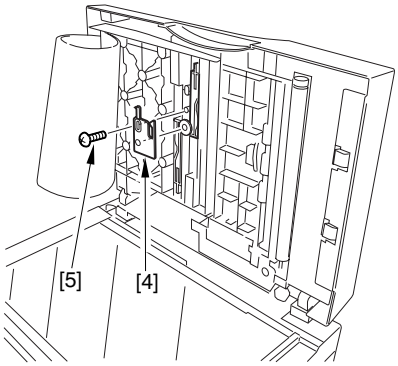

F05-208-11

3) Adjust the left/right registration. (See 1.2.2.1 of Chapter 7.)

COPYRIGHT © 2001 CANON INC.

2.8.2 Pickup System

2.8.2.1 Removing the Separation Roller Unit

1) Remove the ADF motor unit. (See 2.8.1.3)
2) Remove the E-ring [1], gear [2], bushing[3], and pin [4].

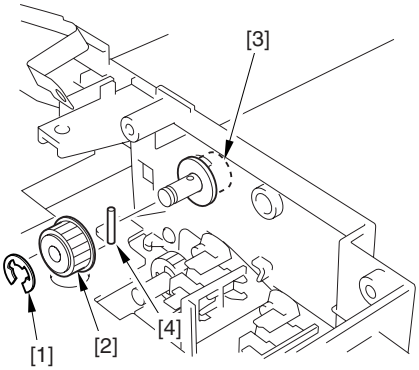

F05-208-12

3) Remove the spring [5], screw [6], and plate [7].
4) Remove the E-ring [8], gear [9], belt [10], and bushing [11].

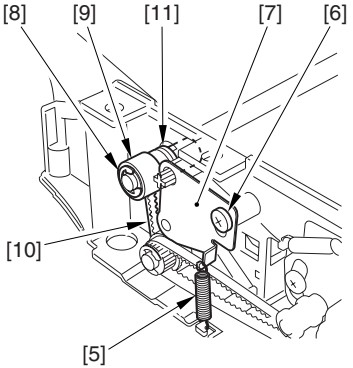

F05-208-13

 COPYRIGHT © 2001 CANON INC.

5) Remove the 2 springs [12], and slide the shaft [13] to detach the open/close cover unit [14].

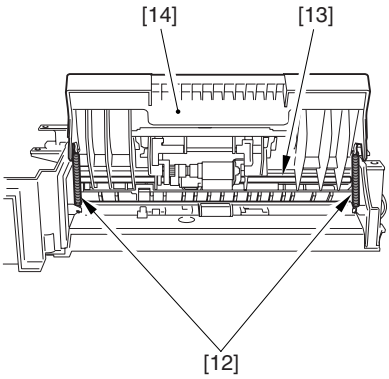

F05-208-14

6) Free the 3 hooks [15], and detach the separation roller unit [16].

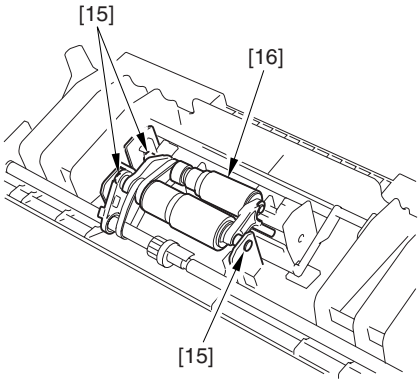

F05-208-15

2.8.2.2 Removing the Original Pickup roller/Original Separation roller

1) Remove the separation roller unit. (See 2.8.2.1)
2) Free the 2 hooks [1], and detach the original pickup roller [2].
3) Free the 2 hooks [3], and detach the original separation roller [4].

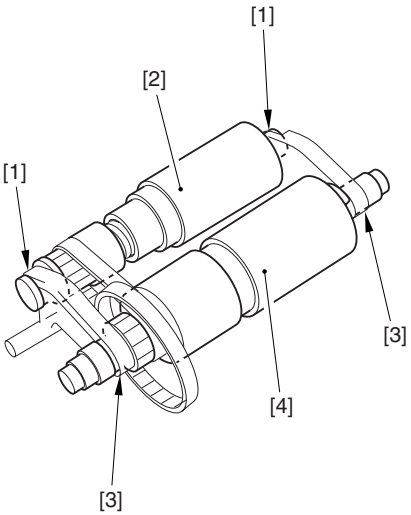

F05-208-16

2.8.2.3 Removing the Original Sensor/Registration Sensor

1) Remove the ADF motor unit. (See 2.8.1.3)
2) Free the 2 hooks [1], and detach the original sensor [2].
3) Free the 2 hooks [3], and detach the registration sensor [4].

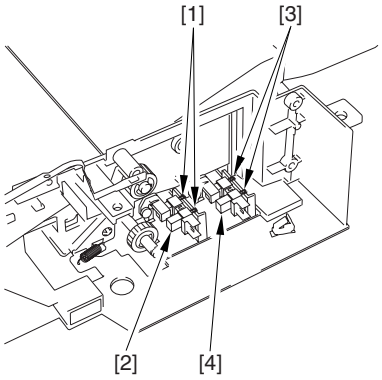

F05-308-17

 COPYRIGHT © 2001 CANON INC.

2.8.2.4 Removing the Original Separation Pad

1) Open the ADF.
2) Hold the tab, and detach the white plate[2].

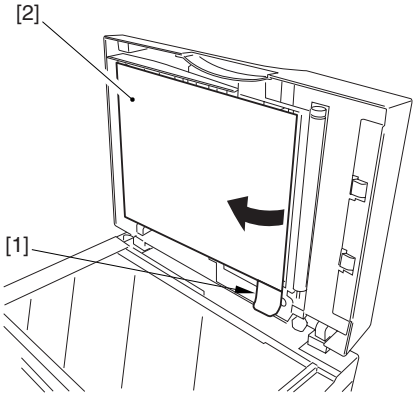

F05-208-18

3) Remove the spring [3], and detach the original separation pad [4].

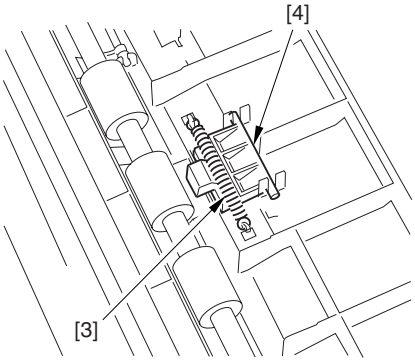

F05-208-19

2.8.2.5 Removing the ADF Registration Roller

1) Remove the ADF drive unit. (See 2.8.1.2)
2) Remove the E-ring [1], and bushing [2].

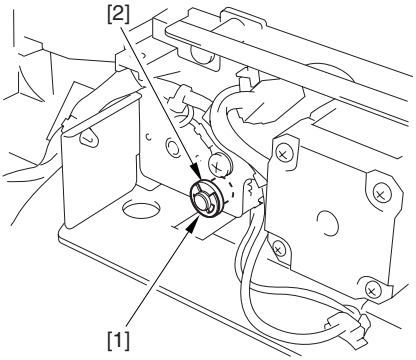

F05-208-20

3) Remove the spring [3] and the screw [4], and detach the plate [5].

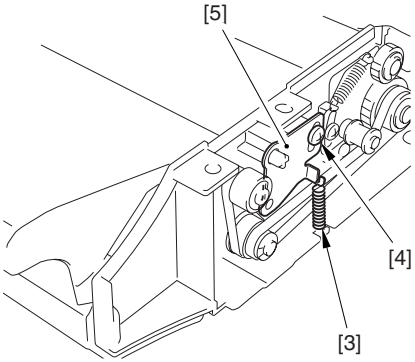

F05-208-21

 COPYRIGHT © 2001 CANON INC.

4) Remove the E-ring [6], gear [7], bushing [8], pin [9], and 2 belts [10].
5) Remove the ADF registration roller [11].

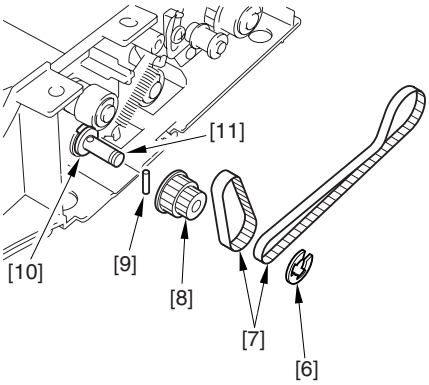

F05-208-22

2.8.3 Feeding System

2.8.3.1 Removing the White Roller

1) Remove the ADF drive unit. (See 2.8.1.2)
2) Remove the spring [1] and the hook [2].

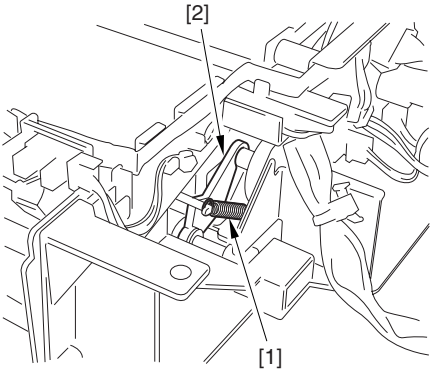

F05-208-23

3) Remove the spring [3] and the hook [4], and detach the white roller [5].

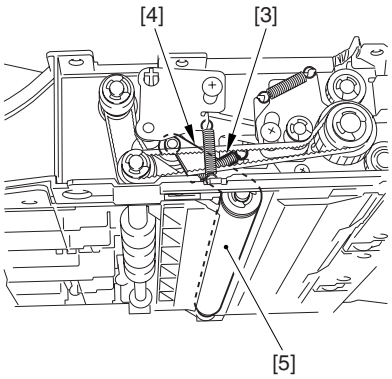

F05-208-24

 COPYRIGHT © 2001 CANON INC.

2.8.3.2 Removing the Feeding Outside Guide

1) Remove the ADF drive unit. (See 2.8.1.2)
2) Disconnect the connector [1], and detach the grounding plate [2].
3) Remove the static eliminator [3] as much as shown.

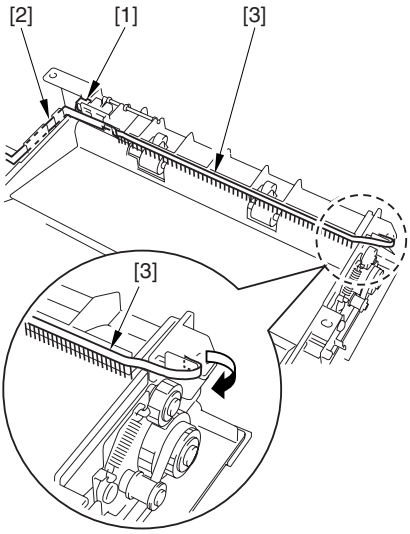

F05-208-25

4) Remove the 2 screws [4], and detach the feeding outside guide [5].

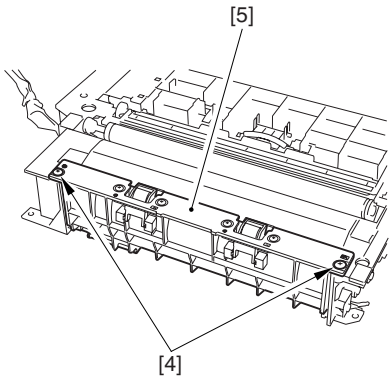

F05-208-26

2.8.3.3 Removing the Feed Roll

1) Remove the feeding outside guide. (See 2.8.3.2)
2) Free the 2 hooks [1], and detach the feed roll [2].

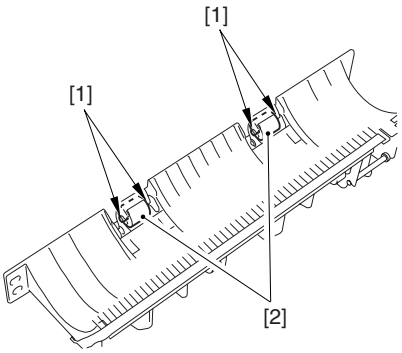

F05-208-27

 COPYRIGHT © 2001 CANON INC.

2.8.3.4 Removing the Original Feed Roller

1) Remove the delivery stacking tray. (See 2.8.4.1)
2) Remove the 2 E-rings [1].

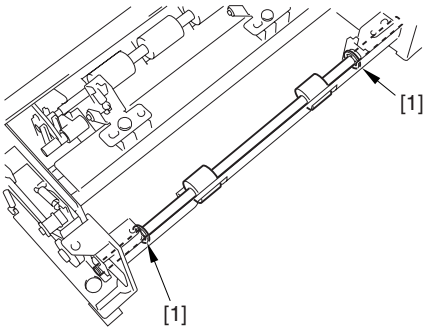

F05-208-28

3) Slide the original feed roller [2] to the left, and remove the pin [3], gear [4], and bushing [5]; then, detach the original feed roller [2].

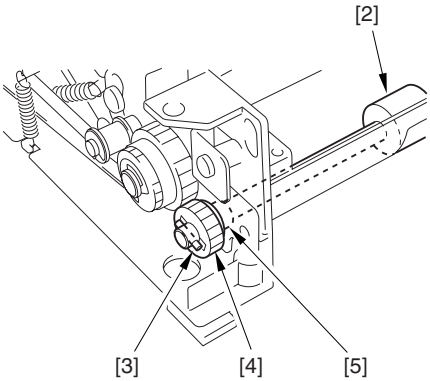

F05-208-29

2.8.4 Delivery System

2.8.4.1 Removing the Delivery Stacking Tray/Original Delivery Roller

1) Remove the feeding outside guide. (See 2.8.3.2)
2) Remove the E-ring [1], gear [2], pin [3], and bushing [4].

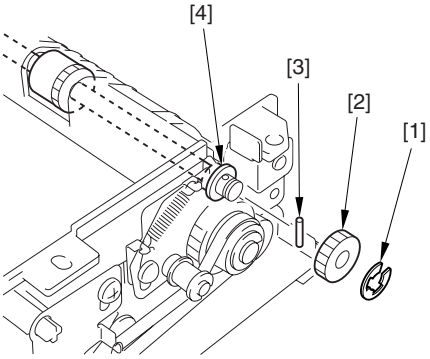

F05-208-30

3) Remove the 2 screws [5], and free the 2 hooks [6].
4) Remove the delivery stacking tray [7], and detach the original delivery roller [8].

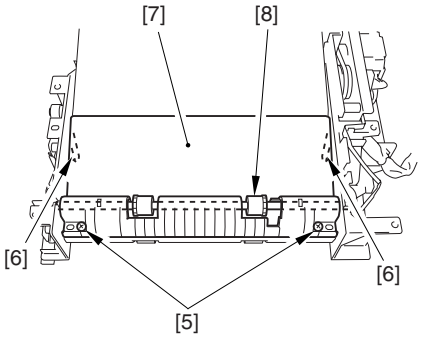

F05-208-31

 COPYRIGHT © 2001 CANON INC.

2.8.4.2 Removing the Original Delivery Sensor

1) Remove the ADF drive unit. (See 2.8.1.2)
2) Disconnect the connector [1].
3) Free the 2 hooks [2], and detach the original delivery sensor [3].

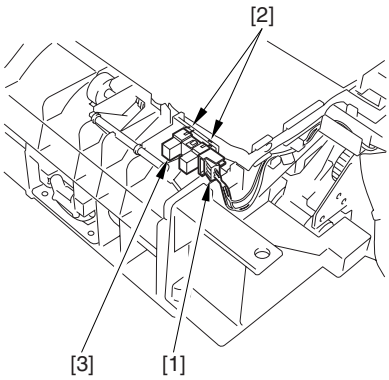

F05-208-32

CHAPTER 6

MAINTENANCE AND INSPECTION

COPYRIGHT © 2001 CANON INC.

1 Periodically Replaced Parts

The machine does not have parts that require periodical replacement.

2 Durables

The machine does not have durables that require replacement once or more during the life of the product because of wear or damage.

3 Scheduled Servicing Chart

The machine does not have items (parts or durables) that require scheduled servicing. To help prolong the life of the product and its parts, it is recommended that the following be performed at time of a service visit.

As of December 2001

Work Procedure

1. Question key person in charge, and obtain a general idea of the issue.
2. Make repairs of any faults.
3. Make test copies, and check the output for the following:
   (1) image density against standards, (2) soiling of the background,
   (3) clarity of characters, (4) margin, (5) fixing, faulty registration, soiling of the back of the page.
   Standards for Margin (single-sided)
   Leading edge: 3.0 ± 2.0 mm
   Left/right edge: 2.5 ± 1.5 mm
4. Clean the parts: As needed, remove the cartridge before starting the work. (See 4.2 of Chapter 6)
5. Make test copies.
6. Clean up the area around the machine.

COPYRIGHT © 2001 CANON INC.

4 Cleaning

4.1 Cleaning by the User (machine)

The user is expected to perform the following so that the machine may be used in its best condition at all times.

4.1.1 Cleaning the Fixing Pressure Roller

If the faces or the backs of printed sheets show soiling in the form of black dots, clean the fixing pressure roller as follows:

1) Place an A4 or larger sheet of plain paper in the manual feed tray.
2) Press the Additional Functions key, and hold down the Right Arrow key or the Left Arrow key until the LCD indicates '6. ADJUST/CLEAN'.
3) Press the OK key.
4) Check to make sure that the LCD indicates '1. ROLLER CLEANING', and press the OK key. In response, the machine will start cleaning the fixing pressure roller.

Memo

It takes about 3 min before the paper is delivered to the delivery tray after the cleaning of the fixing pressure roller is started.

4.1.2 Other Cleaning

If images tend to be soiled, advise the user to clean the following as needed.

No.	Part	Instructions
1	Copyboard glass	Wipe it with a cloth moistened with water (and wrung well); then, dry wipe it.
2	Copyboard glass retainer	Wipe it with a cloth moistened with water (and wrung well); then, dry wipe it.
3	Vertical side plate	Wipe it with a cloth moistened with water (and wrung well); then, dry wipe it.
4	White plate	Wipe it with a cloth moistened with water (and wrung well); then, dry wipe it.

T06-401-01

 COPYRIGHT © 2001 CANON INC.

4.2 Cleaning by the User (ADF)

4.2.1 Cleaning the White Roller

If the backs of originals tend to become soiled, clean the white roller as follows:

1) Open the ADF, and clean the bottom of the white roller with a cloth moistened with water (and wrung well). If the dirt is excessive, use alcohol with lint-free paper. Be sure to dry wipe it with a cloth or lint-free paper thereafter.
2) Press the Additional Functions key, and hold down the Right Arrow or Left Arrow key until the LCD indicates '6. ADJUST/CLEAN'.
3) Press the OK key.
4) Hold down the Right Arrow key or the Left Arrow key until the LCD indicates '2. CLEAN ADF ROLLER'.
5) Press the OK key.
6) When the LCD indicates 'START CLEAN : [SET]', press the OK key. In response, the white roller makes a 120° turn.
7) Wipe the bottom of the white roller with a cloth moistened with water (and wrung well); then, dry wipe it.
8) Repeat steps 6) and 7) to clean the entire surface of the white roller.
9) Press the Stop key to end.

4.2.2 Other Cleaning

If images tend to become soiled, advise the user to clean the following as needed.

No.	Part	Instructions
1	White plate	Wipe it with a cloth moistened with water (and wrung well); then, dry wipe it.

T06-402-01

4.3 Cleaning at Time of a Service Visit (machine)

At time of a service visit, clean the items described in 4.1 “Cleaning by the User (machine)”; then, perform the following as needed:

Do not clean the photosensitive drum.

4.3.1 Selfoc Lens Array of the Contact Sensor

1. If the face of the light guide assembly becomes soiled or scratched, its optical characteristics will be affected. Do not touch the light guide assembly.
2. The contact sensor is vulnerable to static charges. Be sure to provide measures against static damage before touching it.
3. Be sure to fit back the spacer after the cleaning work; otherwise, the contact sensor may not work properly.

Lightly remove any dirt with a dry, soft cloth.

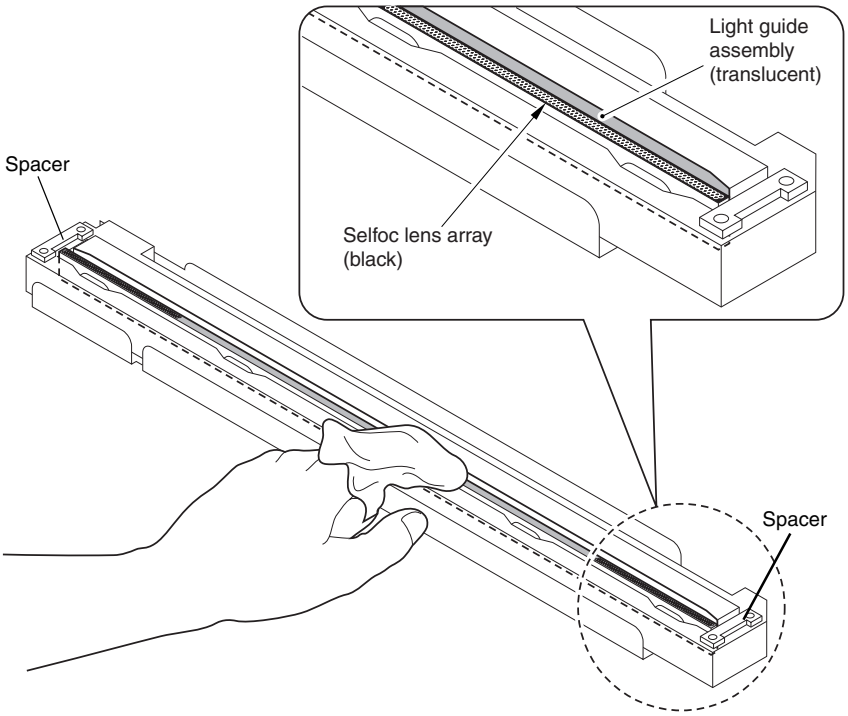

F06-403-01

 COPYRIGHT © 2001 CANON INC.

4.3.2 Cassette Pickup Roller

Clean it with a cloth moistened with water (and wrung well). If the dirt is excessive, use alcohol with lint-free paper thereafter, be sure to dry wipe it with a cloth or lint-free paper.

4.3.3 Manual Feed Pickup Roller

Dry wipe it with a cloth moistened with water (and wrung well). If the dirt is excessive, use alcohol with lint-free paper thereafter, be sure to dry wipe it with a cloth or lint-free paper.

4.3.4 Separation Pad

Dry wipe it with lint-free paper.

4.3.5 Registration Roller

Clean it with a cloth moistened with water (and wrung well). If the dirt is excessive, use alcohol with lint-free paper thereafter, use a cloth or lint-free paper.

4.3.6 Transfer Guide

Clean it with a cloth moistened with water (and wrung well) thereafter, dry wipe it with a cloth or lint-free paper.

4.3.7 Transfer Charging Roller

As a rule, do not touch or clean it. However, if cleaning proves necessary as when the cause of an image fault is the transfer roller, clean it while taking care not to handle the roller or not to subject it to solvent or oils.

Use lint-free paper and dry wipe it. Do not use water or solvent. During cleaning, take care not to impose force on the rubber area of the transfer charging roller.

4.3.8 Separation Static Eliminator

Clean it with a blower brush.

4.3.9 Paper Path

Dry wipe it with lint-free paper.

4.3.10 Fixing Inlet Guide

Use alcohol with a soft cloth.

4.3.11 Fixing Pressure Roller

If dirt cannot be removed by executing fixing pressure roller cleaning from the Additional Functions menu, use alcohol and a soft cloth.

COPYRIGHT © 2001 CANON INC.

4.3.12 Delivery Roller

Clean it with a cloth moistened with water (and wrung well). If the dirt is excessive, use alcohol and lint-free paper thereafter, dry wipe it with a cloth or lint-free paper.

4.3.13 Back of Copyboard Glass (Back of Shading Plate)

Wipe it with a cloth moistened with water (and wrung well); then, dry wipe it with a cloth or lint-free paper.

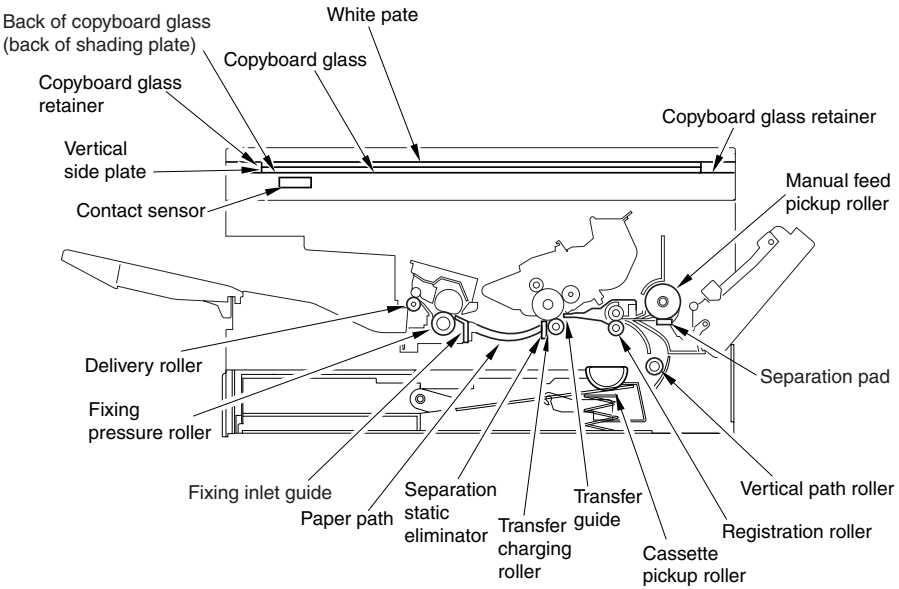

F06-403-02

 COPYRIGHT © 2001 CANON INC.

4.4 Cleaning at Time of a Service Visit (ADF)

At time of a service visit, clean the items described in 4.2 “Cleaning by the User (ADF)”; then, perform the following as needed:

4.4.1 Original Pickup Roller

Clean it with a cloth moistened with water (and wrung well). If dirt is excessive, use alcohol with lint-free paper thereafter, dry wipe it with a cloth or lint-free paper.

4.4.2 Original Separation Roller

Clean it with a cloth moistened with water (and wrung well). if the dirt is excessive, use alcohol with lint-free paper thereafter, dry wipe it with a cloth or lint-free paper.

4.4.3 Original Separation Pad

Clean it with a cloth moistened with water (and wrung well). If the dirt is excessive, use alcohol and lint-free paper thereafter, dry wipe it with a cloth or lint-free paper.

4.4.4 ADF Registration Roller

Clean it with a cloth moistened with water (and wrung well). If the dirt is excessive, use alcohol and lint-free paper thereafter, dry wipe it with a cloth or lint-free paper.

4.4.5 Original Feed Roller

Clean it with a cloth moistened with water (and wrung well). If the dirt is excessive, use alcohol and lint-free paper thereafter, dry wipe it with a cloth or lint-free paper.

4.4.6 Original Delivery Roller

Clean it with a cloth moistened with water (and wrung well). If the dirt is excessive, use alcohol and lint-free paper thereafter, dry wipe it with a cloth or lint-free paper.

COPYRIGHT © 2001 CANON INC.

4.4.7 Copyboard Glass (Original Reading Area)

Wipe it with a cloth moistened with water (and wrung well); then, dry wipe it with a cloth or lint-free paper.

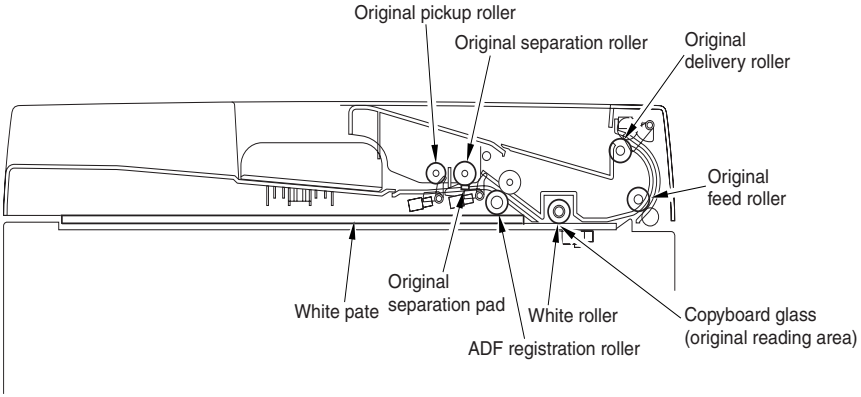

F06-404-01

 COPYRIGHT © 2001 CANON INC.

CHAPTER 7
TROUBLESHOOTING

COPYRIGHT © 2001 CANON INC.

1 Standards and Adjustments

1.1 Checking Against the Standards

Check the machine against the standards as follows:

1.1.1 Checking the Pressure (nip) of the Fixing Pressure Roller

A fixing fault can occur if the nip of the fixing assembly is not correct. The machine is not equipped with a mechanism to adjust the nip; if a fixing fault occurs, be sure to check the nip as follows, and replace the fixing assembly if it is not as indicated:

1) Execute 'PRINT test' under 'test mode' in service mode to make a solid black copy on A4 or LTR paper. (See 3.21.5 of Chapter 2.)
2) With the black side facing down, place the solid black copy in the manual feed tray and make a copy using manual feed tray.
3) Turn off the power as soon as the leading edge of the paper appears in the delivery tray, and leave the machine alone for about 10 sec.
4) Take out the cartridge, and remove the paper from the pickup side as if it was a jam.
5) Measure the width of the area of glossy toner on the paper, and see that it is as indicated in T07-101-01.

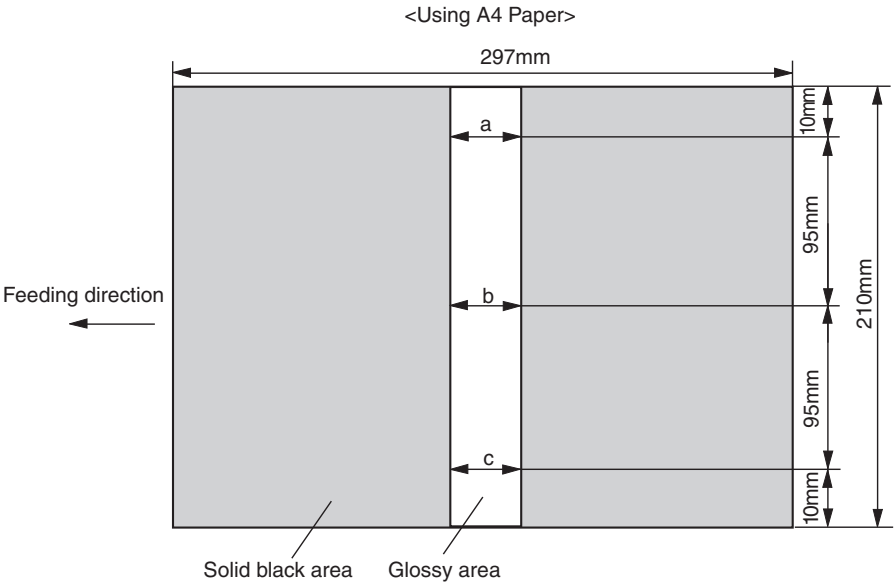

F07-101-01

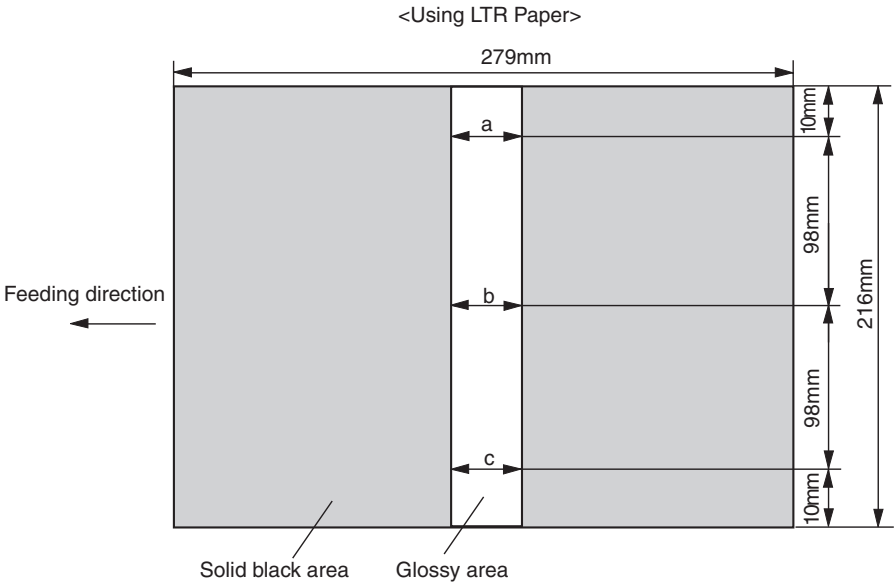

F07-101-02

	Dimension
a	5.5±0.5 mm
|c-a|	0.5 mm or less
|b-a|	0.5 mm or less
|b-c|	0.5 mm or less

T07-101-01

 COPYRIGHT © 2001 CANON INC.

1.2 Making Adjustments

1.2.1 Making Adjustments When Replacing Major Parts

You need to make the following adjustments whenever you have replaced the machine's major parts.



Be sure to make the appropriate adjustments if you have replaced a specific major part.

Part replaced	Item of adjustment
Image processor PCB	all adjustments, including ADF adjustment
Contact sensor	contact sensor LED intensity auto adjustment



To replace the image processor PCB, be sure to work according to the instructions given for the replacement of the image processor PCB (See 1.4.1 of Chapter 7).

COPYRIGHT © 2001 CANON INC.

1.2.2 Preparing a Test Sheet for Adjustment

You will need to prepare a test sheet as follows for adjustments (except contact sensor LED intensity auto adjustment); refer to F07-102-01 and F07-102-02 for the specifics:

Preparing a Test Sheet: On a sheet of A4 or LTR paper, draw straight lines as indicated:

<Using A4 Paper>

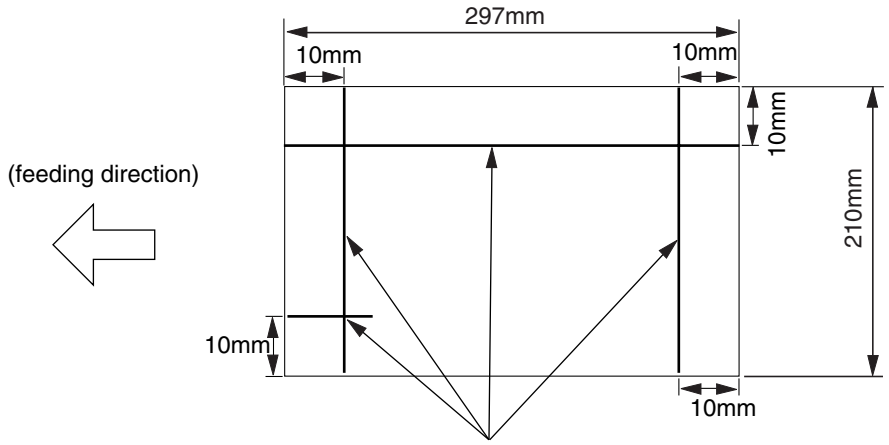

Draw straight lines.

F07-102-01

<Using LTR Paper>

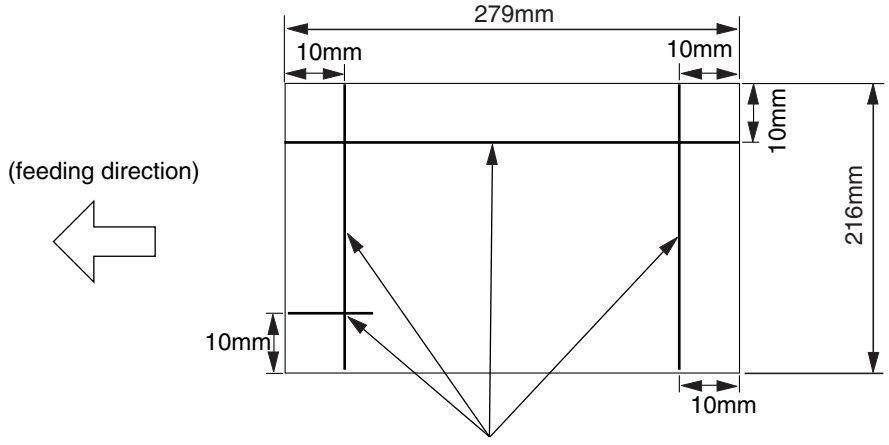

Draw straight lines.

F07-102-02

 COPYRIGHT © 2001 CANON INC.

1.2.3 Adjusting the Mechanical Systems

The machine's mechanical systems do not require adjustments.

1.2.4 Adjusting the Electrical Systems

1.2.4.1 Contact Sensor LED Intensity Auto Adjustment



Before starting adjustment, verify that there is nothing on the copyboard glass. Also verify that the ADF (copyboard cover) is securely closed.

Execute auto adjustment of the contact sensor LED intensity as follows:

1) Press the Additional Functions key and the # key to start service mode.
2) Press the Left/Right Arrow key so that 'TEST MODE' is indicated.
3) Press the OK key.
4) Press '2' on the keypad so that 'TEST MODE' is indicated.
5) Press '7' on the keypad to clear the CCD parameter.
6) Press the Stop key to return to 'TEST MODE'.
7) Press '2' on the keypad so that '2: CCD TEST' is indicated.
8) Press '8' on the keypad so that the machine starts contact sensor LED intensity auto adjustment.
9) End the work when the LCD indicates 'OK'; if it indicates 'NG', on the other hand, start over.
10) Press the Stop key and the Additional Functions key (to end TEST MODE).

COPYRIGHT © 2001 CANON INC.

1.2.4.2 Leading Edge Read Start Position Adjustment

Adjust the leading edge read start position for book mode as follows:

1) Make a copy of the test sheet in book mode on paper of the same size in Direct. (See 1.2.2 of Chapter 7.)
2) Measure the length of L on the copy (i.e., the length obtained by subtracting the leading edge margin from the line found 10 mm from the leading edge; it must be 7 ± 0.5 mm).

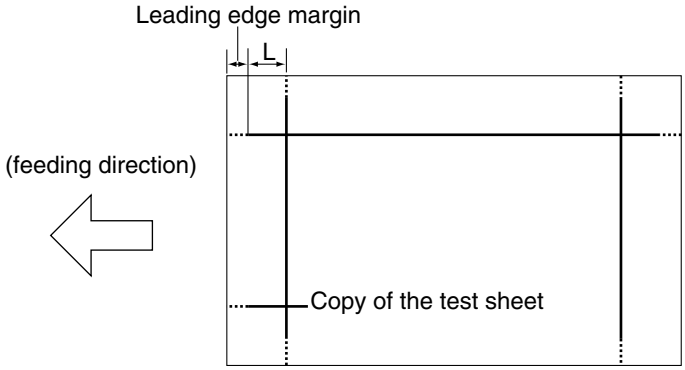

F07-102-03

3) Press the Additional Functions key and the # key to start service mode.
4) Press the left/Right Arrow key so that '#6 SCANNER' is indicated.
5) Press the OK key.
6) Press the Left/Right Arrow key so that '7: CCD' is indicated.
7) Press the OK key.
8) Press the Left/Right Arrow key so that the 2nd row of the LCD indicates '023:'.
9) Enter an appropriate correction value using the Left/Right Arrow key so that the length of L measured in step 2 is 7 mm. (An increase by '1' will decrease the length of L by about 0.1 mm.)
10) Press the OK key.
11) Press the Stop key (to end SCANNER).
12) Make a copy of the test sheet in book mode on paper of the same size in Direct; then, check to make sure that the length of L is as indicated.
13) End the work if the length of L is as indicated; otherwise, start over with step 2).

 COPYRIGHT © 2001 CANON INC.

1.2.4.3 Left/Right Edge Read Start Position Adjustment

Adjust the left/right edge read start position for book mode as follows:

1) If LTR paper is available, prepare a test sheet using LTR paper. (See 1.2.2 of Chapter 7.) If no LTR paper is available, cut a larger sheet of paper so that its width is 216 mm; then, prepare a test sheet as instructed in 1.2.2, making sure that the width is 216 mm; as for its length, make sure that it fits the copyboard glass.
2) Make a copy of the sheet in book mode on paper of the same size to a reduction ratio of 80%.
3) Measure the length of b-a of the copy, and check to make sure that it is as indicated. (It must be 0 ± 0.4 mm.)

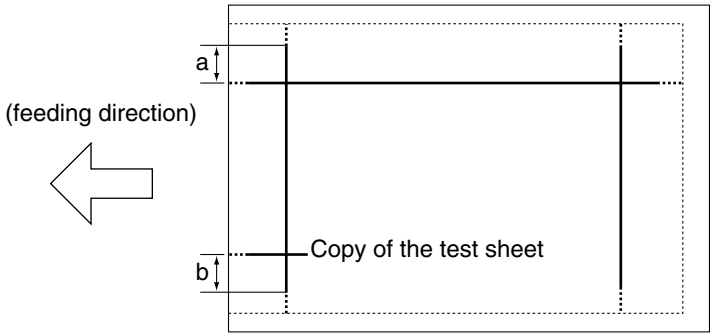

F07-102-04

4) Press the Additional Functions key and the # key to start service mode.
5) Press the Left/Right Arrow key so that '#6 SCANNER' is indicated.
6) Press the OK key.
7) Press the Left/Right Arrow key so that '7: CCD' is indicated.
8) Press the OK key.
9) Press the Left/Right Arrow key so that the 2nd row of the LCD indicates '021:'.
10) Enter an appropriate correction value on the keypad so that the length of b-a measured in step 2) is as indicated. (An increase by '1' will decrease the length of b by about 0.03 mm while increasing the length of a by about 0.03 mm.)
11) Press the OK key.
12) Press the Stop key (to end SCANNER).
13) Make a copy of the test sheet in book mode on paper of the same size; then, check to make sure that the length of L on the copy is as indicated.
14) End the work if the length of L is as indicated; otherwise, start over with step 2).

COPYRIGHT © 2001 CANON INC.

1.3 Making Adjustments (ADF)

1.3.1 Items of Adjustment and Sequence of Work

The ADF must be adjusted for the following items and in the following sequence of work:



1. If you have replaced major parts of the ADF, you must always execute the following: registration arch auto adjustment, original read position adjustment. Then, check to make sure that the settings of other items of adjustment are as indicated; if not, make adjustments starting with the preceding item of adjustment.
2. Each item of adjustment affects the subsequent items of adjustment. If you have made adjustments, therefore, be sure to check that the setting of the item of adjustment that follows is also as indicated; if not, be sure to start over with the preceding item.

Sequence	Item of adjustment
1	registration arch auto adjustment
2	skew removal
3	original read position adjustment
4	original feed speed adjustment
5	leading edge read start position adjustment
6	trailing edge read end position adjustment
7	left/right registration adjustment

1.3.2 Preparing a Test Sheet for Adjustment

When making adjustments (except registration arch auto adjustment and original read position adjustment) for the ADF, you will need a test sheet like the one used for the copier. Prepare a test sheet by referring to the instructions given under 1.2.2 of Chapter 7.

 COPYRIGHT © 2001 CANON INC.

1.3.3 Adjusting the Mechanical Systems

1.3.3.1 Removing the Skew

Make a copy of the test sheet using the ADF in Direct, and make sure that the skew is as indicated (T07-103-01). (See 1.2.2 of Chapter 7.)

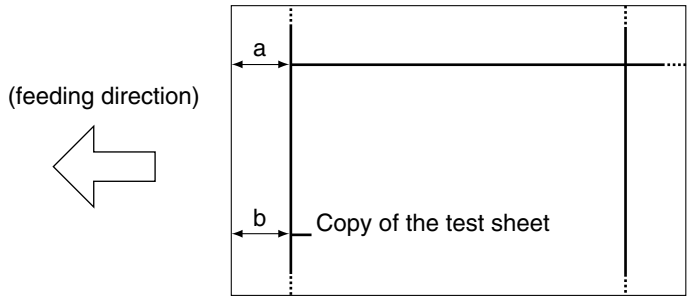

F07-103-01

	Dimension (using A4)	Dimension (using LTR)
b-a	0 ± 1.3 mm	0 ± 1.3 mm

T07-103-01

1) Open the ADF.
2) Loosen the 3 screws [1], and move the left hinge up and down so that the skew will be as indicated by referring to the index graduated at 1-mm intervals.

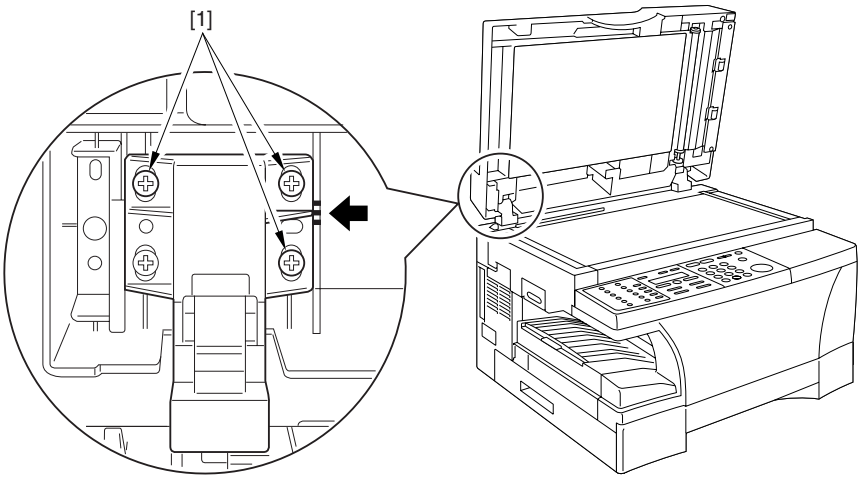

F07-103-02

Memo

A shift of the ADF upward by 1 mm will increase the registration along the left bottom of the paper by about 0.5 mm.

3) Place A4 (LTR) paper in the cassette or the manual feed tray.
4) Open the ADF, and place an A5 (STMTR) original on the copyboard glass.
5) Close the ADF, and make a copy in Direct.
6) Check the copy image, and check to make sure that the area outside the image is free of fogging.
7) If fogging is found, the position of the white sheet may be wrong; check its positioning. If no fault is found, try skew removal once again.

1.3.3.2 Left/Right Registration Adjustment

Using the ADF, make a copy of the sheet in Direct, and check to make sure the left/right registration is 10 ± 1 mm. (See 1.2.2 of Chapter 7.)

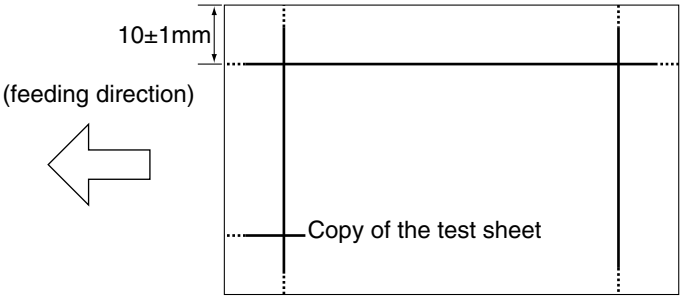

F07-103-03

1) Pick the tab [1], and detach the white plate [2].

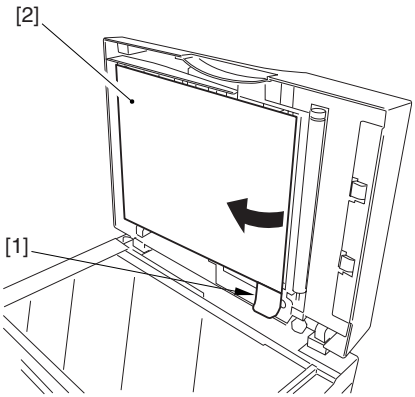

F07-103-04

 COPYRIGHT © 2001 CANON INC.

2) Loosen the screw [3], and move the slide guide to the front/rear with reference to the index graduated at 1-mm intervals until the registration is as indicated.

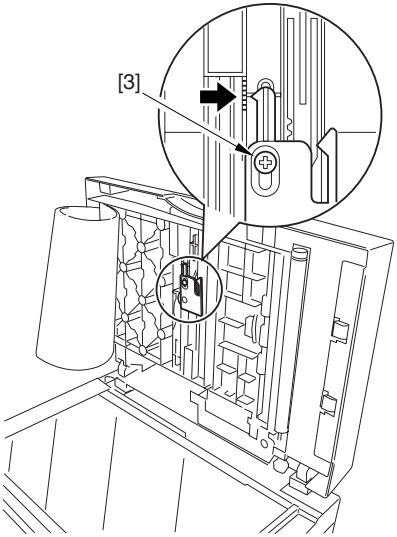

F07-103-05

Memo

A shift of the slide guide up by 1 mm will increase the registration on the right (top of paper) by 1 mm.

Do not remove the screw [3]; otherwise, you must work as instructed for mounting of the slide guide. (See 2.8.1.5 of Chapter 5)

1.3.4 Adjusting the Electrical Systems

1.3.4.1 Registration Arch Auto Adjustment

Adjust the registration arch for the ADF registration roller as follows:

1) Press the Additional Functions key and the # key to start service mode.
2) Press the Left/Right Arrow key so that 'TEST MODE' is indicated.
3) Press '6' on the keypad so that 'FACULTY TEST' is indicated.
4) Press '4' on the keypad so that '6-4 ADF' is indicated.
5) Place 10 sheets of A4 paper in the ADF.
6) Press '8' on the keypad so that the machine will start registration arch auto adjustment.
7) End the work when the LCD indicates 'OK'; if it indicates 'NG', on the other hand, start over the adjustment.
8) Press the Stop key and then the Additional Functions key (to end TEST MODE).

1.3.4.2 Original Read Position Adjustment

Adjust the contact sensor original read position for ADF mode as follows:



Check to make sure that the ADF is fully closed before starting the work. Moreover, check to be sure of the absence of any object on the copyboard glass.

1) Press the Additional Functions key and the # key to start service mode.
2) Press the Left/Right Arrow key so that 'TEST MODE' is indicated.
3) Press the OK key.
4) Press '2' on the keypad so that '2: CCD TEST' is indicated.
5) Press '3' so that the machine starts original read position adjustment.
6) End the work when the LCD indicates 'OK'; if it indicates 'NG', on the other hand, start over the adjustment.
7) Press the Stop key and the Additional Functions key (to end TEST MODE).

 COPYRIGHT © 2001 CANON INC.

1.3.4.3 Original Speed Adjustment

Adjust the speed at which originals are moved for ADF mode as follows:

1) Make a copy of the test sheet in ADF mode on paper of the same size in Direct. (See 1.2.2 of Chapter 7.)
2) Measure the length "L" in the middle of the copy output. (It must be 277 ± 1 mm for A4, 259 ± 1 mm for LTR.)

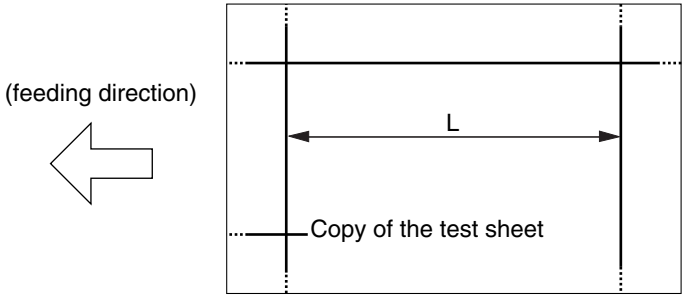

F07-103-06

3) Press the Additional Functions key and the # key to start service mode.
4) Press the Left/Right Arrow key so that '#6 SCANNER' is indicated.
5) Press the OK key.
6) Press the Left/Right Arrow key so that '7: CCD' is indicated.
7) Press the OK key.
8) Press the Left/Right Arrow key so that the 2nd row of the LCD indicates '034:'.
9) Enter a appropriate correction value using the Left/Right Arrow key so that the length of L measured in step 2) is as indicated. (An increase by '1' will increase the length of L by about 0.5 mm.)
10) Press the OK key.
11) Press the Stop key (to end SCANNER).
12) Make a copy of the test sheet in ADF mode on paper of the same size in Direct; then, check to make sure that the length of L of the copy is as indicated.
13) End the work if the length of L is as indicated; otherwise, start over with step 2).

COPYRIGHT © 2001 CANON INC.

1.3.4.4 Leading Edge Read Start Position Adjustment

Adjust the leading edge start position for ADF mode as follows:

1) Make a copy of the test sheet in ADF mode on paper of the same size in Direct. (See 1.2.2 of Chapter 7.)
2) Measure the length of L on the copy (i.e., obtained by subtracting the leading edge margin from the position of the line found 10 mm from the leading edge; it must be 7 ± 0.5 mm).

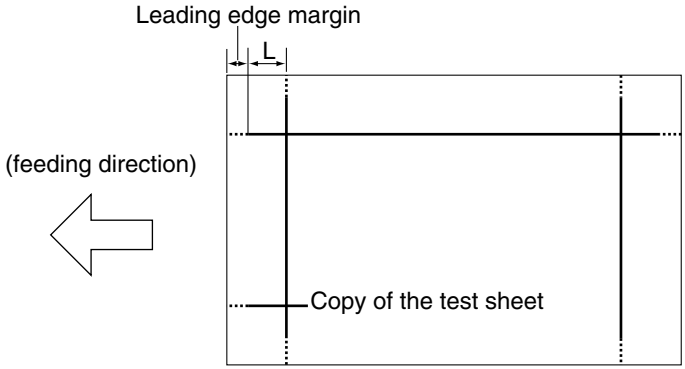

F07-103-07

3) Press the Additional Functions key and the # key to start service mode.
4) Press the Left/Right Arrow key so that '#6 SCANNER' is indicated.
5) Press the OK key.
6) Press the Left/Right Arrow key so that '7: CCD' is indicated.
7) Press the OK key.
8) Press the Left/Right Arrow key so that the 2nd row of the LCD indicates '024'.
9) Enter an appropriate correction value using the Left/Right Arrow key so that the length of L measured in step 2) is 7 mm. (An increase of '1' will increase the length of L by about 0.1 mm.)
10) Press the OK key.
11) Press the Stop key (to end SCANNER).
12) Make a copy of the test sheet in ADF mode on paper of the same size in Direct; then, check to make sure that the length of L on the copy is as indicated.
13) End the work if the length of L is as indicated; otherwise, start over with step 2).

 COPYRIGHT © 2001 CANON INC.

1.3.4.5 Trailing Edge Read End Position Adjustment

To adjust the trailing edge margin for ADF mode, go through the following:

1) Make a copy of the test sheet prepared in 1.2.2 of Chapter 7 on LGL paper in Direct.
2) Measure the length "L" on the copy output. (standard: 8 ±0.5 mm)

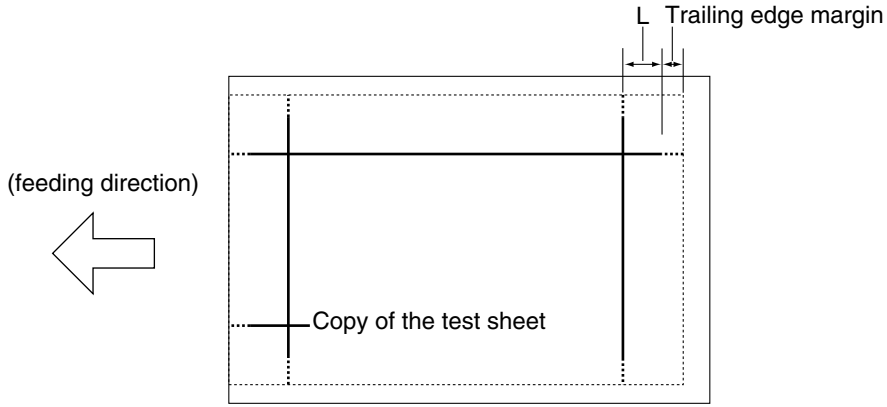

F07-103-08

3) Press the Additional Functions key and the # key to start service mode.
4) Press the Left/Right arrow key so that '#6 SCANNER' is indicated.
5) Press the OK key.
6) Press the Left/Right arrow key so that '7: CCD' is indicated.
7) Press the OK key.
8) Press the Left/Right arrow keys so that the 2nd row of the LCD indicates '025:'.
9) Enter a correction value using the Left /Right key so that the length of "L" measured in step 2) is 8 mm (trailing edge margin of 2 mm; an increase by '1' will decrease the length of "L" by about 0.1 mm).
10) Press the OK key.
11) Press the Stop key (to leave 'SCANNER').
12) Make a copy of the Test Sheet in Direct on LGL paper and in ADF mode. Then, check to make use that the length of "L" on the copy is as indicated.
13) If it is as indicated, end the work. Otherwise, start over with step 2).

COPYRIGHT © 2001 CANON INC.

1.4 When Replacing a Component

You will need to perform some additional work if you have replaced a component; go through the following for the item of work and steps to take:

1.4.1 When Replacing the Image Processor PCB

Perform the following if you have replaced the image processor PCB:

1.4.1.1 Before Starting the Work

1) If the machine is equipped with fax functions, print out the following and all received images: system data list, 1-touch/speed/group dial list, user data list, activity report, system dump list.
2) Turn off the power.

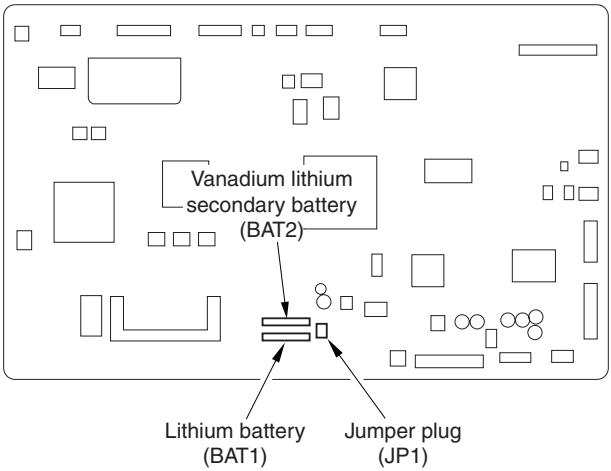

F07-104-01

When the jumper plug (JP1) is removed, all data in control memory will be lost. Therefore, do not disconnect the jumper plug (JP1). The data stored in the SRAM is as follows:

- user data (data set by the user by pressing the Register/OK key)
- service mode deta (data indicating service mode settings)
- control data (communications control record of most recent 20 communications, system dump record)

 COPYRIGHT © 2001 CANON INC.

1.4.1.2 After Finishing the Work

1) Connect the jumper plug (JP1) of the image processor PCB (service part; one side of the pin is disconnected; try connecting both its feet).
2) Turn on the power; then, when 'DATA ERROR' is indicated, press the OK key.
3) Enter the user data and the service mode data.
4) Make various adjustments for the electrical system of the machine. (See 1.2.4 of Chapter 7.)
5) If the machine is equipped with ADF functions, make various adjustments for the ADF. (See 1.3 of Chapter 7.)

1.4.2 When Replacing the NCU PCB

To use this machine in Italy, the steps described below must be carried out when replacing the NCU PCB.

1) Remove the short connector from connector J9 of the NCU PCB.

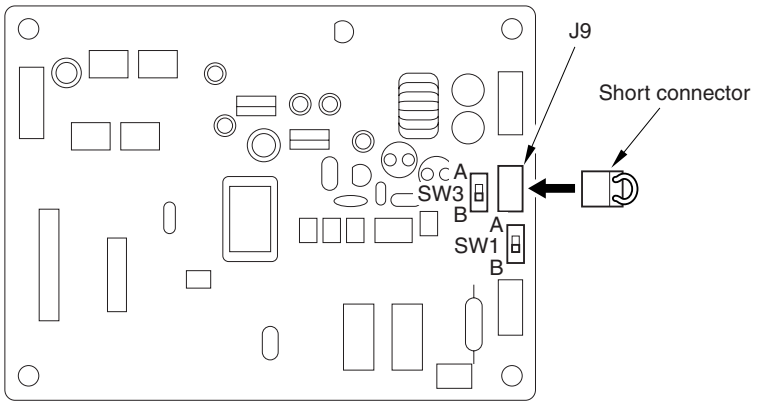

F07-104-02

2) Install the removed short connector to connector J9 of the new NCU PCB.

Do not change the settings of SW1 and SW3 on the NCU PCB. Leave them to the default settings as follows:
SW1 default: B
SW3 default: B

2. Troubleshooting

A fault that can occur in the machine may be one of the following three: an image fault, a malfunction, a feeding fault.

If a fault occurs, make initial checks first; then, isolate the problem according to the troubleshooting flow chart, and take appropriate action with the following in mind:

2.1 Making Initial Checks



1. If you are using a specific terminal of a connector to measure voltage, be sure to check that the connector is not suffering from poor contact.
2. If you are handling a PCB or the contact sensor, be sure to touch a metal portion of the machine before starting the work to avoid static damage.
3. The machine's laser scanner unit cannot be adjusted in the field. Do not disassemble it.

2.1.1 Site Environment

a. The power source must provide the rated voltage ±10%.
b. The site must be free of high temperature/humidity (not near a water faucet, water boiler, humidifier), and must not be in a cold place, near a source of fire, or subject to dust.
c. The site must be free of ammonium gas.
d. The site must be free of direct rays of the sun; otherwise, it must be provided with curtains.
e. The site must be well ventilated.
f. The machine must be level.
g. If the machine is equipped with fax functions, it must remain powered day and night.

2.1.2 Checking the Cartridge

If the surface of the photosensitive drum has scratches, replace the cartridge.

2.1.3 Checking the Paper

a. Is the paper of a recommended type?
b. Is the paper moist? Try fresh paper out of package.

2.1.4 Others

When a machine is brought from a cold to warm place, its inside can start to develop condensation, leading to various problems; for example,

a. condensation in the charging roller system tends to cause electrical leakage.
b. condensation on the pickup/feed path tends to cause a feeding fault.

If condensation occurs, dry wipe the parts or leave the machine ON for 60 min.

 COPYRIGHT © 2001 CANON INC.

2.2 Troubleshooting Flow Chart

After going through the initial checks, try to isolate the problem using the following flow chart, and take appropriate action:

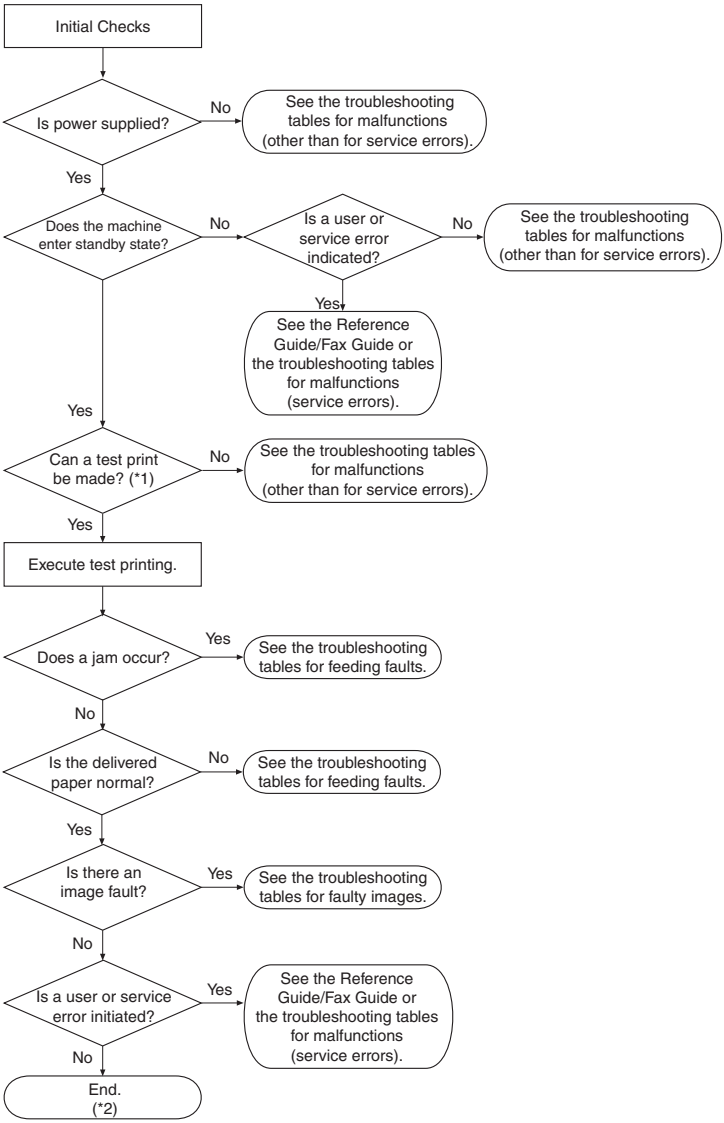

F07-202-01

*1: When executing test printing, be sure to select the source of paper used by the user when the fault occurred.
*2: For malfunctions related to the ADF, see the descriptions of faults unique to machines equipped with ADF functions. Likewise, if a malfunction occurs while printing from a PC or a fax communication, see its respective section (those unique to printer functions or those unique to fax functions).

2.3 Making Checks in Response to an Image Fault

When you have indicated an image fault using the troubleshooting flow chart, go through the following before starting troubleshooting work that follows:

2.3.1 Checking the Originals Against the Symptom

Determine whether the fault is caused by the machine or the original:

a. The copy density is best set to index 5 ± 2.
b. Originals with a bluish background tend to cause poor contrast; e.g., blue sheet, receipts.
c. The density of the original affects its copies: e.g., a diazo copy original or an original with a high transparency can produce output that can be mistaken for “foggy copies,” while originals prepared in light pencil can produce output that can be mistaken for “light” copies.

2.3.2 Copyboard Glass and White Sheet

If the copyboard glass or the white sheet is soiled, wipe it with a moist cloth and then dry wipe it. If the dirt is excessive, use alcohol and lint-free paper. If there are scratches, replace it.

 COPYRIGHT © 2001 CANON INC.

3 Troubleshooting Image Faults

3.1 Troubleshooting Procedure for Image Faults

Before starting to investigate the cause of an image fault, be sure to find out wheather the user is storing paper in the correct way and using paper of a recommended type. If the problem is corrected using such paper, advise the user accordingly.

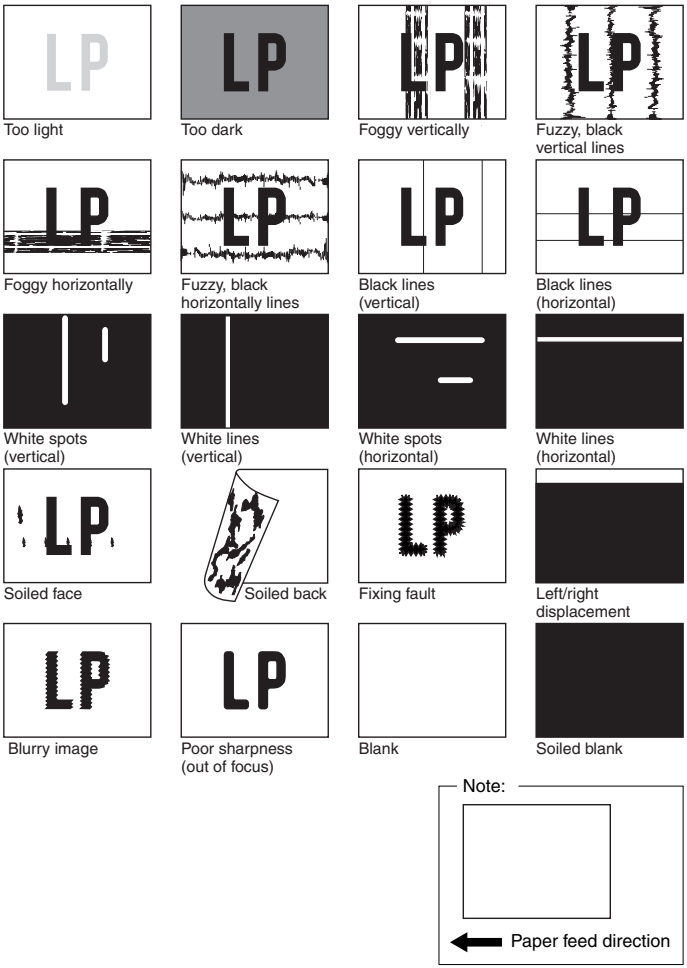

F07-301-01

3.1.1 The output is too light.

Image density

1) Is the image density setting correct?

- **In the case of copier functions: PRINT EXPOSURE of COMMON SETTINGS and STANDARD EXPOSURE of COPY SETTINGS on user mode menu.**
- **In the case of printer functions or fax functions, PRINT EXPOSURE of COMMON SETTINGS on user mode menu.**

NO: Correct the image density setting.

Paper

2) Try paper fresh out of package (newly opened). Is the problem corrected?

YES: 1. The paper may be moist. Advise the user on the correct method of storing paper.
2. Advise the user that the use of non-recommended paper may not bring about the best results.

General conditions

3) Execute 'PRINT test'. Is the output image normal? (See 3.21.5 of Chapter 2.)

YES: Go through steps 14) to 18).
NO: Go to step 4.

General conditions

4) Turn off the machine while an image is printing on the photosensitive drum. Is the toner on the drum surface developed?

YES: Go through steps 11) to 13).
NO: Go through steps 5) to 10).

Cartridge

5) Take out the cartridge, and rock it lightly 5 to 6 times. Is the problem corrected?

YES: End.

High-voltage contact (between cartridge and high-voltage spring)

6) Is the high-voltage spring used to supply high voltage to the cartridge soiled? (Remove the cartridge to check.)

YES: Clean it.

High-voltage contact (between high-voltage spring and DC controller PCB; J205, J207)

7) Is the connection between the high-voltage spring and the DC controller PCB (J205, J207) normal?

NO: Correct it. If it cannot be corrected, replace the faulty part.

 COPYRIGHT © 2001 CANON INC.

Connector

8) Is the connection of the following connectors normal: J201 and J204 on the DC controller PCB; J303, J304, J312, and J316 on the image processor PCB; J3122 and J801 in the laser scanner unit?

NO: Connect them firmly. If a scratch is found in the flexible cable, replace it.

Cartridge

9) Try replacing the cartridge. Is the problem corrected?

YES: End.

Laser scanner unit, DC controller PCB

10) Try replacing the laser scanner unit. Is the problem corrected?

YES: End.

NO: Replace the DC controller PCB.

Transfer guide

11) Measure the transfer guide and other metal portions. Is the resistance 0 Ω

YES: Check the area around the toner guide for a piece of metal (e.g., screw).

High-voltage contact (between transfer charging roller and high-voltage spring)

12) Is the high-voltage spring used to supply high voltage to the transfer charging roller soiled?

YES: Clean it.

High-Voltage Contact (high-voltage spring and DC controller PCB; J209), Transfer charging roller

13) Is the connection between the high-voltage spring and DC controller PCB (J209) normal?

YES: Replace the transfer charging roller.

NO: Correct it. If it cannot be corrected, replace the faulty part.

Selfoc lens array (contact sensor)

14) Clean the selfoc lens array of the contact sensor. Is the problem corrected? (See 4.3.1 of Chapter 6.)

YES: End.

Contact sensor LED intensity auto adjustment

15) Execute contact sensor LED intensity auto adjustment. Is the problem corrected? (See 1.2.4.1 of Chapter 7.)

YES: End.

Connector

16) Is the connection of the following connectors normal: J501 and J503 on the analog processor PCB; J317 on the image processor PCB; and J504 of the contact sensor?

NO: Connect them firmly. If the flexible cable has a scratch, replace it.

COPYRIGHT © 2001 CANON INC.

Contact sensor

17) Try replacing the contact sensor. Is the problem corrected?

YES: End.

Analog processor PCB, Image processor PCB

18) Try replacing the analog processor PCB. Is the problem corrected?

YES: End.

NO: Replace the image processor PCB.

3.1.2 The output is too dark.

Image density

1) Is the image density setting correct?

- **In the case of copier functions: PRINT EXPOSURE of COMMON SETTINGS and STANDARD EXPOSURE of COPY SETTINGS on user mode menu.**
- **In the case of printer functions or fax functions, PRINT EXPOSURE of COMMON SETTINGS on user mode menu.**

NO: Correct the image density setting.

General condition

2) Execute 'PRINT test'. Is the output image normal? (See 3.21.5 of Chapter 2.)

YES: Go through steps 8) to 12).

NO: Go through steps 3) to 7).

High-voltage contact (between cartridge and high-voltage spring)

3) Is the high-voltage spring used to supply high voltage to the cartridge soiled? (Remove the cartridge to check.)

YES: Clean it.

High-voltage contact (between high-voltage spring and DC controller PCB; J205, J207)

4) Is the connection between the high-voltage spring and the DC controller PCB (J205, J207) normal?

YES: Correct it. If it cannot be corrected, replace the faulty part.

Connector

5) Is the connection of the following connectors normal: J201 and J204 on the DC controller PCB; J303, J304, J312, and J316 on the image processor PCB; J3122 and J801 in the laser scanner unit?

NO: Connect them firmly. If the flexible cable has a scratch, replace it.

Cartridge

6) Try replacing the cartridge. Is the problem corrected?

YES: End.

Laser scanner unit, DC controller PCB

7) Try replacing the laser scanner unit. Is the problem corrected?

YES: End.

NO: Replace the DC controller PCB.

 COPYRIGHT © 2001 CANON INC.

Selfoc lens array (contact sensor)

8) Clean the selfoc lens array of the contact sensor. Is the problem corrected? (See 4.3.1 of Chapter 6.)

YES: End.

Contact sensor LED intensity auto adjustment

9) Execute contact sensor LED intensity auto adjustment. Is the problem corrected? (See 1.2.4.1 of Chapter 7.)

YES: End.

Connector

10) Is the connection of the following connectors normal: J501 and J503 on the analog processor PCB; J317 on the image processor PCB; J504 of the contact sensor?

NO: Connect them firmly. If the flexible cable has a scratch, replace it.

Contact sensor

11) Try replacing the contact sensor. Is the problem corrected?

YES: End.

Analog processor PCB, Image processor PCB

12) Try replacing the analog processor PCB. Is the problem corrected?

YES: End.

NO: Replace the image processor PCB.

3.1.3 The output is foggy vertically.
3.1.4 The output has fuzzy, black vertical lines.

Transfer guide assembly, Cartridge

1) Clean the transfer guide assembly. Is the problem corrected?

YES: End.

NO: Replace the cartridge.

3.1.5 The output is foggy horizontally.
3.1.6 The output has fuzzy, black horizontal lines.

General conditions

1) Execute 'PRINT test'. Is the output image normal? (See 3.21.5 of Chapter 2.)

YES: Go through steps 3) to 7).

NO: Go to step 2).

Transfer guide assembly, Cartridge

2) Clean the transfer guide assembly. Is the problem corrected?

YES: End.

NO: Replace the cartridge.

Selfoc lens array (contact sensor)

3) Clean the selfoc lens array of the contact sensor. (See 4.3.1 of Chapter 6.)

YES: End.

Contact sensor LED intensity auto adjustment

4) Execute contact sensor LED intensity auto adjustment. Is the problem corrected? (See 1.2.4.1 of Chapter 7.)

YES: End.

Connector

5) Is the connection of the following connectors normal: J501 and J503 on the analog processor PCB; J317 on the image processor PCB; and J504 of the contact sensor?

NO: Connect them firmly. If the flexible cable has a scratch, replace it.

Contact sensor

6) Try replacing the contact sensor. Is the problem corrected?

YES: End.

Analog processor PCB, Image processor PCB

7) Try replacing the analog processor PCB. Is the problem corrected?

YES: End.

NO: Replace the image processor PCB.

 COPYRIGHT © 2001 CANON INC.

3.1.7 The output has black lines (vertical).
3.1.8 The output has black lines (horizontal).

Fixing inlet guide

1) Clean the fixing inlet guide. Is the problem corrected?

YES: End.

Cartridge (photosensitive drum or primary charging roller), Fixing assembly

2) Try replacing the cartridge. Is the problem corrected?

YES: End.

NO: Replace the fixing assembly.

3.1.9 The output has white spots (vertical).
3.1.10 The output has white lines (vertical).

General conditions

1) Execute 'PRINT test'. Is the output image normal? (See 3.21.5 of Chapter 2.)

YES: Go to step 4).

NO: Go through steps 2) through 3).

Transfer charging roller

2) Is the transfer charging roller soiled?

YES: Clean it. If the problem is not corrected, replace it.

Cartridge, Fixing assembly

3) Try replacing the cartridge. Is the problem corrected?

YES: End.

NO: Replace the cartridge.

Contact sensor drive belt, Contact sensor drive rail

4) Is the contact sensor drive belt normal?

YES: Clean the surface of the contact sensor drive rail with alcohol; thereafter, apply a small amount of lubricant.

NO: Replace the contact sensor drive belt.

COPYRIGHT © 2001 CANON INC.

3.1.11 The output has white spots (horizontal).
3.1.12 The output has white lines (horizontal).

Static eliminator

1) Is the static eliminator soiled?

YES: Clean it.

Back of copyboard glass (back of shading plate; dirt)

2) Try cleaning the back of the shading plate of the copyboard glass. Is the problem corrected?

YES: End.

Shading position

3) Change the setting of No. 19 under '#6 SCANNER' in service mode. Is the problem corrected?

YES: End.

Transfer charging roller

4) Is the transfer charging roller soiled?

YES: Clean it. If the problem is not corrected, replace it.

Cartridge, Fixing assembly

5) Try replacing the cartridge. Is the problem corrected?

YES: End.

NO: Replace the fixing assembly.

 COPYRIGHT © 2001 CANON INC.

3.1.13 The output is soiled.

Rollers (manual feed pickup roller, registration roller, fixing film, delivery roller), Photosensitive drum, Cartridge, Contact sensor

1) Is the problem at specific intervals?

YES: Identify the cause by referring to T07-301-01, and clean it. (If it is the photosensitive drum, replace the cartridge.)
If the problem is not corrected, replace it.

NO: Check for drops of toner from the cartridge.
If the problem occurs only in copy images, clean the selfoc lens array of the contact sensor.

Image Faults by Component

Component	Diameter*1	Image fault interval*1	Type of image fault					
			White spot	Soiling	Soiled back	Fixing fault	Blurring	Poor sharpness
Cassette pickup roller	38.0	-			√			
Manual feed pickup roller	32.0	-		√	*2			
Vertical path roller	14.3	44.9		*2	√			
Registration roller	13.9	43.8		*2	√			
Primary charging roller	12.0	37.3						√
Developing cylinder	16.0	42.0	√					√
Photosensitive drum	30.0	93.3	√	√			√	√
Transfer charging roller	14.6	43.7	√		√		√	√
Fixing film	24.0	75.4		√	*2	√		
Fixing pressure roller	20.4	64.1		*2	√	√		
Delivery roller	12.4	39.0		√	*2			

*1: Approximate; in mm.

*2: Can be caused by dirt from the roller.

T07-301-01

COPYRIGHT © 2001 CANON INC.

3.1.14 The back of the output is soiled.

Paper

1) Is the paper soiled?

YES: Replace the paper.

Fixing pressure roller

2) Execute fixing pressure roller cleaning. Is the problem correct? (See 4.1.1 of Chapter 6.)

YES: Advise the user to clean the fixing pressure roller periodically.

Transfer guide

3) Is the surface of the transfer guide soiled with toner?

YES: Clean it.

Static eliminator

4) Is the static eliminator soiled with toner?

YES: Clean it.

Rollers (cassette pickup roller, vertical path roller, registration roller, transfer charging roller, fixing pressure roller), Paper path

5) Is the problem noted at specific internals?

YES: Isolate the cause by referring to T07-301-01, and clean it. If the problem is not corrected, replace the part.

NO: Clean the paper path. If the problem cannot be corrected, replace the part.

 COPYRIGHT © 2001 CANON INC.

3.1.15 The output has a fixing fault.

Paper

1) Try paper fresh out of package (newly opened). Is the problem corrected?

YES: 1. The paper may be moist. Advise the user on the correct method of storing paper.
2. Advise the user that the use of non-recommended paper may not bring about the best results in terms of fixing.

Fixing pressure roller

2) Execute fixing pressure roller cleaning. Is the problem corrected? (See 4.1.1 of Chapter 6.)

YES: Advise the user to clean the fixing locking roller periodically.

Paper selection (for manual feed)

3) Is the setting of paper selection suited to the type of paper placed in the manual feed tray?

NO: Correct the setting.

Connector

4) Is the connection of the connector J107 on the power supply PCB normal?

NO: Connect it firmly.

Fixing pressure roller

5) Is the surface of the fixing pressure roller normal?

NO: Clean the fixing locking roller. If it has a scratch, replace it.

Fixing film unit

6) Try replacing the fixing film unit. Is the problem corrected?

YES: End.

Fixing pressure roller (nip), Power supply PCB

7) Is the nip of the fixing pressure roller correct? (See 1.1 of Chapter 7.)

NO: Replace the fixing assembly. If the problem is not corrected after replacement, replace the power supply PCB.

COPYRIGHT © 2001 CANON INC.

3.1.16 The output has left/right displacement.

Original

1) Is the original placed correctly?

NO: Place it correctly.

Paper

2) Is the paper curled appreciably?

YES: Replace the paper.

Stack

3) Is the amount of paper placed in the cassette more than allowed?

YES: Advise the user on the limit imposed on the amount of paper.

Left/right edge read start position adjustment, DC controller PCB

4) Execute left/right edge read start position adjustment. Is the problem corrected? (See 1.2.4.3 of Chapter 7.)

YES: End.

NO: Replace the DC controller PCB.

3.1.17 The output has a blurry image.

General conditions

1) Execute 'PRINT test'. Is the output image normal? (See 3.21.5 of Chapter 2.)

YES: Go through steps 4) and 5).

NO: Go through steps 2) and 3).

Transfer charging roller, Photosensitive drum

2) Is the problem noted at specific intervals?

YES: Identify the cause by referring to T07-301-1, and replace it. (If the photosensitive drum is the case, replace the cartridge.)
If the problem cannot be corrected, check its drive system (e.g., gears).

Laser scanner unit, DC controller PCB

3) Try replacing the laser scanner unit. Is the problem corrected?

YES: End.

NO: Replace the DC controller PCB.

Contact sensor drive belt

4) Is the contact sensor drive belt normal?

NO: Replace the contact sensor drive belt.

Contact sensor drive rail, reader motor

5) Move the contact sensor slowly. Does it move smoothly?

YES: Replace the reader motor.

NO: Check the surface of the contact sensor drive rail for foreign matter; if there is any, remove it. If it is soiled, clean it with alcohol, and then apply a small amount of lubricant.

 COPYRIGHT © 2001 CANON INC.

3.1.18 The output has poor sharpness (out of focus).

General conditions

1) Execute 'PRINT test'. Is the output image normal? (See 3.21.5 of Chapter 2.)

YES: Go to step 5).

NO: Go through steps 2) and 5).

Sharpness setting

2) Change the setting of 'SHARPNESS' under 'COPY SETTINGS' on the user mode menu. Is the problem corrected?

YES: End.

High-voltage contact (high-voltage spring and DC controller PCB; J205, J207, J209)

3) Is the high-voltage spring used to supply high voltage to the cartridge soiled? (Remove the cartridge to check.)

High-voltage contact (high-voltage spring; J205, J207, J209 on DC controller PCB)

4) Is the connection between the high-voltage spring and the connectors (J205, J207, J209) on the DC controller PCB normal?

NO: Correct the connection. If the problem is not corrected, replace the faulty part.

Cartridge (primary charging roller, developing cylinder, photosensitive drum), Transfer charging roller, Contact sensor drive rail

5) Is the problem noted at specific intervals?

YES: Identify the cause by referring to T07-301-01, and replace it. (If it is the primary charging roller, developing cylinder, or photosensitive drum, replace the cartridge.)

NO: Check the surface of the contact sensor drive rail for foreign matter; if there is any, remove it. If it is solenoid, clean it with alcohol, and then apply a small amount of lubricant.

COPYRIGHT © 2001 CANON INC.

3.1.19 The output is blank.

General conditions

1) Execute 'PRINT test'. Is the output image normal? (See 3.21.5 of Chapter 2.)

YES: Go through steps 11) to 14).

NO: Go to step 2).

General condition

2) Turn off the power while an image is being printed on the photosensitive drum. Is the toner image developed on the drum surface?

YES: Go through steps 8) to 10).

NO: Go through steps 3) to 7).

High-voltage contact (between cartridge and high-voltage spring)

3) Is the high-voltage spring used to supply high voltage to the cartridge soiled? (Remove the cartridge to check.)

YES: Clean it.

High-voltage contact (between high-voltage spring and DC controller PCB; J205, J207)

4) Is the connection between the high-voltage spring and the connectors (J205, J207) on the DC controller normal?

NO: Correct it. If the problem cannot be corrected, replace the faulty part.

Connectors

5) Is the connection of the following connectors on the DC controller PCB normal: J201 and J204 on the DC controller PCB; J303, J304, J312, and J316 on the image processor PCB; J3122, and J801 of the laser scanner unit?

NO: Connect them firmly. If the flexible cable has a scratch, replace it.

Cartridge

6) Try replacing the cartridge. Is the problem corrected?

YES: End.

Laser scanner unit, DC controller PCB

7) Try replacing the laser scanner unit. Is the problem corrected?

YES: End.

NO: Replace the DC controller PCB.

Transfer guide

8) Measure the transfer guide and other metal areas. Is the resistance 0 Ω.

YES: Check the area around the transfer guide for pieces of metal (e.g., screw).

High-voltage contact (between transfer charging roller and high-voltage spring)

9) Is the high-voltage spring used to supply high voltage to the transfer charging roller soiled?

YES: Clean it.

 COPYRIGHT © 2001 CANON INC.

High-voltage contact (between high-voltage spring and DC controller PCB; J209), Transfer charging roller

10) Is the connection between the high-voltage spring and the DC controller PCB (J209) normal?

YES: Replace the transfer charging roller.

NO: Correct it. If the problem cannot be corrected, replace the faulty part.

Contact sensor LED intensity auto adjustment

11) Execute contact sensor LED intensity auto adjustment. Is the problem corrected? (See 1.2.4.1 of Chapter 7.)

YES: End.

Connector

12) Is the connection of the following connectors normal: J501 and J503 on the analog processor PCB; J317 on the image processor PCB; J504 of the contact sensor.

NO: Connect them firmly. If the flexible cable has a scratch, replace it.

Contact sensor

13) Try replacing the contact sensor. Is the problem corrected?

YES: End.

Analog processor PCB, Image processor PCB

14) Try replacing the analog processor PCB. Is the problem corrected?

YES: End.

NO: Replace the image processor PCB.

COPYRIGHT © 2001 CANON INC.

3.1.20 The output is solid black.

General conditions

1) Execute 'PRINT test'. Is the output image normal? (See 3.21.5 of Chapter 2.)

YES: Go through steps 5) to 8).

NO: Go through steps 2) to 4).

High voltage contact (between primary charging roller and high-voltage spring)

2) Is the high-voltage spring used to supply power to the cartridge soiled? (Remove the cartridge to check.)

YES: Clean it.

High-voltage contact (high-voltage spring and DC controller PCB; J205)

3) Is the connection between the high-voltage spring and the DC controller PCB (J205) normal?

NO: Correct it. If the problem cannot be corrected, replace the faulty part.

Cartridge, DC controller PCB

4) Try replacing the cartridge. Is the problem corrected?

YES: End.

NO: Replace the DC controller PCB.

Contact sensor LED intensity auto adjustment adjustment

5) Execute contact sensor LED intensity auto adjustment adjustment. Is the problem corrected? (See 1.2.4.1 of Chapter 7.)

YES: End.

Connector

6) Is the connection of the following controller normal: J501 and J503 on the analog processor PCB; J317 on the image processor PCB; J504 of the contact sensor?

NO: Connect them firmly. If the flexible cable has a scratch, replace it.

Contact sensor

7) Try replacing the contact sensor. Is the problem corrected?

YES: End.

Analog processor PCB, Image processor PCB

8) Try replacing the analog processor PCB. Is the problem corrected?

YES: End.

NO: Replace the image processor PCB.

 COPYRIGHT © 2001 CANON INC.

4 Troubleshooting Malfunctions

4.1 Troubleshooting Malfunctions (service error)

E000

The error history indicates any of the following error codes 4 times: E001, E002, E003.

Action

1) Clear the error.
Execute '#4 PRINTER RESET" under '#7 PRINTER' in service mode to clear the error.; then, turn back on the power.

E001

000 The main thermistor detects 230°C/446°F or higher for 1 sec or more.
001 The sub thermistor detects 300°C/572°F or higher for 0.2 sec or more.

Main cause

The fixing film unit is faulty (thermistor short circuit). The power supply PCB is faulty. The DC controller PCB is faulty.

Action

1. Malfunction
Turn off the power; wait for 10 min, and turn it on. Is the problem corrected?
YES: End.
2. Fixing film unit
Check the connector (4-pin) of the thermistor for electrical continuity: 1-2 and 3-4. Is it 0 Ω?
YES: Replace the fixing film unit.
3. Power supply PCB, DC controller PCB
Try replacing the power supply PCB. Is the problem corrected?
NO: Replace the DC controller PCB.

COPYRIGHT © 2001 CANON INC.

E002

000 During printing, the main thermistor detects 0°C/32°F or lower for 1 sec or more continuously.
About 10 sec or later after power-on/start of printing, the main thermistor detects less than 120°C/248°F for 1 sec or more continuously.
After power-on/start of printing, the reading of the main thermistor does not reach the target value -15°C/-27°F or higher within 75 sec.

001 About 10 sec or later after the heater is supplied with power, the sub thermistor detects less than 75°C/167°F for 2 sec or more continuously.

Main cause: The fixing film unit is faulty (main thermistor fault, sub thermistor fault, thermal fuse blow, fixing heater fault). The power supply PCB is faulty. The DC controller PCB is faulty.

Action: See the descriptions for E003.

E003

During printing, the main thermistor detects less than 120°C/248°F for 1 sec or more continuously.

Main cause: The fixing film unit is faulty (main thermistor fault, thermal fuse blow, fixing heater fault). The power supply PCB is faulty. The DC controller PCB is faulty.

Action:

1. Malfunction

Turn off the power; wait for 10 min, and turn on the power. Is the problem corrected?

YES: End.

2. Wiring

Is the wiring from the DC controller PCB to the fixing film unit normal?

NO: Correct the wiring.

3. Fixing film unit

Try replacing the fixing film unit. Is the problem corrected?

YES: End.

4. Power supply PCB, DC controller PCB

Try replacing the power supply PCB. Is the problem corrected?

YES: End.

NO: Replace the DC controller PCB.

 COPYRIGHT © 2001 CANON INC.

E100

About 1.5 sec after the scanner drive signal output, the BDI* signal is not detected 3 times or more for 1.0 sec.
While the laser is ON, the BD signal cycle is not as indicated for 0.5 or more continuously.

Main cause: The laser driver/BD PCB is faulty (laser activation failure, BD detection fault). The DC controller PCB is faulty. The image processor PCB is faulty.

Action:

1. Laser scanner unit

Try replacing the laser scanner unit. Is the problem corrected?
YES: End.

2. DC controller PCB, Image processor PCB

Try replacing the DC controller PCB. Is the problem corrected?
YES: End.
NO: Replace the image processor PCB.

E110

The scanner fails to reach the target speed of rotation 10 sec after the laser scanner motor reaches constant speed state.

Main cause: The laser scanner motor is faulty. The DC controller PCB is faulty.

Action:

1. Laser scanner unit, DC controller PCB

Try replacing the laser scanner unit. Is the problem corrected?
YES: End.
NO: Replace the DC controller PCB.

COPYRIGHT © 2001 CANON INC.

E805

While the fan is rotating, fan lock state is detected for 10 sec or more continuously.

Main cause

The fan is faulty. The DC controller PCB is faulty. The image processor PCB is faulty.

Action

1. Foreign matter

Is there any foreign matter that hinders the rotation of the heat discharge fan?

YES: Remove the foreign matter.

2. Wiring, Connection

Are the wiring and connection (connectors) of the fan normal?

NO: Correct them.

3. Fan

Try replacing the fan. Is the problem corrected?

YES: End.

4. DC controller PCB/Image processors PCB

Try replacing the DC controller PCB. Is the problem corrected?

YES: End.

NO: Replace the image processor PCB.

 COPYRIGHT © 2001 CANON INC.

4.2 Troubleshooting Malfunctions (other than service error)

4.2.1 Power is absent.

Power plug

1) Is the power plug connected to the power outlet?

NO: Connect it firmly.

Power cord

2) Is the power cord connected to the machine? Moreover, is the power cord normal?

NO: Connect it. If it is faulty, replace it.

Source power

3) Is the rated voltage present at the power outlet?

YES: Replace the power supply PCB. If the fuse has blown, find and remove the cause.

NO: The problem is not of the machine. Advise the user.

4.2.2 The LCD fails to operate.

Connector

1) Is the connection of the following connectors normal: J401 and J402 on the control panel PCB; J315 on the image processor PCB; J4020 on the LCD?

NO: Connector them firmly. If the flexible cable has a scratch, replace it.

LCD

2) Try replacing the LCD. Is the problem corrected?

YES: End.

Control panel PCB/Image processor PCB

3) Try replacing the control panel PCB. Is the problem corrected?

YES: End.

NO: Replace the image processor PCB.

COPYRIGHT © 2001 CANON INC.

4.2.3 The contact sensor fails to move.

Contact sensor, Spacer of contact sensor

1) Are the contact sensor and the spacers of the contact sensor mounted correctly?

NO: Mount them correctly.

Contact sensor drive belt

2) Is the contact sensor drive belt normal?

NO: Replace the contact sensor drive belt.

Contact sensor drive rail

3) Move the contact sensor slowly. Does it move smoothly?

NO: Check the surface of the contact sensor drive rail for foreign matter, and remove any foreign matter. If it is soiled, clean it with alcohol, and apply a small amount of lubricant.

Connector

4) Is the connection between the connector J310 on the image processor PCB and the connector of the reader motor normal?

NO: Correct the connection.

Reader motor, Image processor PCB

5) Try replacing the reader motor. Is the problem corrected?

YES: End.

NO: Replace the image processor PCB.

4.2.4 The contact sensor LED fails to go ON.

Connector

1) Is the connection of the following sensors normal: J501 and J503 on the analog processor PCB; J317 on the image processor PCB; J504 on the contact sensors?

NO: Correct the connection. If the flexible cable has a scratch, replace it.

Contact sensor

2) Try replacing the contact sensor. Is the problem corrected?

YES: End.

Analog processor PCB, Image processor PCB

3) Try replacing the analog processor PCB. Is the problem corrected?

YES: End.

NO: Replace the image processor PCB.

 COPYRIGHT © 2001 CANON INC.

4.2.5 The speaker fails to generate sound.

Volume setting

1) Is the volume setting in user mode menu correct?

NO: Correct the setting.

Connector

2) Is the connection of the following connectors normal: J315 on the image processor PCB; J401 and J404 on the control panel PCB?

NO: Correct the connection. If the flexible cable has a scratch, replace it.

Speaker

3) Try replacing the speaker. Is the problem corrected?

YES: End.

Control panel PCB, Image processor PCB

4) Replace the control panel PCB. Is the problem corrected?

YES: End.

NO: Replace the image processor PCB.

4.2.6 The message “INSTALL CARTRIDGE” fails to go OFF.

High-voltage contact (between machine and cartridge)

1) Is the high-voltage spring used to supply high voltage to the cartridge soiled?

YES: Clean it.

High-voltage contact (between high-voltage spring and DC controller PCB; J205)

2) Is the connection between the high-voltage spring and the DC controller PCB (J205) normal?

NO: Correct the connection. If the problem cannot be corrected, replace the faulty part.

Cartridge, DC controller PCB

3) Replace the cartridge. Is the problem corrected?

YES: End.

NO: Replace the DC controller PCB.

COPYRIGHT © 2001 CANON INC.

4.2.7 The message “SUPPLY REC. PAPER” fails to go OFF. (cassette)

Cassette

1) Is the cassette fitted correctly?

NO: Fit the cassette correctly.

Spring (holding plate)

2) Is the holding plate of the cassette in up position?

NO: Check the case holding plate, and correct if necessary. If damaged, replace it.

Flag of cassette paper sensor (PS103)

3) Is the flag of the cassette paper sensor displaced or damaged?

YES: Correct it. If damaged, replace it.

NO: Replace the DC controller PCB.

4.2.8 The message “SUPPLY REC. PAPER” fails to go OFF. (manual feed tray)

Flag of manual feed tray paper sensor (PS4)

1) Is the flag of the manual feed tray paper sensor (PS4) displaced or damaged?

YES: Correct it. If damaged, replace it.

Connector

2) Is the connection of the following connectors normal: J303 and J308 on the image processor PCB; J204 on the DC controller PCB; J3081 on the manual feed tray paper sensor (PS4)?

NO: Correct the connection.

Manual feed tray paper sensor (PS4)

3) Try replacing the manual feed paper sensor (PS4). Is the problem corrected?

YES: End.

DC controller PCB, Image processor PCB

4) Try replacing the DC controller PCB. Is the problem corrected?

YES: End.

NO: Replace the image processor PCB.

 COPYRIGHT © 2001 CANON INC.

4.2.9 The message “REC. PAPER JAM” fails to go OFF.

General conditions

1) Check to find out which of the following sensors is faulty. (See 6.1 of Chapter 7.)

- **cassette paper sensor (PS103)**
- **manual feed tray paper sensor (PS4)**
- **delivery sensor (PS3)**
- **paper leading edge sensor (PS102)**

Sensor flag

2) Is the flag of the sensor identified in step 1) damaged or displaced?

YES: Correct it. If damaged, replace it.

Connector

3) Is the connection between the connector for the sensor identified in step 1) and the image processor PCB, DC controller PCB, and power supply PCB normal?

- **In the case of the manual feed tray paper sensor (PS4), J303 and J308 of the image processor PCB and J204 of the DC controller PCB.**
- **In the case of the delivery sensor (PS3), J106 and J109 of the power supply PCB and J202 of the DC controller PCB.**

NO: Correct the connection.

Sensor

4) If the faulty sensor is any of the following, try replacing it. Is the problem corrected?

- **manual feed tray paper sensor (PS4)**
- **delivery sensor (PS3)**

YES: End.

DC controller PCB, Image processor PCB, Power supply PCB

5) 1. If the cassette paper sensor (PS103) or the paper leading edge sensor (PS102) is faulty, try replacing the DC controller PCB. Is the problem corrected?

2. If the manual feed tray paper sensor (PS4) is faulty, try replacing the image processor PCB. Is the problem corrected?

3. If the delivery sensor (PS3) is faulty, try replacing the power supply PCB. Is the problem corrected?

YES: End.

NO: If the manual feed tray paper sensor (PS4) or the delivery sensor (PS3) is faulty, replace the DC controller PCB.

COPYRIGHT © 2001 CANON INC.

4.2.10 The message “PLATEN IS OPEN CLOSE THE PLATEN Unit” fails to go OFF.

Sensor flag

1) Is the reader unit slide detecting switch (SW1) damaged or displaced?

YES: Correct it. If damaged, replace it.

Connector

2) Is the connection between the connector of the reader unit slide detecting switch (SW1) and the connector J314 on the image processor PCB normal?

NO: Correct the connection.

Reader unit slide detecting switch (SW1), Image processor PCB

3) Try replacing the reader unit slide detecting switch (SW1). Is the problem corrected?

YES: End.

NO: Replace the image processor PCB.

 COPYRIGHT © 2001 CANON INC.

4.3 Troubleshooting Malfunctions (if equipped with ADF functions)

4.3.1 Original pickup fails.

General conditions

1) Does the ADF motor rotate?

YES: Go through steps 2) through 4).

NO: Go to step 5) through 6).

General conditions

2) Is the original separation roller rotating?

NO: Check the gear and timing belt used to transmit the drive of the ADF motor (M3). If scratched, replace it.

Original pickup roller descent/Original stopper ascent mechanism

3) Does the original pickup roller move down and the original stopper move up during original pickup?

NO: Check the parts of the original separation roller unit, and correct any fault. If scratched, replace it.

Rollers (separation roller unit)

4) Is the surface of each roller of the separation roller unit normal?

NO: Replace the faulty roller.

ADF motor (connection)

5) Is the ADF motor harness connected firmly?

NO: Connect it firmly.

ADF motor (M3), Image processor PCB

6) Try replacing the ADF motor (M3). Is the problem corrected?

YES: End

NO: Replace the image processor PCB.

COPYRIGHT © 2001 CANON INC.

4.4 Troubleshooting Malfunctions (printer functions)

If the results of all work in the troubleshooting flow in 2.2 are good and yet a fault occurs when a printer function is used (printing from a PC), go through the following:

4.4.1 Printing fails to start.
4.4.2 Printing stops in the middle.

Status check

1) Can test print be done from the PC?

YES: Explain the user that the trouble cause is probably not within the machine.

Operating environment

2) Is the PC used meet the requirements of the machine?

NO: Explain the user that PC environment must satisfy the requirements of the machine. (Refer to Quick Start Guide.)

Status check

3) Run the troubleshooter of the machine from the PC. Are the check results normal?

NO: Correct the problem according to the description displayed as the check results.

Connection of interface cables to PC

4) Is the connection of the interface cables normal?

NO: Connect securely. Replace the cable if it has scratches, etc.

PC settings

5) Are the PC settings correct? (Printer port setting, printer driver selection, etc.)

NO: Correct the settings. (Refer to Quick Start Guide, Print Guide, and operation manual of the PC.)

Interface cables

6) Are the cables meet the specifications of the model?

NO: Replace the cables with the ones that satisfy the specifications of the model.
USB cable specifications: 5 m or shorter
Parallel interface cable specifications: 3 m or shorter (compliant to IEEE1284, for bi-directional communication)

Printer driver

7) Is the problem remedied after reinstalling an optimal printer driver?

YES: End

 COPYRIGHT © 2001 CANON INC.

Connector

8) Is the connection of the printer controller PCB (J709) and the image processor PCB (J318) normal?

NO: Correct the connection. If the flexible cable has a scratch, replace it.

Printer controller PCB

9) Try replacing the printer controller PCB. Is the problem corrected?

YES: End.

NO: Replace the image processor PCB.

COPYRIGHT © 2001 CANON INC.

4.5 Troubleshooting (faults unique to models equipped with fax functions)

4.5.1 Troubleshooting Communication Faults

Go through the troubleshooting flow chart*; if you cannot reach the last step of the flow of work and the fault occurs while a fax function is in use, go through the following: 2.2 of Chapter 7.

1) Find out the conditions in which the fault occurs in detail.
   a. operation used; i.e., number of pages, transmission mode, timing of error occurrence (as before or after transmission), user of auto-dialing
   b. faulty image samples (store away; in the case of reception)
   c. LCD indication at time of the fault
   d. activity report at time of the fault
   e. user information: abbreviation, telephone number, fax number, model name
   f. other-party information: name, telephone number, fax number, model
   g. frequency of occurrence, type of error
   h. fax condition at other party; number of pages transmitted/received, auto or manual; reception condition



If you are visiting in response to a report, try to obtain a system dump list for a. and g.

2) Go through the following flow chart to conduct a communication test.

- Try a test several times for each item using the actual telephone line; check the symptoms, and keep a record.

3) Evaluate all the information you have colleted, and take appropriate action based on comprehensive evaluation.



If the other party is a non-Canon machine and no fault is found in the user's machine, arrange for an investigation of the other party. Advise the user on the situation.

 COPYRIGHT © 2001 CANON INC.

- Troubleshooting a Communication Fault (Canon machine in use)
  Try a 3-station communication as indicated in the following diagram:

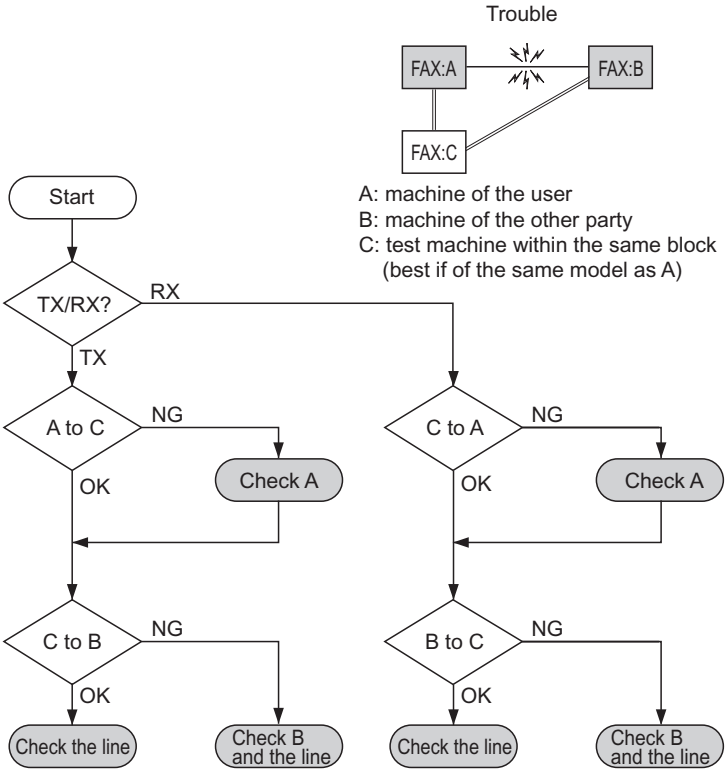

F07-405-01

4.5.2 Service Error Code Output

If '1' is set to service data #1 SSSW SW01 bit 0, an appropriate service error code will be indicated on the following reports if a communication ends in error: communication control report, reception result report, error transmission report.

When an error occurs, you can generate a system dump list in service mode to check the code.

4.5.3 Error Codes

The error codes used in the machine are defined as follows:

4.5.3.1 Transmission Level (ATT): No.07 of Service Soft Switch #2 MENU

- Increase the transmission level:
  Increase the setting so that it is closer to 0 dBm. (At 0 dBm, the LCD indicates '0'.)
- Decrease the transmission level:
  Decrease the setting so that it is closer to -15 dBm. (At -15 dBm, the LCD indicates '15'.)

4.5.3.2 NL Equalizer: No.05 of Service Soft Switch #2 MENU

- Adjust the NL equalizer:
  Select 'ON'.

4.5.3.3 Transmission Page Timer: SW12 of Service Soft Switch #1 SSSW

- Increase the page timer setting:
  To set both transmission and reception to the same time-out length, set SW12 as follows:
  8 min: bit 7, bit 1, bit 0 = 0, 0, 0
  16 min: bit 7, bit 1, bit 0 = 0, 0, 1
  32 min: bit 7, bit 1, bit 0 = 0, 1, 0
  64 min: bit 7, bit 1, bit 0 = 0, 1, 1
  If you want to set transmission and reception to different time-out lengths, or use different time-out lengths according to different image modes, you will have to set all bits (from 7 through 0) accordingly.

4.5.3.4 T0 Timer: No.10 of Service Soft Switch #3 NUMERIC param.

- Increase the T0 timer setting:
  Increase the setting of No.10.
  The T0 timer is used to set the period of time in which a line connection is recognized for transmission, i.e., in which the machine waits for a significant signal from the other party after dialing. The line will be disconnected if no significant signal is received during the period.

 COPYRIGHT © 2001 CANON INC.

4.5.3.5 T1 Timer: No.11 of Service Soft Switch #3 NUMERIC param.

- Increase the T1 timer setting:

Increase the setting of No.11.

The T1 timer is used to set the period of time in which a line connection is recognized for reception, i.e., in which the machine waits for a significant signal from the other party after transmission of DIS. The line will be disconnected if no significant signal is received during the period.

4.5.3.6 RTN Signal Transmission Condition: No. 02, 03, and 04 of Service Soft Switch #3 NUMERIC param.

- Loosen the RTN signal transmission condition:

Increase the settings of No.02, 03, and 04.

No.02 is used to set the ratio of the number of error lines to the total number of lines per page (1% to 99%).

No.03 is used to set the burst error (number of successive error lines identified as an errors) ; (2 to 99 lines).

No.04 is used to set the number of errors falling short of a burst error (1 to 99 times).

4.5.3.7 Echo Remedy

- An echo remedy may be provided on the reception side as follows:

Echo Remedy 1 (by the receiving machine; adds a 1080-Hz total signal before transmission of CED):

Set SW03 bit 7 of service soft switch #1 SSSW to '1' so that a 1080-Hz total signal is transmitted before transmission of CED.

Echo Remedy 2 (by the receiving machine; changes the period in which the low speed signal is ignored after transmission of CFR):

Set SW04 bit 4 of service soft switch #1 SSSW to '1' so that the period in which the low speed signal is ignored after transmission of CFR is changed from 700 to 1500 msec.

4.5.3.8 Echo Protect Tone: SW03 bit 1 of Service Soft Switch #1 SSSW

- Add an echo protect tone to the V.29 modem signal for transmission:

When SW03 bit 1 is set to '1', an echo protect tone will be added to high-speed transmission V.29 (at 9600 or 7200 bps) for transmission.

4.5.3.9 Number of Final Flag Sequences: SW04 bit 2 of Service Soft Switch #1 SSSW

- Increase the number of final flag sequences:

When SW04 bit 2 is set to '1', the number of final flag sequences will be increased from 1 to 2 for a procedure signal (transmitted at 300 bps).

COPYRIGHT © 2001 CANON INC.

4.5.3.10 Subaddress

A subaddress is used to indicate the location of a memory box in the other party (e.g., confidential mailbox, polling box), and it consists of 20 or fewer characters (numerals, *, #, space). As log as the other party complies with the International Standards of ITU-T, the machine can communicate with it by means of subaddresses.

At times, an ID number (referred to as a "password") is used to restrict access to a location indicated by a subaddress.

With some models, polling based on subaddresses is called "selective polling", and a subaddress used at time of polling is called a "selective polling address".

4.5.3.11 Password

A password used by a Canon facsimile machine may be any of the following:

Password for Subaddress Communications:

This is an ID number used for a subaddress communication and, as in the case of a subaddress, it consists of 20 or fewer characters (numerals, *, #, space).

Communication Password:

This is an ID number used for a password communication. Some models use 4 decimal characters (0000 through 9999), while some use 3 decimal characters (000 through 255).



Password Used When Making Settings:
A password may also be used for memory lock Rx, call restriction, and other functions. Such a password consists of 4 decimal characters (0000 through 9999), and it is important to remember that these passwords are used inside the machine and are not intended for communication procedures.

4.5.3.12 Signals

Tonal Signal:

A tonal signal consists of sinusoidal waves of a specific frequency, and may be thought of as a sound carrying a meaning. CNG, CED, and ANSam are tonal signals.

Binary Signal:

A binary signal is used to indicate the meaning of a procedure. It is either '1' or '0', modulated according to frequency, and is used as G3 procedure signals.

Procedure Signal:

It is a generic term for a tonal signal and a binary signal.

Preamble:

It is a signal attached to the beginning of a binary signal, and is used to synchronize modem signals for a procedure signal.

Image Signal:

Of procedure signals, it is used for actual transmission of image data.

Significant Signal:

It is a signal whose significance can be understood by a facsimile machine that receives it, and it is free of a transmission error.

 COPYRIGHT © 2001 CANON INC.

4.5.3.13 Timer

T0 Timer:

It indicates the period of time in which a line connection is recognized during transmission; specifically, the machine waits for a significant signal from the other party after dialing.

T1 Timer:

It indicates the period of time in which a line connection is recognized during reception; specifically, the machine waits for a significant signal from the together party after transmission of DIS.

T5 Timer:

It is the period of time in which RR/RNR is transmitted during an ECM communication.

4.5.4 HOW TO RECORD THE PROTOCOL

If you are instructed to "record the communication procedure sound on a DAT or MD, and ask the Technical Center for analysis", refer to the following diagram for a generally used method of connection:

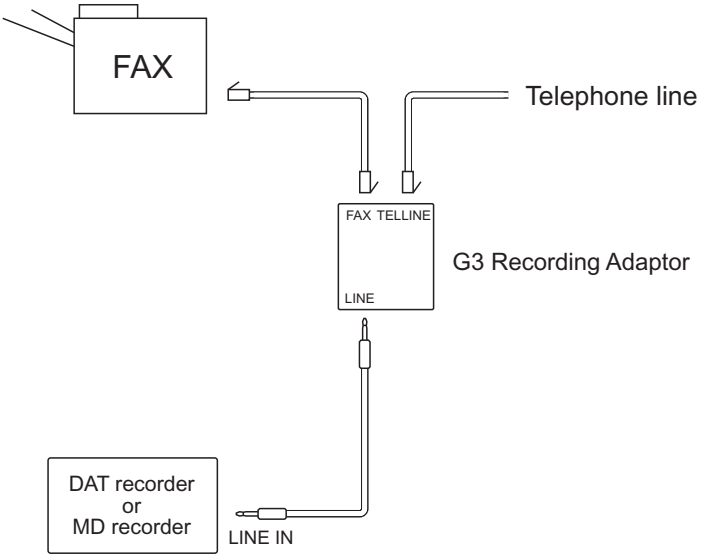

Use Standard (SP) mode for recording.
Set the recording level so that the sound of communication can clearly be heard with as littel noise as possible when replayed.

F07-405-02

 COPYRIGHT © 2001 CANON INC.

4.5.5 Causes and Remedies for User Error Codes

The causes and remedies for individual user error codes are as follows:

#001 [TX] Document has jammed

Cause:	The original is trapped in the feeder
Remedy:	Remove the document, and try again.
Cause:	The original is not of a standard size or thickness.
Remedy:	1. Make a copy on A4/LTR paper in book mode, and transmit the output. 2. If the original is too thin or too small, transmit it in book mode.
Cause:	Internal Fault
Remedy:	1. Check the connection of the DS sensor (original sensor), DES sensor (registration sensor), and image processor PCB. 2. Check the following to see if they operate normally: DS sensor (original sensor), DES senor (registration sensor). (See 6.1 of Chapter 7.) 3. Replace the DS sensor (original sensor) and the DES sensor (registration sensor). 4. Check the connection between the ADF motor and the image processor PCB. 5. Make copies to find out if the ADF motor is operating normally. 6. Replace the image processor PCB.

#003 [TX/RX] Document is too long, or page time-over

Cause:	The length of a single page is too long.
Remedy:	Make copies in book mode, and transmit the original in several divisions.
Cause:	The data of a single page is too large, exceeding the time allowed for transmission.
Remedy:	1. Decrease the reading resolution when transmitting. 2. If the original is too long and, thus, results in a large amount of data, make copies in book mode, and transmit the original in several divisions. 3. If halftone transmission is used, the original is of a default size, and the data is too large, increase the setting of the page timer.
Cause:	The data of a single page is too large, exceeding the time allowed for reception.
Remedy:	1. Ask the operator of the other party to decrease the reading resolution and transmit. 2. Ask the operator of the other party to divide the original and transmit. 3. Increase the setting of the page timer. 4. Ask the operator of the other party to find out the cause.
Cause:	An internal mechanism is faulty.
Remedy:	1. Check the connection of the DES sensor (registration sensor) and image processor PCB. 2. Check the following to see if they operate normally: DES senor (registration sensor). (See 6.1 of Chapter 7.) 3. Replace the DES sensor (registration sensor).

COPYRIGHT © 2001 CANON INC.

4. Check the connection between the ADF motor and the image processor PCB.
5. Make copies to find out if the ADF motor is operating normally.
6. Replace the image processor PCB.

#005 [TX/RX] Initial identification (T0/T1) time-over

Cause: The tone/pulse setting is wrong.
Remedy: Make the correct tone/pulse setting.
Cause: The time it takes to connect to the other party's line is too long.
Remedy:
1. When registering an auto-dial number, put a relatively long pause after the telephone number to delay the T0 timer start mechanism.
2. In service mode, increase the T0 timer length using '10' of #3 Numeric param. so that a time-cover condition will not occur. (for transmission)
3. In service mode, increase the T1 timer length using '11' of #3 Numeric param. so that a time-over condition will not occur. (for reception)

Cause: The other party does not respond.
Remedy: Contact the operator of the other party, and find out the cause.
Cause: The other party's communication mode (G2, G3, etc.) does not match.
Remedy: The communication mode depends on each specific model, and no remedy can be offered.
Cause: During transmission, the other party malfunctioned because of an echo.
Remedy:
1. Using a manual call, press the Start button after hearing the 1st DIS from the other party.
2. To prevent response to the 1st DIS from the other party, put a relatively long pause to the telephone number when registering an auto-dial number.
3. Ask the operator of the other party to provide echo remedy 1.
4. Ask the operator of the other party to decrease the transmission level.

Cause: During reception, the machine malfunctioned because of an echo.
Remedy: Provide echo remedy 1.

#009 [RX] Paper has jammed or the paper has run out

Cause: The paper has run out.
Remedy: Set new paper.
Cause: A paper jam has occurred.
Remedy: Remove the paper jam. (See 5.2 of Chapter 7.)

 COPYRIGHT © 2001 CANON INC.

#011 [RX] Polling reception error

Cause:	There is no original in the other party.
Remedy:	Ask the operator of the other party to set the original correctly.
Cause:	Transmission was attempted, and polling reception was started because the document was not set correctly.
Remedy:	Set the original correctly to transmit.

#012 [TX] The other party has run out of paper

Cause:	The other party has run out of paper.
Remedy:	Ask the operator of the other party to set paper.

#018 [TX] Auto dialing transmission error

Cause:	The tone/pulse setting is wrong.
Remedy:	Make the correct tone/pulse setting.
Cause:	The connection time for the line is too long.
Remedy:	1. When registering an auto-dial number, put a relatively long pause at the end of the telephone number to delay the start of the T0 timer. 2. Increase the T0 timer setting to prevent a time-over condition.
Cause:	The line of the other party was engaged.
Remedy:	Start a call once again.
Cause:	The other party is not connected to the line, or is not turned on so that the transmission did not arrive.
Remedy:	Ask the operator of the other party to find out the cause.
Cause:	The other party is not a facsimile machine.
Remedy:	Check the number of the other party, and start a call once again.
Cause:	The other party ran out of paper so that the line was disconnected during the preprocedure.
Remedy:	Ask the operator of the other machine to set paper.
Cause:	The machine was disconnected from the line using an unidentified reason code.
Remedy:	1. Wait for a while, and start a call once again. 2. Check to make sure that the other party is tuned on.
Cause:	1. The other party did not respond. 2. The other party is out of order. 3. The other party is out of use for some reason. 4. The exchange is congested. 5. There is no line/channel that is available at present. 6. The requested line/channel cannot be used on the side of the other party. 7. Calls crashed. 8. Communication is not possible at present by reason of terminal management.
Remedy:	Ask the operator of the other party to find out the cause.

COPYRIGHT © 2001 CANON INC.

#021 [RX] The other party has rejected the machine during polling reception

Cause: When starting a call, a subaddress, or a subaddress and a password, was not specified.
Remedy: Specify a subaddress, or a subaddress and a password, when starting a call.

#022 [TX] Call fails

Cause: The data for an auto-dial number used when selecting a party was deleted.
Remedy: Register the telephone number of the other party as an auto-dial number, and transmit once again.

#025 [TX/RX] Auto-dial setting is wrong

Cause: The settings require registration of a subaddress for auto-dialing; however, a call was attempted without registering a subaddress.
Remedy: If auto-dialing is of a type requiring registration of a subaddress, register a subaddress.

#037 [RX] Memory has overflowed when receiving images

Cause: The image memory overflowed during reception.
Remedy: Delete image data that is no longer needed, and ask the operator of the other party to transmit once again.

#059 [TX] Dialed number and the connected number (CSI) do not match

Cause: The user telephone number is not registered correctly on the receiving side.
Remedy:
1. Ask the operator of the receiving side to register the user telephone number correctly.
2. Use manual transmission; then, after making sure that a connection has been made, transmit once again.

Cause: The exchange malfunctioned, and the machine is not connected to the dialed party.
Remedy: Have the exchange checked.

#080 [TX] The other party is not equipped with an ITU-T-compliant subaddress reception function

Cause: Bit 49 of DIS received from the other party is '0'.
Remedy:
1. Transmit to a fax machine equipped with a subaddress function.
2. Use normal G3 transmission.

 COPYRIGHT © 2001 CANON INC.

#081 [TX]	The other party is not equipped with an ITU-T-compliant password reception function
Cause:	Bit 50 of DIS received from the other party is '0'.
Remedy:	1. Transmit to a fax machine equipped with a password function. 2. Use subaddress transmission that does not use a password. 3. Use normal G3 transmission.

#082 [RX]	The other party is not equipped with an ITU-T-compliant selective polling transmission function
Cause:	Bit 47 of DIS received from the other party is '0'.
Remedy:	Ask the operator to set normal polling transmission, and use polling reception.

#083 [RX]	Selective polling address or the password does not match during ITU-T-compliant selective polling reception
Cause:	The selective polling address or the password of the machine does not match that of the other machine.
Remedy:	Match the selective polling address and the password of the machine with that of the other party.

#084 [RX]	The other party is not equipped with a password function for ITU-T-compliant selective polling reception
Cause:	Bit 50 of DIS received from the other party is '0'.
Remedy:	Use selective polling that does not use a password.

#995 [TX/RX]	Memory transmission reservation clear/memory reception image clear
Cause:	In the case of transmission, the user canceled the memory transmission reservation.
Remedy:	Transmit once again.
Cause:	In the case of reception, the user deleted the image that had been received in memory reception.
Remedy:	Ask the operator of the other party to transmit once again.

COPYRIGHT © 2001 CANON INC.

4.5.6 Causes and Remedies for Service Error Codes

The causes and remedies for service error codes are as follows:

##100 [TX]	The number allowed for retransmission of the procedure signal was exceeded during transmission
Cause:	The transmission level is too low, and the other party cannot receive NSS, TSI, DCS, TCF, or the training signal correctly.
Remedy:	Increase the transmission level so that the other party may receive the signal correctly.
Cause:	After transmission of TCF immediately before the image signal, the other party malfunctioned because of an echo.
Remedy:	1. Ask the operator of the other party to provide echo remedy 2 2. Using a manual call, press the Start button after hearing the 1st DIS from the other party. 3. To prevent response to the 1st DIS from the other party, put a relatively long pause to the telephone number when registering an auto-dialing number.
Cause:	After transmission of the Q signal following the image signal, the line condition became poor so that the other party cannot receive the image signal or the Q signal correctly.
Remedy:	1. Increase the transmission level so that the other party may service the image signal or the Q signal correctly. 2. Decrease the transmission start speed. 3. Adjust the NL equalizer so that the other party may receive the image signal or the Q signal correctly. 4. Add an echo protect tone to the V.29 modem signal for transmission. 5. Increase the number of final flag sequences for the procedure signal so that the other party may receive the procedure signal correctly.

 COPYRIGHT © 2001 CANON INC.

##101 [TX/RX] The modem speed of the machine does not match that of the other party

Cause: The modem speed of the machine does not match that of the other machine.

Remedy: The modem speed is part of machine specifications, and there is no remedy.

Cause: In the case of transmission, the speed for fallback does not match that of the other party.

Remedy:
1. Increase the transmission level so that the other party may receive TCF correctly.
2. Adjust the NL equalizer so that the other party may receive TCF correctly.
3. Provide echo remedy 1.
4. Using a manual call, press the Start button after hearing the 1st DIS from the other party.
5. To prevent response to the 1st DIS from the other party, put a relatively long pause to the telephone number when registering an auto-dialing number.
6. Ask the operator of the other party to decrease the transmission level so that the other party will not receive an echo.

##102 [TX] Fallback is not possible

Cause: The line condition is poor, and the other party cannot receive TCF correctly.

Remedy:
1. Increase the transmission level so that the other party may receive TCF correctly.
2. Adjust the NL equalizer so that the other party may receive TCF correctly.

Cause: An echo has caused a malfunction.

Remedy:
1. Using a manual call, press the Start button after hearing the 1st DIS from the other party.
2. To prevent response to the 1st DIS from the other party, put a relatively long pause to the telephone number when registering an auto-dialing number.
3. Ask the operator of the other party to provide echo remedy 1.
4. Ask the operator of the other party to decrease the transmission level so that the other party will not receive an echo.

##103 [RX] EOL cannot be detected for 5 sec (15 sec if CBT)

Cause: The line condition is poor, and the image signal cannot be received correctly.

Remedy:
1. Ask the operator of the other party to increase the transmission level so that the image signal may be received correctly.
2. Ask the operator of the other party to decrease the transmission start speed.
3. Adjust the NL equalizer so that the image signal may be received correctly.

Cause: The machine malfunctioned because of an echo of CFR.

Remedy:
1. Provide echo remedy 2.
2. Decrease the transmission level so that an echo of transmitted CFR will not be received.

COPYRIGHT © 2001 CANON INC.

##104 [TX] RTN or PIN has been received

Cause: The line condition is poor so that the other party cannot receive the image signal correctly.

Remedy:
1. Increase the transmission level so that the other party may receive the image signal correctly.
2. Decrease the transmission start speed.
3. Adjust the NL equalizer so that the other party may receive the image signal correctly.
4. Add an echo protect tone to the V.29 modem signal for transmission.
5. Ask the operator of the other party to loosen the RTN transmission conditions so that the other party will not transmit RTN.

Cause: The machine malfunctioned because of an echo.

Remedy:
1. Using a manual call, press the Start button after hearing the 1st DIS from the other party.
2. To prevent response to the 1st DIS from the other party, put a relatively long pause to the telephone number when registering an auto-dialing number.
3. Ask the operator of the other party to provide echo remedy 1.
4. Ask the operator of the other party to decrease the transmission level so that the other party will not receive an echo.

##106 [RX] The procedure signal cannot be received for 6 sec while in wait

Cause: The line condition is poor, and the procedure signal from the other party cannot be received correctly.

Remedy:
1. Ask the operator of the other party to increase the transmission level so that the procedure signal may be received correctly.
2. Adjust the NL equalizer so that the procedure signal may be received correctly.

Cause: The line condition is poor, and the other party cannot receive the signal.

Remedy:
1. Increase the transmission level so that the other party may receive the signal correctly.
2. Adjust the NL equalizer so that the other party may receive the signal correctly.

Cause: The machine malfunctioned because of an echo.

Remedy:
1. Provide echo remedy 1.
2. Decrease the transmission level so that an echo of transmitted signal will not be received.

 COPYRIGHT © 2001 CANON INC.

##107 [RX] The transmitting machine cannot use fall-back

Cause: The line condition is poor, and the signal from the other party cannot be received correctly even at 2400 bps.

Remedy:
1. Ask the operator of the other party to increase the transmission level so that the signal may be received correctly.
2. Adjust the NL equalizer so that the signal may be received correctly.
3. Loosen the RTN transmission conditions so that RTN will not be transmitted.

Cause: The machine malfunctioned because of an echo.

Remedy:
1. Provide echo remedy 1.
2. Decrease the transmission level so that an echo of the transmitted signal will not be received.

##109 [TX] After transmitting DCS, a signal other than DIS, DTC, FTT, CFR, and CRP was received, exceeding the permitted number of transmissions of the procedure signal

Cause: The procedure signal is faulty.

Remedy: Record the protocol on a DAT or MD, and have it analyzed by the local Canon office and/or Technical Center.

##111 [TX/RX]Memory error

Cause: While printing data stored in the image memory, the effects of noise caused a data error.

Remedy: Print out all image data and system data, and execute all-clear; then, store the system data once again.

Cause: Noise started wrong dialing.

Remedy: Replace the image processor PCB.

##114 [RX] RTN was transmitted

Cause: The line condition is poor, and the image signal from the other party cannot be received correctly.

Remedy:
1. Ask the operator of the other party to increase the transmission level so that the image signal may be received correctly.
2. Ask the operator of the other party to decrease the transmission start speed.
3. Adjust the NL equalizer so that the image signal may be received correctly.
4. Loosen the RTN transmission conditions so that RTN will not be transmitted.

Cause: The machine malfunctioned because of an echo of CFR.

Remedy:
1. Provide echo remedy 2.
2. Decrease the transmission level so that an echo of transmitted CFR will not be received.

COPYRIGHT © 2001 CANON INC.

##200 [RX] During image reception, a carrier is not detected for 5 sec

Cause: The line condition is poor, and the image signal cannot be received.

Remedy:
1. Ask the operator of the other party to increase the transmission level so that the image signal may be received correctly.
2. Ask the operator of the other party to decrease the transmission start speed.

Cause: The training signal cannot be received because of an echo of CFR, causing a time-over condition.

Remedy:
1. Provide echo remedy 2.
2. Decrease the transmission level so that an echo of transmitted CFR will not be received.

##201 [TX/RX]DCN was received through a non-normal procedure

Cause: The other party is not ready for reception (e.g., out of paper).

Remedy: Ask the operator of the other party to set the machine for reception (as by setting paper).

Cause: The user telephone number has not been registered (if the receiving machine is a RICOH 3000L).

Remedy: Register the user telephone number.

Cause: In polling transmission, document is not placed.

Remedy: Place a document, and ask the operator of the other party to make a call once again.

Cause: The other party transmitted, but there is no paper.

Remedy: Set paper.

Cause: The line condition is poor, and the other party cannot receive the procedure signal correctly.

Remedy:
1. Increase the transmission level so that the other party may receive the procedure signal correctly.
2. Adjust the NL equalizer so that the other party may receive the procedure signal correctly.

Cause: The machine malfunctioned because of an echo.

Remedy:
1. Provide echo remedies 1 or 2.
2. Decrease the transmission level so that an echo will not be received.

Cause: The image signal or the Q signal cannot be received, and the other party suffered an excess number of re-transmissions of the procedure signal.

Remedy:
1. Ask the operator of the other party to increase the transmission level so that the signal may be received correctly.
2. Adjust the NL equalizer so that the signal may be received correctly.
3. Ask the operator of the other party to decrease the transmission start speed.

Cause: The line condition is poor, and the other party (transmitting machine) cannot use fall-back.

Remedy:
1. Ask the operator of the other party to increase the transmission level so that the signal may be received correctly.
2. Adjust the NL equalizer so that the signal may be received correctly.
3. Loosen the RTN transmission conditions so that RTN will not be transmitted.

 COPYRIGHT © 2001 CANON INC.

##220 [TX/RX]System error (e.g., main program may have gone away)

Cause:	Noise caused the CPU to malfunction.
Remedy:	Turn off and then on the power.

##223 [TX] The line was disconnected during communication

Cause:	The Stop button was pressed during image transmission.
Remedy:	Transmit once again.

##224 [TX/RX]Fault occurred in the communication procedure signal

Cause:	The original on the transmitting party is not correctly fed, forcing polling mode to start (i.e., DCN was received in response to DIS).
Remedy:	1. Check to make user that the original is placed correctly. 2. If the feeding roller is worn, replace it.
Cause:	In a memory full condition, a call arrived when a original was set (i.e., DCN was received in response to DIS).
Remedy:	If any image received in memory reception remains in the memory, print out the image and empty the memory. Also, avoid leaving a original in the copyboad glass unless the machine is in transmission mode.
Cause:	The procedure signal is faulty.
Remedy:	Record the protocol on a DAT or MD, and have it analyzed by the local Canon office and/or Technical Center.

##229 [RX] The recording system became locked for 1 min

Cause:	Not identified.
Remedy:	Correct the locking, and press the Start button to print out the image.

##232 [TX] The unit used to control the encoder is faulty

Cause:	The operation of the IC used to control the encoder did not end normally.
Remedy:	Replace the image processor PCB.

##237 [RX] The IC used to control the decoder malfunctioned

Cause:	The operation of the IC used to control the decoder did not end normally.
Remedy:	Replace the image processor PCB.

##238 [RX] The unit used to control recording malfunctioned

Cause:	The operation of the IC used to control recording did not end normally.
Remedy:	Replace the DC controller PCB.

##261 [TX/RX]System error occurred between the modem and system control board

Cause:	An internal unit is faulty (when RS is set to ‘1’, CS fails to go ‘1’).
Remedy:	Replace the image processor PCB. (faulty modem)

COPYRIGHT © 2001 CANON INC.

##280 [TX] The number of re-transmissions of the procedure signal has been exceeded

Cause: The line condition is poor, and the appropriate signal from the other party cannot be received correctly after transmission of TCF.

Remedy:
1. Increase the transmission level so that the other party may receive TCF correctly.
2. Ask the other party to increase the transmission level so that the appropriate signal may be received correctly.

Cause: The other party malfunctioned because of an echo.

Remedy:
1. Using a manual call, press the Start button after hearing the 1st DIS from the other party.
2. To prevent response to the 1st DIS from the other party, put a relatively long pause to the telephone number when registering an auto-dialing number.
3. Ask the operator of the other party to provide echo remedy 1.
4. Ask the operator of the other party to decrease the transmission level so that the other party will not receive an echo.

Cause: The telephone line has a faulty connection.

Remedy: Check to see that the telephone line is connected correctly.

Cause: During a communication, the telephone line was disconnected.

Remedy: Avoid disconnecting the telephone line while a communication is under way.

##281 [TX] The number of re-transmissions of the procedure signal has been exceeded

Cause: The line condition is poor, and the appropriate signal from the other party cannot be received correctly after transmission of EOP.

Remedy:
1. Increase the transmission level so that the other party may receive EOP correctly.
2. Decrease the transmission start speed.
3. Adjust the NL equalizer so that the other party may receive EOP correctly.
4. Add an echo protect tone to the V.29 modem signal for transmission.
5. Ask the operator of the other party to increase the transmission level so that the appropriate signal may be received correctly.

##282 [TX] The number of re-transmissions of the procedure signal has been exceeded

Cause: The line condition is poor, and the appropriate signal from the other party cannot be received correctly after transmission of EOM.

Remedy:
1. Increase the transmission level so that the other party may receive EOM correctly.
2. Decrease the transmission start speed.
3. Adjust the NL equalizer so that the other party may receive EOM correctly.
4. Add an echo protect tone to the V.29 modem signal for transmission.
5. Ask the operator of the other party to increase the transmission level so that the appropriate signal may be received correctly.

 COPYRIGHT © 2001 CANON INC.

##283 [TX] The number of re-transmissions of the procedure signal has been exceeded

Cause: The line condition is poor, and the appropriate signal from the other party cannot be received correctly after transmission of MPS.

Remedy:
1. Increase the transmission level so that the other party may receive MPS correctly.
2. Decrease the transmission start speed.
3. Adjust the NL equalizer so that the other party may receive MPS correctly.
4. Add an echo protect tone to the V.29 modem signal for transmission.
5. Ask the operator of the other party to increase the transmission level so that the appropriate signal may be received correctly.

##284 [TX] DCN has been received after transmission of TCF

Cause: The other party is not ready for reception (e.g., out of paper).

Remedy: Ask the operator of the other party to set the machine for reception (as by setting paper).

Cause: The user telephone number has not been registered (if the receiving machine is a RICOH 3000L).

Remedy: Register the user telephone number.

Cause: The other party cannot receive TCF correctly.

Remedy: Increase the transmission level so that the other party may receive TCF correctly.

Cause: The other party malfunctioned because of an echo.

Remedy:
1. Using a manual call, press the Start button after hearing the 1st DIS from the other party.
2. To prevent response to the 1st DIS from the other party, put a relatively long pause to the telephone number when registering an auto-dialing number.
3. Ask the operator of the other party to provide echo remedy 1.
4. Ask the operator of the other party to decrease the transmission level so that the other party will not receive an echo.

##285 [TX] DCN has been received after transmitting EOP

Cause: The Stop button was pressed during a communication.

Remedy: Transmit once again.

##286 [TX] DCN has been received after transmitting EOM

Cause: The Stop button was pressed during a communication.

Remedy: Transmit once again.

##287 [TX] DCN has been received after transmitting MPS

Cause: The Stop button was pressed during a communication.

Remedy: Transmit once again.

COPYRIGHT © 2001 CANON INC.

##288 [TX]	After transmitting EOP, a signal other than PIN, PIP, MCF, RTP, or RTN was received
Cause:	The procedure signal has a fault.
Remedy:	Record the protocol on a DAT or MD, and have it analyzed by the local Canon office and/or Technical Center.
##289 [TX]	After transmitting EOM, a signal other than PIN, PIP, MCF, RTP, or RTN was received
Cause:	The procedure signal has a fault.
Remedy:	Record the protocol on a DAT or MD, and have it analyzed by the local Canon office and/or Technical Center.
##290 [TX]	After transmitting MPS, a signal other than PIN, PIP, MCF, RTP, or RTN was received
Cause:	The procedure signal has a fault.
Remedy:	Record the protocol on a DAT or MD, and have it analyzed by the local Canon office and/or Technical Center.
##750 [TX]	In ECM transmission, no significant signal can be received after transmission of PPS-NULL, and the allowed number of procedure signal re-transmissions was exceeded
Cause:	The line condition is poor, and the other party cannot receive PPS-NULL correctly.
Remedy:	1. Increase the transmission level so that the other party may receive PPS-NULL correctly. 2. Adjust the NL equalizer so that the other party may receive PPS-NULL correctly. 3. Add an echo protect tone to the V.29 modem signal for transmission.
Cause:	The line condition is poor, and the significant signal cannot be received correctly.
Remedy:	Ask the operator of the other party to increase the transmission level so that the signal may be received correctly.
##752 [TX]	In ECM transmission, DCN was received after transmission of PPS-NULL
Cause:	The line condition is poor, and the other party cannot receive PPS-NULL correctly.
Remedy:	1. Increase the transmission level so that the other party may receive PPS-NULL correctly. 2. Adjust the NL equalizer so that the other party may receive PPS-NULL correctly. 3. Add an echo protect tone to the V.29 modem signal for transmission.
Cause:	The Stop key was pressed during a communication.
Remedy:	Transmit once again.

 COPYRIGHT © 2001 CANON INC.

##753 [TX]	In ECM transmission, the allowed number of procedure signal re-transmissions was exceeded or a T5 time-over (60 sec) condition occurred after transmission of PPS-NULL
Cause:	The page buffer of the other party is full or is engaged; as such, although RNR was received after transmission of PPS-NULL and then RR was transmitted, no significant signal was received correctly thereafter.
Remedy:	1. Start G3 mode, and transmit once again (Prohibit the ECM mode). 2. Decrease the transmission start speed. 3. Record the protocol on a DAT or MD, and have it analyzed by the local Canon office and/or Technical Center.

##754 [TX]	In ECM transmission, the allowed number of procedure signal re-transmissions was exceeded after transmission of PPS-NULL
Cause:	The line condition is poor; as such, although PPR was received 4 times after transmission of PPS-NULL and then CTC was transmitted, the other party could not receive it correctly.
Remedy:	Increase the transmission level so that the other party may receive CTC correctly.
Cause:	The line condition is poor; as such, although PPR was received 4 times after transmission of PPS-NULL and then CTC was transmitted, no significant signal was received correctly thereafter.
Remedy:	Ask the operator of the other party to increase the transmission level so that the signal may be received correctly.

##755 [TX]	In ECM transmission, no significant signal can be received after transmission of PPS-MPS, and the allowed number of procedure signal re-transmissions was exceeded
Cause:	The line condition is poor, and the other party cannot receive PPS-MPS correctly.
Remedy:	1. Increase the transmission level so that the other party may receive PPS-MPS correctly. 2. Adjust the NL equalizer so that the other party may receive PPS-MPS correctly. 3. Add an echo protect tone to the V.29 modem signal for transmission.
Cause:	The line condition is poor, and the significant signal cannot be received correctly.
Remedy:	Ask the operator of the other party to increase the transmission level so that the signal may be received correctly.

COPYRIGHT © 2001 CANON INC.

##757 [TX] In ECM transmission, DCN was received after transmission of PPS-MPS

Cause: The line condition is poor, and the other party cannot receive PPS-MPS correctly.

Remedy:
1. Increase the transmission level so that the other party may receive PPS-MPS correctly.
2. Adjust the NL equalizer so that the other party may receive PPS-MPS correctly.
3. Add an echo protect tone to the V.29 modem signal for transmission.

Cause: The Stop key was pressed during a communication.

Remedy: Transmit once again.

##758 [TX] In ECM transmission, the allowed number of procedure signal re-transmissions was exceeded or a T5 time-over (60 sec) condition occurred after transmission of PPS-MPS

Cause: The page buffer of the other party is full or is engaged; as such, although RNR was received after transmission of PPS-MPS and then RR was transmitted, no significant signal was received correctly thereafter.

Remedy:
1. Start G3 mode, and transmit once again (Prohibit the ECM mode).
2. Decrease the transmission start speed.
3. Record the protocol on a DAT or MD, and have it analyzed by the local Canon office and/or Technical Center.

##759 [TX] In ECM transmission, the allowed number of procedure signal re-transmissions was exceeded after transmission of PPS-MPS

Cause: The line condition is poor; as such, although PPR was received 4 times after transmission of PPS-MPS and then CTC was transmitted, the other party could not receive it correctly.

Remedy: Increase the transmission level so that the other party may receive CTC correctly.

Cause: The line condition is poor; as such, although PPR was received 4 times after transmission of PPS-MPS and then CTC was transmitted, no significant signal was received correctly thereafter.

Remedy: Ask the operator of the other party to increase the transmission level so that the signal may be received correctly.

 COPYRIGHT © 2001 CANON INC.

##760 [TX] In ECM transmission, no significant signal can be received after transmission of PPS-EOM, and the allowed number of procedure signal re-transmissions was exceeded

Cause: The line condition is poor, and the other party cannot receive PPS-EOM correctly.

Remedy:
1. Increase the transmission level so that the other party may receive PPS-EOM correctly.
2. Adjust the NL equalizer so that the other party may receive PPS-EOM correctly.
3. Add an echo protect tone to the V.29 modem signal for transmission.

Cause: The line condition is poor, and the significant signal cannot be received correctly.

Remedy: Ask the operator of the other party to increase the transmission level so that the signal may be received correctly.

##762 [TX] In ECM transmission, DCN was received after transmission of PPS-EOM

Cause: The line condition is poor, and the other party cannot receive PPS-EOM correctly.

Remedy:
1. Increase the transmission level so that the other party may receive PPS-EOM correctly.
2. Adjust the NL equalizer so that the other party may receive PPS-EOM correctly.
3. Add an echo protect tone to the V.29 modem signal for transmission.

Cause: The Stop key was pressed during a communication.

Remedy: Transmit once again.

##763 [TX] In ECM transmission, the allowed number of procedure signal re-transmissions was exceeded or a T5 time-over (60 sec) condition occurred after transmission of PPS-EOM

Cause: The page buffer of the other party is full or is engaged; as such, although RNR was received after transmission of PPS-EOM and then RR was transmitted, no significant signal was received correctly thereafter.

Remedy:
1. Start G3 mode, and transmit once again (Prohibit the ECM mode).
2. Decrease the transmission start speed.
3. Record the protocol on a DAT or MD, and have it analyzed by the local Canon office and/or Technical Center.

COPYRIGHT © 2001 CANON INC.

##764 [TX]	In ECM transmission, the allowed number of procedure signal re-transmissions was exceeded after transmission of PPS-EOM
Cause:	The line condition is poor; as such, although PPR was received 4 times after transmission of PPS-EOM and then CTC was transmitted, the other party could not receive it correctly.
Remedy:	Increase the transmission level so that the other party may receive CTC correctly.
Cause:	The line condition is poor; as such, although PPR was received 4 times after transmission of PPS-EOM and then CTC was transmitted, no significant signal was received correctly thereafter.
Remedy:	Ask the operator of the other party to increase the transmission level so that the signal may be received correctly.

##765 [TX]	In ECM transmission, no significant signal can be received after transmission of PPS-EOP, and the allowed number of procedure signal re-transmissions was exceeded
Cause:	The line condition is poor, and the other party cannot receive PPS-EOP correctly.
Remedy:	1. Increase the transmission level so that the other party may receive PPS-EOP correctly. 2. Adjust the NL equalizer so that the other party may receive PPS-EOP correctly. 3. Add an echo protect tone to the V.29 modem signal for transmission.
Cause:	The line condition is poor, and the significant signal cannot be received correctly.
Remedy:	Ask the operator of the other party to increase the transmission level so that the signal may be received correctly.

##767 [TX]	In ECM transmission, DCN was received after transmission of PPS-EOP
Cause:	The line condition is poor, and the other party cannot receive PPS-EOP correctly.
Remedy:	1. Increase the transmission level so that the other party may receive PPS-EOP correctly. 2. Adjust the NL equalizer so that the other party may receive PPS-EOP correctly. 3. Add an echo protect tone to the V.29 modem signal for transmission.
Cause:	The Stop key was pressed during a communication.
Remedy:	Transmit once again.

 COPYRIGHT © 2001 CANON INC.

##768 [TX] In ECM transmission, the allowed number of procedure signal re-transmissions was exceeded or a T5 time-over (60 sec) condition occurred after transmission of PPS-EOP

Cause: The page buffer of the other party is full or is engaged; as such, although RNR was received after transmission of PPS-EOP and then RR was transmitted, no significant signal was received correctly thereafter.

Remedy:
1. Start G3 mode, and transmit once again (Prohibit the ECM mode).
2. Decrease the transmission start speed.
3. Record the protocol on a DAT or MD, and have it analyzed by the local Canon office and/or Technical Center.

##769 [TX] In ECM transmission, the allowed number of procedure signal re-transmissions was exceeded after transmission of PPS-EOP

Cause: The line condition is poor; as such, although PPR was received 4 times after transmission of PPS-EOP and then CTC was transmitted, the other party could not receive it correctly.

Remedy: Increase the transmission level so that the other party may receive CTC correctly.

Cause: The line condition is poor; as such, although PPR was received 4 times after transmission of PPS-EOP and then CTC was transmitted, no significant signal was received correctly thereafter.

Remedy: Ask the operator of the other party to increase the transmission level so that the signal may be received correctly.

##770 [TX] In ECM transmission, no significant signal can be received after transmission of EOR-NULL, and the allowed number of procedure signal re-transmissions was exceeded

Cause: The line condition is poor, and the other party cannot receive EOR-NULL correctly.

Remedy:
1. Increase the transmission level so that the other party may receive EOR-NULL correctly.
2. Adjust the NL equalizer so that the other party may receive EOR-NULL correctly.
3. Add an echo protect tone to the V.29 modem signal for transmission.

Cause: The line condition is poor, and the significant signal cannot be received correctly.

Remedy: Ask the operator of the other party to increase the transmission level so that the signal may be received correctly.

COPYRIGHT © 2001 CANON INC.

##772 [TX] In ECM transmission, DCN was received after transmission of EOR-NULL

Cause: The line condition is poor, and the other party cannot receive EOR-NULL correctly.

Remedy:
1. Increase the transmission level so that the other party may receive EOR-NULL correctly.
2. Adjust the NL equalizer so that the other party may receive EOR-NULL correctly.
3. Add an echo protect tone to the V.29 modem signal for transmission.

Cause: The Stop key was pressed during a communication.

Remedy: Transmit once again.

##773 [TX] In ECM transmission, the allowed number of procedure signal retransmissions was exceeded or a T5 time-over (60 sec) condition occurred after transmission of EOR-NULL

Cause: The page buffer of the other party is full or is engaged; as such, although RNR was received after transmission of EOR-NULL and then RR was transmitted, no significant signal was received correctly thereafter.

Remedy:
1. Start G3 mode, and transmit once again (Prohibit the ECM mode).
2. Decrease the transmission start speed.
3. Record the protocol on a DAT or MD, and have it analyzed by the local Canon office and/or Technical Center.

##774 [TX] In ECM transmission, ERR was received after transmission of EOR-NULL

Cause: The line condition is poor, and the other party cannot often receive the image signal correctly.

Remedy:
1. Increase the transmission level so that the other party may receive the image signal correctly.
2. Adjust the NL equalizer so that the other party may receive the image signal correctly.

Cause: The other party malfunctioned because of an echo.

Remedy:
1. Using a manual call, press the Start button after hearing the 1st DIS from the other party.
2. To prevent response to the 1st DIS from the other party, put a relatively long pause to the telephone number when registering an auto-dialing number.
3. Ask the operator of the other party to provide echo remedy 1.
4. Ask the operator of the other party to decrease the transmission level so that the other party will not receive an echo.

 COPYRIGHT © 2001 CANON INC.

##775 [TX] In ECM transmission, no significant signal can be received after transmission of EOR-MPS, and the allowed number of procedure signal re-transmissions was exceeded

Cause:	The line condition is poor, and the other party cannot receive EOR-MPS correctly.
Remedy:	1. Increase the transmission level so that the other party may receive EOR-MPS correctly. 2. Adjust the NL equalizer so that the other party may receive EOR-MPS correctly. 3. Add an echo protect tone to the V.29 modem signal for transmission.
Cause:	The line condition is poor, and the significant signal cannot be received correctly.
Remedy:	Ask the operator of the other party to increase the transmission level so that the signal may be received correctly.

##777 [TX] In ECM transmission, DCN was received after transmission of EOR-MPS

Cause:	The line condition is poor, and the other party cannot receive EOR-MPS correctly.
Remedy:	1. Increase the transmission level so that the other party may receive EOR-MPS correctly. 2. Adjust the NL equalizer so that the other party may receive EOR-MPS correctly. 3. Add an echo protect tone to the V.29 modem signal for transmission.
Cause:	The Stop key was pressed during a communication.
Remedy:	Transmit once again.

##778 [TX] In ECM transmission, the allowed number of procedure signal re-transmissions was exceeded or a T5 time-over (60 sec) condition occurred after transmission of EOR-MPS

Cause:	The page buffer of the other party is full or is engaged; as such, although RNR was received after transmission of EOR-MPS and then RR was transmitted, no significant signal was received correctly thereafter.
Remedy:	1. Start G3 mode, and transmit once again (Prohibit the ECM mode). 2. Decrease the transmission start speed. 3. Record the protocol on a DAT or MD, and have it analyzed by the local Canon office and/or Technical Center.

COPYRIGHT © 2001 CANON INC.

##779 [TX] In ECM transmission, ERR was received after transmission of EOR-MPS

Cause: The line condition is poor, and the other party cannot often receive the image signal correctly.

Remedy:
1. Increase the transmission level so that the other party may receive the image signal correctly.
2. Adjust the NL equalizer so that the other party may receive the image signal correctly.

Cause: The other party malfunctioned because of an echo.

Remedy:
1. Using a manual call, press the Start button after hearing the 1st DIS from the other party.
2. To prevent response to the 1st DIS from the other party, put a relatively long pause to the telephone number when registering an auto-dialing number.
3. Ask the operator of the other party to provide echo remedy 1.
4. Ask the operator of the other party to decrease the transmission level so that the other party will not receive an echo.

##780 [TX] In ECM transmission, no significant signal can be received after transmission of EOR-EOM, and the allowed number of procedure signal re-transmissions was exceeded

Cause: The line condition is poor, and the other party cannot receive EOR-EOM correctly.

Remedy:
1. Increase the transmission level so that the other party may receive EOR-EOM correctly.
2. Adjust the NL equalizer so that the other party may receive EOR-EOM correctly.
3. Add an echo protect tone to the V.29 modem signal for transmission.

Cause: The line condition is poor, and the significant signal cannot be received correctly.

Remedy: Ask the operator of the other party to increase the transmission level so that the signal may be received correctly.

##782 [TX] In ECM transmission, DCN was received after transmission of EOR-EOM

Cause: The line condition is poor, and the other party cannot receive EOR-EOM correctly.

Remedy:
1. Increase the transmission level so that the other party may receive EOR-EOM correctly.
2. Adjust the NL equalizer so that the other party may receive EOR-EOM correctly.
3. Add an echo protect tone to the V.29 modem signal for transmission.

Cause: The Stop key was pressed during a communication.

Remedy: Transmit once again.

 COPYRIGHT © 2001 CANON INC.

##783 [TX] In ECM transmission, the allowed number of procedure signal re-transmissions was exceeded or a T5 time-over (60 sec) condition occurred after transmission of EOR-EOM

Cause: The page buffer of the other party is full or is engaged; as such, although RNR was received after transmission of EOR-EOM and then RR was transmitted, no significant signal was received correctly thereafter.

Remedy:
1. Start G3 mode, and transmit once again (Prohibit the ECM mode).
2. Decrease the transmission start speed.
3. Record the protocol on a DAT or MD, and have it analyzed by the local Canon office and/or Technical Center.

##784 [TX] In ECM transmission, ERR was received after transmission of EOR-EOM

Cause: The line condition is poor, and the other party cannot often receive the image signal correctly.

Remedy:
1. Increase the transmission level so that the other party may receive the image signal correctly.
2. Adjust the NL equalizer so that the other party may receive the image signal correctly.

Cause: The other party malfunctioned because of an echo.

Remedy:
1. Using a manual call, press the Start button after hearing the 1st DIS from the other party.
2. To prevent response to the 1st DIS from the other party, put a relatively long pause to the telephone number when registering an auto-dialing number.
3. Ask the operator of the other party to provide echo remedy 1.
4. Ask the operator of the other party to decrease the transmission level so that the other party will not receive an echo.

##785 [TX] In ECM transmission, no significant signal can be received after transmission of EOR-EOP, and the allowed number of procedure signal re-transmissions was exceeded

Cause: The line condition is poor, and the other party cannot receive EOR-EOP correctly.

Remedy:
1. Increase the transmission level so that the other party may receive EOR-EOP correctly.
2. Adjust the NL equalizer so that the other party may receive EOR-EOP correctly.
3. Add an echo protect tone to the V.29 modem signal for transmission.

Cause: The line condition is poor, and the significant signal cannot be received correctly.

Remedy: Ask the operator of the other party to increase the transmission level so that the signal may be received correctly.

COPYRIGHT © 2001 CANON INC.

##787 [TX] In ECM transmission, DCN was received after transmission of EOR-EOP

Cause: The line condition is poor, and the other party cannot receive EOR-EOP correctly.

Remedy:
1. Increase the transmission level so that the other party may receive EOR-EOP correctly.
2. Adjust the NL equalizer so that the other party may receive EOR-EOP correctly.
3. Add an echo protect tone to the V.29 modem signal for transmission.

Cause: The Stop key was pressed during a communication.

Remedy: Transmit once again.

##788 [TX] In ECM transmission, the allowed number of procedure signal retransmissions was exceeded or a T5 time-over (60 sec) condition occurred after transmission of EOR-EOP

Cause: The page buffer of the other party is full or is engaged; as such, although RNR was received after transmission of EOR-EOP and then RR was transmitted, no significant signal was received correctly thereafter.

Remedy:
1. Start G3 mode, and transmit once again (Prohibit the ECM mode).
2. Decrease the transmission start speed.
3. Record the protocol on a DAT or MD, and have it analyzed by the local Canon office and/or Technical Center.

##789 [TX] In ECM transmission, ERR was received after transmission of EOR-EOP

Cause: The line condition is poor, and the other party cannot often receive the image signal correctly.

Remedy:
1. Increase the transmission level so that the other party may receive the image signal correctly.
2. Adjust the NL equalizer so that the other party may receive the image signal correctly.

Cause: The other party malfunctioned because of an echo.

Remedy:
1. Using a manual call, press the Start button after hearing the 1st DIS from the other party.
2. To prevent response to the 1st DIS from the other party, put a relatively long pause to the telephone number when registering an auto-dialing number.
3. Ask the operator of the other party to provide echo remedy 1.
4. Ask the operator of the other party to decrease the transmission level so that the other party will not receive an echo.

 COPYRIGHT © 2001 CANON INC.

##790 [TX] In ECM reception, ERR was transmitted after reception of EOR-Q

Cause: The line condition is poor, and the image signal cannot often be received correctly.

Remedy:
1. Ask the operator of the other party to increase the transmission level so that the image signal may be received correctly.
2. Adjust the NL equalizer so that the image signal may be received correctly.

Cause: The machine malfunctioned because of an echo.

Remedy:
1. Provide echo remedy 1.
2. Decrease the transmission level so that an echo is not received.

##791 [TX/RX] During an ECM mode procedure, a signal other than a significant signal was received

Cause: The procedure signal is faulty.

Remedy: Record the protocol on a DAT or MD, and have it analyzed by the local Canon office and/or Technical Center.

##792 [RX] In ECM reception, PPS-NULL between partial pages cannot be detected

Cause: The line condition is poor, and PPS-NULL cannot be received.

Remedy:
1. Ask the operator of the other party to increase the transmission level so that PPS-NULL may be received correctly.
2. Adjust the NL equalizer so that PPS-NULL may be received correctly.

##793 [RX] In ECM reception, no effective frame was detected while signals were received at high speed, and a time-over condition occurred

Cause: The line condition is poor, and the other party cannot receive CFR correctly.

Remedy:
1. Increase the transmission level so that the other party may receive CFR correctly.
2. Adjust the NL equalizer so that the other party may receive CFR correctly.

Cause: The line condition is poor, and the image signal cannot be received correctly.

Remedy:
1. Ask the operator of the other party to increase the transmission level so that the image signal may be received correctly.
2. Ask the operator of the other party to decrease the transmission start speed.

Cause: An echo of CFR prevents reception of the training signal.

Remedy:
1. Provide echo remedy 2.
2. Decrease the transmission level so that an echo of the transmitted CFR will not be received.

##795 [TX/RX] A fault occurred in decoding process during a communication

Cause: The communication CODEC is busy.

Remedy:
1. Disconnecting and connecting the power cord.
2. Replace the image processor PCB.

COPYRIGHT © 2001 CANON INC.

4.5.7 Common Faults

No communication occurs.

Cause	The modular cable is not connected to the modular jack used for line connection.
Remedy	Connect the modular cable to the modular jack used for line connection.

A call cannot be made.

Cause	The selected type of line (tone or dial) is different from the type of the connected line.
Remedy	Select the type of line identical to the type of the connected line.

 COPYRIGHT © 2001 CANON INC.

5 Troubleshooting Feeding Faults

5.1 Outline

The machine distinguishes between paper jams and original jams (if equipped with ADF functions), and they are further grouped according to location:

[1] Cassette pickup assembly
[2] Manual feed tray assembly
[3] Feeding assembly
[4] Fixing delivery assembly

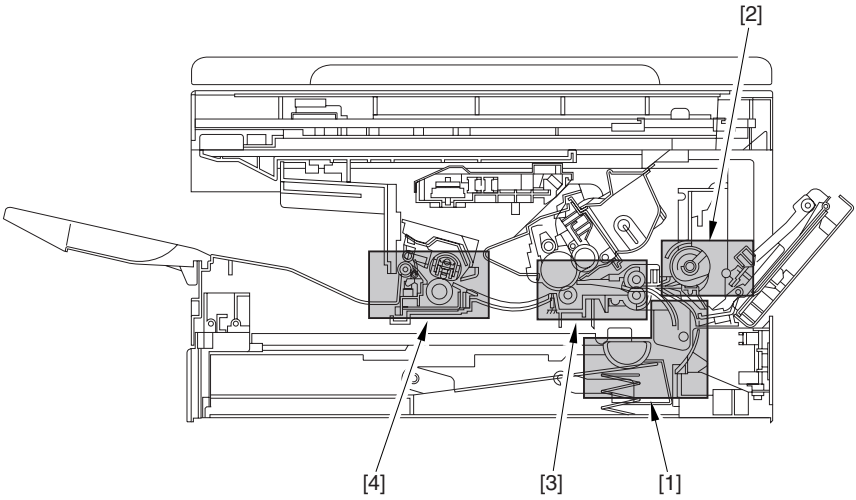

F07-501-01

COPYRIGHT © 2001 CANON INC.

5.2 Paper Jams

5.2.1 Pickup Assembly (cassette)

General conditions

1) Are the following rollers rotating? (See 5.2.5 of Chapter 7.)

- **cassette pickup roller**
- **vertical path roller**

YES: Go through steps 2) through 7).

NO: Fit it correctly.

Cassette

2) Is the cassette fitted correctly?

NO: Fit it correctly.

Paper

3) Is the paper placed correctly?

NO: Place it correctly.

Paper stack

4) Is the amount of paper placed in the cassette more than allowed?

YES: Advise the user on the limit of paper.

Paper

5) Is the paper curled or wavy?

YES: Replace the paper, and advise the user on the correct method of storing paper.

Paper

6) Try paper of a recommended type. Is the problem corrected?

YES: Advise the user to use recommended paper.

Cassette holding plate spring, Rollers (cassette pickup system)

7) Is the holding plate of the cassette in up position?

YES: Clean the cassette pickup roller/vertical path roller. If scratched, replace it.

NO: Check the cassette holding plate spring, and correct any fault. If damaged, replace it.

Main motor

8) Is the main motor rotating?

YES: Go through steps 9) through 12).

NO: Go through steps 13) through 15).

Gears (drive assembly; for cassette pickup roller drive/vertical path drive)

9) Is any of the gears in the drive assembly (for cassette pickup roller drive/vertical path roller drive) cracked or damaged?

YES: Replace the damaged gear.

 COPYRIGHT © 2001 CANON INC.

Connector (if the cassette pickup roller is not rotating)

10) Is the connection of the connectors on the image processor PCB (J303, J307) and the DC controller PCB (J204) normal?

NO: Correct the connection. If the flexible cable has a scratch, replace it.

Cassette pickup solenoid (SL2; if the cassette pickup roller is not rotating)

11) Try replacing the cassette pickup solenoid (SL2). Is the problem corrected?

YES: End.

DC controller PCB, Image processor PCB (if the cassette pickup roller is not rotating)

12) Try replacing the DC controller PCB. Is the problem corrected?

YES: End.

NO: Replace the image processor PCB.

Connector (main motor)

13) Is the connection of the connector of the main motor unit and the connector (J312) on the image processor PCB normal?

NO: Correct the connection.

Main motor

14) Try replacing the main motor. Is the problem corrected?

YES: End.

DC controller PCB, Image processor PCB

15) Try replacing the DC controller PCB. Is the problem corrected?

YES: End.

NO: Replace the image processor PCB.

COPYRIGHT © 2001 CANON INC.

5.2.2 Pickup Assembly (manual feed tray)

General conditions

1) Is the manual feed pickup roller rotating?

YES: Go through steps 2) to 6).

NO: Go to step 7).

Paper

2) Is the paper placed correctly?

NO: Place the paper correctly.

Paper stack

3) Is the amount of paper placed in the manual feed tray more than allowed?

YES: Advise the user on the amount of paper that may be placed.

Paper

4) Is the paper curled or wavy?

YES: Replace the paper, and advise the user on the correct method of storing paper.

Paper

5) Try paper of a recommended type. Is the problem corrected?

YES: Advise the user to use recommended paper.

Paper guide plate ascent mechanism, Manual feed pickup roller

6) Does the paper guide plate move up in conjunction with pickup operation?

YES: Clean the manual feed roller. If scratched, replace it.

NO: Check to see if the spring used to push up the paper guide is mounted correctly.

Main motor

7) Is the main motor rotating?

YES: Go through steps 8) through 11).

NO: Go through steps 12) through 14).

Gear (in drive assembly; for manual feed pickup roller drive)

8) Is any of the gears in the drive assembly (used to drive the manual feed pickup roller) cracked or damaged?

YES: Replace the faulty gear.

Connector

9) Is the connection of the connectors on the image processor PCB (J303, J308) and on the DC controller PCB (J204) normal?

NO: Correct the connection. If the flexible cable has a scratch, replace it.

 COPYRIGHT © 2001 CANON INC.

Manual feed pickup solenoid (SL1)

10) Replace the manual feed pickup solenoid (SL1). Is the problem corrected?

YES: End.

DC controller PCB, Image processor PCB

11) Try replacing the DC controller PCB. Is the problem corrected?

YES: End.

NO: Replace the image processor PCB.

Connector (main motor)

12) Is the connection of the connector of the main motor unit and the connector (J312) on the image processor PCB normal?

NO: Correct the connection.

Main motor

13) Try replacing the main motor. Is the problem corrected?

YES: End.

DC controller PCB, Image processor PCB

14) Try replacing the DC controller PCB. Is the problem corrected?

YES: End.

NO: Replace the image processor PCB.

COPYRIGHT © 2001 CANON INC.

5.2.3 Feeding Assembly

General conditions

1) Are the following components rotating normally? (See 5.2.5 of Chapter 7.)

- **registration roller**
- **gears in contact with photosensitive drum**

YES: Go through steps 2) to 8).
NO: Go to step 11).

Paper

2) Is the paper curled or wavy?

YES: Replace the paper, and advise the user on the correct method of storing paper.

Paper

3) Try paper of a recommended type. Is the problem corrected?

YES: Advise the user to user recommended paper.

Feeding assembly

4) Is the surface of the following components normal?

- **registration roller**
- **photosensitive drum**
- **transfer charging roller**

NO: Clean the soiled component. If scratched, replace it. If the photosensitive drum is scratched, replace the cartridge.

Registration roller locking mechanisms

5) Is the registration roller locking spring normal?

NO: Replace the locking spring.

Registration shutter mechanism

6) Is the registration shutter spring normal?

NO: Replace the locking spring.

Paper path

7) Is there dirt or foreign matter in the paper path?

YES: Clean the paper path. If any, remove the foreign matter.

General conditions

8) Is LGL paper placed in the cassette?

YES: Go through steps 9) and 10).
NO: Check the jam sensor. (See 4.2.9 of Chapter 7.)

Side guide plate

9) Is the side guide plate of the cassette mounted correctly?

NO: Mount the side guide plate correctly. If scratched, replace it.

 COPYRIGHT © 2001 CANON INC.

Sensor flag

10) Is the flag for the LGL paper sensor (PS101) damaged or displaced?

YES: Correct it. If damaged, replace it.

NO: Replace the DC controller PCB.

Gear (in drive assembly; for registration roller, photosensitive drum, transfer charging roller drive)

11) Is any of the gears in the drive assembly cracked or damaged (used to drive the registration roller, photosensitive drum, transfer charging roller)?

YES: Replace the damaged gear. If the gear on the photosensitive drum side is damaged, replace the cartridge.)

COPYRIGHT © 2001 CANON INC.

5.2.4 Fixing Delivery Assembly

General conditions

1) Is the delivery roller rotating normally?

YES: Go through steps 2) to 7).

NO: Go to step 8).

Paper

2) Is the paper curled or wavy?

YES: Replace the paper, and advise the user on the correct method of storing paper.

Paper

3) Try paper of a recommended type. Is the problem corrected?

YES: Advise the user to use recommended paper.

Fixing pressure roller

4) Execute fixing pressure roller cleaning. Is the problem corrected? (See 4.1.1 of Chapter 6.)

YES: Advise the user to clean the component on a periodical basis.

Fixing inlet guide

5) Is the fixing inlet guide soiled, or is there foreign matter?

YES: Clean it. If there is any foreign matter, remove it.

Roller (fixing delivery system)

6) Is the surface of the following rollers normal?

- **fixing pressure roller**
- **delivery roller**

NO: Clean the soiled component. If scratched, replace it.

Delivery sensor

7) Check the delivery sensor. Is the problem corrected? (See 4.2.9 of Chapter 7.)

NO: Replace the delivery sensor.

Gear (in drive assembly; for fixing plessure roller, delivery roller drive)

8) Is any of the gears of the drive assembly (used to drive the fixing pressure roller, delivery roller) cracked or damaged?

YES: Replace the damaged gear.

 COPYRIGHT © 2001 CANON INC.

5.2.5 Checking the Rotation of the Rollers and Gears

If a jam occurs, go through the following to find out whether the rollers are rotating normally:

5.2.5.1 Checking the Rotation of the Cassette Pickup Roller and the Vertical Path Roller

1) Check to be sure that the machine is in standby state.
2) Open the right door.
3) Press the Start key.
4) Check the rotation of the roller through the right door area of the machine.

5.2.5.2 Checking the Rotation of the Registration Roller and the Gear for the Photosensitive Drum

1) Check to be sure that the machine is in standby state.
2) Slide the reader unit.
3) Open the copyboard cover, and remove the reader cover.
4) Open the cartridge cover.
5) Remove the cartridge.
6) While pressing the reader unit slide detecting switch (SW1) with a screwdriver, press the Start key.
7) Check the rotation of the roller/gear through the right side area of the machine.

COPYRIGHT © 2001 CANON INC.

5.3 Original Jams (if equipped with ADF functions)

General conditions

1) Are the following rollers of the ADF rotating?

- **original separation roller**
- **ADF registration roller**
- **white roller**
- **original feed roller**
- **original delivery roller**

YES: Go through steps 2) to 6).
NO: Go to step 7).

General conditions

2) Is the ADF closed firmly?

NO: Close it firmly.

Original

3) Is the original placed correctly?

NO: Place the original correctly.

Stack of originals

4) Is the stack of originals in the original placement assembly more than allowed?

YES: Advise the user on the number of originals that may be paled in the original placement assembly.

Original

5) Is the original curled or do originals bond together because of static charge?

YES: Advise the user that the cause is the originals. Remove the curl, and fan out the originals.

Roller (ADF)

6) Is the surface of the following roller of the ADF normal?

- **original separation roller**
- **ADF registration roller**
- **white roller**
- **original feed roller**
- **original delivery roller**

NO: Clean any soiled roller. If scratched, replace it.

Gear, Belt (drive assembly)

7) Is any of the gears or the belts in the drive assembly cracked or damaged?

YES: Replace the damaged gear/belt.

 COPYRIGHT © 2001 CANON INC.

5.4 Feeding Faults

5.4.1 Double Feeding

Paper

1) Is the paper placed correctly?

NO: Place the paper correctly.

Stack of paper

2) Is the amount of paper in the cassette/manual feed tray more than allowed?

YES: Advise the user on the amount of paper that may be placed.

Paper

3) Is the paper curled or wavy?

YES: Replace the paper, and advise the user on the correct method of storing paper.

Paper

4) Try paper of a recommended type. Is the problem corrected?

YES: Advise the user to use recommended paper.

Claws (cassette)

5) Is the claw of the cassette deformed?

YES: Correct the deformation. If the deformation cannot be corrected, replace the cassette.

Separation pad, Separation pad pressure spring (manual feed tray)

6) Is the surface of the separation pad of the manual feed tray normal?

YES: Replace the pressure spring of the separation pad.

NO: Clean it. If worn, replace it.

COPYRIGHT © 2001 CANON INC.

5.4.2 Wrinkles

Pickup assembly

1) Turn off the power while the paper is being moved. At this time, is the paper wrinkled or moving askew?

YES: Check the rollers of the pickup assembly and the registration roller and the registration shutter. If damaged, replace the components.

Paper

2) Is the paper placed correctly?

NO: Place the paper correctly.

Paper

3) Is the paper curled or wavy?

YES: Replace the paper, and advise the user on the correct method of storing paper.

Paper

4) Try paper of a recommended type. Is the problem corrected?

YES: Advise the user to use recommended paper.

Fixing assembly inlet guide

5) Is the fixing inlet guide soiled, or is there foreign matter?

YES: Clean it. If there is any foreign matter, remove it.

NO: Replace the fixing assembly.

 COPYRIGHT © 2001 CANON INC.

5.5 Faulty Feeding of Originals (if equipped with ADF functions)

5.5.1 Double Feeding

Original

1) Is the original placed correctly?

NO: Place the original correctly.

Stack of originals

2) Is the stack of originals placed in the original placement assembly more than allowed?

YES: Advise the user on the number of originals that may be placed.

Original

3) Is the original curled or do originals bond together because of static charge?

YES: Advise the user that the cause is the originals. Remove the curl, or fan out the originals.

Original separation pad, Pressure spring (original separation pad)

4) Is the surface of the original separation pad normal?

YES: Replace the pressure spring of the original separation pad.

NO: Clean it. If worn or faulty, replace it.

5.5.2 Skew

Slide guide

1) Is the slide guide fitted correctly to suit the width of the original?

NO: Fit it correctly.

Original

2) Are originals of different widths placed together?

YES: Make sure that all originals are of the same width when placed on the original placement area.

Skew correction

3) Is the skew correction value appropriate?

NO: Execute skew correction. (See 1.3.3.1 of Chapter 7.)

If you have corrected the skew, check to be sure the settings of all other adjustment items for the ADF are as indicated in specs.

Original separation pad, Roller (separation roller unit)

4) Clean the original separation pad and the rollers of the separation roller unit. Is the problem corrected?

YES: End.

NO: Replace the original separation pad or the rollers of the separation roller unit.

COPYRIGHT © 2001 CANON INC.

6 Arrangement of the Electrical Parts

6.1 Checking the Photointerrupters

Use 'SENSOR' under 'TEST MODE' in service mode to check photointerrupters as follows:

1) Press the Additional Functions key and the # key to start service mode.
2) Press the Left/Right Arrow key so that 'TEST MODE' is indicated.
3) Press '6' on the keypad so that '6: FACULTY TEST' is indicated.
4) Press '3' on the keypad to start sensor check mode, in which the following screen appears:



F07-601-01

5) When the screen shown in F07-601-01 is displayed, press '1', '2', '3', or '4' to bring up the State screen of a specific sensor. For instance, when '1' is pressed, the following will be true:

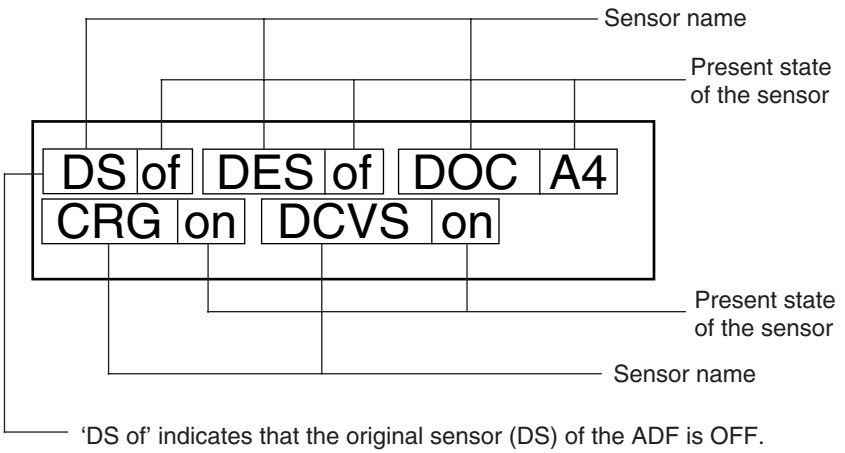

F07-601-02

6) Move the flag of the sensor to see that the indication alternates between 'of' and 'on' to indicate that the sensor is going OFF and ON.
On the next page, the screens that appear when '1' through '4' are pressed are shown together with the sensor names and the sensor states when the machine is in standby state.

 COPYRIGHT © 2001 CANON INC.

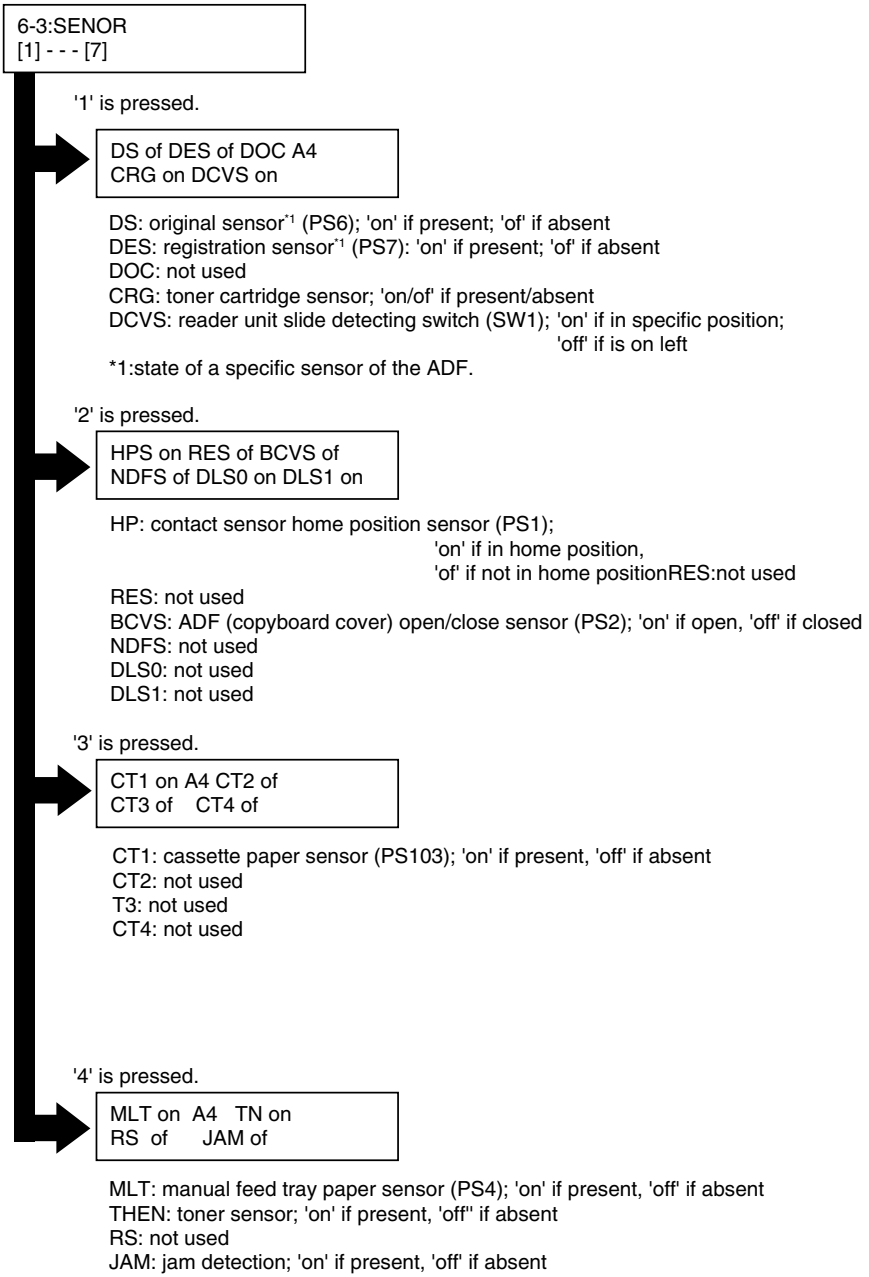

F07-601-03

COPYRIGHT © 2001 CANON INC.

6.2 Arrangement and Functions of Electrical Components

6.2.1 Solenoids, Motors, Fans

6.2.1.1 Body

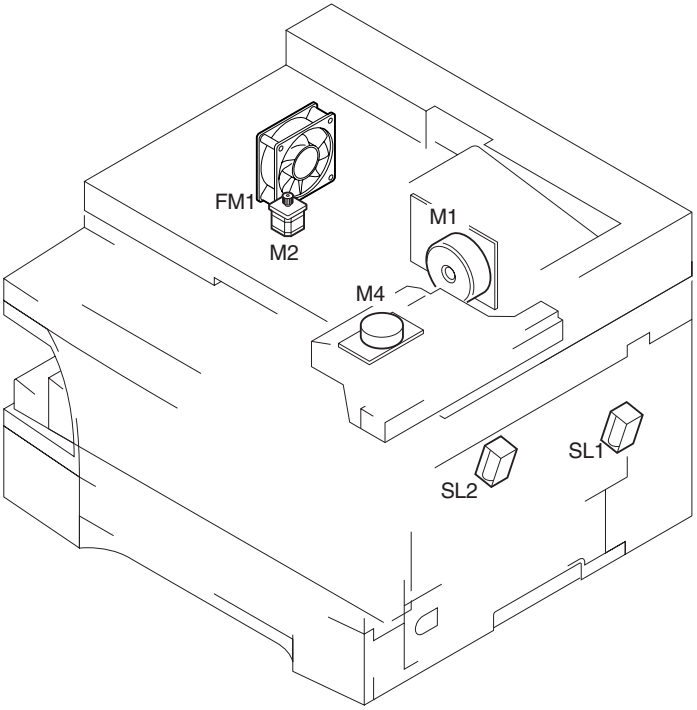

F07-602-01

 COPYRIGHT © 2001 CANON INC.

6.2.1.2 ADF (if eqquiped with ADF functions)

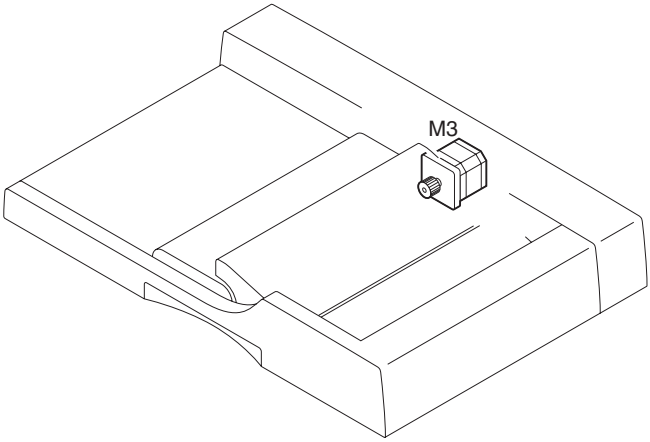

F07-602-02

Solenoids, Motors, and Fans

T07-602-01

Symbol	Name	Notation	Description
SL	Solenoid	SL1	manual feed pickup roller drive
		SL2	cassette pickup roller drive
M	Motor	M1	main motor
		M2	reader motor
		M3	ADF motor (if equipped with ADF functions)
	Fan	M4	laser scanner motor
		FM1	fan

6.2.2 Sensors

6.2.2.1 Body

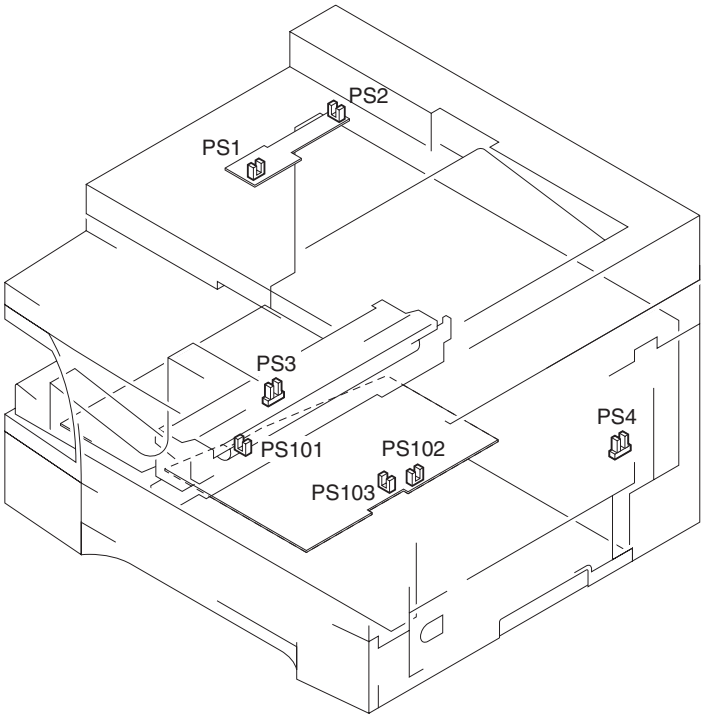

F07-602-03

 COPYRIGHT © 2001 CANON INC.

6.2.2.2 ADF (if eqquiped with ADF functions)

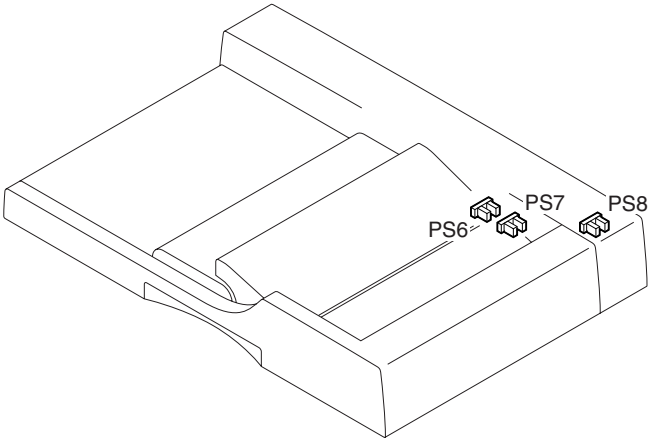

F07-602-04

Sensors

Symbol	Name	Notation	Description
	Photointerrupters	PS1	constant sensor home position detection
		PS2	ADF (copyboard cover) open/close detection
		PS3	delivery detection
		PS4	manual feed tray paper detection
		PS6	original detection (if equipped with ADF functions)
		PS7	ADF registration paper detection (if equipped with ADF functions)
		PS8	original delivery detection (if equipped with ADF functions)
		PS101	LGL paper detection
		PS102	paper leading edge detection
		PS103	cassette paper detection

T07-602-02

COPYRIGHT © 2001 CANON INC.

6.2.3 Others

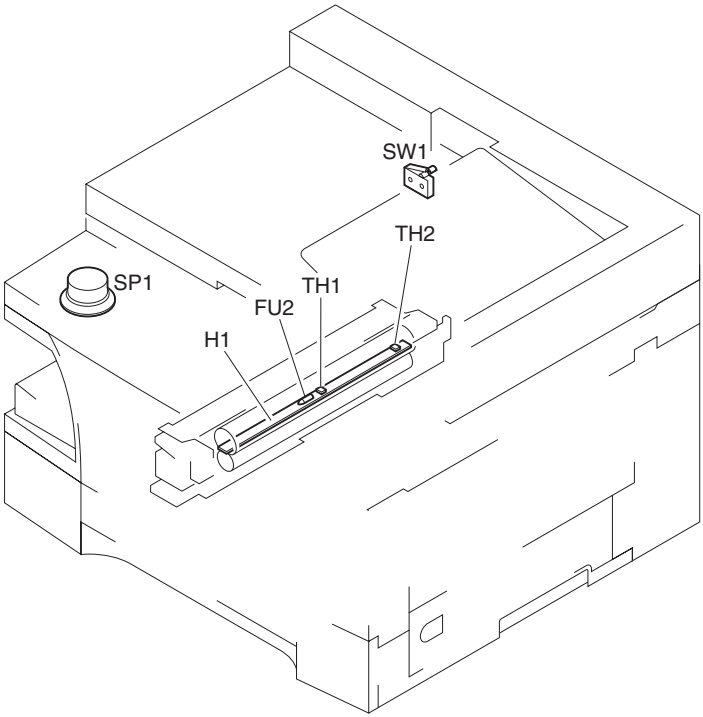

F07-602-05

 COPYRIGHT © 2001 CANON INC.

Others

Symbol	Name	Notation	Description
	Switch	SW1	reader unit slide detecting switch
	Heater	H1	fixing heater
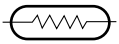	Thermistor	TH1	fixing main thermistor (fixing assembly center temperature detection)
		TH2	fixing sub thermistor (fixing assembly end temperature detection)
	Thermal fuse	FU2	Fixing heater error temperature detection
	SpeakerName	SP1	speaker*1

T07-602-03

*1: If equipped with fax functions.

6.2.4 PCBs

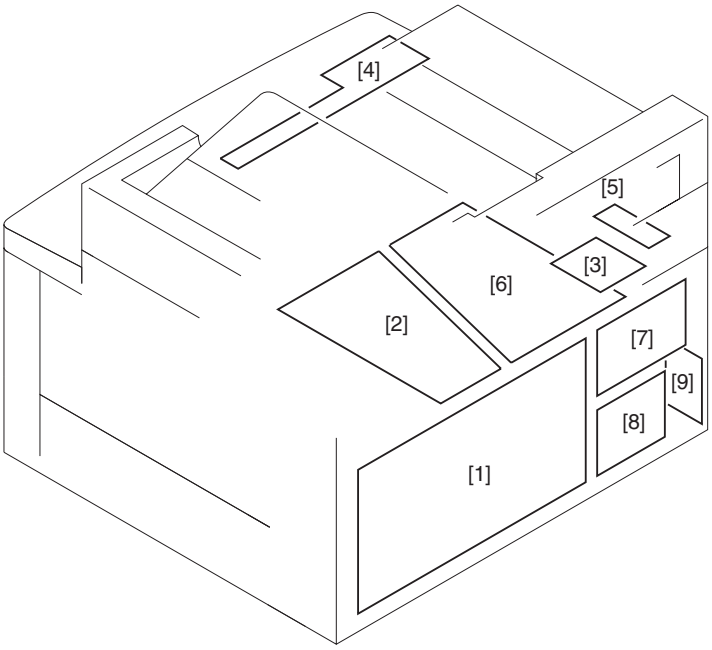

F07-602-06

 COPYRIGHT © 2001 CANON INC.

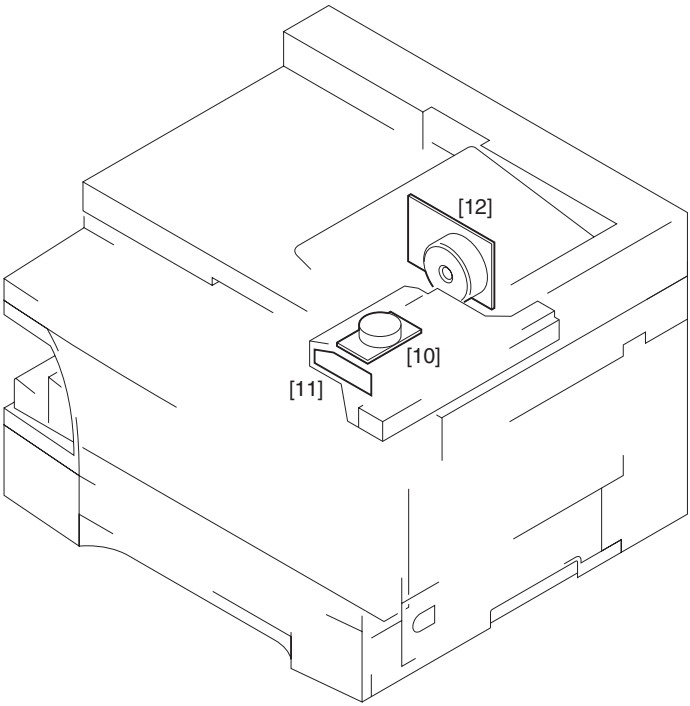

F07-602-07

PCBs

Ref.	Name	Description
1	Image processor PCB	image processing control
2	DC controller PCB	DC load control
3	Analog processor PCB	contact sensor drive, analog image processing
4	Control panel PCB	control panel control
5	Sensor PCB	ADF (copyboard cover) open/close detection, contact sensor home position detection
6	Power supply PCB	low-voltage power supply control
7	Printer controller PCB	computer combination control
8	NCU PCB*1	fax communication control
9	Modular jack PCB*1	telephone line connection
10	Laser scanner motor driver	laser scanner motor drive
11	Laser driver BD PCB	laser drive, laser beam detection
12	Main motor driver	main motor drive

T07-602-04

*1: If equipped with fax functions.

COPYRIGHT © 2001 CANON INC.

6.3 Variable Resistors, Light Emitting Diodes (LED), and Check Pins by PCB

Of the VRs, LEDs, and check pins used in the machine, those needed when servicing in the field are discussed:

1. Some LEDs emit dim light even when OFF; this is a normal condition, and must be kept in mind.
2. VRs that may be used in the field: ⊘
   VRs that must not be used in the field: ⊘

Do not touch the VRs and check pins not found in the lists herein; they are exclusively for the factory, and require special tools and high accuracy.

6.3.1 Image Processor PCB

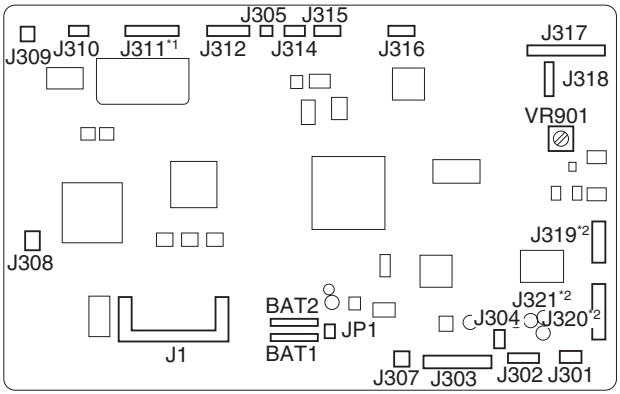

F07-603-01

JP1: jumper plug for power used by battery to back up memory (control data; user data, service mode data).
BAT1: battery used to back up memory (SRAM; control data; service mode data, user mode data).
BAT2: battery used to back up memory (SDRAM; fax images)

*1: If equipped with ADF functions
*2: If equipped with fax functions.

 COPYRIGHT © 2001 CANON INC.

6.3.2 DC Controller PCB

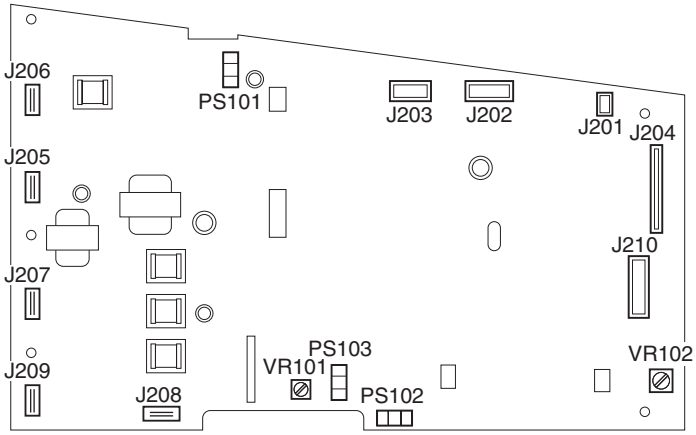

F07-603-02

VR101: for factory adjustment
VR102: for factory adjustment

APPENDIX

COPYRIGHT © 2001 CANON INC.

1 General Timing Chart

(book mode, A4, 2 copies, Direct, cassette)

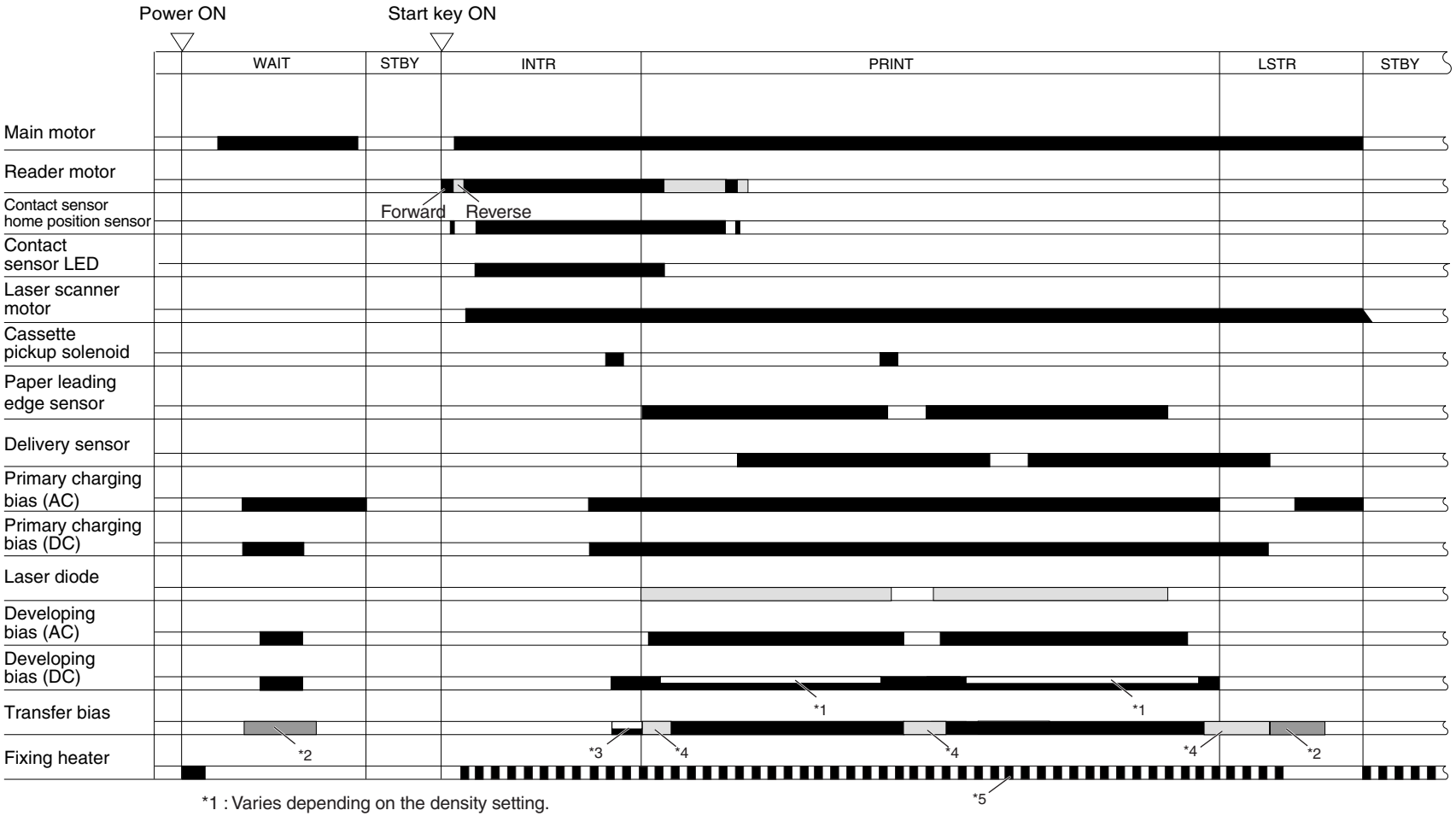

*1 : Varies depending on the density setting.
*2 : Cleaning bias control.
*3 : ATVC control.
*4 : Sheet-to-sheet bias control.
*5 : Temperature control by paper type.

COPYRIGHT © 2001 CANON INC.

(ADF, A4 original, A4 paper, 2 copies, Direct, cassette)

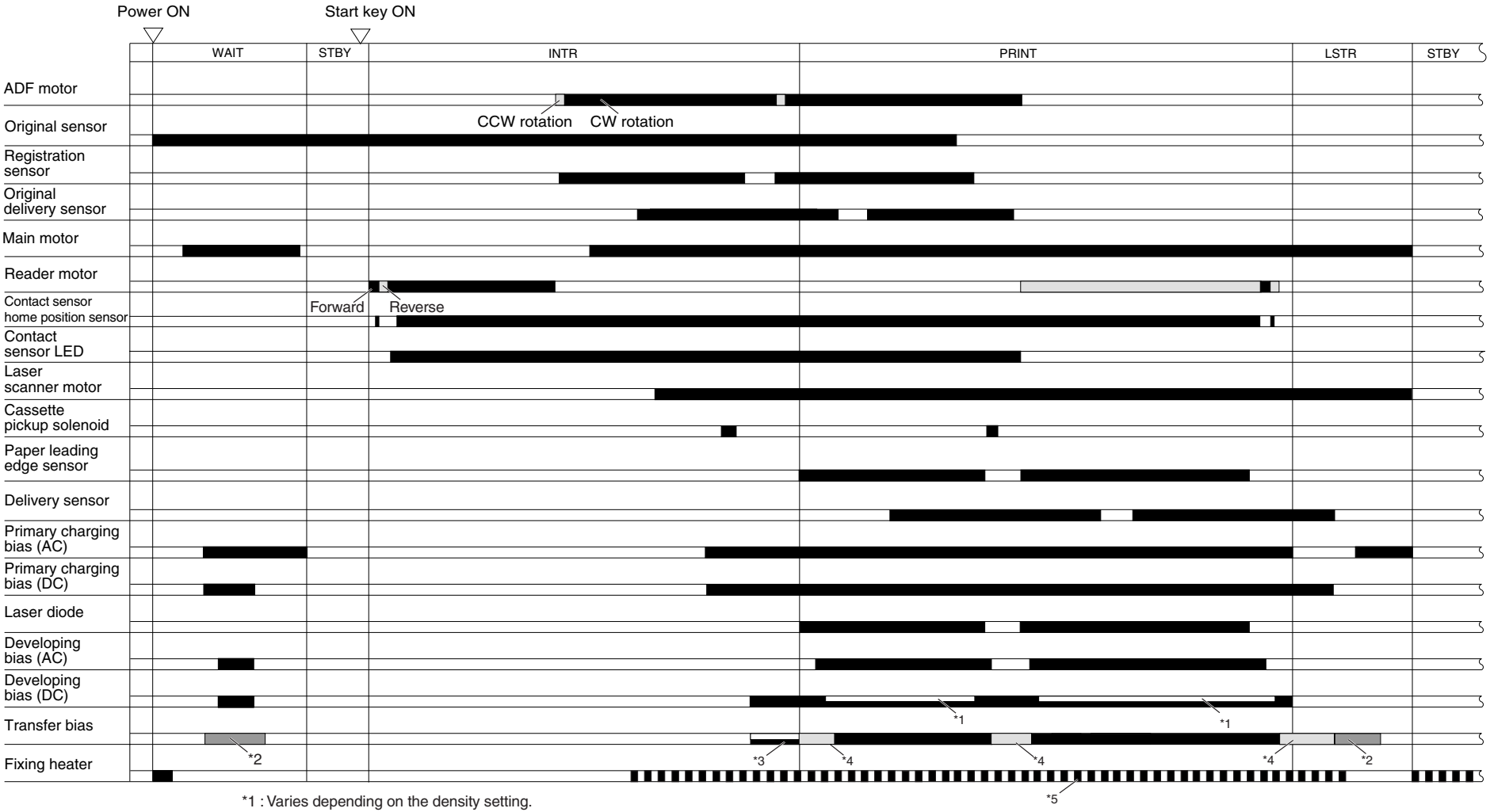

*1 : Varies depending on the density setting.
*2 : Cleaning bias control.
*3 : ATVC control.
*4 : Sheet-to-sheet bias control.
*5 : Temperature control by paper type.

COPYRIGHT © 2001 CANON INC.

2 General Circuit Diagram

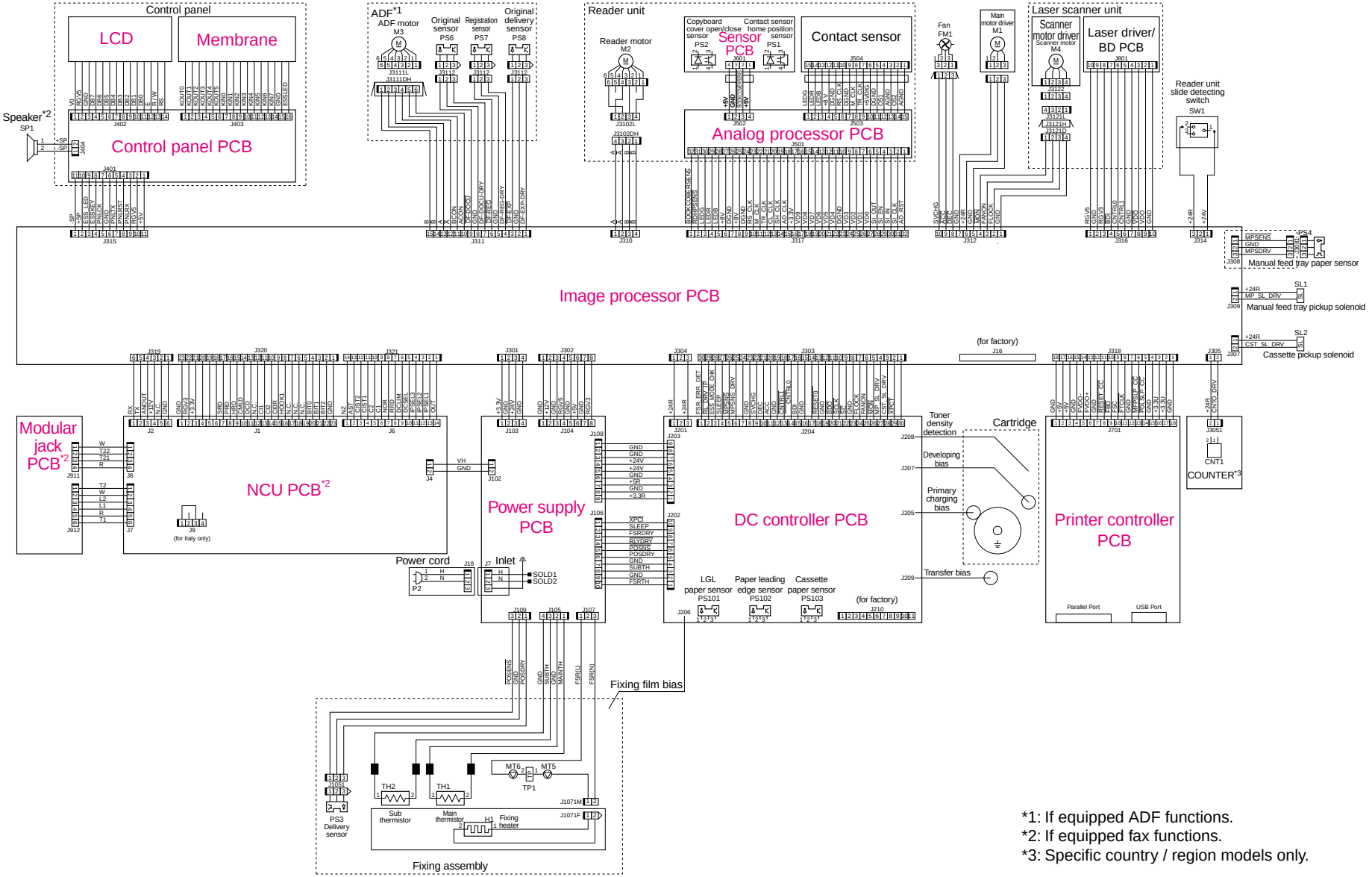

*1: If equipped ADF functions.
*2: If equipped fax functions.
*3: Specific country / region models only.

COPYRIGHT © 2001 CANON INC.

Blank page

COPYRIGHT © 2001 CANON INC.

3 List of Special Tools

The following tools are required in addition to the standard set of tools when servicing the machine:

No.	Tool name	Tool No.	Shape	Rank*	Remarks
1	Digital multimeter	FY9-2002	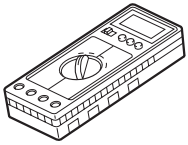	A	For making electrical checks.
2	NA-3 Test Sheet	FY9-9196	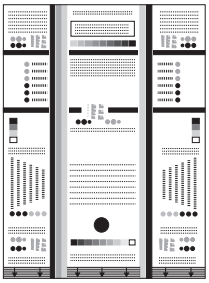	A	For adjusting/checking images.

*Rank:
A: Every service person is expected to carry one.

COPYRIGHT © 2001 CANON INC.

4 List of Solvents and Oils

No.	Name	Use	Composition	Remarks
1	Alcohol	Cleaning: e.g., glass, plastic, rubber; external covers.	Fluoride-family hydrocarbon, alcohol, surface activating agent, water.	• Do not bring near fire. • Procure locally. • IPA (isopropyl alcohol) may be substituted.
2	Solvent	Cleaning: metal; oil stain or toner stain.	Fluoride-family carbon hydrocarbon, chlorine-family, hydrocarbon, alcohol.	• Do not bring near fire. • Procure locally. • MEK may be substituted.
3	Heat-resisting grease	Lubricating; e.g. fixing drive assembly.	Mineral oil-family lithium soap, molybdenum disulfide.	• Tool No. CK-0427 (500 g/can).
4	Lubricant		Mineral oil (puraffin family).	• Tool No. CK-0524 (100 cc).
5	Lubricant	Lubricating: e.g., drive assembly, friction assembly.	Silicone oil.	• Tool No. CK-0551 (20 g).
6	Lubricant	Lubricating: e.g. contact sensor drive rail.	Silicone oil.	• Tool No. FY9-6011 (50 cc)
7	Conducting grease	Lubricating: e.g., drum heater contact.	Polyehtyl, polytetrafluoroethylene.	• Tool No. FY9-6008 (10 g)

COPYRIGHT © 2001 CANON INC.

Prepared by
Office Imaging Products Quality Assurance Center
CANON INC.

REVISION 0 (DEC. 2001) (22114/10653)

5-1, Hakusan 7-chome, Toride-shi, Ibaraki 302-8501 Japan

COPYRIGHT © 2001 CANON INC.

Canon