PC800s/900s

SERVICE HANDBOOK

REVISION 0

PC860		
	F13-8491	TYA00001-
PC880		
	F13-8291	TZA00001-
PC890		
	F13-8242	UAA00001-
PC920		
	F13-8431	TVB00001-
	F13-8441	PUD00001-
		PUE00001-
	F13-8461	PUH00001-
PC921		
	F13-8432	TVC00001-
PC940		
	F13-8436	TVD00001-
PC941		
	F13-8437	TVE00001-
PC950		
	F13-8231	TVF00001-
	F13-8241	PUF00001-
		PUG00001-
PC960		
	F13-8434	TVG00001-
PC980		
	F13-8232	TVH00001-
PC981		
	F13-8233	TVJ00001-

Canon

AUG. 1999 FY8-23B6-000

COPYRIGHT © 1999 CANON INC.
CANON PC800s/900s REV.0 AUG. 1999 PRINTED IN JAPAN (IMPRIME AU JAPON)

IMPORTANT

THIS DOCUMENTATION IS PUBLISHED BY CANON INC., JAPAN, TO SERVE AS A SOURCE OF REFERENCE FOR WORK IN THE FIELD.
SPECIFICATIONS AND OTHER INFORMATION CONTAINED HEREIN MAY VARY SLIGHTLY FROM ACTUAL MACHINE VALUES OR THOSE FOUND IN ADVERTISING AND OTHER PRINTED MATTER.

ANY QUESTIONS REGARDING INFORMATION CONTAINED HEREIN SHOULD BE DIRECTED TO THE COPIER SERVICE DEPARTMENT OF THE SALES COMPANY.
THIS DOCUMENTATION IS INTENDED FOR ALL SALES AREAS, AND MAY CONTAIN INFORMATION NOT APPLICABLE TO CERTAIN AREAS.

COPYRIGHT © 1999 CANON INC.

Printed in Japan
Imprimé au Japon

Use of this manual should be strictly supervised to avoid disclosure of confidential information.

Prepared by

OFFICE IMAGING PRODUCTS TECHNICAL SUPPORT DIVISION

CANON INC.

5-1, Hakusan 7-chome, Toride-shi, Ibaraki 302-8501 Japan

• This service handbook covers the models shown in the following table. Be sure to have a good understanding of the difference from model to model before referring to this handbook.

Model	Type code	Multi-feeder	Single feeder	Zoom	Default ratio	Density correction switch (SW101)	ADF as standard	Cassette	Copying speed (cpm) at Direct
PC860	TYA		√	√	2R2E	√		250 sheets	12
PC880	TZA	√		√	2R2E	√		250 sheets	12
PC890	UAA	√		√	2R2E	√	√	250 sheets	12
PC920	PUD		√	√	2R2E	√		Universal	10
PC920	PUE		√	√	2R2E	√		Universal	10
PC920	PUH		√	√	2R2E	√		Universal	10
PC920	TVB		√	√	3R1E			Universal	10
PC921	TVC		√		3R1E			Universal	10
PC940	TVD		√	√	3R1E			Universal	13
PC941	TVE		√		3R1E			Universal	13
PC950	PUF	√		√	2R2E	√		Universal	12
PC950	PUG	√		√	2R2E	√		Universal	12
PC950	TVF	√		√	3R1E			500 sheets	13
PC960	TVG	√		√	3R1E		√	Universal	10
PC980	TVH	√		√	3R1E		√	500 sheets	13
PC981	TVJ	√			3R1E		√	500 sheets	13

The notation "√" indicates that the item in question is available.

CONTENTS

CHAPTER 1 MAINTENANCE AND INSPECTION

A. Periodically Replaced Parts 1-1
B. Durables and Consumables 1-1
C. Scheduled Servicing 1-1
D. Storing and Handling the Cratridge 1-2
D-1. Storing the Cartridge with the Packaging Seal Intact 1-2
D-2. Storing and Handling the Cartridge with the Packaging Seal Removed 1-3
E. Image Adjustment Basic Procedure 1-7
F. Points to Note for Servicing 1-8

CHAPTER 2 STANDARDS AND ADJUSTMENTS

A. Mechanical 2-1
B. ADF 2-26
C. Electrical 2-37

CHAPTER 3 ARRANGEMENT AND FUNCTIONS OF ELECTRICAL PARTS

A. Sensors and Solenoids 3-1
B. Switches 3-2
C. Lamp, Heater, Motor, Etc. 3-3
D. PCBs 3-4
E. ADF 3-5
F. Variable Resistors (VR) and Check Pins by PCB 3-6

CHAPTER 4 SELF DIAGNOSIS

A. Self Diagnosis 4-1

APPENDIX

A. General Timing Chart A-1
B. Signals and Abbreviations A-3
C. General Circuit Diagram A-5
D. Special Tools A-7
E. Solvents/Oils A-8
F. Specifications A-9

CHAPTER 1 MAINTENANCE AND INSPECTION

A. Periodically Replaced Parts

The machine does not have parts which must be replaced on a periodical basis.

B. Durables and Consumables

The machine does not have items designated as durables or consumables.

C. Scheduled Servicing

The machine does not have any parts which require scheduled servicing.

D. Storing and Handling the Cartridge

The cartridge is subject to the effects of the environment whether its packing seal is intact or removed or whether it is inside the machine or otherwise, changing over time regardless of the number of copies made. The degree of change is highly dependent on the site of installation and how it is maintained, and no general rule may be drawn; however, it is important to exercise care when storing or handling it.

D-1. Storing the Cartridge with the Packaging Seal Intact

If you are storing the cartridge in a warehouse or workshop, be sure that the environment is as indicated in Table 1-1; in addition, keep the following in mind:

- Avoid direct rays of the sun.
- Avoid vibration.
- Do not subject it to impact (as by hitting or dropping it).

Temperature	Normal (9/10 of entire storage period)		between 0°C/32°F and 35°C/95°F
	Harsh (1/10 of entire storage period)	High temperature	between 35°C/95°F and 45°C/113°F
		Low temperature	between -20°C/-4°F and 0°C/32°F
Temperature changes (within 3-min period; approx.)			from 40°C/104°F to 15°C/59°F from -20°C/-4°F to 25°C/77°F
Humidity	Normal (9/10 of entire storage period)		between 35% and 85% RH
	Harsh (1/10 of entire storage period)	High humidity	between 85% and 95% RH
		Low humidity	between 10% and 35% RH
Atmospheric pressure			between 613.3 and 1013.3 (hPa; 0.6 to 1 atm)

Table 1-1 Temperature/Humidity Conditions for Storage

Temperature	Humidity
between -20°C/-4°F and 40°C/104°F	90% or less

Table 1-2 Conditions for Transportation

D-2. Storing and Handling the Cartridge with the Packaging Seal Removed

The photosensitive medium is an organic photoconducting (OPC) material, which would deteriorate if subjected to storing light.

The cartridge also holds toner, requiring the user to exercise care when storing or handling it. (Be sure that the user stores it in an appropriate storage box for storage.)

1. Storage after Removing the Packaging Seal

a. Avoid areas subject to the direct rays of the sun, i.e., near a window. Do not keep it in a car for a long time, as it will be subjected to an extremely high temperature. (This applies even if the cartridge is inside a protective box.)
b. Avoid areas subjected to high or low temperature/humidity or where temperature or humidity tends to change abruptly (e.g., near an air conditioner).
c. Avoid areas subject to dust, ammonium gas, or organic solvent.
d. Make sure that the cartridge is stored at 40°C/104°F or lower.

2. Handling the Cartridge

a. Before setting the cartridge in the machine or if copies have white spots as when it starts to run out of toner, hold the cartridge level and shake it about 90° several times as shown in Figure 1-1 to even out the toner inside.
If you shake it in a different way, the toner can spill out of the developing assembly or the cleaning assembly.

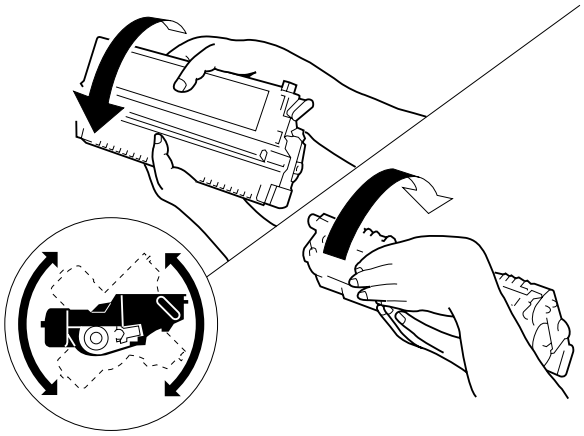

Figure 1-1

b. Do not place the cartridge on its end or turn it over as shown in Figure 1-2.

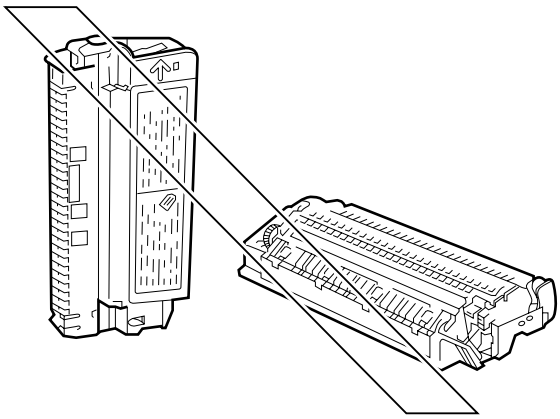

Figure 1-2

c. Do not touch the surface of the photosensitive drum as by opening the shutter for the photosensitive drum cover found at the bottom of the cartridge.
(If you have soiled the surface of the photosensitive drum, wipe it with a flannel cloth coated with toner. Do not clean it using solvents.)

d. Do not disassemble the cartridge.

e. Do not subject the cartridge to excess vibration or impact. In particular, do not impose force on the shutter for the photosensitive drum shutter.

f. Make sure that it is out of reach of children.

g. The photosensitive drum is susceptible to strong light, and the light-blocking shutter is provided as a means of protection.
If the drum is exposed to strong light for a long time, however, copies can start to show white spots or vertical bands. Try leaving the machine alone as long as possible if such a problem is noted; the memory (i.e., cause of white spots or vertical bands), however, may not disappear.
Keep the following in mind:

Caution:

1. Try to work briskly when removing a jam or replacing the cartridge.
2. If the cartridge must be taken out of the machine for storage, be sure to put it in a protective box or put a cover over it. Do not leave it outside the machine unprotected.

Reference:

If the photosensitive drum is exposed to light of 1500 lux (general lighting) for 5 min and then left alone in a dark place for 5 min, it should recover so that it will not cause practical problems. Nevertheless, avoid direct sunshine. (The rays of the sun is as strong as 10000 and 30000 lux.)

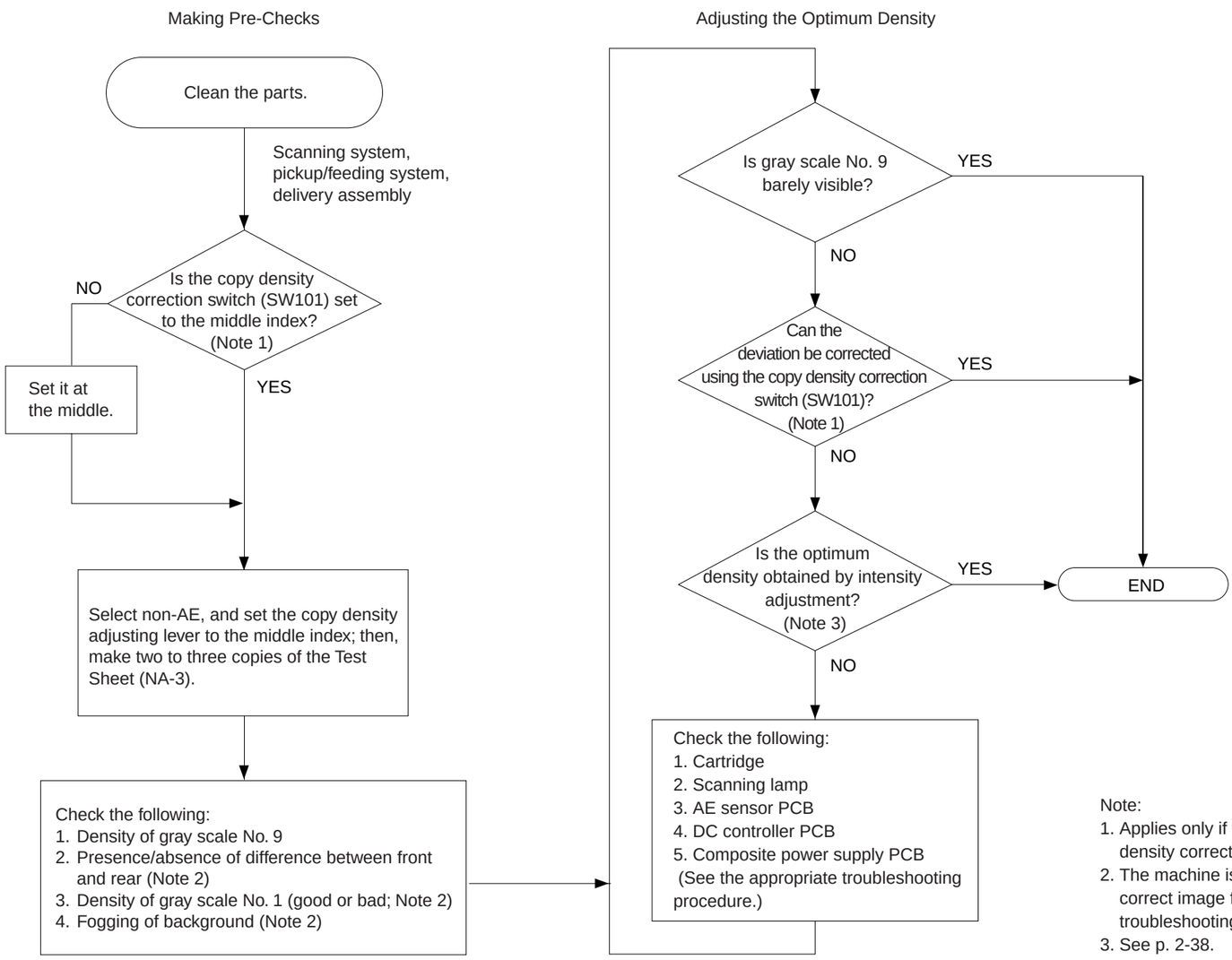

Note:
1. Applies only if the machine is equipped with a copy density correction switch (SW101).
2. The machine is not equipped with a function to correct image faults. See the appropriate troubleshooting procedure.
3. See p. 2-38.

F. Points to Note for Servicing

Copyboard, Scanner

Item	Tools/solvent	Work/remarks
Copyboard cover	Alcohol	Cleaning.
Copyboard glass	Alcohol	Cleaning.
Lens	Blower brush	Cleaning.
Scanning lamp	Lint-free paper	Dry wiping.
Reflecting plate No. 1 through No. 6 mirror	Blower brush	If dirt cannot be removed, dry-wiping with lint-free paper.

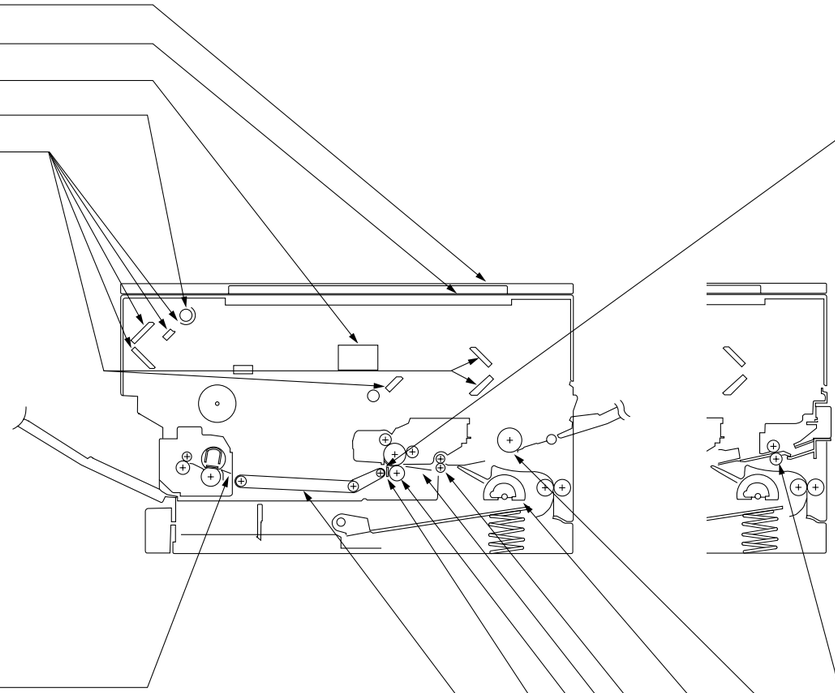

Cartridge

Item	Tools/solvents	Work/remarks
Drum cover shutter	Most cloth	Cleaning; be sure to remove all toner to prevent toner soiling images.

Fixing Assembly, Delivery Assembly

Item	Tools/solvent	Work/remarks
Inlet guide	Solvent	Cleaning.

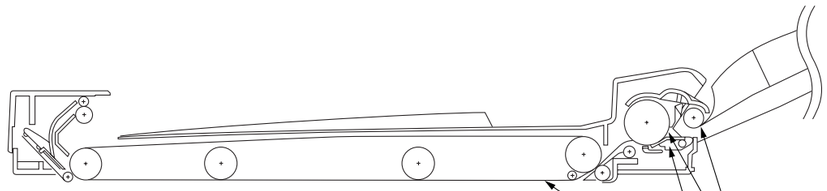

ADF

Item	Tool/solvent	Work/remarks
Feeding belt	Cloth moistened with water*	Dry-wiping.
Separation pad	Cloth	Cleaning.
Pickup roller	Cloth moistened with water* or alcohol	Cleaning.

*Be sure to wring it well.

Pickup, Feeding, and Transfer Assemblies and Static Eliminator

Item	Tools/solvents	Work/remarks
Single-feeder pickup roller	Moist cloth or alcohol	Cleaning.
Multifeeder, Pickup roller	Moist cloth or alcohol	Cleaning.
Cassette pickup roller	Moist cloth or alcohol	Cleaning.
Registration roller	Moist cloth	Cleaning.
Transfer guide	Moist cloth	Cleaning.
Transfer charging roller	Lint-free paper	Cleaning. Do not use water or solvent. Take care not to touch it or leave solvent or oil.
Static eliminator	Special brush	Cleaning.
Feed belt	Moist cloth	Cleaning.

CHAPTER 2 STANDARDS AND ADJUSTMENTS

A. Mechanical

1. Copier

a. Leading Edge Non-Image Width

Make adjustments so that the leading edge non-image width is 2.0 ±1.5 mm when the Test Sheet is copied in Direct.

Caution:

If you have performed this adjustment, be sure to adjust the image leading edge margin.

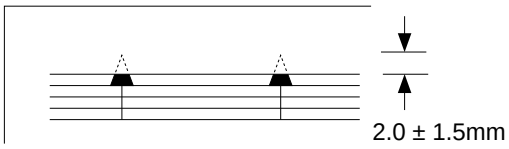

Figure 2-1

1) Turn VR105 on the DC controller PCB so that the width is as indicated.

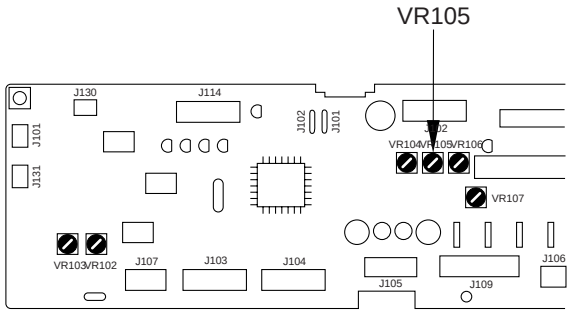

Figure 2-2

Turing VR105 and Leading Edge Non-Image Width

Direction of VR105	Leading edge non-image width
Clockwise	Decreases
Counterclockwise	Increases

Table 2-1

b. Image Leading Edge Margin (registration activation timing)

Make adjustments so that the leading edge margin is 2.5 ±1.5 mm when the Test Sheet is copied.

Caution:

Be sure to check that the leading edge non-image width is as indicated before performing this adjustment.

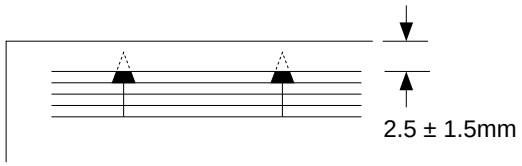

Figure 2-3

1) Turn VR104 on the DC controller PCB so that the margin is as indicated.

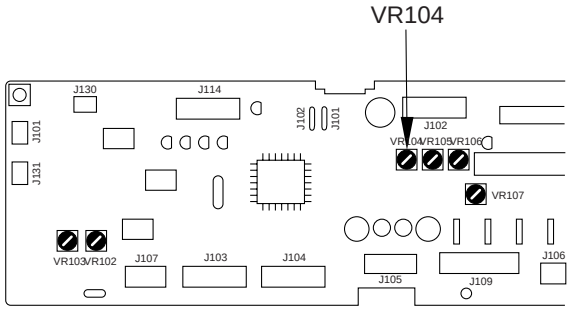

Figure 2-4

Turing VR104 and Image Leading Edge Margin

Direction of VR104	Image leading edge margin
Clockwise	Increases
Counterclockwise	Decreases

Table 2-2

c. Adjusting the Mirror Position (optical length between No. 1 mirror and No. 2 mirror)

If you have replaced the scanner drive cable, you must adjust the mirror position, by changing the position of the cable retainer of the No. 1 mirror mount.

Reference:

1. As more and more copies are made, the cable tends to become slack, requiring adjustment.
2. If the optical length between the No. 1 mirror and the No. 2 mirror is not correct, the horizontal reproduction ratio will be wrong, causing poor sharpness or blurred images.

1) Fit the mirror positioning tool (FY9-3009) as shown.

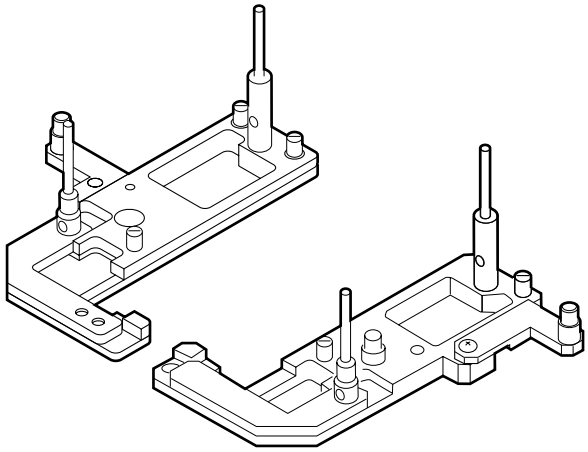

Figure 2-5

2) Remove the copyboard glass.
3) Loosen the screws used to secure the cable retainer at the rear and the front of the No. 1 mirror mount [1].

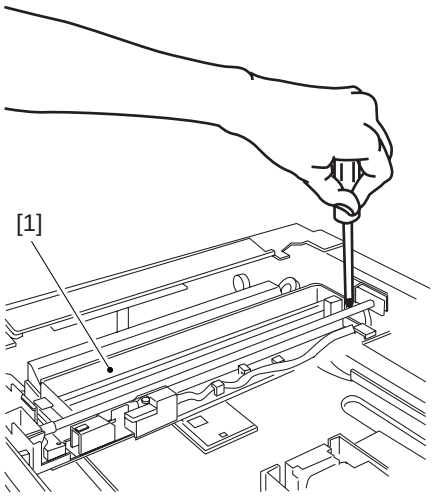

Figure 2-6

4) Turn the cable drive pulley [3] so that the three shafts [2] of the mirror positioning tool for the front and the rear may be arranged as shown.

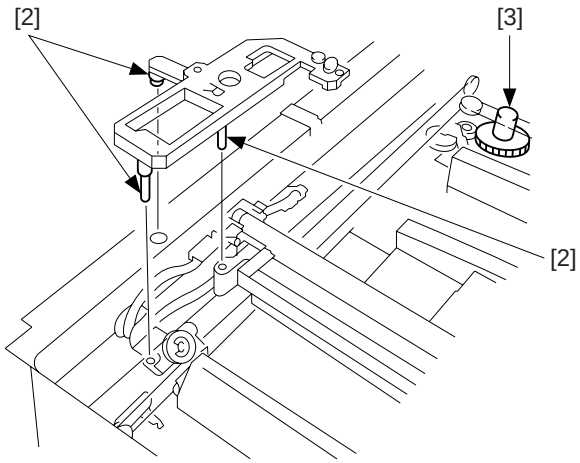

Figure 2-7 (rear)

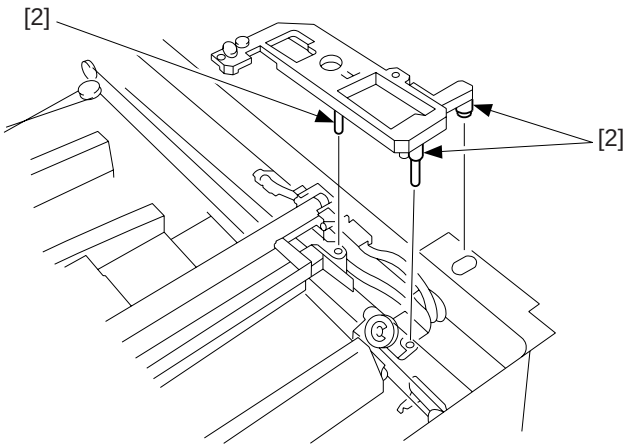

Figure 2-8 (front)

5) While keeping the condition of 4), tighten the positioning screw at the rear and the front of the No. 1 mirror mount [1].

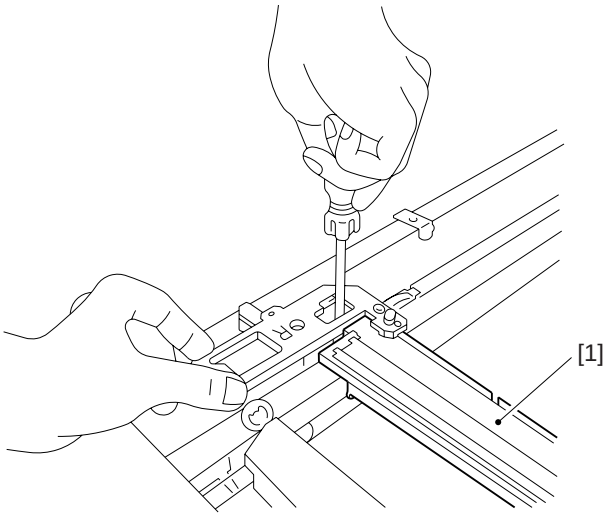

Figure 2-9 (rear)

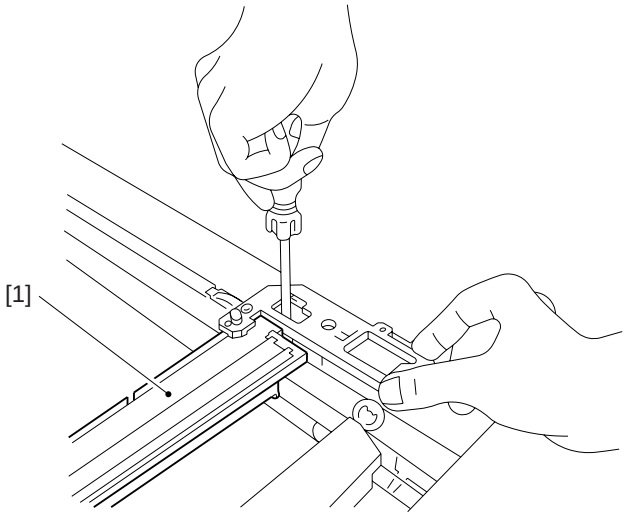

Figure 2-10 (front)

d. Checking the Force of the Cassette Spring

If the force of the spring used to hold up the holding plate of the cassette is not correct, pickup faults or the like can occur.

If a fault is suspected, check the force of the spring using a spring gauge (CK-0054), and replace the spring if it is not as indicated:

Standard: 970 ±150 g

Making Measurements

Push the spring gauge against the middle of the spring as shown, and check to make sure that the reading of the spring gauge is 970 ±150 g when the holding plate is 18 mm away from the bottom of the cassette.

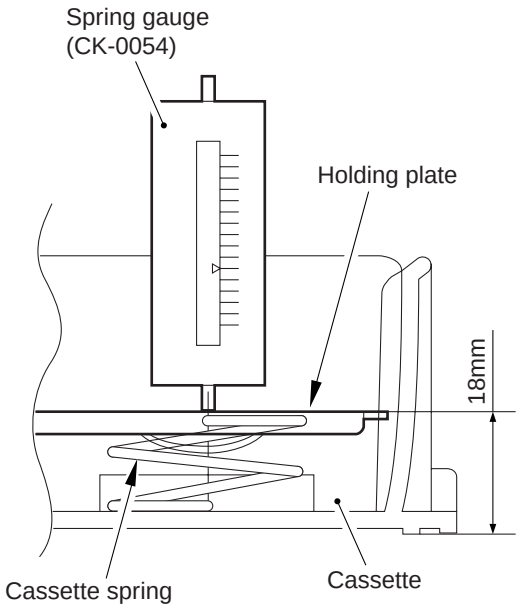

Figure 2-11

e-1. Routing the Scanner Drive Cable

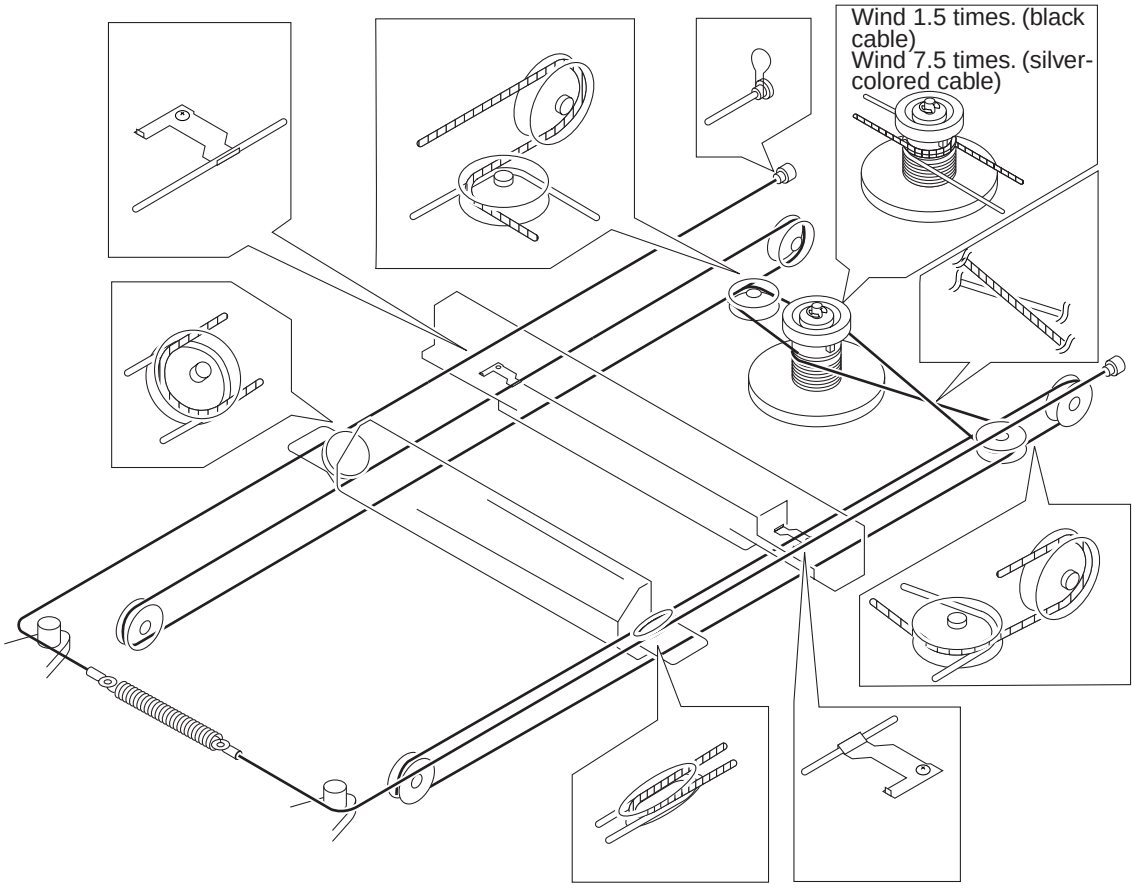

Figure 2-12

e-2. Routing the Scanner Drive Cable

1. Before Starting the Work

Prepare the following:
- Mirror positioning tool (FY9-3009)
- Cable clip (FY9-3017)
- Adhesive tape

1) Set the mirror positioning tool as shown.

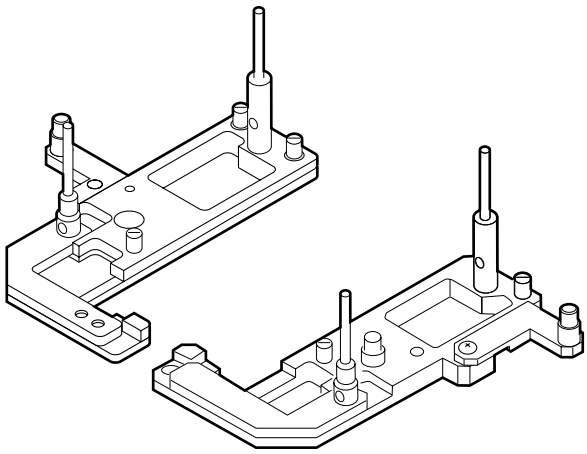

Figure 2-13

2) Prepare about five strips of adhesive tape (each one about 20 × 50 mm).
3) Remove the copyboard glass.
4) Disconnect the connectors (J101, J131) [1] from the DC controller PCB.

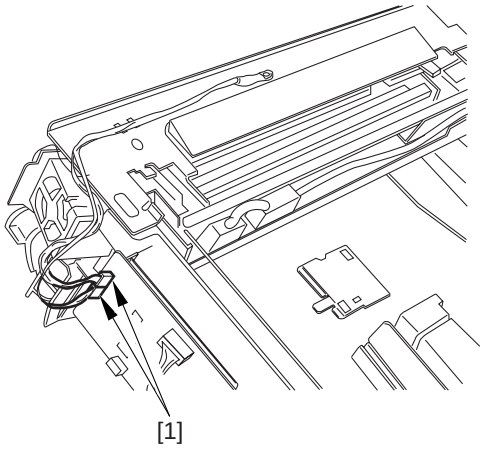

Figure 2-14

5) If the machine is equipped with an ADF, free the hook [2], and disconnect the two relay connectors [3] from the left upper stay [4].

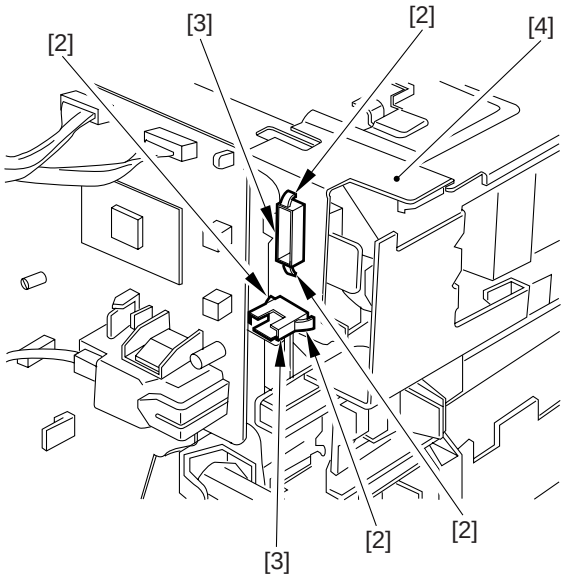

Figure 2-15

6) Remove the three screws [5], and detach the left upper stay [4].

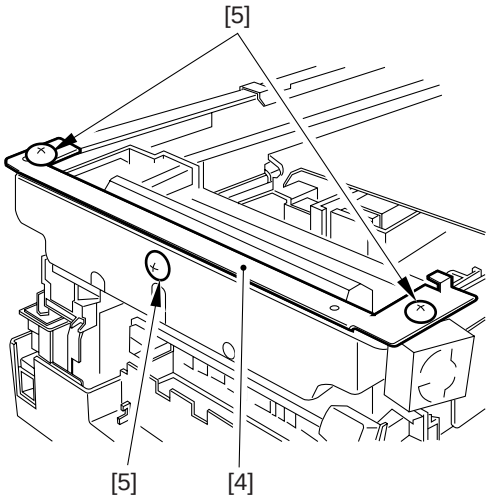

Figure 2-16

7) Remove the four screws [7], and detach the lens cover [8].

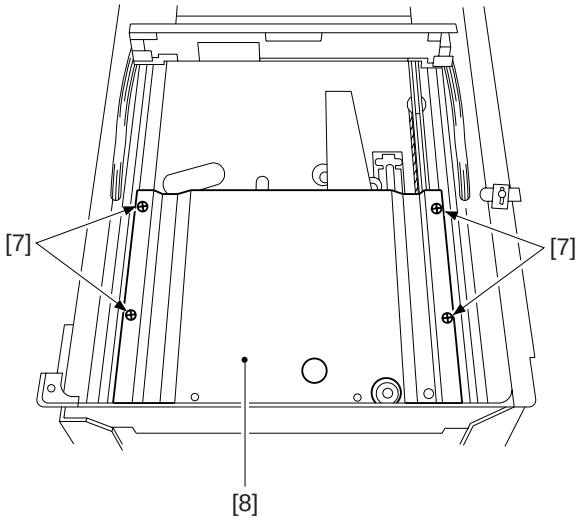

Figure 2-17

2. Routing the Reversing Cable

1) Wind the reversing cables (silver-colored) [2] on the cable drive pulley [1] 7.5 times with the longer of the two on top; then, secure it in position with a cable clip [3].

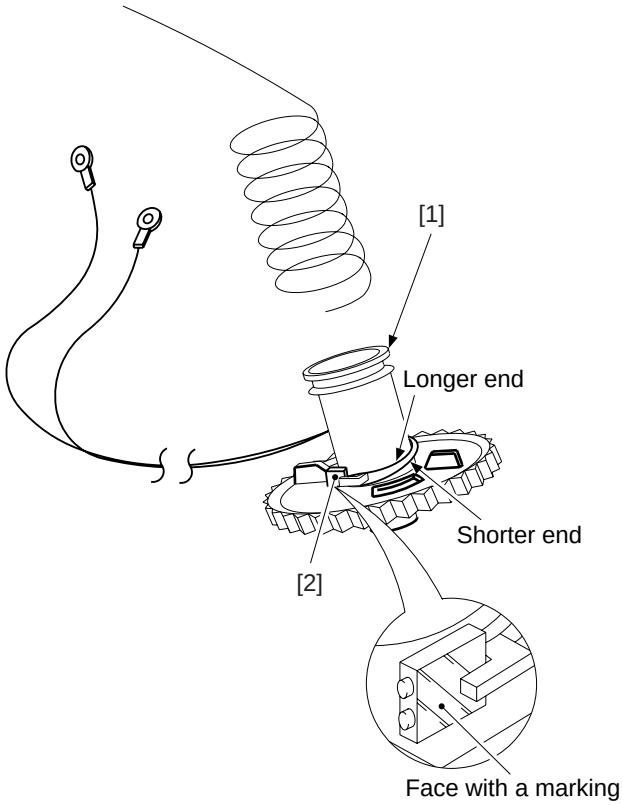

Figure 2-18

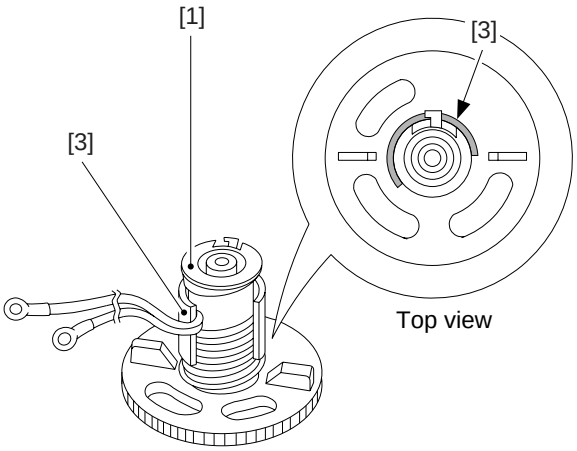

Figure 2-19

2) Put the cable drive pulley [1] into the shaft [4], and secure it in position with an E-ring [5]. When putting the cable drive pulley into the shaft, be sure that the hook is at the front.

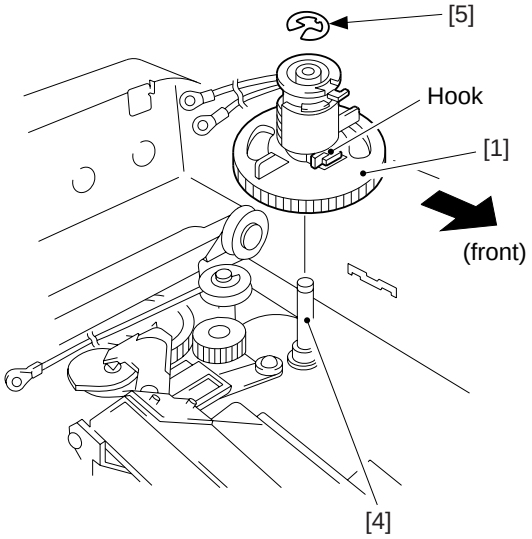

Figure 2-20

3) Hook the shorter end [6] on the pulley [7].

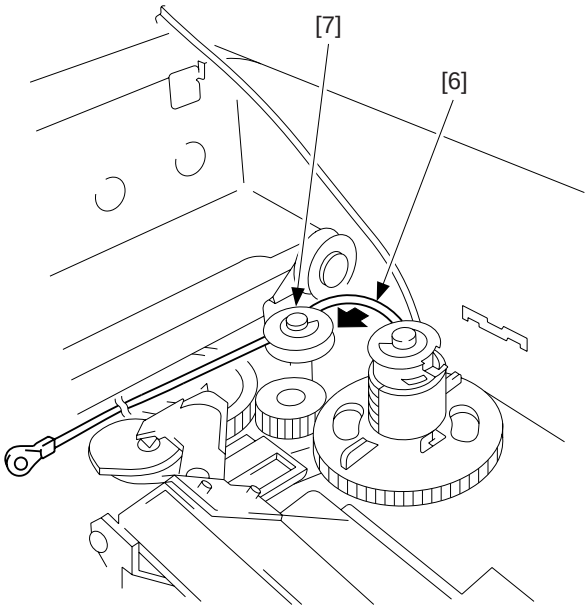

Figure 2-21

4) Lead the shorter end [6] under the No. 1 mirror mount [8] and the No. 2/3 mirror mount [9]; then, hook it on the left rear pulley [10] and the pulley [11] of the No. 2/3 mirror mount.

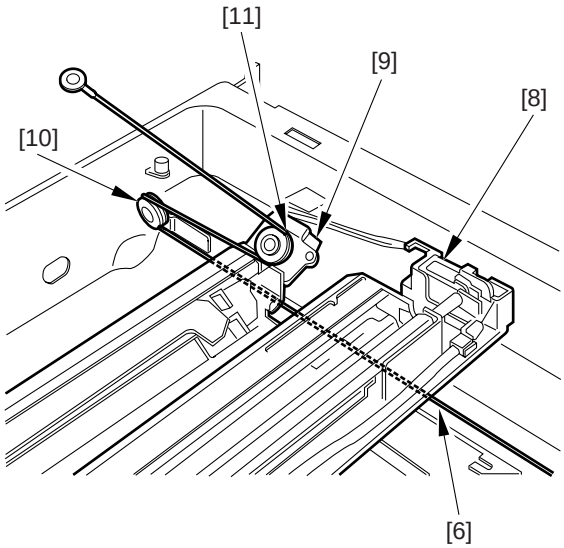

Figure 2-22

5) After fitting the shorter end [6] on the cable hook [12], secure its end with adhesive tape [13]. Be sure that the secured end of the cable is found where the hole in the left side plate and the tip of the cable matches.

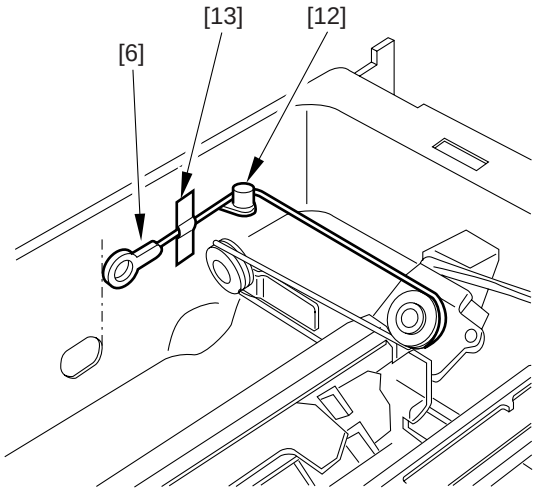

Figure 2-23

6) Lead the longer end [14] along the cable drive pulley [1], and hook it on the pulley [15] on the right front side.

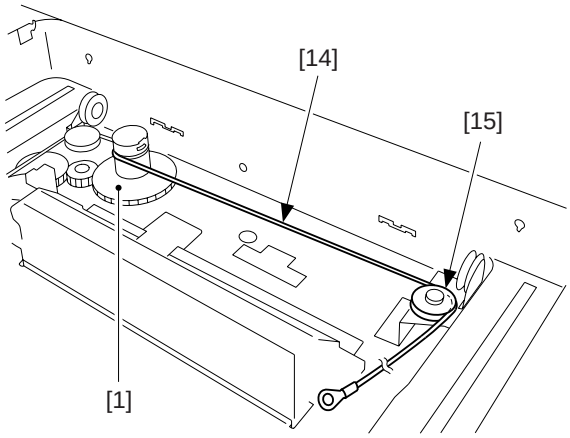

Figure 2-24

7) Lead the longer end [14] under the No. 1 mirror mount [8] and the No. 2/3 mirror mount [9]; then, hook it on the pulley [16] on the left front side and the pulley [17] of the No. 2/3 mirror mount.

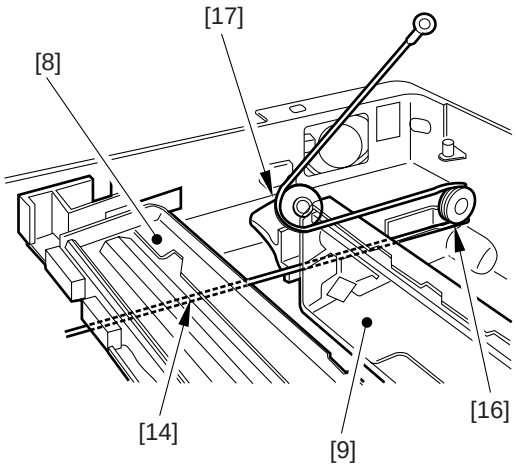

Figure 2-25

8) Hook the longer cable [14] on the cable hook [18]; then, secure its end to the left side with adhesive tape [19].
Be sure that the secured end of the cable is found where the hole in the left side plate and the tip of the cable matches.

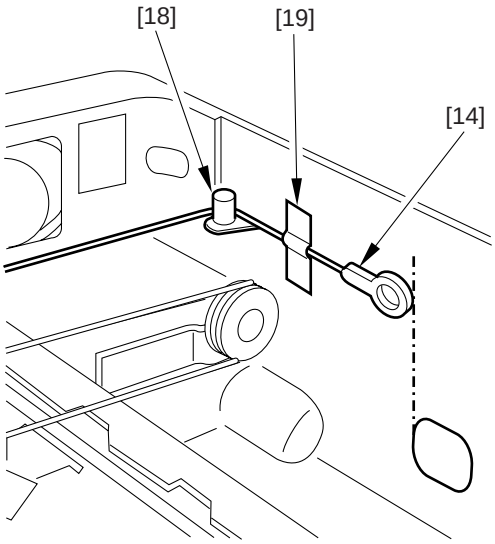

Figure 2-26

3. Routing the Forwarding Cable

1) Fit the longer end forwarding cable (black) [2] on the top hook of the cable drive pulley [1], and wind it 1.5 times. Then, secure the shorter end [3] as shown with adhesive tape [4].

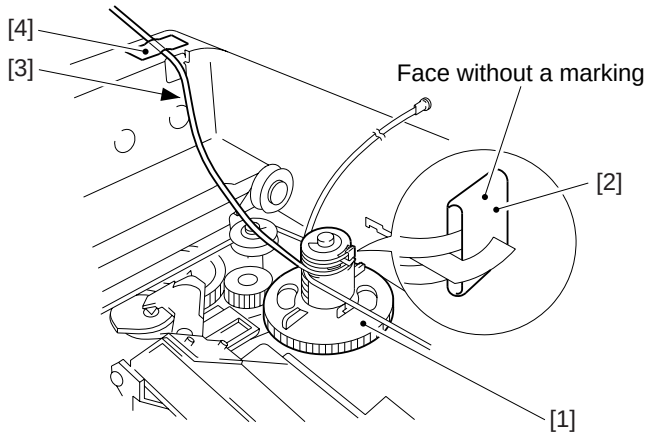

Figure 2-27

2) Lead the longer end [5] along the cable drive pulley [1] as shown, and hook it on the pulley [6] on the right front side.

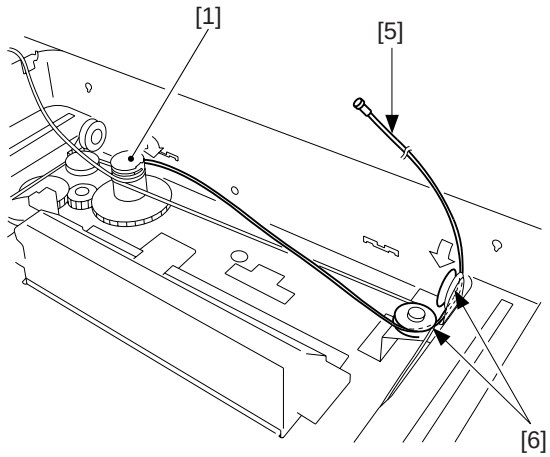

Figure 2-28

3) Lead the longer end [5] under the No. 1 mirror mount [7]; then, hook it on the pulley [8] of the No. 2/3 mirror mount, and lead it between the No. 1 mirror mount [7] and the scanning lamp [9].

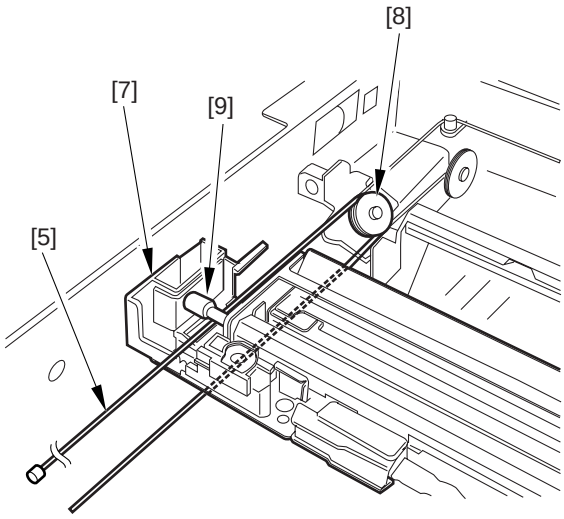

Figure 2-29

4) Hook the end of the longer end [5] on the hole [10] on the right side.

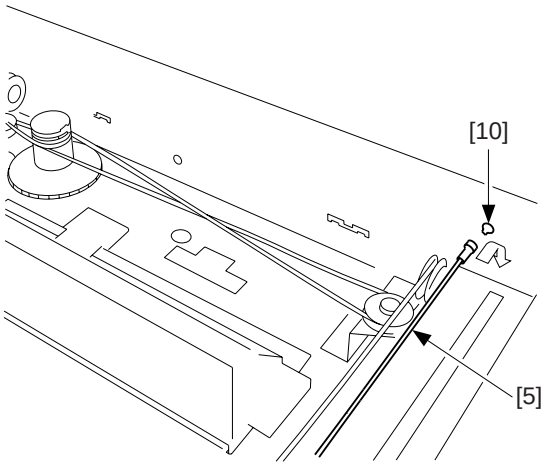

Figure 2-30

5) Free the shorter end [3], and hook it on the pulley [11] on the right rear side.

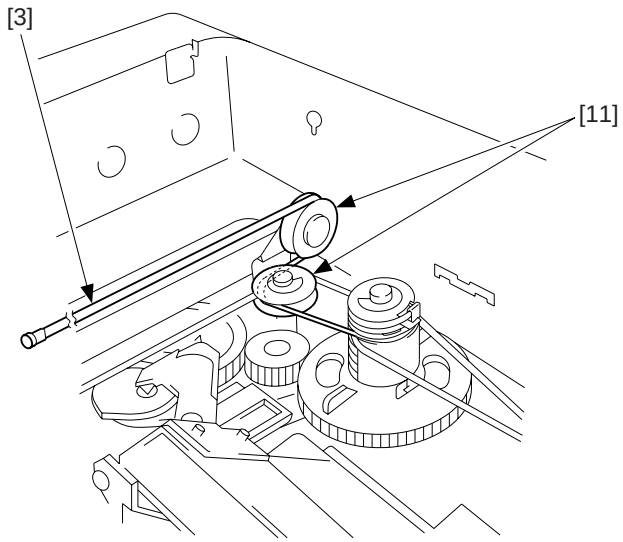

Figure 2-31

6) Lead the shorter end [3] under the No. 1 mirror mount [7], and hook it on the pulley [12] of the No. 2/3 mirror mount as shown; then, lead it between the No. 1 mirror mount [7] and the scanning lamp [9].

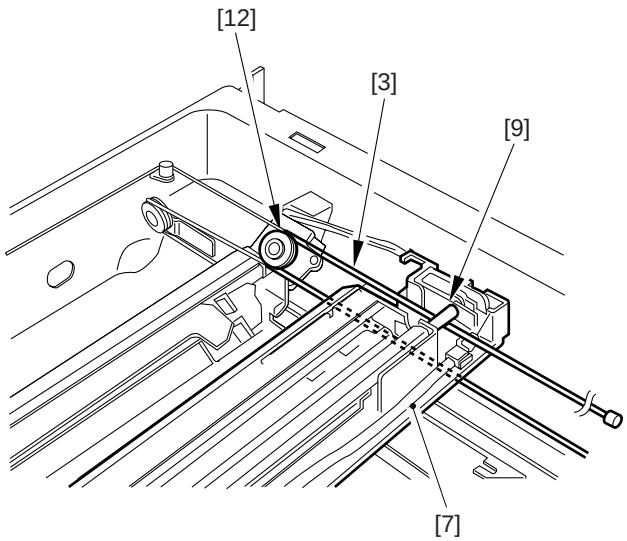

Figure 2-32

7) Hook the end of the shorter end [3] on the hole [13] on the right side.

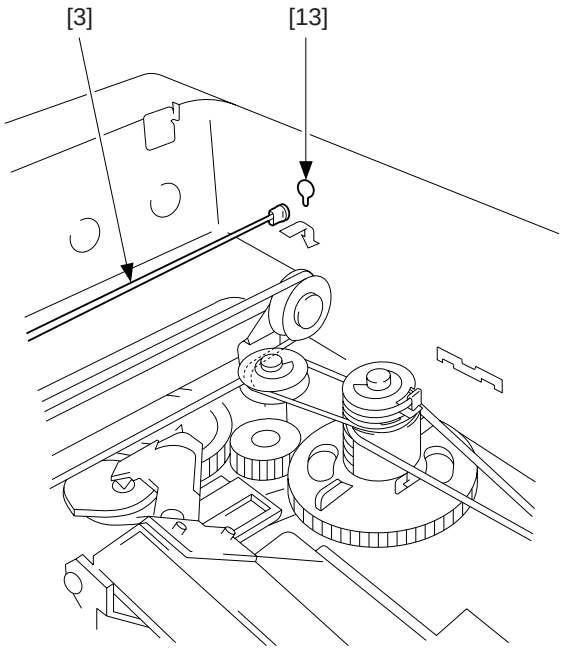

Figure 2-33

8) Free the shorter end [3] and the longer end [5] (reversing cable), and connect both with a spring [14]; then, fit the stopper [15].

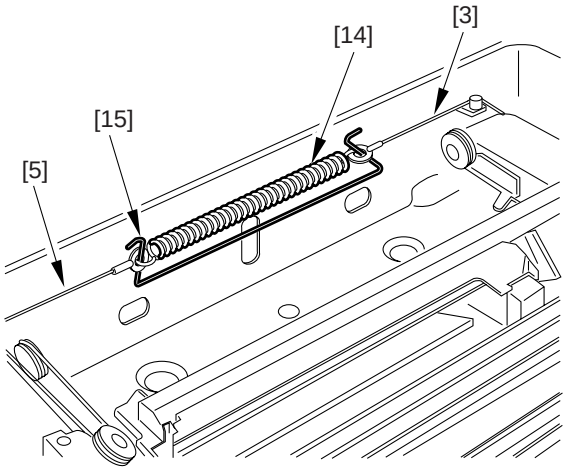

Figure 2-34

9) Detach the pulley clip [16] from the cable drive pulley [1].

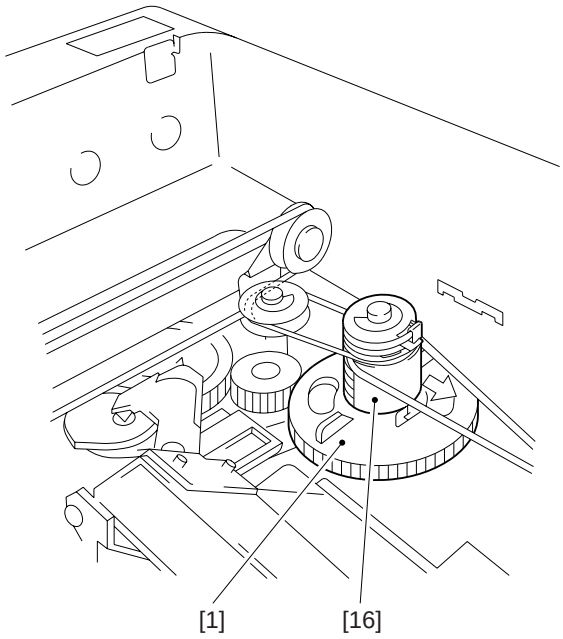

Figure 2-35

4. Positioning the No. 1 Mirror Mount

1) Fix the rear and the front of the No. 1 mirror mount [1] temporarily to the metal fixing [2] of the forwarding cable.

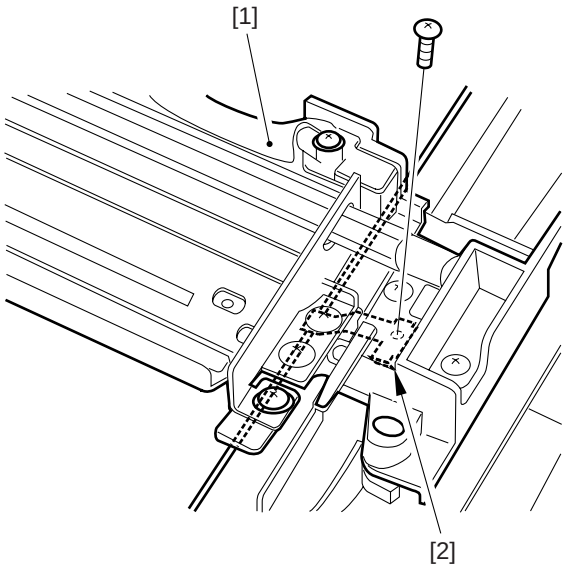

Figure 2-36 (rear)

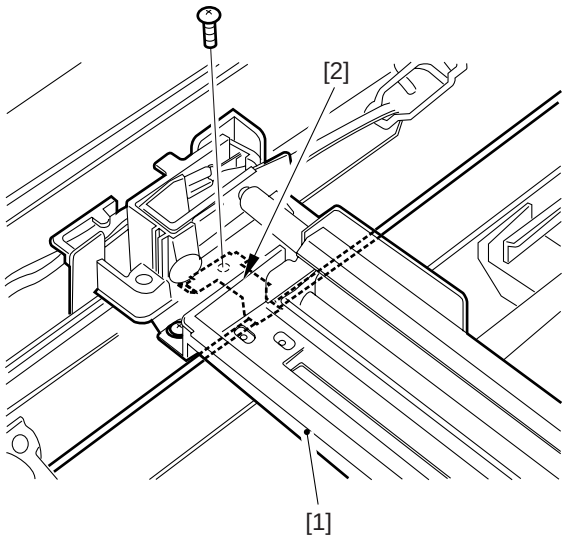

Figure 2-37 (front)

2) Turn the cable drive pulley [4] so that the three shafts [3] of the mirror positioning tool for rear and front is as shown.

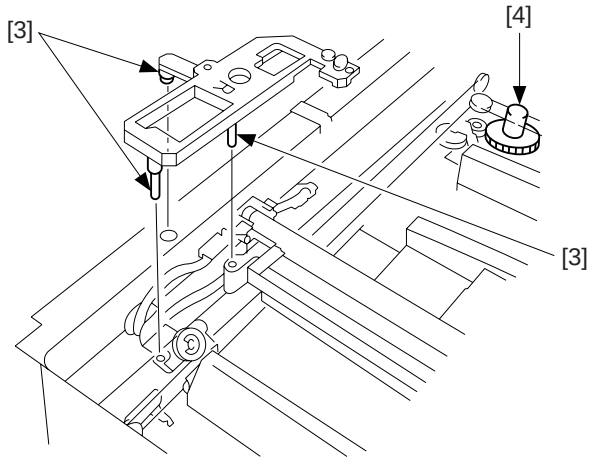

Figure 2-38 (rear)

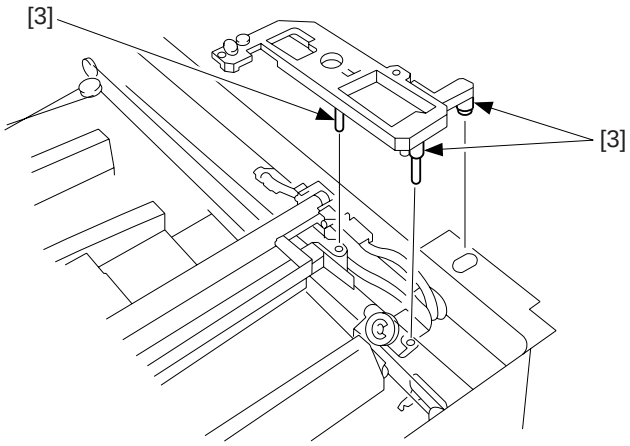

Figure 2-39 (front)

3) While keeping the condition of step 2), tighten the positioning screw on the rear and front of the No. 1 mirror mount [1].

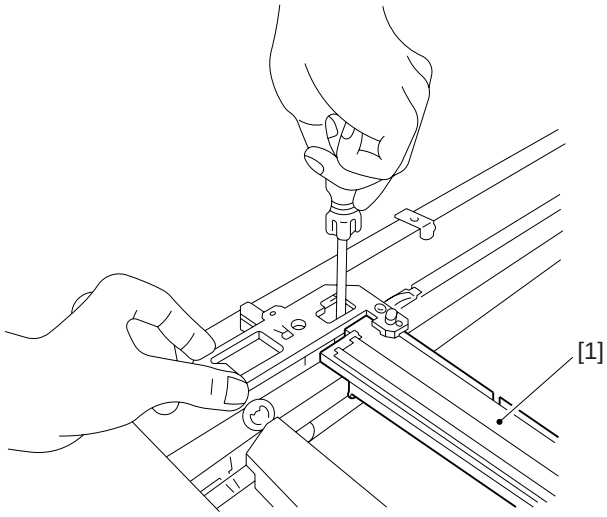

Figure 2-40 (rear)

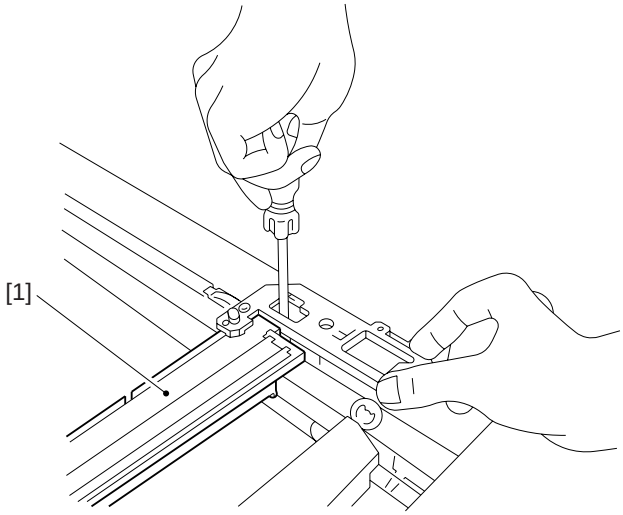

Figure 2-41 (front)

f. Point to Note When Mounting the Scanning Lamp

When mounting the scanning lamp, be sure that its logo mark (manufacturer's name) is toward the front. Further, be sure that the protrusion near its middle is as shown.

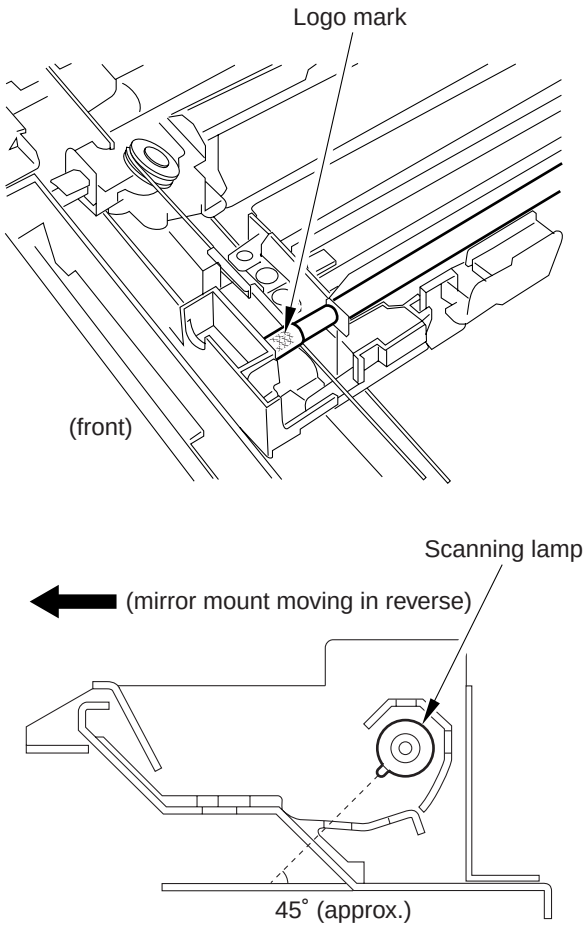

Figure 2-42

Caution:

- If you have replaced the scanning lamp, you must adjust the intensity of the lamp (p. 2-38) and perform AE adjustment.
- Do not touch the lamp when handling it.

g. Points to Note When Mounting the Fuse

When mounting the thermal fuse of the No. 1 mirror mount, be sure that the fuse is oriented as shown.

Make sure that the fuse is in contact with the reflecting plate.

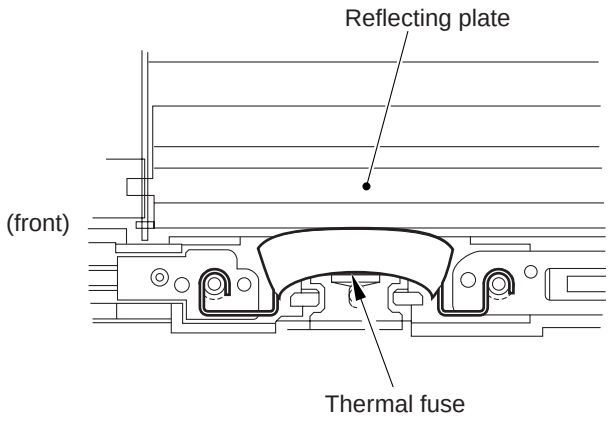

Figure 2-43

B. ADF

1. Adjusting the Original Stop Position

Adjust the original stop position in the following order:

1. Correcting original skew
2. Adjusting the rear/front original stop position
3. Adjusting the original leading edge stop position

2. Correcting Original Skew

1) Obtain a sheet of A4 or LTR white copy paper, and draw two lines as indicated.
   • The sheet will be used as a test sheet.

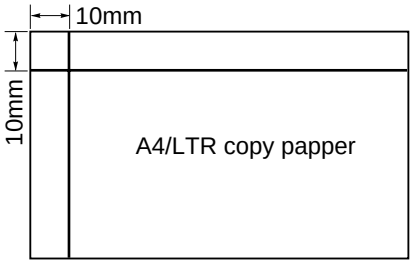

Figure 2-44

2) Turn on the machine, and place the test sheet prepared in step 1) on the original tray.

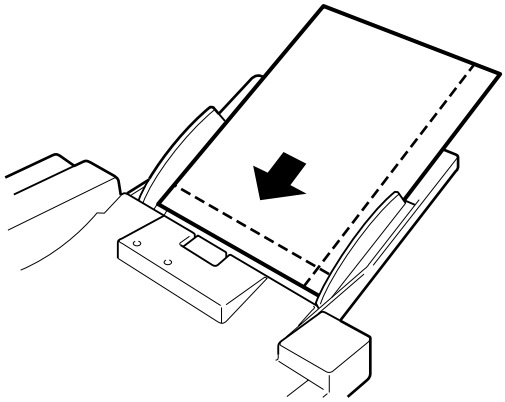

Figure 2-45

3) Press the Copy Start key to make a copy.
4) Check to make sure that the difference between L1 and L2 on the copy is 1.8 mm (standard) or less.

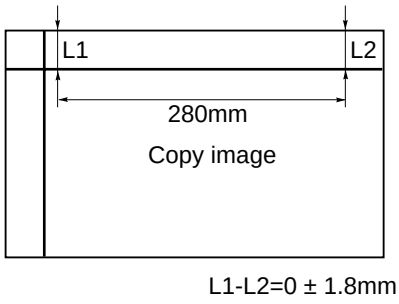

Figure 2-46

5) If the difference is not as specified, turn the adjusting screw found to the side of the left hinge unit to make adjustments.

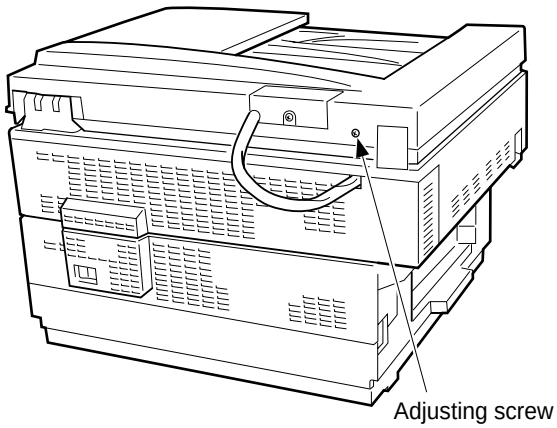

Figure 2-47

Relationship between Adjusting Screw and L1/L2

Direction of turn	Relationship between L1 and L2
Clockwise	L1 > L2
Counterclockwise	L1 < L2

Table 2-3

3. Adjusting the Rear/Front Original Stop Position

You must first correct original skew before adjusting the rear/front original stop position.

1) Obtain a sheet of A4 or LTR white copy paper, and draw two lines as indicated.
   • The sheet will be used as a test sheet.

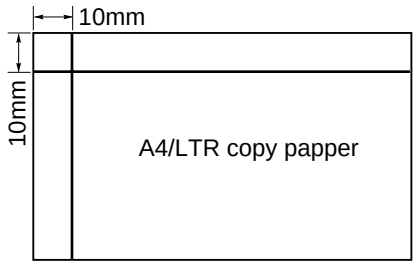

Figure 2-48

2) Remove the original tray cover from below the original tray.

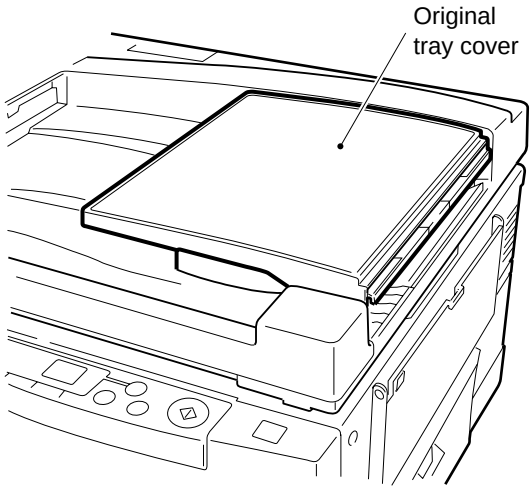

Figure 2-49

3) Turn on the machine, and place the test sheet prepared in step 1) on the original tray.

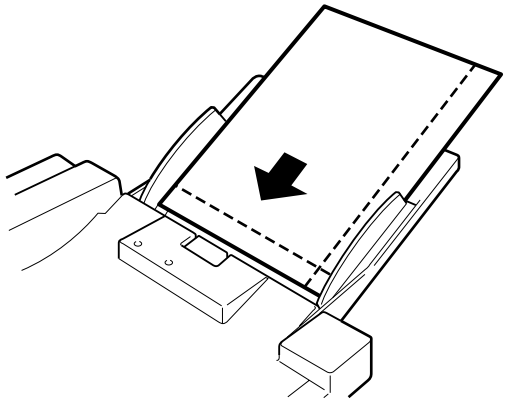

Figure 2-50

4) Press the Copy Start key to make a copy.
5) Check to make sure that the distance L3 on the copy image indicated is 10 ±2.5 mm (standard) or less.

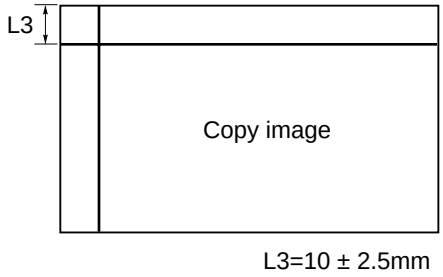

Figure 2-51

6) If the distance is not as specified, loosen the pinion gear positioning screw under the original tray, and adjust the position of the pinion gear.

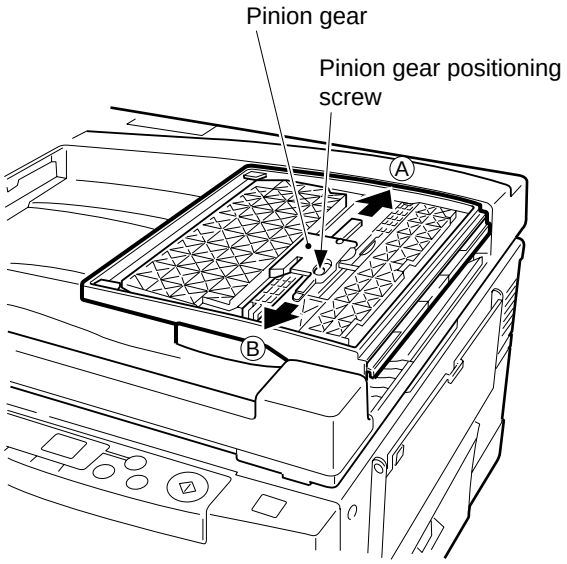

Figure 2-52

Relationship between Pinion Gear Position and L3

Direction of pinion gear	L3
A	Increases
B	Decreases

Table 2-4

4. Adjusting the Original Leading Edge Stop Position

You must first correct original skew and adjust the rear/front original stop position before adjusting the original leading edge stop position.

1) Obtain a sheet of A4 or LTR white copy paper, and draw two lines as indicated.
   • The sheet will be used as a test sheet.

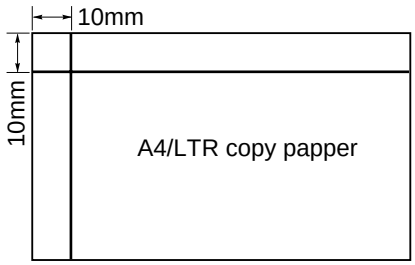

Figure 2-53

2) Remove the screw, and remove the ADF controller cover.

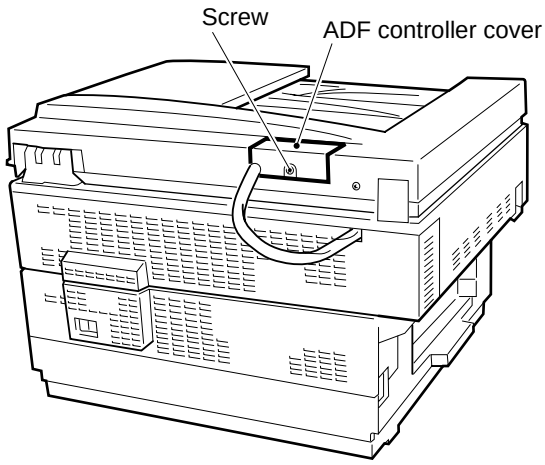

Figure 2-54

3) Turn on the machine, and place the test sheet prepared in step 1) on the original tray.

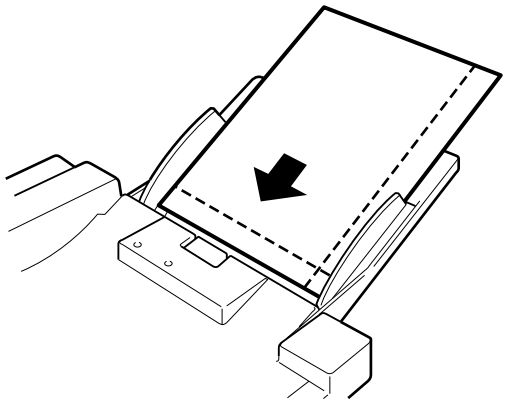

Figure 2-55

4) Press the Copy Start key to make a copy.
5) Check to make sure that the distance L4 on the copy image indicated is 10 +2.0, -2.5 mm (standard) or less.

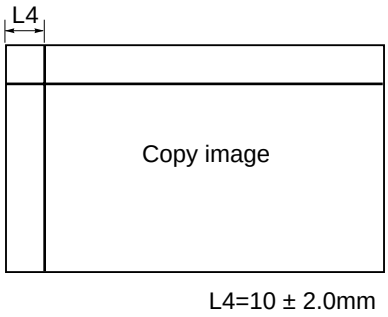

Figure 2-56

6) If the distance is not as specified, shift bit 1 of the DIP switch (SW1) on the ADF controller PCB to ON, and place an A4 or LTR white copy paper on the original tray.

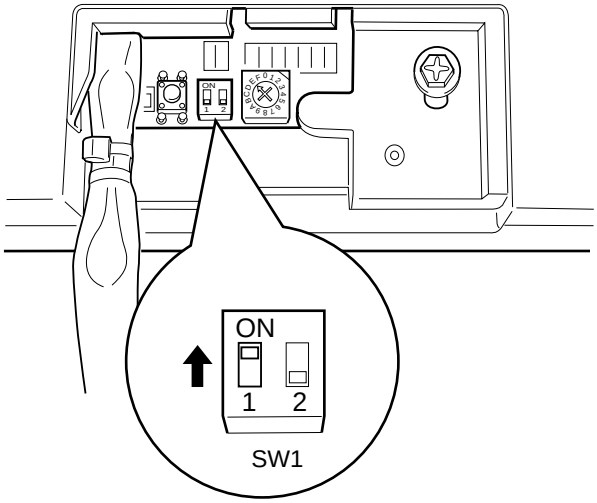

Figure 2-57

7) Press the push switch (PSW) on the ADF controller PCB.
   • The copy paper will be picked up from the original tray and stopped on the copyboard glass.

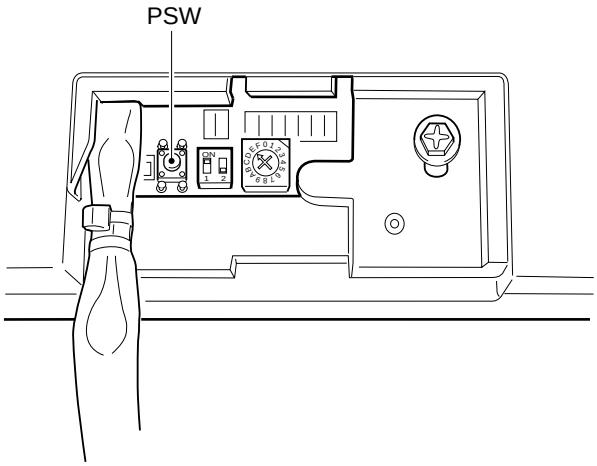

Figure 2-58

8) Use the rotary switch (SW2) on the ADF controller PCB to adjust the original leading edge stop position.
Moving the rotary switch by a single notch changes the original stop position by about 0.3 mm.
Press the push switch (PSW) after deciding on a position to discharge the copy paper and store the optimum value.

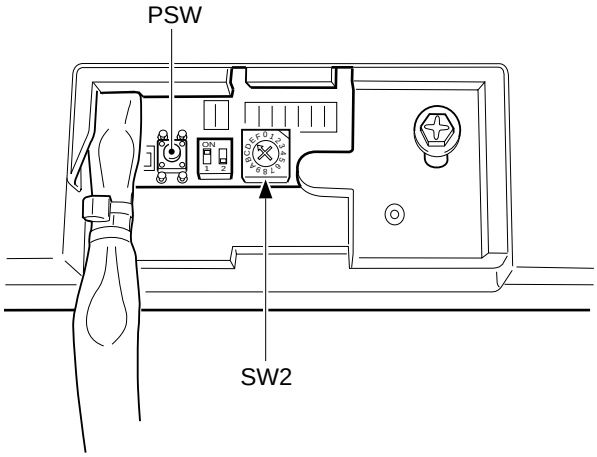

Figure 2-59

Relationship between Rotary Switch Direction and Original Position

Direction of rotary switch	Position (shift) of original
Clockwise	Toward leading edge
Counterclockwise	Toward trailing edge

Table 2-5

Example:

If L4 is 13 mm,

You must shift the original stop position toward the leading edge by 3 mm.

1) Place a sheet of A4 or LTR white copy paper on the original tray.
2) Shift bit 1 of the DIP switch (SW1) on the ADF controller PCB to ON; then, push the push switch (PSW) to pick up the copy paper.

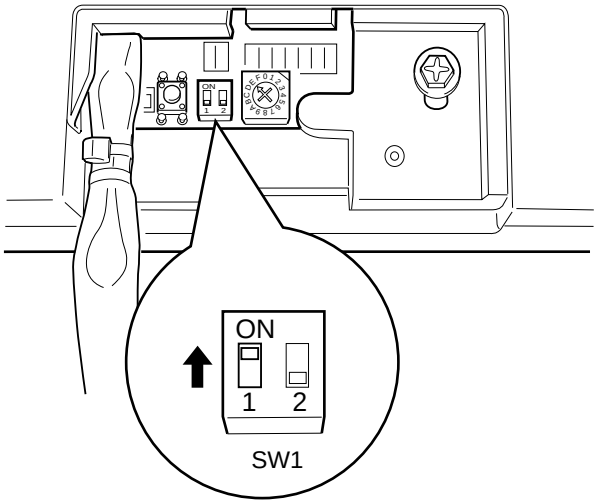

Figure 2-60

3) Turn the rotary switch (SW2) on the ADF controller PCB clockwise by 10 notches.

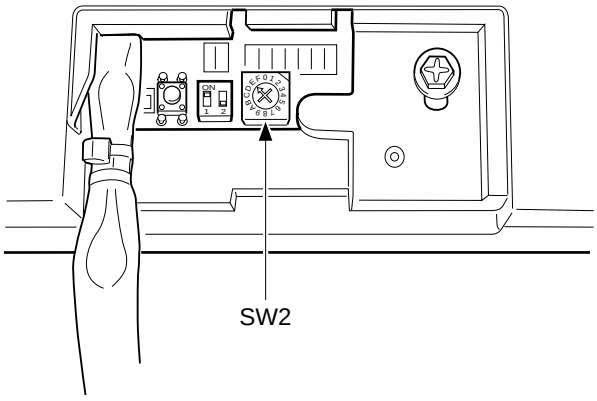

Figure 2-61

4) Press the push switch (PSW) on the ADF controller PCB.
   • The copy paper on the copyboard will be discharged, and the optimum value will be stored.

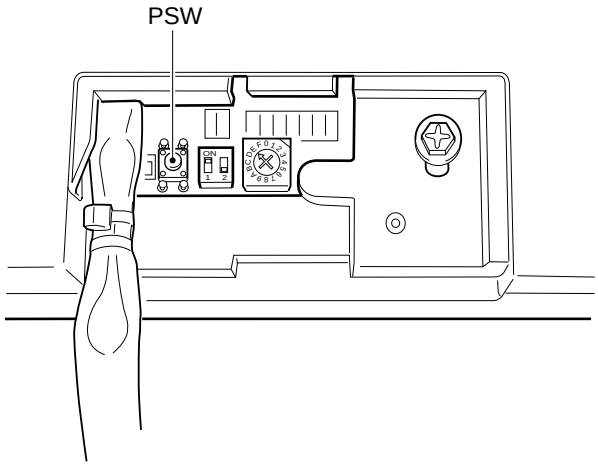

Figure 2-62

C. Electrical

1. After Replacing the Major Parts

Parts	Adjustment
Scanning lamp	1. Intensity of the scanning lamp 2. AE mechanism
AE sensor PCB	1. AE mechanism
Composite power supply PCB*1	(1. Intensity of the scanning lamp) (2. AE mechanism)
DC controller PCB	1. Intensity of the scanning lamp 2. AE mechanism 3. Leading edge non-image width 4. Image leading edge margin 5. Reproduction ratio (fine adjustment)
ADF controller PCB	1. Excute original leading edge stop position adjustment

*1: If you have replaced the composite power supply PCB, check copy images using the Test Sheet; if (and only if) an image fault is found, adjust the intensity of the scanning lamp and execute AE adjustment.

Table 2-6

2. Adjusting the Intensity of the Scanning Lamp

Adjust the intensity of the scanning lamp if you have replaced any of the following:

- DC controller PCB
- Composite power supply PCB (See p.2-37.)
- Scanning lamp

Caution:

If you have performed this adjustment, you must always perform AE adjustment.

Making Adjustments

1) Set a cartridge in the machine.
2) Set the density correction switch (SW101) to its middle index.

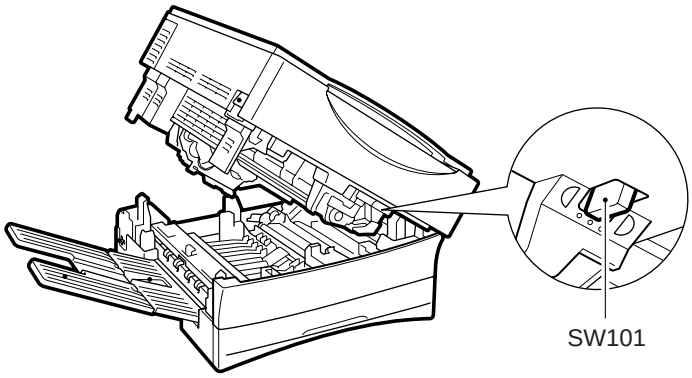

Figure 2-63

3) Turn off the AE mechanism, and set the copy density adjusting lever on the control panel to its middle index.
4) Place the Test Sheet on the copyboard, and make a copy.
5) Turn VR107 on the DC controller PCB gradually until gray scale No. 9 is barely visible.

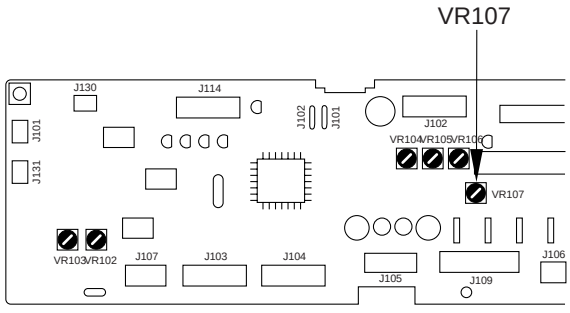

Figure 2-64

VR107 and Copy Density

Direction of VR107	Copy density
Clockwise	Lighter
Counterclockwise	Darker

Table 2-7

3. AE Adjustment

Perform this adjustment if you have replaced any of the following:

- DC controller PCB
- Composite power supply PCB (See p.2-37.)
- AE sensor PCB
- Scanning lamp

Making Adjustments

Before Starting the Work

- Obtain a newspaper with more or less even print. (Avoid ones with many photos or large display text.)
- Obtain five sheets of white sheets of paper.
- Be sure that the intensity of the scanning lamp has been adjusted when you have replaced the scanning lamp.
- Set the density correction switch (SW101) to the middle setting. If the machine is not equipped with a density correction switch, set the density adjusting lever to the middle setting.

1) Short JP103 and JP104 on the DC controller PCB.

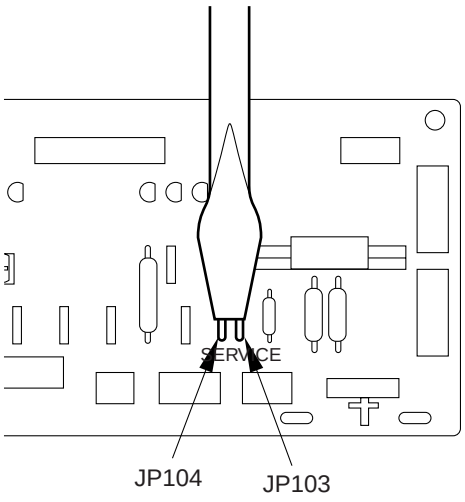

Figure 2-65

2) While keeping the condition in step 1), turn on the power.
   - The scanning lamp will turn on, and the main motor (M1) will rotate.
3) Stop shorting JP103 and JP104.

4) Turn VR103 on the DC controller PCB fully clockwise.

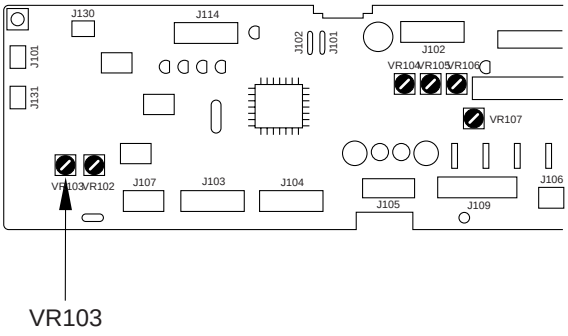

Figure 2-66

5) Place a newspaper on the copyboard, and close the copyboard cover.
6) Turn VR102 so that the display indicates ‘A3’ to ‘Ad’.

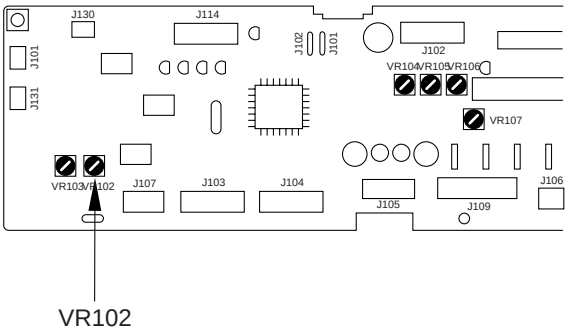

Figure 2-67

7) Remove the newspaper from the copyboard, and place five sheets of copy paper in its place; then, close the copyboard cover.
8) Turn VR103 on the DC controller PCB so that the display will indicate ‘52’ to ‘5c’.

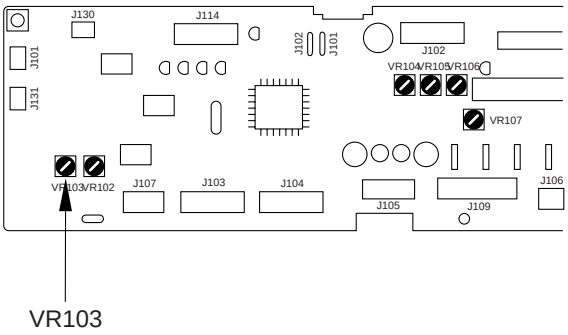

Figure 2-68

9) Repeat steps 5) through 8) so that the values of both VR102 and VR103 are target values.

Caution:

If you cannot set VR102 and VR103 to the target values at the same time, turn VR103 fully counterclockwise, and go back to step 5) and make adjustments once again.

10) Make a copy, and check to make sure that it is free of fogging and its text is adequately dark.
    - If the copy is foggy or its text is too light, go back to step 1) and start over.
    - If the results of adjustment for a second time are not good, make adjustments using the density correction switch (SW101).

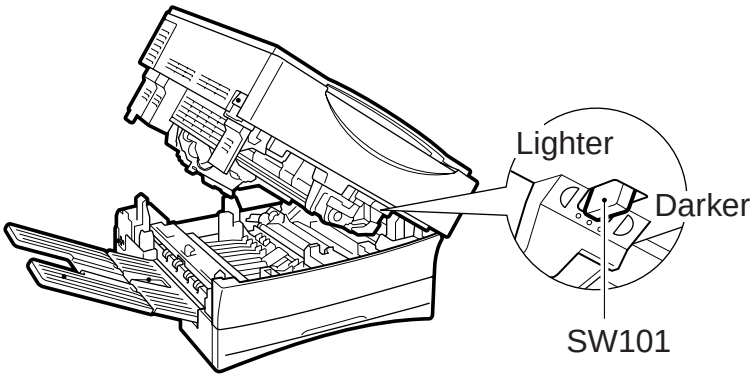

Figure 2-69

4. Adjusting the Reproduction Ratio (fine adjustment)

Adjust the reproduction ratio if you have replaced the following:

- DC controller PCB

Making Adjustments

Before Starting the Work

- Meter

1) Before replacing the DC controller PCB, turn on the power; then, connect the meter probes to CP23 and GND on the DC controller PCB, and measure the voltage.
   + probe CP23
   - probe .....GND

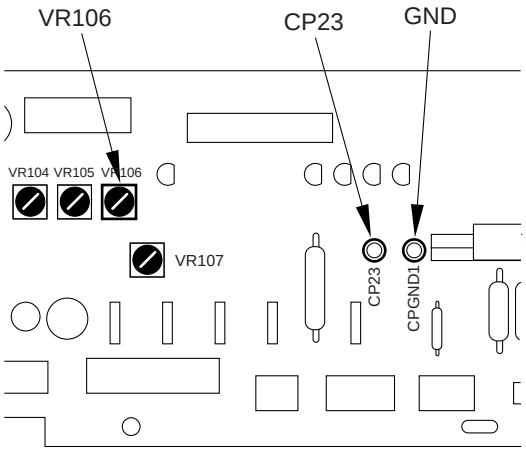

Figure 2-70

2) After replacing the DC controller PCB, measure the voltage as in step 1); then, turn VR106 on the DC controller PCB so that the reading is the same as before replacement.

5. Checking the Photointerrupters

1) Set the meter range to 12 VDC.
2) Connect the - probe to GND (CPGND1) on the DC controller PCB.

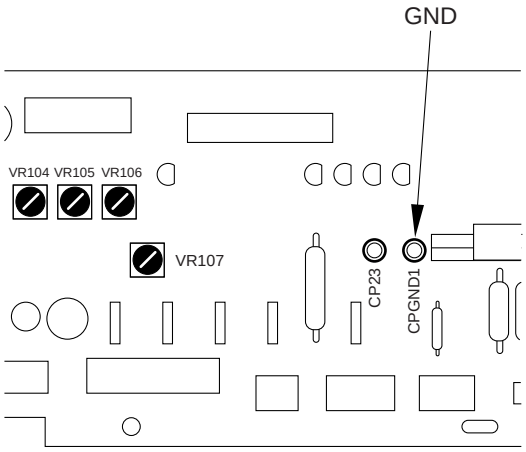

Figure 2-71

3) Make checks as instructed.

Reference:

The photointerrupers other than those shown in Table 2-8 are connected in a matrix, hence the omission from the table.

Sensor	Connector	Checks		Voltage (approx.)
PS1 Scanner home position sensor (SCHP)	J101-3	During standby, move the scanner by hand.	When the light-blocking plate is at PS1, When the light-blocking plate is not at PS1,	5V 0V
PS2 Lens home position sensor (LHP)	J109-10	During standby, move the lens mount by hand.	When the light-blocking plate is at PS2, When the light-blocking plate is not at PS2,	5V 0V
PS4 Vertical path roller paper sensor (PDP)	J132-5	During standby, move the detecting lever by hand.	When the light-blocking plate is at PS4, When the light-blocking plate is not at PS4,	5V 0V
Q751 Pre-registration roller paper sensor (RPD)	J108-3	During standby, move the detecting lever by hand.	When the light-blocking plate is at Q751, When the light-blocking plate is not at Q751,	0V 5V

Table 2-8

CHAPTER 3 ARRANGEMENT AND FUNCTIONS OF ELECTRICAL PARTS

A. Sensors and Solenoids

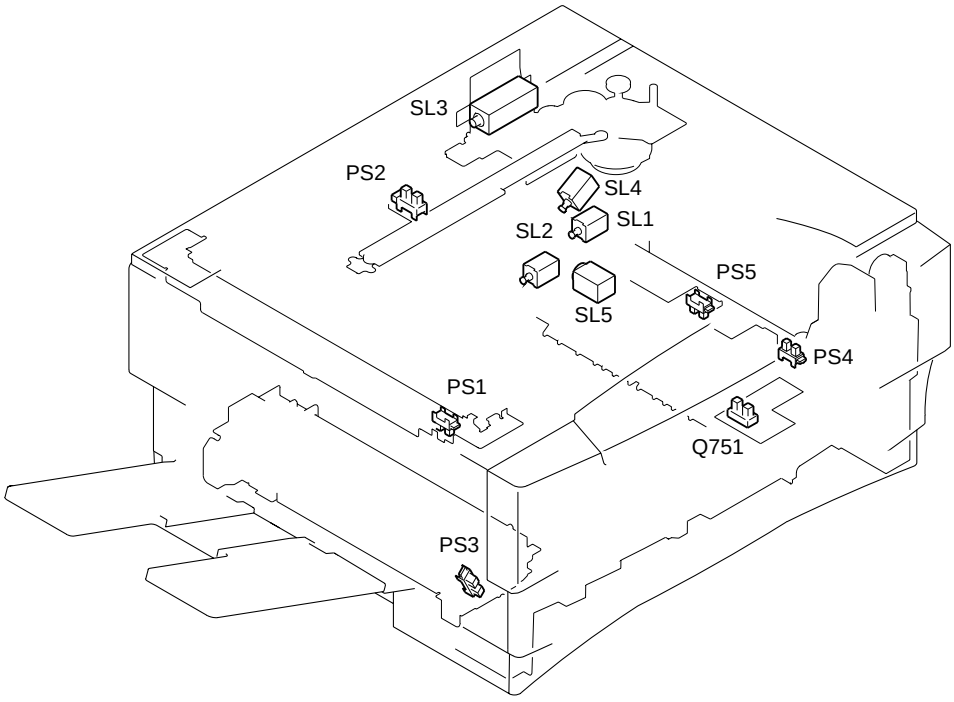

Figure 3-1

Symbol	Name	Notation	Description	Remarks
PS	Photointerrupters	PS1	Scanner home position detection	
		PS2	Lens home position detection	
		PS3	Delivery assembly paper detection	
		PS4	Vertical path assembly paper detection	
		PS5	Single-feeder paper detection	Single-feeder type only
		Q751	Pre-registration roller paper detection	
SL	Solenoid	SL1	Pickup clutch solenoid	
		SL2	Registration clutch solenoid	
		SL3	Lens solenoid	
		SL4	Multifeeder pickup solenoid	Multifeeder type only
		SL5	Cassette pickup solenoid	

B. Switches

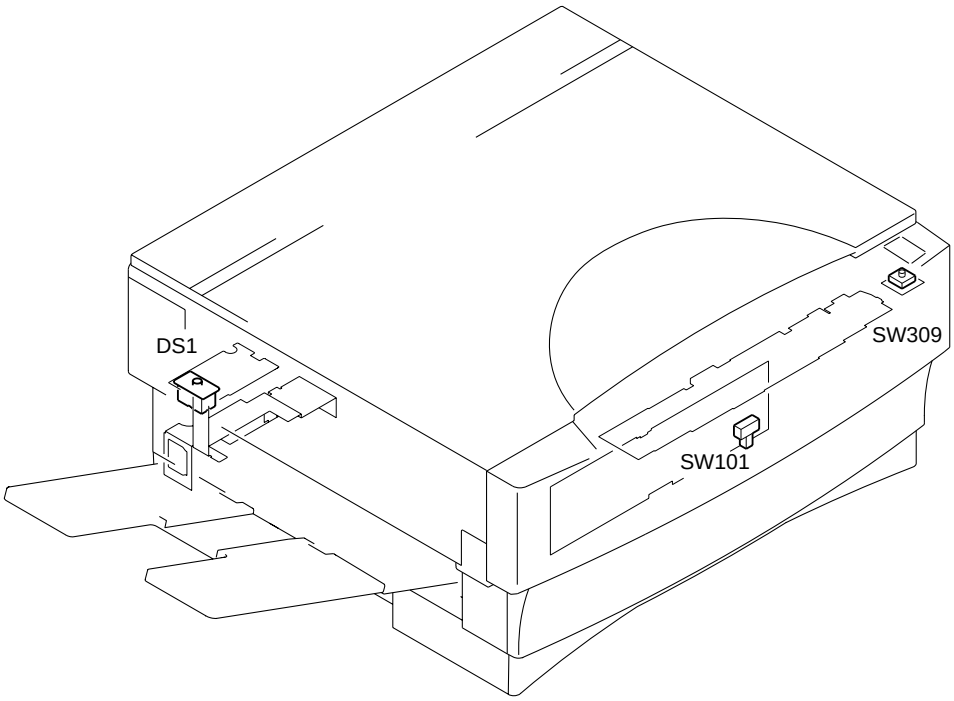

Figure 3-2

Symbol	Name	Notation	Description	Remarks
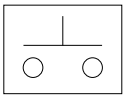	Switch	DS1 SW309	Door switch Power switch	
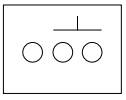	Switch	SW101	Density correction switch	

C. Lamp, Heater, Motor, Etc.

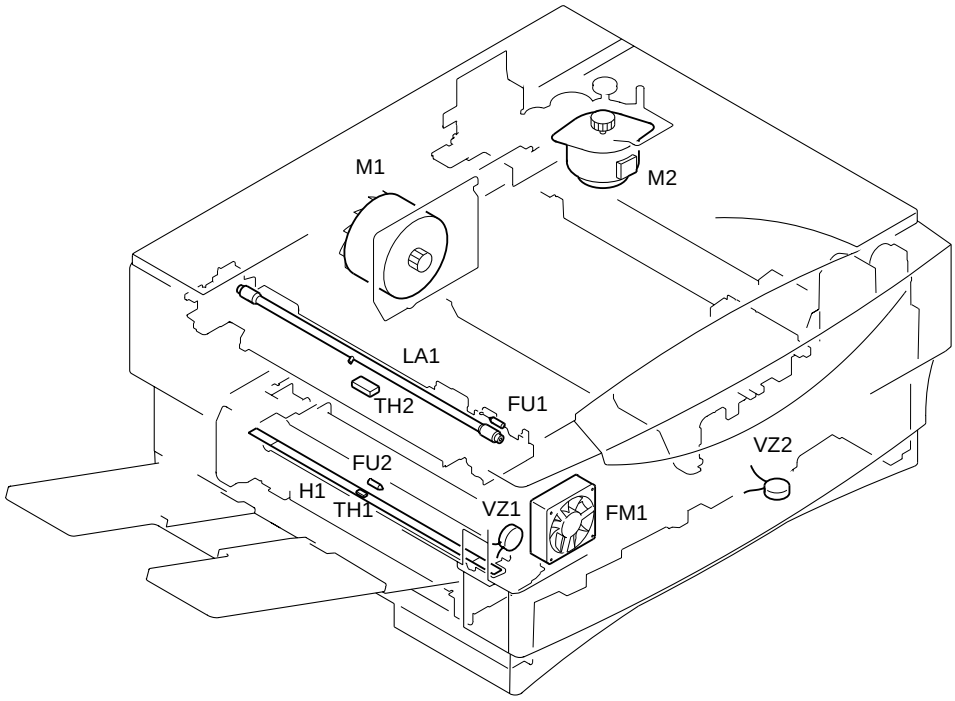

Figure 3-3

Symbol	Name	Notation	Description	Remarks
	Lamp	LA1	Scanning lamp	
	Heater	H1	Fixing heater	
M	Motor	M1 M2	Main motor Scanner/lens drive motor	
	Fan motor	FM1	Scanner cooling fan	
	Thermistor	TH1 TH2	Fixing heater temperature detection Scanner temperature detection	
	Thermal fuse	FU1 FU2	Lamp overheating detection Fixing heater overheating detection	
	Varistor	VZ1 VZ2	Fixing film varistor Transfer guide varistor	

D. PCBs

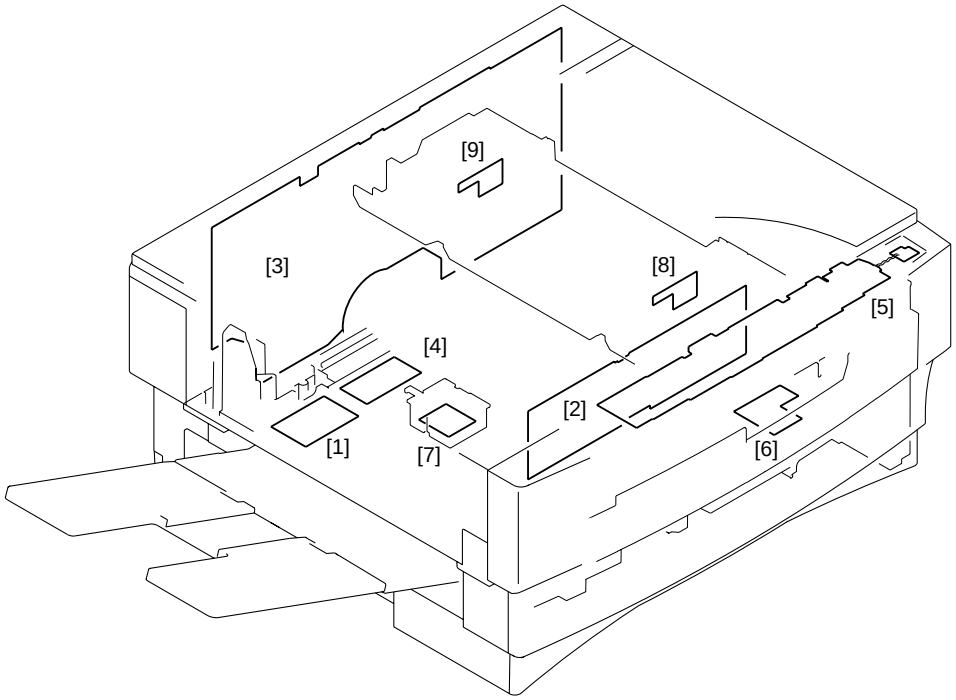

Figure 3-4

Ref.	Name	Description
[1]	Noise filter PCB	Removes noise from the power supply.
[2]	DC controller PCB	Controls sequence of operations.
[3]	Composite power supply PCB	Supplies DC power, generates high voltage, and controls the scanning lamp.
[4]	High-voltage contact PCB	Makes an electrical connection between the machine top and bottom.
[5]	Control panel PCB	Provides copying insurrections/indications.
[6]	Sensor PCB	Detects paper in front of the registration roller.
[7]	AE sensor PCB	Detects the density of originals.
[8]	Blanking PCB (front)	Used for blanking exposure.
[9]	Blanking PCB (rear)	Used for blanking exposure.

E. ADF

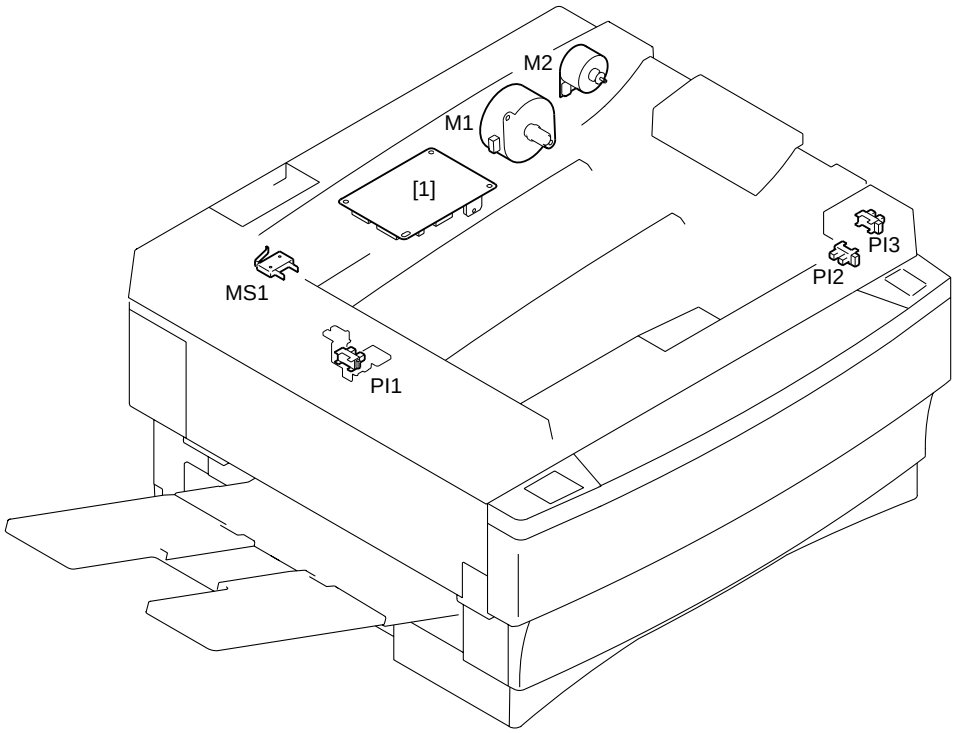

Figure 3-5

Symbol	Name	Notation	Description	Remarks
PS	Photointerrupter	PI1 PI2 PI3	Delivery paper detection Registration roller paper detection Original placement detection	
	Microswitch	MS1	ADF open/close switch	
M	Motor	M1 M2	Belt motor Pickup motor	
[1]	ADF controller PCB		Controls sequence of operations	

F. Variable Resistors (VR) and Check Pins by PCB

Of the variable resistors (VR) and check pins, those needed in the field are discussed herein. Those not found in the discussions are for the factory only, requiring special tools and adjustment to an extremely accuracy. Do not touch them in the field.

Caution:
VRs that may be used in the field .....
VRs that must not be used in the field .....

1. DC Controller PCB

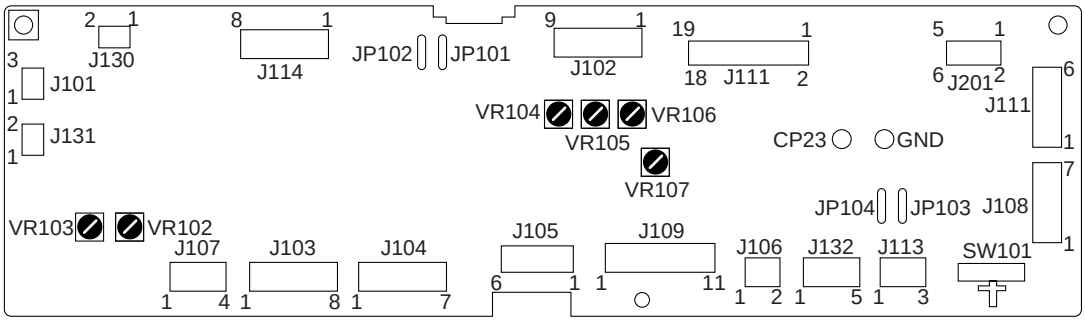

Figure 3-6

2. Composite Power Supply PCB

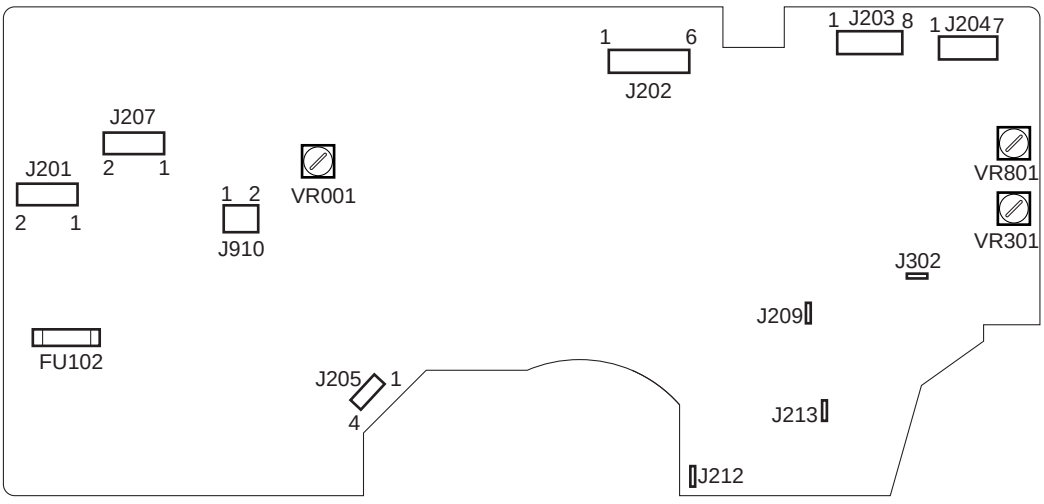

Figure 3-7

3. ADF Controller PCB

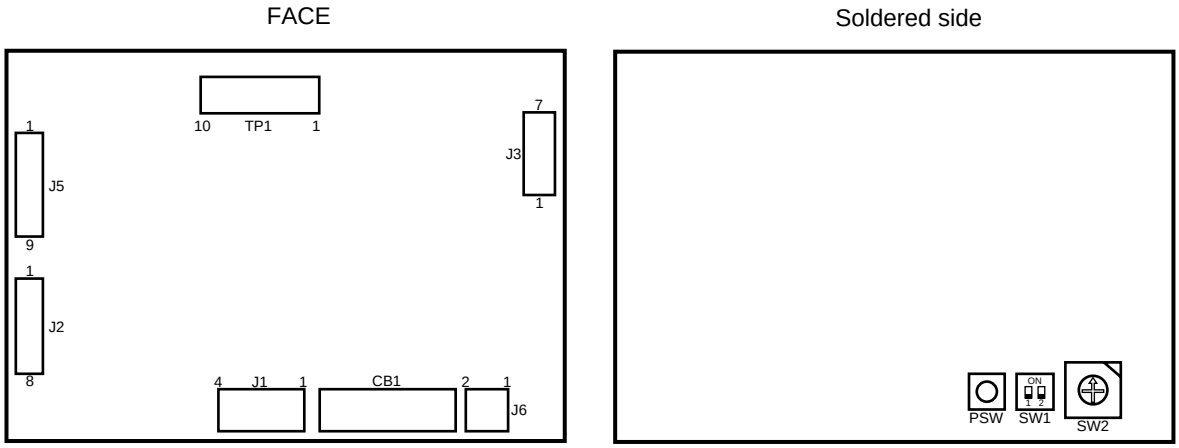

Figure 3-8

CHAPTER 4 SELF DIAGNOSIS

A. Self Diagnosis

The microprocessor on the machine's DC controller PCB is equipped with a self diagnostic mechanism that checks the condition of the machine (particularly, sensors) and indicates an error code in the count/ratio indicator on the control panel upon detection of a fault.

In the case of 'E001', 'E0' and '01' are flashed alternately.

Code	Cause	Description
E0	'E000', 'E001', 'E002', or 'E003' has occurred.	The power switch is turned off and then on immediately after an error ('E000', 'E001', 'E002', 'E003') has occurred.
E000	• The thermistor (TH1) is faulty. • The fixing heater (H1) is faulty. • The thermal fuse (FU2) has blown. • The DC controller PCB is faulty. • The composite power supply PCB is faulty.	• The temperature detected by the thermistor (TH1) does not reach 65°C 1.5 sec after the Copy Start key has been pressed. • The temperature detected by the thermistor (TH1) does not reach 150°C 4 sec after the Copy Start key has been pressed.
E001	• The thermistor (TH1) is faulty. • The DC controller PCB is faulty. • The composite power supply PCB is faulty.	• The temperature detected by the thermistor (TH1) exceeds 230°C. • The temperature detected by the thermistor (TH1) exceeds by 30°C or more. • The temperature detected by the thermistor (TH1) registers an increase of 100°C or more within 1 sec. • The temperature detected by the thermistor (TH1) registers an increase of 40°C or more after it has reached 100°C during standby. • E0 detection signal (E0_DT) is detected twice or more in succession.
E002	• The thermistor (TH1) is faulty. • The fixing heater (H1) is faulty. • The thermal fuse (FU2) has blown. • The DC controller PCB is faulty. • The composite power supply PCB is faulty.	• The temperature detected by the thermistor (TH1) has exeeded 150°C during copy operation and maximum power is applied for 10 to 14 sec thereafter.
E003	• The thermistor (TH1) is faulty. • The fixing heater (H1) is faulty. • The thermal fuse (FU2) has blown. • The DC controller PCB is faulty. • The composite power supply PCB is faulty.	• The temperature detected by the thermistor (TH1) drops to and remains 150°C or lower after it has reached 160°C.

Code	Cause	Description
E010	• The main motor (M1) is fault. • The DC controller PCB is faulty.	• The rotation of the main motor deviates (indicated by MLOCK=0) for 1 sec or more while the main motor drive signal (MMD=1) is being generated.
E064	• The composite power supply PCB is faulty. • The DC controller PCB is faulty.	• The actual output value of the composite power supply high voltage is different from the setting value twice in succession.
(E202) The keys on the control panel are locked without error code indication.	• The scanner home position sensor (PS1) is faulty. • The scanner/lens drive motor (M2) is faulty. • The DC controller PCB is faulty.	• The scanner home position is not detected within 10 sec after the scanner has turned on. • The scanner does not leave the home position after it has turned on.
E210	• The lens home position sensor (PS2) is faulty. • The scanner/lens drive motor (M2) is faulty. • The lens cable is faulty. • The DC controller PCB is faulty.	• The lens hoe position is not detected after the lens has moved the maximum travel distance. • The lens does not leave the home position after it has turned on.
E220	• The scanning lamp (LA1) is faulty. • The DC controller PCB is faulty. • The composite power supply PCB is faulty.	• The lamp ON detection signal is not detected for 1 sec or more in the presence of the scanning lamp On signal. • The lamp ON detection signal is detected for 1 sec or more in the absence of the scanning lamp ON signal.
E240	• The DC controller PCB is faulty. • The composite power supply PCB is faulty.	• A fault in the communication between DC controller PCB and composite power supply PCB is detected.
E261	• The frequency of the power supply is faulty. • The composite power supply PCB is faulty.	• The interval between zero-cross signals is in excess of the allowed interval.
E400	• Data communication between the copier and the ADF (faulty).	• The communication with the copier is interrupted for 5 sec or more; the communication is monitored at all times.
E803	• The DC controller PCB is faulty. • The composite power supply PCB is faulty.	• During a copying run, the +24 V power deviates from the control value by ±20%.

Caution:

1. If the self-diagnosis has turned on, turn off the power switch to reset the machine. In the case of 'E000', 'E001', 'E002', or 'E003', however, the machine must be reset as follows: this consideration is to prevent feeding power to the fixing heater otherwise occurring if the thermistor has an open circuit:
2. In the case of 'E0', 'E000', 'E001', 'E002', 'E003', or 'E220', the machine will turn off in 1.5 sec for 'E0' and 'E000' through 'E003' and in 2 sec for 'E220'.
3. In the case of 'E0', 'E000', 'E001', 'E002', or 'E003', perform the following steps:
   1) Turn off the power switch, and short circuit JP101 and JP102 on the DC controller PCB with a screwdriver or the like.

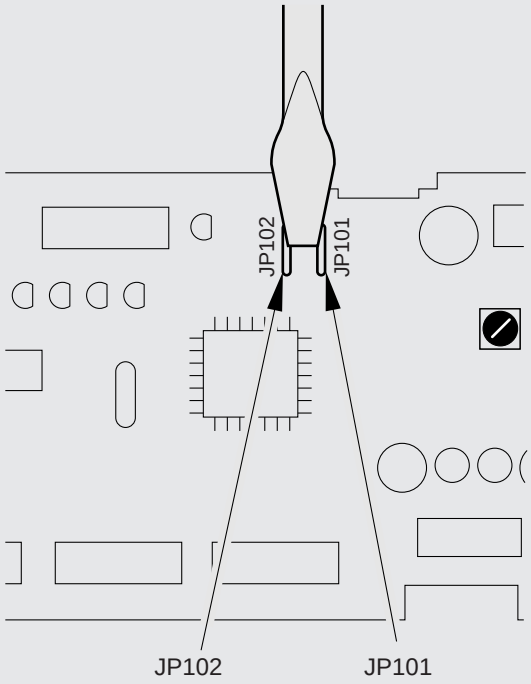

Figure 4-1

   2) While keeping the condition in step 1), turn on the power switch.
   3) Stop short-circuiting JP101 and JP102.

APPENDIX

A. General Timing Chart

1. Copyboard Type

(A4, 2 copies, DIRECT, from cassette)

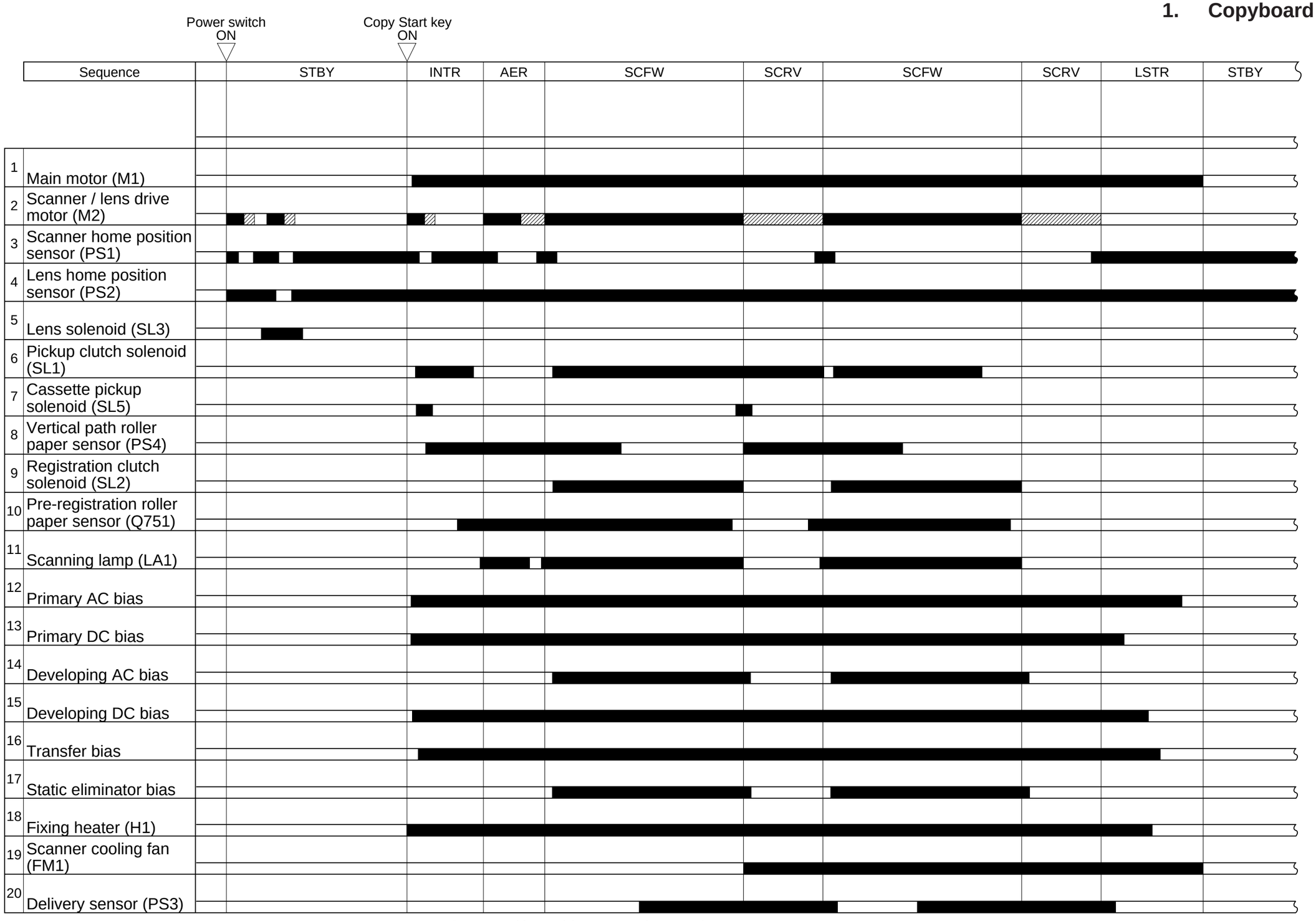

: Scanner / lens drive motor (reverse)

2. ADF Type

(A4, 2 copies, DIRECT, from cassette)

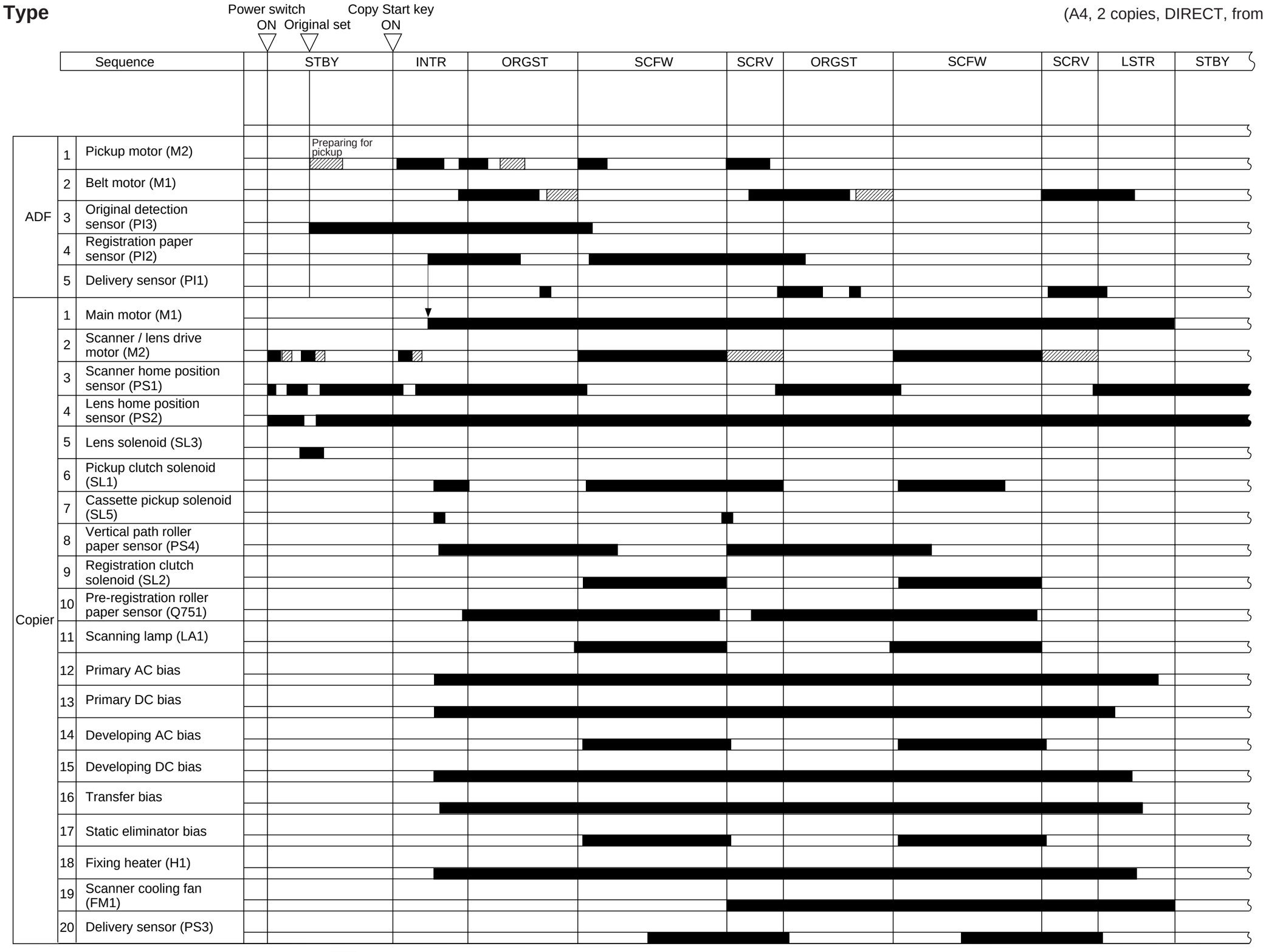

: Scanner / lens drive motor (reverse) / Pickup motor (reverse) / Belt motor (reverse)

B. Signals and Abbreviations

What follows below is a list of signals and abbreviations used in the chapters of the manual and circuit diagrams.
The abbreviations within parentheses represent analog signals, which cannot be expressed in terms of ‘1’ or ‘0’.

1. Signals

ACBIAS	AC BIAS OSCILLATION signal
[AE]	AE SENSOR OUTPUT signal
AEREF	AE SENSOR REFERENCE signal
BIAS_PWM	DC BIAS CONTROL signal
BIAS_S	DC BIAS MONITOR signal
CLK32K	TRANSFORMER CONTROL signal
CPUSD	CASSETTE PICKUP SOLENOID DRIVE signal
DPD	DELIVERY PAPER DETECTION signal
DV_AC_ON	DEVELOPING AC BIAS ON signal
DV_DC_ON	DEVELOPING DC BIAS ON signal
E0_DT	E0 DETECTION signal
FM1D	SCANNER COOLING FAN DRIVE signal
HEAT_ERR	FIXING HEATER ERROR signal
HEAT_OFF	FIXING HEATER OFF signal
HEAT_PWM	FIXING HEATER DUTY signal
HEAT_TRG	FIXING HEATER DRIVE signal
LAMP_DETECT	LAMP ACTIVATION DETECTION signal
LAMP_ON	SCANNING LAMP ACTIVATION signal
LHP	LENS HOME POSITION signal
LNSLD	LENS SOLENOID DRIVE signal
MFSLD	MULTIFEEDER PICKUP SOLENOID DRIVE signal
MLOCK	MAIN MOTOR CONSTANT SPEED signal
MMCLK	MAIN MOTOR CLOCK PULSE signal
MMD	MAIN MOTOR DRIVE signal
PAC_OUT	PRIMARY CORONA AC BIAS signal
PAC_S	PRIMARY CORONA AC DETECTION signal
PDC_PWM	DC BIAS CONTROL signal
PDC_S	DC VOLTAGE MONITOR signal
PDP	VERTICAL PATH ROLLER PAPER DETECTION signal
PR_DC_ON	PRIMARY CHARGING DC BIAS ON signal
PUSLD	PICKUP CLUTCH SOLENOID DRIVE signal
PWM_1KHz	SCANNING LAMP INTENSITY ADJUSTMENT signal
PWOFF	POWER SWITCH OFF signal
RGSLD	REGISTRATION CLUTCH SOLENOID DRIVE signal
RLOFF	RELAY DRIVE signal
RPD	PRE-REGISTRATION ROLLER PAPER DETECTION signal
SB_LP	SIDE BLANK EXPOSURE LAMP ON signal
SC_A	SCANNER MOTOR PULSE signal A
SC_B	SCANNER MOTOR PULSE signal B
SC_COM	SCANNER MOTOR DRIVE signal
SCHP	SCANNER HOME POSITION signal
SFPD	SINGLE-FEEDER PAPER DETECTION signal
T_FEEDBACK	TRANSFER BIAS VOLTAGE DETECTION signal
T_FW_DRV	TRANSFER DC BIAS CONTROL signal
T_FW_ON	TRANSFER DC BIAS ON signal
T_FW_S	TRANSFER CURRENT DETECTION signal
T_REV_ON	TRANSFER POSITIVE DC BIAS ON signal
TH1	FIXING THERMISTOR signal
TH2	SCANNER THERMISTOR signal

2. Abbreviations

AER	AE (MEASUREMENT) ROTATION
INTR	INITIAL ROTATION
LSTR	LAST ROTATION
SCFW	SCANNER FORWARD
SCRV	SCANNER REVERSE
STBY	STANDBY

C. General Circuit Diagram

1. Copier

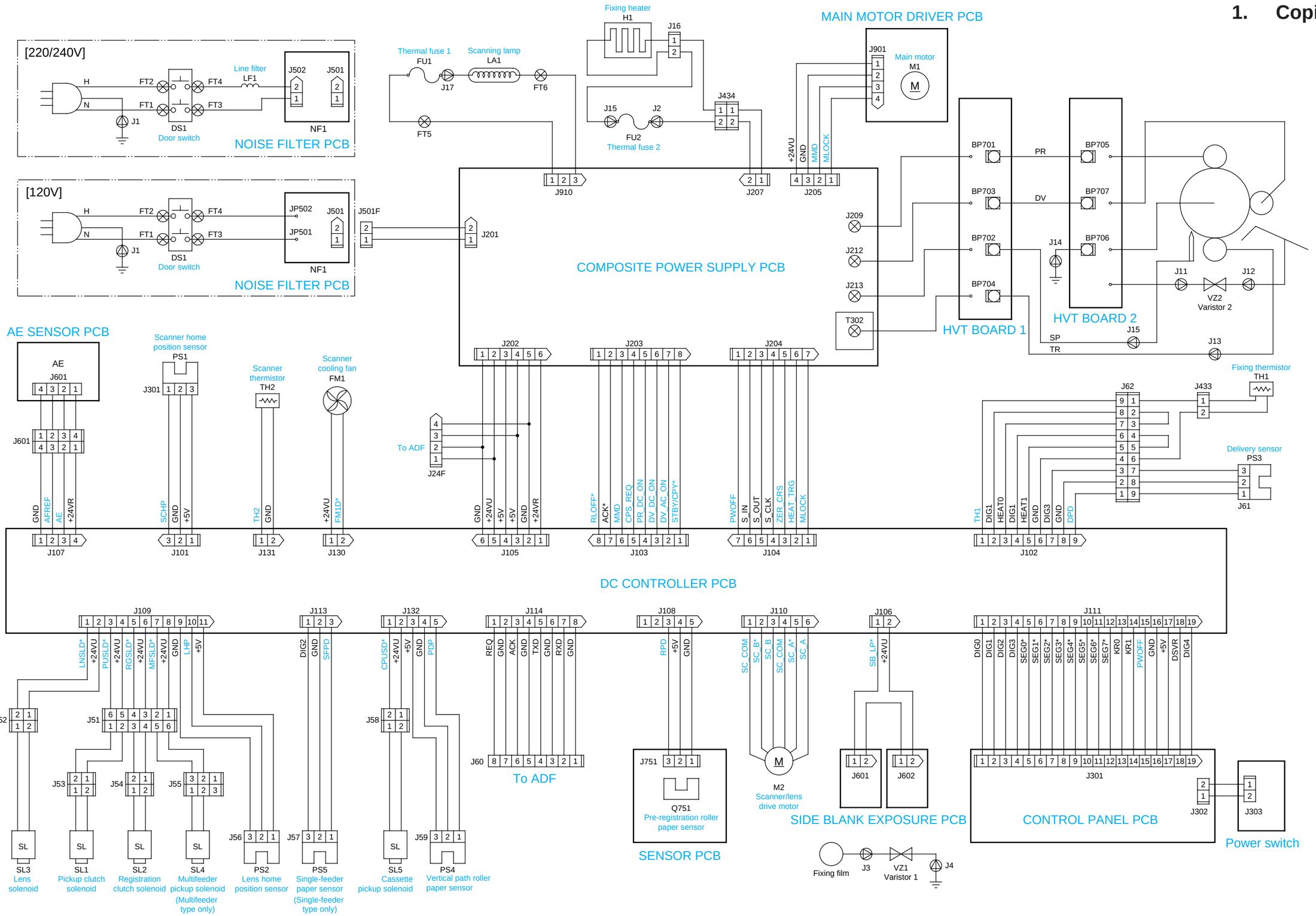

2. ADF

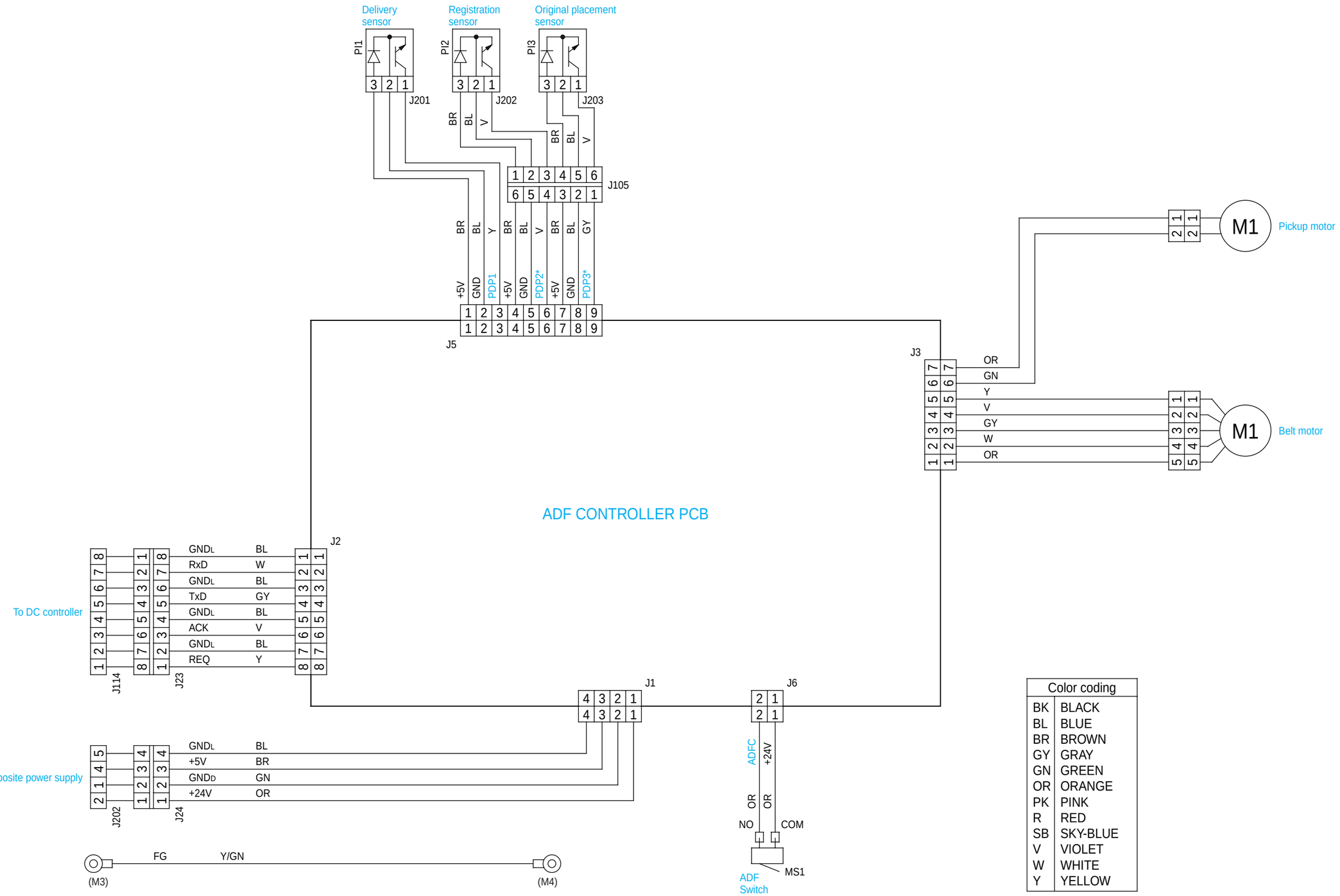

Color coding	
BK	BLACK
BL	BLUE
BR	BROWN
GY	GRAY
GN	GREEN
OR	ORANGE
PK	PINK
R	RED
SB	SKY-BLUE
V	VIOLET
W	WHITE
Y	YELLOW

D. Special Tools

You will need the following special tool(s) in addition to the standard tools set when servicing the machine.

No	Tool	Tool No.	Shape	Rank*	Remarks
1	Mirror positioning tool (pair for front and rear)	FY9-3009	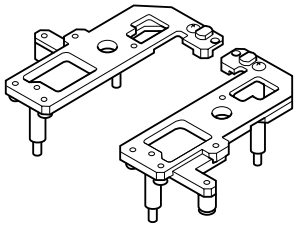	B	For adjusting the distance between the No.1 and No.2 mirrors.
2	Wire clip	FY9-3017	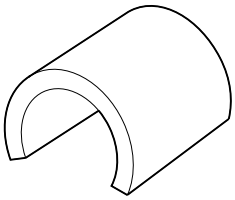	B	For fixing the scanner wire in place while adjusting its tension.
3	Spring gauge	CK-0054	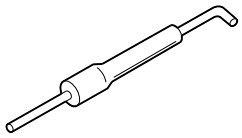	B	For checking the cassette spring pressure Range of measurements: 0 to 1,500g

*Rank:

A: Each service person is expected to carry one.
B: Each five or so service persons is expected to carry one.
C: Each workshop is expected to carry one.

E. Solvents/Oils

No.	Name	Uses	Composition	Remarks
1	Alcohol	Cleaning: e.g., glass, plastic, rubber parts; external covers	Hydrocarbon (fluorine family) Alcohol Surface active agent	• Do not bring near fire. • Procure locally. • Isopropyl alcohol may be substituted.
2	Solvent	Cleaning: e.g., metal; oil or toner dirt	Hydrocarbon (fluorine/chlorine family) Alcohol	• Do not bring near fire. • Procure locally.
3	Lubricating oil	Lubricating spring clutch	Mineral oil (paraffin family)	• CK-0451 (100cc)
4	Lubricating oil	Lubricating drive and friction parts, scanner rail	Silicone oil	• CK-0551 (20g)

F. Specifications

1. Copier

a. Type

Item	Descriptions
Body	Desk top
Copyboard	Fixed
Source of light	Halogen lamp (80 V/110 W for 120V-model; 150 V/160 W for 220/240 V-model)
Lens	Fixed focal point lens
Photosensitive medium	OPC drum (24-mm dia.)

Table A-1

b. Mechanisms

Item	Descriptions
Reproduction	Indirect static reproduction
Charging	Roller (direct charging)
Exposure	Slit (moving light source)
Copy density adjustment	Auto or manual
Development	Dry (toner projection)
Pickup	Cassette (1 pc.) Single-feeder (single-feeder type) Multifeeder (multifeeder type)
Separation	Curvature separation + static eliminator
Fixing	Flat heater
Cleaning	Blade
Original orientation	Center reference (copyboard)

Table A-2

c. Performance

Item	Descriptions
Original type	Sheet, book, 3-D object (2kg max.)
Maximum original size	A4 (297 × 210 mm)/LGL (216 × 356 mm)
Reproduction ratio	Inch/AB-configuration: 2R2E Inch-configuration: 3R1E
Zoom	70% to 141% (in 1% increments[*1])
Wait time	0 sec (at 20°C room temperature)
First copy time	10 sec or less (at 20°C room temperature; Direct, non-AE, from the cassette)
Continuous copying	100 (max.)
Copy size	A4/LGL (297 × 210 mm/216 × 356 mm max.) Business card (90 × 55 mm, min.)
Copy paper type	Cassette: Plain paper (64 to 80 g/m^2), tracing paper (SM-1, A4R/B5R), colored paper, recycled paper (64 to 80 g/m^2; A4R/B5R), eco paper (80 g/m^2; A4R) Manual Feeder: Plain paper (52 to 128 g/m^2), tracing paper (SM-1, GNT-80[*2]; A4R/B5R), transparency[*2,*4] (A4R/LTRR[*3]), colored paper, business card (200 g/m^2 or less), label sheet[*2] (A4R/LTRR), recycled paper (64 to 80 g/m^2; A4R/B5R), eco paper (80 g/m^2; A4R), postcard[*3] Double-Sided/Overlay Copying[*5]: Plain paper (64 to 128 g/m^2), colored paper, business card (200 g/m^2 or less), recycled paper (64 to 80 g/m^2; A4R/B5R), eco paper (80 g/m^2; A4R), postcard[*3]
Cassette	With claws Universal cassette (250 sheets of 80 g/m^2 paper; A4/LGL to A5/STMT) 250-sheet cassette (250 sheets of 80 g/m^2) 500-sheet cassette (500 sheets of 80 g/m^2)
Multifeeder tray	5 mm deep (approx.; 50 sheets of 80 g/m^2)
Copy tray	100 sheets (A4; 80 g/m^2)
Non-image width	Leading edge: 2.0 ±1.5 mm (Direct; 4.0 mm or less otherwise) Left/right: 0.0 +2.0, -0.0 mm (0 +4.0, -0.0 mm for LTR)
Auto power-off	Provided (5 min, approx.; fixed)[*6]

Table A-3

*1. Applies only to models with a zoom function.
*2. Applies only to single pickup if the multifeeder is used.
*3. Applies only to vertical feeding.
*4. Upon delivery, be sure to remove each from the copy tray.
*5. Be sure to remove any curling before feeding for a second time.
*6. If stopped because paper ran out during copying operation, 1 hr.

d. Others

Item	Descriptions
Operating condition Temperature Humidity Atmospheric pressure	 7.5°C to 32.5°C/44.5°F to 90.5°F 5% to 85% RH 607.95 to 1013.25 hPa (0.6 to 1 atm)
Power source	120 V 60 Hz 220/240 V 50 Hz, 60 Hz
Serial number	TVBxxxxx PUDxxxxx PUHxxxxx TVCxxxxx PUExxxxx TVDxxxxx PUFxxxxx TVExxxxx PUGxxxxx TVFxxxxx TYAxxxxx TVGxxxxx TZAxxxxx TVHxxxxx UAAxxxxx TVJxxxxx
Maximum power consumption	0.9 kW or less Standby: 1.2W (approx.; about 5min; reference only) Copying: 0.4kWh (approx.; reference only)
Noise	Standby: -(sound power level by ISO) Copying: (sound power level by ISO) • Single-feeder type: 68 dB or less • Multifeeder type: 66 dB or less
Ozone	0.01 ppm or less (average; 0.02 ppm or less, max.)
Dimensions (WxDxH)	Copyboard Type 484.9 × 448.2 × 297.5 mm*1/ 329.0 mm*2 19.1 in. × 17.6 in × 11.7 in*1/ 13.0 in*2 ADF Type 484.9 × 448.2 × 358.3 mm*1/ 389.8 mm*2 19.1 in × 17.6 in × 14.1 in*1/ 15.3 in*2
Weight (including the cassette)	Copyboard Type Single-feeder type: 19.3 kg*1/ 42.5 lb*1, 20.9 kg*2/ 46.0 lb*2 Multifeeder type: 19.5 kg*1/ 42.9 lb*1, 21.1 kg*2/ 46.4 lb*2 ADF Type Single-feeder type: 23.8 kg*1/ 52.4 lb*1, 25.2 kg*2/ 55.4 lb*2 Multifeeder type: 24.0 kg*1/ 52.8 lb*1, 25.4 kg*2/ 55.9 lb*2
Consumables	Copy paper: Keep wrapped, and protect against humidity. Toner: Avoid direct sunlight, and store at 40°C/104°F, 85% or less.

Table A-4

*1. 250-sheet cassette type
*2. 500-sheet cassette type

e. Default Ratios

Item	2R2E (Inch/AB-configuration)	3R1E (Inch-configuration)
Direct	1:1.000	1:1.000
Reduce I	1:0.707	1:0.707
Reduce II		1:0.786
Reduce III	1:0816	
Reduce IV		1:0.860
Enlarge I	1:1.154	
Enlarge II	1:1.414	1:1.414

Table A-5

f. Copying Speed

Copying speed at Direct	Reproduction ratio	Copy size	Number of copies (Multifeeder*1) (Copies / min)
13	Direct	LTRR	13 (9)
		LGL	11 (8)
		STMTR	13 (9)
	Reduce I (70.7%)	MIN	13 (9)
	Reduce II (78.6%)	LGL → LTRR	13 (9)
	Reduce IV (86.0%)	MARJIN	13 (9)
	Enlarge II (141.4%)	MAX	10 (9)
12	Direct	A4R	12 (9)
		B5R	12 (9)
		A5R	12 (9)
	Reduce I (70.7%)	A4R → A5R	12 (9)
	Reduce III (81.6%)	B5R → A5R	12 (9)
	Enlarge I (115.4%)	B5R → A4R	12 (9)
	Enlarge II (141.4%)	A5R→ A4R	10 (9)
10	Direct	A4R	10 (9)
		B5R	10 (9)
		A5R	10 (9)
	Reduce I (70.7%)	A4R → A5R	10 (9)
	Reduce III (81.6%)	B5R → A5R	10 (9)
	Enlarge I (115.4%)	B5R → A4R	10 (9)
	Enlarge II (141.4%)	A5R → A4R	10 m(9)
10	Direct	LTRR	10 (9)
		LGL	9
		STMTR	10 (9)
	Reduce I (70.7%)	MIN	10 (9)
	Reduce II (78.6%)	LGL → LTRR	10 (9)
	Reduce III (86.0%)	MARJIN	10 (9)
	Enlarge II (141.4%)	MAX	9

Table A-6

*1. The number of copies starting with the pickup operation that follows the delivery of the 19th copy in a continuous copying job.

The specifications are subject to change for product improvement.

2. ADF

Item	Descriptions
Original pickup	Auto pickup/delivery
Original orientation	Face-down
Original position	Center reference
Original separation	Top separation
Original type	Single-sided (50 to 128 g/m^2) A5 (STMT) to A4R (LTRR), LGL Length: 139.7 to 355.6 mm (feeding direction) Width: 139.7 to 215.9 mm
Stack	30 sheets (80 g/m^2 or less; about 3 mm in height)
Original processing mode	Single-sided original to single-sided copy
Original size detection	Yes (in feeding direction)
Mixed original sizes	No
Original detection	Yes
Original feeding speed	446 mm/sec
Communication with host	IPC
Dimensions	Width: 474 mm/ 18.7 in. (659 mm/ 25.9 in. with the tray open) Depth: 394 mm/ 15.5 in. Height: 74 mm/ 2.9 in. (216 mm/ 8.5 in. with the tray open)
Weight	5 kg/ 11 lb (approx.)
Power source	24 VDC and 5 VDC (from the host)
Maximum power consumption	40 W or less
Operating environment	Temperature: same as the host Humidity: same as the host

Table A-7

Prepared by
Office Imaging Products Technical Support Division
CANON INC.
Printed in Japan

REVISION 0 (AUG. 1999) (30359/10317)

5-1, Hakusan 7-chome, Toride-shi, Ibaraki 302-8501 Japan

COPYRIGHT © 1999 CANON INC. CANON PC800s/900s REV.0 AUG. 1999 PRINTED IN JAPAN (IMPRIME AU JAPON)

Canon



This pubication is printed on
70% reprocessed paper.

PRINTED IN JAPAN (IMPRIME AU JAPON) 0899AB1.31-1