NP1550

SERVICE MANUAL

Canon
FY8-13BN-010

COPYRIGHT CANON INC.
PRINTED IN JAPAN

I. FEATURES

1. Copies as large as A3 in size (DIRECT) may be made, and the copyboard is of a fixed type.
   - Although compact in design the copier enables making copies as large as A3 in size in the DIRECT mode.
   - The copyboard is of a fixed type so that pages of a book may be copied with much ease.

2. Zooming between 50% and 200%.
   - Copies may be made in reproduction rations of between 50% and 200%, selectable in 1% increments.

3. Front loading for faster supply of paper.
   - Paper is loaded from the front of the copier so that the cassette may be replenished with paper without wasting time. The design also saves space.

4. Single component fine particle toner for high resolution.
   - Copies are developed using the single component toner projection method. Further, the copier uses toner of extremely fine particles for enhanced image quality.

5. Multifeeder (stack bypass) pick-up.
   - As many as 50 copies (80 g/m^2) may be made continuously using the multifeeding mechanism.

COPYRIGHT© 1992 CANON INC.
CANON NP-1550 REV.0 JAN. 1992 PRINTED IN JAPAN (IMPRIME AU JAPON)

II. SPECIFICATIONS

A. Type

Body	Desktop
Copyboard	Fixed
Light sourse	Halogen lamp (300W)
Lens	Zoom lens
Photosensitive medium	OPC

B. System

Reproduction		Indirect electrostatic method
Charging		Corona
Exposure		Slit (moving light source)
Copy density adjustment		Auto or Manual
Development		Dry
Pick-up	Automatic	Exclusive cassette
	Manual	Multifeed
Transfer		Corona
Separation		Curvature and Static eliminator
Drum cleaning		Blade
Fixing		Heat roller (900W)

C. Performance

Type of document		Sheet,Book,3-D object(2 kg)
Document size		A3 max.
Wait time		75 sec (approx.;at 20°C)
First copy		9.4 sec (A4, AE ON/OFF, 1:1)
Continuous copying		99 copies
Copy size		A3(max.),A6(min,;148x105 mm)
Type of copy paper	Cassette	Plain paper(64 to 80 g/m^2),Tracing paper, Colored paper
	Multifeed tray	Plain paper(64 to 128 g/m^2),Tracing paper*, Colored paper, OHP film*, Postcard, Label sheet

*Use of tracing paper may cause double feeding. If thin paper or OHP film, feed one sheet at a time.

COPYRIGHT © 1992 CANON INC.
CANON NP-1550 REV.0 JAN. 1992 PRINTED IN JAPAN (IMPRIME AU JAPON)

Two-sided copying	Multifeed tray	Plain paper(64 to 128 g/m^2), Colored paper, Postcard
Overlay copying	Multifeed tray	Plain paper(64 to 128 g/m^2), Colored paper, Postcard
Cassette	Claw	Provided.
	Standard	27 mm deep(about 250 sheets of 80 g/m^2 paper)
	Universal	None.
Copy tray		100 sheets(approx.; A4, 80 g/m^2)
Non-image width (1st side)	Leading edge	2.0 ±1.5 mm or less
	Left/Right	2.5 ±1.5 mm or less
Auto clear		Provided. (2 min, standard)
Auto shutoff		None.
Option		ADF-A1, CT unit, MS-A1, Stapler Sorter-B1, CC-V

D. Others

Power supply		Serial Numbers	
	220V 50Hz	UBN XXXXX	
	240V 50Hz	QBN XXXXX	
Power consumption	Maximum	1.5kW or less	
	Standby	0.148 kWh (Reference value)	
	Continuous copying	0.64 kWh (Reference value)	
Noise	Copying	55dB or less	(sound power level as prescribed by ISO)
	Standby	40dB or less	
Ozone		0.05ppm or less (UL standards.)	
Dimensions	Width	697mm	
	Depth	617mm	
	Height	391mm	
Weight		50.6kg	
Operating environment	Temperature	15.0°C to 30.0°C	
	Humidity	5% to 80%	
	Atmospheric pressure	0.6 to 1	
Others		Keep copy paper wrapped to protect against moisture.	

COPYRIGHT © 1992 CANON INC.
CANON NP-1550 REV.0 JAN. 1992 PRINTED IN JAPAN (IMPRIME AU JAPON)

Reproduction mode		Paper size	Cassette	Copies/min
DIRECT		A3 (297x420mm)	A3	9
		A4 (210x297mm)	A4	15
		B4 (257x365mm)	B4	10
		B5 (182x257mm)	B5	17
		A5R (210x149mm)	A5R	16
REDUCE	I	50%		
	II	A3 → A4	A4R	10
ENLARGE	I	A4 → A3	A3	9
	II	200%		

COPYRIGHT © 1992 CANON INC.
CANON NP-1550 REV.0 JAN. 1992 PRINTED IN JAPAN (IMPRIME AU JAPON)

III. NAMES OF PARTS

A. External View

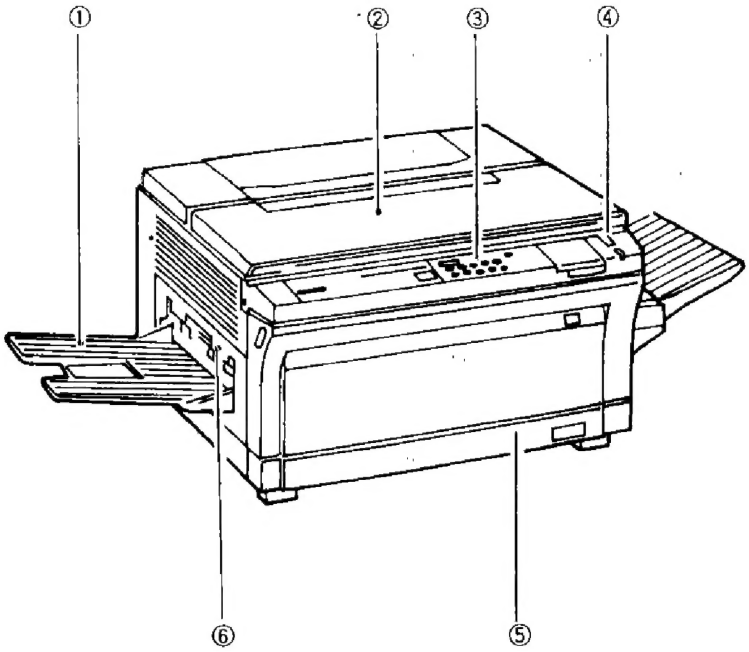

① Copy tray
② Copyboard cover
③ Control panel
④ Power switch
⑤ Cassette
⑥ Delivery cover

Figure 1-1

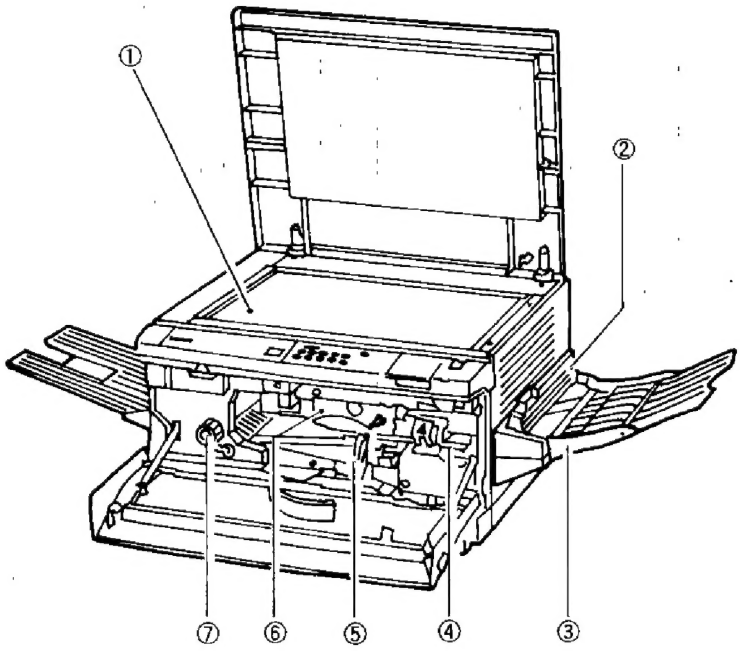

① Copyboard glass
② Multifeeder cover
③ Multifeeder tray
④ Developing assembly release lever
⑤ Feeder assembly release lever
⑥ Drum unit
⑦ Fixing assembly knob

Figure 1-2

COPYRIGHT © 1992 CANON INC.

B. Cross Section

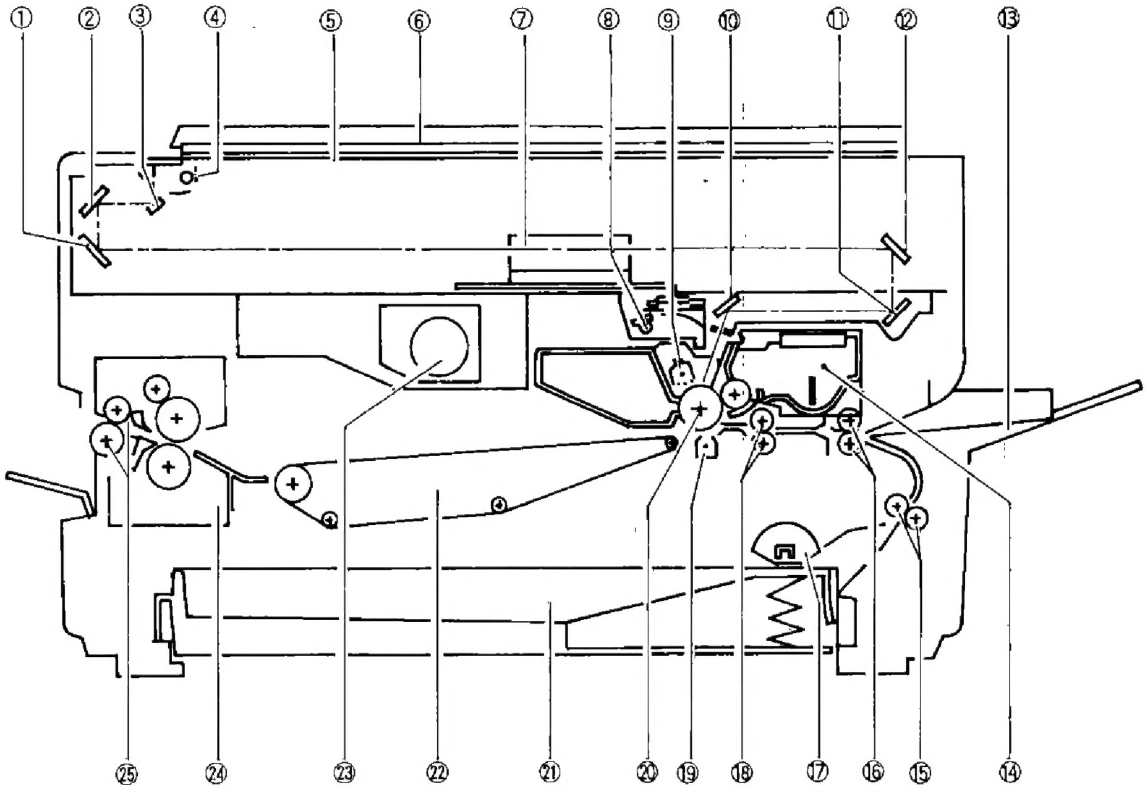

① No. 3 mirror
② No. 2 mirror
③ No. 1 mirror
④ Scanning lamp
⑤ Copyboard glass
⑥ Copyboard cover
⑦ Lens
⑧ Pre-exposure lamp
⑨ Primary corona assembly
⑩ No. 6 mirror
⑪ No. 5 mirror
⑫ No. 4 mirror
⑬ Multifeeder tray
⑭ Developing assembly
⑮ Feeder roller 1
⑯ Registration roller
⑰ Pick-up roller
⑱ Feeder roller 2
⑲ Transfer corona assembly
⑳ Photosensitive drum
㉑ Cassette
㉒ Feeder assembly
㉓ Exhaust fan
㉔ Fixing assembly
㉕ Delivery roller

Figure 1-3

COPYRIGHT© 1992 CANON INC.
CANON NP-1550 REV.1 SEPT. 1992 PRINTED IN JAPAN (IMPRIME AU JAPON)

IV. OPERATION

A. Control Panel

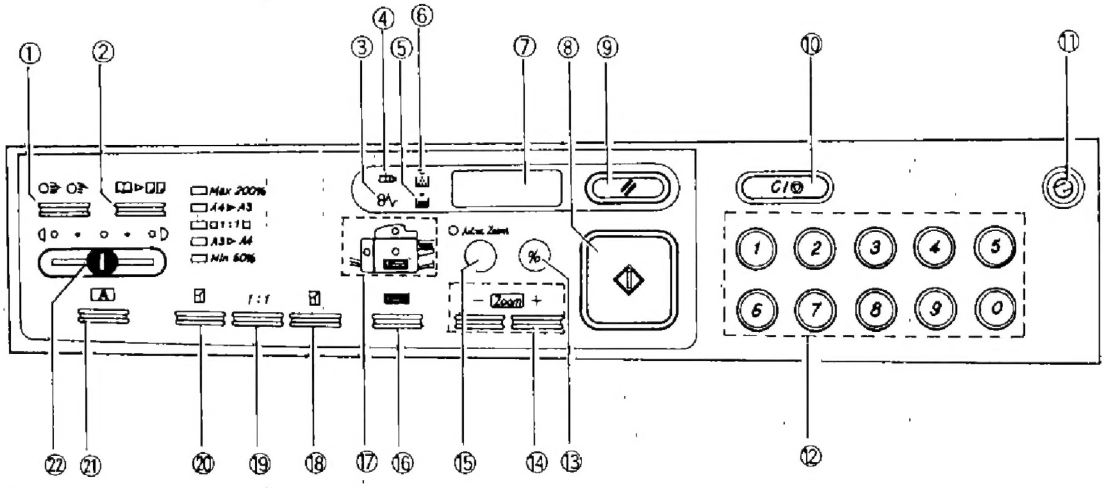

Figure 1-4

① SORT/GROUP key
Press it to select the sort, group, or non-sort mode. The indicator remains unit when the non-sort mode is selected.
- sorting
- grouping

② PAGE SEPARATION key
Press it to select the page separation mode.

③ JAM indicator

④ CONTROL CARD indicator

⑤ ADD PAPER indicator

⑥ ADD TONER indicator

⑦ COPY COUNT/RATIO indicator
It indicates the reproduction ratio when the % key is pressed.

⑧ COPY START key
- glows orange when the copier is not ready for copying.
- glows green when the copier is ready for copying.

⑨ RESET key
Press it to reset the copier to its default settings.
Default Settings
- copy count 1
- DIRECT
- AE (may be turned OFF using 'C15' of service mode)
- non-sort

⑩ CLEAR/STOP key

⑪ STANDBY key

⑫ NUMERIC keypad

⑬ % key
Press it to check the reproduction ratio using the copy count indicator.
The display changes to the copy count 2 sec after the key is released.

⑭ ZOOM key
Press it to select desired reproduction ratios between 50% and 200% in 1% increments.

⑮ AUTO RATIO key
Press it to select or deselect the auto reproduction ratio mode.
The key is effective when the ADF is attached.

⑯ PAPER SELECT key
Press it to select the cassette or multifeeder as the source of paper.

⑰ PAPER SELECT/JAM indicator
A LED goes ON to indicate the location of the paper or flashes to indicate the location of the jam, if any.

⑱ ENLARGE key

⑲ DIRECT key

⑳ REDUCE key

㉑ AE (automatic exposure (density) adjustment) key

㉒ COPY DENSITY lever

COPYRIGHT © 1992 CANON INC.
CANON NP-1550 REV.1 SEPT. 1992 PRINTED IN JAPAN (IMPRIME AU JAPON)

B. Basic Copying Operation

1) Set the power switch to ON (I).
   a) If the temperature of the fixing roller is too low for copying, the indicator of the COPY START key will blink green.
   b) When the temperature of the fixing roller becomes high enough for copying, the indicator will glow green.
   c) The normal waiting time at room temperature (20°C) is about 75 seconds.
2) Raise the copyboard cover, place an original on the copyboard with the side to be copied facing downward, and align it with the size indication.
3) To adjust the copy density manually, the AE key indicator should be OFF; press the key once if it is ON. Set the COPY DENSITY lever to suit the original.
4) Check the size of paper in the cassette.
   a) If the cassette does not have the desired size of paper, remove it and install a cassette with the desired size.
5) Set the required number of copies (1 to 99) using the NUMERIC keypad and confirm that the correct number appears on the COPY COUNT/RATIO indicator.
   a) If an error was made in inputting the number of copies, press the CLEAR/STOP key and reset the number of copies.
6) Press the COPY START key
   a) To stop a continuous copying operation, press the CLEAR/STOP key or RESET key. The copier will complete the copy in progress, then stop.
   The COPY COUNT/RATIO indicator will display the initially set copy quantity.
   b) It is possible to switch from automatic exposure control to manual density adjustment at any time from the start of copying to the completion of the final copy. However, it is not possible to switch from manual density adjustment to automatic.

Example:
If the copy is too dark or too faint using AE, cancel AE and vary the copy density with the COPY DENSITY lever.

   c) If the ADD PAPER indicator goes ON during copying, the copier will stop. Refill the cassette and press the COPY START key. The remaining number of copies will be made automatically.
   d) If the copier has a ADF, place a document (original) on the document tray. The document will be fed automatically and copying will start.
   e) If no other operation is performed, the copier will return to the STANDARD mode approximately 2 minutes after it completes a copy or after the last key operation.

C. Pick-Up from Multifeeder

1) Set documents on the copyboard.
2) Press the PAPER SELECT key to select the multifeeder.
3) Open the multifeeder tray.
4) Open the multifeeder cover.
5) Set the slide guide to the size of the copy paper.
6) Set copy paper.
   • As may as 50 sheets (80 g/m²) may be set.
7) Close the multifeeder cover.
8) Set the desired reproduction ratio using the DIRECT, REDUCE, ENLARGE, or ZOOM key.
9) Cancel the AE mode, and set the COPY DENSITY lever if manual adjustment of the density is desired.
10) Enter the number of copies using the NUMERIC keypad.
11) Press the COPY START key.

COPYRIGHT © 1992 CANON INC.
CANON NP-1550 REV.1 SEPT. 1992 PRINTED IN JAPAN (IMPRIME AU JAPON)

D. Two-Sided Copying

Copy one side of a 2-sided original. Invert the original so that the same edge faces the front. Invert the copy in the same way (front edge facing the front) and feed it into the copier.

a) Use dry, uncurled paper.
b) Use paper in the weight range 60 to 128 g/ m²
c) When making two-sided copies, only one image can be made on each side of the copy paper.
d) Both overlay and two-sided copies cannot be made on the same sheet of copy paper.

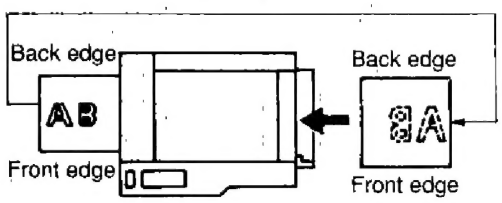

Figure 1-5

E. Overlay Copy Operation

By changing the developing assembly, a 2-color copy can be made on the same side of the copy paper.

a) Use paper in the range of 60 to 128 g/m²
b) When making an overlay copy a maximum of two images can be made on one side of the copy paper.
c) Overlay and two-sided copies cannot be made on the same sheet of copy paper.

F. Auto Start

The auto start mechanism may be made use of while the copier is in the wait mode (COPY START key blinking green); i.e., after it is switched ON or after the standby mode is cancelled.

Set a document while the copier is in the wait mode, and select the copy mode; then, press the COPY START key.

The COPY START key changes from blinking green to orange to indicate that the auto start mechanism has been activated.

The copier starts making copies as soon as it enters the standby mode using the selected copy modes.

The auto start mechanism may be cancelled by pressing the CLEAR/STOP or RESET key.

G. Replacing the CT Unit

1) Open the front door.
2) Swing the developing assembly release lever counterclockwise.
3) Pull the developing assembly forward.
4) Grasp the handle of the developing assembly, and gently raise it.

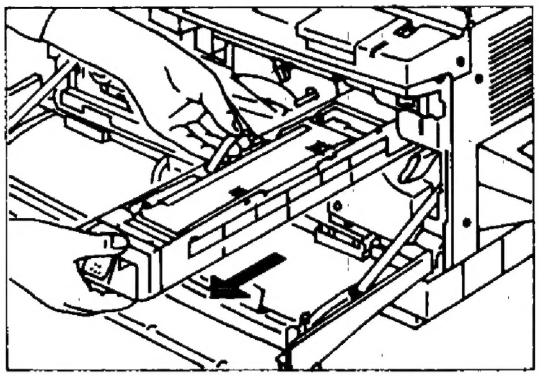

Figure 1-6

5) Place the CT unit gently on the developing assembly guide rails and push it in the copier.
6) Shift the developing assembly release lever clockwise until it is horizontal.
7) Close the front door.

Note:
i. Do not tilt or handle the developing assembly or the CT unit roughly.
ii. Do not place the developing assembly or the CT unit on the floor. Be sure to place them in their storage box or in the pedestal of the copier.

COPYRIGHT© 1992 CANON INC.

V. WARNING INDICATOR AND REQUIRED ACTION

A. JAM Indicator

If an area of this indicator flashes while copying is taking place, it is likely that the paper has jammed at the position represented by the part that is flashing. Check and take action as follows.

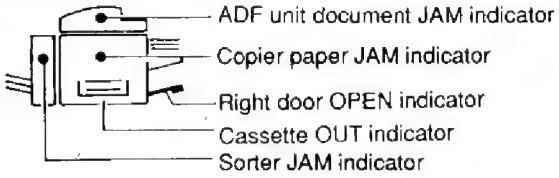

Figure 1-7

When clearing a paper jam which has occurred in an option unit (sorter or ADF), refer to the Service Manual for the option unit.

- ADF unit document JAM indicator
- Copier paper JAM indicator
- Right door OPEN indicator
- Cassette OUT indicator
- Sorter JAM indicator

If paper jams inside the copier, check the paper pick-up area, separation feeder area, fixing/copy delivery area, and cartridge area; and remove all jammed paper.

1) Open the front door.
2) Remove the copies from the copy tray.
3) Operate the release and open the copy delivery assembly.
4) Check if there is copy paper jammed in the fixing assembly. If there is paper jam in it, turn the knob of the fixing rollers clockwise to remove the jammed paper.

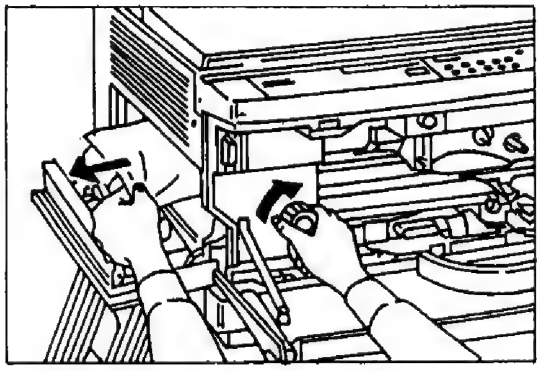

Figure 1-8

5) Close the copy delivery assembly.
6) Check if there is paper jammed in the separation/feeder area. If there is, swing the feeder release lever counterclockwise to open the feeder, then remove the jammed paper. Be careful not to tear it.

Note:
When removing jammed paper from the separation area be very careful not to touch the photosensitive drum.

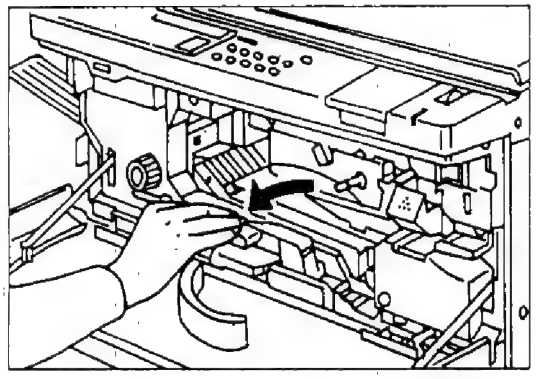

Figure 1-9

7) Open the multifeeder cover, and remove the paper from the multifeeder tray.
8) Hold the grip found at the bottom of the multifeeder cover, and open the right door; then, remove the jam.

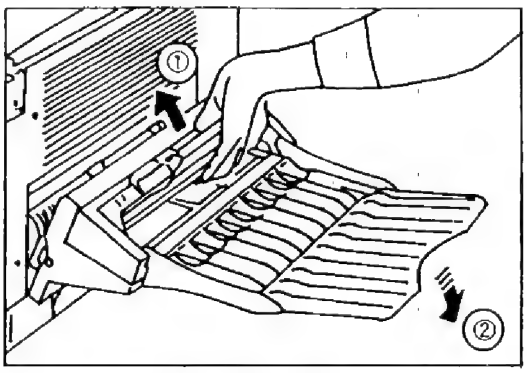

Figure 1-10

COPYRIGHT © 1992 CANON INC.
CANON NP-1550 REV.1 SEPT. 1992 PRINTED IN JAPAN (IMPRIME AU JAPON)

9) Close the right door.

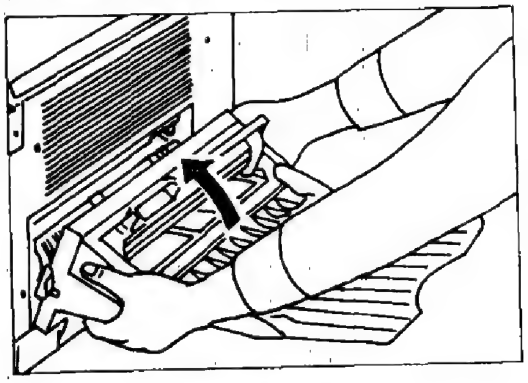

Figure 1-11

10) Close the front door.

B. ADD PAPER Indicator

1. Cassette

The indicator goes ON when no cassette is found in the cassette or no paper is found inside the cassette.

1) Push the center of the cassette.
   • The cassette springs out automatically.

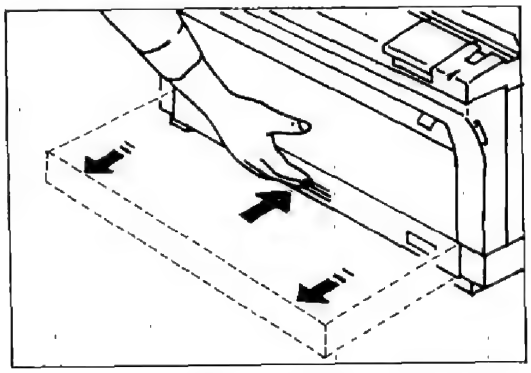

Figure 1-12

2) Set copy paper inside the cassette.
   • As many as 250 sheets of copy paper (80 g/㎡) may be set.

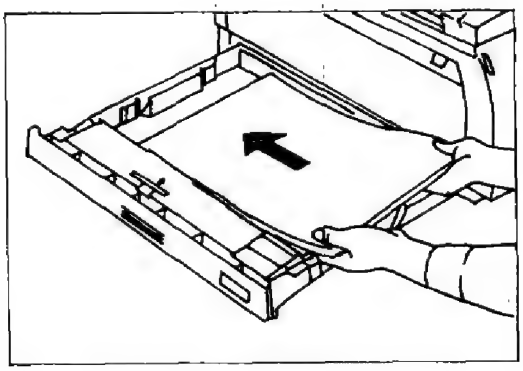

Figure 1-13

3) Hold the center of the cassette, and slide it into the cassette holder until it stops.

2. Multifeeder

The indicator goes ON when the paper on the multifeeder tray is not positioned correctly or the multifeeder cover is left open.

- As many as 50 sheets of copy paper (80 g/㎡) may be set on the multifeeder tray.

COPYRIGHT © 1992 CANON INC.
CANON NP-1550 REV.0 JAN. 1992 PRINTED IN JAPAN (IMPRIME AU JAPON)

C. ADD TONER Indicator

This indicator flashes when the amount of toner in the black developing assembly has become low.

1. Black developing assembly

1) Open the front door.
2) Turn the developing assembly release lever counterclockwise.
3) Pull the developing assembly forward as far as possible.
4) Open the top cover of the developing assembly.
5) Shake the toner cartridge back and forth about 10 times.
6) Place the toner cartridge on the developing assembly.
7) While holding the toner cartridge in place, remove the seal slowly to allow the toner to flow out.

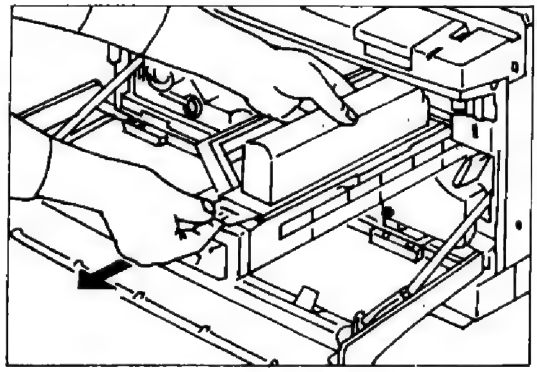

Figure 1-14

8) Tap the top of the toner cartridge to remove any toner remaining in the cartridge.
9) Carefully remove the toner cartridge.
10) Close the top cover of the developing assembly.
11) Put the developing assembly back into the copier.
12) Swing the developing assembly release lever clockwise.
13) Close the front door.

2. CT Unit (color developing unit)

If copy images become faint, the color toner has probably run out. In this case, replace the CT unit. The copy image can sometimes be temporarily restored by placing the CT unit in its storage box and agitating it.

Note:
The CT unit is a discardable type. When the color toner has been used up, toner is not added to the CT unit; rather, the entire unit is replaced.

D. CONTROL CARD Indicator

The control card indicator operates on a copier with a control card unit. It flashes in the following cases.

a) When there is no control card in the control card unit.
b) When there is a control card in the control card unit but the indication on the control card unit is "P" or "EE".

COPYRIGHT © 1992 CANON INC.
CANON NP-1550 REV.1 SEPT. 1992 PRINTED IN JAPAN (IMPRIME AU JAPON)

VI. DAILY INSPECTION TO BE PERFORMED BY THE CUSTOMER

Carefully instruct the customer to be sure to clean the following parts of the copier once a week.

1. **Primary corona assembly**
   Slide in and out the wire cleaner to clean the corona wires.
2. **Copyboard glass**
   Clean the copyboard glass with a damp cloth, then wipe it dry.
3. **Copyboard cover**
   Clean the copyboard cover with a mild detergent solution, then wipe it dry.
4. **Transfer corona assembly**
   Remove the transfer corona assembly from the copier, then slide the knob (wire cleaner) at the bottom of the transfer corona assembly back and forth to clean the corona wires.
   Further, clean the static eliminator using the cleaning brush (accessory).

COPYRIGHT © 1992 CANON INC.
CANON NP-1550 REV.1 SEPT. 1992 PRINTED IN JAPAN (IMPRIME AU JAPON)

I. IMAGE FORMATION PROCESS

A. Outline

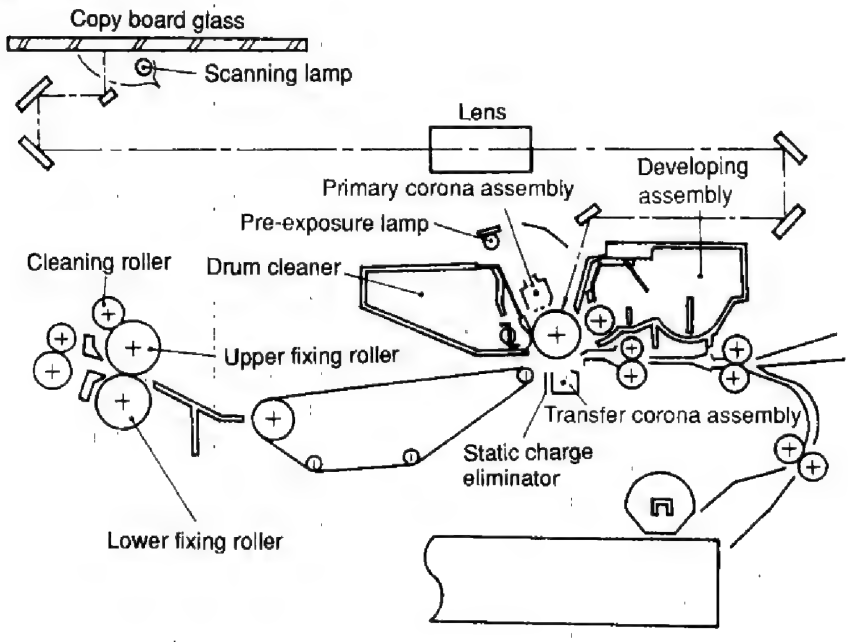

Figure 2-1

This copier consists of the units shown in Figure 2-1.

The image forming process is divided into the eight steps shown below.

Step 1: Pre-exposure
Step 2: Primary corona (negative DC)
Step 3: Image exposure
Step 4: Developing (positive plus AC)
Step 5: Transfer (negative DC)
Step 6: Separation
Step 7: Fixing
Step 8: Drum cleaning

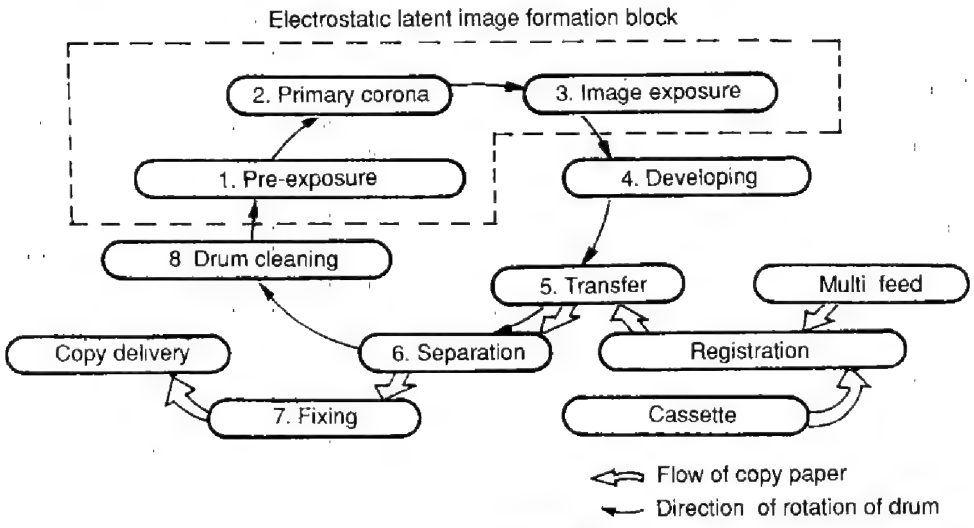

Figure 2-2

COPYRIGHT © 1992 CANON INC.
CANON NP-1550 REV.1 SEPT. 1992 PRINTED IN JAPAN (IMPRIME AU JAPON)

The outer surface of the photosensitive drum is a layer of organic photoconductor (OPC).The base is an aluminum (conductive) cylinder.

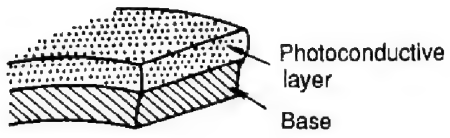

Figure 2-3

B. Electrostatic Latent Image Formation Block

This stage consists of three steps. At the end of the stage, the drum has a pattern of negative electrical charges on its surface corresponding to the dark parts of the document image. The light areas of the document image are represented on the drum by an absence of charges.

The pattern of negative charges cannot be seen by the eye, hence it is called an electrostatic latent image.

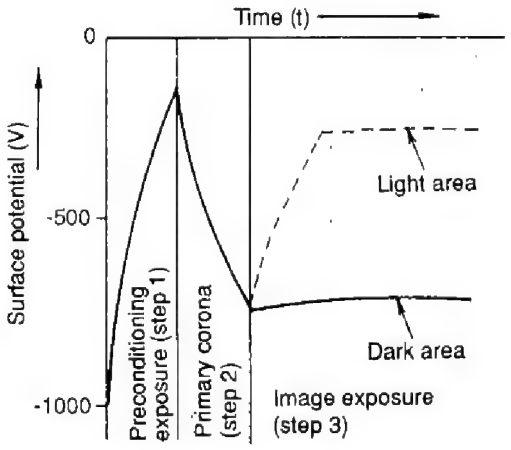

Figure 2-4

C. Step 1 Pre-Exposure

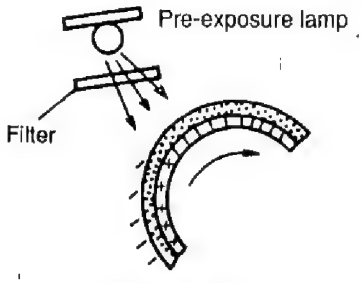

Figure 2-5

Before the primary corona step, light from the pre-exposure lamps is shone onto the surface of the drum (pre-exposure). This process eliminates residual charges and helps to make the density of the copy even.

D. Step 2 Primary Corona

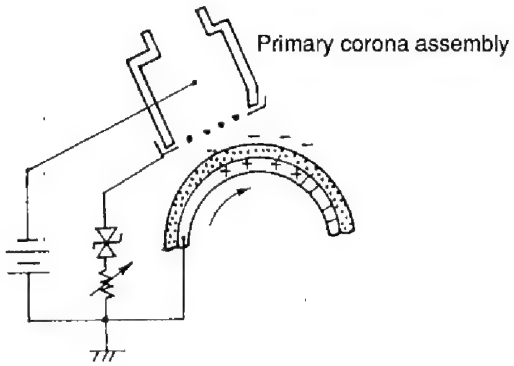

Figure 2-6

The primary corona (negative) applies a uniform layer of negative charges over the drum surface.

The drum surface potential is determined by the grid potential. The grid is connected to ground through a varistor, which holds the drum potential constant at the varistor break-down voltage.

COPYRIGHT © 1992 CANON INC.
CANON NP-1550 REV.1 SEPT. 1992 PRINTED IN JAPAN (IMPRIME AU JAPON)

E. Step 3 Scanning Exposure

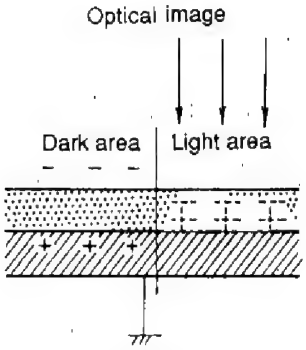

Figure 2-7

Light from the original is projected onto the drum surface. Charges in these light areas on the drum are neutralized by drum photosensitive effects.

F. Step 4 Developing

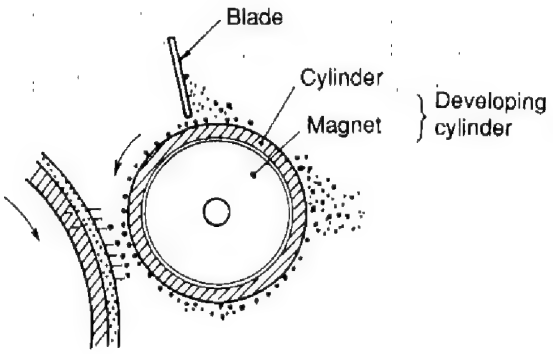

Figure 2-8

As shown in Figure 2-8, the developing assembly consists of a developing cylinder (a stationary magnet surrounded by a rotating sleeve) and a blade made of magnetic material. Black toner is a single component type consisting of a fine powder of mixed magnetite and resin binder. The toner has insulating properties and is charged to a positive potential by friction with the rotating cylinder.

Color developer is a two-component type consisting of iron powder (carrier) and toner mixed together in a fixed ratio. The main component of the toner is resin. The toner is charged to a positive potential and the iron powder to a negative potential by friction with the rotating cylinder.

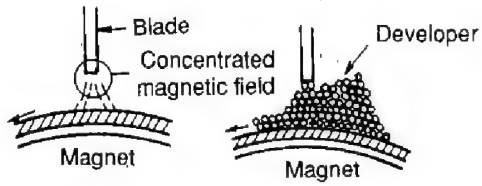

Figure 2-9

A concentrated magnetic field develops between the magnet and the edge of the blade. This field attracts the charged developer.

The developer is held virtually immobile by the magnetic field, forming a curtain along the edge of the blade. As the cylinder rotates, this curtain skims the toner particles on its surface to a thin uniform layer.

An AC bias plus a negative DC bias are applied simultaneously to the developing cylinder so that the waveform of the developing bias has a larger negative excursion than positive.

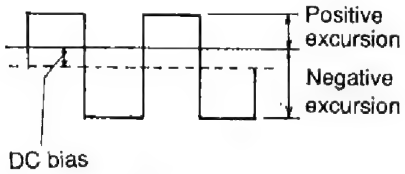

Figure 2-10

During copying toner is attracted to the drum by the charges on the drum surface and by repulsion due to the developing bias (during the positive excursion), transforming the latent electrostatic image into a visible image. Excess toner particles are attracted back to the cylinder from the drum due to the charges on the drum surface and the developing bias (during the negative excursion).

The DC bias affects copy density and fogging: As the DC bias becomes less negative (approaches 0V), the density and degree of fogging both increase.

COPYRIGHT © 1992 CANON INC.
CANON NP-1550 REV.1 SEPT. 1992 PRINTED IN JAPAN (IMPRIME AU JAPON)

G. Step 5 Transfer

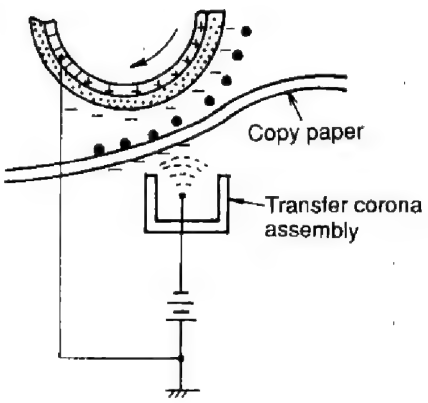

Figure 2-11

In this step, a negative corona is applied to the back of the copy paper, attracting the toner from the surface of the drum to the copy paper.

H. Step 6 Separation

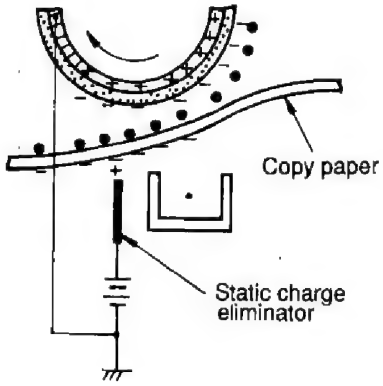

Figure 2-12

The copy paper is separated from the drum by utilizing its stiffness. Thin paper, however, is not stiff, and may wrap around the drum instead of separating from it. To prevent this, a positive voltage is applied to the separation static charge eliminator, weakening the attraction between the drum and the copy paper. This enables the paper to separate easily from the drum.

COPYRIGHT © 1992 CANON INC.
CANON NP-1550 REV.1 SEPT. 1992 PRINTED IN JAPAN (IMPRIME AU JAPON)

I. Step 7 Fixing

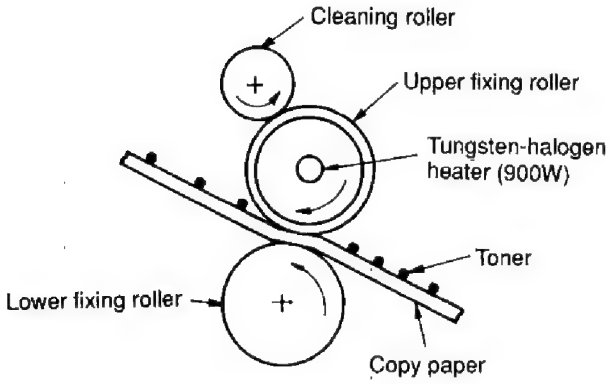

Figure 2-13

In this step, the copy paper is pressed between two heated rollers to make the toner image permanent.

To prevent the copy paper from wrapping around the roller and toner offsetting (adhesion of toner to the roller and transfer of the toner to the next copy), the surface of the upper fixing roller is cleaned with the cleaning roller.

J. Step 8 Drum Cleaning

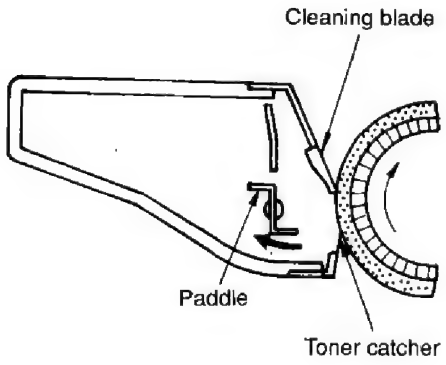

Figure 2-14

This step prepares the drum surface for the next copying operation. Any residual toner scraped off the drum by the cleaning blade and picked up by the toner catcher. It is then pushed to the back by the paddle.

II. AUXILIARY PROCESSES

A. Blank Exposure

Blank exposure is the process of shining light onto is simply the removal of the drum surface potential in the non-image areas resulting from REDUCTION copying and using some cassette sizes (paper sizes). The light for this is produced by the preconditioning lamp and is reflected onto the drum by a reflector.

In the non-image area on the drum between successive sheets of copy paper, the grid bias of the primary corona is reduced to prevent adhesion of toner. For these areas, there is no blank exposure for removal of the surface charges.

B. Ozone Filter

A catalytic ozone filter in the exhaust fan prevents ozone (generated by the coronas) from escaping to the atmosphere by converting the ozone to oxygen.

COPYRIGHT © 1992 CANON INC.
CANON NP-1550 REV.0 JAN. 1992 PRINTED IN JAPAN (IMPRIME AU JAPON)

I. BASIC OPERATION

A. Functions

The copier can be divided into four functional sections: paper pick-up and feed system, exposure system, image formation system, and control system.

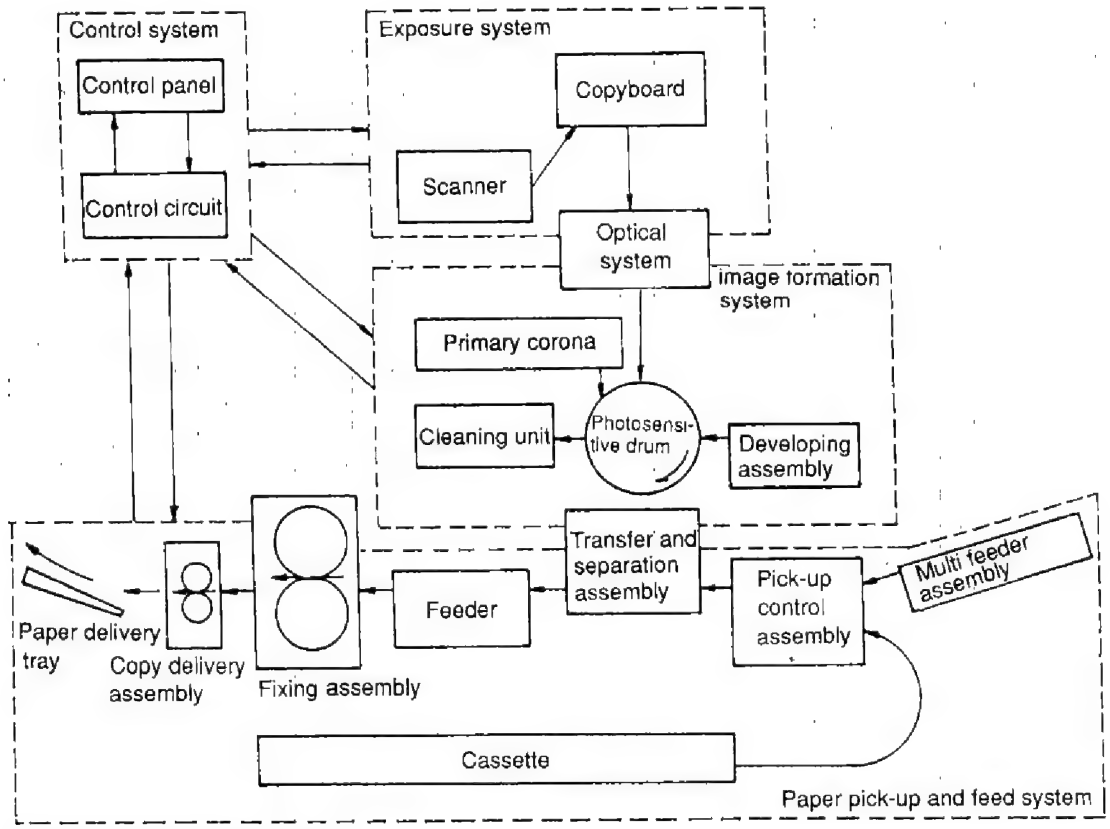

Figure 3-1

COPYRIGHT © 1992 CANON INC.
CANON NP-1550 REV.1 SEPT. 1992 PRINTED IN JAPAN (IMPRIME AU JAPON)

B. Outline of Electric Circuitry

The NP-1550's main mechanisms are controlled by the microprocessor, PROM, and EEPROM on the DC controller PCB.

1. Microprocessor (Q303)
   - controls the copying sequence
   - controls the control panel
   - controls the main motor/scanner motor
   - controls the scanning lamp
   - reads the analog signals
2. PROM (Q318)
   - contains the sequence program
3. EEPROM (Q315)
   stores data that can be modified in the service mode (replaces conventional variable resistors and switches)

Note:

EEPROM is a type of ROM in which data may be erased or stored newly.

For this reason, the NP-1550's RAM and RAM are not backed up by a lithium battery.

Note:

The NP-1550 is equipped with an A/D converter and, therefore, its microprocessor can read analog signals.

Note:

The main motor (M1) is a synchronous motor that uses the frequency of the power supply as the reference of its operation.

The scanner motor (M2) are stepping motor that use the oscillation frequency of the crystal oscillator on the DC controller.

Fluctuations of the frequency in the power supply during copying operation affects only the revolution of the main motor (M1) and result in expansion or contraction of the images.

COPYRIGHT © 1992 CANON INC.
CANON NP-1550 REV.0 JAN. 1992 PRINTED IN JAPAN (IMPRIME AU JAPON)

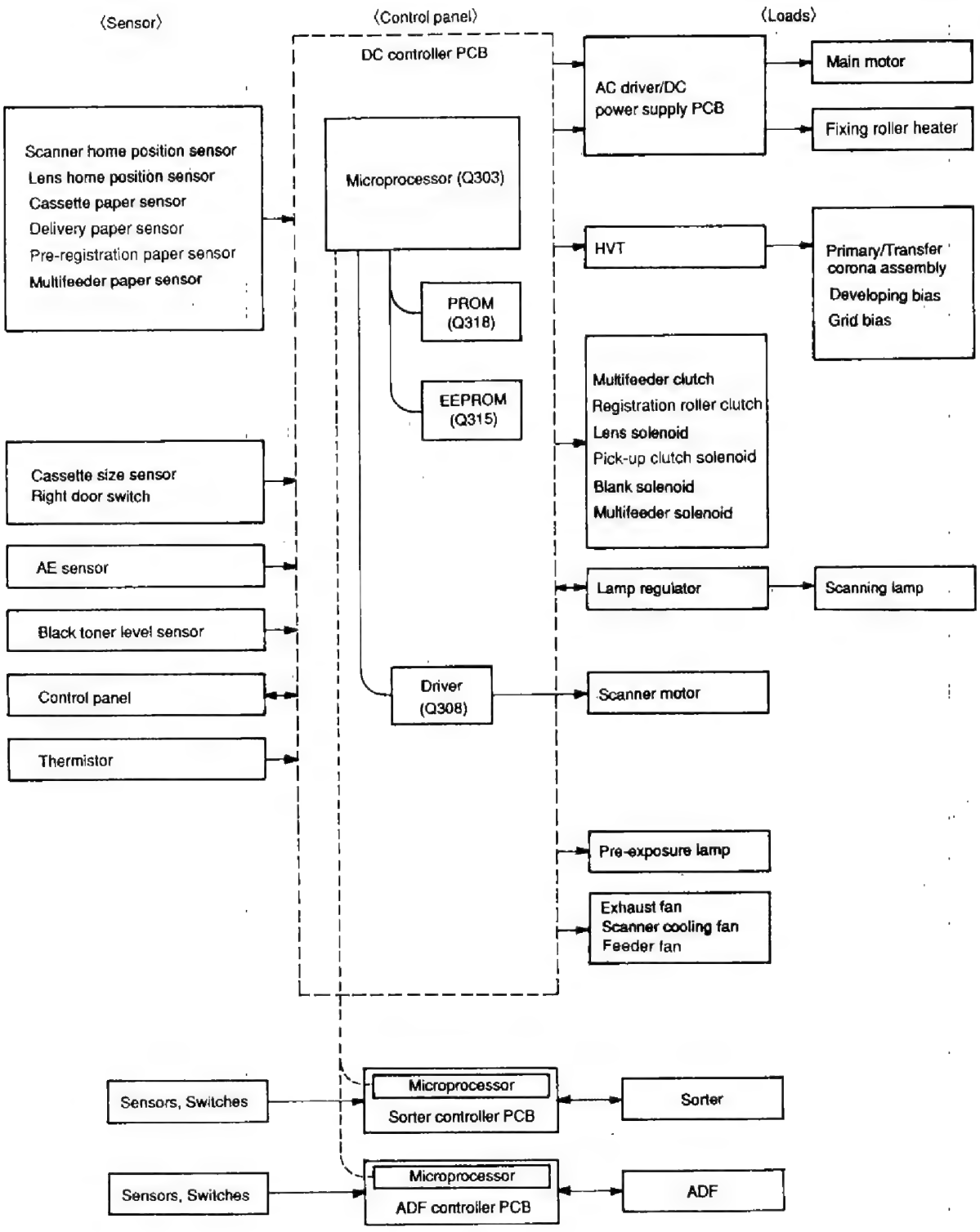

Figure 3-2

COPYRIGHT © 1992 CANON INC.
CANON NP-1550 REV.0 JAN. 1992 PRINTED IN JAPAN (IMPRIME AU JAPON)

C. Inputs to DC Controller

1. Inputs to DC Controller (1/2)

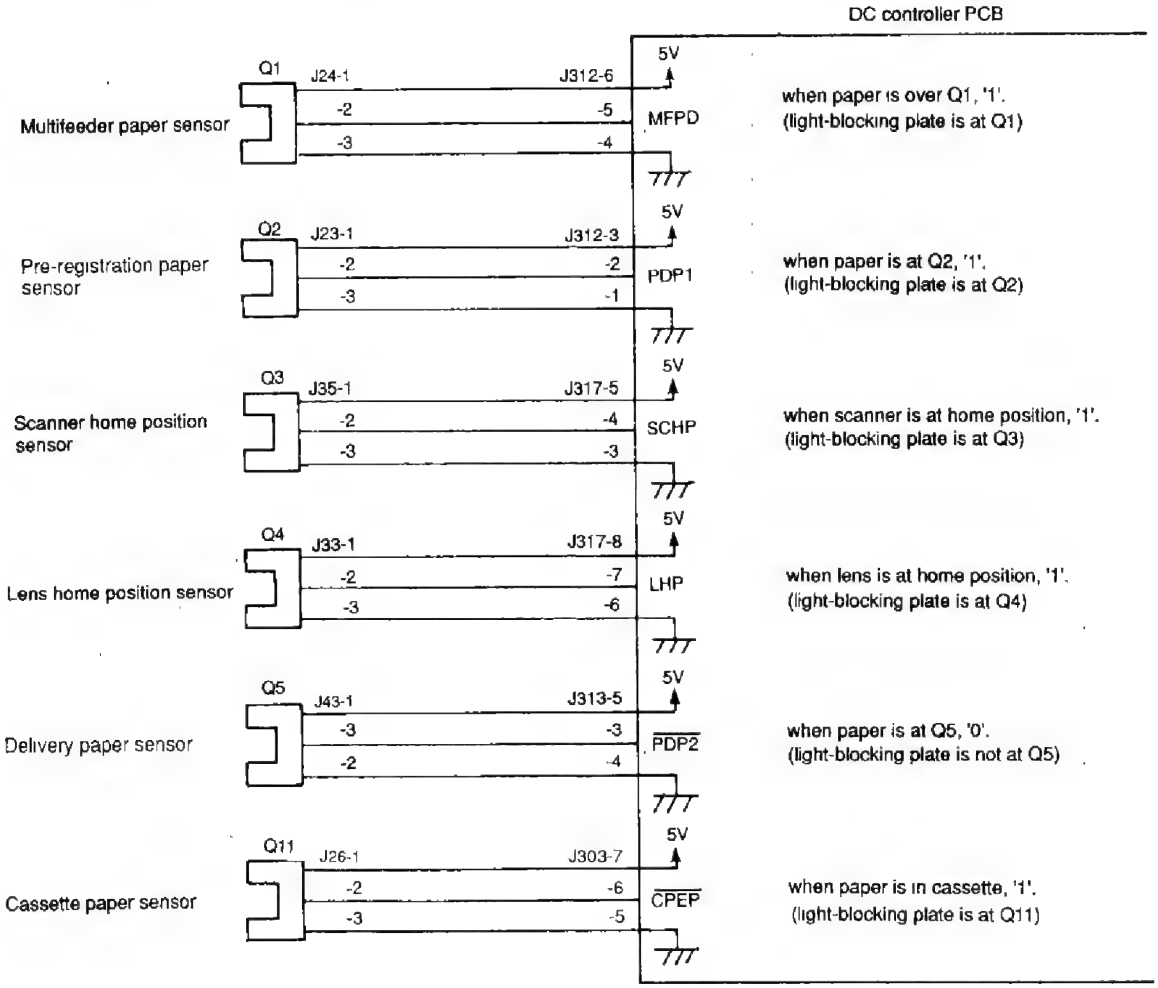

Figure 3-3

COPYRIGHT © 1992 CANON INC.
CANON NP-1550 REV.0 JAN. 1992 PRINTED IN JAPAN (IMPRIME AU JAPON)

2. Inputs to DC Controller (2/2)

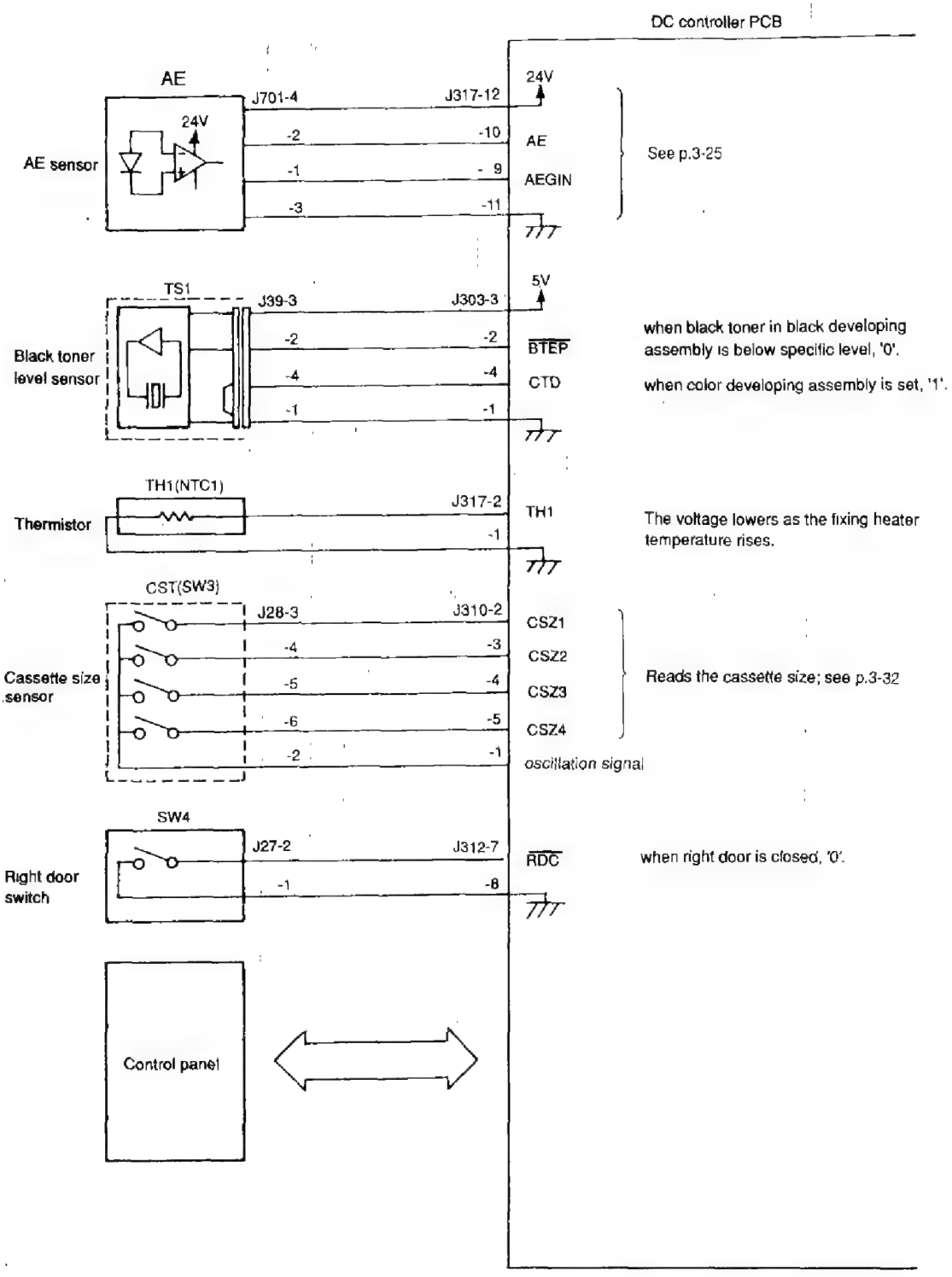

Figure 3-4

COPYRIGHT © 1992 CANON INC.
CANON NP-1550 REV.1 SEPT. 1992 PRINTED IN JAPAN (IMPRIME AU JAPON)

D. DC Controller Outputs

1. DC Controller Out Puts (1/3)

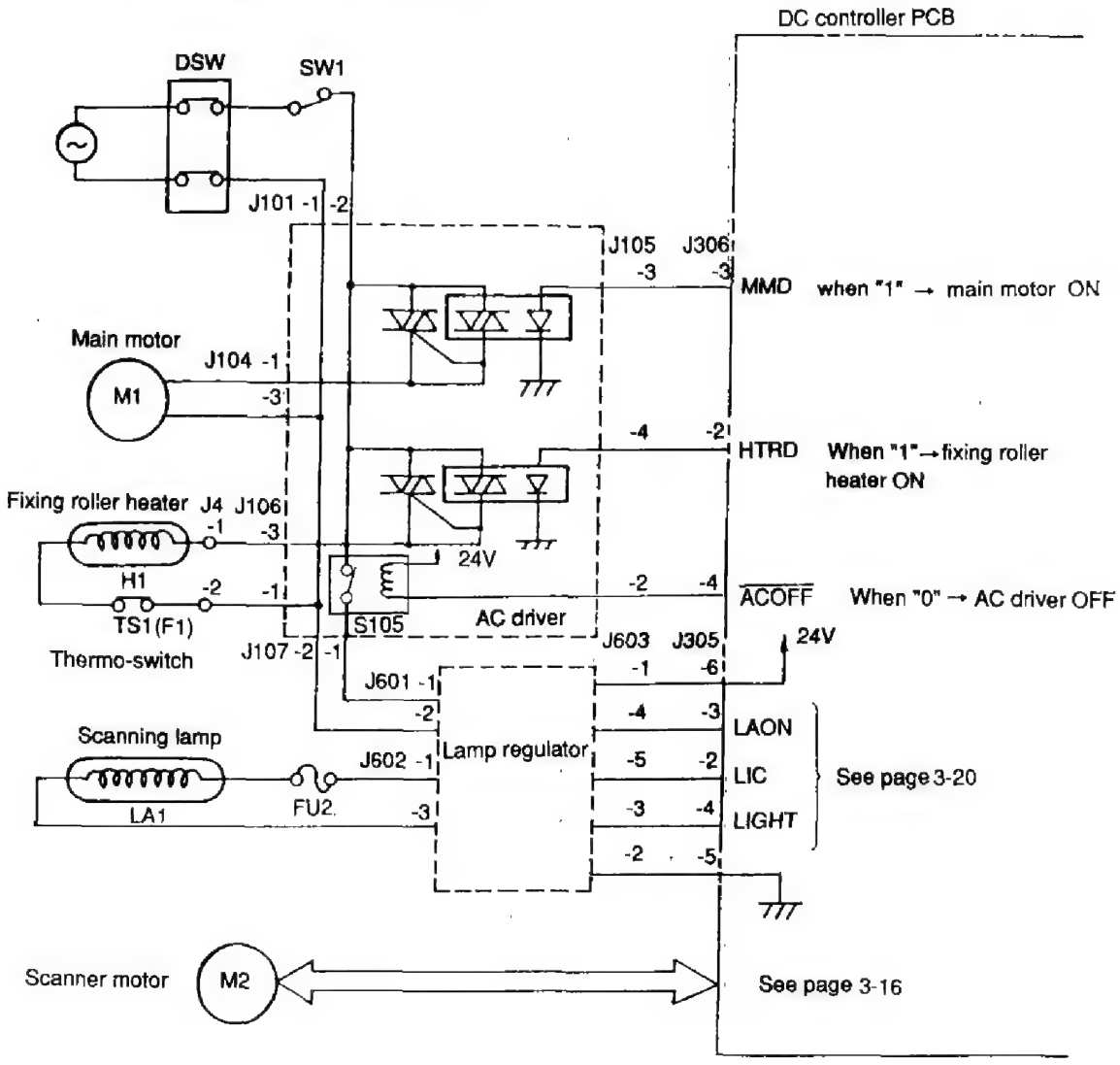

Figure 3-5

COPYRIGHT © 1992 CANON INC.
CANON NP-1550 REV.1 SEPT. 1992 PRINTED IN JAPAN (IMPRIME AU JAPON)

2. DC Controller Out Puts (2/3)

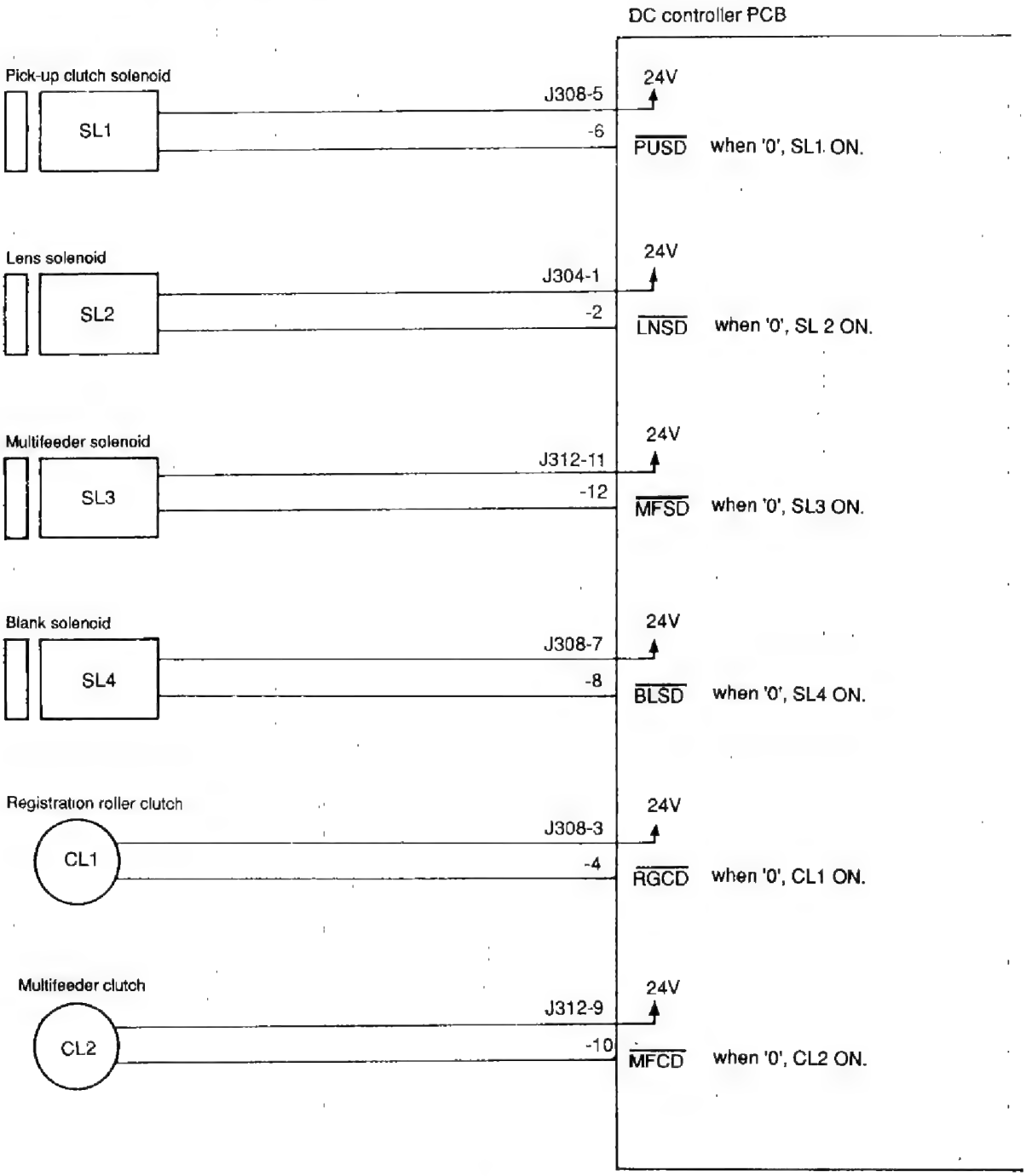

Figure 3-6

COPYRIGHT © 1992 CANON INC.
CANON NP-1550 REV.1 SEPT. 1992 PRINTED IN JAPAN (IMPRIME AU JAPON)

3. DC Controller Out Puts (3/3)

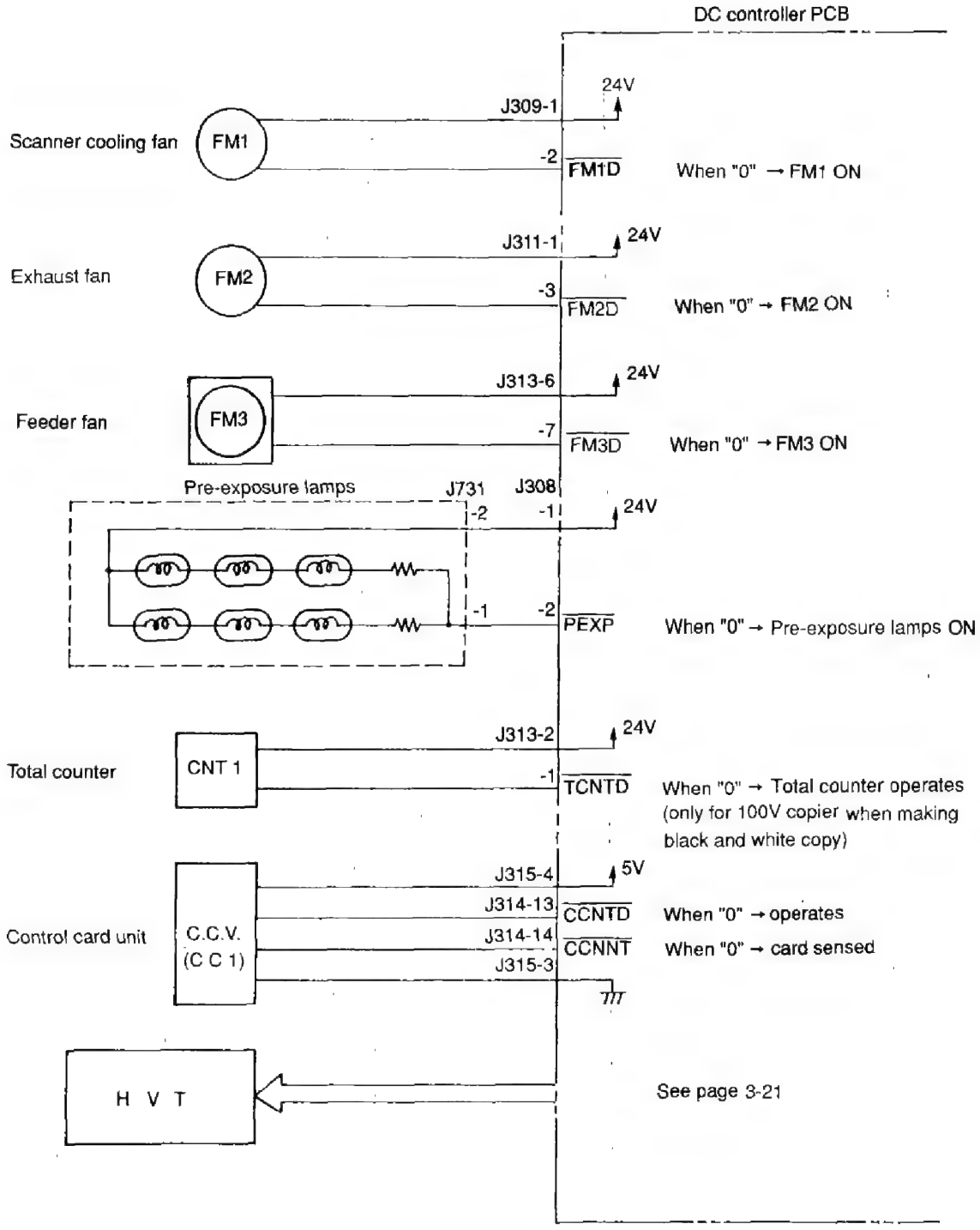

Figure 3-7

COPYRIGHT © 1992 CANON INC.
CANON NP-1550 REV.1 SEPT. 1992 PRINTED IN JAPAN (IMPRIME AU JAPON)

E. Basic Sequence of Operations (Direct, Continuous Copying (2 sheets))

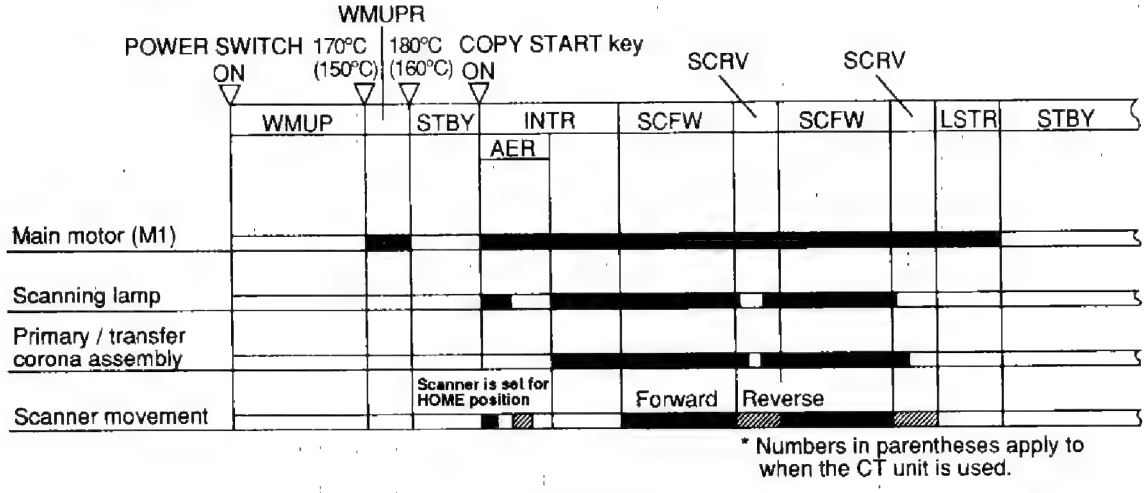

Figure 3-8

Period		Purpose	Remarks
WMUP (Warm-Up)	From switch on until the fixing roller temperature reaches 170°C for the black developer or 150°C for the CT unit. (About 75 seconds at an ambient temperature of 20°C)	Allows time for fixing roller to warm up	Warm-up time varies with fixing roller temperature at power ON. When the COPY START key is lighting green.
WMUPR (Warm-Up rotation)	Until the fixing roller temperature reaches 170° to 180°C for the black developer or 150° to 160°C for the CT unit	Keeps fixing roller temperature uniform	• After the WMUPR period ends, the READY/WAIT indicator changes from orange to green. • Even when the fixing roller has warmed up, it rotates for at least 4.2 seconds.
INTR (INITIAL rotation)	About 2.2seconds after COPY START key is pressed	Stabilizes drum sensitivity to prepare for copying	A PAPER FEED signal is generated to feed first sheet of copy paper. **Note:** AE mode: About 3.2 seconds Non-AE mode: About 2.2 seconds

Table 3-1 (a)

COPYRIGHT © 1992 CANON INC.
CANON NP-1550 REV.1 SEPT. 1992 PRINTED IN JAPAN (IMPRIME AU JAPON)

Period		Purpose	Remarks
AER (AE rotation)	From when the scanner moves forward about 70 mm from the end of the image until it returns to its home position.	Move the scanner forward about 70 mm from the end of the image and measure the document density.	In the non-AE mode, the scanner does not move forward or in reverse.
SCFW (Scanner Forward)	When the scanner is moving forward • Travel distance changes with copy paper size.	Scanning lamp illuminates original, and reflected optical image is transmitted to photosensitive drum through mirrors and lens array.	• A REGISTRATION signal is generated, and copy paper is fed to transfer area. • A PAPER FEED signal is generated to feed next sheet of copy paper.
SCRV (Scanner reverse)	While the scanner is moving in reverse • The speed of the reverse movement is 2.5 times that of the forward movement.	Scanner is moved back to HOME position to prepare for next copy	
LSTR (LAST rotation)	Untill the main motor stop after SCRV for last copy ends	Ensures full ejection of last copy	
STBY (STANDBY)		Waits until COPY START key is pressed	

Table 3-1 (b)

COPYRIGHT © 1992 CANON INC.
CANON NP-1550 REV.0 JAN. 1992 PRINTED IN JAPAN (IMPRIME AU JAPON)

II. EXPOSURE SYSTEM

A. Changing the Reproduction Ratio

The reproduction ratio across the drum is varied by changing the position of the lens. It is moved by the lens drive system. The reproduction ratio around the drum is varied by changing the speed of the scanner. Figure 3-9 shows how the position of the lens is varied to change the reproduction ratio across the drum.

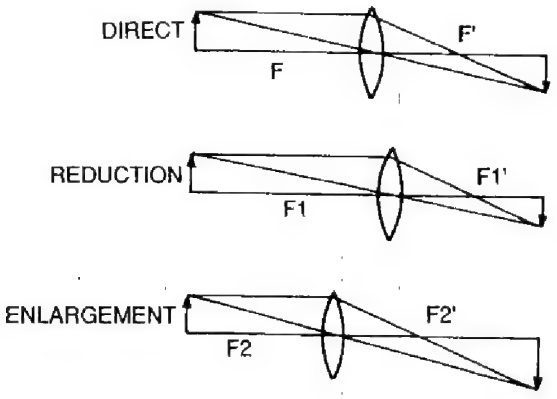

Figure 3-9

The scanner drive system changes the reproduction ratio around the drum by varying the speed at which mirror 1 moves relative to the peripheral speed of the drum. (The scanner is mirror 1 plus the scanning lamp.)

The mirror speed is faster than the drum peripheral speed for REDUCTION and slower for ENLARGEMENT.

Note:

1. The relative position of the mirrors is not changed to vary the reproduction ratio.
2. For DIRECT copying, the speed of the mirror is the same as the peripheral speed of the drum.

B. Lens Drive System

1. Outline

The lens is moved by the scanner motor (M2). Normally, the coupling gear is in its upper position, and connects the scanner motor to the scanner drive capstan. To move the lens, the lens solenoid (SL2) goes ON, causing the coupling gear to disengage from the scanner capstan gear and engage with the lens capstan gear. The lens is a "floating element" type. In operation, the relative position of lens elements (individual lenses) changes, and the focal length changes as a result, but the changes are to optimize lens sharpness for each reproduction ratio, not to make the lens function as a zoom lens. (The lens should not be dismantled.)

When the scanner motor rotates (CW), the lens will be moved to the left (for ENLARGEMENT) by the capstan and cable.

When the cassette size is changed or when the copier is in the REDUCE mode, the blank exposure shutter moves in relation to the distance over which the lens travels, thereby blanking out the width corresponding to the reproduction ratio; see p. 3-28.

The DC controller indicates 'E210' on the control panel in response to an error in the lens drive system.

COPYRIGHT © 1992 CANON INC.
CANON NP-1550 REV.0 JAN. 1992 PRINTED IN JAPAN (IMPRIME AU JAPON)

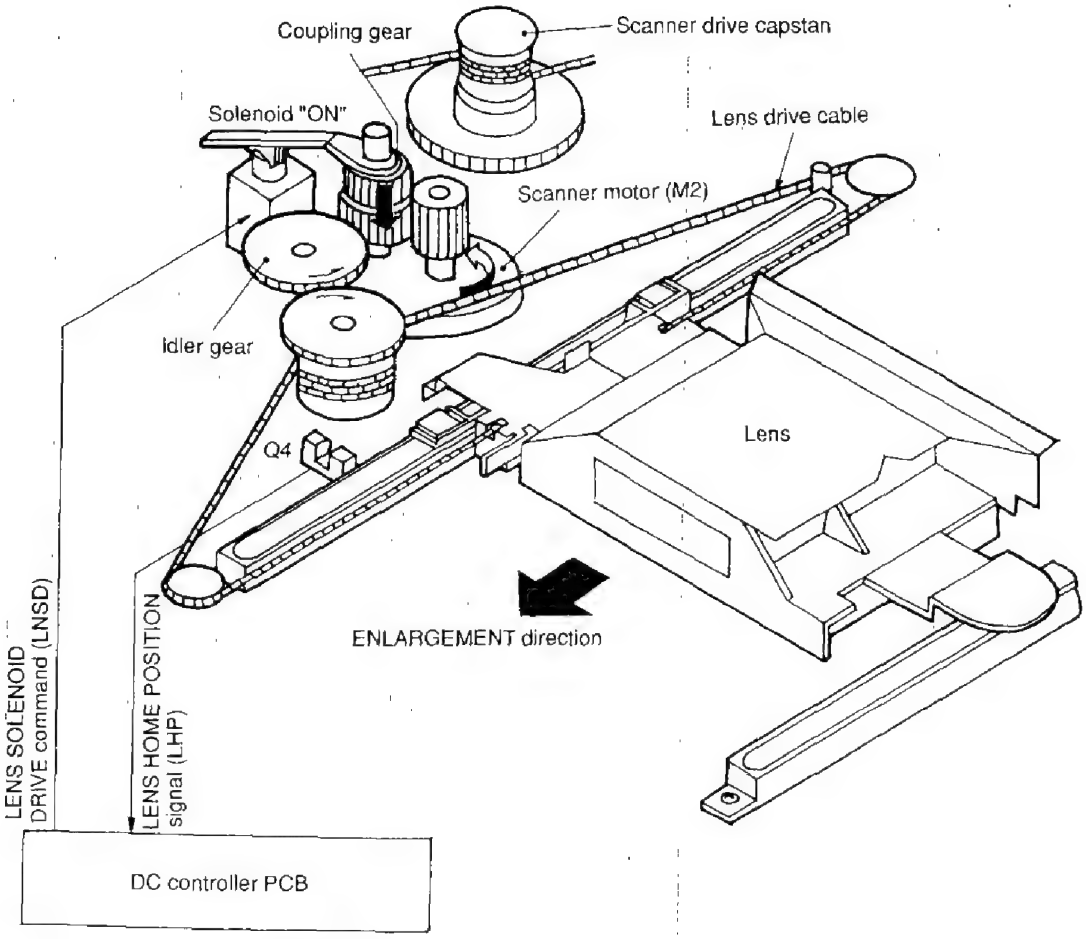

Figure 3-10

COPYRIGHT © 1992 CANON INC.
CANON NP-1550 REV.0 JAN. 1992 PRINTED IN JAPAN (IMPRIME AU JAPON)

2. Basic lens Drive System Operation (change of reproduction ratio)

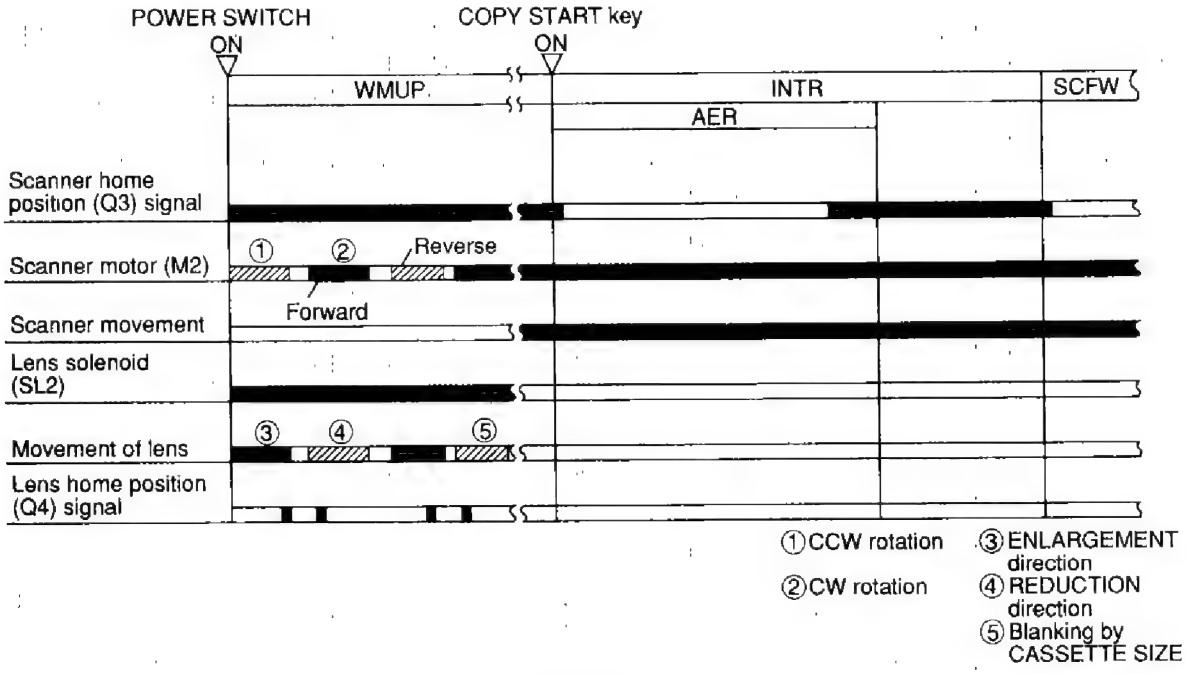

Figure 3-11

When the casette size is changed or when the copier is in the ZOOM mode, the lens first returns to the home position before moving to the position that corresponds to the cassette size and the reproduction ratio.

This operation is executed also when the ZOOM mode is switched to the DIRECT mode.

COPYRIGHT © 1992 CANON INC.
CANON NP-1550 REV.1 SEPT. 1992 PRINTED IN JAPAN (IMPRIME AU JAPON)

C. Scanner Drive System

1. Outline

The scanner is driven by the scanner motor (M2). The direction of rotation of the scanner motor determines whether the scanner moves forward or backward. The forward speed of the scanner motor is continuously variable to produce the required reproduction ratio. The reverse speed is fixed regardless of the reproduction ratio (2.5 times the forward speed for DIRECT copying).

The distance that the scanner moves varies to suit the size of copy paper and the reproduction ratio.

The control panel displays 'E202' in response to an error in the scanner motor (M2) or the scanner home position sensor (Q3).

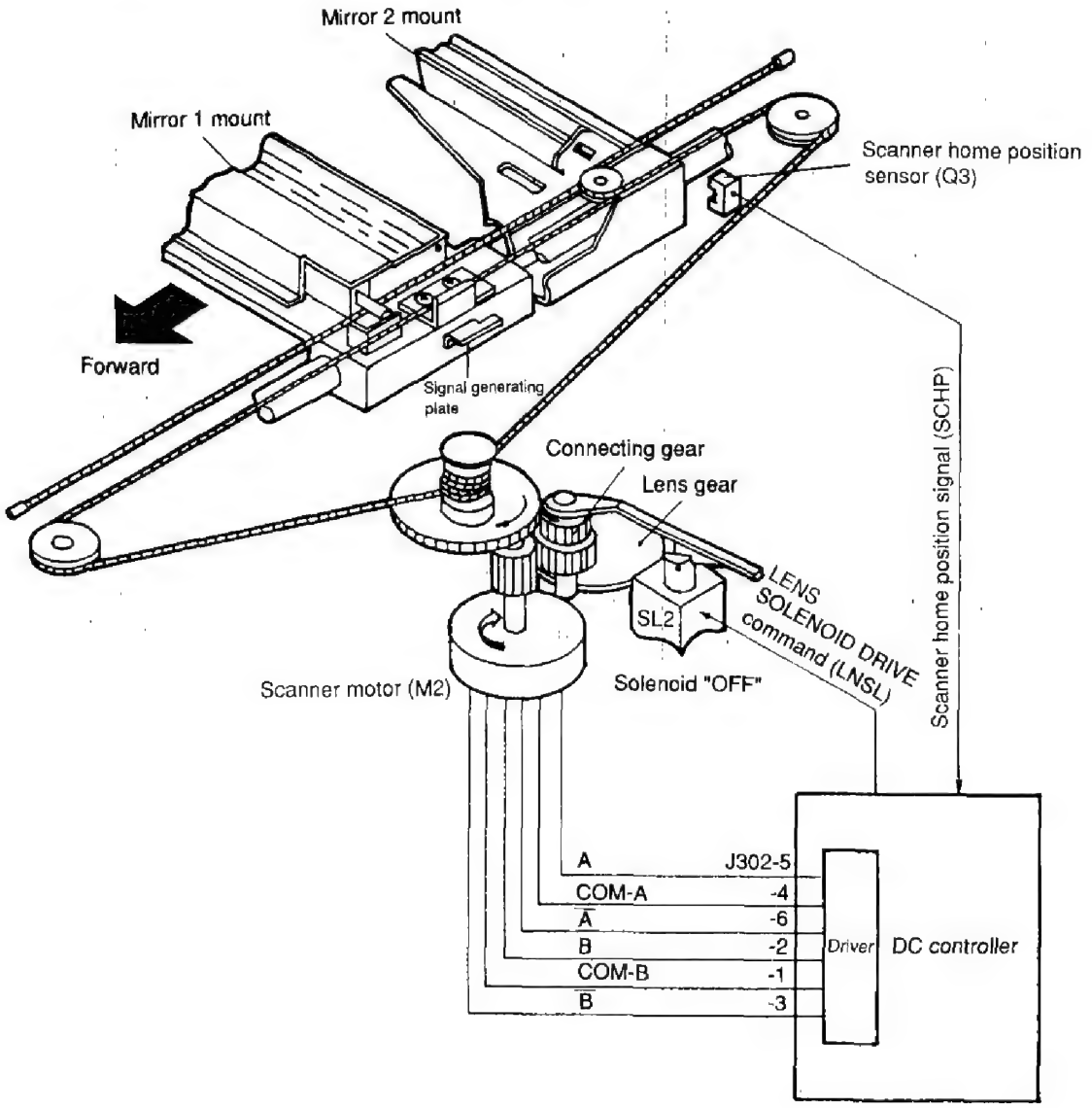

Figure 3-12

COPYRIGHT © 1992 CANON INC.
CANON NP-1550 REV.1 SEPT. 1992 PRINTED IN JAPAN (IMPRIME AU JAPON)

2. Relation Between Scanner Sensor and Signals

Scanner sensor	Signal name	Scanner		Meaning
		Forward	Reverse	
Scanner home position sensor (Q3)	SCHP			• Grid bias ON
				• After 0.1 seconds, scanner stops advancing

Table 3-2

3. Basic Scanner Operation

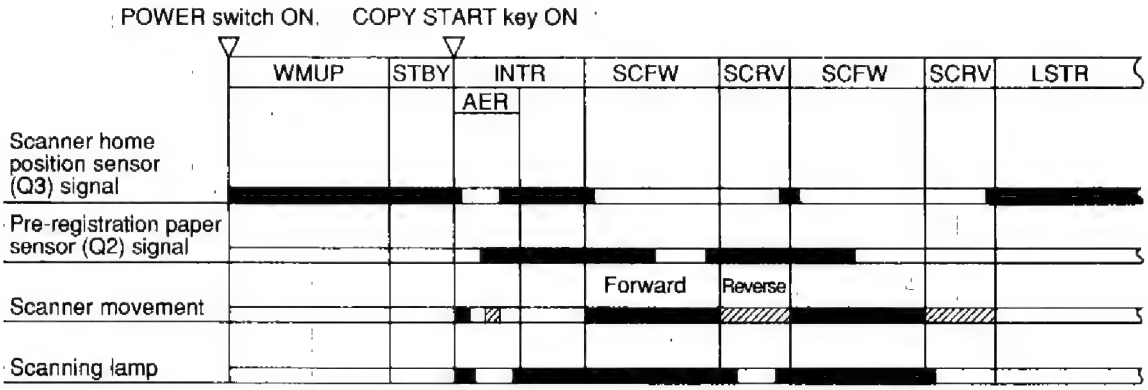

Figure 3-13

COPYRIGHT © 1992 CANON INC.

4. Scanner Motor Drive System Operation

a. Clockwise rotation

The scanner motor driver outputs pulses, and the motor rotates CW. This moves the lens in the direction for REDUCTION, and the scanner moves forward.

For REDUCTION copying, the motor speed increases to move the scanner faster (forward).

b. Counterclockwise rotation

The scanner motor is driven CCW by pulses of phase relationship opposite to that used to drive it CW. This moves the lens in the direction for ENLARGEMENT, and moves the scanner in reverse.

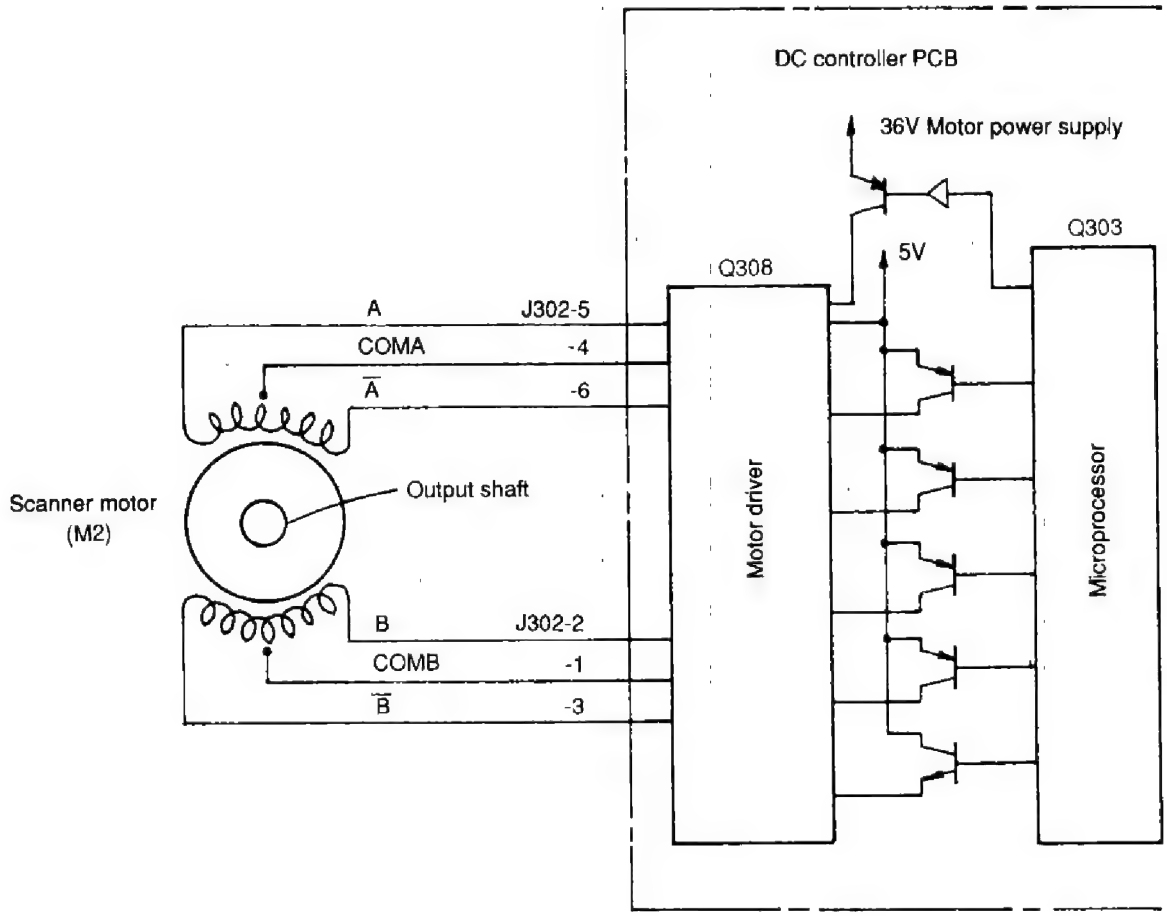

Figure 3-14

COPYRIGHT © 1992 CANON INC.
CANON NP-1550 REV.0 JAN. 1992 PRINTED IN JAPAN (IMPRIME AU JAPON)

5. Scanner Movement for Two-page Separation Mode (copy count "2")

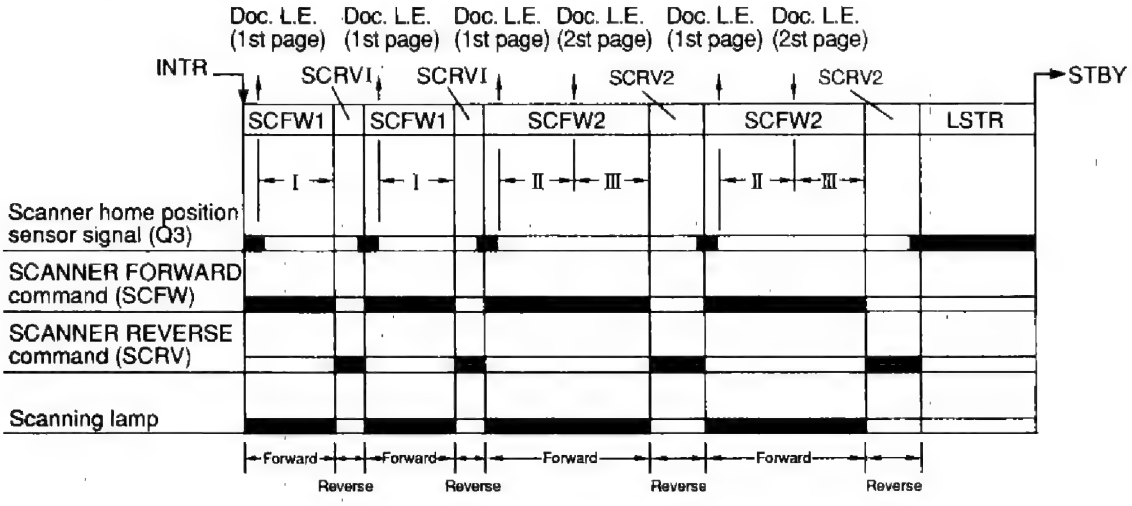

Figure 3-15

Timing of operations I,II, and III shown in figure 3-15 is with reference to the leading edge of the first page of the document (fall of Q3 signal).

I: The distance traveled by the scanner from the leading edge of the original is determined by the reproduction ratio and the copy paper size, just as for a normal copy.

II: This is roughly the same as I. If the forward distance traveled by the scanner is greater than 210 mm (220V, or 240V copier) the DC controller will judge that 210 mm is the leading edge of the original. If the distance that the scanner moves forward is less than 210 mm, the point at which the scanner reverses in I will be the leading edge of the second page of the document.

III:Same as I.

COPYRIGHT © 1992 CANON INC.
CANON NP-1550 REV.1 SEPT. 1992 PRINTED IN JAPAN (IMPRIME AU JAPON)

III. IMAGE FORMATION SYSTEM

A. Outline

The basic structure of the image formation system is as shown below.

- Scanning lamp control system
- Primary/transfer corona current and grid bias voltage control system
- Controlling developing bias
- Document density measurement system
- Developing assembly/Drum cleaner
- Blanking

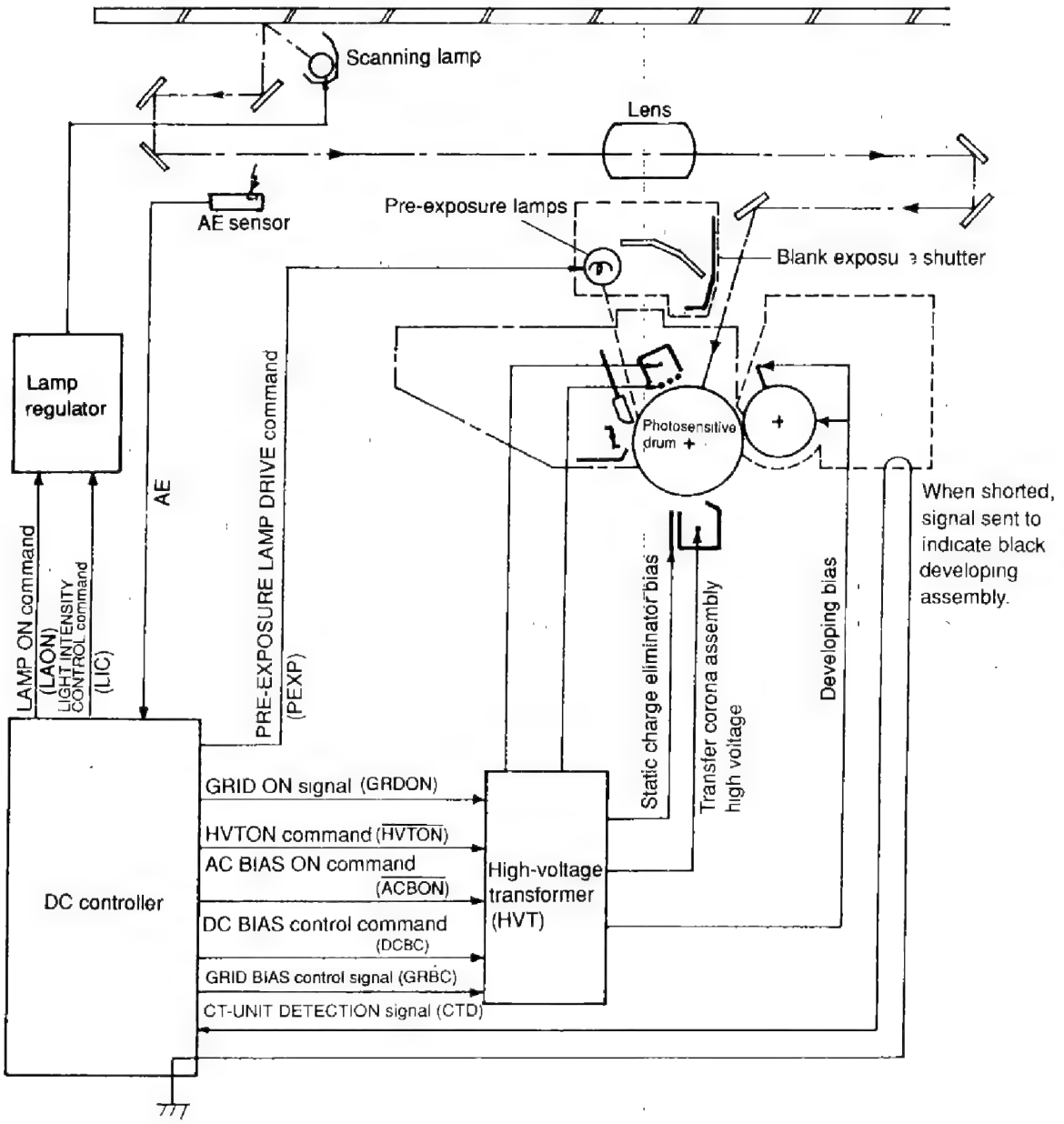

Figure 3-16

COPYRIGHT © 1992 CANON INC.
CANON NP-1550 REV.1 SEPT. 1992 PRINTED IN JAPAN (IMPRIME AU JAPON)

B. Basic Operation of Image Formation System (black developing assembly, 2 copies)

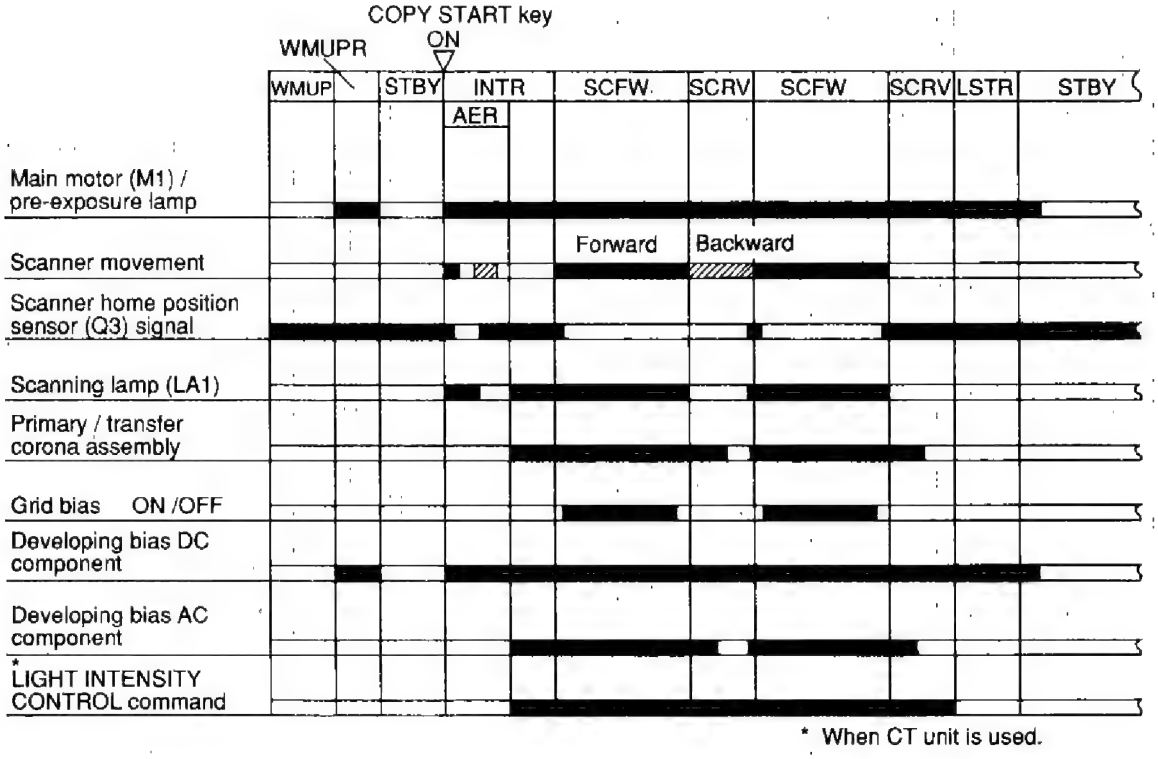

Figure 3-17

When a color developing (CT) unit is used, the AC component of the bias operates when the main motor (M1) is operating.

COPYRIGHT © 1992 CANON INC.
CANON NP-1550 REV.1 SEPT. 1992 PRINTED IN JAPAN (IMPRIME AU JAPON)

C. Controlling the Scanning Lamp

1. Outline

The scanning lamp (LA1) is controlled by the DC controller PCB; see Figure 3-18. Specifically, the DC controller

- turns the scanning lamp ON and OFF.
- controls the intensity of the scanning lamp.

2. Mechanism

a. Turning the Scanning Lamp ON and OFF

The microprocessor (Q303) on the DC controller PCB controls the lamp regulator. The scanning lamp goes ON when the scanning LAMP ON command (LAON) is '1', and it goes OFF when the signal is '0'.

b. Controlling the Intensity of the Scanning Lamp

The intensity of the scanning lamp is switched between when the black developing assembly is used and when the CT unit is used.

When the CT unit is used, the LIGHT INTENSITY CONTROL command (LIC) goes '0' to raise the lamp voltage by about 3.5 V higher than when the black developing assembly is used.

During AE exposure, however, the voltage (70 V) applied to the scanning lamp remains the same.

The NP-1550 adjusts the copy density using its development bias; see p. 3-22.

c. Error Protection

The condition of the scanning lamp is monitored using the LIGHT signal (LGHT).

If the LIGHT signal (LIGHT) is received by the DC controller for about 20 sec, the error detection circuit generates the AC SHUTOFF signal (ACOFF) to force the relay (S105) on the AC driver/DC power supply PCB to go OFF, thereby cutting AC power supply (P. 3-39). In this case E220 error is displayed.

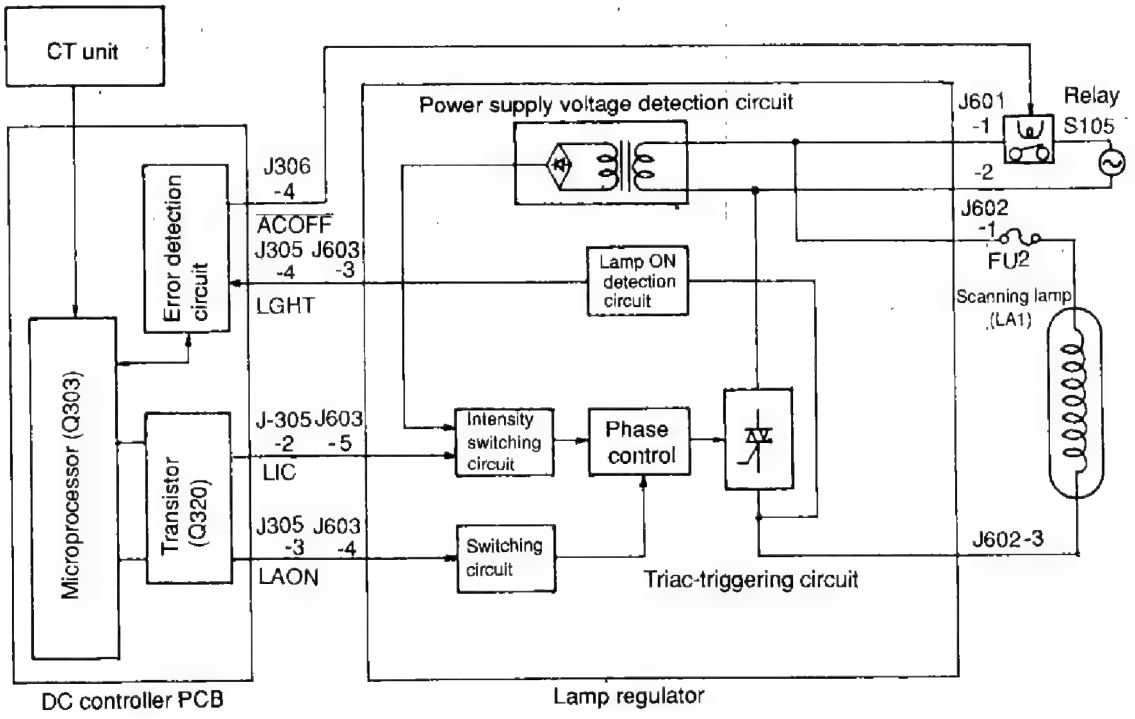

Figure 3-18

COPYRIGHT © 1992 CANON INC.
CANON NP-1550 REV.1 SEPT. 1992 PRINTED IN JAPAN (IMPRIME AU JAPON)

D. Primary/Transfer Corona Current and Grid Bias Voltage Control System

1. Outline

The circuit shown in Figure 3-17 conntrols the primary/transfer coronal current and the bias voltage of the grid of the primary corona. Main functions are as follows.

a. Switching primary/transfer corona current ON/OFF
b. Maintaining primary/transfer corona current constant
c. Switching primary corona grid bias voltage
d. Switching primary corona grid bias ON/OFF

In order to eliminate the effect of changes in atmospheric conditions on the effectiveness of the corona discharge, the current to the primary corona wire is maintained constant.

The primary corona and transfer corona current are switched ON and OFF by the HVT ON command ($\overline{\text{HVTON}}$).

The grid bias voltage is switched by the GRID ON signal (GRDON).

2. Switching Primary/Transfer Corona Current ON/OFF

a. When $\overline{\text{HVTON}}$ = 1
   - Differential amplifier goes OFF.
     - Variable pulse width oscillator goes OFF.
       - High-voltage transformer goes OFF.

b. When $\overline{\text{HVTON}}$ = 0
   - Differential amplifier goes ON.
     - Variable pulse width oscillator goes ON.
       - High-voltage transformer goes ON.

3. Maintaining Primary/Transfer Corona Current Constant

If the primary corona current is greater than the correct value due to changes in the environment, the level (analog) of the feedback signal to the differential amplifier circuit will increase and the output from the differential amplifier circuit will fall. As a result, the primary/transfer coronal current will fall. Similarly, if the primary corona current is too low, it will be increased.

If the output side of the high-voltage transformer supplying the primary corona assembly should be overloaded, the current will be limited to a certain maximum.

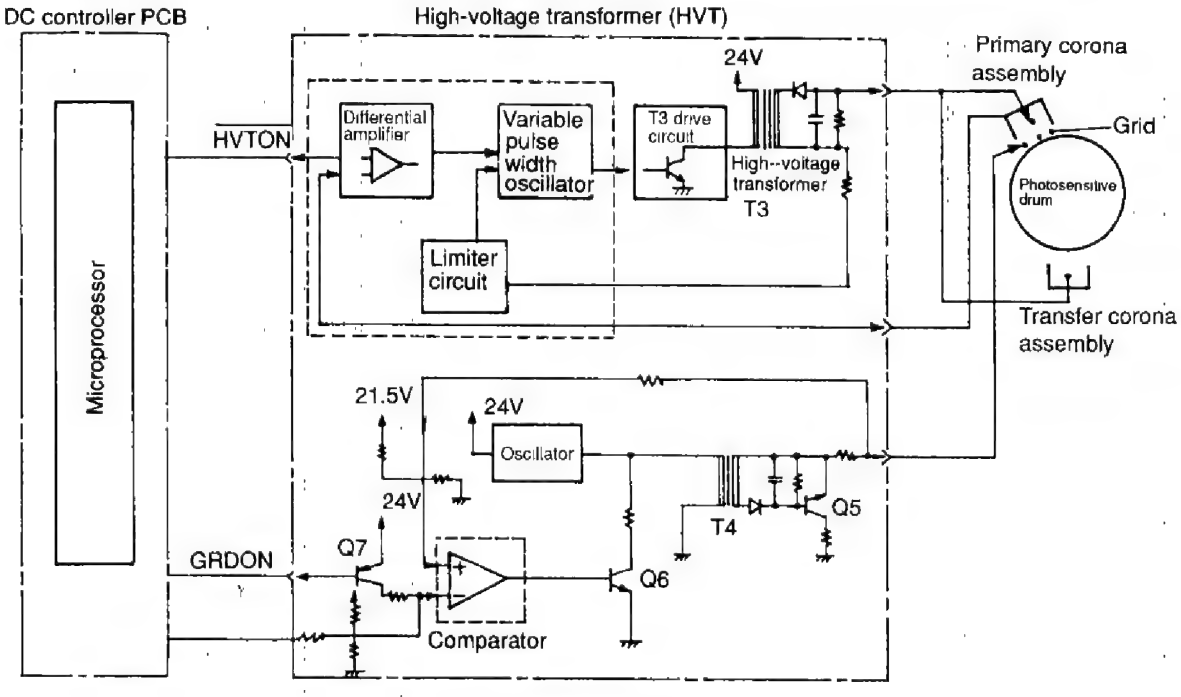

Figure 3-19

COPYRIGHT © 1992 CANON INC.
CANON NP-1550 REV.1 SEPT. 1992 PRINTED IN JAPAN (IMPRIME AU JAPON)

4. Controlling Grid Bias Voltage

a. During scanning, the DC controller PCB outputs $\overline{GRDON}$ = "0".

→ Q7 goes ON and the comparator output is "L".

→ Q6 goes OFF.

→ Current does not flow into transformer T4 and Q5 goes ON.

→ Bias is applied to the grid.

→ The surface of the drum is charged.

The voltage applied to the grid is fed back to the comparator which functions to maintain the grid voltage constant.

b. When scanning is not taking place, the DC controller PCB outputs $\overline{GRDON}$ = "1".

→ Q7 goes OFF and comparator circuit output is "H".

→ Q6 goes ON and current flows into T4.

→ Bias is not applied to the grid.

Under the above conditions, the surface of the drum is not charged, hence toner does not adhere to it (blanking).

The timing at which the grid bias is switched may be varied using '[3' or '[6' in the service mode (leading edge non-image width adjustment).

E. Controlling Developing Bias

1. Outline

The circuit shown in Figure 3-18 controls the developing bias. Its main functions are as follows.

a. Switching AC component of the developing bias ON/OFF.
b. Regulating voltage of the DC component of the developing bias.

The copy density can be controlled by varying the voltage of the developing bias to suit the following variables.

a. Settings of COPY DENSITY lever and recalibration dial
b. AE sensor output
c. Type of developing assembly

When there is a black developing assembly in the copier, J303-1 and J303-4 are connected electrically to inform the copier that a black developing assembly is in place.

The photosensitive drum gradually deteriorates with use, causing the potential (V_L) of light areas of the drum to increase, so that copy density is not correct for a given setting of the copy density lever. To compensate for this, a COPY DENSITY knob, which can be turned to raise the DC bias by exactly the increase in V_L, and thus produce clear copies again.

2. Operation

a. Switching AC component of the developing bias ON/OFF

The square wave generator operates continuously when the copier is switched ON.

a) When $\overline{ACBON}$ = 1

→ AC bias switch circuit goes ON.

→ Output from the square wave generator is cut off.

So AC bias is not supplied to the developing cylinder.

COPYRIGHT © 1992 CANON INC.
CANON NP-1550 REV.1 SEPT. 1992 PRINTED IN JAPAN (IMPRIME AU JAPON)

b) When $\overline{ACBON}$ = 0

└ The AC bias switch circuit goes OFF.

So the output of the square wave oscillator goes to the T1 drive circuit. This causes the AC high-voltage transformer to generate a 1300VAC AC bias, which is supplied to the developing cylinder.

Also, the output of the AC high-voltage transformer is rectified and suppled to the static charge eliminator (approx. 3.2 kV).

b. Controlling DC bias

The differential amplifier of Figure 3-21 operates when DCBC is 16V or below. (The range of DCBC (analog) is 6 to 16V, as set by the copy density cursor or the AE system.)

└ Differential amplifier goes ON.

└ Variable pulse-width oscillator goes ON.

└ DC high-voltage transformer goes ON.

The DC bias is applied to the developing cylinder.

DCBC	6V to16V
DC component of developing bias	-500V to -0V

The copy density knob changes the DC component of the developing bias as shown in Figure 3-20.

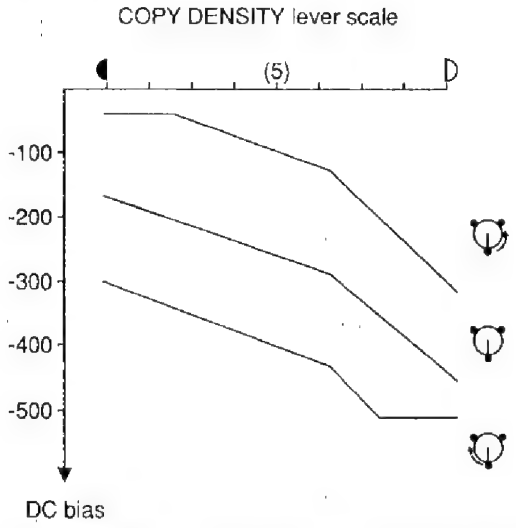

Figure 3-20 Changes in Development Bias (DC component) by COPY DENSITY knob

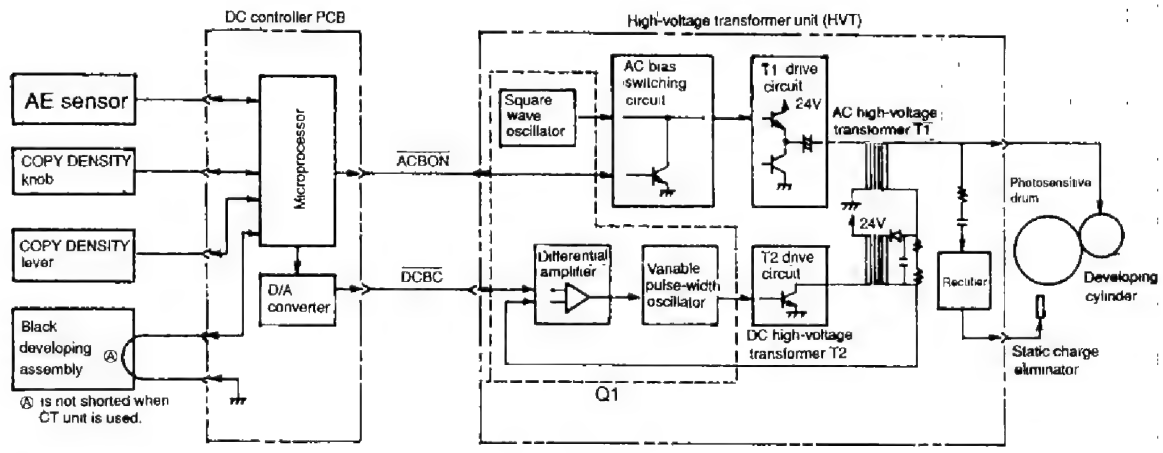

Figure 3-21

COPYRIGHT © 1992 CANON INC.
CANON NP-1550 REV.1 SEPT. 1992 PRINTED IN JAPAN (IMPRIME AU JAPON)

3. Developing Bias Operation

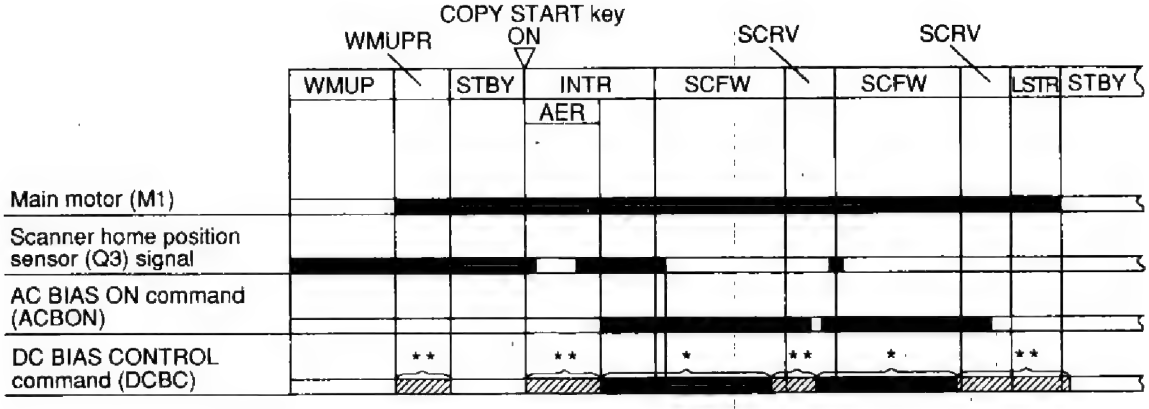

Figure 3-22

* The value of the DC BIAS CONTROL command and the DC bias are determined by (1) the setting of the COPY DENSITY lever and COPY DENSITY knob, (2) the AE sensor output, and (3) the type of developing assembly installed.

** The DC bias used at times other than during scanning depends on the type of developing assembly installed.
Black developing assembly: Approx. -320V CT unit: Approx. -220V

Note:
The AC component is added to the developing bias for a CT unit when the main motor is operating.

COPYRIGHT © 1992 CANON INC.
CANON NP-1550 REV.1 SEPT. 1992 PRINTED IN JAPAN (IMPRIME AU JAPON)

F. Document Density Measurement System

1. Outline

There is an automatic density adjustment (AE) system which adjusts the DC component of the developing bias to suit the density of the original. If the density of the original is more or less uniform, the AE function varies the DC component of the developing bias to suit the density of the original, so that copies of the correct density will be made.

2. Operation

The scanner moves forward approximately 70mm past the leading edge of the original and stops momentarily. The scanning lamp goes ON for approximately one second, the image density is read by the AE sensor, and the sensor output is interpreted by the DC controller. The DC controller then adjusts the DC component of the developing bias accordingly.

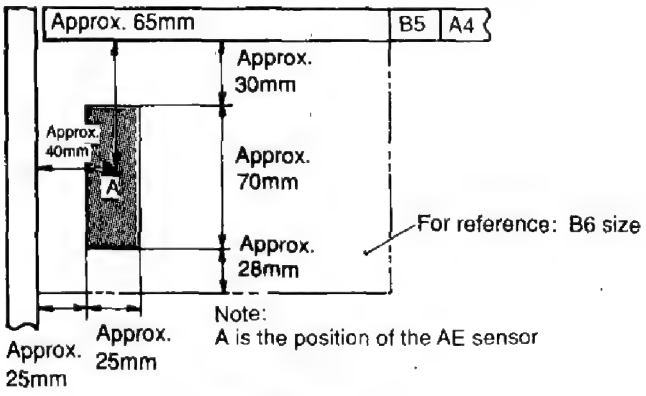

Figure 3-23

3. Reading the Output of the AE Sensor

The AE sensor consists of a photodiode (Q702) and an operational amplifier (Q701). If the strength of light striking the photodiode is high, the output voltage (AE) of the amplifier will be small. If the amount of light is small, the output voltage will be large.

The DC controller reads the output at a certain time after the zero-cross signal (ZXDP) is received from the DC power supply.

The data representing the adjusted AE reference/slope values are written to EEPROM when '[illegible]' or '[illegible]' is used in the service mode.

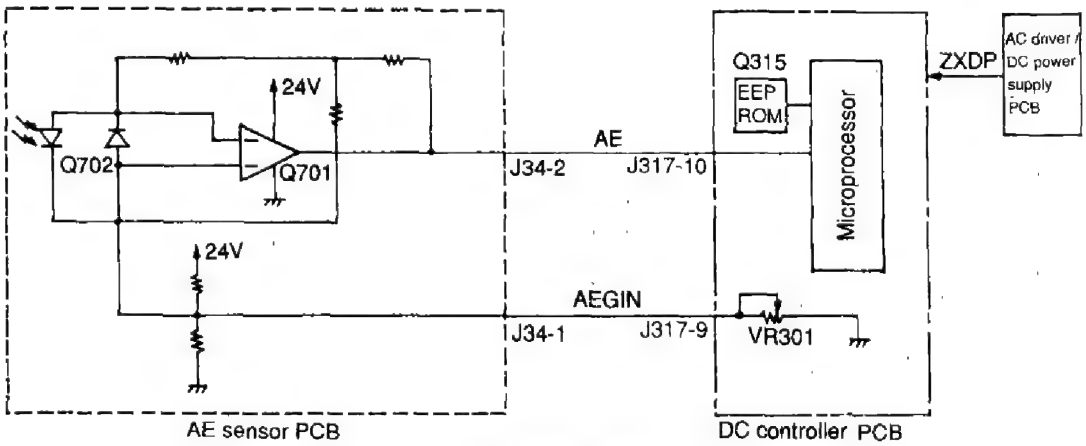

Figure 3-24

COPYRIGHT © 1992 CANON INC.
CANON NP-1550 REV.0 JAN. 1992 PRINTED IN JAPAN (IMPRIME AU JAPON)

4. Adjustment

Make the following adjustments when the AE sensor or the DC controller PCB has been replaced.

1) Remove the potentiometer cover at the back of the left cover.
2) Set the power switch ON.
   • Wait until the WAIT period has ended.
3) Place an NB-3 or NA-2 test sheet on the copyboard, and lower the copyboard cover.
4) Press switch SW 300 on the DC controller PCB.
   • "0" will appear on the COPY COUNT/RATIO indicator on the control panel.
   • If "0" does not appear, press the "0" number key on the control panel so that "0" appears.
5) Press the SORT/GROUP key on the control panel.
   • The scanner will move forward to the AE measuring position, then the scanning lamp will go ON. (Note)
6) Adjust VR 301 on the DC controller so that "22" appears on the COPY COUNT/RATIO indicator.

For reference:

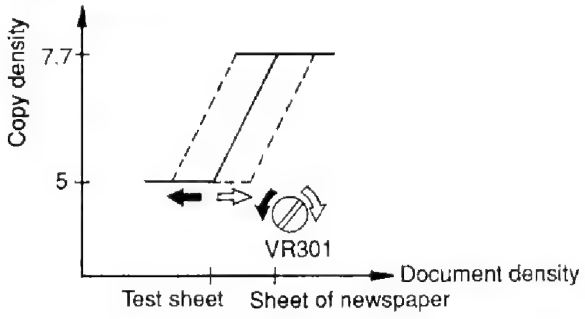

Figure 3-25

7) Press the SORT/GROUP key.
   • The scanning lamp will go OFF, and the scanner will return to the HOME position.
8) Remove the test sheet, place a sheet of newspaper on the copyboard, and lower the copyboard cover.
9) Press the SORT/GROUP key.
   • The copier will perform the same operations as described in step 5).
10) Make a note of the numerical value displayed on the COPY COUNT/RATIO indicator.
11) Press the SORT/GROUP key.
   • "0" will appear on the COPY COUNT/RATIO indicator.
12) Press the "1" number key.
   • "1" will appear on the COPY COUNT/RATIO indicator.
13) Enter the value recorded in step 10) using the NUMERIC keypad.

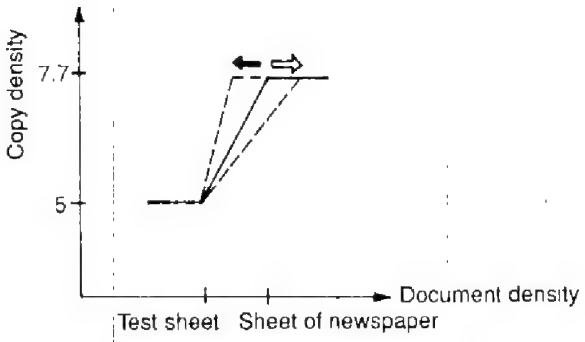

⇨: when the setting is lowered.
➡: when the setting is raised.

Figure 3-26

COPYRIGHT © 1992 CANON INC.
CANON NP-1550 REV.1 SEPT. 1992 PRINTED IN JAPAN (IMPRIME AU JAPON)

G. Developing Assembly/ Drum Cleaner

1. Outlines

The paddle inside the drum cleaning unit and also the developing cylinder are rotated by the main motor.

The amount of toner in the developing assembly is sensed by the black toner level sensor (TS1).

When the amount of toner falls below the required quantity, the ADD TONER indicator on the control panel will flash.

When the toner in the CT unit is used up, the entire CT unit should be replaced.

The toner collected by the cleaning blade is stored in the drum cleaning unit.

The developing assembly is pressed against the drum by a cam that presses against the developing assembly rail. (The cam is operated by the developing assembly release lever.)

2. Remaining Toner Sensor

The black developing assembly has a piezoelectric type sensor (TS1) which senses if the toner remaining in the hopper of the developing assembly is above or below the required level.

When the amount of toner in the hopper is sufficient, the sensor output is "1". When it is below the specified level, the output is "0".

The DC controller checks for 5 seconds after copying is completed if the TONER EMPTY signal (TEP) is being outputted. If the signal is outputted continuously for 5 seconds, it is regarded as "TONER OUT-First time". If another TONER EMPTY signal is received in the same way after the next copying operation is completed, it is regarded as "TONER OUT-Second time", and the DC controller makes the ADD TONER indicator flash.

The CT unit for this copier does not have a remaining toner sensor or waste toner sensor.

3. Torque Limiter

There is a torque limiter in the drive train between the main motor and the drum to stop the drum in response to a jam in the drum cleaner.

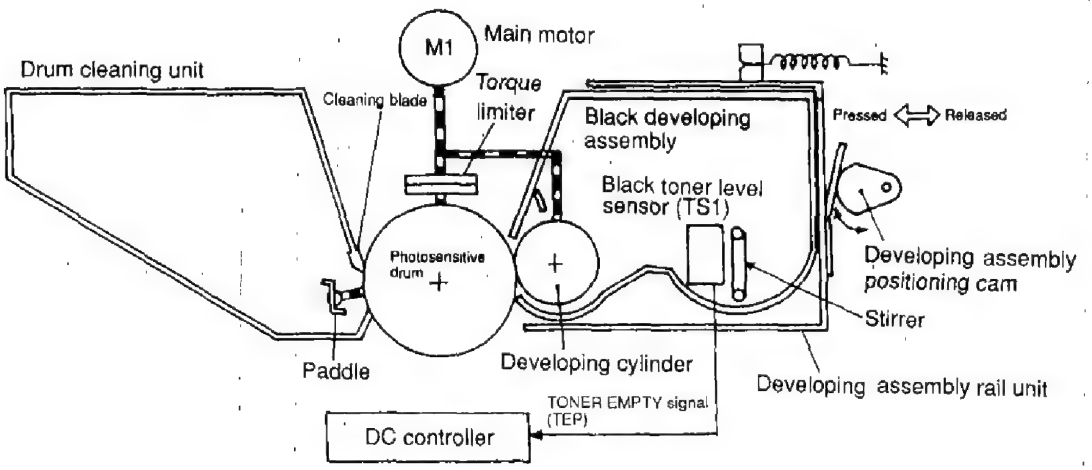

Figure 3-27

COPYRIGHT © 1992 CANON INC.

H. Blanking

1. Outline

The area of the drum between the trailing edge of one copy and the leading edge of the next would normally act as an all black area and attract toner if a preventive measure were not taken. This measure is to switch the primary corona OFF and the primary corona assembly grid wire bias ON (There is no blank exposure; see page 3-22.)

When the copy (cassette) size is a non-default size or when the copier is in the REDUCE mode, the light from the pre-exposure lamp is directed to the photosensitive drum by way of the reflecting plate to prevent adhesion of toner; the blank exposure shutter is moved to open the exposure slit making use of the movement of the lens.

2. Movement of the Blank Exposure Mechanism

a. When the copier is switched ON, the lens first moves in the direction of enlargement and then returns to the home position. Next, the lens moves in the direction of reduction for blank exposure up to a point that corresponds to the cassette size. At the time, the blank solenoid goes ON, and the blank exposure shutter moves in the direction of the arrow by the force of the spring.

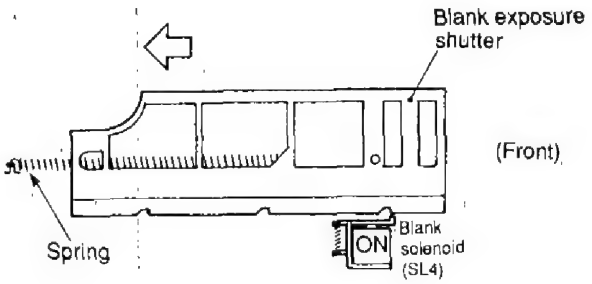

Figure 3-29

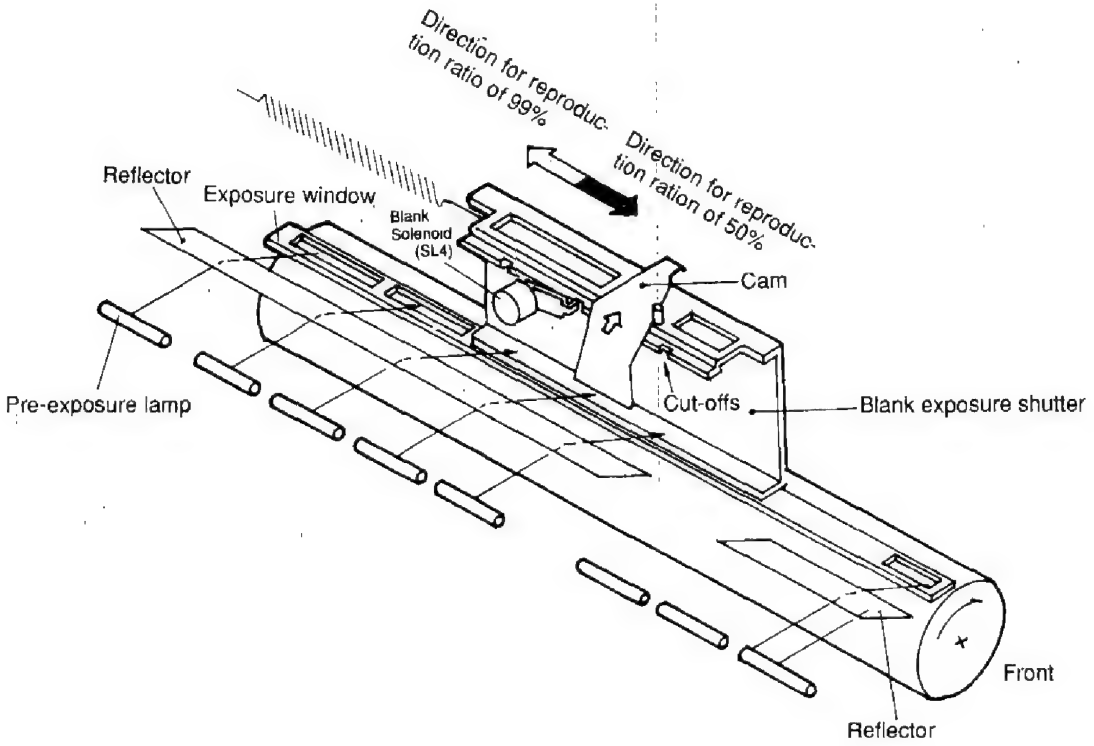

Figure 3-28

COPYRIGHT © 1992 CANON INC.
CANON NP-1550 REV.0 JAN. 1992 PRINTED IN JAPAN (IMPRIME AU JAPON)

b. The blank exposure shutter is moved by the cam attached to the bottom of the lens when the lens moves to the blank exposure position, which corresponds to the cassette size.

The blank solenoid (SL4) goes OFF as soon as the blank exposure shutter has moved to a cut-out to fix the shutter in position; cut-offs are provided for each cassette size. DIRECT and ENLARGE copies are made with the mechanism in this position.

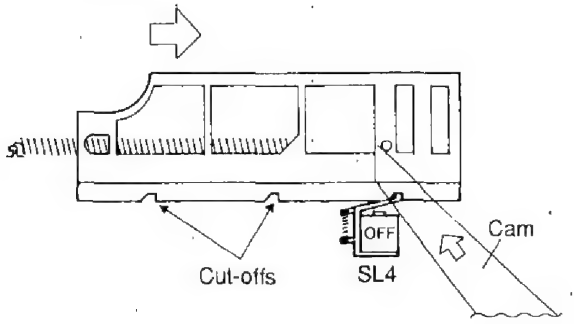

Figure 3-30

c. When the REDUCE mode is selected, the lens first returns to the home position and then moves to a position that corresponds to the selected reduction ratio. At the time, the blank exposure shutter is moved over a distance corresponding to the selected reduction ratio by the cam attached to the bottom of the lens to execute blank exposure.

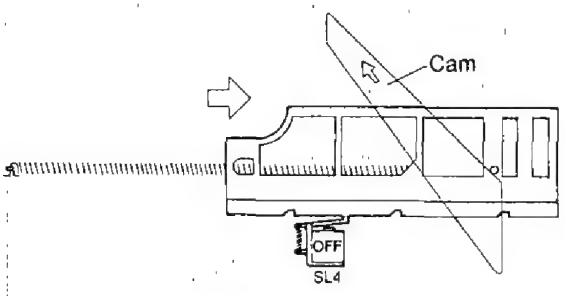

Figure 3-31

COPYRIGHT © 1992 CANON INC.
CANON NP-1550 REV.0 JAN. 1992 PRINTED IN JAPAN (IMPRIME AU JAPON)

IV. PAPER TRANSPORT SYSTEM

A. Paper Pick-up Assembly and Feeder

1. Outline

When the pick-up clutch solenoid (SL1) engages, main motor (M1) turns the roller, feeding a sheet of copy paper to the registration rollers. The number of rotations of the pick-up roller varies with the length of the copy paper.

The copy paper is fed by the registration rollers so that its leading edge is in line with the leading edge of the toner image on the photosensitive drum. It then passes through the transfer, separation, feed, fixing and delivery stages to the copy tray.

The copy paper is sensed by paper sensor (Q2 and Q5). If it does not reach or pass the sensors within the specified period, the DC controller PCB judges that a jam has occurred and causes the JAM indicator on the control panel to flash.

Cassette paper sensor (Q11) senses whether there is paper in the cassette. If there is not, the CASSETTE PAPER EMPTY signal (CPEP) becomes "0", causing the ADD PAPER indicator on the control panel to go ON.

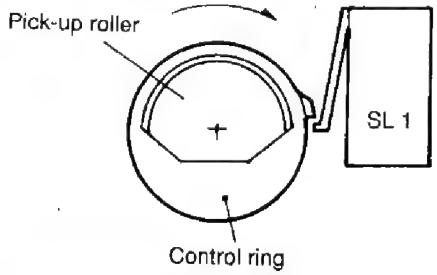

Figure 3-32 (rear)

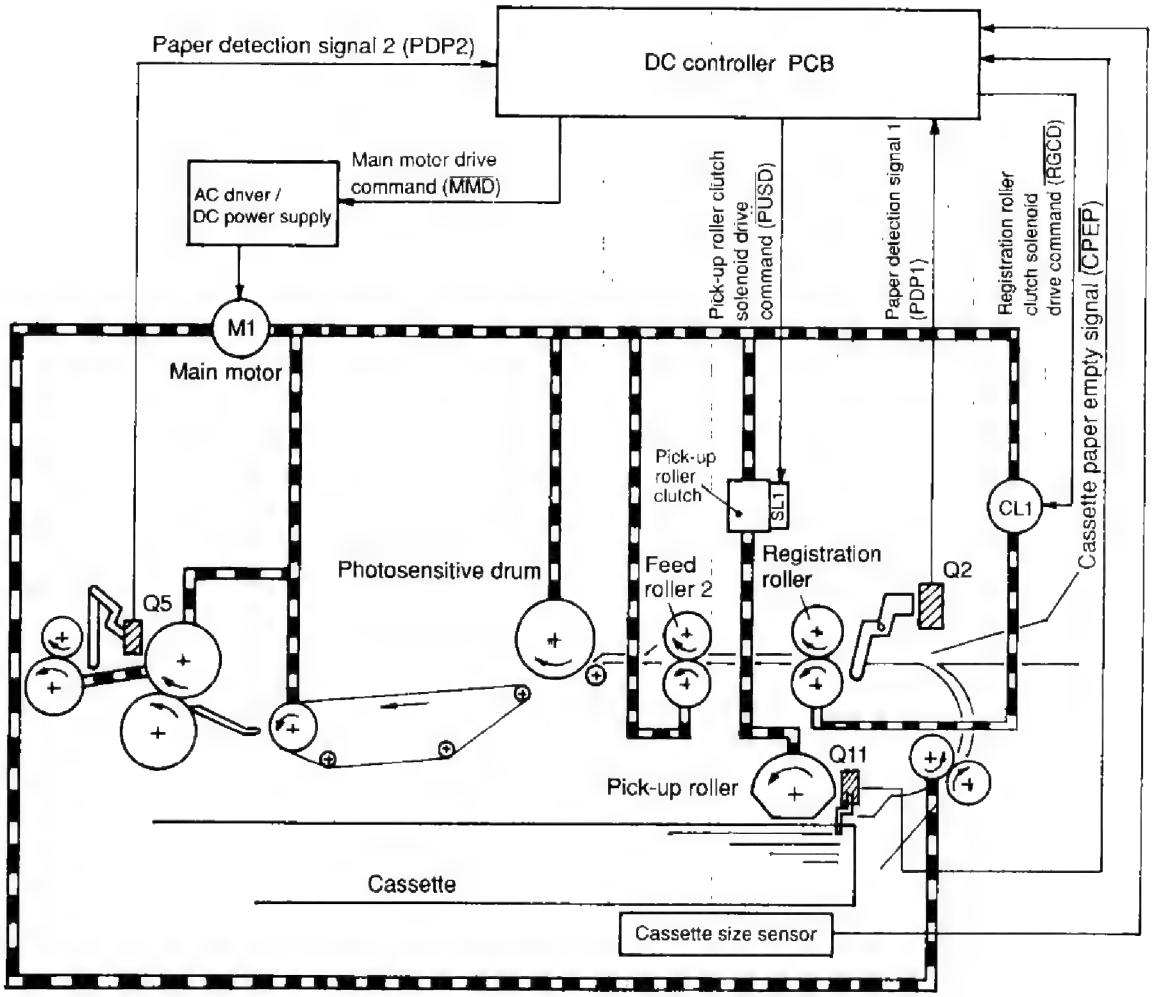

Figure 3-33

COPYRIGHT © 1992 CANON INC.
CANON NP-1550 REV.1 SEPT. 1992 PRINTED IN JAPAN (IMPRIME AU JAPON)

2. Pick-up and Feeder Operation

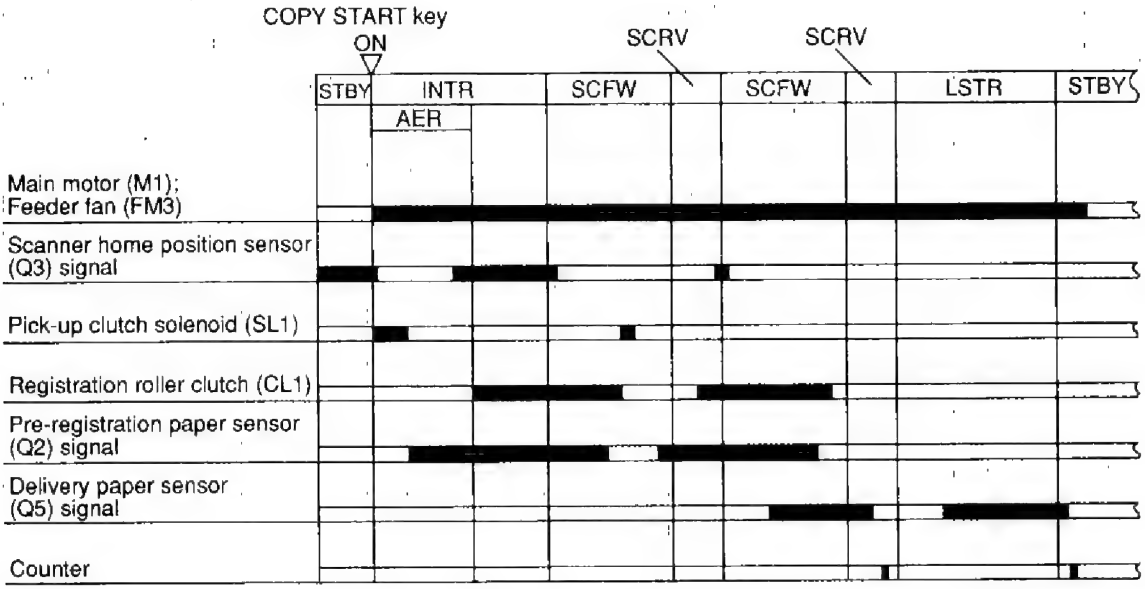

Figure 3-34

COPYRIGHT © 1992 CANON INC.
CANON NP-1550 REV.0 JAN. 1992 PRINTED IN JAPAN (IMPRIME AU JAPON)

3. Identifying the Cassette Size

The presence/absence of a cassette in the cassette holder and the size thereof are identified by four switches (CST1 through CST4) provided in each cassette holder. Based on the combinations of the switches which have been actuated, the microprocessor recognizes the presence/absence of a cassette as shown in Table 3-3 and, at the same time, determines where to reverse the scanner and how to control the blank shutter.

Arrangement / Paper size	CST 1 (left)	CST 2	CST 3	CST 4 (right)
No cassette	0	0	0	0
B5 (182x257)	0	0	0	1
U1 (184 to 190 x 265 to 267)	0	0	1	0
A4 (210x297)	0	0	1	1
B5R (257x182)	0	1	0	0
B4 (257x364)	0	1	0	1
A4R (297x210)	0	1	1	0
A3 (297x420)	0	1	1	1
U3 (190 to 203 x 266 to 268)	1	0	0	0
A5R (210x149)	1	0	0	1
U2 (203 to 220 x 267 to 355)	1	0	1	0
Letter 8.5"x11" (216x279)	1	0	1	1
STMT 5.5"x8.5" (140x216)	1	1	0	0
Legal 8.5"x14" (216x356)	1	1	0	1
Letter R 8.5"x11" (216x279)	1	1	1	0
Ledger R 11"x17" (279x432)	1	1	1	1

0: SW is OFF.
1: SW is ON.

(unit: mm)

Table 3-3

COPYRIGHT © 1992 CANON INC.
CANON NP-1550 REV.0 JAN. 1992 PRINTED IN JAPAN (IMPRIME AU JAPON)

4. Pick-Up from Multifeeder

The multifeeder pick-up roller is controlled by the main motor (M1).

When the multifeeder paper sensor (Q1) identifies copy paper and the COPY START key is pressed, the multifeeder clutch (CL2) goes ON and the pick-up roller starts to rotate to pick up the paper.

When the copy paper reaches the registration roller, the multifeeder clutch (CL2) goes OFF and the pick-up roller stops.

At the same time, the multifeeder solenoid (SL3) goes ON to transmit the drive of the main motor (M1) to the cam mechanism, thereby lowering the multifeeder holding tray to prevent dirt on the next copy paper in duplex.

The multifeeder solenoid (SL3) goes OFF as soon as the first copy paper moves past the pre-registration paper sensor (Q2); at the time, the multifeeder holding tray returns to the normal pick-up position.

Note:
The degree of arching for pick-ups from the multifeeder may be adjusted in the service mode (CH).

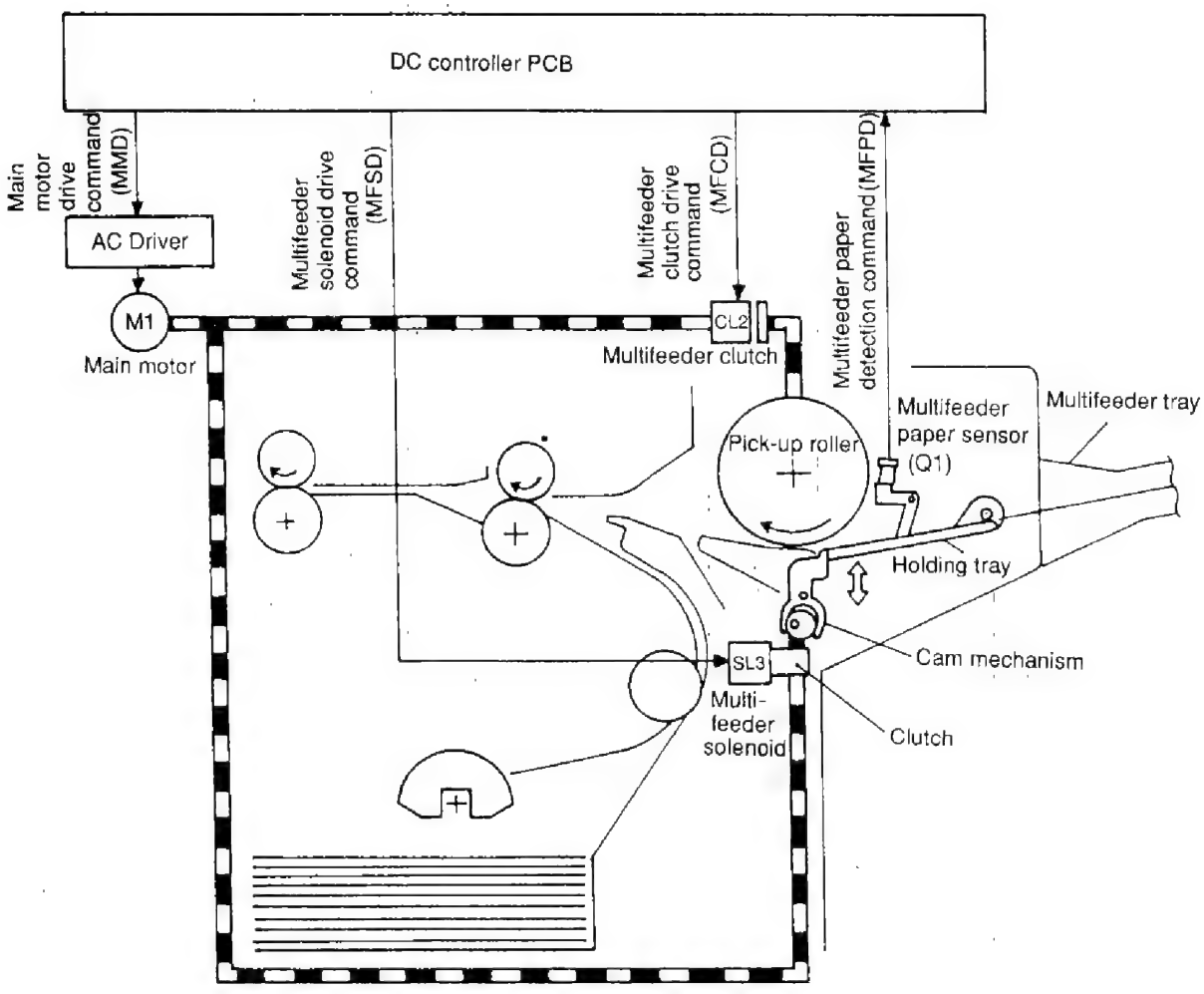

Figure 3-35

COPYRIGHT © 1992 CANON INC.
CANON NP-1550 REV.1 SEPT. 1992 PRINTED IN JAPAN (IMPRIME AU JAPON)

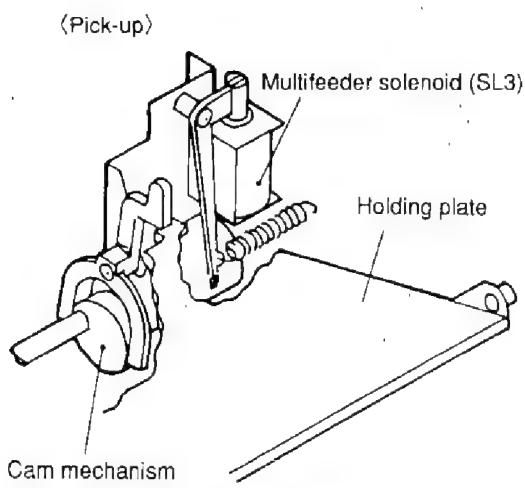

Figure 3-36

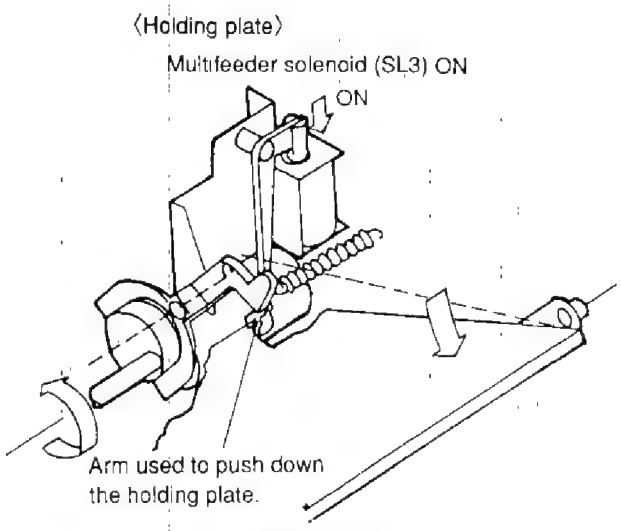

Figure 3-37

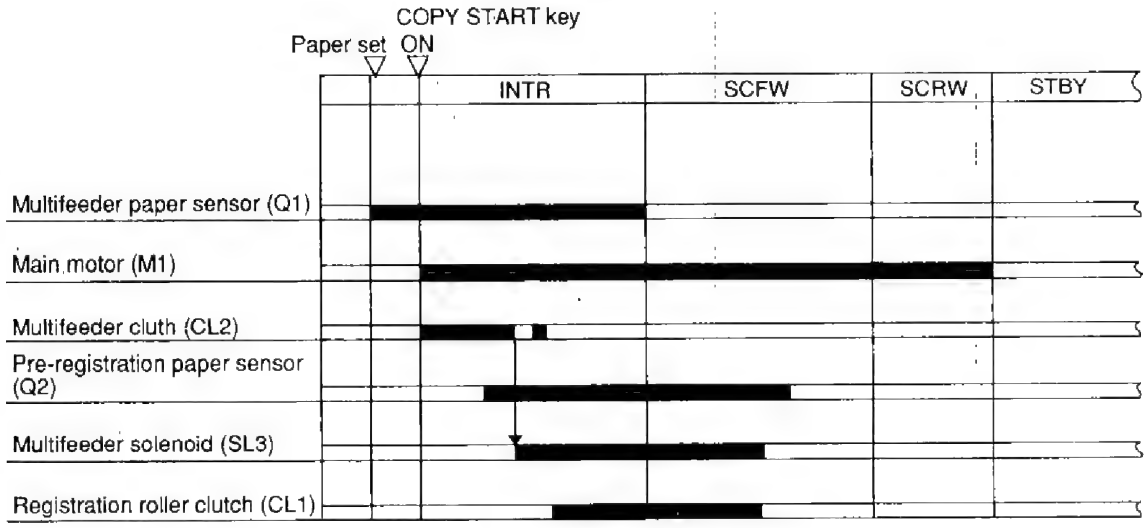

Figure 3-38

COPYRIGHT © 1992 CANON INC.
CANON NP-1550 REV.0 JAN. 1992 PRINTED IN JAPAN (IMPRIME AU JAPON)

B. Fixing and Paper Delivery Assemblies

1. Outline

The upper and lower rollers of the fixing assembly are driven by the main motor (M1).

The upper roller is heated by a single heater (H1:900W). When the surface temperature of the roller rises, the resistance of the thermistor (TH) falls, so the voltage of the signal that it produces FIXING ROLLER SURFACE TEMPERATURE signal (TH1) also falls.

Whether the voltage of TH1 (analog) is above or below a certain level at a given time determines if the microprocessor of the DC controller makes the HEATER DRIVE command (HTRD) "1" or "0".

The NP-1550 is provided with the following three protection mechanisms:

• The microprocessor monitors the voltage of TH1 and indicates 'E000' or 'E001' in response to an error, i.e., $\overline{\text{ACOFF}}$ goes '0' to turn the relay (S105) OFF, thereby cutting the power to the fixing heater.

• The fixing roller error detection circuit monitors the voltage of TH1 and, when it drops below 0.9V (equivalent of 215°C), turns HTRD OFF.

• The thermo switch (TS1) goes OFF when the temperature of its inside rises to 230°C to cut off the power to the fixing heater.

Note:
The thermo switch (TS1) cannot be used after its contact has opened; the contact will not return to its normal state at room temperature.

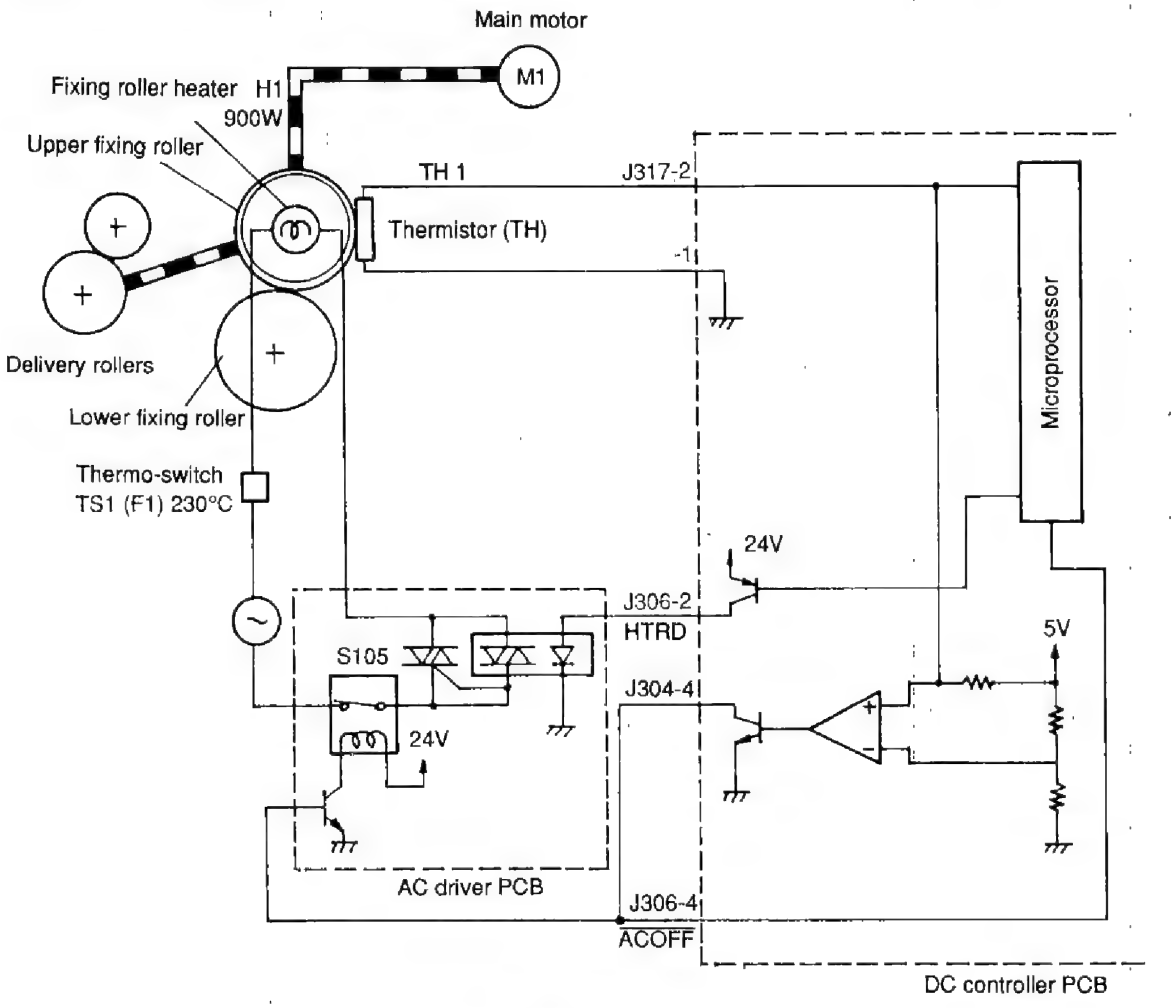

Figure 3-39

COPYRIGHT © 1992 CANON INC.

2. Operation of Fixing Assembly Temperature Control System

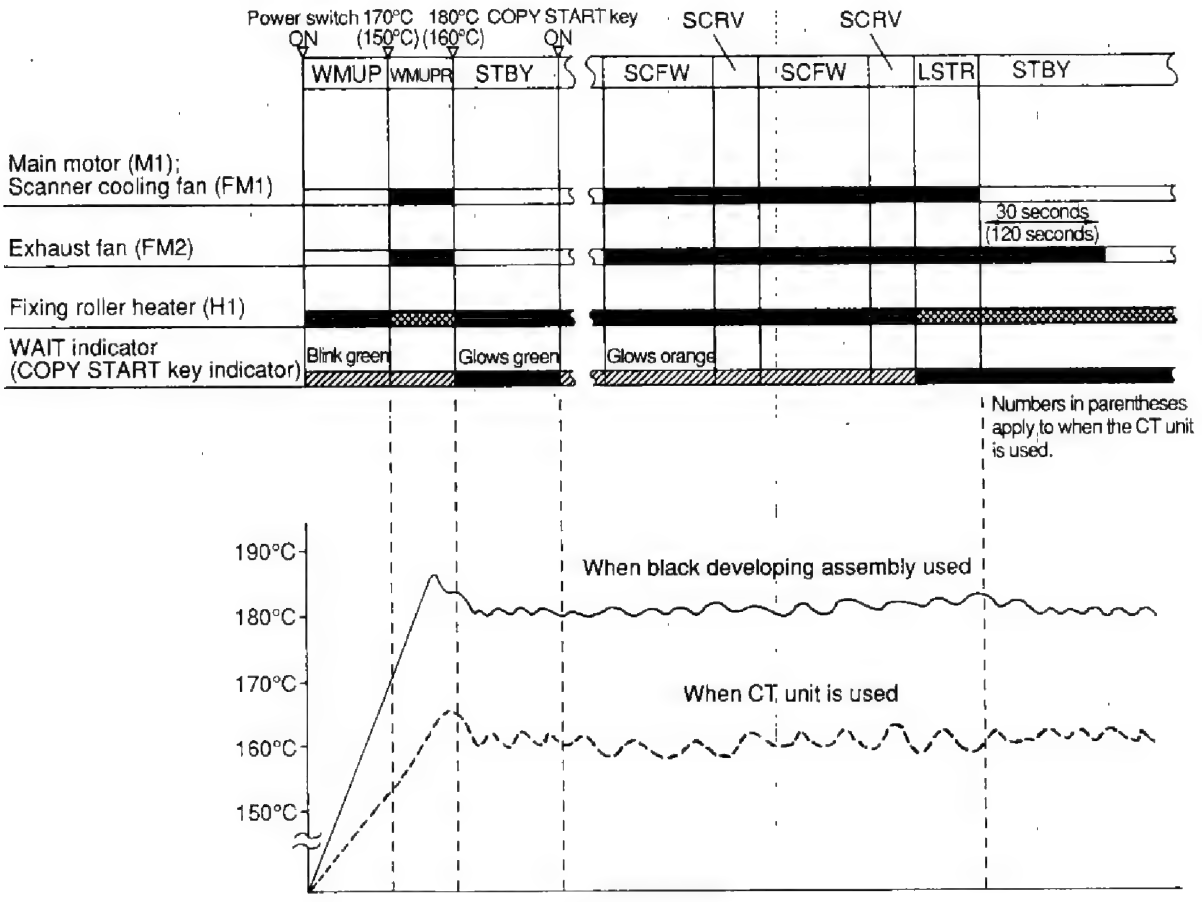

Figure 3-40

Note:
When the preheat mode starts in response to a press on the STANDBY key, the fixing temperature is controlled to 150°C.

COPYRIGHT © 1992 CANON INC.
CANON NP-1550 REV.1 SEPT. 1992 PRINTED IN JAPAN (IMPRIME AU JAPON)

C. Jam Detection

The copier has two sensors to sense whether copy paper is being fed normally.

- Pre-registration paper sensor (Q2)
- Delivery paper sensor (Q5)

Paper jams can be identified by the microprocessor by reading signals from the sensors at predetermined times to check if paper is at or not at a sensor at that time, and thus identify if the paper is moving through the copier correctly.

If a jam occurs, the copier memorizes the number of copies that have not yet been made and also the copier settings. This information is stored in the copier, even if the power is cut off by opening the front door in order to reset the copier.

The microprocessor identifies a jam in any of the following four cases. Also, the microprocessor judges that there is a jam if one of the sensors detects paper when the power is switched ON.

1. Pick-up assembly delay jam

If the copy paper does not reach the paper sensor of the pick-up assembly within a specified period after paper pick-up-starts, the microprocessor will judge that a pick-up delay jam has occurred, and immediately stop the operation of the copier. Also, the JAM indicator on the control panel will flash and a segment of the PAPER SELECT/JAM indicator will go ON.

a. Multifeeder

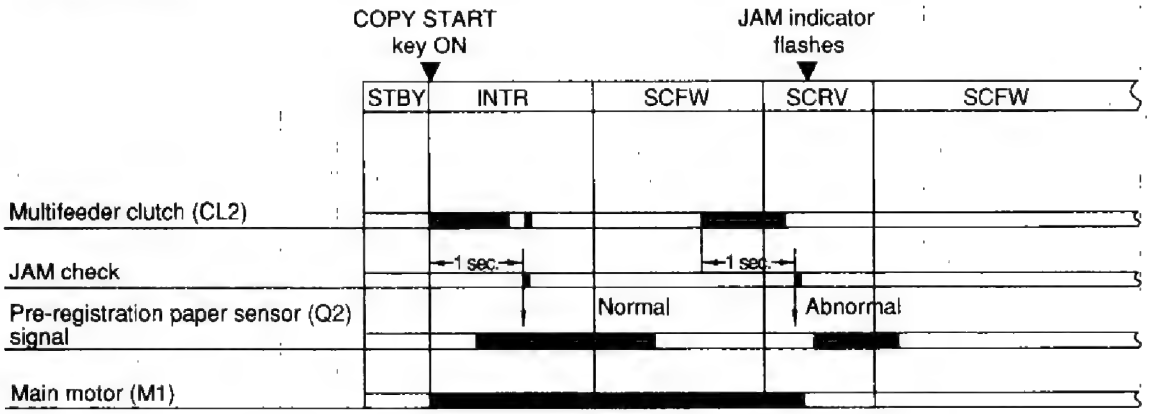

Figure 3-41 (Multifeeder pick-up assembly delay jam)

b. Cassette

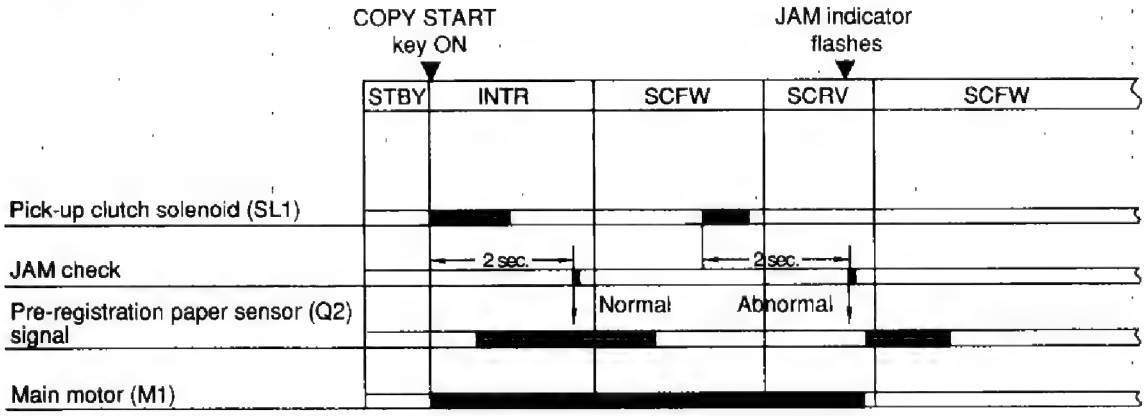

Figure 3-42 (Cassette pick-up assembly delay jam)

COPYRIGHT © 1992 CANON INC.
CANON NP-1550 REV.1 SEPT. 1992 PRINTED IN JAPAN (IMPRIME AU JAPON)

2. Delivery assembly stationary jam

If the copy does not pass the delivery assembly paper sensor within the specified period after the registration roller clutch (CL1) operates, the microprocessor will judge that a delivery unit stationary jam has occurred, and immediately stop the operation of the copier. Also, the JAM indicator on the control panel will flash and a segment of the PAPER SELECT/JAM indicator will go ON.

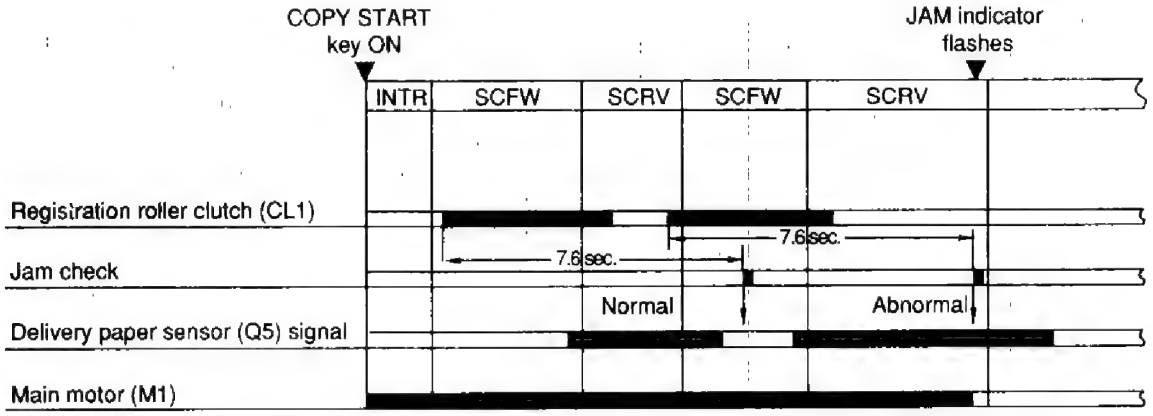

Figure 3-43 Delivery assembly stationary jam (A4 size)

3. Delivery assembly delay jam

If the copy does not reach the delivery assembly paper sensor within the specified period after the registration roller clutch (CL1) has operated, the microprocessor will judge that a delivery assembly delay jam has occurred, and immediately stop the operation of the copier. Also, the JAM indicator on the control panel will flash and a segment of the PAPER SELECT/JAM indicator will light.

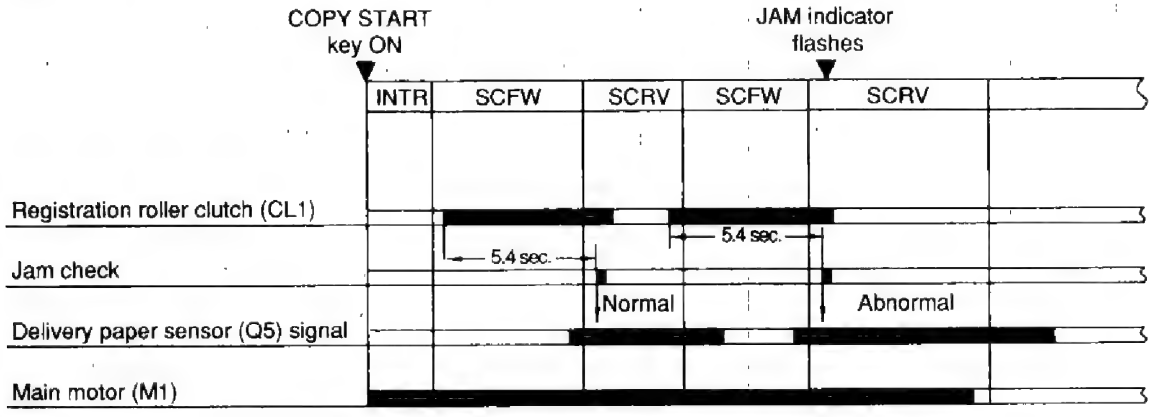

Figure 3-44 Delivery assembly stationary jam (A4 size)

COPYRIGHT © 1992 CANON INC.
CANON NP-1550 REV.1 SEPT. 1992 PRINTED IN JAPAN (IMPRIME AU JAPON)

V. POWER SUPPLY

A. AC Driver DC Power Supply

1. Outline

The AC driver/DC power supply PCB is supplied with AC power when the door switch (SW2) and the power switch (SW1) go ON.

On the other hand the DC power supply supplies the main body with 36 VDC, 24 VDC, and 5 VDC.

36 VDC is used to drive the scanner motor (M2), and 24 VDC is used to drive fans and solenoids as well as high-voltage transformer (HVT); 5 VDC is used by the sensors and ICs on the DC controller PCB.

2. DC Power Supply Circuit

The AC voltage is lowered to 32 V by the external transformer (T1) and sent to the DC power supply/AC driver PCB.

The lowered voltage is then rectified to 36 VDC and converted to 24 VDC and 5 VDC by two regulators.

These regulators serve to prevent overcurrent and help maintain the output voltage against fluctuations in the voltage of the power supply.

The DC power supply/AC driver PCB is equipped with a zero-cross (ZXDP) signal generator circuit; the circuit generates zero-cross signals and sends them to the DC controller for control of the fixing heater temperature and the copying sequence.

'E261' is indicated on the control panel when an error is identified in the zero-cross (ZXDP) signal.

3. AC Driver Circuit

The DC power supply/AC driver PCB has AC driver circuit and, based on the signals from the DC controller PCB, controls the SSRs and relays on the DC power supply/AC driver PCB to drive AC loads.

If the DC controller PCB detects an error, the $\overline{\text{ACOFF}}$ signal is generated to turn the relay (S105) on the DC power supply/AC driver PCB OFF, thereby shutting off the power to the CVR and the fixing heater.

When the power is shut off, switch the copier OFF, and identify the cause; then, switch the copier OFF.

Note that repeated short-circuiting and resetting can cause the built-in fuse to blow.

COPYRIGHT © 1992 CANON INC.
CANON NP-1550 REV.1 SEPT. 1992 PRINTED IN JAPAN (IMPRIME AU JAPON)

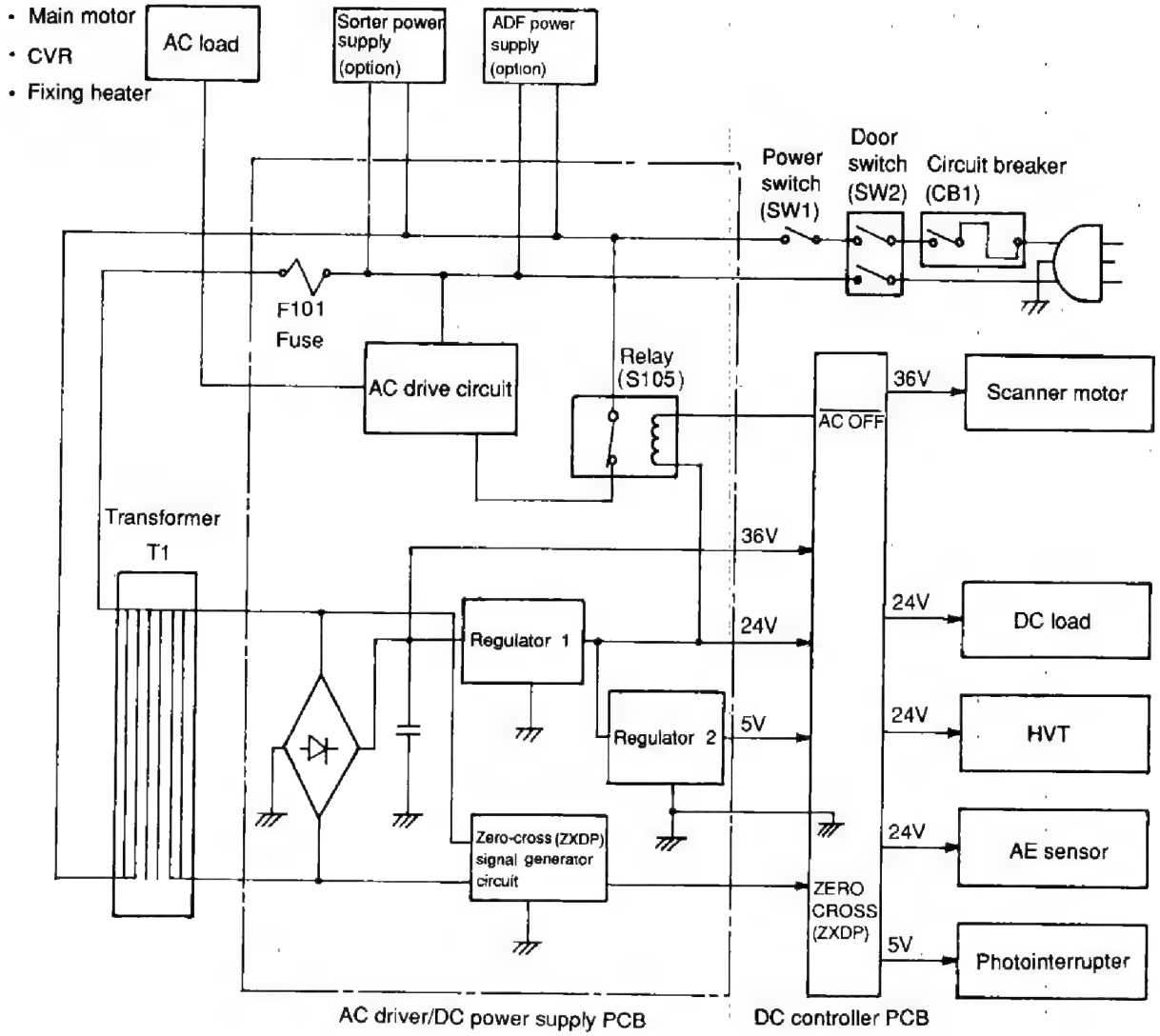

Figure 3-45

COPYRIGHT © 1992 CANON INC.
CANON NP-1550 REV.1 SEPT. 1992 PRINTED IN JAPAN (IMPRIME AU JAPON)

VI. SERVICE MODE

A. Outline

The NP-1550's service mode allows the following:

- checking the operation of some switches and LEDs.
- changing data in EEPROM

B. Using the Service Mode

1) Detach the VR cover from the rear of the left cover.
2) Check that the COPY START key is glowing green.
3) Press the service switch (SW300) on the DC controller PCB.
4) Check that ' C0 ' is indicated.
5) Enter the No. of the desired service mode using the NUMERIC keypad on the control panel.
   - For example, the display indicates ' C3 ' in response to a press on '3'.
6) Press the SORT/GROUP key.
7) Operate as follows as necessary.

〈 Mode No. C0 , C11 , or C14 〉

A press on the SORT/GROUP key executes the selected mode; a second press stops the execution.

〈 Mode No. C1 through C6 and C15 〉

Change the setting using the NUMERIC keypad, and press the SORT/GROUP key; the setting will be stored in EEPROM.

〈 Mode No. C18 〉

Press the AE key twice, and check 'CEE' is indicated on the control panel; then, press the SORT/GROUP key.

8) Press the service switch (SW300) to leave the service mode.

COPYRIGHT © 1992 CANON INC.
CANON NP-1550 REV.1 SEPT. 1992 PRINTED IN JAPAN (IMPRIME AU JAPON)

C. Guide to Service Mode

Mode No.	Display	Default Settings	Remarks
C0	AE sensor output	—	Use it when adjusting the AE reference point/slope; see p. 3-46.
C1	AE adjustment	25 0 to 50	A higher setting causes copies of newspaper to become lighter; see 3-46. (unit: 0.1V)
C2	Leading-edge registration adjustment (registration roller ON timing adjustment)	32 0 to 63	A higher setting delays the registration roller ON timing. (unit: 0.25 mm)
C3	Leading-edge nonimage width adjustment (grid bias switch timing adjustment)	32 0 to 63	A higher setting increases the leading edge non-image width. (unit: 0.25 mm)
C4	Degree of arching (multifeeder pick-up; clutch off timing adjustment)	32 0 to 63	A higher setting delays the multifeeder clutch OFF timing. (unit: 0.25 mm)

COPYRIGHT © 1992 CANON INC.
CANON NP-1550 REV.0 JAN. 1992 PRINTED IN JAPAN (IMPRIME AU JAPON)

Mode No.	Display	Default / Settings	Remarks
C5	Leading edge registration adjustment (2nd page in page separation; registration roller ON timing adjustment)	32 0 to 63	A higher setting advances the registration roller ON timing. (unit: 0.25 mm)
C6	Leading edge non-image width adjustment (2nd page in page separation; grid bias switch timing adjustment)	32 0 to 63	A higher setting increases the leading edge non-image width. (unit: 0.25 mm)
C11	Cassette size	—	The size of the cassette is indicated in code in response to the output of the activated cassette switch; see Table 3-4.
C14	LED ON check (on cotroll panel)	—	
C15	AE mode setting	1 0 or 1	Selects/Deselects the AE mode at time of power-on: 1, AE ON; 2, AE OFF.
C16	For factory adjustment	0 0 to 5	Do not change the setting; i.e., keep it '0'.
C18	EEPROM reset		Initializes EEPROM on the DC controller PCB.

COPYRIGHT © 1992 CANON INC.
CANON NP-1550 REV.1 SEPT. 1992 PRINTED IN JAPAN (IMPRIME AU JAPON)

Code	Cassette size	Code	Cassette size
0	No cassette	9	U1
1	B5	10	U2
2	U3	11	Letter
3	A4	12	STMT-R
4	B5-R	13	Legal
5	B4	14	Letter-R
6	A4-R	15	11 x17
7	A3	16	Multifeed
8	A5-R		

Table 3-4 Cassette Size Codes

COPYRIGHT © 1992 CANON INC.
CANON NP-1550 REV.0 JAN. 1992 PRINTED IN JAPAN (IMPRIME AU JAPON)

D. Adjustment

1. Image leading edge non-reproduced area

There is a white strip on the bottom of the copyboard glass in the position shown in the figure below. If bias is being applied to the grid of the primary corona while the scanner is passing the white strip, the leading edge of the copy will be reproduced blank. If the leading edge non-image width is outside the standards, adjust the timing at which the grid bias goes from OFF to ON in the service mode (☐☐).

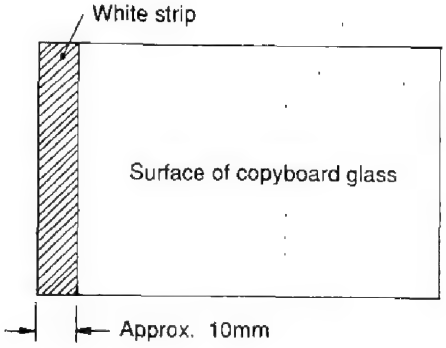

Figure 3-46

The standard image leading edge non-reproduced area on a DIRECT copy of a test sheet is 2.0 ±1.5 mm.



Figure 3-47

A higher setting (☐☐) increases the leading edge non-image width; in units of 0.25 mm.

COPYRIGHT © 1992 CANON INC.

2. AE adjustment

Make the following adjustments when the AE sensor or the DC controller PCB has been replaced.

1) Remove the potentiometer cover at the back of the left cover.
2) Set the power switch ON.
   • Wait until the WAIT period has ended.
3) Place an NB-3 or NA-2 test sheet on the copyboard, and lower the copyboard cover.
4) Press switch SW 300 on the DC controller PCB.
   • " C0 " will appear on the COPY COUNT/RATIO indicator on the control panel.
   • If " C0 " does not appear, press the "0" number key on the control panel so that " C0 " appears.
5) Press the SORT/GROUP key on the control panel.
   • The scanner will move forward to the AE measuring position, then the scanning lamp will go ON. (Note)
6) Adjust VR301 on the DC controller so that "22" appears on the COPY COUNT/RATIO indicator.

For reference:

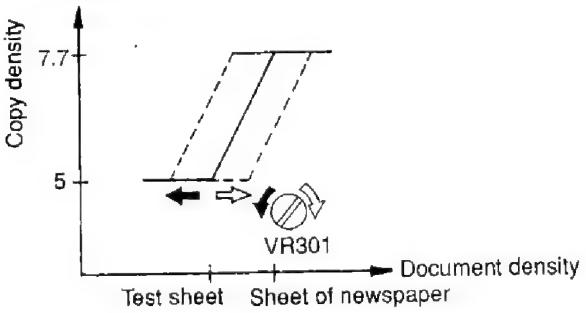

Figure 3-48

7) Press the SORT/GROUP key.
   • The scanning lamp will go OFF, and the scanner will return to the HOME position.
8) Remove the test sheet, place a sheet of newspaper on the copyboard, and lower the copyboard cover.
9) Press the SORT/GROUP key.
   • The copier will perform the same operations as described in step 5).
10) Make a note of the numerical value displayed on the COPY COUNT/RATIO indicator.
11) Press the SORT/GROUP key.
   • " C0 " will appear on the COPY COUNT/RATIO indicator.
12) Press the "1" number key.
   " C1 " will appear on the COPY COUNT/RATIO indicator.
13) Enter the value recorded in step 10) using the NUMERIC keypad.

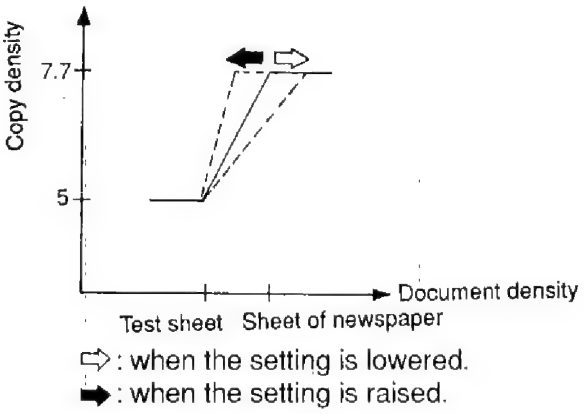

Figure 3-49

COPYRIGHT © 1992 CANON INC.
CANON NP-1550 REV.1 SEPT. 1992 PRINTED IN JAPAN (IMPRIME AU JAPON)

VII. SELF DIAGNOSIS

The DC controller PCB has a microprocessor that diagnoses the functions of the copier (particularly the sensors) at appropriate intervals. If this microprocessor detects an abnormality, it will display the type of the abnormality on the indicator on the control panel.

The table below shows the various fault codes, their meaning, and the corresponding detection timing.

Example of E000 code indication:
E ⇔ 000 light alternately.

Code displayed	Main cause	Fault criteria
E000	Thermistor (TH1), Fixing roller heater (H1), AC driver/DC power supply PCB, DC controller PCB, operation of thermoswitch	• If the temperature of the fixing rollers after 40 seconds is virtually the same as when the copier is turned ON. (This indication does not appear if warm-up is completed within 30 seconds.) • If the temperature of the fixing roller drops below 100°C for 0.1 seconds or longer after warm-up is completed.
E001	Defective thermistor (TH1), AC driver/DC power supply PCB, Fixing roller heater (H1),or DC controller PCB	If the temperature remains 220°C or higher for 0.1 seconds or longer.
E030	Counter, DC controller PCB	If the break signal is emitted continuously for 0.1 seconds or more the counter is not being driven.
E202	Scanner HOME position sensor (Q3), scanner motor (M2), motor controller PCB, or DC controller PCB	1. If the scanner is not at the HOME position (SCHP = 0) when the COPY START key is pressed. If the scanner does not return to the HOME position (SCHP remains 0) within 15 seconds (A4 size) after it starts to reverse. 2. If the scanner is in the HOME position (SCHP = 1) when the COPY START key is pressed. • If the scanner does not leave the HOME position (SCHP remains 1) within 1.5 second after it starts to advance. • If the scanner does not return to the HOME position (SCHP remains 0) within 1 second after it leaves the HOME position (SCHP = 0).
E210	Lens home position sensor (Q4), or DC controller PCB	• If the lens does not return to the HOME position (LHP remains 0) within 2.5 seconds. • If LHP remains 1 for at least 4 seconds
E220	Lamp regulater Scanning lamp	At the lamp ON timing, LAON=1 is not true. At the lamp OFF timing, LAON=0 is not true.
E245	DC controller PCB	If the data in EEPROM has been rewritten more than specified.
E261	AC driver/DC power supply, DC controller PCB	If the mains frequency is out of the allowed range.
E400	ADF controller PCB, ADF power supply, or DC controller PCB	If ADF remains 0 for 12 seconds or longer.
E500	Sorter controller PCB or DC controller PCB	• If the copier does not communicate with the sorter for at least 12 seconds. • If the SORTER STANDBY signal does not return within 35 seconds after the BCR signal is outputted.

COPYRIGHT © 1992 CANON INC.
CANON NP-1550 REV.0 JAN. 1992 PRINTED IN JAPAN (IMPRIME AU JAPON)

Note:
After self diagnosis has been executed, the copier may be reset by switching it OFF and then ON unless 'E000' or 'E001' is indicated on the display.

This consideration is made to prevent the user from resetting the copier when the fixing assembly has a serious fault (open thermistor or others) that can damage the assembly.

Rest the copier as follows if 'E000' or 'E001' is indicated:

1) Detach the rear cover
2) Press the service switch (SW300) on the DC controller.
3) Check that 'P' and 'OFF' alternate on the control panel COPY COUNT/RATIO indicator.
4) Switch the copier OFF.

COPYRIGHT © 1992 CANON INC.
CANON NP-1550 REV.1 SEPT. 1992 PRINTED IN JAPAN (IMPRIME AU JAPON)

I. EXTERNALS

A. External Covers

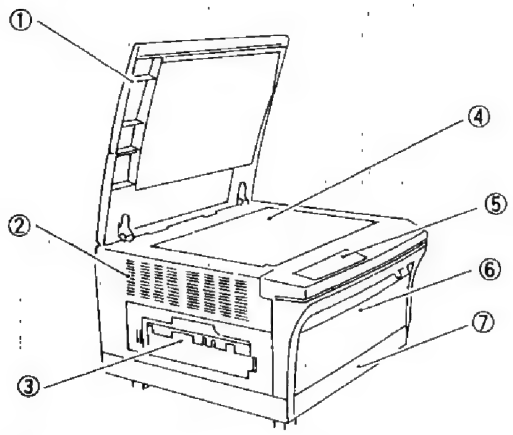

① Copyboard cover
② Left cover
③ Delivery cover
④ Copyboard glass
⑤ Control panel
⑥ Front door
⑦ Cassette

Figure 4-1

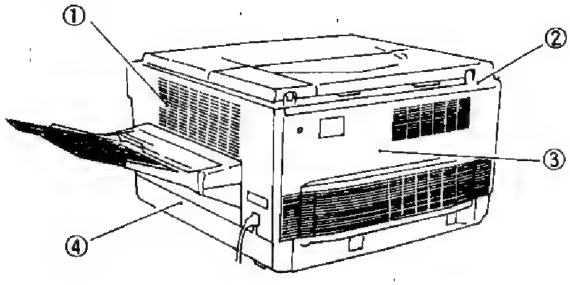

① Right cover
② Rear upper cover
③ Rear cover
④ Right door

Figure 4-2

Detach the covers as necessary when cleaning, checking, or repairing the inside of the machine, covers that can be detached by mere removal of the fixing screws are omitted from the discussions.

Note:
Make sure that the copier's doors are closed before detaching the copyboard glass. Use alcohol when cleaning the glass; do not use solvent, or the white paint along the right edge of the glass may melt.

1. Detaching the Inside Cover

1) Remove the two screws that hold the front cover bands in place.
2) Remove the screw, and detach the fixing assembly knob.
3) Remove the four mounting screws, and detach the inside cover.

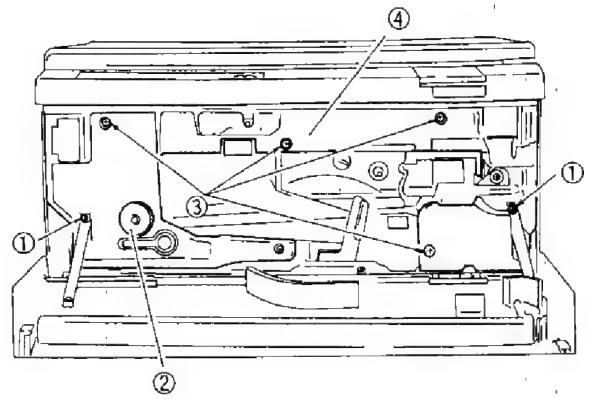

① Front cover bands
② Fixing assembly knob
③ Inside cover mounting screw
④ Inside cover

Figure 4-3

COPYRIGHT © 1992 CANON INC.
CANON NP-1550 REV.0 JAN. 1992 PRINTED IN JAPAN (IMPRIME AU JAPON)

2. Detaching the Right Door

1) Open the right door.
2) Disengage the two hooks.

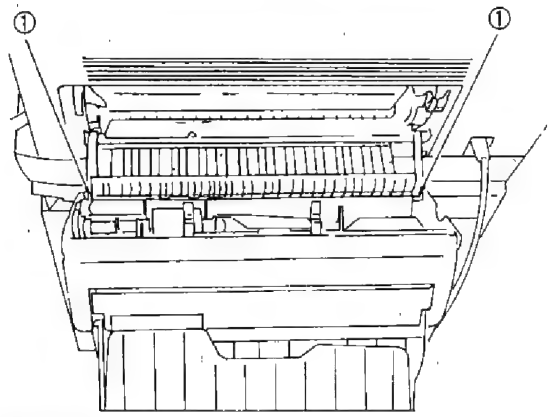

① Hook

Figure 4-4

3) Detach the right door as if to lift it out of the cut-offs.

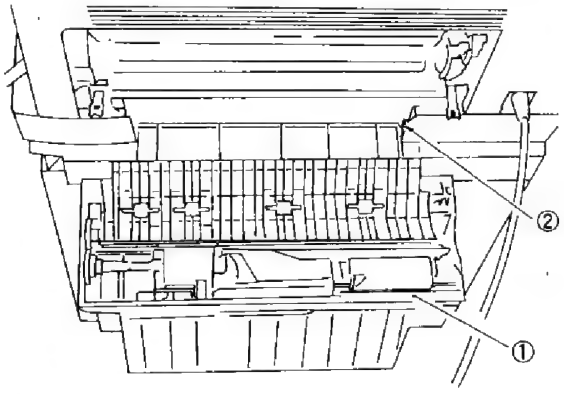

① Right door ② Cut-offs

Figure 4-5

B. Control Panel

1. Detaching the control panel

1) Detach the inside cover.
2) Remove the five screws, and lift the control panel toward the front to detach.

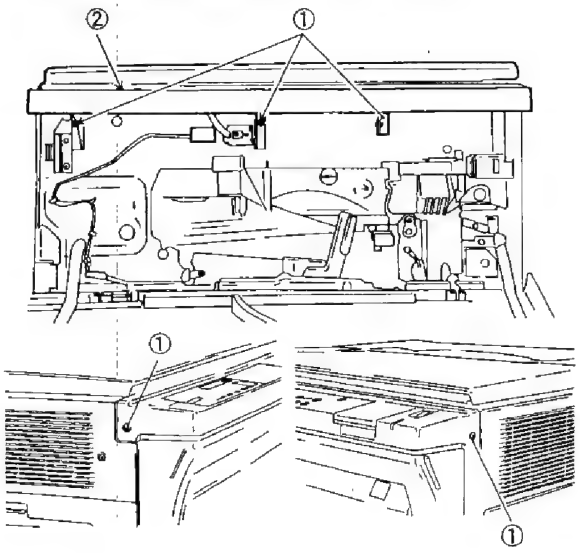

① Screws ② Control panel

Figure 4-6

3) Lift the control panel to the front, and turn it over.

Note:
Do not force the control panel, or the harness connected to it may snap off.

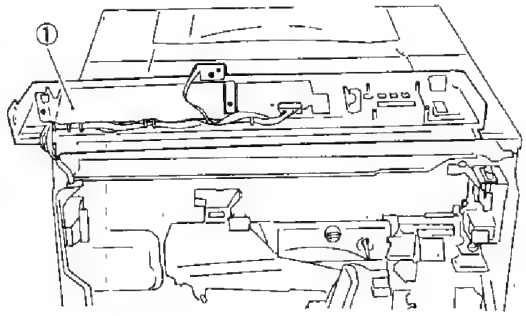

① Control panel

Figure 4-7

COPYRIGHT © 1992 CANON INC.
CANON NP-1550 REV.1 SEPT. 1992 PRINTED IN JAPAN (IMPRIME AU JAPON)

C. Copyboard Cover

1. Replacing the Copyboard Sheet

The copyboard sheet is attached to the copyboard cover using adhesive tape and can be detached by pulling at its corner.

After replacement, make sure to even out the sheet for even contact.

D. Fans

1. Outline

The NP-1550 is equipped with three fans to circulate the air inside the machine, thereby preventing the machine from overheating.

Each fan serves the following function.

Scanner cooling fan (FM1): cools the scanner feeder fan
Exhaust fan (FM2): discharges air to the outside.
Feeder fan (FM3): transports copy paper

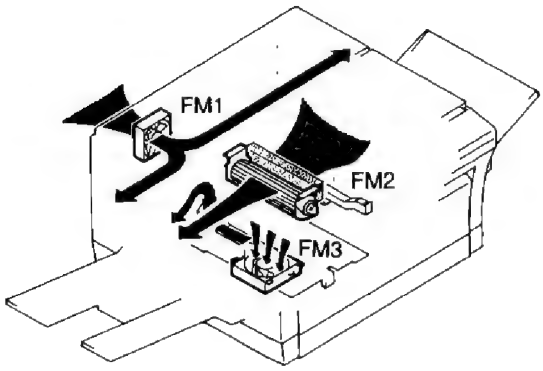

Figure 4-8

2. Scanner Cooling Fan (FM1)

1) Detach the rear cover.
2) Cut off the harness band as necessary.
3) Disconnect the connector (J309) from the DC controller PCB.
4) Remove the three screws, and detach the scanner cooling fan.

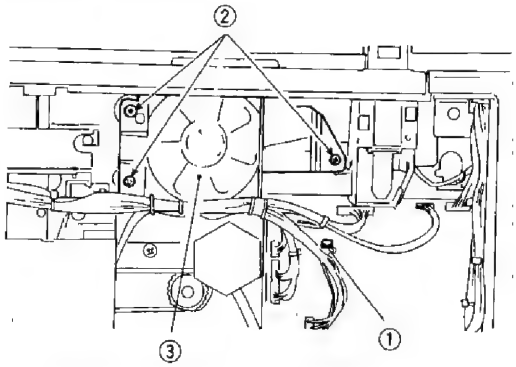

① Connector (J309) ② Screws
③ Scanner cooling fan

Figure 4-9

3. Exhaust Fan (FM2)

1) Open the front door, and detach the drum unit.
2) Detach the rear cover.
3) Disconnect the connector (J311), and remove the two screws from the DC controller PCB; then, shift the DC controller PCB.
4) Remove the two screws from the rear of the exhaust fan.

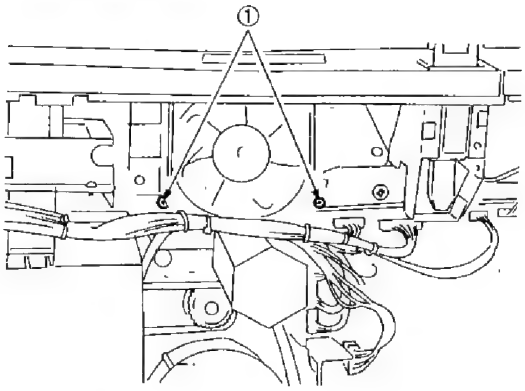

① Screws

Figure 4-10

COPYRIGHT © 1992 CANON INC.

5) Detach the ozone filter and the inside cover; then, lower the feeder assembly.
6) Hold the exhaust fan assembly on its bottom, and remove the two screws; then, pull the assembly to the front.

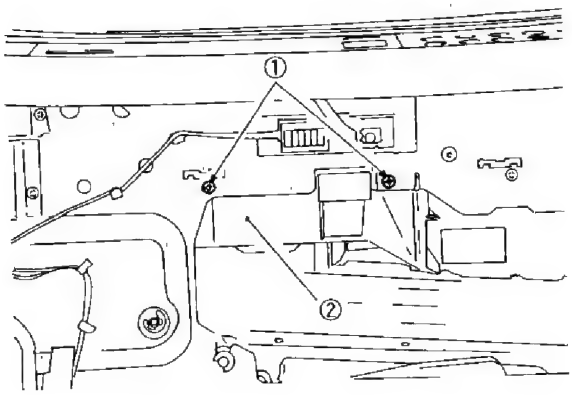

① Screws ② Exhaust fan

Figure 4-11

4. Feeder Fan (FM3)

See p.4-17.

COPYRIGHT © 1992 CANON INC.
CANON NP-1550 REV.0 JAN. 1992 PRINTED IN JAPAN (IMPRIME AU JAPON)

II. DRIVE SYSTEM

A. Lens Drive Assembly

The unit is adjusted at the factory with high precision using special tools. Do not remove parts or loosen screws other than those discussed.

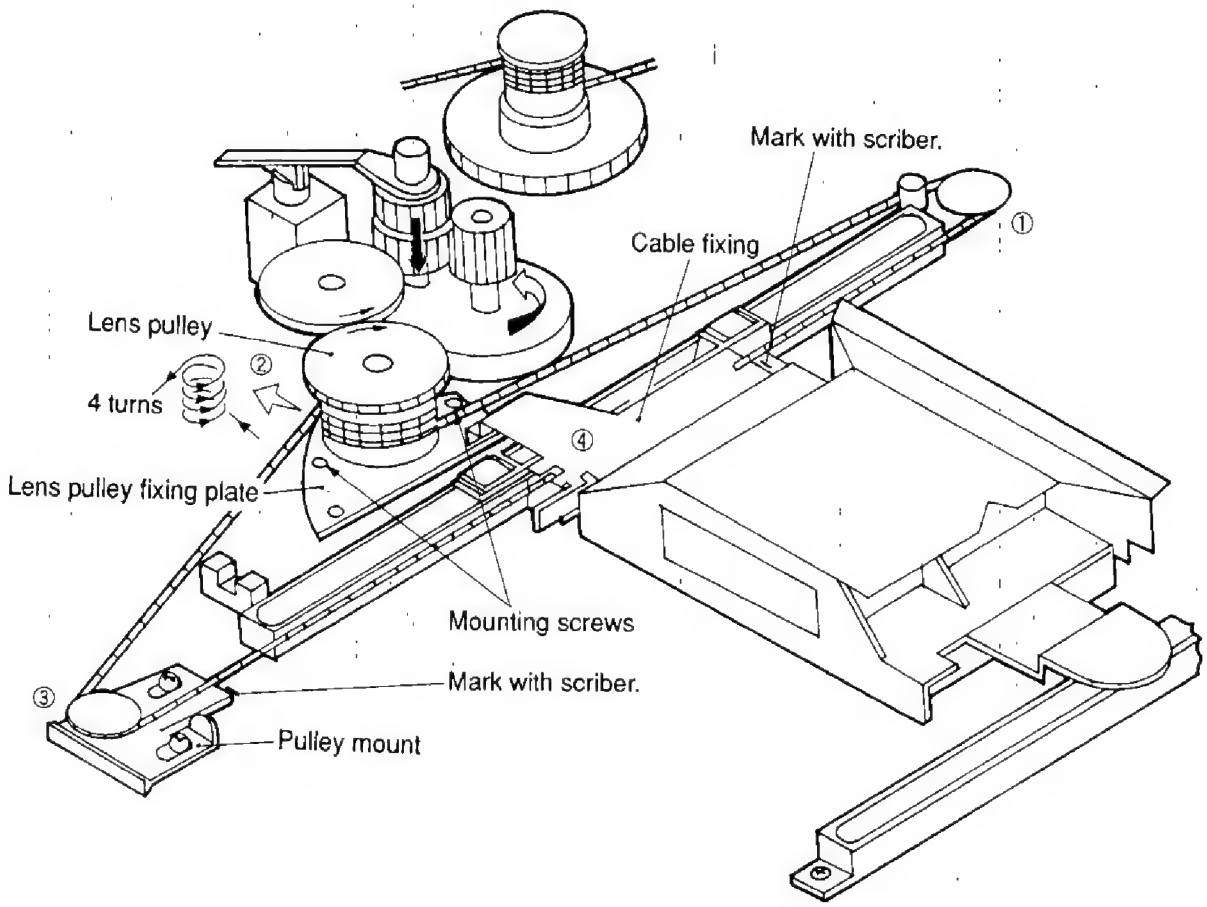

Figure 4-12

COPYRIGHT © 1992 CANON INC.
CANON NP-1550 REV.0 JAN. 1992 PRINTED IN JAPAN (IMPRIME AU JAPON)

1. Detaching the Lens Cable

1) Detach the copyboard cover, copyboard glass, lens cover, rear cover, and upper rear cover.
2) Remove the three screws shown in Figure 4-13, and detach the upper frame.

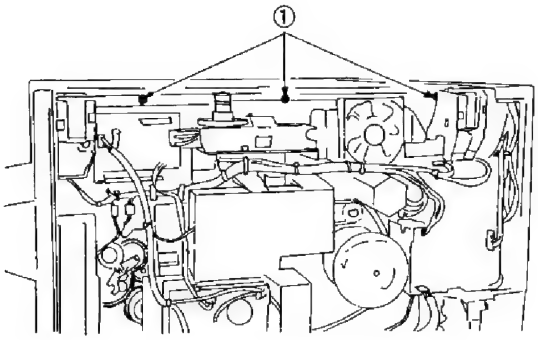

① Screws

Figure 4-13

3) Mark the position of the pulley mount and the cable mount using a scriber.
4) Remove the two screws that hold the pulley mount in place.
5) Detach the cable.

2. Routing the Lens Cable

1) Remove the tow screws that hold the lens pulley mount in place, and detach the lens pulley; see Figure 4-12.

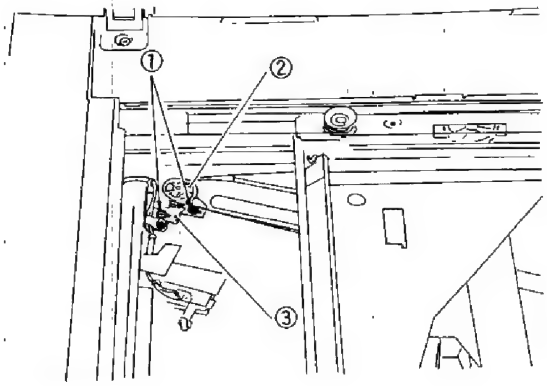

① Screws
② Pulley
③ Pulley mount

Figure 4-14

2) Wind the lens cable around the lens pulley as shown in Figure 4-12; then, fix it using two screws.
3) Shift the pulley mount to the position marked with a scriber, and fix it in place using two screws.

COPYRIGHT © 1992 CANON INC.
CANON NP-1550 REV.0 JAN. 1992 PRINTED IN JAPAN (IMPRIME AU JAPON)

B. Scanner Drive Assembly

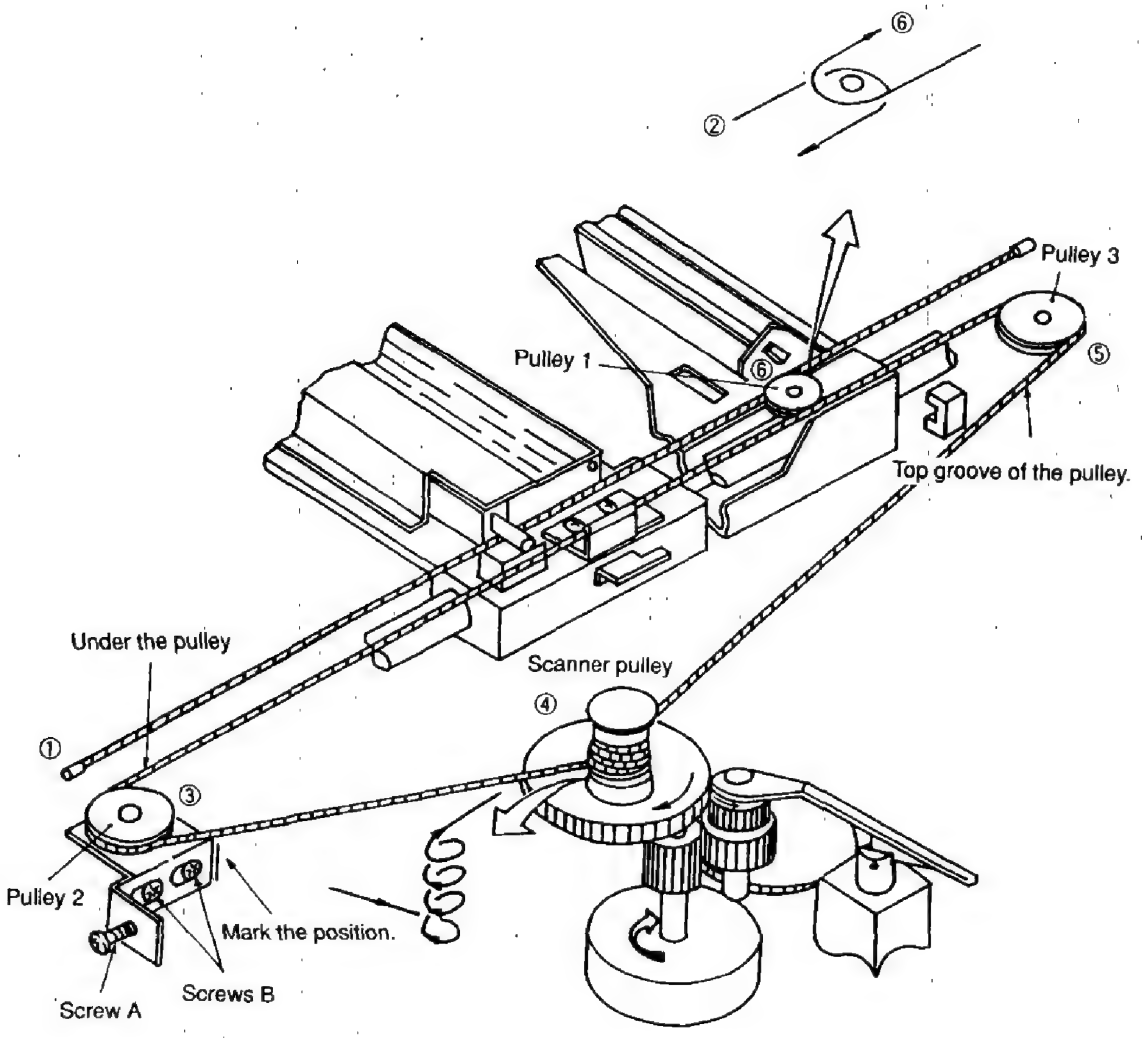

Figure 4-15 Scanner Drive Assembly

1. Detaching the Scanner Cable

1) Mark the position of the mount, and loosen screws B (2 pcs.), which hold the mount in place.
2) Loosen screw A (1 pcs.), and detach the scanner cable.

2. Attaching the Scanner Cable

1) Route the scanner cable as shown in Figure 4-15.
2) Position the fixing plate where a mark has been put using screw A.
3) Tighten screws B.

COPYRIGHT © 1992 CANON INC.
CANON NP-1550 REV.0 JAN. 1992 PRINTED IN JAPAN (IMPRIME AU JAPON)

3. Adjusting the Mirror Position (optical distance between No. 1 and No. 2 mirrors)

Adjust the position of the mirror after attaching the scanner cable.

To adjust, relocate the fixing used for the No. 1 mirror mount; loosen the two screws.

Note:

i. The cable tends to become slack as more and more copies are made, requiring adjustment.

ii. If the horizontal reproduction ratio becomes faulty because of inaccurate optical distance between the No. 1 and No. 2 mirrors, the images on copies will become out of focus.

1) Draw a line 1 cm from both ends of copy paper (A4 or A3) as shown in Figure 4-16.

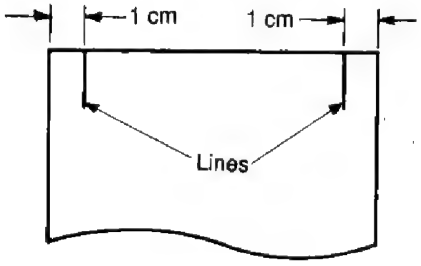

Figure 4-16

2) Make a copy of the sheet on which lines have been drawn; call the copy obtained this way *sheet A.*

3) Place a blank sheet of paper on the copyboard, and feed the sheet on which lines were drawn in the manual mode; call the delivered sheet *sheet B.*

■ Sheet B will show contraction by heat.

4) Put the left lines on sheet A and sheet B together, and adjust the position of the No. 1 mirror mount so that x and y in Figure 4-17 are identical.

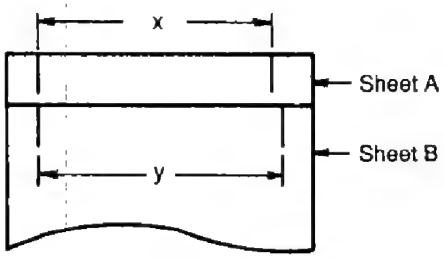

Figure 4-17

x = y	correct
x > y	move the No. 1 mirror mount into the direction of a
x < y	move the No. 1 mirror mount into the direction of b

Note:

If the distance between the No. 1 and No. 2 mirrors is short, the copy image will be enlarged; if long, reduced.

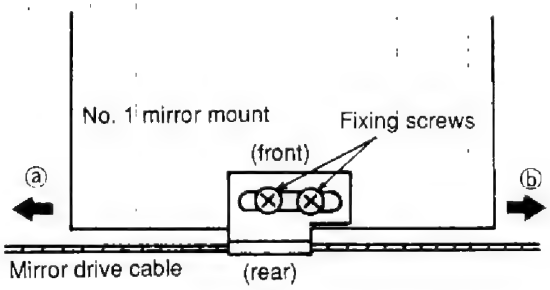

Figure 4-18

COPYRIGHT © 1992 CANON INC.
CANON NP-1550 REV.0 JAN. 1992 PRINTED IN JAPAN (IMPRIME AU JAPON)

4. Using the Mirror Cleaning Tool

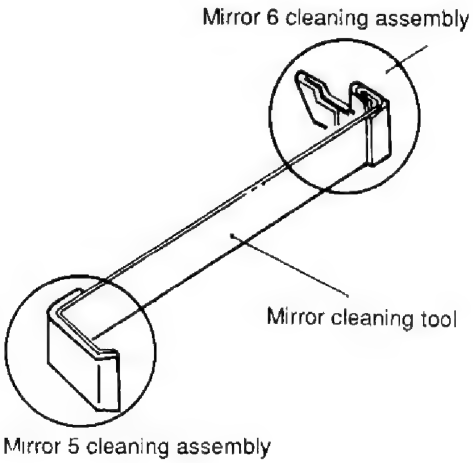

Figure 4-19

5. Cleaning the No. 5 Mirror

1) Detach the copyboard galss and the lens cover; then, remove the screw, and detach the mirror cleaning tool from the lens mount.
2) Detach the lens cover, and insert the mirror cleaning tool as shown in Figure 4-20.

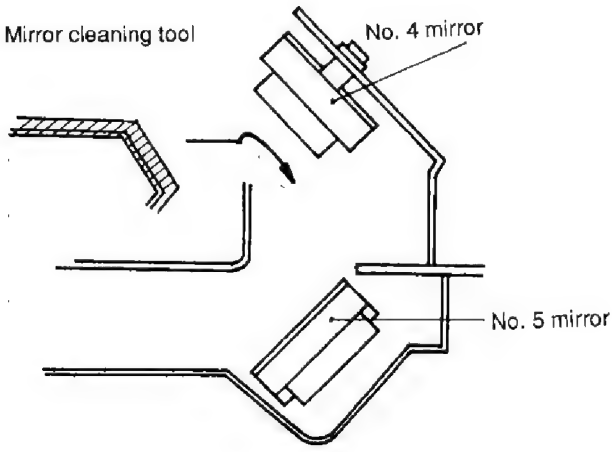

Figure 4-20

3) Push the mirror cleaning tool against the No. 5 mirror as shown in Figure 4-21, and clean the lens by sliding it back and forth.

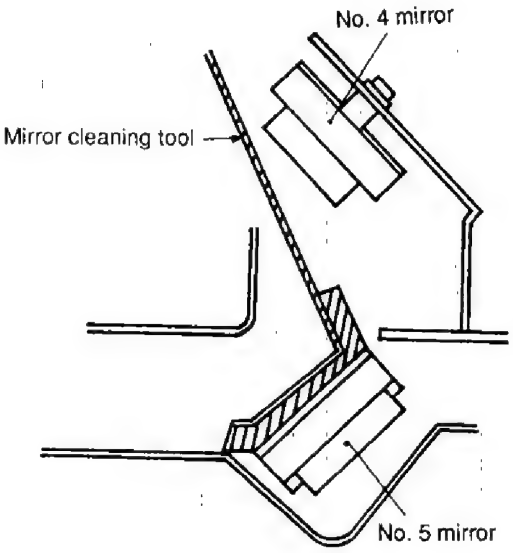

Figure 4-21

6. Cleaning the No. 6 Mirror

1) Detach the drum cartridge, developing assembly, and dustproofing glass.
2) Put the mirror cleaning tool against the mirror as shown in Figure 4-22, and clean the lens by sliding it back and forth.

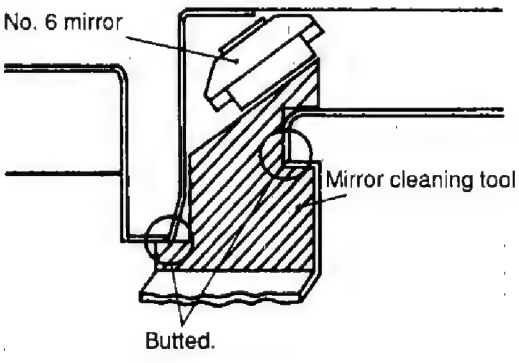

Figure 4-22

7. Lubricating

Clean the scanner rail; then, apply lubricant evenly over it.

COPYRIGHT © 1992 CANON INC.
CANON NP-1550 REV.0 JAN. 1992 PRINTED IN JAPAN (IMPRIME AU JAPON)

C. Main Motor Assembly

1. Detaching the Main Motor

1) Detach the left cover and the rear cover.
2) Disconnect all connectors, and remove the two screws from the DC controller PCB; then, detach the DC controller PCB.
3) Disconnect the connector (J104) from the AC driver PCB.

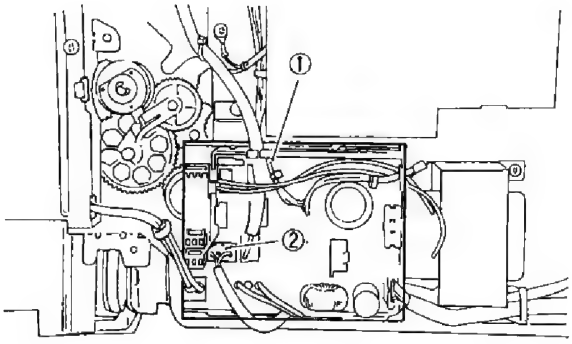

① AC driver PCB ② Connector (J104)

Figure 4-23

4) Remove the four screws, and detach the main motor as if to lift it toward the front.

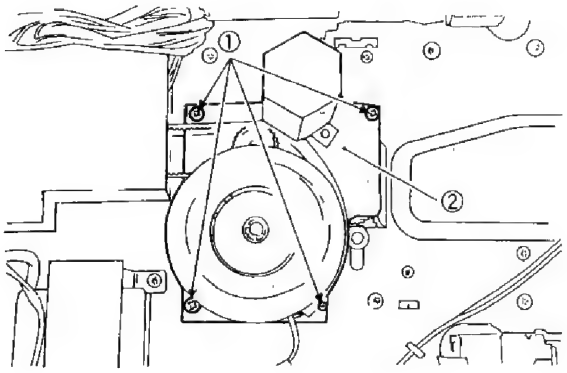

①Screws ② Main motor assembly

Figure 4-24

COPYRIGHT © 1992 CANON INC.
CANON NP-1550 REV.0 JAN. 1992 PRINTED IN JAPAN (IMPRIME AU JAPON)

III. FEEDER SYSTEM

A. Pick-up Assembly

1. Detaching the U Guide Plate

1) Detach the inside cover, right cover, and rear cover; then, detach the right door.
2) Disconnect the two connectors, and remove the cable clamp; then, shift the power cord mount.

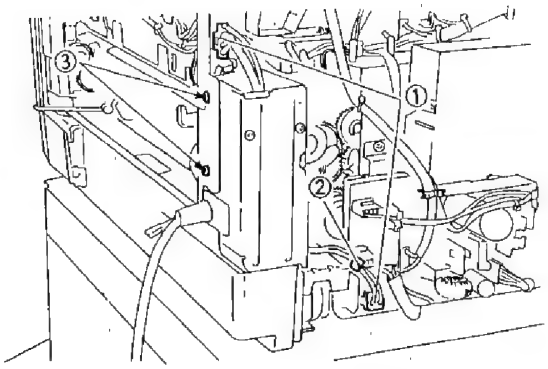

① Connectors ③ Screws
② Cable clamp

Figure 4-25

3) Remove the two screws, and detach the developing rail mount.

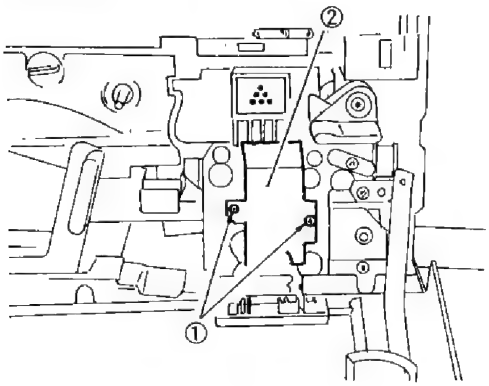

① Screws ② Developing rail mount

Figure 4-26

4) Remove the screws, and remove the two pins.

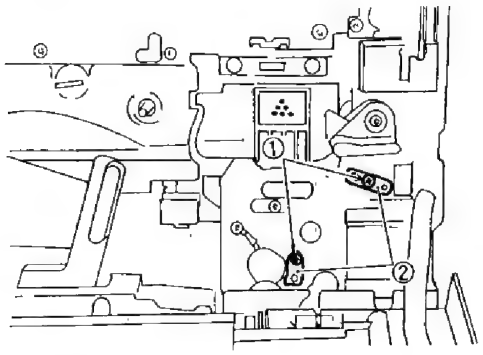

① Screws ② Pins

Figure 4-27

5) Detach the gear

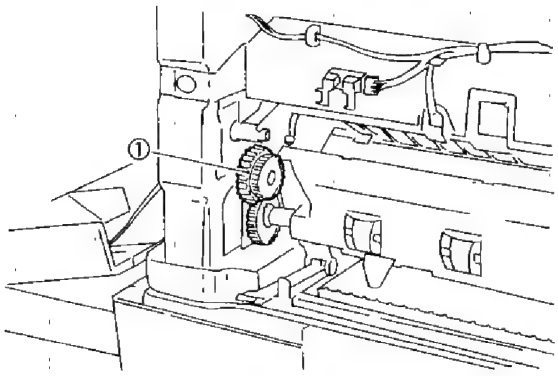

① Gear

Figure 4-28

COPYRIGHT © 1992 CANON INC.
CANON NP-1550 REV.0 JAN. 1992 PRINTED IN JAPAN (IMPRIME AU JAPON)

6) Remove the two screws, and disconnect the connector; then, detach the multifeeder solenoid unit.

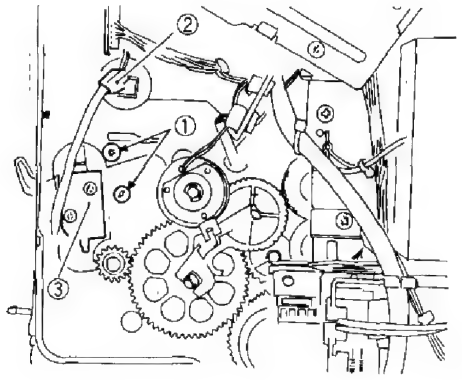

① Screws
② Connector
③ Multifeeder solenoid unit

Figure 4-29

7) Remove the screw, and remove the pin found at the rear.

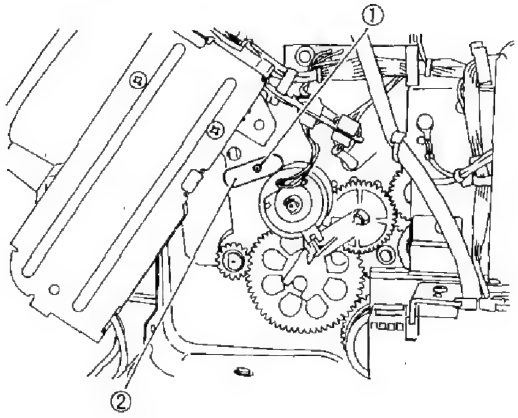

① Screw
② Pin

Figure 4-30

8) Detach the guide, if necessary, paying attention to the pre-registration paper sensor lever.

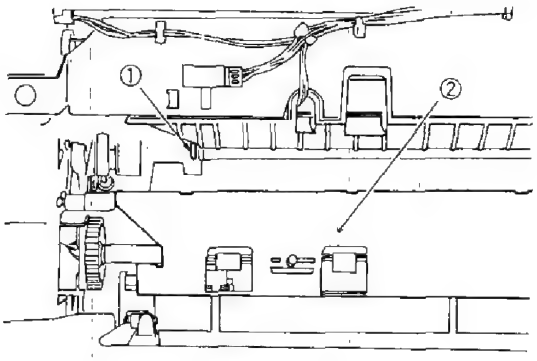

① Pre-registration paper sensor lever
② U guide plate

Figure 4-31

2. Detaching the Pick-Up Roller Shaft

1) Detach the U guide plate.
2) Detach the cassette.
3) Detach the pick-up roller bushing found at the font.

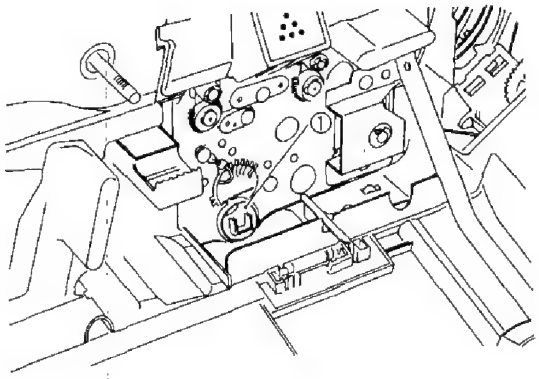

① Bushing

Figure 4-32

COPYRIGHT © 1992 CANON INC.
CANON NP-1550 REV.1 SEPT. 1992 PRINTED IN JAPAN (IMPRIME AU JAPON)

4) Remove the screw, and disconnect the connector, if necessary; then, shift the AC driver/DC power supply PCB.

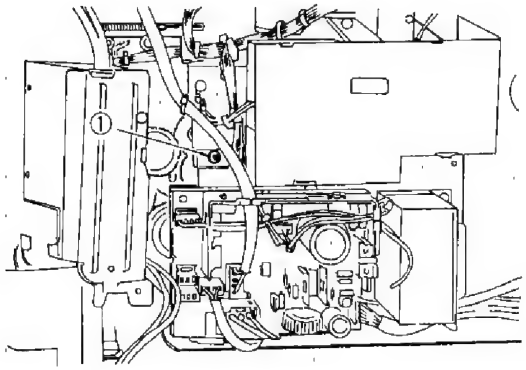

① Screw

Figure 4-33

5) Detach the control ring from the pick-up roller shaft.

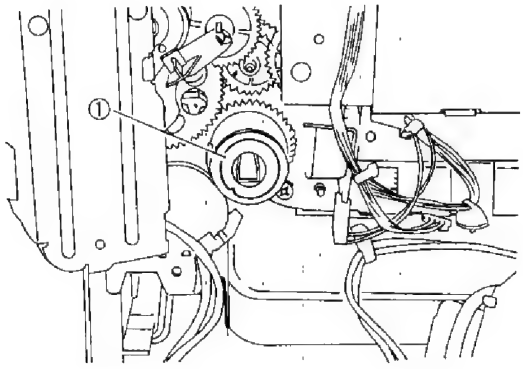

① Control ring

Figure 4-34

6) Detach the pick-up roller bushing found at the rear.

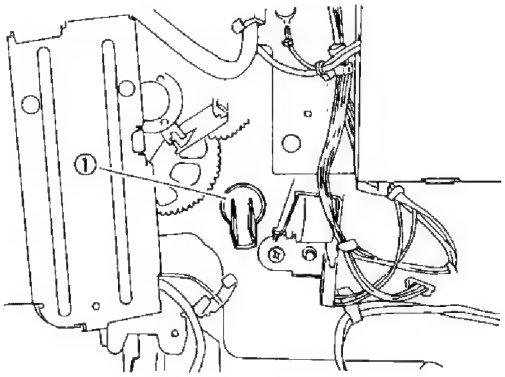

① Bushing

Figure 4-35

7) Shift the pick-up roller shaft to the rear, and detach the pick-up roller shaft from the right door assembly.

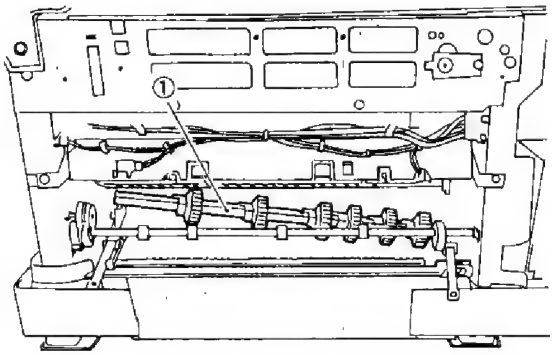

① Pick-up roller shaft

Figure 4-36

COPYRIGHT © 1992 CANON INC.
CANON NP-1550 REV.0 JAN. 1992 PRINTED IN JAPAN (IMPRIME AU JAPON)

8) Detach the pick-up roller from the pick-up roller shaft.

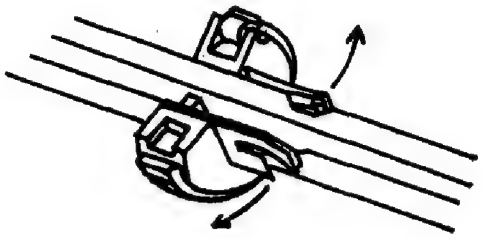

Figure 4-37 (top view)

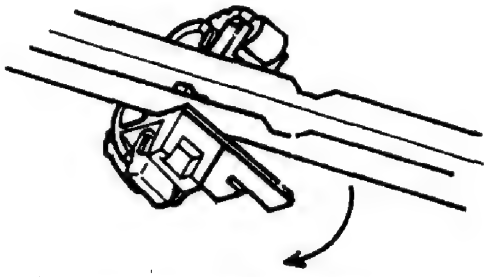

Figure 4-38 (top view)

3. Pick-Up Roller

1) Detach the pick-up roller from the pick-up roller shaft.
2) Detach the rubber member from the pick-up roller.

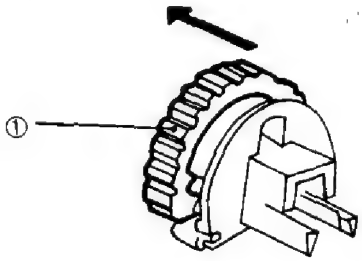

① Rubber member of pick-up roller

Figure 4-39

4. Positioning the Pick-Up Roller

Attach the pick-up roller to the pick-up shaft as shown in Figure 4-40; make sure that the pick-up roller is fitted into the mounting hole.

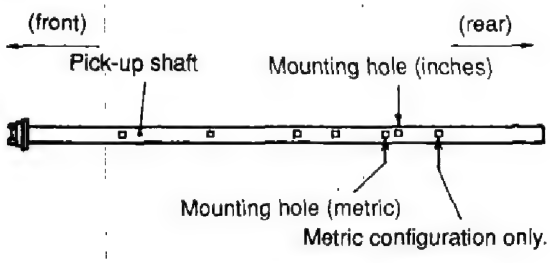

Mounting holes without notation are inch/metric configurations.

Figure 4-40

5. Detaching the Multifeeder Roller

1) Detach the right door; see p. 4-2.
2) Disengage the two hooks, and detach the U-turn guide unit.

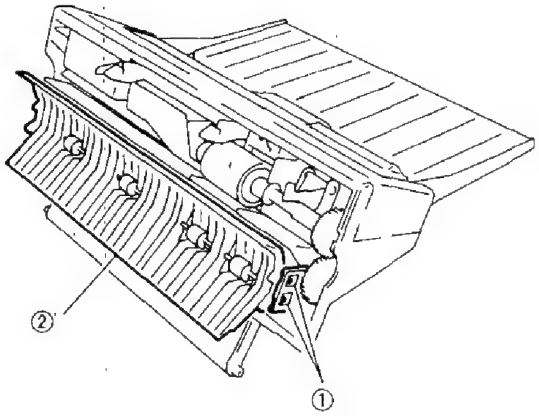

① Hook ② U-turn guide unit

Figure 4-41

COPYRIGHT © 1992 CANON INC.
CANON NP-1550 REV.1 SEPT. 1992 PRINTED IN JAPAN (IMPRIME AU JAPON)

3) Push and turn the pad spring support assembly found at the bottom of the right door unit 90 degrees.

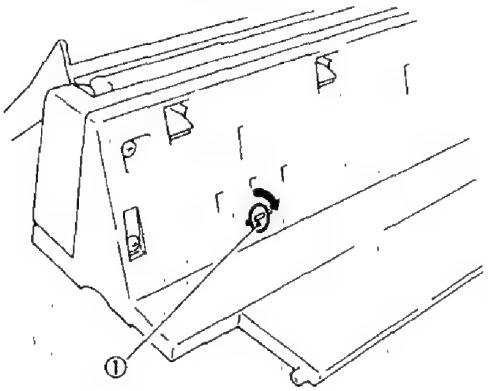

① Pad spring support

Figure 4-42

4) Detach the pad unit.

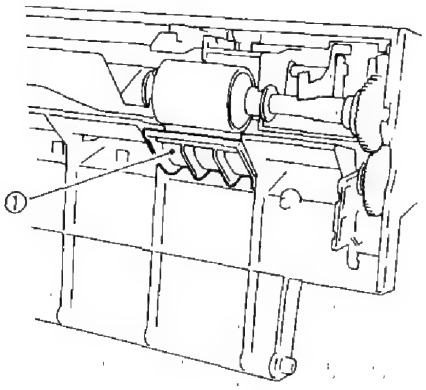

① Pad unit

Figure 4-43

5) Pinch the hooks of the two bushings using pliers, and detach the bushings.

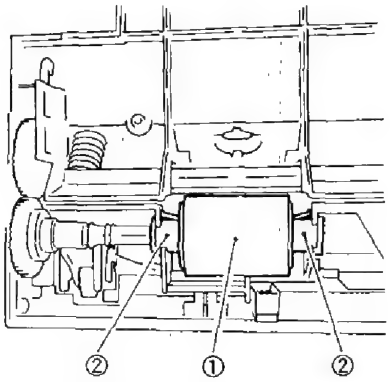

① Multifeeder roller ② Bushing

Figure 4-44

Note:
Be sure to replace the pad also whenever the multifeeder roller is replaced.

COPYRIGHT © 1992 CANON INC.
CANON NP-1550 REV.0 JAN. 1992 PRINTED IN JAPAN (IMPRIME AU JAPON)

B. Feeder Assembly

1. Feeder Assembly

Note:
Make sure that the drum unit, transfer corona assembly, and developing assembly have been detached before detaching the feeder assembly.

1) Release the feeder assembly.
2) Detach the main motor assembly; see p. 4-10.
3) Remove the E-ring, and detach the bushing.

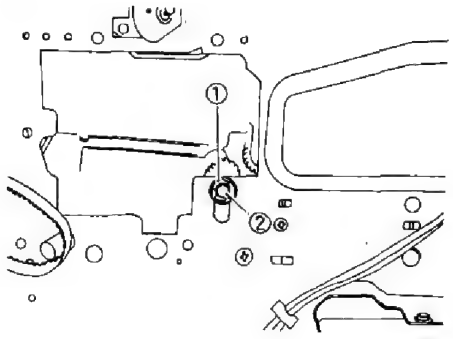

① E-ring ② Bushing

Figure 4-45

4) Detach the inside cover, and remove the E-ring; then, detach the bushing.
5) Disconnect the connector, and detach the grounding wire (1 screw); then, detach the cord mount (1 screw).

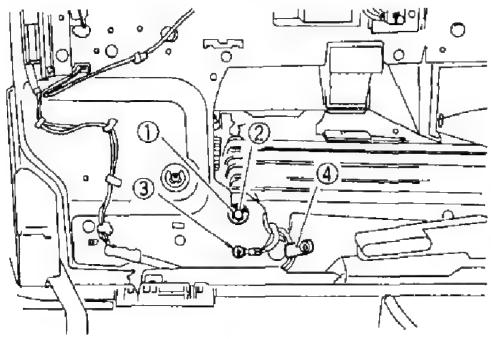

① E-ring ③ Grounding wire
② Bushing ④ Cord mount

Figure 4-46

6) Hold the side of the feeder assembly closer to the fixing assembly, and pull it out toward the front slowly as if to lift it.

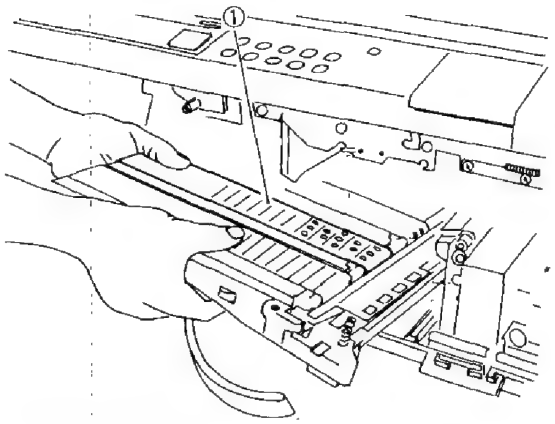

① Feeder assembly

Figure 4-47

2. Feeder Belt

1) Detach the feeder assembly.
2) Remove the two screws, and detach the rail cover found at the front.

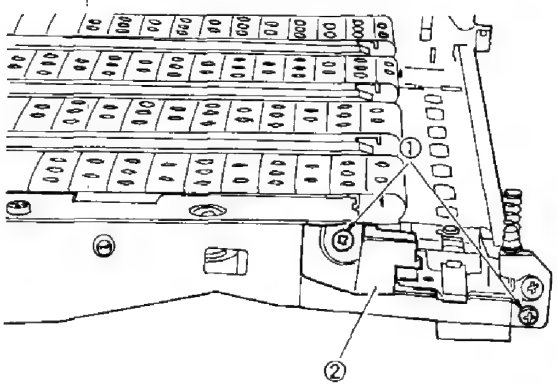

① Screws ② Rail cover

Figure 4-48

COPYRIGHT © 1992 CANON INC.
CANON NP-1550 REV.0 JAN. 1992 PRINTED IN JAPAN (IMPRIME AU JAPON)

3) Remove the two screws found at the front that hold the corona assembly rail in place.

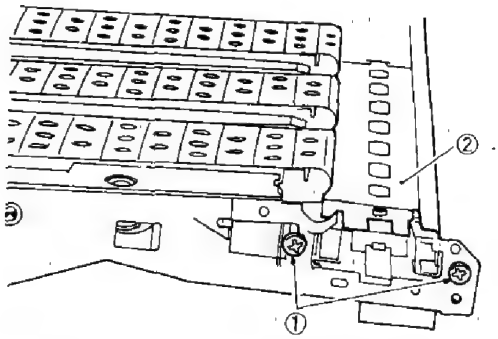

① Screws ② Corona assembly rail

Figure 4-49

4) Remove the three screws, and detach the terminal holder found at the rear.

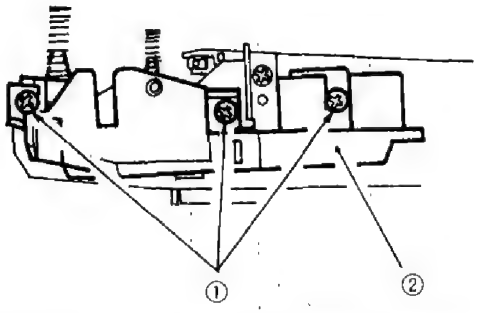

① Screws ② Terminal holder

Figure 4-50

5) Remove the two screws found at the rear, and detach the corona assembly rail.

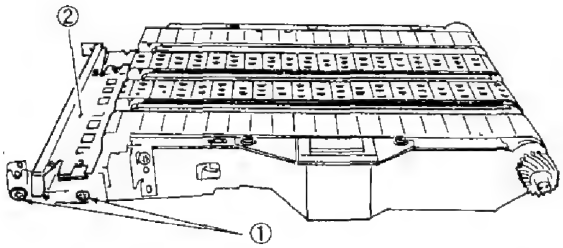

① Screws ② Corona assembly rail

Figure 4-51

6) Detach the feeder belt.

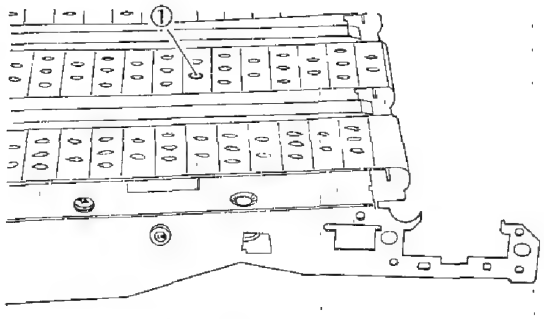

① Feeder belt

Figure 4-52

3. Feeder Fan (FM3)

1) Detach the feeder assembly.
2) Detach the two feeder belts.
3) Remove the four rolls.

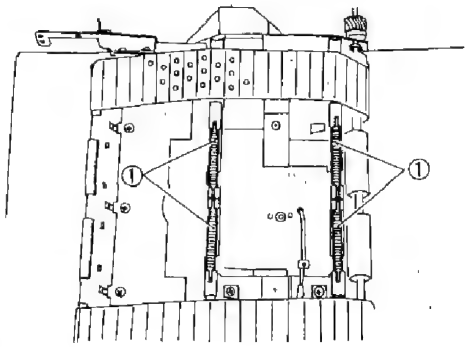

① Rolls

Figure 4-53

4) Remove the four screws, and detach the feeder fan.

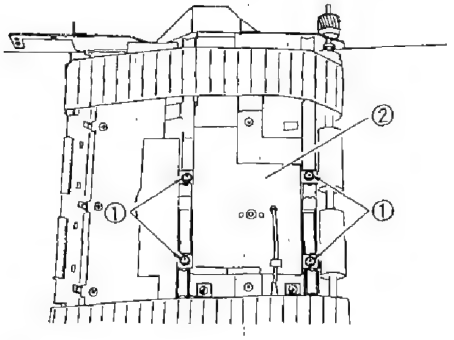

① Screws ② Feeder fan

Figure 4-54

COPYRIGHT © 1992 CANON INC.
CANON NP-1550 REV.1 SEPT. 1992 PRINTED IN JAPAN (IMPRIME AU JAPON)

IV. EXPOSURE SYSTEM

A. Exposure Assembly

1. Detaching the Scanning Lamp

1) Disconnect the power plug.
2) Detach the copyboard glass.
3) Remove the two screws, and detach the anti-glare plate.

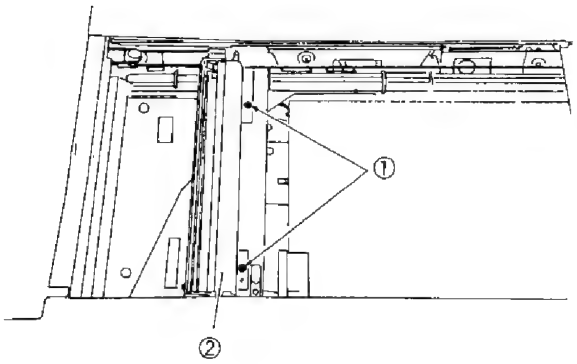

① Screws ② Anti-glare plate

Figure 4-55

4) Push the lamp terminal plate (rear) into the direction of the arrow, and detach the scanning lamp.

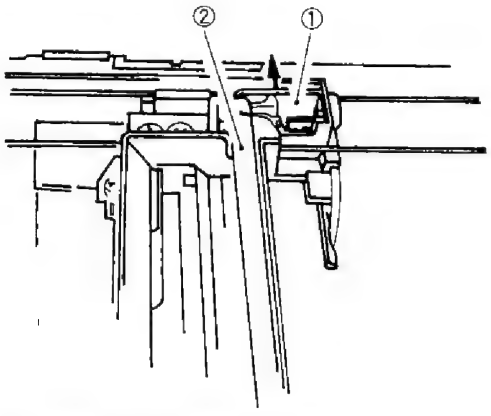

① Lamp terminal plate (rear)
② Scanning lamp

Figure 4-56

Note:

i. Wait until the scanning lamp has cooled before starting the work.
ii. Do not leave fingerprints on the scanning lamp.
iii. Dry wipe the scanning lamp if it is soiled.

2. Detaching the Thermal Fuse

1) Detach the control panel and the copyboard glass.
2) Hold the rear of the No. 1 mirror mount, and move it to the right until it is positioned as shown in Figure 4-57.

Note:

When moving the No. 1 mirror mount, be sure to hold its right side.

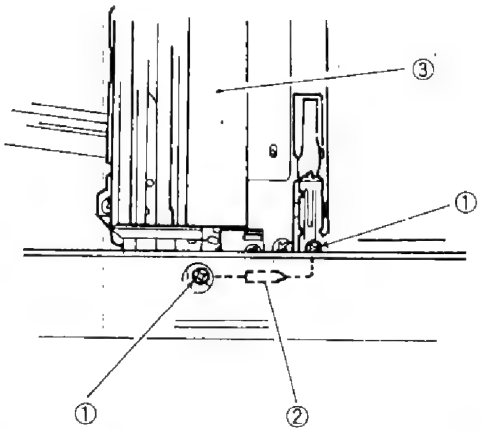

① Screws ③ No. 1 mirror mount
② Thermal fuse

Figure 4-57

3) Remove the two screws, and detach the thermal fuse.

COPYRIGHT © 1992 CANON INC.
CANON NP-1550 REV.0 JAN. 1992 PRINTED IN JAPAN (IMPRIME AU JAPON)

B. Blank Assembly

1. Detaching the Pre-Exposure PCB

1) Detach the rear cover.
2) Disconnect the connector (J731) from the pre-exposure PCB.
3) Hold the pre-exposure PCB using pliers, and pull it straight out taking care not to damage PCB.

2. Detaching the Blank Assembly

1) Detach the copyboard glass, lens cover, rear cover, and drum unit; then, detach the developing assembly.
2) Disconnect the connector (J731) from the pre-exposure PCB and the connector (J30) from the blank solenoid.

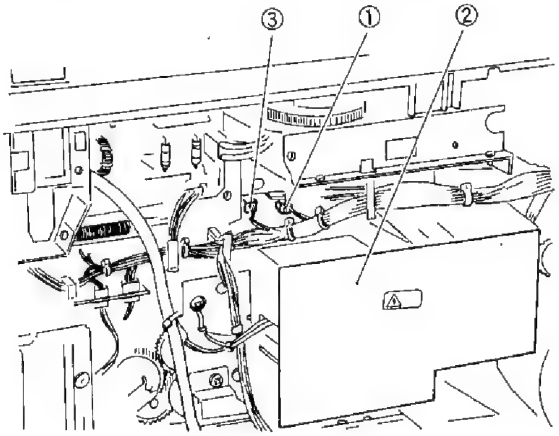

① Connector (J731) ③ Connector (J30)
② HVT

Figure 4-58

3) Hold the blank assembly on its bottom, and remove the four screws; then, pull out the pre-exposure unit to the front.

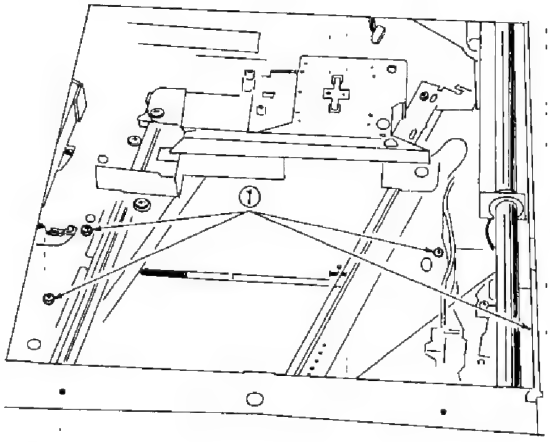

① Screws

Figure 4-59

COPYRIGHT © 1992 CANON INC.
CANON NP-1550 REV.1 SEPT. 1992 PRINTED IN JAPAN (IMPRIME AU JAPON)

V. CORONA SYSTEM

A. Drum Unit

1. Detaching the Drum Unit

1) Release the feeder assembly.
2) Open the front door, and remove the screw.

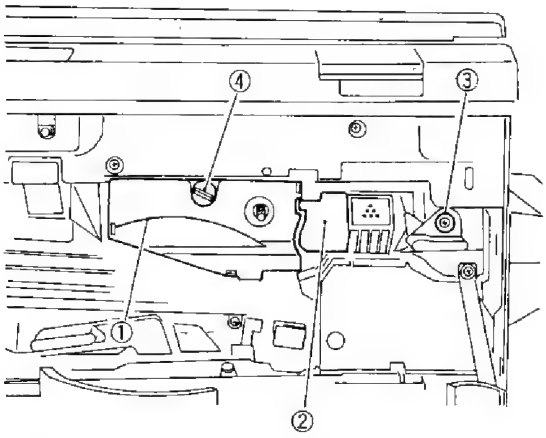

① Drum unit
② Developing assembly
③ Developing assembly release lever
④ Screw

Figure 4-60

3) Turn the developing assembly release lever counterclockwise.
4) Pull out the drum unit to the front carefully.

Note:
Take care not to damage the drum.

Note:
The photosensitive drum is susceptible to light; exposure to even room light can lead to white spots or black lines on the copies.

As a rule, do not switch the copier ON with the drum unit detached.

Note:
Do not press the COPY START key.

2. Cleaning

If the photosensitive drum is soiled, clean it using a flannel cloth coated with toner; do not use paper, lint-free or otherwise.

Note:
Do not use solvent or dry wipe the drum; never use drum cleaning powder.

COPYRIGHT © 1992 CANON INC.
CANON NP-1550 REV.0 JAN. 1992 PRINTED IN JAPAN (IMPRIME AU JAPON)

B. Primary/Transfer Corona Assembly

1. Outline

The photosensitive drum is surrounded by the primary and transfer corona assemblies.

The primary corona assembly is equipped with a grid plate.

2. Disassembly/Assembly

a. Primary Corona Assembly

1) Detach the drum unit.

Note:

Do not expose the photosensitive drum to strong light; otherwise, white spots or black lines can occur on the copies.

2) Disengage the hook, and pull out the primary corona assembly from the drum unit.

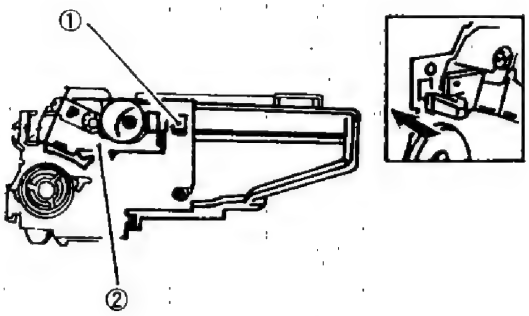

① Hook ② Primary corona assembly

Figure 4-61

b. Transfer Corona Assembly Gut Wire and Static Eliminator

1) Detach the transfer corona assembly from the copier.

2) Remove the two screws, and detach the static eliminator, taking care so that the gut wire will not come off.

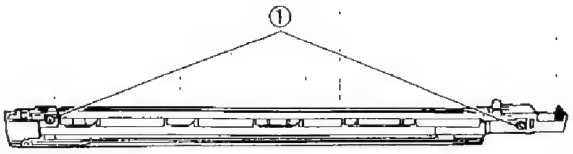

① Screws

Figure 4-62

3) Detach the static eliminator

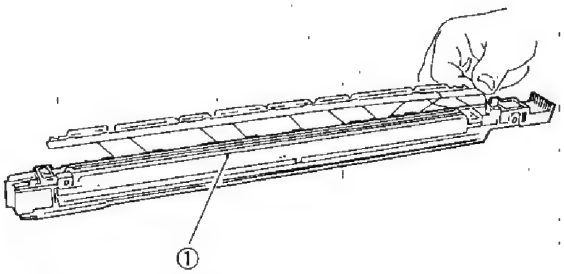

① Static eliminator

Figure 4-63

COPYRIGHT © 1992 CANON INC.
CANON NP-1550 REV.0 JAN. 1992 PRINTED IN JAPAN (IMPRIME AU JAPON)

c. Attaching the Primary/Transfer Corona Assembly Wire

■ Primary Corona Assembly

1) Remove the four tension springs, and detach the grid plate.

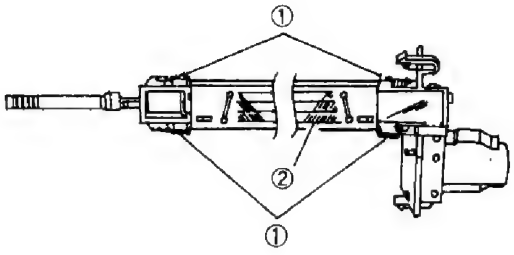

① Grid tension springs ② Grid plate

Figure 4-64

■ Transfer Corona Assembly

2) Detach the gut wire from the transfer corona assembly; see p. 4-21.
3) Free about 40 mm from the corona wire reel (0.06 mm dia.), and form a loop at its end about 2 mm in diameter.

Note:
Wind the corona wire around a hex key once, and turn the hex key four to five times; then twist it to form a loop.

4) Cut the twisted end of the corona wire to about 1 mm or less using a nipper.
5) Hook the loop of the corona wire as shown in Figure 4-65, and lead the wire along the V-groove of the height adjusting roll.

Hook the corona wire tension spring on the corona wire, and twist the spring three to four times as shown.

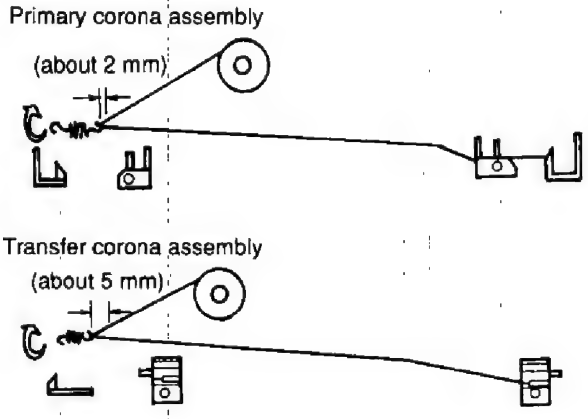

Figure 4-65

6) Cut the excess corona wire to about 1 mm or less using a nipper.
7) Pick the end of the corona wire tension spring using tweezers, and hook it on the corona terminal.

Note:
i. Make sure that the corona wire is free of breaks or twists and its gold plating has not peeled
ii. Make sure that the corona wire is not slack; normal, if the length of the corona wire tension spring is 12 mm.
iii. Make sure that the corona wire is in the V-groove of the height adjusting roll.

COPYRIGHT © 1992 CANON INC.
CANON NP-1550 REV.0 JAN. 1992 PRINTED IN JAPAN (IMPRIME AU JAPON)

VI. DEVELOPMENT SYSTEM

A. Developing Assembly

1. Construction

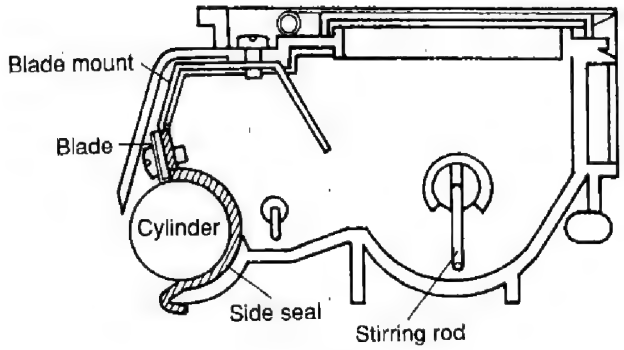

Figure 4-66

2. Detaching the Developing Assembly

1) Turn the developing assembly release lever counterclockwise.
2) Slide out the developing assembly carefully.
3) Hold the grip on the developing assembly, and take the assembly out the copier.

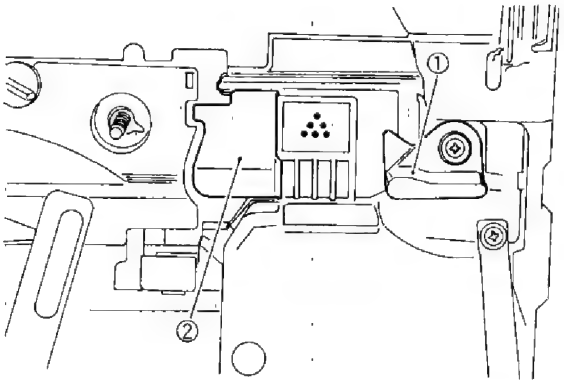

① Developing assembly release lever ② Developing assembly

Figure 4-67

3. Detaching the Blade, Developing Cylinder, and Side Seal

1) Detach the developing assembly from the copier.
2) Remove the screw, and detach the upper cover fixing plate.
3) Detach the top cover.
4) Remove the two screws, and detach the developing assembly upper cover.

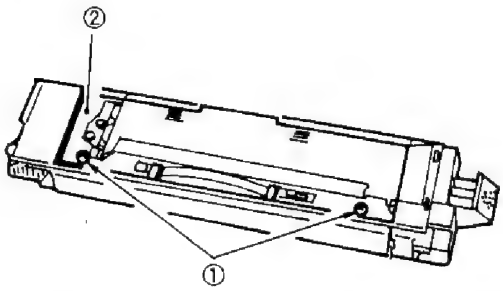

① Screws ② Developing assembly upper cover

Figure 4-68

5) Place a newspaper on the floor, and pour out the toner from the developing assembly.
6) Remove the two screws, and detach the blade mount together with the blade.

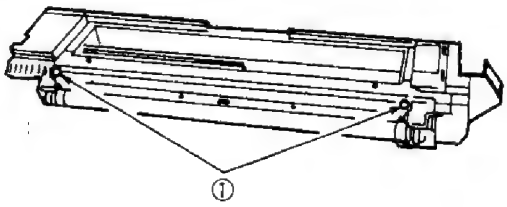

① Screws

Figure 4-69

COPYRIGHT © 1992 CANON INC.
CANON NP-1550 REV.0 JAN. 1992 PRINTED IN JAPAN (IMPRIME AU JAPON)

7) Disengage the hook on the bottom, and detach the grip.

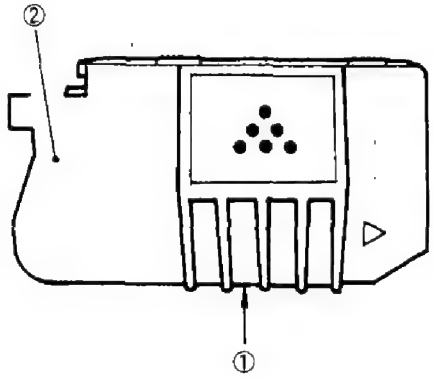

① Hook ② Grip

Figure 4-70

8) Remove the three screws, and detach the developing cylinder holder (front), ball bearing, and developing roll.

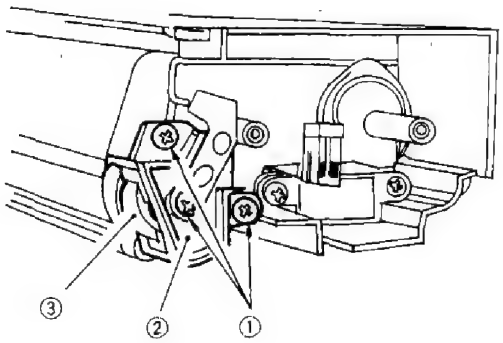

① Screws
② Developing cylinder holder
③ Developing roll

Figure 4-71

9) Remove the two E-rings, and remove the two gears.

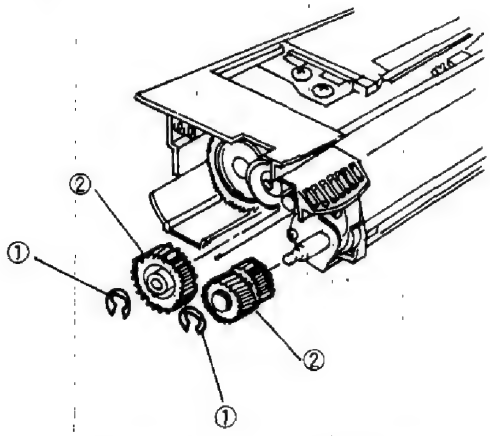

① E-rings ② Gears

Figure 4-72

10) Remove the two screws, and detach the developing cylinder holder (rear), ball bearing, and developing roll.

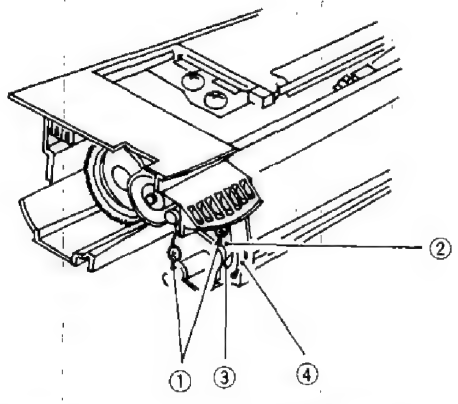

① Screws
② Developing cylinder holder
③ Ball bearing
④ Developing roll

Figure 4-73

11) Detach the developing cylinder and side seal.

COPYRIGHT © 1992 CANON INC.
CANON NP-1550 REV.1 SEPT. 1992 PRINTED IN JAPAN (IMPRIME AU JAPON)

4. Attaching the Side Seal and the Blade

1) Clean the surface on which the side seal will be attached using alcohol.
2) Attach the side seal at the position shown in Figure 4-74.

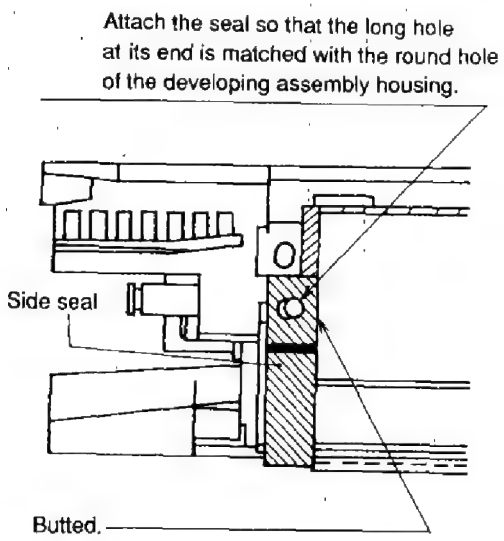

Figure 4-74

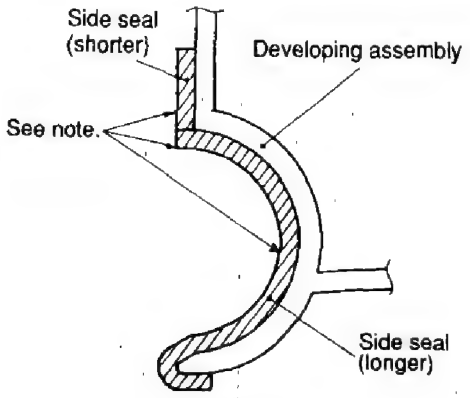

Figure 4-75

Note:
Put the leading edge of the longer side seal against the face of the shorter side seal, and attach them making sure that they are in firm contact with the curve of the developing assembly.

3) Attach all parts that have been detached except the blade.
Make sure that the gear is assembled with the longer tooth in the groove.

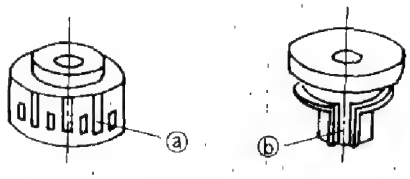

Figure 4-76

4) Force the blade mount against the developing assembly in the direction of the arrow, and tighten the two screws.

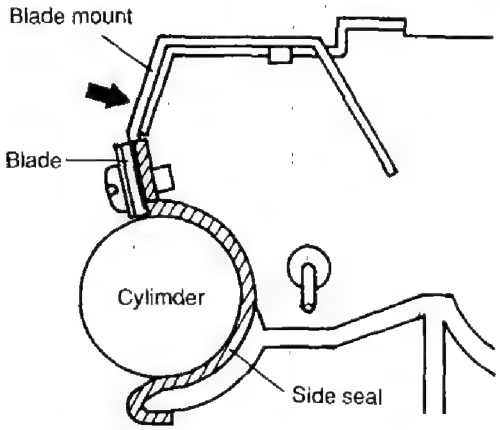

Figure 4-77

5) Loosen the four screws that hold the blade on the blade mount, and tighten them again.

Note:
Do not loosen the screws excessively, or the blade may come off the positioning pin found at the center.

COPYRIGHT © 1992 CANON INC.

VII. FIXING SYSTEM

A. Fixing Assembly

1. Construction

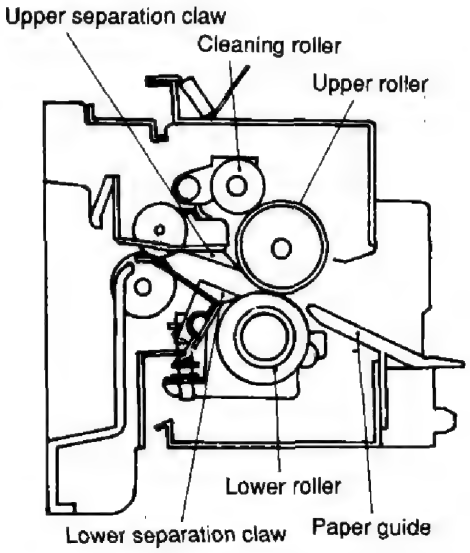

Figure 4-78

2. Detaching the Fixing Assembly

1) Remove the screw, and detach the fixing assembly knob.

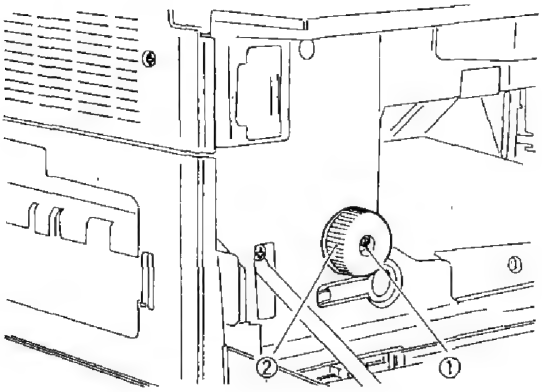

① Screw ② Fixing assembly knob

Figure 4-79

2) Remove the three screws, and detach the blanking plate and the left cover.

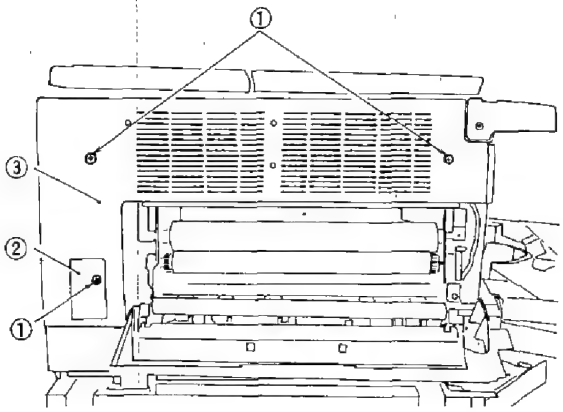

① Screws ③ Left cover
② Blanking plate

Figure 4-80

3) Disconnect the three connectors.

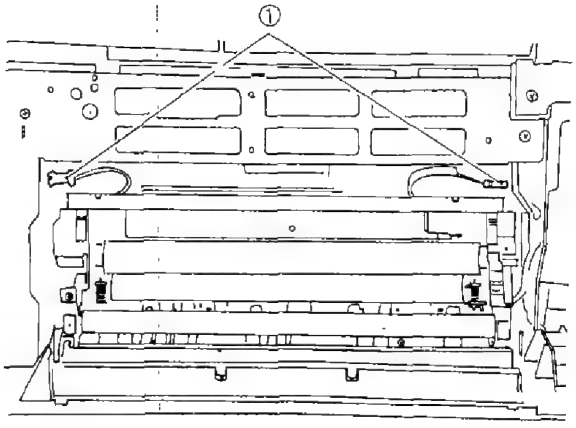

① Connectors

Figure 4-81

COPYRIGHT © 1992 CANON INC.
CANON NP-1550 REV.1 SEPT. 1992 PRINTED IN JAPAN (IMPRIME AU JAPON)

4) Remove the two screws, and slide out the fixing assembly.

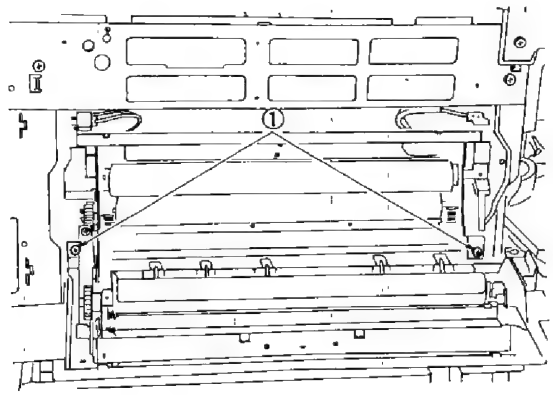

①Screws

Figure 4-82

3. Detaching the Upper Fixing Roller, Heater, and Lower Fixing Roller

1) Detach the fixing assembly from the copier.
2) Pull out faston A, and remove the screw; the heater mount plate (front) can be detached in this condition.

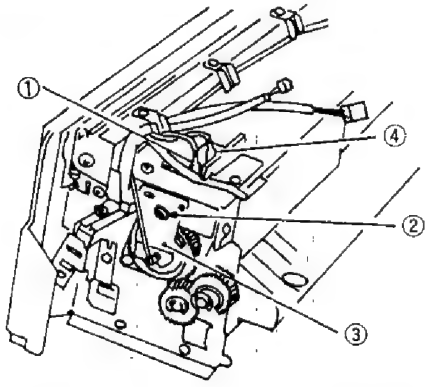

① Faston A
② Screw
③ Heater mount plate (front)
④ Faston B

Figure 4-83

3) Pull faston B (see Figure 4-83), and remove the mounting screw from the heater mount plate found at the rear; then, pull out the heater mount plate (rear) and the heater carefully.

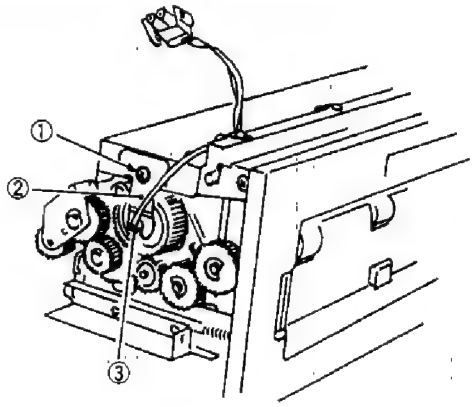

① Screw
② Heater mount plate (rear)
③ Heater

Figure 4-84

4) Remove the two screws, and detach the thermistor cover.

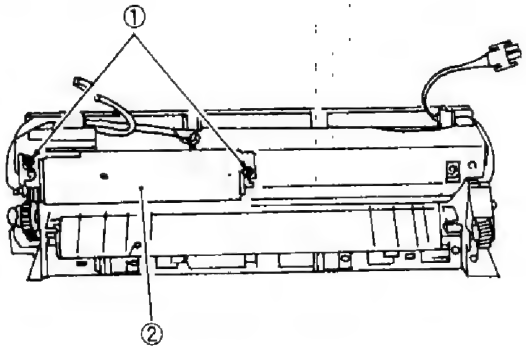

① Screws
② Thermistor cover

Figure 4-85

5) Remove the screw, and detach the thermistor.

COPYRIGHT © 1992 CANON INC.
CANON NP-1550 REV.1 SEPT. 1992 PRINTED IN JAPAN (IMPRIME AU JAPON)

6) Remove the three screws, and detach the thermoswitch.

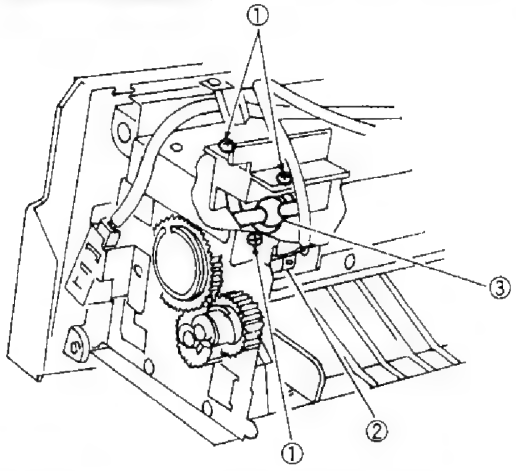

① Screws ③ Thermoswitch
② Thermistor

Figure 4-86

7) Remove the C-ring at the rear, and detach the gear.

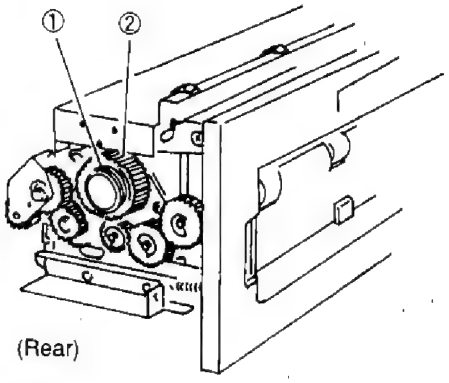

① C-ring ② Gear

Figure 4-87

8) Remove the E-ring, and detach gear A.
9) Remove the C-ring, and detach two gears B.

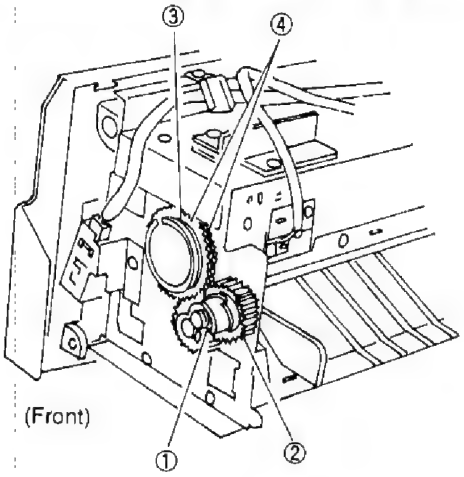

① E-ring ③ C-ring
② Gear A ④ Gears B

Figure 4-88

10) Remove the two screws, and detach the bushing.

Note:
The bushing is pushed up from below and is difficult to detach; try pushing the upper fixing roller to the bottom to facilitate detachment.

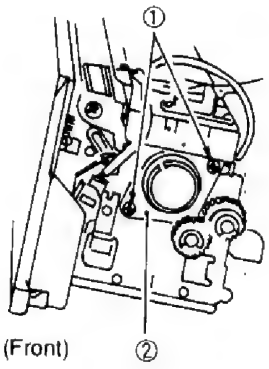

① Screws ② Bushing

Figure 4-89

COPYRIGHT © 1992 CANON INC.
CANON NP-1550 REV.1 SEPT. 1992 PRINTED IN JAPAN (IMPRIME AU JAPON)

11) Push the pressure spring of the lower fixing roller using a screwdriver, and detach the upper fixing roller.

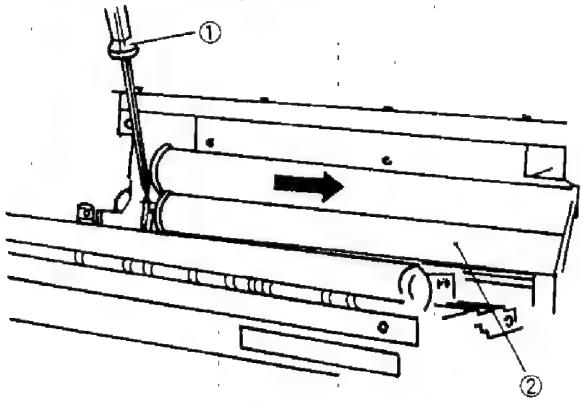

① Screwdriver ② Lower roller

Figure 4-90

12) Detach the lower fixing roller.

4. Attaching the Heater and Upper Fixing Roller

Attach the heater and the upper fixing roller as in detaching them but in reverse order while noting the following:

a. Heater
   i. Do not touch the surface of the heater.
   ii. Make sure that the end bearing the manufacturer's name is to the front.

b. Upper Fixing Roller
   i. Wrap the roller with copy paper to prevent soiling or scarring the surface of the roller.
   ii. Make sure that the end with two C-rings is to the rear.
   iii. Make sure that the two identical gears are used at the front.

5. Adjusting the Nip Width (tightening the pressure adjusting nut)

If the nip width is not as shown in Figure 4-91, turn the bolt to adjust it.

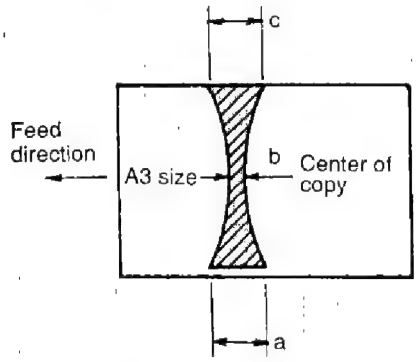

Figure 4-91

Note:
a and c represents points 10 mm from the each end.

Dimension	Measure after the upper and lower rollers have heated up.
b	4.0 ± 0.5mm
|a - c|	0.5mm or less

Table 4-1

a. Measuring the Nip Width
   If the roller is not heated, wait for 15 minutes after the WAIT indicator has changed to green; then, make 20 copies before taking measurements.

b. Taking Measurements
1) Lift the copyboard cover, and make an A3 copy of a solid black document.
2) Switch the copier OFF as soon as the leading edge of the copy comes out of the copier, and open the front door and the delivery assembly.

COPYRIGHT © 1992 CANON INC.
CANON NP-1550 REV.1 SEPT. 1992 PRINTED IN JAPAN (IMPRIME AU JAPON)

3) Turn the fixing assembly knob counterclockwise slightly, and hold it for 15 minutes; then, turn the fixing assembly knob to remove the copy.
4) Measure the width of the area where toner is shiny; see Figure 4-91.

6. Attaching the Thermistor

Make sure that the sensor face of the thermistor is in even contact with the surface of the upper fixing roller.

Note:
The position of the thermistor need not be adjusted; if the contact is not even, make sure that the thermistor spring is not deformed.

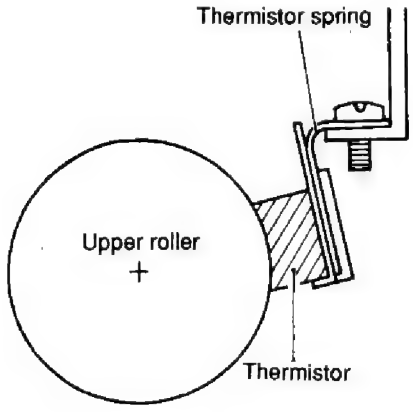

Figure 4-92

7. Attaching the Thermoswitch

Make sure that the sensor face of the thermoswitch is in even contact with the surface of the upper fixing roller.

Note:
The position of the thermoswitch need not be adjusted; if the contact is not even, make sure that the thermoswitch spring is not deformed.

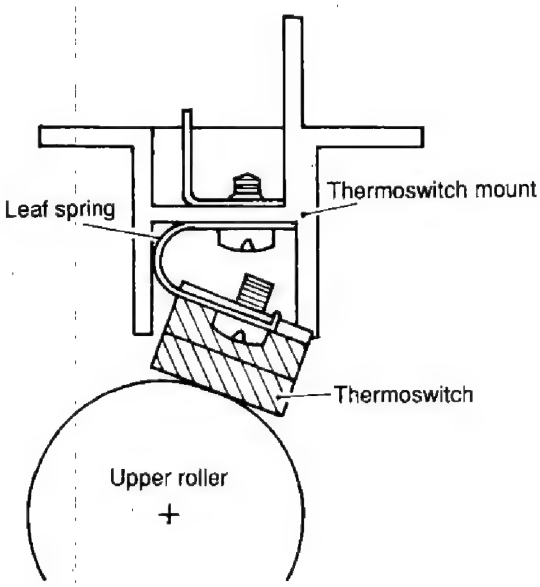

Figure 4-93

8. Position of Paper Guide

The position of the paper guide is adjusted by the paper guide mount. For this reason, the position of the paper guide need not be adjusted.

Note:
If the paper guide mount has been detached, the position of the paper guide must be adjusted. To avoid this, do not loosen the screws on the paper guide; if necessary, mark the position on the fixing assembly mount using a scriber.

COPYRIGHT © 1992 CANON INC.
CANON NP-1550 REV.0 JAN. 1992 PRINTED IN JAPAN (IMPRIME AU JAPON)

Note:
To adjust the position of the paper guide, place the fixing assembly on a desk, and move the paper guide so that the position is as shown in Figure 4-94.

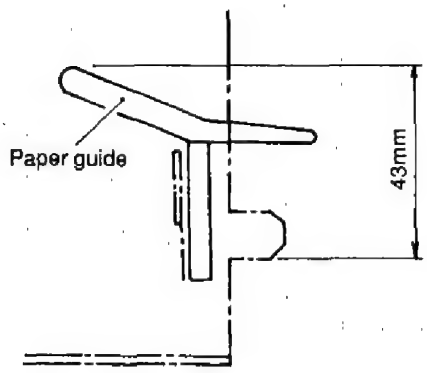

Figure 4-94

9. Detaching the Cleaning Roller

1) Open the delivery assembly.
2) Remove the screw, and detach the fixing plate.

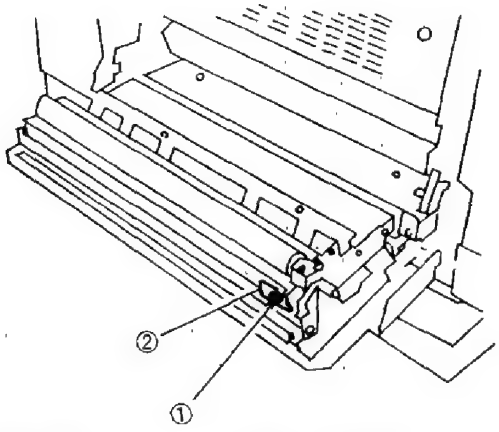

① Screw ② Fixing plate

Figure 4-95

3) Shift the lever, and detach the cleaning roller.

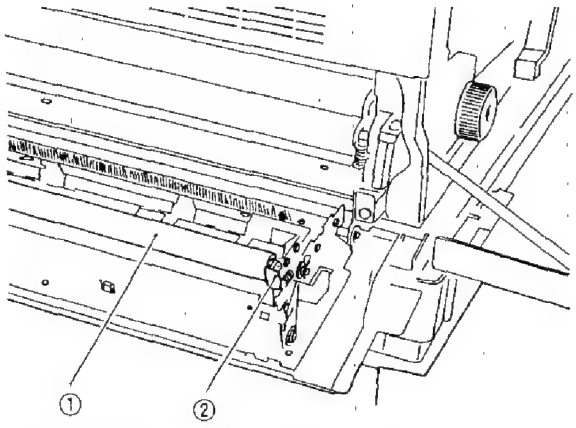

① Cleaning roller ② Lever

Figure 4-96

10. Detaching the Upper Separation Claw

1) Open the delivery assembly.
2) Detach the cleaning roller.
3) Remove the two screws, and detach the upper separation claw assembly.

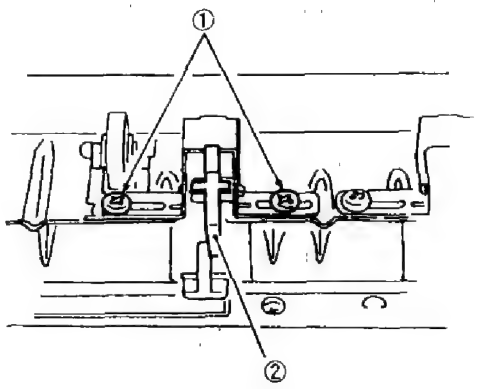

① Screws ② Upper separation claw assembly

Figure 4-97

4) Remove the spring, and detach the upper separation claw.

COPYRIGHT © 1992 CANON INC.
CANON NP-1550 REV.1 SEPT. 1992 PRINTED IN JAPAN (IMPRIME AU JAPON)

11. Attaching the Upper Separation Claw

Attach the upper separation claw as detaching it but in reverse order with the following in mind.

a. Make sure that the boss on the upper separation claw is in contact with the mount as shown in Figure 4-98.

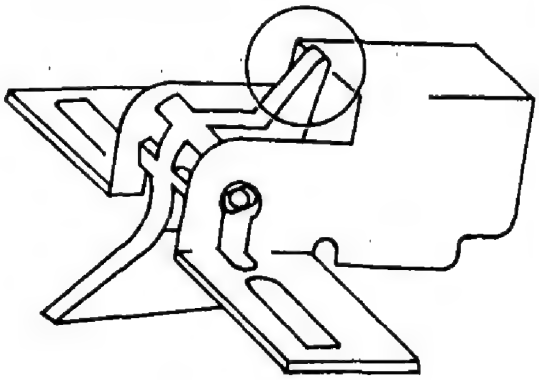

Figure 4-98

b. Make sure that the upper separation claw assembly is fully toward the rear. If a scratch is noted on the upper fixing roller, move the upper separation claw assembly about 4 mm toward the front.

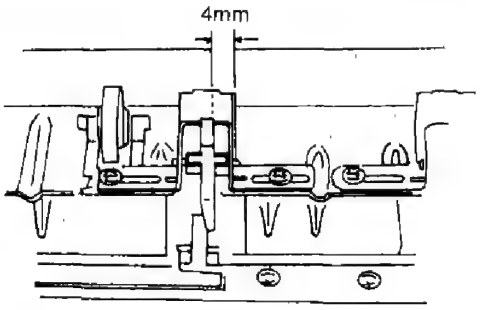

Figure 4-99

12. Detaching the Lower Separation Claw

1) Detach the delivery cover; then, open the delivery door, and detach the lower separation claw retainer.

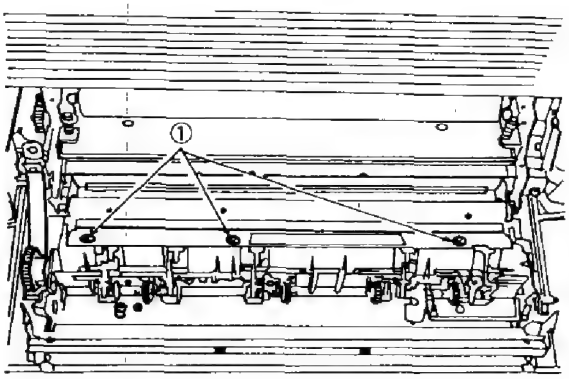

① Screws

Figure 4-100

2) Remove the springs from the lower separation claw.

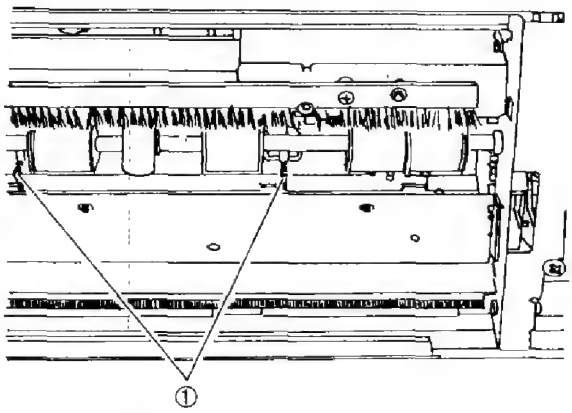

① Springs

Figure 4-101

Apply heat-resisting grease (CK-0427) over the following sections on a periodical basis.

a) engagement of gears (rear)
b) gear assembly of fixing knob

COPYRIGHT © 1992 CANON INC.
CANON NP-1550 REV.1 SEPT. 1992 PRINTED IN JAPAN (IMPRIME AU JAPON)

I. LOCATION

The location of the copier should be chosen based on the following considerations. If possible, make a visit to the user for a study of the site before delivery of the copier.

a. The ambient temperature should be between 15° and 35°C and the humidity, 10% to 80%. Avoid locations near water faucets, humidifiers, water boilers, and refrigerators.
b. Avoid locations near open fire or subject to dust or ammonia fumes and direct rays of the sun. Provide curtains over the windows if necessary.
c. Choose a well-ventilated place.
d. Make sure all feet of the copier will be in contact with the floor.
e. Allow at least 10 cm from any wall to provide access.

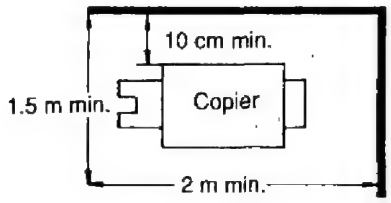

Figure 5-1

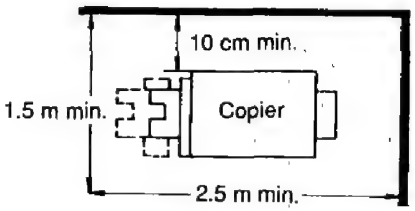

Figure 5-2 (with sorter)

COPYRIGHT © 1992 CANON INC.
CANON NP-1550 REV.0 JAN. 1992 PRINTED IN JAPAN (IMPRIME AU JAPON)

II. UNPACKING AND INSTALLING THE COPIER

When a piece of metal is moved from a cold place to a warm place, droplets of water form on its surface. This phenomenon is known as condensation and affects the performance of machines. The simplest way to eliminate condensation in the copier, any machines for that matter, is to leave it alone until it warms to room temperature (at least one hour).

A. Unpacking

Step	Work	Remarks
1	Open the shipping carton.	
2	Place the hands beneath the front and rear of the base plate of the copier (on skids), then raise the copier and place it on a pedestal or a desk.	
3	Open the cardboard box, and take out the parts and accessories.	Check that the following are available: • Copy tray • OPERATOR'S MANUAL • Drum unit
4	Remove all tape, and take out the cassettes; remove the cushion blocks from inside the cassettes.	
5	Remove the tape that secures the optical unit in place (outside the left cover), and slide the fixing to the right and pull it out.	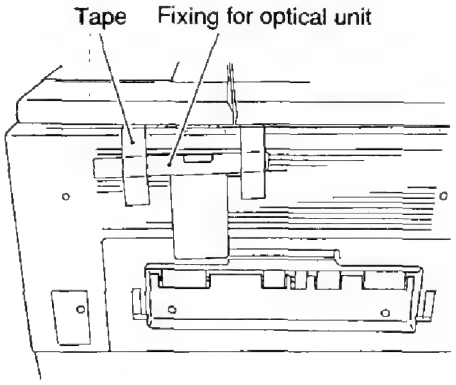
6	Open the front cover, and disengage the developing assembly, and remove it from the copier.	Check that the developing cylinder is free of scratches.

COPYRIGHT © 1992 CANON INC.
CANON NP-1550 REV.1 SEPT.1992 PRINTED IN JAPAN (IMPRIME AU JAPON)

Step	Work	Remarks
7	Remove the cushion blocks from the feeder assembly and fixing assembly.	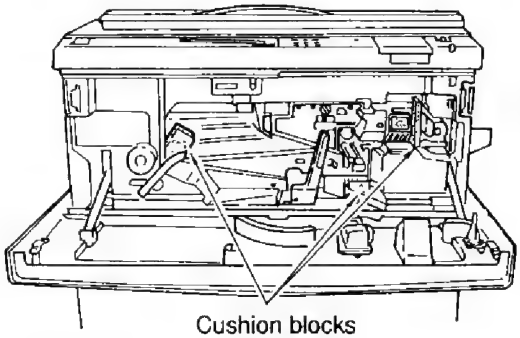
8	Pull the spacer (if found*) to the front to detach. **Some previous machines may not have it.*	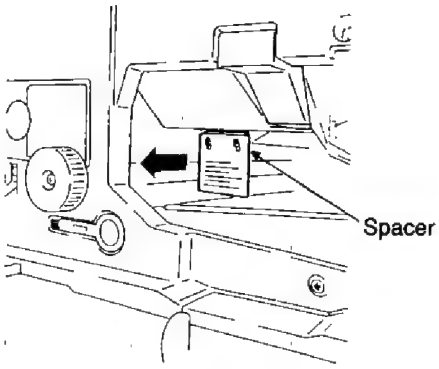
9	Disengage the feeder assembly, remove the knob, and remove the dummy drum. Keep the knob for use later.	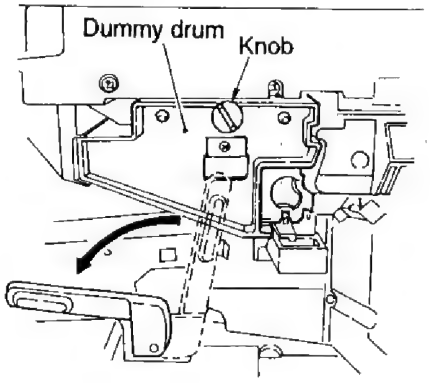
10	Remove the lens lock screw (w/ shipping tag) from between the drum unit rails of the copier.	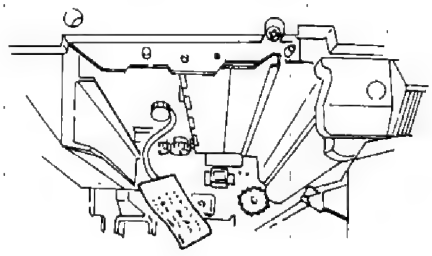

COPYRIGHT © 1992 CANON INC.
CANON NP-1550 REV.1 SEPT. 1992 PRINTED IN JAPAN (IMPRIME AU JAPON)

Step	Work	Remarks
11	Open the delivery cover, and remove the two fixing roller release rolls; then, close the delivery cover.	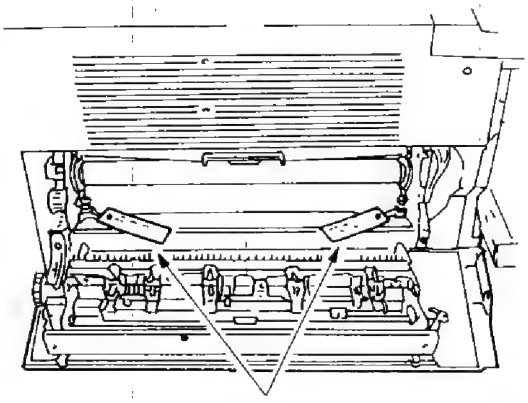

B. Mounting the Drum

The photosensitive drum is susceptable to light; if exposed to room light, it can cause white spots or black lines on the copy images. As such, be quick in performing the following work.

Step	Work	Remarks
1	Take out the drum unit from the box, and remove the light-blocking sheet.	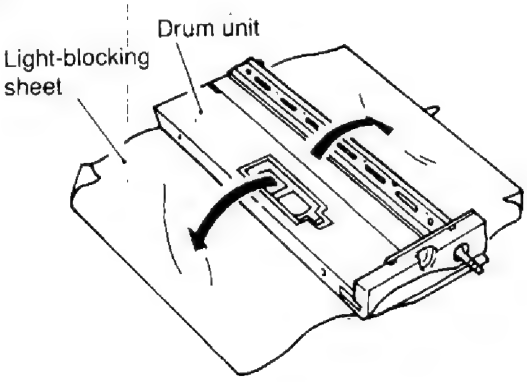 Take care not to damage the drum.
2	Set the drum unit in the copier, and fix it in place using the knob that held the dummy drum.	Slide the drum unit straight along the rails into the copier
3	Move the grip to clean the corona wire of the drum unit two to three times.	
4	Set the developing assembly in the copier, and engage it.	The front cover may be left open.

COPYRIGHT © 1992 CANON INC.
CANON NP-1550 REV.1 SEPT. 1992 PRINTED IN JAPAN (IMPRIME AU JAPON)

C. Checking the Operation

Step	Work	Remarks
1	Turn the door switch ON using the door switch actuator.	
2	Connect the power plug, and shift the POWER switch to 'ON'.	Check that the ADD PAPER and CASSETTE OUT indicators go ON and the WAIT indicator lights red.
3	Set the cassette size to suit the needs of the user.	See p. 5-8
4	Put copy paper in the cassette, and set the cassette in the copier.	• Check that the ADD PAPER indicator goes OFF. • Press the keys, except the COPY START key, on the control panel, and check that each operation is correct.
5	Set the copy tray on the copier.	
6	Open the copyboard cover, and remove the paper and the protection seal from the document size plate.	
7	Record the reading of the copy counter.	
8	Make a copy after the COPY START key has gone green. Wait for ten seconds or more after the drum has stopped, and make another copy.	Check the following: • No abnormal sound is heard; and • The ADD TONER indicator flashes about five to ten seconds after the second copy operation is over.
9	Check that the counter operates properly.	Check that the reading has increased by two from the reading recorded in step 7.

COPYRIGHT © 1992 CANON INC.
CANON NP-1550 REV.0 JAN. 1992 PRINTED IN JAPAN (IMPRIME AU JAPON)

D. Adding Toner

Step	Work	Remarks
1	Remove the door switch actuator.	
2	Disengage the developing assembly, and slide it until it stops.	
3	Shake the toner cartridge well.	
4	Open the developing assembly lid, and fit the boss on the rear end of the toner cartridge into the hole of the plate on the rear end of the developing assembly; thereafter, pull the toner cartridge to the front somewhat so that it comes into contact with the boss found on the left side of the front.	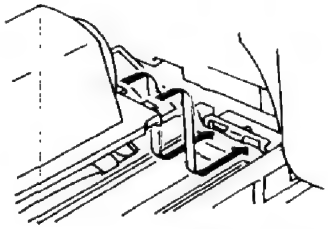
5	Hold the toner cartridge, and pull on the seal to the front until it stops.	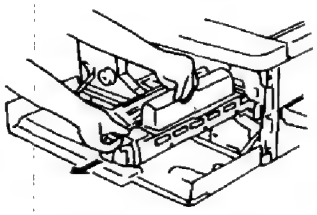
6	Tap lightly on the top of the toner cartridge until all toner has fallen into the developing assembly.	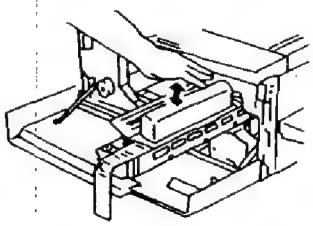
7	Remove the toner cartridge, and keep it in an empty box.	
8	Close the developing assembly lid, and slide the assembly inside until it stops.	
9	Turn the developing assembly lever clockwise to engage it.	
10	Close the front cover.	
11	Set a blank sheet of paper (A3/11"x17") on the copyboard after the COPY START key goes green, and make six to ten copies.	The operation causes the toner inside the developing assembly to be stirred.

COPYRIGHT © 1992 CANON INC.
CANON NP-1550 REV.1 SEPT. 1992 PRINTED IN JAPAN (IMPRIME AU JAPON)

E. Checking the Image

Step	Work	Remarks
1	Place the Test Sheet on the copyboard, and check the image.	Check that copies are made without a problem and the non-image width along the leading edge is correct; otherwise, make adjustments. Non-image width: 2.0 mm (approx.) for leading edge 2.5 mm (approx.) on left/right side
2	Feed paper in the manual mode.	Make tow-sided and overlay copies, and check that the operation is correct; otherwise, make adjustments.
3	Put the OPERATOR'S MANUAL in the pocket of the copyboard cover.	
4	Clean up the area around the copier, and fill out the Service Sheet.	

When all above work is finished, install the options(ADF-A1, MS-A1, Stapler Sorter-B1, and Control Card V) and the document holder.

■ Points to Note for Photosensitive Drum After Installation

The photosensitive drum is susceptible to light and, if exposed to light, can cause white spots or black lines on the copy image; take note of the following:

- Limit the replacement of the CT unit within one minute;
- Limit the removal of jams within five minutes; and
- Keep the drum wrapped in the light-blocking sheet (from drum unit) or fresh copy paper and place it in a dark place whenever it is removed from the copier.

Do not touch the drum; if its surface is soiled, wipe off the dirt using a flannel cloth coated with toner. Do not use paper, lint-free or otherwise, or use a dry cloth or solvent.

COPYRIGHT © 1992 CANON INC.
CANON NP-1550 REV.0 JAN. 1992 PRINTED IN JAPAN (IMPRIME AU JAPON)

III. SETTING THE CASSETTE SIZE

The copier's cassette may be modified to suit the desired paper size by modifying the rear stop plate, spring, and face plate.

1. Modifying the Cassette Size

1) Turn over the cassette, and remove the screw that holds the rear stop plate in place.

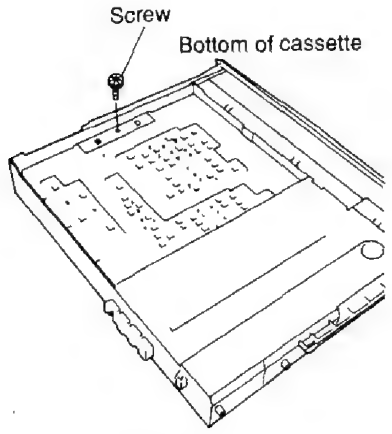

Figure 5-3

2) Change the rear stop plate to suit the desired paper size; note the index on the bottom, and see Table 5-1.

Note:
For the following, use two rear stop plates; note the index on the bottom of the cassette: B4, A4-R, LGL, ARG-R, 11x17, LTR-R,FLS, G.R, FOLIO, G.LGL, AUS. FLS, BLV, ARG.LGL,E., OFC

Copy paper	Size	Rear stop plate
A3	297mmx420mm (11.7"x16.5")	A3
11x17	279.4mmx431.8mm (11"x17")	11x17
A4	210mmx297mm (8.3"x11.7")	A4
Letter	216mmx279mm (8.5"x11.0")	LTR
Government Letter	203mmx267mm (8"x10.5")	G.
Korean	190mmx265mm (7.5"x10.4")	K.
B4	257mmx364mm (10.1"x14.3")	B4
Legal	216mmx356mm (8.5"x14.0")	LGL
B5	182mmx257mm (7.2"x10.1")	B5
Argentine Letter	220mmx280mm (8.7"x11.0")	Arg.
A4-R	297mmx210mm (11.7"x8.3")	A4 R
Letter-R	279mmx216mm (11.0"x8.5")	LTR R
B5R	257mmx182mm (10.1"x7.2")	B5 R
Argentine Legal	220mmx340mm (8.7"x13.4")	Arg.LGL
Government Letter-R	267mmx203mm (10.5"x8.0")	G.R
Government Legal	203mmx330mm (8.0"x13.0")	G.LGL
Argentine Letter-R	280mmx220mm (11.0"x8.7")	Arg.R
Foolscap	216mmx330mm (8.5"x13")	FLS
Folio	210mmx330mm (8.3"x13")	FOLIO
Australian Foolscap	206mmx337mm (8.1"x13.3")	Aus.FLS
Korean-R	265mmx190mm (10.4"x7.5")	K.R
Officio	216mmx317mm (8.5"x12.5")	OFC
Ecuadorean Officio	220mmx320mm (8.0"x12.6")	E.
Bolivian Officio	216mmx355mm (8.5"x14.0")	BLV

Table 5-1

COPYRIGHT © 1992 CANON INC.
CANON NP-1550 REV.0 JAN. 1992 PRINTED IN JAPAN (IMPRIME AU JAPON)

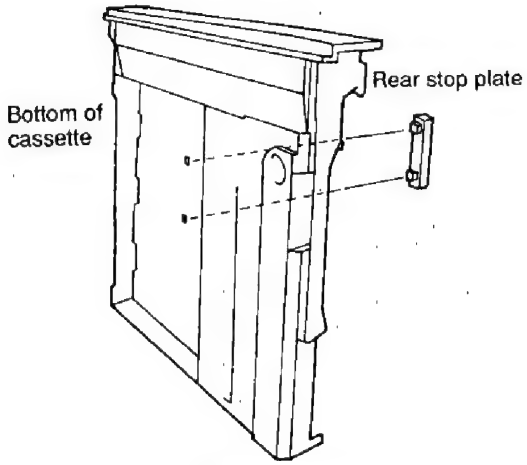

Figure 5-4

3) Fix the stop plate in place using screws.

Note:
See "Replacing the Cassette Spring" when using a different type of spring.

4) Remove the side stop plate each from the two cassettes.

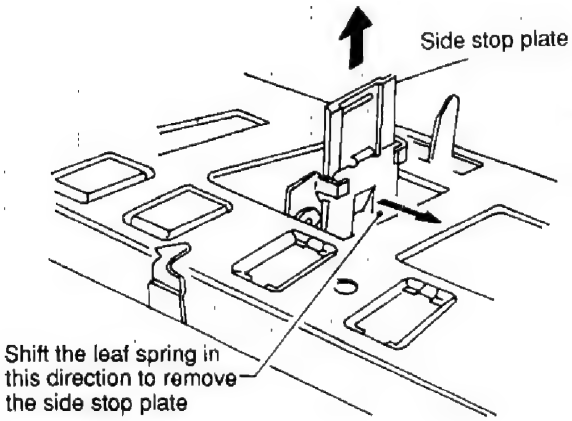

Figure 5-5

5) Remove the screw that hold the paper size plate in place.

6) Slide the paper size plate along the index on the bottom of the cassette to suit the desired paper.

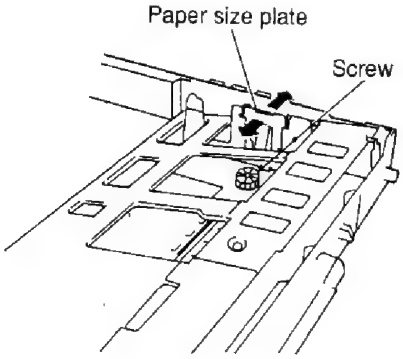

Figure 5-6

7) Place about 100 sheets of paper (fresh out of package, of the desired size) in the cassette, and butt them against the front of the cassette.
8) Keep the side stop plate between the bunch of sheets and size plate as shown, and screw the size plate using a screw; make sure that the size plate is butted.

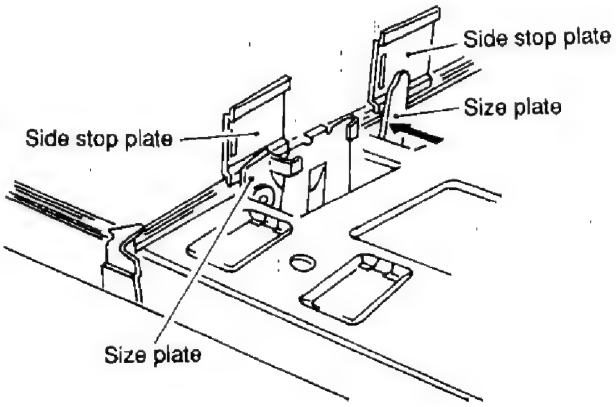

Figure 5-7

9) Fix the side stop plate in its original location.

COPYRIGHT © 1992 CANON INC.
CANON NP-1550 REV.0 JAN. 1992 PRINTED IN JAPAN (IMPRIME AU JAPON)

10) Set the cassette size tab.

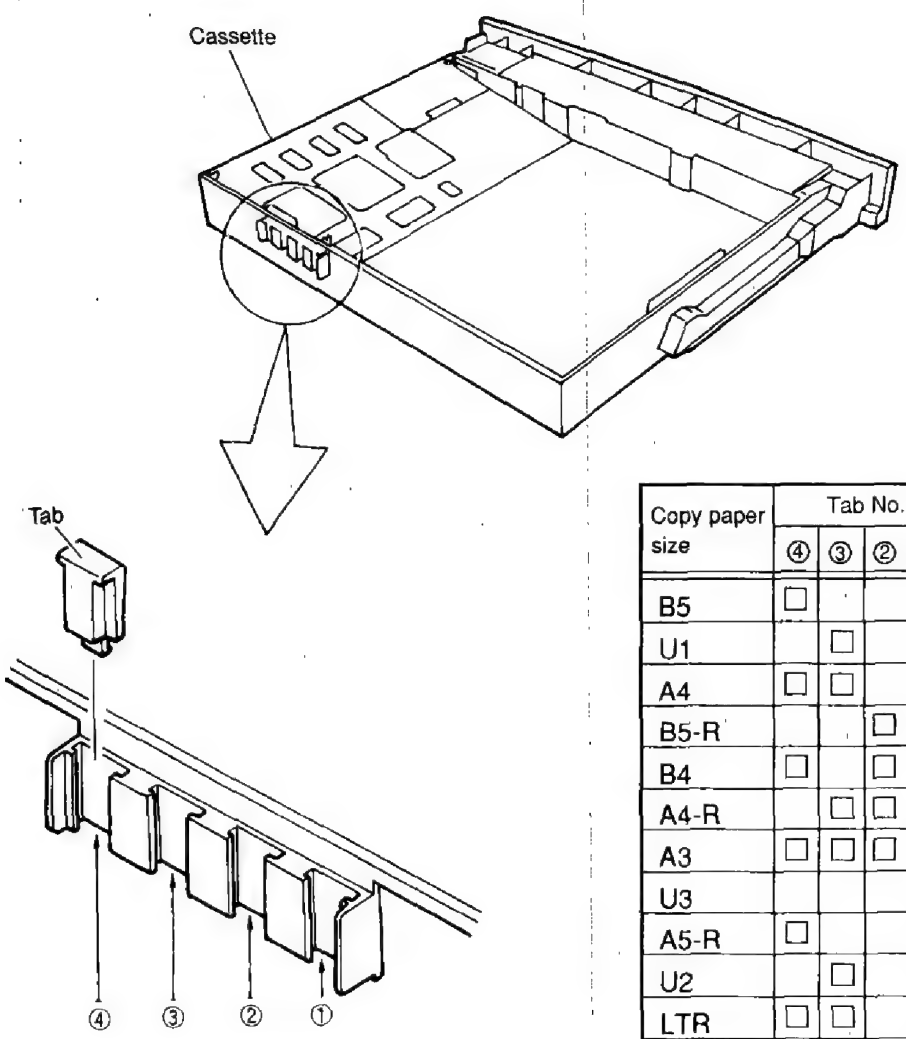

Copy paper size	Tab No.			
	④	③	②	①
B5	□			
U1		□		
A4	□	□		
B5-R			□	
B4	□		□	
A4-R		□	□	
A3	□	□	□	
U3				□
A5-R	□			□
U2		□		□
LTR	□	□		□
STMT-R			□	□
LGL	□		□	□
LTR-R		□	□	□
11 x 17	□	□	□	□

□ • • • • tab present

U1: Korean-R

U2: Others

U3: Korean, Argentine Letter, Government Letter.

Figure 5-8

COPYRIGHT © 1992 CANON INC.
CANON NP-1550 REV.0 JAN. 1992 PRINTED IN JAPAN (IMPRIME AU JAPON)

11) Detach and attach the plate; see Table 5-2.

Copy paper size	Face plate
A3	a b c d
11x17	a b c d
A4	a b c d
Letter	a b c d
Argentine Letter	a b c d
Government Letter	a b c
Korean	a b c
B4	a b c
B5	a b c
A4-R	a b
Letter-R	a b
Argentine Legal	a b
Government Letter-R	a b
Government Legal	a b
Argentine Letter-R	a b
Foolscap	a b
Folio	a b
Australian Foolscap	a b
Officio	a b
Ecuadorean Officio	a b
Bolivian Officio	a b
Legal	a b
Korean-R	a
B5R	a

Table 5-2

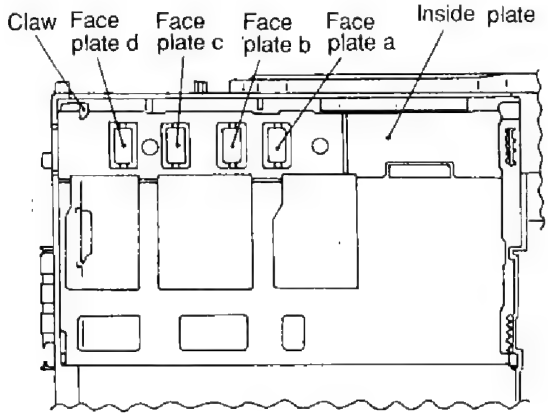

Figure 5-9

12) Attach the size label on the cassette; if the label is not available, write the size on a blank strip of paper.

2. Replacing the Cassette Spring

- The copier can be reset for a different size of copies by modifying the cassette spring as shown in Table 5-3.

Size of paper	Color of spring
A4/A3 11x17/LTR/I	green
A4R/B5R/LTR-R LGL/STMT/II	yellow
B4/B5	red

Table 5-3

I: ARGENTINE LTR
GOVERNMENT LTR
KOREAN
II: ARGENTINE LGL
GOVERNMENT LGL
ARGENTINE LTR-R
GOVERNMENT LTR-R
FOOLSCAP FOLIO
AUSTRALIAN FOOLSCAP
KOREAN-R
ECUADORAN OFICIO
BOLIVIAN OFICIO

1) Remove the rubber stopper from the inside plate.

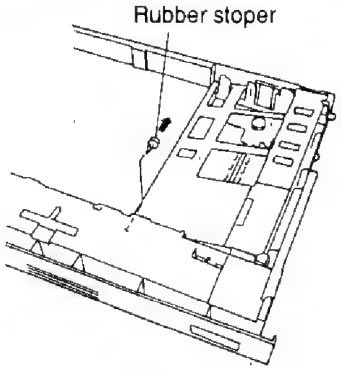

Figure 5-10

COPYRIGHT © 1992 CANON INC.
CANON NP-1550 REV.0 JAN. 1992 PRINTED IN JAPAN (IMPRIME AU JAPON)

2) Remove the inside plate and spring.

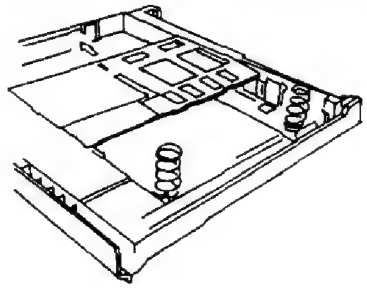

Figure 5-11

3) Change the spring as shown in Table 5-3.
4) Set the inside plate, and attach the rubber stopper.

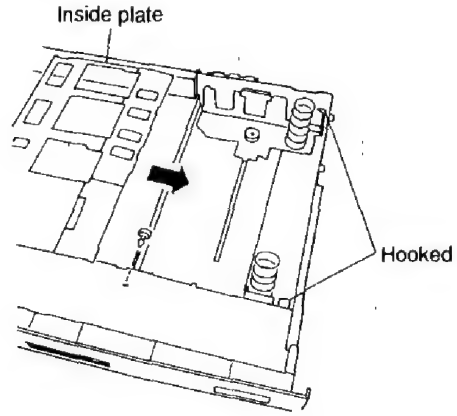

Figure 5-12

Check that the rubber stoppers are correctly attached; further, check that the spring at the rear is correctly set on the fixing behind the inside plate.

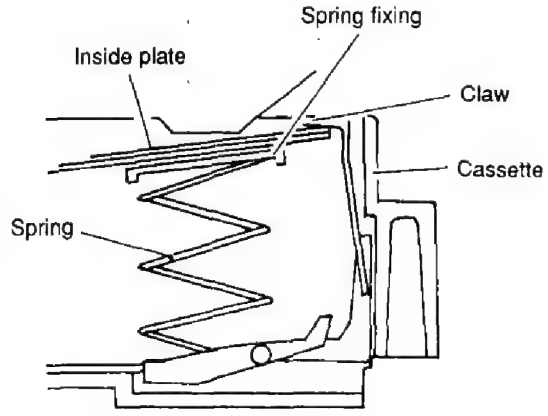

Figure 5-13

3. Removing the Pick-Up Roller

If the cassette is sized to GOVERNMENT LTR, KOREAN, or KOREAN-R, remove the pick-up rollers shown below (metric rollers).

• GOVERNMENT LTR and KOREAN

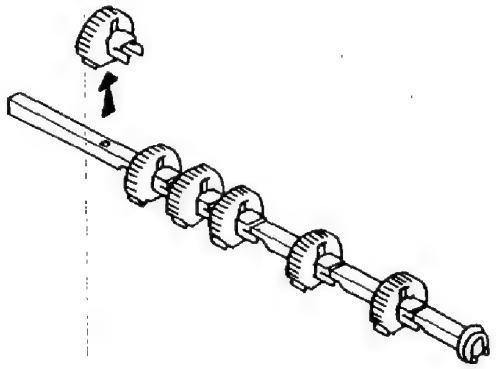

Figure 5-14

• KOREAN-R

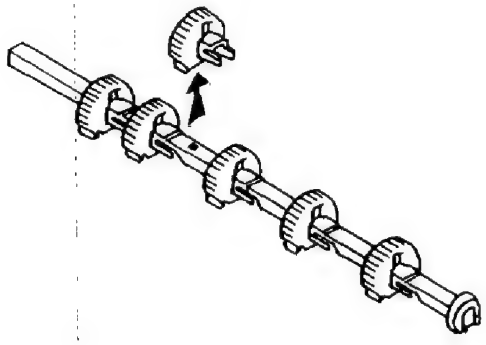

Figure 5-15

COPYRIGHT © 1992 CANON INC.
CANON NP-1550 REV.0 JAN. 1992 PRINTED IN JAPAN (IMPRIME AU JAPON)

IV. SETTING THE CT UNIT

1) Hold both ends so that the yellow seal (round) is to the front, and turn it in the direction of the arrow about ten times as shown below.

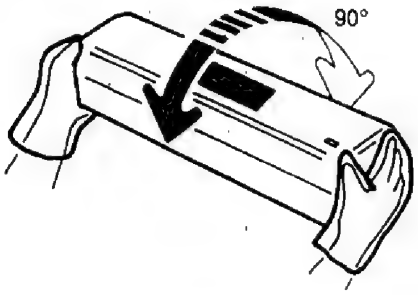

Figure 5-16

2) Take the CT unit from the storage case, and set it in the copier; thereafter, hold the CT unit in place, and pull the yellow tab straight out.

Note:
Do not pull out the orange film.

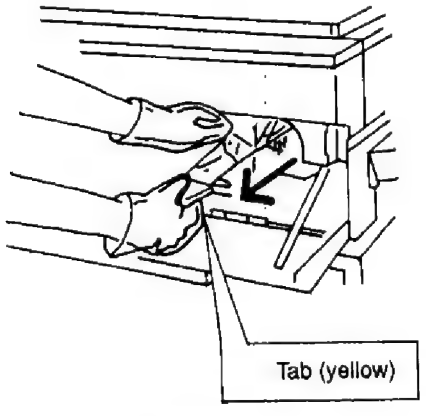

Figure 5-17

3) Put the CT unit back into the storage case, and roll it about ten times in the direction of the arrows.

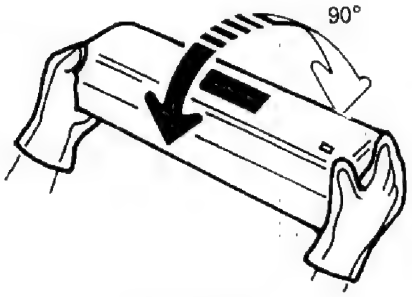

Figure 5-18

4) Shake it in the direction of the arrows about ten times.

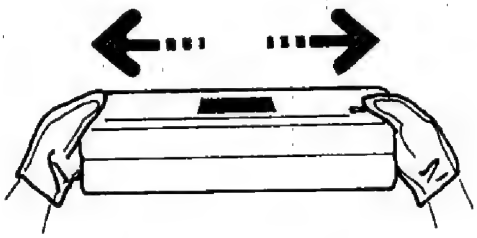

Figure 5-19

5) Set the CT unit in the copier once again, and make test copies in the DIRECT mode; repeat step 4) if the image is uneven.
6) Set the CT unit in the copier, and pull the orange tab straight out; thereafter, close the front door.

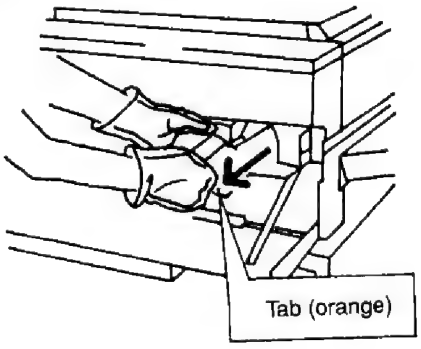

Figure 5-20

COPYRIGHT © 1992 CANON INC.
CANON NP-1550 REV.0 JAN. 1992 PRINTED IN JAPAN (IMPRIME AU JAPON)

V. RELOCATING THE COPIER

Perform the following when relocating the copier by truck or other means of transportation.

Step	Work	Check	Remarks
1	Remove the drum unit.	Put the drum unit in a box for transport.	
2	Fix the scanner and lens in place.		
3	Tape the corona assemblies and feeder assembly release lever in place against vibration.		
4	Tape the front door and delivery assembly.		
5	Place a sheet of A3 or 11"x17" paper on the copyboard glass, and tape the copyboard cover.		

Table 5-4

COPYRIGHT © 1992 CANON INC.
CANON NP-1550 REV.1 SEPT.1992 PRINTED IN JAPAN (IMPRIME AU JAPON)

VI. SETTING CONTROL CARD V

1) Open the front door, and remove the inside cover.
2) Remove the control panel; see p.4-2
3) Turn over the control panel, remove the screw that holds the face lid in place.
4) Remove the face plate.

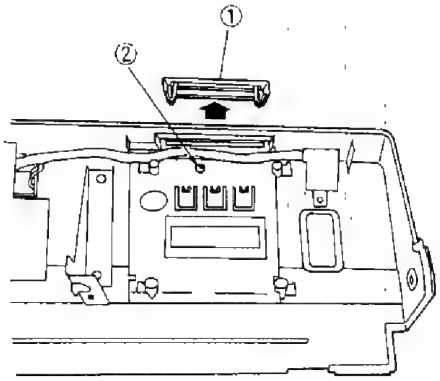

① Mounting screw ② Face lid

Figure 5-21

5) Remove the protection sheet from the indicator unit of Control Card V.
6) Place the clear sheet over the hole of the indicator unit.

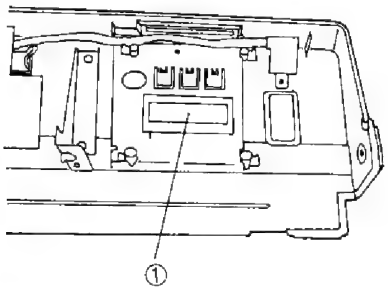

① Hole

Figure 5-22

7) Fix Control Card V on the control panel using four mounting screws.

Slide a card into Control Card V, and fix Control Card V where the card can be slid in and out easily.

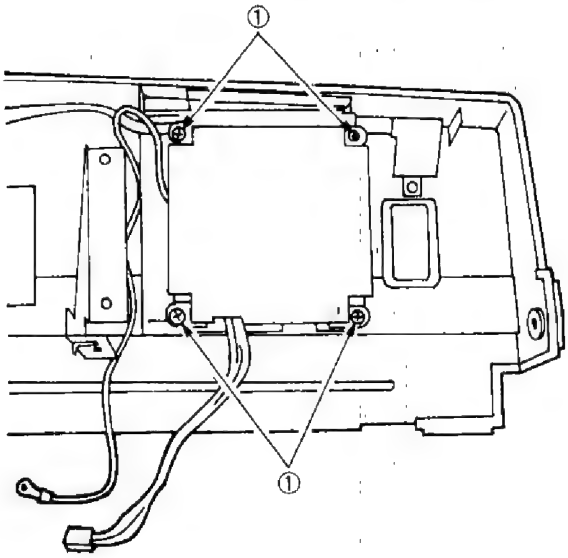

① Holes for mounting screws

Figure 5-23

Check that the connector for the printer is found at the center of the hole.

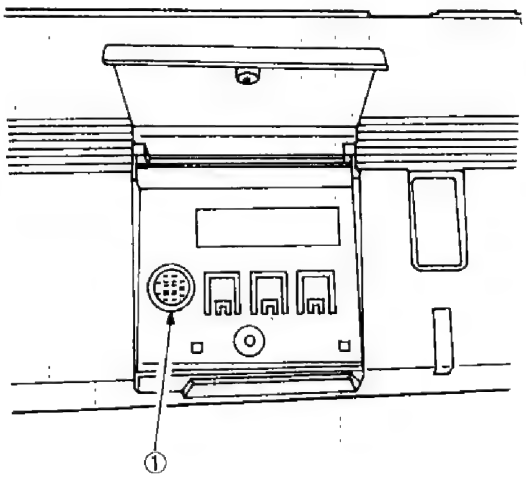

① Connector for printer

Figure 5-24

COPYRIGHT © 1992 CANON INC.
CANON NP-1550 REV.0 JAN. 1992 PRINTED IN JAPAN (IMPRIME AU JAPON)

8) Attach the grounding wire for Control Card V.

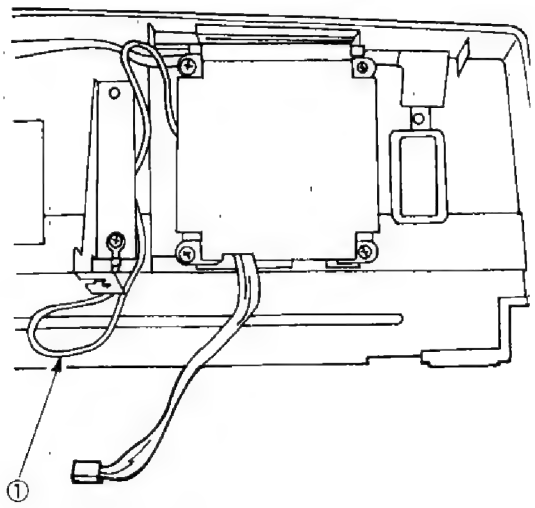

① Grounding wire

Figure 5-25

9) Disconnect the shorting connector of the control panel shown in Figure 5-26.
10) Connect the 4P connector of Control Card V and the 4P connector of the control panel on the copier side.

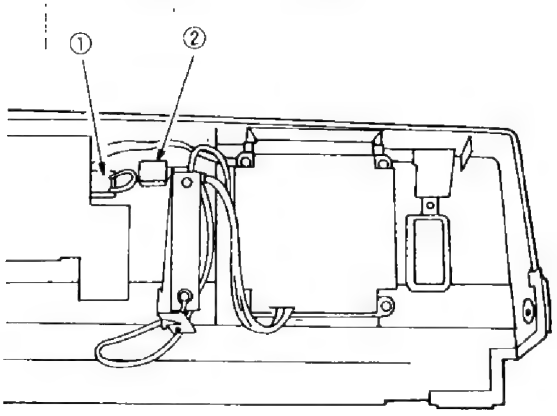

① Shorting connector ② 4P connector

Figure 5-26

11) Mount the control panel on the copier.
12) Remove the protection sheet from the control panel guide plate of Control Card V.
13) Attach the control panel guide plate of Control Card V on the control panel of the copier.

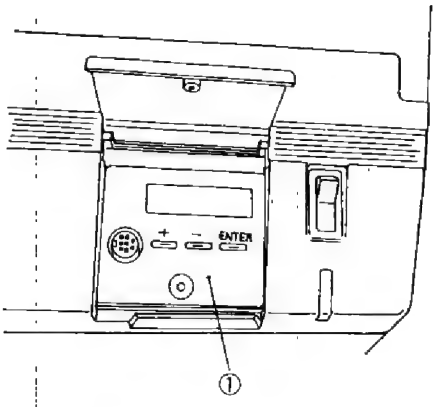

① Guide plate

Figure 5-27

14) Turn the copier ON, and check the operation of Control Card V.
15) Attach the inside right cover.

COPYRIGHT © 1992 CANON INC.
CANON NP-1550 REV.1 SEPT. 1992 PRINTED IN JAPAN (IMPRIME AU JAPON)

VII. ATTACHING THE DOCUMENT HOLDER

1) Fit the two stepped screws (M4 x 5) on the right side plate of the copier.

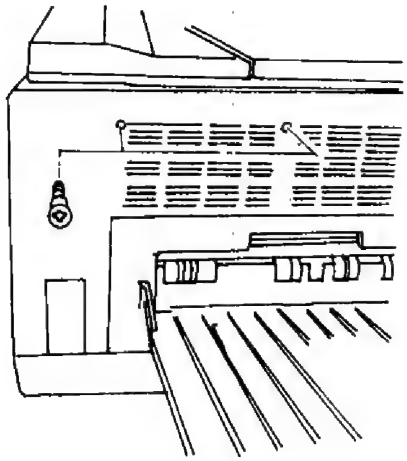

Figure 5-28

2) Hook the retainers of the document holder on the stepped screws.

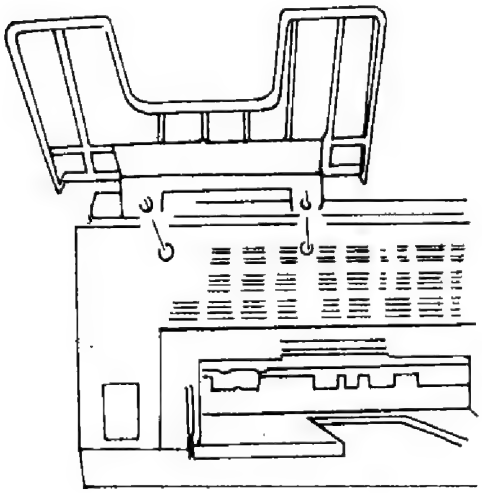

Figure 5-29

COPYRIGHT © 1992 CANON INC.
CANON NP-1550 REV.0 JAN. 1992 PRINTED IN JAPAN (IMPRIME AU JAPON)

I. PERIODICALLY REPLACED PARTS

To maintain the copier at its peak performance, the parts listed in the following chart must be replaced periodically. Although the deterioration of a part may not be visible, it can seriously hamper the performance of the copier if not replaced on schedule.

Parts should be replaced during the regular service visit that is closest to the end of the service life of the part.

as of SEPT. 1992

No.	Description	Part No.	Quantity	Replacement	Remarks
1	Ozone filter	FF2-5595-00P	1	–	1 year
2	Static charge eliminator	FF1-9438-050	1	50,000	
3	Transfer corona wire	FY3-0040-000	AR	100,000	115/220/240V
4	Side seal, upper (short)(developing assembly)	FA5-1790-000	2	100,000	
	Side seal, lower (long)(developing assembly)	FA5-1769-000	2	100,000	
5	Front developing cylinder spacer roller	FA5-1766-000	1	100,000	
6	Rear developing cylinder spacer roller	FA5-1767-000	1	100,000	

Note:
The above values are estimates and are subject to change depending on experience.

COPYRIGHT © 1992 CANON INC.
CANON NP-1550 REV.1 SEPT. 1992 PRINTED IN JAPAN (IMPRIME AU JAPON)

II. DURABLE PARTS

The values shown in the table below indicate the expected average life (number of copies) of parts which may require replacement at least once during the warranty period due to deterioration or damage but which can be simply replaced to restore the performance of the copier.

as of SEPT. 1992

No.	Description	Part No.	Quantity	Service life (number of copies)	Remarks
1	Oil-applying roller (fixing assembly)	FA5-1952-000	1	20,000	
2	Scanner drive cable	FA5-2073-000	1	100,000	
3	Scanning lamp (scanner)	FH7-3114-000	1	100,000	220/240V
4	Paper pick-up roller (pick-up assembly)	FC1-0676-00P	6	100,000	
5	Slide scraper (developing assembly)	FA5-1768-000	2	100,000	
6	Upper fixing roller bearing (fixing assembly)	FS1-1240-000	2	100,000	
7	Pre-exposure lamp	FG2-4048-00P	1	200,000	
8	Upper fixing roller (fixing assembly)	FA5-1916-050	1	200,000	
9	Lower fixing roller (fixing assembly)	FA6-3921-000	1	200,000	
10	Upper separation claw (fixing assembly)	FB1-0301-000	5	200,000	
11	Lower separation claw (fixing assembly)	FA2-9037-000	5	200,000	
12	Multi feeder roller	FC1-0741-00P	1	90,000	Must be replaced at the same time.
13	Pad (multi feeder)	FC1-0736-00P	1	90,000	

Note:
The above values are estimates and are subject to change depending on experience.

COPYRIGHT © 1992 CANON INC.
CANON NP-1550 REV.1 SEPT. 1992 PRINTED IN JAPAN (IMPRIME AU JAPON)

III. BASIC PROCEDURE FOR PERIODIC SERVICING

Note:

i. Perform periodic servicing after every 15,000 copies, as a general rule.
ii. Before making a service call, check the service log and take along any replacement parts that are likely to be needed.

No.	Procedure	Check	Remarks
1	Note the operator's comments.	Conditions of copier	
2	Record the counter reading	Number of miscopies	
3	Make DIRECT and two-page overlay test copies.	a. Image density b. Dirty background c. Clarity of letters d. Leading edge blank area e. Left and right margins f. Fixing, synchronizing, and soiling of back g. Unusual noise h. Operation of counter	Standard: 2.0±1.5mm (DIRECT) Standard: 10.0±2.0mm (DIRECT), front side
4	Clean the corona assemblies.		Wipe dry using lint-free paper then clean using alcohol.
5	Clean separation feeder assemblies.		
6	Clean fixing and delivery assemblies. • Paper guide plate • Separation claws (upper and lower)		Alcohol
7	Perform the periodic servicing appropriate to the number of copies (see page 6-4).		
8	Clean the copyboard cover and the copyboard glass.		
9	Check the amount of waste toner.		
10	Make test copies.		
11	Make sample copies.		
12	Select sample copies to keep for the customer record. Clean up around the copier.		
13	Record the final counter value.		
14	Fill in the service sheet and check out with the person in charge.		

COPYRIGHT © 1992 CANON INC.
CANON NP-1550 REV.1 SEPT. 1992 PRINTED IN JAPAN (IMPRIME AU JAPON)

IV. PERIODIC SERVICING SCHEDULE

Note:
Do not use solvents or oils other than those specified.

△: Clean ●: Replace ×: Lubricate □: Adjust ◎: Check

Unit	Description	Periodic servicing		Remarks
		Every * 15,000 copies	Every 30,000 copies	
Externals	Copyboard glass	△		Clean with alcohol.
	Ozone filter			Replace yearly.
Scanner drive unit	Scanner rails		×	Clean with alcohol then apply high-vis-cosity lubricating oil (TKN-0451)
Feeder	Transfer guide	△		Damp cloth
	Feeder belt	△		
	Feeder frame	△		
Optical path	Scanning lamp reflector		△	Clean with a blower brush. If very dirty, clean with alcohol. Clean mirrors 5 and 6 with mirror cleaning tool.
	Scanning lamp side reflector		△	
	Mirror 1 to 6		△	
	Lens		△	
	Dustproofing glass	△		
Corona assemblies	Primary corona assembly	△		Dry wipe using lint-free paper, then clean using alcohol.
	Primary corona wire	△		
	Transfer corona assembly	△		
	Transfer corona wire	△		
	Static charge eliminator	△		Damp cloth
Developing assembly	Developing rollers (front and rear)		△	Clean with alcohol.
	Side seals (front and rear)			
Fixing assembly	Upper fixing roller	△		Clean with cleaning oil.
	Lower fixing roller	△		
	Paper guide plate	△		Clean with MEK.
	Separation claws (upper and lower)	△		

* Items to be cleaned every 15,000 copies or over 6 months, whichever comes first.

< Option : Stapler Sorter - B1 >
Not designated.

COPYRIGHT © 1992 CANON INC.
CANON NP-1550 REV.1 SEPT. 1992 PRINTED IN JAPAN (IMPRIME AU JAPON)

A. GENERAL TIMING CHART (A4, AE, 2 copies)

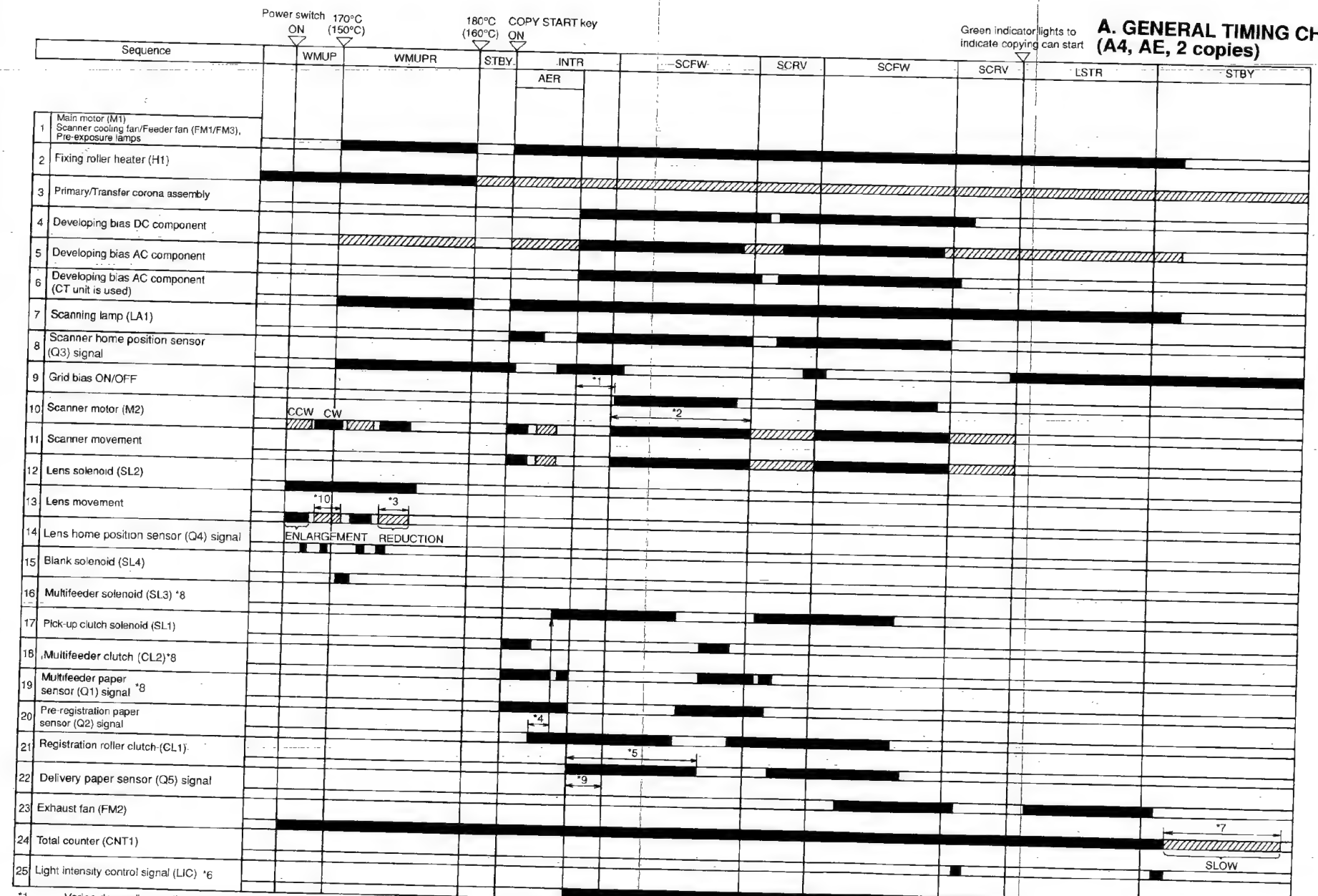

*1 Varies depending on the reproduction ratio and the setting of 'leading edge (C3)' in the service mode.
*2 Varies depending on the cassette size and the selected reproduction ratio.
*3 Varies depending on the reproduction ratio.
*4 Varies depending on the setting of 'arc adjustment (C4) ' in the service mode; multifeeder in use.
*5 Varies depending on the cassette size.
*6 Generated only when the CT unit is in use to increase the intensity of the scanning lamp.
*7 Rotates at lower speed for 30 sec when the black developing assembly is used and 120 sec when the CT unit is used.
*8 Used only when the multifeeder is in use.
*9 Varies depending on the setting of 'leading edge non-image width' in the service mode.
*10 Varies depending on the cassette size.

COPYRIGHT © 1992 CANON INC.
CANON NP-1550 REV.1 SEPT. 1992 PRINTED IN JAPAN (IMPRIME AU JAPON)

<MULTI FEED>
(A4, 2copies, multifeed)



*Varies depending on the setting of 'arc adjustment (C4)' in the service mode; multifeeder in use.

COPYRIGHT © 1992 CANON INC.

CANON NP-1550 REV.0 JAN. 1992 PRINTED IN JAPAN (IMPRIME AU JAPON)

B. LIST OF SIGNALS/COMMANDS

1. SIGNALS

ACBON	AC BIAS ON command
ACOFF	AC SHUT-OFF command
AE	AE SENSOR OUTPUT signal (analog)
AE-BIAS	AE SENSOR BIAS signal (analog)
AEGIN	AE SENSOR GAIN signal
BLSD	BLANK SOLENOID DRIVE command
BTEP	BLACK TONER EMPTY signal
CCNTD	CONTROL COUNTER DRIVE command
CCNNT	CONTROL CARD CONNECT signal
CPEP	CASSETTE PAPER EMPTY signal
CSIN	CASSETTE IN signal
CSZ0	CASSETTE SIZE signal 0
CSZ1	CASSETTE SIZE signal 1
CSZ2	CASSETTE SIZE signal 2
CSZ3	CASSETTE SIZE signal 3
CSZ4	CASSETTE SIZE signal 4
CTD	CT-UNIT DETECTION signal
DCBC	DC BIAS CONTROL command
FM1D	FAN MOTOR 1 DRIVE command
FM2D	FAN MOTOR 2 DRIVE command
FM3D	FAN MOTOR 3 DRIVE command
GRBC	GRIDE BIAS CONTROL signal
GRDON	GRID ON signal
HTRD	HEATER DRIVE command
HVTON	HVTON command
LAON	LAMP ON command
LGHT	LIGHT signal
LHP	LENS HOME POSITION signal
LIC	LIGHT INTENSITY CONTROL command
LNSD	LENS SOLENOID DRIVE command
MFCD	MULTIFEEDER CLUTCH DRIVE command
MFPD	MULTIFEEDER PAPER DETECTION signal
MFSD	MULTIFEEDER SOLENOID DRIVE command
MMD	MAIN MOTOR DRIVE command
PDP1	PAPER DETECTION signal 1 (Q2)
PDP2	PAPER DETECTION signal 2 (Q5)
PEXP	PRE-EXPOSURE LAMP LINT command
PUSD	PICK-UP ROLLER CLUTCH SOLENOID DRIVE command
RGCD	REGISTRATION ROLLER CLUTCH SOLENOID DRIVE command
RDC	RIGHT DOOR CLOSE signal
SCHP	SCANNER HOME POSITION signal
TCNTD	TOTAL COUNTER DRIVE command
TEP	TONER EMPTY signal
TH1	FIXING ROLLER SURFACE TEMPERATURE signal (analog)
ZXDP	ZERO CROSS DETECTION signal

2. ABBREVIATIONS

AER	AE ROTATION
INTR	INITIAL ROTATION
LSTR	LAST ROTATION
SCFW	SCANNER FORWARD
SCRV	SCANNER REVERSE
STBY	STANDBY
WMUP	WARM UP
WMUPR	WARM UP ROTATION

COPYRIGHT © 1992 CANON INC.
CANON NP-1550 REV.1 SEPT. 1992 PRINTED IN JAPAN (IMPRIME AU JAPON)

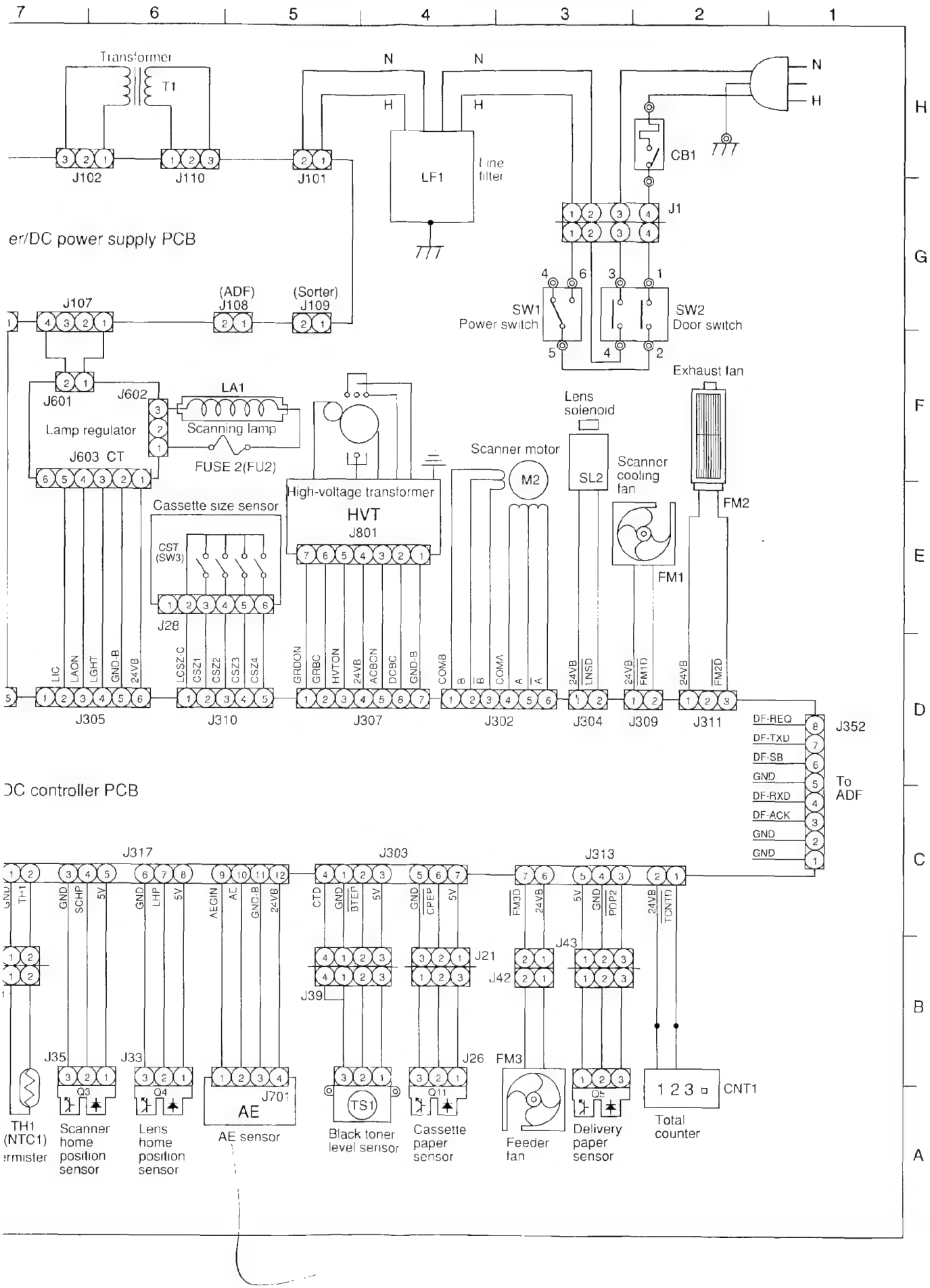
7
6
5
4
3
2
1
H
G
F
E
D
C
B
A
Transformer
T1
J102
J110
J101
N
H
LF1
Line filter
CB1
J1
er/DC power supply PCB
SW1
Power switch
SW2
Door switch
J107
(ADF)
J108
(Sorter)
J109
J601
J602
LA1
Lamp regulator
Scanning lamp
J603 CT
FUSE 2(FU2)
Exhaust fan
Lens solenoid
Scanner motor
M2
SL2
Scanner cooling fan
FM2
FM1
Cassette size sensor
CST (SW3)
J28
High-voltage transformer
HVT
J801
LIC
LAON
LGHT
GND-B
24VB
LCSZ-C
CSZ1
CSZ2
CSZ3
CSZ4
GRDON
GRBC
HVTON
24VB
ACBCN
DCBC
GND-B
COMB
B
B
COMA
A
A
24VB
LNSD
24VB
FM1D
24VB
FM2D
J305
J310
J307
J302
J304
J309
J311
DF-REQ
DF-TXD
DF-SB
GND
DF-RXD
DF-ACK
GND
GND
J352
To ADF
DC controller PCB
J317
J303
J313
TH-1
GND
SCHP
5V
GND
LHP
5V
AEGIN
AE
GND-B
24VB
CTD
GND
BTEP
5V
GND
CPEP
5V
FM3D
24VB
5V
GND
PDP2
24VB
TCNTD
J21
J42
J43
J39
J35
J33
J701
J26
FM3
Q3
Q4
AE
Q11
Q5
TS1
1 2 3
CNT1
TH1 (NTC1)
Scanner home position sensor
Lens home position sensor
AE sensor
Black toner level sensor
Cassette paper sensor
Feeder fan
Delivery paper sensor
Total counter

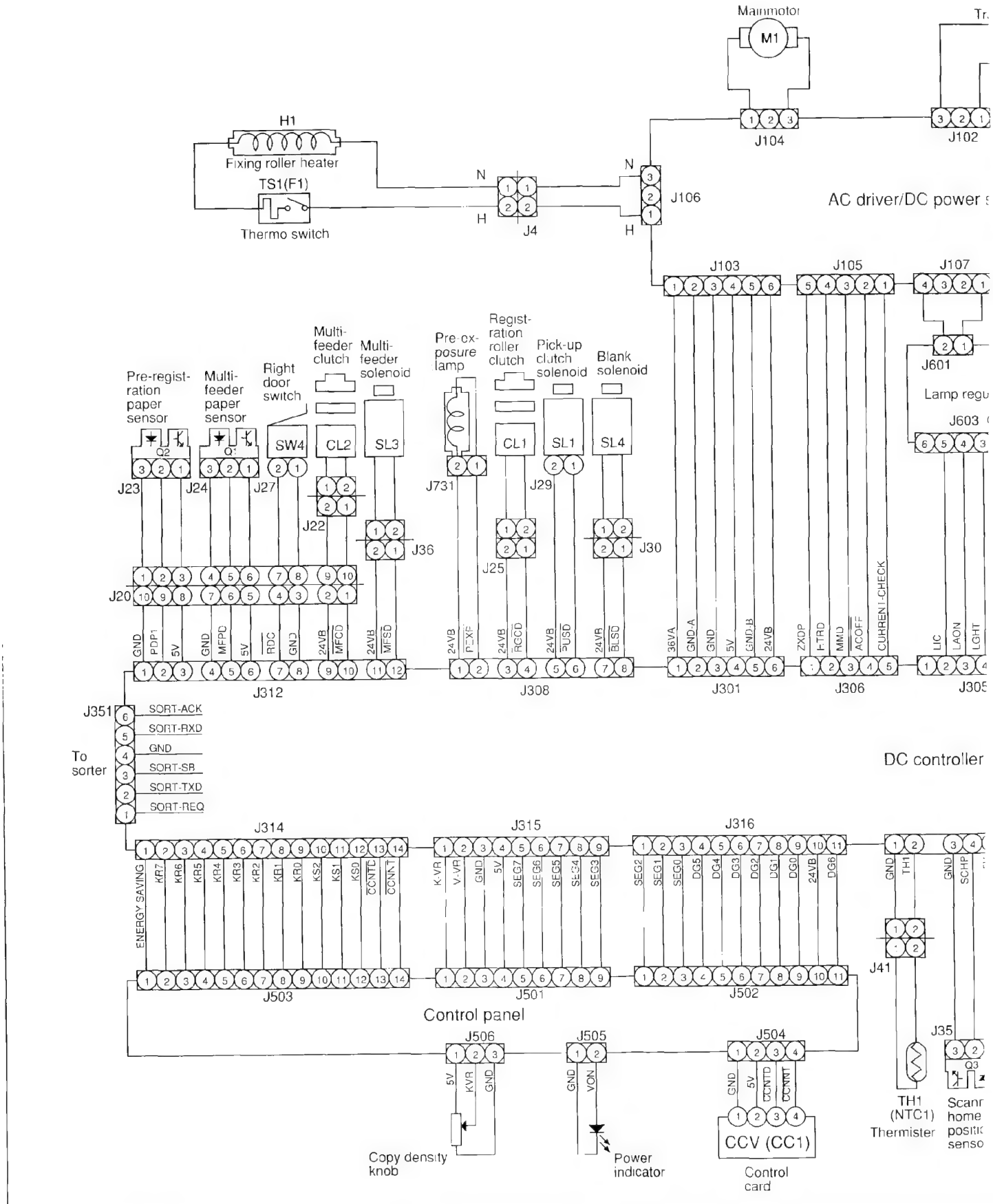

COPYRIGHT © 1992 CANON INC.

CANON NP-1550 REV.1 SEPT.1992 PRINTED IN JAPAN (IMPRIME AU JAPON)

DC CONTROLLER PCB (1/5)

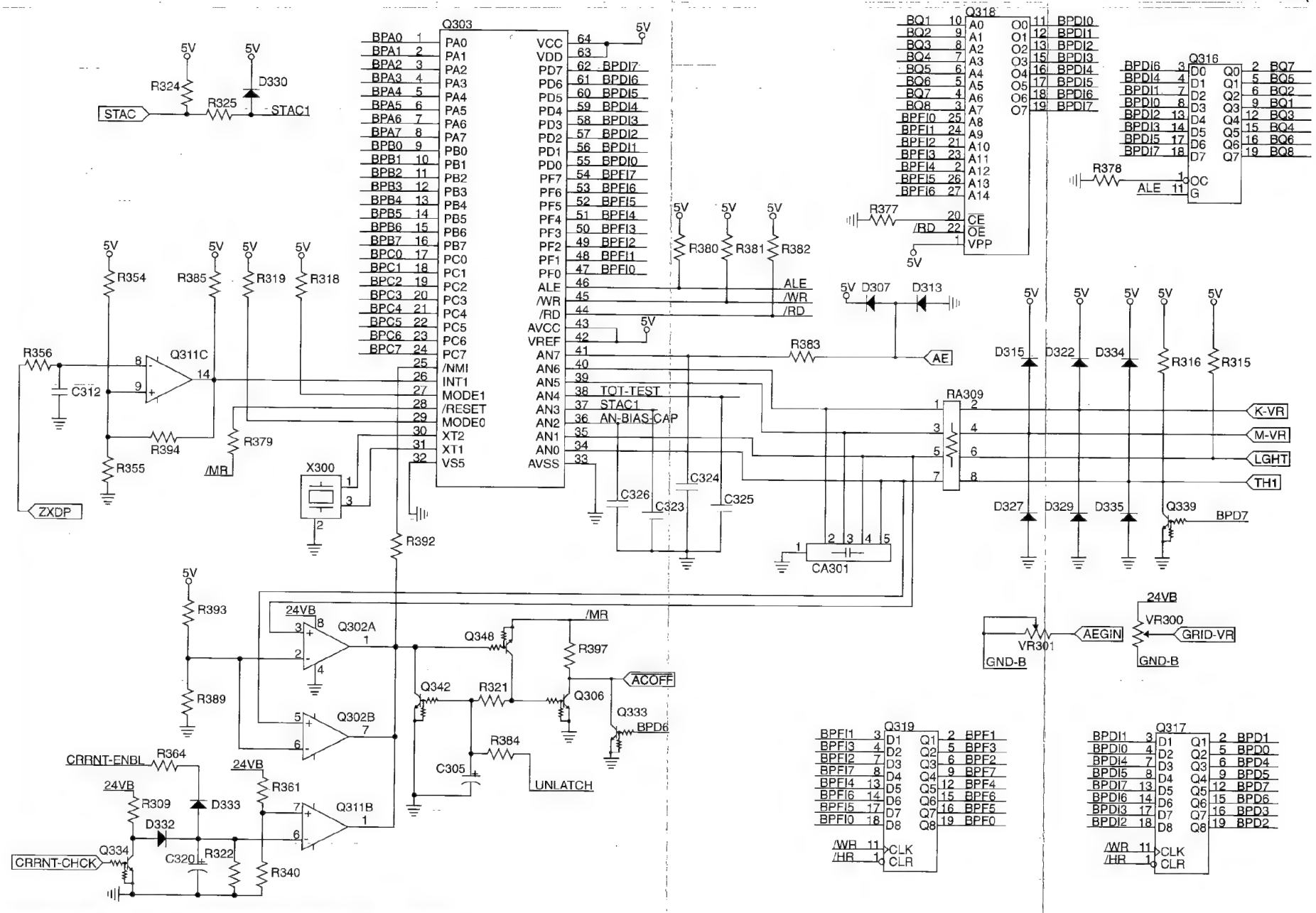

COPYRIGHT © 1992 CANON INC.

CANON NP-1550 REV.0 JAN. 1992 PRINTED IN JAPAN (IMPRIME AU JAPON)

DC CONTROLLER PCB (2/5)

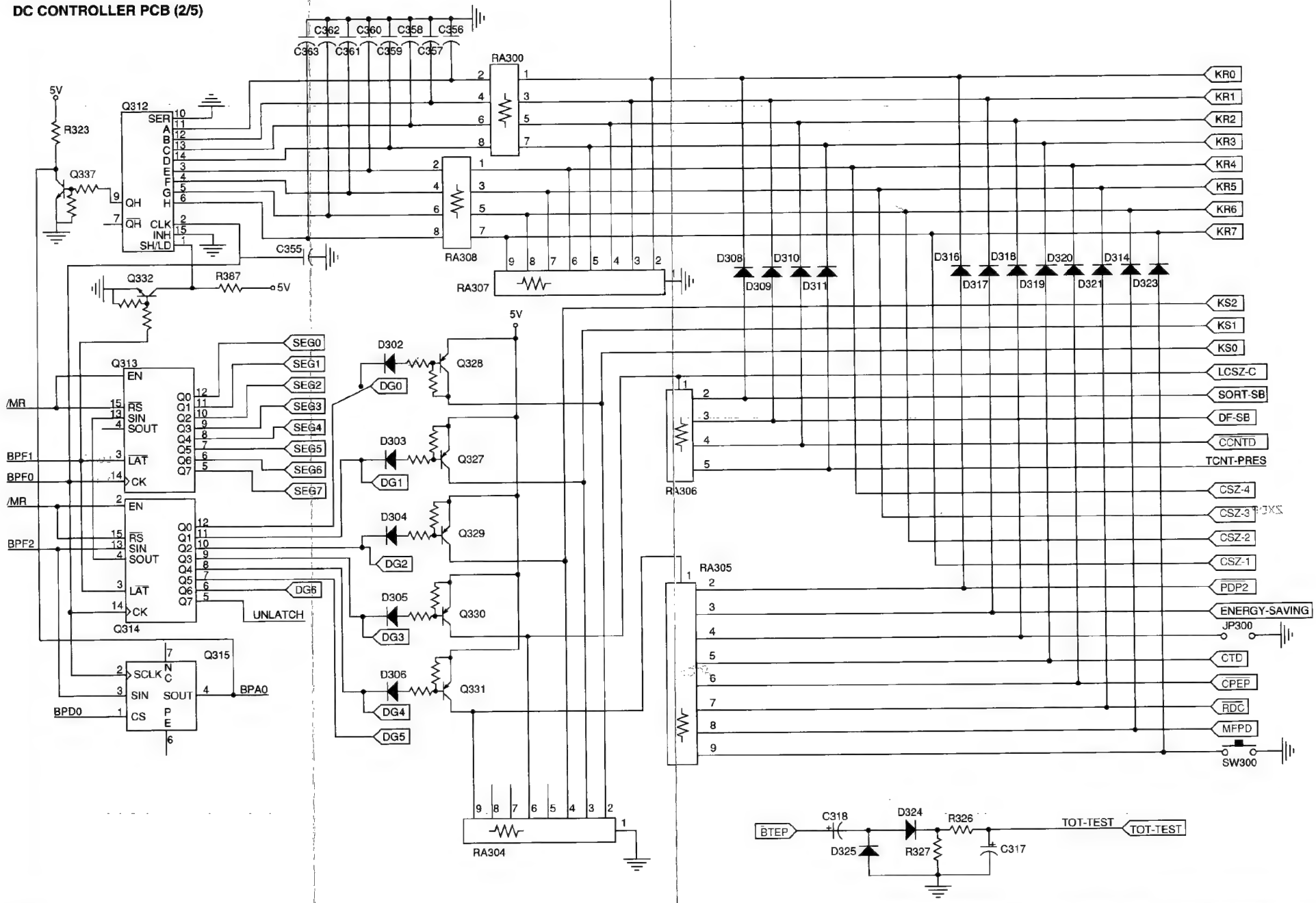

COPYRIGHT © 1992 CANON INC.

CANON NP-1550 REV.0 JAN. 1992 PRINTED IN JAPAN (IMPRIME AU JAPON)

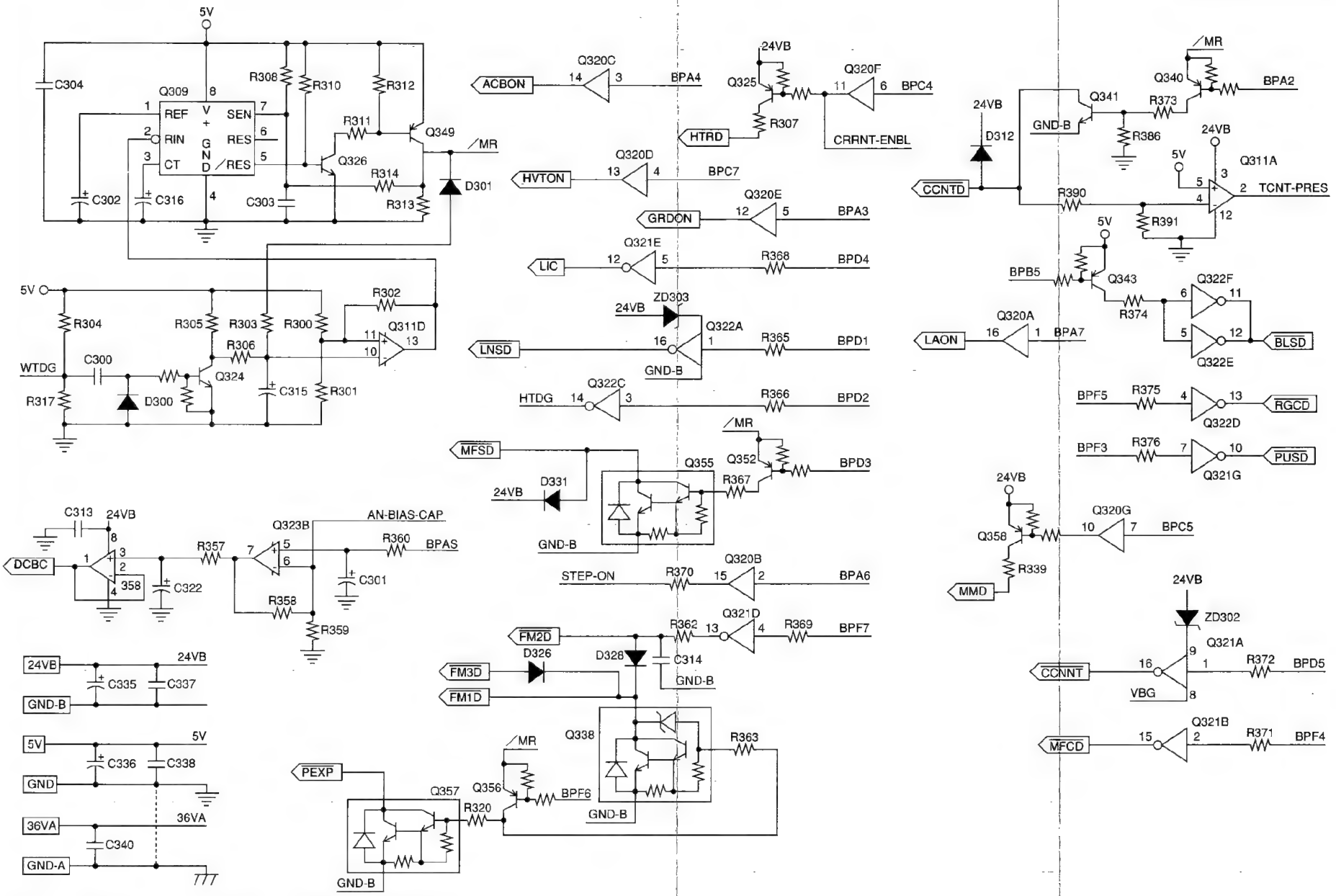

COPYRIGHT © 1992 CANON INC.

CANON NP-1550 REV.1 SEPT. 1992 PRINTED IN JAPAN (IMPRIME AU JAPON)

DC CONTROLLER PCB (4/5)

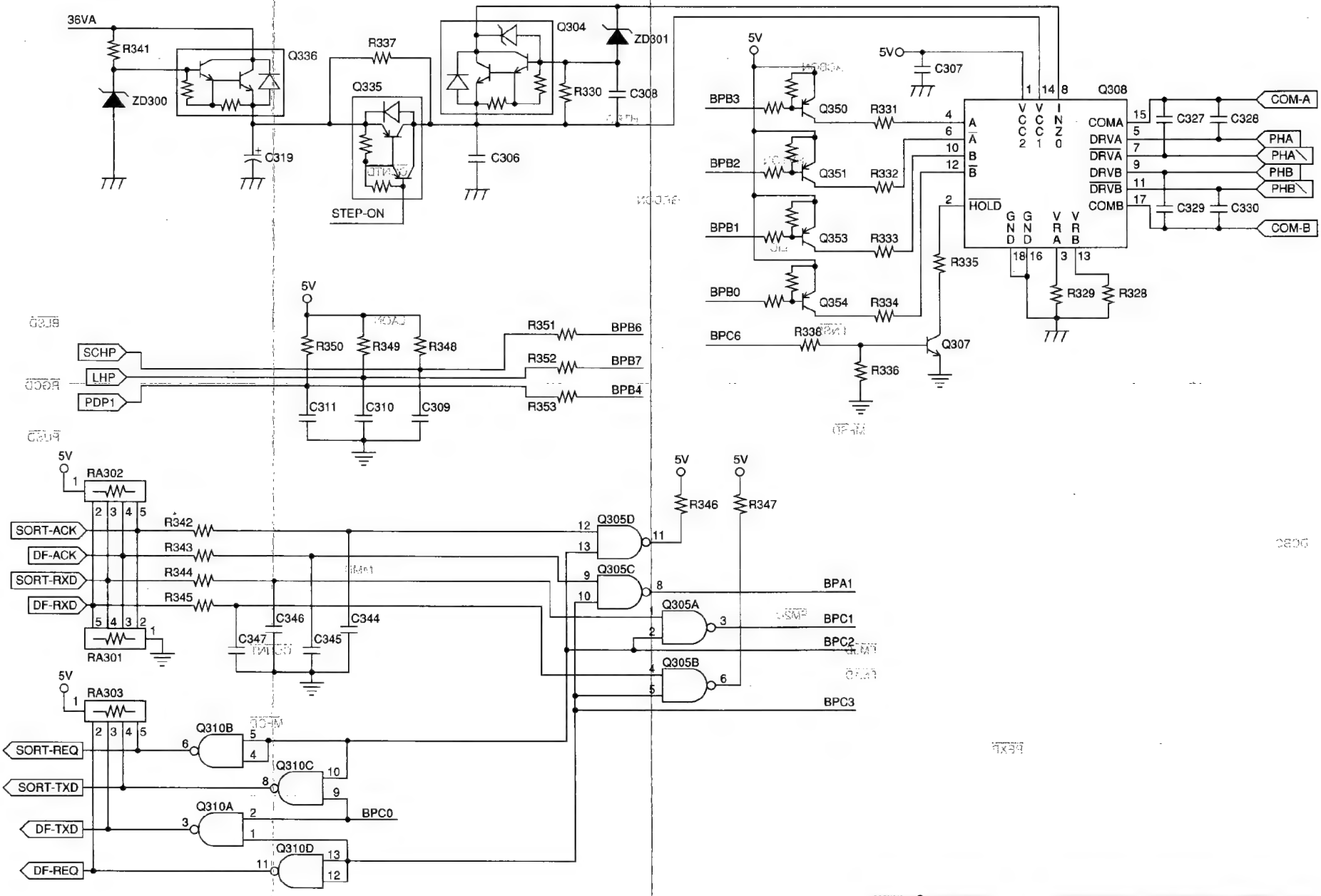

COPYRIGHT © 1992 CANON INC.

CANON NP-1550 REV.0 JAN. 1992 PRINTED IN JAPAN (IMPRIME AU JAPON)

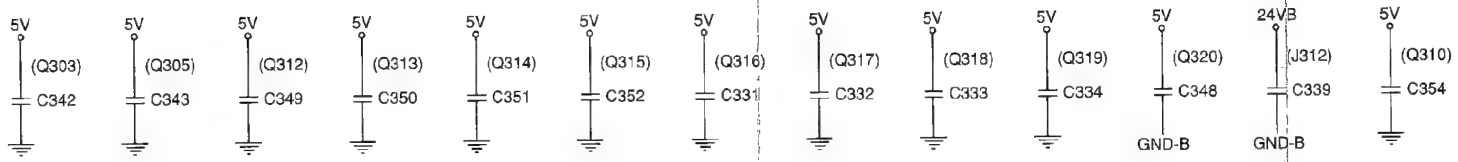

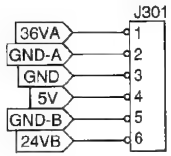

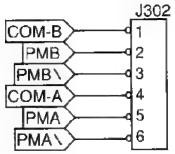

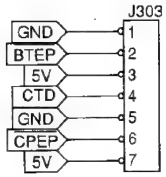

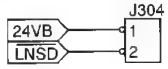

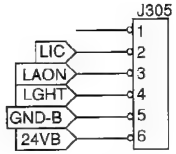

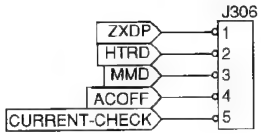

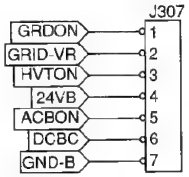

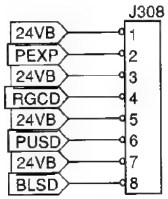

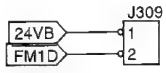

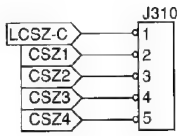

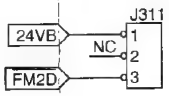

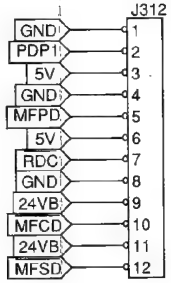

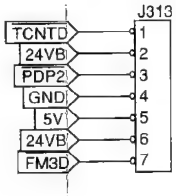

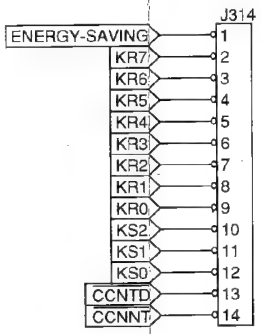

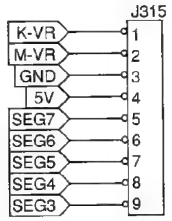

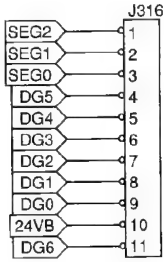

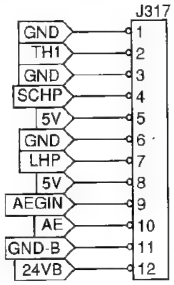

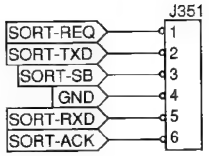

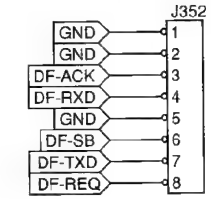

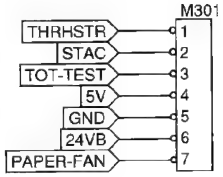

COPYRIGHT © 1992 CANON INC.

CANON NP-1550 REV.0 JAN. 1992 PRINTED IN JAPAN (IMPRIME AU JAPON)

E. AE SENSOR CIRCUIT DIAGRAM

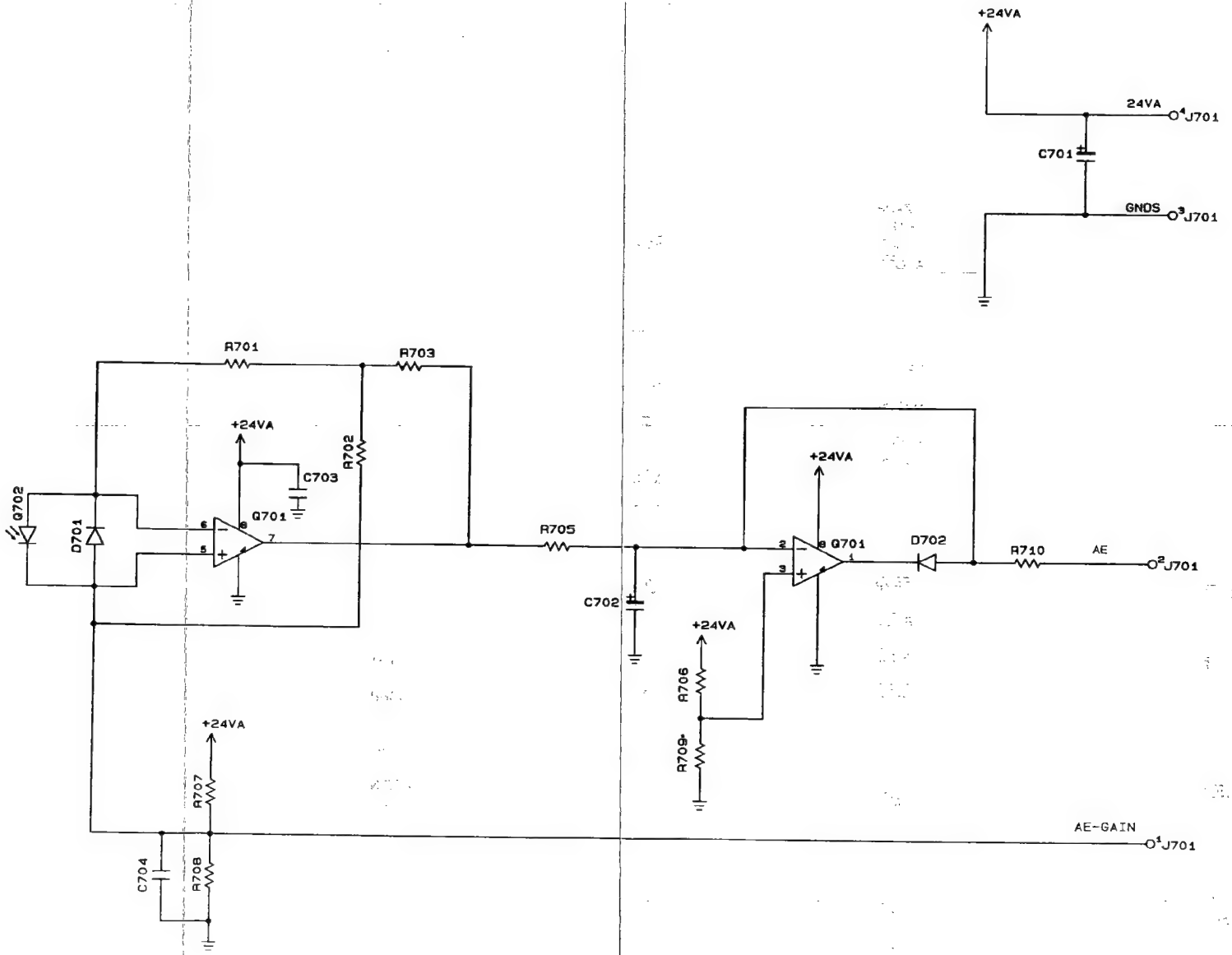

COPYRIGHT © 1992 CANON INC.

CANON NP-1550 REV.0 JAN. 1992 PRINTED IN JAPAN (IMPRIME AU JAPON)

F. AC DRIVER / DC POWER SUPPLY CIRCUIT DIAGRAM

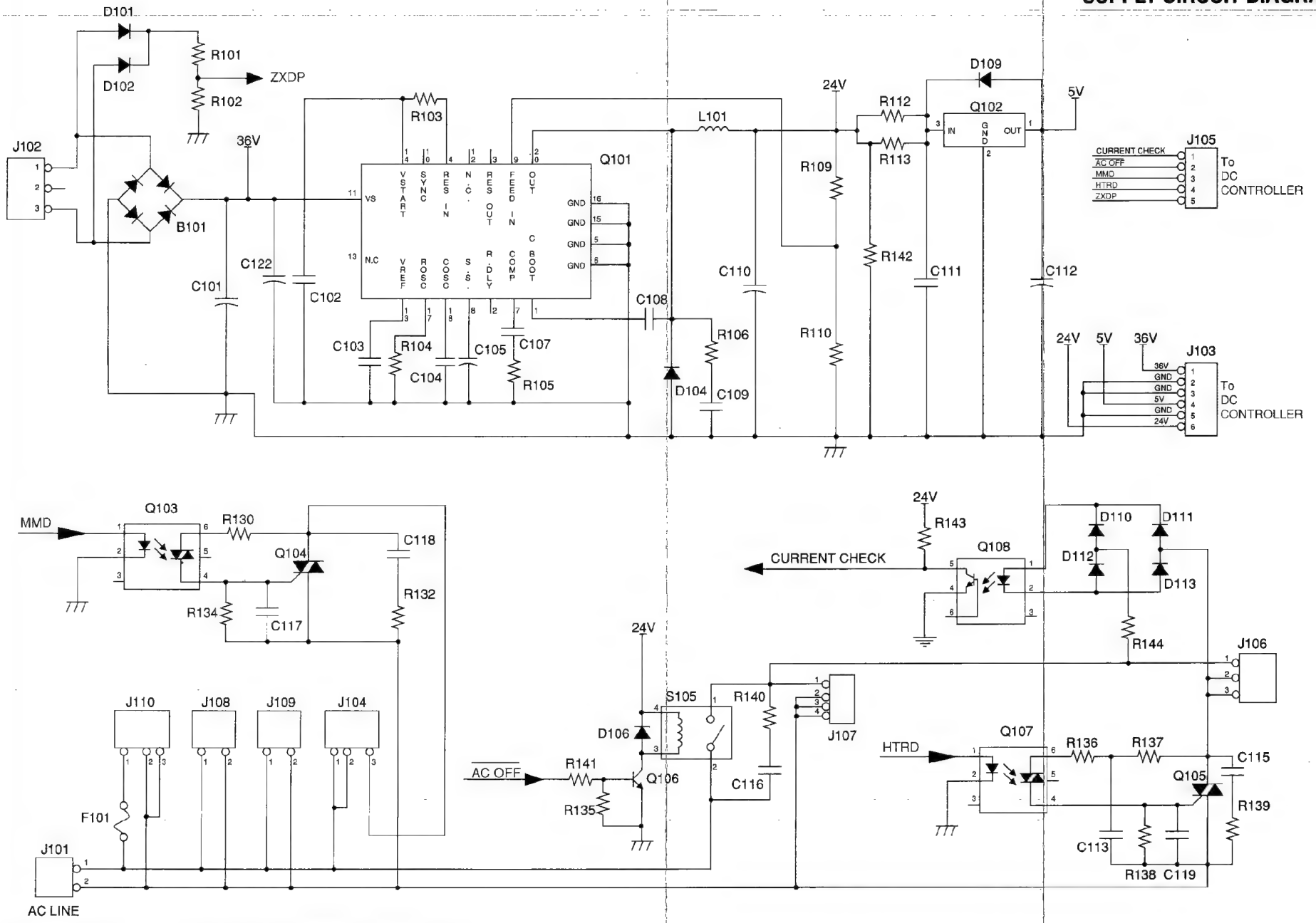

COPYRIGHT © 1992 CANON INC.

CANON NP-1550 REV.1 SEPT. 1992 PRINTED IN JAPAN (IMPRIME AU JAPON)

G. PRE-EXPOSURE LAMP CIRCUIT DIAGRAM

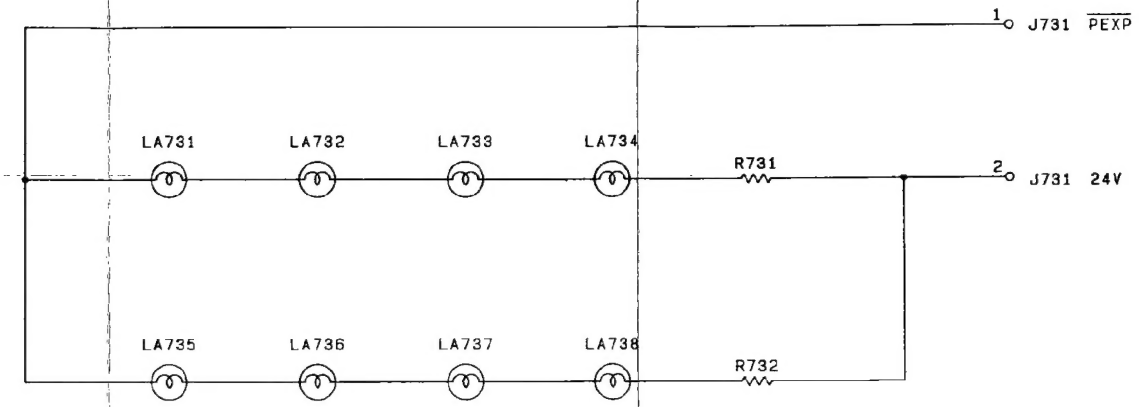

COPYRIGHT © 1992 CANON INC.

CANON NP-1550 REV.0 JAN. 1992 PRINTED IN JAPAN (IMPRIME AU JAPON)

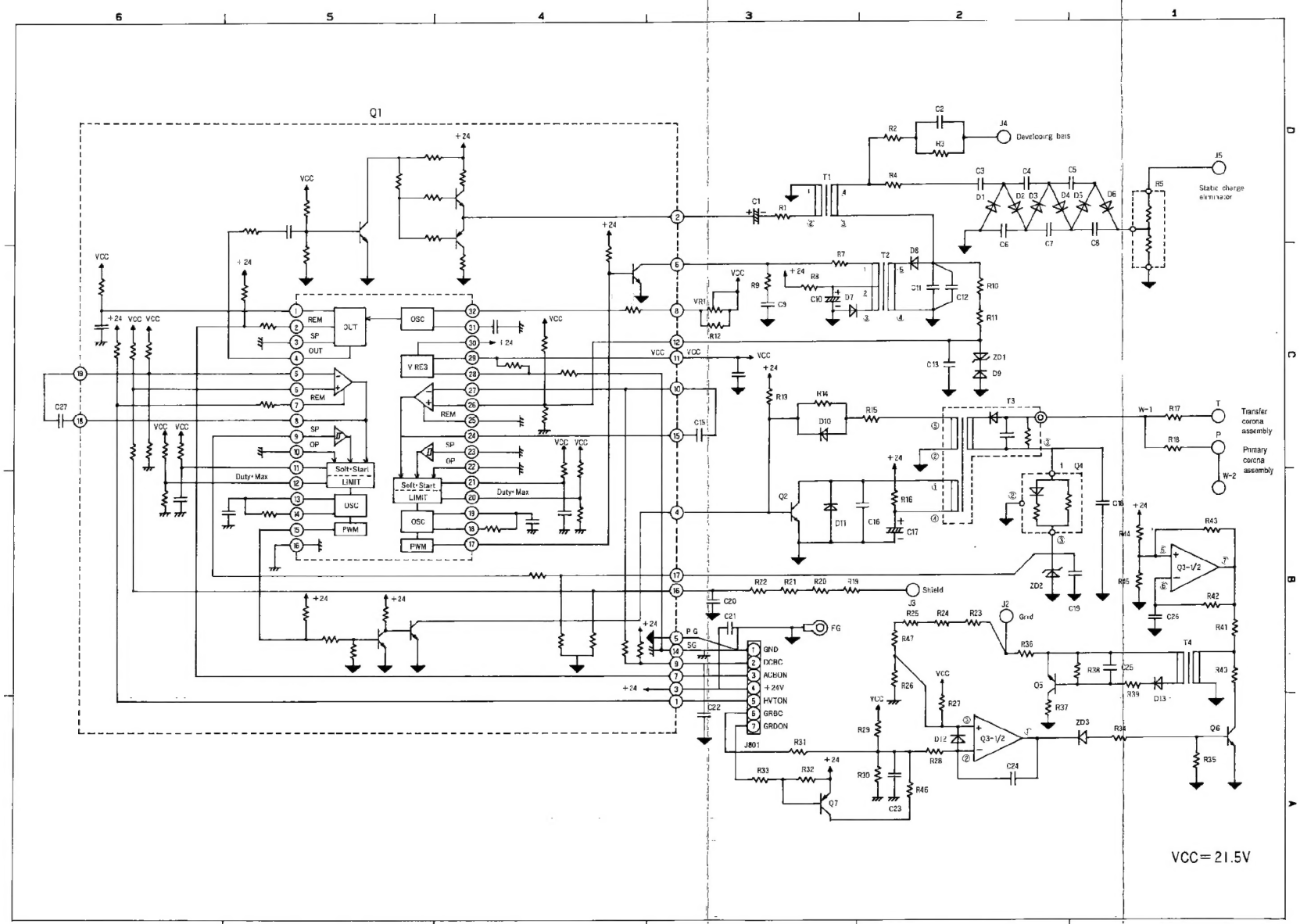

COPYRIGHT © 1992 CANON INC.

CANON NP-1550 REV.0 JAN. 1992 PRINTED IN JAPAN (IMPRIME AU JAPON)

I. LIST OF SPECIAL TOOLS

Special tools which are required for servicing this copier (in addition to the standard tool set) are listed below.

No.	Tool name	Tool No.	Shape	Code	Application/remarks
1	Door switch actuator	TKN-0093	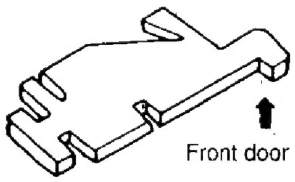	A	
2	Spring scale (compression)	CK-0054		B	• Measuring strength of cassette springs • Adjust scanner drive cable tension
3	Extension blades for pliers	CK-0426	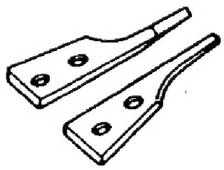	B	For removing grip rings: 4 to 9 mm

Note: Rank
A: Each service technician should carry one with him.
B: A group of five service technicians should share one.
C: Each workshop should keep one.

COPYRIGHT © 1992 CANON INC.
CANON NP-1550 REV.1 SEPT. 1992 PRINTED IN JAPAN (IMPRIME AU JAPON)

J. LIST OF SOLVENTS AND MATERIALS

No.	Material name	Use	Chemical formula, mixture ratio, etc.	Source	Remarks
1.	Ethyl alcohol (Ethanol) Isopropyl alcohol (Isopropanol)	Cleaning: copyboard glass, mirror, etc.	C_2H_5OH $(CHZ_3)_2$ CHOH	Locally	Flammable. Use in a well-ventilated area. Avoid breathing concentrated vapor.
2.	MEK	Removing toner or oil stains	CH_3•CO•C_2H_5 Methylethyl ketone	Locally	Flammable. Use in a well-ventilated area and avoid breathing concentrated vapor. Avoid contact with eyes or skin. Do not use of cleaning the drum, plastic molded parts, or corona wires.
3.	Heat-resistant grease	Lubricating the drive mechanisms, e.g., copyboard driving gear, fixing drive gear, fixing ass'y, etc.		CANON	Tool No.: CK-0427 (500g can) (Equivalent grease can be used, but should be able to withstand 200°C for extended periods of time.)
4.	Lubricating oil (low viscosity)	Lubrication points: Scanner rail, etc.	ISO VG 68 oil ESSO Febis K68 MOBIL Vactraoil No.2 SHELL Tonna oil T68	Locally	Equivalent oil can be used. Tool No.: CK-0451 (100cc)
5.	Lubricating oil (low viscosity)	Lubrication point: one-way clutch in pick-up control assembly	ISO VG 220 oil ESSO Febis K220 MOBIL Vactraoil No.4	Locally	Equivalent oil can be used. Tool No.: CK-0524 (100cc)

COPYRIGHT © 1992 CANON INC.
CANON NP-1550 REV.1 SEPT. 1992 PRINTED IN JAPAN (IMPRIME AU JAPON)