iR5000/iR6000

SERVICE HANDBOOK

REVISION 0

Canon

JULY 2000

FY8-23BB-000

COPYRIGHT© 2000 CANON INC.

CANON iR5000/iR6000 REV.0 JULY 2000 PRINTED IN JAPAN (IMPRIME AU JAPON)

Application

This manual has been issued by Canon Inc. for qualified persons to learn technical theory, installation, maintenance, and repair of products. This manual covers all localities where the products are sold. For this reason, there may be information in this manual that does not apply to your locality.

Corrections

This manual may contain technical inaccuracies or typographical errors due to improvements or changes in products. When changes occur in applicable products or in the contents of this manual, Canon will release technical information as the need arises. In the event of major changes in the contents of this manual over a long or short period, Canon will issue a new edition of this manual.

The following paragraph does not apply to any countries where such provisions are inconsistent with local law.

Trademarks

The product names and company names used in this manual are the registered trademarks of the individual companies.

Copyright

This manual is copyrighted with all rights reserved. Under the copyright laws, this manual may not be copied, reproduced or translated into another language, in whole or in part, without the written consent of Canon Inc.

COPYRIGHT © 2000 CANON INC.
Printed in Japan
Imprimé au Japon

Caution

Use of this manual should be strictly supervised to avoid disclosure of confidential information.

Contents

CHAPTER 1 MAINTENANCE AND INSPECTION

1. Periodical Servicing Chart 1-1
   1.1 Reader Unit 1-1
   1.2 Printer Unit 1-1
   1.3 Cleaning the photosensitive drum 1-4
2. Periodically Replaced Parts 1-5
   2.1 Guide to Timing of Replacement 1-5
   2.2 Reader Unit 1-5
   2.3 Printer Unit 1-6
3. Consumables and Durables 1-7
   3.1 Guide to Timing of Replacement 1-7
   3.2 Reader Unit 1-7
   3.3 Printer Unit 1-8
   3.4 Side Paper Deck 1-9
4. Points to Note for Periodical Servicing 1-10
5. Image Adjustment Basic Procedure 1-11
   5.1 Making Pre-Checks 1-11
   5.2 Making Checks on the Printer Unit (1/2) 1-12
   5.3 Making Checks on the Printer Unit (2/2) 1-13
   5.4 Making Checks on the Reader Unit 1-14

CHAPTER 2 STANDARDS AND ADJUSTMENTS

1. Image Adjustments 2-1
   1.1 Standards of Image Position 2-1
   1.2 Checking the Image Position 2-2
   1.3 Adjusting the Left/Right Image Margin 2-2
      1.3.1 Cassette 3/4 2-2
      1.3.2 Left/Right Front Deck 2-3
      1.3.3 Manual Feed Tray 2-3
      1.3.4 Duplex Feeding Unit 2-4
      1.3.5 Side Paper Deck 2-4
   1.4 Adjusting the Image Leading Edge Margin 2-5
   1.5 Adjusting the Left/Right Non-Image Width 2-5
   1.6 Adjusting the Leading Edge Non-Image Width 2-6
2. Scanning System 2-7
   2.1 Replacing the Scanner Drive Cable 2-7
      2.1.1 Removing the Scanner System Drive Cable 2-7
      2.1.2 Routing the Scanner Drive Cable 2-9
   2.2 Adjusting the Position of the Scanner Mirror Base 2-10
   2.3 After Replacing the Scanning Lamp 2-12
3. Image Formation System 2-13
   3.1 Routing the Grid Wire of the Primary Charging Assembly 2-13
   3.2 Routing the Charging Wire of Charging Assemblies 2-15
      3.2.1 Routing the Charging Wire 2-15
      3.2.2 Adjusting the Heiqht of the Charging Wire 2-18
   3.3 Mounting the Drum Cleaning Blade 2-19
      3.3.1 Removing the Cleaning Blade 2-19
      3.3.2 Mounting the Cleaning Blade 2-20

3.4 Mounting the Developing Blade 2-22
3.4.1 Removing the Blade Unit ... 2-22
3.4.2 Mounting the Blade 2-22
3.5 Replacing the Potential Sensor/ Potential Control PCB 2-23
3.5.1 Removing the Potential Sensor/ Potential Control PCB 2-23
3.5.2 Adjusting the Potential Sensor 2-25
4. Pickup/Feeding System 2-27
4.1 Orientation of the Deck/Cassette Pickup Roller 2-27
4.2 Orientation of the Deck/Cassette Separation Roller 2-28
4.3 Orientation of the Feeding Roller of the Deck/Cassette Pickup Assembly 2-28
4.4 Orientation of the Pickup Roller of the Side Paper Deck 2-29
4.5 Orientation of the Feeding Roller of the Side Paper Deck 2-30
4.6 Adjusting the Pressure of the Separation Roller of the Deck/ Cassette 2-31
4.7 Adjusting the Pressure of the Separation Roller of the Manual Feed Tray 2-32
4.8 Adjusting the Fixing Inlet Guide Solenoid (SL1) 2-33
4.9 Adjusting the Position of the Pickup Solenoid (SL3, SL4) of the Cassette 3/4 2-34
4.10 Adjusting the Position of the Delivery Flapper Solenoid (SL5) 2-35
4.11 Adjusting the Position of the Right Deck Pickup Solenoid (SL6) ... 2-35
4.12 Adjusting the Position of the Left Deck Pickup Solenoid (SL7) ... 2-36
4.13 Adjusting the Position of the Reversing Flapper Solenoid (SL8) 2-36
4.14 Adjusting the Position of the Fixing Web Solenoid (SL9) 2-37
4.14.1 New Fixing Web 2-37
4.14.2 Existing Fixing Web 2-37
4.15 Position of the Side Paper Deck Pickup Roller Releasing Solenoid 2-38
4.16 Attaching the Timing Belt of the Manual Feed Tray Assembly ... 2-38
4.17 Attaching the Drive Belt 2-39
5. Fixing System 2-40
5.1 Points to Note When Mounting the Fixing Heater 2-40
5.2 Position of the Fixing Inlet Guide 2-40
5.3 Adjusting the Lower Roller Pressure (nip) 2-41
5.3.1 Taking Measurements 2-41
5.3.2 Standards 2-41
5.3.3 Making Adjustments 2-41
6. Laser Exposure System 2-42
6.1 When Replacing the Scanner Unit 2-42
7. Electrical Parts 2-43
7.1 When Replacing the CCD Unit 2-43
7.2 When Replacing the Reader controller PCB 2-43
7.3 When Replacing the Main Controller PCB 2-44
7.4 When Replacing the HDD Unit 2-44
7.5 When Replacing the DC Controller PCB 2-45
7.6 When Replacing the High-Voltage PCB 2-46
8. Checking the Surface Potential Control System 2-47
8.1 Outline 2-47
8.2 Disabling the Auto Control Mechanism 2-47
8.3 Zero Level Check 2-48
8.3.1 Method 1 2-48
8.3.2 Method 2 2-50
8.4 Checking the Potential System 2-53

8.5 Conversion Table for the Potential Control System 2-55
8.6 Emergency Measures for a Fault in the Potential Sensor 2-59
9. Checking the Environment Sensor ... 2-60
9.1 Procedure 2-60
9.2 Emergency Measure for a Fault in the Environment Sensor 2-60
10. Checking the Photointerrupters 2-61
10.1 Using a Meter 2-61
10.2 Using Service Mode 2-61
10.3 Check List 2-61

CHAPTER 3 ARRANGEMENT AND FUNCTIONS OF ELECTRICAL PARTS

1.1 Clutches 3-1
1.1.1 Reader Unit 3-1
1.1.2 Printer Unit 3-1
1.2 Solenoids and Switches 3-2
1.2.1 Reader Unit 3-3
1.2.2 Printer Unit 3-3
1.3 Motors 3-4
1.3.1 Reader Unit 3-5
1.3.2 Printer Unit 3-5
1.4 Fans 3-6
1.4.1 Reader Unit 3-7
1.4.2 Printer unit 3-7
1.5 Sensors 3-8
1.5.1 Reader Unit 3-10
1.5.2 Printer Unit 3-10
1.6 Lamps, Heaters, and Others 3-12
1.6.1 Reader Unit 3-13
1.6.2 Printer Unit 3-13
1.7 PCBs 3-14
1.7.1 Reader Unit 3-15
1.7.2 Printer unit 3-15
1.8 Variable Resistors (VR), Light-Emitting Diodes (LED), and Check Pins by PCB 3-16
1.8.1 Main Controller PCB 3-16
1.8.2 DC Controller PCB 3-17
1.8.3 Reader Controller PCB 3-18
1.8.4 Power Supply PCB 3-18
1.8.5 HVT PCB 3-19
1.8.6 Drum Heater Control PCB 3-19

CHAPTER 4 SERVICE MODE

1. Organization of Service Mode 4-1
1.1 Outline 4-1
1.2 Starting Service Mode and Making Selections 4-2
1.3 Ending Service Mode 4-3
1.4 Backing Up Service Mode 4-3
1.5 Basic Operations 4-4
1.5.1 Initial Screen 4-4
1.5.2 Level 1/Level 2 Screen 4-4
1.5.3 Level 3 Screen 4-5
2. DISPLAY (control/display mode) 4-6
2.1 COPIER 4-6
2.2 FEEDER 4-19
3. I/O (I/O display mode) 4-20
3.1 DC-CON 4-21
3.2 R-CON 4-29
3.3 MN-CON 4-31
3.4 FEEDER 4-33
3.5 SORTER 4-36
3.5.1 Finisher Block 4-36
3.5.2 Saddle Stitcher Unit 4-41
4. ADJUST (adjustment mode) 4-44
4.1 COPIER 4-44
4.2 FEEDER 4-57

4.3 SORTER 4-58
5. FUNCTION (operation/inspection mode) 4-59
5.1 COPIER 4-59
5.2 FEEDER 4-75
6. OPTION (settings mode) 4-76
6.1 COPIER 4-76
6.2 FEEDER 4-92
6.3 SORTER 4-92
6.4 BOARD 4-93
7. TEST (test print mode) 4-94
8. COUNTER (counter mode) 4-98

CHAPTER 5 SELF DIAGNOSIS

1. Error Codes 5-1
1.1 List of Error Codes 5-1
1.2 Self Diagnosis of the ADF 5-13
1.3 Self Diagnosis of the Finisher ... 5-14
1.4 Self Diagnosis of the Saddle Stitcher 5-18

APPENDIX

A. GENERAL TIMING CHART A-1
B. LIST OF SIGNALS/ABBREVIATIONS A-3
C. General Circuit Diagram A-9
D. PAPER DECK -G1 GENERAL CIRCUIT DIAGRAM A-11
E. SHIFT TRAY GENERAL CIRCUIT DIAGRAM A-12
F. SPECIFICATIONS A-13
1.1 Copier A-13
1.1.1 Type A-13
1.1.2 Method A-13
1.1.3 Functions A-14
1.1.4 Others A-19
1.2 Paper Deck-G1 ..... A-22
1.3 Shift Tray-B1 ..... A-23
G. List of Special Tools A-24
H. List of Solvents/Oils A-26

CHAPTER 1 MAINTENANCE AND INSPECTION

1. Periodical Servicing Chart



Do not use solvents or oils other than those indicated.

1.1 Reader Unit

△: Clean ●: Replace ×: Lubricate □: Adjust ◎: Inspect

Unit	Part	Intervals					Remarks
		Upon installation	every 250,000	every 500,000	every 750,000	every 1,000,000	
Scanner	Scanner cable		◎□				Only at fist 250,000 (inpection/ adjustment).
Optical path	Scanner rail		△×				Silicone oil (FY9-6011)
	Copyboard glass		△				
	No. 1 through No. 3 mirrors		△				
	Scanner reflecting plate		△				

1.2 Printer Unit

△: Clean ●: Replace ×: Lubricate □: Adjust ◎: Inspect

Unit	Part	Intervals					Remarks
		Upon installation	every 250,000	every 500,000	every 750,000	every 1,000,000	
Externals/ controls	Ozone filter (FM3)			●			
	Dust-proofing filter (FM2)		△				Remove dust from surface.
Laser optical path	Dust-proof glass		△				
Charging assembly	Charging wire (primary, pre-transfer, transfer/separation)	△		●			After replacement, execute wire cleaning 5 times.

Unit	Part	Intervals					Remarks
		Upon installation	every 250,000	every 500,000	every 750,000	every 1,000,000	
Charging assembly	Charging wire cleaner (primary, pre-transfer, transfer/separation)			●			Replace with charging wire simultaneously.
	Grid wire (primary)	△	△	●			
	Charging assembly shielding plate (each charging assembly)	△	△				
	Roller electrode	△	△				
	Primary anti-stray toner sheet		△				
Photosensitive drum	Photosensitive drum			△			Use alcohol and drum cleaning powder (CK-0429); for instructions, see 6. “Cleaning the Photosensitive Drum.”
	Electrode (for slip ring of drum heater)					△×	Clean with alcohol; 1) electrode, 2) protruding wall of electrode (where FY9-6008 is applied). · Charge collecting brush
Developing assembly	Developing cylinder	◎					
	Developing assembly roll		△				

Unit	Part	Intervals					Remarks
		Upon installation	every 250,000	every 500,000	every 750,000	every 1,000,000	
Developing assembly	Anti stray-toner sheet		△				
Cleaner	Side scraper			△			
	Toner dish (rear, front)		△				
Fixing assembly	Inlet guide		△				
	Web	◎					
	Oil dish			△			
	Thermistor		△	●			
	Sub thermistor		△	●			
	Thermal switch					●	
Delivery assembly	Separation claw (upper, lower)		△	●			
Waste toner collection area	Waste toner box		◎				Inspect case, and remove toner.
Pickup/ feeding assembly	Transfer guide		△				
	Registration roller (upper, lower)		△				
	Feeding belt		△				
	Feeding rollers		△				

1.3 Cleaning the photosensitive drum

Do not rotate the magnet roll during work. Otherwise, waste toner may fall through the cleaner assembly.

1) Slide out the process unit. (Be sure to place the drum protective sheet over the fixing/feeding unit.)
2) Take out the photosensitive drum.
3) Moisten lint-free paper [1] with 5 to 10 cc of alcohol [2]; then, pour 0.2 to 0.3 g of drum cleaning powder (CK-0429) [3] on the lint-free paper.
4) While butting the lint-free paper relatively strongly against the photosensitive drum, wipe the surface of the drum from the front to the rear and from the rear to the front.

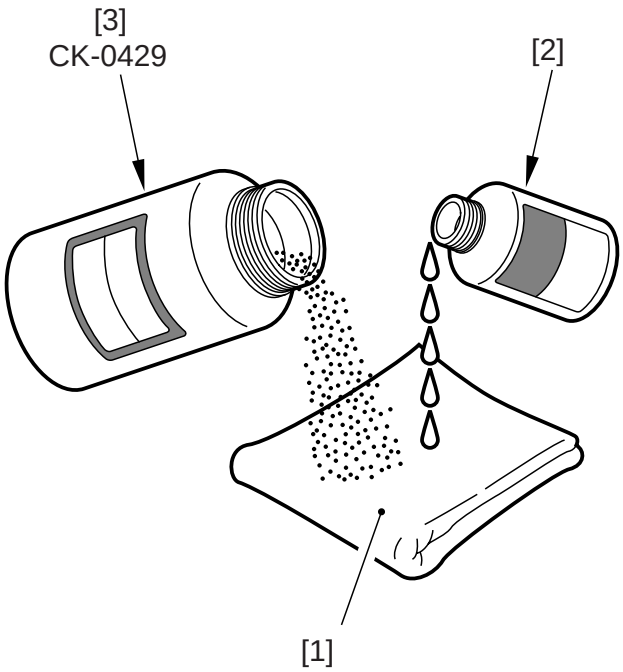

F01-103-01

- Keep the widths of cleaning to 5 to 10 cm in the peripheral direction of the drum.
- Move the lint-free paper back and forth 15 to 20 times over a single area.
  Forcing the lint-free paper will not affect the life of the drum.

5) When the alcohol has evaporated, dry wipe the surface with lint-free paper. If the area is uneven, go back to step 4), and increase the back-and-forth movements.
6) Rotate the drum for the width (5 to 10 cm), and repeat steps 3) through 5) until the entire area of the surface has been cleaned.

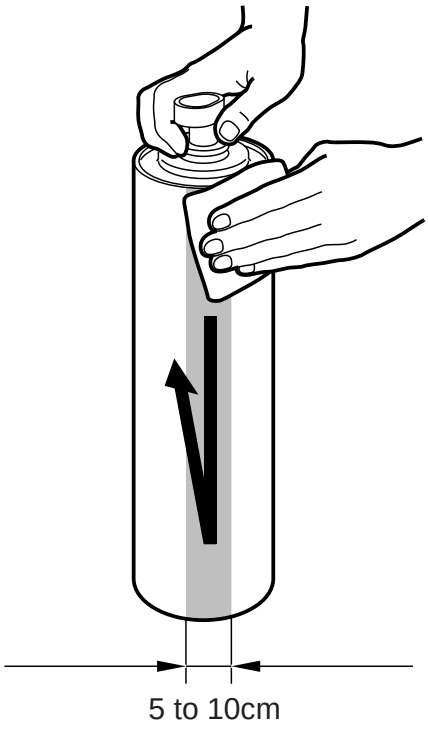

F01-103-02

2. Periodically Replaced Parts

Some parts of the machine must be replaced on a periodical basis to ensure a specific level of machine performance. (Once they fail, the consequences are likely to be considerable.)

Whenever possible, schedule the replacement to coincide with a scheduled visit to the user's.

2.1 Guide to Timing of Replacement

You can check the timing of replacement for periodically replaced parts in service mode: COPIER>COUNTER>PRDC-1.

2.2 Reader Unit

The reader unit does not have parts that require periodical replacement.

2.3 Printer Unit

As of June 2000

No.	Part name	Part No.	Q'ty	Life	Remarks
1	Primary, pre-transfer, transfer, separation charging wire	FB4-3687	AR	500,000*	
2	Primary grid wire	FY1-0883	AR	500,000	
3	Primary charging wire cleaner 1	FF5-6883	2	500,000	Strengthened polish type (blue)
4	Primary charging wire cleaner 2	FF2-6884	2	500,000	Strengthened polish type (blue)
5	Transfer charging wire cleaner 1	FF5-6883	1	500,000	Strengthened polish type (blue)
6	Transfer charging wire cleaner 2	FF5-6884	1	500,000	Strengthened polish type (blue)
7	Separation charging wire cleaner	FF5-3090	1	500,000	
8	Pre-transfer charging wire cleaner	FF5-3090	1	500,000	
9	Main thermistor	FH7-7529	1	500,000	
10	Sub thermistor	FG5-8812	1	500,000	
11	Ozone filter	FB5-5570	1	500,000	
12	Thermal switch	FH7-7154	1	1,000,000	

*Do not use the old type (gold plated). After replacement of the charge wire, be sure to execute wire cleaning in service mode. (COPIER>FUNCTION>CLEANING>WIRE-CLN)

T01-203-01


Memo

The indicated life of each part is for reference only, and is subject to the site environment and the conditions of use.

3. Consumables and Durables

Some parts of the machine are likely to require replacement because of wear or damage once or more over the period of machine warranty. Replace them when they fail.

3.1 Guide to Timing of Replacement

You can check the timing of replacement for durables in service mode: COPIER>COUNTER>DRBL-1.

3.2 Reader Unit

The reader unit does not have parts that are classified as “consumables” or “durables.”

3.3 Printer Unit

As of June 2000

No.	Part name	Part No.	Q'ty	Life	Remarks
1	Pickup/feeding roller (manual feed roller)	FB1-8581	1	120,000	
2	Separation roller (manual feed tray)	FB5-0873	1	120,000	
3	Pickup roller	FF5-1220	8	250,000	Each holder uses 2 pc.
4	Pickup/feeding roller (deck, cassette)	FF5-9779	8	250,000	Each holder uses 2 pc.
5	Separation roller (deck, cassette)	FB2-7777	4	250,000	
6	Cleaner separation claw	FB2-6899	3	500,000	
7	Pre-separation charging assembly scraper	FA4-1867	1	500,000	
8	Fixing upper roller	FB4-3690	1	500,000	
9	Fixing lower roller	FB5-3619	1	500,000	
10	Fixing web	FY1-1157	1	500,000	
11	Insulating bush (front/rear)	FB5-3613	2	500,000	Replace simultaneously with fixing upper roller.
12	Delivery upper separation claw	FB5-3625	6	500,000	
13	Delivery lower separation claw	FA2-9037	2	1,000,000	
14	Developing cylinder	FG5-8235	1	1,000,000	
15	Developing assembly roll	FB2-6933	2	1,000,000	
16	Cleaning blade	FA4-1827	1	1,000,000	Both edges are used; each for 500,000; apply toner upon replacement.
17	Primary corona assembly	FG6-5927	1	1,000,000	
18	Transfer/separation corona assembly	FG6-5911	1	1,000,000	
19	Pre-transfer corona assembly	FG6-5045	1	1,000,000	

T01-303-01

3.4 Side Paper Deck

As of June 2000

No.	Part name	Part No.	Q'ty	Life	Remarks
1	Pickup roller (front)	FF5-1220	1	250,000	
2	Pickup roller (rear)	FF5-1221	1	250,000	
3	Feeding roller	FF5-9779	1	250,000	
4	Separation roller	FB2-7777-020	1	250,000	

T01-304-01

4. Points to Note for Periodical Servicing

Unless otherwise instructed, clean with lint-free paper and alcohol.

- Make a thorough check of the block (front, rear) for melting by leakage, deformation by heat, cracking, discoloration (yellowing). If a fault is found, replace the part with a new one immediately.
- Check the block (front, rear) including its inside.
- Do not use a cloth on which metal powder is found.
- If you have used solvent, make sure that the part has dried completely before mounting it back to the machine.
- Do not use a moist cloth unless specifically indicated.
- Be sure to provide scheduled servicing/replacement at the specified intervals.

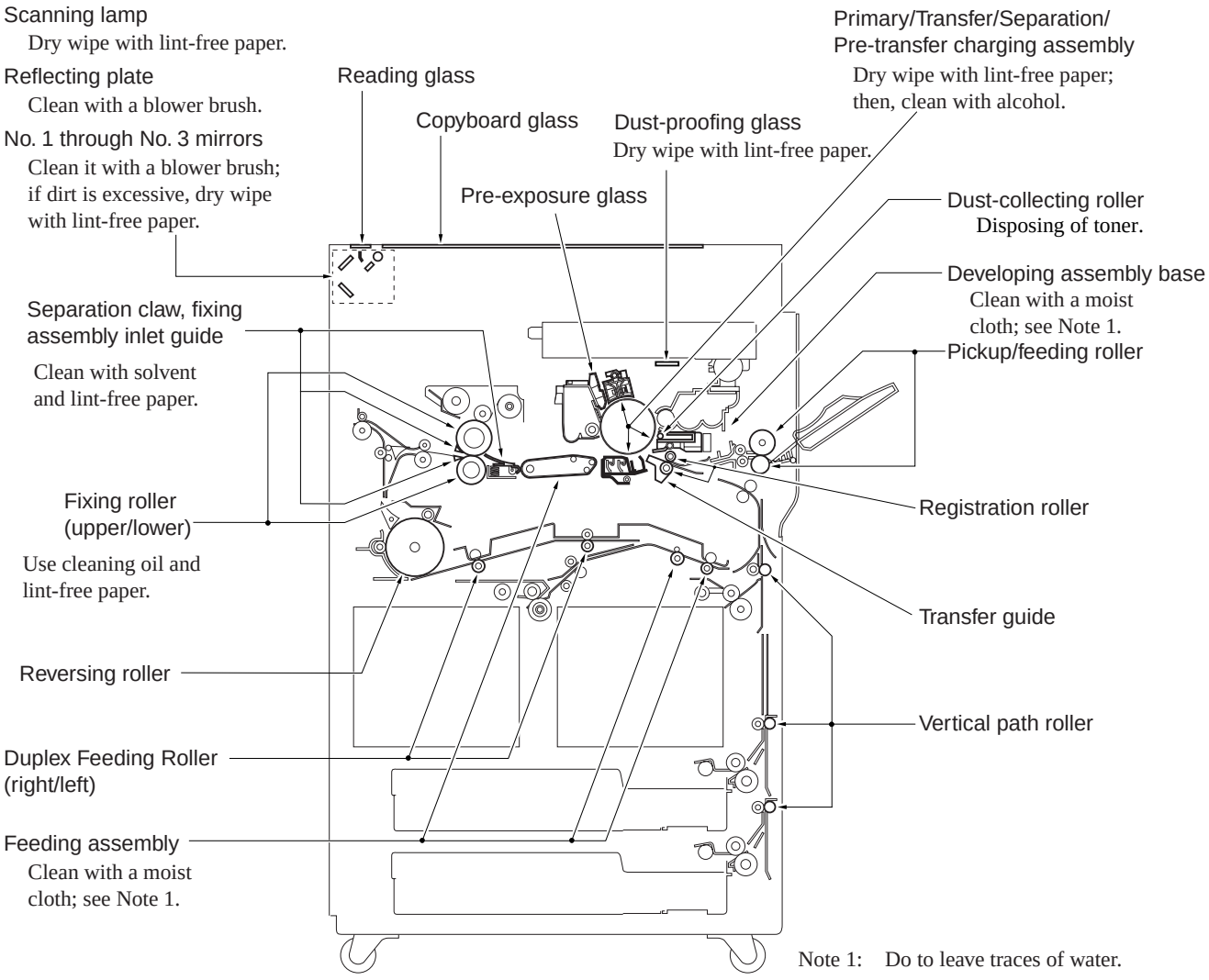

F01-401-01

5. Image Adjustment Basic Procedure

5.1 Making Pre-Checks

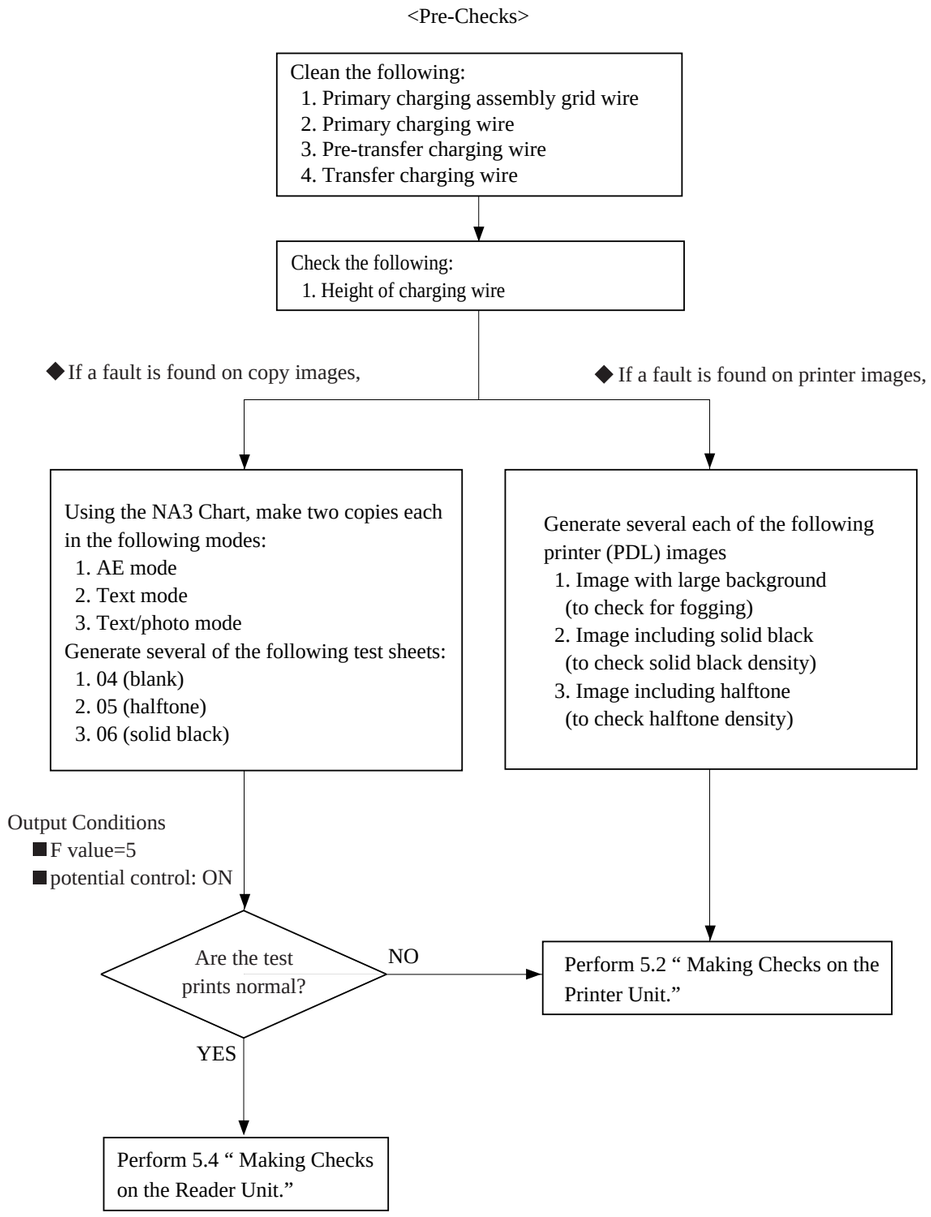

⚠ Points to Note When Making Checks on the Printer Side

The machine's potential control mechanism is designed for both copier image output and printer (PDL) image output, and its parameters for potential control in service mode may be adjusted independently of each other.

As such, when an image fault occurs, try to find out which side is causing it, and generate the appropriate images (data) for adjustment of related parameters.

5.2 Making Checks on the Printer Unit (1/2)

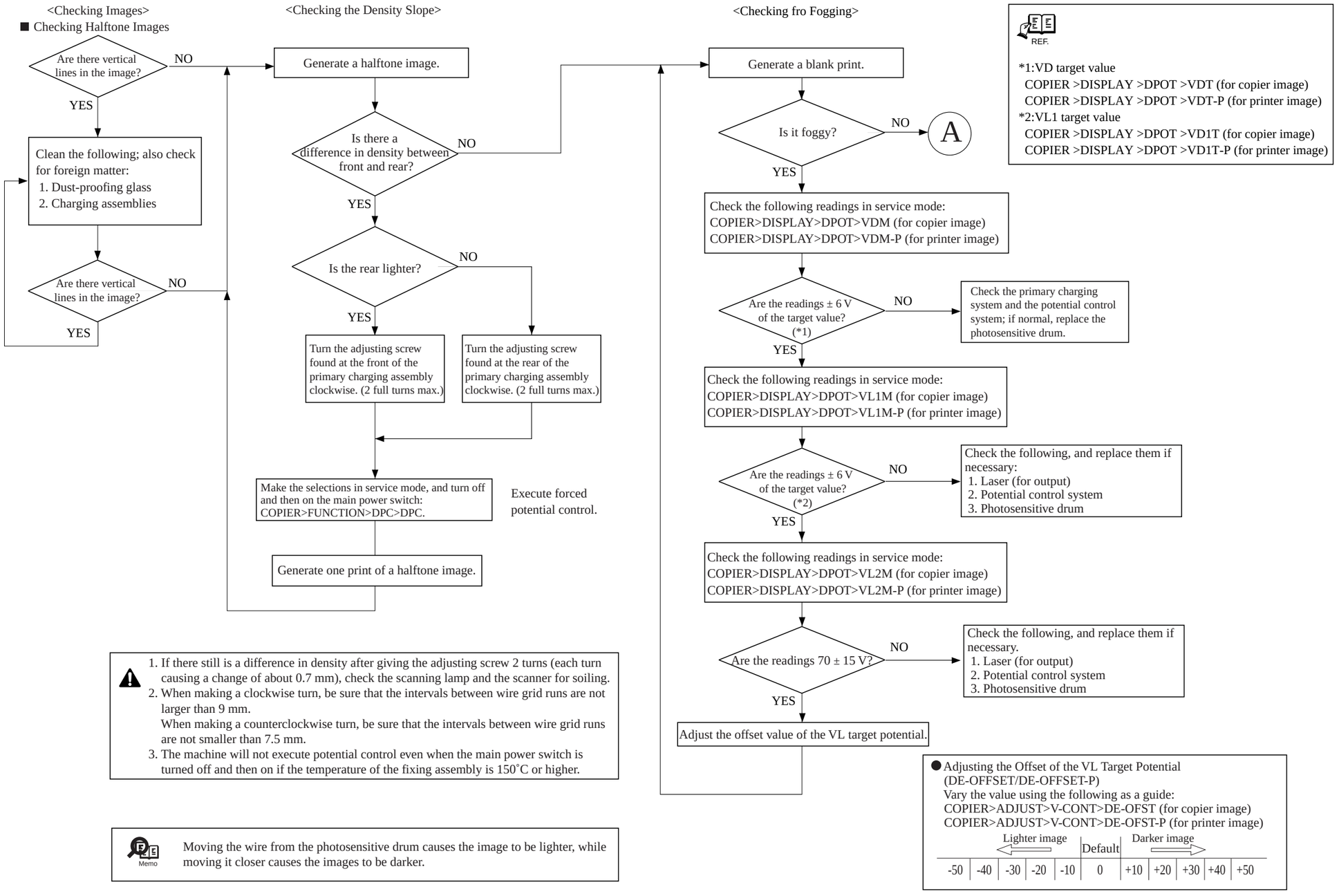

1. If there still is a difference in density after giving the adjusting screw 2 turns (each turn causing a change of about 0.7 mm), check the scanning lamp and the scanner for soiling.
2. When making a clockwise turn, be sure that the intervals between wire grid runs are not larger than 9 mm.
   When making a counterclockwise turn, be sure that the intervals between wire grid runs are not smaller than 7.5 mm.
3. The machine will not execute potential control even when the main power switch is turned off and then on if the temperature of the fixing assembly is 150˚C or higher.

Memo

Moving the wire from the photosensitive drum causes the image to be lighter, while moving it closer causes the images to be darker.

5.3 Making Checks on the Printer Unit (2/2)

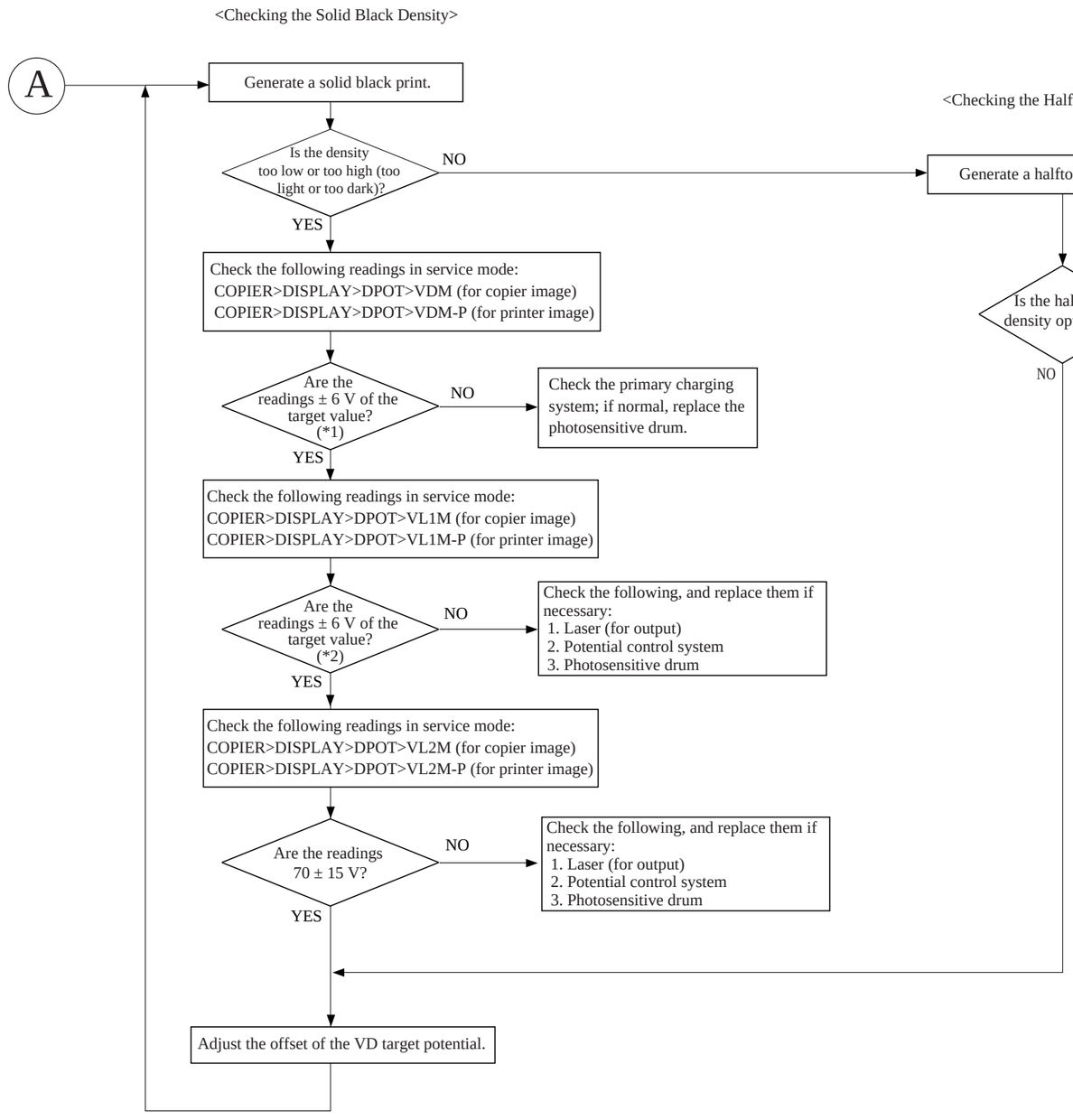

REF.

*1:VD target value
COPIER >DISPLAY >DPOT >VDT (for copier image)
COPIER >DISPLAY >DPOT >VDT-P (for printer image)
*2:VL1 target value
COPIER >DISPLAY >DPOT >VD1T (for copier image)
COPIER >DISPLAY >DPOT >VD1T-P (for printer image)

● Adjusting the Offset Value of the VD Target Potential (VD-OFFSET/VD-OFFSET-P)
COPIER>ADJUST>V-CONT>VD-OFST (for copier image)
COPIER>ADJUST>V-CONT>VD-VD-OFST-P (for printer image)

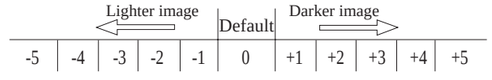

5.4 Making Checks on the Reader Unit

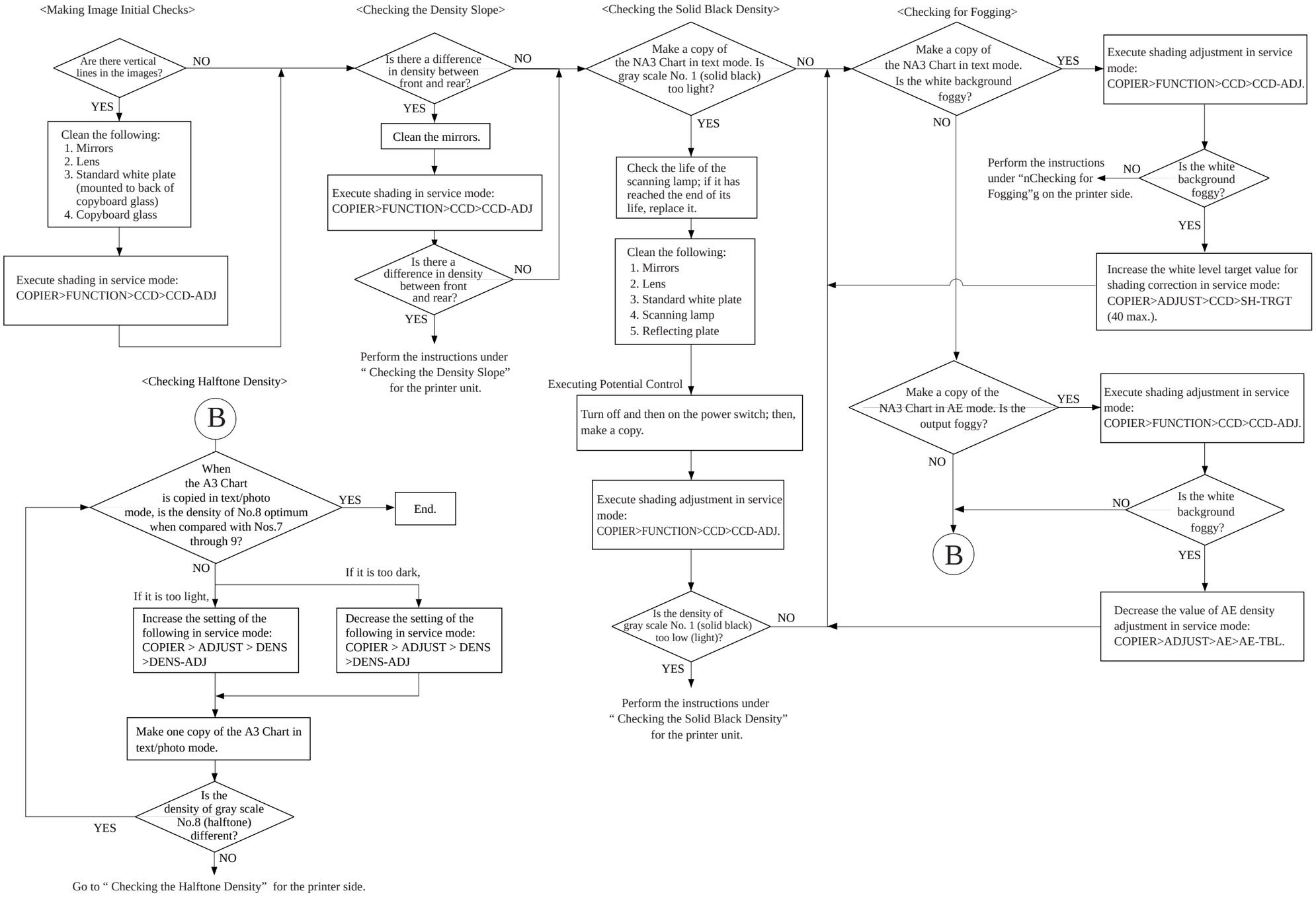

CHAPTER 2 STANDARDS AND ADJUSTMENTS

1. Image Adjustments

1.1 Standards of Image Position

The image margin/non-image width of a print made in Direct must be as follows:

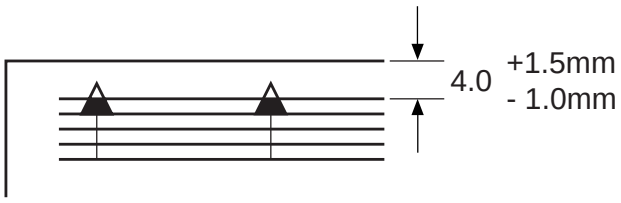

F02-101-01 Image Leading Edge Margin

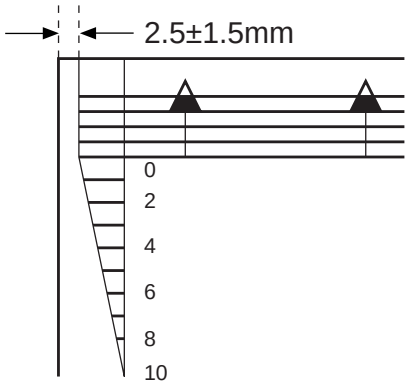

F02-101-02 Left/Right Image Margin

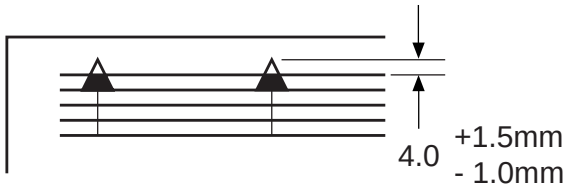

F02-101-03 Leading Edge Non-Image Width

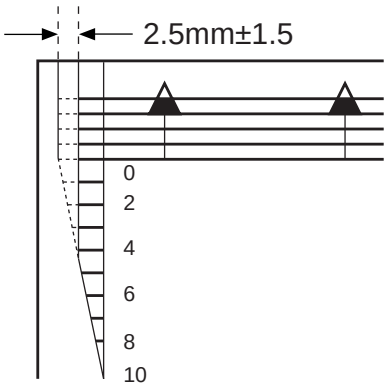

F02-101-04 Left/Right Non-Image Width

1.2 Checking the Image Position

Make prints using the following as the source of paper (10 prints each), and check to see that the image margin and the non-image width are as indicated:

- Each cassette
- Front deck (left, right)
- Manual feed tray
- Duplex feeding unit
- Side paper deck

If not as indicated, adjust the image position in the following order:

1. Adjusting the left/right image margin (registration)
2. Adjusting the image leading edge margin (registration)
3. Adjusting the left/right non-image width (CCD read start position)
4. Leading edge non-image width (scanner image leading edge position)

1.3 Adjusting the Left/Right Image Margin

1.3.1 Cassette 3/4

1) Loosen the two fixing screws [1] found on the left and the right of the cassette.

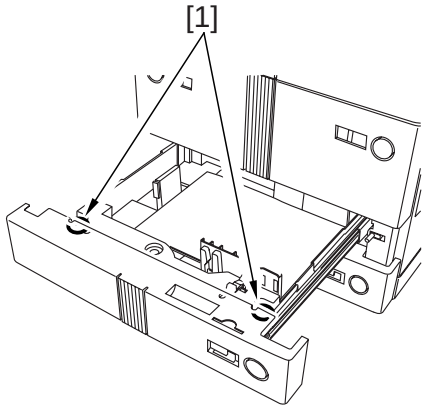

F02-103-01

2) Remove the paper size plate [2], and turn the adjusting screw [3] found in the opening of the paper size plate [2] to adjust the position; then, tighten the two fixing screws [1].
After making the adjustment, be sure to execute the following service mode: COPIER>FUNCTION>CST>C3-STMTR/A4R or C4-STMTR/A4R

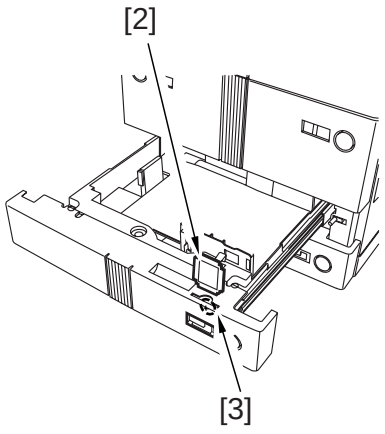

F02-103-02

1.3.2 Left/Right Front Deck

1) Loosen the four screws [2] and the two fixing screws [3] of the cassette front cover [1].

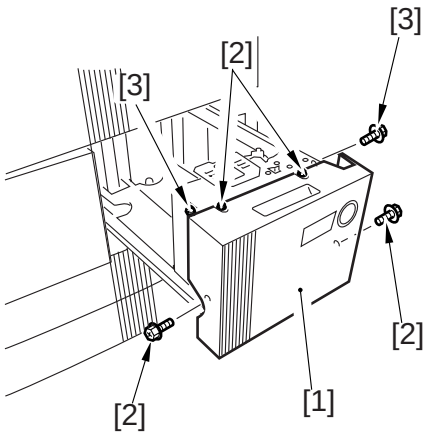

F02-103-03

2) Move the cassette guide assembly (front) [4] to the front or the rear to make adjustments.

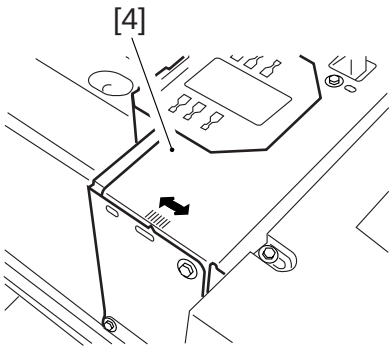

F02-103-04

1.3.3 Manual Feed Tray

1) Loosen the two mounting screws [1] of the manual feed tray, and adjust the position of the manual feed tray.

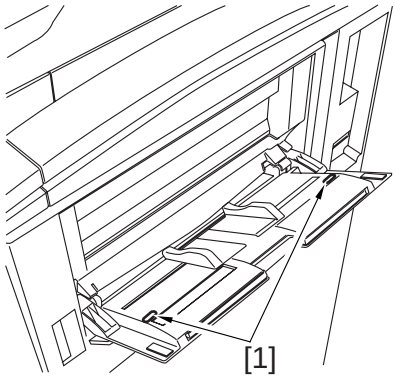

F02-103-05

1.3.4 Duplex Feeding Unit

1) Adjust the image margin as indicated using service mode: COPIER>ADJUST>Feed-ADJ>ADJ-REFE.

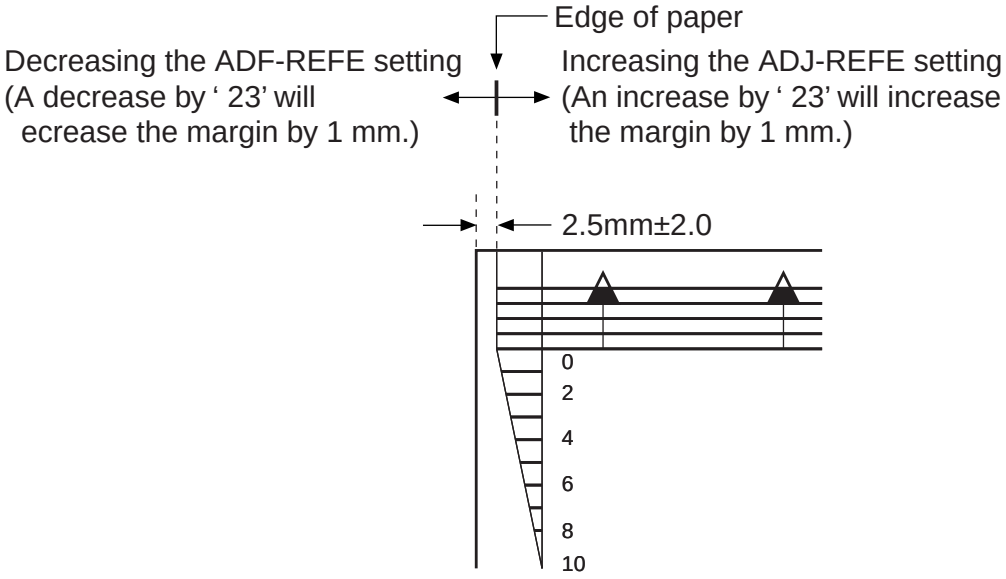

F02-103-06

1.3.5 Side Paper Deck

1) Slide out the compartment, and turn the two screws to adjust the position of the latch plate of the deck open solenoid. (At this time, use the index on the latch plate as a guide.)

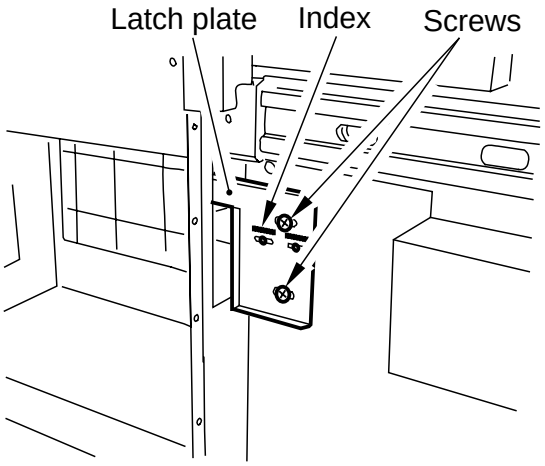

F02-103-07

1.4 Adjusting the Image Leading Edge Margin

1) Adjust the image margin in service mode so that it is as indicated:
COPIER>ADJUST>Feed-ADJ>REGIST.

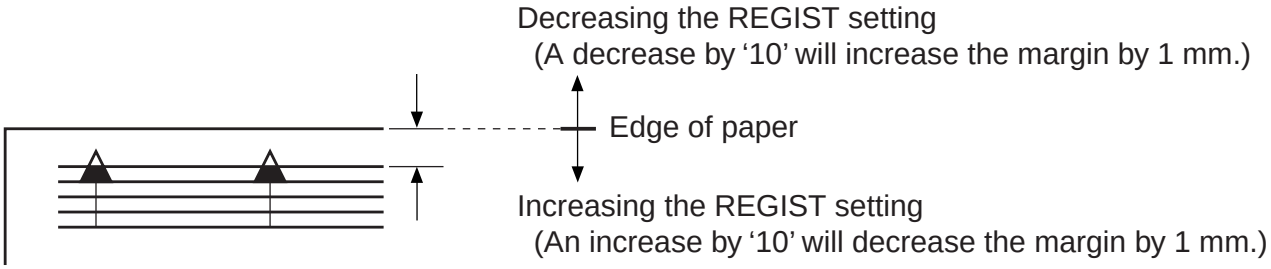

F02-104-01

1.5 Adjusting the Left/Right Non-Image Width

1) Adjust the non-image width in service mode so that it is as indicated:
COPIER>ADJUST>ADJ-XY>ADJ-Y.

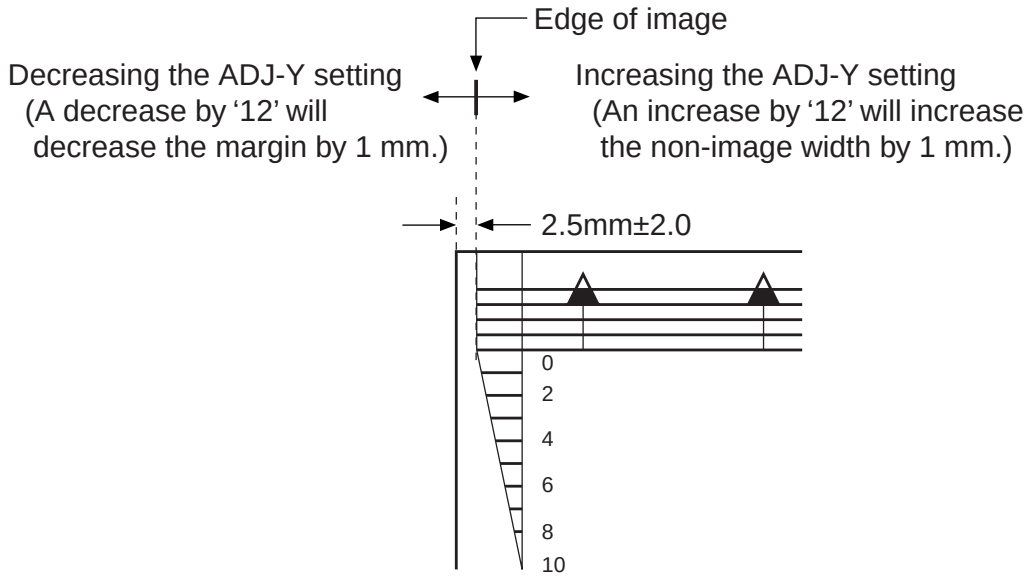

F02-105-01

1.6 Adjusting the Leading Edge Non-Image Width

1) Adjust the non-image width in service mode so that it is as indicated: COPIER>ADJUST>ADJ-XY>ADJ-X.

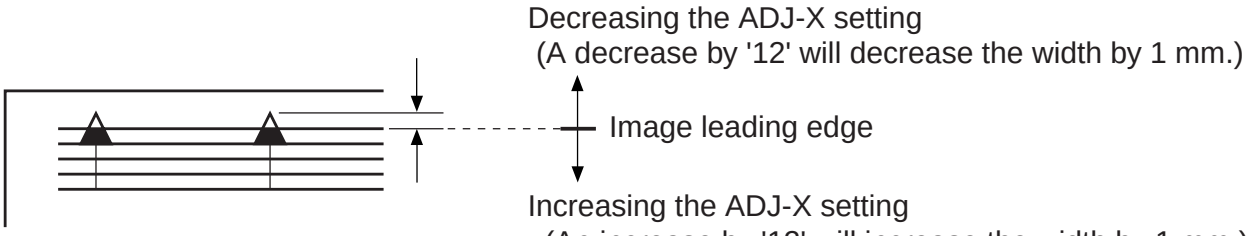

F02-106-01

2. Scanning System

2.1 Replacing the Scanner Drive Cable

2.1.1 Removing the Scanner System Drive Cable

Obtain the following before starting to replace the scanner drive cable:

- mirror positioning tool (FY9-3040-000)

1) Remove the ADF.
2) Remove the copyboard glass.
3) Remove the reader left cover and the reader front cover.
4) Remove the motor cover. (See steps 1) through 4) used to the motor.)
5) Remove the five screws [1], and detach the PCB base [2].

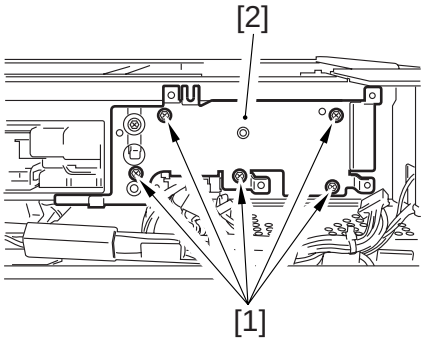

F02-201-01

6) Remove the screw [3], and detach the ADF base (left) [4]; then, remove the three screws [5], and detach the copyboard sensor base [7].

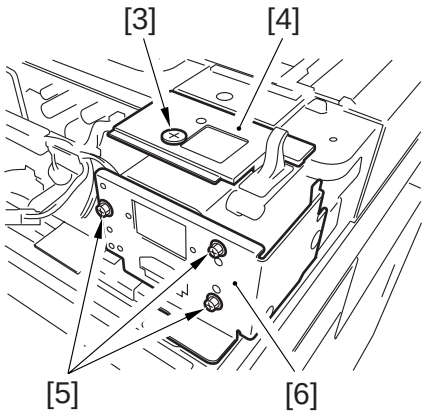

F02-201-02

7) Remove the 15 screws [7], and remove the two screws [8]; then, detach the reader upper frame [9].

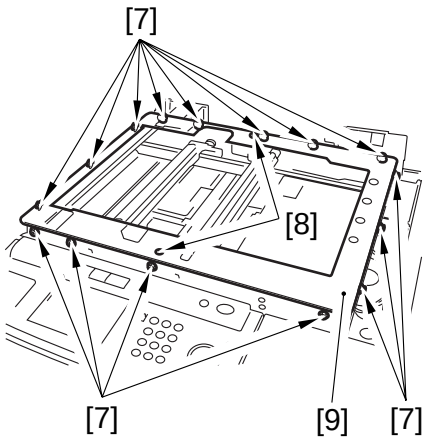

F02-201-03

8) Remove the two cable fixing screws [11] of the No. 1 mirror base [10].
9) Remove the two springs [12] used to secure the cable in place.
10) Remove the cable fixing plate [13] and each pulley cable.

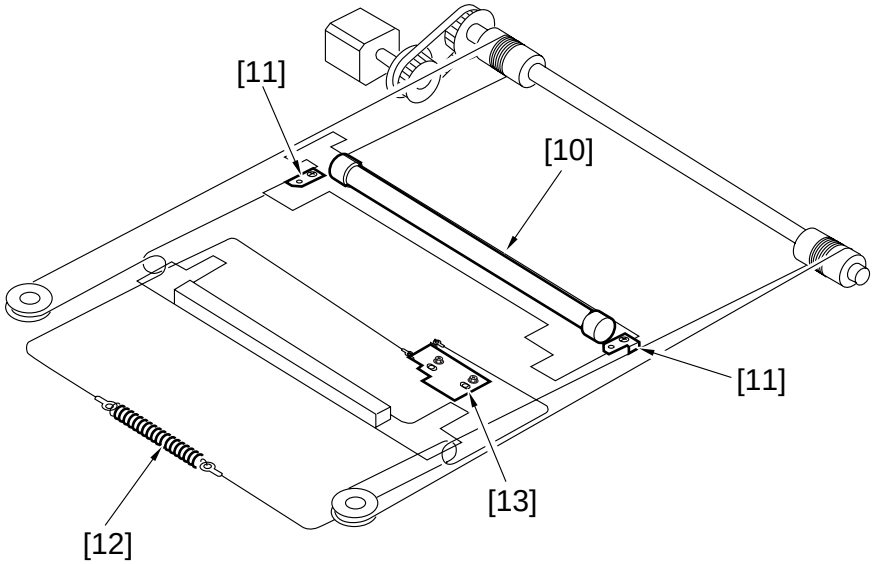

F02-201-04

2.1.2 Routing the Scanner Drive Cable

Route the scanner cable to each pulley and hook mirror base in the order indicated:

1) Loosen the screw on the cable fixing plate.
2) Fit the ball of the cable into the hole of the drive pulley, and wind the cable (4 times inward, 5 times outward); then, tape it in place. When winding, be sure that the cable metal fixing is inside.
3) Hook the cable on each pulley, and temporarily fix one end to the cable fixing plate and the other end to the hook of the reader frame.
4) Temporarily fix the cable metal fixing to the No. 1 mirror base. (Do not fully secure it.)
5) Mount the reader paper frame.

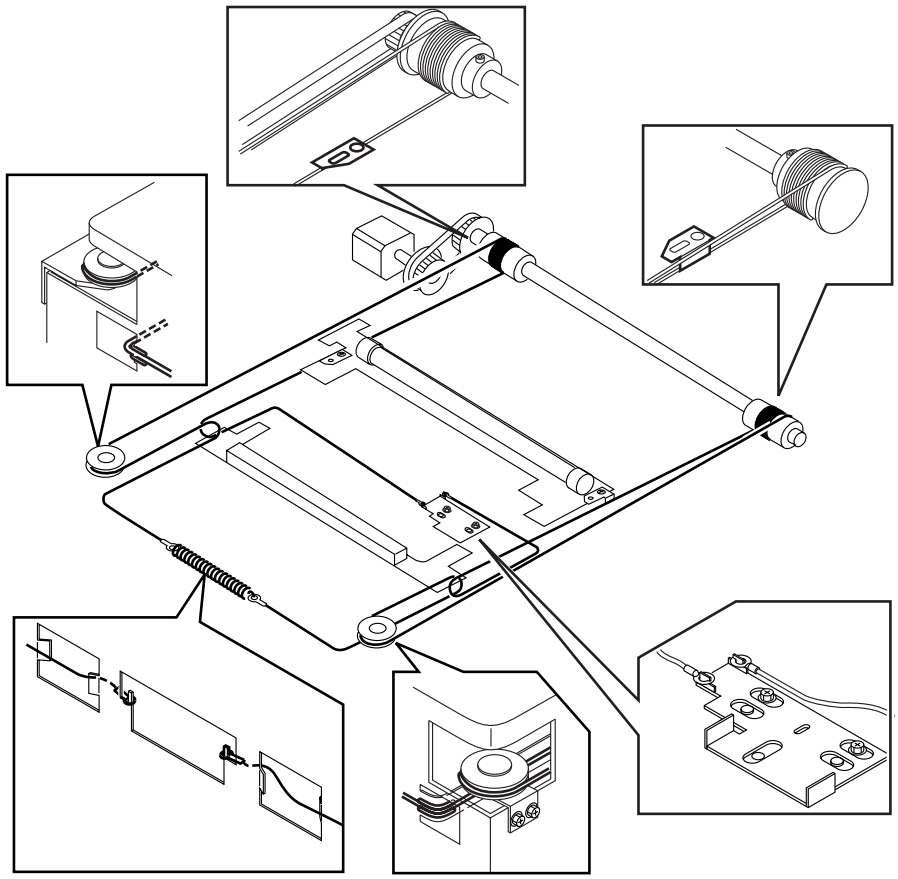

F02-201-05

When mounting the reader upper frame, be sure to go through the following steps:

1) Fit the eight claws [1] of the reader frame correctly into the cut-offs in the reader upper frame.
2) Secure the positions [2] of the four left/right claws using screws.
3) Fit the two screws [3] at the end.

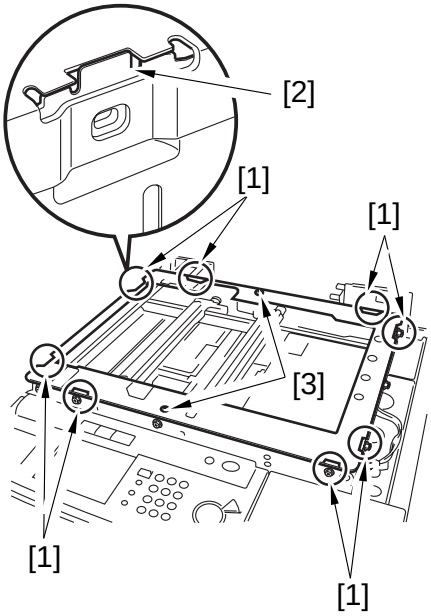

F02-201-06

2.2 Adjusting the Position of the Scanner Mirror Base

1) Set the pins of the mirror position tool as indicated.

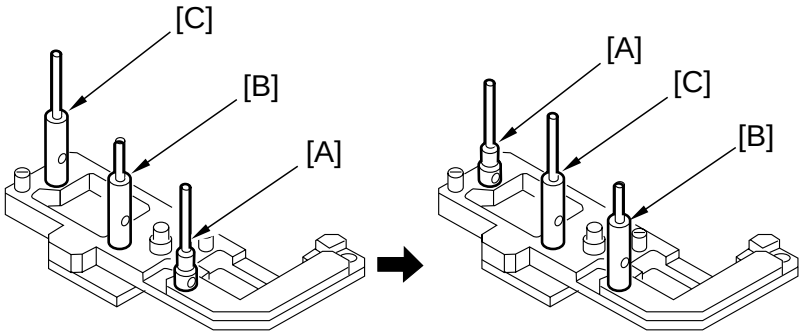

Initial FY9-3009-040 configuration (for rear)

Configuration used for the machine (for rear)

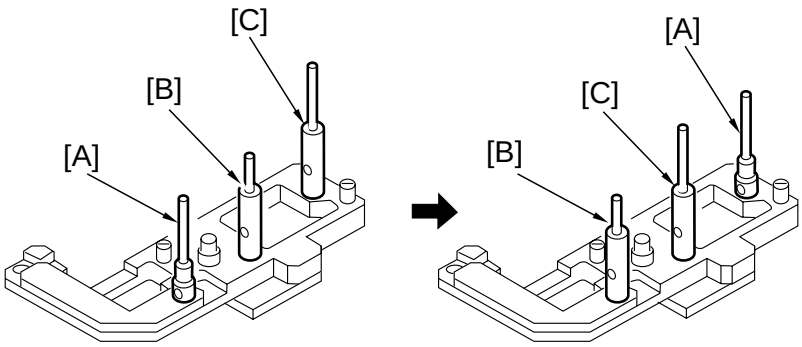

Initial FY9-3009-040 configuration (for front)

Configuration used for the machine (for front)

F02-202-01

2) Insert the pins of the mirror positioning tool (front [2]/rear [3]) into each of the holes [1]: No. 1 mirror base, No. 2 mirror base, and rail. The position of the No. 2 mirror base is adjusted by sliding the cable fixing plate to the front and the rear.

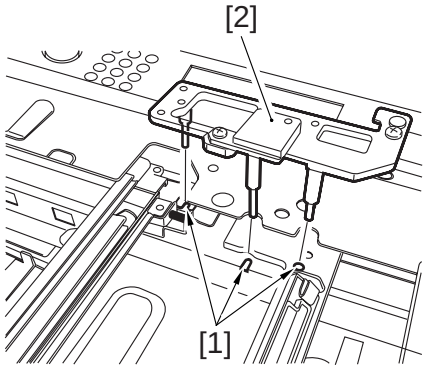

F02-202-02

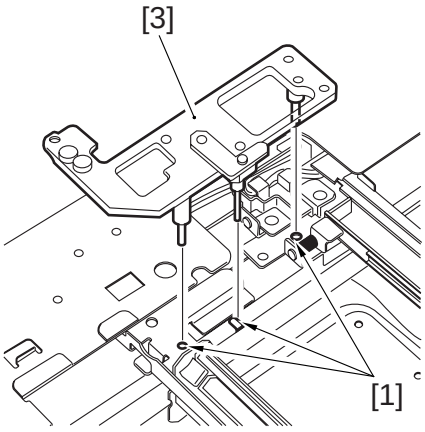

F02-202-03

3) Secure the end of the cable so far temporarily fixed to the hook of the reader frame using a spring.
4) Fully tighten the screw on the cable fixing plate.
5) Fully tighten the cable metal fixing on the No. 1 mirror base.
6) Detach the mirror positioning tool.
7) Reverse steps 1) through 6) for mounting.

2.3 After Replacing the Scanning Lamp

Execute ‘CCD auto adjustment’ in service mode, and record the updated CCD adjustment data on the service label.

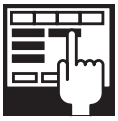

1. CCD Auto Adjustment
COPIER>FUNCTION>CCD>
CCD-ADJ
2. CCD Adjustment Data
all items under
COPIER>ADJUST>CCD

3. Image Formation System

3.1 Routing the Grid Wire of the Primary Charging Assembly

1) Loosen the two mounting screws used to secure the left and right shielding plates in place.
2) Loosen the three mounting screws used to secure the motor unit in place at the front.

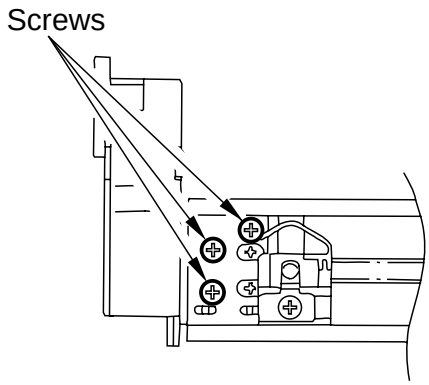

F02-203-01

3) Loosen the mounting screw, and move it in the direction indicated; then, fix it in place temporarily.
4) Free a length of about 5 cm of charging wire from the charging wire reel (0.1 mm in diameter), and form a loop at its end with a diameter of about 2 mm.

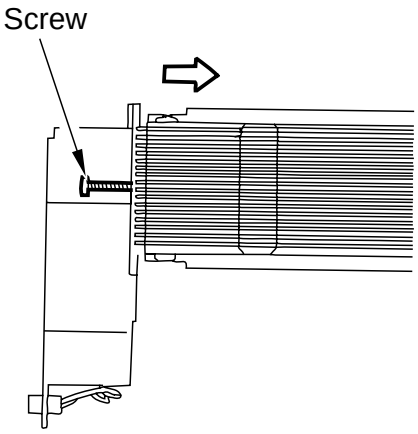

F02-203-02

REF.

To form a loop, wind the charging wire around a hex key once, and turn the hex key three to four times; then, twist the charging wire.

5) Cut the twisted charging wire (excess) with nippers.
6) Hook the loop on stud A.
7) After routing the wire for 31 runs, lead it through section B, and give it a half turn; then, put it between the washer and the motor unit, and wind it once around the mounting screw (clockwise), and secure it in place with a mounting screw.

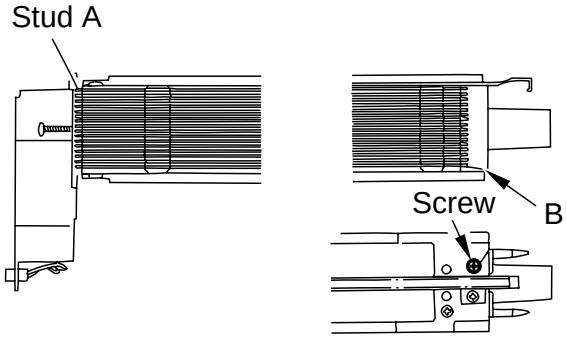

F02-203-03

8) Cut the excess of the charging wire with nippers.
9) Tighten the mounting screw loosened in step 3).
   Keep tightening until the tension of the grid wire is even.
   Be sure to pay attention to avoid deformation (slack) of the charging assembly (as by tightening the mounting screw found on the front of the left/right shielding plate early).
10) Tighten the mounting screws loosened in steps 1) and 2).
11) Wipe the grid wire with lint-free paper moistened with alcohol.



1. Check to make sure that the grid wire is free of bending and twisting.
2. Be sure that the runs are laid at equal intervals (i.e., the wire is in the groove of the block).

3.2 Routing the Charging Wire of Charging Assemblies

3.2.1 Routing the Charging Wire

All charging wires (except the grid wire) are routed more or less in the same way; the following cites the primary charging assembly:

1) Remove the shielding plate (left, right) of the charging assembly. To prevent deformation (slack) in the primary charging assembly, be sure to work separately for the left shielding plate and the right shielding plate (i.e., do not loosen the mounting screws [1] of both shielding plates at the same time).
2) Remove the wire cleaner.

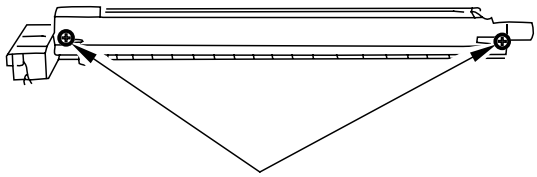

F02-203-04

For other charging assemblies, remove the two lids.

3) Free a length of about 5 cm of charging wire from the charging wire reel (0.06 mm in diameter), and form a loop at its end with a diameter of about 2 mm.

REF.

To form a loop, wind the charging wire around a hex key once, and turn the hex key three to four times; then, twist the charging wire.

4) Cut the end (excess) of the twisted charging wire.
5) Hook the loop on the stud.

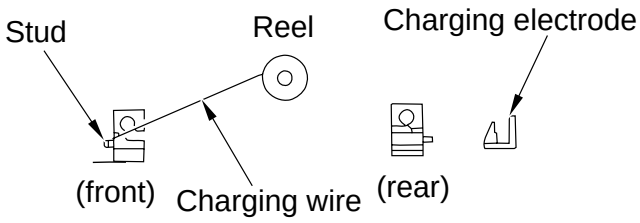

F02-203-05

6) At the rear, hook the charging wire on the charging wire positioner; then, hook the charging wire tension spring on the charging wire where indicated to F02-203-06.

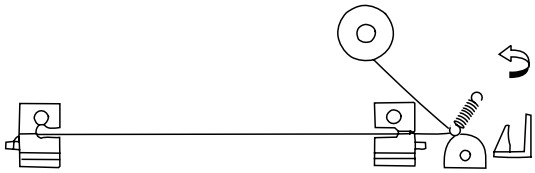

F02-203-06

7) Cut off the excess of the charging wire with nippers.
8) Pick the end of the charging wire tension spring with tweezers, and hook it on the charging power supply electrode. In the case of the pre-transfer charging assembly, hook the spring on the pin at the front.

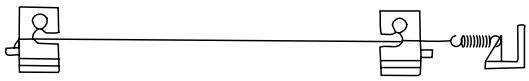

F02-203-07

Make sure of the following:
- The charging wire must not be bent or twisted.
- The charging wire must be fitted in the V-groove of the charging wire positioner.

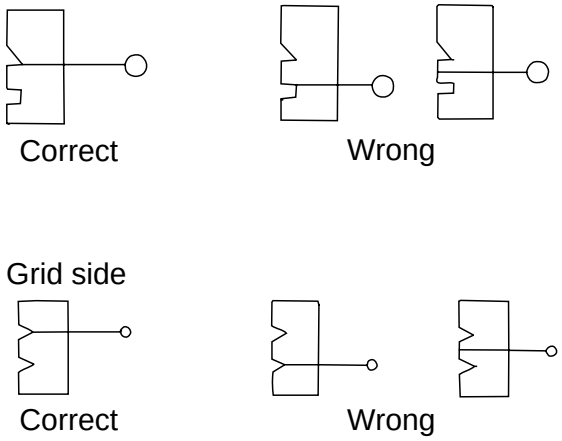

F02-203-08

9) Attach a cushoin in front of the charging wire. (This does not apply to the primary charging assembly.)
10) Mount the shielding plate (left, right).

For other charging assemblies, mount the two lids.

11) Mount the wire cleaner. At this time, pay attention to make sure that the wire cleaner is oriented correctly.
12) Wipe the charging wire with lint-free paper moistened with alcohol.

3.2.2 Adjusting the Height of the Charging Wire

Charging assembly	Height of charging wire	Tolerance
Primary	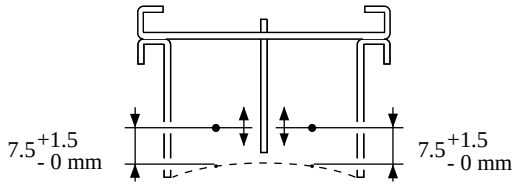 A	±1mm
Pre-transfer	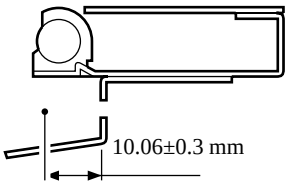 B	No height adjusting mechanism
Transfer	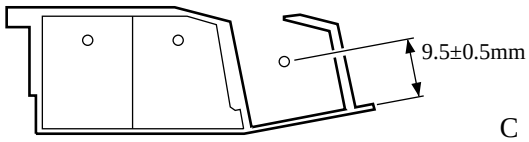 C	±2mm
Separation	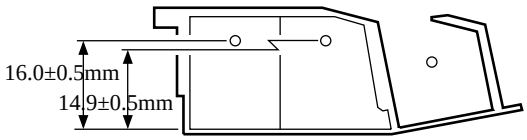 D	±2mm

T02-203-01

REF.

The height (position) of the primary charging wire and the transfer charging wire may be adjusted by turning the screw found at the back of the charging assembly; a single turn changes the position of the charging wire by about 0.7 mm.

3.3 Mounting the Drum Cleaning Blade

3.3.1 Removing the Cleaning Blade

1) Slide out the process unit from the machine. (See the Printer Manual : Chap.4 > 7.3 "Process Unit".)
2) Remove the primary charging assembly.
3) Disconnect the connector [1] of the AC line of the drum heater.
4) Remove the four mounting screws [2], and detach the cleaning blade assembly [3].

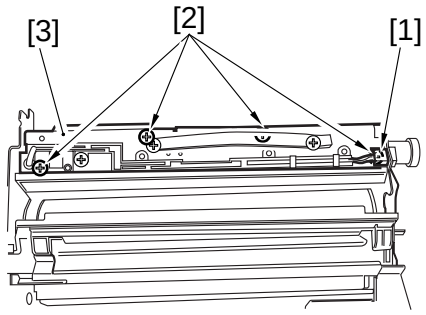

F02-203-09

5) Remove the E-ring [4] from under the cleaning blade assembly, and detach the pressure spring [5].

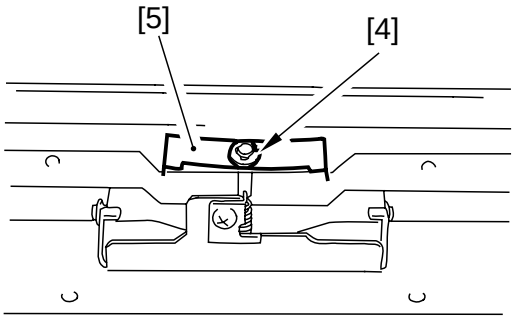

F02-203-10

6) Disconnect the connector [6], and remove the two screws [7]; then, detach the pre-exposure LED assembly [8].

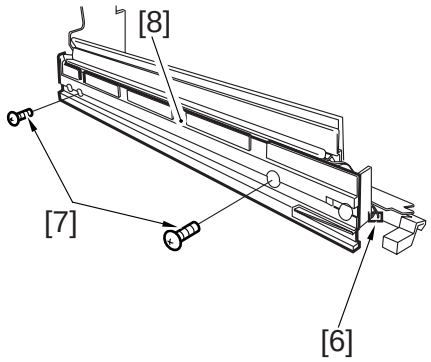

F02-203-11

7) Loosen the five mounting screws [9], and detach the blade support plate from the cleaning blade.

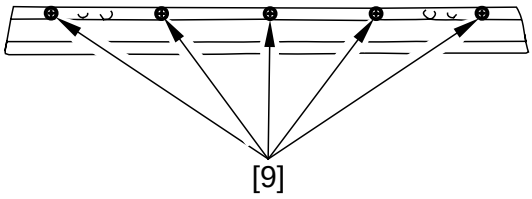

F02-203-12

3.3.2 Mounting the Cleaning Blade

When mounting the cleaning blade, be sure that the side with the marking [1] will be the face.

1) Push in the cleaning blade [2] until it butts slightly again the rear.

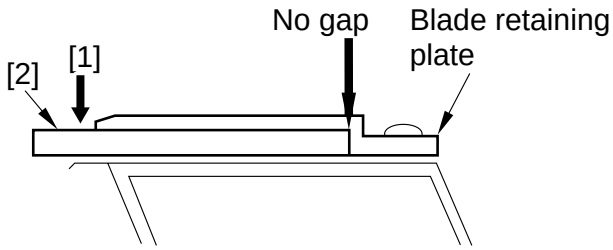

F02-203-13

2) Tighten the five mounting screws [2] lightly, stopping to turn them when resistance is felt.
3) Turn the screws tightened lightly in step 2) about 20° to 30° in the order indicated, tightening them fully.

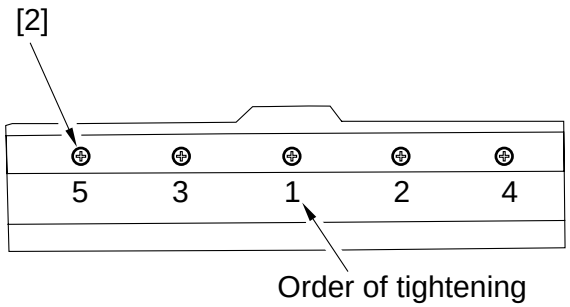

F02-203-14

After mounting the cleaning blade, check to make sure that the edge of the blade is not appreciably bent.
Further, be sure to clean the groove in the blade support plate before mounting the blade, as toner or the like in the groove can start to bend the blade.

3.4 Mounting the Developing Blade

3.4.1 Removing the Blade Unit

1) Take the developing assembly out of the machine.
2) Remove the two mounting screws [1], and detach the developing assembly cover [2].

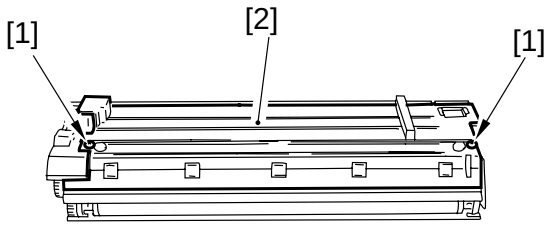

F02-203-15

3) Place a newspaper on the floor or a desk, and pour out the toner onto the newspaper from the developing assembly.
4) Remove the two mounting screws [3], and detach the blade unit [4] together with its mounting base.

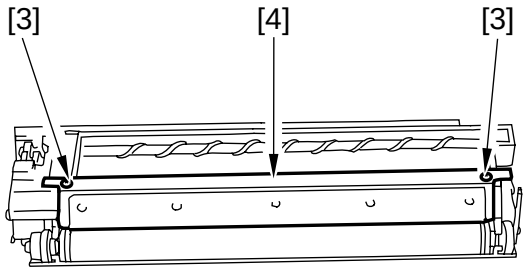

F02-203-16

The blade must be mounted with a high accuracy. Do not remove it on its own in the field (i.e., be sure to remove it intact with its mounting base).

3.4.2 Mounting the Blade

Mount the blade by reversing the steps used to remove it.

1) Push the blade mounting base against the developing assembly, and tighten the two mounting screws.
   When mounting the blade, place copy paper on the developing cylinder first to protect the developing cylinder.

3.5 Replacing the Potential Sensor/Potential Control PCB

3.5.1 Removing the Potential Sensor/Potential Control PCB

Be sure to replace the potential sensor and the potential control PCB at the same time.

1) Open the front cover, and slide out the hopper unit.
2) Remove the developing assembly and the primary cooling fan.
3) Disconnect the connector [1], and remove the screw [2]; then, detach the potential sensor assembly [3].

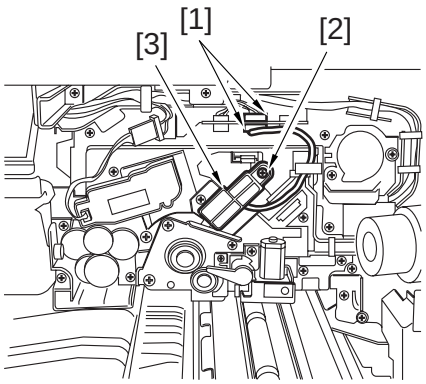

F02-203-17

4) Remove the three screws [4], and detach the front door switch cover [5].

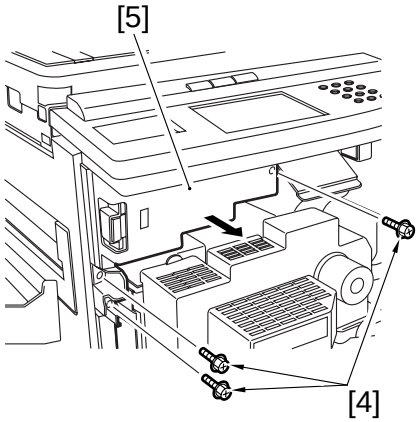

F02-203-18

5) Free the cable [6] from the cable guide.
6) Remove the six screws [7], and detach the door switch assembly [8].

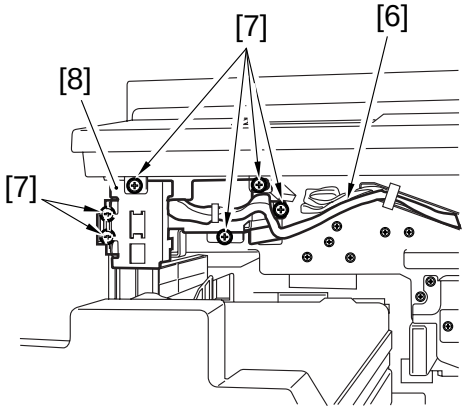

F02-203-19

7) Remove the two screws [9], and detach the potential control PCB together with the mounting base [10].

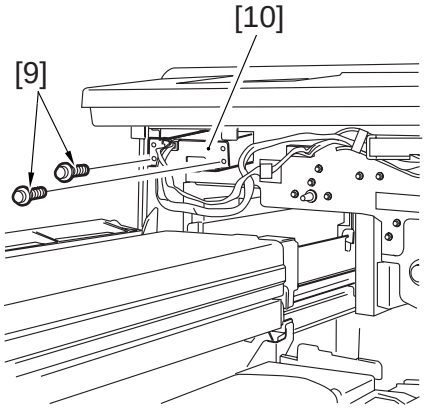

F02-203-20

8) Remove the four screws [11] and three connectors [12], and detach the potential control PCB [13].

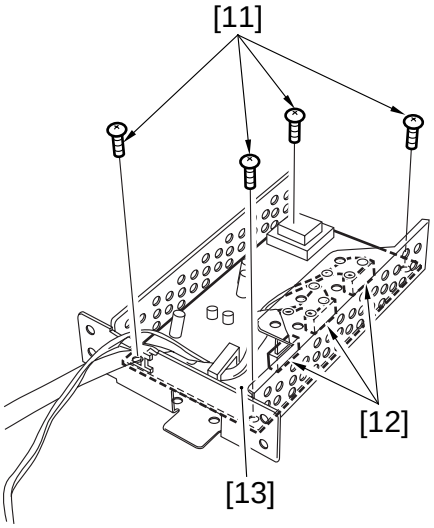

F02-203-21

3.5.2 Adjusting the Potential Sensor

The potential sensor and the potential control PCB are adjusted in a pair, requiring simultaneous replacement.

1) Start service mode, and set '0' to the following to disable potential control: COPIER>OPTION>BODY>PO-CNT.
2) Replace the potential control PCB.
3) Connect the connector of the potential sensor to the connector of the machine.
4) Fit the potential checking electrode (FY9-3012) [2] to the potential sensor [1].

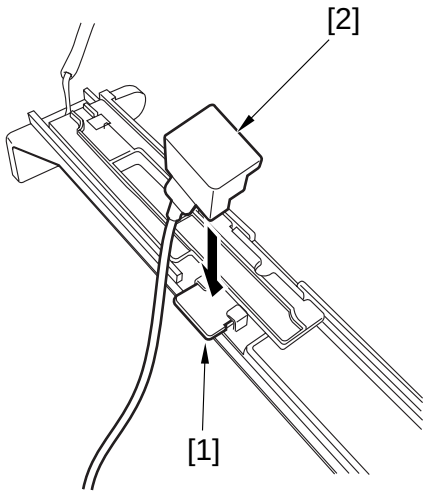

F02-203-22

When fitting the checking electrode to the potential sensor [2], be sure that the magnet of the checking electrode does not come into contact with the potential sensor cover.

5) Connect the clip [3] of the checking electrode to the frame of the machine (GND).

Be sure to keep the clip [3] fully away from the sensor and not to bring it in contact with the cover of the sensor.

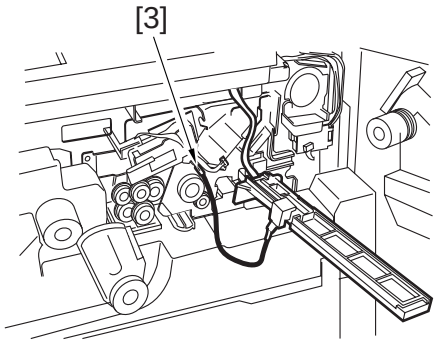

F02-203-23

6) Insert the door switch actuator into the door switch assembly.
7) Connect the power plug to the power outlet, and turn on the main power switch.
8) Execute the following in service mode: COPIER>FUNCTION>DPC>OFST.
9) Record the setting of <OFST> on the service label.
10) Start service mode, and set '1' to the following to enable potential control: COPIER>OPTION>BODY>PO-CNT.
11) Check to make sure that the data lamp in the control panel is off; then, turn off the main power switch.
12) Disconnect the power plug from the power outlet.
13) Remove the checking electrode from the potential sensor.
14) Mount the potential sensor.

4. Pickup/Feeding System

4.1 Orientation of the Deck/Cassette Pickup Roller

The pickup roller may be mounted by reversing the steps used to remove it; however, be sure to keep the following in mind:

- The pickup rollers used at the front and the rear of the machine are not interchangeable.
- The collar of the pickup roller used at the front of the machine is gold-colored.

When mounting the pickup roller [1] to the pickup assembly, make sure that the round marking [2] found on the side of the roller and the round marking [3] found on the collar (gold-colored) are toward the front of the machine.

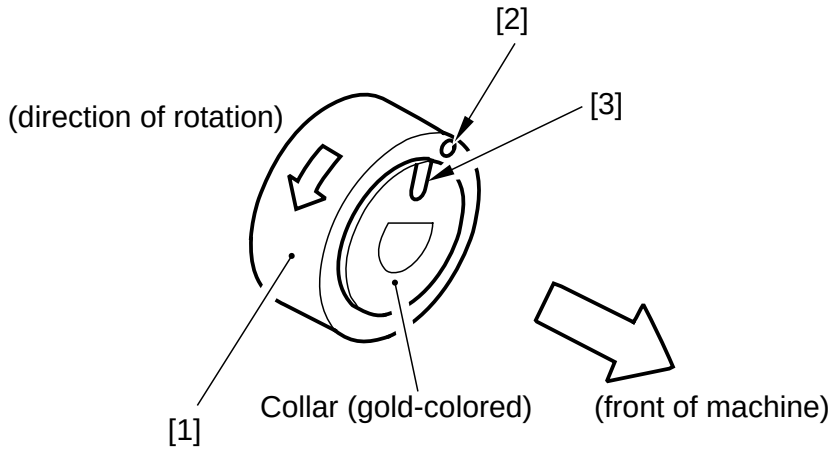

F02-401-01

- The collar of the pickup roller used at the rear of the machine is silver-colored. When mounting the pickup roller [4] to the pickup assembly, make sure that the round marking [5] found on the side o the roller is toward the front of the machine while the round marking on the collar (silver-colored) is toward the rear of the machine.

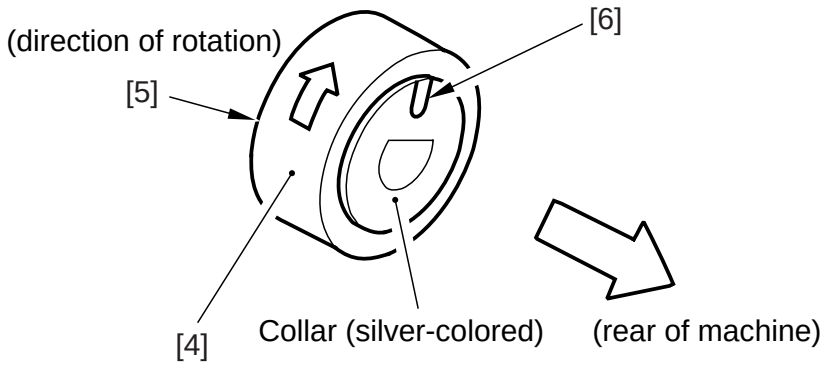

F02-401-02

4.2 Orientation of the Deck/Cassette Separation Roller

When replacing the separation roller, be sure it is oriented as follows:

Cassette 3/4, Right Pickup Assembly

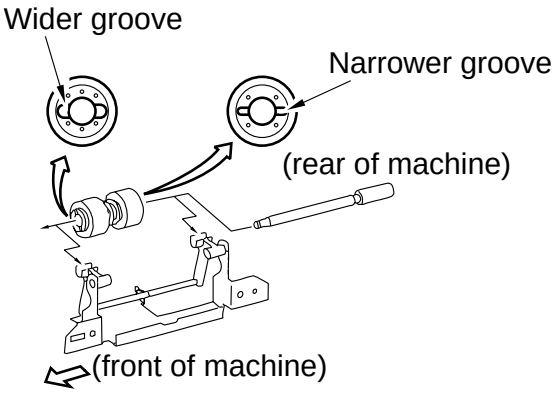

Left Deck Pickup Assembly

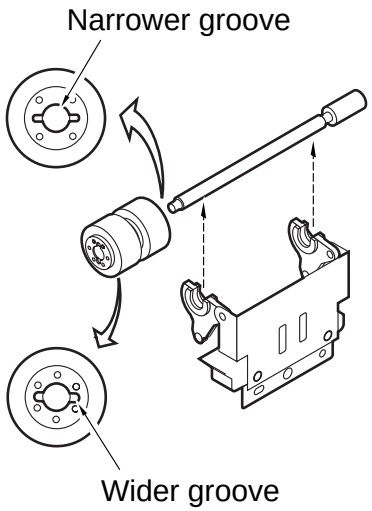

F02-402-01

4.3 Orientation of the Feeding Roller of the Deck/Cassette Pickup Assembly

When mounting the feeding roller assembly of the deck/cassette pickup assembly, be sure the belt pulley [2] is toward the front of the machine.

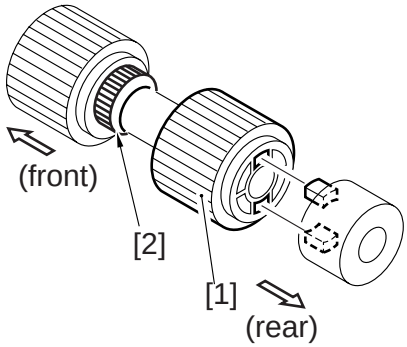

F02-403-01

4.4 Orientation of the Pickup Roller of the Side Paper Deck

The pickup roller may be mounted by reversing the steps used to remove it; however, be sure to keep the following in mind:

- The pickup rollers used at the front and the rear of the machine are not interchangeable.
- The collar of the pickup roller used at the front of the machine is silver-colored.

When mounting the pickup roller [1] to the pickup assembly, be sure that the round marking [2] found on the collar (silver-colored) is toward the front of the machine.

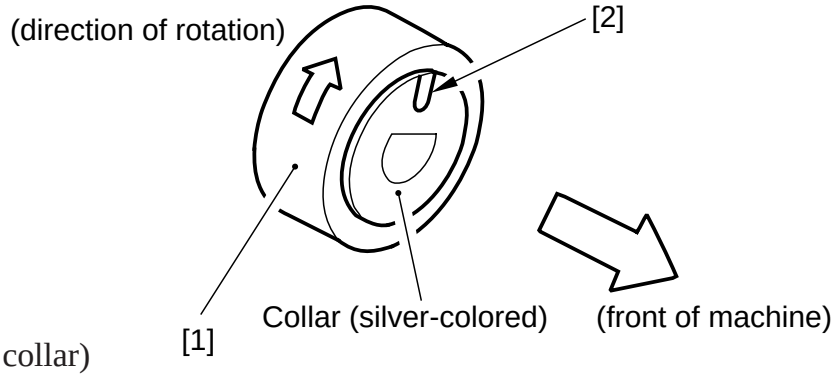

[1] Pickup roller
[2] Marking (on collar)

F02-404-01

- The collar on the pickup roller found at the rear of the machine is gold-colored.

When mounting the pickup roller [4] to the pickup assembly, be sure that the round marking [5] found on the side of the roller and the round marking [6] found on the collar (gold-colored) are toward the rear of the machine.

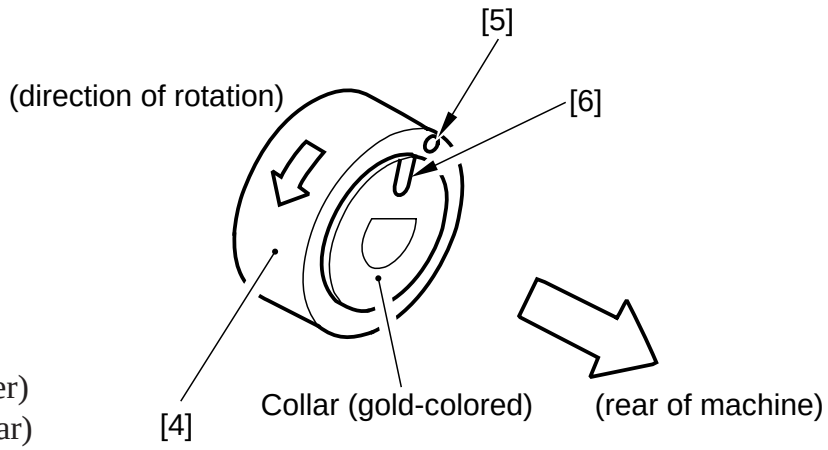

[4] Pickup roller
[5] Marking (roller)
[6] Marking (collar)

F02-404-02

4.5 Orientation of the Feeding Roller of the Side Paper Deck

When mounting the feeding roller assembly [1] to the side paper deck, be sure that the belt pulley [2] is toward the front of the machine. When mounting the feeding roller [3] to the feeding roller shaft [4], be sure that the round marking [5] is toward the rear of the machine.

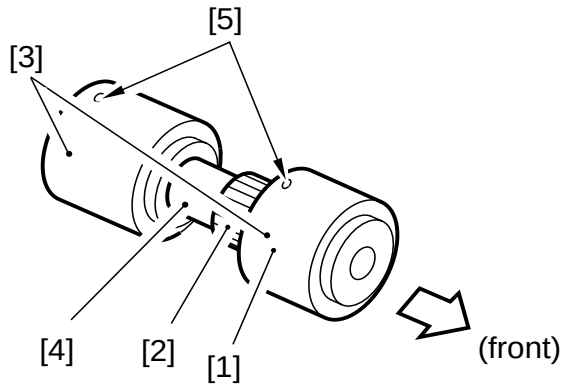

F02-405-01

4.6 Adjusting the Pressure of the Separation Roller of the Deck/Cassette

If double feeding or pickup failure occurs during pickup, change the position of the pressure spring of the separation roller:

- If double feeding occurs, move the hook of the spring in the direction of B.
- If pickup failure occurs, move the hook of the spring in the direction of A.

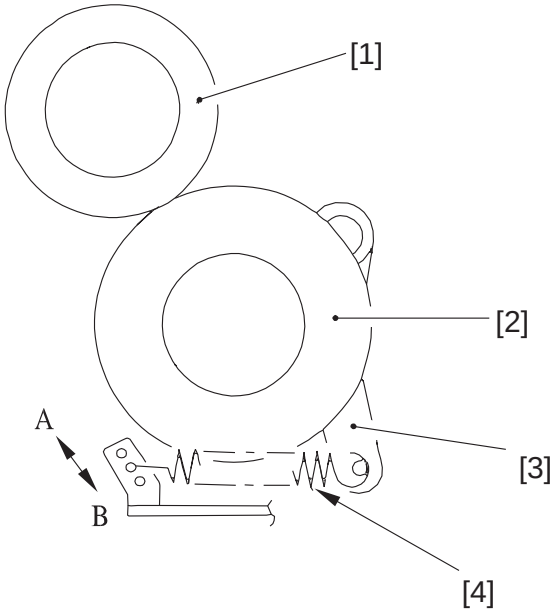

[1] Feeding roller [2] Separation roller
[3] Pressure lever [4] Pressure spring

F02-406-01

4.7 Adjusting the Pressure of the Separation Roller of the Manual Feed Tray

If double feeding or pickup failure occurs during pickup, adjust the position of the pressure spring of the separation roller.

1) Remove the right upper cover.
2) Remove the upper guide [1].

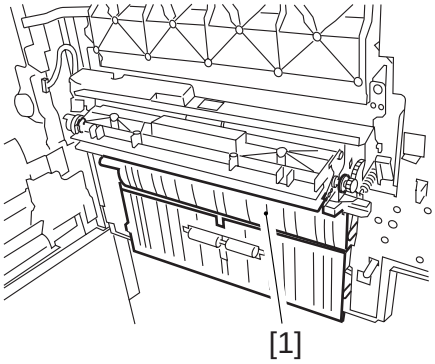

F02-407-01

- If double feeding occurs, remove the mounting screw [2], and lower the mounting base [3]; then, tighten the mounting screw [2] in hole A.
- If pickup failure occurs, remove the mounting screw [2], and raise the mounting base [3]; then, tighten the mounting screw [3] in hole B.

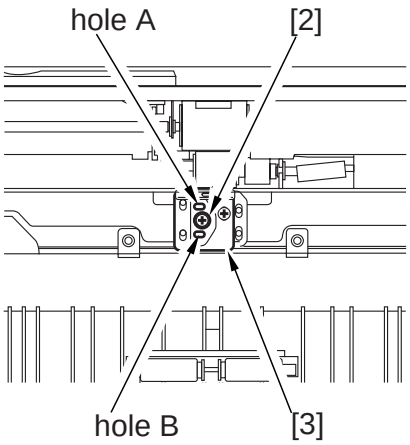

F02-407-02

4.8 Adjusting the Fixing Inlet Guide Solenoid (SL1)

Adjust the position of the solenoid using the two screws [1] so that the guide will be positioned as indicated when the solenoid turns on.

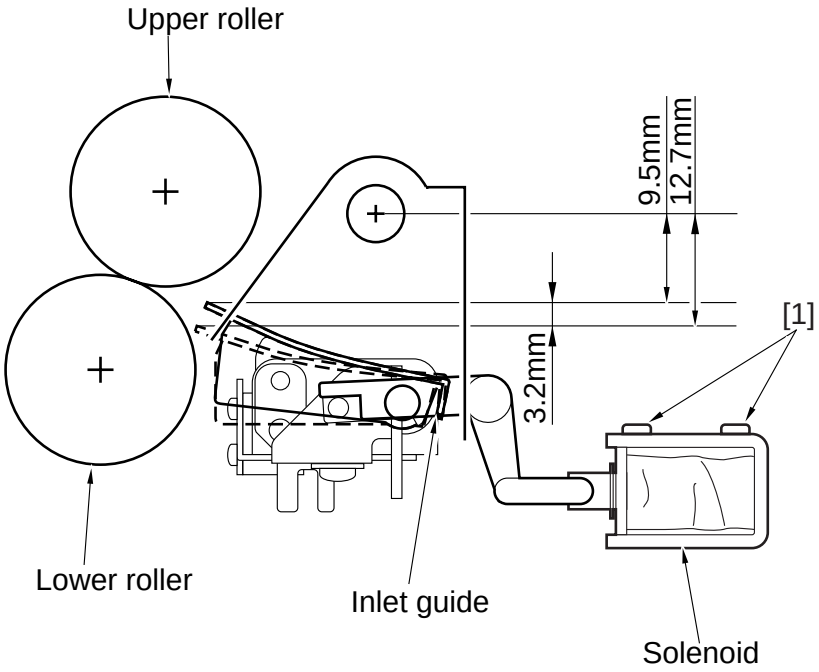

F02-408-01

4.9 Adjusting the Position of the Pickup Solenoid (SL3, SL4) of the Cassette 3/4

Adjust the position of the solenoid using the two screws [3] so that the distance from the bottom of the pickup assembly to A of the roller arm is 36±0.5 mm when [1] and [2] are operated.

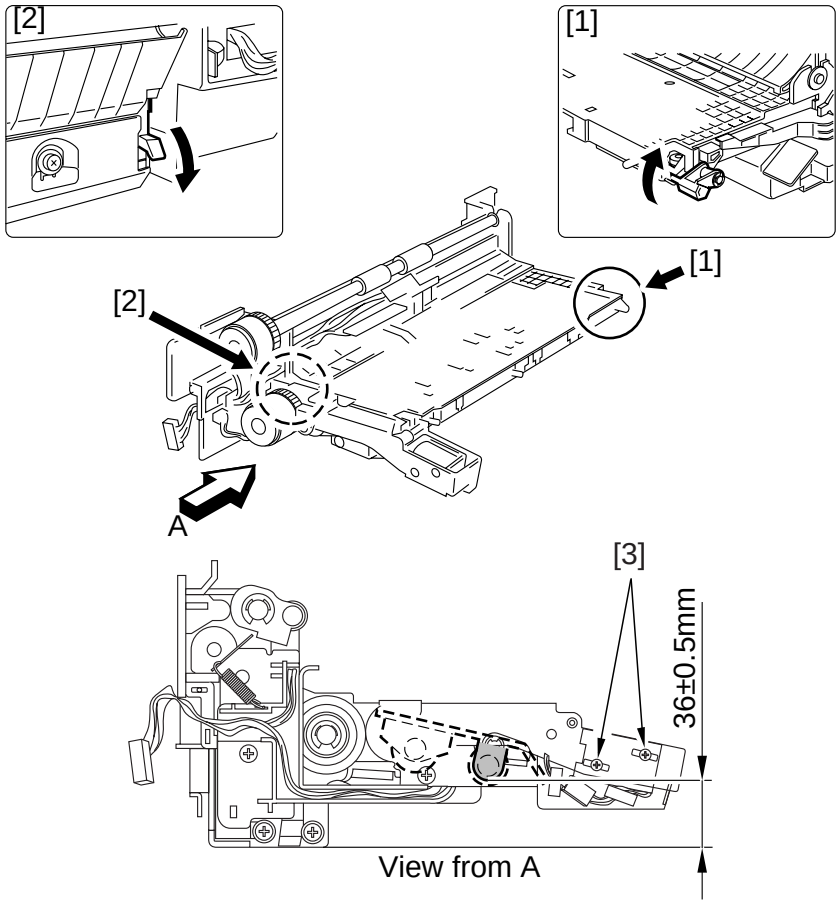

F02-409-01

4.10 Adjusting the Position of the Delivery Flapper Solenoid (SL5)

Adjust the position of the mounting screw [2] using the screw [2] so that the drive lever [1] is pushed fully when the solenoid turns on (i.e., when the plunger is drawn).

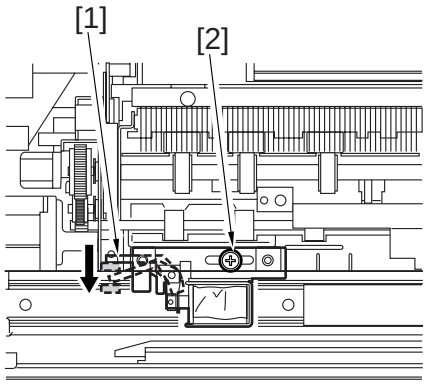

F02-410-01

4.11 Adjusting the Position of the Right Deck Pickup Solenoid (SL6)

Adjust the position of the solenoid so that the left edge of the arm 2 is 57.2 ± 0.5 mm from the center of hole A of the solenoid mounting base.

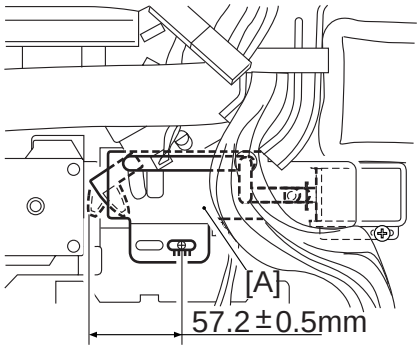

F02-411-01

4.12 Adjusting the Position of the Left Deck Pickup Solenoid (SL7)

Before removing the left deck pickup solenoid from the support plate [1], take note of its position with reference to the fixing screw [2] of the solenoid. Or, mark the position for the solenoid by drawing a line on the support plate with a scriber.

When mounting the solenoid on its own, be sure to secure it in its original position.

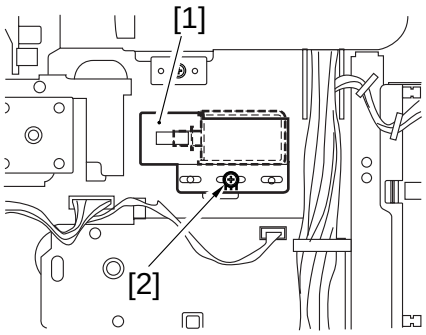

F02-412-01

4.13 Adjusting the Position of the Reversing Flapper Solenoid (SL8)

1) Adjust the potion of the solenoid so that the drive lever [1] is pushed fully when the solenoid turns on (i.e., when the plunger is drawn).

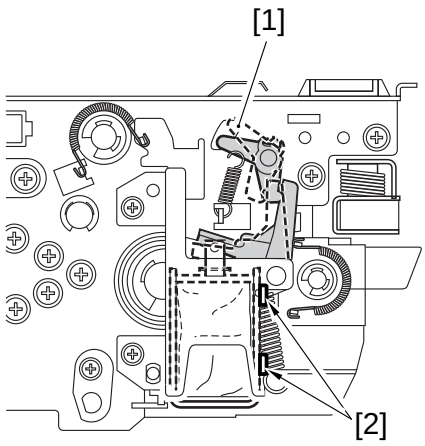

F02-413-01

4.14 Adjusting the Position of the Fixing Web Solenoid (SL9)

4.14.1 New Fixing Web

Adjust the position for the solenoid using the screw [2] so that the distance of travel of the drive lever [1] is 8.6 mm.

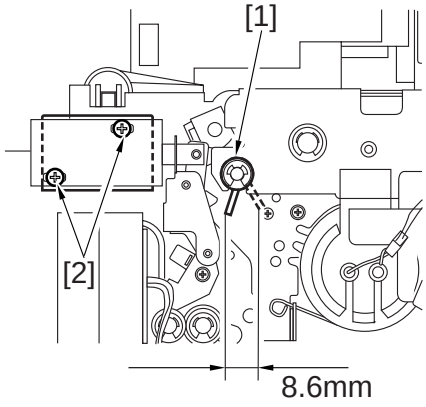

F02-414-01

4.14.2 Existing Fixing Web

Before removing the solenoid, take note of the position [A] of the drive lever when the solenoid turns on. After replacing the solenoid, adjust its position using the screw [2] so that the drive lever [1] will be positioned as it was before replacement when the solenoid turns on.

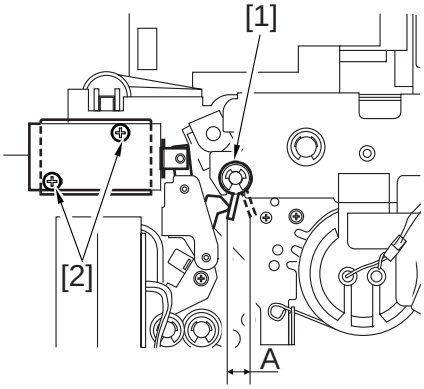

F02-414-02

4.15 Position of the Side Paper Deck Pickup Roller Releasing Solenoid

Before removing the deck pickup roller releasing solenoid [1] from the support plate, take note of the position of the two fixing screws [2] of the solenoid with reference to the index on the support plate. Or, draw a line on the support plate so that it will serve as a reference when positioning the solenoid.

When mounting the solenoid on its own, be sure to secure it in its original position.

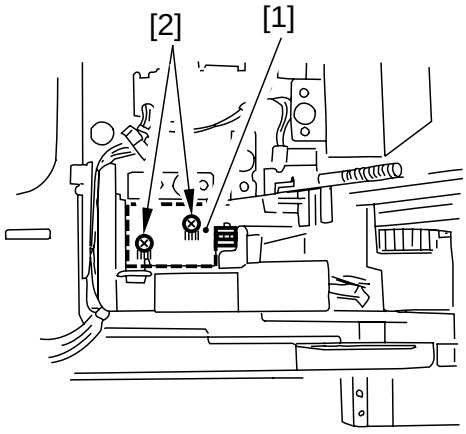

F02-415-01

4.16 Attaching the Timing Belt of the Manual Feed Tray Assembly

1) Butt the rack plate [1] of the manual feed tray against A (open state)
2) Move the slide volume in the direction of B, and attach the timing belt [2] to the pulley [3].

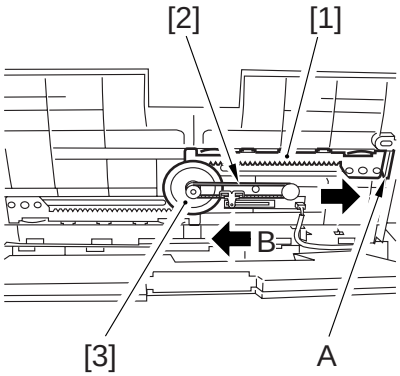

F02-416-01

4.17 Attaching the Drive Belt

Attach the drive belt on the pulley and the rollers as indicated.

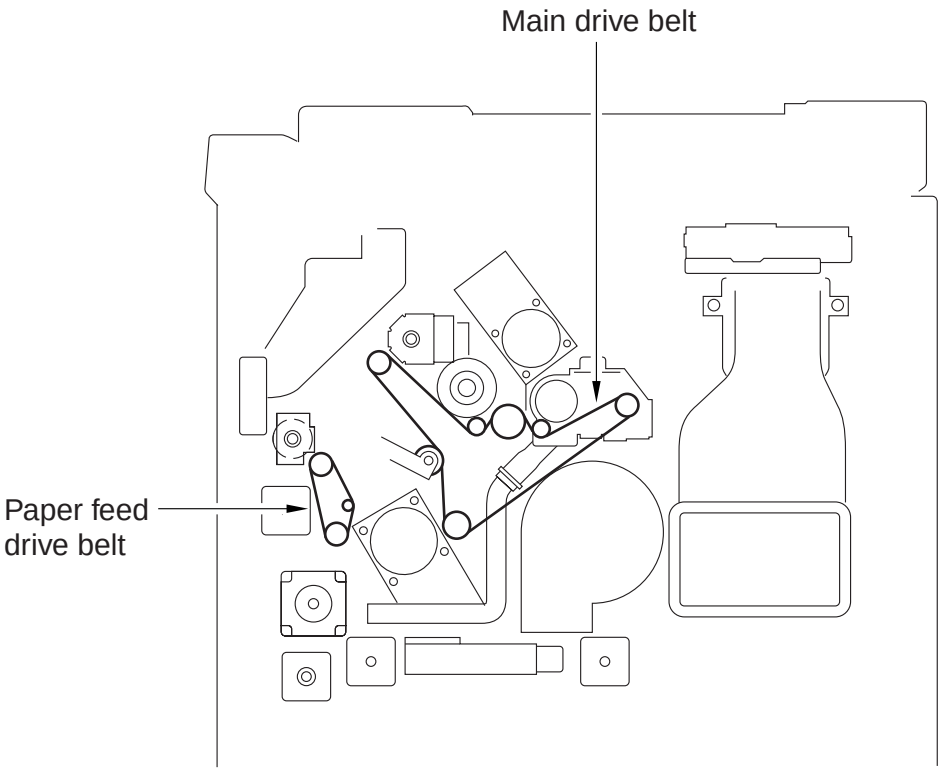

F02-417-01

5. Fixing System

5.1 Points to Note When Mounting the Fixing Heater

1) Do not touch the surface of the heater.
2) For both heaters, be sure that the side with the longer harness is toward the front.
3) Mount the main heater [1] to the right side and the sub heater [2] to the left side (viewing from the front of the fixing assembly).
4) Be user that the protrusions of the heaters will not interfere, i.e., stagger them.
5) When mounting the faston to the fixing heater at the rear, do not bend the faston terminals (A, B) as if to direct it toward the outside.
   Be sure it is parallel to the holder.

5.2 Position of the Fixing Inlet Guide

- Points to Note When Making Adjustments in the Field

1) For the position of the inlet guide, see the instructions under 2.4.1, i.e., adjusting the position of the fixing inlet guide solenoid (SL1).
2) The inlet guide will move down when the solenoid (SL1) turns on.
3) The difference in the height of the inlet guide between front and rear must be within 0.5 mm.
4) The height of the inlet guide may be adjusted by loosening the fixing screw on the height adjusting support plate.



Removing the inlet guide base will require adjustment of the position of the inlet guide. To avoid the adjustment, try not to loosen the mounting screw on the inlet guide base. If you loosened it for some unavoidable reason, be sure to position it correctly with reference to the index on the fixing assembly base.

5.3 Adjusting the Lower Roller Pressure (nip)

5.3.1 Taking Measurements

Wait for 15 min after the machine ends its warm-up; then, make 20 A4 copies before starting the work:

1) Place A4 or LTR paper, and select A4 or LTR in the control panel.
2) Make the following selections in service mode to discharge the paper: COPIER>FUNCTION>FIXING>NIP-CHK

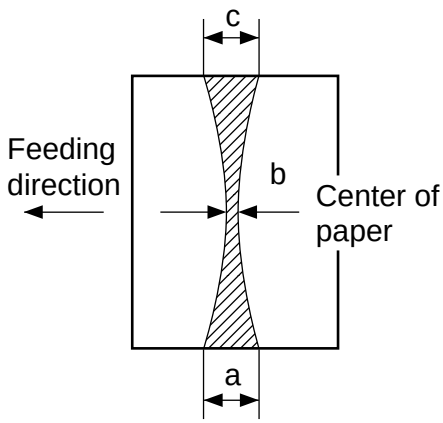

b : 7.8mm ± 0.5mm
a-c : 0.5mm or less

F02-503-01

5.3.2 Standards

1) Measure the width of a, b and c.

a and c are points 10 mm from both edges of paper.

2) Check to see if the measurements are as indicated. Otherwise, make the adjustment under c.

Be sure that both upper and lower rollers are fully heated when taking measurements.

5.3.3 Making Adjustments

1) Slide the fixing assembly out of the machine.
2) Open the delivery assembly.
3) Adjust the nip using the adjusting screw [1] found at the front and the rear.

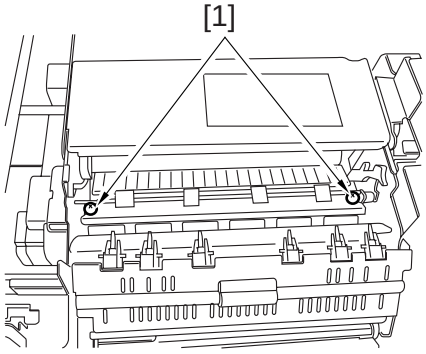

F02-503-02

6. Laser Exposure System

6.1 When Replacing the Scanner Unit

If the temperature of the fixing assembly is 150°C or higher when the scanner unit is replaced, force potential control in service mode:

1) Make the following selections in service mode: COPIER>FUNCTION>DPC>DPC.
2) Turn off and then on the main power switch.

7. Electrical Parts

7.1 When Replacing the CCD Unit

1) Replace the CCD unit.
2) After assembling the machine, connect the power plug to the power outlet, and turn on the main power switch.
3) Execute the following modes:
   CCD auto adjustment: COPIER>FUNCTION>CCD>CCD-ADJ
   CCD edge gain correction position auto adjustment:
   COPIER>FUNCTION>CCD>EGGN-POS
6) When the following data is updated (automatically), record them on the service label:
   COPIER>ADJUST>CCD>all items

7.2 When Replacing the Reader controller PCB

1) Print out the data of user mode/service mode.
2) Replace the reader controller PCB.
3) Remove the EEPROM (1 pc.) from the existing PCB, and mount it to the new PCB.
4) After assembling the machine, connect the power plug to the power outlet, and turn on the main power switch.
5) Check to make sure that the following service mode settings are the same as the data before replacement:
   COPIER>ADJUST>AE>all items
   COPIER>ADJUST>ADJ-XY>all items
   COPIER>ADJUST>CCD>all items

If any service mode setting is faulty, enter the respective setting recorded on the service label in service mode.

7.3 When Replacing the Main Controller PCB

1) Replace the main controller PCB.
2) Remove the counter memory PCB from the existing PCB, and mount it to the new PCB.
3) After assembling the machine, connect the power plug to the power outlet, and turn on the main power switch.

7.4 When Replacing the HDD Unit



When replacing the HDD unit, be sure to keep the following in mind:
1. Take appropriate measures against static charges.
2. Keep the HDD unit protected from impact.

1) Replace the HDD unit.
2) After assembling the machine, connect the power plug to the power outlet.
3) Connect a PC to which the Service Support Tool has been installed.
4) Turn on the PC, and turn on the main power switch while holding down both ‘2’ and ‘8’ on the keypad.
5) Using the Service Support Tool, format the HDD unit and install the system software.

7.5 When Replacing the DC Controller PCB

1) Print out the data of user mode/service mode.
2) Replace the DC controller PCB.
3) Remove the EEPROMs (6 pc.) from the existing PCB, and mount them to the new PCB.
4) After assembling the machine, connect the power plug to the power outlet, and turn on the main power switch.
5) Enter the values recorded on the label attached to the new DC controller PCB in service mode:

   COPIER>ADJUST>DEVELOP>D-HV-DE

   COPIER>ADJUST>HV-TR>D-PRE-TR

   COPIER>ADJUST>HV-TR>D-HV-TR

   COPIER>ADJUST>HV-SP>D-HV-SP
6) Check to make sure that the following service mode settings are the same as the data obtained before replacing the PCB:

   COPIER>ADJUST>LASER>(all items)

   COPIER>ADJUST>DEVELOP>(all items except D-HV-DE)

   COPIER>ADJUST>DENS>(all items)

   COPIER>ADJUST>BLANK>(all items)

   COPIER>ADJUST>V-CONT>(all items)

   COPIER>ADJUST>HV-PRI>(all items)

   COPIER>ADJUST>HV-TR>(all items except D-PRE-TR and D-HV-TR)

   COPIER>ADJUST>HV-SP>(all items except D-HV-SP)

   COPIER>ADJUST>FEED-ADJ>(all items)

   COPIER>ADJUST>CST-ADJ>(all items)

   COPIER>ADJUST>MISC>(all items)

If a fault is found in the service mode settings, enter the respective setting recorded on the service label in service mode; however, enter the settings recorded on the label attached to the high-voltage unit for the following service mode items:

COPIER>ADJUST>DEVELOP>HVT-DE
COPIER>ADJUST>HV-TR>HVT-TR
COPIER>ADJUST>HV-TR>H-PRE-TR
COPIER>ADJUST>HV-SP>HVT-SP

7.6 When Replacing the High-Voltage PCB

1) Replace the high-voltage PCB.
2) After assembling the machine, connect the power plug, and turn on the main power switch.
3) Enter the values recorded on the label attached to the new high-voltage PCB in the following service mode items:
   COPIER>ADJUST>DEVELOP>HVT-DE
   COPIER>ADJUST>HV-TR>HVT-TR
   COPIER>ADJUST>HV-TR>H-PRE-TR
   COPIER>ADJUST>HV-SP>HVT-SP

8. Checking the Surface Potential Control System

8.1 Outline

In the event of an image fault, it is important to find out if the cause is within the static latent image formation block (including the photosensitive drum and the potential control system) or is with the developing/transfer mechanism; and to isolate the cause, the surface potential must first be checked in service mode.

8.2 Disabling the Auto Control Mechanism

The potential control system may be checked by disabling the auto control mechanism (referred to hereafter as “non-auto control mode).

If improvements are noted in the images made in non-auto control mode, the potential measurement unit and the DC controller PCB may be suspected.

Further, non-auto control mode may also be made use of as an emergency measure against an error in the auto control mechanism.



In non-auto control mode, all control settings (corona current, intensity, developing bias) will automatically be set to the standard settings stored in the ROM.

Starting Non-Auto Control Mode

1) Make the following selections in service mode, and enter ‘0’:
   COPIER>OPTION>BODY>PO-CNT; then, press the OK key.
2) Press the Reset key twice.

8.3 Zero Level Check

A "zero level check" is a check made to find out whether the control system of the DC controller PCB identifies 0 V when the drum surface potential is 0 V.

A zero level check may be made in either of two ways, so as to find out whether a circuit on the the DC controller PCB or the potential measurement circuit is normal:

1) Method 1: for checking the level shift circuit of the DC controller PCB
2) Method 2: for checking the potential measurement circuit

8.3.1 Method 1

1) Turn off the main power switch.
2) Remove the rear upper cover.
3) Short CP106 [1] and CP105 [2] on the DC controller PCB using a cable whose both ends are equipped with an alligator clip or a probe.



When shorting CP106 and CP105, be sure to keep the shorting tool away from other elements or the pattern on the PCB.

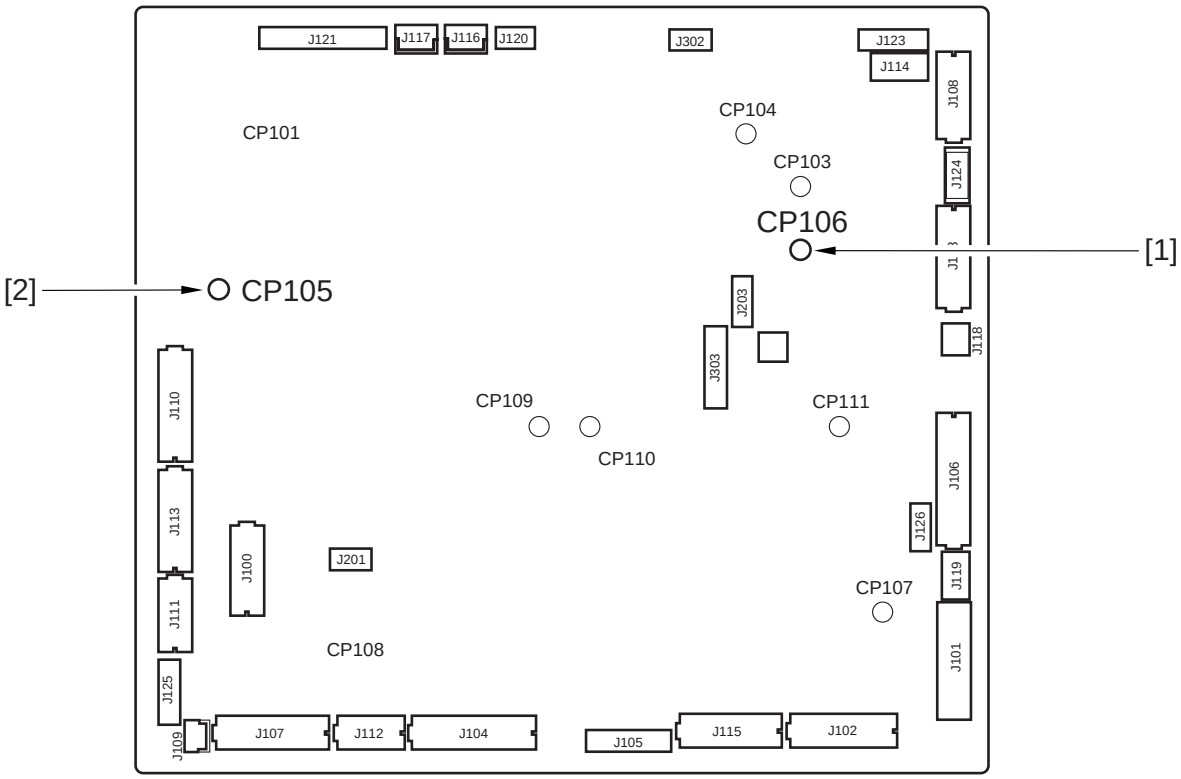

F02-803-01

4) Open the front cover, and slide out the pickup feeding unit to the front.
5) Remove the three screws [3], and detach the front switch cover [4].

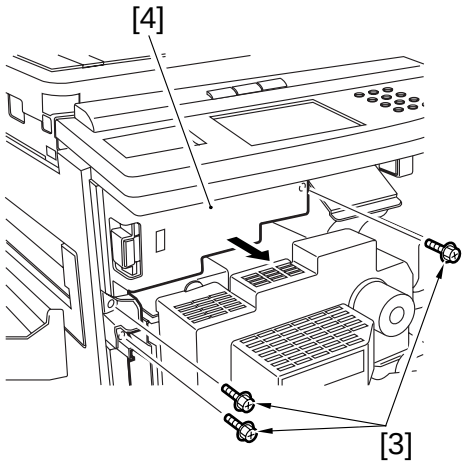

F02-803-02

6) Free the cable of the potential control PCB from the cable clamp, and disconnect the connector (4-pin) [5] connected to the DC controller PCB.

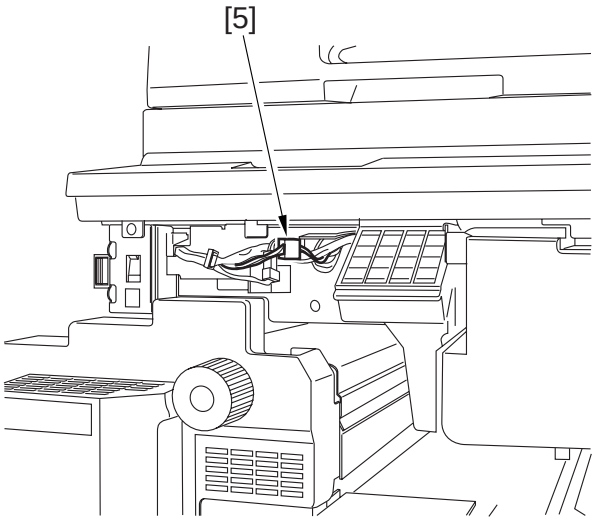

F02-803-03

7) Put the pickup feeding unit back into its initial position, and fit the door switch tool in the door switch assembly; then, turn on the main power switch.
8) Make the following selections in service mode, and check to find out that the reading during initial rotation is between 0 and 30: COPIER>DISPLAY>DPOT>DPOT-K.
If the reading is not between 0 and 30, suspect a fault on the DC controller PCB.
9) Turn off the main power switch, and remove the door switch tool.
10) Remove the jumper wire from the DC controller PCB.

11) Connect the connector of the cable (of the potential control PCB).
12) Mount the front switch cover, and close the front cover.
13) Mount the rear upper cover.
14) Turn on the main power switch.

8.3.2 Method 2

1) Disable potential control so that the machine will be in non-auto control mode.
2) Turn off the main power switch.
3) Remove the potential sensor from the machine.
4) Connect the connector of the potential controller to the connector on the machine side.
5) Fit the electrode (FY9-3012) [2] designed for checking potential sensors to the potential sensor [1].

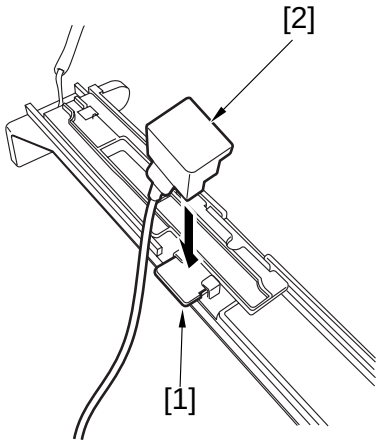

F02-803-04

When fitting the electrode to the potential sensor, be sure to keep the magnet of the electrode away from the potential sensor cover.

6) Connect the clip [3] designed for making checks to the frame of the machine frame (GND).

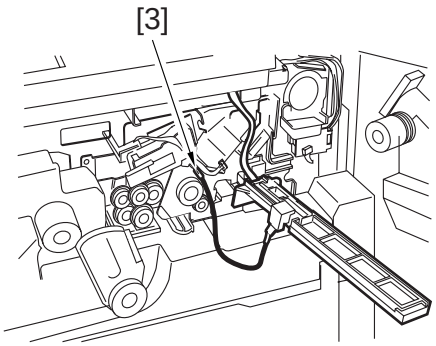

F02-803-05

Be sure to fit the clip [3] fully away from the sensor window, not letting it coming into contact with the cover of the sensor.

7) Insert the door switch tool into the door switch assembly.
8) Turn on the main power switch.

Be sure not to touch the potential senor assembly after turning on the power switch.

9) Make the following selections in service mode, and check to make user that the reading during initial rotation is between 0 and 30: COPIER>DISPLAY>DPOT>DPOT-K.

REF.

1. If the reading is as indicated for method 1 but is not so for method 2, suspect dirt on the or and a fault in the potential measurement unit.
2. If the reading is as indicated for both method 1 and method 2, the signal paths and the operations from the potential sensor unit to the microprocessor on the DC controller PCB may be assumed to be normal.

10) Turn off the main power switch.
11) Detach the electrode designed for checking potential sensors.
12) Mount the potential sensor support plate.
13) Turn on the main power switch.
14) Enable potential control.

Blank Page

8.4 Checking the Potential System

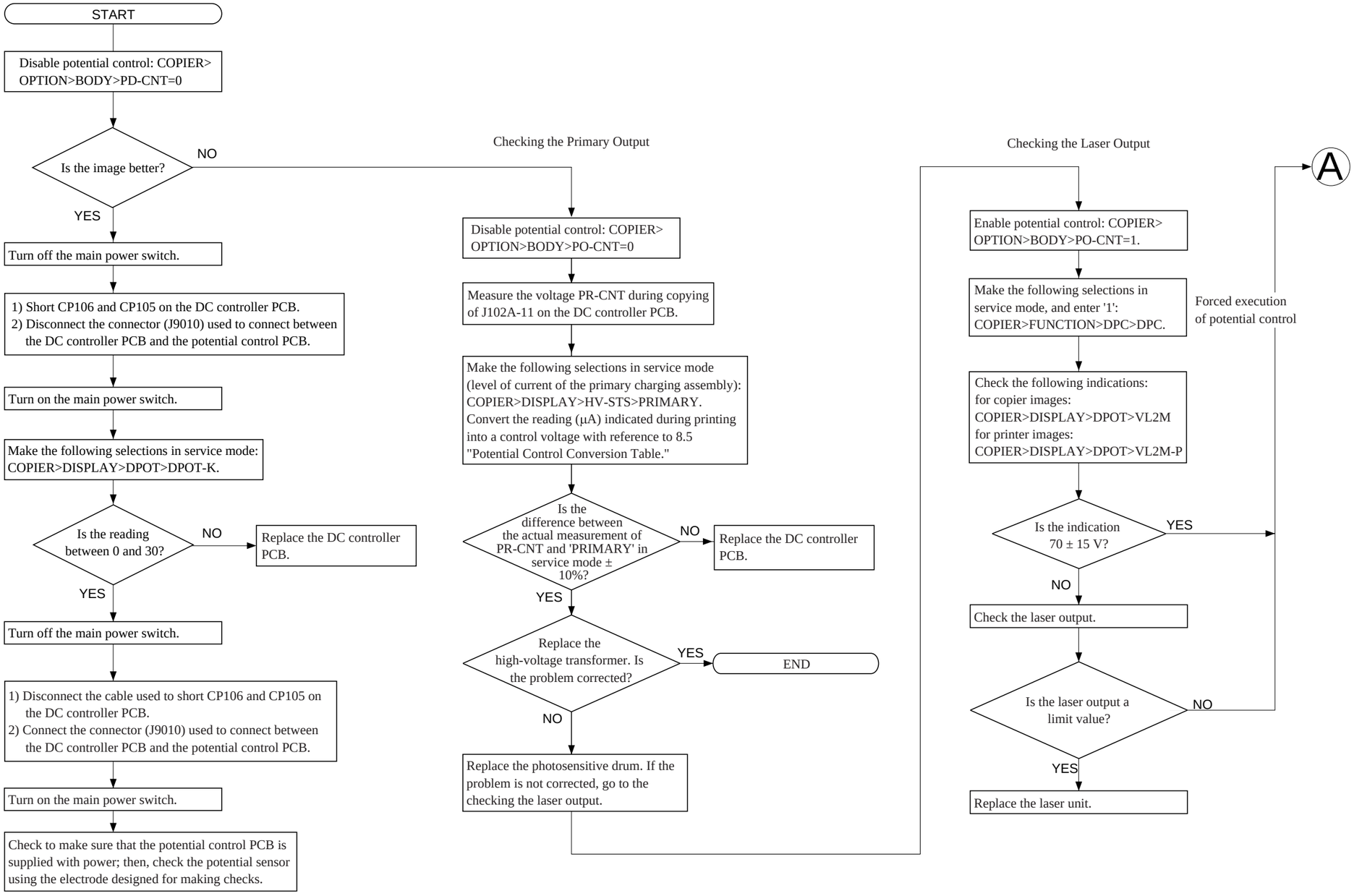

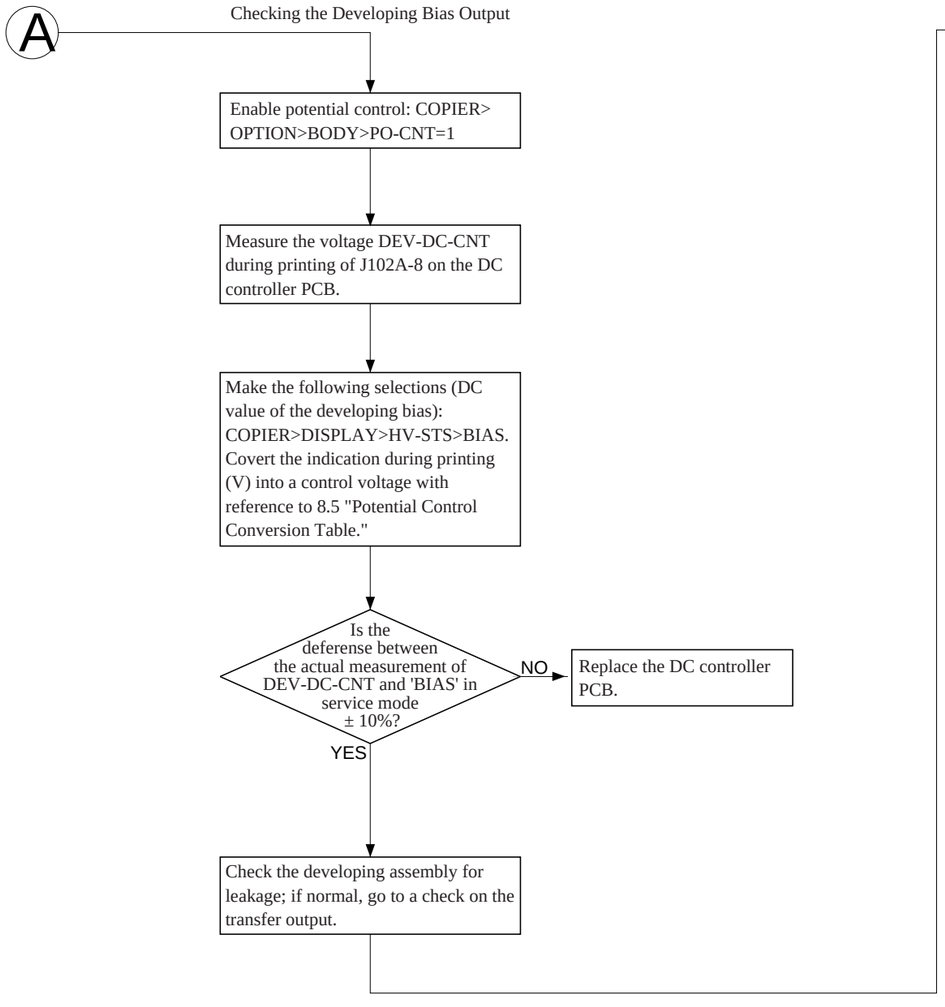
A
Checking the Developing Bias Output
Enable potential control: COPIER> OPTION>BODY>PO-CNT=1
Measure the voltage DEV-DC-CNT during printing of J102A-8 on the DC controller PCB.
Make the following selections (DC value of the developing bias): COPIER>DISPLAY>HV-STS>BIAS. Covert the indication during printing (V) into a control voltage with reference to 8.5 "Potential Control Conversion Table."
Is the deference between the actual measurement of DEV-DC-CNT and 'BIAS' in service mode ± 10%?
NO
Replace the DC controller PCB.
YES
Check the developing assembly for leakage; if normal, go to a check on the transfer output.

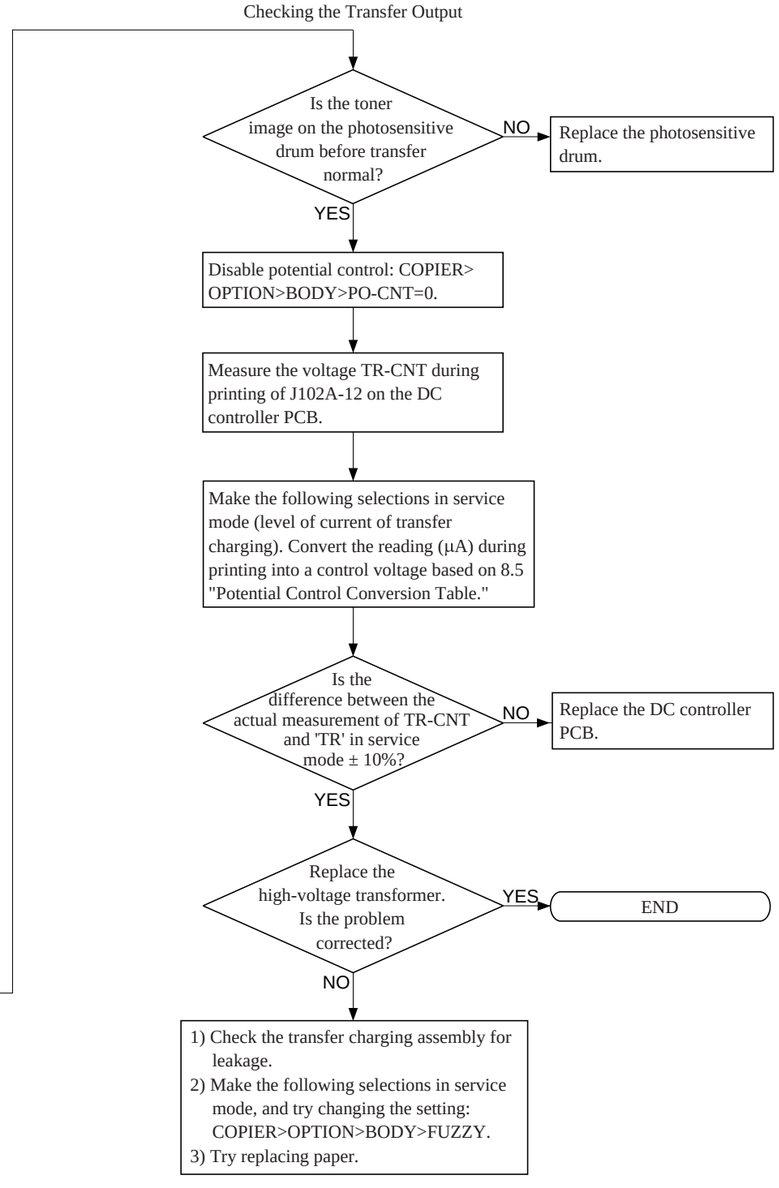
Checking the Transfer Output
Is the toner image on the photosensitive drum before transfer normal?
NO
Replace the photosensitive drum.
YES
Disable potential control: COPIER> OPTION>BODY>PO-CNT=0.
Measure the voltage TR-CNT during printing of J102A-12 on the DC controller PCB.
Make the following selections in service mode (level of current of transfer charging). Convert the reading (µA) during printing into a control voltage based on 8.5 "Potential Control Conversion Table."
Is the difference between the actual measurement of TR-CNT and 'TR' in service mode ± 10%?
NO
Replace the DC controller PCB.
YES
Replace the high-voltage transformer. Is the problem corrected?
YES
END
NO
1) Check the transfer charging assembly for leakage.
2) Make the following selections in service mode, and try changing the setting: COPIER>OPTION>BODY>FUZZY.
3) Try replacing paper.

8.5 Conversion Table for the Potential Control System

Control[V]	Primary[μA]	Developing bias[V]	Pre-transfer[μA]	Transfer[μA]	Separation[μA]
3.00	1,400	0	0	440	100
3.05	1,391	3	-2	437	96
3.10	1,382	7	-4	434	92
3.15	1,373	11	-6	431	88
3.20	1,365	15	-8	429	85
3.25	1,356	18	-10	426	81
3.30	1,347	22	-12	426	77
3.35	1,338	26	-14	420	73
3.40	1,330	30	-16	418	70
3.45	1,321	33	-18	415	66
3.50	1,312	37	-20	412	62
3.55	1,303	41	-22	409	58
3.60	1,295	45	-24	407	55
3.65	1,286	48	-26	404	51
3.70	1,277	52	-28	401	47
3.75	1,268	56	-30	398	43
3.80	1,260	60	-33	396	40
3.85	1,251	63	-35	393	36
3.90	1,242	67	-37	390	32
3.95	1,233	71	-39	387	28
4.00	1,225	75	-41	385	25
4.05	1,216	78	-43	382	21
4.10	1,207	82	-45	379	17
4.15	1,198	86	-47	376	13
4.20	1,190	90	-49	374	10
4.25	1,181	93	-51	371	6
4.30	1,172	97	-53	368	2
4.35	1,163	101	-55	365	-1
4.40	1,155	105	-57	363	-5
4.45	1,146	108	-59	360	-8
4.50	1,137	112	-61	357	-12
4.55	1,128	116	-63	354	-16
4.60	1,120	120	-66	352	-20
4.65	1,111	123	-68	349	-23
4.70	1,102	127	-70	346	-27
4.75	1,093	131	-72	343	-31
4.80	1,085	135	-74	341	-35
4.85	1,076	138	-76	338	-38
4.90	1,067	142	-78	335	-42
4.95	1,058	146	-80	332	-46

Control[V]	Primary[μA]	Developing bias[V]	Pre-transfer[μA]	Transfer[μA]	Separation[μA]
5.00	1,050	150	-82	330	-50
5.05	1,041	153	-84	327	-53
5.10	1,032	157	-86	324	-57
5.15	1,023	161	-88	321	-61
5.20	1,015	165	-90	319	-65
5.25	1,006	168	-92	316	-68
5.30	997	172	-94	313	-72
5.35	938	176	-96	310	-76
5.40	980	180	-99	308	-80
5.45	971	183	-101	305	-83
5.50	962	187	-103	302	-87
5.55	953	191	-105	299	-91
5.60	945	195	-107	297	-95
5.65	936	198	-109	294	-98
5.70	927	202	-111	291	-102
5.75	918	206	-113	288	-106
5.80	910	210	-115	286	-110
5.85	901	213	-117	283	-113
5.90	892	217	-119	280	-117
5.95	883	221	-121	277	-121
6.00	875	225	-123	275	-125
6.05	866	228	-125	272	-128
6.10	857	232	-127	269	-132
6.15	848	236	-129	266	-136
6.20	840	240	-132	264	-140
6.25	831	243	-134	261	-143
6.30	822	247	-136	258	-147
6.35	813	251	-138	255	-151
6.40	805	255	-140	253	-155
6.45	796	258	-142	250	-158
6.50	787	262	-144	247	-162
6.55	778	266	-146	244	-166
6.60	770	270	-148	242	-170
6.65	761	273	-150	239	-173
6.70	752	277	-152	236	-177
6.75	743	281	-154	233	-181
6.80	735	285	-156	231	-185
6.85	726	288	-158	228	-188
6.90	717	292	-160	225	-192
6.95	708	296	-162	222	-196

Control[V]	Primary[µA]	Developing bias[V]	Pre-transfer[µA]	Transfer[µA]	Separation[µA]
7.00	700	300	-165	220	-200
7.05	691	303	-167	217	-203
7.10	682	307	-169	214	-207
7.15	673	311	-171	211	-211
7.20	665	315	-173	209	-215
7.25	656	318	-175	204	-218
7.30	647	322	-177	203	-222
7.35	638	326	-179	200	-226
7.40	630	330	-181	198	-230
7.45	621	333	-183	195	-233
7.50	612	337	-185	192	-237
7.55	603	341	-187	189	-241
7.60	595	345	-189	187	-245
7.65	586	348	-191	184	-248
7.70	577	352	-193	181	-252
7.75	568	356	-195	178	-256
7.80	560	360	-198	176	-260
7.85	551	363	-200	173	-263
7.90	542	367	-202	170	-267
7.95	533	371	-204	167	-271
8.00	525	375	-206	165	-275
8.05	516	378	-208	162	-278
8.10	507	382	-210	159	-282
8.15	498	386	-212	156	-286
8.20	490	390	-214	154	-290
8.25	481	393	-216	151	-293
8.30	472	397	-218	148	-297
8.35	463	401	-220	145	-301
8.40	455	405	-222	143	-305
8.45	446	408	-224	140	-308
8.50	437	412	-226	137	-312
8.55	428	416	-228	134	-316
8.60	420	420	-231	132	-320
8.65	411	423	-233	129	-323
8.70	402	427	-235	126	-327
8.75	393	431	-237	123	-331
8.80	385	435	-239	121	-335
8.85	376	438	-241	118	-338
8.90	367	442	-243	115	-342
8.95	358	446	-245	112	-346

Control[V]	Primary[μA]	Developing bias[V]	Pre-transfer[μA]	Transfer[μA]	Separation[μA]
9.00	350	450	-247	110	-350
9.05	341	453	-249	107	-353
9.10	332	457	-251	104	-357
9.15	323	461	-253	101	-361
9.20	315	465	-255	99	-365
9.25	306	468	-257	96	-368
9.30	297	472	-259	93	-372
9.35	288	476	-261	90	-376
9.40	280	480	-264	88	-380
9.45	271	483	-266	85	-383
9.50	262	487	-268	82	-387
9.55	253	491	-270	79	-391
9.60	245	495	-272	77	-395
9.65	236	498	-274	74	-398
9.70	227	502	-276	71	-402
9.75	218	506	-278	68	-406
9.80	210	510	-280	66	-410
9.85	201	513	-282	63	-413
9.90	192	517	-284	60	-417
9.95	183	521	-286	57	-421
10.00	175	525	-288	55	-425
10.05	166	528	-290	52	-428
10.10	157	532	-292	49	-432
10.15	148	536	-294	46	-436
10.20	140	540	-297	44	-440
10.25	131	543	-299	41	-443
10.30	122	547	-301	38	-447
10.35	113	551	-303	35	-451
10.40	105	555	-305	33	-455
10.45	96	558	-307	30	-458
10.50	87	562	-309	27	-462
10.55	78	566	-311	24	-466
10.60	70	570	-313	22	-470
10.65	61	573	-315	19	-473
10.70	52	577	-317	16	-477
10.75	43	581	-319	13	-481
10.80	35	585	-321	11	-485
10.85	26	588	-323	8	-488
10.90	17	592	-325	5	-492
10.95	8	596	-327	2	-496
11.00	0	600	-330	0	-500

8.6 Emergency Measures for a Fault in the Potential Sensor

If transfer separation fails because of a fault in the potential sensor, try using the following service mode items to get around the problem; keep in mind, however, that this is no more than a temporary measure used until the replacement of the potential sensor:

1. COPIER>OPTION>TEMPO>F-POT-SW
   If the potential sensor has gone out of order and transfer separation faults occur as a result, enter '1'.
2. COPIER>OPTION>TEMPO>F-POT-D
   The above service mode item must be set to '1':
   0: if the user mainly uses originals with a low image ratio (text-oriented; default)
   1: if the user mainly uses originals with a high image ratio (photo-oriented)
   2: if retransfer (white spots around 50 mm along the leading edge)

9. Checking the Environment Sensor

9.1 Procedure

Check the environment sensor using the environment sensor tool to see that it operates normally.

1) Make the following selections in service mode, and obtain the following data:
   COPIER>DISPLAY>ANALOG.
   Data A
   TEMP: machine inside temperature (°C) data A1
   HUM: machine inside humidity (%) data A2
2) Press the Reset key twice, and turn off the main power switch.
3) Remove the environment sensor, and attach the environment sensor tool (FY9-3014).
4) Turn on the main power switch, and level the machine alone for 5 min.
5) Make the following selections in service mode, and obtain the following data:
   COPIER>DISPLAY>ANALOG.
   Data B
   TEMP: machine inside temperature (°C) data B1
   HUM: machine inside humidity (%) data B2
6) Compare data A and data B; if the difference is not as indicated, replace the environment sensor.
   - difference between data A1 and data B1: 0±5
   - difference between data A2 and data B2: 0±20
7) Press the Reset key twice, and turn off the main power switch.
8) Detach the environment sensor tool, and attach the environment sensor.



The environment sensor tool (FY9-3014) is adjusted at the factory to high precision. Be sure to store it in an air-tight container with a drying agent.

9.2 Emergency Measure for a Fault in the Environment Sensor

If the environment sensor has gone out of order, the machine may be used by entering humidity data in the following service mode item; keep in mind, however that this is no more than a temporary measure used until replacement of the environment sensor:

1. COPIER>OPTION>TEMPO>F-HUM-SW
   Enter '1' if the environment senor has gone out of order.
2. COPIER>OPTION>TEMPO>F-HUM-D
   The above service mode item must be set to '1'.
   Enter the humidity of the site of installation (between 30% and 99%; default, 35%)

10. Checking the Photointerrupters

The machine's photointerrupters may be checked by means of a meter or service mode.

10.1 Using a Meter

1) Set the meter range to 300 VDC.
2) Connect the - probe of the meter to the GND terminal of the PCB to check.
3) Connect the + probe of the meter to the terminals indicated.
4) Make checks as instructed.

10.2 Using Service Mode

1) Enter service mode, and select I/O.
2) Bring up the I/O address to check, and make checks as indicated.



Turning on and off the sensor can turn on the machine's motors. Take full care.

10.3 Check List

Guide to Connector No.
D: DC controller PCB
R: reader controller PCB

Reader Unit (service mode: COPIER>I/O>R-CON)

Sensor	Connector No. I/O address	Checks			I/O display	Voltage display
PS39	R>J5012-2	Move the No. 1 mirror base	Light-blocking plate	Present	1	5V
Scanner HP sensor	IO-P6-4	by hand.		Absent	0	0V
PS40	R>J5012-5	Move the sensor lever by hand.	Copyboard (ADF)	Closed	1	5V
Copyboard cover sensor	IO-P6-7			Open	0	0V
PS43	R>J5006-2	Place an original on the copyboard.	Paper	Present	0	0V
Original sensor	IO-P4-6			Absent	1	5V

T02-1003-01

Printer Unit (service mode: COPIER>I/O>DC-CON)

Sensor	Connector No. / I/O address	Checks			I/O display	Voltage display
PS2	D>J113-A14	Open and close the right lower cover.	Cover	Open	-	0V
Right lower cover open/closed sensor	—			Closed	-	5V
PS3	D>J103-B14	Open and close the manual feed tray.	Tray	Open	0	0V
Manual feed tray open/closed sensor	IO-P03-13			Closed	1	5V
PS4	D>J106-B19	Put paper over the point of detection.	Paper	Present	0	0V
Claw jam sensor	IO-P01-14			Absent	1	5V
PS5	D>J112-B2	Open and close the right deck.	Right deck	Open	0	0V
Right deck open/closed sensor	IO-P03-11			Closed	1	5V
PS6	D>J112-A2	Put paper in the right deck.	Paper	Present	1	5V
Right deck lifter sensor	IO-P03-1			Absent	0	0V
PS7	D>J112-A5	Put paper in the right deck.	Paper	Present	1	5V
Right deck paper sensor	IO-P01-7			Absent	0	0V
PS8	D>J112-B8	Put paper in the right deck.	Paper	Present	1	5V
Right deck limit sensor	IO-P02-4			Absent	0	0V
PS9	D>J115-A14	Open and close the left deck.	Left deck	Open	0	0V
Left deck open/closes sensor	IO-P03-12			Closed	1	5V
PS10	D>J115-A5	Put paper in the left deck.	Paper	Present	1	5V
Left deck lifter sensor	IO-P03-3			Absent	0	0V
PS11	D>J115-A8	Put paper in the left deck.	Paper	Present	1	5V
Left deck paper sensor	IO-P01-9			Absent	0	0V
PS12	D>J115-A2	Put paper in the left deck.	Paper	Present	1	5V
Left deck limit sensor	IO-P03-4			Absent	0	0V
PS13	D>J110-A5	Put paper in the cassette 3.	Paper	Present	1	5V
Cassette 3 paper sensor	IO-P01-3			Absent	0	0V
PS14	D>J110-B5	Put paper in the cassette 4.	Paper	Present	1	5V
Cassette 4 paper sensor	IO-P01-5			Absent	0	0V
PS15	D>J110-A11	Open and close the cassette 3.	Cassette	Open	0	0V
Cassette 3 open/closed sensor	IO-P04-3			Closed	1	5V
PS16	D>J110-B11	Open and close the cassette 4.	Cassette	Open	0	0V
Cassette 4 open/closed sensor	IO-P04-4			Closed	1	5V
PS17	D>J110-A2	Put paper in the cassette 3.	Paper	Present	1	5V
Cassette 3 lifter sensor	IO-P03-5			Absent	0	0V
PS18	D>J110-B2	Put paper in the cassette 4.	Paper	Present	0	0V
Cassette 4 lifter sensor	IO-P03-6			Absent	1	5V
PS19	D>J112-A8	Put paper over the point of	Paper	Present	1	5V
Right deck re-tray sensor	IO-P01-2	detection.		Absent	0	0V

T02-1003-02

Sensor	Connector No. I/O address	Checks			I/O display	Voltage display
PS20 Left deck re-try sensor	D>J115-A11 IO-P02-2	Put paper over the point of detection.	Paper	Present Absent	1 0	5V 0V
PS21 Cassette 3 re-try sensor	D>J110-A8 IO-P02-0	Put paper over the point of detection.	Paper	Present Absent	1 0	5V 0V
PS22 Cassette 4 re-try sensor	D>J110-B8 IO-P02-1	Put paper over the point of detection.	Paper	Present Absent	1 0	5V 0V
PS23 Manual paper sensor	D>J108-B9 IO-P01-0	Put paper on the manual feed tray.	Paper	Present Absent	0 1	5V 0V
PS24 Vertical path 1 paper sensor	D>J113-A5 IO-P01-8	Open the right cover, and move the sensor lever.	Light-blocking plate	Present Absent	1 0	5V 0V
PS25 Vertical path 2 paper sensor	D>J113-A2 IO-P01-10	Open the right cover, and move the sensor lever.	Light-blocking plate	Present Absent	1 0	5V 0V
PS26 Vertical path 3 paper sensor	D>J110-A14 IO-P01-4	Open the right cover, and move the sensor lever.	Light-blocking plate	Present Absent	1 0	5V 0V
PS27 Vertical path 4 paper sensor	D>J110-B14 IO-P01-6	Open the right cover, and move the sensor lever.	Light-blocking plate	Present Absent	1 0	5V 0V
PS28 Laser write start sensor	D>J113-B2 IO-P02-8	Put paper over the point of detection.	Paper	Present Absent	1 0	5V 0V
PS29 Registration paper sensor	D>J106-A9 IO-P01-1	Put paper over the point of detection.	Paper	Present Absent	1 0	5V 0V
PS30 Duplex pre-registration sensor	D>J107-B13 IO-P02-5	Put paper over the point of detection.	Paper	Present Absent	1 0	5V 0V
PS31 Duplex horizontal registration sensor	D>J107-B12 IO-P02-6	Put paper over the point of detection.	Paper	Present Absent	0 1	5V 0V
PS32 Right deck feed paper sensor	D>J112-B5 IO-P03-2	Put paper over the point of detection.	Paper	Present Absent	1 0	5V 0V
PS33 Left deck feed paper sensor	D>J107-A16 IO-P01-15	Put paper over the point of detection.	Paper	Present Absent	1 0	5V 0V
PS34 Duplex sensor	D>J107-B14 IO-P02-11	Put paper over the point of detection.	Paper	Present Absent	1 0	5V 0V
PS35 Inside delivery sensor	D>J106-B1 IO-P01-12	Put paper over the point of detection.	Paper	Present Absent	0 1	5V 0V
PS36 Outside delivery sensor	D>J106-B20 IO-P01-11	Put paper over the point of detection.	Paper	Present Absent	1 0	5V 0V
PS37 Reversal sensor 1	D>J107-B15 IO-P02-3	Put paper over the point of detection.	Paper	Present Absent	1 0	5V 0V

T02-1003-03

Sensor	Connector No. I/O address	Checks			I/O display	Voltage display
PS38	D>J107-B16	Put paper over the point of	Paper	Present	1	5V
Reversal sensor 2	IO-P02-7	detection.		Absent	0	0V
PS45	D>J106-B5	Put paper over the	Web	Present	0	0V
Fixing web length sensor	IO-P02-12	sensor.		Short	1	5V
PS46	D>J106-B2	Put paper over the point of	Paper	Present	1	5V
Delivery assembly jam sensor	IO-P06-2	detection.		Absent	0	0V
PS47	D>J115-B2	Remove the deck from the machine,	Light-blocking	Present	1	5V
Right deck level (upper) sensor	IO-P05-8	and move the sensor lever.	plate	Absent	0	0V
PS48	D>J115-B5	Remove the deck from the machine,	Light-blocking	Present	1	5V
Right deck level (lower) sensor	IO-P05-12	and move the sensor lever.	plate	Absent	0	0V
PS49	D>J115-B8	Remove the deck from the machine,	Light-blocking	Present	1	5V
Left deck level (upper) sensor	IO-P05-9	and move the sensor lever.	plate	Absent	0	0V
PS50	D>J115-B11	Remove the deck from the machine,	Light-blocking	Present	0	0V
Left deck level (lower) sensor	IO-P05-13	and move the sensor lever.	plate	Absent	1	5V

T02-1003-04

CHAPTER 3 ARRANGEMENT AND FUNCTIONS OF ELECTRICAL PARTS

1.1 Clutches

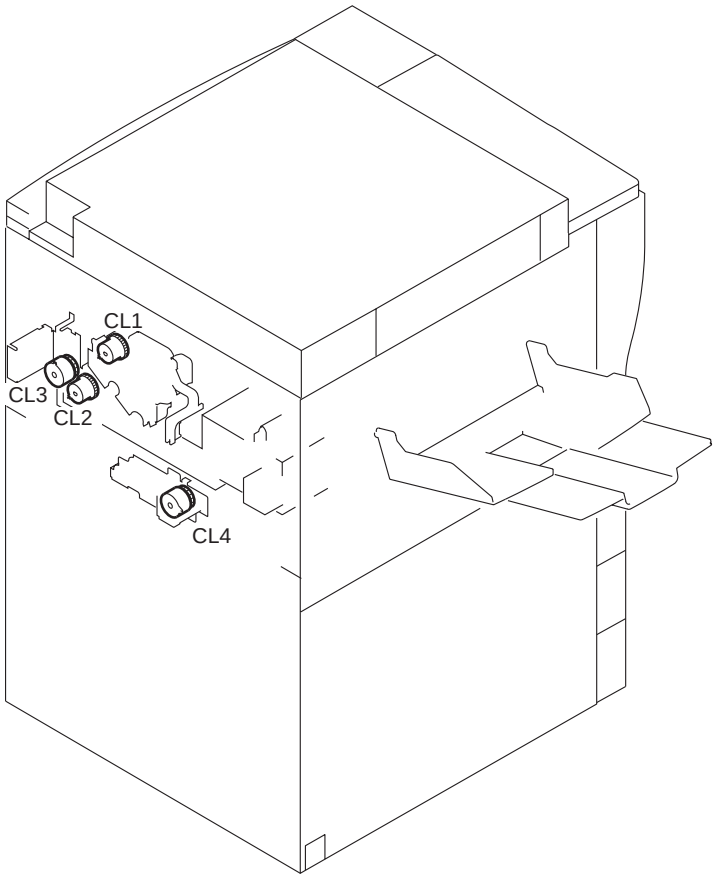

F03-101-01

1.1.1 Reader Unit

The reader unit does not have a clutch.

1.1.2 Printer Unit

Symbol	Name	Notation	Function
CL	Clutch	CL1	Drives the developing cylinder.
		CL2	Drives the registration roller.
		CL3	Drives the manual feed pickup roller.
		CL4	Drives the left deck pull-off roller.

1.2 Solenoids and Switches

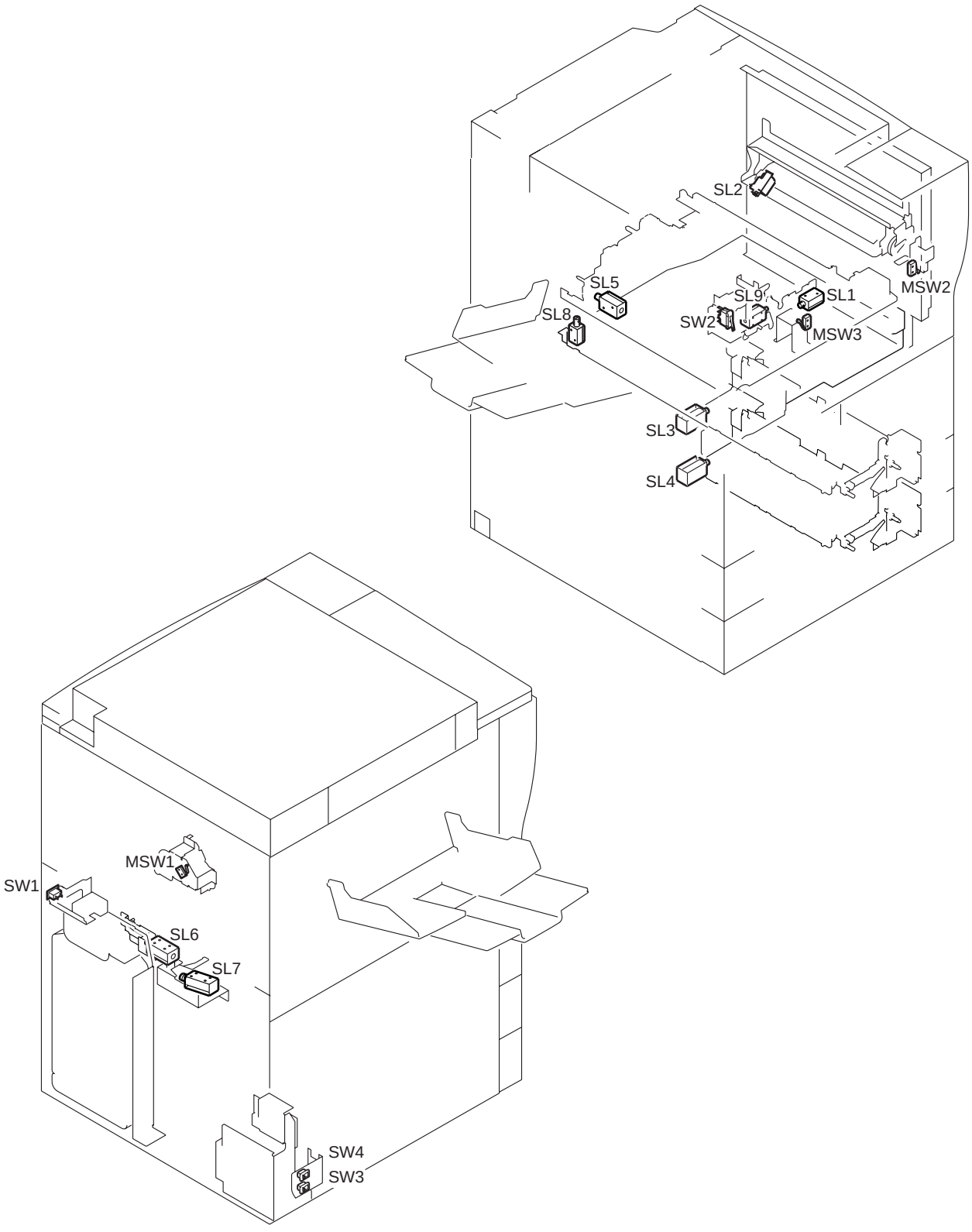

F03-102-01

1.2.1 Reader Unit

The reader unit does not have a solenoid or a switch.

1.2.2 Printer Unit

Symbol	Name	Notation	Function
	Solenoid	SL1	Drives the fixing assembly inlet guide.
		SL2	Drives the manual feed pickup mechanism.
		SL3	Drives the cassette 3 pickup mechanism.
		SL4	Drives the cassette 4 pickup mechanism.
		SL5	Drives the delivery flapper.
		SL6	Drives the right deck pickup mechanism.
		SL7	Drives the left deck pickup mechanism.
		SL8	Drives the reversing flapper.
		SL9	Drives the fixing web.
	Switch	SW1	Main power switch
		SW2	Front cover switch
		SW3	Environment switch
		SW4	Cassette heater switch
		MSW1	Detects the state (locked) of the waste toner screw.
		MSW2	Detects the state (open/closed) of the manual feed tray cover detection
		MSW3	Detects the attachment/detachment of the fixing/feeding unit.

1.3 Motors

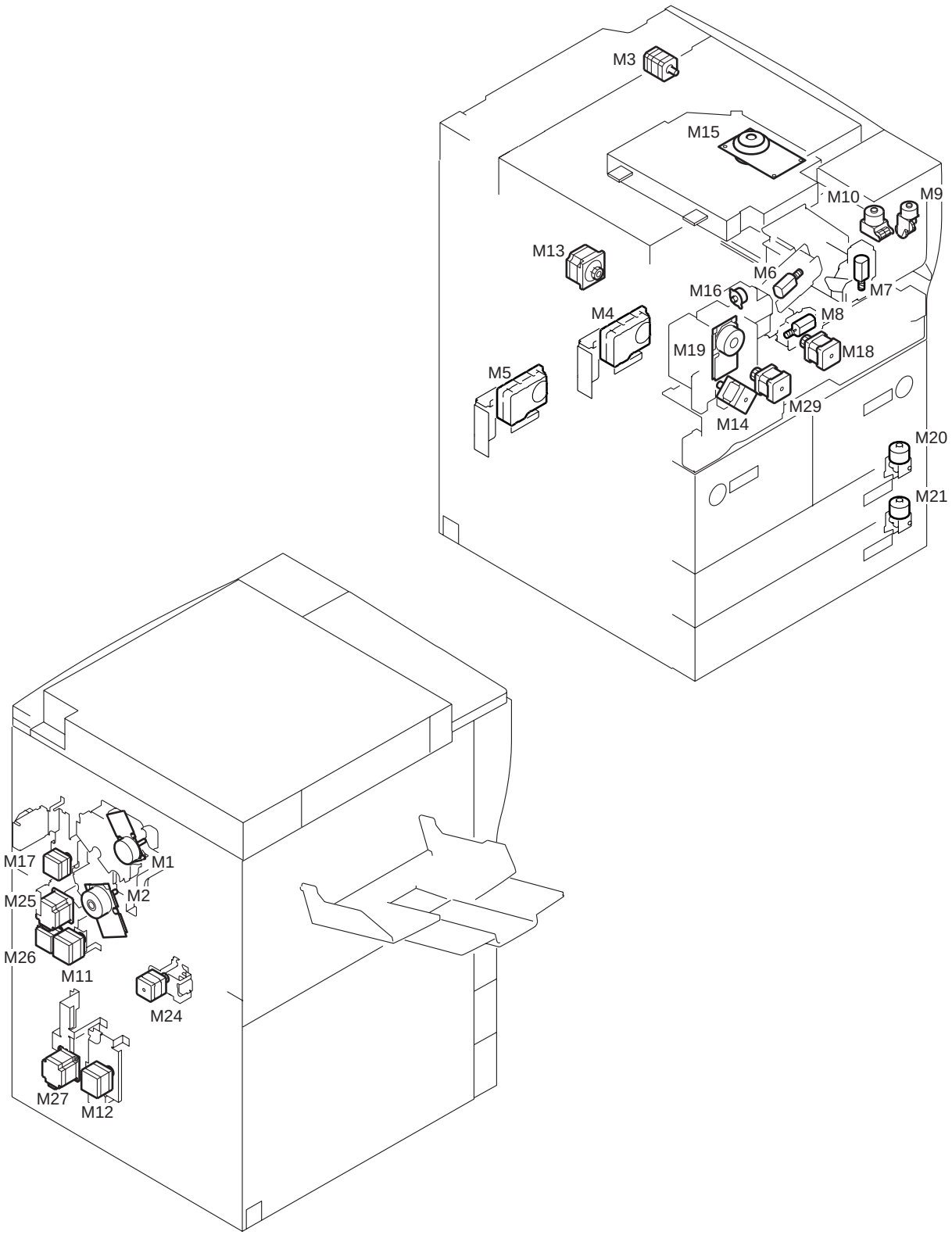

F03-103-01

1.3.1 Reader Unit

Symbol	Name	Notation	Function
	Motor	M3	Scanner motor

1.3.2 Printer Unit

Symbol	Name	Notation	Function
	Motor	M1	Drum motor
		M2	Main motor
		M4	Left deck lifter motor
		M5	Right deck lifter motor
		M6	Primary charging wire cleaning motor
		M7	Pre-transfer charging wire cleaning motor
		M8	Transfer/separation charging wire cleaning motor
		M9	Hopper stirring motor
		M10	Hopper supply motor
		M11	Right deck pickup motor
		M12	Cassette 3/4 pickup motor
		M13	Delivery motor
		M14	Reversal motor
		M15	Laser scanner motor
		M16	Duplex horizontal registration motor
		M17	Pre-registration motor
		M18	Duplex feeding right motor
		M19	Fixing motor
		M20	Cassette 3 lifter motor
		M21	Cassette 4 lifter motor
		M24	Left deck pickup motor
		M25	Vertical path duplex feeding motor
		M26	Vertical path upper motor
		M27	Vertical path lower motor
		M29	Duplex feeding left motor

1.4 Fans

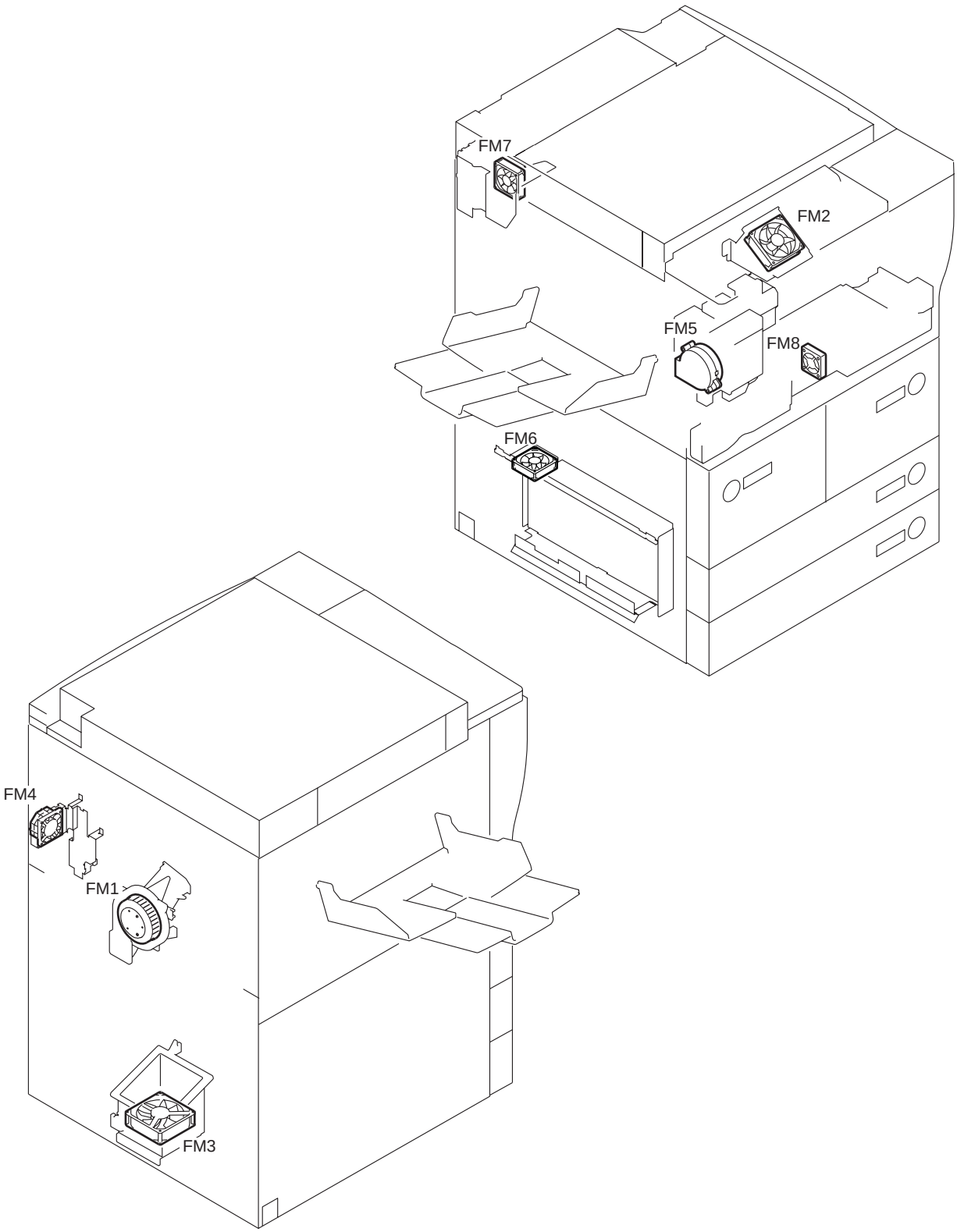

F03-104-01

1.4.1 Reader Unit

The reader unit does not have a fan.

1.4.2 Printer unit

Symbol	Name	Notation	Function
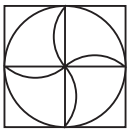	Fan	FM1	Feeding fan
		FM2	Primary charging cooling fan
		FM3	Heat discharging fan
		FM4	Controller cooling fan
		FM5	De-curling fan
		FM6	DC power supply fan
		FM7	HDD fan
		FM8	Duplex feeding fan

1.5 Sensors

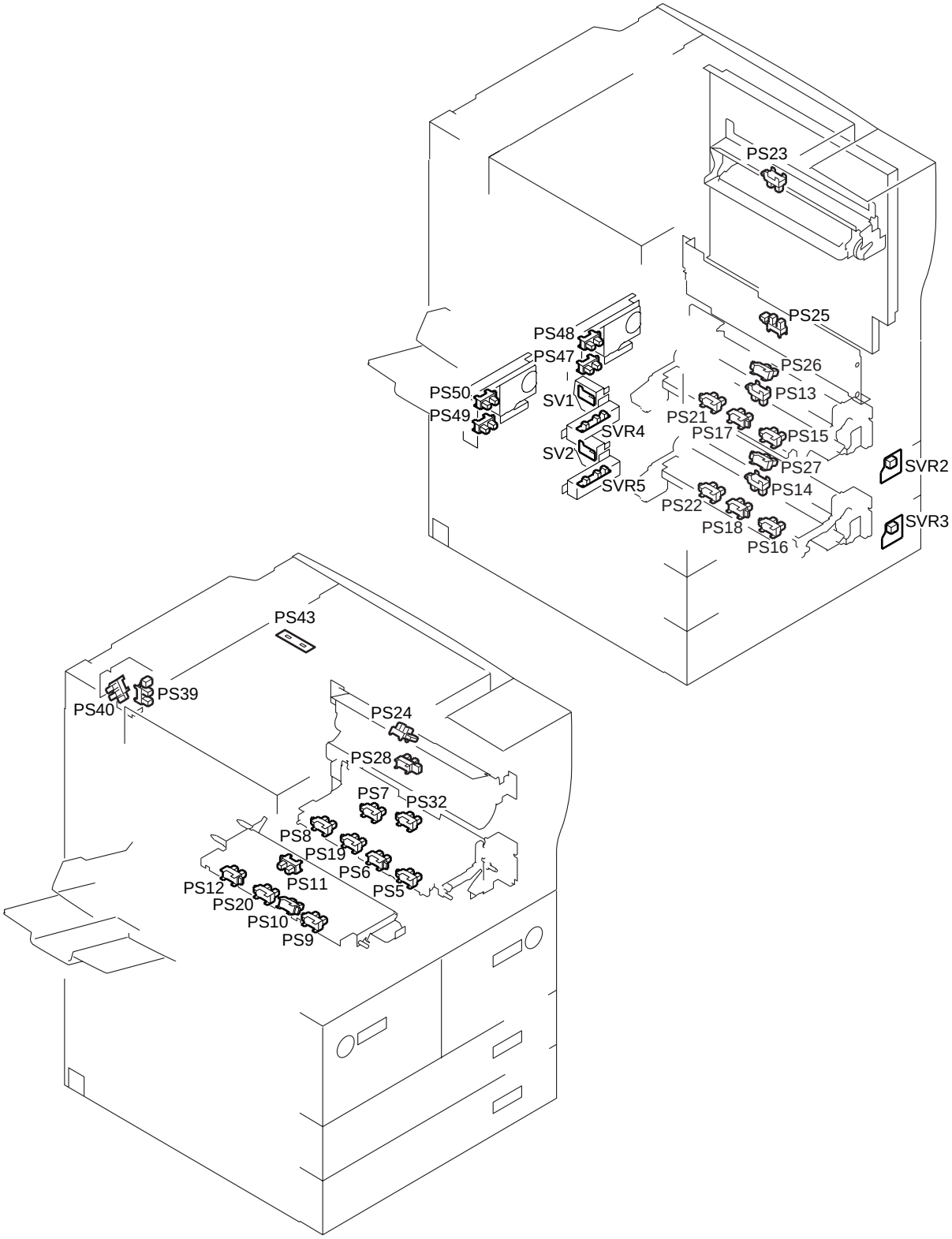

F03-105-01

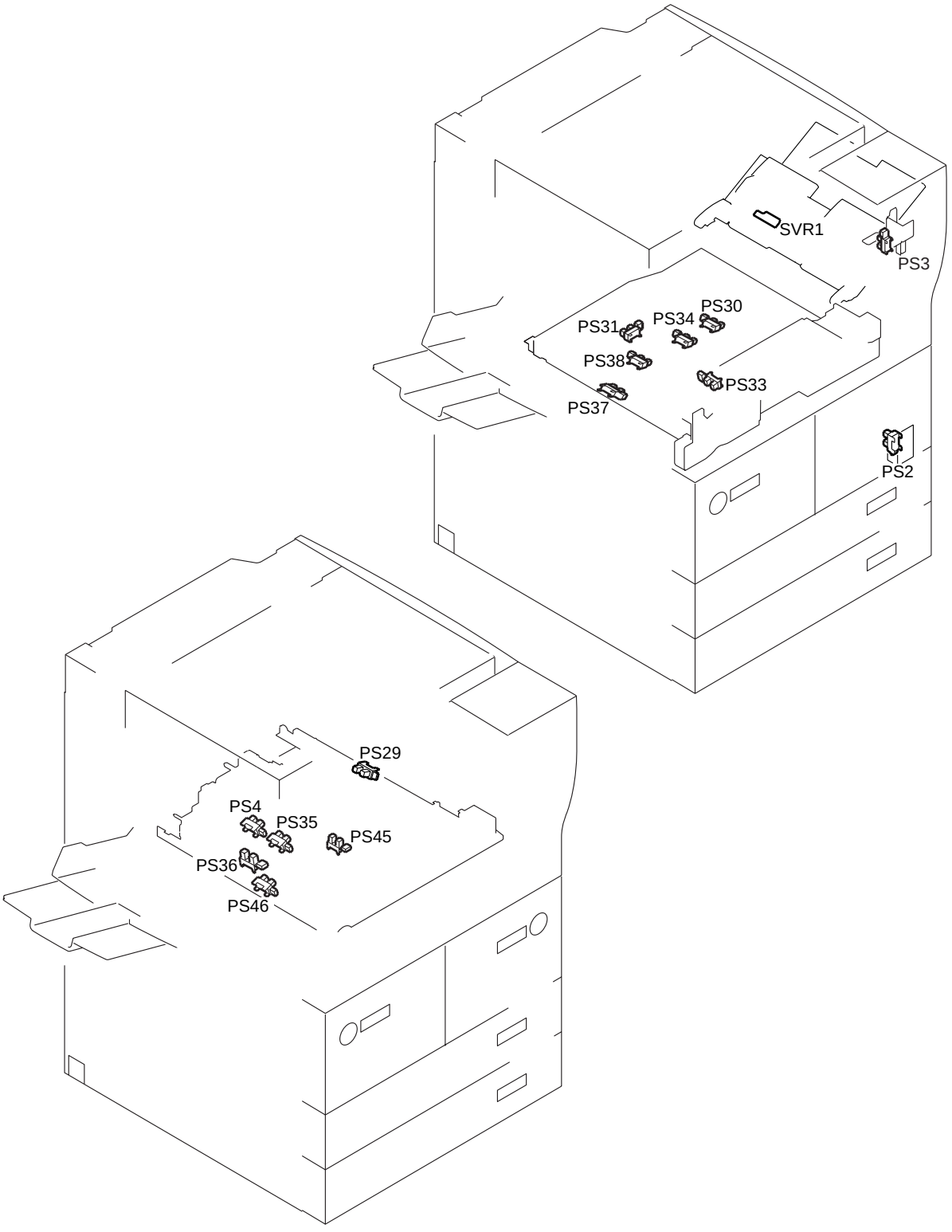
SVR1
PS3
PS30
PS34
PS31
PS38
PS33
PS37
PS2
PS29
PS4
PS35
PS45
PS36
PS46

F03-105-02

1.5.1 Reader Unit

Symbol	Name	Notation	Function
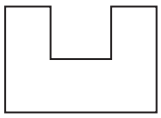	Photointerrupter	PS39	Scanner HP sensor
		PS40	Copyboard cover sensor
SIZE	Photosensor	PS43	Original sensor

1.5.2 Printer Unit

Symbol	Name	Notation	Function
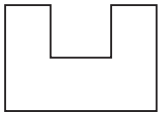	Photointerrupter	PS2	Right lower cover open/closed sensor
		PS3	Manual feed tray open/closed sensor
		PS4	Claw jam sensor
		PS5	Right deck open/closed sensor
		PS6	Right deck lifter sensor
		PS7	Right deck paper sensor
		PS8	Right deck limit sensor
		PS9	Left deck open/closed sensor
		PS10	Left deck lifter sensor
		PS11	Left deck paper sensor
		PS12	Left deck limit sensor
		PS13	Cassette 3 paper sensor
		PS14	Cassette 4 paper sensor
		PS15	Cassette 3 open/closed sensor
		PS16	Cassette 4 open/closed sensor
		PS17	Cassette 3 lifter sensor
		PS18	Cassette 4 lifter sensor
		PS19	Right deck re-try sensor
		PS20	Left deck re-try sensor
		PS21	Cassette 3 re-try sensor
		PS22	Cassette 4 re-try sensor
		PS23	Manual feed paper sensor
		PS24	Vertical path 1 paper sensor
		PS25	Vertical path 2 paper sensor
		PS26	Vertical path 3 paper sensor
		PS27	Vertical path 4 paper sensor
		PS28	Laser write start sensor
		PS29	Registration paper sensor
		PS30	Duplex pre-registration sensor

Symbol	Name	Notation	Function
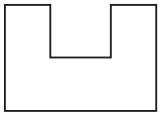	Photointerrupter	PS31	Duplex horizontal registration sensor
		PS32	Right deck feed paper sensor
		PS33	Left deck feed paper sensor
		PS34	Duplexing paper sensor
		PS35	Internal delivery sensor
		PS36	External delivery sensor
		PS37	Reversal sensor 1
		PS38	Reversal sensor 2
		PS45	Fixing web length sensor
		PS46	Delivery jam sensor
		PS47	Right deck level sensor (upper)
		PS48	Right deck level sensor (lower)
		PS49	Left deck level sensor (upper)
		PS50	Left deck level sensor (lower)
	Photointerrupter	SV1	Detects the length of paper in the cassette 4. (100-V model only)
		SV2	Detects the length of paper in the cassette 3.
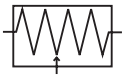	Slide resistor	SVR1	Detects the width of paper on the manual feed tray.
		SVR2	Detects the level of paper in the cassette 3.
		SVR3	Detects the level of paper in the cassette 4.
		SVR4	Detects the width of paper in the cassette 3.
		SVR5	Detects the width of paper in the cassette 4. (100-V model only)

1.6 Lamps, Heaters, and Others

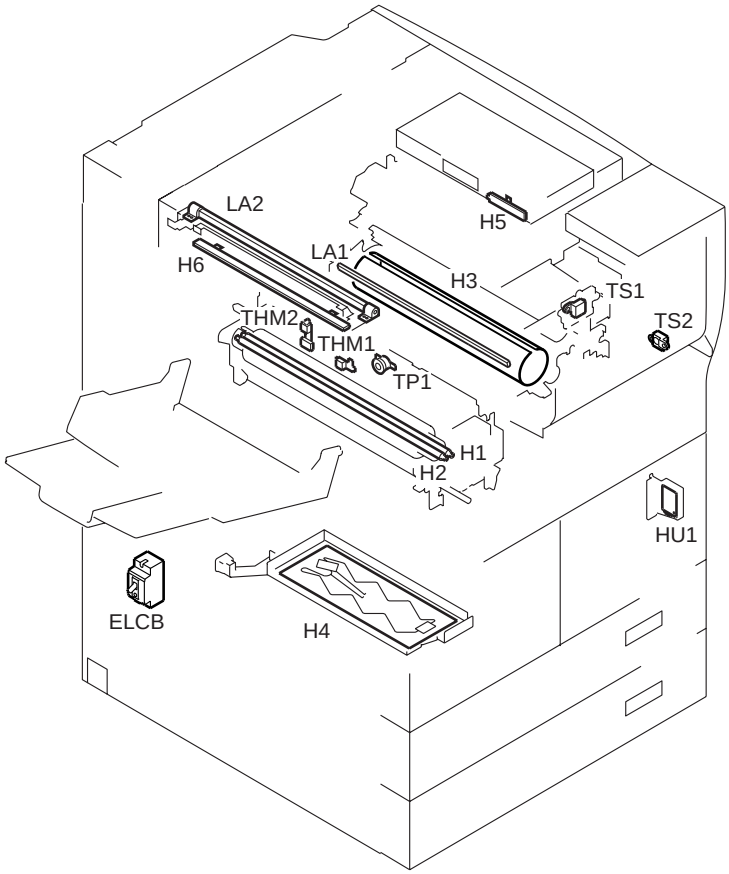

F03-106-01

1.6.1 Reader Unit

Name	Notation	Function
Lamp	LA2	Scanning lamp
Heater	H5	Lens heater (standard in 100-V model)
	H6	Mirror heater (standard in 100-V model)

1.6.2 Printer Unit

Name	Notation	Function
Lamp	LA1	Pre-exposure lamp (LED)
Heater	H1	Fixing main heater
	H2	Fixing sub heater
	H3	Drum heater
	H4	Cassette heater (standard in 100-V model)
Thermistor	TH1	Fixing heater main thermistor
	TH2	Fixing heater sub thermistor (ends)
Thermal switch	TP1	Fixing heater thermal switch
Leakage breaker	ELCB	Leakage breaker
Toner sensor	TS1	Developing assembly toner sensor
	TS2	Hopper toner sensor
Environment sensor	HUM1	Temperature/humidity sensor (machine internal temperature sensor)

1.7 PCBs

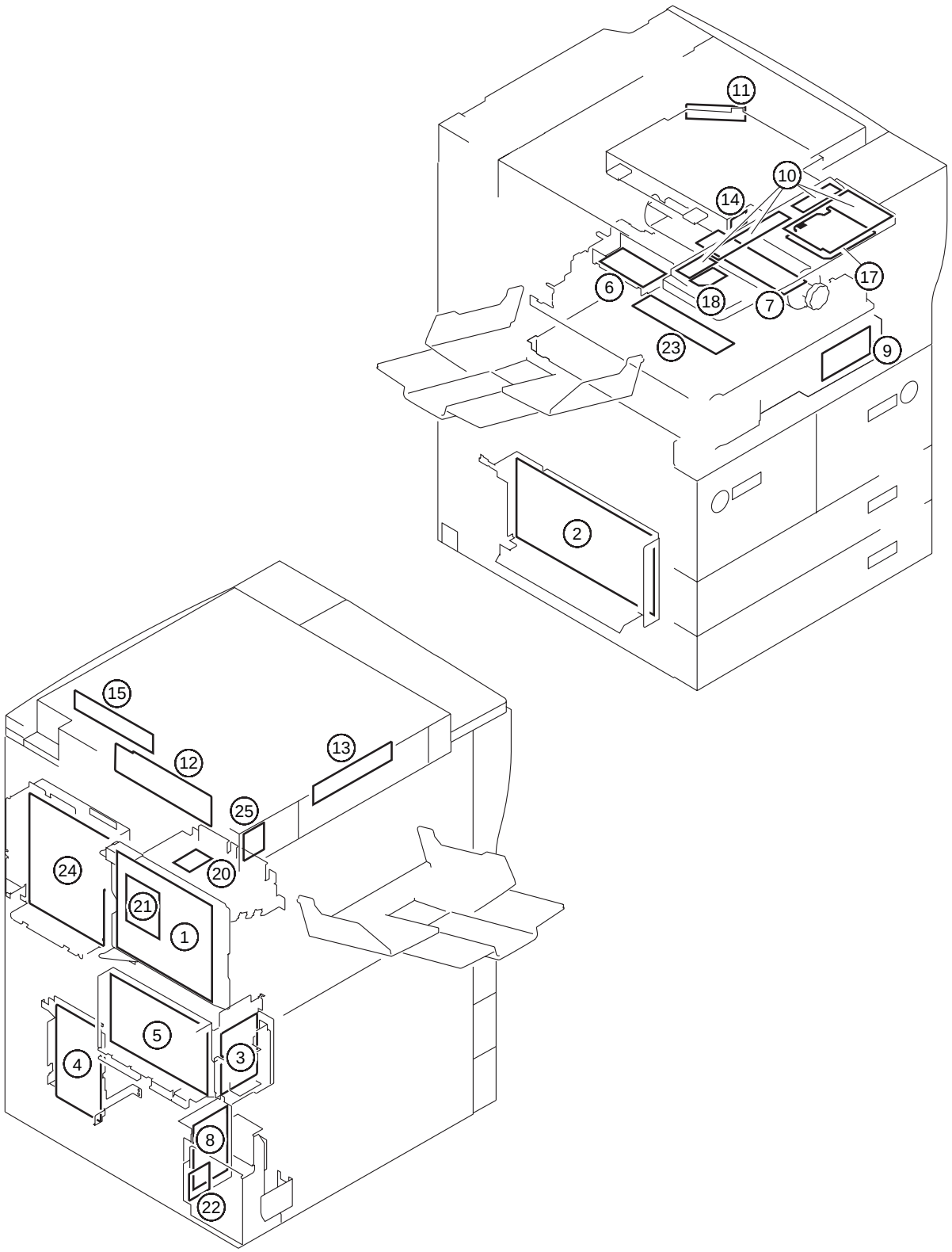

F03-107-01

1.7.1 Reader Unit

Ref.	Name	Function
12	Reader controller PCB	Controls the reader unit/ADF.
13	CCD/AP PCB	Drives the CCD/processes analog images.
15	Inverter PCB	Controls the scanning lamp.
25	Fuse PCB	Controls the mirror/lens heater. (standard in 100-V model)

1.7.2 Printer unit

Ref.	Name	Function
1	DC controller PCB	Controls the power supply of the printer unit/finisher.
2	DC power supply PCB	Supplies DC power.
3	AC driver PCB	Controls the AC circuit.
4	Motor driver PCB	Controls the motor.
5	HVT PCB	Generates high-voltage.
6	Potential control PCB	Controls the surface potential of the photosensitive drum.
7	Drum heater control PCB	Controls the drum heater.
8	Accessories power supply PCB	Supplies power to the finisher.
9	Duplex driver PCB	Controls the sensor, motor, and solenoid of the duplex unit.
10	Control panel PCB	Controls the keys and LEDs.
11	Laser driver PCB	Controls the laser drive.
14	BD PCB	Detects the laser beam.
17	Control panel CPU PCB	Controls the control panel.
18	LCD contrast adjustment PCB	Adjusts the contrast of the control panel.
20	Serial number PCB	Controls the serial number.
21	Anti-rush current PCB	Prevents rush current in the fixing/feeding assembly and the duplex unit.
22	Capacitor PCB	Removes noise.
23	Fixing/feeding relay PCB	Relays signals of sensors and motors of the fixing/feeding unit.
24	Main controller PCB	Processes digital images/controls the system.

1.8 Variable Resistors (VR), Light-Emitting Diodes (LED), and Check Pins by PCB

Of the VRs, LEDs, and switches found on the machine, those used in the field are discussed:

1. Some LEDs have leakage current and emit dim light when off; this is a normal condition and must be kept in mind:
2. VRs that may be used in the field: ⊘

   VRs that must not be used in the field: ⊘

Any VR and check pin not found in the lists is for use at the factory, requiring special tools and high accuracy. Do not touch them in the field.

1.8.1 Main Controller PCB

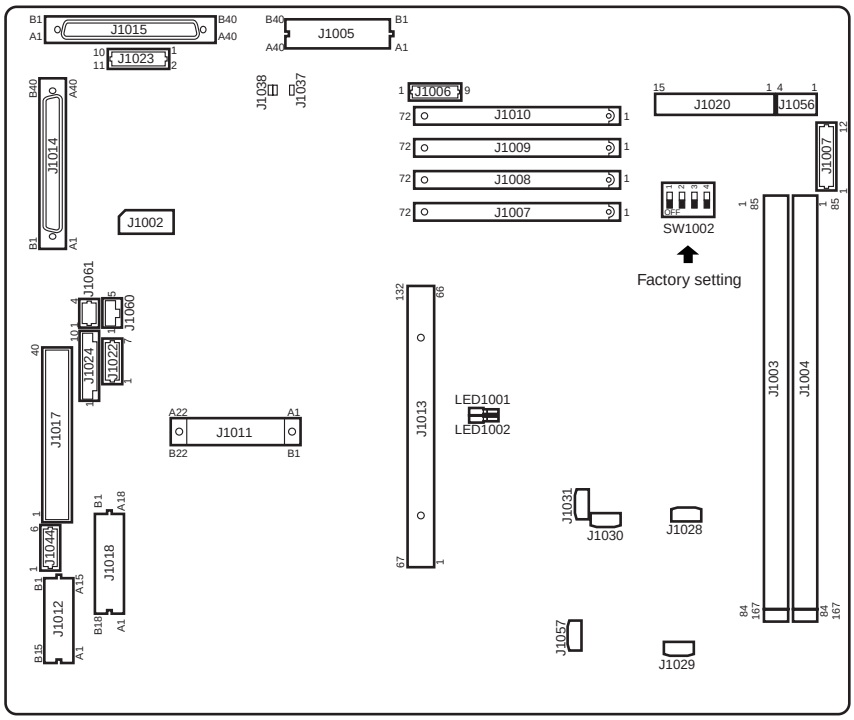

F03-108-01

The DIP switch (SW1002) is for the factory. Do not use it in the field. (It is used when making settings before shipment of the machine.)

1.8.2 DC Controller PCB

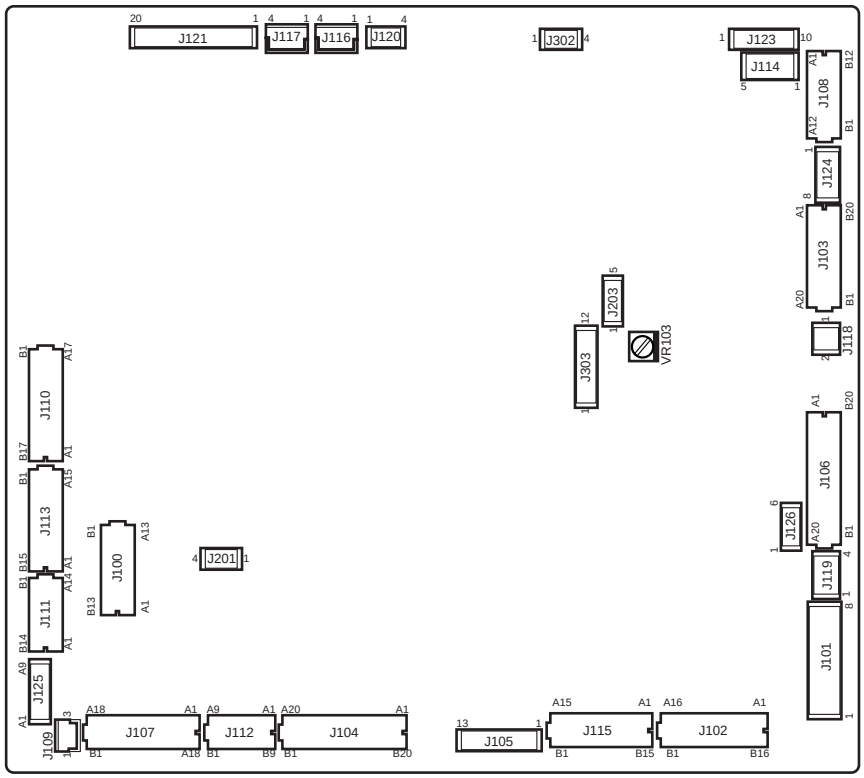

F03-108-02

The shorting connectors of J303 are set as follows; be sure to transfer the shorting connectors to the new PCB upon replacement:

J303-	100V	120V	230V
1		○	○
2		○	○
3	○		○
4	○		○
5	○	○	
6	○	○	
7			
⋮			
12			

○ :shorted by a jumper wire.

F03-108-03

1.8.3 Reader Controller PCB

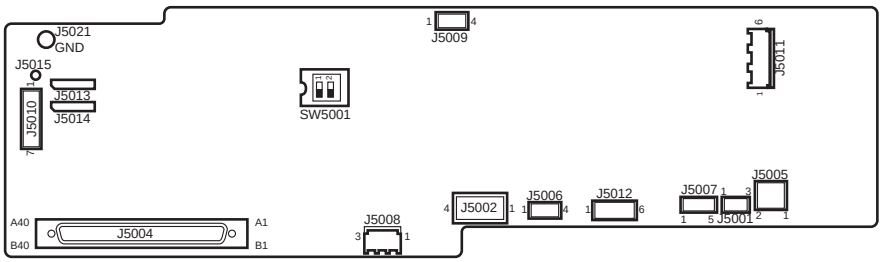

F03-108-04

	SW5001-1	SW5001-2
ON:	Inch series.	Not used.
OFF:	AB series	Not used.

1.8.4 Power Supply PCB

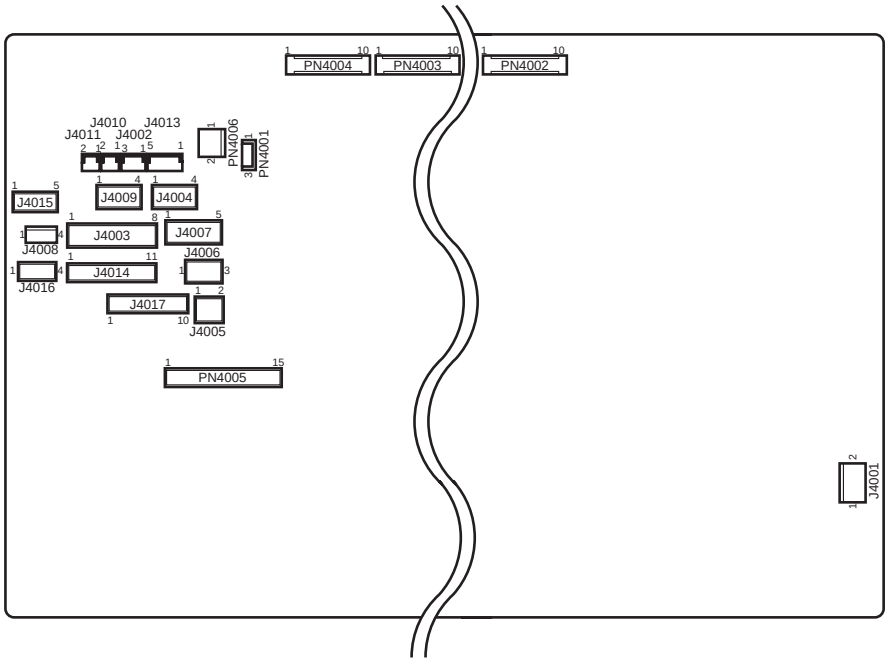

F03-108-05

1.8.5 HVT PCB

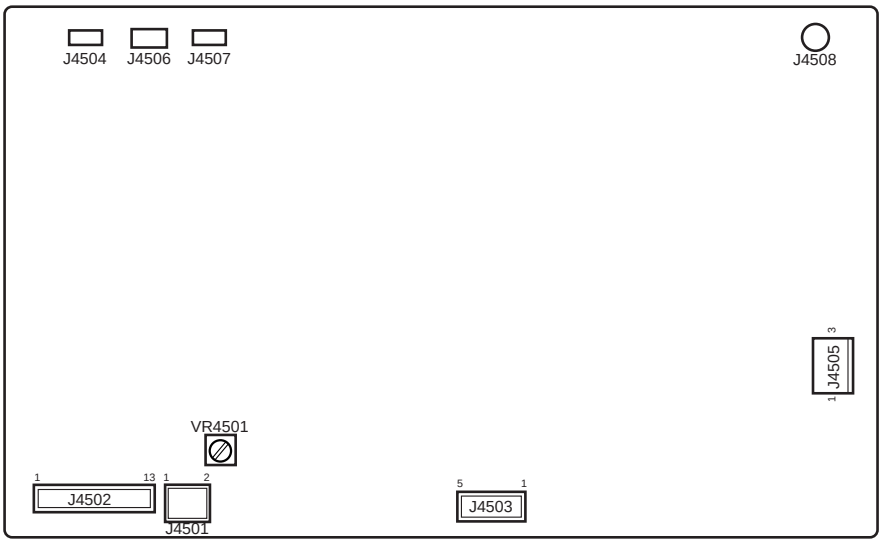

F03-108-06

1.8.6 Drum Heater Control PCB

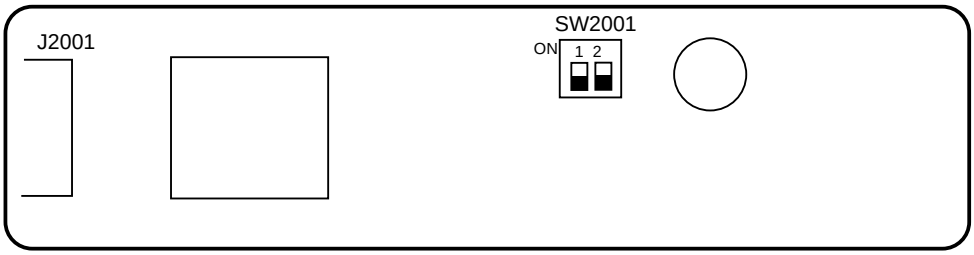

F03-108-07

	SW2001-1	SW2001-2
ON:	controlled to 47°C	Not used.
OFF:	controlled to 43°C (default)	Not used.

For details of drum heater control, see 6. “Controlling the Drum Heater” in Chapter 4.

CHAPTER 4 SERVICE MODE

1. Organization of Service Mode

1.1 Outline

The screens in service mode are grouped into three: Initial screen, Level 1/Level 2 screen, and Level 3 screen.

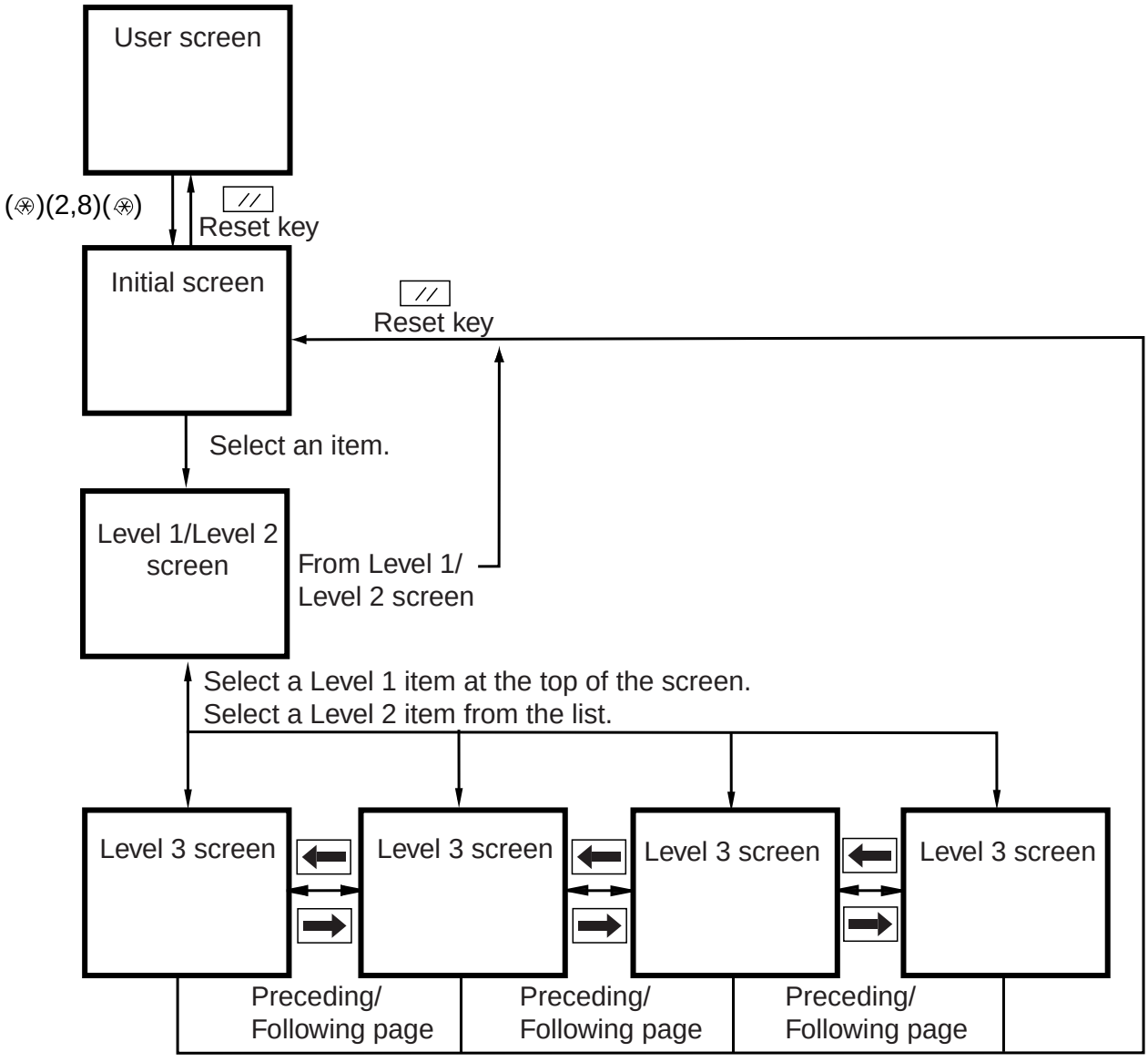

F04-101-01

The machine's service mode is divided into the following seven types:

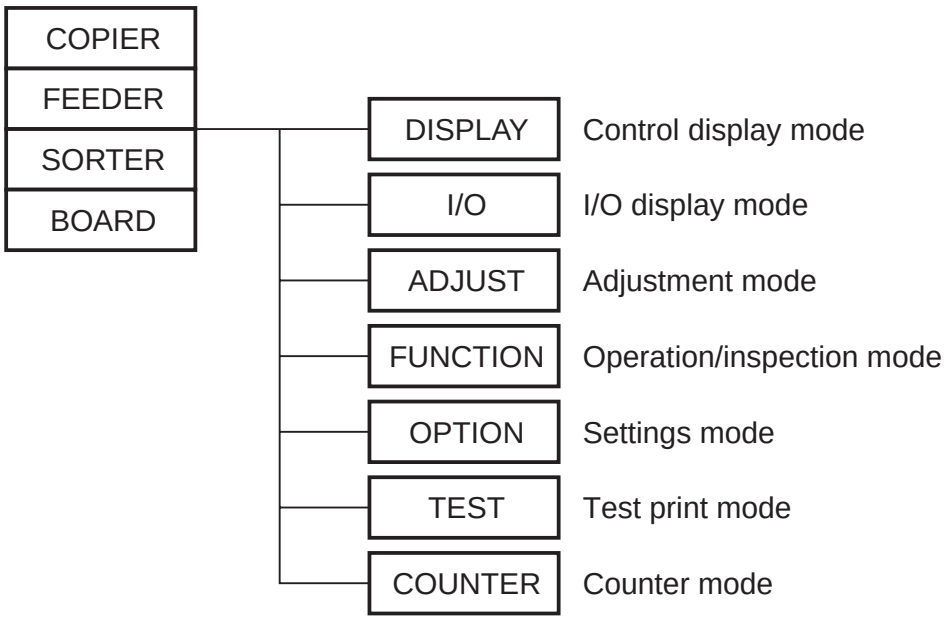

F04-101-02

1.2 Starting Service Mode and Making Selections

1) Press the user mode key (⊛) on the control panel.
2) Press the 2 and 8 keys at the same time.
3) Press the user mode key (⊛).

In response, the Initial screen will appear.

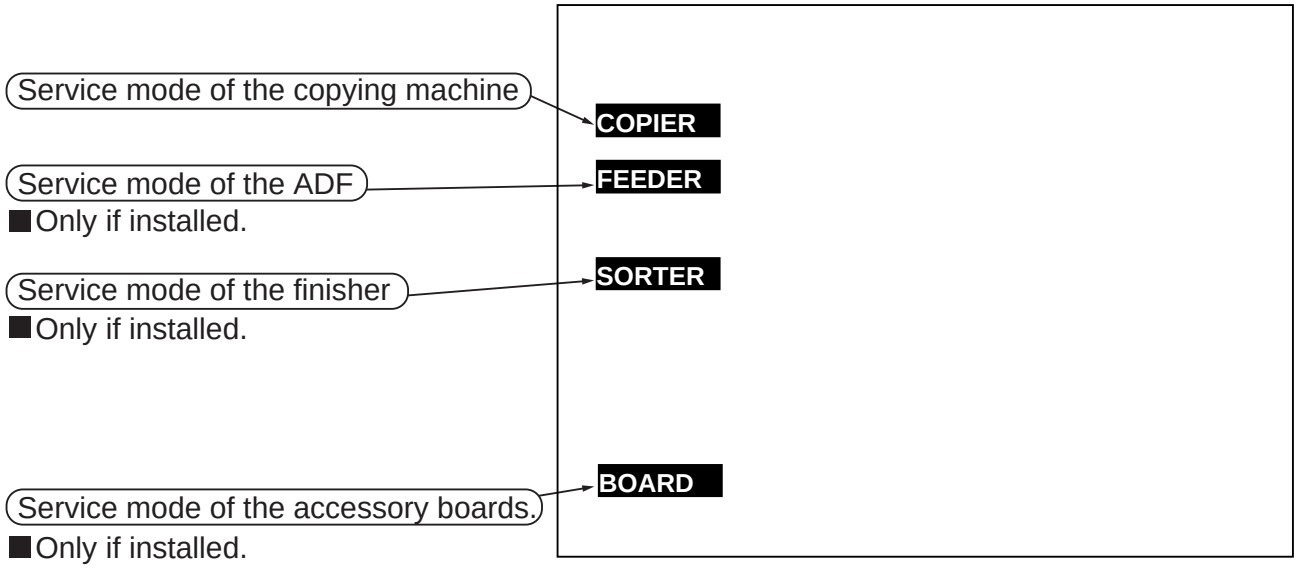

F04-102-01

1.3 Ending Service Mode

Press the Reset key once to return to the service mode Initial screen (F05-102-01).

Press the Reset key twice to end service mode and to return to the User (standard) screen.



If you used ADJUST, FUNCTION, or OPTION in service mode, be sure to turn off and then on the power switch after ending service mode.

1.4 Backing Up Service Mode

Each machine is adjusted before shipment from the factory, and adjustment settings are indicated on the service label (attached to the service book case found behind the front cover).

If you have replaced the reader controller PCB or the DC controller PCB, be sure to remove the EEPROM from the old PCB and mount it to the new PCB.

If you have initialized the RAM, the ADJUST and OPTION settings are replaced with the default settings. If you have made adjustments and changed service mode settings in the field, be sure to record the new settings on the service label. (If the label does not show an appropriate item, make use of its blank space.)

If you want, you can print out all service mode settings at once using service mode (COPIER>FUNCTION>MIS-P>P-PRINT).

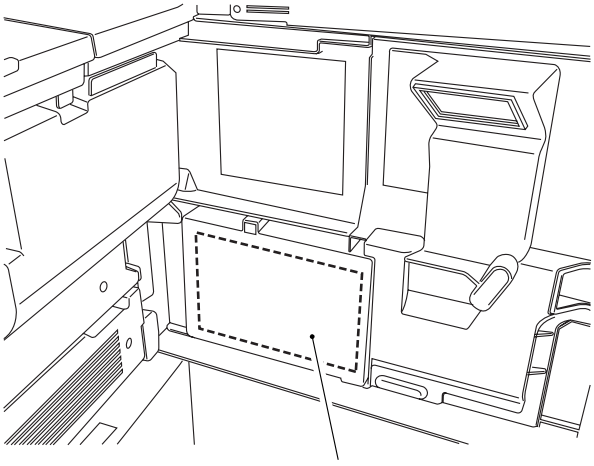

F04-104-01 Service Label

1.5 Basic Operations

1.5.1 Initial Screen

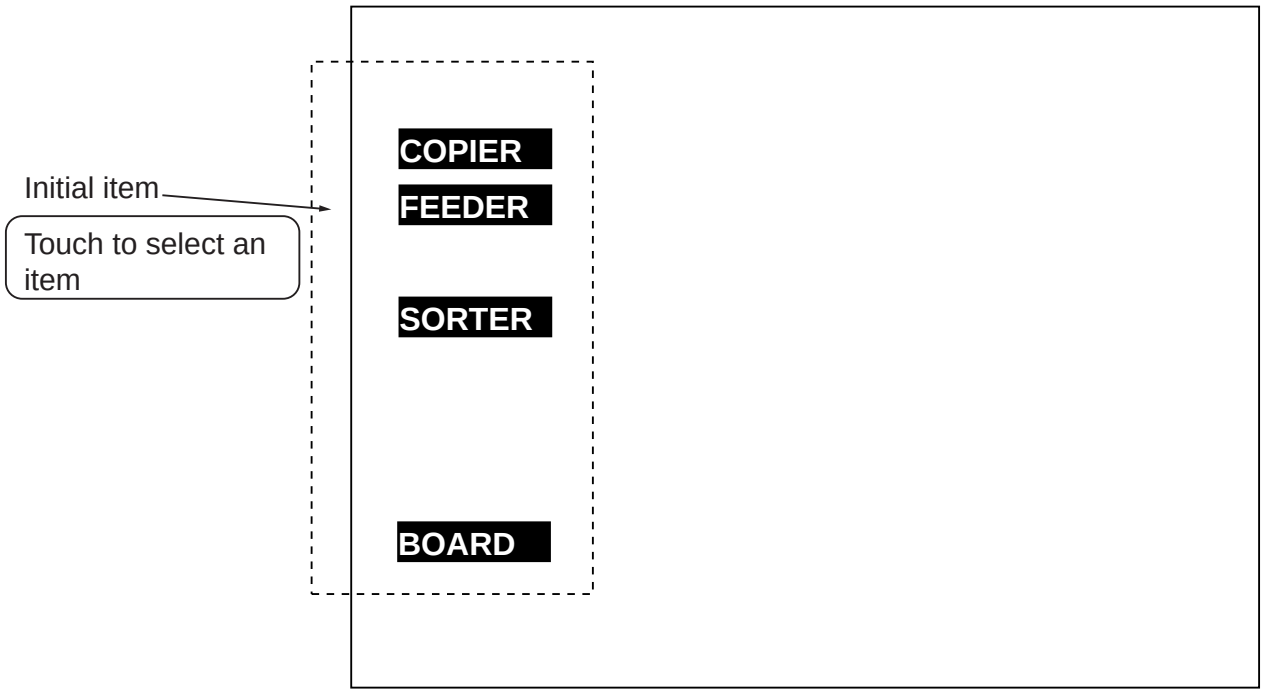

F04-105-01

1.5.2 Level 1/Level 2 Screen

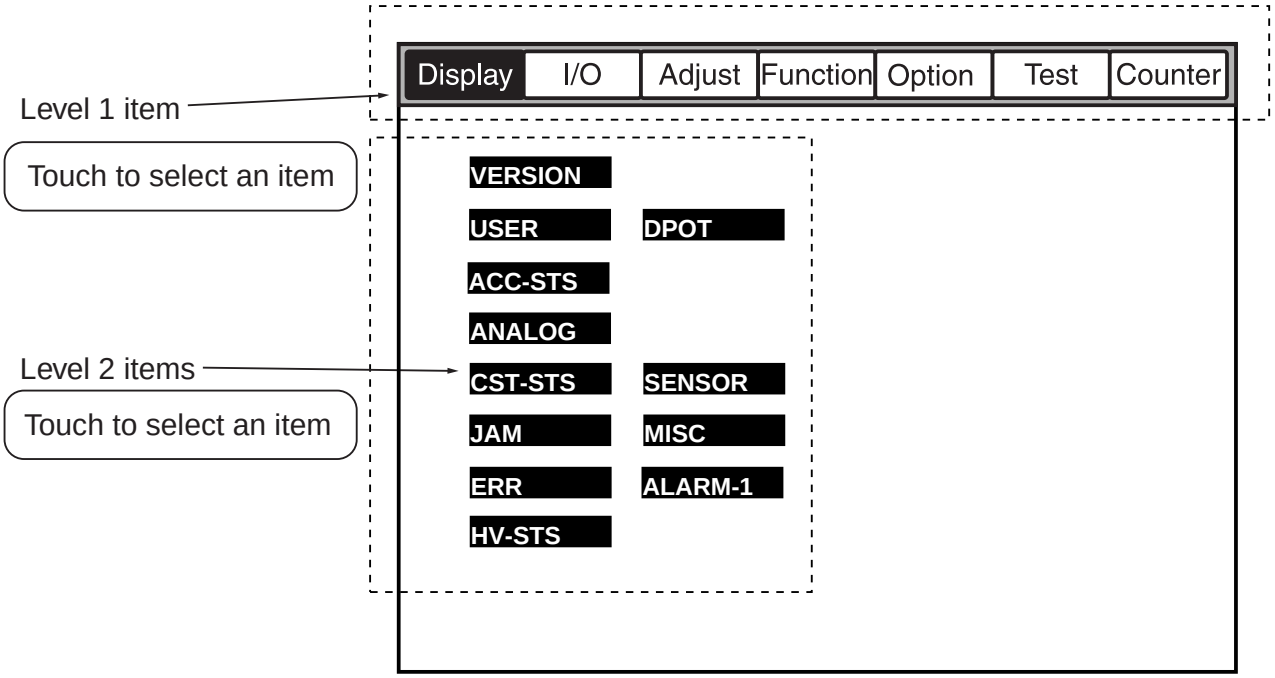

F04-105-02

1.5.3 Level 3 Screen

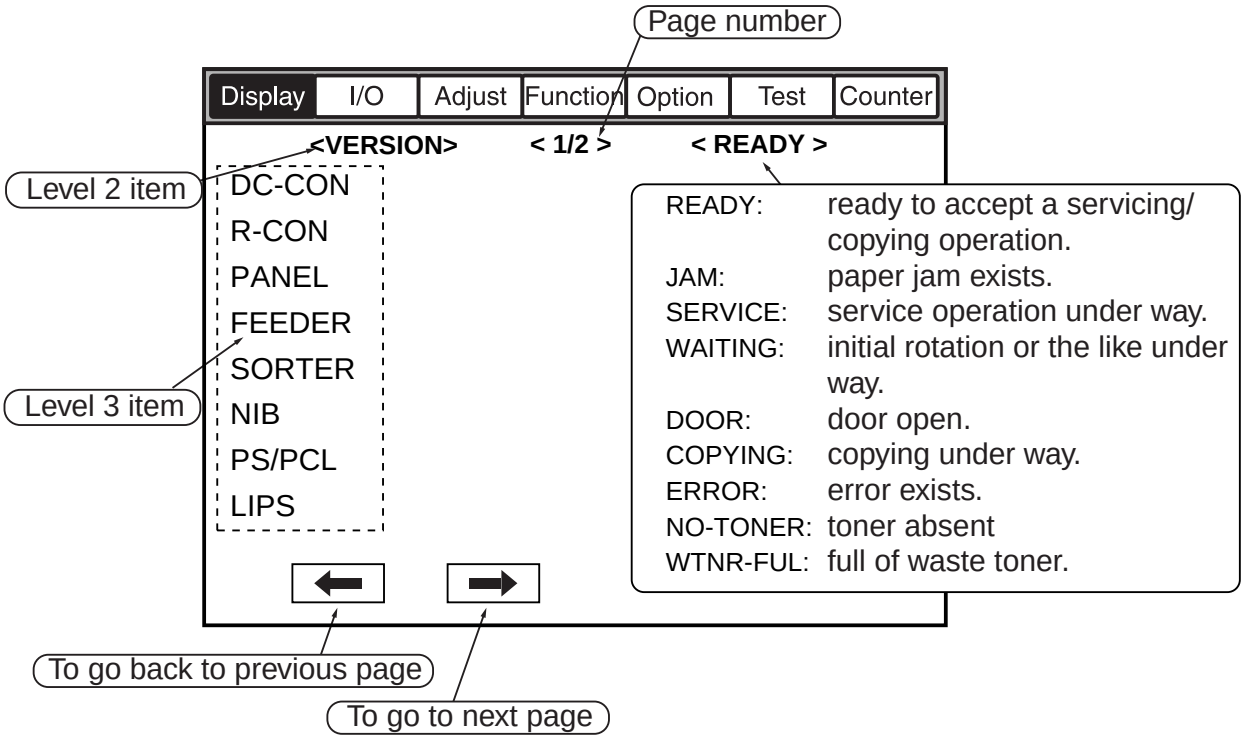

F04-105-03

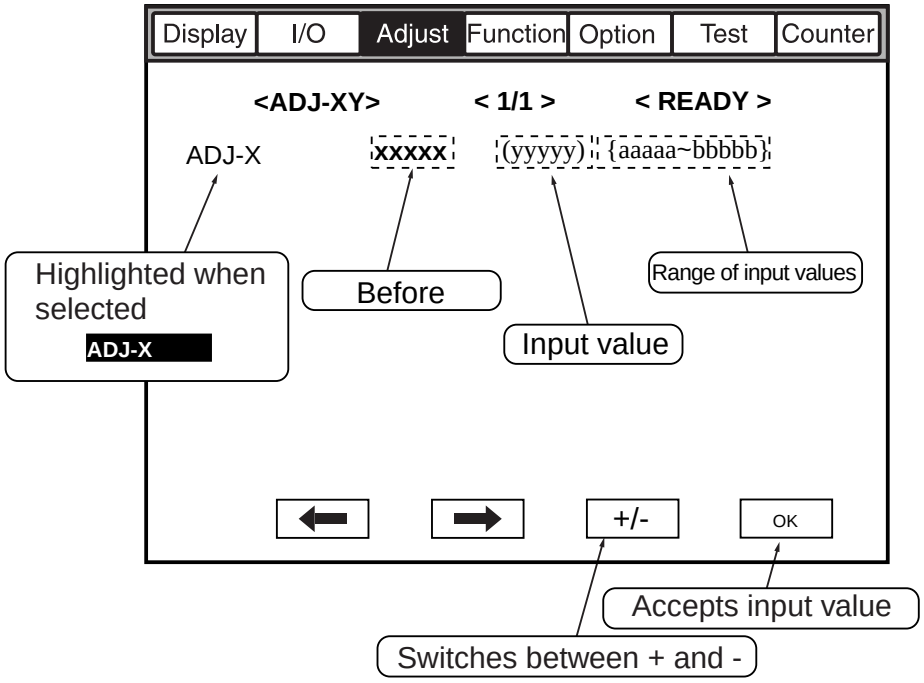

Stop key: stops the ongoing operation.

Clear key: clears a value.

Start key: makes copies without ending service mode.

F04-105-04

2. DISPLAY (control/display mode)

2.1 COPIER

The following screen appears in response to COPIER>DISPLAY; for the items, see the pages that follow:

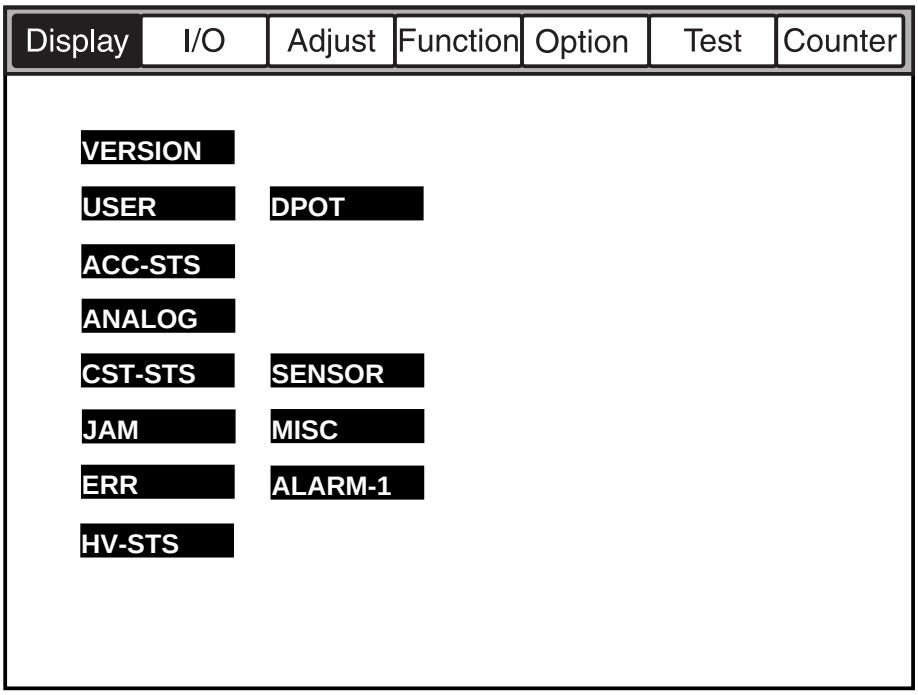

F04-201-01

<VERSION>

Indicates the PCB ROM versions of the machine and accessories.
Indication<xx, yy> xx: version number yy:R & D control number.

DC-CON	Indicates the ROM version of the DC controller PCB.
R-CON	Indicates the ROM version of the reader controller PCB.
PANEL	Indicates the ROM version of the control panel CPU PCB.
FEEDER	Indicates the ROM version of the feeder controller PCB.
SORTER	Indicates the ROM version of the finisher controller PCB.
NIB	Indicates the version of the network software.
PS/PCL	Indicates the version of the printer board (PS/PCL).
LIPS	Indicates the version of the printer board (LIPS).
SDL-STCH	Indicates the ROM version of the saddle stitcher controller PCB.
MN-CONT	Indicates the version of the software of the main controller PCB.
RIP1	Indicates the version of the RIP1 board.
BOOT-ROM	Indicates the ROM version of the boot ROM of the main controller block.
DIAG-DVC	Indicates the version of the self diagnosis device.

<USER>

Indicates the User screen and items related to the user.

LANGUAGE	Indicates the language/paper size configuration used. Display <LANGUAGE xxyy. zz. aa> xx (2 higher-order digits): country code yy (2 lower-order digits) : language code zz : destination code (00: CANON, 01: OEM) aa : paper size configuration code (00: AB, 01: Inch, 02: A, 03: all sizes)
COUNTER	Indicates the type of control of the software counter. (00: 100 V, 01: USA, Europe)
MODEL	Indicates the identification of the model. (0: iR5000, 1: iR6000)

<ACC-STS>

Indicates the connection of accessories.

FEEDER	Indicates the connection of the ADF. (0: not connected, 1: connected)
SORTER	Indicates the state (connection) of the finisher and the puncher unit. Display: xy x= 0: finisher, 1: saddle finisher, 3: shift tray y= 0: none, 1: 2-hole, 2: 2/3-hole, 3: 4-hole (FRN), 4: 4-hole (SWDN)
DECK	Indicates the connection of the paper deck (accessory). (0: not connected, 1: connected)
CARD	Indicates the connection of the control card. (0: not connected, 1: connected)
DATA-CON	Indicates the connection of a self diagnosis device. (0: none, 1: copy data controller, 2: remote diagnostic device)

RAM	Indicates the size of the memory mounted to the main controller. (64 MB, 128 MB)
NIB	Indicates the connection of a network board. (0: none, 1: Etherboard, 2: Token-Ring, 3: both)
LIPS-RAM	Indicates the size of the memory mounted on the LIPS board. (xx MB)
LIPS	Indicates the connection of the LIPS board. (0: not connected, 1: connected)
PS/PCL	Indicates the connection of a PS/PCL board. (0: none, 1: PS/PCL, 2: PS Kanji)
RIP1	Indicates the connection of the RIP1 board. (0: not connected, 1: connected)

<ANALOG>

Indicates the measurement taken by the analog sensor.

TEMP	Indicates the machine's internal temperature. (by environment sensor) Unit: °C
HUM	Indicates the machine's internal humidity. (by environment sensor) Unit: %RH
FIX-U	Indicates the temperature of the upper fixing roller. Unit: °C

<CST-STS>

Indicates the paper size of the cassette and the manual feeder.

WIDTH-C3	Indicates the paper width of the cassette 3 in terms of paper size.
WIDTH-C4	Indicates the paper width of the cassette 4 in terms of paper size. (100-V model only)
WIDTH-MF	Indicates the paper width of the manual feeder in terms of paper size.

<JAM>

Indicates jam data.

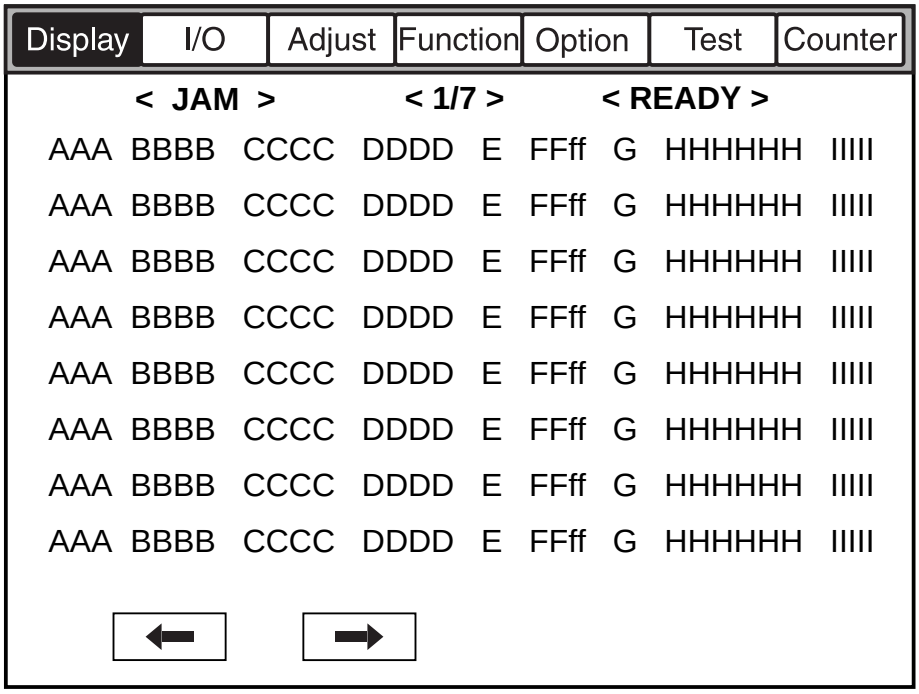

F04-201-02

Item	Description	Remarks
AAA	Indicates the numbers of jams (larger the number, the more past the jam).	1 to 50 (50 max.)
BBBB	Indicates the date of occurrence.	month, day (2 digits each)
CCCC	Indicates the hour of occurrence.	24-hour notation
DDDD	Indicates the return time.	24-hour notation
E	Indicates the location of occurrence.	0: copying machine 1: feeder 2: finisher
FFff	Jam code	FF: jam type (T04-201-01) ff: jam sensor (T04-201-02) (For the feeder, T04-201-04.)
G	Indicates the source of paper.	(T04-201-03)
HHHHHH		
IIIII	Indicates the paper size.	

FF: Types of Jams

Code	Type
00xx	none
01xx	delay jam
02xx	stationary jam
0Axx	stationary jam at power-on
0Bxx	front cover open jam

T04-201-01

ff: Jam Sensor

Code	Sensor
xx01	registration paper sensor (PS29)
xx02	laser write start sensor (PS28)
xx03	vertical path 1 paper sensor (PS24)
xx04	vertical path 2 paper sensor (PS25)
xx05	vertical path 3 paper sensor (PS26)
xx06	vertical path 4 paper sensor (PS27)
xx07	right deck feed paper sensor (PS32)
xx08	left deck feed paper sensor (PS33)
xx0B	right deck re-try sensor (PS19)
xx0C	left deck re-try sensor (PS20)
xx0D	cassette 3 re-try sensor (PS21)
xx0E	cassette 4 re-try sensor (PS22)
xx0F	claw jam sensor (PS4)
xx10	internal delivery sensory (PS35)
xx11	external delivery sensor (PS36)
xx12	delivery assembly jam sensor (PS46)
xx13	reversal sensor 2 (PS38)
xx14	reversal sensor 1 (PS37)
xx15	duplexing paper sensor (PS34)
xx16	duplexing pre-registration sensor (PS30)
xx1E	deck pickup sensor (PS101)
xx1F	deck feed sensor (PS106)
xx32	buffer path sensor (PI14)
xx33	inlet sensor (PI1)
xx34	delivery sensor (PI3)
xx35	staple tray sensor (PI4)
xx36	vertical path paper sensor (PI17S)
xx37	delivery sensor (PI11S)

T04-201-02

G: Source of Paper

Code	Description
1	right front deck
2	left front deck
3	cassette 3
4	cassette 4
5	not used
6	not used
7	paper deck (accessory)
8	manual feed tray
9	duplexing block

T04-201-03

FFff: Sensors for and Types of Jams in the Feeder

x=1: 1st original picked up.

x=0: 2nd or subsequent original picked up.

Code	Description	Sensor
00x1	Post-separation sensor (S3) delay	S3
00x2	Post-separation sensor (S3) stationary	S2, S3
00x3	Registration senor (PI1) delay	S3, PI1
00x4	Registration sensor (PI1) stationary	PI1
00x5	Read sensor (S2) delay	S2
00x6	Read sensor (S2) stationary	S2
00x7	Delivery reversal sensor (S1) delay	S1, S2
00x8	Delivery reversal sensor (S1) stationary	S1, S2
00x9	User ADF open	PI2
00xA	ADF open	PI2
00xB	User cover open	SW2
00xC	Cover open	SW2
00xD	Residual	PI1, S1, S2, S3
00xE	Pickup fault	PI5
00xF	Timing error	S2

T04-201-04

<ERR>

Indicates error data.

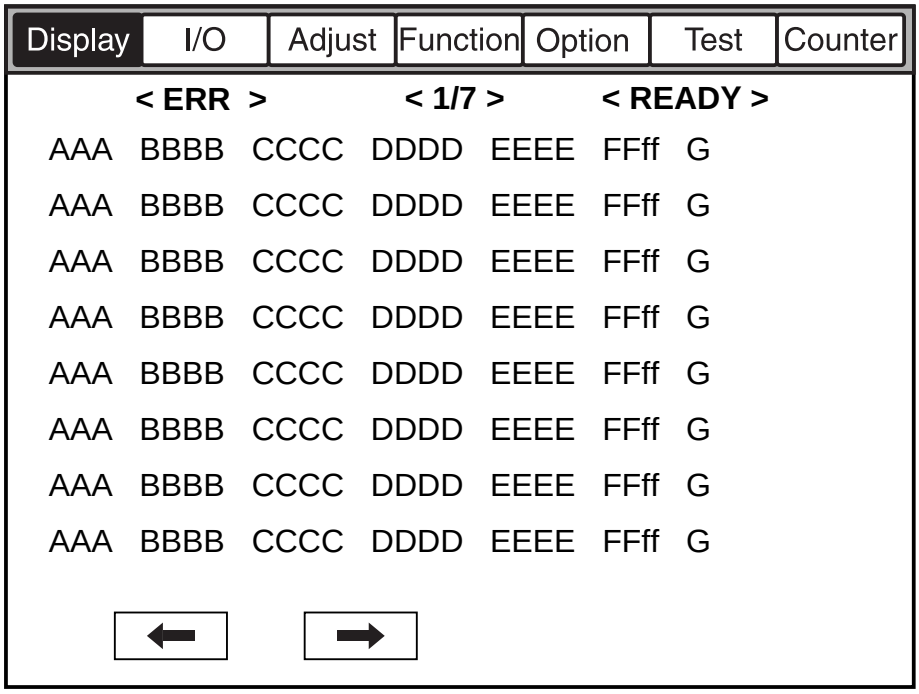

F04-201-03

Item	Description	Remarks
AAA	Indicates the numbers of errors (the higher the number, the more recent the error).	1 to 50 (50 max.)
BBBB	Indicates the date of occurrence.	month, day (2 digits each)
CCCC	Indicates the time of occurrence.	24-hour notation
DDDD	Indicates the return time.	24-hour notation
EEEE	Indicates the error code in question.	See “Self Diagnosis” in Chapter 5.
FFff	Indicates the detailed code in question.	if none, ‘0000’.
G	Indicates the location of occurrence.	0: copying machine/ main controller 1: feeder 2: finisher 3: C.F.F. 4: reader 5: printer 6: PDL 7: fax

<HV-STS>

Indicates the measurements taken of the voltage/current system.

PRIMARY	Indicates the level of primary charging current.
PRE-TR	Indicates the level of current for pre-transfer (post) charging.
TR	Indicates the level of transfer charging current.
SP	Indicates the level of separation charging current.
BIAS	Indicates the level of developing bias DC.
SP-N2	Indicates the level of separation charging current for the 2nd side of a double-sided print.
TR-N2	Indicates the level of transfer charging current for the 2nd side of a double-sided print.

<DPOT>

Indicates the photosensitive drum surface potential control data.

DPOT-K	Indicates the surface potential of the photosensitive drum. (unit: V)
VL1T	Indicates the target value of the light-area potential (VL1) for copying.
VL1M	Indicates the measurement taken of the light-area potential (VL1) for copying. (optimum value: VL1T ± 6 V; reference only)
VL2M	Indicates the measurement taken of the light-area potential (VL2) for copying. (optimum value: 70 ± 15 V; reference only)
VDT	Indicates the target dark-area potential (VD) for copying.
VDM	Indicates the measurement of the dark-area potential (VD) for copying. (optimum value: VDT ± 6 V; reference only)
VL2M-P	Indicates the measurement of the light-area potential (VL2) for printer (PDL) images. (optimum value: 70 ± 15 V; reference only)
VL1M-P	Indicates the measurement of the light-area potential (VL1) for printer (PDL) images. (optimum value: VL1T-P ± 6 V)
VL1T-P	Indicates the measurement of the light-area potential (VL1) for printer (PDL) images.
VDM-P	Indicates the measurement of the dark-area potential (V) for printer (PDL) images.
VDT-P	Indicates the target level of dark-area potential (VD) for printer (PDL) images.
LLMT-P	Indicates the laser power voltage control mechanism for printer (PDL) images. (0: normal, 1: error)

PLMT-P	Indicates the primary charging current control mechanism for printer (PDL) images. (0: normal, 1: error)
LLMT	Indicates the laser power voltage control mechanism for copying. (0: normal, 1: error)
PLMT	Indicates the primary charging current control mechanism for copying. (0: normal, 1: error)
BIAS-P	Indicates the result of potential control for the developing bias for copying.
BIAS-C	Indicates the result of potential control for the developing bias for copying.
LPOWER-P	Indicates the result of potential control for the laser intensity during output of printer (PDL) images. (range of indication: 0 to 255, 0: error)
LPOWER-C	Indicates the result of potential control for the laser intensity during output of copy images. (range of indication: 0 to 255, 0: error)
PRIM-P	Indicates the result of potential control for the primary charging current for printer (PDL) images. (range of indication: 0 to 1400 µA, optimum value: 500 to 1000 µA)
PRIM-C	Indicates the result of potential control for the primary charging current for copying. (range of indication: 0 to 1400 µ, optimum value: 500 to 1000 µA)

<SENSOR>

Indicates the state of sensors.

DOC-SZ	Indicates the size of the original detected by the original size sensor.
LPOWER	Indicates the laser intensity on a real-time basis.

<ALARM-1>

Indicates alarm data.

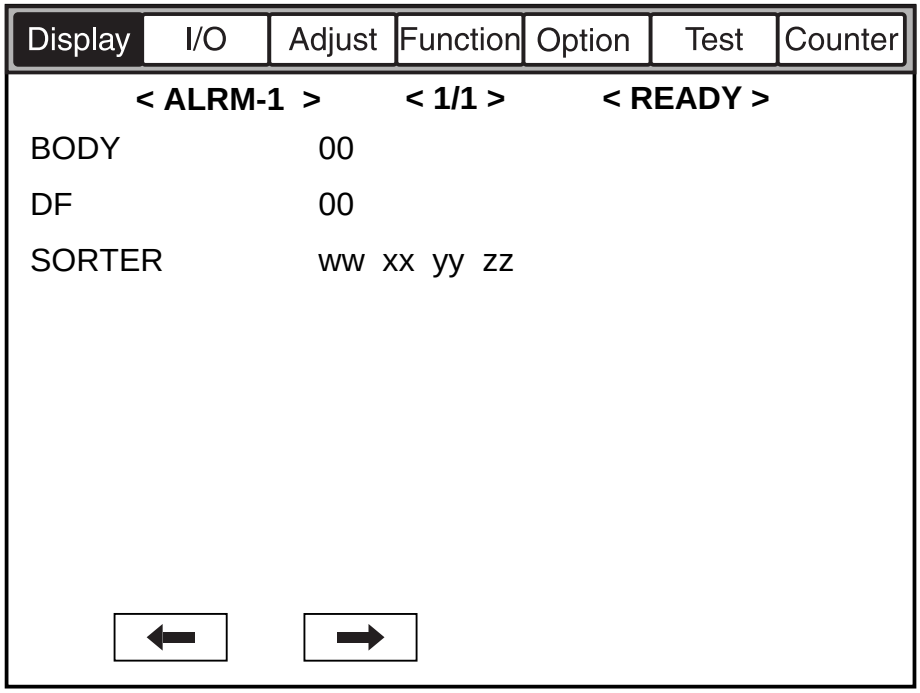

F04-201-04

Item	Description	Remarks
BODY	Indicates alarms associated with the copying machine.	01: right front deck lifter fault 02: left front deck lifter fault 03: cassette 3 lifter fault 04: cassette 4 lifter fault 05: paper deck lifter fault 10: primary charging assembly leakage 11: transfer charging assembly leakage 12: separation charging assembly leakage 20: de-curling fan (FM5) locked 21: duplex unit feed fan (FM8) locked 30: duplex unit horizontal registration HP detection fault 31: shift tray alarm
DF	Indicates alarms associated with the ADF.	For details, see the Service Manual of the ADF.
SORTER	Indicates the alarms associated with the finisher.	For details, see the Service Manual of the finisher. ww: staple alarm of finisher xx: staple alarm of saddle stitcher yy: stack alarm zz: tray alarm

2.2 FEEDER

FEEDSIZE	Indicates the size of an original detected by the ADF.

3. I/O (I/O display mode)

The following screen appears in response to COPIER>I/O; for the items, see the pages that follow:

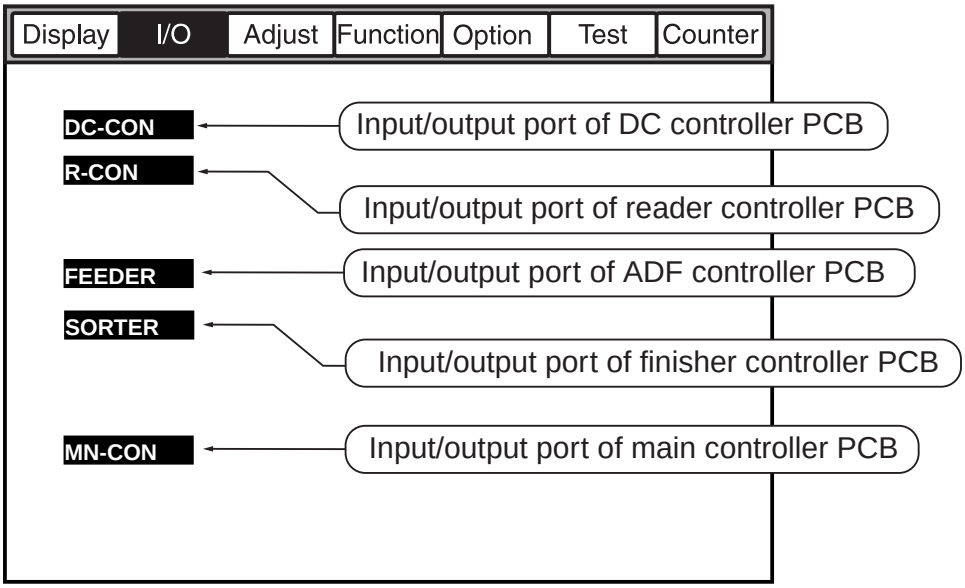

F04-300-01

<Guide to the Screen>

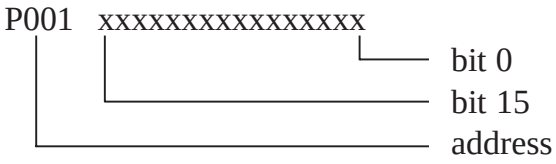

3.1 DC-CON

Indicates the input/output ports of the DC controller PCB.

<DC-CON (1/8)>

Address	Bit	Notation	Description	Remarks
IO-P01	0	PS23	manual feed paper sensor signal	0: paper present
	1	PS29	registration paper sensor signal	1: paper present
	2	PS19	right deck re-try sensor signal	1: paper present
	3	PS13	cassette 3 paper sensor signal	1: paper present
	4	PS26	vertical path 3 paper sensor signal	1: paper present
	5	PS14	cassette 4 paper sensor signal	1: paper present
	6	PS27	vertical path 4 paper sensor signal	1: paper present
	7	PS7	right deck paper sensor signal	1: paper present
	8	PS24	vertical path 1 paper sensor signal	1: paper present
	9	PS11	left deck paper sensor signal	1: paper present
	10	PS25	vertical path 2 paper sensor signal	1: paper present
	11	PS36	external delivery sensor signal	1: paper present
	12	PS35	internal delivery sensor signal	0: paper present
	13		not used	
	14	PS4	claw jam sensor signal	0: paper present
	15	PS33	left deck feed paper sensor	1: paper present
IO-P02	0	PS21	cassette 3 re-try sensor signal	1: paper present
	1	PS22	cassette 4 re-try sensor signal	1: paper present
	2	PS20	left deck re-try sensor signal	1: paper present
	3	PS37	reversal sensor 1 signal	1: paper present
	4	PS8	right pre-registering limit sensor signal	1: limit
	5	PS30	duplexing pre-registration senor signal	1: paper present
	6	PS31	duplexing horizontal pre-registration sensor signal	0: paper present
	7	PS38	reversal sensor 2 signal	1: paper present
	8	PS28	laser write start sensor signal	1: paper present
	9	TS1	developing assembly toner sensor signal	0: toner absent
	10	TS2	hopper toner sensor signal	0: toner absent
	11	PS34	duplexing paper senor signal	1: paper present
	12	PS45	fixing web length detection signal	1: absent
	13		not used	
	14		hopper connector detection signal	1: disconnected
	15	MSW1	waste toner screw lock detection signal	0: clogged
IO-P03	0	MSW2	manual feed cover open/closed detection signal	1: closed
	1	PS6	right deck lifter sensor signal	1: paper present
	2	PS32	right deck feed paper sensor signal	1: paper present

<DC-CON (2/8)>

Address	Bit	Notation	Description	Remarks
	3	PS10	left deck lifter sensor signal	1: paper present
	4	PS12	left deck limit sensor signal	1: limit
	5	PS17	cassette 3 lifter sensor signal	1: paper present
	6	PS18	cassette 4 lifter sensor signal	1: paper present
	7		cassette 4 universal detection	0: universal
	8	SV1	cassette 4 length detection signal 0	
	9	SV1	cassette 4 length detection signal 1	
	10	CL2	registration roller clutch drive signal	1: ON
	11	PS5	right deck open/closed detection sensor signal	1: closed
	12	PS9	left deck open/closed sensor signal	1: closed
	13	PS3	right cover open/closed detection signal	1: closed
	14		not used	
	15	SW2	front cover open/closed detection signal	0: closed
IO-P04	0		duplexing unit detection signal	0: connected
	1		fixing/feeding unit detection signal	0: connected
	2		hard disk unit detection signal	1: absent
	3	PS15	cassette 3 open/closed sensor signal	1: closed
	4	PS16	cassette 4 open/closed sensor signal	1: closed
	5	SV2	cassette 3 size detection signal 0	
	6	SV2	cassette 3 size detection signal 1	
	7		not used	
	8	TH2	fixing sub thermistor error detection signal 1	1: error
	9	TH1	fixing main thermistor error detection signal	1: error
	10		E001 error hard detection signal	1: error
	11		fixing sub thermistor error detection signal 2	1: error
	12	RL1	main relay OFF detection signal	
	13		main SSR error signal	1: error
	14		sub SSR error signal	1: error
	15		DC controller switch signal	1: new
IO-P05	0	FM1	separation feeder fan stop detection signal	1: stop
	1	FM2	primary charging cooling fan stop detection signal	1: stop
	2	FM6	DC power supply fan stop detection signal	1: stop
	3	FM3	heat discharge fan stop detection signal	1: stop
	4	FM7	hard disk fan stop detection signal	1: stop
	5	FM4	controller cooling fan stop detection signal	1: stop
	6	FM8	duplexing feed fan stop detection signal	1: stop
	7	FM5	de-curling fan stop detection signal	1: stop
	8	PS47	right deck paper level sensor (upper) signal	1: paper present

<DC-CON (3/8)>

Address	Bit	Notation	Description	Remarks
	9	PS49	left deck paper level sensor (upper) signal	1: paper present
	10		SSR error signal	1: error
	11		not used	
	12	PS48	right deck paper level sensor (lower) signal	1: paper present
	13	PS50	left deck paper level sensor (lower) signal	1: paper present
	14		not used	
	15	PS104/ 105	shift tray full sensor signal	0: full
IO-P06	0	M19	fixing motor clock detection	1: locked
	1	M15	laser scanner motor lock detection signal	1: locked
	2	PS46	delivery jam sensor signal	1: paper present
	3		for factory adjustment	
	4		for factory adjustment	
	5		for factory adjustment	
	6		for factory adjustment	
	7		not used	
	8		LZC-ERROR	
	9		LZD-ERROR	
	10		LZ-HEAT RDY	
	11		LZ-HEAT ERROR	
	12	PS103	shift tray paper sensor signal	0: paper present
	13	PS104	shift tray HP detection (front)	1: HP
	14	PS105	shift tray HP detection (rear)	1: HP
	15		shift tray connection detection signal	0: connected
IO-P07	0		flicker control signal	0: flicker
	1		power supply spec 1	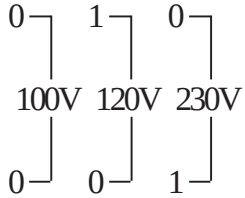
	2		power supply spec 2	
	3		SW3	
	4		SW4	
	5		SW5	
	6		duplexing feed fan detection signal	
	7		SW7	
	8		not used	
	9		not used	
	10		not used	
	11		not used	
	12		high-voltage separation error signal	

<DC-CON (4/8)>

Address	Bit	Notation	Description	Remarks
	13		high-voltage transfer error signal	
	14		high-voltage primary error signal	
	15		not used	
IO-P08	0	CL1	developing clutch drive signal	1: ON
	1	CL2	registration roller clutch drive signal	0: ON
	2	CL3	manual feed pickup clutch drive signal	1: ON
	3		not used	
	4		not used	
	5		not used	
	6	CL4	left deck pull-off clutch drive signal	1: ON
	7		not used	
	8		roller bias ON signal	0: ON
	9		developing bias AC drive signal	0: ON
	10		high-voltage high humidity switch signal	0: ON
	11		high-voltage AC driver signal	0: ON
	12		high-voltage remote signal	0: ON
	13		EEPROM select signal 1	1: ON
	14		EEPROM select signal 2	1: ON
	15		EEPROM select signal 3	1: ON
IO-P09	0		shift tray detection signal	0: ON
	1	SM101	shift tray motor (CW) signal	1: ON
	2	SM101	shift tray motor (CCW) signal	1: ON
	3	SL6	right deck pickup solenoid drive signal	0: ON
	4	SL7	left deck pickup solenoid drive signal	1: ON
	5	SL3	cassette 3 pickup solenoid drive signal	1: ON
	6	SL4	cassette 4 pickup solenoid drive signal	1: ON
	7	SL2	manual feed releasing solenoid drive signal	1: ON
	8		not used	
	9	SL5	delivery flapper solenoid drive signal	1: ON
	10	SL8	reversing flapper solenoid drive signal	0: ON
	11	SL1	fixing assembly inlet guide drive solenoid (return) drive signal	1: ON
	12	SL1	fixing assembly inlet guide drive solenoid (suction) drive signal	1: ON
	13	SL9	fixing assembly web solenoid drive signal	1: ON
	14		not used	
	15		not used	
IO-P10	0	M5	right deck lifter motor drive signal	0: ON
	1	M4	left deck lifter motor drive signal	0: ON
	2	M6	primary charging wire cleaning motor (CCW) signal	1: ON

<DC-CON (5/8)>

Address	Bit	Notation	Description	Remarks
	3	M6	primary charging wire cleaning motor (CW) signal	1: ON
	4	M7	pre-transfer charging wire cleaning motor (CW) signal	1: ON
	5	M7	pre-transfer charging wire cleaning motor (CCW) signal	1: ON
	6	M8	transfer/separation charging wire cleaning motor (CW) signal	1: ON
	7	M8	transfer/separation charging wire cleaning motor (CCW) signal	1: ON
IO-P11	0	M1	drum motor drive signal	0: ON
	1	M2	main motor drive signal	0: ON
	2		not used	
	3	M19	fixing motor drive signal	0: ON
	4	M15	laser scanner moter drive signal	0: ON
	5	M9	hopper stirring motor drive signal	1: ON
	6	M10	hopper supply motor drive signal	1: ON
	7	M15	laser scanner motor speed switch signal	0: half-speed
IO-P12	0	M21	cassette 4 lifter motor drive signal	0: ON
	1	M20	cassette 3 lifter motor drive signal	0: ON
	2		not used	
	3		not used	
	4	H1	fixing main heater ON signal	0: ON
	5	H2	fixing sub heater ON signal	0: ON
	6	H3	drum heater ON signal	0: ON
	7		not used	
IO-P13	0	FM1	separation feed fan (half-speed) signal	1: ON
	1	FM1	separation feed fan (full-speed) signal	1: ON
	2	FM2	primary charging cooling fan (half-speed) signal	1: ON
	3	FM2	primary charging cooling fan (full speed) signal	1: ON
	4		not used	
	5		not used	
	6	FM3	heat discharge fan (half-speed) signal	1: ON
	7	FM3	heat-discharge fan (full-speed) signal	1: ON
IO-P14	0	FM7	hard disk fan (half-speed) signal	1: ON
	1	FM7	hard disk fan (full-speed) signal	1: ON
	2	FM4	controller cooling fan (half-speed) signal	1: ON
	3	FM4	controller cooling fan (full-speed) signal	1: ON
	4		not used	
	5		not used	
	6	FM5	de-curling fan (half-speed) signal	1: ON
	7	FM5	de-curling fan (full-speed) signal	1: ON
IO-P15	0	RL1	main relay OFF signal	1: ON

COPIER>I/O

<DC-CON (6/8)>

Address	Bit	Notation	Description	Remarks
	1		not used	
	2		not used	
	3		not used	
	4		not used	
	5	LA1	pre-exposure LED ON signal	1: ON
	6	VS1	potential sensor ON signal	1: ON
	7		fixing 12 V supply signal	0: supplied
IO-P16	0		DDI-PPRDY	
	1		DDI-CTS	
	2		not used	
	3		not used	
	4		not used	
	5		not used	
	6		not used	
	7		not used	
IO-P17	0		DDI-CPRDY	
	1		DDI-PRSST	
	2		DDI-RST	
	3		not used	
	4		not used	
	5		not used	
	6		not used	
	7		not used	
IO-P18	0		not used	
	1		not used	
	2		not used	
	3		not used	
	4		not used	
	5		not used	
	6		not used	
	7	FM8	duplexing feed fan	
IO-P19	0		not used	
	1	M14	reversal motor clock signal	
	2		not used	
	3		not used	
	4		not used	
	5	M29	duplexing feed left motor clock signal	
	6		not used	

<DC-CON (7/8)>

Address	Bit	Notation	Description	Remarks
	7	M13	delivery motor clock signal	
IO-P20	0	CL2	registration roller clutch ON signal	-
	1		not used	
	2		not used	
	3		not used	
	4		not used	
	5	M17	pre-registration motor clock signal	-
	6		not used	
	7	M18	duplexing feed right motor clock signal	-
IO-P21	0		serial 0-TXD	-
	1		serial 1-TXD	-
	2		serial 0-RXD	-
	3		serial 1-RXD	-
	4		not used	
	5		not used	
	6		not used	
	7		not used	
IO-P22	0		cassette paper width input port switch signal	1: cassette 4, 0: cassette 3
	1		not used	
	2	FM6	DC power supply fan drive signal	0: ON
	3	M16	duplexing horizontal registration motor clock signal	-
	4		not used	
	5		not used	
	6		not used	
	7		not used	
IO-P23	0		not used	
	1		not used	
	2		laser enable signal	0: enabled
	3		not used	
	4		not used	
	5	M1	drum tor INT	
	6	M2	main motor INT	
	7		error INT	
IO-P24	0		not used	
	1		not used	
	2		not used	
	3		not used	
	4		not used	

<DC-CON (8/8)>

Address	Bit	Notation	Description	Remarks
	5		pulse count INT	
	6		DMA-END-INT	
	7		DMA-REQ-INT	
IO-P25	0	SW101	deck open detection switch signal	0: closed
	1	PS102	deck paper absent sensor signal	1: paper present
	2	PS103	deck lifter upper limit sensor signal	1: upper limit
	3	PS101	deck pickup sensor signal	1: paper present
	4	PS106	deck feed sensor signal	1: paper present
	5	CL102	deck pickup clutch ON signal	1: ON
	6		not used	
	7	PS107	deck paper supply position sensor signal	1: ON
IO-P26	0	PS108	deck paper level sensor signal	1: paper present
	1	SW102	deck lifter lower limit detection signal	1: lower limit
	2	PS105	deck set sensor signal	1: connected
	3	PS109	deck open sensor signal	1: closed
	4		deck ID1	1: connected
	5		deck ID2	0: connected
	6		not used	
	7		not used	
IO-P27	0	LED100	deck open LED ON signal	1: ON
	1	SL101	deck pickup roller releasing solenoid drive signal	1: ON
	2		not used	
	3	CL102	deck pickup clutch drive signal	1: ON
	4		not used	
	5		not used	
	6	M101	deck main motor drive signal	1: ON
	7	M102	deck lifter motor drive signal	1: ON
IO-P28	0	SW102	deck lifter lower limit detection signal	1: ON
	1	SL102	deck open solenoid	1: ON
	2	M101	deck main motor fixing current setting	1: ON
	3		not used	
	4		not used	
	5		not used	
	6		not used	
	7		not used	

3.2 R-CON

Indicates the input/output ports of the reader controller PCB.

<R-CON (1/2)>

Address	Bit	Notation	Description	Remarks
IO-P1	0	M3	scanner motor clock signal	when 1→0, ON
	1	M3	scanner motor CCW/CW switch signal	0: CCW, 1: CW
	2	M3	scanner motor HOLD/OFF switch signal	0: current hold, 1: current OFF
	3	M3	scanner motor driver reset signal	1: reset
	4	M3	scanner motor stream reading current switch signal	0: stream reading current
	5	PS43	original sensor ON switch signal	0: sensor ON
	6		fan error signal	not used
	7	LA2	scanning lamp ON switch signal	0: lamp ON
IO-P2	0		SK signal to EEPROM	normal clock
	1		DDI-SPI(1)	not used
	2		DDI-SPI(2)	not used
	3		DI signal to EEPROM	DATA area
	4		DDI-SCTS	0: DDI reception ready
	5		DDI-SPRDY	0: DDI power ready
	6		DDI-SCPRDY	0: DDI power ready
	7		scanning lamp inverter error signal	1: error
IO-P3	0		DDI-S transmission	DATA area
	1		RS232C transmission (factory terminal transmission)	DATA area
	2		DDI-S reception	DATA area
	3		RS232C reception (factory terminal reception)	DATA area
	4		ITOP transmission (image leading edge signal)	not used
	5		DDI-SRTS	0: DDI transmission ready
IO-P4	0		DDI-SPO(0)	not used
	1		DDI-SPO(1)	not used
	2		DDI-SPO(2)	not used
	3		not used	
	4		not used	
	5		not used	
	6	PS43	original sensor 3 signal (AB input)	0: original present
	7	PS43	original sensor 4 signal (Inch input)	0: original present
IO-P5	0		DDI-SPRTST	0: DDI-SPRTST signal ON
	1		serial data to CCD	DATA area
	2		clock to CCD	when 0→1→0, data transmitted
	3		output to RING2	when 0→1→0, data transmitted
IO-P6	0		not used	

COPIER>I/O

<R-CON (2/2)>

Address	Bit	Notation	Description	Remarks
	1		PCB check mode (for factory)	0: check mode
	2	LA2	scanning lamp (LOW/HI) switch signal	not used
	3		CS output to EEPROM	1: CP
	4	PS39	scanner HP sensor signal	1: HP
	5		ADF-ITOP (image leading edge) signal	0: ADF original image leading edge interrupt
	6	PS40	copyboard cover sensor (used as interrupt)	1: ADF (copyboard) closed
	7	PS40	copyboard cover sensor	1: ADF (copyboard) closed
IO-P7	0		WATCH-DOG pulse output	normal clock
	1		output to analog processor	when 0→1→0, data transmitted
	2		DO signal from EEPROM	Data area
IO-P8	0-7		not used	
IO-P9	0		not used	
	1		not used	
	2		not used	
	3		not used	
	4	M3	scanner motor drive control 2	default setting
	5	M3	scanner motor drive control 3	default setting
	6	M3	scanner motor drive control 4	default setting
	7	M3	scanner motor drive control (RETURN)	default setting
IO-P10	0	M3	scanner motor drive control 0, 1	default setting
	1	M3	scanner motor drive control 0, 1	default setting
	2	M3	scanner motor drive current control	default setting
	3	M3	scanner motor drive current control	default setting
	4	M3	scanner motor drive current control	default setting
	5	M3	scanner motor drive current control	default setting
	6	M3	scanner motor drive current control	default setting
	7		not used	

3.3 MN-CON

Indicates the input/output ports of the main controller PCB.

<MN-CON (1/2)>

Address	Bit	Notation	Description	Remarks
P001	3	GPDATA	not used (1 fixed)	
	2		not used (1 fixed)	
	1		not used (1 fixed)	
	0		not used (1 fixed)	
P002	3	SPI	SPRTST signal, printer start-up signal	0: reader image start
	2		DDI-S general input	not used
	1		DDI-S general input	not used
	0		DDI-S general input	not used
P003	3		DDI-S general input	not used
	2		DDI-P general input	not used
	1		DDI-P general input	not used
	0		DDI-P general input	not used
P004	3	SPO	SSCNST signal	not used
	2		3.3-V non-all night power OFF signal	0: normal (ON), 1=5W (OFF) sleep mode
	1		DDI-S general output	not used
	0		DDI-S general output	not used
P005	3	PPO	PPRTST signal	0: printer image start
	2		DDI-P general output	not used
	1		DDI-P general output	not used
	0		DDI-P general output	not used
P006	7	GPI	not used	
	6		serial EEPROM D0	access port to EEPROM
	5		operation enable (coin robot)	1: enabled
	4		operation enable (CC-IV)	1: enabled
	3		serial ROM connection detection	1: connected
	2		flash ROM R/B#	0: writing/deleting
	1		parallel EEPROM R/B#	0: writing
	0		battery alarm	not used
P007	15	GPO	FAX SSB forced reset	not used
	14		parallel EEPROM write protect	0: write enabled
	13		color UI I/F enable	not used
	12		LCD back-light control	1: ON
	11		coin robot delivery count	1: count
	10		coin robot pickup count	1: count

COPIER>I/O

<MN-CON (2/2)>

Address	Bit	Notation	Description	Remarks
	9		delivery count	1: counter
	8		pickup count	1: counter
	7		serial EEPROM DIN	access port to EEPROM
	6		serial EEPROM SCK	access port to EEPROM
	5		serial EEPROM CS	access port to EEPROM
	4		PCI (PDL) soft reset	0: LIPS board forced reset
	3		not used	
	2		SPO[2]	not used
	1		flash ROM write protect	not used
	0		battery charge control	not used
P008	7	IPCPA	board version	for factory
	6		board version	for factory
	5		board version	for factory
	4		BWUI detect	0: B/W UI present
	3		Color UI detect	0: color UI present
	2		FAX SSB identification	not used
	1		FAX SSB identification	not used
	0		FAX SSB identification	not used

3.4 FEEDER

Indicates the input/output ports of the ADF controller PCB.

<FEEDER (1/3)>

Address	Bit	Notation	Description	Remarks
IO-P01	0	M2	feed motor drive clock	
	1		not used	
	2	M2	feed motor clock LB	
	3	M1	pickup motor clock LB	
	4		not used	
	5	M3	delivery reversal motor clock LB	
	6	PI3	large/small identification sensor signal	1: paper present (large)
	7	PI4	A4R/LTRR identification sensor signal	1: A4R
IO-P02	0	M1	pickup motor drive clock signal	
	1	M1	pickup motor mode signal	
	2	M1	pickup motor CW/CCW signal	
	3	M1	pickup motor enable output	
	4		not used	
	5	M2	feed motor enable output	1: enable
	6	CL1	pickup clutch drive signal	1: ON
	7	SL1	locking solenoid signal	1: attracted
IO-P03	0		serial communication	transmission (TxD0)
	1		image leading edge signal	
	2		serial communication	reception (RxD0)
	3		EEPROM data output	transmission (TxD1)
	4		EEPROM clock	(SCK0)
	5		EEPROM chip select	
	6		not used	
	7		not used	
IO-P04	0	VR1	original width VR signal	(AN0)
	1	S3	post-separation sensor analog signal	(AN1)
	2	S2	read sensor analog signal	(AN2)
	3	S1	delivery reversal sensor analog signal	(AN3)
	4		not used	
	5		not used	
	6		not used	
	7		not used	
IO-P05	0		external WDT clock output	
	1		D/A data output	
	2		D/A clock output	

<FEEDER (2/3)>

Address	Bit	Notation	Description	Remarks
	3		D/A load signal	
	4		not used	
	5		not used	
	6		not used	
	7		not used	
IO-P06	0		EEPROM data input	
	1	FM1	cooling fan lock signal	1: locked
	2	FM1	cooling fan	
	3		not used	
	4	S3	post-separation sensor signal	(IRQ0)
	5	PI1	registration 1 sensor signal	(IRQ1)
	6	S2	read sensor signal	(IRQ2)
	7	S1	delivery reversal sensor signal	(IRQ3)
IO-P07	0		not used	
	1		not used	
	2		not used	
	3		not used	
	4		not used	
	5		not used	
	6		not used	
	7	SW1	cover open switch	1: opened
IO-P08	0	PI2	ADF open/closed sensor signal	1: opened
	1	M3	delivery reversing motor excitation phase (A) output	during output, alternately '0' and '1'
	2	M3	delivery reversing motor excitation phase (*A) output	during output, alternately '0' and '1'
	3	M3	delivery reversing motor excitation phase key (B) output	during output, alternately '0' and '1'
	4	M3	delivery reversing motor excitation phase (*B) output	during output, alternately '0' and '1'
	5	M2	feed motor mode output	
	6	M2	feed motor mode output	
	7	M2	feed motor (CW/CCW) switch signal	1: CCW
IO-P09	0		DIP switch (DIPSW8) signal	0: ON
	1		DIP switch (DIPSW7) signal	0: ON
	2		DIP switch (DIPSW6) signal	0: ON
	3		DIP switch (DIPSW5) signal	0: ON
	4		DIP switch (DIPSW4) signal	0: ON
	5		DIP switch (DIPSW3) signal	0: ON
	6		DIP switch (DIPSW2) signal	0: ON
	7		DIP switch (DIPSW1) signal	0: ON
IO-P10	0		not used	

<FEEDER (3/3)>

Address	Bit	Notation	Description	Remarks
	1		not used	
	2		not used	
	3		not used	
	4		not used	
	5		not used	
	6		not used	
	7		not used	
IO-P11	0	LED4	LED ON signal	0: ON
	1	LED3	LED ON signal	0: ON
	2	LED2	LED ON signal	0: ON
	3	LED1	LED ON signal	0: ON
	4		not used	
	5		not used	
	6		not used	
	7		not used	
AD-P01		VR1	tray volume	(hereafter, analog ports)
AD-P02		S3	post-separation sensor analog input	
AD-P03		S2	read sensor analog input	
AD-P04		S1	delivery paper reversal sensor analog input	
AD-P05			not used	
AD-P06			not used	
AD-P07			not used	
AD-P08			not used	
DA-P01		M1	pickup motor	(hereafter, analog ports)
DA-P02		M2	feed motor	
DA-P03		M3	delivery reversal motor	
DA-P04		S3	post-separation sensor_DA	
DA-P05		S3	post-separation sensor_TH	
DA-P06		S2	read sensor DA	
DA-P07		S2	read sensor TH	
DA-P08		S1	delivery reversal sensor_DA	
DA-P09		S1	delivery reversal sensor_TH	
DA-P10			not used	
DA-P11			not used	
DA-P12			not used	

3.5 SORTER

Indicates the input/output ports of the finisher controller PCB.

<Sorter (1/3)>

3.5.1 Finisher Block

Address	Bit	Notation	Description	Remarks
IO-P01	0		not used	
(output)	1		not used	
	2	M8	No. 2 feed motor phase A output	
	3	M8	No. 2 feed motor phase B output	
	4	M4	stapler shift motor phase B output	
	5	M4	stapler shift motor phase A output	
	6	M3	alignment motor phase B output	
	7	M3	alignment motor phase A output	
	8-15		not used	
IO-P02	0	M5	tray lift motor PWM	
(output)	1	M2	delivery motor PWM	
	2	M7	swing motor PWM	
	3	M1P	punch motor PWM	
	4	M2P	horizontal registration motor phase B output	
	5	M2P	horizontal registration motor phase A output	
	6	M5	tray lift motor DOWN drive output	1: down
	7	M5	tray lift motor UP drive output	1: up
	8-15		not used	
IO-P03	0		not used	
(output)	1	LED2	LED2 ON solenoid output	0: ON
	2		not used	
	3	PS1	height sensor (input)	
	4	LED1	LED1 ON signal output	1: ON
	5		height sensor external clock (input)	
	6		not used	
	7		not used	
	8-15		not used	
IO-P04	0		dust full detection signal	
(input)	1		24-V output off detection signal	
	2		horizontal registration detection signal 1	
	3		horizontal registration detection signal 2	
	4		horizontal registration detection signal 3	
	5		horizontal registration detection signal 4	
	6		trailing edge detection signal	
	7		punch LED ON signal (output)	
	8-15		not used	

Address	Bit	Notation	Description	Remarks
IO-P05	0	M9	inlet feed motor phase A output	
(output)	1	M9	inlet feed motor phase B output	
	2		not used	
	3		not used	
	4		not used	
	5		not used	
	6		not used	
	7		not used	
	8-15		not used	
IO-P06	0	PI4	stapler tray paper detection signal	0: paper present
(input)	1		punch motor clock detection signal	
	2	M1	No. 1 feed motor phase A (output)	
	3	M1	No. 1 feed motor phase B (output)	
	4		No. 2 feed motor clock input	
	5		inlet feed motor clock input	
	6		No. 1 feed motor clock input	
	7		delivery motor clock detection signal	
	8-15		not used	
IO-P07	0		not used	
(input)	1		not used	
	2		not used	
	3		not used	
	4		not used	
	5		tray lift motor clock signal 1	
	6		tray lift motor clock signal 2	
	7		swing motor clock detection signal	
	8-15		not used	
IO-P08	0		stacker EEPROM CLK signal	
(output)	1		stacker EEPROM data out signal	
	2		stitcher EEPROM CS signal	
	3		*LWR (input/output)	
	4		*HWR (output/output)	
	5		*RD (input/output)	
	6		*AS (input/output)	
	7		stacker unit EEPROM data (input)	
	8-15		not used	
IO-P09	0	PI17	buffer path inlet paper detection signal	0: paper present
(input)	1	PI3	delivery paper detection signal	1: paper present
	2	PI14	buffer path paper detection signal	0: paper present
	3	PI1	inlet paper detection signal	0: paper present
	4	PI22	stapler drive home position detection signal	1: HP
	5		not used	

Address	Bit	Notation	Description	Remarks
	6		not used	
	7		not used	
	8-15		not used	
IO-P10	0-15		not used	
IO-P11	0-15		not used	
IO-P12	0		stapler connection detection signal	0: connected
(input)	1	MS7	stapler cartridge detection	0: cartridge present
	2		staple ready signal	
	3	MS8	staple absent detection signal	0: staple present
	4		not used	
	5	PI11	tray 1 paper detection signal	0: paper present
	6	PI12	tray 2 paper detection signal	0: paper present
	7		not used	
	8-15		not used	
IO-P13	0-15		not used	
IO-P14	0		punch unit connection detection signal	
(input)	1	PI3P	punch home position detection signal	1: HP
	2	PI1P	horizontal registration home position detection signal	0: HP
	3	MS2P	front cover open detecting switch signal	0: closed
	4	MS1P	upper cover open detecting switch signal	0: closed
	5		not used	
	6		not used	
	7		not used	
	8-15		not used	
IO-P15	0		PUSH SW3	
(input)	1		PUSH SW2	
	2		punch unit EEPROM data in	
	3		stapler shift home position detection signal	0: HP
	4		alignment home position detection signal	0: HP
	5		tray open position detection signal	1: HP
	6		shutter open detection signal	1: open
	7		swing guide open detection signal	0: open
	8-15		not used	
IO-P16	0		DIP SW3 bit 1	0: ON
(input)	1		DIP SW3 bit 2	0: ON
	2		DIP SW3 bit 3	0: ON
	3		DIP SW3 bit 4	0: ON
	4		DIP SW3 bit 5	0: ON
	5		DIP SW3 bit 6	0: ON
	6		DIP SW3 bit 7	0: ON
	7		DIP SW3 bit 8	0: ON
	8-15		not used	

Address	Bit	Notation	Description	Remarks
IO-P17	0	PI15	joint detection signal	1: connected
(input)	1	PI16	cover open/closed detection signal	1: closed
	2		saddle unit connection detection signal	
	3	MS5	tray upper limit detecting switch signal	1: upper limit
	4	MS.	tray safety switch signal	0: safe
	5	MS1	cover open/closed detecting switch signal	0: closed
	6	MS4	shutter closed detecting switch signal	1: closed
	7	MS6	swing guide closed detecting switch signal	0: closed
	8-15		not used	
IO-P18	0	M7	swing motor CW drive output	1: CW
(output)	1	M7	swing motor CCW drive output	1: CCW
	2	M1P	punch motor CCW drive output	0: CCW
	3	M1P	punch motor CW drive output	0: CW
	4	M2	delivery motor CCW drive output	1: CCW
	5	M2	delivery motor CW drive output	1: CW
	6	M6	stapler motor CCW drive output	0: CCW
	7	M6	stapler motor CW drive output	0: CW
	8-15		not used	
IO-P19	0		stepping motor OFF	1: OFF
(output)	1	M2P	punch horizontal registration motor current switch	0: ON
	2	M9	inlet feed motor current switch 2	0: ON
	3	M9	inlet feed motor current swing 1	0: ON
	4	M8	No. 2 feed motor current switch 2	0: ON
	5	M8	No. 2 feed motor current switch 1	0: ON
	6	M1	No. 1 feed motor current switch 2	0: ON
	7	M1	No. 1 feed motor current switch 1	0: ON
	8-15		not used	
IO-P20	0		punch unit EEPROM data out	
(output)	1		punch unit EEPROM CS	
	2		punch unit EEPROM CLK	
	3		not used	
	4		not used	
	5		height sensor ON/OFF	
	6	M4	stapler shift motor current switch	0: ON
	7	M3	alignment motor current switch	0: ON
	8-15		not used	

Address	Bit	Notation	Description	Remarks
IO-P21	0	SL7	belt escape solenoid drive signal	1: ON
(output)	1	SL3	buffer outlet solenoid drive signal	1: ON
	2		not used	
	3	SL2	buffer inlet solenoid drive signal	1: ON
	4	SL1	flapper solenoid drive signal	1: ON
	5	SL5	paddle solenoid drive signal	1: ON
	6		solenoid timer output	
	7	SL6	escape solenoid drive signal	1: ON
	8-15		not used	
IO-P22	0-15		not used	
AD-P01	-		dust full detection signal	
AD-P02	-		24-V output OFF detection signal	
AD-P03	-		horizontal registration detection signal 1	
AD-P04	-		horizontal registration detection signal 2	
AD-P05	-		horizontal registration detection signal 3	
AD-P06	-		horizontal registration detection signal 4	
AD-P07	-		trailing edge detection signal	
DA-P01	-		punch LED ON signal (output)	

3.5.2 Saddle Stitcher Unit

Address	Bit	Notation	Description	Remarks
IO-P23	0	M6S	stitcher motor (rear) CW drive output	0: CW
(output)	1	M6S	stitcher motor (rear) CCW drive output	0: CCW
	2	M7S	stitcher motor (front) CW drive output	0: CW
	3	M7S	stitcher motor (front) CCW drive output	0: CCW
	4	M2S	paper fold motor CW drive output	0: CW
	5	M2S	paper fold motor CCW drive output	0: CCW
	6	SL1S	No. 1 deflecting plate solenoid drive signal	1: ON
	7	SL2S	No. 2 deflecting plate solenoid drive signal	1: ON
	8-15		not used	
IO-P24	0		not used	
(output)	1		not used	
	2		not used	
	3		not used	
	4		not used	
	5	SL4S	feed roller plate solenoid drive signal	1: ON
	6		solenoid timer output	
	7	M4S	paper positioning plate motor current switch	0: when ON
	8-15		not used	
IO-P25	0		24-V output OFF detection signal	1: down
(input)	1	PI15S	paper push-on plate leading edge position signal	0: leading edge
	2	PI11S	delivery detection signal	0: paper present
	3		not used	
	4		not used	
	5		not used	
	6		not used	
	7		not used	
	8-15		not used	
IO-P26	0		paper fold motor clock detection signal	
(input)	1		paper push-on plate motor clock detection signal	
	2	PI14S	paper push-on HP detection signal	1: HP
	3	PI5S	alignment plate HP detection signal	0: HP
	4		not used	
	5		not used	
	6		not used	
	7		not used	
	8-15		not used	

Address	Bit	Notation	Description	Remarks
IO-P27	0	PI7S	paper positioning HP detection signal	0: HP
(input)	1	PI16S	stitcher IN detection signal	0: in
	2	SW2	PUSH SW2 ON/OFF	
	3	PI17S	vertical path paper detection signal	1: paper present
	4	PI12S	crescent roller phase detection signal	0: HP
	5	PI13S	guide home position detection signal	0: HP
	6		not used	
	7		not used	
	8-15		not used	
IO-P28	0	M4S	paper positioning plate motor phase A output	
(output)	1	M4S	paper positioning plate motor phase B output	
	2	M8S	paper push-on plate motor PWM	
	3		feed motor current switch	0: ON
	4	M1S	feed motor phase A output	
	5	M1S	feed motor phase B output	
	6		not used	
	7	M8S	paper push-on plate motor CCW drive output	0: CCW
	8-15		not used	
IO-P29	0	M5S	alignment motor phase A output	
(output)	1	M5S	alignment motor phase B output	
	2	M2S	paper fold motor PWM	
	3	M8S	paper push-on motor CW drive output	0: CW
	4	M3S	guide motor phase A output	
	5	M3S	guide motor phase B output	
	6	M3S	guide motor current switch	0: ON
	7	M5S	alignment motor current switch	0: ON
	8-15		not used	
IO-P30	0	PI19S	No. 2 paper sensor paper detection signal	0: paper present
(input)	1	PI20S	No. 3 paper sensor paper detection signal	0: paper present
	2	MS5S	stitching HP detection signal 2	1: HP
	3	MS7S	stitching HP detection signal 1	1: HP
	4	PI8S	paper positioning plate paper detection signal	0: paper present
	5	PI6S	tray paper detection signal	0: paper present
	6	PI18S	No. 1 paper sensor paper detection signal	0: paper present
	7		not used	
	8-15		not used	
IO-P31	0	PI5S	alignment plate HP sensor connection detection	1: connected
(input)	1	PI14S	paper push-on plate HP sensor connection detection	1: connected
	2	PI3S	delivery door sensor connection detection	1: connected
	3	PI2S	front cover open/closed sensor connection detection	1: connected
	4	PI21S	paper folding HP sensor connection detection	1: connected
	5	PI21S	paper folding HP detection signal	0: HP

Address	Bit	Notation	Description	Remarks
	6		not used	
	7		not used	
	8-15		not used	
IO-P32	0-15		not used	
IO-P33	0	MS4S	staple absent detection signal 2	1: staple absent
(input)	1	MS6S	staple absent detection signal 1	1: staple absent
	2	MS1S	inlet cover open detecting switch signal	0: closed
	3	MS2S	front cover open detecting switch signal	0: closed
	4	PI3S	delivery cover open detecting signal	0: closed
	5	PI2S	front cover open detection signal	1: closed
	6	PI9S	inlet cover open detection signal	1: closed
	7	MS3S	delivery cover open detecting switch signal	1: closed
	8-15		not used	
IO-P34	0		TIP SW1 bit 8	0: ON
(input)	1		TIP SW1 bit 7	0: ON
	2		TIP SW1 bit 6	0: ON
	3		TIP SW1 bit 5	0: ON
	4		TIP SW1 bit 4	0: ON
	5		TIP SW1 bit 3	0: ON
	6		TIP SW1 bit 2	0: ON
	7		TIP SW1 bit 1	0: ON
	8-15		not used	
AD-P09	-		stitcher (rear) punching detection	(hereafter, analog ports)
AD-P10	-		stitcher (front) punching detection	
AD-P11	-		not used	
AD-P12	-	PI9	inlet cover sensor connection detection	connected at '7F' or lower*
AD-P13	-		not used	
AD-P14	-	PI13	guide HP sensor connection detection	connected at '7F' or lower*
AD-P15	-	PI16	stitcher compartment sensor connection detection	connected at '7F' or lower*
AD-P16	-	PI15	paper push-on plate leading edge position sensor connection detection	connected at '7F' or lower*

*Hexadecimal.

4. ADJUST (adjustment mode)

4.1 COPIER

The following screen appears in response to COPIER>ADJUST; for the items, see the pages that follow:

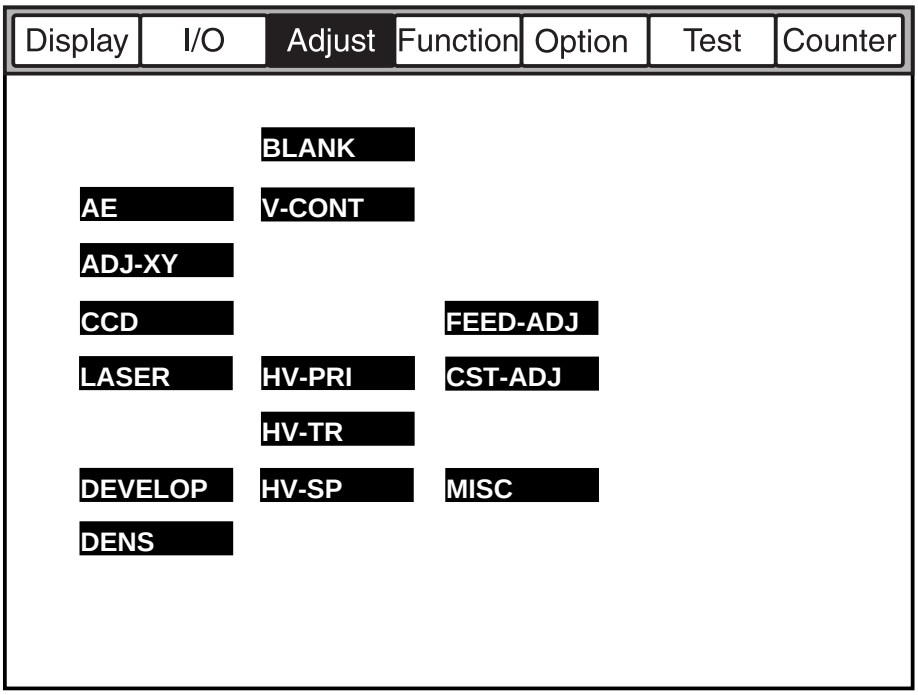

F04-401-01

<AE>

Executing AE Adjustment

If you have cleared the RAM on the reader controller PCB, enter the settings indicated on the service label.

AE-TBL

Use it to adjust the density of characters for image density adjustment.

Range of adjustment

1 to 9 Default: 5

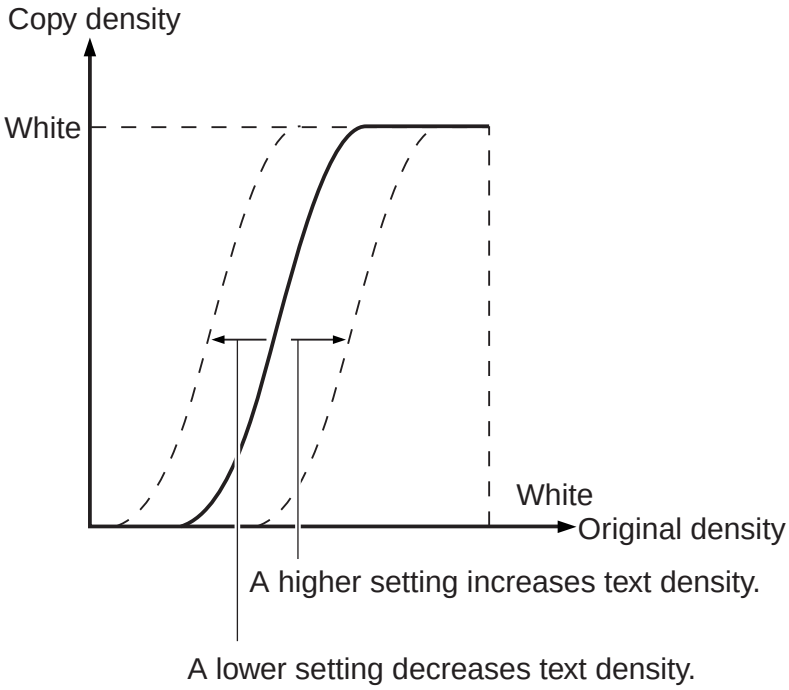

F04-401-02

<ADJ-XY>

Executing Image Read Start Position Adjustment

If you have cleared the RAM on the reader controller PCB, enter the settings indicated on the service label.

ADJ-X

Use it to adjust the scanner image leading edge position.

Range of adjustment

250 to 290 (A change of '1' causes a shift of 0.1 mm.)

Caution

Be sure to execute this mode before adjusting the margin.
Do not use this mode to create a margin.

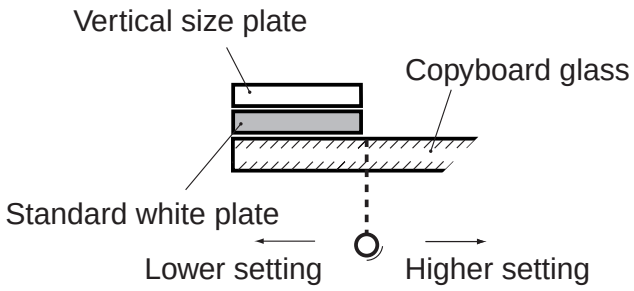

F04-401-03

ADJ-Y

Use it to adjust the CCD read start position.

Range of adjustment

100 to 400 (A change of '1' causes a shift of 0.1 mm.)

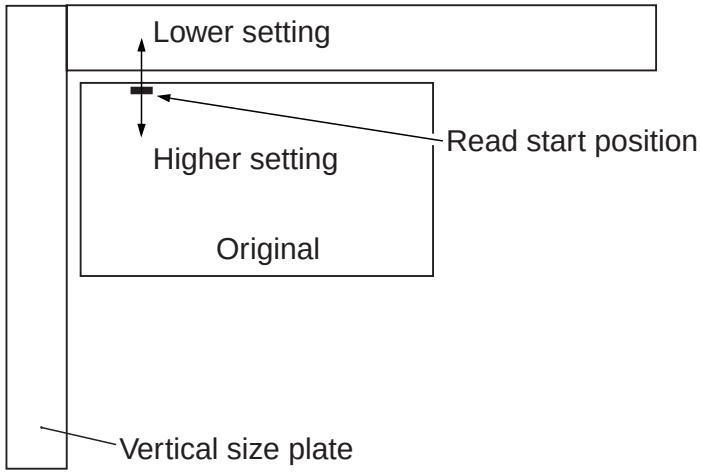

F04-401-04

ADJ-S

Use it to adjust the scanner home position.

Range of adjustment

55 to 70 (A change of '1' causes a shift of 0.1 mm.)

Caution

- Execute this mode if the copyboard glass is soiled so that the standard white plate will be read avoiding the soiled area.
- If you changed the adjustment value, be sure to open and then close the ADF (for HP search).

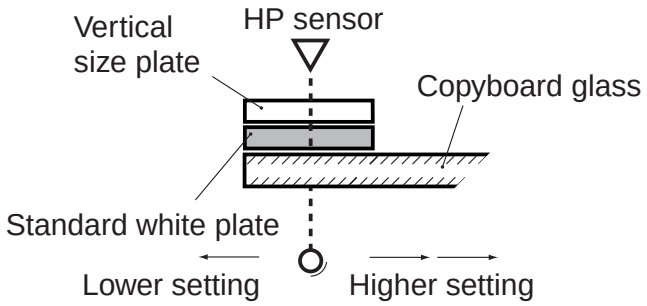

F04-401-05

ADJ-Y-DF

Use it to adjust the ADF read start position (ADF horizontal registration) in scanning direction.

Range of adjustment

100 to 400 (unit: 0.1 mm)

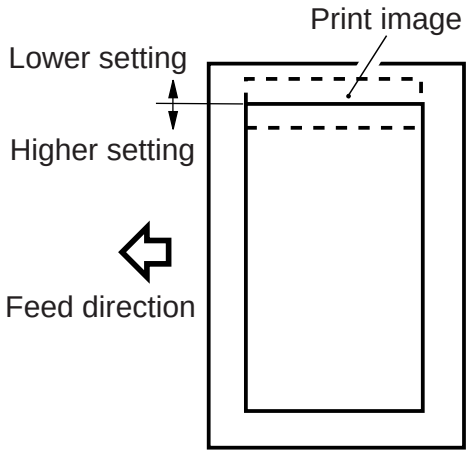

F04-401-06

STRD-POS

Use it to adjust the CCD read position for stream reading.

Range of adjustment

30 to 60 (A change of '1' causes a shift of 0.1 mm.)

<CCD>

Making CCD- and Shading-Related Adjustments

If faulty images are noted after executing COPIER>FUNCTION>CCD>CCD-ADJ, enter the settings indicated on the service label.

SH-TRGT	Use it to enter the white level target value for shading correction.
SH-RATIO	Use it to enter the data on the white label ratio (standard white paper and standard white plate) for shading correction.
EGGN-ST	Use it to enter an adjustment value for the edge gain correction start position for the CCD.
EGGN-END	Use it to enter an adjustment value for the edge gain correction end position for the CCD.

<LASER>

Adjusting the Laser Output

If you have cleared the RAM on the DC controller PCB, be sure to enter the settings indicated on the service label.

PVE-OFST	Use it to adjust the position of laser projection.
Range of adjustment	**-300 to +300**
POWER	Use it to adjust the laser power for non-potential control.
Range of adjustment	**0 to 255**

<DEVELOP>

Adjusting the Developing Bias Output

BIAS	Use it to enter the adjustment value for the development bias.
Range of adjustment	**0 to 600 (A higher setting makes images lighter.)**
Caution	• If you have cleared the RAM on the DC controller PCB, enter the settings indicated on the service label. • This mode is valid only when the potential control mechanism is disabled.
HVT-DE	Use it to enter the offset value for the development high-voltage output for the high-voltage unit.
Caution	If you have replaced the high-voltage unit or cleared the RAM on the DC controller PCB, enter the settings indicated on the new high-voltage unit.
D-HV-DE	Use it to enter the offset value for the development high-voltage output of the DC controller PCB.
Caution	If you have replaced the DC controller PCB or cleared the RAM on the DC controller PCB, enter the settings indicated on the label on the new DC controller PCB.

<DENS>

Making Fine Adjustments for Copy Density Auto Correction

If you have cleared the RAM on the DC controller PCB, enter the settings indicated on the service label.

DENS-ADJ	Use it to correct the density of images (copier/printer). If images are foggy or high-density areas are faint, correct the F-value table.
Range of adjustment	**1 to 9 (default: 5)**

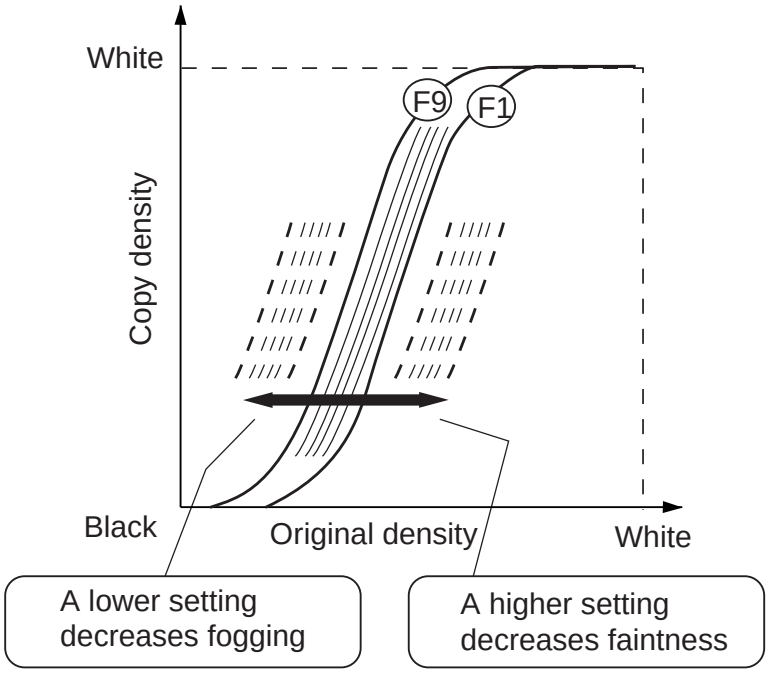

F04-401-07

<BLANK>

Adjusting the Non-Image Width

If you have cleared the RAM on the DC controller PCB, enter the value indicated on the service label.

BLANK-T	Use it to enter the image leading edge non-image width adjustment value.
Range of adjustment	**1 to 500**
BLANK-B	Use it to enter the image trailing edge non-image width adjustment value.

<V-CONT>

Adjusting the Potential Control System

- Normally, the machine's potential control is not executed if the temperature of the fixing assembly is 150°C or higher. If you have adjusted any of the following potential control-related modes, be sure to execute potential control by making the following selections: COPIER>OPTION>BODY>PO-CNT-S.
- If you have cleared the RAM on the DC controller PCB, enter the settings indicated on the service label.

EPOTOFST	Use it to enter the offset value for the potential sensor.
Range of adjustment	**0 to 255 (default: 0)**
VD-OFST	Use it to enter the offset value for the VD target potential for the copier.
Range of adjustment	**-5 to +5 (unit: 10 V; default: 0)**
DE-OFS-P	Use it to enter the offset value for the VL target potential for the printer (PDL; Vdc fine-adjustment).
Range of adjustment	**-50 to +50 (unit: V; default: 0)**
VD-OFS-P	Use it to enter the offset value for the VD target potential (VDC fine-adjustment) for the printer (PDL).
Range of adjustment	**-5 to +5 (unit: 10V; default: 0)**
DE-OFST	Use it to enter the offset value for the VL target value for the copier (Vdc fine-adjustment).
Range of adjustment	**-50 to +50 (default: 0)**

<HV-PR1>

Adjusting the Output of the Primary Charging Assembly

If you have cleared the RAM on the DC controller PCB, enter the settings indicated on the service label.

PRIMARY	Use it to enter the adjustment value of the primary current for non-potential control.
Range of adjustment	**0 to 1400**

<HV-TR>

Adjusting the Output of the Transfer Charging Assembly/Pre-Transfer Charging Assembly

TR-N1	Use it to enter the output adjustment value for the transfer charging current (for printing on the face of plain paper and printing on the 1st side of a double-sided sheet).
Caution	If you have cleared the RAM on the DC controller PCB, enter the settings indicated on the service label.
TR-N2	Use it to enter the output adjustment value for the transfer charging current (printing on the 2nd side of a double-sided plain paper sheet).
Caution	If you have cleared the RAM on the DC controller PCB, enter the settings indicated on the service label.
PRE-TR	Use it to enter the output adjustment value for the pre-transfer charging current.
Caution	If you have cleared the RAM on the DC controller PCB, enter the settings indicated on the service label.
HVT-TR	Enter the offset value for the transfer high-voltage output of the high-voltage unit.
Caution	If you have replaced the high-voltage unit or cleared the RAM on the DC controller PCB, enter the settings indicated on the label attached to the new high-voltage unit.

H-PRE-TR	Use it to enter the offset value for the pre-transfer high-voltage output of the DC controller PCB.
Caution	If you have replaced the DC controller PCB or cleared the RAM on the DC controller PCB, enter the settings indicated on the label attached to the new DC controller PCB.
D-PRE-TR	Use it to enter the offset value for the pre-transfer high-voltage output of the DC controller PCB.
Caution	If you have replaced the DC controller PCB or cleared the RAM on the DC controller PCB, enter the settings indicated on the label attached to the new DC controller PCB.
D-HV-TR	Use it to enter the offset value for the transfer high-voltage output of the DC controller PCB.
Caution	If you have replaced the DC controller PCB or cleared the RAM on the DC controller PCB, enter the settings indicated on the label attached to the new DC controller PCB.

<HV-SP>

Adjusting the Output of the Separation Charging Assembly

SP-N1	Use it to enter the output adjustment value of the separation charging current (printing on the face of a sheet of plain paper and printing on the 1st side of a double-sided sheet).
Caution	If you have cleared the RAM on the DC controller PCB, enter the settings indicated on the service label.
SP-N2	Use it to enter the output adjustment value of the separation charging current (printing on the 2nd side of a double-sided sheet of plain paper).
Caution	If you have cleared the RAM on the DC controller PCB, enter the settings indicated on the service label.
HVT-SP	Use it to enter the offset value for the separation high-voltage output of the high-voltage unit.
Caution	If you have replaced the high-voltage unit or cleared the RAM on the DC controller PCB, enter the settings indicated on the label attached to the new high-voltage unit.

D-HV-SP	
	Use it to enter the offset value for the separation high-voltage output of the DC controller PCB.
Caution	If you have replaced the DC controller PCB or cleared the RAM on the DC controller PCB, enter the settings indicated on the label attached to the new DC controller PCB.

<FEED-ADJ>

Adjusting the Feeder System

REGIST	
	Use it to adjust the timing at which the registration roller clutch turns on. • A higher setting delays the timing at which the registration roller clutch turns on, thereby decreasing the leading edge margin.
Range of adjustment	**-50 to +50 (unit: 0.1 mm)**
Caution	If you have cleared the RAM on the DC controller PCB, enter the settings indicated on the service label.
ADJ-REFE	
	Use it to adjust the horizontal registration for re-pickup. • If the image is displaced on the front, increase the setting.
Range of adjustment	**-101 to +100 (unit: 0.1 mm)**
Caution	If you have cleared the RAM on the DC controller PCB, enter the settings indicated on the service label.
RG-MF	
	Use it to adjust the timing at which the registration roller clutch turns on at time of pickup in manual feed mode. • A higher setting delays the timing at which the registration roller clutch turns on, thereby decreasing the leading edge margin.
Range of adjustment	**-50 to +50 (unit: 0.1 mm)**
Caution	If you have cleared the RAM on the DC controller PCB, enter the settings indicated on the service label.

<CST-ADJ>

Making Cassette-/Manual Feed-Related Adjustments

If you have cleared the RAM on the DC controller PCB, enter the settings indicated on the service label.

C3-STMTR	Enter the paper width basic value (STMTR) for the cassette 3.
Caution	If you have replaced the paper width detecting VR, execute FUNCTION>CST in service mode.
C3-A4R	Use it to enter the paper width basic value (A4R) for the cassette 3.
Caution	If you have replaced the paper width detecting VR, execute FUNCTION>CST in service mode.
C4-STMTR	Use it to enter the paper width basic value (STMTR; 100-V model only) for the cassette 4.
Caution	If you have replaced the paper width detecting VR, execute FUNCTION>CST in service mode.
C4-A4R	Use it to enter the paper width basic value (A4R; 100-V model only) for the cassette 4.
Caution	If you have replaced the paper width detecting VR, execute FUNCTION>CST in service mode.
MF-A4R	Use it to enter the paper width basic value (A4R) for the manual feed tray.
Caution	If you have replaced the paper width detecting VR, execute FUNCTION>CST in service mode.
MF-A6R	Use it to enter the paper width basic value (A6R) for the manual feed tray.
Caution	If you have replaced the paper width detecting VR, execute FUNCTION>CST in service mode.
MF-A4	Use it to enter the paper width basic value (A4) for the manual feed tray.
Caution	If you have replaced the paper width detecting VR, execute FUNCTION>CST in service mode.
C3-LVOL	Use it to enter the stacking capacity of the cassette 3 (50 sheets).
C3-HVOL	Use it to enter the stacking capacity of the cassette 3 (275 sheets).

C4-LVOL	Use it to enter the stacking capacity of the cassette 4 (50 sheets).
C4-HVOL	Use it to enter the stacking capacity of the cassette 4 (275 sheets).

<MISC>

Making Other Adjustments

If you have cleared the RAM on the DC controller PCB, enter the settings indicated on the service label.

ATM	Use it to select an operating environment in relation to atmospheric pressure. A low atmospheric pressure tends to cause leakage; lower the target potential control.	
Range of adjustment	**0 to 2**	**0: 1 to 0.75 atm (up to altitude of 2500m)** **1: 0.75 to 0.70 atm (up to altitude of 2500 to 3000m)** **2: 0.70 to 0.65 atm (up to altitude of from 3000 to 3500m)**

4.2 FEEDER

DOCST

Use it to adjust the original leading edge registration when the ADF is selected as the source of paper.

- A higher setting decreases the leading edge margin.
- The data will be stored on the ADF controller PCB.

Range of adjustment

-10 to +10 (unit: 0.5 mm)

Using the Mode

1) Make a print of the test chart, and check the position of the image.
2) Select the mode item, and change the setting to make adjustments.
3) Press the OK key.
4) Make a print of the test chart once again, and check to see the position of the image is as indicated.

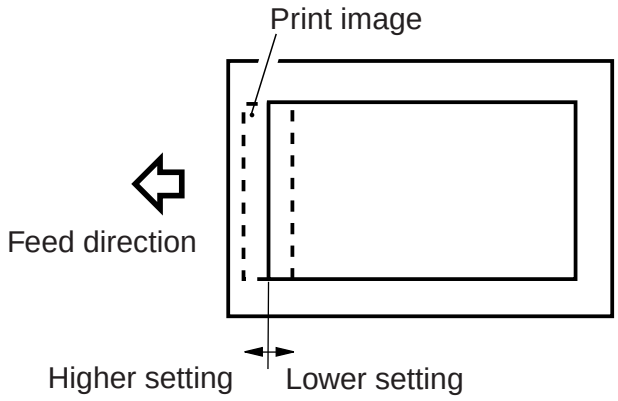

F04-402-01

LA-SPEED

Use it to adjust the original feed speed for ADF stream reading speed.

- A higher setting increases the speed.
- The data will be stored on the ADF controller PCB.

Range of adjustment

-30 to +30 (unit: 0.1%)

4.3 SORTER

PNCH-HLE

Use it to adjust the position of the punch holes (paper feeding direction) when the puncher unit is used.

- A higher setting moves the punch holes toward the leading edge (middle) of the sheet.

Range of adjustment

-4 to +2 (unit; mm)

Using the Mode

1) Make a print of the Test Chart, and check the position of the holes.
2) Select this item, and change the setting as needed.
3) Press the OK key.
4) Make a print of the Test Chart once again, and see that the position for the holes is as indicated.

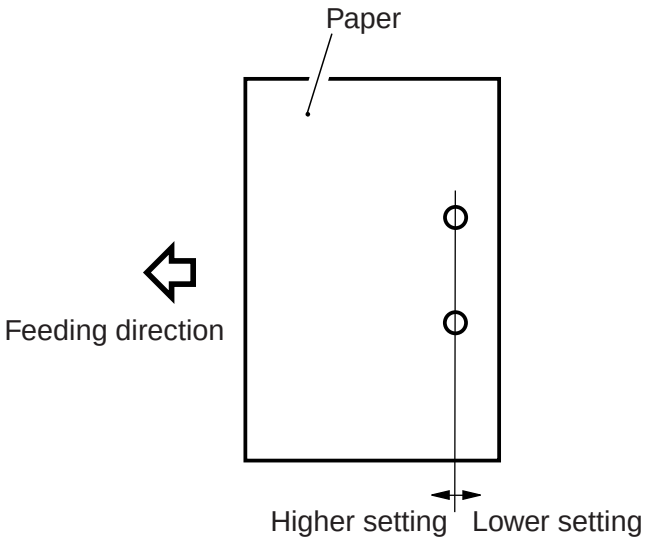

F04-403-01

5. FUNCTION (operation/inspection mode)

5.1 COPIER

The following screen appears in response to COPIER>FUNCTION; for the items, see the pages that follow:

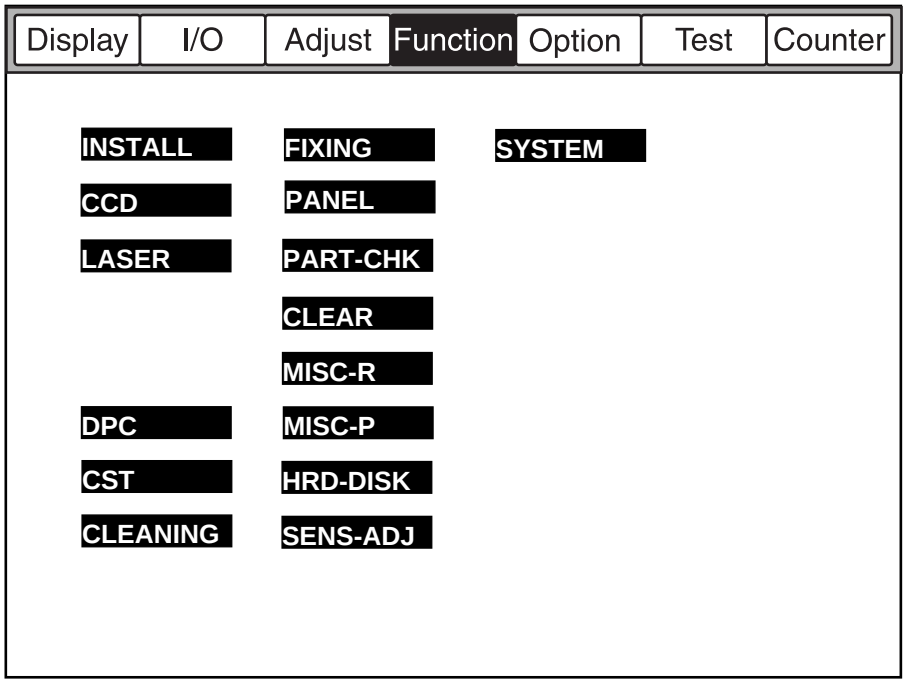

F04-501-01

<INSTALL>

Modes for Installation

TONER-S	Use it to supply toner from the hopper to the developing assembly and to stir the toner inside the developing assembly.
Caution	• Make sure that the developing assembly is properly mounted before pressing the OK key. • Do NOT turn off the power while the machine is in operation.
	Using the Mode 1) Select the mode item, and press the OK key. 2) The machine executes toner supply. (about 8 to 10 min) • While toner is being supplied, the duration (sec) is counted down starting at '600 sec'. 3) The machine stops automatically at the end of the operation.
STRD-POS	Use it to execute auto adjustment of the position of the CCD read position for stream reading mode.
Caution	• Execute this mode at time of installing an ADF or if you have removed and then installed the existing ADF.
	Using the Mode 1) Select this item, and press the OK key. • Auto adjustment is executed. 2) See that the adjustment ends automatically. 3) Record the updated setting indicated in service mode on the service label: COPIER>ADJUST>ADJ-XY>STRD-POS.

<CCD>

Executing Auto Adjustment for CCD-/Shading-Related Items

CCD-ADJ

Use it to execute CCD auto adjustment.

Caution

- Execute this mode if you have replaced the CCD unit, scanning lamp, inverter PCB, or copyboard glass (standard white plate).
- Use the whitest of all papers used by the user as the standard white paper.

Using the Mode

1) Place sheets of standard white paper (10 sheets min.) on the copyboard glass.
2) Select the mode item, and press the OK key.
   - The machine executes auto adjustment. (about 1 min)
   - The machine stops operation at the end of auto adjustment.
3) Record the updated settings on the service label (all under COPIER>ADJUST>CCD).

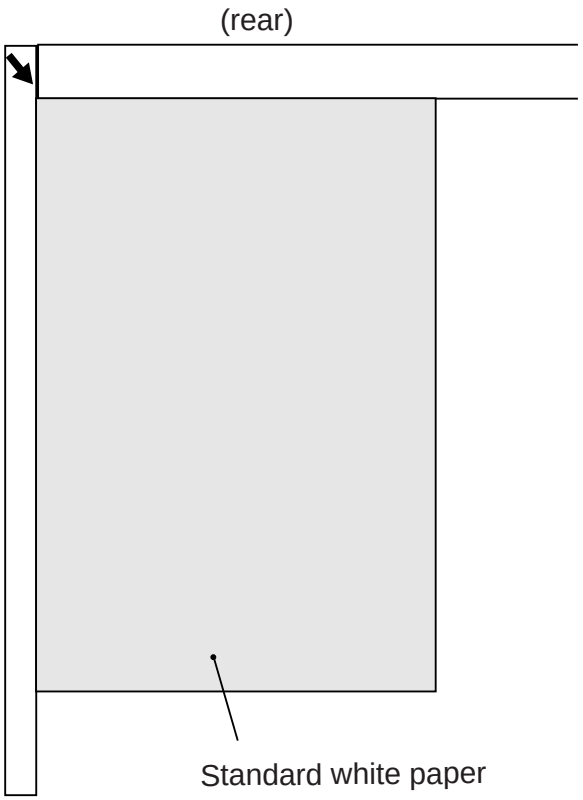

F04-501-02

SHDG-POS	
	Use it to enter the data for optimum position auto adjustment in reference to the standard white plate for shading correction.
Caution	Do not use this mode item. It is for use at the factory only.
SH-PS-ST	
	Use it to execute optimum position auto adjustment in reference to the standard white plate for shading correction.
Caution	The following must be executed before initiating auto adjustment in this mode: COPIER>FUNCTION>CCD>CCD-DJ. Using the Mode 1) Clean the back of the copyboard glass. 2) Select the mode item, and press the OK key. • The machine executes auto adjustment. (several tens of seconds) • The machine stops automatically at the end of the operation.
EGGN-POS	
	Use it to execute auto adjustment for the edge gain correction position for the CCD. (The CCD edge gain correction mechanism is effective only when an ADF is in use.)
Caution	• If the CCD unit has been replaced, be sure to execute the following in advance: COPIER>FUNCTION>CCD>CCD-ADJ. • If the CCD unit, No. 1 mirror mount, or No. 2 mirror mount has been replaced, execute this mode. Using the Mode 1) Open the ADF (copyboard cover; be sure to do so). 2) Select the item, and press the OK key. 3) Wait until auto adjustment ends (about 1 sec). 4) See that auto adjustment ends automatically and the results (OK/NG) are displayed. • If NG is indicated, check the following, and execute adjustment once a. Is the ADF (copyboard cover) open? b. Is the reading glass mounted correctly? c. Is the edge gain correcting plate attached to the reading glass normal? d. Is the scanning lamp on?

5) When the following has been updated, enter the new settings:
COPIER>ADJUST>CCD-EGGN-ST and -EGGN-END.

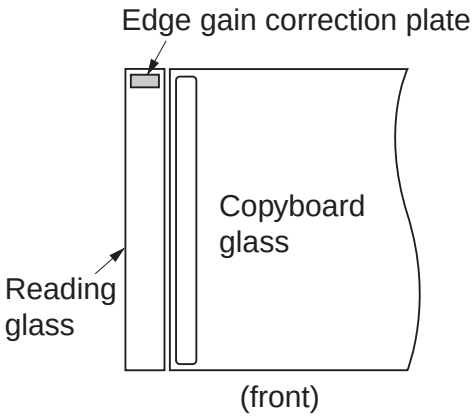

F04-501-03

<LASER>

Using Laser-Related Operations

POWER	Turning On the Laser Using the Mode 1) Select the mode item, and press the OK key. • The laser turns on. • The laser turns off automatically in 30 sec. (To turn it off earlier, press the Stop key.)

<DPC>

Using Potential Sensor-Related Operations

DPC	Use it to force potential control.
Caution	The machine will not execute potential control when the power switch is turned off and then on if the temperature of the fixing assembly is 150ºC or higher. If you have replaced the photosensitive drum or the laser unit, or changed the drum potential setting, execute potential control using this mode item. Using the Mode 1) Select the mode item, and enter '1', then, press the OK key. 2) Turn off and then on the power switch. • The machine will execute potential control.
OFST	Use it to execute offset adjustment for the potential sensor.
Caution	Do not execute this mode on its own; it is designed as part of a series of work to perform after replacing the potential sensor unit. (See the Printer Manual: Chap. 4, 7. "Disassembly and Assembly.") Using the Mode 1) Select the mode item, and press the OK key. • The machine stops the operation automatically at the end of offset adjustment.

<CST>

Executing Size Auto Adjustment for the Cassette/Manual Feed Tray

C3-STMTR C3-A4R C4-STMTR C4-A4R	Use it to store the paper width basic value for the cassette 3/4. STMTR width: 139.5 mm, A4R width: 210 mm
Caution	For fine adjustment after storing the basic value, make the following selections: ADJUST>CST-ADJ>C3-STMTR, C3-A4R, C4-STMTR, C4-A4R. Using the Mode 1) Place STMTR paper in the cassette, and adjust the side guide plate to suit the STMTR width. 2) Select C3-STMTR (C4-STMTR), and press the OK key. • The machine executes adjustment automatically, at the end of which the value is stored. 3) Likewise, repeat steps 1) and 2) for A4R.
MF-A4R MF-A6R MF-A4	Use it to store the paper width basic value for the manual feed tray.
Caution	For fine adjustment after storing the basic value, make the following selections: ADJUST>CST-ADJ>MF-A4R, MF-A6R, MF-A4. Using the Mode 1) Place A4R paper on the manual feed tray, and adjust the side guide to the A4R width. 2) Select MF-A4R, and press the OK key. • The machine executes adjustment automatically, at the end of which the value is stored. 3) Likewise, repeat steps 1) and 2) for A6R and A4.

<CLEANING>

Executing Cleaning Operations

WIRE0-CLN	Use it to execute automatic cleaning of the charging wire five times (5 round trips) consecutively.
Caution	If you have replaced the primary charging wire or the transfer charging wire, execute this mode item. Using the Mode 1) Select the mode item, and press the OK key. • The machine executes auto cleaning of the charging wire five times consecutively. • The machine stops automatically at the end of the cleaning operation.

<FIXING>

Executing Auto Adjustment for Fixing Assembly-Related Items

NIP-CHK	Use it to obtain an output for measuring the fixing nip width. Using the Mode 1) Make about 20 A4 copies of the test sheet. 2) Place an A4 sheet of paper on the manual feed tray. 3) Select the mode item (to highlight), and press the OK key. • The sheet will be picked up and stopped between the fixing rollers; it is then discharged in about 20 secs. 4) Measure the width of the area indicated.

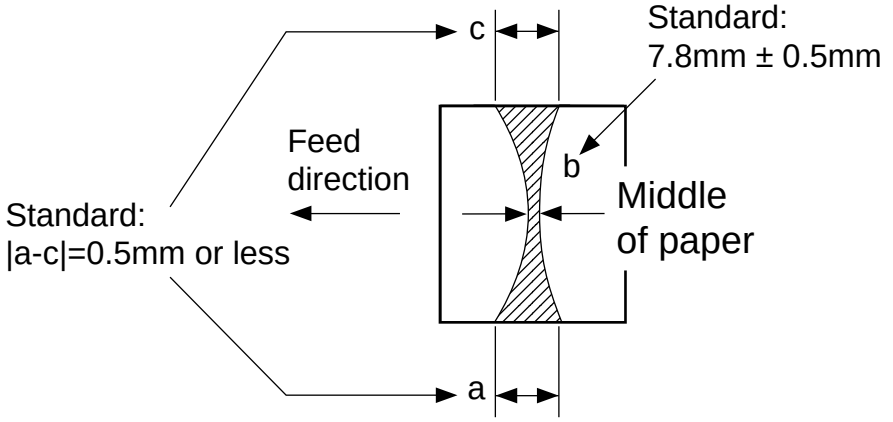

F04-501-04

Caution	a and b are points 10 mm from the edges of paper.

<PANEL>

Checking the Control Panel

LCD-CHK	Use it to check for missing dots on the touch panel. Using the Mode 1) Select the mode item, and press the OK key. • The entire face of the touch panel turns on in white and blue repeatedly. 2) Press the Stop key to stop the operation.
LED-CHK	Use it to check the LEDs on the control panel. Using the Mode 1) Select the mode item, and press the OK key. • The LEDs will turn on in sequence. 2) Select LED-OFF to end the operation.
LED-OFF	Use it to end a LED check of the control panel. Using the Mode 1) Select the mode item to end the check.
KEY-CHK	Use it to check key inputs. Using the Mode 1) Select the mode item. 2) Press any key so that its corresponding character will appear on the touch panel, indicating that the input is normal. (T05-501-01)
TOUCHKEY Caution	Use it to adjust the coordinates of the touch panel. • Use it to mach the points of presses on the touch panel and the LCD coordinates. • Execute this mode if you have replaced the LCD unit. Using the Mode 1) Select the mode item, and press the OK key. 2) Press '+' indicated on the touch panel at nine locations in sequence. 3) Select TOUCHKEY once again to end the operation.

<INPUT KEY/DISPLAY>

Key	Screen display	Key	Screen display
counter check	BILL	start	START
copy	COPY	mail box	PB
scan	OTHER	reset	RESET
0 to 9	0 - 9	energy saver	STAND BY
stop	STOP	clear	CLEAR
ID	ID	interrupt	INTERRUPT
additional functions	USER	guide	?

T04-501-01

<PART-CHK>

Checking the operation of various loads.

CL	Use it to select the clutch to check. Using the Mode 1) Select the mode item. 2) Using the keypad, enter the code of the clutch in question (T05-501-02). 3) Press the OK key.
CL-ON	Use it to check the operation of a clutch. Using the Mode 1) Select the mode item, and press the OK key. • ON → 10 secs OFF → ON → 10 secs OFF → ON → OFF

MTR	Use it to select the motor to check. Using the Mode 1) Select the mode item. 2) Using the keypad, enter the code of the motor to check (T04-501-03). 3) Press the OK key.
MTR-ON	Use it to check the operation of the motor. Using the Mode 1) Select the mode item, and press the OK key. • ON for 20 secs → OFF • The hopper motor and the duplex horizontal registration motor remains on for 10 sec and then turns off. • The shift tray motor stops at the front/rear home position.
SL	Use it to select the solenoid to check for operation. Using the Mode 1) Select the mode item. 2) Using the keypad, enter the code of the solenoid (T04-501-04). 3) Press the OK key.
SL-ON	Use it to check the operation of the solenoid. Using the Mode 1) Select the mode item, and press the OK key. • ON → OFF for 10 secs → ON → OFF for 10 secs → ON → OFF

<Code/Clutch Name>

Code	Name
1	manual feed clutch (CL3)
2	left deck pull-out clutch (CL4)
3	paper deck pickup clutch (CL102)
4	developing clutch (CL1)
5	registration roller clutch (CL2)

T04-501-02

<Code/Motor Name>

Code	Name	Code	Name
1	drum motor (M1)	13	left deck pickup motor (M24)
2	main motor (M2)	14	cassette 3/4 pickup motor (M12)
3	fixing motor (M19)	15	vertical path duplexing feed motor (M25)
4	laser scanner motor (M15)	16	vertical path lower motor (M27)
5	hopper stirring motor (M9)	17	vertical path upper motor (M26)
6	hopper supply motor (M10)	18	paper deck main motor (M101)
7	duplexing horizontal registration motor (M16)	19	reversal motor (M14)
8	right deck lifter motor (M5)	20	duplexing feed left motor (M29)
9	left deck lifter motor (M4)	21	delivery motor (M13)
10	cassette 3 lifter motor (M20)	22	pre-registration motor (M17)
11	cassette 4 lifter motor (M21)	23	duplexing feed right motor (M18)
12	right deck pickup motor (M11)	24	shift tray motor (SM 101)

T04-501-03

<Code/Solenoid Name>

Code	Name	Code	Name
1	right deck pickup solenoid (SL6)	7	delivery flapper solenoid (SL5)
2	left deck pickup solenoid (SL7)	8	reversing flapper solenoid (SL8)
3	cassette 3 pickup solenoid (SL3)	9	fixing inlet guide drive solenoid
4	cassette 4 pickup solenoid (SL4)		(SL1); return
5	manual feed releasing solenoid (SL2)	10	fixing inlet guide drive solenoid
6	paper deck pickup roller		(SL1); draw
	releasing solenoid (SL101)	11	fixing web solenoid (SL9)

T04-501-04

<CLEAR>

Cleaning the RAM, Jam History, and Error Code History

The data is cleared only when the main power switch has been turned off and then on; be sure to turn it off and then on at the end.

ERR	Use it to clear error codes. Using the Mode 1) Select the mode item, and press the OK key. 2) Turn off and then on the main power switch.
DC-CON	Use it to clear the RAM on the DC controller PCB. Using the Mode 1) Select the mode item, and press the OK key. 2) Turn off and then on the main power switch.
R-CON	Use it to clear the RAM on the reader controller PCB. Using the Mode 1) Select the mode item, and press the OK key. 2) Turn off and then on the main power switch.
SERVICE	Use it to clear the backup data of service mode (COPIER>OPTION). Using the Mode 1) Select the mode item, and press the OK key. 2) Turn off and then on the main power switch.
JAM-HIST	Use it to clear the jam history. Using the Mode 1) Select the mode item, and press the OK key. 2) Turn off and then on the main power switch.
ERR-HIST	Clearing the Error History Using the Mode 1) Select the item, and press the OK key. 2) Turn off and then on the main power switch.
E354-CLR	---
E355-CLR	---

PWD-CLR	Use it to clear the password set for 'system administrator' in user mode. Using the Mode 1) Select the mode item, and press the OK key. 2) Turn off and then on the main power switch.
CNT-MCON	Use it to clear the counter for servicing located on the main controller PCB. Using the Mode 1) Select the mode item, and press the OK key. 2) Turn off and then on the main power switch.
CNT-DCON	Use it to clear the counter for servicing found on the DC controller PCB. Using the Mode 1) Select the mode item, and press the OK key. 2) Turn off and then on the main power switch.
MMI	Use it to clear the backup data on user mode settings (spec, ID, group ID, mode memory, etc.). Using the Mode 1) Select the mode item, and press the OK key. 2) Turn off and then on the main power switch.

<MSIC-R>

Checking Reader Unit-Related Operations

SCANLAMP	Use it to check the activation of the scanning lamp. Using the Mode 1) Select the mode item, and press the OK key. • The scanning lamp will turn on. 2) Press the Stop key to turn off the lamp.

<MISC-P>

Checking Printer-Related Operations

P-PRINT	Use it to print out a list of service mode items. Using the Mode 1) Select the mode item, and press the OK key. • The machine will print out a list of service mode items.

KEY-HIST	Use it to print out the history of key inputs made on the control panel. Using the Mode 1) Select the mode item, and press the OK key. • The machine will print out the history of key inputs.
HIST-PRT	Use it to print out the history of jams and errors in service mode. Using the Mode 1) Select the item mode, and press the OK key. • The machine will print out the history of jams and errors.
USER-PRT	Use it to print out a list of user modes in service mode. Using the Mode 1) Select the mode item, and press the OK key. • The machine will print out a list of user modes.
PRE-EXP	Use it to check the activation of the pre-exposure LED. Using the Mode 1) Select the mode item, and press the OK key. • The pre-exposure LED will remain on for about 3 secs and will turn off.

<HRD-DISK>

Use it to check the operation of the hard disk.

SCANDISK Caution	Use it to detect an error on the hard disk. Use it on a hard disk found to have a problem. Using the Mode 1) Select the mode item, and press the OK key. • Once operation starts, counting is executed starting with 0%; the opera tion ends at 100% (in about 25 mins).
FORMAT Caution	Use it to initialize the image area of the hard disk. • Use it on a normal hard disk. • Use it at time of shipment from the factory or upon replacement of the hard disk. Using the Mode 1) Select the mode item, and press the OK key. • The operation will end in about 1 sec, and the power will turn off.

<SENS-AJD>

Use it to check the operation of sensors.

STCK-LMT	
	Use it to adjust the position of the full sensor (PS104, PS105) of the shift tray. • If either of the full sensors (or both) detects paper, the machine will indicate ‘ON’. • If neither of the sensors detects paper, the machine will indicate ‘OFF’.
Caution	• Use this mode when the full sensor has been replaced. • Be sure to move the sensors starting at the point farthest from the paper, moving them closer to the paper (in keeping with the characteristics of the sensors).
	Using the Mode 1) Keep both sensors at the point farthest from the paper. 2) Place a stack of sheets (about 60 mm high) at the point of detection of either sensor on the shift tray. 3) Select the mode item, and press the OK key. 4) By referring to the indication, move the sensor closer to the paper, and fix it in position where the indication changes to ‘ON’. 5) Move the paper to the position of detection of the other sensor. 6) Repeat step 4) for the other sensor. 7) Press the Stop key to end the adjustment.

<SYSTEM>

Checking System-Related Operations

DOWNLOAD	
	Use it to switch to download mode of the system program.
Caution	
	Using the Mode 1) Turn off the machine and the PC. 2) Disconnect the network-related cable connected to the machine. 3) Connect the machine with the PC with a bi-Centronics cable. 4) Turn on the PC. 5) Turn on the machine. 6) Select the mode item, and press the OK key. 7) Start downloading using the service support tool. 8) At the end of the operation, turn off and then on the main power switch.

5.2 FEEDER

SENS-INT	
	Use it to adjust the sensitivity of each sensor of the ADF.
Caution	Be sure to clean the sensor before executing this mode.
	Using the Mode
	1) Select the mode item, and press the OK key.
	• The machine stops operation at the end of the adjustment.

6. OPTION (settings mode)

6.1 COPIER

The following screen appears in response to COPIER>OPTION; for the items, see the pages that follow:

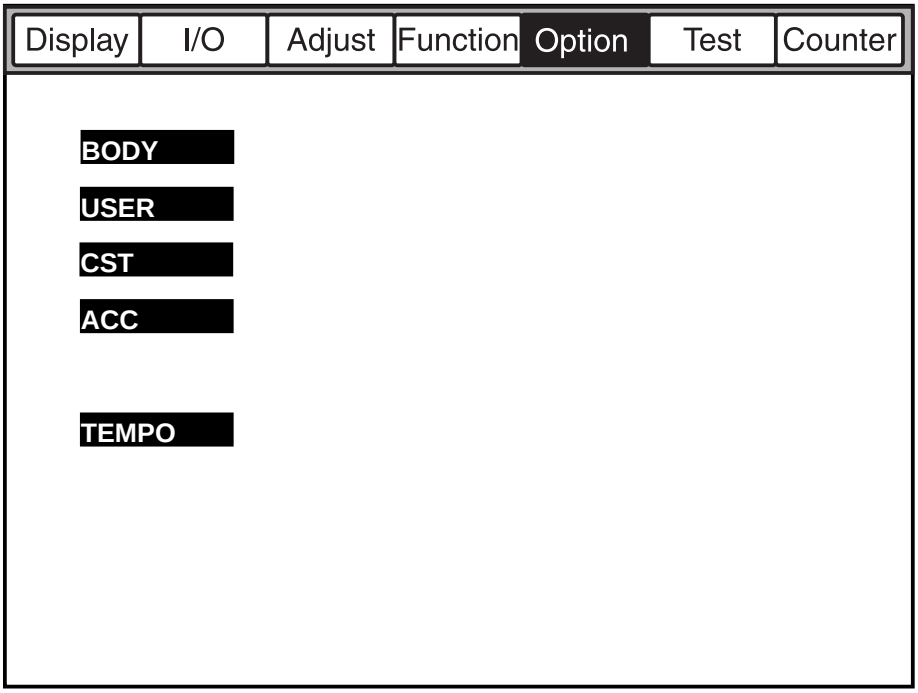

F04-601-01

BODY

Use it to make machine settings.

PO-CNT	
	Use it to turn on/off potential control.
Settings	**0: off, 1: on (default)**
PO-CNTMD	
	Use it to select a potential control mode.
Settings	**0: one at time of power-up (default)** **1: 10 mins and 60 mins after power-up (reduced mode)** **2: 10 mins and 60 mins after power-up (normal mode)**
W-CLN-P	
	Use it to set the intervals at which auto cleaning of the primary charging wire is executed in terms of the number of prints.
Settings	**100 to 2000 (default: 2000)**
MODEL-SZ	
	Use it to switch default ratios display and ADF original size detection by site.
Settings	**0: AB (6R5E), 1: INCH (5R4E), 2: A (3R3E), 3: AB/INCH (6R5E)**
FIX-TEMP	
	Use it to select down sequence mode.
Settings	**0: OFF, 1: priority on fixing while controlling down sequence temperature to +10°C for all, 2: priority on productivity while controlling down sequence temperature to -5°C for all**
IDL-MODE	
	Use it to select idle rotation mode for the developing assembly.
Settings	**0: OFF (no idle rotation; default)** **1: auto control by environment sensor** **2: idle rotation started when fixing temperature reaches 100°C** **3: idle rotation started when main power switch is turned on**
FSPD-S1	
	Use it to switch fixing control for special paper. • The selection of this mode disables the function of OHP-TEMP and WARM-UP. • The special paper mode (2 below) is valid for the 120/230-V model only, and is executed when a source of paper assigned to thick paper is selected.
Settings	**0: normal mode (plain paper; default), 1: special paper 1 mode (in high humidity environment, reduces fixing temperature),** **2: special paper mode (thick paper)**

FUZZY	
	Use it to turn on/off fuzzy control and to make environment settings. • The selection will affect pre-transfer, transfer, and separation charging currents. • Selecting 1 through 3 will make the operation independent of the environment sensor.
Settings	**0: fuzzy control ON (default), 1: low humidity environment mode (current level lower than standard),** **2: normal humidity environment mode, 3: high humidity environment mode (current level higher than standard)**
TSPLY-SW	
	Use it to switch the toner supply sequence executed in conjunction with the humidity sensor.
Settings	**0: changes control of toner supply motor by humidity data automatically (default)** **• medium/low humidity: ON for 2 sec, OFF for 1 sec** **• high humidity: ON for 4 sec, OFF for 2 sec** **1: uses fixed pattern (ON for 2 sec, OFF for 1 sec)**
SCANSLCT	
	Use it to turn on/off the ADF original size detection mechanism. • When ON, the scan size is determined according to the detected original size.
Settings	**0: OFF (default), 1: ON**
OHP-TEMP	
	Use it to switch the temperature setting for transparency mode. • The control mechanism will use a lower fixing temperature to improve separation of transparencies from the fixing roller.
Caution	This mode is disabled if WARM-UP, FSPD-S1 is set.
Settings	**0: OFF (default)** **1: normal temperature control -5°C** **2: normal temperature control -10°C** **3: normal temperature control -15°C** **4: normal temperature control -20°C**
F-GD-CNT	
	Use it to select the descent mode for the fixing inlet guide. • Move down the inlet guide if uneven density or light images occur as a result of uneven fixing.
Settings	**0: normal control (default)** **1: moves down inlet guide for 1st side only (A4R/297 mm or larger)**

CONFIG	
	Use it to select multiple pieces of firmware retained on the hard disk so as to make appropriate settings: country, language, model, paper size series.
Settings	**XXYYZZAA XX: country (JP), YY: language (ja), ZZ (00); model, AA (00): paper size series; display will be in the following sequence and the parentheses indicate default settings: COPIER>DISPLAY>USER>LANGUAGE.**
	Using the Mode 1) Select CONFIG. 2) Select an item (to highlight), and press the +/- key to scan through the items. 3) When the appropriate setting has appeared for each item, press the OK key. 4) Turn off and then on the main power switch.
WARM-UP	
	Use it to reduce the warm-up time if the room temperature is likely to be about 18°C or higher when the machine is first turned on. In the case of the iR5000 Series, the multiple rotation initial, standby, and print start temperatures are reduced by 15°C. In the case of the iR6000 Series (100-V model), the period of initial multiple rotation is reduced by 1 min.
Caution	• For the 120/230-V model, the same control mechanism is used for both iR6000 Series and iR5000 Series. • This mode is disabled if FSPD-S1 is set.
Settings	**0: standard (default), 1: reduced mode (as above)**
SHARP	
	Use it to change the sharpness level of the image. • A higher setting makes the images sharper.
Settings	**1 to 5 (default: 3)**
LAPC-SW	
	Use it to switch laser APC correction.
Settings	**0: ON (initial rotation APC executed if left alone for 10 min), 1: ON (initial rotation ON APC executed if left alone for 60 min; default), 2: (initial rotation APC executed if left alone for 120 min) 3: initial rotation APC only off; 4: OFF**
FDW-DLV	
	Use it to switch face-up delivery to ensure stacking performance when making multiple prints.
Settings	**0: normal (all in face-up delivery, if single original; default)** **1: face-up delivery for single print of single original, face-down delivery for multiple prints)**

COTDPC-D	
	For factory use.
Settings	**0 to 3 (default: 0)**
EVL-VDT	
	Use it to switch the drum target potential (VDT) and the developing bias (Vdc) to reduce traces of black fixing separation claws caused by an excess deposit of toner in a low-humidity environment.
Settings	**0: no change** **1: for copy image, VDT -35 V; for printer image, VDT -25 V/Vdc +25 V (default)** **2: for copy image, VDT -50 V; for printer image, VDT -50 V/Vdc +25 V** **3: for copy image, VDT -35 V; for printer image, no change** **4: for copy image, VDT -50 V; for printer image, no change** **5: for copy image, no change; for printer image, VDT -25 V/Vdc +25 V** **6: for copy image, no change; for printer image, VDT -50 V/Vdc +25 V**
RMT-LANG	
	Use it to switch the language for remote UI driven over the WEB.
Settings	**Use it to select a language code (ja, en, etc.) to identify the site; expressed as in service mode (COPIER>DISPLAY>USER>LANGUAGE).** Using the Mode 1) Select RMT-LANG. 2) Each press on the +/- key brings up a different language code. 3) When the desired language code has appeared, press the OK key.
HI-HUME	
	Use it to switch the developing bias frequency if separation faults occur in a high-humidity environment.
Caution	If separation faults occur in the above environment, set it to '1'.
Settings	**0: 2700 Hz (default), 1: 2000 Hz**
TR-SP-C1	
	Use it to switch the transfer/separation output level when the right deck is used as the source of paper to prevent various problems.
Settings	**0: normal (default), 1: to prevent re-transfer** **2: to prevent separation fault, 3: to prevent transfer fault**
TR-SP-C2	
	Use it to switch the transfer/separation output level when the left deck is used as the source of paper to prevent various problems.
Settings	**0: normal (default), 1: to prevent re-transfer** **2: to prevent separation fault, 3: to prevent transfer fault**

TR-SP-C3	
	Use it to switch the transfer/separation output level when the cassette 3 is used as the source of paper to prevent various problems.
Settings	**0: normal (default), 1: to prevent re-transfer** **2; to prevent separation fault, 3: to prevent transfer fault**
TR-SP-C4	
	Use it to switch the transfer/separation output level when the cassette 4 is used as the source of paper to prevent various problems.
Settings	**0: normal (default), 1: to prevent re-transfer** **2: to prevent separation fault, 3: to prevent transfer fault**
TR-SP-MF	
	Use it to prevent the transfer/separation output level when the manual feed tray is used to prevent various problems.
Settings	**0: normal (default), 1: to prevent re-transfer** **2: to prevent separation fault, 3: to prevent transfer fault**
TR-SP-DK	
	Use it to switch the transfer/separation output level when the paper deck is used as the source of paper to prevent various problems.
Settings	**0: normal (default), 1: to prevent re-transfer** **2: to prevent separation fault, 3: to prevent transfer fault**
TPR-DECL	
	Use it to switch the delivery path to improve stacking performance in reverse delivering thick paper.
Settings	**0: normal (default), 1: move paper over reversing roller, and reverse/ delivery after removing curl**
DF_BLINE	
	Use it to turn on/off reduce mode (turning off edge emphasis) for black lines in stream reading mode.
Caution	Turning on the mode will make black lines less noticeable, but the edges of images will accordingly be less sharp
Settings	**0: OFF (default), 1: ON**

USER

Making User-Related Settings

COPY-LIM	
	Use it to change the upper limit for setting a copy count.
Settings	**1 to 999 (default: 999)**

SLEEP	
	Use it to turn on/off sleep mode.
Settings	**0: OFF, 1: ON (default)**
WEB-DISP	
	Use it to turn on/off the fixing web length warning. • If OFF (no warning), the message will appear only when service mode is started.
Settings	**0: OFF (warning not issued; default), 1: ON (warning issued)**
SIZE-DET	
	Use it to turn on/off the original size detection mechanism.
Settings	**0: OFF, 1: ON (default)**
Caution	After making the setting, be sure to turn off and then on the main power switch.
W-TONER	
	Use it to turn on/off the waste toner case full message. • When OFF (no warning) is selected, the message will appear only when service mode is started.
Settings	**0: OFF (no warning issued; default), 1: ON (warning issued)**
COUNTER1	
	Use it to indicate the type of soft counter of the control panel.
Caution	The type of soft counter 1 cannot be changed.
Settings	**101: total 1 (default: fixed to 101; see T05-601-01)**
COUNTER2	
	Use it to change the type of soft counter 2 of the control panel to suit the needs of the user or the dealer.
Settings	**000 to 804 (T05-601-01); default: 000 for 100-V model, 103 for 120/230-V model**
COUNTER3	
	Use it to change the type of soft counter 3 of the control panel to suit the needs of the user or the dealer.
Settings	**000 to 804 (T05-601-01); default: 000 for 100-V model, 203 for 120/230-V model**
COUNTER4	
	Use it to change the type of soft counter 4 of the control panel to suit the needs of the user or the dealer.
Settings	**000 to 804 (T05-601-091); default: 000 for 100-V model, 203 for 120/230-V model**

COUNTER5	
	Use it to change the type of soft counter 5 of the control panel to suit the needs of the user or the dealer.
Settings	**000 to 804 (T05-601-01; default, 000)**
COUNTER6	
	Use it to change the type of soft counter 6 of the control panel to suit the needs of the user or the dealer.
Settings	**000 to 804 (T05-601-01; default: 000)**
DATE-DSP	
	Use it to switch how the date is displayed.
Caution	For the 120V model, the default is '1'.
Settings	**0: YYYY MM/DD (default), 1: DD/MM YYYY, 2: MM/DD/YYYY**
MB-CCV	
	Use it to impose limits on the Box function by the Control Card IV (CC-IV).
Settings	**0: enables control and printing regardless of presence/absence of card in remote; in remote, makes no change** **1: enables control and printing regardless of presence/absence of card in remote; accepts print job, but stops printing in absence of card (with card, enables printing but imposes charge; default)** **2: disables control in remote; does not accept print job in remote**
B4-L-CNT	
	Use it to specify whether B4 sheets are counted as large size or small size for soft counters 1 through 6.
Settings	**0: small size (default), 1: large size**
TRAY-STP	
	Use it to prohibit suspension of printing by imposing limits to the number of sheets to staple or mixing of sizes of the finisher.
Settings	**0: normal mode (suspend printing by count/size; default)** **1: suspend printing if height sensor is ON (full of paper)**
MF-LG-ST	
	Use it to turn on the Extra Length key for sheets up to 630 mm (free in manual feed); the 630 mm limit also applies to the ADF.
Settings	**0: normal mode (default), 1: extra length mode (key indicated)**
SPECK-DP	
	Use it to enable/disable indication of a warning for dust detection in stream reading.
Settings	**0: disable indication (default), 1: enable indication**

CNT-DISP	
	Use it to enable/disable the indication of a serial number in response to the Counter Check key.
Settings	**0: enable indication (default), 1: disable indication**
PH-D-EL	
	Use it to select the number of lines for photo mode printing.
Settings	**0: 141 lines (default), 1: 134 lines**
COPY-JOB	
	Use it to prevent auto copy start when a coin robot and a card reader.
Settings	**0: copy job auto start selected (default)** **1: copy job auto start not selected**
OP-SZ-DT	
	Use it to turn on and off the original size detection mechanism in book mode.
Settings	**0: OFF (accepts input of original size from control panel; default)** **1: ON (detects original size automatically)**

<Soft Counter Specifications>

The soft counters are classified as follows according to input numbers:

100s: total	500s: scan
200s: copies	600s: box
300s: prints	700: reception prints
400s: copies + prints	800: report prints

Legend

○:	counter effective for the machine
4C:	full color
mono:	mono color (Y, M, C/R, G, B/sepia mono)
Bk:	black mono
L:	large size (larger than B4)
S:	small size (B4 or smaller)
number in counter:	count indicating large-size sheets

In service mode, the settings may be changed so that B4 or larger may be counted as large size (COPIER>OPTION>USER>B4-L-CNT).

Effective	No.	Counter type	Effective	No.	Counter type
○	000	not indicated	○	201	copy (total 1)
○	101	total 1	○	202	copy (total 2)
○	102	total 2	○	203	copy (L)
○	103	total (L)	○	204	copy (S)
○	104	total (S)	○	205	copy A (total 1)
	105	total (4C1)	○	206	copy A (total 2)
	106	total (4C2)	○	207	copy A (L)
	107	total (Mono)	○	208	copy A (S)
	108	total (Bk 1)	○	209	local copy (total 1)
	109	total (Bk 2)	○	210	local copy (total 2)
	110	total (Mono/L)	○	211	local copy (L)
	111	total (Mono/S)	○	212	local copy (S)
	112	total (Bk/L)	○	213	remote copy (total 1)
	113	total (Bk/S)	○	214	remote copy (total 2)
○	114	total (4C+Mono+Bk/	○	215	remote copy (L)
		double-sided)	○	216	remote copy (S)
		total 1 (double-sided)		217	copy (4C1)
○	115	total 2 (double-sided)		218	copy (4C2)
○	116	L (double-sided)			
○	117	S (double-sided)			

T04-601-01a

Effective	No.	Counter type	Effective	No.	Counter type
	219	copy (Mono 1)		319	print (Bk/L)
	220	copy (Mono 2)		320	print (Bk/S)
	221	copy (Bk 1)		321	print (4C+Mono/L)
	222	copy (Bk 2)		322	print (4C+Mono/S)
	223	copy (4C/L)		323	print (4C+Mono/2)
	224	copy (4C/S)		324	print (4C+Mono/1)
	225	copy (Mono/L)		325	print (4C/L/double-sided)
	226	copy (Mono/S)		326	print (4C/S/double-sided)
	227	copy (Bk/L)		327	print (Mono/L/double-sided)
	228	copy (Bk/S)			
	229	copy (4C+Mono/L)		328	print (Mono/S/double-sided)
	230	copy (4C+Mono/S)			
	231	copy (4C+Mono/2)		329	print (Bk/L/double-sided)
	232	copy (4C+Mono/1)		330	print (Bk/S/double-sided)
	233	copy (4C/L/double-sided)	○	331	PDL print (total 1)
			○	332	PDL print (total 2)
	234	copy (4C/S/double-sided)	○	333	PDL print (L)
			○	334	PDL print (S)
	235	copy (Mono/L/double-sided)		401	copy + print (4C/L)
				402	copy + print (4C/S)
	236	copy (Mono/S/double-sided)		403	copy + print (Bk/L)
				404	copy + print (Bk/S)
	237	copy (Bk/L/double-sided)		405	copy + print (Bk 2)
	238	copy (Bk/S/double-sided)		406	copy + print (Bk 1)
○	301	print (total 1)		407	copy + print (4C+Mono/L)
○	302	print (total 2)		408	copy + print (4C+Mono/S)
○	303	print (L)		409	copy + print (4C+Mono/2)
○	304	print (S)		410	copy + print (4C+Mono/1)
○	305	print A (total 1)		411	copy + print (L)
○	306	print A (total 2)		412	copy + print (S)
○	307	print A (L)		413	copy + print (2)
○	308	print A (S)		414	copy + print (1)
	309	print (4C1)	○	501	scan (total 1)
	310	print (4C1)			copy scan (total/4)
	311	print (Mono 1)	○	502	scan (total 2)
	312	print (Mono 2)	○	503	scan (L)
	313	print (Bk 1)			copy scan (L/4)
	314	print (Bk 2)	○	504	scan (S)
	315	print (4C/L)			copy scan (S/4)
	316	print (4C/S)			
	317	print (Mono/L)			
	318	print (Mono/S)			

T04-601-01b

Effective	No.	Counter type	Effective	No.	Counter type
	505	Bk scan (total 1)	○	601	box print (total 1)
		copy scan (Bk)	○	602	box print (total 2)
	506	Bk scan (total 2)	○	603	box print (L)
	507	Bk scan (L)	○	604	box print (S)
		copy scan (Bk/L)	○	701	reception print (total 1)
	508	Bk scan (S)	○	702	reception print (total 2)
		copy scan (Bk/S)	○	703	reception print (L)
	509	color scan (total 1)	○	704	reception print (S)
		copy scan (4C)	○	801	report print (total 1)
	510	color scan (total 2)	○	802	report print (total 2)
	511	color scan (L)	○	803	report print (L)
		copy scan (4C/L)	○	804	report print (S)
	512	color scan (S)			
		copy scan (4C/S)			
	513	copy scan (L)			
	514	copy scan (S)			
	515	copy scan (total)			

T04-601-01c

CST

Making Cassette-Related Settings

U1-NAME U2-NAME U3-NAME U4-NAME	
	Use it to turn on/off the paper name indication when a paper size group (U1 to U4) is detected.
Settings	**0: OFF (touch panel indicates 'U1' through 'U4'; default)** **1: ON (indicates paper name specified in CST-U1 through -U4)**
CST-U1	
	Use it to specify paper names used for paper size group U1.
Settings	**31: G-LTR (default), 22: K-LGL**
CST-U2	
	Use it to specify paper names used for paper size group U2.
Settings	**24: FOOLSCAP (default), 26: OFFICIO, 27: E-OFFI, 36: A-OFI, 37: M-OFI**
CST-U3	
	Use it to specify paper names used for paper size group U3.
Settings	**34: G-LGL (default), 29: A-LTR, 25: A-FLS**
CST-U4	
	Use it to specify paper names used for paper size group U4.
Settings	**18: LTR (default), 29: A-LTR**
P-SZ-C1 P-SZ-C2	
	Use it to specify paper size used in the front deck (C1: right deck, C2: left deck).
Caution	After electing the appropriate paper size, be sure to turn off and then on the main power switch.
Settings	**6: A4 (default), 15: B5, 18: LTR**
P-SZ-C4	
	Use it to select a paper size for the cassette 4.
Caution	• This mode is effective only for the 120/230-V model. • After electing the appropriate paper size, be sure to turn off and then on the main power switch.
Settings	**4: A3 (230-V model: default); 16: 11×17 (120-V model: default); for other size code, see T05-601-02)**

C1-DWSW C2-DWSW DK-DWSW C3-DWSW C4-DWSW	
	Use it to turn on/off the thick paper control sequence. (C1: right deck, C2: left deck, C3/C4: cassette 3/4, DK: paper deck)
Setting	**0: OFF (default), 1: ON**

<Code/Paper Names>

Code	Notation	Name	Code	Notation	Name
01	A1	A1	21	LGL	LEGAL
02	A2	A2	22	K-LGL	Korean government
03	A3R	A3R	23	K-LGLR	Korean government R
04	A3	A3	24	FLSC	FOOLSCAP
05	A4R	A4R	25	A-FLS	Australian FOOLSCAP
06	A4	A4	26	OFI	OFFICIO
07	A5	A5	27	E-OFI	Ecuadorian OFFICIO
08	A5R	A5R	28	B-OFI	Bolivian OFFICIO
09	B1	B1	29	A-LTR	Argentine LETTER
10	B2	B2	30	A-LTRR	Argentine LETTERR
11	B3	B3	31	G-LTR	Government LETTER
12	B4R	B4R	32	G-LTRR	Government LETTERR
13	B4	B4	33	A-LGL	Argentine LEGAL
14	B5R	B5R	34	G-LGL	Government LEGAL
15	B5	B5	35	FOLI	FOLIO
16	11×17	11×17	36	A-OFI	Argentine OFFICIO
17	LTRR	LETTERR	37	M-OFI	Mexico OFFICIO
18	LTR	LETTER	38		
19	STMT	STATEMENT	39		
20	STMTR	STATEMENTR	40	ALL	

T04-601-02

ACC

Use it to make accessories-related settings.

COIN	
	Use it to turn on/off the coin vendor indication. • The control card indicator used on the control panel may be used for the coin vendor.
Settings	**0: OFF (default), 1: ON (for count vendor)**
DK-P	
	Use it to set a paper of the paper deck.
Caution	After electing the appropriate paper size, be sure to turn off and then on the main power switch.
Settings	**0: A4 (default), 1: B5, 2: LTR**

TEMPO

Use it as an emergency remedy when the potential sensor or the environment sensor is faulty (out of order).

F-POT-SW	
	Use it to turn on and off the setting if a transfer fault occurs because of a fault (error) in the potential sensor. • Use it as an emergency remedy until the potential sensor is replaced.
Settings	**0: OFF (default), 1: enables F-POT-D setting**
F-POT-D	
	Use it if a transfer fault occurs because of a fault (error) in he potential sensor. • It is valid only when F-POT-SW is set to '1'. • The level of separation current is in the order of 0>1>2.
Settings	**0: for text-oriented users (originals with low image ratio)** **1: for photo-oriented users (originals with high image ratio)** **2: not used usually; however, if re-transfer (white spot at 50 mm along leading edge) occurs**
F-HUM-SW	
	Use it to turn on and off F-HUM-D if the environment senor has a fault (error). • Use it as an emergency remedy until the environment sensor is replaced.
Settings	**0: OFF (default), 1: enables F-HUM-D**

F-HUM-D	Use it to enter an approximate humidity level of the site of installation. • Uses the input humidity as the output of the humidity sensor. • Valid only if F-HUM-SW is set to '1'.
Settings	**30% to 99% (default: 35%)**

6.2 FEEDER

SIZE-SW	
	Use it to turn on/off the mixed size detection mechanism for AB and Inch series originals.
Settings	**0: disable (default), 1: enable**

6.3 SORTER

BLNK-SW	
	Use it to set the margin width (W) on both sides of the fold when the saddle stitcher is used.
Settings	**0: normal width (5 mm), 1: larger width (10 mm; default)**

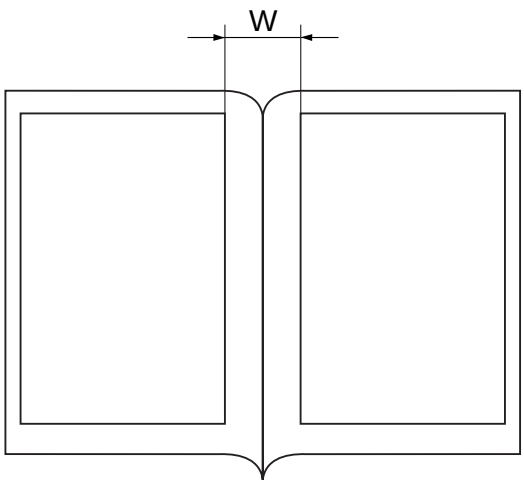

F04-603-01

6.4 BOARD

MENU-1	
	Use it to enable level 1 indication for the printer settings menu.
Settings	**0: disable indication (default), 1: enable indication**
MENU-2	
	Use it to enable level 2 indication for the printer settings menu.
Settings	**0: disable indication (default), 1: enable indication**
MENU-3	
	Use it to enable level 3 indication of the printer settings menu.
Settings	**0: disable indication (default), 1: enable indication**
MENU-4	
	Use it to enable level 4 indication for the printer settings menu.
Settings	**0: disable indication (default), 1: enable indication**
RIP1-CHK	
	Use it to check the operation of the RIP1 board. Check the generated test print. If lines of 32 dots wide are found, the board is normal; otherwise, the board is faulty. Using the Mode 1) Select the mode item, and press the OK key. 2) The machine will generate a test print. 3) Check to find out if the generated test print has lines of 32 dots wide.
PCI1-OFF	
	Use it to turn off the slot 1 function when the board inserted into the PCI slot 1 is out of order.
Settings	**0: normal (default), 1: OFF (board function not used)**
PCI2-OFF	
	Use it to turn off the slot 2 function when the board inserted into the PCI slot 2 is out of order.
Settings	**0: normal (default), 1: OFF (board function not used)**
PCI3-OFF	
	Use it to turn off the slot 3 functions when the board inserted into the PCI slot 3 is out of order.
Settings	**0: normal (default), 1: OFF (board function not used)**

7. TEST (test print mode)

The following screen appears in response to COPIER>TEST; for the items, see the pages that follow:

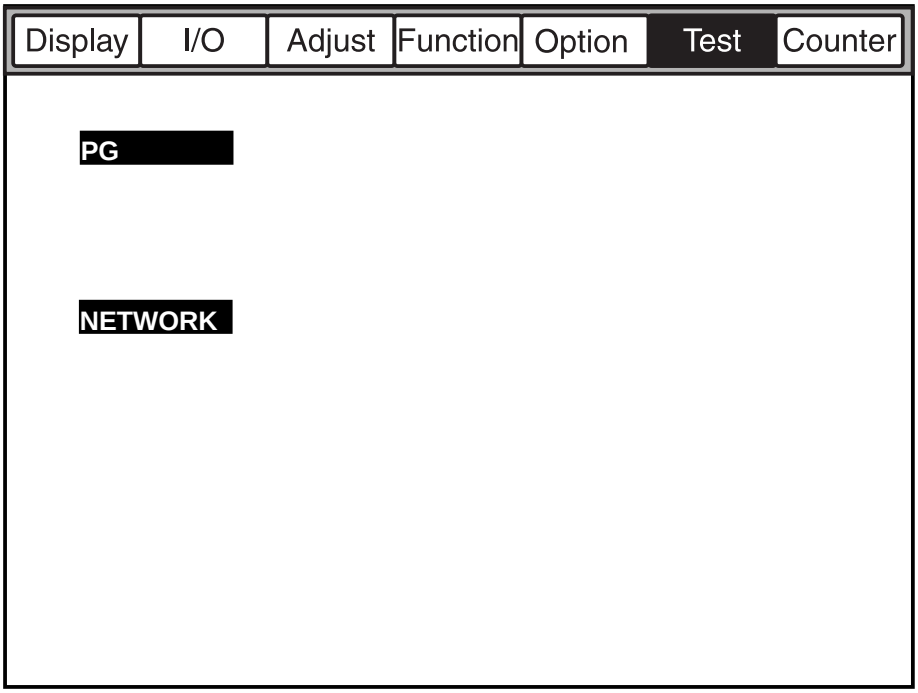

F04-701-01

PG

Use it to select the type of test print and generate it.

TYPE	
	Enter the type number of the test print, and press the OK key to generate it.
Caution	Be user to return the input to '00' after generating the test print.
Settings	**00: normal print, 01 through 08: see T04-701-01**
TXPH	
	Use it to switch between text mode and photo mode during test printing.
Settings	**0: text mode, 1: photo mode**
PG_PICK	
	Use it to select the source of paper for test printing.
Settings	**1: right deck (default), 2: left deck, 3: cassette 3, 4: cassette 4, 5 to 6: not used, 7: paper deck, 8: manual feed tray**

<TYPE Input No./Test Print Type)

Input No.	Type	Input No.	Type
00	image form CCD (normal print)	05	halftone
01	grid	06	solid black
02	17 gradations (w/ image correction)	07	vertical straight lines
03	17 gradations (w/o image correction)	08	horizontal straight lines
04	blank	-	-

T04-701-01

NETWORK

Use it to check the connections related to the network.

PING

Use it to check the connection between the machine and the network (for TCP/IP environment only).

Caution

Use this mode to check the connection to the network after installing the machine or when the connection to the network is found to be poor.

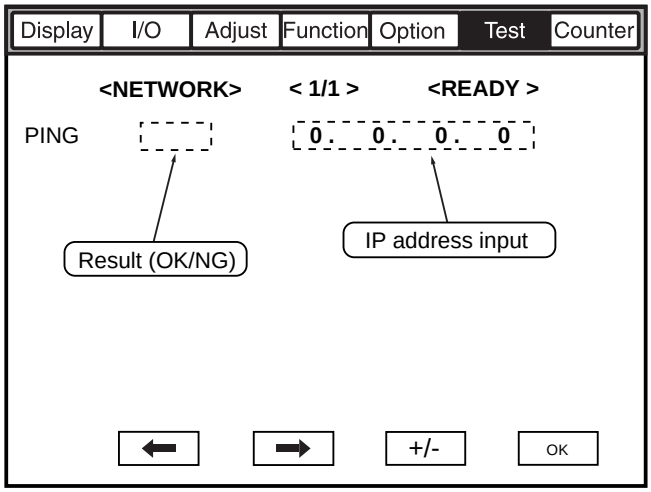

F04-701-02

Using the Mode

1) Turn off the main power switch.
2) Connect the network cable to the machine, and turn on the main power switch.
3) Inform the user's system administrator that the machine has properly been installed, asking him/her to make the appropriate network settings.
4) Inform the system administrator that the network connection will be tested, and find out the remote host address (i.e., IP address of the PC terminal on the user network) for PING.
5) Make the following selections in service mode: COPIER>TEST>NETWORK>PING; then, enter the IP address obtained in step 4), and press the OK key.

- If the connection to the network is correct, 'OK' will be indicated.
- If 'NG' is indicated, check the connection of the network cable; if cor rect, go to step 6). If a fault is found in the connection of the network cable, correct the fault, and go to step 5).

6) Make the following selections in service mode:
COPIER>TEST>NETWORK>PING; then, enter the loop back address* (127.0.0.1), and press the OK key and then the Start key.

- If 'NG' is indicated, the machine has a problem with the TCP/IP set tings; go back to step 3), and check the settings.
- If 'OK' is indicated, the machine's TCP/IP settings may be considered to be free of a problem. However, the connection of the network inter face board (NIC) or the NIC itself may have a problem. Go to step 7) to make a check.

*The address will be returned before it reaches the NIC, allowing a check on the machine's TCP/IP settings.

7) Make the following selections in service mode:
COPIER>TEST>NETWORK>PING; then, enter the local host address (i.e., the machine's IP address), and press the OK key.

- If 'NG' is indicated, the NIC connection or the NIC itself is faulty. Check the NIC connection or replace the NIC.
- If 'OK' is indicated, the machine's network settings and NIC may be considered to be free of problems. However, the environment of the user network may be faulty. Report to the system administrator, and ask for correction.

8. COUNTER (counter mode)

The following screen appears in response to COPIER>COUNTER; for the items, see the pages that follow:

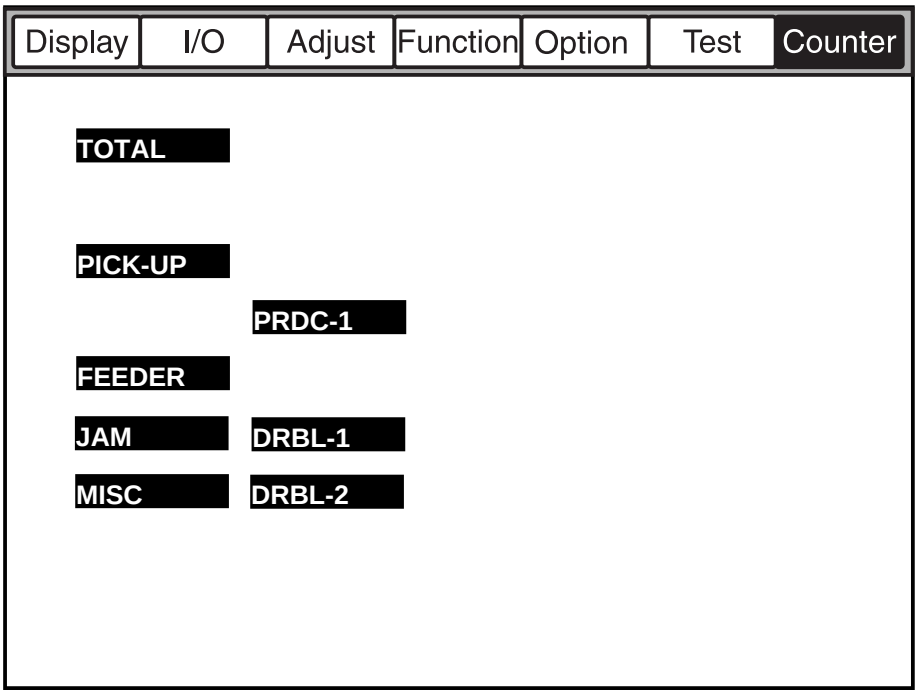

F04-801-01

<Clearing the Counter Reading>

1) Select the item to clear (to highlight).
2) Press the Clear key on the control panel.
   - The counter will be cleared, and will return to '00000000'.

<Small Size and Large Size in the Mode>

large size (L): larger than A4 or LTR.
small size (S): A4 or LTR or smaller

<Guide to Consumables Counter>

The machine is equipped with consumables counters (PRDC-1, DRBL-1, DRBL-2), providing references for parts replaced on a periodical basis or parts requiring replacement.

EX.

PRM-WIRE / **00000027** / **00500000** / **0%** **!!** **000082**

[1] [2] [3] [4] [5] [6]

[1] Indicates the name of the part. In the case of the example, the primary charging wire.
[2] Indicates the counter reading (number of actual sheets handled); clear it by pressing the Clear key after replacing the part.
[3] Indicates the limit setting (guide to replacement); the setting may be changed by selecting the image and using the keypad (thereafter, press the OK key).
[4] Indicates the ratio of counter readings to limit levels.
[5] A single exclamation mark (!) will be indicated between 90% and 100%; two marks at 100% or higher; otherwise, no mark.
[6] Indicates an estimated number of days to replacement; in the case of the example, 82 days.

List of Counter Items

Level 1: COUNTER		Mode
Level 2: TOTAL		
Level 3:	SERVICE 1	total counter 1 for servicing
	SERVICE 2	total counter 2 for servicing
	COPY	copy counter
	PDL-PRT	PDL print counter
	BOX-PRT	Box print counter
	PMT-PRT	remote copy/print counter
	FAX-PRT	fax reception print counter
	RPT-PRT	report print counter
	2-SIDE	double-sided print counter
	SCAN	scanner counter

Level 2: PICK-UP

Level 3:	C1	right front deck (cassette 1) pickup counter
	C2	left front deck (cassette 2) pickup counter
	C3	cassette 3 pickup counter
	C4	cassette 4 pickup counter
	MF	manual feed tray pickup counter
	DK	paper deck pickup counter
	2-SIDE	duplexing 2nd side pickup counter

Level 2: FEEDER

Level 3:	FEED	feeder pickup total counter

Level 2: JAM

Level 3:	TOTAL	machine total jam counter
	FEEDER	feeder (ADF) jam counter
	SORTER	sorter (finisher) jam counter
	2-SIDE	duplexing assembly jam counter
	MF	manual feed tray jam counter
	C1	right front deck (cassette 1) jam counter
	C2	left front deck (cassette 3) jam counter
	C3	cassette 3 jam counter
	C4	cassette 4 jam counter
	DK	paper deck jam counter

Level 2: MISC

Level 3:	FIX-WEB*	fixing web counter (Be sure to reset after replacing the fixing web.)
	WST-TNR	waste toner counter (Be sure to reset after disposing of the waste toner.)

*When FIX-WEB counts up to '2000', 'E005' will be indicated.

Level 2: PRDC-1

Level 3:	PRM-WIRE	primary charging wire counter
	PRM-GRID	primary grid wire counter
	PO-WIRE	pre-transfer (post-) charging wire counter
	TR-WIRE	transfer charging wire counter
	SP-WIRE	separation charging wire counter
	FIX-TH1	fixing main thermistor (TH1) counter
	FIX-TH2	fixing sub thermistor (TH2) counter
	FX-TSW	fixing thermal switch (TP1) counter
	PRM-CLN	primary charging wire cleaner counter
	TR-CLN	transfer charging wire cleaner counter
	PO-CLN	pre-transfer charging wire cleaner counter
	SP-CLN	separation charging wire cleaner counter
	OZ-FIL3	ozone filter (FM3) counter

level 2: DRBL-1

Level 3:	PRM-UNIT	primary charging assembly counter
	PO-UNIT	pre-transfer charging assembly counter
	PO-SCRPR	pre-transfer (post-) charging assembly scraper counter
	T/S-UNIT	transfer/separation charging assembly counter
	CLN-BLD	cleaner blade counter
	SP-CLAW	cleaner separation claw counter
	DVG-CYL	developing cylinder counter
	DVG-ROLL	developing assembly roll counter
	C3-PU-RL	cassette 3 pickup roller counter
	C3-SP-RL	cassette 3 separation roller counter
	C3-FD-RL	cassette 3 feed roller counter
	C4-PU-RL	cassette 4 pickup roller counter
	C4-SP-RL	cassette 4 separation roller counter
	C4-FD-RL	cassette 4 feed roller counter
	LD-PU-RL	left front deck pickup roller counter
	LD-SP-RL	left front deck separation roller counter
	LD-FD-RL	left front deck feed roller counter
	RD-SP-RL	right front deck separation roller counter
	RD-PU-RL	right front deck pickup roller counter
	RD-FD-RL	right front deck feed roller counter
	M-SP-RL	manual feed separation roller counter
	M-FD-RL	manual feed roller counter
	M-PO-RL	manual feed pull-off roller counter
	FX-UP-RL	upper fixing roller counter
	FX-LW-RL	lower riding roller counter
	FX-IN-BS	fixing insulating bush counter
	FX-WEB*	fixing web counter (Be sure to reset after replacing the fixing web.)
	DLV-UCLW	delivery upper separation claw counter
	DLV-LCLW	delivery lower separation claw counter

*The limit of FX-WEB is set to 300,000.

Level 2: DRBL-2

Level 3:	DF-PU-RL	ADF pickup roller counter
	DF-SP-PL	ADF separation plate counter
	DF-SP-PD	ADF separation pad counter
	DF-FD-RL	ADF feed roller counter
	LNT-TAPE	ADF dust-collecting tape counter
	PD-PU-RL	paper deck pickup roller counter
	PD-SP-RL	paper deck separation roller counter
	PD-FD-RL	paper deck feed roller counter
	FIN-STPR	finisher stapler counter
	FIN-FDBL	finisher feed belt counter
	FIN-PDDL	finisher paddol counter
	SDL-STPL	saddle staple counter
	PUNCH	punch counter
	PNCH-HRS	punch harness counter

CHAPTER 5 SELF DIAGNOSIS

1. Error Codes

1.1 List of Error Codes

The machine is equipped with a mechanism to run self diagnosis to find out its condition (particularly of its sensors): CPU on the main controller PCB and the CPU on the DC controller PCB. If it finds a fault, it indicates the nature of the fault in its control panel.

The following is a list of codes and descriptions (including timing of detection); a code may have detailed codes, which may be checked in service mode (COPIER> DISPLAY>JAM/ERR).

E000	
Main Cause	The main thermistor (TH1) has poor contact or an open circuit. The thermal switch (TP1) has an open circuit. The fixing heater has an open circuit. The SSR is faulty. The DC controller PCB is faulty.
Mode of Detection	0000 After the main power switch is turned on, the temperature detected by the main thermistor does not reach 70°C.
Caution	The error must be reset in service mode (COPIER>FUNCTION> CLEAR>ERR).

E001	
Main Cause	The main thermistor (TH1) has a short circuit. The sub thermistor (TH2) has detected overheating. The SSR is faulty. The DC controller PCB is faulty.
Mode of Detection	0001 The main thermistor or the sub thermistor has detected about 230°C or higher for 2 sec. 0002 The main thermistor has detected 230°C or higher (hard circuit detection). 0003 The sub thermistor has detected about 236°C or higher.
Caution	The error must be reset in service mode (COPIER>FUNCTION> CLEAR>ERR).

E002

Main Cause	The main thermistor (TH1) has poor contact or an open circuit. The thermal switch (TP1) has an open circuit. The SSR is faulty. The DC controller is faulty.
Mode of Detection	0000 The temperature of the upper fixing roller does not reach 100°C within 2 min after it has exceeded 70°C.
Caution	The error must be reset in service mode (COPIER>FUNCTION> CLEAR>ERR).

E003

Main Cause	The main thermistor (TH1) has poor contact or an open circuit. The thermal switch (TP1) has an open circuit. The fixing heater has an open circuit. The SSR is faulty. The DC controller PCB is faulty.
Mode of Detection	0000 The temperature detected by the main thermistor is 70°C for 2 sec or more after it has reached 100°C.
Caution	The error must be reset in service mode (COPIER>FUNCTION> CLEAR>ERR).

E004

Main Cause	The SSR has a short circuit. The DC controller PCB is faulty.
Mode of Detection	0000 The SSR used to drive the fixing heater is found to have a short circuit (hard circuit detection).
Caution	The error must be reset in service mode (COPIER>FUNCTION> CLEAR>ERR).

E005

Main Cause	The fixing web has been taken up. The fixing web length sensor (PS45) is faulty. The DC controller PCB is faulty.
Mode of Detection	0000 The length of fixing web that has been taken up is in excess of the specified length.
Caution	After replacing the fixing web, be sure to reset the two web counters in service mode: COPIER>COUNTER>MISC>FIX-WEB and COPIER> COUNTER>DRBL-1>FX-WEB.

E010

Main Cause: The main motor (M2) is faulty. The DC controller PCB is faulty.

Mode of Detection:

0000 The clock pulses do not arrive for 2 secs or more after the main motor drive signal (MMFG) has been generated.

E012

Main Cause: The drum motor (M1) is faulty. The DC controller PCB is faulty.

Mode of Detection:

0000 The clock pulses do not arrive for 2 secs or more after the drum motor drive signal (DMFG) has been generated.

E013

Main Cause: The waste toner feedscrew is faulty. The water toner clock sensor (MSW2) is faulty. The DC controller PCB is faulty.

Mode of Detection:

0000 The rotation of the waste toner feedscrew goes out of order, and the switch (MSW2) is pressed multiple times during a specific period of time.

E014

Main Cause: The fixing motor (M19) is faulty. The DC controller PCB is faulty.

Mode of Detection:

0000 The motor clock signal is detected for 2 secs or more continuously after the fixing motor drive signal has been generated.

E020

Main Cause: The hopper connector is left disconnected. The hopper motor (M9/M10) is faulty. The toner sensor (TS1/TS2) is faulty. The DC controller PCB is faulty.

Mode of Detection:

0000 During printing, the toner supply signal is '0' (absence of toner) for 2 mins.

E032

Main Cause

The copy data controller or the remote diagnostic device is faulty. The Main controller PCB is faulty.

Mode of Detection

0001 Although once connected, the copy data controller or the remote diagnostic device has become disconnected.

E061

Main Cause

The laser shutter is faulty. The laser unit is faulty. The potential measurement PCB is faulty. The DC controller PCB is faulty.

Mode of Detection

0001 As the result of potential control, the drum surface potential (VL2) of the white background is about 200 V (generating solid black images).

0002 The primary charging output used for print output and the drum surface potential after laser output has been made are about 200 V (generating solid black images).

E100

Main Cause

The BD PCB is faulty. The laser unit is faulty. The laser driver PCB is faulty. The wiring is faulty (short circuit, open circuit). The DC controller PCB is faulty.

Mode of Detection

0001 In 100 msec after the laser drive signal has been generated, the BD signal is not detected 50 times or more within 40 msecs.

0002 While the laser is on, the BD signal cycle is found to be outside a specific range 10 times or more.

E110

Main Cause

The laser scanner motor (M15) is faulty. The wiring is faulty (short circuit, open circuit). The DC controller PCB is faulty.

Mode of Detection

0001
- After the laser scanner motor drive signal has been generated, the motor ready signal (LMRDY*) does not arrive for 15 secs or more. (stop → full speed, half-speed → full speed)
- During the period of 'full speed → half speed', the motor ready signal does not arrive for 60 secs or more after the speed change signal has been generated.
- During the period of 'full speed rotation', the motor ready signal is not detected 50 times or more (t intervals of 100 msec).

E121

Main Cause

The controller cooling fan (FM4) is faulty. The wiring is faulty (short circuit, open circuit). The DC controller PCB is faulty.

Mode of Detection

0001 Although the controller cooling fan (FM4) is being driven, the clock signal (FM4LCK) does not arrive for 5 secs or more.

E196

Main Cause

The EEPROM on the DC controller PCB is faulty. The location of the EEPROM is wrong. The DC controller PCB is faulty.

Mode of Detection

1abb When data is written to the EEPROM, the data written and the data read do not match.

2abb When the ID read into the EEPROM and the ID into the ROM are compared, a mismatch is found.

3abb When ID in the EEPROM and the ID in the ROM are compared after the main power switch is turned on, a mismatch is found.

a: chip Nos. 0 through 5 (0: IC104, 1: IC105, 2: IC109, 3: IC110, 4: IC127, 5: IC130)

bb: chip faulty address (bit)

E202

Main Cause	The scanner HP sensor (PS39) is faulty. The scanner motor (M3) is faulty. The reader controller PCB is faulty.
Mode of Detection	0001 The scanner HP sensor does not turn off even when the scanner has been moved 40 mm forward after the main power switch has been turned on or the Start key has been pressed. 0002 The scanner HP sensor does not turn on even when the scanner has been moved 450 mm in reverse.
Caution	No code is indicated, and keys are locked. The code may be checked in service mode (COPIER>DISPLAY>ERR).

E204

Main Cause	The ADF controller PCB is faulty. The reader controller PCB is faulty.
Mode of Detection	0001 During printing, the image leading edge signal does not arrive from the ADF.
Caution	No code is indicated, and keys are locked. The code may be checked in service mode (COPIER>DISPLAY>ERR).

E220

Main Cause	The lamp inverter PCB is faulty. The reader controller PCB is faulty.
Mode of Detection	0001 The lamp inverter PCB is found to have a fault.

E225

Main Cause	The scanning lamp (xenon tube) is faulty. The inverter PCB is faulty. The CCD/AP PCB is faulty. The reader controller PCB is faulty.
Mode of Detection	0000 A specific signal level cannot be attained by CCD gain correction at power-on. 0002 The edge gain correction value changed more than a specific level compared with the correction value used for the preceding sheet.

E240

Main Cause: The main controller PCB. The DC controller PCB is faulty.

Mode of Detection:

0000 An error has occurred in the communication between the main controller PCB and the CPU of the DC controller PCB.

E243

Main Cause: The control panel CPU PCB is faulty. The main controller PCB is faulty.

Mode of Detection:

0000 An error has occurred in communication between the CPU of the control panel CPU PCB and the main controller PCB.

E248

Main Cause: The EEPROM on the reader controller PCB is faulty. The reader controller PCB is faulty.

Mode of Detection:

0001 The ID read into the EEPROM when the main power switch has been turned on and the ID in the ROM do not match.

0002 When data is written into EEPROM, the data written and the data read do not match.

0003 When data is written, the ID in the EEPROM and the ID in the ROM are found not to match.

E302

Main Cause: The CCD/AP PCB is faulty. The wiring is faulty (short circuit, open circuit). The reader controller PCB is faulty.

Mode of Detection:

0001 During shading, the reader controller PCB does not end shading in 1 sec.

0002 In stream reading, the edge white accumulation (processing) does not end after a period of 10 secs.

E601

Main Cause

The wiring is faulty (short circuit, open circuit). The hard disk drive is faulty. The DC controller PCB is faulty. The main controller PCB is faulty.

Mode of Detection

0000 The main controller PCB has detected an error in control data while an image was transmitted between the main controller PCB and the hard disk drive.

0001 The main controller PCB has found an error in the control data in transfer of images between main controller PCB and the DC controller PCB.

E602

Main Cause

The wiring is faulty (short circuit, open circuit). The hard disk drive is faulty. The main controller PCB is faulty.

Mode of Detection

0001 A mount error was detected when the hard disk was started up from the boot ROM.

0002 A data read error (from the hard disk) was detected when the hard disk was started from the boot ROM.

E607

Main Cause

The hard disk fan (FM7) is faulty. The wiring is faulty (short circuit, open circuit). The DC controller PCB is faulty.

Mode of Detection

0000 While the hard disk fan (FM7) is being driven, the clock signal (FM7CLK) does not arrive for 5 secs or more.

E677

Main Cause

The various printer board (accessories) are faulty. The main controller PCB is faulty.

Mode of Detection

0001 An error has occurred in the communication between the various printer boards (accessories) and the main controller PCB.

E710

Main Cause: The DC controller PCB is faulty. The reader controller PCB is faulty. The main controller PCB is faulty.

Mode of Detection:

- 0001 When the main power is turned on, the IPC (IC5021) on the reader controller PCB cannot be initialized.
- 0002 When the main power is turned on, the IPC (IC120) on the DC controller PCB cannot be initialized.
- 0003 When the main power is turned on, the IPC (IC1003) on the main controller PCB cannot be initialized.

E711

Main Cause: The connector is not connected properly. The remote diagnostic device PCB is faulty. The copy data controller PCB is faulty. The ADF controller PCB is faulty. The ADF controller PCB is faulty. The finisher controller PCB is faulty.

Mode of Detection:

- 0001 Data has been written to the error register of the IPC (IC5021) on the reader controller PCB four times or more within 1.5 secs.
- 0002 Data has been written to the error register of the IPC (IC120) on the DC controller PCB four times or more within 2 secs.
- 0003 Data has been written to the error register of the IPC (IC1003) of the main controller PCB four times or more within 2 secs.

E712

Main Cause: The connector is not connected properly. The ADF 24-V power supply is faulty. The ADF controller PCB is faulty. The reader controller PCB is faulty.

Mode of Detection:

- 0001 Communication does not resume in 3 secs after data has been written to the error register of the communication IC (IPC) of the ADF controller PCB.
- 0002 The transmission bit is not enabled after a period of 10 sec at the sync register of the IPC (IC5021) on the reader controller PCB.

E713

Main Cause	The connector is not connected properly. The finisher accessories power supply PCB is faulty. The finisher controller PCB is faulty. The DC controller PCB is faulty.
Mode of Detection	0000 The communications IC (IPC) on the finisher controller has gone out of order.

E717

Main Cause	The wiring is faulty (short circuit, open circuit). The copy data controller or the remote diagnostic device is faulty. The main controller PCB is faulty.
Mode of Detection	0001 The copy data controller or the NE controller is out of order or an open circuit has been detected.
Caution	The error must be reset in service mode (COPIER>FUNCTION> CLEAR>ERR).

E719

Main Cause	The wiring is faulty (short circuit, open circuit). The coin vendor is faulty. The main controller PCB is faulty.
Mode of Detection	0001 The communication between the coin vendor and the main controller PCB has been interrupted.
Caution	The error must be reset in service mode (COPIER>FUNCTION> CLEAR>ERR).

E732

Main cause	The connector has poor contact. The reader controller PCB is faulty.
Mode of Detection	0001 The main controller PCB has detected an error in the communication between the reader controller PCB and the main controller PCB.

E733

Main cause	The connector has poor contact. The DC controller PCB is faulty.
Mode of Detection	0001 The main controller PCB has detected an error in the communication between the DC controller PCB and the main controller PCB.

E740

Main cause: The LAN card is faulty. The main controller PCB is faulty.

Mode of Detection:

- 0001 An error is detected on the LAN card at power-on (with the card inserted).
- 0002 A MAC address is found to be faulty.
- 0003 The LAN card register cannot be read.

E741

Main Cause: The PCI bus connection is not proper. The main controller PCB is faulty.

Mode of Detection:

- 0000 An error has occurred in the PCI bus.

E742

Main Cause: The RIP1 board (accessory) is faulty. The main controller PCB is faulty.

Mode of Detection:

- 0000 An error has been detected by self diagnosis of the RIPI board.

E743

Main cause: The connector has poor contact. The main controller PCB is faulty.

Mode of Detection:

- 0000 The reader controller PCB has detected an error in the communication between the main controller PCB and the reader controller PCB.

E804

Main Cause: The wiring is faulty (short circuit, open circuit). The DC power supply fan (FM6) is faulty. The DC controller PCB is faulty.

Mode of Detection:

- 0000 While the DC power supply fan is being driven, the clock signal (FM6CLK) does not arrive for 5 secs or more.

E805

Main Cause	The wiring is faulty (short circuit, open circuit). The feed fan (FM1) is faulty. The heat discharge fan (FM3) is faulty. The DC controller PCB is faulty.
Mode of Detection	0001 While the heat discharge fan is being driven, the clock signal (FM3CLK) does not arrive for 5 secs or more. 0002 While the feed fan is being driven, the clock signal (FM1CLK) does not arrive for 5 secs or more.

E824

Main Cause	The wiring is faulty (short circuit, open circuit). The primary charging assembly cooling fan (FM2) is faulty. The DC controller PCB is faulty.
Mode of Detection	0000 While the primary charging assembly cooling fan is being driven, the clock signal (FM2CLK) does not arrive for 5 secs or more.

1.2 Self Diagnosis of the ADF

When the machine's self diagnosis mechanism has turned on, the condition can be reset by turning off and then on the host machine's power switch.

If the machine must remain out of order, prints may still be made by disconnecting the machine's lattice connector, and placing an original on the host machine's copyboard glass.

E412	
Main Cause	The cooling fan (FM1) is faulty. The ADF controller PCB is faulty.
Mode of Detection	0001 While the cooling fan is being driven, the lock signal (FMLCK) arrives for 100 msec or more.
E420	
Main Cause	The EEPROM is faulty. The ADF controller PCB is faulty.
Mode of Detection	0001 When the host machine's power switch is turned on, the backup data of the EEPROM cannot be read or the data, if read, has an error.
E421	
Main Cause	The EEPROM is faulty. The ADF controller PCB is faulty.
Mode of Detection	0001 Backup data cannot be written to the EEPROM or the data, if written, has an error.
E422	
Main Cause	The IPC communication has an error. The communication line has an open circuit. The ADF controller PCB is faulty.
Mode of Detection	0001 While the machine is in standby, the communication with the host machine has been interrupted for 5 secs or more. or, while the machine is in operation, the communication with the host machine has been interrupted for 0.5 sec or more.

E512

Main Cause: The delivery motor clock sensor (PI10) is faulty. The delivery motor (M2) is faulty. The finisher controller PCB is faulty.

Mode of Detection:

- 0001 When operation starts, as many clocks as needed do not arrive from the delivery motor clock sensor.
- 0002 No clock pulse arrives while paper is being moved over a distance of 200 mm.

E530

Main Cause: The alignment plate home position sensor (PI6) is faulty. The alignment motor (M3) is faulty. The finisher controller PCB is faulty.

Mode of Detection:

- 0001 The alignment plate does not leave home position when the alignment motor has been driven for 2 secs.
- 0002 The alignment plate does not return to home position when the alignment motor has been driven for 2 secs.

E531

Main Cause: The stapler home position detecting switch (MS7) is faulty. The stapler motor (M6) is faulty. The finisher controller PCB is faulty.

Mode of Detection:

- 0001 The stapler does not leave home position when the stapler motor has been driven for 0.5 sec.
- 0002 The stapler does not return to home position when the stapler motor has been driven for 0.5 sec.

E532

Main Cause: The stapler shift home position sensor (PI7) is faulty. The stapler shift motor (M4) is faulty. The finisher controller PCB is faulty.

Mode of Detection:

- 0001 The stapler unit does not leave home position when the stapler shift motor has been driven for 4 secs.
- 0002 The stapler unit does not return to home position when the stapler shift motor has been driven for 4 secs.

E590

Main Cause

The punch home position sensor (PI3P) is faulty. The punch motor (M1P) is faulty. The punch driver PCB is faulty.

Mode of Detection

0001 The puncher does not leave home position when the punch motor has been driven for 200 msecs.

0002 The puncher does not return to home position when the punch motor has been driven for 200 msecs.

E593

Main Cause

The horizontal registration home position sensor (PI1P) is faulty. The horizontal registration motor (M1P) is faulty. The punch driver PCB is faulty.

Mode of Detection

0001 The puncher does not leave home position when the horizontal registration motor has been driven for 4 secs.

0002 The puncher does not return to home position when the horizontal registration motor has been driven for 4 secs.

E5F3

Main Cause: The alignment home position sensor (PI5S) is faulty. The alignment motor (M5S) is faulty. The saddle stitcher controller PCB is faulty.

Mode of Detection:

- 0001 The alignment plate home position sensor does not turn on when the alignment motor has been driven for 0.5 sec (initially, driven for about 1.7 sec).
- 0002 The alignment plate home position sensor does not turn off when the alignment motor has been driven for 1 sec.

E5F4

Main Cause: The stitch home position sensor (rear, MS5S) is faulty. The stitch motor (rear, M6S) is faulty. The saddle stitcher controller PCB is faulty.

Mode of Detection:

- 0001 The stitcher home position sensor (rear) does not turn off when the stitch motor (rear) has been rotated CW for 0.5 sec or more.
- 0002 The stitch home position sensor (rear) does not turn on when the stitch motor (rear) has been rotated CCW for 0.5 sec or more.

E5F5

Main Cause: The stitch home position senor (front, MS7S) is faulty. The stitch motor (front, M7S) is faulty. The saddle stitcher controller PCB is faulty.

Mode of Detection:

- 0001 The stitch home position sensor (front) does not turn off when the stitch motor (front) has been rotated CW for 0.5 sec or more.
- 0002 The stitch home position sensor (front) does not turn on when the stitch motor (front) has been rotated CCW for 0.5 sec or more.

E5F9

Main Cause

The inlet door switch (MS1S) is faulty. The front door switch (MS2S) is faulty. The delivery door switch (MS3S) is faulty. The saddle stitch controller PCB is faulty.

Mode of Detection

0001 When the inlet cover, front cover, and the delivery cover are found to be closed, the inlet door switch detects an open condition for 1 sec or more from the start of the initial rotation of the host machine or the start of printing.

0002 When the inlet cover, front cover, and delivery cover are found to be closed, the front door switch detects an open condition for 1 sec or more after the start of the initial rotation of the host machine or the start of printing.

0003 When the inlet cover, front cover, and delivery cover are found to be closed, the delivery door switch detects an open condition for 1 sec or more from the start of the initial rotation of the host machine or the start of printing.

A. GENERAL TIMING CHART

General Timing Chart I

· A4, 2 Sheets, Single-Sided, Direct; Right Deck (face-down delivery)

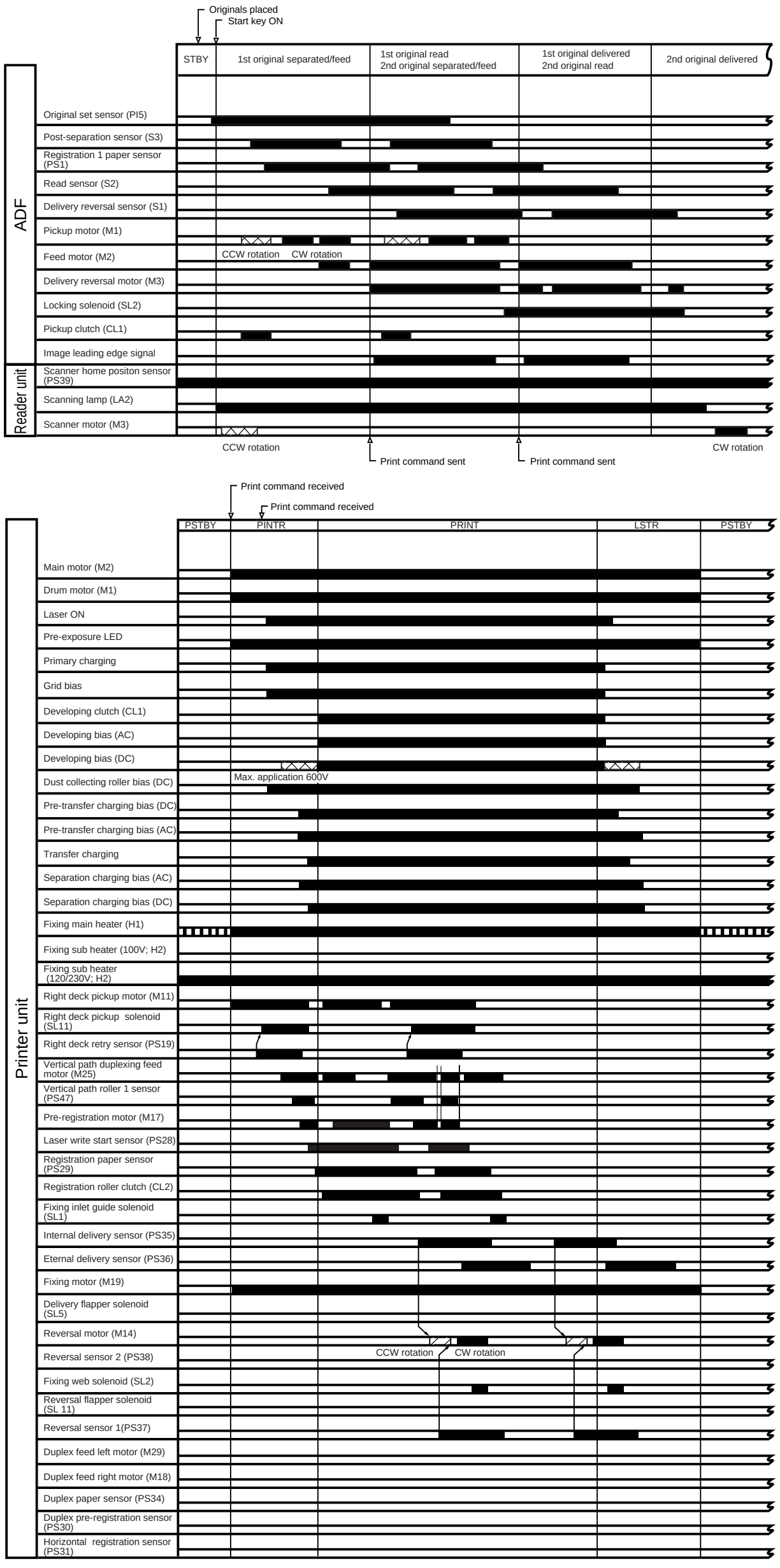

General Timing Chart II

· A4, 1 Sheet, Direct, Double-Sided; Right Deck

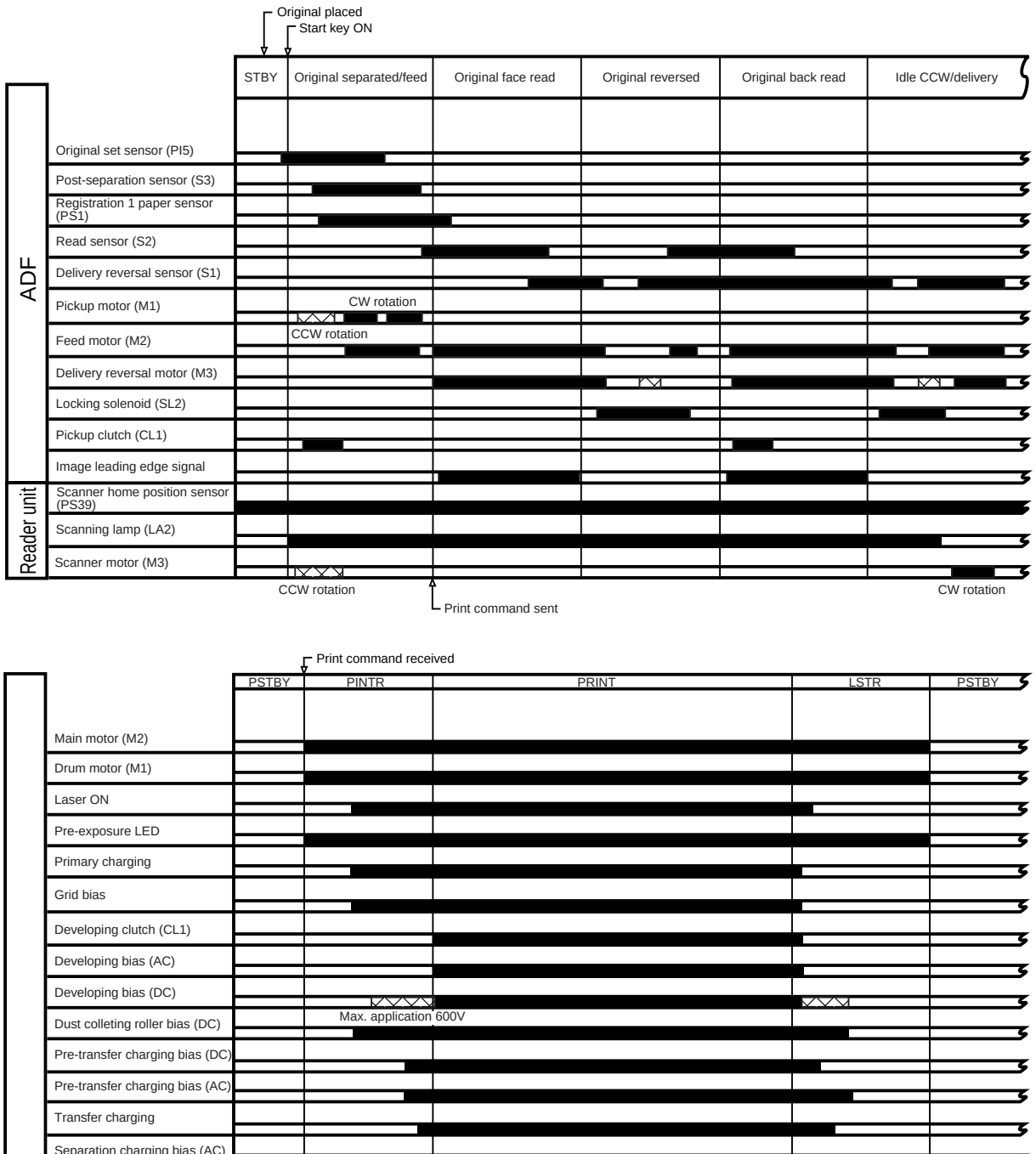

B. LIST OF SIGNALS/ABBREVIATIONS

The following is a list of the signals and abbreviations used in this chapter and the circuit diagrams.



The abbreviations in parentheses are electrical signals, but are analog signals, which cannot be expressed in terms of '1' or '0'. Others are digital signals, which may be expressed in terms of '1' or '0'.

ADF_OPEN	ADF COVER OPEN/CLOSED DETECTION signal
C3LMD	CASSETTE3 LIFTER MOTOR DRIVE command
C3LTP	CASSETTE3 LIFTER POSITION DETECTION signal
C3OP	CASSETTE3 OPEN/CLOSED DETECTION signal
C3PD	CASSETTE3 PAPER DETECTION signal
C3PL0	CASSETTE3 LENGTH DETECTION signal
C3PL1	CASSETTE3 LENGTH DETECTION signal
C3PLV	CASSETTE3 PAPER LEVEL DETECTION signal
C3PUSD*	CASSETTE3 PICK-UP SOLENOID DRIVE command
C3PWD	CASSETTE3 PAPER WIDTH DETECTION
C3RTD	CASSETTE3 RETRY DETECTION signal
C4LMD	CASSETTE4 LIFTER MOTOR DRIVE command
C4LTP	CASSETTE4 LIFTER POSITION DETECTION signal
C4OP	CASSETTE4 OPEN/CLOSED DETECTION signal
C4PD	CASSETTE4 PAPER DETECTION signal
C4PL0	CASSETTE4 LENGTH DETECTION signal
C4PL1	CASSETTE4 LENGTH DETECTION signal
C4PLV	CASSETTE4 PAPER LEVEL DETECTION signal
C4PUSD*	CASSETTE4 PICK-UP SOLENOID DRIVE command
C4PWD	CASSETTE4 PAPER WIDTH DETECTION
C4RTD	CASSETTE4 RETRY DETECTION signal
CBOP	FIXING WEB LENGTH DETECTION signal
CJAM	CLAW JAM DETECTION signal
D_SENS3*	DOCUMENT SIZE DETECTION signal
DEV-AC-REMOTE	DEVELOPING DC BIAS REMOTE signal
DEV-DC-CNT	DEVELOPING DC BIAS CURRENT CONTROL signal
DEVCD*	DEVELOPING CLUTCH DRIVE command
DMFG	DRUM MOTOR CLOCK signal

DMON	DRUM MOTOR DRIVE command
DPDS	DUPLEXING PAPER DETECTION signal
DRGFPD	DUPLEXING PRE-REGISTRATION PAPER DETECTION signal
DRUM HT ON	DRUM HEATER DRIVE CONTROL signal
DSJAM	DERIVERY JAM DETECTION signal
DSRGPD	DUPLEXING SIDE REGISTRATION PAPER DETECTION signal
DTEP	DEVELOPER TONER signal
EDS	EXTERNAL DELIVERY signal
FCBSD*	FIXING WEB SOLENOID DRIVE command
FDOD	FRONT DOOR OPEN/CLOSE DETECTION signal
FFUS*	FIXING FEED UNIT LOCKED DETECTION signal
FM1CLK	FEEDING FAN CLOCK signal
FM1ON	FEEDING FAN DRIVE command
FM2CLK	PRIMARY CHARGING COOLING FAN CLOCK signal
FM2ON	PRIMARY CHARGING COOLING FAN DRIVE command
FM3CLK	DERIVERY FAN CLOCK signal
FM3ON	DELIVERY FAN DRIVE command
FM4CLK	CONTROLLER COOLING FAN CLOCK signal
FM4ON	CONTROLLER COOLING FAN DRIVE command
FM5CLK	DE-CURLING FAN CLOCK signal
FM5ON	DE-CURLING FAN DRIVE command
FM6CLK	DC POWER SUPPLY FAN CLOCK signal
FM6ON	DC POWER SUPPLY FAN DRIVE command
FM7CLK	HARD DISK FAN CLOCK signal
FM7ON	HARD DISK FAN DRIVE command
FM8CLK	DUPLEXING FAN CLOCK signal
FM8ON	DUPLEXING FAN DRIVE command
HPSENS	SCANNER HOME POSITION DETECTION signal
HV-CR-REMOTE	DUST-COLLECTING ROLLER BIAS REMOTE signal
IDS	INTERNAL DELIVERY signal
INV_ERR	INVERTER ERROR signal
L-RDY	LASER INTENSITY READY signal
LAMP_ON	SCANNING LAMP DRIVE command
LD(+)	LASER DRIVE signal
LD(-)	LASER DRIVE signal
LD-DT	LASER INTENSITY REFERENCE signal

LD-EN	LASER ENABLE signal
LDCLD*	LEFT DECK PULL-OFF CLUTCH DRIVE command
LDEL	LEFT DECK LIMIT DETECTION signal
LDEOP	LEFT DECK OPEN/CLOSED DETECTION signal
LDLM	LEFT DECK LIFTER MOTOR DRIVE command
LDLTP	LEFT DECK LIFTER POSITION DETECTION signal
LDPD	LEFT DECK PAPER DETECTION signal
LDPD1	LEFT DECK PAPER LEVEL DETECTION signal1
LDPD2	LEFT DECK PAPER LEVEL DETECTION signal2
LDPFS	LEFT DECK FEED PAPER DETECTION signal
LDPUSD*	LEFT DECK PICK-UP SORENOID DRIVE command
LDRT	LEFT DECK RETRY DETECTION signal
LMON	LASER SCANNER MOTOR DRIVE command
LMRDY	LASER SCANNER MOTOR READY signal
LMSPSEL	LASER SCANNER MOTOR SPEED SELECT signal
LODOP	RIGHT LOWER COVER OPEN/CLOSED DETECTION signal
LSH	SAMPLE LASER ACTIVATION signal
LWRPD	LASER WRITE START DETECTION signal
M10ON	HOPPER MOTOR (TONER SUPPLY) DRIVE command
M11_A	RIGHT DECK PICK-UP MOTOR (A) DRIVE command
M11_A*	RIGHT DECK PICK-UP MOTOR (A*) DRIVE command
M11_B	RIGHT DECK PICK-UP MOTOR (B) DRIVE command
M11_B*	RIGHT DECK PICK-UP MOTOR (B*) DRIVE command
M12_A	CASSETTE3/4 PICK-UP MOTOR (A) DRIVE command
M12_A*	CASSETTE3/4 PICK-UP MOTOR (A*) DRIVE command
M12_B	CASSETTE3/4 PICK-UP MOTOR (B) DRIVE command
M12_B*	CASSETTE3/4 PICK-UP MOTOR (B*) DRIVE command
M13_A	DERIVERY MOTOR (A) DRIVE command
M13_A*	DERIVERY MOTOR (A*) DRIVE command
M13_B	DERIVERY MOTOR (B) DRIVE command
M13_B*	DERIVERY MOTOR (B*) DRIVE command
M14_A	REVERSAL MOTOR (A) DRIVE command
M14_A*	REVERSAL MOTOR (A*) DRIVE command
M14_B	REVERSAL MOTOR (B) DRIVE command
M14_B*	REVERSAL MOTOR (B*) DRIVE command
M16_A	DUPLEXING HORIZONTAL REGISTRATION MOTOR (A) DRIVE command

M16_A*	DUPLEXING HORIZONTAL REGISTRATION MOTOR (A*) DRIVE command
M16_B	DUPLEXING HORIZONTAL REGISTRATION MOTOR (B) DRIVE command
M16_B*	DUPLEXING HORIZONTAL REGISTRATION MOTOR (B*) DRIVE command
M17_A	PRE-REGISTRATION MOTOR (A*) DRIVE command
M17_A*	PRE-REGISTRATION MOTOR (A) DRIVE command
M17_B	PRE-REGISTRATION MOTOR (B*) DRIVE command
M17_B*	PRE-REGISTRATION MOTOR (B) DRIVE command
M18_A*	DUPLEXING FEEDING RIGHT MOTOR (A*) DRIVE command
M18_A*	DUPLEXING FEEDING RIGHT MOTOR (A) DRIVE command
M18_B	DUPLEXING FEEDING RIGHT MOTOR (B) DRIVE command
M18_B*	DUPLEXING FEEDING RIGHT MOTOR (B*) DRIVE command
M19LD	FIXING MOTOR LOCK DETECTION signal
M19ON	FIXING MOTOR DRIVE command
M24_A	LEFT DECK PICK-UP MOTOR (A) DRIVE command
M24_A*	LEFT DECK PICK-UP MOTOR (A*) DRIVE command
M24_B	LEFT DECK PICK-UP MOTOR (B) DRIVE command
M24_B*	LEFT DECK PICK-UP MOTOR (B*) DRIVE command
M25_A	VERTICAL PATH DUPLEXING FEEDING MOTOR (A) DRIVE command
M25_A*	VERTICAL PATH DUPLEXING FEEDING MOTOR (A*) DRIVE command
M25_B	VERTICAL PATH DUPLEXING FEEDING MOTOR (B) DRIVE command
M25_B*	VERTICAL PATH DUPLEXING FEEDING MOTOR (B*) DRIVE command
M26_A	VERTICAL PATH UPPER MOTOR (A) DRIVE command
M26_A*	VERTICAL PATH UPPER MOTOR (A*) DRIVE command
M26_B	VERTICAL PATH UPPER MOTOR (B) DRIVE command
M26_B*	VERTICAL PATH UPPER MOTOR (B*) DRIVE command
M27_A	VERTICAL PATH LOWER MOTOR (A) DRIVE command
M27_A*	VERTICAL PATH LOWER MOTOR (A*) DRIVE command
M27_B	VERTICAL PATH LOWER MOTOR (B) DRIVE command
M27_B*	VERTICAL PATH LOWER MOTOR (B*) DRIVE command
M29_A	DUPLEXING FEEDING LEFT MOTOR (A) DRIVE command
M29_A*	DUPLEXING FEEDING LEFT MOTOR (A*) DRIVE command
M29_B	DUPLEXING FEEDING LEFT MOTOR (B) DRIVE command
M29_B*	DUPLEXING FEEDING LEFT MOTOR (B*) DRIVE command
M3A	SCANNER MOTOR (A) DRIVE command
M3A*	SCANNER MOTOR (A*) DRIVE command
M3B	SCANNER MOTOR (B) DRIVE command

M3B*	SCANNER MOTOR (B*) DRIVE command
M9ON	HOPPER MOTOR (TONER STIRRING) DRIVE command
MFDS	MANUAL FEED TRAY OPEN/CLOSED DETECTION signal
MFLSD*	MULTI FEED RELEASING SORENOID DRIVE command
MFPCD*	MULTI FEED ROLLER CLUTCH DRIVE command
MFPD	MANUAL FEED PAPER WIDTH DETECTION
MFS	MULTIFEEDER PAPER DETECTION signal
MMFG	MAIN MOTOR DRIVE CLOCK signal
MMON	MAIN MOTOR DRIVE command
PCLM1	PRIMARY CHARGING WIRE CLEANING MOTOR1 DRIVE command
PCLM2	PRIMARY CHARGING WIRE CLEANING MOTOR2 DRIVE command
PEXP	PRE-EXPOSURE LED DRIVE command
POT	PHOTOSENSITIVE DRUM SURFACE POTENTIAL signal
POTON	PHOTOSENSITIVE DRUM SURFACE POTENTIAL SENSOR POWER ON command
PR/TR-REMOTE	HIGH-VOLTAGE REMOTE signal
PR/TR-REMOTE	HIGH-VOLTAGE REMOTE signal
PR-CNT	PRIMARY CORONA CURRENT CONTROL signal
PR-LEAK-DETECT	PRIMARY CHARGING LEAKAGE DETECTION signal
PT/SP-CNT	PRE-TRANSFER CHARGING CONTROL signal
PT/SP-LEAK-DETECT	PRE-TRANSFER/SEPARATION CHARGING LEAKAGE DETECTION signal
PT/SP-REMOTE	PRE-TRANSFER/SEPARATION CHARGING REMOTE signal
PTRCLM1	PRE-TRNANSFER CHARGING WIRE CLEANING MOTOR1 DRIVE command
PTRCLM2	PRE-TRNANSFER CHARGING WIRE CLEANING MOTOR2 DRIVE command
RDEL	RIGHT DECK LIMIT DETECTION signal
RDEOP	RIGHT DECK OPEN/CLOSED DETECTION signal
RDLM	RIGHT DECK LIFTER MOTOR DRIVE command
RDLTP	RIGHT DECK LIFTER POSITION DETECTION signal
RDPD	RIGHT DECK PAPER DETECTION signal
RDPD1	RIGHT DECK PAPER LEVEL DETECTION signal1
RDPD2	RIGHT DECK PAPER LEVEL DETECTION signal2
RDPFS	RIGHT DECK FEED PAPER DETECTION signal
RDPUSD*	RIGHT DECK PICK-UP SORENOID DRIVE command
RDRT	RIGHT DECK RETRY DETECTION signal
RGCD*	REGISTRATION ROLLER CLUTCH DRIVE command
RGPD	REGISTRATION PAPER DETECTION signal
RVFSD1*	DELIVERY FLAPPER SORENOID DRIVE command

RVFSD2*	REVERSING FLAPPER SORENOID DRIVE command
RVS1	REVERSING signal1
RVS2	REVERSING signal2
SL1P*	FIXING ASSEMBLY INLET GUIDE SOLENOID DRIVE command
SL1R*	FIXING ASSEMBLY INLET GUIDE SOLENOID DRIVE command
SP-CNT	SEPARATION CHARGING CURRENT CONTROL signal
TEP	HOPPER TONER signal
TH1	FIXING MAIN THERMISTOR signal
TH2	FIXING SUB THERMISTOR signal
THHUM1	MACHINE INSIDE HUMIDITY signal
TR-CNT	TRANSFER CHARGING CURRENT CONTROL signal
TR-LEAK-DETECT	TRANSFER CHARGING LEAKAGE DETECTION signal
TSCLM1	TRANSFER/SEPARATION CHARGING WIRE CLEANING MOTOR1 DRIVE command
TSCLM2	TRANSFER/SEPARATION CHARGING WIRE CLEANING MOTOR2 DRIVE command
VP1PD	VERTICAL PATH 1 PAPER DETECTION signal
VP2PD	VERTICAL PATH 2 PAPER DETECTION signal
VP3PD	VERTICAL PATH 3 PAPER DETECTION signal
VP4PD	VERTICAL PATH 4 PAPER DETECTION signal
WTFL	WASTE TONER FEEDING SCREW LOCKED DETECTION signal

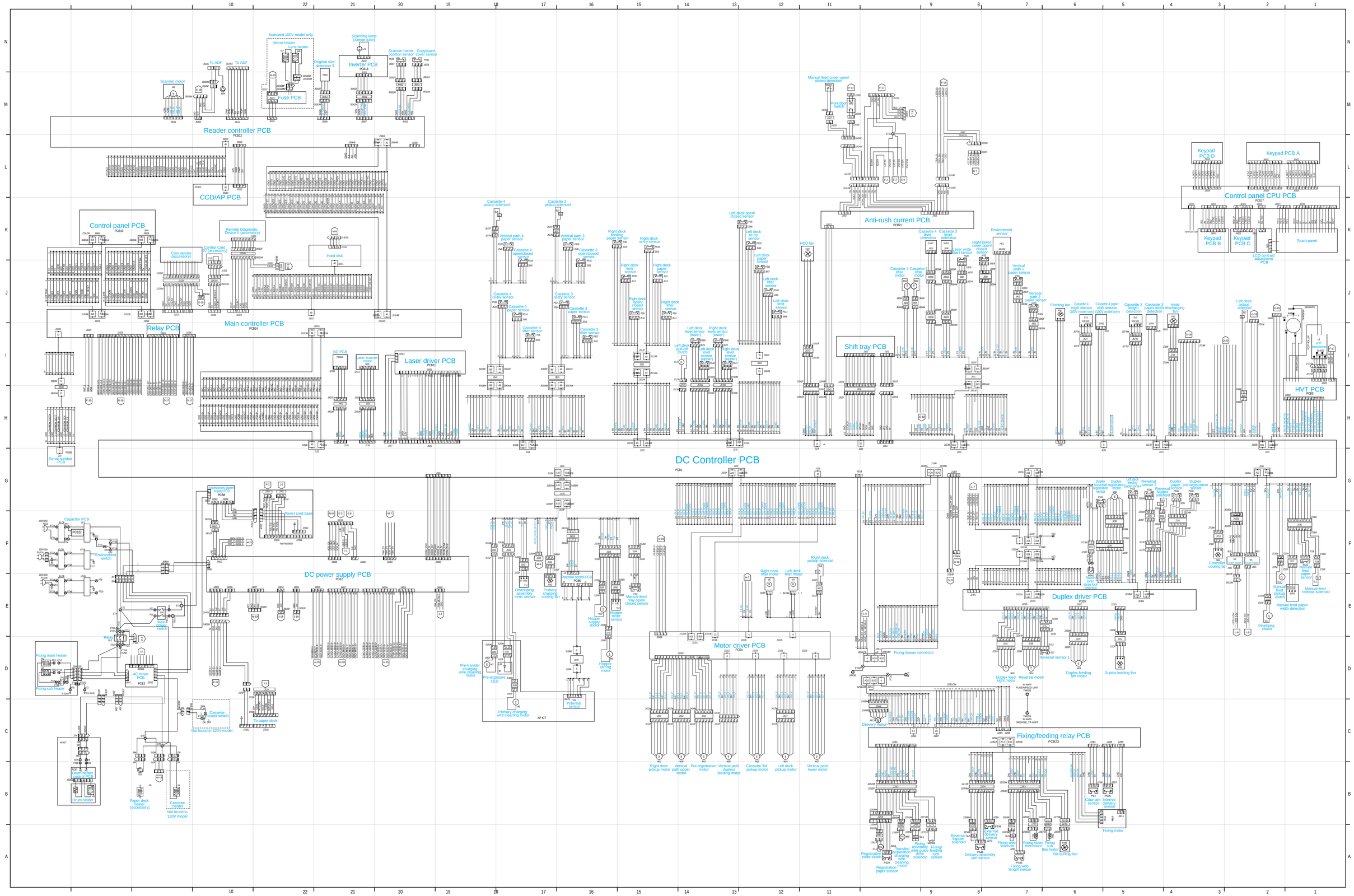
Reader controller PCB
CCD/AP PCB
Control panel PCB
Main controller PCB
Relay PCB
Laser driver PCB
Inverter PCB
Fuse PCB
Anti-rush current PCB
Shift tray PCB
Control panel CPU PCB
Keypad PCB A
Keypad PCB B
Keypad PCB C
Keypad PCB D
HVT PCB
DC Controller PCB
DC power supply PCB
Motor driver PCB
Duplex driver PCB
Fixing/feeding relay PCB
Capacitor PCB
Drum heater control PCB
Drum heater
Fixing main heater
Fixing sub heater
Power cord base
Hard disk
Touch panel
Fixing motor

D. PAPER DECK -G1 GENERAL CIRCUIT DIAGRAM

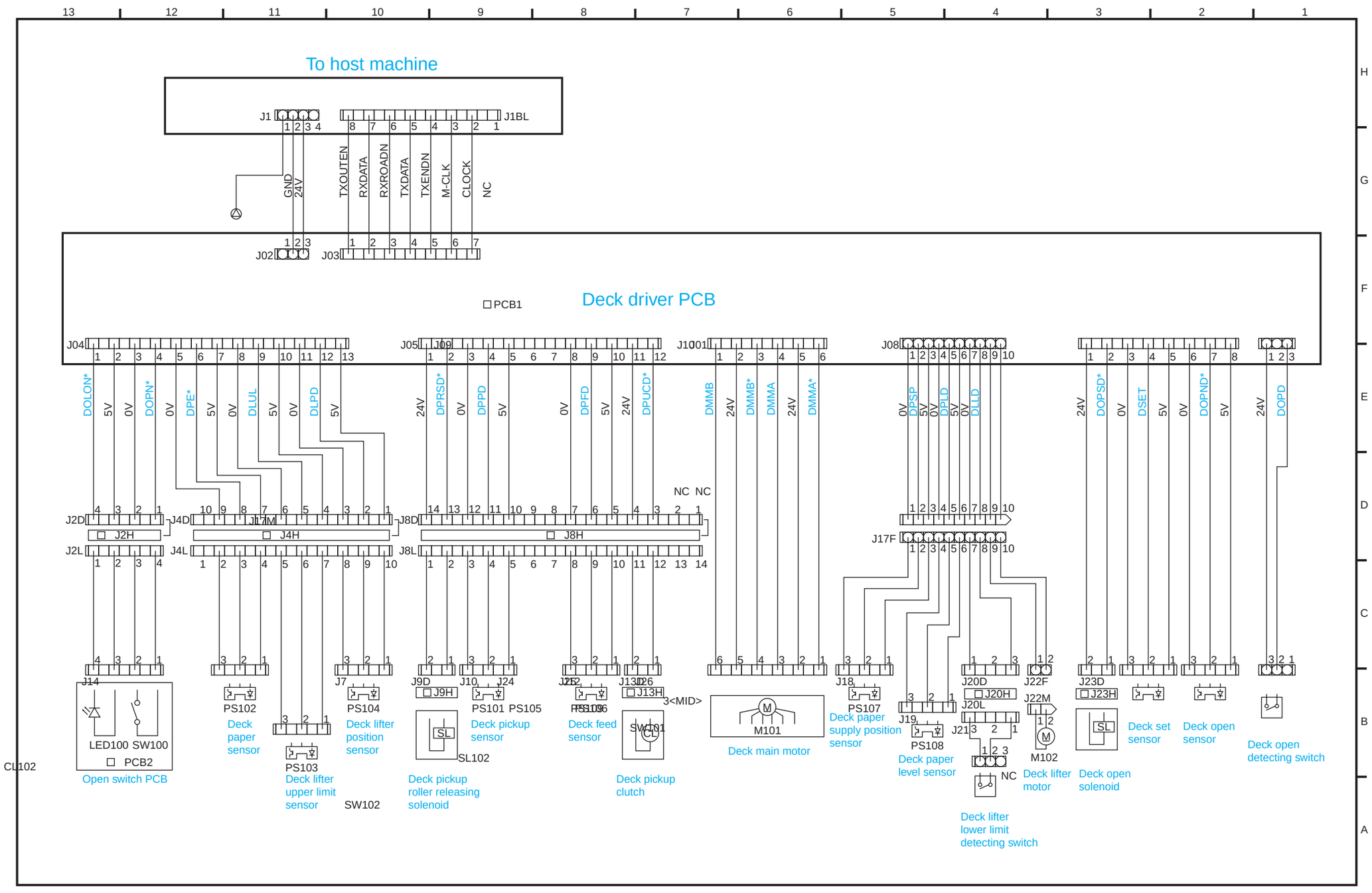

E. SHIFT TRAY GENERAL CIRCUIT DIAGRAM

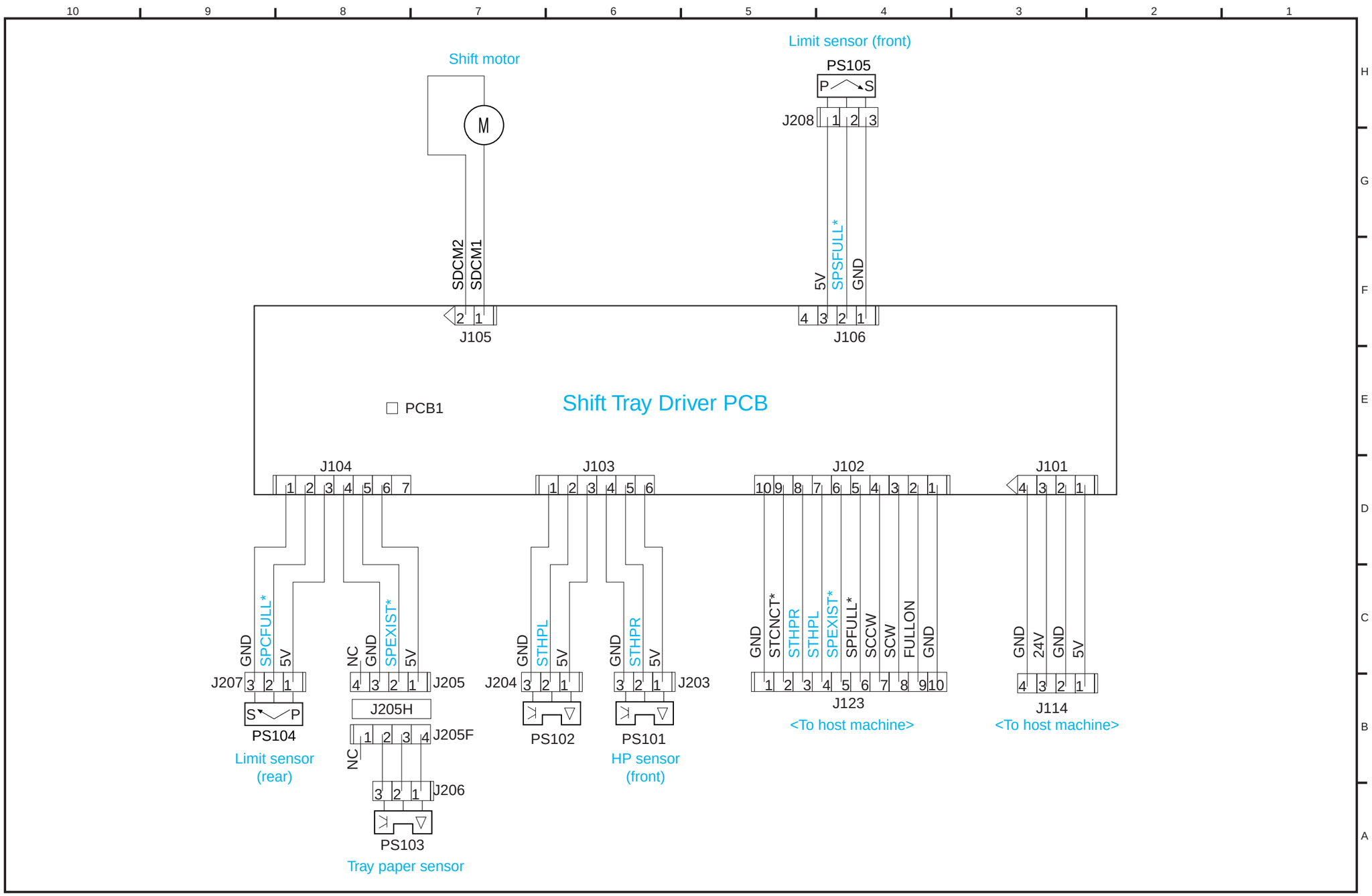

F. SPECIFICATIONS

1.1 Copier

1.1.1 Type

Item	Specifications
Body	Console
Copyboard	Fixed
Light source	Xenon tube
Lens	Lens array (F3.7)
Photosensitive medium	Amorphous silicon drum (80-dia.)

A-101-01

1.1.2 Method

Item		Specifications
Reproduction		Indirect statophotography
Charging		Corona
Exposure		Laser
Copy density adjustment		Auto or manual
Development		Dry, 1-component toner production
Pickup	Auto	Front paper deck (2 holders)
		Front cassette (2 holders)
	Manual	Manual feed tray
		(5.5 mm deep; about 50 sheets of 80 m^2 paper)
Transfer		Corona
Separation		Corona (static separation)
Cleaning		Blade
Fixing		Heat roller
		100 V: 700 W (main) + 470 W (sub)
		120/230 V: 600 W (main) + 600 W (sub)

A-101-02

1.1.3 Functions

Item	Specifications			
Original type	Sheet, book, 3-D object (2 kg max.)			
Maximum original size	A3/279.4×431.8 mm (11"×17")			
Reproduction ratio	Direct	1: 1		
	Reduce I	1: 0.250		
	Reduce II	1: 0.500		
	Reduce III	1: 0.611		
	Reduce IV	1: 0.707		
	Reduce V	1: 0.816		
	Reduce IV	1: 0.865		
	Enlarge I	1: 0.154		
	Enlarge II	1: 1.224		
	Enlarge III	1: 0.414		
	Enlarge IV	1: 2.000		
	Enlarge V	1: 4.000		
	Zoom	1: 0.250 to 4.00 (in 1% increments)		
Wait time	iR5000: 5 min or less (at 20°C/168°F) iR6000: 6 min or less (at 20°C/168°F)			
First copy time	5.5 sec (stream reading, right deck, Direct, A4/LTR, non-AE, straight delivery) 3.8 sec (book mode, right deck pickup, Direct, A4/LTR, non-AE, straight delivery)			
Continuous reproduction	999 prints max.			
Print size	Single-sided	AB	A3 max.	Postcard min. (vertical)
		Inch	279.4 × 431.8 mm (11"×17") max.	STMT min. (vertical)
	Duplexing	AB	A3 max.	A5 min. (vertical)
		Inch	279.4 × 431.8 mm (11"×17") max.	STMT min. (vertical)

A-101-03

Pickup	Paper type
Right deck	Plain paper (64 to 80 g/m^2)
Left deck	A4, B5, LTR
	Tracing paper
	A4, B5
	Colored paper (Canon-recommended)
	A4
	Thick paper (90 to 200 g/m^2)
	A4, B5, LTR
Cassette 3	Plain paper (64 to 80 g/m^2)
	A3, B4, A4, B5, A5R, A4R, B5R
Cassette 4	279.4×431.8 mm (11" × 17"), LGL, LTR, LTRR, STMT (vertical feeding)
	Tracing paper
	B4, A4, A4R
	Colored paper (Canon-recommended)
Manual feed tray	(vertical feeding) (64 to 80 g/m^2)
	A3, B4, A4, B5, A5R, A4R, B5R
	279.4×431.8 mm (11" × 17"), LGL, LTR, LTRR, STMT (vertical feeding)
	Tracing paper
	A3, B4, A4, B5, A4R, B5R
	Transparency (Canon-recommended)
	A4, A4R, LTR, LTRR
	Colored paper (Canon-recommended)
	B4, A4, A4R
	Postcard (vertical feeding only)
	Postcard, 2-in-1 postcard (vertical feeding only), 4-in-1 postcard (horizontal feeding only)
	Label sheet (Canon-recommended)
	B4, A4, A4R, LTR, LTRR
	Thick paper (90 to 200 g/m^2)
	A3, B4, A4, B5, A4R, B5R, LTR, LTRR

A-101-04

Item	Paper type
Single-sided	Plain paper (64 to 80 g/m^2) A3, B4, A4, B5, A5R, A4R, B5R 279.4×431.5 mm (11"×17"), LGL, LTR, LTRR, STMT (vertical feeding) Tracing paper A3, B4, A4, B5, A4R, B5R Transparency (Canon-recommedned) A4, A4R, LTR, LTRR Colored paper (Canon-recommended) B4, A4, A4R Postcard (vertical feeding only) Postcard, 2-in-1 postcard (vertical feeding only), 4-in-1 postcard (horizontal feeding only) Label sheet (Canon-recommended) B4, A4, A4R, LTR, LTRR Thick, paper (90 to 200 g/m^2) A3, B4, A4, B5, A4R, B5R, LTR, LTRR
Reverse delivery	Plain paper (64 to 80 g/m^2) A3, B4, A4, B5, A5R, A4R, B5R 279.4×431.8 mm (11"×17"), LGL, LTR, LTRR, STMT (vertical feeding) Colored paper (Canon-recommended) B4, A4, A4R Thick paper (90 to 200 g/m^2) A3, B4, A4, B5, A4R, B5R, LTR, LTRR

A-101-05

Item		Paper type
Double-sided	Auto	• Plain paper (64 to 80 g/m^2) A3, B4, A4, B5, A5R, A4R , B5R 279.4×431.8 mm (11"×17"), LGL, LTR, LTRR, STMT (vertical feeding) • Colored paper (Canon-recommended) B4, A4, A4R Thick paper (90 to 200 g/m^2) A3, B4, A4, B5, A4R, B5R, LTR, LTRR
	Manual feed tray	• Plain paper (64 to 80 g/m^2) A3, B4, A4, B5, A5R, A4R, B5R 279.4×431.8 mm (11"×17"), LGL, LTR, LTRR, STMT (vertical feeding) • Colored paper (Canon-recommended) B4, A4, A4R • Thick paper (90 to 200 g/m^2) A3, B4, A4, B5, A4R, B5R, LTR, LTRR

A-101-06

Item		Specifications
Claw		None
Tray	Paper deck (right, left)	162 mm/16.4 in deep (approx.; about 1500 sheets of 80 g/m^2 paper)
	Cassette 3/4	55 mm/2.2 in deep (approx.; about 550 sheets of 80 g/m^2)
Delivery tray		250 sheets (approx.; of 80 g/m^2)
Hard disk		6.4 GB or 5.1 GB*1
Non-image width	Leading edge	Direct/Enlarge-Reduce: 4.0 ± 1.5/-1.0mm < 4.5 ± 1.8mm >*2
	Trailing edge	Direct/Enlarge-Reduce: 2.0 ± 1.5mm < 2.0 ± 1.8 mm >*2
	Left/right (1st side)	Direct/Enlarge-Reduce: 2.5 ± 1.5mm < 2.5 ± 2.0 mm >*2
Auto clear		Yes (2 min standard; may be changed between 0 and 9 min in 1-min increments)
Auto power off		No
	Low-power mode	Yes (15 min standard; may be changed in user mode for 10, 15, 20, 30, 40, 50, 60, 90 min and 2, 3, 4 hr)
Power save mode	Auto sleep	Yes (60 min standard; may be changed to 10, 15, 20, 30, 40, 50, 60, 90 min, 2, 3, 4 hr in user mode)
	Energy save mode	Yes (-10% standard; may be changed to -10%, -25%, -50%, no return time (0%) in user mode)
Accessories		• Paper Deck-G1 • Remote Diagnostic Device II • Control Card-IV • Finisher-F1 • Saddle Finisher-F2 • Puncher Unit-B1/C1/D1 (2/3/4 holes) • Network LIPS Printer Kit-A1 (100-V only) • Network Multi-PDL Printerkit-A1 (120/230-V only)

*1: The HDD mounted in the machine or an HDD supplied as a service part may have a different memory size; all HDDs use the same area (amount) of memory and, therefore, the fact will not cause a problem.

*2: The values within <> indicate the use of an ADF.

A-101-07

The specifications are subject to change for product improvement.

1.1.4 Others

Item		Specifications	
Operating environment	Temperature	15 to 30°C/59 to 86°F	
	Humidity	5% to 80%RH	
	Atmospheric pressure	810.6 to 1013.3 hpa (0.8 to 1.0 atm)	
		iR5000	iR6000
Power supply	100V (50/60Hz)	LQHxxxxx	LQKxxxxx
		LQJxxxxx	LQLxxxxx
	120V (50/60Hz)	NRFxxxxx	NRHxxxxx
		NRGxxxxx	NRJxxxxx
	220V/60Hz	PKMxxxxx	PKLxxxxx
	230V (50/60Hz)	PKKxxxxx	PKZxxxxx
		PKLxxxxx	PLHxxxxx
		QCWxxxxx	QCXxxxxx
		PBZxxxxx	RCYxxxxx
		SCKxxxxx	SCLxxxxx
		TBZxxxxx	TCMxxxxx
		UFMxxxxx	UFNxxxxx
Power consumption	Maximum	iR5000: 1.3 kW or less	iR6000: 1.3 kW or less
	Stand by	iR5000: 282 Wh (approx.; reference)	iR6000: 282 Wh (approx.; reference)
	Continuous copying	iR5000: 995 Wh (approx.; reference only)	
		iR6000: 1008 Wh (approx.; reference only)	
Noise		By sound power level (impulse mode)	
	During copying	iR5000: 71 dB or less	iR6000: 78 dB or less
	During standby	iR5000: 50 dB or less	iR6000: 55 dB or less
Ozone (after 2500, 000 prints)		0.05 ppm or less	
Dimensions	Width	852 mm/33.5 in	
	Depth	726 mm/28.6 in	
	Height	1134 mm/44.7 in	
Weight		210 kg (approx.)/470.4 lb (approx.)	
Consumables	Copy paper	Keep wrapped, and store avoiding humidity.	
	Toner	Avoid direct sunlight, and store at 40°C, 85% RH or less.	

A-101-08

Reproduction ratio		Size	Paper size	copies/min (1-to-N)	
				iR5000	iR6000
Direct		A3 (297×420 mm)	A3	30	30
		A4 (210×297 mm)	A4	50	60
		B4 (257×364 mm)	B4	36	36
		B5 (182×257 mm)	B5	50	60
		A4R (297×210 mm)	A4R	38	41
		B5R (257×182 mm)	B5R	40	44
		A5R (210×149 mm)	A5R	50	60
Reduce	II (50%)	A3→A5R	A5R	50	60
	III (61.1%)	A3→B5R	B5R	40	44
	IV (70.7%)	B4→B5R	B5R	40	44
		A3→A4R	A4R	38	41
	V (81.6%)	B4→A4R	A4R	38	41
		B5R→A5R	A5R	50	60
	VI (86.5%)	A4→B5	B5	50	60
		A3→B4	B4	36	36
Enlarge	IV (200.0%)	A5R→A3	A3	30	30
	III (141%)	A4R→A3	A3	30	30
		B5R→B4	B4	36	36
	II (122.4%)	A4R→B4	B4	36	36
		A5→B5	B5	50	60
	I (115.4%)	B4→A3	A3	30	30
		B5→A4	A4	50	60

Delivery by the machine, auto paper select, auto density select, non-sort, deck/cassette

A-101-09 Copying Speeds (copier only)

Reproduction ratio		Size	Paper size	copies/min	
				iR5000	iR6000
Direct		279.4×431.8 mm (11"×17")	279.4×431.8 mm (11"×17")	30	30
		LTR	LTR	50	60
		LGL	LGL	36	36
		LTRR	LTRR	39	42
		STMTR	STMTR	50	60
Reduce	II (50.0%)	279.4×431.8 mm (11"×17")→STMTR	STMTR	50	60
	III (64.7%)	279.4×431.8 mm (11"×17")→LTRR	LTRR	39	42
	IV (73.3%)	279.4×431.8 mm (11"×17")→LGL	LGL	36	36
	V (78.6%)	LGL→LTRR	LTRR	39	39
Enlarge	IV (200.0%)	STMTR*→ 279.4×431.8 mm (11"×17")	279.4×431.8 mm (11"×17")	30	30
	III (129.4%)	LTRR→ 279.4×431.8 mm (11"×17")	279.4×431.8 mm (11"×17")	30	30
	II (121.4%)	LGL→ 279.4×431.8 mm (11"×17")	279.4×431.8 mm (11"×17")	30	30

* Cannot be set in an ADF as an original.
Delivery by the machine, auto paper select, auto density select, non-sort, deck/cassette

A-101-10 Copying Speeds (copier only)

The specifications are subject to change for product improvement.

1.2 Paper Deck-G1

Item	Specifications
Pickup	Clawless (retard)
Paper accommodation	Side tray
Copy paper type	• Plain paper (64 to 80 g/m^2) A4, B5, LTR • Tracing paper (SM-1) A4, B5 • Colored paper (Canon-recommended) A4 Thick paper (90 to 200 g/m^2) A4, B5, LTR
Paper stack	Height: 385 mm (approx.; about 3500 sheets)
Serial number	A4 type: XCQ xxxxx/LTR type: XCRxxxxx
Paper size switch	By size guide plate (in steps), in service mode (OPTION)
Dimensions	326.2 (W) × 583 (D) × 574.5 (H) mm/ 12.8 (W) × 23.0 (D) × 22.6 (H) in
Weight	46 kg (approx.)/101.4 lb (approx.)
Power supply	DC from host machine
Operating environment Temperature Humidity Atmospheric pressure	Same as host machine

A-102-01

The specifications are subject to change for product improvement.

1.3 Shift Tray-B1

Item		Specifications
Paper type		Same as host machine
Paper size	Feeding	Same as host machine
	Shifting	LTR, LTRR, LGL, 279.4×431.8 mm (11"×17"), A4, A4R, A3
Paper stack		Height: 60 mm /2.4 in (approx.; about 500 sheets of 64 g/m^2)
Stacking performance	Delivery direction (w/ shift)	50 mm or less
	Shift direction (w/ shift)	between stacks: 20 mm or more within stack: [between stacks -5] mm
	w/o shift	100 mm or less
Serial number		XCSxxxxx
Dimensions		365.3 (W) × 547.0 (D), 255.7 (H) mm/ 14.4 (W) × 21.5 (D) × 10.1 (H) in
Weight		4.2 kg (approx.)/9.3 lb (approx.)
Power supply		DC from host machine
Maximum power consumption		2 W or less
Operating environment		Same as host machine
Temperature		
Humidity		
Atmospheric pressure		

A-103-01

The specifications are subject to change for product improvement.

G. List of Special Tools

The following special tools will be needed in addition to the standard tools set:

No.	Name	Toll No.	Shape	Rank	Remarks
1	Digital multimeter	FY9-2002	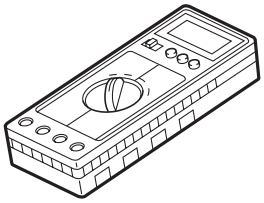	A	Used when making electrical checks.
2	Door switch	TKN-0093	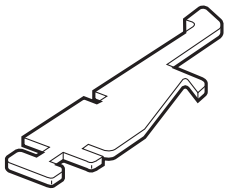	A	
3	Mirror positioning tool (front, rear)	FY9-3009	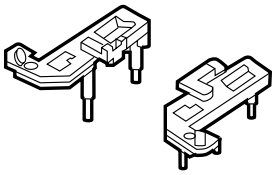	B	Used when positioning the No. 1/No. 2 mirror.
4	NA-3 Test Sheet	FY9-9196	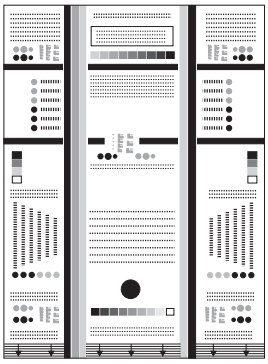	A	Used when adjusting/ checking images.
5	Potential sensor electrode	FY9-3012	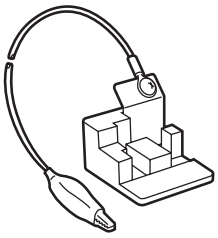	B	Used to make zero-level checks on potential sensors.

No.	Name	Toll No.	Shape	Rank	Remarks
6	Environment sensor checking sensor	FY9-3014	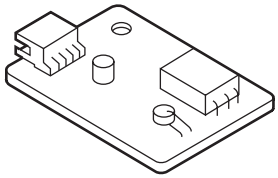	B	Used to check the environment sensor.
7	Tester extension pin	FY9-3038	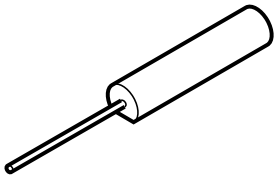	A	Used when making electrical checks.
8	Tester extension pin (L-shaped)	FY9-3039	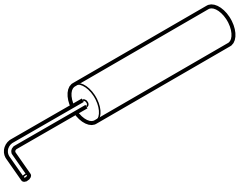	A	Used when making electrical checks.

Rank:

A: each service person is expected to carry one.
B: each group of five persons is expected to carry one.
C: each workshop is expected to carry one.

H. List of Solvents/Oils

No.	Name	Uses	Composition	Remarks
1	Alcohol	Cleaning: e.g., glass, plastic, rubber parts; external covers.	Fluorescent family hydrocarbon, alcohol, surface activating agent, water	• Do not bring near fire. • Procure locally. • Substitute: IPA (isopropyl alcohol)
2	Solvent	Cleaning: metal part; oil, toner.	Fluorescent family hydrocarbon, chlorine family hydrocarbon, alcohol.	• Do not bring near fire. • Procure locally.
3	Heat resisting grease	Lubrication: fixing drive parts	Mineral family lithium soap, molybdenum disulfide,	Tool No.: CK-0427 (500g/can)
4	Lubricant		Mineral oil (paraffin family)	Tool No.: CK-0524 (100cc)
5	Lubricant	Lubrication: drive parts, friction parts	Silicone oil	Tool No.: CK-0551 (20g)
6	Drum cleaning powder	Cleaning: photosensitive drum	Cerium oxide	Tool No.: CK-0429
7	Lubricant	Lubrication: scanner rail	Silicone oil	Tool No.: FY9-6011 (50cc)
8	Conducting grease	Lubrication: drum heater contact	Ether, polytetra fluoethylene	Tool No.: FY9-6008 (10 g)

Prepared by
Office Imaging Products Technical Support Division
Office Imaging Products Quality Assurance Center
CANON INC.
Printed in Japan

REVISION 0 (JULY 2000) (18723/22109)

5-1, Hakusan 7-chome, Toride-shi, Ibaraki 302-8501 Japan



This publication is printed on
100% reprocessed paper.

Canon

PRINTED IN JAPAN (IMPRIME AU JAPON) 0800M1.25-1