iR5000/iR6000

SERVICE MANUAL

REVISION 0

Canon

JULY 2000 FY8-13GS-000

COPYRIGHT© 2000 CANON INC.

CANON iR5000/iR6000 REV.0 JULY 2000 PRINTED IN JAPAN (IMPRIME AU JAPON)

Application

This manual has been issued by Canon Inc. for qualified persons to learn technical theory, installation, maintenance, and repair of products. This manual covers all localities where the products are sold. For this reason, there may be information in this manual that does not apply to your locality.

Corrections

This manual may contain technical inaccuracies or typographical errors due to improvements or changes in products. When changes occur in applicable products or in the contents of this manual, Canon will release technical information as the need arises. In the event of major changes in the contents of this manual over a long or short period, Canon will issue a new edition of this manual.

The following paragraph does not apply to any countries where such provisions are inconsistent with local law.

Trademarks

The product names and company names used in this manual are the registered trademarks of the individual companies.

Copyright

This manual is copyrighted with all rights reserved. Under the copyright laws, this manual may not be copied, reproduced or translated into another language, in whole or in part, without the written consent of Canon Inc.

COPYRIGHT © 2000 CANON INC.
Printed in Japan
Imprimé au Japon

Caution

Use of this manual should be strictly supervised to avoid disclosure of confidential information.

1. Symbols Used

This documentation uses the following symbols to indicate special information:

Symbol	Description
	Indicates an item of a non-specific nature, possibly classified as Note, Caution, or Warning.
	Indicates an item requiring care to avoid electric shocks.
	Indicates an item requiring care to avoid combustion (fire).
	Indicates an item prohibiting disassembly to avoid electric shocks or problems.
	Indicates an item requiring disconnection of the power plug from the electric outlet.
 Memo	Indicates an item intended to provide notes assisting the understanding of the topic in question.
 REF.	Indicates an item of reference assisting the understanding of the topic in question.
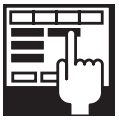	Provides a description of a service mode.
	Provides a description of the nature of an error indication.
	Refers to the Copier Basics Series for a better understanding of the contents.

COPYRIGHT © 2000 CANON INC.

2. Outline of the Manual

This Service Manual contains basic information needed to service the iR5000/iR6000 and its accessories (i.e., side paper deck, shift tray) in the field, conducted for the purpose of maintaining its product quality and a specific level of performance. A separate Service Manual is made available for each of its accessories (except for the side paper deck and shift tray); for details, refer to the appropriate manual.

This Service Manual consists of the following chapters:

1. System Unit

Chapter 1	Introduction:	features, specifications, names of parts, functions, operation, system configuration, routine maintenance by the user
Chapter 2	Main Controller:	functional construction, outline of electrical circuitry, principles of operation of the image processing system, power supply
Chapter 3	Installation:	site conditions and installation procedure, relocation of the machine, installation of accessories

2. Reader Unit

Chapter 1	Basic Operation:	functional construction, outline of electrical circuitry, basic sequence of operations
Chapter 2	Original Exposure System:	principles of operation of the exposure system, timing of operation, disassembly/assembly and adjustment
Chapter 3	Image Processing System:	principles of operation of the image processing system, timing of operation, disassembly/assembly and adjustment

3. Printer Unit

Chapter 1	Introduction:	safety of the laser, image formation, auxiliary processes
Chapter 2	Sequence of Operations:	basic operations, outline of electrical circuitry, basic sequence of operations
Chapter 3	Laser Exposure System:	principles of operation of the laser exposure system, timing of operation, disassembly/assembly and adjustment
Chapter 4	Image Formation System:	principles of operation of the image formation system, timing of operation, disassembly/assembly and adjustment
Chapter 5	Pickup/Feeding System:	principles of operation of the pickup/feeding system, timing of operation, disassembly/assembly and adjustment

COPYRIGHT © 2000 CANON INC.

Chapter 6	Fixing System:	principles of operation of the fixing system, timing of operation, and disassembly/assembly and adjustment
Chapter 7	Externals and Controls:	principles of operation of the externals/controls, timing of operation, disassembly/assembly and adjustment
Chapter 8	Paper Deck:	principles of operation, timing of operation, disassembly/assembly and adjustment
Chapter 9	Shift Tray:	principles of operation, timing of operation, disassembly/assembly adjustment

4. Troubleshooting

Chapter 1	Maintenance and Inspection:	table of periodically replaced parts, table of consumables/durables, scheduled servicing chart
Chapter 2	Image Adjustment Basic Procedure:	basic procedure for image adjustment
Chapter 3	Standards and Adjustments:	standards and adjustments
Chapter 4	Troubleshooting Image Faults/Malfunctions:	troubleshooting image faults/malfunctions
Chapter 5	Service Mode:	how to use service mode, list of service modes
Chapter 6	Self Diagnosis:	codes, causes of errors, timing chart
Appendix:		general timing chart, general circuit diagrams

The descriptions are updated from time to time to reflect product improvements, and major changes are communicated in the form of Service Information bulletins.

All service persons are expected to familiarize themselves with the contents of this Service Manual and Service Information bulletins and acquire a level of knowledge and skill required to promptly respond to the needs of the field.

COPYRIGHT © 2000 CANON INC.

The following rules apply throughout this Service Manual:

1. Each chapter contains sections explaining the purpose of specific functions and the relationship between electrical and mechanical systems with reference to the timing of operation.
   In the diagrams, ▮▮▮ represents the path of mechanical drive; where a signal name accompanies the symbol ⟶, the arrow indicates the direction of the electric signal.
   The expression "turn on the power" means flipping on the power switch, closing the front door, and closing the delivery unit door, which results in supplying the machine with power.
2. In the digital circuits, '1' is used to indicate that the voltage level of a given signal is "High," while '0' is used to indicate "Low." (The voltage value, however, differs from circuit to circuit.) In addition, the asterisk (*) as in "DRMD*" indicates that the DRMD signal goes on when '0'.
   In practically all cases, the internal mechanisms of a microprocessor cannot be checked in the field. Therefore, the operations of the microprocessors used in the machines are not discussed: they are explained in terms of from sensors to the input of the DC controller PCB and from the output of the DC controller PCB to the loads.

The descriptions in this Service Manual are subject to change without notice for product improvement or other purposes, and major changes will be communicated in the form of Service Information bulletins.

All service persons are expected to have a good understanding of the contents of this Service Manual and all relevant Service Information bulletins and be able to identify and isolate faults in the machine.

COPYRIGHT © 2000 CANON INC.

System Configuration

The iR5000/iR6000 may be configured with the following accessories for a fully integrated system:

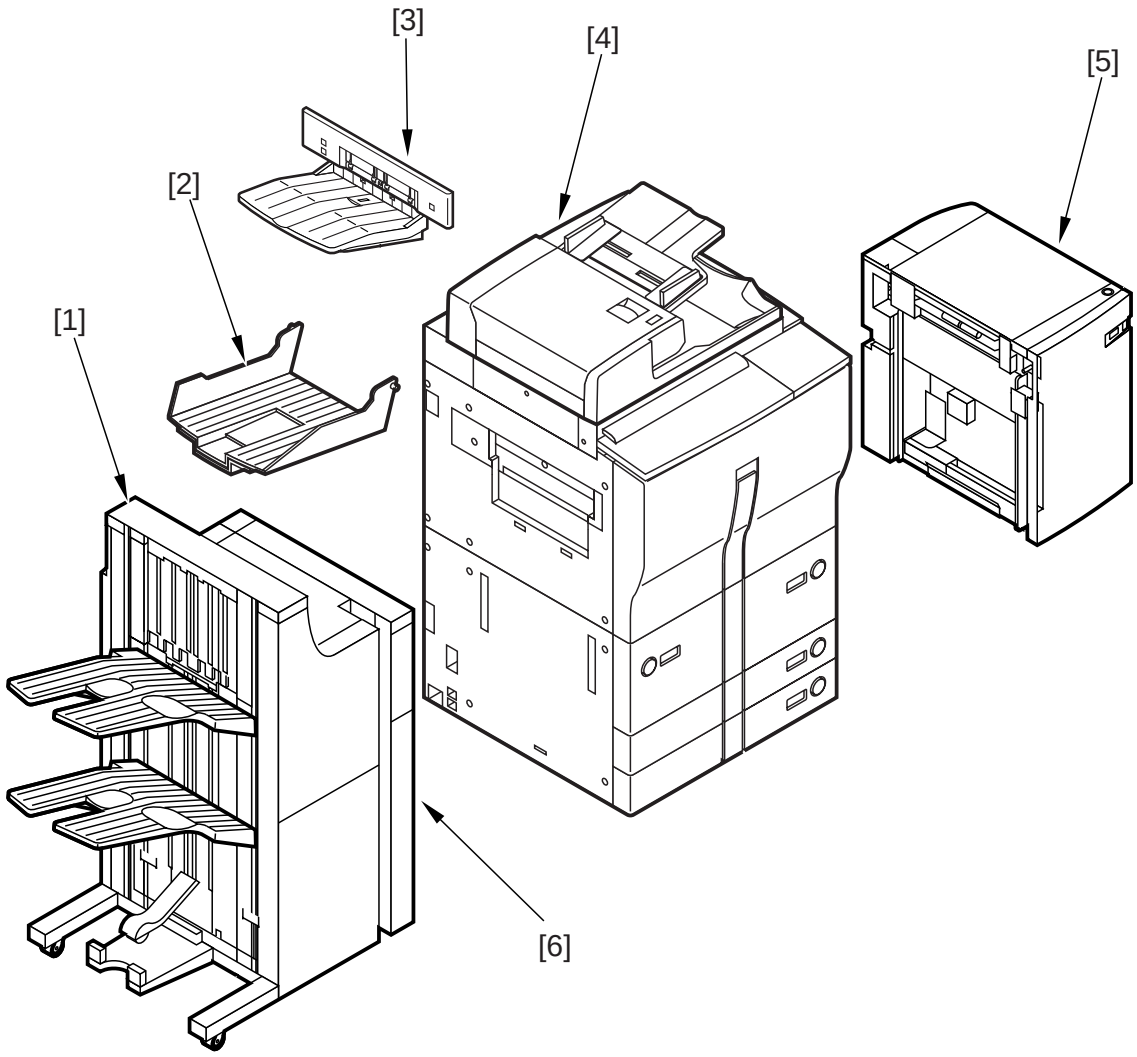

[1] Finisher-F1/Saddle Finisher-F2
[2] Copy Tray-C1
[3] Shift Tray-B1
[4] DADF-D1 (standard)
[5] Paper Deck-G1
[6] Puncher Unit-B1/C1/D1

Figure 1

COPYRIGHT © 2000 CANON INC.

Important!

Be sure to turn off the main power switch and disconnect the power plug before starting to disassemble the machine; in addition, keep the following in mind for the work:

1. In printer mode, turning off the main power switch can result in the loss of data being processed. Check to make sure that the Execution/Memory lamp on the control panel is off before operating the main power switch.
2. Do not turn off the main power switch while downloading is taking place. Otherwise, the machine may become disabled.
3. The cassette heater and the drum heater remain powered as long as the environment switch and the heater switch are on (even when the main power switch is off).
4. Not all power is removed when the front cover is opened if the main power switch is on, requiring care.

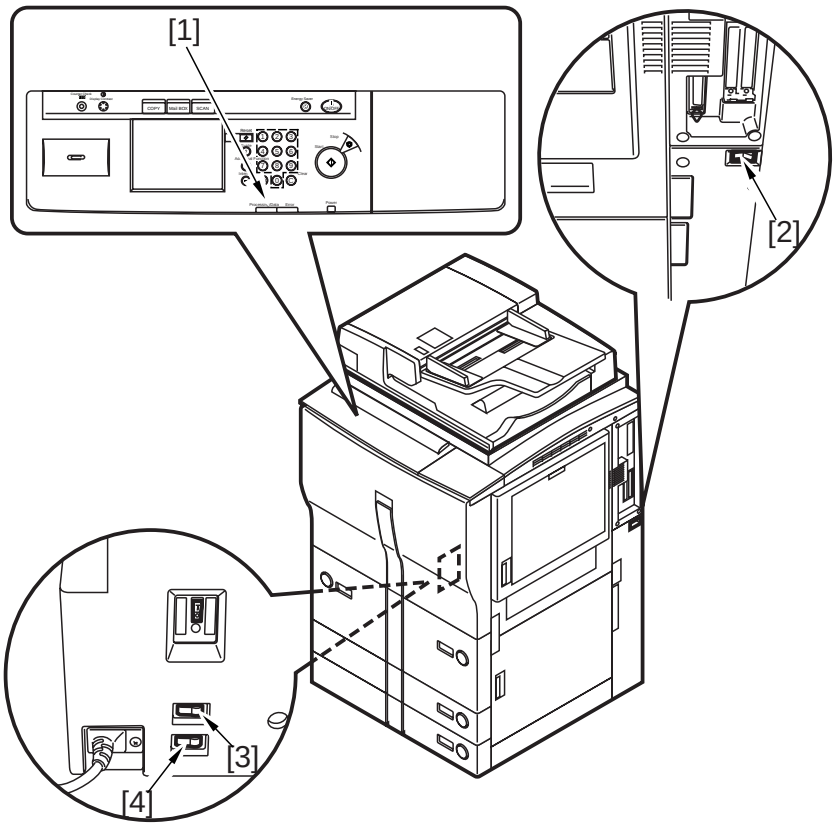

[1] Execution/Memory lamp
[2] Main power switch
[3] Cassette heater switch
[4] Environment switch

Figure 2 Arrangement of the Switches

COPYRIGHT © 2000 CANON INC.

SYSTEM UNIT
SERVICE MANUAL

COPYRIGHT © 2000 CANON INC.
CANON iR5000/iR6000 REV.0 JULY 2000

Contents

CHAPTER 1 GENERAL DESCRIPTION

1. Features 1-1S
   - 1.0.1 High Speed, High Image Quality 1-1S
   - 1.0.2 Hard Disk 1-1S
   - 1.0.3 Stackless, Duplexing Mechanism 1-1S
   - 1.0.4 Large-Capacity Paper Source 1-1S
   - 1.0.5 Variety of Delivery Processing (with accessories) 1-1S
2. Specifications 1-2S
   - 2.1 Copier 1-2S
     - 2.1.1 Type 1-2S
     - 2.1.2 Method 1-2S
     - 2.1.3 Functions 1-3S
     - 2.1.4 Others 1-8S
   - 2.2 Paper Deck-G1 ..... 1-11S 1-11S
   - 2.3 Shift Tray-B1 ..... 1-12S
3. Names of Parts 1-13S
   - 3.1 External View 1-13S
   - 3.2 Cross Section 1-15S
4. Using the Machine 1-17S
   - 4.1 Turning On the Power Switches 1-17S
   - 4.2 Control Panel 1-18S
   - 4.3 Extension Mode 1-19S
   - 4.4 User Mode 1-20S
5. System Construction 1-24S
   - 5.1 Functional Construction 1-24S
   - 5.2 Outline of Electrical Circuitry 1-25S
     - 5.2.1 Construction of Electrical Circuitry 1-25S
   - 5.3 Inputs to and Outputs from the Major PCBs 1-26S
     - 5.3.1 Wiring Diagram of the Major PCBs 1-26S
6. Routine Maintenance by the User 1-27S
   - 6.1 Cleaning 1-27S
   - 6.2 Inspection 1-30S
     - 6.2.1 Making a Check 1-30S

CHAPTER 2 MAIN CONTROLLER

1. Basic Operations 2-1S
   - 1.1 Functional Construction 2-1S
   - 1.2 Outline of Electrical Circuitry . 2-2S
     - 1.2.1 Outline 2-2S
     - 1.2.2 Main Controller PCB 2-2S
     - 1.2.3 Hard Disk Drive 2-2S
   - 1.3 Start-Up Sequence 2-4S
     - 1.3.1 Outline 2-4S
     - 1.3.2 Start-Up Sequence 2-5S
   - 1.4 Inputs to and Outputs from the Major PCBs 2-7S
     - 1.4.1 Wiring Diagram of the Major PCBs 2-7S
2. Digital Image Processing 2-8S
   - 2.1 Outline 2-8S
   - 2.2 Input Image Processing 2-9S
     - 2.2.1 Image Data from the Reader Unit 2-9S
     - 2.2.2 Enlargement/Reduction (main scanning direction) ... 2-9S
     - 2.2.3 Edge Emphasis 2-9S
     - 2.2.4 Editing 2-9S
     - 2.2.5 Density Conversion (LUT) 2-9S
     - 2.2.6 Binary Processing (error diffusion; T-BIC) 2-9S
     - 2.2.7 Binary Processing (dither screen) 2-10S

COPYRIGHT © 2000 CANON INC.

2.3 Controlling the Image Memory 2-11S
2.3.1 Compression/Decompression, Rotation, Enlargement/ Reduction 2-11S
2.3.2 SDRAM 2-11S
2.3.3 Hard Disk Drive (HDD) .. 2-11S
2.4 Output Image Processing 2-11S
2.4.1 Smoothing 2-11S
2.4.2 Thickening (PDL output only) 2-11S
2.4.3 Binary-Binary Density Conversion (read image output only) 2-11S
3. Soft Counter 2-12S
4. Controlling the Power Supply 2-14S
4.1 Outline 2-14S
4.2 Power Supply Mode 2-14S
4.3 Standby Mode (normal operation) 2-14S
4.4 Power Save Mode 2-14S
4.5 Low Power Mode 2-15S
4.5.1 Shift from Standby Mode (standby → low-power) ... 2-15S
4.5.2 Shift to Standby Mode (low power → standby) ... 2-15S
4.6 Sleep Mode 2-15S
4.6.1 Shift from Standby Mode (standby → sleep) 2-15S
4.6.2 Shift from Low Power Mode (low power mode → sleep) 2-15S
4.6.3 Return to Standby Mode (sleep → standby) 2-15S
4.7 Off Mode 2-16S
4.7.1 Shift from Standby Mode (standby → off mode) 2-16S
4.7.2 Shift from Low Power Mode (low power mode → off mode) 2-16S
4.7.3 Return to Standby Mode (off mode → standby) 2-16S
4.8 Power Off Mode 2-16S

CHAPTER 3 INSTALLATION

1. Selecting the Site 3-1S
2. Unpacking and Installation 3-3S
2.1 Before Starting the Work 3-3S
2.2 Installation 3-4S
2.3 Unpacking 3-5S
2.4 Mounting the Scanner 3-6S
2.5 Mounting the Fixing Assembly 3-7S
2.6 Checking the Charging Assemblies 3-9S
2.7 Mounting the Developing Assembly 3-12S
2.8 Mounting the Pickup Assembly 3-13S
2.9 Mounting the Deck Locking Plate (left deck) 3-14S
2.10 Supplying Toner 3-15S
2.11 Setting the Cassette 3-16S
2.12 Changing the Paper Size for the Front Deck (right/left) 3-17S
2.13 Checking Images/Operations and User Mode 3-18S
2.14 Checking the Environment Switch 3-20S
2.15 Installing the Machine 3-21S
3. Relocating the Machine 3-22S
4. Mounting the Delivery Roll 3-23S
5. Mounting the Original Holder 3-24S
6. Installing the Control Card IV 3-25S
7. Installing the NE Controller-A1 .... 3-26S
7.1 Installation 3-26S

COPYRIGHT © 2000 CANON INC.

CHAPTER 1

GENERAL DESCRIPTION

COPYRIGHT © 2000 CANON INC.

1. Features

1.0.1 High Speed, High Image Quality

Copying speed: 50 copies/min (iR5000; 1-on-N; from cassette/deck)
60 copies/min (iR6000; 1-on-N; from cassette/deck)
Reading resolution: 600 × 600 dpi
Printing resolution: 1200* × 600 dpi (copier mode; smoothing ON; varies by model)
2400* × 600 dpi (printer mode)
*Equivalent.

1.0.2 Hard Disk

The machine comes with a hard disk as standard, enabling memory-based sorting. The machine is capable of making multiple copies by reading the original once.

1.0.3 Stackless, Duplexing Mechanism

The machine moves paper seamlessly when making double-sided copies without any waste as by stacking it in a duplexing unit.

1.0.4 Large-Capacity Paper Source

The addition of an accessory will enable accommodation of as many as 7650 sheets of paper (80 g/m^2).

Right front paper deck: 1500 sheets
Left front paper deck: 1500 sheets
Cassette 3: 550 sheets
Cassette 4: 550 sheets
Multifeeder: 50 sheets
Paper Deck-G1 (accessory): 3500 sheets

1.0.5 Variety of Delivery Processing (with accessories)

Finishing: 1-point or 2-point stapling (Finisher)
Saddle stitching: middle binding and folding for delivery (Saddle Finisher-F2 only)
Punching: making binding holes for delivery (Puncher Unit)

COPYRIGHT © 2000 CANON INC.

2. Specifications

2.1 Copier

2.1.1 Type

Item	Specifications
Body	Console
Copyboard	Fixed
Light source	Xenon tube
Lens	Lens array (F3.7)
Photosensitive medium	Amorphous silicon drum (80-dia.)

T01-201-01

2.1.2 Method

Item		Specifications
Reproduction		Indirect statophotography
Charging		Corona
Exposure		Laser
Copy density adjustment		Auto or manual
Development		Dry, 1-component toner production
Pickup	Auto	Front paper deck (2 holders)
		Front cassette (2 holders)
	Manual	Manual feed tray
		(5.5 mm deep; about 50 sheets of 80 m^2 paper)
Transfer		Corona
Separation		Corona (static separation)
Cleaning		Blade
Fixing		Heat roller
		100 V: 700 W (main) + 470 W (sub)
		120/230 V: 600 W (main) + 600 W (sub)

T01-201-02

COPYRIGHT © 2000 CANON INC.

2.1.3 Functions

Item	Specifications			
Original type	Sheet, book, 3-D object (2 kg max.)			
Maximum original size	A3/279.4×431.8 mm (11"×17")			
Reproduction ratio	Direct 1: 1			
	Reduce I 1: 0.250			
	Reduce II 1: 0.500			
	Reduce III 1: 0.611			
	Reduce IV 1: 0.707			
	Reduce V 1: 0.816			
	Reduce IV 1: 0.865			
	Enlarge I 1: 0.154			
	Enlarge II 1: 1.224			
	Enlarge III 1: 0.414			
	Enlarge IV 1: 2.000			
	Enlarge V 1: 4.000			
	Zoom 1: 0.250 to 4.00 (in 1% increments)			
Wait time	iR5000: 5 min or less (at 20°C/168°F)			
	iR6000: 6 min or less (at 20°C/168°F)			
First copy time	5.5 sec (stream reading, right deck, Direct, A4/LTR, non-AE, straight delivery)			
	3.8 sec (book mode, right deck pickup, Direct, A4/LTR, non-AE, straight delivery)			
Continuous reproduction	999 prints max.	AB	A3 max.	Postcard min. (vertical)
Print size	Single-sided	Inch	279.4 × 431.8 mm (11"×17") max.	STMT min. (vertical)
		AB	A3 max.	A5 min. (vertical)
	Duplexing	Inch	279.4 × 431.8 mm (11"×17") max.	STMT min. (vertical)

T-01-201-03

COPYRIGHT © 2000 CANON INC.

Pickup	Paper type
Right deck	Plain paper (64 to 80 g/m^2)
Left deck	A4, B5, LTR
	Tracing paper
	A4, B5
	Colored paper (Canon-recommended)
	A4
	Thick paper (90 to 200 g/m^2)
	A4, B5, LTR
Cassette 3	Plain paper (64 to 80 g/m^2)
	A3, B4, A4, B5, A5R, A4R, B5R
Cassette 4	279.4×431.8 mm (11" × 17"), LGL, LTR, LTRR, STMT (vertical feeding)
	Tracing paper
	B4, A4, A4R
	Colored paper (Canon-recommended)
Manual feed tray	(vertical feeding) (64 to 80 g/m^2)
	A3, B4, A4, B5, A5R, A4R, B5R
	279.4×431.8 mm (11" × 17"), LGL, LTR, LTRR, STMT (vertical feeding)
	Tracing paper
	A3, B4, A4, B5, A4R, B5R
	Transparency (Canon-recommended)
	A4, A4R, LTR, LTRR
	Colored paper (Canon-recommended)
	B4, A4, A4R
	Postcard (vertical feeding only)
	Postcard, 2-in-1 postcard (vertical feeding only), 4-in-1 postcard (horizontal feeding only)
	Label sheet (Canon-recommended)
	B4, A4, A4R, LTR, LTRR
	Thick paper (90 to 200 g/m^2)
	A3, B4, A4, B5, A4R, B5R, LTR, LTRR

T-01-201-04

COPYRIGHT © 2000 CANON INC.

Item	Paper type
Single-sided	Plain paper (64 to 80 g/m^2) A3, B4, A4, B5, A5R, A4R, B5R 279.4×431.5 mm (11"×17"), LGL, LTR, LTRR, STMT (vertical feeding) Tracing paper A3, B4, A4, B5, A4R, B5R Transparency (Canon-recommedned) A4, A4R, LTR, LTRR Colored paper (Canon-recommended) B4, A4, A4R Postcard (vertical feeding only) Postcard, 2-in-1 postcard (vertical feeding only), 4-in-1 postcard (horizontal feeding only) Label sheet (Canon-recommended) B4, A4, A4R, LTR, LTRR Thick, paper (90 to 200 g/m^2) A3, B4, A4, B5, A4R, B5R, LTR, LTRR
Reverse delivery	Plain paper (64 to 80 g/m^2) A3, B4, A4, B5, A5R, A4R, B5R 279.4×431.8 mm (11"×17"), LGL, LTR, LTRR, STMT (vertical feeding) Colored paper (Canon-recommended) B4, A4, A4R Thick paper (90 to 200 g/m^2) A3, B4, A4, B5, A4R, B5R, LTR, LTRR

T01-201-05

COPYRIGHT © 2000 CANON INC.

	Item	Paper type
Double-sided	Auto	• Plain paper (64 to 80 g/m^2) A3, B4, A4, B5, A5R, A4R , B5R 279.4×431.8 mm (11"×17"), LGL, LTR, LTRR, STMT (vertical feeding) • Colored paper (Canon-recommended) B4, A4, A4R Thick paper (90 to 200 g/m^2) A3, B4, A4, B5, A4R, B5R, LTR, LTRR
	Manual feed tray	• Plain paper (64 to 80 g/m^2) A3, B4, A4, B5, A5R, A4R, B5R 279.4×431.8 mm (11"×17"), LGL, LTR, LTRR, STMT (vertical feeding) • Colored paper (Canon-recommended) B4, A4, A4R • Thick paper (90 to 200 g/m^2) A3, B4, A4, B5, A4R, B5R, LTR, LTRR

T01-201-06

COPYRIGHT © 2000 CANON INC.

Item		Specifications
Claw		None
Tray	Paper deck (right, left)	162 mm/16.4 in deep (approx.; about 1500 sheets of 80 g/m^2 paper)
	Cassette 3/4	55 mm/2.2 in deep (approx.; about 550 sheets of 80 g/m^2)
Delivery tray		250 sheets (approx.; of 80 g/m^2)
Hard disk		6.4 GB or 5.1 GB*1
Non-image width	Leading edge	Direct/Enlarge-Reduce: 4.0 ± 1.5/-1.0mm < 4.5 ± 1.8mm >*2
	Trailing edge	Direct/Enlarge-Reduce: 2.0 ± 1.5mm < 2.0 ± 1.8 mm >*2
	Left/right (1st side)	Direct/Enlarge-Reduce: 2.5 ± 1.5mm < 2.5 ± 2.0 mm >*2
Auto clear		Yes (2 min standard; may be changed between 0 and 9 min in 1-min increments)
Auto power off		No
	Low-power mode	Yes (15 min standard; may be changed in user mode for 10, 15, 20, 30, 40, 50, 60, 90 min and 2, 3, 4 hr)
Power save mode	Auto sleep	Yes (60 min standard; may be changed to 10, 15, 20, 30, 40, 50, 60, 90 min, 2, 3, 4 hr in user mode)
	Energy save mode	Yes (-10% standard; may be changed to -10%, -25%, -50%, no return time (0%) in user mode)
Accessories		• Paper Deck-G1 • Remote Diagnostic Device II • Control Card-IV • Finisher-F1 • Saddle Finisher-F2 • Puncher Unit-B1/C1/D1 (2/3/4 holes) • Network LIPS Printer Kit-A1 (100-V only) • Network Multi-PDL Printerkit-A1 (120/230-V only)

*1: The HDD mounted in the machine or an HDD supplied as a service part may have a different memory size; all HDDs use the same area (amount) of memory and, therefore, the fact will not cause a problem.

*2: The values within <> indicate the use of an ADF.

T01-201-07

The specifications are subject to change for product improvement.

COPYRIGHT © 2000 CANON INC.

2.1.4 Others

Item		Specifications	
Operating environment	Temperature	15 to 30°C/59 to 86°F	
	Humidity	5% to 80%RH	
	Atmospheric pressure	810.6 to 1013.3 hpa (0.8 to 1.0 atm)	
		iR5000	iR6000
Power supply	100V (50/60Hz)	LQHxxxxx	LQKxxxxx
		LQJxxxxx	LQLxxxxx
	120V (50/60Hz)	NRFxxxxx	NRHxxxxx
		NRGxxxxx	NRJxxxxx
	220V/60Hz	PKMxxxxx	PKLxxxxx
	230V (50/60Hz)	PKKxxxxx	PKZxxxxx
		PKLxxxxx	PLHxxxxx
		QCWxxxxx	QCXxxxxx
		PBZxxxxx	RCYxxxxx
		SCKxxxxx	SCLxxxxx
		TBZxxxxx	TCMxxxxx
		UFMxxxxx	UFNxxxxx
Power consumption	Maximum	iR5000: 1.3 kW or less	iR6000: 1.3 kW or less
	Stand by	iR5000: 282 Wh (approx.; reference)	iR6000: 282 Wh (approx.; reference)
Noise	Continuous copying	iR5000: 995 Wh (approx.; reference only) iR6000: 1008 Wh (approx.; reference only) By sound power level (impulse mode)	
	During copying	iR5000: 71 dB or less	iR6000: 78 dB or less
	During standby	iR5000: 50 dB or less	iR6000: 55 dB or less
Ozone (after 2500, 000 prints)		0.05 ppm or less	
Dimensions	Width	852 mm/33.5 in	
	Depth	726 mm/28.6 in	
	Height	1134 mm/44.7 in	
Weight		210 kg (approx.)/470.4 lb (approx.)	
Consumables	Copy paper Toner	Keep wrapped, and store avoiding humidity. Avoid direct sunlight, and store at 40°C, 85% RH or less.	

T01-201-08

COPYRIGHT © 2000 CANON INC.

Reproduction ratio		Size	Paper size	copies/min (1-to-N)	
				iR5000	iR6000
Direct		A3 (297×420 mm)	A3	30	30
		A4 (210×297 mm)	A4	50	60
		B4 (257×364 mm)	B4	36	36
		B5 (182×257 mm)	B5	50	60
		A4R (297×210 mm)	A4R	38	41
		B5R (257×182 mm)	B5R	40	44
		A5R (210×149 mm)	A5R	50	60
Reduce	II (50%)	A3→A5R	A5R	50	60
	III (61.1%)	A3→B5R	B5R	40	44
	IV (70.7%)	B4→B5R	B5R	40	44
		A3→A4R	A4R	38	41
	V (81.6%)	B4→A4R	A4R	38	41
		B5R→A5R	A5R	50	60
	VI (86.5%)	A4→B5	B5	50	60
		A3→B4	B4	36	36
Enlarge	IV (200.0%)	A5R→A3	A3	30	30
	III (141%)	A4R→A3	A3	30	30
		B5R→B4	B4	36	36
	II (122.4%)	A4R→B4	B4	36	36
		A5→B5	B5	50	60
	I (115.4%)	B4→A3	A3	30	30
		B5→A4	A4	50	60

Delivery by the machine, auto paper select, auto density select, non-sort, deck/cassette

T01-201-09 Copying Speeds (copier only)

COPYRIGHT © 2000 CANON INC.

Reproduction ratio		Size	Paper size	copies/min	
				iR5000	iR6000
Direct		279.4×431.8 mm (11"×17")	279.4×431.8 mm (11"×17")	30	30
		LTR	LTR	50	60
		LGL	LGL	36	36
		LTRR	LTRR	39	42
		STMTR	STMTR	50	60
Reduce	II (50.0%)	279.4×431.8 mm (11"×17")→STMTR	STMTR	50	60
	III (64.7%)	279.4×431.8 mm (11"×17")→LTRR	LTRR	39	42
	IV (73.3%)	279.4×431.8 mm (11"×17")→LGL	LGL	36	36
	V (78.6%)	LGL→LTRR	LTRR	39	39
Enlarge	IV (200.0%)	STMTR*→ 279.4×431.8 mm (11"×17")	279.4×431.8 mm (11"×17")	30	30
	III (129.4%)	LTRR→ 279.4×431.8 mm (11"×17")	279.4×431.8 mm (11"×17")	30	30
	II (121.4%)	LGL→ 279.4×431.8 mm (11"×17")	279.4×431.8 mm (11"×17")	30	30

* Cannot be set in an ADF as an original.
Delivery by the machine, auto paper select, auto density select, non-sort, deck/cassette

T01-201-10 Copying Speeds (copier only)

The specifications are subject to change for product improvement.

COPYRIGHT © 2000 CANON INC.

2.2 Paper Deck-G1

Item	Specifications
Pickup	Clawless (retard)
Paper accommodation	Side tray
Copy paper type	• Plain paper (64 to 80 g/m^2) A4, B5, LTR • Tracing paper (SM-1) A4, B5 • Colored paper (Canon-recommended) A4 Thick paper (90 to 200 g/m^2) A4, B5, LTR
Paper stack	Height: 385 mm (approx.; about 3500 sheets)
Serial number	A4 type: XCQ xxxxx/LTR type: XCRxxxxx
Paper size switch	By size guide plate (in steps), in service mode (OPTION)
Dimensions	326.2 (W) × 583 (D) × 574.5 (H) mm/ 12.8 (W) × 23.0 (D) × 22.6 (H) in
Weight	46 kg (approx.)/101.4 lb (approx.)
Power supply	DC from host machine
Operating environment Temperature Humidity Atmospheric pressure	Same as host machine

T01-202-01

The specifications are subject to change for product improvement.

COPYRIGHT © 2000 CANON INC.

2.3 Shift Tray-B1

Item		Specifications
Paper type		Same as host machine
Paper size	Feeding	Same as host machine
	Shifting	LTR, LTRR, LGL, 279.4×431.8 mm (11"×17"), A4, A4R, A3
Paper stack		Height: 60 mm /2.4 in (approx.; about 500 sheets of 64 g/m^2)
Stacking performance	Delivery direction (w/ shift)	50 mm or less
	Shift direction (w/ shift)	between stacks: 20 mm or more within stack: [between stacks -5] mm
	w/o shift	100 mm or less
Serial number		XCSxxxxx
Dimensions		365.3 (W) × 547.0 (D), 255.7 (H) mm/ 14.4 (W) × 21.5 (D) × 10.1 (H) in
Weight		4.2 kg (approx.)/9.3 lb (approx.)
Power supply		DC from host machine
Maximum power consumption		2 W or less
Operating environment		Same as host machine
Temperature		
Humidity		
Atmospheric pressure		

T01-203-01

The specifications are subject to change for product improvement.

COPYRIGHT © 2000 CANON INC.

3. Names of Parts

3.1 External View

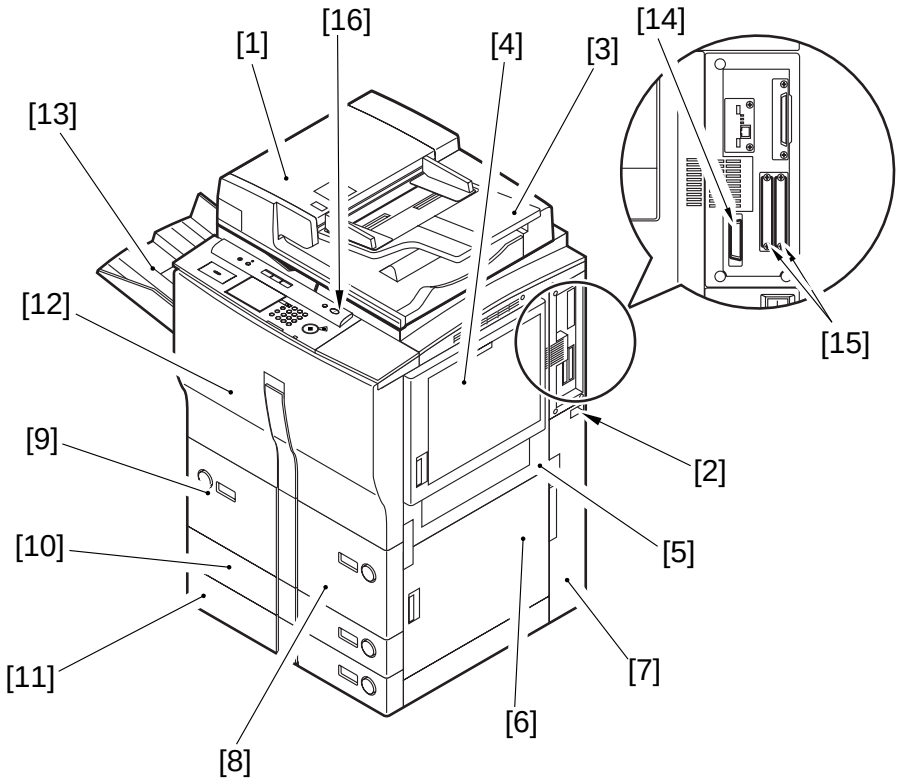

[1] ADF
[2] Main power switch
[3] Original pickup tray
[4] Manual feed tray
[5] Right upper cover
[6] Right lower cover
[7] Waste toner box, grip, drum protection sheet case
[8] Right front paper deck
[9] Left front paper deck
[10] Cassette 3
[11] Cassette 4
[12] Front cover
[13] Delivery tray
[14] Parallel connector for downloading
[15] Slot for expansion board
[16] Control panel power switch

F01-301-01 External View 1

COPYRIGHT © 2000 CANON INC.

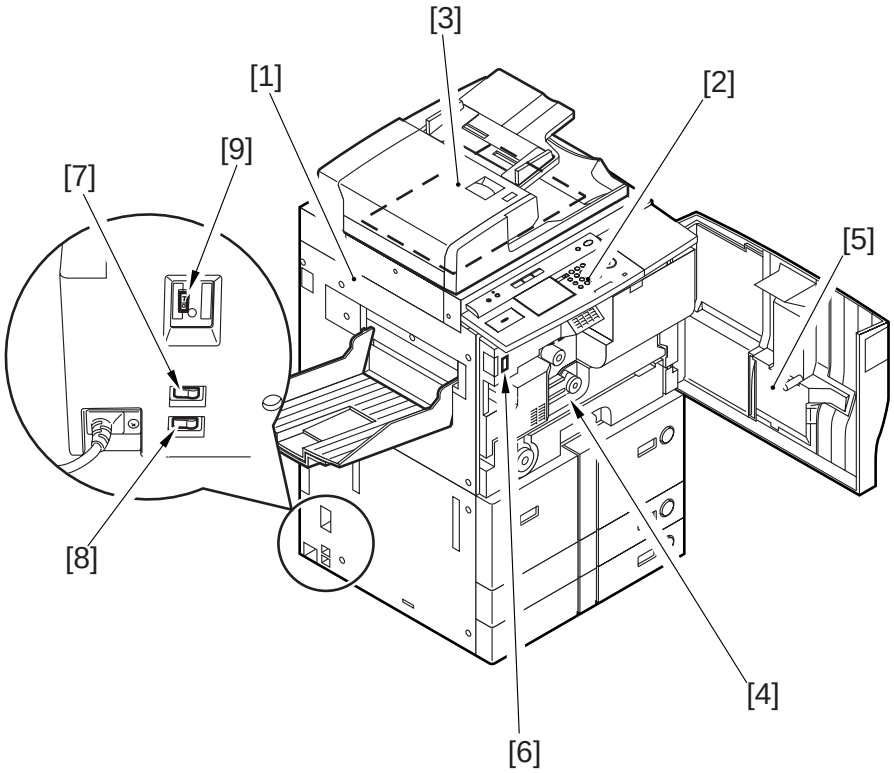

[1] Delivery assembly cover
[2] Control panel
[3] Copyboard glass
[4] Feeding assembly releasing lever
[5] Service book case
[6] Door switch assembly
[7] Cassette heater switch
[8] Environment switch
[9] Leakage breaker

F01-301-02 External View 2

COPYRIGHT © 2000 CANON INC.

3.2 Cross Section

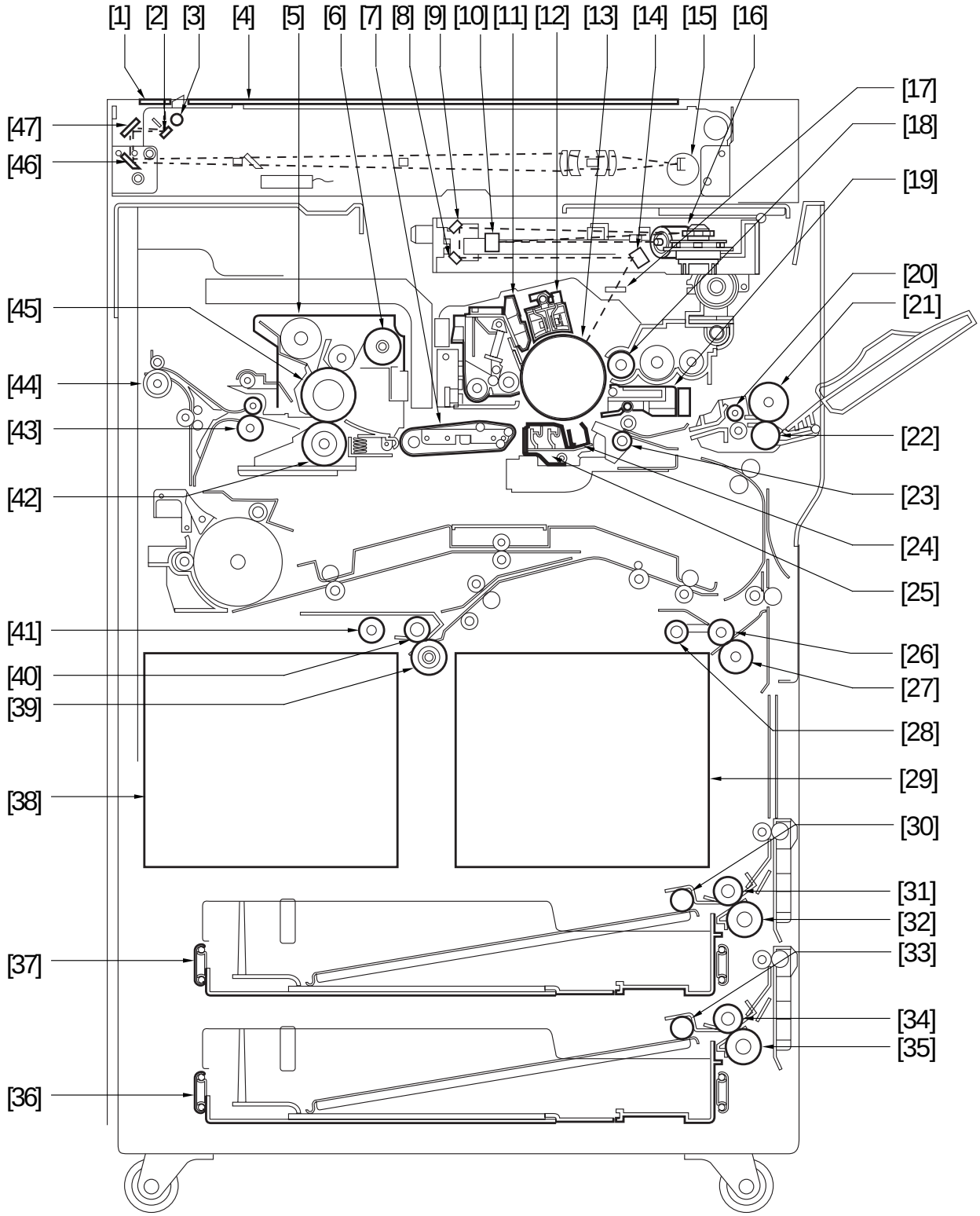

F01-302-01 Cross Section

[1] ADF reading glass
[2] No. 1 mirror
[3] Scanning lamp
[4] Copyboard glass
[5] Fixing assembly
[6] Fixing web
[7] Feeding assembly
[8] Laser mirror 3
[9] Laser mirror 2
[10] Laser mirror 1
[11] Drum cleaner assembly
[12] Primary charging assembly
[13] Photosensitive drum
[14] Laser mirror 4
[15] CCD unit
[16] Lens unit
[17] Dust-proofing glass
[18] Developing cylinder
[19] Pre-transfer charging assembly
[20] Manual feed pull-out roller
[21] Manual feed feed roller
[22] Manual feed separation roller
[23] Registration roller
[24] Transfer charging assembly
[25] Separation charging assembly
[26] Right deck feed roller
[27] Right deck separation roller
[28] Right deck pickup roller
[29] Right deck
[30] Cassette 3 pickup roller
[31] Cassette 3 feed roller
[32] Cassette 3 separation roller
[33] Cassette 4 pickup roller
[34] Cassette 4 feed roller
[35] Cassette 4 separation roller
[36] Cassette 4
[37] Cassette 3
[38] Left deck
[39] Left deck separation roller
[40] Left deck feed roller
[41] Left deck pickup roller
[42] Fixing lower roller
[43] Internal delivery roller
[44] External delivery roller
[45] Fixing upper roller
[46] No. 3 mirror
[47] No. 2 mirror

COPYRIGHT © 2000 CANON INC.

4. Using the Machine

4.1 Turning On the Power Switches

The machine possesses two switches: main power switch and control panel power switch. Normally, it is supplied with power when the main power switch is turned on (i.e., other than in energy saver mode, low power mode, or sleep mode).

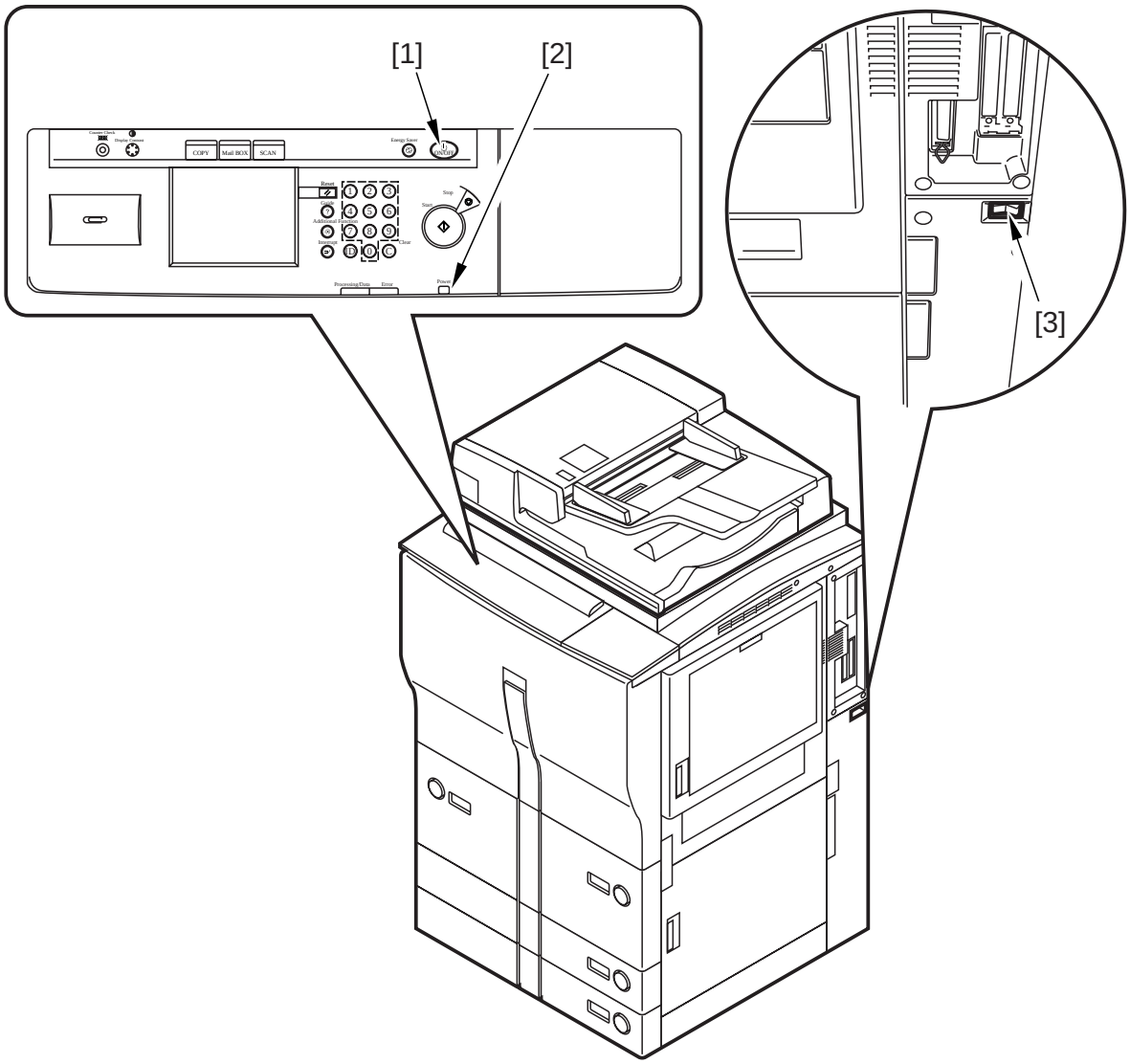

[1] Control panel power switch
[2] Main power lamp
[3] Main power switch

F01-401-01 Arrangement of Switches

4.2 Control Panel

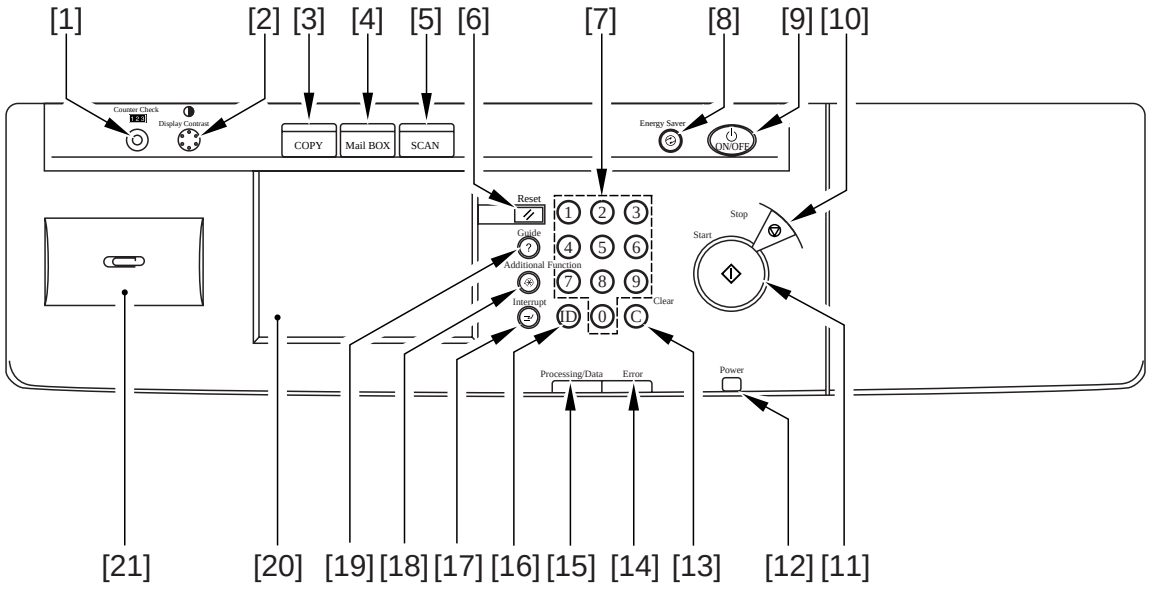

[1] Counter Check key
[2] Display Contrast dial
[3] Copy key
[4] Mail Box key
[5] Scan key
[6] Reset key
[7] Number keys
[8] Energy Saver key
[9] Control panel power switch (sub power supply)
[10] Stop key
[11] Start key
[12] Main power indicator
[13] Clear key
[14] Error lamp
[15] Processing/Data lamp
[16] ID key
[17] Interrupt key
[18] Additional Function key
[19] Guide key
[20] Touch panel
[21] Clip holder

F01-402-01

COPYRIGHT © 2000 CANON INC.

4.3 Extension Mode

Mode	Description
Two-Page Separation	Use it to copy left and right pages (as of an open book) on separate sheets by a single operation.
Transparency Interleaving	Use it to insert a sheet of paper between transparencies in transparency mode.
Shift	Use it to move the entire original image to the center or a corner.
Cover/Sheet Insertion	Use it to print on a sheet of a type different from the one used for the body to serve as a front/back/chapter cover.
Different Size Originals	Use it to copy originals of different sizes (different horizontal lengths or different sizes) on sheets of corresponding sizes.
Margin	Use it to create a margin on the edge of a copy for binding.
Frame Erase	Use it to erase the image of the frame or holes of an original from its copy.
Image Combination	Use it to reduce 2, 4, or 8 originals automatically to print on a single sheet.
Image Separation	Use it to enlarge a single original automatically by dividing it into 2 or 4 to print on a sheet of a selected size.
Nega/Posi	Use it to reverse the black and white areas of the original on its copies.
Sharpness	Use it to increase the black-and-white contrast of an original on its copies.
Mode Memory	Use it to store or recall a copying mode.
Recall	Use it to call as many as three stored copying modes.
Booklet	Use it to copy single- or double-sided originals in such a way to enable making a booklet.
Image Repeat	Use it to repeat an image of the original vertically/ horizontally as many times as specified (until the sheet is full).
Mirror Image	Use it to make a mirror image of an image of the original.
Job build	Use it to copy separately placed sets of originals at once.
Extra-Length	Use it when making copies of an original of a non-default length (manual feed mode; needs selection in service mode: COPIER>OPTION>USER>MF-LG-ST).

T01-403-01 List of Functions

COPYRIGHT © 2000 CANON INC.

4.4 User Mode

Common Settings	Initial Functions	copy*/box/other
	Auto Clear Setting	return*, do not return
	Audible Tones	Use it to turn on/off the buzzer. (on*/off; input sound, alarm sound, job end sound)
	Inch Entry	Use it to use Inch input. (on*/off)
	Drawer Enigibility For APS/ ADS	Use it to turn on cassette selection for each cassette folder. (manual feed: on/off*; cassette holder: on*/ off; paper type: consider/do not consider*)
	Store Paper Type	Use it to select a paper type for the front paper deck, each cassette, and side paper deck. (plain paper*, letterhead, thick paper, colored paper)
	Energy Saver Mode	Use it to change the level of power save mode. (-10%*/-25%/-50%/None)
	Function Key Wake UP	Use it to turn on/off the mechanism used to assign a function key for disabling sleep mode/power save mode. (on/off*)
	Energy Consumption in Sleep Mode	Use it to set the level of power consumption for sleep mode. (low*/high)
	LTRR/STMT Originals Selection	Use it to turn off the mechanism used to distinguish an LTRR/STMT original. (manual/LTRR*/STMT)
	Tray Designation	Use it to select a delivery function for the finisher tray. (tray A: copy*/printer/other; tray B: copier/printer*/other)
	Printing Priority	Use it to set priority of printing. (copy*/print/other)
	Manual Paper Standard Settings	Use it to register standard mode for manual feed. (register/do not register*)
	Local Printing Standard Mode	Use it to set standard mode for local printing. (number of prints: 1* to 2000; double-sided print: yes/no*; remove after printing: yes/no*; integrate text: yes/no*; sort: sort*/group/staple sort/shift sort/shift group; paper select: auto*/ select source)
	Initializing Common Settings	Use it to return common settings to factory settings. (yes/no)

* Factory setting.

COPYRIGHT © 2000 CANON INC.

Copier Settings	Standard Key 1,2 Setting	Use it to register a Preference key on the Basic screen. Select from mode keys and mode memory keys of mode memory on the Extended Mode screen.
	Auto Orientation	Use it to automatically rotate images based on the result of computing original size and reproduction ratio and to copy the resulting images on selected paper. (ON*/OFF)
	Auto Collate	Use it to select a function by which sorter mode is switched to sort mode in response to the placement of originals in the feeder. (ON*/OFF)
	Job Duration Display	Use it to specify whether to display copy wait time. (ON/OFF*)
	Image Orientation Priority	Use it to select priority on image orientation. (ON/OFF*)
	Photo Mode	Use it to specify whether to use film photo mode. (ON/OFF*)
	Standard Settings	Use it to change copy mode items stored as standard modes. (register/initialize)
	Initialize Copier Settings	Use it to reset to factory settings for each item of copier settings. (yes/no)
Timer Settings	Date & Time	Use it to set the current date and time. (12-digit number)
	Change Auto Sleep Time	Use it to set the interval from the end of operation to the start of sleep state. (10, 15, 30, 40, 50, 90 min; 1*, 2, 3, 4 hr)
	Changing Auto Clear Time	Use it to set the interval from the end of operation to the start of the Basic screen on the touch panel. (0, 1 to 9 min; 2 min*)
	Low Power Mode Time	Use it to set the interval from the end of operation to the start of low power mode. (10, 15*, 20, 30, 40, 50, 60, 90 min; 2 to 4 hr)
	Time Until Unit Quiets Down	Use it to set the interval from the end of operation to the start of silent mode. (in which the laser scanner motor is put to rest; 0 to 9 min; 1 min*)
	Daily Timer Seting	Use it to set the time at which the control panel power switch is automatically turned off for the day of the week. (Sunday through Saturday; 00:00 to 23:59, 1-min intervals)

* Factory setting.

COPYRIGHT © 2000 CANON INC.

Cleaning/Adjustment	Zoom Fine Adjustment	Use it to fine-adjust any small discrepancy between original and copy images for vertical and horizontal reproduction ratios. (-1.0% to +1.0%; 0.1% increments; 0%*)
	Feeder Cleaning	Use it to clean the pickup roller assembly by feeding paper from the ADF.
	Wire Cleaning	Use it to clean the charging wire.
	Saddle Stitcher Staple Repositioning	Use it to edge out the staple unit in the saddle stitcher unit.
	Saddle Stitch Position Adjustment	Use it to adjust the position of saddle stitch. (-2.0 to +2.0 mm; 0.1mm-incrmenets; 0 mm*)
	Exposure Recalibration	Use it to correct any discrepancy between original and print images occurring while the density adjustment index is kept at the middle. (9 steps; 5*)
Mail Box Settings	Box Set/Store	Use it to register/set a box. (100 boxes max.; box No.: 0 to 99; ID No.: 4 digits; file storage period: 1, 2, 3, 6, 12 hr, 1, 2, 3, 7, 30 days, indefinite, 2 hr*; name: 24 characters max.; initializing a box)
	Photo Mode	Use it to specify whether to use film photo mode in conjunction with the box function. (ON/OFF*)
	Standard Scan Settings	Use it to change the standard mode for read settings. (registering/initializing)
Report Settings	Additional Functions Settings	Use it to print additional function mode settings.

* Factory setting.

COPYRIGHT © 2000 CANON INC.

System Settings	Administrator Info Setteing	Use it to register system administrator data. (control ID: 7 digits; password: 7 digits; administrator name: 32 characters; administrator mail address; administrator contact info; administrator comment)
	Machine info Setting	Use it to register a device name and location.
	Department ID Management	Use it to enable/disable* ID control by group. (group ID, ID No., counter upper limit, count control, count all clear, counter print, non ID-specific job print)
	Clear message Board	Use it to delete messages on the bulletin board.
	Network Initial Settings	Use it to make settings related to TCP/IP, NetWare, AppleTalk, Ethernet driver.
	Setting Report UI (accessory accommodation)	Use it to make settings for remote UI. (use*/do not use)

* Factory setting.

COPYRIGHT © 2000 CANON INC.

5. System Construction

5.1 Functional Construction

The machine may be divided into the following six functional blocks:

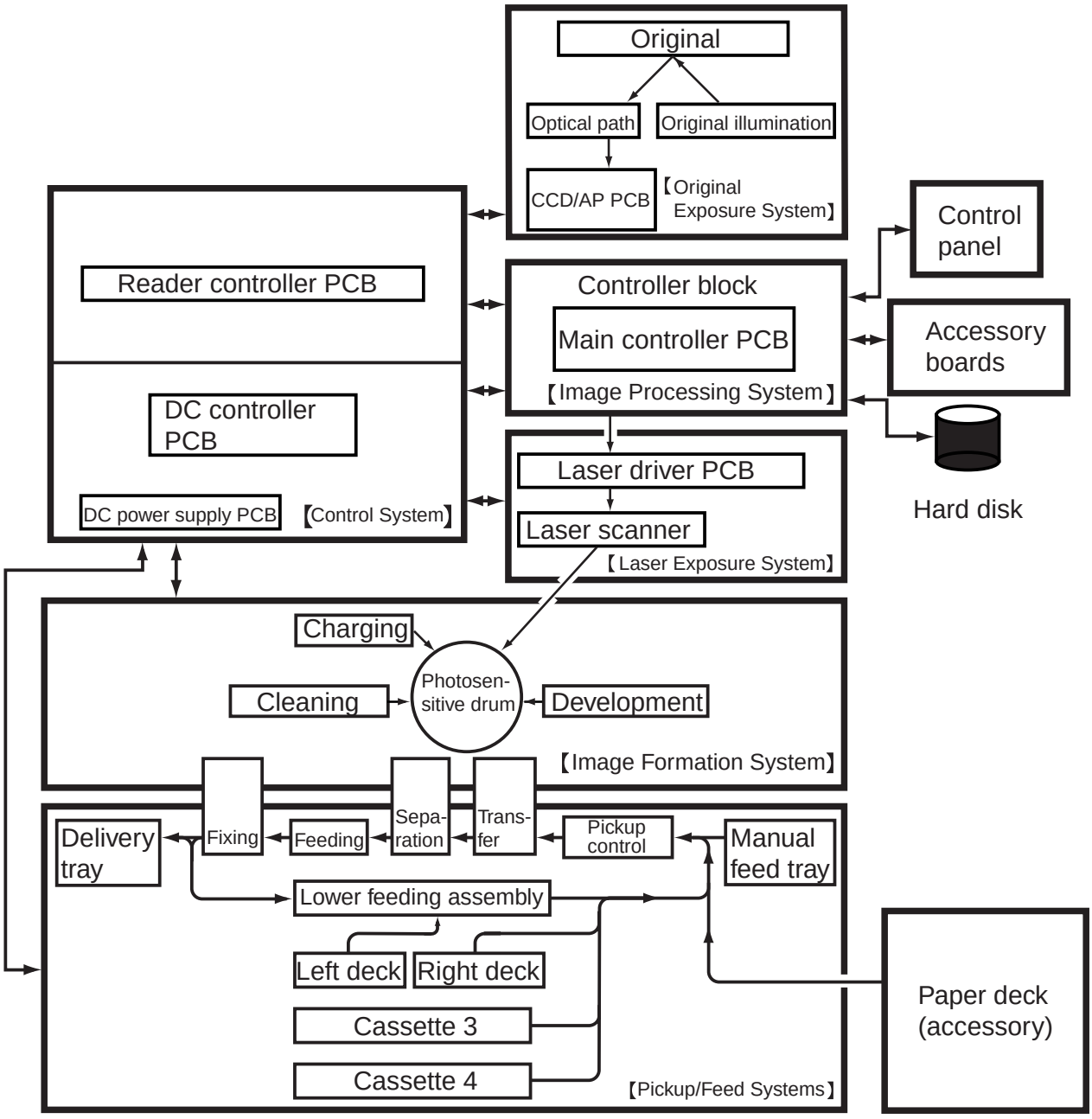

F01-501-01

COPYRIGHT © 2000 CANON INC.

5.2 Outline of Electrical Circuitry

5.2.1 Construction of Electrical Circuitry

The machine's major electrical mechanisms are controlled by the following PCBs:

[1] Main controller PCB. Controls the system as a whole, performs image processing.
[2] DC controller PCB. Controls the printer unit, controls finisher communications.
[3] Reader controller PCB. Controls the reader controller, controls ADF communications.

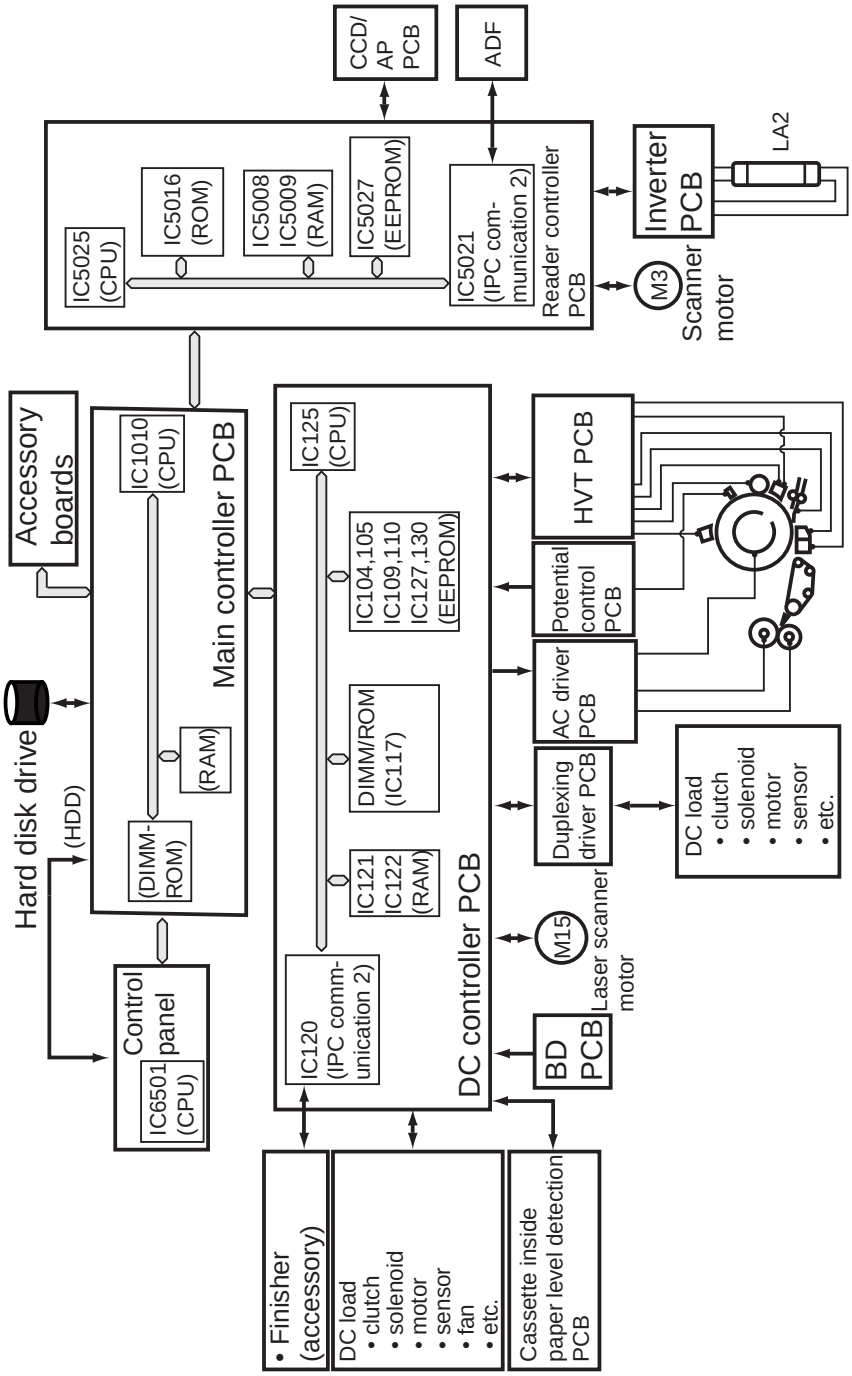

F01-502-01

5.3 Inputs to and Outputs from the Major PCBs

5.3.1 Wiring Diagram of the Major PCBs

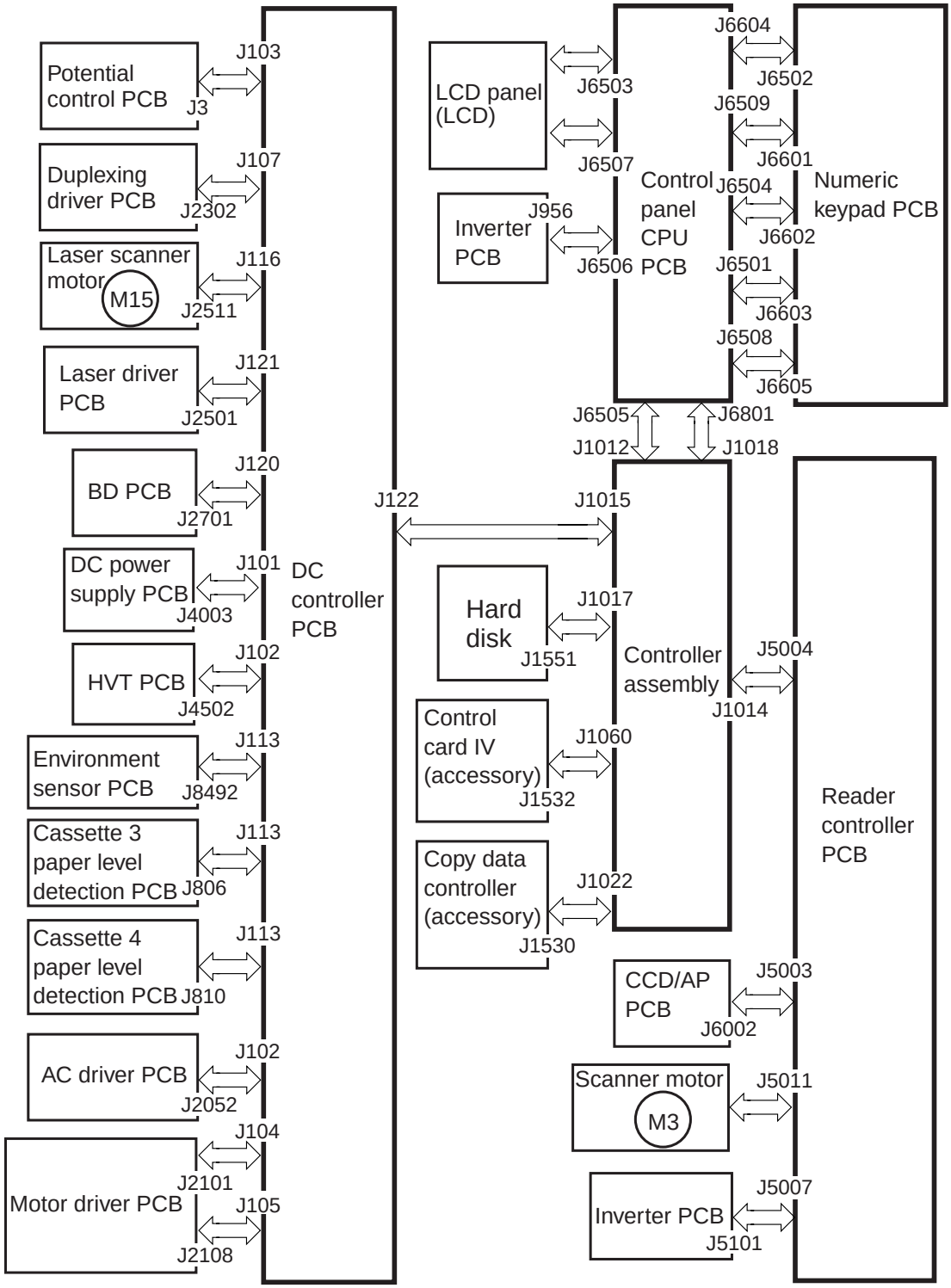

Note: The symbol ⟺ in the diagram indicates major wiring connections, and does not indicate the flow of signals.

F01-503-01

COPYRIGHT © 2000 CANON INC.

6. Routine Maintenance by the User

6.1 Cleaning

Advise the user to clean the following at least once a week:

No.			Remarks
1	Copyboard glass	Wipe with a moist cloth; then, dry wipe.	Reader unit
2	Wire cleaning	Execute 'wire clean' in user mode.	
3	Feeder cleaning	Execute 'feeder clean' in user mode.	
4	Roller assemblies	Wipe with a moist cloth; then, dry wipe.	ADF
5	Sheet assemblies	Wipe with a moist cloth; then, dry wipe.	ADF
6	Platen guide	Wipe with a moist cloth; then, dry wipe.	ADF
7	White plate (copyboard cover)	Wipe with a moist cloth; then, dry wipe.	ADF
8	Read glass	Wipe with a moist cloth; then, dry wipe.	Reader unit
9	Copyboard glass	Wipe with a moist cloth; then, dry wipe.	Reader unit

T01-601-01

Clean the ADF as follows:

1) Open the feeder cover, and wipe the rollers behind the feeder cover (8 pc. in total) with a moist cloth while turning the rollers; then, wipe them with a dry, soft cloth. Likewise, clean the sheet around the rollers in the same way.

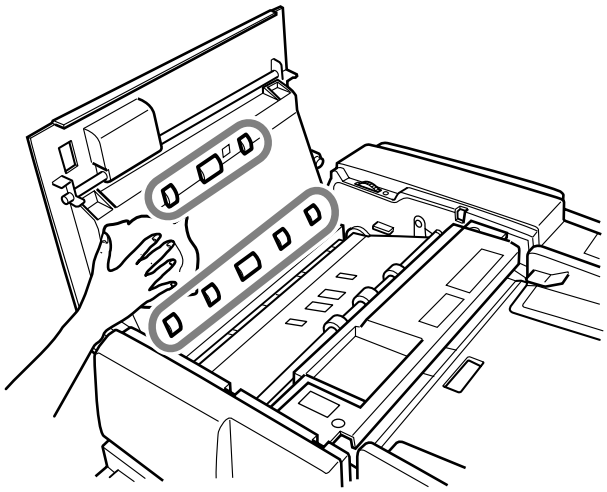

F01-601-01

COPYRIGHT © 2000 CANON INC.

2) Wipe the rollers shown (3 pc. in total) with a moist cloth while turning them; then, wipe them with a dry, soft cloth. Likewise, clean the sheet around them in the same way.

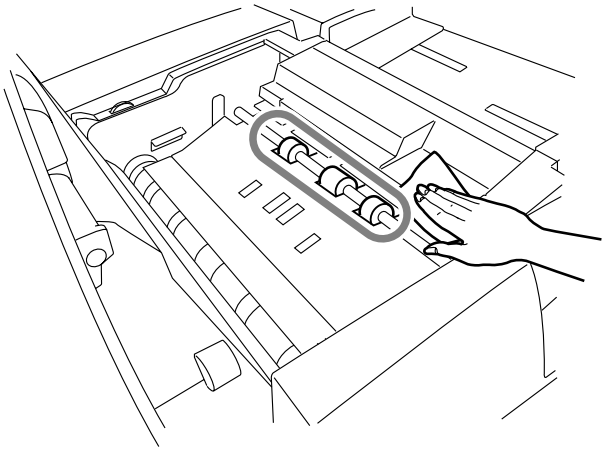

F01-601-02

3) Open the C guide, and clean the rollers (5 pc. in total) with a moist cloth while turning he jam removal lever; then, wipe them with a dry, soft cloth. Likewise, clean the sheet around the rollers in the same way.

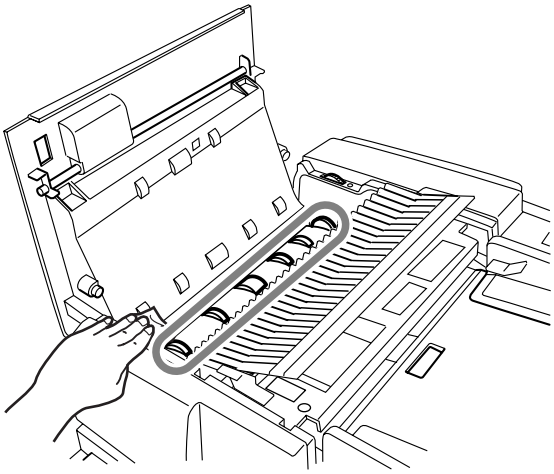

F01-601-03

4) Wipe the rollers (4 pc. in total) with a moist cloth while turning them; then, wipe them with a dry, soft cloth.

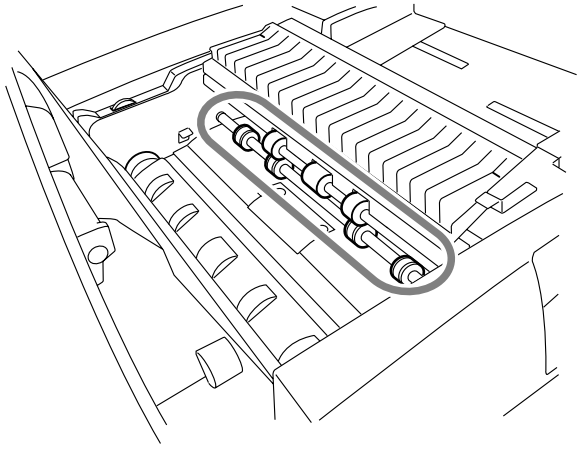

F01-601-04

COPYRIGHT © 2000 CANON INC.

5) Close the C guide and the feeder cover, and open the ADF.
Wipe the copyboard glass with a moist cloth; then, wipe it with a dry, soft cloth.

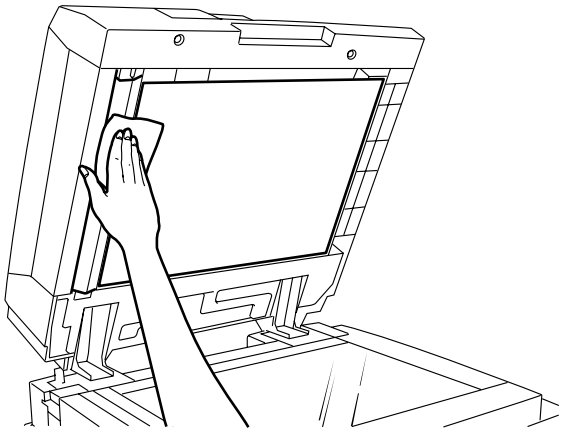

F01-601-05

6) Clean the white plate and the platen guide with a moist cloth.
Likewise, clean the sheet around the platen in the same way.
At the end, close the ADF.

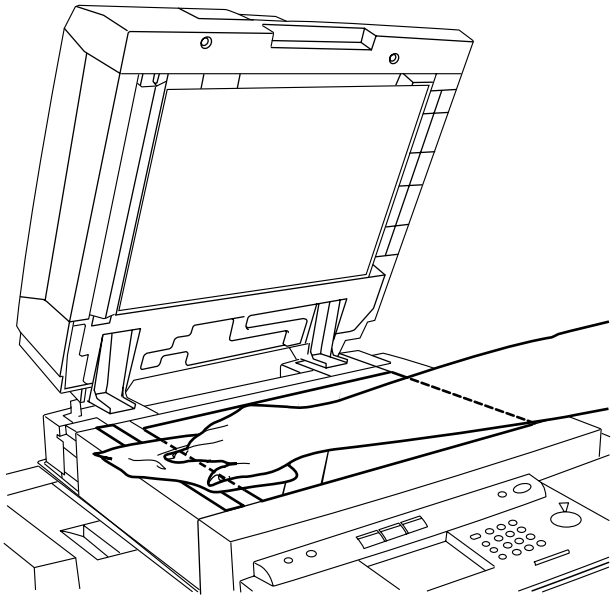

F01-601-06

COPYRIGHT © 2000 CANON INC.

6.2 Inspection

Advise the user to check the circuit breaker at least once or twice a month as shown below.

6.2.1 Making a Check

1) Press the test button in the machine's bottom left.

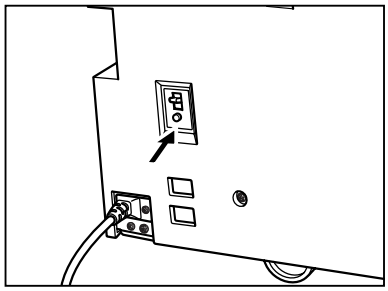

F01-602-01

2) Check to make sure that the open/close lever shifts to OFF and the power turns off.

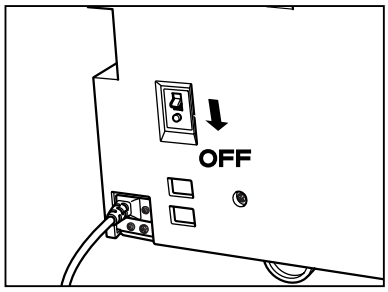

F01-602-02

3) After making the above check, shift the open/close lever to ON.

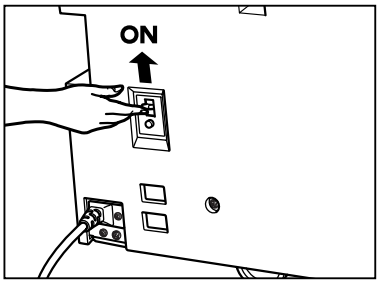

F01-602-03

4) Enter the date in the Breaker Check Sheet found at the back of the User's Manual.

COPYRIGHT © 2000 CANON INC.

CHAPTER 2

MAIN CONTROLLER

COPYRIGHT © 2000 CANON INC.

1. Basic Operations

1.1 Functional Construction

The machine may be divided into the following functional blocks; the controller block is shaded in the diagram:

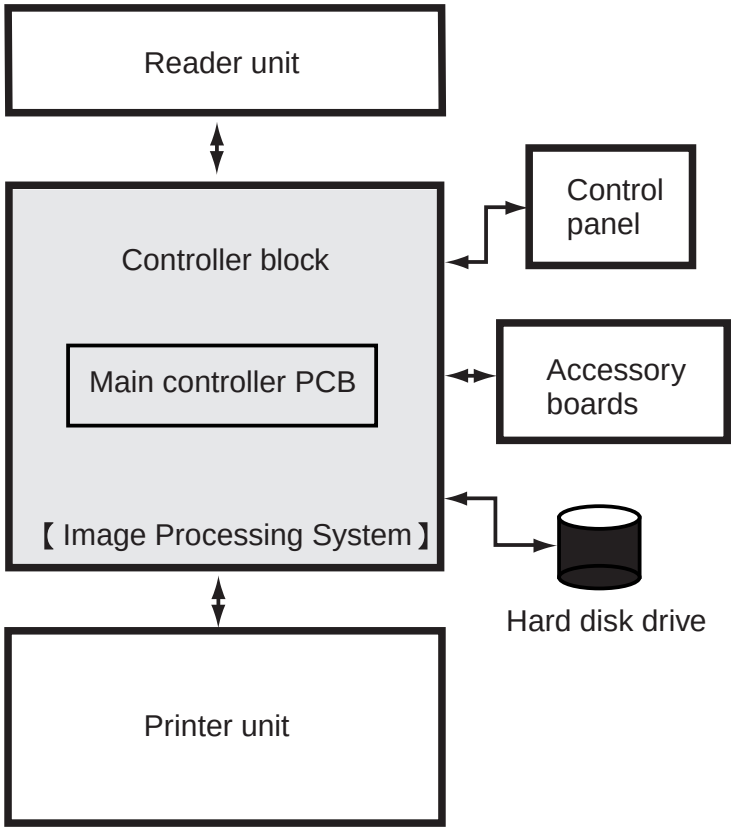

F02-101-01

1.2 Outline of Electrical Circuitry

1.2.1 Outline

The major mechanism of the controller block are controlled by the CPU on the main controller PCB. The CPU, such ICs as RAM and DIMM used in association with the CPU, and hard disk drive have the following functions:

1.2.2 Main Controller PCB

Name	Description
CPU	• Controls image processing of input image data from the reader unit.
RAM	• Controls image processing of output image data to the printer unit.
	• Controls the hard disk drive.
	• Controls the network interface, DMA controller, PCI interface, and ROM-RAM interface.
	• Controls the RAM interface.
RAM	• Temporarily stores program data and image data.
DIMM-ROM	• Stores the system control program.
	• Stores the boot program.

T02-102-01 List of Control Items

1.2.3 Hard Disk Drive

Name	Description
HDD	• Stores the system software.Box
	• Stores image data as part of the box function.

T02-102-02

COPYRIGHT © 2000 CANON INC.

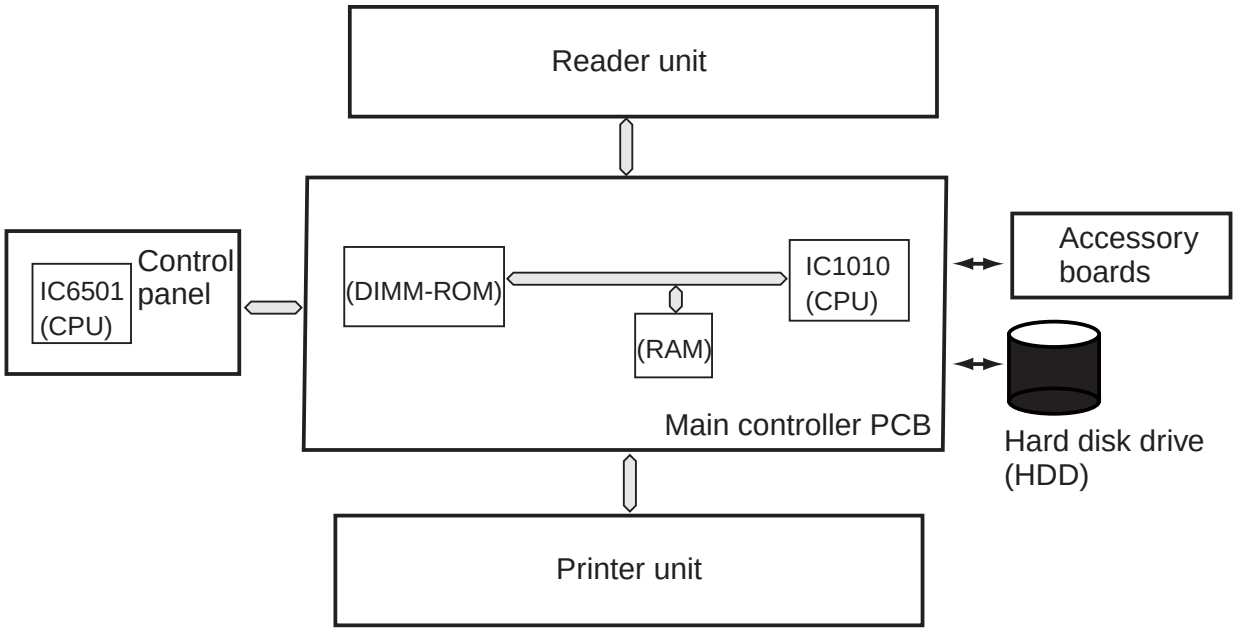

F02-102-01 major PCBs

1.3 Start-Up Sequence

1.3.1 Outline

The system software used to control the machine is stored on the had disk drive (HDD). The CPU on the main controller PCB is programmed to read the system software from the hard disk and write it to the SDRAM mounted to the DIMM socket on the main controller PCB. (For this reason, it will be a while before the control panel becomes ready after the main power switch is turned on.

The control panel shows the following screen while the CPU writes the system software to the SDRAM, and the progress of the start-up sequence is indicated by means of a bar on the screen.

Start-Up Screen

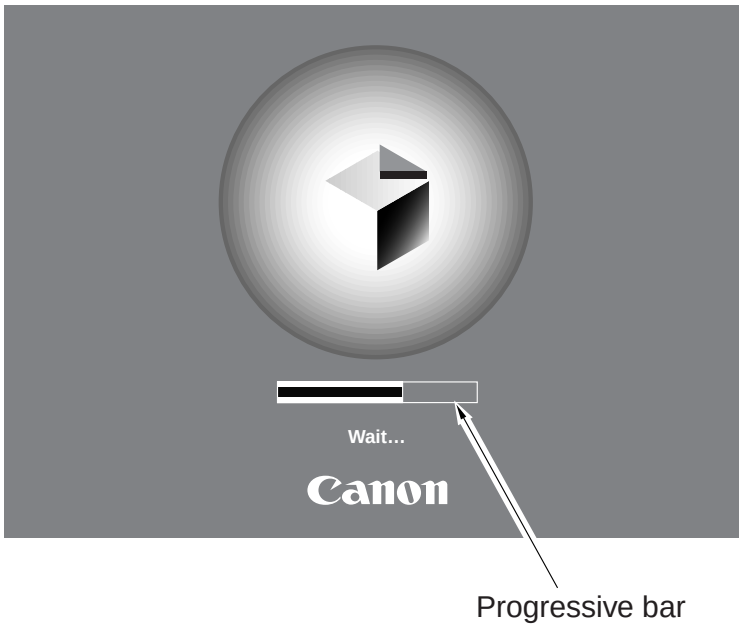

F02-103-01

COPYRIGHT © 2000 CANON INC.

1.3.2 Start-Up Sequence

When the main power switch is turned on, the CPU on the main controller PCB executes the self-diagnosis program stored in the boot ROM.

The self-diagnosis program is designed to check the condition of the SDRAM and hard disk, and indicates any error it detects on the control panel in the form of an error code.

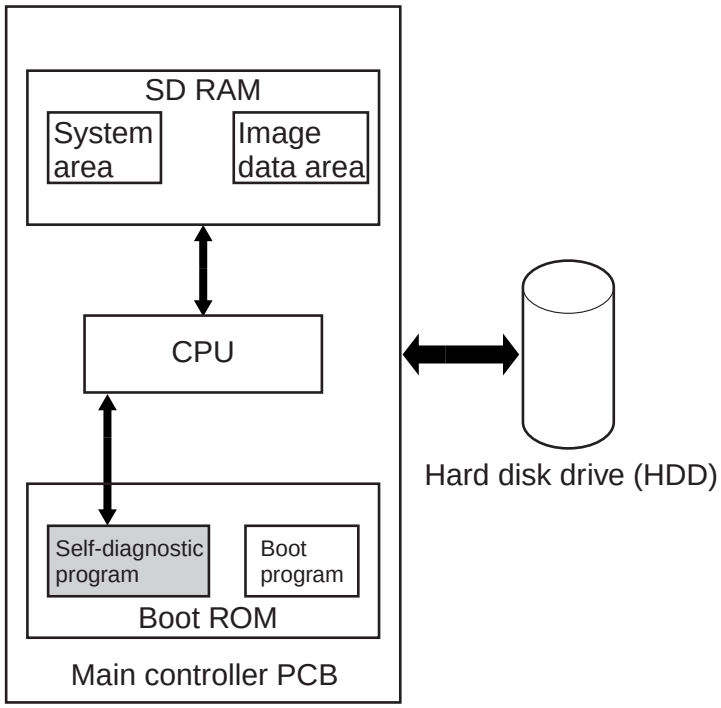

F02-103-02

Error

Related Error Code
E601-0000, -0001
Error in Image Transfer Information
E602-0001, -0002
Write/Read Error

When the self-diagnosis program ends normally, the boot program also stored in the boot ROM starts to read the system software from the hard disk to write it to the system area of the SDRAM.

The machine's system software consists of multiple modules, and the appropriate modules needed at a specific time are called into the system area of the SDRAM for execution.

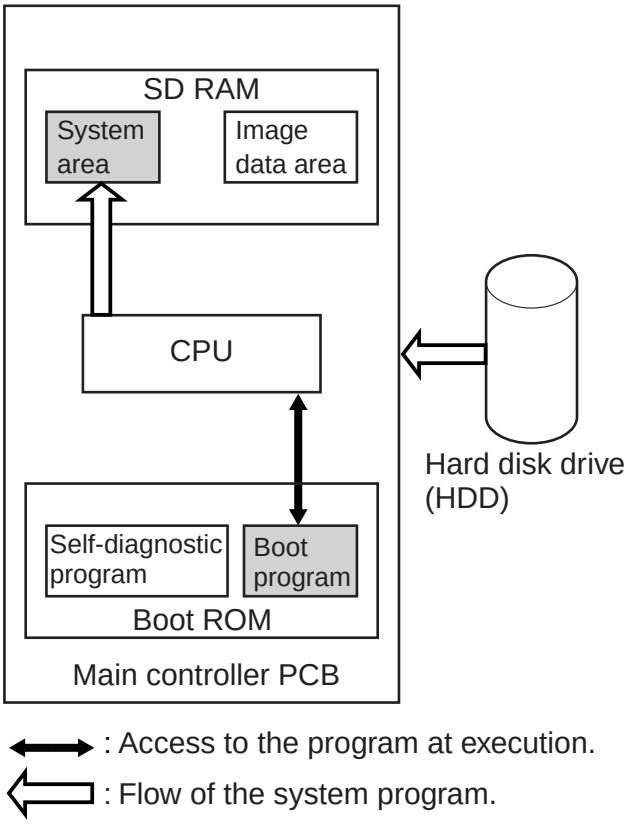

F02-103-03

COPYRIGHT © 2000 CANON INC.

1.4 Inputs to and Outputs from the Major PCBs

1.4.1 Wiring Diagram of the Major PCBs

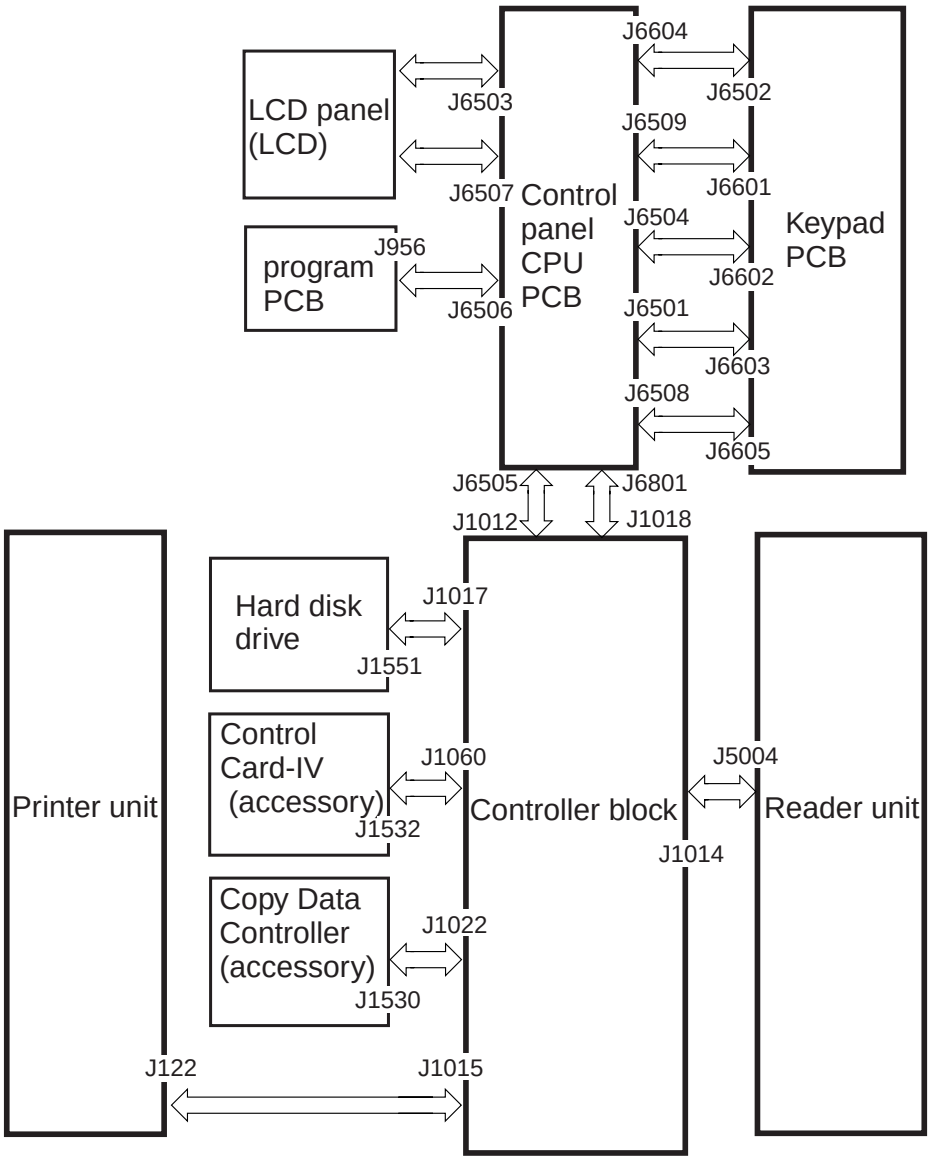

Note: The ⟺ in the diagram indicates major wiring connections, and does not indicate the flow of signals.

F02-104-01 Wiring Diagram of the Major PCBs

COPYRIGHT © 2000 CANON INC.

2. Digital Image Processing

2.1 Outline

The machine's digital image processing and control of the image memory is performed by the main controller PCB. The following is a block diagram showing digital image processing:

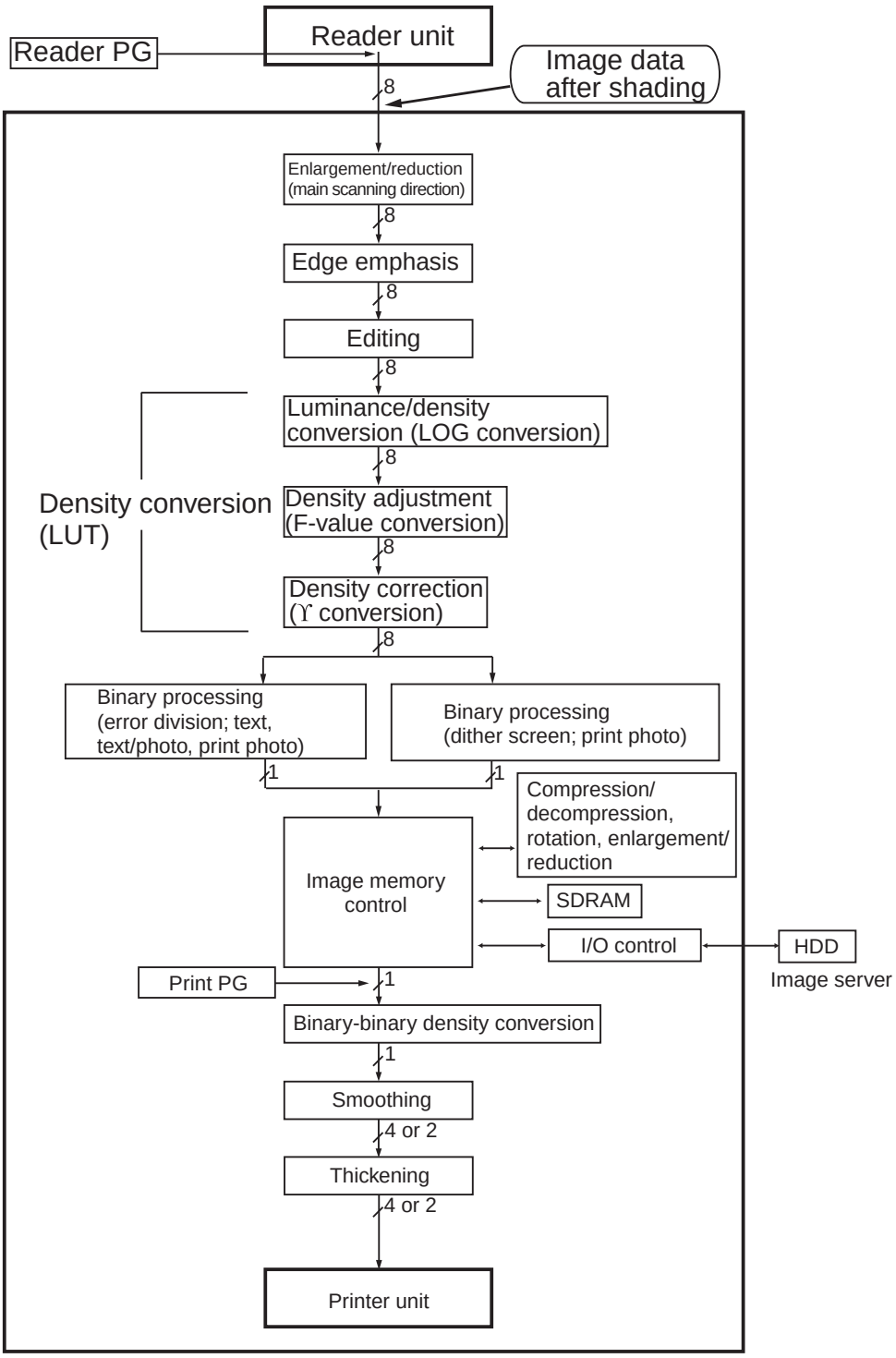

F02-201-01

COPYRIGHT © 2000 CANON INC.

2.2 Input Image Processing

The input image data from the reader unit is processed as follows:

2.2.1 Image Data from the Reader Unit

The image data from the reader unit is 8-bit, 256-gradation luminance signals which have been subjected to shading correction.

Further, the input is from two signal lines (odd-/even-number pixels).

2.2.2 Enlargement/Reduction (main scanning direction)

An image is enlarged/reduced by processing image data when writing it to the image memory or reading it from the image memory.

2.2.3 Edge Emphasis

Edge emphasis is performed to enhance the crispness of text, text/photo, film photo, and print photo modes while reducing moire as much as possible.

2.2.4 Editing

The machine's editing functions include the following: blanking/framing, negative/positive reversal, slant, mirror, fold, repeat.

2.2.5 Density Conversion (LUT)

In this block, luminance image signals are converted into density image signals, and processing is performed so that the output density curve best suited to each mode may be obtained.

a. LOG Conversion

A LOG conversion table is used to convert luminance image signals possessing luminance data based on reflected light into density image signals possessing density data of toner.

b. Density Adjustment (F-value conversion)

An F-value table suited to the setting of the Copy Density key on the control panel is used to perform density adjustment. It, however, is not performed in memory copy mode.

c. Density Correction (ϒ conversion)

The ϒ conversion table for text, text photo, film photo, or print photo is used to perform density correction.

2.2.6 Binary Processing (error diffusion; T-BIC)

The machine's error diffusion method (T-BIC) ensures the best binary processing by controlling texture for best printing results. The 8-bit image density signal of text, text/photo, or print photo mode is converted into a 1-bit image density signal (binary).

COPYRIGHT © 2000 CANON INC.

2.2.7 Binary Processing (dither screen)

The machine's dither screen method is designed to convert the 8-bit image density signal of film photo mode into a 1-bit image density signal (binary), enabling 144 gradations for binary images (12x12 pixels).

COPYRIGHT © 2000 CANON INC.

2.3 Controlling the Image Memory

The image data resulting from binary processing is processed as follows:

2.3.1 Compression/Decompression, Rotation, Enlargement/Reduction

Binary data is processed so that the images may be compressed/decompressed (for electronic sorting), rotated, or enlarged/reduced.

2.3.2 SDRAM

The SDRAM is used to temporarily store the image data held by the image memory.

2.3.3 Hard Disk Drive (HDD)

As opposed to its function as an image server, the box function is made use of to store image data.

2.4 Output Image Processing

The image data sent to the printer unit is processed as follows:

2.4.1 Smoothing

a. When Outputting Read Images

In the case of text/text photo mode, a 600x600-dpi input image is converted into an image of 1200* × 600 dpi.

In smoothing, the image data is compared against several hundred templates (7×7 pixel pattern matrixes), and each pixel in question is replaced as needed.

b. When Outputting Printer (PDL) Images

The type of smoothing best suited to PDL is performed while converting 300x300-dpi or 600×600-dpi data into data of 2400*× 600 dpi.

*Equivalent.

2.4.2 Thickening (PDL output only)

If so specified using the printer driver, thickening (processing) is performed to improve the reproduction of fine lines.

Lines in a PDL output image are thickened by adding 1/2 pixels (1200 dpi) in horizontal direction and 1/2 pixels in right vertical direction.

2.4.3 Binary-Binary Density Conversion (read image output only)

This processing is used as an auxiliary function serving as part of density adjustment while copies are being made.

COPYRIGHT © 2000 CANON INC.

3. Soft Counter

The machine is equipped with a soft counter for counting the number of prints. The counter reading is indicated in response to a press on the Check key on the control panel.

The counter is controlled by the main control PCB, and the count is incremented when any of the following sensors detects paper during copying/printing operation.

Copying/printing operation	Sensor name
Single-sided	Internal delivery sensor (PS35)
Double-sided	Double-sided pre-registration sensor (PS30)
Finisher in use	Delivery sensor

T02-300-01

The counter function is composed of a total of 8 modes, each for large size and small size (a total of 16 mode types) as shown below:

Copying/printing operation	Large size	Small size*1
Local copying	A	B
PDL printing	C	D
BOX printing	E	F
Remote copying/printing	G	H
Fax reception printing*2	I	J
Report printing	K	L
Duplexing printing	M	N
Scanning	O	P

*1: At time of shipment, B4 or less; to include B4 in the large-size category, use service mode.

*2: The machine is not provided with a fax function, not counting printing of messages received by fax.

T02-300-02

COPYRIGHT © 2000 CANON INC.

The counter function is set at the factory as follows according to the model of machine:

Counter	Descriptoin*1	Default indication		Default change*2
		100-V model	120/230-V model	
Counter 1	Total (A through L)	ON	ON	No
Counter 2	Total large (ACEGIK)	OFF	ON	Yes
Counter 3	Copy 1 (ABGH)	OFF	ON	Yes
counter 4	Copy 1 large (AG)	OFF	ON	Yes
Counter 5	Pint 1 total (CDEF)	OFF	OFF	Yes
Counter 6	Fax total (1)	OFF	OFF	Yes

*1: The notation in parentheses indicates the corresponding counter mode (T02-300-02).
*2: The counter reading may be changed or its display may be enabled/disabled in service mode (not applicable to counter 1).

T02-300-03

COPYRIGHT © 2000 CANON INC.

4. Controlling the Power Supply

4.1 Outline

The main controller PCB controls the following five power modes, in addition to the mode it controls at when the main power switch is turned off (power-off mode):

- standby mode (normal operation)
- power save mode
- low-power mode
- sleep mode
- off mode

4.2 Power Supply Mode

The machine possesses the following five modes for each of its power supplies: +3.3V all-night (3.3 VB), +3.3 V non-all night (3.3 VA), +5 V non all-night (5 V), +24 V.

Mode	+3.3-V all night	+3.3-V non-all night	+5-V non-all night	+24V
Standby	○	○	○	○
Power save	○	○	○	○
Low power	○	○	○	×
Sleep	○	×	×	×
Off mode	○	×	×	×
Power off	×	×	×	×

T02-402-01

4.3 Standby Mode (normal operation)

Standby mode is used during normal operation or while the machine is ready for operation, i.e., nearly all its power supplies are powered.

In addition to the main controller PCB, the reader unit, printer unit, and control panel are all ready for communication/control.

4.4 Power Save Mode

All power supplies are powered (same as standby mode).

The level of power consumption is reduced by lowering the control temperature of the fixing assembly in standby state.

COPYRIGHT © 2000 CANON INC.

4.5 Low Power Mode

In low power mode, only the +24-V power supply remains off; the level of power consumption for the reader unit and the printer unit is reduced for low power consumption.

4.5.1 Shift from Standby Mode (standby → low-power)

A shift is made from standby mode to low power mode under the following conditions:

- Low power mode is selected on the control panel.
- Standby mode has continued for a specific period of time, selected in user mode.

4.5.2 Shift to Standby Mode (low power → standby)

A shift is made from low power mode to standby mode under the following conditions:

- The control panel power switch (soft switch) is on.
- PDL data is received from the network or parallel power. (Electrically, the control panel is off as in standby mode.)

4.6 Sleep Mode

In sleep mode, only the +3.3-V all-night (3.3 VB) power supply is powered.

The CPU on the main controller PCB stops the programs, thereby saving power (the program is stopped).

This mode is used only when the machine is used as a printer equipped with a network print option/PDL print option.

4.6.1 Shift from Standby Mode (standby → sleep)

A shift is made from standby mode to sleep mode under the following conditions:

- The control panel power switch (soft switch) is off.
- Standby mode has continued for a specific period of time (selected in user mode).

4.6.2 Shift from Low Power Mode (low power mode → sleep)

A shift from low power mode to sleep mode is made under the following conditions:

- The control panel power switch (soft switch) is off.
- Low power mode has continued for a specific period of time (selected in user mode).

4.6.3 Return to Standby Mode (sleep → standby)

- The control panel power switch (soft switch) is on.
- PDL data is received from the network/parallel port. (Electrically, the control panel is off as in standby mode.)

COPYRIGHT © 2000 CANON INC.

4.7 Off Mode

In off mode, a minimum number of logic circuits on the main controller PCB are left powered, and all others including the CPU (+3.3 V) all night power supply are tuned off.

This mode is used only when the copier is used on its own (i.e., without network print option/PDL print option).

4.7.1 Shift from Standby Mode (standby → off mode)

A shift is made from standby mode to off mode under the following conditions:

- The control panel power switch (soft switch) is off.
- Standby mode has continued for a specific period of time (selected in user mode).

4.7.2 Shift from Low Power Mode (low power mode → off mode)

A shift is made from low power mode to off mode under the following conditions:

- The control panel power switch (soft switch) is off.
- Low power mode has continued for a specific period of time (selected in user mode).

4.7.3 Return to Standby Mode (off mode → standby)

In off mode, an auto return to standby mode by means of an external command is not possible. To turn on standby mode, the control panel power switch (soft switch) or the main power switch must be turned off and then on.

The return operation is exactly the same as when the machine is turned on.

4.8 Power Off Mode

The machine is in power off mode when its main power switch remains off.

To return from power off mode, the main power switch must be turned on, thereby automatically returning the machine to standby mode.

COPYRIGHT © 2000 CANON INC.

CHAPTER 3

INSTALLATION

COPYRIGHT © 2000 CANON INC.

1. Selecting the Site

The site must satisfy the following conditions; if possible, pay a visit before the delivery of the machine:

1. The temperature must be between 75° and 32.5°C (59° and 86°F) and the humidity must be between 5% and 85%. Avoid an area near a water faucet, water boiler, humidifier, or refrigerator.
2. Avoid an area near a source of fire or subject to dust or ammonium gas. If the site is exposed to direct sunlight, provide a curtain.
3. The level of ozone generated by the machine is not likely to affect the health of people around it. Some individuals, however, may find its odor unpleasant, calling for a good means of ventilation.
4. Be sure that the machine's feet will be in contact with the floor, and the machine will remain level.
5. Be sure that the machine will be at least 10 cm away from any wall, and make sure there will be adequate space for machine operation.

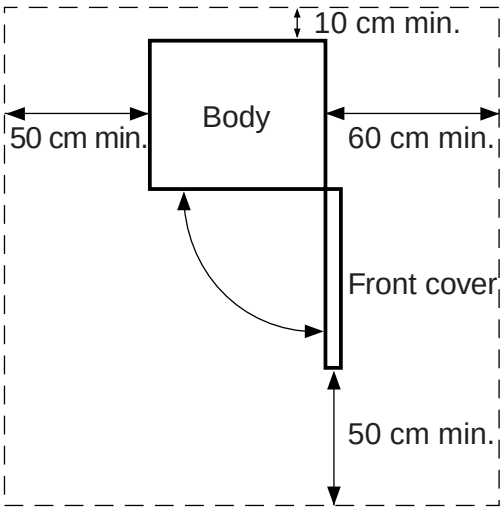

F03-100-01

6. Be sure that the room will be well ventilated and the machine will not be installed near an air vent.

7. If multiple machines exist, be sure to arrange them so that the exhaust from one will not be drawn into another. In general, the silicone gas (vaporized silicone oil from the fixing assembly) will soil corona wires, shortening their lives. This phenomenon is particularly conspicuous in a low humidity environment.

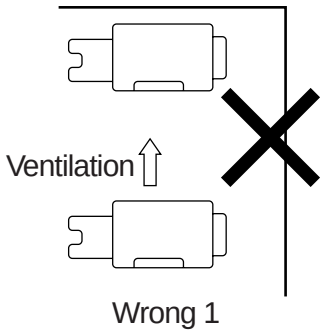

F03-100-02

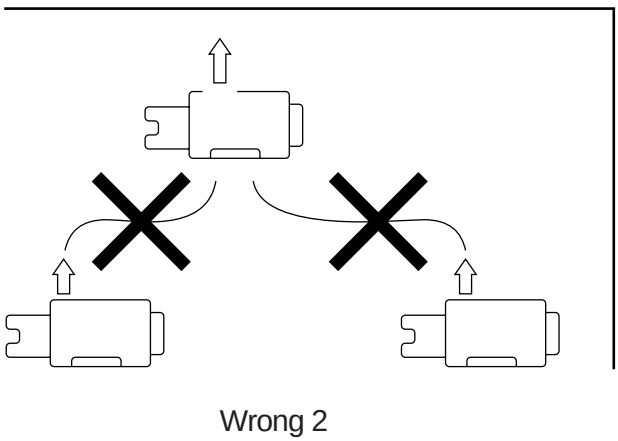

F03-100-03

COPYRIGHT © 2000 CANON INC.

2. Unpacking and Installation

2.1 Before Starting the Work

Be sure to observe the following when installing the machine:



1. If the machine is moved from a cold to warm place for installation, condensation can occur in its pickup/feed assembly. Leave the machine alone without unpacking for an hour or more before starting the work. (The term condensation refers to the formation of droplets of water on a metal surface caused by rapidly cooling moisture in the air.)

2. If flights of stairs are used to move the machine into or out of the site of installation, be sure to observe the following:
   2.1 Take out the ADF assembly, fixing/feeding assembly, and duplexing unit, and move them separately from the body.
   2.2 When lifting the machine, do not use its four grips (left, right); instead, hold it by its four bottom corners.
   2.3 The machine weighs 210 kg. Be sure to work in a group of four.

3. Shift up the two adjusters found on the machine's bottom (front) to make sure that they are released. The adjusters can slip off while the machine is being moved. Be sure to pay attention not to lose them.

4. Be sure to work in a group of three or more when installing the machine. When removing the pad and bottom plate, arrange one person at the rear and one person at the front to hold the grips while one person engages in removal.

COPYRIGHT © 2000 CANON INC.

2.2 Installation

Install the machine as follows; for details, see the appropriate item on the pages that follow:

1. Unpacking
   unpacking, checking the attachments
2. Mounting the Scanner
   removing the scanner fixing screws/spacers
3. Mounting the Fixing assembly
   removing the separation claw releasing member, removing the fixing assembly nip releasing screws
4. Checking the Charging Assemblies
   checking the transfer/separation, primary, and pre-transfer charging assemblies
5. Mounting the Developing Assembly
6. Mounting the Pickup assembly
   removing the pickup roller releasing spacers
7. Mounting the Deck Locking Plate (left deck)
8. Supplying Toner
9. Setting the Cassette
10. Changing the Paper Size for the Front Deck (right/left)
    changing the paper size, selecting the paper size (service mode)
11. Checking Images/Operations
    connecting the grounding wire, turning on the main power, placing paper, and checking images
12. Checking the Environment Switch
    setting the drum, cassettes, mirrors, and lens heater
13. Installing the Machine
    putting away the attachments, fixing the adjusters

COPYRIGHT © 2000 CANON INC.

2.3 Unpacking

Step	Work	Checks/remarks
1	Unpack the machine, and remove the plastic sheets. ⚠ Do not remove the tape used to secure the two adjusters found on the machine's bottom (front) until the machine has been moved off the skids. Otherwise, the adjusters can trip on the slope plates, causing the machine to tumble.	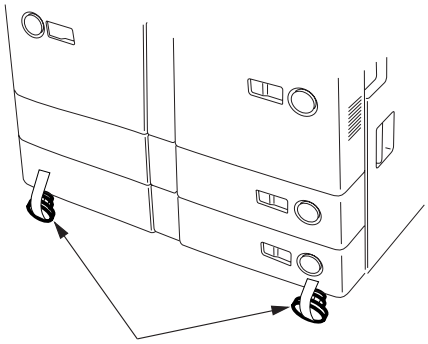
2	Insert the grip that comes with the machine into the front of the pickup side. 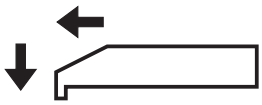 ⚠ Be sure to orient the stopper as shown when inserting it. Otherwise, it can slip off when the body is being lifted.	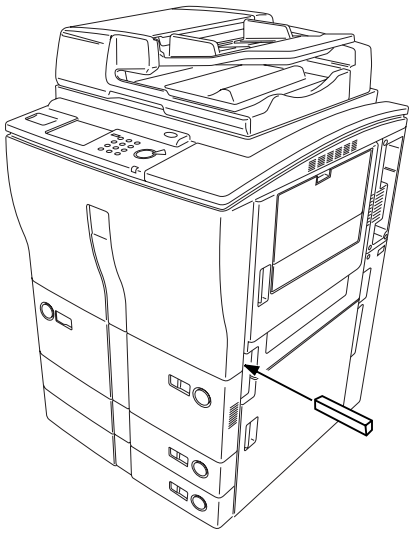
3	Take out the two slope plates from inside the skid.	
4	Holding the two grips (front, rear) found on the side of the delivery assembly, lift the machine slightly to remove the pad. (weight of the machine: about 210 kg)	

Step	Work	Checks/remarks
5	Holding the two grips (front, rear) on the side of the pickup assembly, lift the machine slightly to remove the pad.	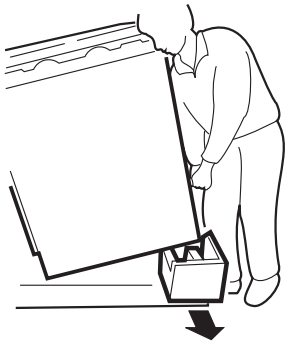
6	Turn over the slope plates; then match the pin holes in the skids with those in the slope plates, and fit the pins (one each). Holding the grips (front, rear) found on the machine, move the machine off the skid by sliding it on the slope plates.	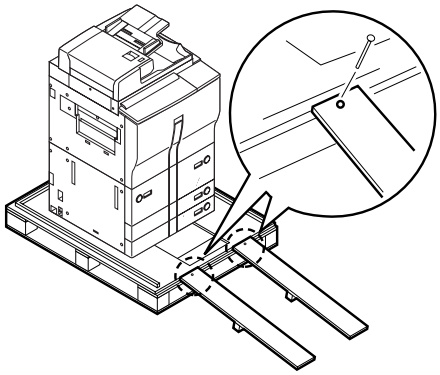
7	Remove the packaging tape from the body.	
8	Open the cardboard box that comes with the machine, and take out the parts and component members.	Check to make sure that none is missing.

2.4 Mounting the Scanner

Step	Work	Checks/remarks
1	Open the ADF, and remove the packing material.	
2	Remove the scanner fixing screw and spacer. ⚠ 1. Take care not to let the spacer fall inside the machine. 2. Store away the fixings for use when securing the scanner for possible relocation of the machine. 3. The middle spacer is longer than the spacers on both ends; pay attention when using them.	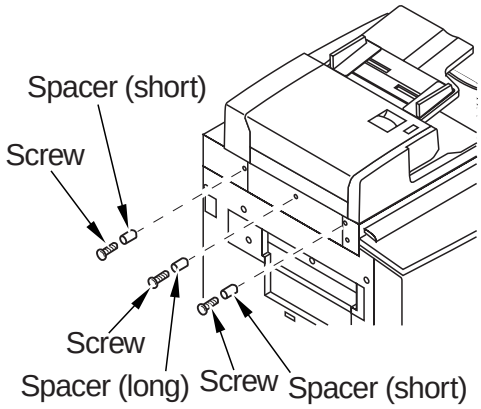

COPYRIGHT © 2000 CANON INC.

2.5 Mounting the Fixing Assembly

Step	Work	Checks/remarks
1	Open the front cover.	
2	Shift the fixing/feeding assembly releasing lever in the direction of the arrow (left) to free the transfer/separation charging assembly. Slide out the fixing/feeding assembly to the front.	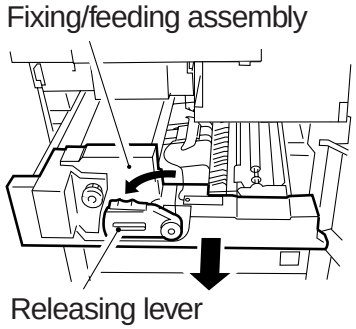
3	Remove the separation claw releasing member and the tag from the fixing/feeding assembly. ⚠ Remove the tape and glue from the feeding belt.	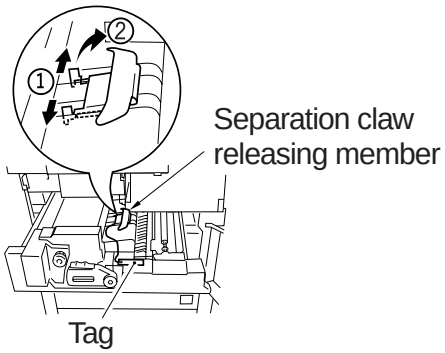
4	Remove the retaining tape of the tag, and open the fixing/delivery assembly.	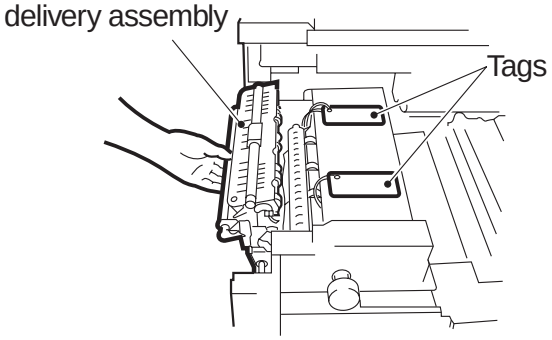

COPYRIGHT © 2000 CANON INC.

Step	Work	Checks/remarks
5	Remove the two fixing nip releasing screws.	Screw (rear) 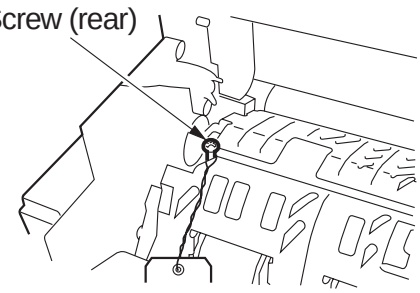 Screw (front) 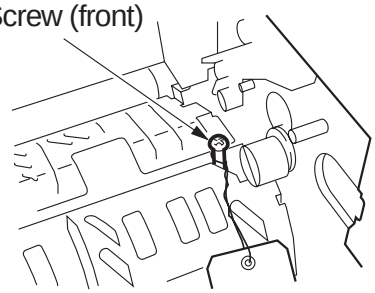
6	Close the fixing/feeding assembly.	

COPYRIGHT © 2000 CANON INC.

2.6 Checking the Charging Assemblies

Step	Work	Checks/remarks
1	Remove the two screws, and detach the feeding assembly front cover (right).	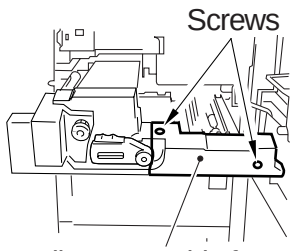
2	Remove the screw, and detach the metal fixing; then disconnect the connector. While holding the front and the rear of the transfer/separation charging assembly at the same time, pull it to the front to detach in the left upper direction. Check the transfer/separation charging assembly; if dirt or paper lint is found, clean with alcohol. Mount the transfer/separation charging assembly. Connect the connector, and fit the metal fixing. ⚠ Do not bring the transfer/separation charging assembly into contact with the transfer guide to avoid cutting the gut wire. Further, be sure that the solvent has evaporated completely.	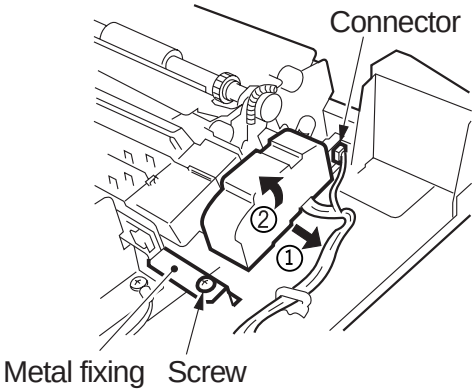
3	Mount the feeding assembly front cover (right) with two screws, and insert the fixing/feeding assembly into the machine.	
4	Remove the screw from the door tape (door stopper) of the front door. (This is to keep the hopper open, which otherwise may close when the hopper is opened.)	

COPYRIGHT © 2000 CANON INC.

Step	Work	Checks/remarks
5	Open the hopper cover, and remove the three screws and connector cover; then disconnect the connector.	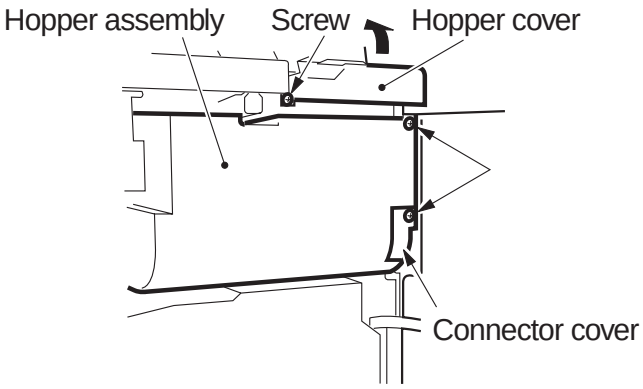
6	Slide out the hopper unit to the front, and turn it to the front right by 90°.	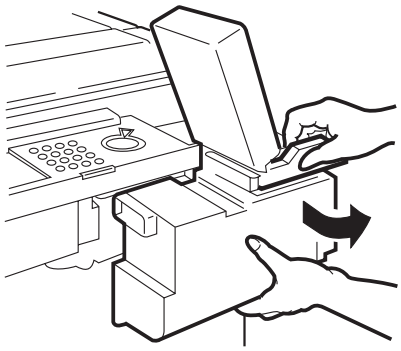
7	Loosen the screw; then shift the charging assembly fixing member in the direction of the arrow (right upper), and secure it in place with a screw. Disconnect the connector, and take out the primary charging assembly. Check the primary charging assembly; if dirt or paper lint are found, clean it with alcohol.	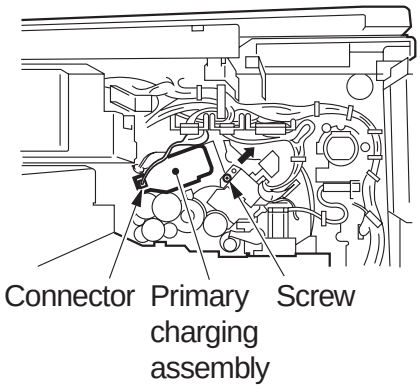
8	Disconnect the connector, and remove the screw; then take out the pre-transfer charging assembly. Check the pre-transfer charging assembly; if dirt or paper lint are found, clean it with alcohol.	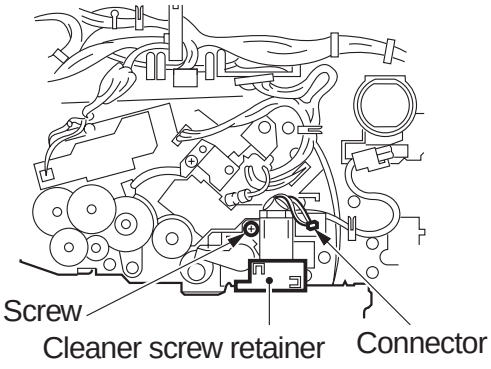

COPYRIGHT © 2000 CANON INC.

Step	Work	Checks/remarks
9	Insert the primary charging assembly and pre-transfer charging assembly; then secure them in place. ⚠ 1. If solvent was used for cleaning, check to make sure that it has evaporated completely. 2. When inserting the pre-transfer charging assembly, be sure to push it in horizontally in relation to the processing unit, thus avoiding damage to the surface of the drum. 3. Check to make sure that the one-way arm of the pre-transfer charging assembly is on the eccentric cam.	
10	Close the hopper, and connect the connector of the hopper. Fit and tighten the three screws, and mount the connector cover; then fit and tighten the screw of the door tape and close the front door. ⚠ Be sure to connect the connector of the hopper.	

COPYRIGHT © 2000 CANON INC.

2.7 Mounting the Developing Assembly

Step	Work	Checks/remarks
1	Open the manual feed tray cover and remove the screw from the door tape.	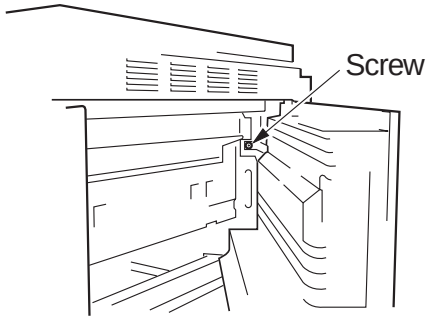
2	Remove the screw and slide the developing assembly locking unit in the direction of the arrow (rear) to detach.	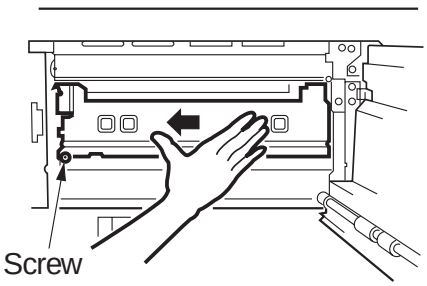
3	Take out the developing assembly from the cardboard box.	Turn the developing cylinder gear by hand and check to make sure that the cylinder is free of scratches.
4	Hold the developing assembly in the middle (pocket of the grip) and mount it to the machine. Connect the connector. ⚠ When mounting the developing assembly, take care not to bring the developing cylinder into contact with the metal plate of the developing assembly base.	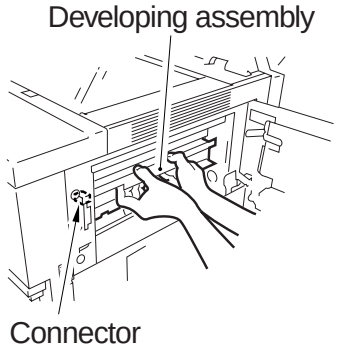
5	Insert the developing assembly locking unit from the right side (rear) while making sure to hold it horizontally. Secure the developing assembly locking unit in place with a screw.	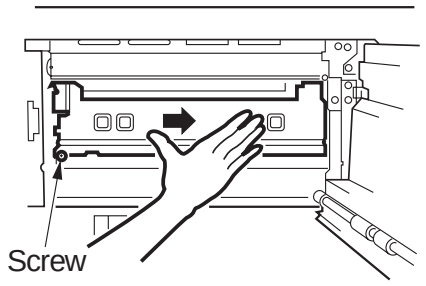
6	Mount the door tape of the manual feed tray cover with a screw.	

COPYRIGHT © 2000 CANON INC.

2.8 Mounting the Pickup Assembly

Step	Work	Checks/remarks
1	Open the right upper cover and remove the pickup roller releasing spacer.	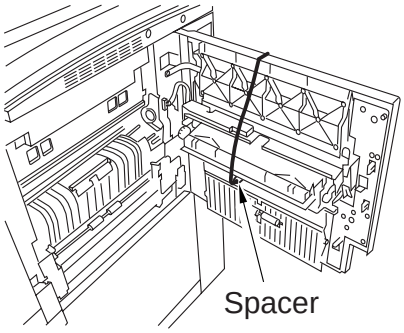
	Slide the pickup roller releasing spacer to the right; then pull it out to the front.	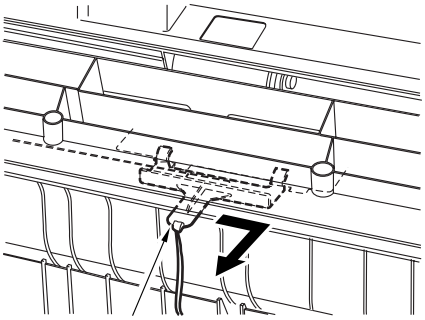
2	Slide out the right deck and the cassette halfway and open the right upper cover and right lower cover; then remove the pickup roller releasing spacers of the right deck and cassette 3/4. Memo It will be difficult to remove the spacer if the deck/cassette is set; slide them out halfway to unlock the spacers. After removing all spacers, close the right upper cover and the right lower cover.	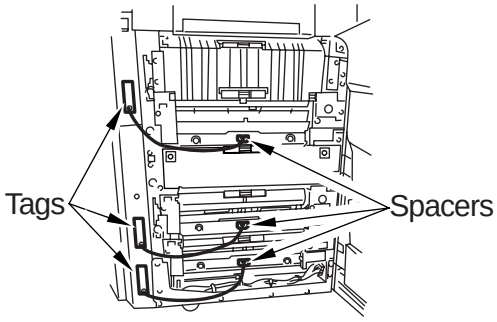 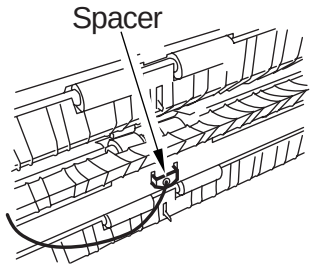

2.9 Mounting the Deck Locking Plate (left deck)

Step	Work	Checks/remarks
1	Push the releasing button of the left deck, and slide out the left deck.	
2	Fit the deck locking plate with a screw. Close the left deck.	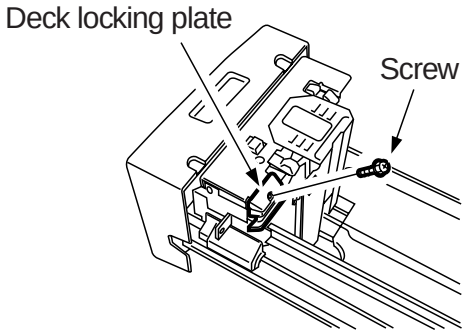

COPYRIGHT © 2000 CANON INC.

2.10 Supplying Toner

Step	Work	Checks/remarks
1	Rotate the toner bottom as shown ten times or more.	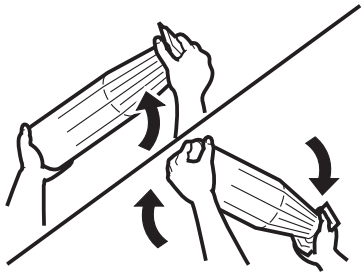
2	Open the hopper cover and fit the boss on the tip of the toner bottle in the groove of the toner supply mouth. At this time, be sure to push it in until a click is heard.	Check to make sure that the toner bottle is locked to the toner supply mouth.
3	Pull the shutter (black) of the body (found on the right of the toner supply mouth of the hopper) to the right. Keep pulling until the shutter stops.	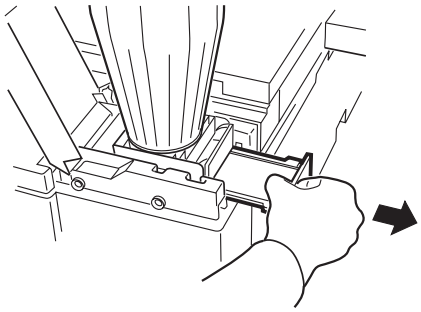
4	Pull the shutter of the toner bottle to the right. Toner will be supplied from the toner bottle to the hopper. Tap on the bottom of the toner bottle to make sure that all toner has moved to the hopper. Push the shutter of the toner bottle to the left to close.	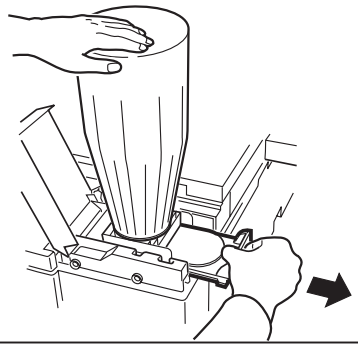
5	Push the machine's shutter to the left until it stops. Push the machine's shutter farther to the marking on the hopper, thus freeing the toner bottle. Pull the toner bottle in left upper direction to detach; then close the hopper cover.	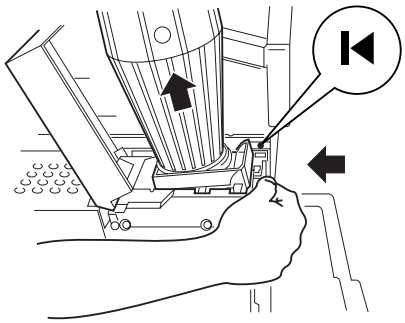

2.11 Setting the Cassette

Step	Work	Checks/remarks
1	Push the cassette releasing button, and slide out each cassette to the front; then remove the packing materials.	
2	Set the side plate of each cassette to the hole identified by the marking M (M4/A3). Fit the Inch-preventing roll that comes with the machine from inside the cassette so that it covers the hole (STMT-R) identified by the marking A and the one (LTR-R) identified by the marking H. ⚠ • Be sure there is no gap. • Perform this step only when the use of Inch-configured paper is not planned.	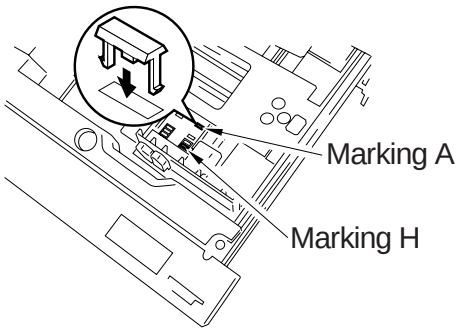
3	Set the cassettes to the appropriate sizes to suit the user's needs and attach the sticker indicating the new sizes.	
4	Slide the cassettes into the machine.	

COPYRIGHT © 2000 CANON INC.

2.12 Changing the Paper Size for the Front Deck (right/left)

Step	Work	Checks/remarks
1	Press the release button and slide out the deck.	
2	Remove the screw from the rear edge guide plate and the left and right guide plates; then secure each guide plate to suit the size of the user's choice. At time of shipment: A4 Slide the deck into the machine.	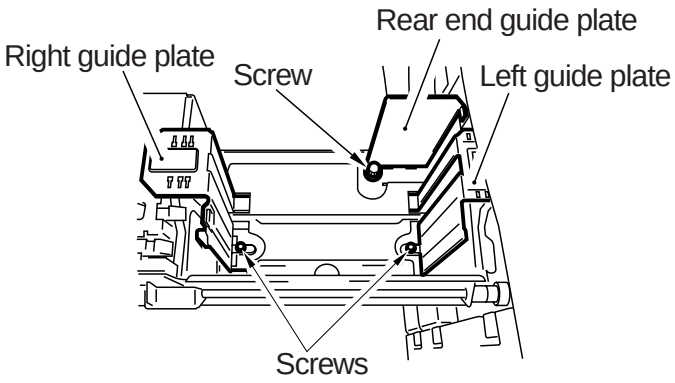
3	Attach the appropriate size sticker to the paper size indicator plate of the deck.	
4	Turn on the power and register the front deck paper size using service mode.	Right deck: COPIER>OPTION>CST>P-SZ-C1 Left deck: COPIER>OPTION>CST>P-SZ-C2 A4=6, B5=15, LTR=18

COPYRIGHT © 2000 CANON INC.

2.13 Checking Images/Operations and User Mode



Be sure to remove all packaging material from the cassettes before turning on the power switch.

Step	Work	Checks/remarks
1	Slide out the duplexing unit and check to make sure that there is no foreign matter and each part is free of damage.	
2	Connect the power plug to the power outlet and turn on the power switch. • Adjust the contrast of the control panel display using the Screen Contrast key; then advise the user on how to make adjustments. • Check that the Add Paper indicator has turned on. • Press the keys of the keypad and the Clear key to make sure that the copy count indication is correct.	
3	Place paper in the cassettes and the deck. (If the paper size has been changed for the deck, be sure to register the new paper size using service mode.)	
4	When the wait period is over, start service mode and execute toner supply (thereby supplying toner from the hopper to the developing assembly). 1. Press the following in sequence to start service mode: ‘user mode’, ‘2 and 8 at the same time’, and ‘user mode’. 2. Select COPIER>FUNCTION>INSTALL>TONER-S. 3. Check that the following indication has appeared: “CHECK THE DEVELOPER.” 4. Check to make sure that the developing assembly has been mounted properly and press the OK key. 5. See that toner is supplied from the hopper to the developing assembly (about 8 to 10 min). 6. Press the Reset key twice to end service mode. ⚠ Do not turn off the power while the machine is in operation.	

COPYRIGHT © 2000 CANON INC.

Step	Work	Checks/remarks
5	When the developing assembly has been supplied with toner, check the operator and copy images using the Test Sheet by making sure of the following: Copying operation: All associated operations must be normal. Double-sided copying: Paper must move properly in the duplexing unit. Pickup operation: Paper must be picked up normally from each source of paper. Operating noise: There must be no abnormal noise. Default enlargement/reduction: The quality of images made at each ratio must be good. Multiple copies: As many copies as specified must be made normally. If there is a difference in density between left and right, adjust the height of the primary charging wire at the rear to correct. ⚠ At times, toner may drop from the drum separation claw soiling about the first ten or so copies. This problem will disappear on its own as more copies are made.	
6	Set the standard mode in user mode and service mode (press the Rest key twice to end service mode).	

2.14 Checking the Environment Switch

Step	Work	Checks/remarks
1	The environment of the site determines how the environment switch must be used. If the site requires that the drum/cassette heater remain on while the main power switch is turned off, operate the following two switches: Environment Switch It is designed for the drum heater and all night heaters, and functions as follows: ON: all night switch remains on; the main power supply switch may be off or on. OFF: heater remains on only when the main power switch is on.	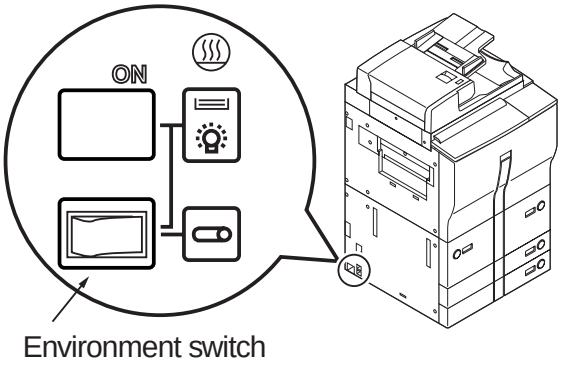

COPYRIGHT © 2000 CANON INC.

2.15 Installing the Machine

Step	Work	Checks/remarks
1	Remove the two screws, and detach the cover from the right rear bottom of the machine; then, store the following parts: 1. drum protection sheet; keep it near the waste toner case. 2. drum rotating tool; put it together with the waste toner case cap and store it in the grip found at the top of the waste toner case. 3. grip; store it in the grip recess. ⚠ Do not roll the drum protection sheet.	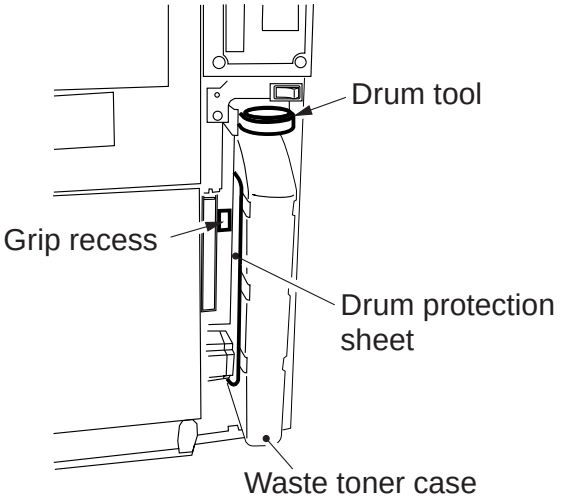
2	Mount the cover to the right rear bottom.	
3	Fit the covers to the grip assemblies.	
4	If installation of an accessory (sort, etc.) is planned, install it according to the Installation Procedure that comes with the accessory.	
5	Clean up the area around the machine.	
6	Move the machine to the site of installation and correct it so that it is level using the two adjusters.	
7	Fill out the Service Sheet.	

COPYRIGHT © 2000 CANON INC.

3. Relocating the Machine

Be sure to observe the following if the machine needs to be moved by truck or other means of transportation:

Work Procedure

1. Remove all paper from the left/right paper deck and the cassettes.
2. Turn off the power switch, and disconnect the power plug from the power outlet.
3. Secure the No. 1 mirror base in place from the side of the reader left cover using a fixing screw (check to make sure that the No. 1 mirror base will not move).
4. Take out the developing assembly. Be sure to move the developing assembly separately from the machine.
5. Tape the following in place to avoid displacement by vibration: transfer charging assembly, fixing/feeding assembly releasing lever, duplexing unit.
6. Tape the covers, decks, and cassettes in place.
7. Place A3 copy paper on the copyboard glass, and tape the ADF in place.



1. Be sure to observe the following if flights of stairs are used when moving the machine into or out of the site of installation:
   1.1 Take out the ADF, fixing/feeding assembly, and duplexing unit; they must be moved separately from the machine.
   1.2 When lifting the machine, avoid using the four grips (left, right); instead, hold it by its bottom four corners.
   1.3 The machine weighs about 210 kg. Be sure to work in a group of four when lifting it.

2. Be sure to shift up the two adjusters (front) found on the machine's bottom to make sure that they are released. The adjusters can slip off while the machine is being moved. Take care not to lose them.

3. If a side paper deck/finisher (accessory) is installed, remove it before moving the machine.

COPYRIGHT © 2000 CANON INC.

4. Mounting the Delivery Roll

The delivery roller must be equipped with a delivery roll in its middle before mounting the delivery tray. **The following steps,** however, **must not be performed** if installation of the shift tray or finisher is planned.

Step	Work	Checks/remarks
1	Open the front cover, and slide out the fixing/feeding assembly; then remove the two screws, and detach the anti-wrap cover.	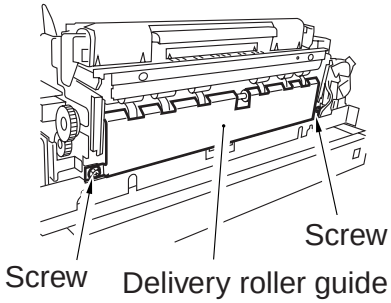
2	Mount the delivery roll aligning it against the pin in the middle of the delivery roller; then secure it in place with an E-ring.	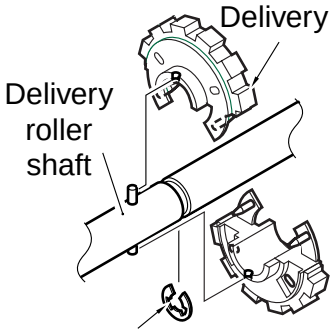 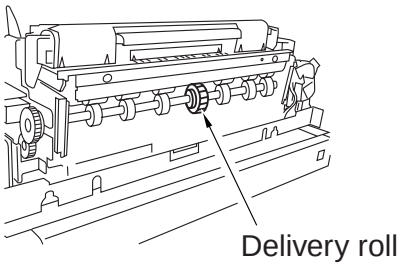
3	Mount the anti-wrap cover with two screws, and push the fixing/feeding assembly into the machine; then close the front cover.	
4	Remove the two screws, and detach the reader left cover; then mount the magnet catcher.	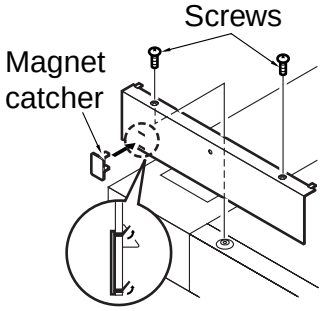
5	Mount the delivery tray.	

COPYRIGHT © 2000 CANON INC.

5. Mounting the Original Holder

Step	Work	Checks/remarks
1	Mount the original holder to the machine (right) using the two stepped screws that come with the machine. If the original holder is not needed, fit the two rubber caps that come with the machine instead. If it is difficult to mount the original holder, try loosening the two mounting screws.	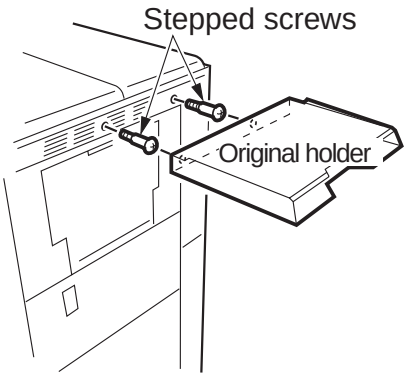

COPYRIGHT © 2000 CANON INC.

6. Installing the Control Card IV

Step	Work	Checks/remarks
1	Remove the three screws and detach the upper cover.	
2	Remove the screw and detach the upper cover support plate.	
3	Shift the screw hole position so that the control card base is more or less outside the machine; then mount the upper cover support plate.	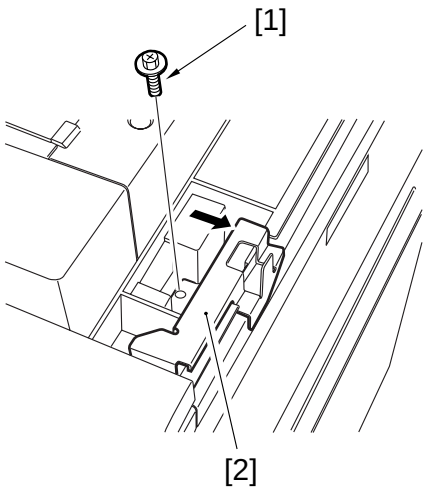
4	Mount the Control Card IV to the upper cover support plate with one screw.	
5	Disconnect the shorting connector from the cable and connect it to the cable of the Control Card IV. ⚠ Be sure to store away the shorting connector. It will be used when removing the Control Card IV for repairs or the like.	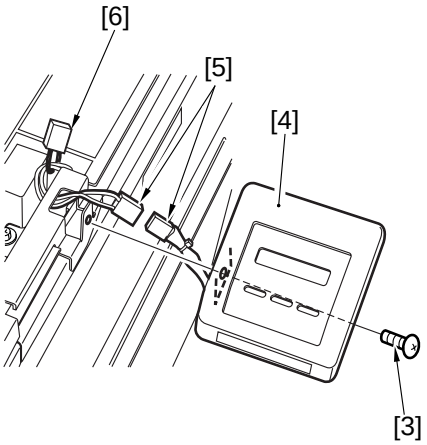
6	Mount the upper cover.	

COPYRIGHT © 2000 CANON INC.

7. Installing the NE Controller-A1

Installation herein is to the iR5000/6000. For how to make various settings and points to note and check (operations), see the Installation Procedure that comes with the machine.

7.1 Installation

Step	Work	Checks/remarks
1	Remove the upper cover of the controller. (See the Installation Procedure.)	
2	Connect the plug of the AC adapter to the controller. (See the Installation Procedure.)	
3	Remove the four screws [1], and detach the face plate [2] of the rear upper cover.	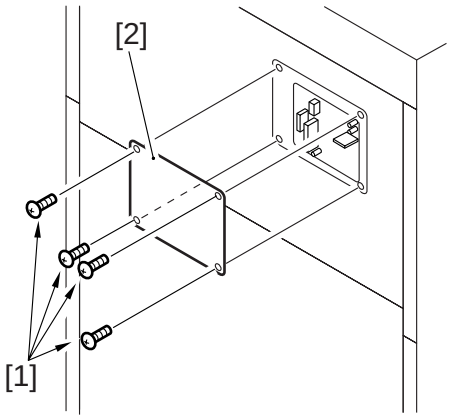
4	Remove the rear upper cover, and free the 8-pin cable [3] used to connect the controller from the cable clamp; then, let the cable hang as shown. Be sure not to route the cable in the area indicated (by dashed line) of the DC controller PCB to avoid malfunction of the machine.	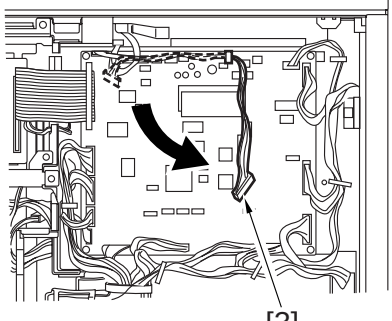 Keep the cable out 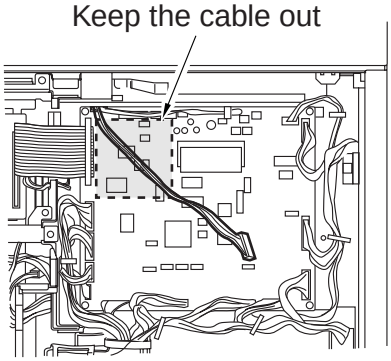

COPYRIGHT © 2000 CANON INC.

Step	Work	Checks/remarks
5	Mount the rear upper cover, and draw out the controller cable [4] from where the controller is mounted; then, connect it to the controller cable [5].	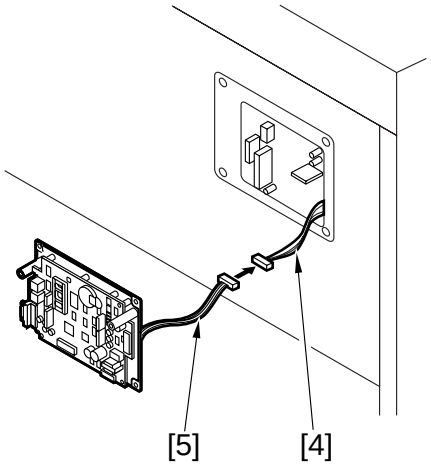
6	Mount the controller [6] to the rear upper cover using four screws [7]. (Use the screws that come in the box.)	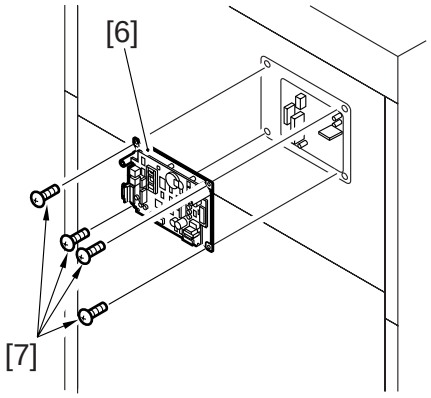
7	Make various settings and check the operations as instructed in the NE Controller-A1 Installation Procedure.	

READER UNIT
SERVICE MANUAL

COPYRIGHT © 2000 CANON INC.
CANON iR5000/iR6000 REV.0 JULY 2000

Contents

CHAPTER 1 BASIC OPERATION

1. Functional Construction 1-1R
2. Outline of Electrical Circuitry 1-2R
2.1 Outline 1-2R
2.2 Reader Controller PCB 1-2R
3. Basic Sequence of Operations 1-3R
3.1 Basic Sequence of Operations at Power-On 1-3R
3.2 Basic Sequence of Operations in Book Mode 1-3R
4. Inputs to and Outputs from the Major PCBs 1-4R
4.1 Wiring of Major PCBs 1-4R
4.2 Inputs to and Outputs from the Reader Controller PCB 1-5R

CHAPTER 2 ORIGINAL EXPOSURE SYSTEM

1. Outline of Operations 2-1R
1.1 Outline 2-1R
1.2 Sequence of Operations (original exposure) 2-3R
1.2.1 Book Mode, 1 Original, Copyboard Closed 2-3R
1.2.2 Book Mode, 1 Original, Copyboard Cover Open 2-4R
1.3 Enlargement/Reduction (zoom) 2-5R
1.3.1 Changing the Reproduction Ratio in Main Scanning Direction 2-5R
1.3.2 Changing the Reproduction Ratio in Sub Scanning Direction 2-5R
2. Scanner Drive System 2-6R
2.1 Outline 2-6R
2.2 Controlling the Scanner Motor 2-7R
2.2.1 Controlling the Motor When Scanning an Image .. 2-7R
2.2.2 Reversing the Scanner After Scanning in Main Reading Direction 2-8R
3. Controlling the Scanning Lamp (LA2) 2-9R
3.1 Outline 2-9R
3.2 Scanning Lamp 2-9R
3.3 Turning On/Off the Lamp 2-9R
3.4 Detecting an Error 2-10R
4. Detecting the Size of Originals 2-11R
4.1 Outline 2-11R
4.2 Points of Detection 2-11R
4.3 Outline of Detection 2-11R
4.4 Outline of Detection Operation 2-12R
4.4.1 Book Mode, 1 Original, Copyboard Cover Open .. 2-12R
4.4.2 Book Mode, 1 Original, Copyboard Cover Close . 2-13R
5. Scanning Lamp 2-15R
5.1 Removing the Scanning Lamp 2-15R
5.2 Points to Note When Replacing the Scanning Lamp 2-16R
5.3 After Replacing the Scanning Lamp 2-16R
6. Scanner Drive Block 2-17R
6.1 Scanner Motor 2-17R
6.1.1 Removing the Scanner Motor 2-17R
6.1.2 Mounting the Scanner Motor 2-18R
6.2 Scanner System Drive Cable 2-19R

COPYRIGHT © 2000 CANON INC.

6.2.1 Removing the Scanner System Drive Cable 2-19R
6.2.2 Routing the Scanner Drive Cable 2-21R
6.2.3 Positioning the No. 1/2 Mirror Base 2-22R
7. Others 2-24R
7.1 Removing the Original Size Sensor 2-24R
7.2 Removing the HP Sensor 2-25R
7.3 Removing the Copyboard Sensor 2-26R
8. PCBs 2-27R
8.1 Removing the Fuse PCB 2-27R
8.2 Removing the Inverter PCB .. 2-28R

CHAPTER 3 IMAGE PROCESSING SYSTEM

1. Outline 3-1R
2. Analog Image Processing 3-2R
2.1 Outline 3-2R
2.2 Driving the CCD 3-2R
2.3 Gain Correction and Offset Correction of the CCD Output 3-3R
2.4 A/D Conversion of the CCD Output 3-3R
3. Digital Image Processing 3-4R
3.1 Outline 3-4R
3.2 Shading Correction 3-4R
3.2.1 Outline 3-4R
3.2.2 Shading Adjustment 3-5R
3.2.3 Shading Correction 3-5R
3.2.4 Edge Gain Correction (ADF in use) 3-6R
3.3 Auto Density Adjustment (AE) 3-7R
3.3.1 Outline 3-7R
3.3.2 ABC Circuit 3-7R
3.4 Related Service Mode 3-8R
4. External Covers 3-9R
4.1 Removing the Reader Front Cover 3-9R
4.2 Removing the Reader Rear Cover 3-11R
5. CCD/AP PCB 3-12R
5.1 Removing the CCD Unit 3-12R
5.2 When Replacing the CCD/AP PCB 3-13R
6. Reader Controller PCB 3-14R
6.1 Removing the Reader Controller PCB 3-14R
6.2 When Replacing the Reader Controller PCB 3-14R

COPYRIGHT © 2000 CANON INC.

CHAPTER 1

BASIC OPERATION

COPYRIGHT © 2000 CANON INC.

1. Functional Construction

The reader unit is divided into the following two functional blocks (shaded):

1. Original exposure block
2. Control block

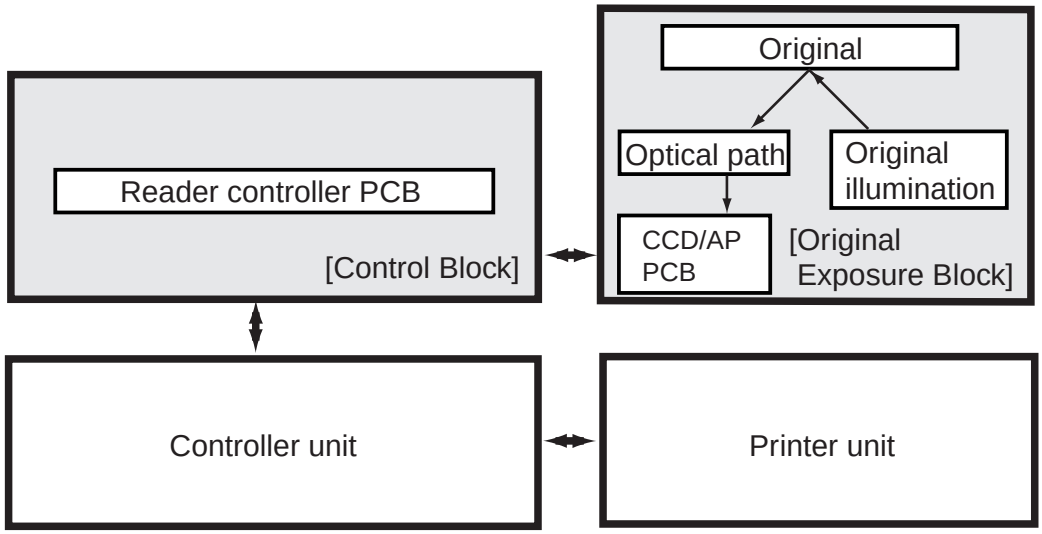

F01-100-01

2. Outline of Electrical Circuitry

2.1 Outline

The major mechanisms of the reader unit are controlled by the CPU on the reader controller PCB.

The functions of the major ICs are as indicated in the following table.

2.2 Reader Controller PCB

Name	Description	
CPU	• Controls the sequence of scanner operations. • Controls the original size detection mechanism. • Controls the CCD. • Controls the communications with the ADF.	• Controls the scanning lamp. • Controls shading correction. • Controls service mode. • Controls the communications with the main controller.
RAM	• Stores service mode data. • Stores user mode data. • Stores control data.	
EEP-ROM	• Backs up RAM data.	
ROM	• Stores control programs.	

T01-202-01 List of Control Items

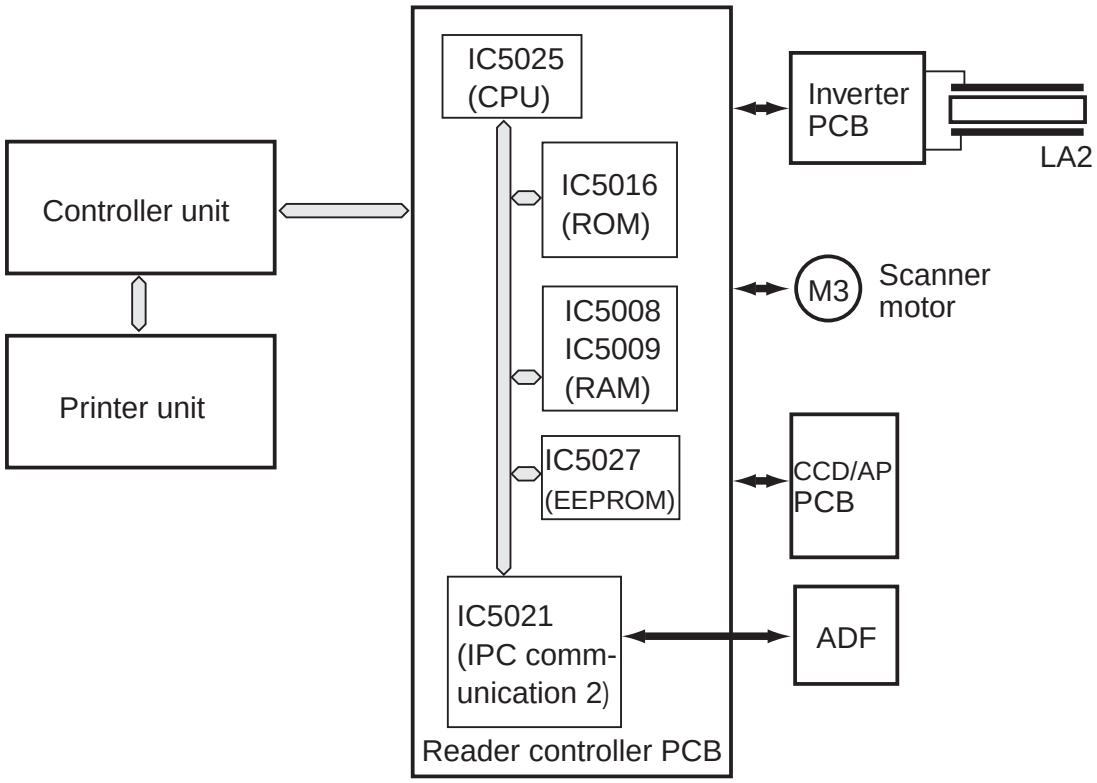

F01-202-01 Major PCBs

COPYRIGHT © 2000 CANON INC.

3. Basic Sequence of Operations

3.1 Basic Sequence of Operations at Power-On

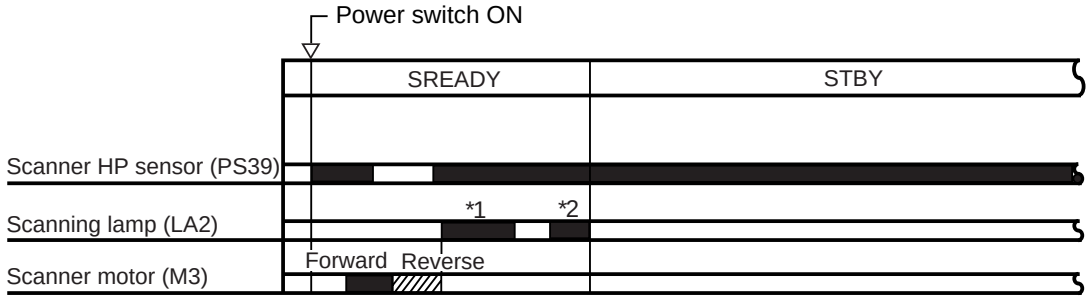

*1: Shading correction (gain adjustment) is executed 1 sec after the scanning lamp turns on.
*2: Shading correction (CCD original size detection slash level adjustment) is executed 100 secs after the scanning lamp turns on.

F01-301-01

3.2 Basic Sequence of Operations in Book Mode

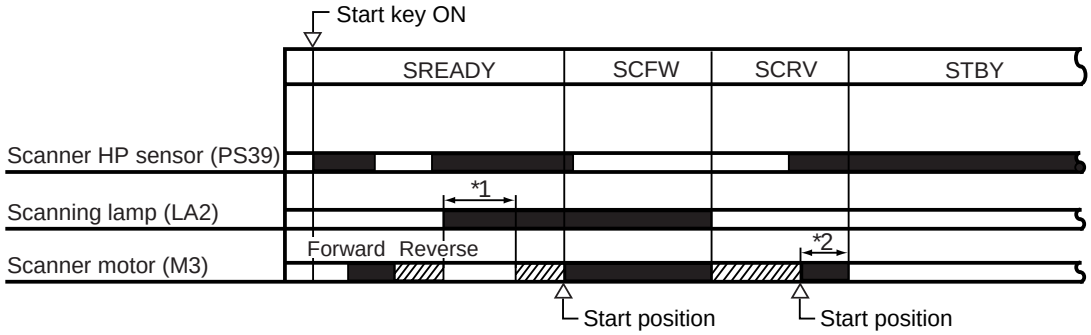

*1: Shading correction (gain adjustment and CCD original size detection slash level adjustment) is executed for every job.
*2: Executed only at the end of a scan job.

F01-302-01

Name of period	Description
SREADY(scanner ready)	From when the power switch is turned on to when shading correction ends. Or, from when the Start key is turned on to when the scanner reaches scanner start position.
SCFW(scanner forward)	While the scanner is moving forward to scan the original.
SCRV(scanner reverse)	While the scanner is moving in reverse.
STBY(standby)	From when shading correction ends to when the Start key is turned on or when the power switch is turned off.

T01-302-01

COPYRIGHT © 2000 CANON INC.

4. Inputs to and Outputs from the Major PCBs

4.1 Wiring of Major PCBs

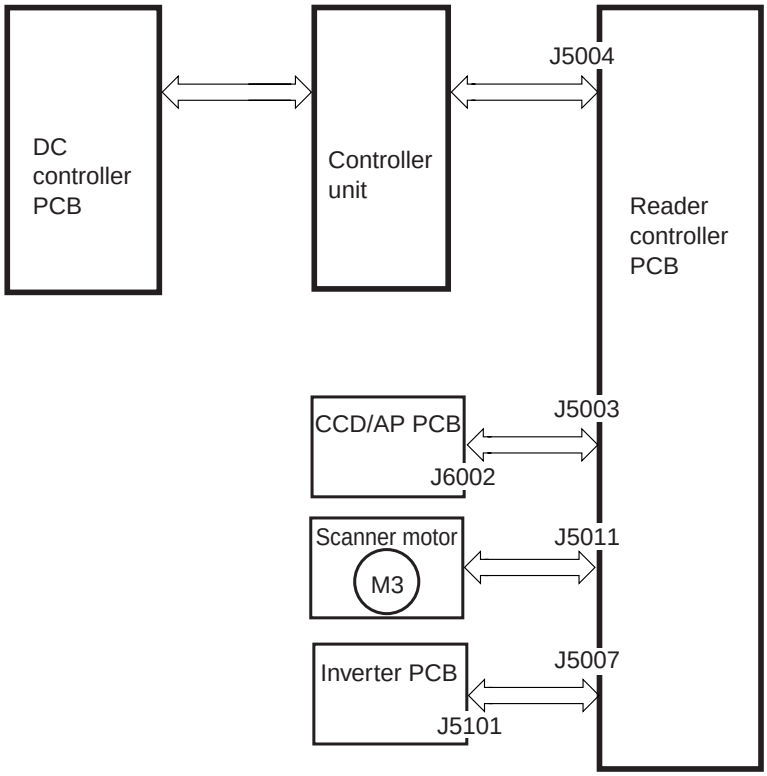

Note: The symbol ⟺ in the diagram indicates the major wiring route, NOT the flow of signals.

F01-401-01 Wiring of Major PCBs

COPYRIGHT © 2000 CANON INC.

4.2 Inputs to and Outputs from the Reader Controller PCB

• Inputs to and Outputs from the Reader Controller PCB (1/2)

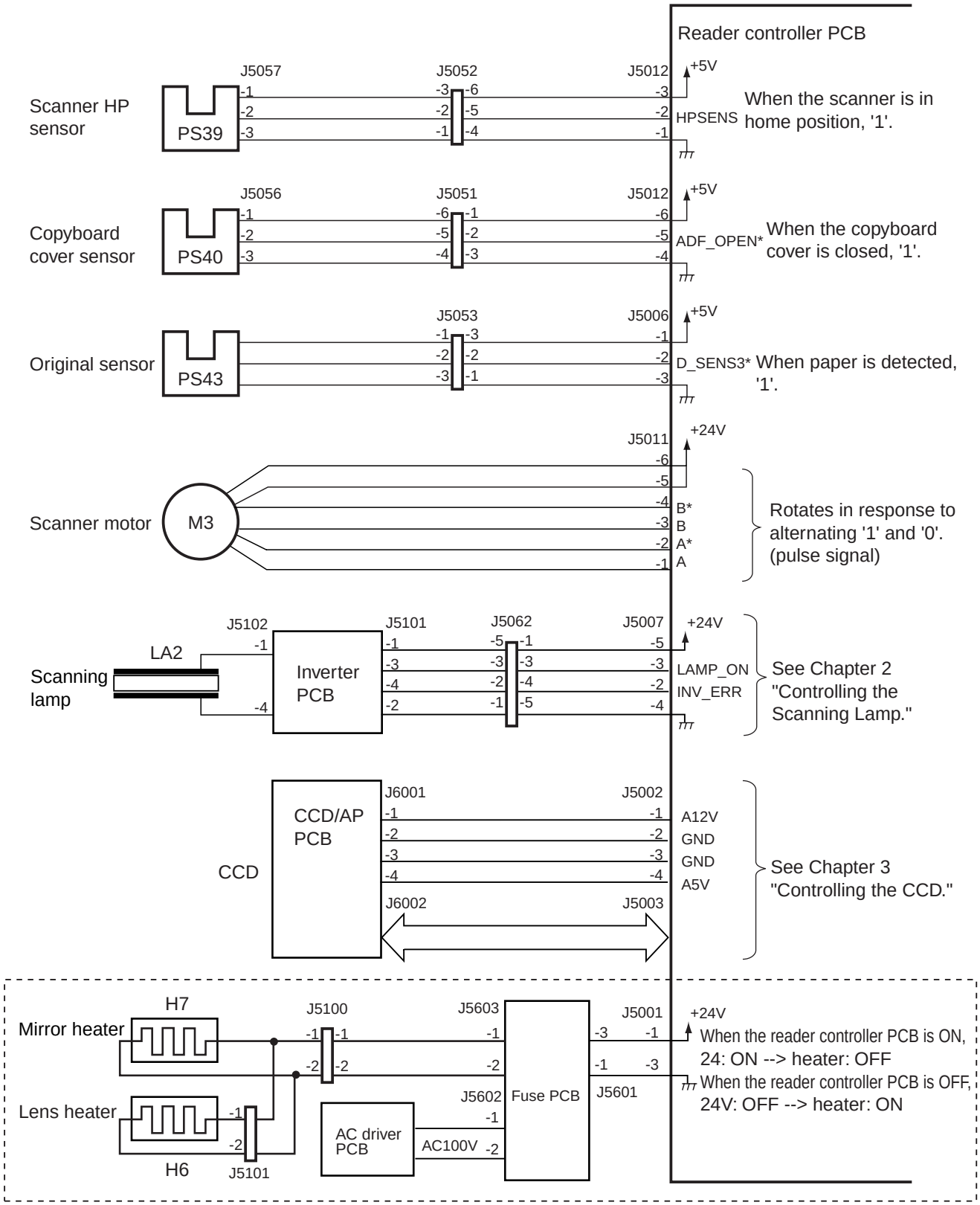

100-V model only

F01-402-01

• Inputs to and Outputs from the Reader Controller PCB (2/2)

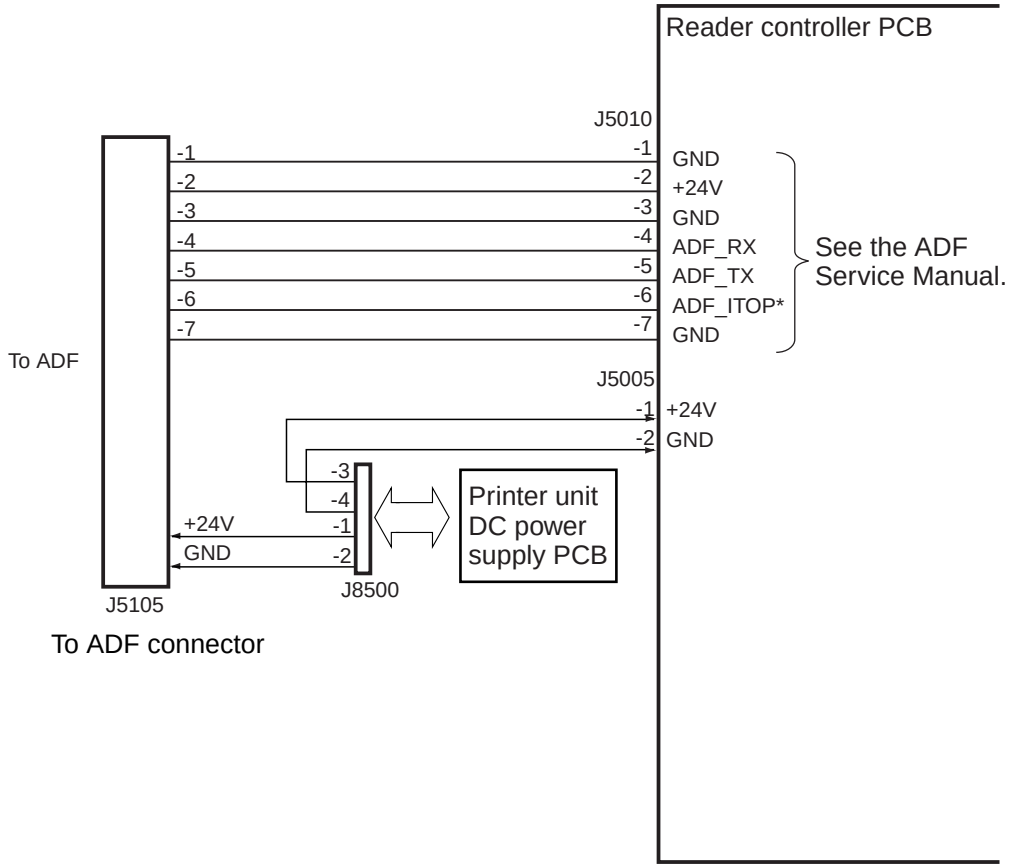

F01-402-02

COPYRIGHT © 2000 CANON INC.

CHAPTER 2

ORIGINAL EXPOSURE SYSTEM

COPYRIGHT © 2000 CANON INC.

1. Outline of Operations

1.1 Outline

The major functions of the original exposure system are as follows:

Item	Description
Scanning lamp	Xenon lamp
Original Scanning	In book mode: by moving the scanner. With ADF in use: by stream reading while holding the No. 1 mirror base fixed in position.
Scanner position detection	By scanner HP sensor (PS39)
Reproduction ratio (zoom)	[1] Using the Copyboard: 25% to 400% • In main scanning direction, image processing is performed by the controller unit. • In sub scanning direction, the speed of the No. 1 mirror base is changed (50% or higher), in addition, the image data is processed by the controller unit (lower than 50%). [2] Using the ADF: 25% to 200% • In main scanning direction, the image data is processed by the controller unit. • In sub scanning direction, the speed at which the originals are moved is changed (50% or higher), in addition, the image data is processed by the controller unit (lower than 50%).
Scanner drive control	The No.1/No.2 mirror base is controlled by means of a stepping motor (M3).
Lens	Lens array (fixed in position)
Scanning lamp activation	[1] Turned on by an inverter circuit. [2] Monitored for errors.
Original size detection	[1] In book mode, by a reflection type sensor in sub scanning direction; by a CCD in main scanning direction. [2] With the ADF in use, by the ADF.

COPYRIGHT © 2000 CANON INC.

The major components of the original exposure system are as follows:

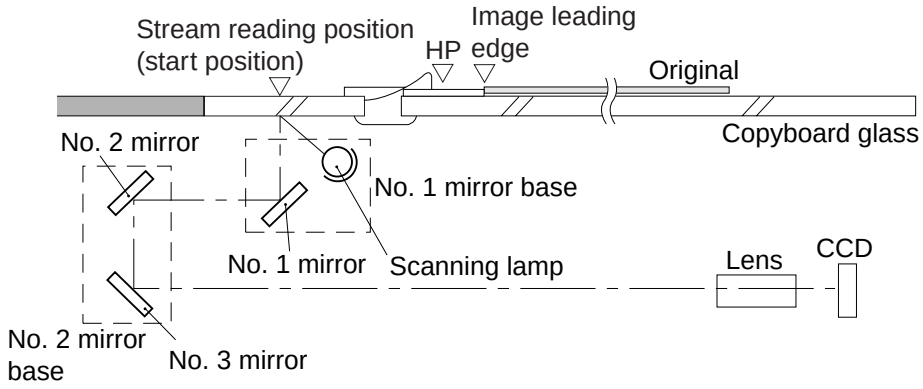

F02-101-01

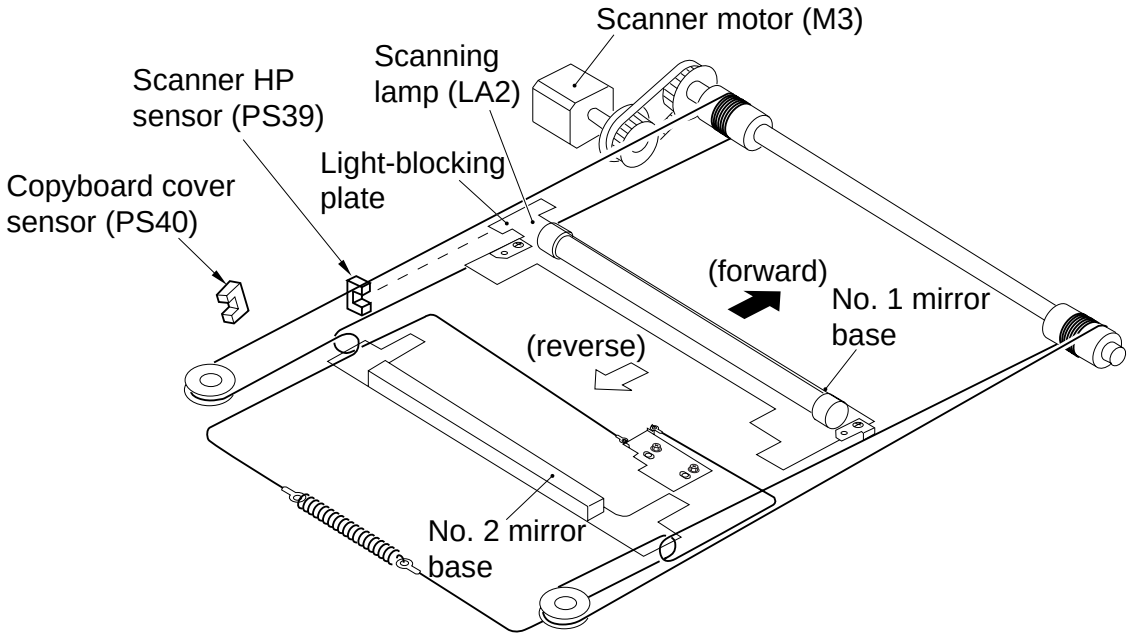

F02-101-02

Component	Notation	Description
Scanning lamp	LA2	Xenon lamp (intensity of 70,000 lx)
Scanner motor	M3	2-phase stepping motor (under pulse control)
Scanner HP sensor	PS39	Photointerrupter (detects scanner home position)
Copyboard cover sensor	PS40	Photointerrupter (detects the state (open/closed) of copyboard cover)
Mirror	-	No. 1/No. 2/No. 3 mirror

COPYRIGHT © 2000 CANON INC.

1.2 Sequence of Operations (original exposure)

1.2.1 Book Mode, 1 Original, Copyboard Closed

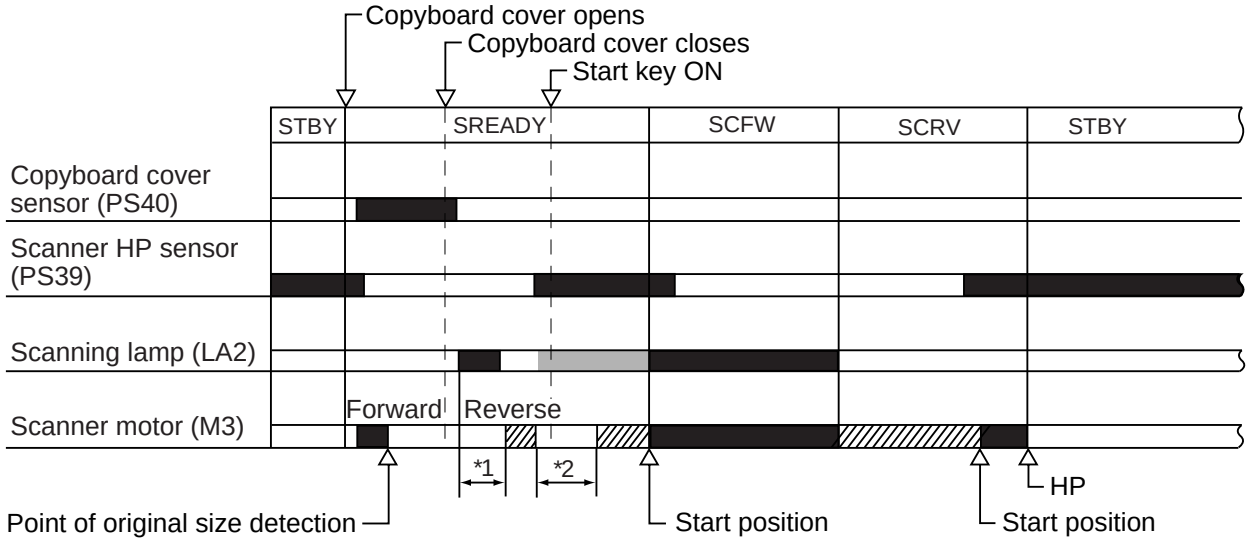

*1: original size detection.*2: shading correction.

F02-102-01

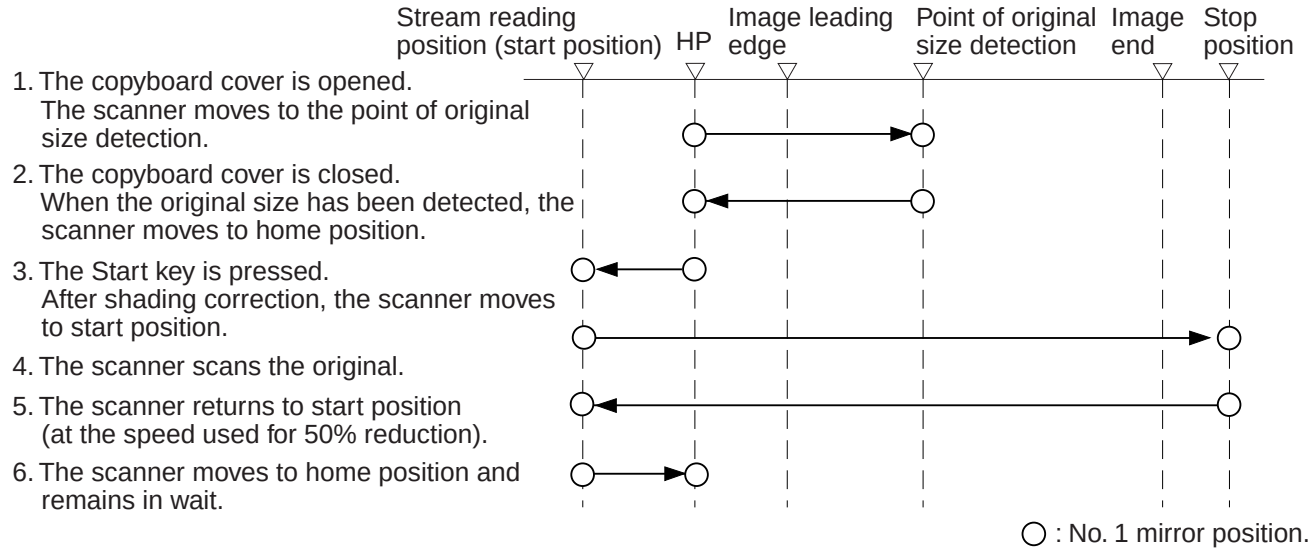

F02-102-02

1.2.2 Book Mode, 1 Original, Copyboard Cover Open

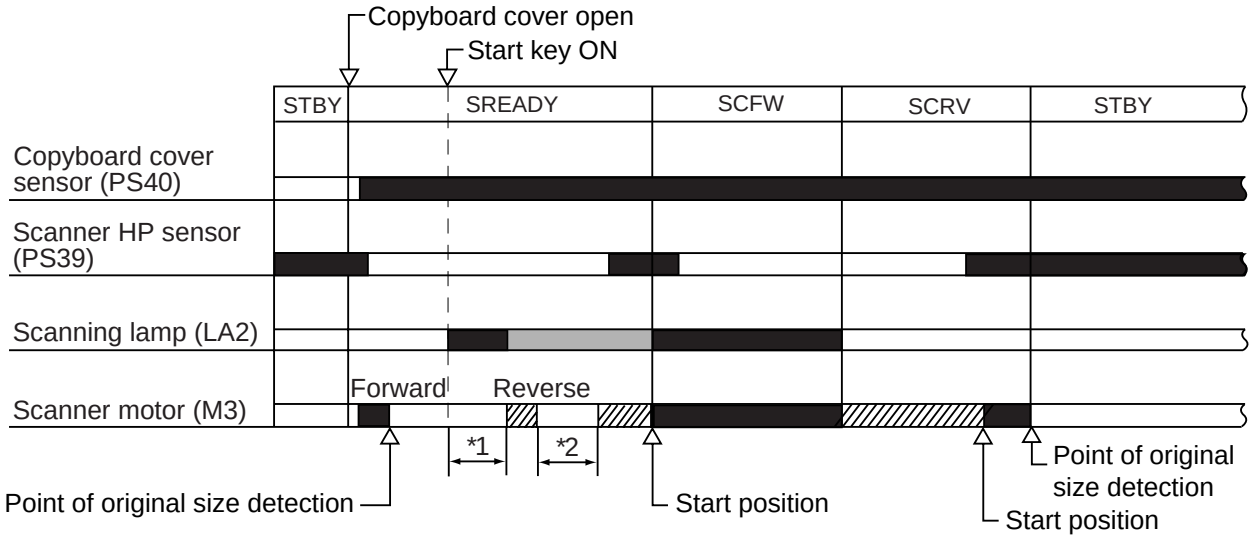

*1: original size detection.*2: shading correction.

F02-102-03

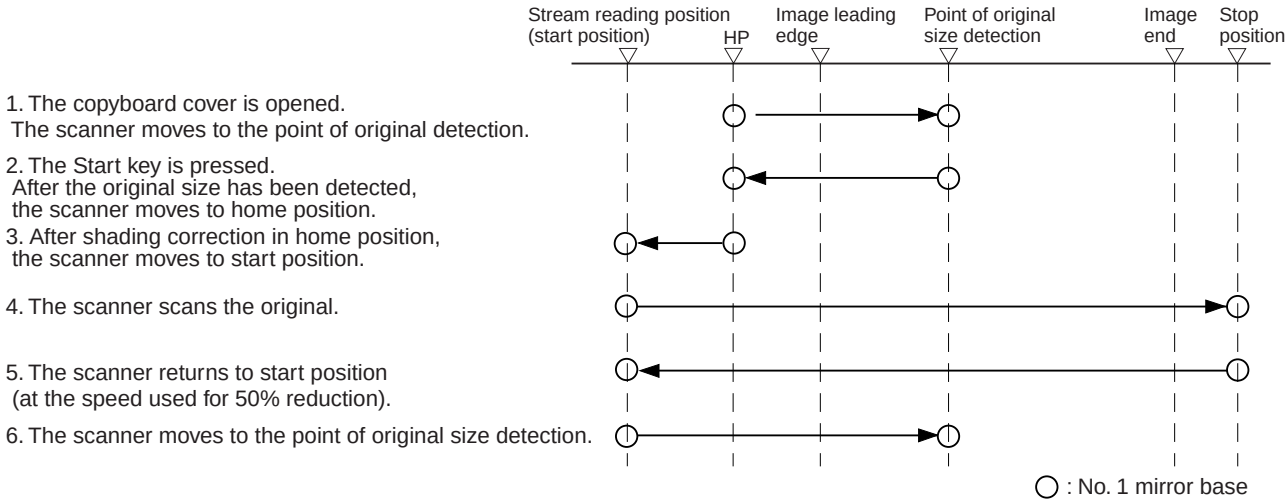

F02-102-04

COPYRIGHT © 2000 CANON INC.

1.3 Enlargement/Reduction (zoom)

[1] When the copyboard cover is used, the ratio may be between 25% and 400% and the speed of the scanner is controlled.
[2] When the ADF is used, the ratio may be between 25% and 200% and the speed of moving the originals is controlled.

1.3.1 Changing the Reproduction Ratio in Main Scanning Direction

For main scanning direction, the original is read at 100% (for both copyboard and ADF); the size is changed by processing data in the main controller unit.

[1] To reduce, data units are skipped when writing image data to the line memory.
[2] To enlarge, data units are read multiple times when reading image data from the line memory.

1.3.2 Changing the Reproduction Ratio in Sub Scanning Direction

The reproduction ratio in sub scanning direction is changed by controlling the speed of the scanner and the speed at which originals are moved. For a reduction between 25% and 49%, however, the main controller unit also functions to change the ratio by processing data.

[1] To enlarge, the speeds at which the mirror base is moved and the originals are moved are reduced (i.e., slower than in Direct).
For instance, to enlarge at 200%, the originals are read at 1/2 the speed used for Direct.
[2] To reduce to between 50% and 99%, the speeds at which the mirror base is moved and the originals are moved are increased (i.e., faster than in Direct).
For instance, to reduce to 50%, the originals are read twice the speed used in Direct.

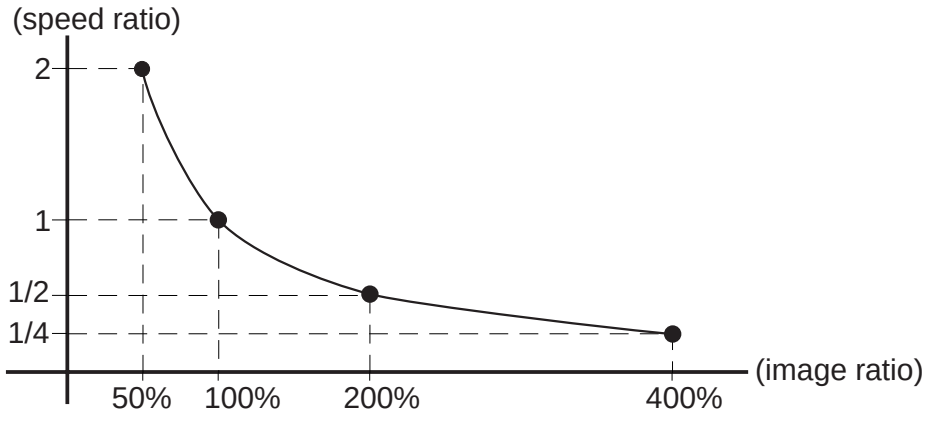

F02-103-01

[3] To reduce to between 25% and 49%, the image data read at 50% and 98% is subjected to skipping (1/2) in the main controller unit.

2. Scanner Drive System

2.1 Outline

The following parts are associated with the scanner drive system.

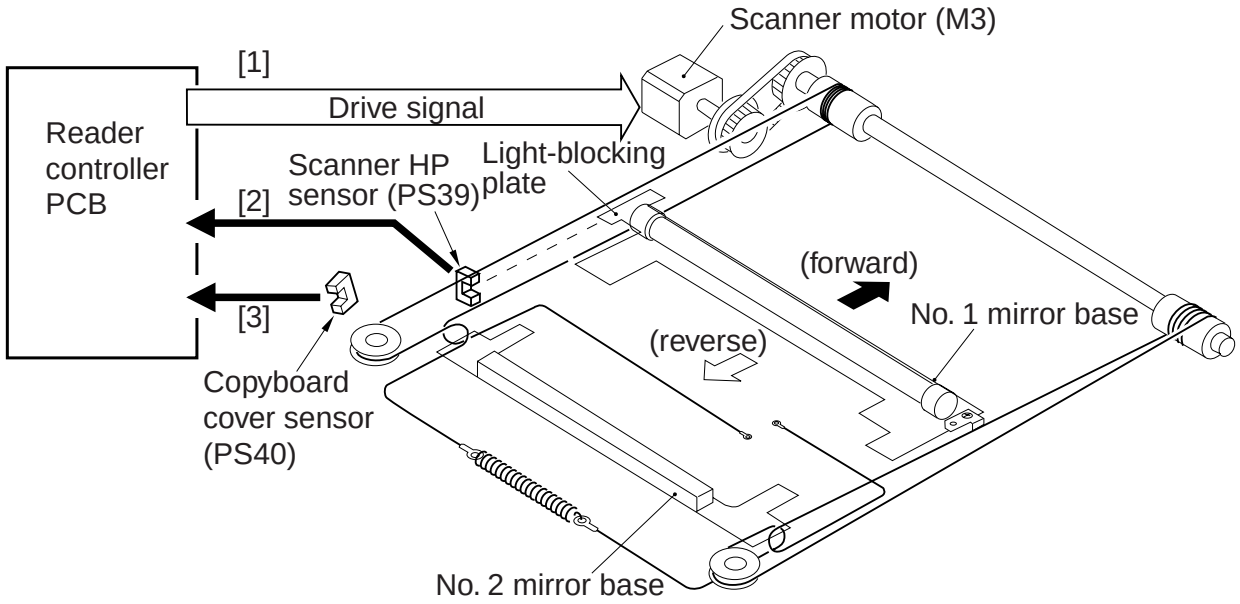

F02-201-01

[1] Scanner Motor (M3) Control Signal
Used to turn on/off the motor and to control its direction and speed of rotation.

[2] Scanner HP Sensor (PS39) Detection Signal
Used to make sure that the No. 1 mirror base is at home position.

[3] Copyboard Cover Sensor (PS40) Detection Signal
Used to detect the state (open or close) of the copyboard cover.

COPYRIGHT © 2000 CANON INC.

2.2 Controlling the Scanner Motor

The system used to control the scanner motor is constructed as follows:

The motor driver turns on/off the scanner motor and controls its direction and speed of rotation in keeping with the signals from the CPU, IPC, and speed control circuit.

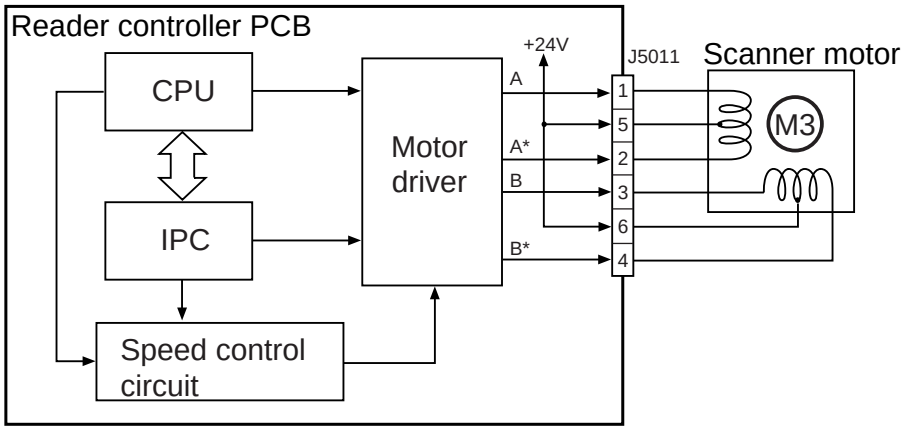

F02-202-01

2.2.1 Controlling the Motor When Scanning an Image

When scanning an image, the motor is controlled as follows, thereby controlling the movement of the No. 1 mirror base unit:

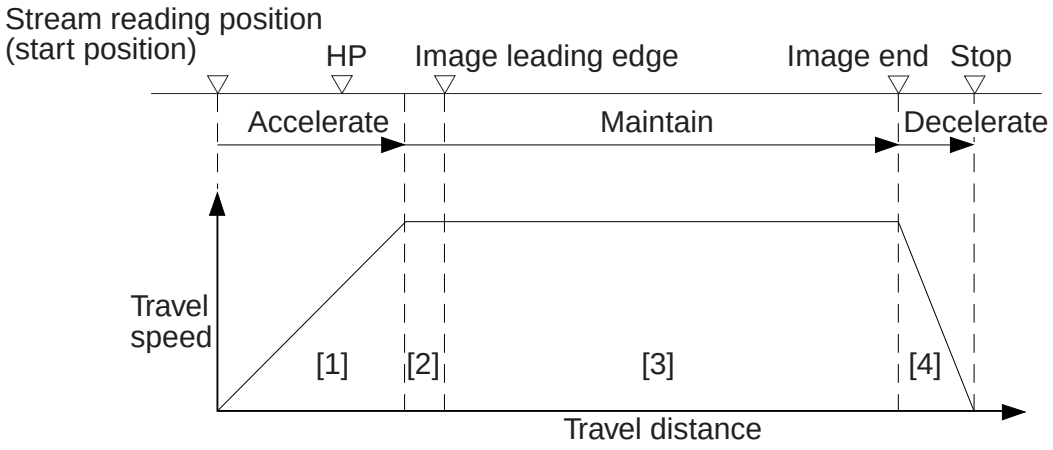

[1] Acceleration. Used to accelerate until the speed most appropriate to the read ratio is attained.
[2] Approach run. Used to ensure that speed stabilizes.
[3] Image read. Used to read the image at a specific speed suited to the read ratio.
[4] Deceleration. Used to enable the scanner to speed down and stop promptly, starting at the end of the image.

F02-202-02

COPYRIGHT © 2000 CANON INC.

2.2.2 Reversing the Scanner After Scanning in Main Reading Direction

When the image has been scanned, the No. 1 mirror base is moved in reverse to home position at the speed used for 50% reduction, regardless of the ratio being used.

Error

E202 (HP detection error)

[1] The No. 1 mirror base does not reach the HP sensor within a specific period of time.

[2] The HP sensor identifies the presence of the No. 1 mirror base when the No. 1 mirror base should have been moved away.

E204 (image leading edge detection error)

[1] The image signal is not generated when the No. 1 mirror base is moving forward.

[2] The ADF does not generate the image leading edge signal in stream reading mode.

COPIER>ADJUST>ADJ-XY>ADJ-X (scanner image leading edge adjustment)

Enter an appropriate value to adjust the image leading edge position.

Range: 0 through 2970 (a change of '12' causes a shift of 1 mm)

COPIER>ADJUST>ADJ>XY>ADJ-S (scanner home position adjustment)

Enter an appropriate value to adjust the home position (standard white plate read position).

If the standard white plate is soiled, execute this mode so that the plate is read avoiding the soiled area.

Range: 0 to 4

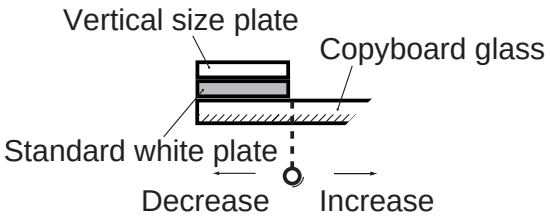

F02-204-01

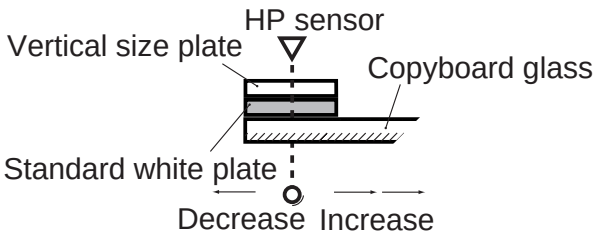

F02-204-02

COPYRIGHT © 2000 CANON INC.

3. Controlling the Scanning Lamp (LA2)

3.1 Outline

The system used to control the scanning lamp is constructed as follows and the items of control include the following:

[1] Turning on and off the scanning lamp.

[2] Monitoring the scanning lamp for errors.

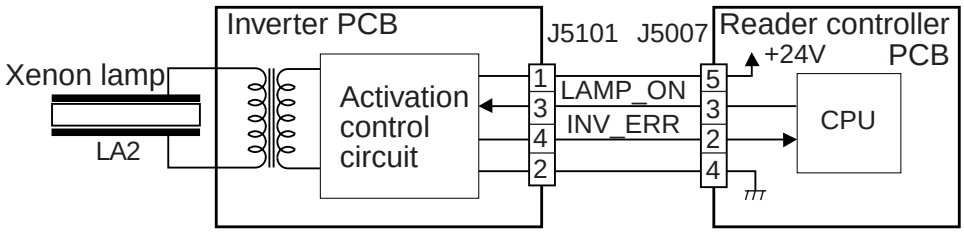

F02-301-01

3.2 Scanning Lamp

The machine's scanning lamp is a xenon lamp of a non-electrode discharge type, in which xenon gas is sealed in a tube.

On the outside of the glass tube, two electrodes are arranged parallel to the tube axis, and the inner side of the glass tube is coated with fluorescent material.

The internal gas discharges and, as a result, the fluorescent material glows when a high-frequency voltage is applied across the electrodes.

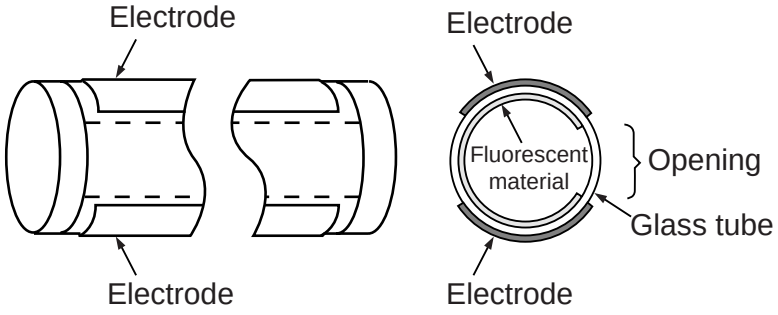

F02-302-01

3.3 Turning On/Off the Lamp

The scanning lamp is turned on/off in response to the drive signal (LAMP_ON) from the CPU on the reader controller PCB. When the signal is generated, the inverter generates a high-frequency voltage using the drive voltage (+24 V) supplied by the reader controller PCB to turn on the xenon tube.

COPYRIGHT © 2000 CANON INC.

3.4 Detecting an Error

The reader controller circuit generates the error signal (INV_ERR) in response to an error (e.g., output open, short circuit, leak) in the inverter circuit. A fault in the lamp (low intensity, activation failure) will be identified as an activation error caused by lack of intensity during initial activation (e.g., at time of shading correction).



E220
It is used to indicate a fault in the inverter PCB.
E225
It is used to indicate a fault in the scanning lamp (xenon tube).

COPYRIGHT © 2000 CANON INC.

4. Detecting the Size of Originals

4.1 Outline

The machine automatically identifies the size of originals based on the combination of intensities measured by reflection type sensors and CCD at specific points.

- For main scanning direction, the CCD is used to take measurements (if AB, 4 points; if Inch, 2 points).
- For sub scanning direction, a reflection type photosensor is used (1 point).

4.2 Points of Detection

For main scanning direction, the No. 1 mirror base is moved to the following points in relation to the position of the original to measure the intensity at each point.

For sub scanning direction, on the other hand, measurements are taken while holding the sensor in place at a specific point.

AB-Configuration

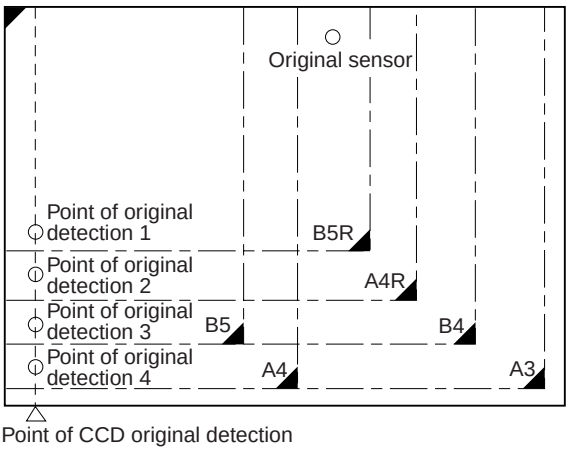

Inch-Configuration

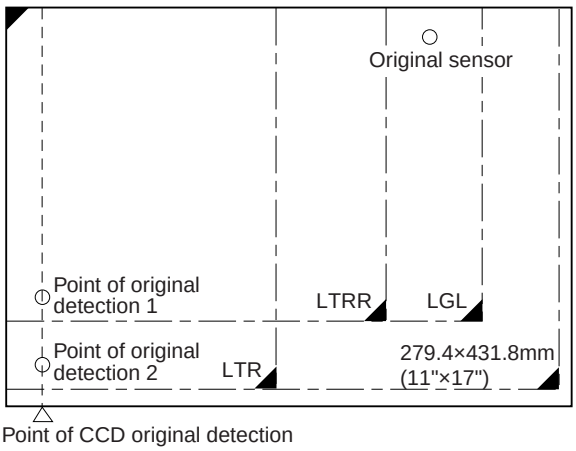

F02-402-01

4.3 Outline of Detection

The machine identifies the size of originals in the following two steps:

[1] Detecting External Light (main scanning direction only)
While keeping the scanning lamp off, the CCD level at each point of detection in main scanning direction is measured. A point at which external light is detected will be identified as indicating the absence of an original, enabling the identification of the width of an original.

[2] Detecting the Sensor Output Level
The scanning lamp is turned on, and the CCD level at each point of detection in main scanning direction is measured. In addition, the reflection type photosensor in sub scanning direction is turned on to measure the sensor output.
The combination of these output measurements is used to identify the size of the original. For specific movements, see the pages that follow.

COPYRIGHT © 2000 CANON INC.

4.4 Outline of Detection Operation

4.4.1 Book Mode, 1 Original, Copyboard Cover Open

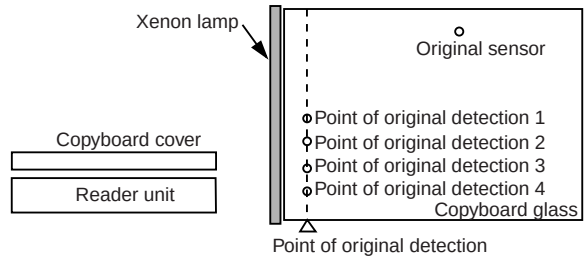

[1] The scanner remains in wait.
No. 1 mirror base: at HP
Xenon lamp: off
Original sensor: disabled

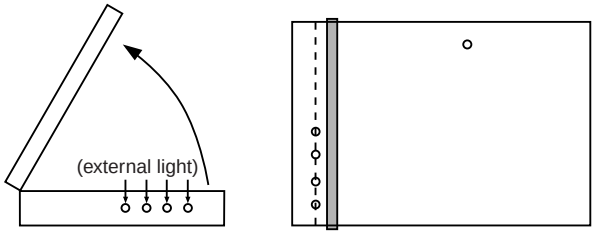

[2] The copyboard is opened.
Detection starts of external light in main scanning direction.
No. 1 mirror base: to point of original detection
Xenon lamp: off
Original sensor: disabled

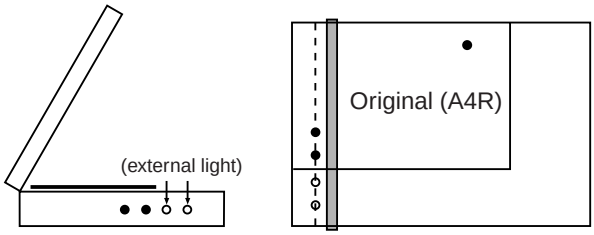

[3] An original is placed.
The width of the original is identified in relation to the presence/absence of external light; here, the absence of an original is identified at points in question, eliminating B5, B4, A4, and A3.

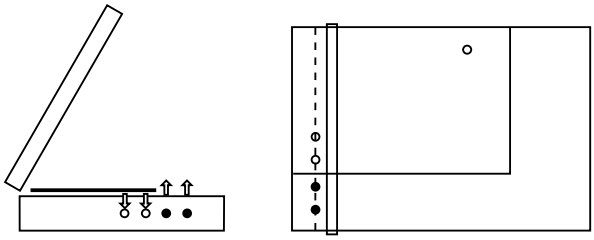

[4] The Start key is pressed.
In response, original detection is started.
For main scanning direction, the xenon lamp is turned on to check for reflected light by the CCD (4 points).
For sub scanning direction, the original sensor starts detection.
The absence of external light is identified as indicating the absence of an original.
The machine will identify the size of an original based on the combination of the results (T02-404-01)

F02-404-01

COPYRIGHT © 2000 CANON INC.

AB-Configuration

Originals size	Point of CCD detection 1	2	3	4	Original sensor
A3	○	○	○	○	○
B4	○	○	○	●	○
A4R	○	○	●	●	○
A4	○	○	○	○	●
B5	○	○	○	●	●
B5R	○	●	●	●	○
None	●	●	●	●	●

Inch-Configuration

Originals size	Point of CCD detection 1	2	Originals sensor
11"×17"	○	○	○
LGL	○	●	○
LTRR	○	●	●
LTR	○	○	●
None	●	●	●

○: reflection present ● : reflection absent

T02-404-01

4.4.2 Book Mode, 1 Original, Copyboard Cover Close

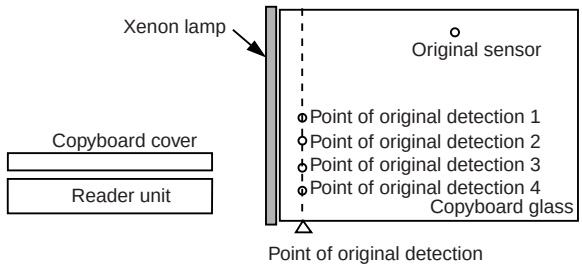

[1] The scanner remains in wait.
No. 1 mirror base: HP
Xenon lamp: off
Original sensor: disabled

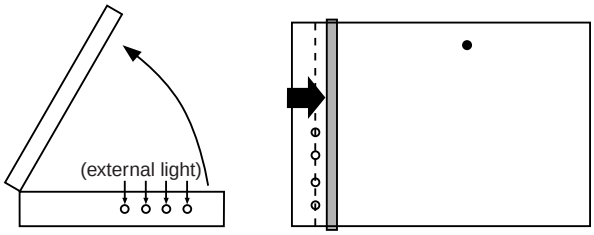

[2] The copyboard cover is opened.
Detection starts of external light in main scanning direction.
No. 1 mirror base: to point of original detection
Xenon lamp: off
Original sensor: disabled

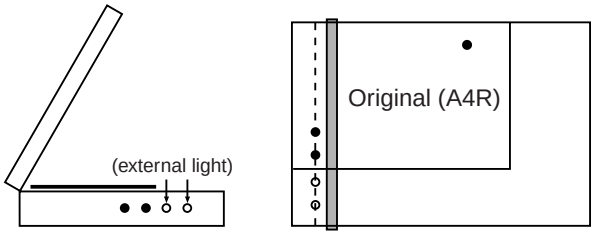

[3] An original is set.
The width of an original is identified in terms of the presence or absence of external light; here, the external light is blocked and the absence of an original is identified, excluding B5, B4, A4, and A3.

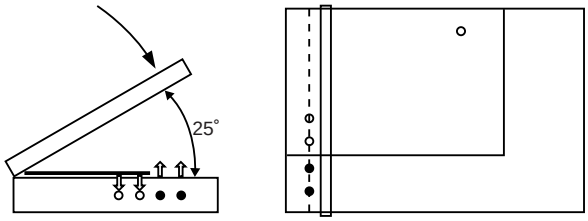

[4] The copyboard cover is closed.
When the copyboard cover is brought down to 25°, the Copyboard cover sensor detects the "closed" state, and original size detection starts.
For main scanning direction, the xenon lamp is turned on, and the CCD checks for reflected light (4 points).
For sub scanning direction, the original sensor starts detection.

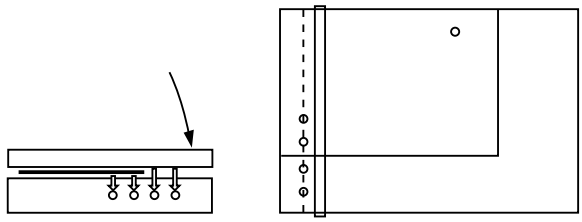

[5] The copyboard cover is fully closed.
The changes in the output level of each sensor are monitored until the copyboard cover is fully closed. The absence of a change is identified as indicating the absence of paper, and the size of the original is identified based on the combination of changes in level at five points (T02-404-02).

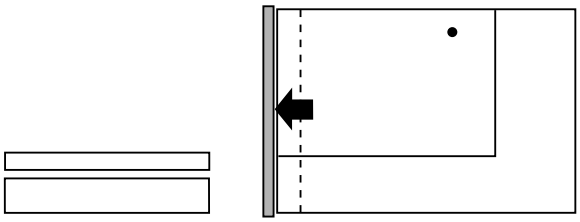

[6] The scanner remains in wait (for a press on the Start key).
The No. 1 mirror base moves to home position, and the scanner waits for a press on the Start key (wait state).

F02-404-02

AB-Configuration

Originals size	Point of CCD detection 1	2	3	4	Original sensor
A3	○	○	○	○	○
B4	○	○	○	●	○
A4R	○	○	●	●	○
A4	○	○	○	○	●
B5	○	○	○	●	●
B5R	○	●	●	●	○
None	●	●	●	●	●

Inch-Configuration

Originals size	Point of CCD detection 1	2	Original sensor
11"* 17"	○	○	○
LGL	○	●	○
LTRR	○	●	●
LTR	○	○	●
None	●	●	●

○: Changes ●: Does not changes

T02-404-02

COPYRIGHT © 2000 CANON INC.

5. Scanning Lamp

5.1 Removing the Scanning Lamp

1) Remove the copyboard glass.
2) Remove the right upper cover and the right upper cover base.
3) Remove the reader left cover; then, detach the reader front cover.
4) Remove the reader controller PCB.
5) Move the No. 1 mirror base [1] as far as the cut-in made in the frame.
6) Remove the three screws [2] from the No. 1 mirror base, and detach the scanning lamp [3] together with the cable fixing plate [4].

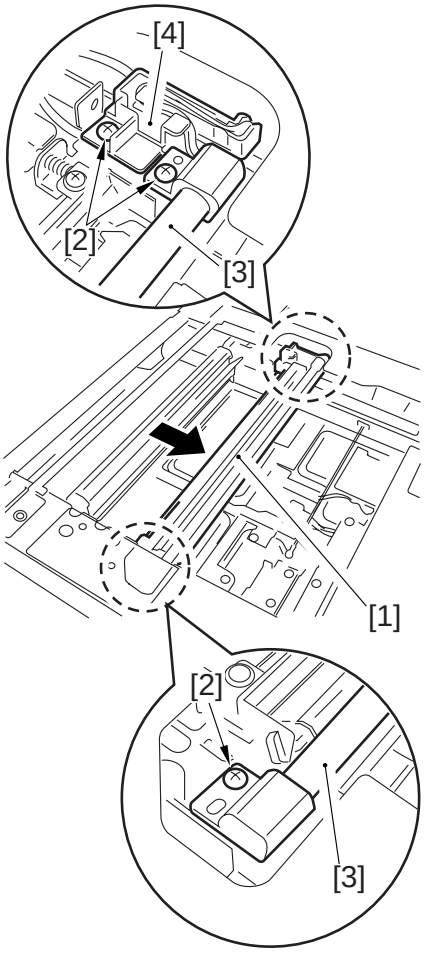

F02-501-01

7) Disconnect the connector [6] from the inverter PCB [5], and remove the screw [7]; then, detach the cable fixing plate [8].

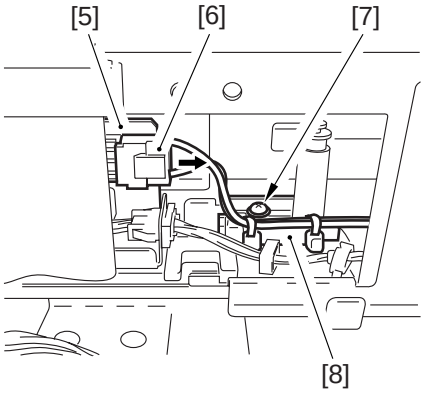

F02-501-02

COPYRIGHT © 2000 CANON INC.

When mounting the scanning lamp, be sure to hook the cable [9] on the pulley [11] of the No. 2 mirror base [10] without twisting it.

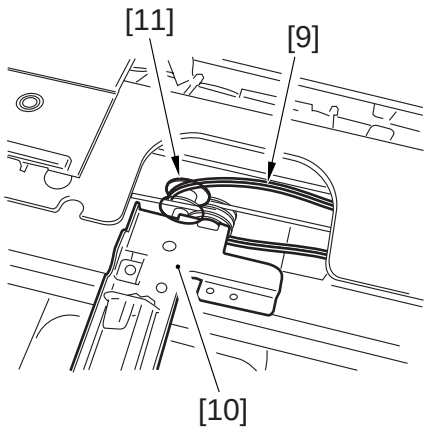

F02-501-03

5.2 Points to Note When Replacing the Scanning Lamp

- Do not work while the scanning lamp is hot.
- Do not leave fingerprints on the surface of the scanning lamp.
- If the surface of the scanning lamp is soiled, dry wipe it.
- Do not touch the light window of the scanning lamp, as when mounting it.
- Do not subject the scanning lamp to impact.

5.3 After Replacing the Scanning Lamp

Execute 'CCD auto adjustment' in service mode, and record the updated CCD adjustment data on the service label.

1. CCD Auto Adjustment
COPIER>FUNCTION>CCD>
CCD-ADJ
2. CCD Adjustment Data
all items under
COPIER>ADJUST>CCD

COPYRIGHT © 2000 CANON INC.

6. Scanner Drive Block

6.1 Scanner Motor

6.1.1 Removing the Scanner Motor

1) Remove the right upper cover and the right upper cover base.
2) Remove the reader controller.
3) Remove the screw [1], and detach the ADF base (right) [2].
4) Remove the five screws [3], and detach the motor cover [4].

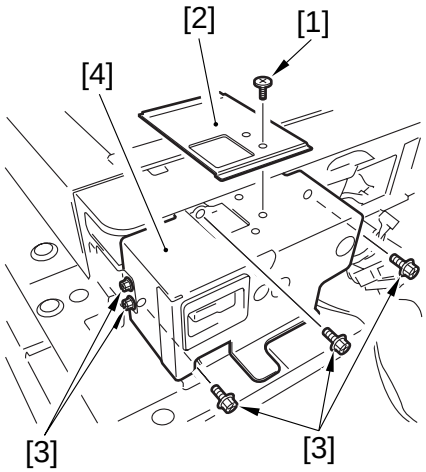

F02-601-01

5) Remove the two springs [5], and remove the three screws [6]; then, while shifting the motor unit [7] in the direction of the arrow, detach the belt.

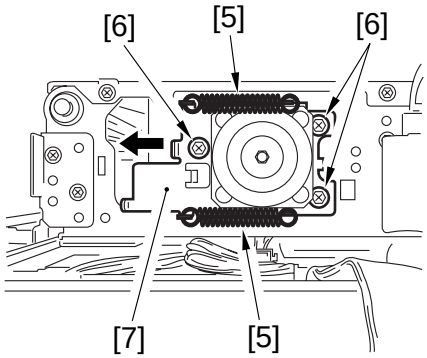

F02-601-02

6) Remove the two screws [8], and detach the scanner motor [10] from the motor base [9].

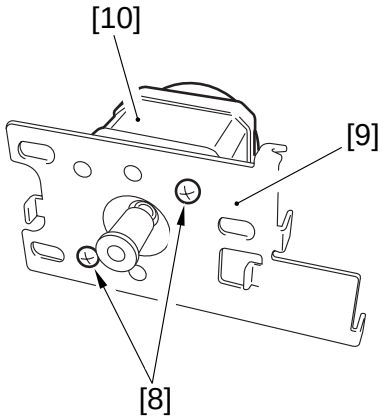

F02-601-03

COPYRIGHT © 2000 CANON INC.

6.1.2 Mounting the Scanner Motor

1) Attach the belt [3] to the pulley [2] of the scanner motor [1].
2) Fit the motor base to its position, fit the two springs to provide tension to the belt; then, secure it in place with three screws.

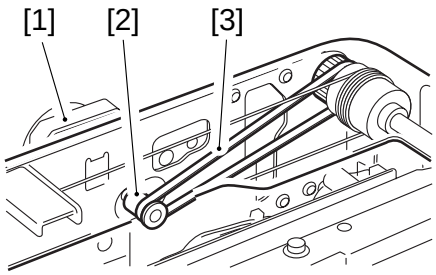

F02-601-04

COPYRIGHT © 2000 CANON INC.

6.2 Scanner System Drive Cable

6.2.1 Removing the Scanner System Drive Cable

Obtain the following before starting to replace the scanner drive cable:

- mirror positioning tool (FY9-3040-000)

1) Remove the ADF.
2) Remove the copyboard glass.
3) Remove the reader left cover and the reader front cover.
4) Remove the motor cover. (See steps 1) through 4) used to the motor.)
5) Remove the five screws [1], and detach the PCB base [2].

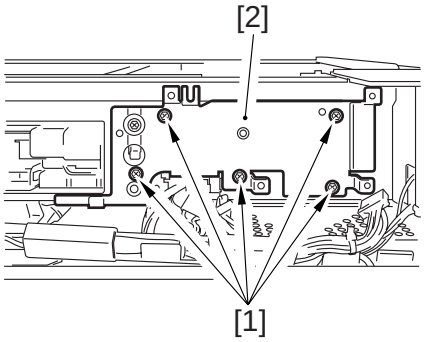

F02-602-01

6) Remove the screw [3], and detach the ADF base (left) [4]; then, remove the three screws [5], and detach the copyboard sensor base [7].

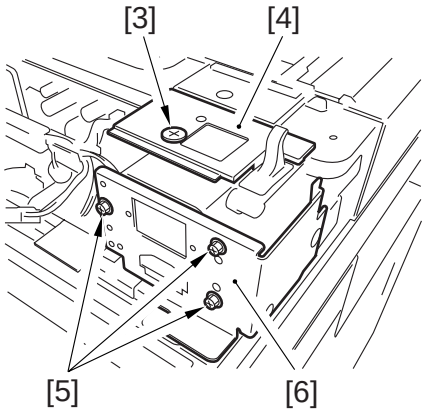

F02-602-02

7) Remove the 15 screws [7], and remove the two screws [8]; then, detach the reader upper frame [9].

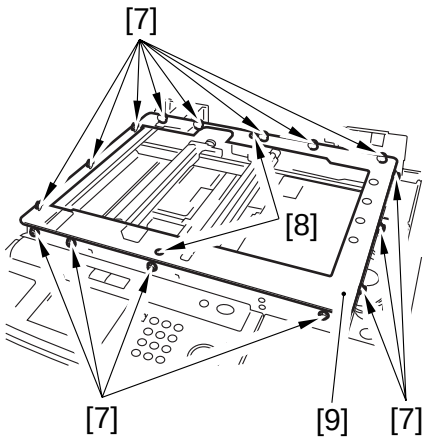

F02-602-03

8) Remove the two cable fixing screws [11] of the No. 1 mirror base [10].
9) Remove the two springs [12] used to secure the cable in place.
10) Remove the cable fixing plate [13] and each pulley cable.

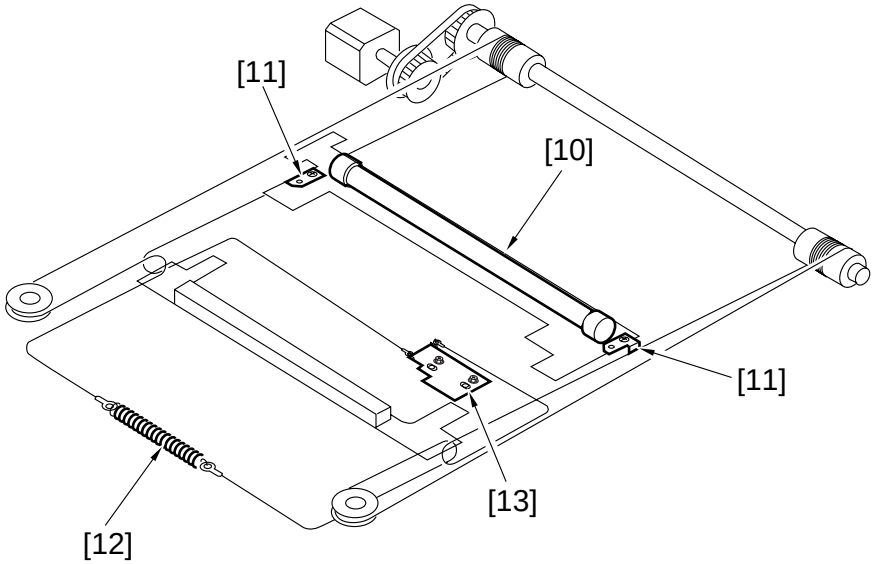

F02-602-04

COPYRIGHT © 2000 CANON INC.

6.2.2 Routing the Scanner Drive Cable

Route the scanner cable to each pulley and hook mirror base in the order indicated:

1) Loosen the screw on the cable fixing plate.
2) Fit the ball of the cable into the hole of the drive pulley, and wind the cable (4 times inward, 5 times outward); then, tape it in place. When winding, be sure that the cable metal fixing is inside.
3) Hook the cable on each pulley, and temporarily fix one end to the cable fixing plate and the other end to the hook of the reader frame.
4) Temporarily fix the cable metal fixing to the No. 1 mirror base. (Do not fully secure it.)
5) Mount the reader paper frame.

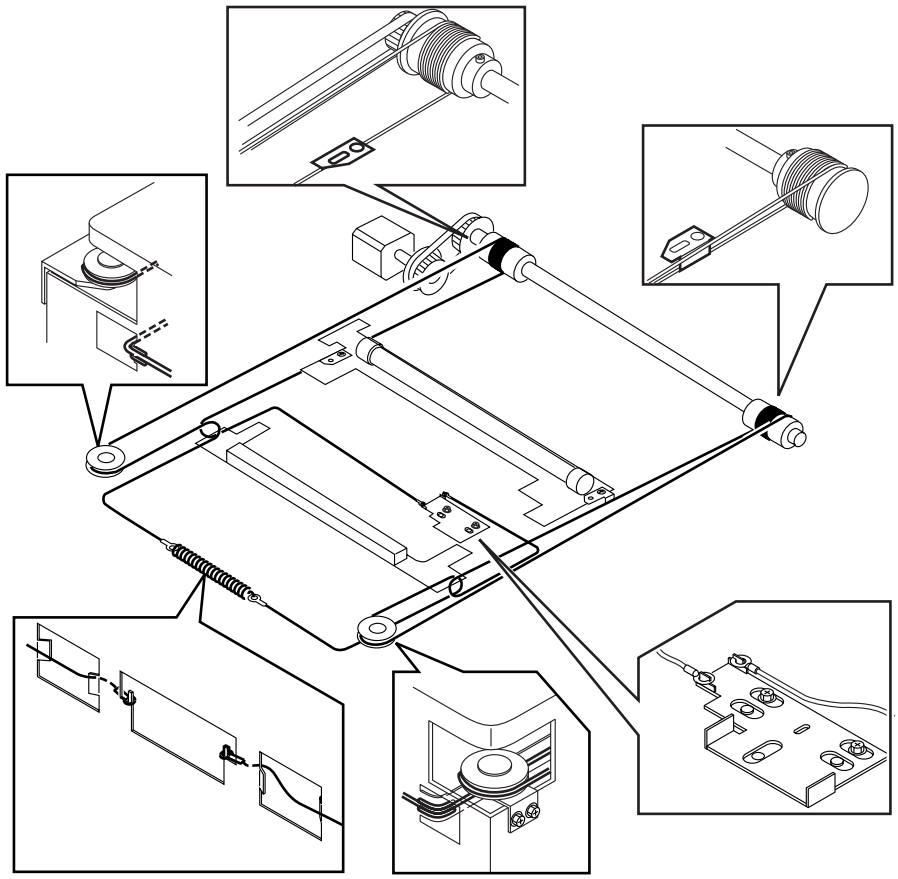

F02-602-05

When mounting the reader upper frame, be sure to go through the following steps:

1) Fit the eight claws [1] of the reader frame correctly into the cut-offs in the reader upper frame.
2) Secure the positions [2] of the four left/right claws using screws.
3) Fit the two screws [3] at the end.

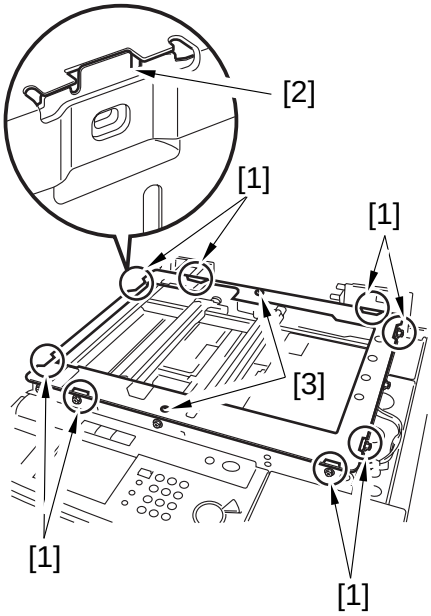

F02-602-06

6.2.3 Positioning the No. 1/2 Mirror Base

1) Set the pins of the mirror position tool as indicated.

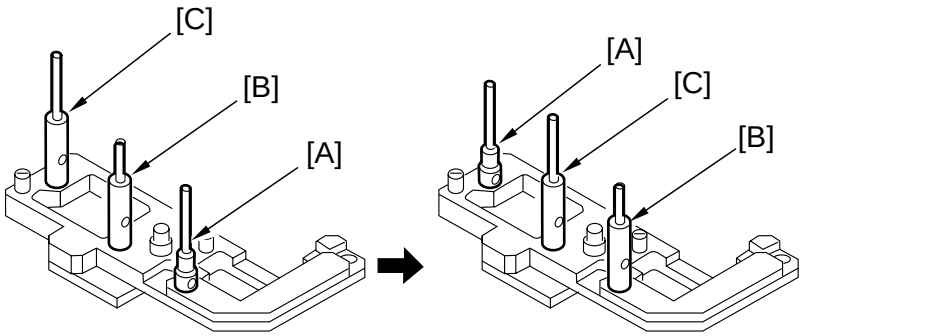

Initial FY9-3009-040 configuration (for rear)

Configuration used for the machine (for rear)

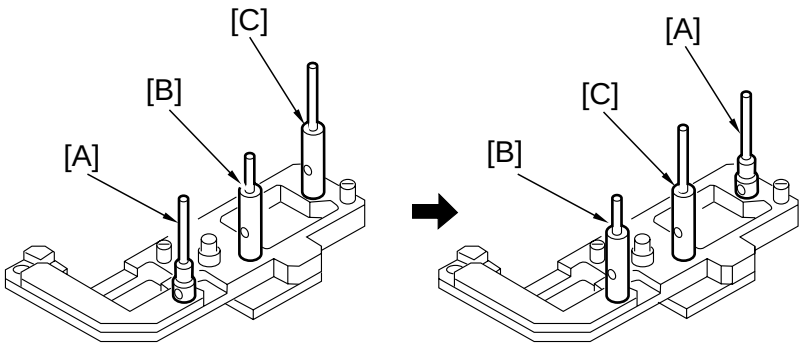

Initial FY9-3009-040 configuration (for front)

Configuration used for the machine (for front)

F02-602-07

COPYRIGHT © 2000 CANON INC.

2) Insert the pins of the mirror positioning tool (front [2]/rear [3]) into each of the holes [1]: No. 1 mirror base, No. 2 mirror base, and rail. The position of the No. 2 mirror base is adjusted by sliding the cable fixing plate to the front and the rear.

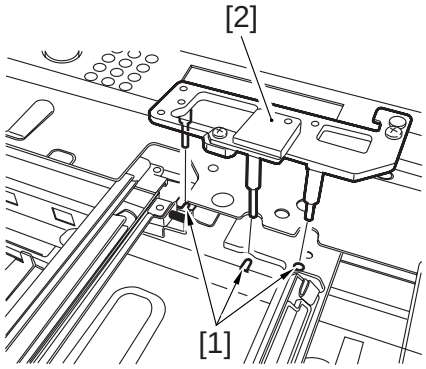

F02-602-08

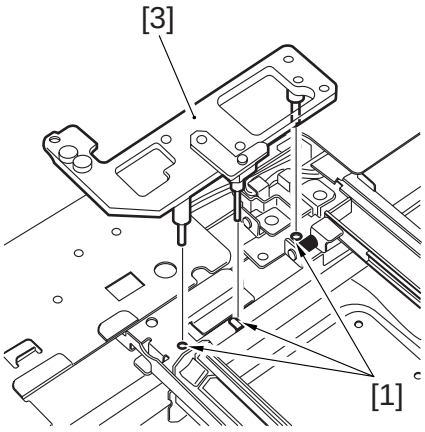

F02-602-09

3) Secure the end of the cable so far temporarily fixed to the hook of the reader frame using a spring.
4) Fully tighten the screw on the cable fixing plate.
5) Fully tighten the cable metal fixing on the No. 1 mirror base.
6) Detach the mirror positioning tool.
7) Reverse steps 1) through 6) for mounting.

COPYRIGHT © 2000 CANON INC.

7. Others

7.1 Removing the Original Size Sensor

1) Remove the copyboard glass.
2) Move the No. 1 mirror base to the left end.
3) Remove the screw [1], and disconnect the connector [2]; then, free the cable from the cable clamp [3], and detach the original sensor unit [4].

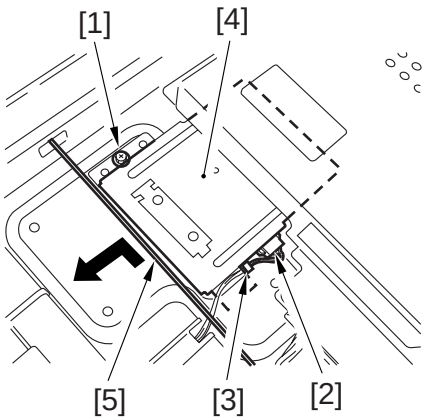

F02-701-01

When removing the original sensor, take care not to damage it against the cable [5].

COPYRIGHT © 2000 CANON INC.

7.2 Removing the HP Sensor

1) Remove the ADF unit from the reader unit.
2) Remove the reader rear cover.
3) Remove the screw [1], and detach the ADF base (left) [2].
4) Remove the three screws [3], and detach the fuse base [4].

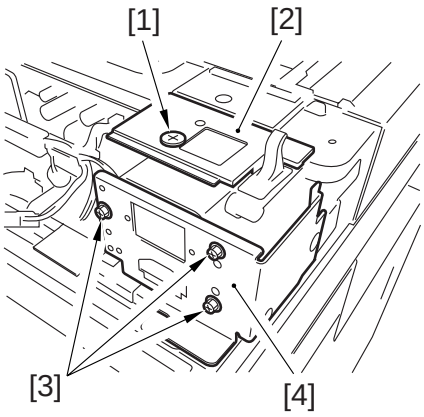

F02-702-01

5) Remove the screw [5], and detach the sensor base [7]; then, disconnect the connector [8], and detach the HP sensor [8] from the base.

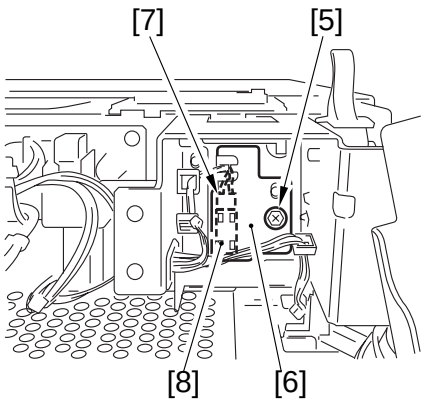

F02-702-02

7.3 Removing the Copyboard Sensor

1) Remove the reader rear cover.
2) Remove the three screws [1], and detach the fuse PCB base [2].

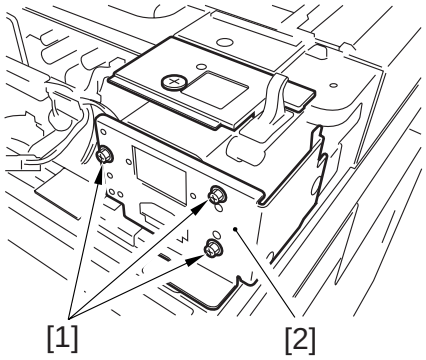

F02-703-01

3) Disconnect the connector [3], and remove the screw [4]; then, detach the copyboard sensor cover [7] and the copyboard sensor [6].

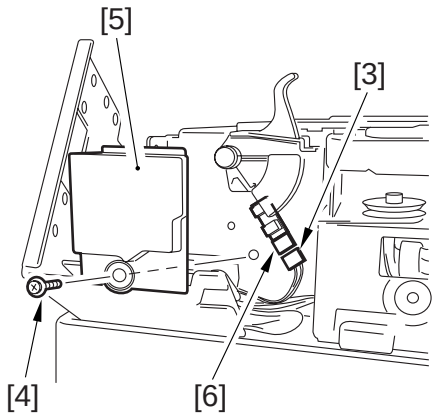

F02-703-02

COPYRIGHT © 2000 CANON INC.

8. PCBs

8.1 Removing the Fuse PCB

1) Remove the reader rear cover.
2) Remove the three screws [1], and detach the fuse PCB [2].
3) Remove the screw [3], and disconnect the three connectors [4]; then, detach the fuse PCB [5].

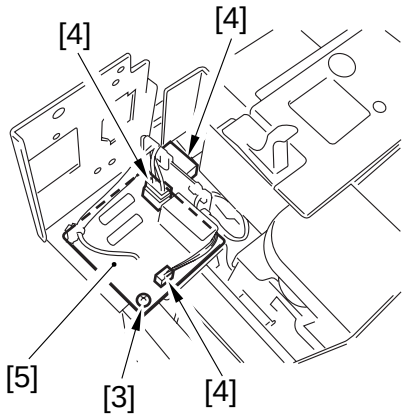

F02-801-01

8.2 Removing the Inverter PCB

1) Remove the right upper cover and the right upper cover base.
2) Remove the reader controller PCB.
3) Disconnect the two connectors from the inverter PCB [1].

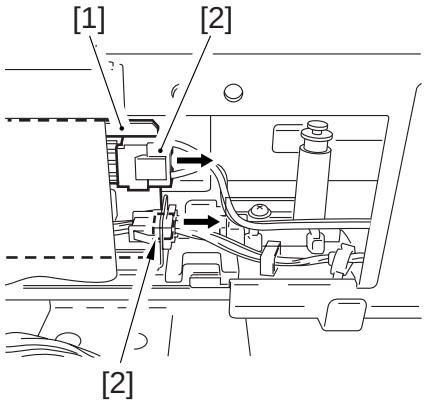

F02-802-01

4) Remove the three screws [3], and detach the stopper [4]; then, pull out the inverter unit [5].

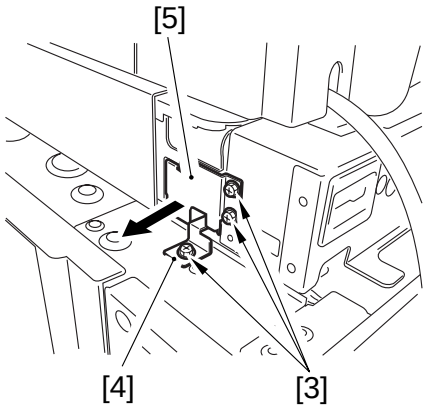

F02-802-02

5) Remove the two screws [7], and disconnect the connector [7]; then, detach the inverter PCB [8].

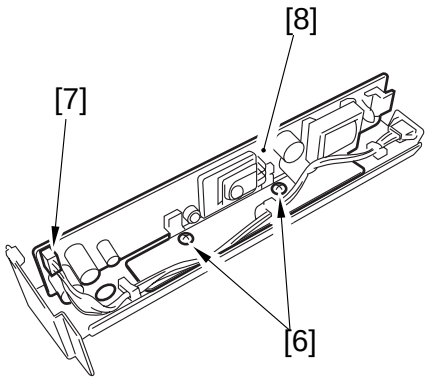

F02-802-03

COPYRIGHT © 2000 CANON INC.

Points to Note When Mounting the Inverter PCB

When fitting the inverter PCB [1] into the reader frame, be sure to fit the leading edge [2] of the frame of the inverter PCB into the mounting hole in the reader frame.

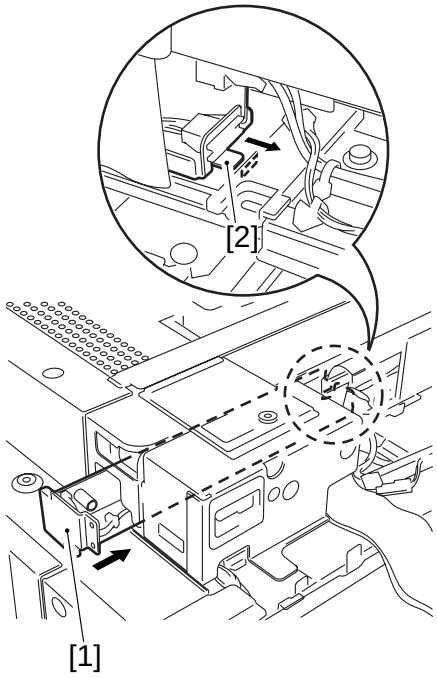

F02-802-04

CHAPTER 3

IMAGE PROCESSING SYSTEM

COPYRIGHT © 2000 CANON INC.

1. Outline

The major functions of the image processing system are as follows:

[1] CCD (image sensor)
Number of lines: 1
Number of pixels: 7450
Size of pixel: 4.7 x 4.7 µm
[2] Shading Correction
Shading adjustment: executed in service mode
Shading correction: executed for each copy
[3] Auto Density Adjustment (AE)
Executed for each line in main scanning direction.

The image processing system consists of the following functional blocks:

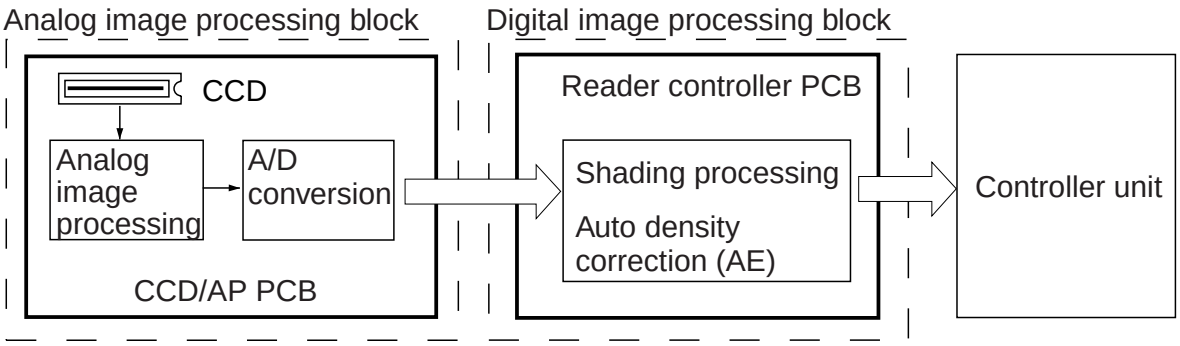

F03-100-01

Each of the PCBs used in the image processing system has the following functions:

[1] CCD/AP PCB. Drives the CCD, performs analog image processing, performs A/D conversion.
[2] Reader controller PCB. Performs shading correction, performs auto density adjustment (AE).

COPYRIGHT © 2000 CANON INC.

2. Analog Image Processing

2.1 Outline

Analog image processing is performed by the CCD/AP PCB, which has the following major functions:

[1] Drives the CCD.
[2] Corrects the gain in the CCD output, corrects offset.
[3] Performs A/D conversion of CCD output.

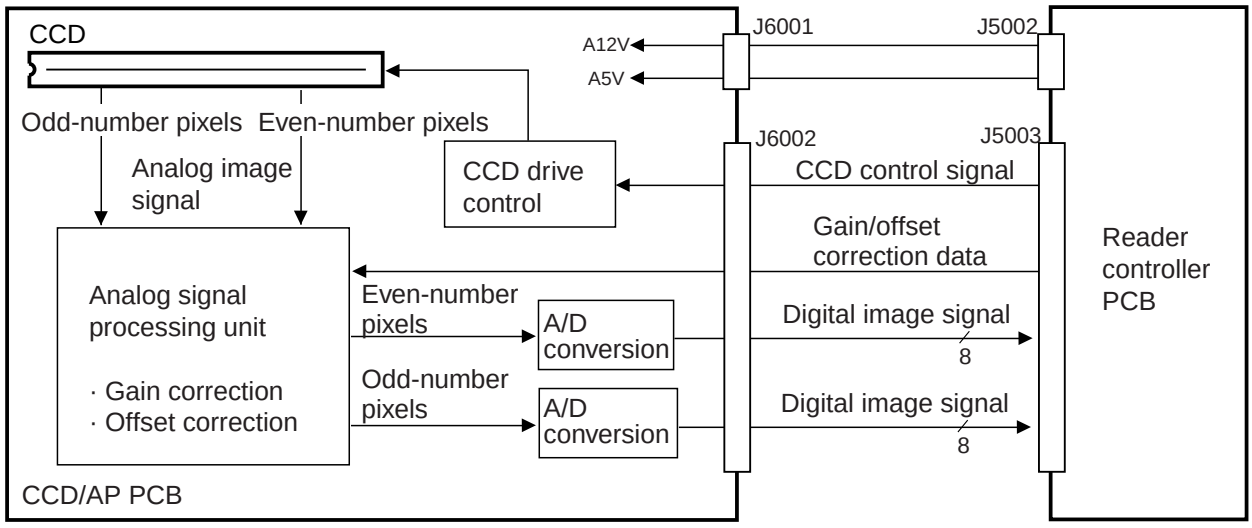

F03-201-01

2.2 Driving the CCD

The machine's CCD sensor is a single-line linear image sensor, and is composed of 7450 pixel photo cells.

The signals subjected to phtoconversion in the light-receiving segment are sent out in two types of analog signals: even-number (EVEN) pixels and odd-number (ODD) pixels.

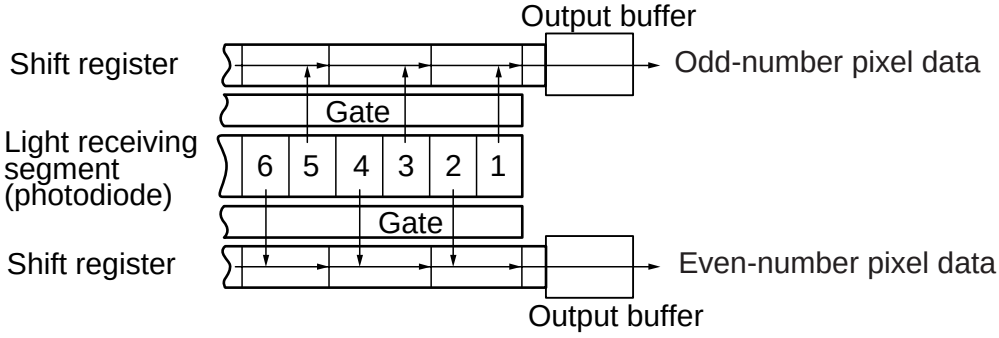

F03-202-01 CCD Block Diagram

COPYRIGHT © 2000 CANON INC.

2.3 Gain Correction and Offset Correction of the CCD Output

To correct discrepancies in the efficiency of photoconversion among pixels, the analog video signals from the CCD are corrected: in gain correction, the rates of amplification are standardized; in offset correction, on the other hand, the output voltage in the absence of incoming light is set to a specific level.

2.4 A/D Conversion of the CCD Output

The analog video signals of odd-number and even-number pixels after correction are converted into 8-bit digital signals that correspond to specific pixel voltage levels by the A/D converter.



COPIER/ADJUST>ADJ-XY>ADJ-Y (CCD read start position adjustment)
It is used to adjust the parameter used determining the read start position in main scanning direction.
Range: 0 to 400
(A change by '12' results in a shift of 1 mm.)

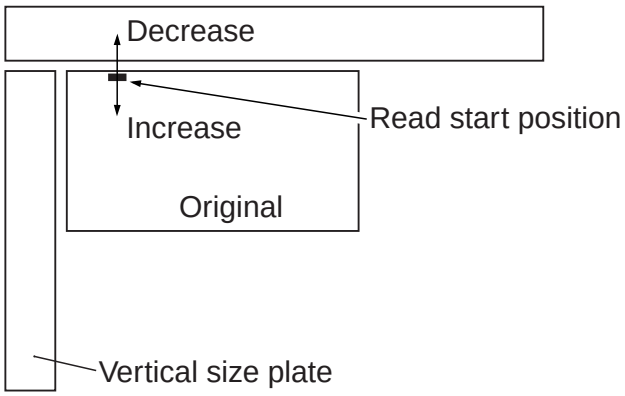

F03-205-01

3. Digital Image Processing

3.1 Outline

Digital image processing is performed by the reader controller PCB, which has the following major functions:

[1] Shading correction
[2] Auto density adjustment (AE)

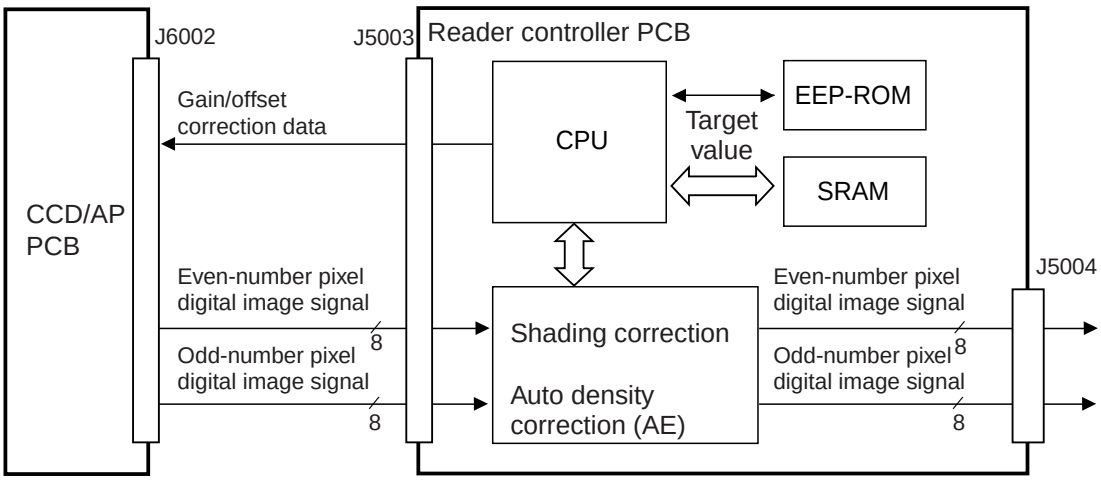

F03-301-01 Functional Blocks

3.2 Shading Correction

3.2.1 Outline

The output of the CCD will not necessarily be uniform because of the following factors even if the density of the original in question is perfectly uniform:

1) The level of sensitivity of a CCD pixel differs from that of another.
2) The level of penetration of light differs between the center and the periphery of a lens.
3) The intensity of the scanning lamp differs between the middle and the ends of the lamp.
4) The scanning lamp is subject to deterioration.

Shading correction is executed to correct discrepancies in the output of the CCD, and it may be of either of the following two: shading adjustment used to determine a target level in service mode and shading correction executed when scanning each original.

To make up for the fluctuations in the intensity of light occurring at short intervals, edge area gain correction is also executed.

COPYRIGHT © 2000 CANON INC.

3.2.2 Shading Adjustment

In this adjustment, the density of white paper and that of the standard white plate are measured, and the results are stored in memory.

The data is computed for use as the target level during shading correction. The adjustment is designed for service mode and is used upon installation of the machine, after replacement of the scanning lamp, or when correcting changes in the intensity of the scanning lamp occurring over time.

3.2.3 Shading Correction

This correction is executed each time an original is scanned. The density of the standard white plate is measured and the result is compared against the target value stored in the shading correction circuit. The difference is used as the shading correction value, which will be used to correct the variation in CCD pixels, thereby ensuring a specific level of image density.

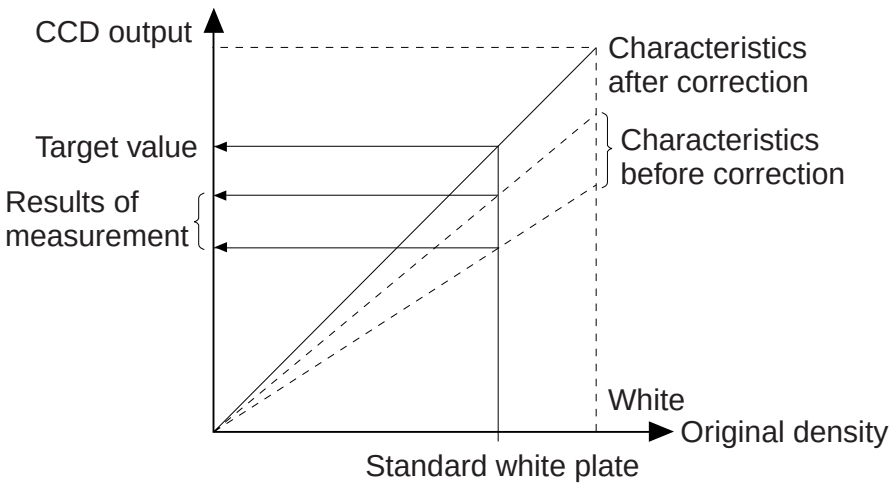

F03-302-01

3.2.4 Edge Gain Correction (ADF in use)

In stream reading with the ADF in use, the No. 1 mirror base is fixed in position. To check for changes in the intensity of the scanning lamp, the edge gain correction plate (gray; mounted at the edge of read position) is read, and a gain that enables the attainment of a specific intensity is computed.

The result is used to correct the data which otherwise would be affected by changes in the intensity of light.

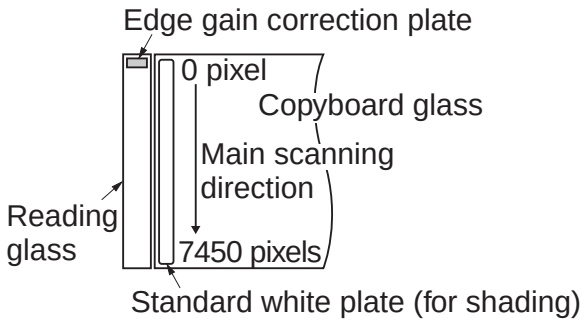

F03-302-02

COPYRIGHT © 2000 CANON INC.

3.3 Auto Density Adjustment (AE)

3.3.1 Outline

As in the case of a newspaper, some originals have a dark background. Auto density correction is executed to reproduce the information (text, graphics) of such originals by removing the background.

This adjustment is enabled in density auto mode or when text mode is selected and data is processed by the ABC circuit.

3.3.2 ABC Circuit

A colored background is identified as being white by changing the height of the dynamic range according to the chromatic level of the background as shown in the following figure for the CCD output level (8-it) of digital image signals (A/D converted).

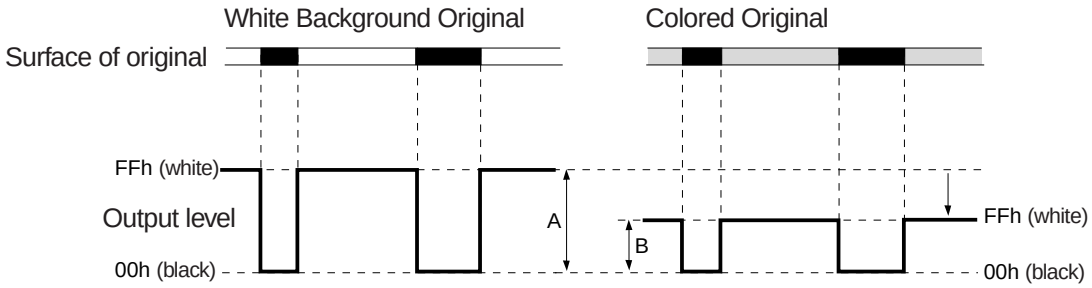

A : dynamic range of white-background original.
B : dynamic range of colored-background original.

F03-303-01

3.4 Related Service Mode

COPIER>FUNCTION>CCD>CCD-ADJ (shading auto adjustment)
Execute the mode after replacing the CCD unit, scanning lamp, reader controller PCB, or standard white plate.

COPIER>ADJUST>CCD>PPR (density data of standard white paper)
COPIER>ADJUST>CCD>PLT (density data of standard white plate)
COPIER>AJDUST>CCD>GAIN-E/O (gain adjustment input of CCD output)
COPIER>ADJUST>CCD>OFST-E/O (offset adjustment input of CCD output)
COPIER>ADJUST>CCD>SH_RATIO (white level ratio data of standard white plate and standard white paper during shading correction)
If a faulty image is generated after executing shading auto adjustment, enter the parameter values indicated on the service label.

COPIER>ADJUST>AE>AE-TBL (text density adjustment for real-time AE mode)
Use it to change the parameter for adjustment of the density correction curve (for real-time AE mode; 10 steps).
Range: 0 to 9 (default: 4)

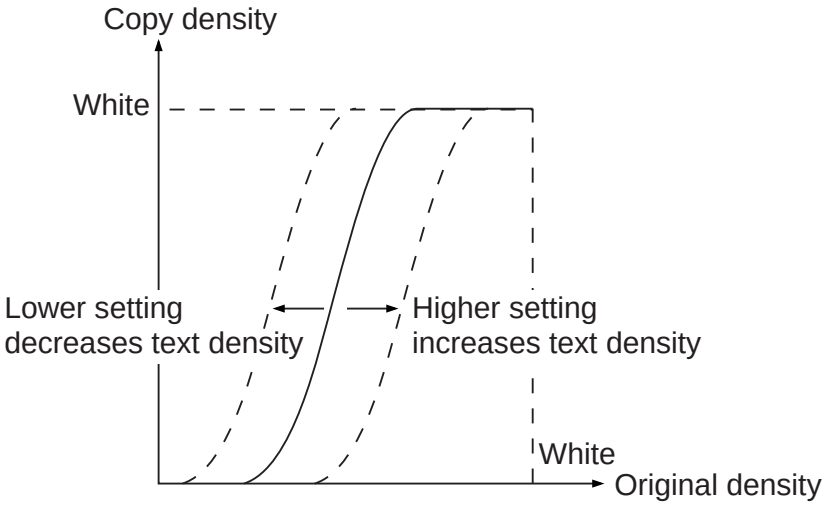

F03-304-01

COPYRIGHT © 2000 CANON INC.

4. External Covers

4.1 Removing the Reader Front Cover

1) Remove the two screws [1], and remove the reader right cover [2]; then, detach the copyboard glass [3].

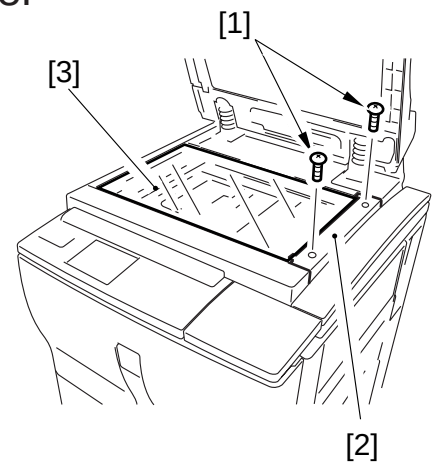

F03-401-01

2) Open the hopper cover [4], and remove the three screws [5]; then, detach the right upper cover [6].

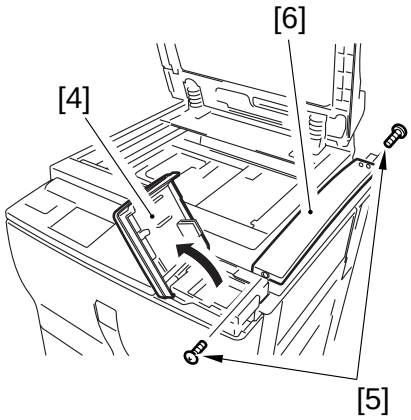

F03-401-02

3) Remove the four screws [7], and detach the right upper cover base [9] together with the card controller base [9] and the copyboard base [10].

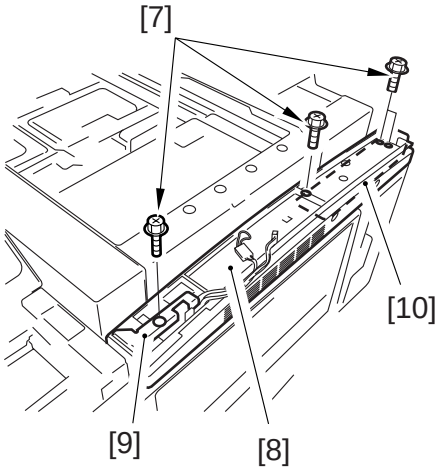

F03-401-03

COPYRIGHT © 2000 CANON INC.

4) Remove the two screws [11], and detach tje reader left cover [12]; then, remove the two screws [13], and detach tje reader front cover [14].

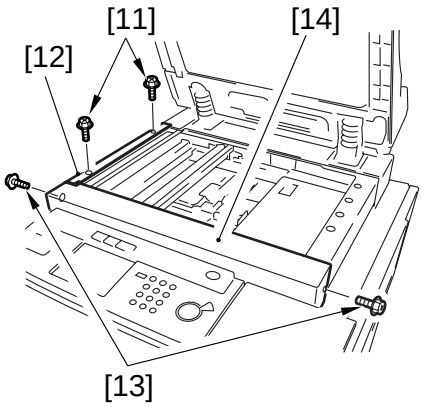

F03-401-04

COPYRIGHT © 2000 CANON INC.

4.2 Removing the Reader Rear Cover

1) Remove the five screws [1], and detach the rear cover [2].

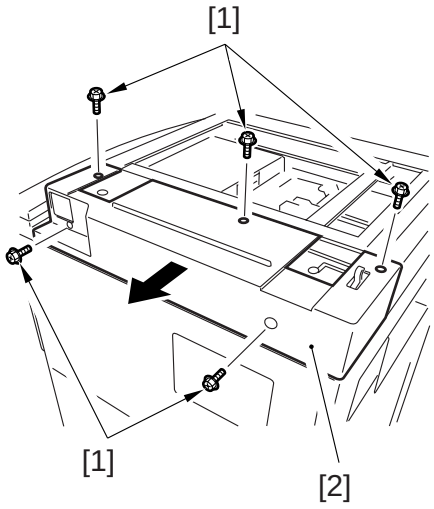

F03-402-01

5. CCD/AP PCB

5.1 Removing the CCD Unit

1) Remove the reader right cover, and detach the copyboard glass.
2) Move the No. 1 mirror base to the left end.
3) Remove the right upper cover and the right upper cover base.
4) Remove the reader left cover and the reader front cover.
5) Remove the eight screws [1], and disconnect the connector [2]; then, detach tje CCD shielding plate [3].

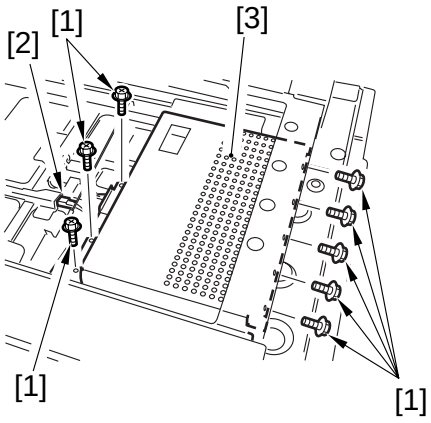

F03-501-01

6) Remove the screw [4], and disconnect the connector [5]; then, free the cable from the cable clamp [6], and detach the original sensor unit [7].

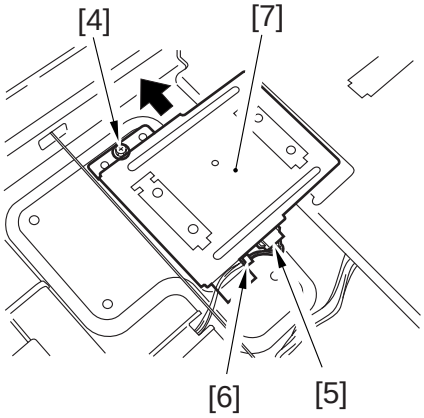

F03-501-02

7) Remove the four screws [8], and disconnect the connector [9]; then, free the flat cable [10], and free the two fixing claws [11]. Thereafter, detach the CCD unit [12].

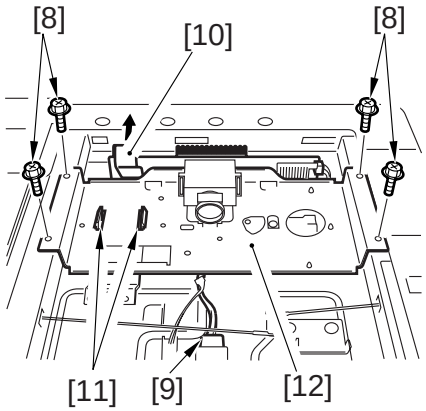

F03-501-03

COPYRIGHT © 2000 CANON INC.

5.2 When Replacing the CCD/AP PCB

Be sure to execute 'CCD auto adjustment' in service mode, and record the updated CCD adjustment data on the service label.

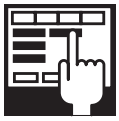

1. CCD Auto Adjustment
   COPIER>FUNCTION>CCD
   >CCD-ADJ
2. CCD Adjustment data
   all items under
   COPIER>ADJUST>CCD

6. Reader Controller PCB

6.1 Removing the Reader Controller PCB

1) Remove the reader rear cover.
2) Disconnect tje nine connectors, and remove the flat cable [1], seven screws [2], and cable guide [3]; then, detach the reader controller PCB [4].

Take care not to damage the flat cable removed in step 2).

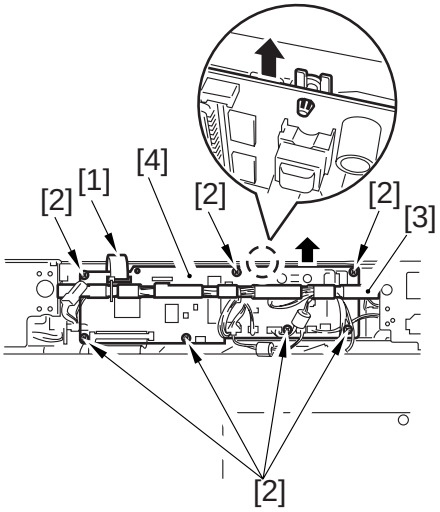

F03-601-01

6.2 When Replacing the Reader Controller PCB

See the Troubleshooting Manual: Chap.3>7. Electrical Parts.

COPYRIGHT © 2000 CANON INC.

PRINTER UNIT
SERVICE MANUAL

COPYRIGHT © 2000 CANON INC.
CANON iR5000/iR6000 REV.0 JULY 2000

Contents

CHAPTER 1 GENERAL DESCRIPTION

1. Safety 1-1P
1.1 Safety of Laser Light 1-1P
1.2 Regulations Under the Center for Devices and Radiological Health 1-1P
1.3 Handling the Laser Unit 1-3P
1.4 Safety of Toner 1-6P
2. Image Formation 1-7P
2.1 Outline 1-7P

CHAPTER 2 SEQUENCE OF OPERATIONS

1. Basic Operations 2-1P
1.1 Functional Construction 2-1P
1.2 Outline of Electrical Circuitry ... 2-2P
1.2.1 Outline 2-2P
1.2.2 DC Controller PCB 2-2P
1.3 Sequence of Basic Operations ... 2-4P
1.3.1 Basic Sequence of Operations at Power-On 2-4P
1.4 Controlling the Main Motor (M2) 2-6P
1.4.1 Outline 2-6P
1.5 Inputs to and Outputs from the Major PCBs 2-7P
1.5.1 Wiring Diagram of Major PCBs 2-7P
1.5.2 Inputs to the DC Controller PCB 2-8P
1.5.3 Inputs to the DC Controller PCB 2-14P

CHAPTER 3 LASER EXPOSURE SYSTEM

1. Outline of Operations 3-1P
1.1 Outline 3-1P
1.2 Basic Sequence of Operations (laser exposure system) 3-3P
2. Generating Sync Signals 3-4P
2.1 Outline 3-4P
2.2 Flow of Sync Signals 3-5P
3. Laser Driver Circuit 3-6P
3.1 Controlling the Laser 3-6P
4. Controlling the Laser Scanner Motor 3-9P
4.1 Outline 3-9P
5. Disassembly and Assembly 3-10P
5.1 Scanner Unit 3-11P

COPYRIGHT © 2000 CANON INC.

CHAPTER 4 IMAGE FORMATION SYSTEM

1. Outline of Processes 4-1P
   1.1 Outline 4-1P
   1.2 Basic Sequence of Operations (image formation system) 4-3P
2. Potential Control 4-5P
   2.1 Outline 4-5P
      2.1.1 Controlling Potential for Printing/Copying 4-6P
   2.2 Determining Primary Current 4-11P
   2.3 Determining the Laser Output 4-12P
   2.4 Determining the Developing Bias 4-13P
   2.5 APC Correction 4-14P
   2.6 Density Adjustment in Each Mode 4-16P
      2.6.1 Density Adjustment During Copying 4-16P
      2.6.2 Density Adjustment During Printing 4-17P
3. Controlling Charging 4-18P
   3.1 Controlling Pre-Exposure LED 4-18P
      3.1.1 Outline 4-18P
   3.2 Controlling Primary Charging 4-19P
      3.2.1 Outline 4-19P
      3.2.2 Primary Charging Assembly Cleaning Mechanism 4-20P
      3.2.3 Others 4-21P
   3.3 Dust-Collecting Roller Bias ... 4-22P
      3.3.1 Outline 4-22P
   3.4 Controlling the Pre-Transfer Charging 4-23P
      3.4.1 Outline 4-23P
      3.4.2 Controlling the Output to Suit the Environment (fuzzy control) 4-24P
      3.4.3 Cleaning Mechanism for the Pre-Transfer Charging Assembly 4-25P
      3.4.4 Others 4-26P
   3.5 Controlling Transfer Charging 4-27P
      3.5.1 Outline 4-27P
      3.5.2 Controlling the Output to Suit the Environment (fuzzy control) 4-28P
      3.5.3 Cleaning Mechanism for the Transfer Charging Assembly 4-29P
      3.5.4 Others 4-30P
   3.6 Controlling Separation Charging 4-32P
      3.6.1 Outline 4-32P
      3.6.2 Correcting the Output to Suit the Environment and the Density of the Original Used 4-34P
      3.6.3 Others 4-35P
4. Hopper/Developing Assembly 4-36P
   4.1 Outline 4-36P
   4.2 Controlling the Drive to the Hopper/Developing Assembly 4-37P
   4.3 Controlling the Developing Bias 4-39P
   4.4 Detecting the Level of Toner and Controlling the Supply of Toner 4-41P
      4.4.1 Sequence of Operations (toner supply) 4-42P
5. Drum Cleaner Unit 4-43P
   5.1 Outline 4-43P
   5.2 Detecting the Waste Toner 4-44P
6. Controlling the Drum Heater 4-46P
   6.1 Outline 4-46P
7. Disassembly and Assembly 4-49P
   7.1 Pre-Exposure Lamp Unit 4-50P
      7.1.1 Removing the Pre-Exposure Lamp Unit 4-50P
   7.2 Photosensitive Drum 4-51P

COPYRIGHT © 2000 CANON INC.

7.2.1 Removing the Drum Unit 4-51P
7.2.2 Replacing the Drum Heater 4-52P
7.2.3 Mounting the Photosensitive Drum 4-53P
7.2.4 Setting the DIP Switch for the Drum Heater Control PCB 4-53P
7.3 Process Unit 4-54P
7.3.1 Removing the Process Unit 4-54P
7.3.2 Mounting the Process Unit 4-56P
7.4 Potential Sensor/Potential Control PCB 4-57P
7.4.1 Removing the Potential Sensor/Potential Control PCB 4-57P
7.4.2 Adjusting the Potential Sensor 4-59P
7.5 Primary Charging Assembly .. 4-61P
7.5.1 Removing the Primary Charging Assembly 4-61P
7.6 Pre-Transfer Charging Assembly 4-62P
7.6.1 Removing the Pre-Transfer Charging Assembly 4-62P
7.7 Transfer/Separation Charging Assembly 4-63P
7.7.1 Removing the Transfer/ Separation Charging Assembly 4-63P
7.7.2 Mounting the Transfer/ Separation Charging Assembly 4-63P
7.8 Charging Wire 4-66P
7.8.1 Outline 4-66P
7.8.2 Removing the Wire Cleaner of the Primary Charging Assembly 4-66P
7.8.3 Routing the Charging Wire 4-66P
7.8.4 Routing the Grid for the Primary Charging Assembly 4-69P
7.8.5 Adjusting the Height of the Charging Wire 4-71P
7.8.6 Cleaning the Primary Anti-Stray Sheet 4-72P
7.9 Developing Assembly 4-73P
7.9.1 Removing the Developing Assembly from the Machine 4-73P
7.9.2 Removing the Blade Unit 4-74P
7.9.3 Mounting the Blade 4-75P
7.9.4 Removing the Developing Cylinder/Magnetic Seal 4-75P
7.9.5 Cleaning the Developing Anti-Stray Sheet 4-77P
7.10 Hopper Assembly 4-78P
7.10.1 Removing the Hopper Assembly from the Machine 4-78P
7.11 Drum Cleaner 4-79P
7.11.1 Construction 4-79P
7.11.2 Removing the Cleaning Blade 4-79P
7.11.3 Mounting the Cleaning Blade 4-80P
7.11.4 Mounting the Side Seal 4-82P
7.11.5 Cleaning the Cleaner Side Scraper 4-83P
7.12 Separation Claw/Separation Claw Drive Assembly 4-84P
7.12.1 Removing from the Drum Unit 4-84P

COPYRIGHT © 2000 CANON INC.

CHAPTER 5 PICK-UP/FEEDING SYSTEM

1. Outline 5-1P
   1.1 Specifications and Construction 5-1P
   1.2 Arrangement of Roller and Sensors 5-2P
2. Pickup Assembly 5-4P
   2.1 Pickup Control System 5-4P
      2.1.1 Outline 5-6P
      2.1.2 Sequence of Operations (pickup) 5-7P
      2.1.3 Pickup Retry Operation 5-9P
      2.1.4 Others 5-10P
   2.2 Lifter Movement 5-11P
      2.2.1 Outline 5-11P
      2.2.2 Lifter Limiter Control Circuit (right/left deck) 5-13P
      2.2.3 Detecting the Presence/ Absence of Paper 5-14P
      2.2.4 Detecting the Level of Paper 5-14P
   2.3 Identifying the Size of Paper in the Cassette 5-17P
      2.3.1 Right/Left Deck 5-17P
      2.3.2 Cassette 3/4 ..... 5-17P
      2.3.3 Markings on the Width Guide Rail 5-19P
      2.3.4 Paper Sizes 5-20P
   2.4 Manual Feed Tray Pickup Assembly 5-23P
      2.4.1 Pickup Operation 5-23P
      2.4.2 Detecting the Size of Paper on the Manual Feed Tray . 5-24P
3. Controlling the Registration Clutch 5-25P
   3.1 Outline 5-25P
   3.2 Control System 5-25P
4. Double-Sided Prints 5-26P
   4.1 Control System 5-26P
      4.1.1 Sending Paper to the Reversing Assembly After Printing on the First Side . 5-26P
      4.1.2 Sending Paper from the Reversing Assembly to the Duplexing/ Feeding Assembly 5-27P
      4.1.3 Outline 5-28P
   4.2 Sequence of Operations (printing) 5-29P
   4.3 Through-Path Operation 5-30P
      4.3.1 Outline 5-30P
      4.3.2 Outline of Operations 5-31P
   4.4 Detecting Horizontal Registration Position 5-35P
      4.4.1 Outline 5-35P
      4.4.2 Operation 5-36P
5. Controlling the Pickup Assembly . 5-37P
   5.1 Pickup Assembly Motors 5-37P
6. Controlling the Delivery Assembly 5-38P
   6.1 Reversal Delivery Operation 5-38P
7. Controlling the Cassette Heater 5-40P
8. Detecting Jams 5-42P
   8.1 Outline 5-42P
      8.1.1 Arrangement of Jam Sensors 5-42P
      8.1.2 Types of Jams 5-43P
   8.2 Sequence of Operations (jam detection) 5-44P
      8.2.1 Delay Jam 5-44P
      8.2.2 Stationary Jams 5-46P
      8.2.3 Jam History 5-47P
9. Disassembly and Assembly 5-48P
   9.1 Manual Feed Tray Assembly ... 5-49P
      9.1.1 Removing the Right Upper Cover 5-49P
      9.1.2 Opening of the Right Upper Cover 5-49P
      9.1.3 Removing the Manual Feed Pull-Out Roller Unit 5-50P
      9.1.4 Removing the Feeding Roller 5-50P
      9.1.5 Removing the Separation Roller 5-50P

COPYRIGHT © 2000 CANON INC.

9.1.6 Adjusting the Pressure of the Separation Roller 5-51P
9.1.7 Removing the Manual feed Tray Paper Sensor 5-52P
9.1.8 Attaching the Side Guide Timing Belt in the Manual Feed Tray Assembly 5-53P
9.1.9 Removing the Manual Feed Pull-Out Roller 5-53P
9.2 Deck Pickup Assembly 5-54P
9.2.1 Removing the Right Deck Pickup Assembly 5-54P
9.2.2 Removing the Left Deck Pickup Assembly 5-54P
9.2.3 Removing the Cassette 3 Pickup Assembly 5-55P
9.2.4 Removing the Cassette 4 Pickup Assembly 5-55P
9.2.5 Removing the Pickup Roller 5-55P
9.2.6 Removing the Feeding Roller 5-56P
9.2.7 Orientation of the Feeding Roller of the Deck/Cassette Pickup Assembly 5-57P
9.2.8 Removing the Separation Roller 5-57P
9.2.9 Adjusting the Separation Roller Pressure 5-59P
9.2.10 Orientation of the Separation Roller 5-59P
9.2.11 Adjusting the Left/Right Registration for the Front Deck 5-60P
9.2.12 Adjusting the Registration for the Cassette 3/4 ..... 5-60P
9.2.13 Removing the Lifter Motor M20 (M21) of the Cassette 3 (4) 5-61P
9.2.14 Adjusting the Position of the Lifter Motor M20 (M21) of the Cassette 3 (cassette 4) 5-61P
9.2.15 Adjusting the Position of the Cassette 3/4 Pickup Solenoid (SL3, 4) 5-63P
9.3 Vertical Path Roller Assembly 5-64P
9.3.1 Removing the Vertical Path Roller 1 ..... 5-64P
9.3.2 Removing the Vertical Path Roller 2 ..... 5-64P
9.3.3 Removing the Vertical Path Roller 3/4 ..... 5-65P
9.4 Registration Feeding Assembly 5-66P
9.4.1 Removing the Registration Clutch 5-66P
9.4.2 Removing the Registration Roller 5-66P
9.5 Feeding Assembly 5-68P
9.5.1 Removing the Feeding Belt 5-68P
9.5.2 Removing the Fixing/ Feeding Unit Releasing Lever Switch 5-69P
9.6 Duplex Unit 5-70P
9.6.1 Removing the Duplex Unit 5-70P
9.6.2 Removing the Reversing Flapper Solenoid 5-70P
9.6.3 Removing the Reversal Motor 5-70P
9.6.4 Mounting the Reversal Motor 5-71P
9.6.5 Removing the Duplexing Feeding Left Motor 5-72P
9.6.6 Removing the Duplex Feeding Right Motor 5-72P
9.6.7 Removing the Horizontal Registration Motor 5-73P
9.6.8 Removing the Duplex Pre-Registration Sensor ... 5-73P
9.6.9 Removing the Duplex Paper Sensor 5-74P
9.6.10 Removing the Reversal Sensor 1 ..... 5-75P

COPYRIGHT © 2000 CANON INC.

9.6.11 Removing the Reversal Sensor 2 ..... 5-75P
9.6.12 Removing the Left Deck Feed Paper Sensor 5-76P
9.6.13 Removing the Horizontal Registration Sensor 5-77P
9.6.14 Removing the Duplex Driver PCB 5-77P
9.6.15 Removing the Horizontal Registration Unit 5-78P
9.6.16 Removing the Duplex Feeding Fan 5-78P
9.6.17 Mounting the Reversing Flapper Solenoid 5-79P

CHAPTER 6 FIXING SYSTEM

1. Outline of Operation 6-1P
1.1 Outline 6-1P
1.2 Basic Sequence of Operations (fixing system) 6-4P
2. Fixing Drive System 6-5P
2.1 Outline 6-5P
2.2 Controlling the Drive of the Fixing Roller 6-6P
2.3 Controlling the Drive of the Cleaning Web 6-7P
2.4 Controlling the Drive of the Fixing Assembly Inlet Guide 6-8P
2.5 Controlling the Reciprocating Mechanisms of the Thermistor 6-9P
2.6 Controlling the Reciprocating Mechanism of the Upper Separation Claw 6-10P
3. Controlling the Fixing Temperature 6-11P
3.1 Outline 6-11P
3.2 Temperature Control 6-12P
3.2.1 Normal Sequence 6-13P
3.2.2 Temperature Control by Mode 6-15P
3.3 Detecting Errors 6-18P
4. Disassembly and Assembly 6-20P
4.1 Fixing Assembly 6-21P
4.1.1 Removing the Fixing/ Feeding Unit 6-21P
4.1.2 Removing the Fixing Assembly 6-22P
4.2 Fixing Roller Cleaning Assembly 6-24P
4.2.1 Removing the Fixing Web 6-24P
4.2.2 Mounting the Fixing Web 6-25P
4.2.3 Adjusting the Fixing Web Solenoid (SL9) 6-26P
4.3 Fixing Heater and the Control Parts 6-27P
4.3.1 Removing the Main/Sub Heater 6-27P
4.3.2 Mounting the Main/Sub Heater 6-28P
4.3.3 Removing the Thermal Switch 6-28P
4.3.4 Removing the Main Thermistor 6-29P
4.3.5 Removing the Sub Thermistor 6-31P
4.4 Fixing Roller Assembly 6-32P
4.4.1 Removing the Fixing Upper Roller 6-32P
4.4.2 Mounting the Fixing Upper Roller 6-33P
4.4.3 Removing the Fixing Lower Roller 6-33P
4.4.4 Adjusting the Nip 6-34P
4.5 Fixing Separation Assembly ... 6-35P
4.5.1 Removing the Upper Separation Claw 6-35P

COPYRIGHT © 2000 CANON INC.

4.5.2 Removing the Lower Separation Claw 6-35P
4.6 Delivery Assembly 6-36P
4.6.1 Removing the External Delivery Roller 6-36P
4.6.2 Removing the Internal Delivery Roller 6-37P
4.6.3 Adjusting the Position of the Delivery Flapper Solenoid (SL5) 6-38P
4.7 Paper Sensor 6-39P
4.7.1 Removing the Claw Jam Sensor 6-39P
4.7.2 Removing the Internal Delivery Sensor 6-39P
4.7.3 Removing the Delivery Jam Sensor 6-40P
4.7.4 Removing the External Delivery Sensor 6-41P
4.8 Fixing Assembly Inlet Guide Assembly 6-42P
4.8.1 Adjusting the Position of the Fixing Assembly Inlet Guide Solenoid (SL1) 6-42P
4.8.2 Adjusting the Position of the Fixing Assembly Inlet Guide 6-42P

CHAPTER 7 EXTERNALS AND CONTROLS

1. Control Panel 7-1P
1.1 Outline 7-1P
2. Fans 7-2P
2.1 Arrangement, Functions, and Error Codes 7-2P
2.2 Operation 7-4P
2.2.1 Controlling the Speed 7-4P
2.2.2 Sequence of Operations 7-4P
3. Power Supply 7-5P
3.1 Power Supply 7-5P
3.1.1 Outline 7-5P
3.1.2 Distribution of Power Among Switches 7-6P
3.1.3 Output of Power Supplies ... 7-8P
3.2 Rated Outputs of the DC Power Supply 7-9P
3.3 Protection Mechanism 7-10P
4. Others 7-12P
4.1 Silent Mode 7-12P
5. Disassembly and Assembly 7-13P
5.1.1 External Covers 7-14P
5.1.2 Removing the Front Cover 7-15P
5.2 Arrangement of Electrical Parts (rear of the machine) 7-16P
5.3 Control Panel 7-18P
5.3.1 Removing the Control Panel 7-18P
5.3.2 Removing the Control Panel Control PCB and Keypad PCB 7-18P
5.3.3 Removing the Touch Panel 7-20P
5.4 PCBs 7-21P
5.4.1 DC Controller PCB 7-21P
5.4.2 Main Controller Box and the Main Controller PCB . 7-22P
5.4.3 Power Supply PCB 7-23P
5.4.4 High-Voltage Power Supply PCB 7-24P
5.4.5 Accessories Power Supply PCB 7-25P
5.4.6 AC Driver PCB 7-25P
5.4.7 Motor Driver PCB 7-26P
5.4.8 Anti-Rush Current PCB ... 7-26P
5.4.9 Serial Number PCB 7-27P
5.5 Fans 7-28P
5.5.1 Exhaust Fan 7-28P
5.5.2 Feeding Fan 7-28P
5.5.3 HDD Fan 7-29P
5.5.4 DC Power Supply Fan 7-29P
5.6 Drive System 7-30P

COPYRIGHT © 2000 CANON INC.

5.6.1 Left Deck Drive Assembly 7-30P
5.6.2 Vertical Path Duplex/Right Deck Drive Assembly 7-30P
5.6.3 Main Motor Drive Assembly 7-31P
5.6.4 Manual Feed Pickup Drive Assembly 7-31P
5.6.5 Waste Toner Drive Assembly 7-32P
5.6.6 Left Deck Pull-Out Roller Drive Assembly 7-32P
5.6.7 Drum Drive Assembly 7-32P
5.6.8 Waste Toner Bottle Assembly, Lifter Drive Assembly, Vertical Path Drive Assembly, and Cassette Pickup Drive Assembly 7-33P
5.6.9 Left Deck Lifter Drive Assembly 7-35P
5.7 Motor 7-36P
5.7.1 Vertical Path Lower Motor (M27) 7-36P
5.7.2 Main Motor (M2) 7-36P
5.7.3 Vertical Path Duplex Motor (M25), Vertical Path Upper Motor (M26), Deck Right Motor (M11), Lifter Right Motor (M5), and Cassette Pickup Motor (M12) 7-37P
5.7.4 Pre-Registration Motor (M17) and Drum Motor (M1) 7-38P
5.8 Solenoid 7-40P
5.8.1 Right Deck Pickup Roller Releasing Solenoid (SL6) 7-40P
5.8.2 Adjusting the Position of the Right Deck Pickup Solenoid (SL6) 7-40P
5.8.3 Right Deck Pickup Roller Releasing Solenoid (SL7) 7-41P
5.8.4 Adjusting the Position of the Left Deck Pickup Solenoid (SL7) 7-41P
5.9 Clutches 7-42P
5.9.1 Manual Feed Pickup Clutch/Developing Clutch 7-42P
5.10 Sensors 7-43P
5.10.1 Cassette 3/4 Paper Size (width/length) Sensor 7-43P
5.11 HDD 7-44P
5.12 Others 7-46P
5.12.1 DC Controller PCB Base 7-46P
5.12.2 Relay 7-46P
5.12.3 Power Supply Transformer 7-47P

CHAPTER 8 PAPER DECK

1. Paper Deck 8-1P
1.1 Inputs to and Outputs from the Deck Driver 8-1P
1.1.1 Inputs to the Driver (1/2) ... 8-1P
1.1.2 Outputs from the Deck Driver (2/2) 8-2P
1.1.3 Outputs form the Deck Driver (1/1) 8-3P
1.2 Pickup 8-4P
1.2.1 Outline 8-4P
1.2.2 Pickup Operation 8-4P
1.2.3 Sequence of Operations (pickup from the deck) 8-6P
1.3 Detecting Paper in the Deck 8-7P
1.3.1 Detecting the Presence/ Absence of Power 8-7P
1.3.2 Switching the Deck Paper Size 8-7P
1.3.3 Detecting the Level of Paper in the Deck 8-8P

COPYRIGHT © 2000 CANON INC.

1.4 Deck Lifter 8-9P
1.4.1 Detecting the Presence/ Absence of Paper 8-9P
1.4.2 Indicating the Level of Paper on the Deck Front Cover .. 8-11P
1.5 Opening/Closing the Compartment 8-12P
1.5.1 Opening/Closing the Compartment 8-12P
1.5.2 Sequence of Operations (opening/closing the compartment) 8-13P
1.6 Controlling the Deck 8-14P
1.6.1 Controlling the Deck Main Motor (M101) 8-14P
1.6.2 Controlling the Deck Lifter Motor (M102) 8-15P
2. Detecting Jams 8-17P
2.1 Outline 8-17P
3. Disassembly and Assembly 8-19P
3.1 External Covers 8-20P
3.1.1 Removing the Front Cover 8-20P
3.1.2 Removing the Rear Cover 8-23P
3.1.3 Removing the Right Cover 8-23P
3.1.4 Removing the Upper Cover 8-24P
3.2 General Descriptions 8-25P
3.2.1 Disconnecting the Deck from the Host Machine 8-25P
3.2.2 Removing the Compartment 8-27P
3.2.3 Changing the Deck Paper Size Configuration 8-29P
3.2.4 Adjusting the Deck Registration 8-30P
3.2.5 Adjusting the Roll Position 8-30P
3.3 Drive Mechanisms 8-31P
3.3.1 Removing the Deck Pickup Clutch (CL102) 8-31P
3.3.2 Removing the Deck Main Motor (M101) 8-31P
3.3.3 Removing the Deck Lifter Motor (M102) 8-32P
3.3.4 Removing the Lifter Cable (front of the deck) 8-33P
3.3.5 Removing the Lifter Cable (rear of the deck) 8-35P
3.3.6 Routing the Lifter Cable ... 8-37P
3.4 Feeding Mechanisms 8-38P
3.4.1 Removing the Deck Pickup Unit 8-38P
3.4.2 Removing the Deck Pickup Roller 8-38P
3.4.3 Orientation of the Deck Pickup Roller 8-39P
3.4.4 Removing the Deck Pickup/Feed Roller 8-39P
3.4.5 Orientation of the Deck Pickup/Feed Roller 8-40P
3.4.6 Removing the Deck Separation Roller 8-40P
3.4.7 Adjusting the Pressure of the Deck Separation Roller 8-41P
3.4.8 Position of the Deck Pickup Roller Releasing Solenoid (SL101) 8-42P
3.5 Electrical Mechanisms 8-43P
3.5.1 Removing the Deck Driver PCB 8-43P
3.5.2 Removing the Open Switch PCB 8-43P

COPYRIGHT © 2000 CANON INC.

CHAPTER 9 SHIFT TRAY

1. Specifications 9-1P
2. Names of Parts 9-2P
3. Outline of the Electrical Circuit 9-3P
   3.1 Shift Tray Driver PCB 9-3P
   3.2 Inputs to and Outputs from the Shift Tray Driver PCB 9-4P
4. Outline of Operations 9-5P
   4.1 Shifting 9-5P
   4.2 Stacking 9-5P
   4.3 Detecting paper 9-6P
   4.4 Delivery 9-6P
5. Maintenance and Inspection 9-7P
   5.1 Adjusting the Limit Sensor Position 9-7P
      5.1.1 Related Service Mode 9-7P
      5.1.2 Making Adjustments 9-7P
6. Disassembly and Assembly 9-9P
   6.1 Removing the Shift Tray Driver PCB 9-10P
   6.2 Removing the Tray Drive Unit 9-12P

COPYRIGHT © 2000 CANON INC.

CHAPTER 1

GENERAL DESCRIPTION

COPYRIGHT © 2000 CANON INC.

1. Safety

1.1 Safety of Laser Light

Laser light could prove to be harmful to the human body. To ensure safety, the machine's laser optical system is sealed inside a protective housing and by external covers, serving to prevent leakage of the light. The user is safe from the hazards of laser light as long as he/she uses the machine under normal operating conditions.

1.2 Regulations Under the Center for Devices and Radiological Health

The Center for Devices and Radiological Health of the Food and Drug Administration (US government agency) put in force regulations governing laser products on August 2, 1976.

Under the regulations, laser products manufactured on and after August 1, 1976, cannot be sold in the United States without certification.

The following label represents certification under the CDRH regulations, and all laser products sold in the United States are required to bear it.

COPYRIGHT © 2000 CANON INC.

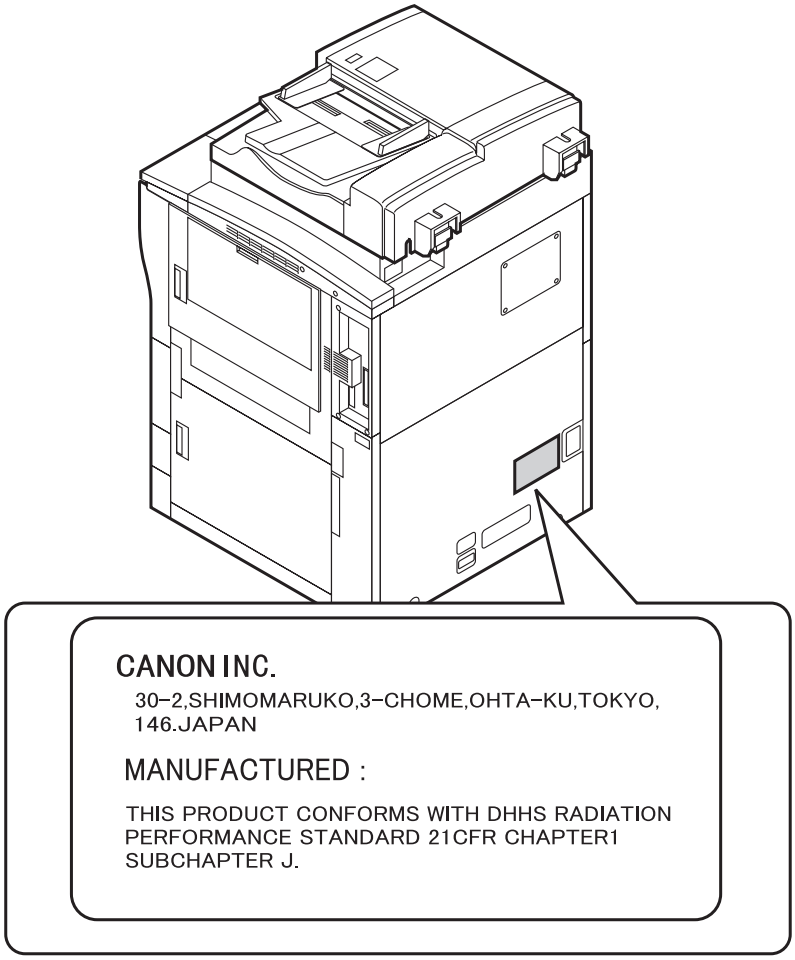

F01-102-01 CDRH Label

The descriptions on the label may differ among different models of a product.

COPYRIGHT © 2000 CANON INC.

1.3 Handling the Laser Unit

It is important to avoid inserting a tool having a high reflectance (e.g., screwdriver) into the path of laser light whenever servicing areas around the laser unit.

Further, it is also important to get into the habit of removing watches, rings, or the like, which could reflect laser light to the eye.

The machine's laser light is red in color. The covers used to block laser light are identified by the following label, calling for special attention when servicing behind the covers.

The label is attached to covers used to block laser light inside the machine.

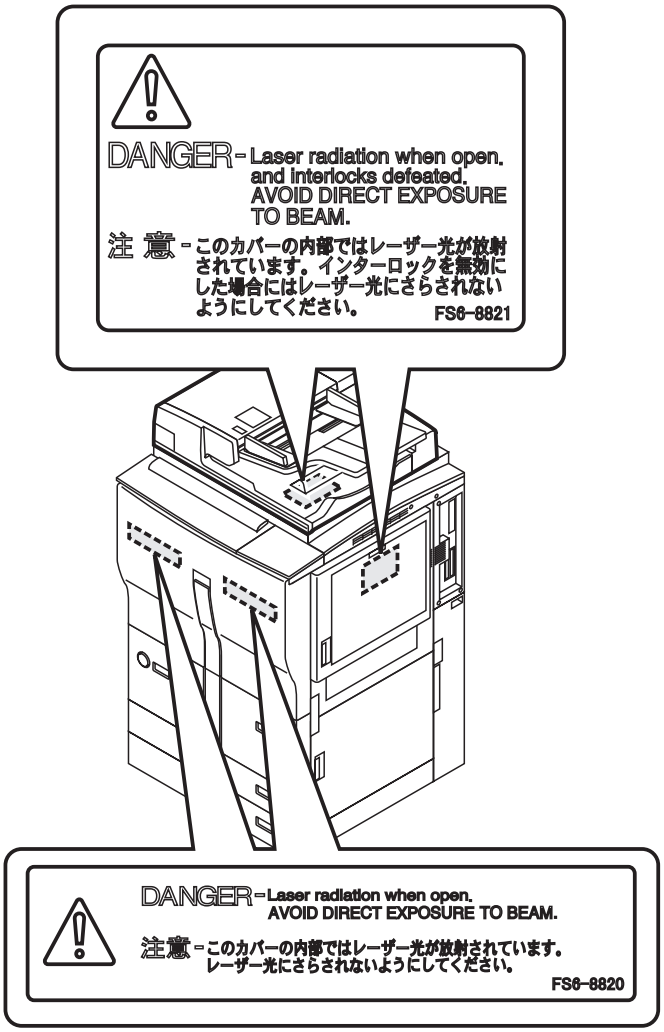

F01-103-01 Laser Caution Label (100/120-V model)

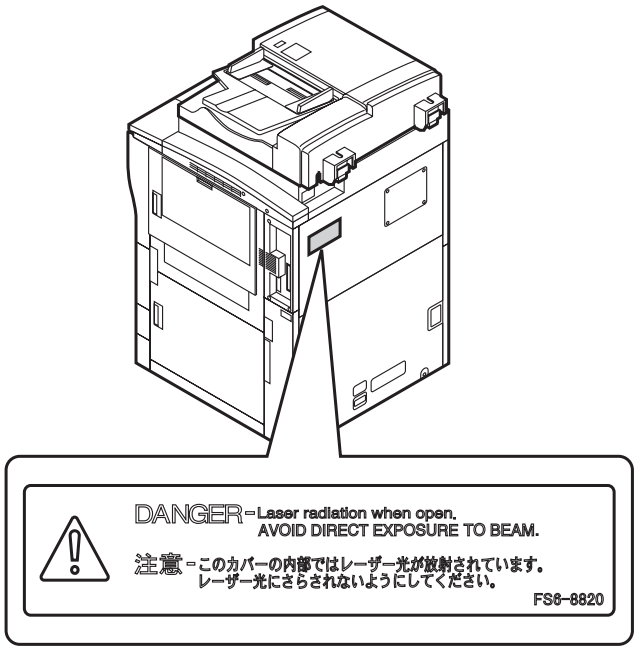

F01-103-02 Laser Caution Label (100/120-V model)

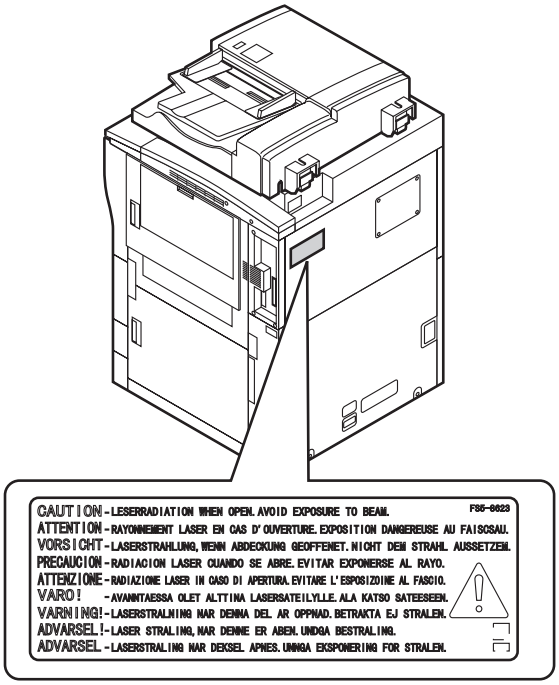

F01-103-03 Laser Caution Label (230-V model)

COPYRIGHT © 2000 CANON INC.

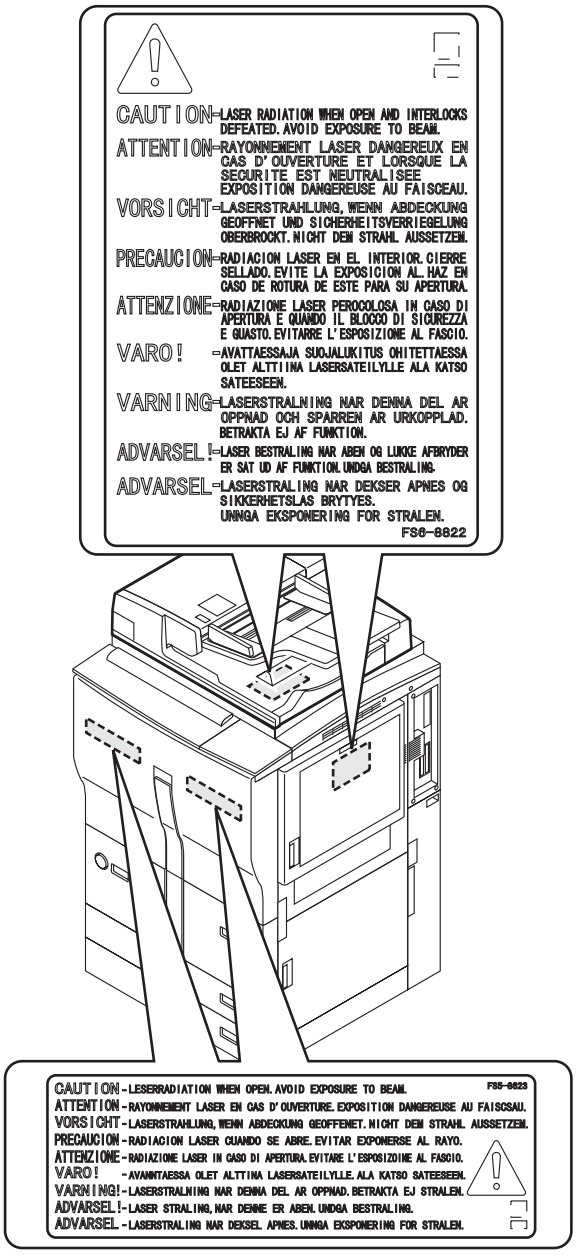

F01-103-04 Laser Caution Label (230-V model)

1.4 Safety of Toner

Toner is a non-toxic material consisting of plastic and iron matter with a small amount of dye.

If your skin or clothes have come into contact with toner, remove as much of it as you can with paper, and wash with water. Do not use hot water to avoid turning the toner into a gel. (It will fuse with the fibers of cloth, making removal difficult).

Toner tends to react to vinyl and dissolve. Do not allow it to come into contact with vinyl material.



Do not pour toner into fire. Such an act can lead to explosion.

COPYRIGHT © 2000 CANON INC.

2. Image Formation

2.1 Outline

The machine uses an indirect electrophotographic method to form images, and is constructed as follows:

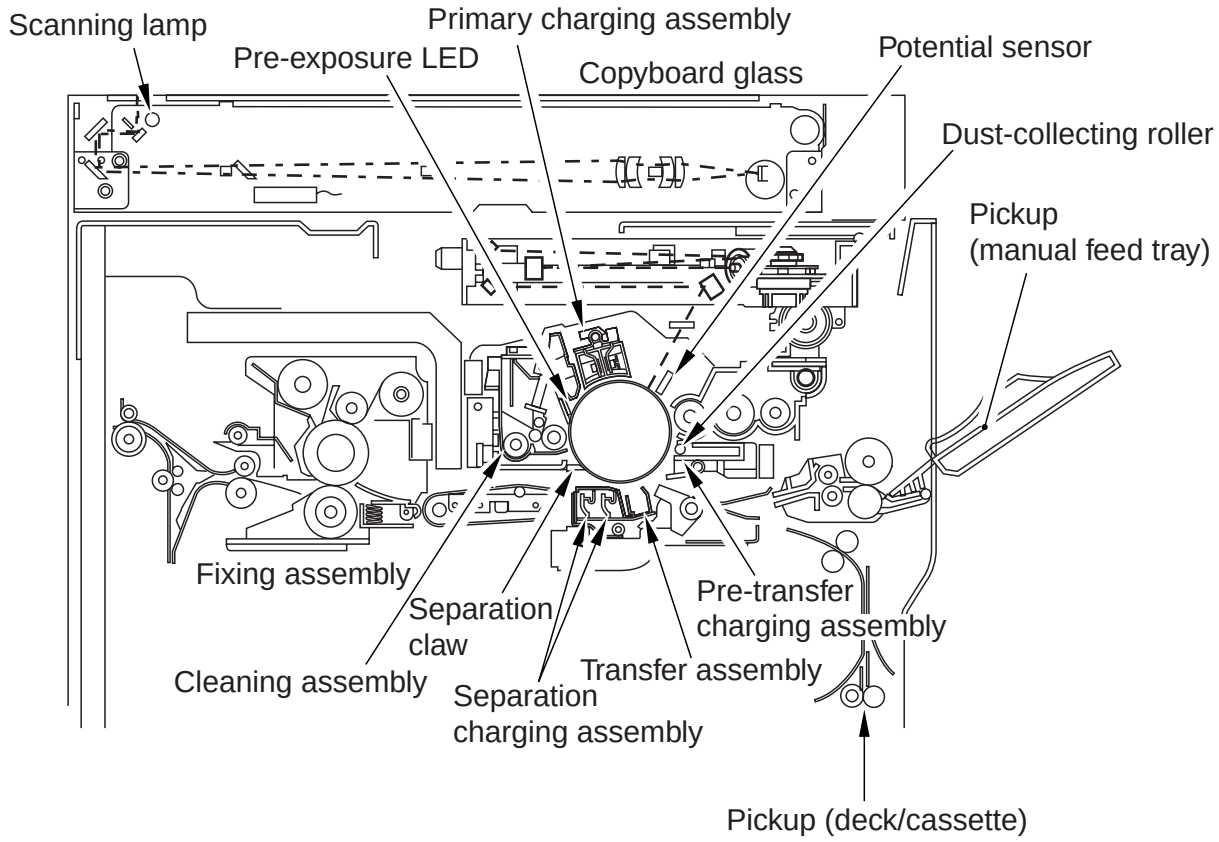

F01-201-01 Construction of the Machine

The machine's image formation process consists of the following eight steps:

Step 1 Pre-exposure
Step 2 Primary charging (positive DC)
Step 3 Laser exposure*
Step 4 Development (AC + positive DC)
Step 5 Transfer (negative DC)
Step 6 Separation (AC + positive DC)
Step 7 Fixing
Step 8 Drum cleaning

*Deposits toner on the VD. Used also for blank exposure.

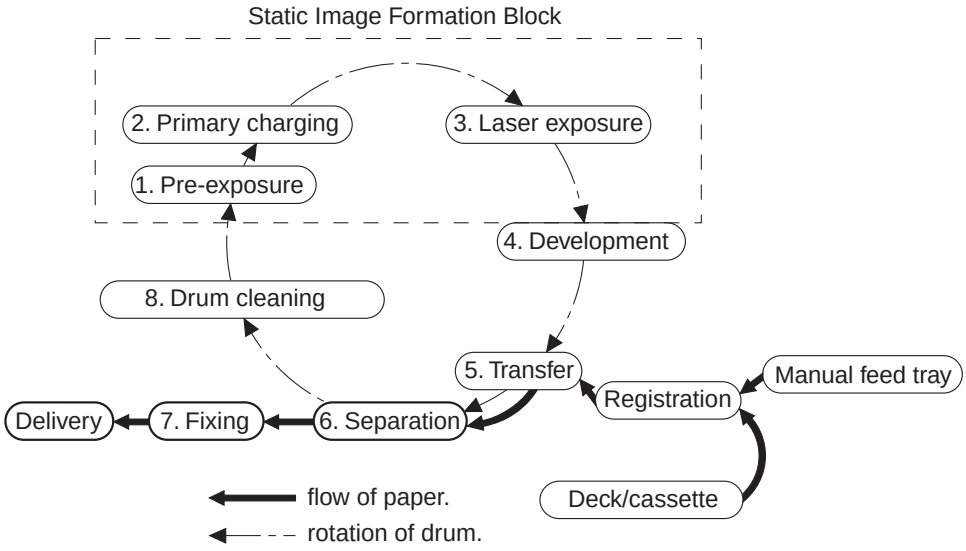

F01-201-02

COPYRIGHT © 2000 CANON INC.

CHAPTER 2

SEQUENCE OF OPERATIONS

COPYRIGHT © 2000 CANON INC.

1. Basic Operations

1.1 Functional Construction

The printer unit may be divided into the following four functional blocks (shaded):

- Control block
- Laser exposure block
- Image formation block
- Pickup/feeding block

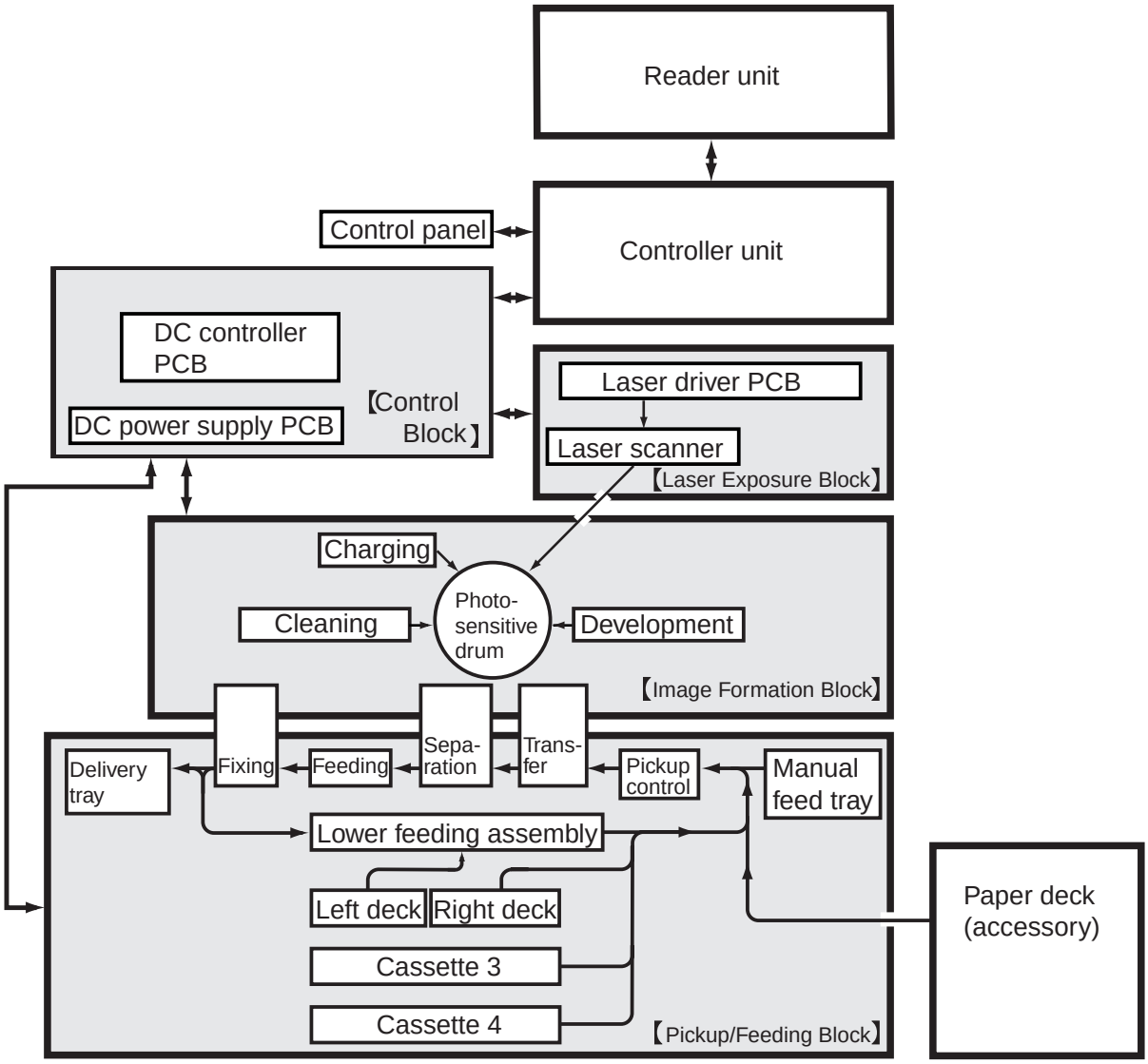

F02-101-01

COPYRIGHT © 2000 CANON INC.

1.2 Outline of Electrical Circuitry

1.2.1 Outline

The major electric mechanisms of the printer unit are controlled by the CPU on the DC controller PCB; the principal functions of the major elements are as follows:

1.2.2 DC Controller PCB

Name	Description
CPU	• Controls jobs • Controls state of operation
	• Controls fixing temperature • Controls high voltage
	• Controls potential • Controls toner supply • Controls paper feeding
	• Controls printing sequence • Controls output • Controls motors
	• Controls finisher (accessory)
	• Controls communications with controller unit • Controls service mode
RAM	• Stores service mode data
	• Stores user mode data
	• Stores control data
DIMM ROM	• Flash memory for storing control program
EEP-ROM	• Backs up RAM data
ROM	• Mask ROM for control program (for future use)

T02-102-01 List of Control Items

COPYRIGHT © 2000 CANON INC.

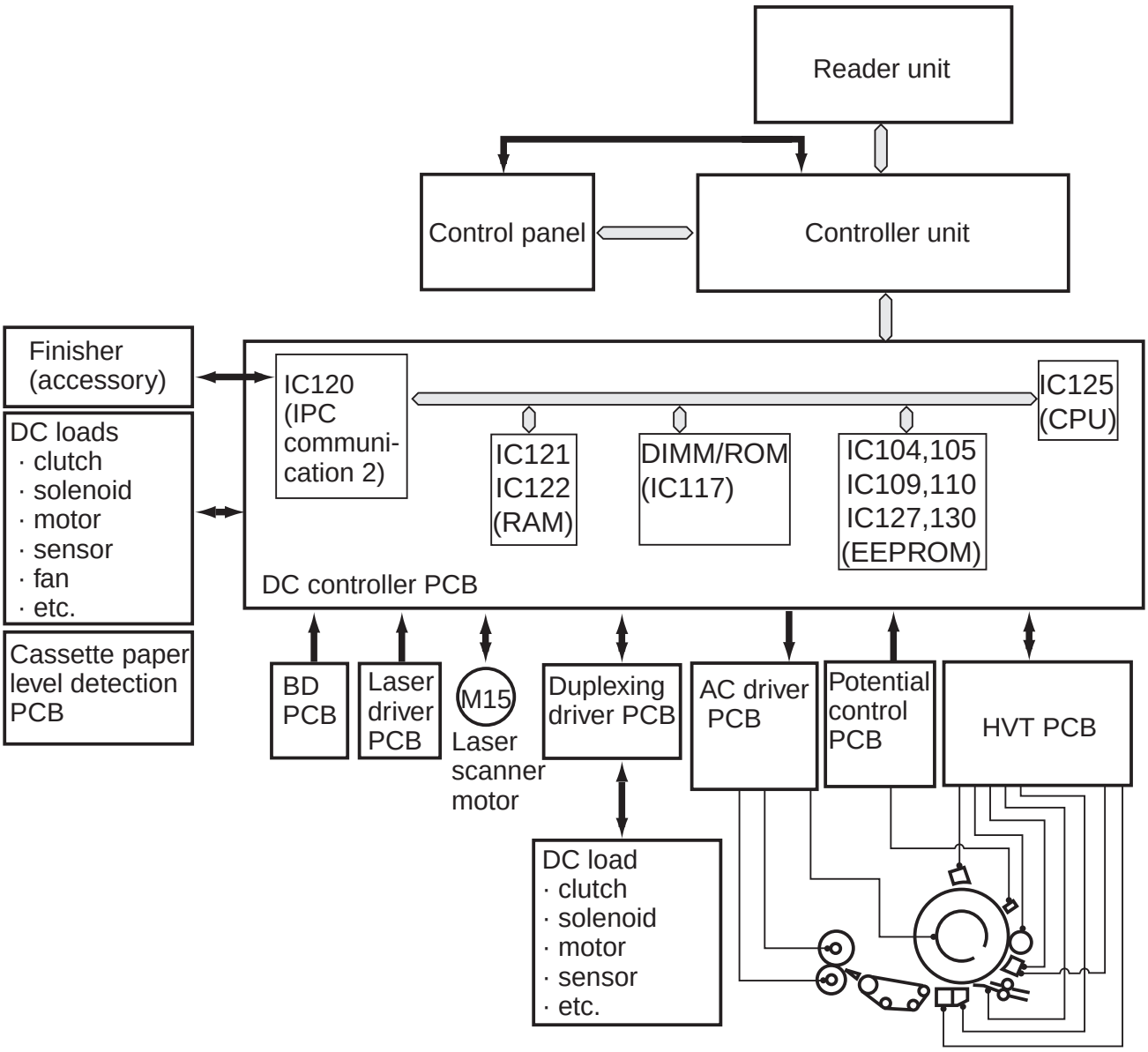

F02-102-01 Construction of Major PCBs

1.3 Sequence of Basic Operations

1.3.1 Basic Sequence of Operations at Power-On

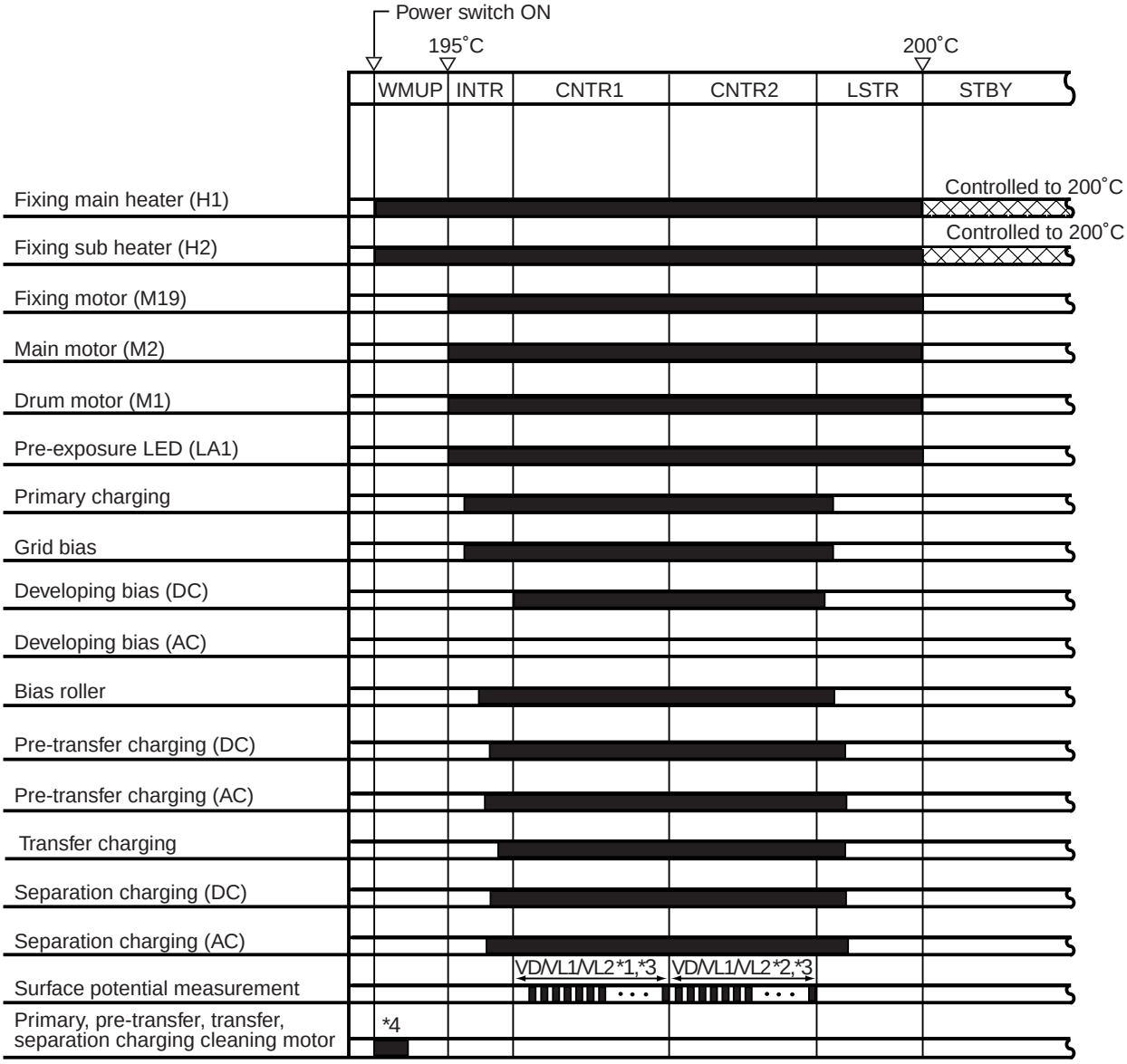

*1: For copying, potential control is executed as follows: VD, 8 times max.; VL1, 8 times max.; and VL2, once.

*2: For printing, potential control is executed as follows: VD, 8 times max.; VL1, 8 times max.; VL2, once.

*3: If the surface temperature of the fixing roller is 150ºC or higher when the power switch is turned on, the machine will assume that potential control for power-on has been executed once, thus not executing it any more. (This, however, does not apply if potential control ended in error or potential control is executed in service mode.)

*4: If the surface temperature of the fixing roller when the power is turned on is 100ºC or lower, the primary/pre-transfer/transfer/separation charging wire will be cleaned. (Cleaning is also executed each time 2000 copies have been made.)

F02-103-01 Basic Sequence of Operations

COPYRIGHT © 2000 CANON INC.

Period	Description
WNUP (warm-up)	From when the power switch is turned on to when the surface temperature of the fixing assembly reaches 195°C.
INTR (initial multiple rotation)	From when the surface temperature of the fixing assembly has reached 195°C to when it reaches 200°C; this is to even out the surface temperature of the fixing roller.
CNTR1 (control rotation 1)	From when INTR ends to when the drum surface potential for copying has been measured; this is to measure the drum surface potential (VD, VL1, VL2) and to control it.
CNTR2 (control rotation 2)	From when CNTR1 ends to when the drum surface potential for printing has been measured; this is to measure the drum surface potential (VD, VL1, VL2) and to control it.
LSTR (post rotation)	While the photosensitive drum makes a single rotation; this is to clean the surface of the photosensitive drum as a post-process (removes charges).
STBY (standby)	From when LSTR ends to when the Start key is pressed or the power switch is turned off.

T02-103-01

1.4 Controlling the Main Motor (M2)

1.4.1 Outline

The functions of the main motor control circuit are as shown in the following table, and its block diagram is shown in the following figure:

Item	Description
Power supply	24V is supplied by the DC controller PCB
drive signal	from the DC controller PCB (MMON)
Operating/driving	Waste toner feedscrew
	Cleaning assembly
	Registration roller
	Manual feed pickup assembly
	Left deck feed roller 2
	Developing assembly unit
Control	Turning on/off the motor
	Controlling the motor to a specific speed
Error detection	code E010

T02-104-01

1. When the main motor drive signal (MMON) goes '1', the main motor starts to rotate.
2. When the main motor rotates, clock pulse signals (MMFG) are generated. If the DC controller PCB detects an error in clock pulse signals, it will indicate "E010" in the control panel.

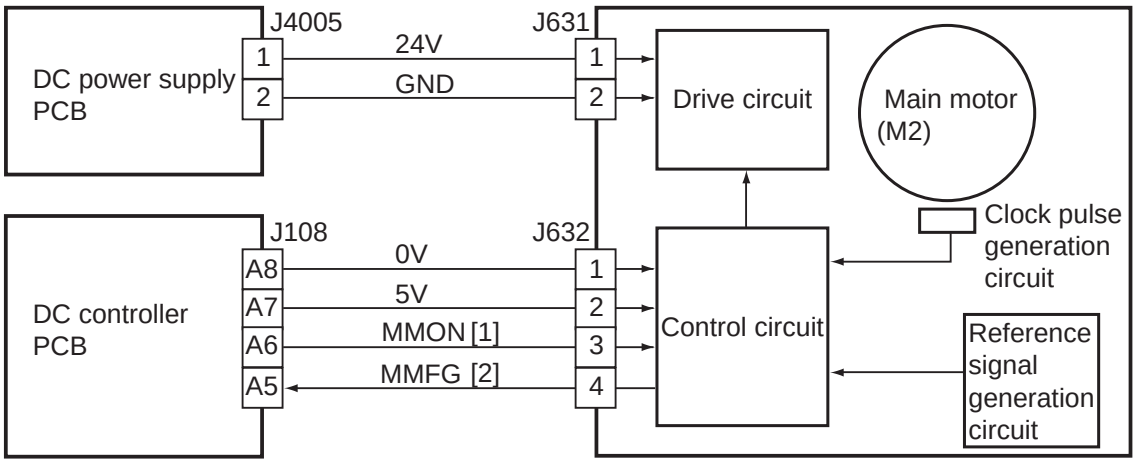

F02-104-01 Control Block Diagram

COPYRIGHT © 2000 CANON INC.

1.5 Inputs to and Outputs from the Major PCBs

1.5.1 Wiring Diagram of Major PCBs

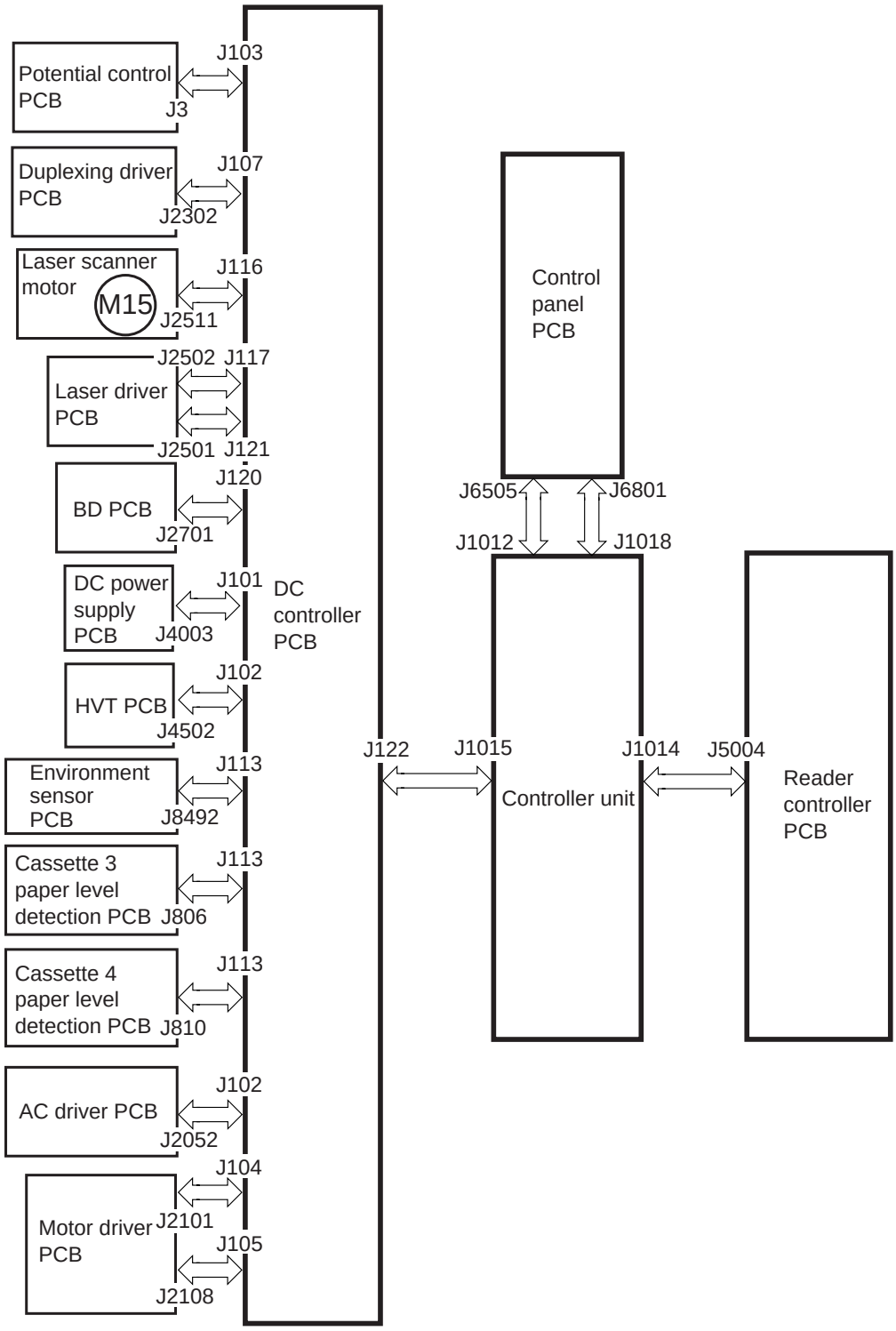

Note: The symbol ⟺ in the diagram indicates major connections, and does NOT indicate the flow of signals.

F02-105-01 Wiring Diagram of Major PCBs

COPYRIGHT © 2000 CANON INC.

1.5.2 Inputs to the DC Controller PCB

• Inputs to the DC Controller PCB (1/7)

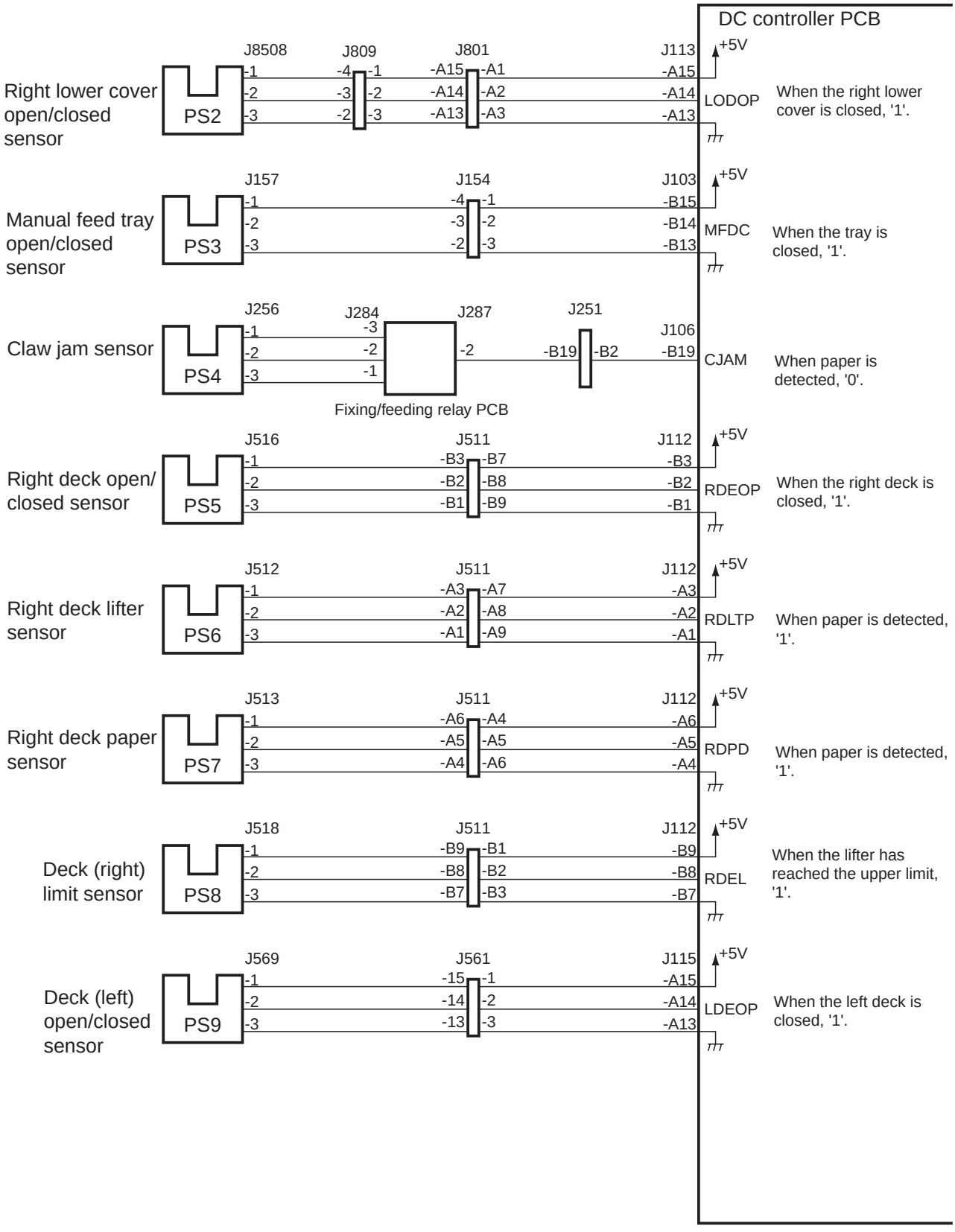

F02-105-02 Inputs to the DC Controller PCB

COPYRIGHT © 2000 CANON INC.

• Inputs to the DC Controller PCB (2/7)

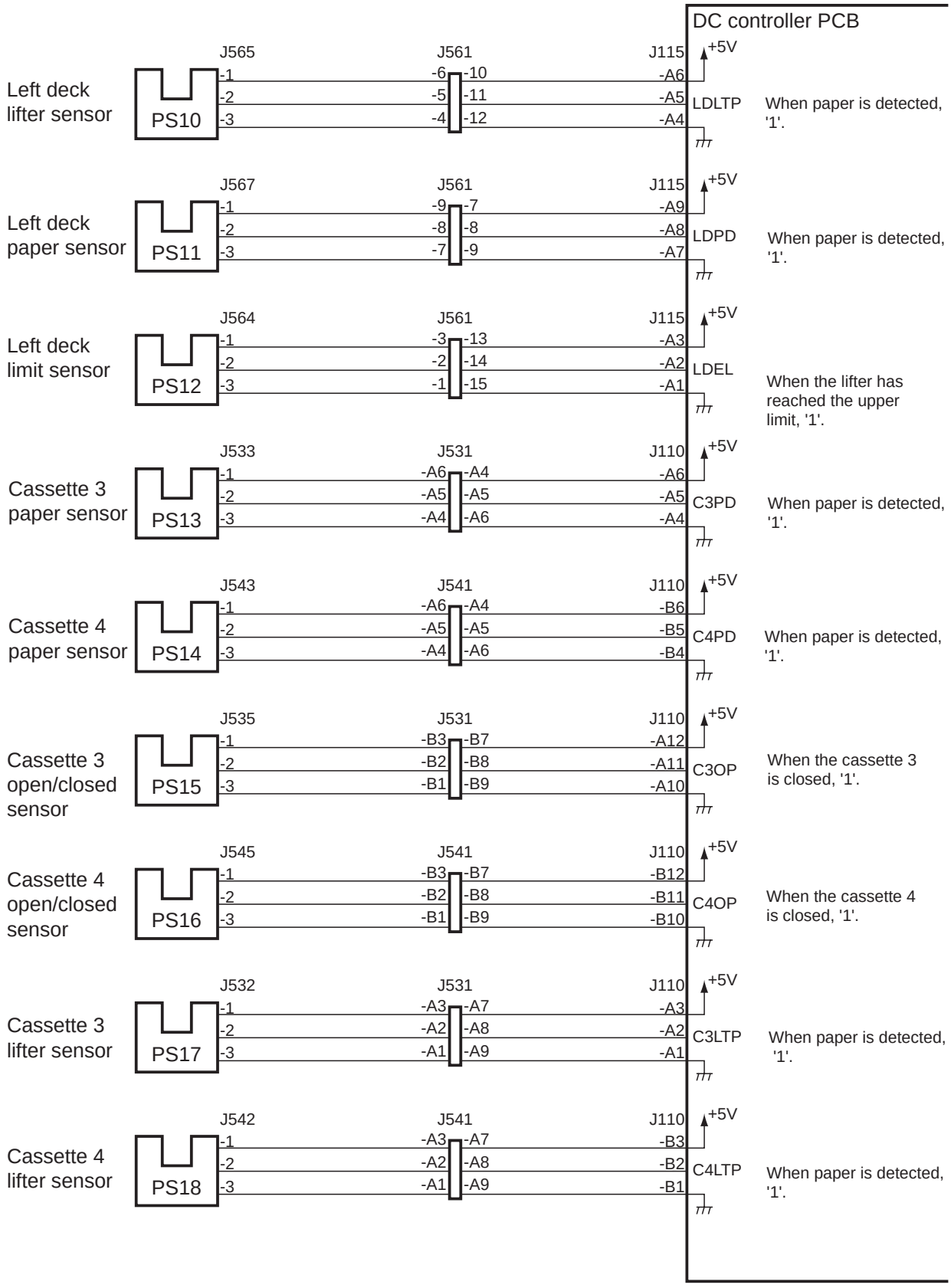

F02-105-03 Inputs to the DC Controller PCB

• Inputs to the DC Controller (3/7)

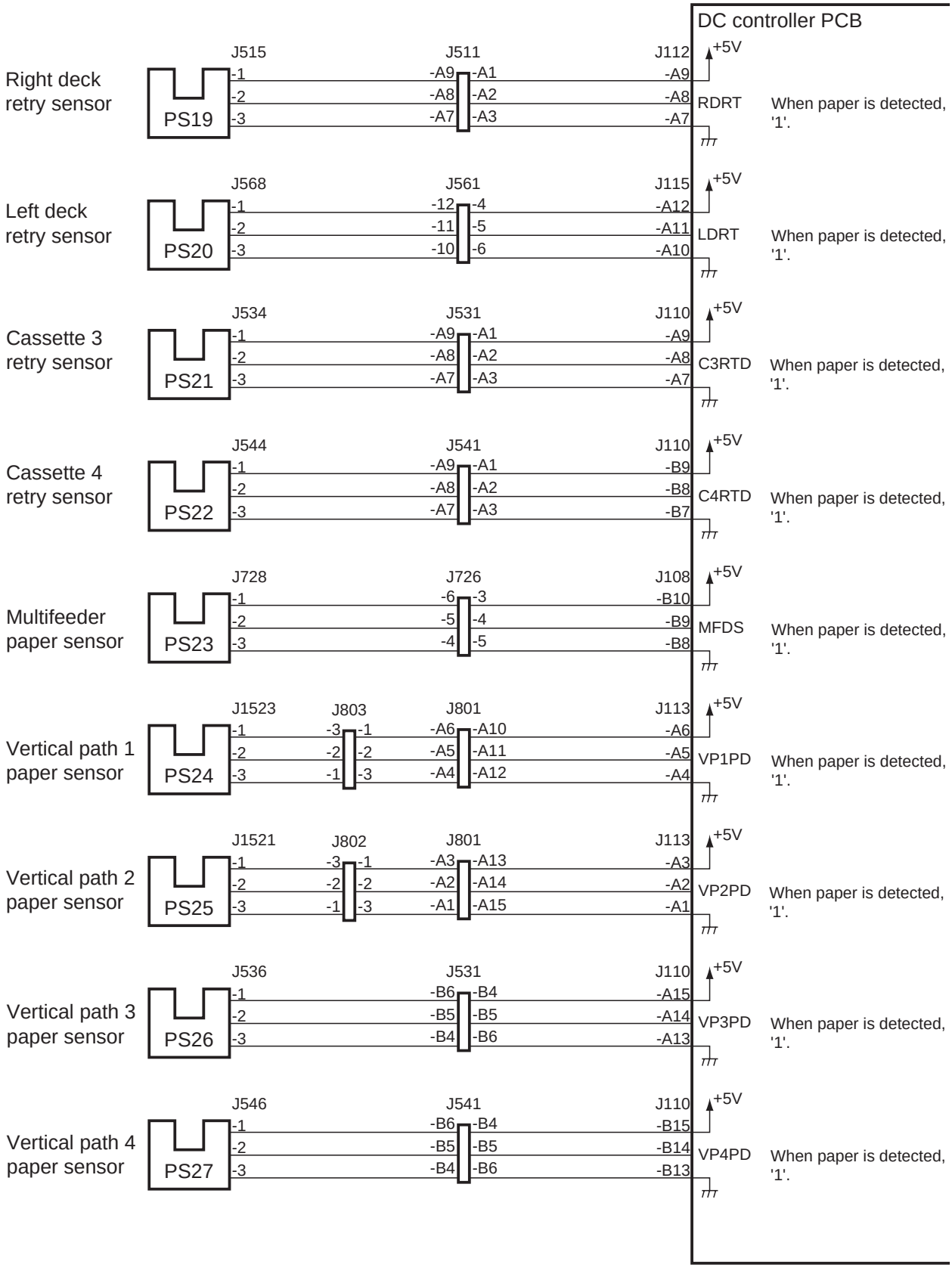

F02-105-04 Inputs to the DC Controller PCB

COPYRIGHT © 2000 CANON INC.

• Inputs to the DC Controller (4/7)

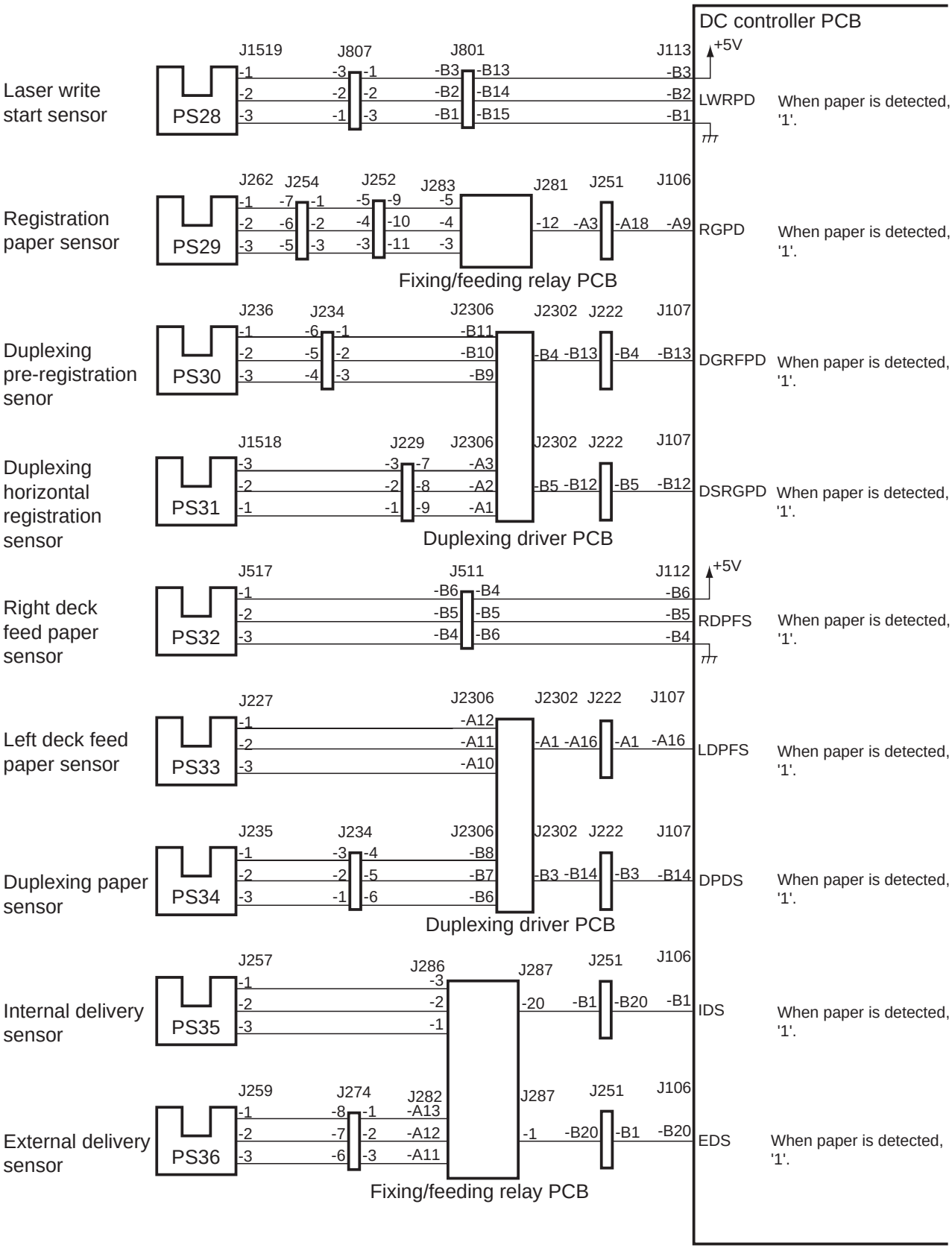

F02-105-05 Inputs to the DC Controller PCB

• Inputs to the DC Controller PCB (5/7)

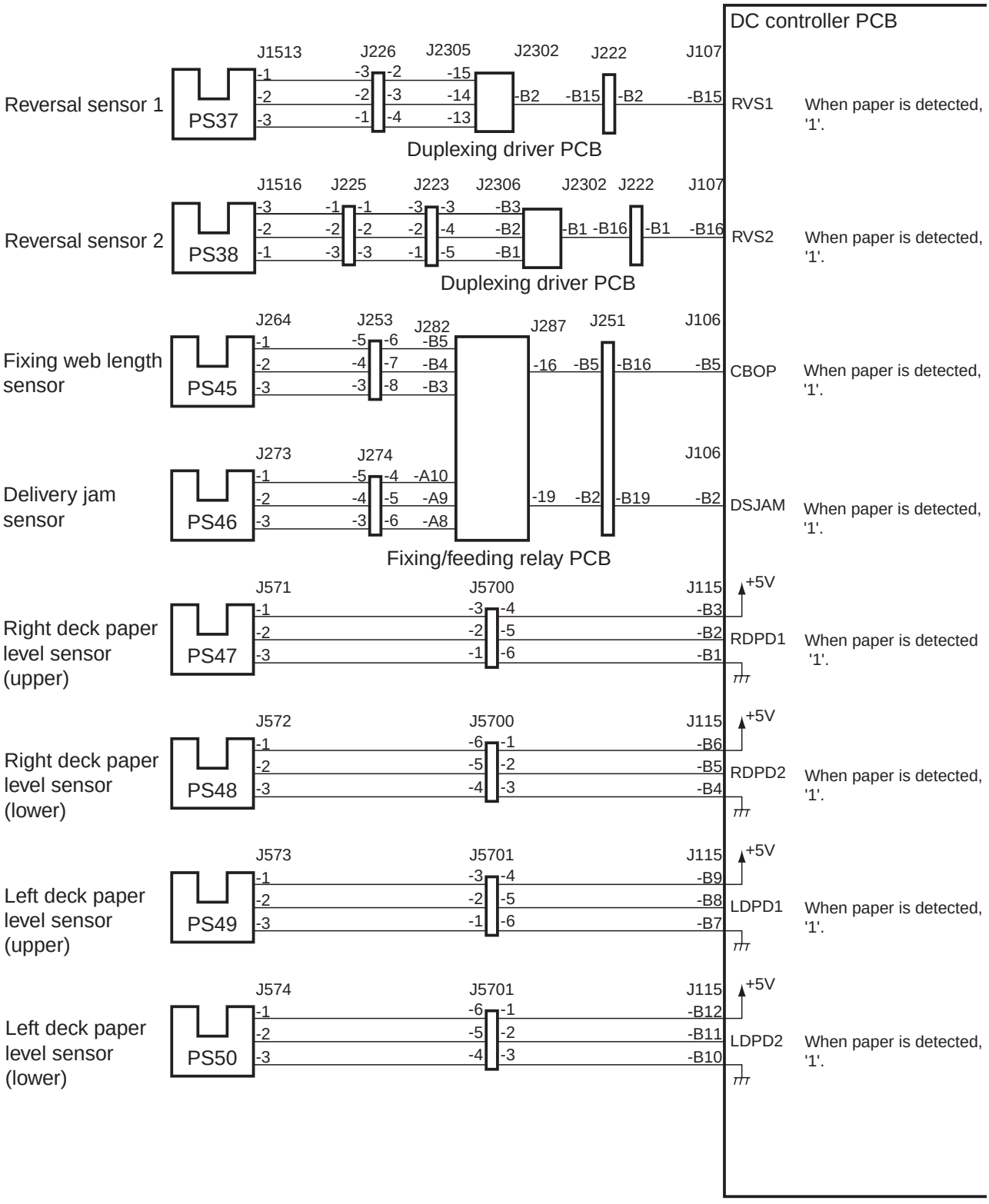

F02-105-06 Inputs to the DC Controller PCB

COPYRIGHT © 2000 CANON INC.

• Inputs to the DC Controller PCB (6/7)

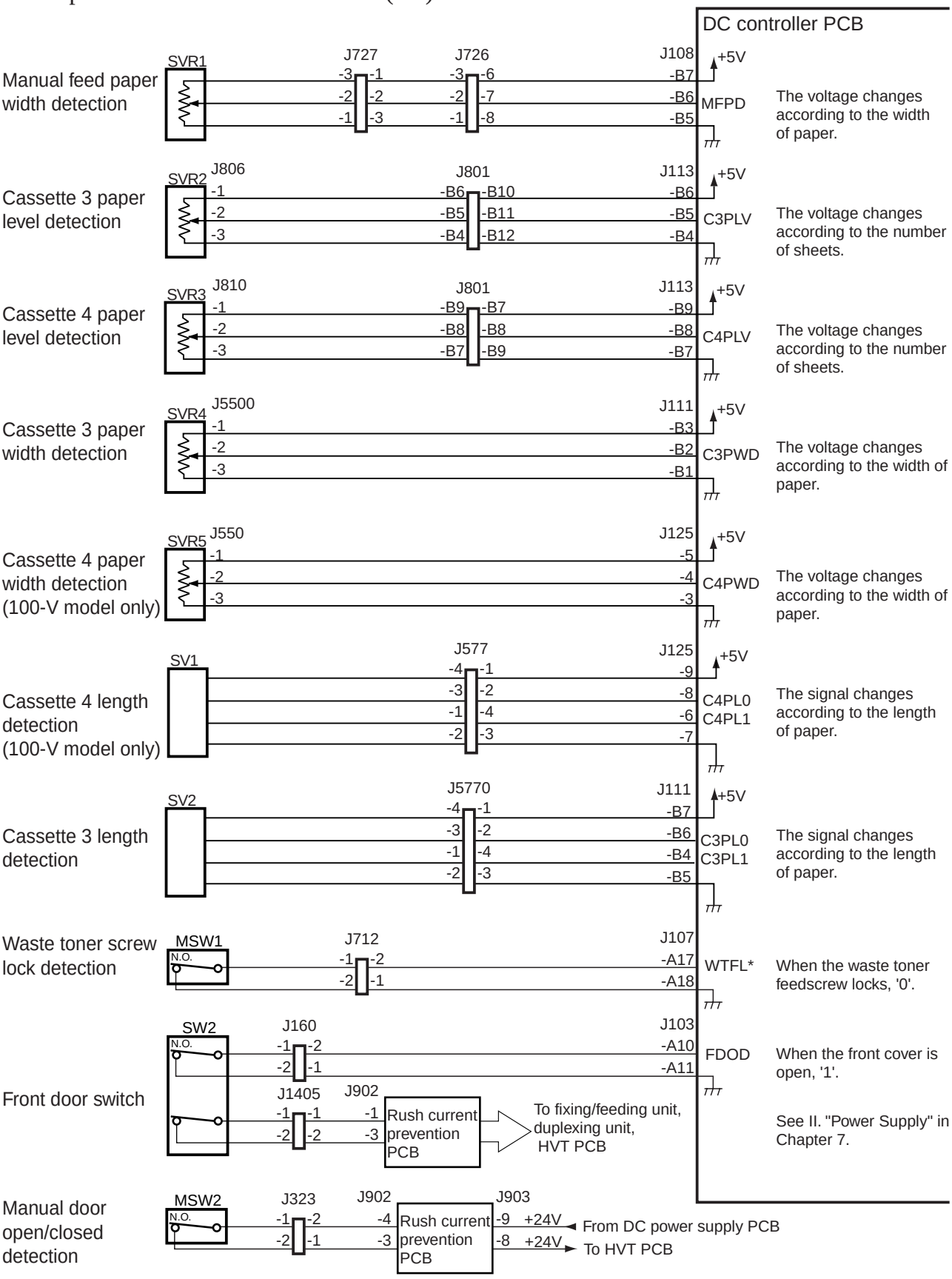

F02-105-07 Inputs to the DC Controller PCB

1.5.3 Inputs to the DC Controller PCB

• Inputs to the DC Controller PCB (7/7)

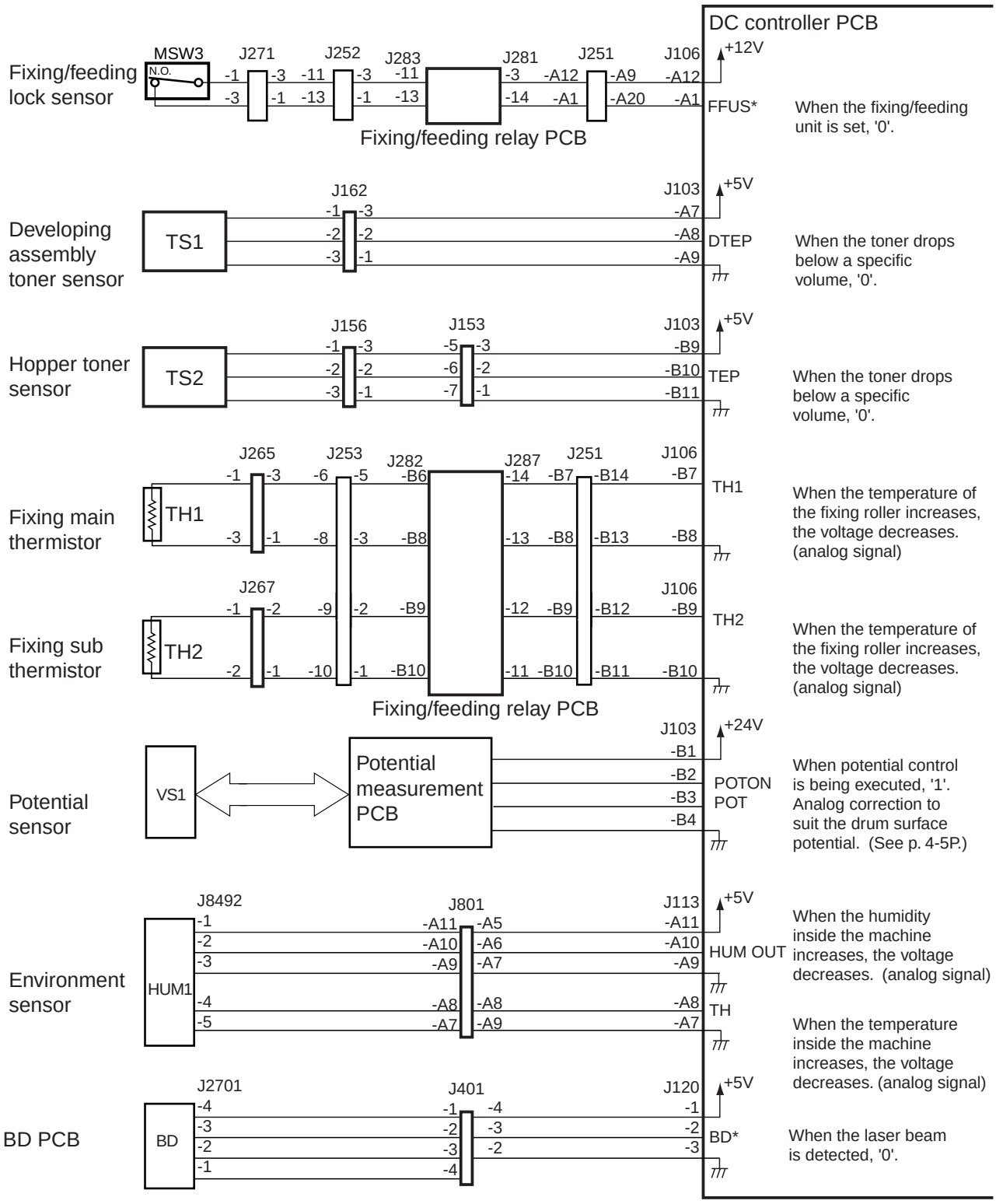

F02-105-08 Inputs to the DC Controller PCB

COPYRIGHT © 2000 CANON INC.

• Outputs from the DC Controller PCB (1/7)

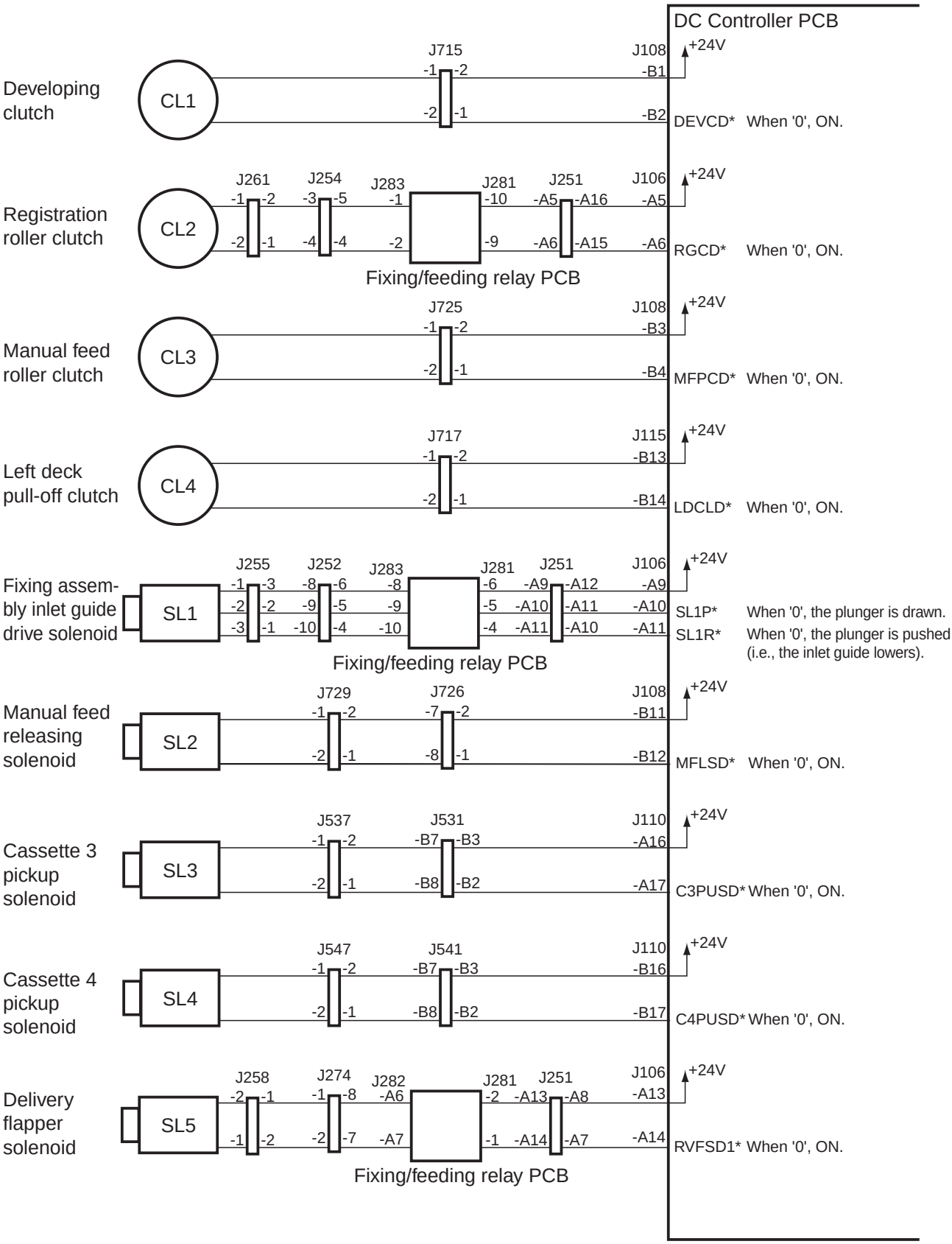

F02-105-09 Outputs from the DC Controller PCB

• Output from the DC Controller PCB (2/7)

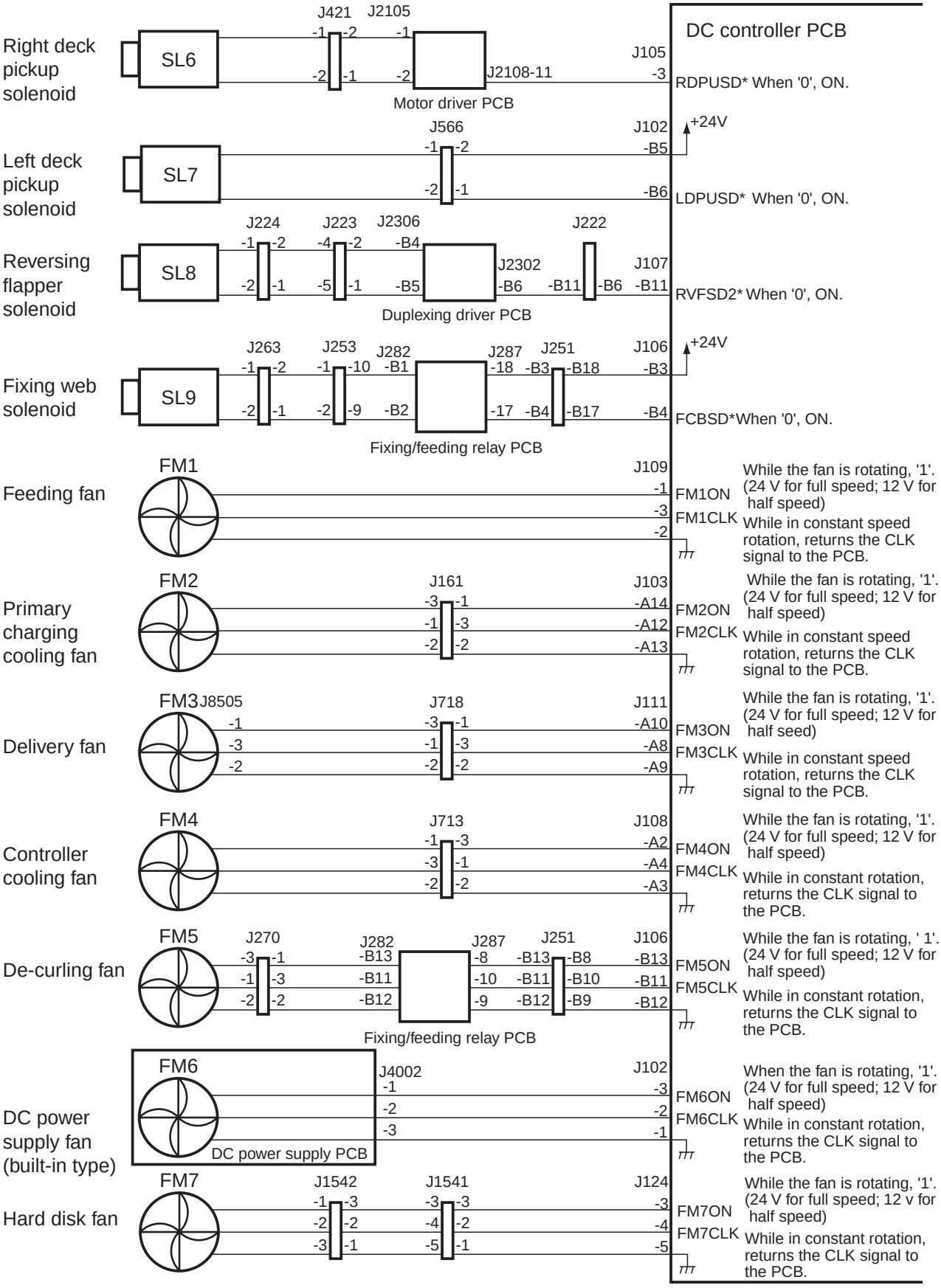

F02-105-10 Outputs from the DC Controller PCB

COPYRIGHT © 2000 CANON INC.

• Outputs from the DC Controller PC (3/7)

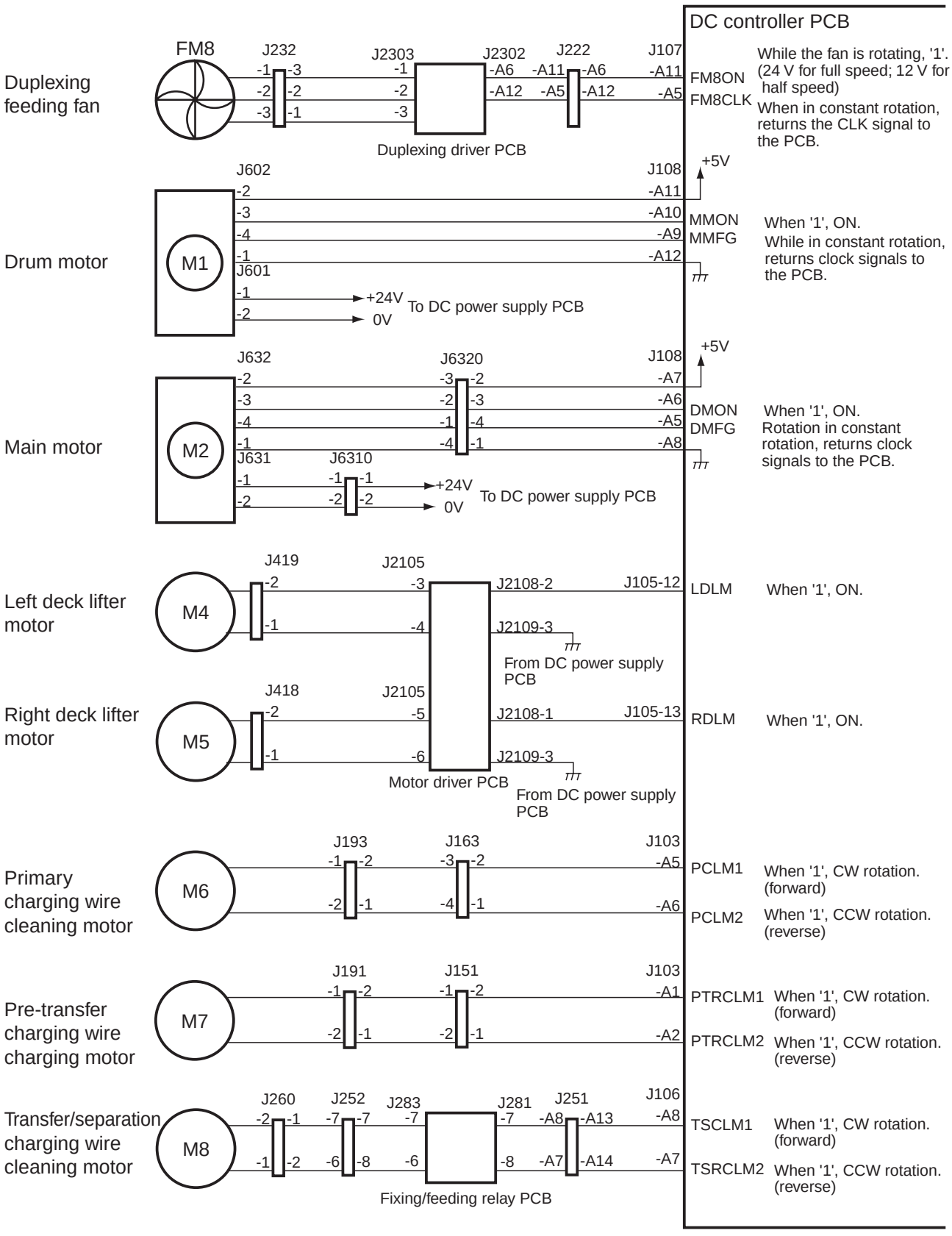

F02-105-11 Outputs from the DC Controller PCB

• Outputs from the DC Controller PC (4/7)

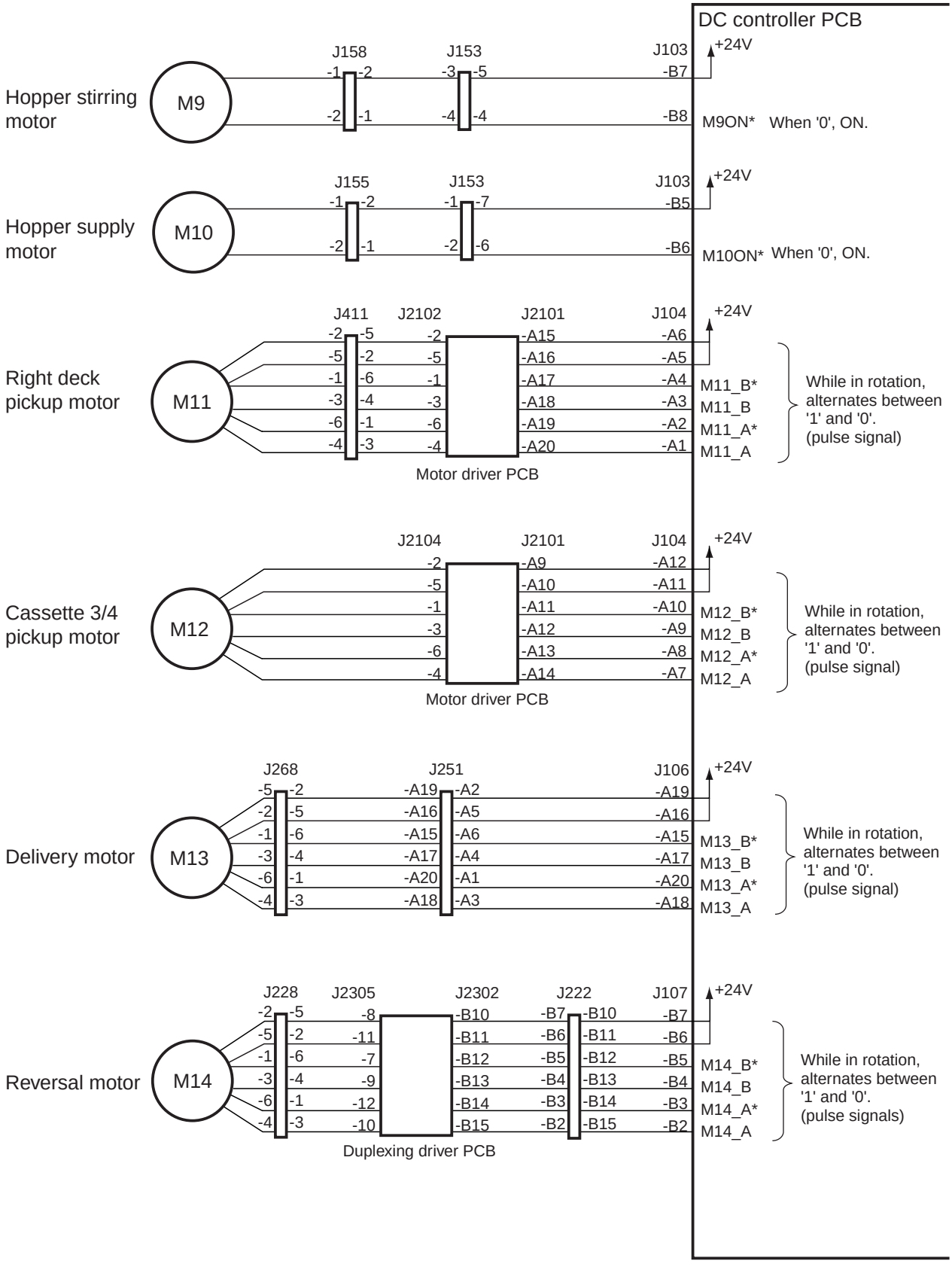

F02-105-12 Outputs from the DC Controller PCB

COPYRIGHT © 2000 CANON INC.

• Outputs from the DC Controller PCB (5/7)

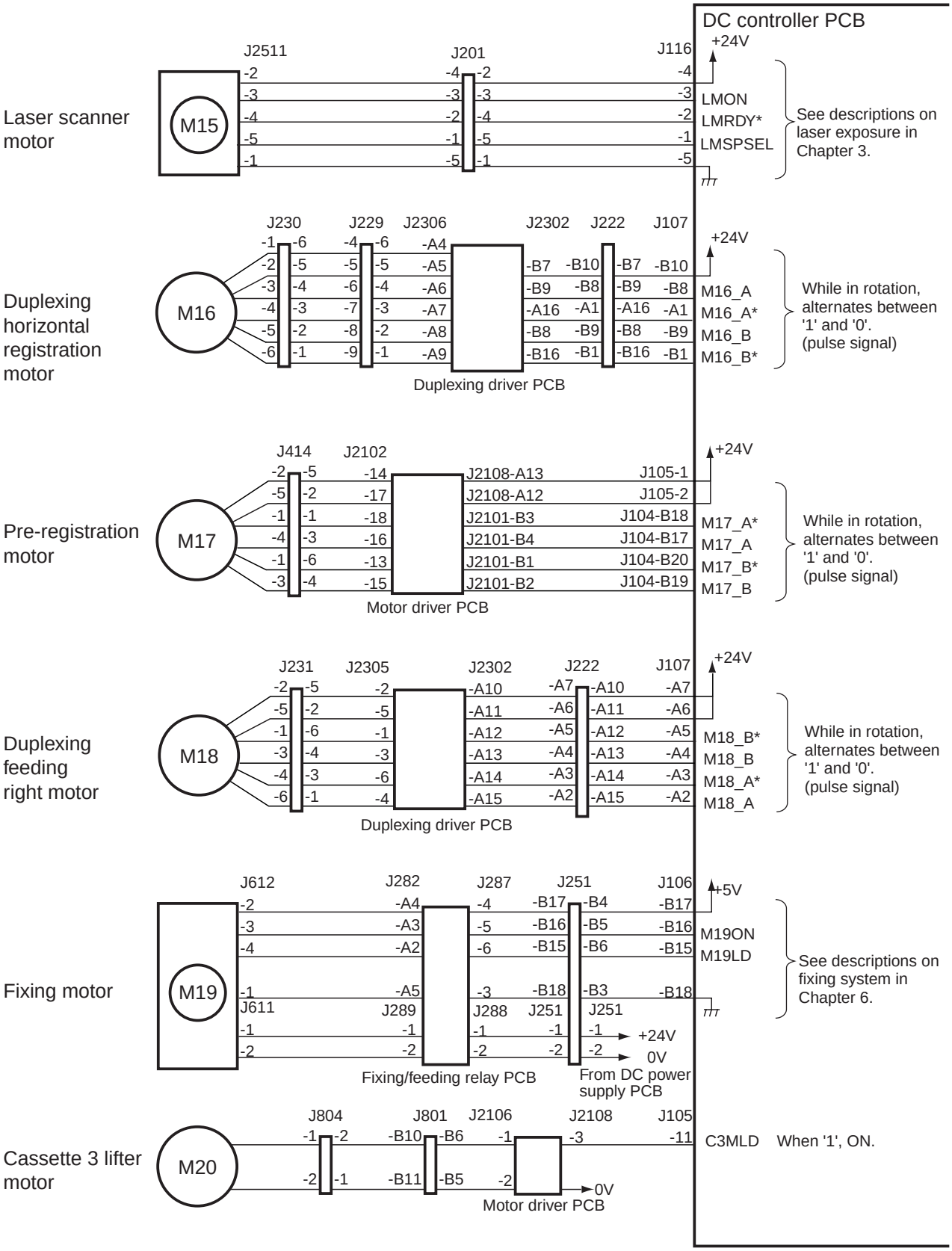

F02-105-13 Outputs from the DC Controller PCB

• Outputs from the DC Controller PCB (6/7)

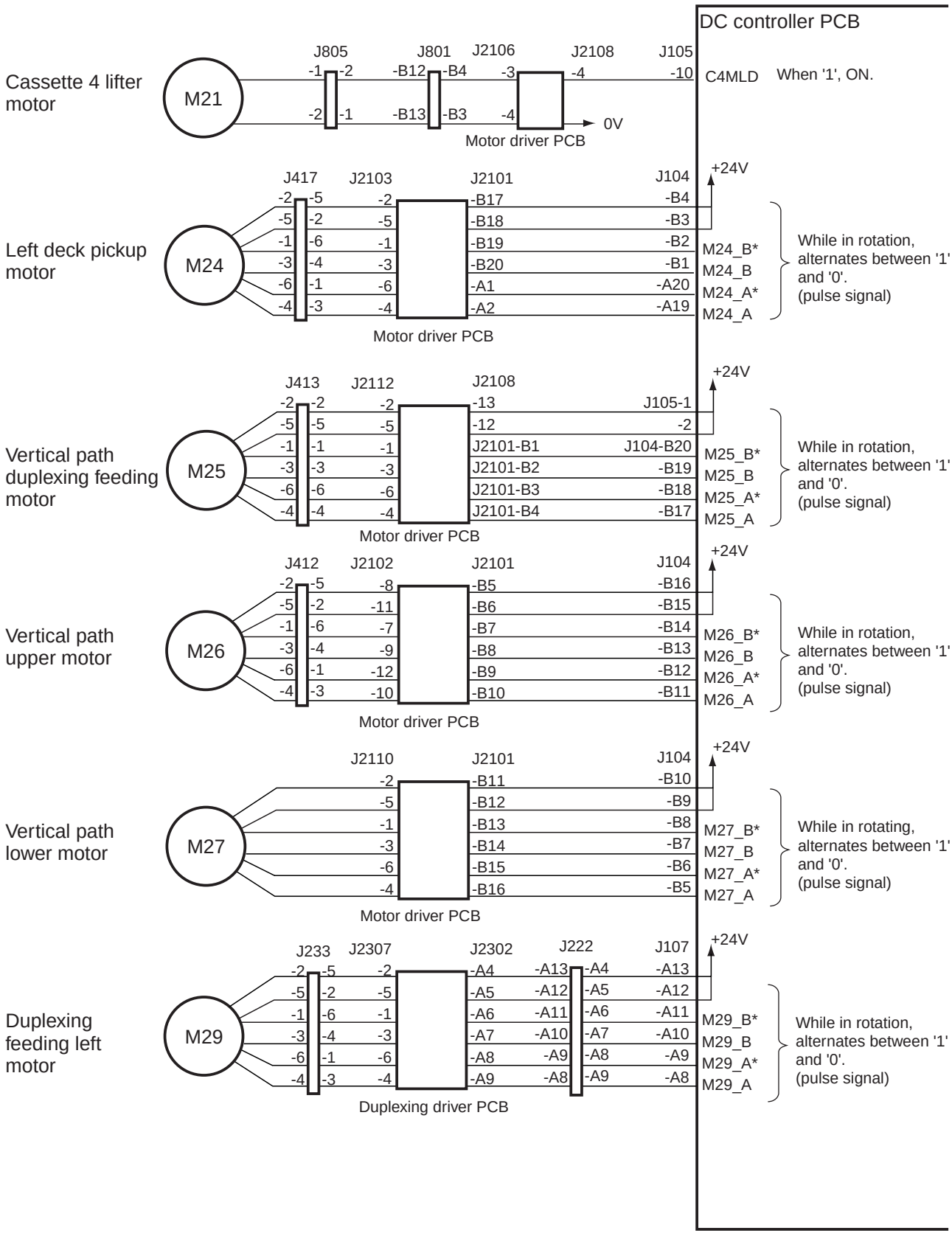

F02-105-14 Outputs from the DC Controller PCB

COPYRIGHT © 2000 CANON INC.

• Outputs from the DC Controller PCB (7/7)

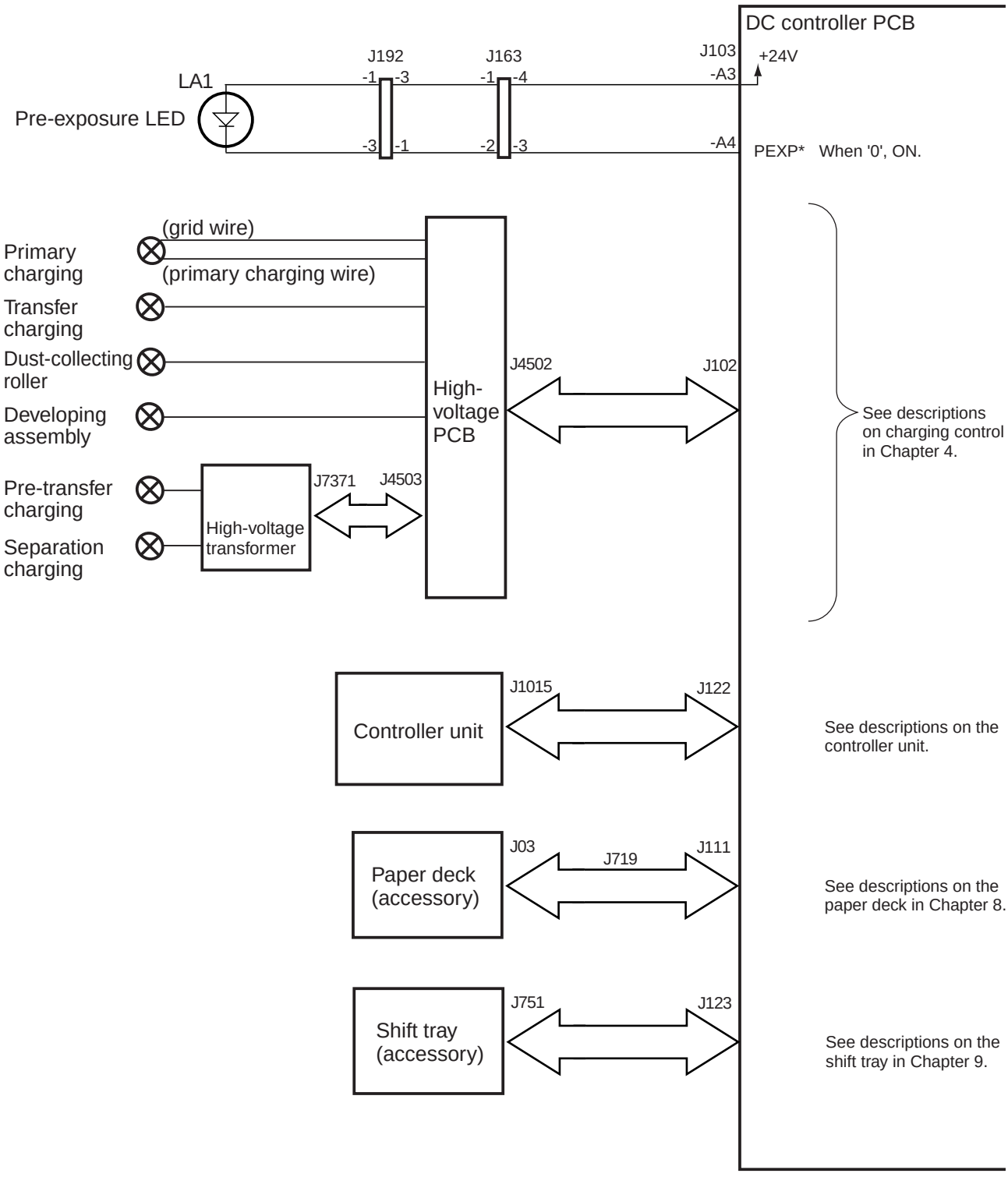

F02-105-15 Outputs from the DC Controller PCB

CHAPTER 3

LASER EXPOSURE SYSTEM

COPYRIGHT © 2000 CANON INC.

1. Outline of Operations

1.1 Outline

The laser exposure system consists of a laser unit and a laser scanner: the laser unit is the source of laser light, while the laser scanner serves to generate a scanning laser beam by means of a polygon mirror.

The video signals from the controller unit are converted into laser drive signals by the DC controller PCB; they are then turned into laser intensity signals by the laser driver PCB, used to direct the laser beam from the laser unit.

The collimator lens turns the laser beam into a parallel beam possessing an oval cross section; the cylindrical lens then changes it to a flat, band-like parallel beam.

The resulting laser beam is directed through an imaging lens and is reflected by a polygon mirror, which is rotating at a high and by, upon by which the beam is turned into a scanning beam possessing a specific direction.

The laser beam is then led through an imaging lens for removal of distortion, and is directed to the positively charged photosensitive drum (areas representing white) for the formation of a static image.

The laser beam is also used to blank out the non-image area.

Item	Description
Laser intensity control	1. Executes laser power auto control (APC control) 2. Executes optimum intensity control to suit the surface potential of the drum
Laser scanning	By semiconductor laser Main scanning direction: control by BD signal Sub scanning direction: control by laser write start signal
Laser scanner motor control	1. Executes constant speed rotation control 2. Switches between full-speed rotation and in-wait rotation

T03-101-01

COPYRIGHT © 2000 CANON INC.

The laser exposure system consists of the following major components:

The machine uses a small-diameter, 12-facet polygon mirror, a lens construction possesing a large angle of radiation, and a single-beam laser, all with considerations to high speed, low power, and low noise operation.

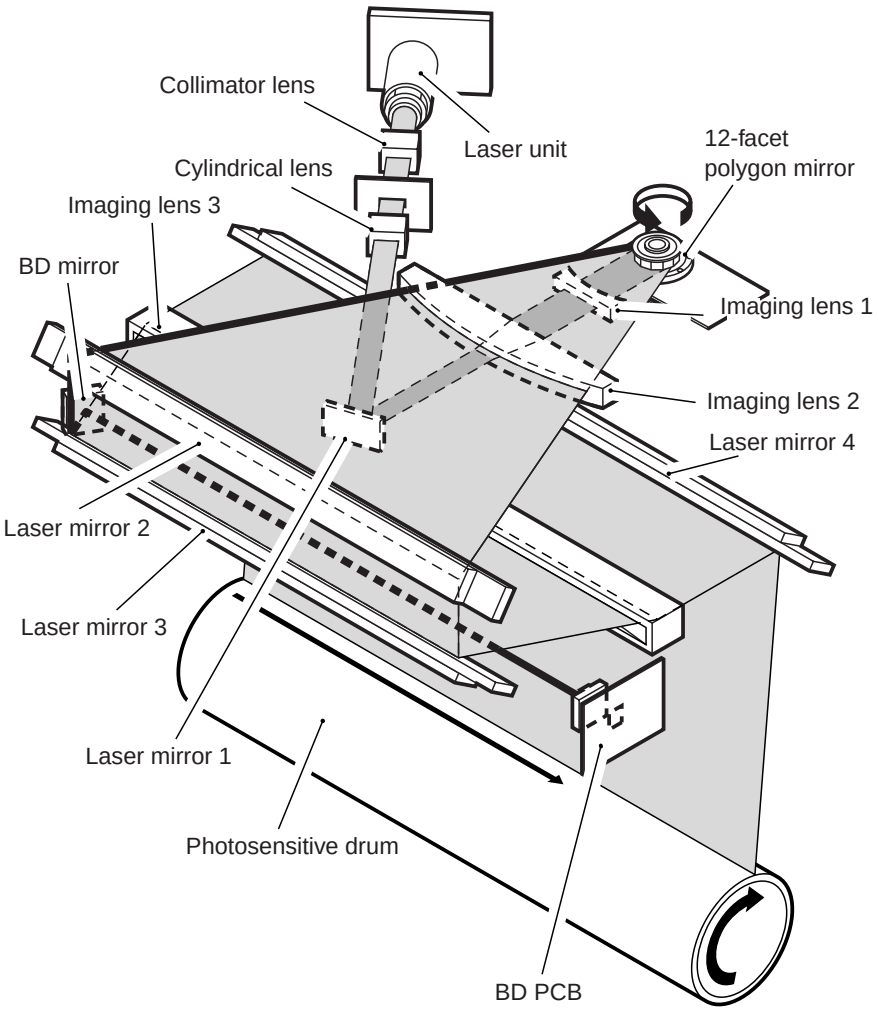

F03-101-01 External View

Components	Description
Laser semiconductor	Visible laser light (aboxut 660 nm), 1 beam
Laser scanner motor (M15)	DC motor, 2-speed control
Polygon mirror	12-faceted
BD mirror/BD PCB	Detects a laser beam.
Laser driver PCB	Controls laser activation.
DC controller PCB	Controls laser scanner motor rotation.

T03-101-02 List of Components

COPYRIGHT © 2000 CANON INC.

1.2 Basic Sequence of Operations (laser exposure system)

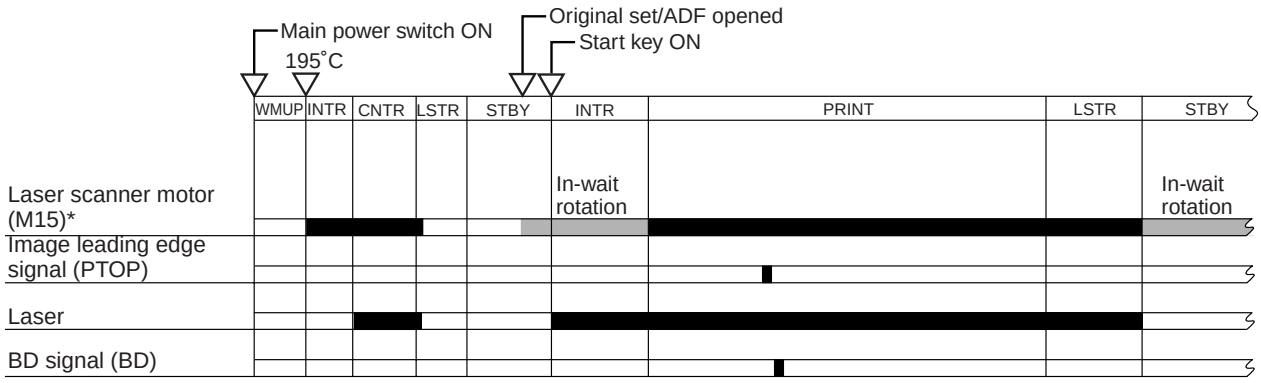

*:If silence mode has been selected in user mode, a switch-over to half-speed rotation is made after a specific period of time during in-wait rotation.

F03-102-01 Basic Sequence of Operations

2. Generating Sync Signals

2.1 Outline

The BD signal used to synchronize video signals for laser scanning direction is generated by the BD PCB with reference to the laser beam reflected by the BD mirror, mounted along the path of the laser beam.

The CCD/AP PCB reads image signals from the CCD, and sends them to the controller unit. The controller unit performs image processing, and the signals are sent to the laser driver PCB as video signals through the DC controller PCB; they are then sent to the laser unit as laser intensity control signals in sequence.

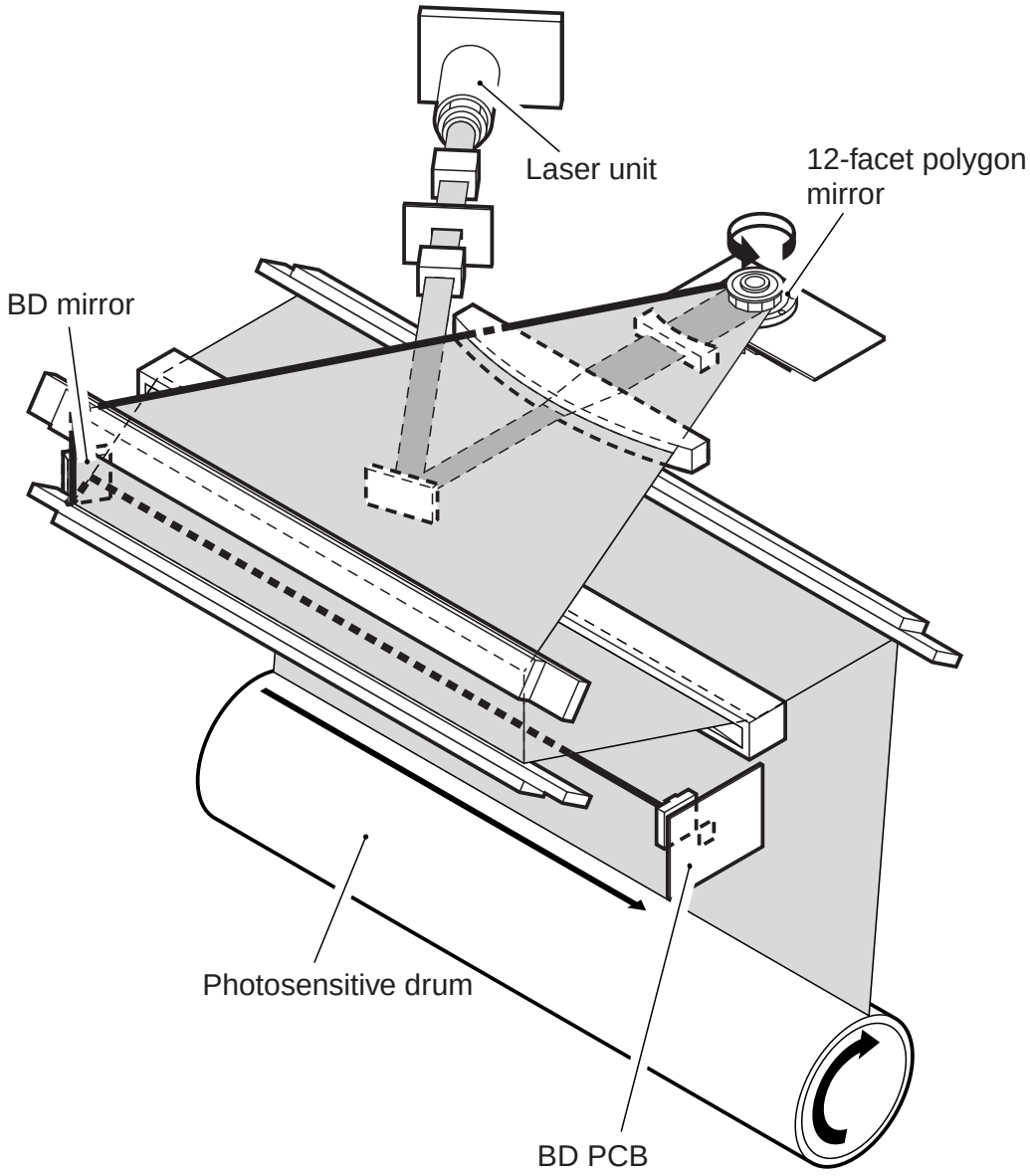

F03-201-01 Construction of the Control System

COPYRIGHT © 2000 CANON INC.

2.2 Flow of Sync Signals

[1] The BD signal goes '0' when laser light is detected.
[2] A phase matching is conducted with reference to the printer, and sync signals are generated.
[3] Using the printer sync signal, image data is read from the image memory.
[4] Video signals are generated.
[5] The 2-pixel parallel signal is converted into a 1-pixel serial signal.
[6] The laser drive signal drives the laser in response to the video signals.

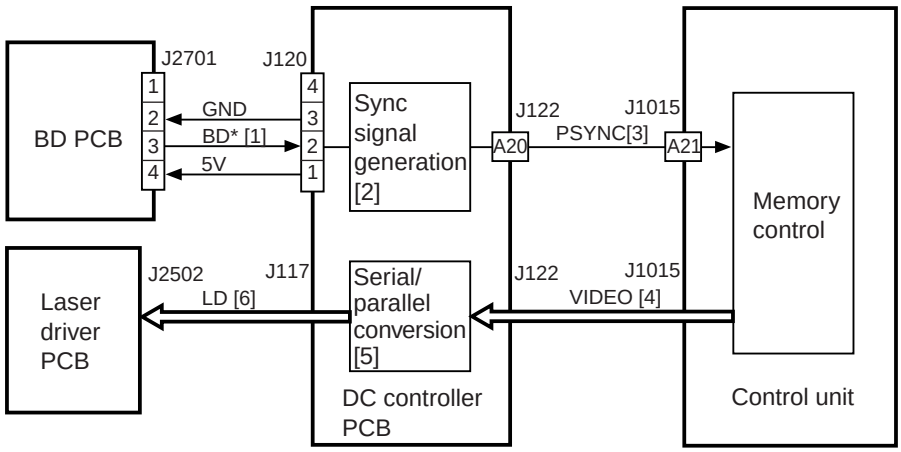

F03-202-01 Flow of Signals

Error

E100
It is indicated if the BD signal is not detected within a specific period of time after the laser has been turned on.

3. Laser Driver Circuit

3.1 Controlling the Laser

The laser driver circuit serves to drive the semiconductor laser in response to the laser drive signal (LD) from the DC controller PCB.

The following are control items associated with the laser driver circuit:

1. Turning on/off laser light.
2. Controlling the intensity of laser light (ACP control).
3. Controlling the intensity of laser light to suit the surface potential of the drum.

The following signals are used:

[1] Laser drive signal.
[2] Sample laser activation signal. Used to turn on laser light for an intensity sample (for each scan).
[3] Laser enable signal. Goes '0' when the laser becomes ready after the Start key has been pressed.
[4] Laser write start signal. Used to start a laser write when paper reaches the laser write start sensor (PS28), mounted in front of the registration roller.
[5] The intensity of laser light is monitored while it is turned on to collect a sample; an appropriate value is fed back to the laser drive circuit.
[6] The output is controlled so that the reference value from the DC controller (EEPROM) and the value returned as feedback will be identical.
[7] Laser intensity reference signal. Used as the laser activation reference value, and is determined by potential control (EEPROM).

COPYRIGHT © 2000 CANON INC.

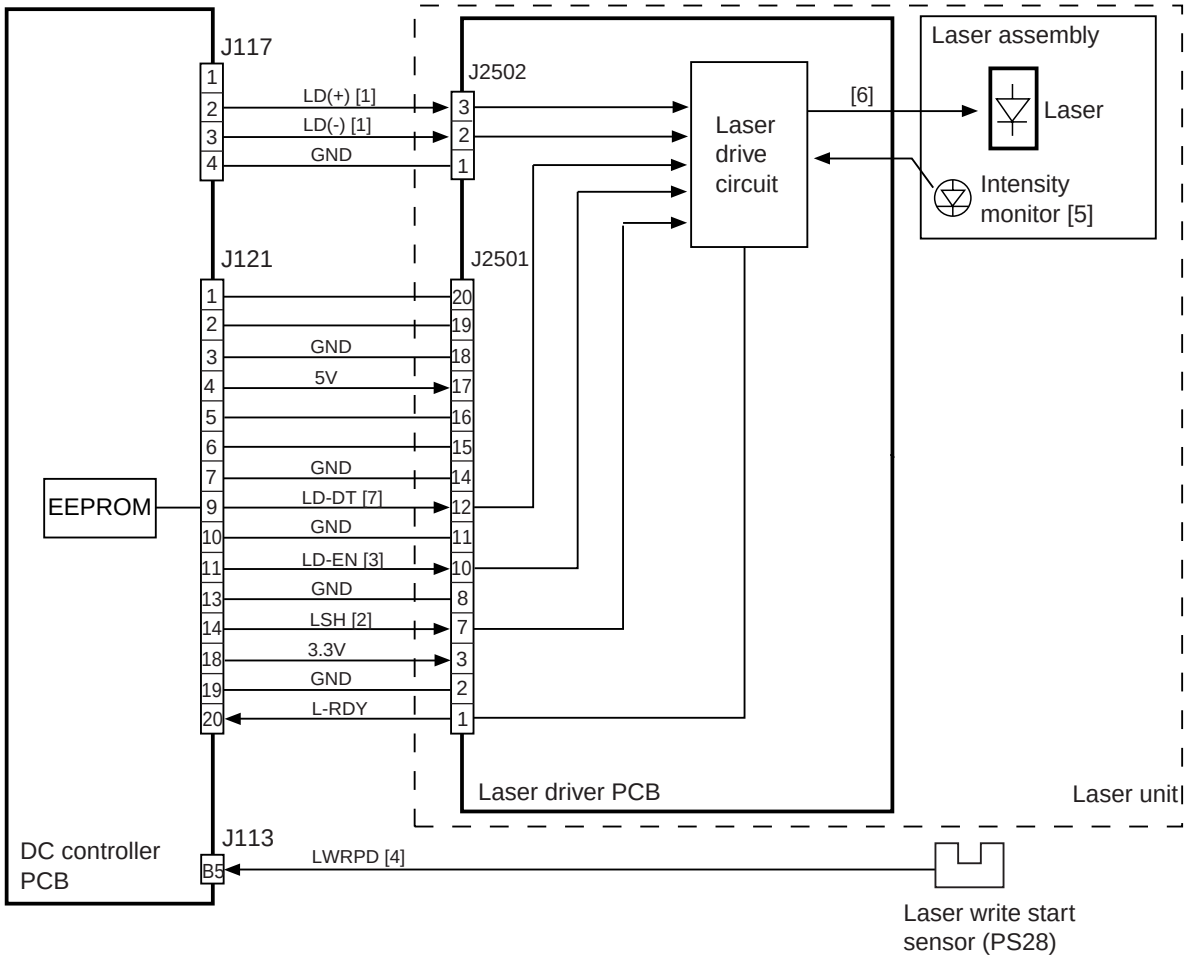

F03-301-01

REF.

1. The laser power is automatically adjusted whenever the laser unit has been replaced.
2. The laser starts writing when pickup is from the manual feed tray in response to the detection of paper by the registration paper sensor (PS29).

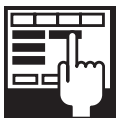

DISPLAY>DPOT>LLMT-P
Indicates the laser power voltage control mechanism for printer (PDL) images.
DISPLAY>DPOT>LLMT
Indicates the laser power voltage control mechanism for copying.
DISPLAY>DPOT>LPOWER-P
Indicates the result of potential control mechanism for the laser intensity during output of printer (PDL) images.
DISPLAY>DPOT>LPOWER-C
Indicates the result of the potential control mechanism for the laser intensity during output of copy images.
DISPLAY>MISC>LPOWER
Indicates the laser intensity on a real-time basis.
ADJUST>LASER>PVE-OFST
Use it to adjust the point of laser exposure.
FUNCTION>LASER>POWER
Use it to turn on laser light.

COPYRIGHT © 2000 CANON INC.

4. Controlling the Laser Scanner Motor

4.1 Outline

The following signals are used to control the laser scanner motor:

[1] Laser scanner motor drive signal. When '1', the laser scanner motor is turned on (i.e., turning on/off the motor).

[2] Laser scanner motor speed switch signal. When '0', the motor is rotated at full speed; when '1', in-wait rotation (i.e., switching the speed).

[3] Laser scanner motor ready signal. When '0', the laser scanner motor is rotated at a constant speed (constant speed rotation control).

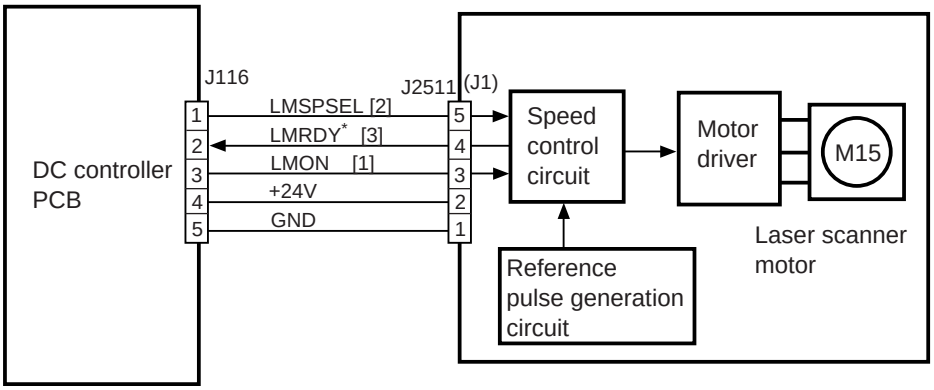

F03-401-01 Functional Block Diagram

Error

E110

It is indicated under the following conditions:

[1] If the laser scanner motor ready signal (LMRDY*) goes '1' when the motor is rotating.

[2] If the laser scanner motor ready signal (LMRDY*) does not go '0' within a specific period of time.

COPYRIGHT © 2000 CANON INC.

5. Disassembly and Assembly

The machine's mechanical characteristics and features are as described herein, and the machine may be disassembled or assembled as instructed while keeping the following in mind:

1. ⚠ The power plug must be disconnected for the work.
2. Unless otherwise indicated, the machine may be assembled by reversing the steps used to disassemble it.
3. The screws must be identified by type (length, diameter) and location.
4. The mounting screw of the grounding wire and the varistors is equipped with a toothed washer to ensure electrical continuity. They must not be left out when fitting the screws.
5. As a rule, the machine must not be operated with any of its parts removed.
6. The front door switch or the main power switch must be turned off before sliding out the duplex unit or the fixing/feeding unit.
7. ⚠ Toner must not be thrown away into fire to avoid explosion.

COPYRIGHT © 2000 CANON INC.

5.1 Scanner Unit

1) Open the front cover.
2) Open the hopper cover [1]; then, remove the three screws [2], remove the connector cover [3], and disconnect the connector.

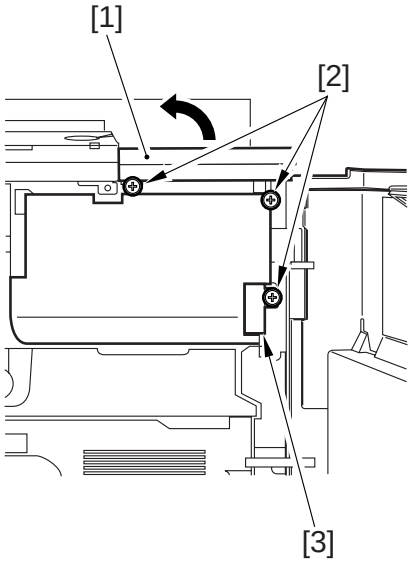

F03-501-01

3) Slide out the hopper unit [4].

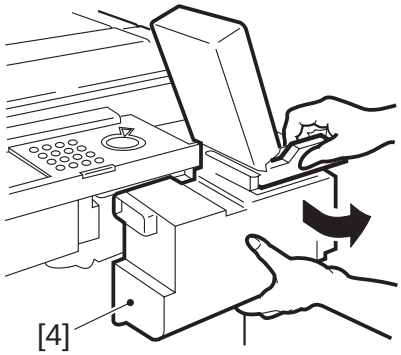

F03-501-02

4) Remove the two screws [5], and detach the toner dish [6].

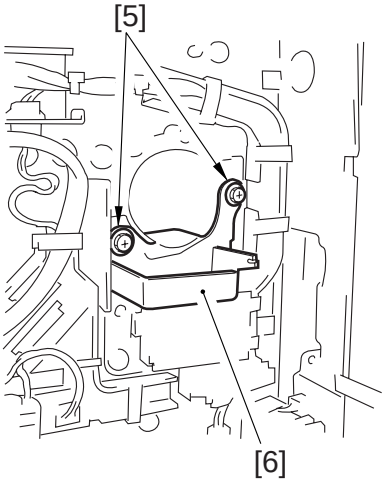

F03-501-03

5) Remove the tape fixing screw of the right cover.
6) Remove the screw [7], and detach tje developing assembly locking unit [8]. Remove the four screws [9], and detach the scanner cover [10].

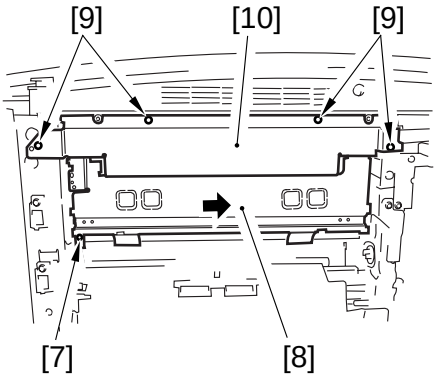

F03-501-04

7) Disconnect the connector [11], and slide out the developing assembly [12]; then, detach the hopper slot [13].
Disconnect the four connectors, and remove the four screws [14]; then, slide out the scanner unit [15].

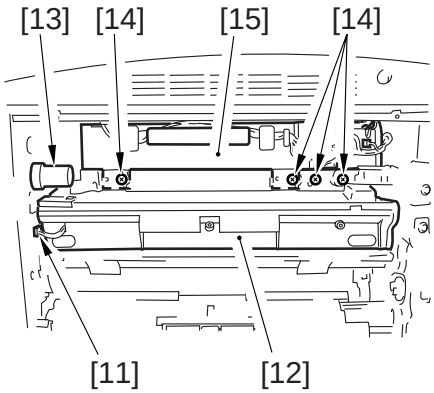

F03-501-05

When replacing the scanner unit, be sure to execute the following in service mode if the fixing assembly is 150°C or higher; otherwise, potential control will not be executed:
COPIER>FUNCTION>DPC>DPC.

COPYRIGHT © 2000 CANON INC.

CHAPTER 4

IMAGE FORMATION SYSTEM

COPYRIGHT © 2000 CANON INC.

1. Outline of Processes

1.1 Outline

The functions and methods used in the machine's image formation system are as follows:

Item	Function/method
Photosensitive drum	Amorphous silicon (80-mm dia.) Cleaning method: blade
Developing assembly	Developing cylinder (24.5-mm dia.) Developing method: dry, 1-component, toner projection Toner: magnetic, negative
Pre-exposure	Array of 63 LEDs Turning on/off the Pre-exposure LED Array.
Potential sensor	Potential Control [1] Setting the primary current [2] Setting the laser output [3] Setting the developing bias (DC)
Wire auto cleaning	[1] Primary charging wire [2] Pre-transfer charging wire [3] Transfer charging wire [4] Separation charging wire
Primary charging control	DC constant current control: set by potential control
Grid bias control	DC constant voltage control: fixed by varistor Control value: 850 V (approx.)
Developing bias control	AC constant voltage control: on/off control only Voltage: 1500 Vp-p (approx.) Frequency: 2.7 kHz (approx.) DC constant voltage control: set by potential control Control value: 0 to 600 V (approx.)
Dust-collecting roller bias control	DC non-control Voltage: -1000 V (approx.)
Pre-transfer charging control	AC constant voltage control: fuzzy by environment sensor DC constant current control: on/off control only
Transfer charging control	DC current control: fuzzy control by environment sensor
Separation charging control	AC constant voltage control DC constant current control: fuzzy control by environment sensor and to suit density of original (drum surface potential)

T04-101-01

COPYRIGHT © 2000 CANON INC.

The image formation system is constructed as follows:

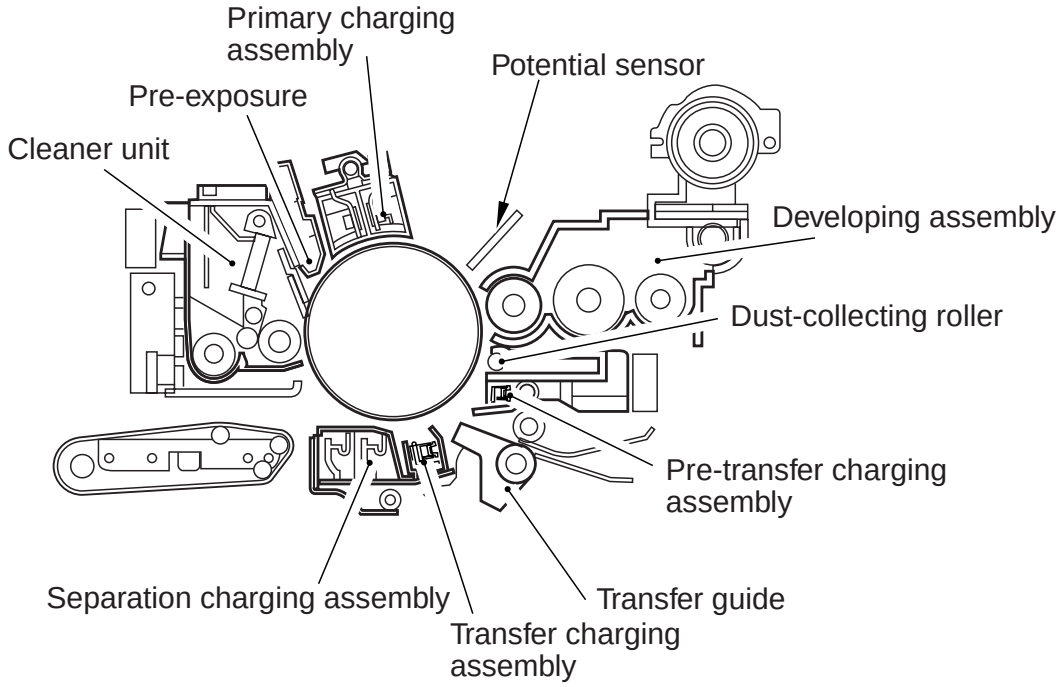

F04-101-01

COPYRIGHT © 2000 CANON INC.

1.2 Basic Sequence of Operations (image formation system)

• at power-on, 1 original, 2 prints

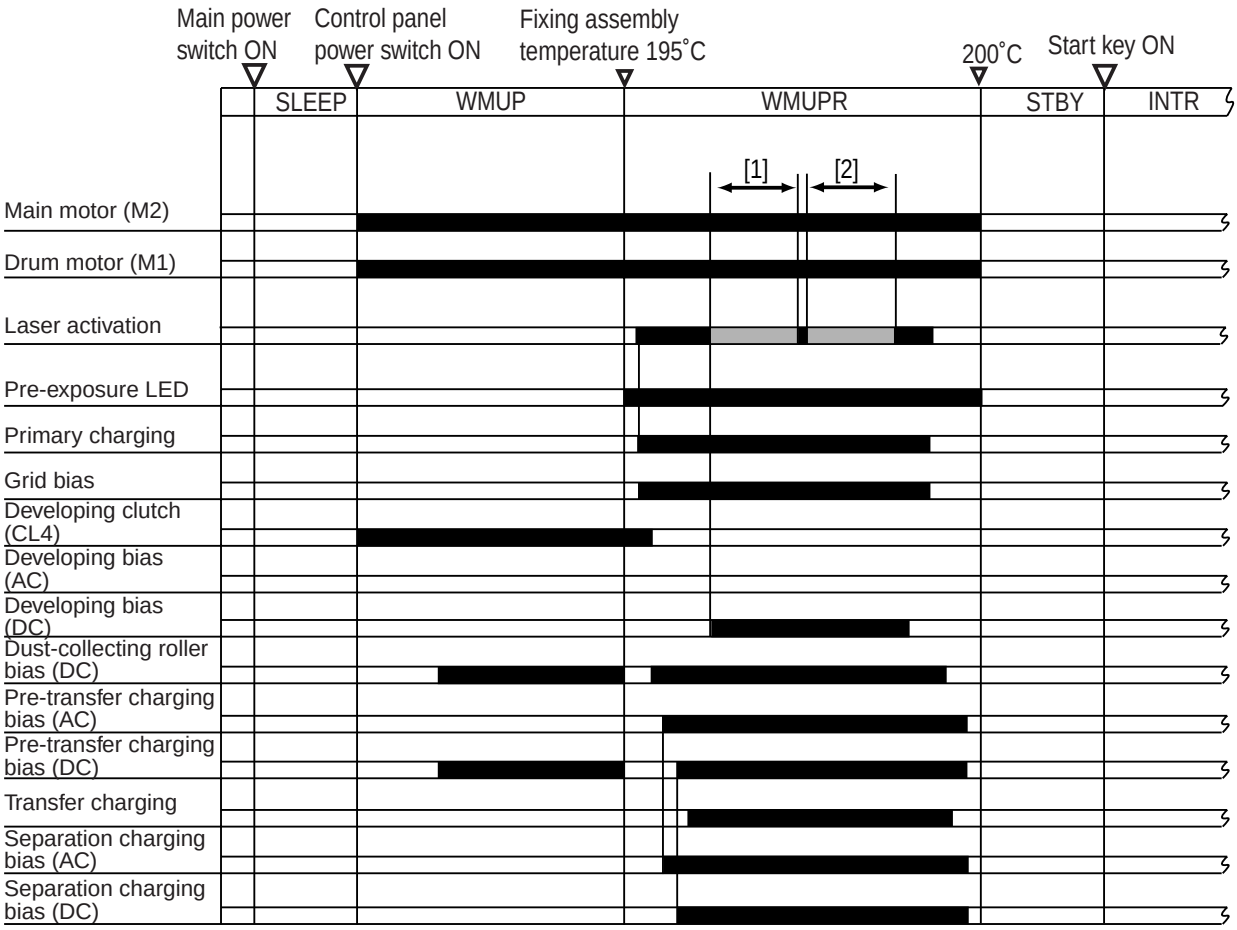

F04-102-01

Note the following about the sequence:

[1] potential control for copying

[2] potential control for printing

• during printing, 1 original, 2 prints

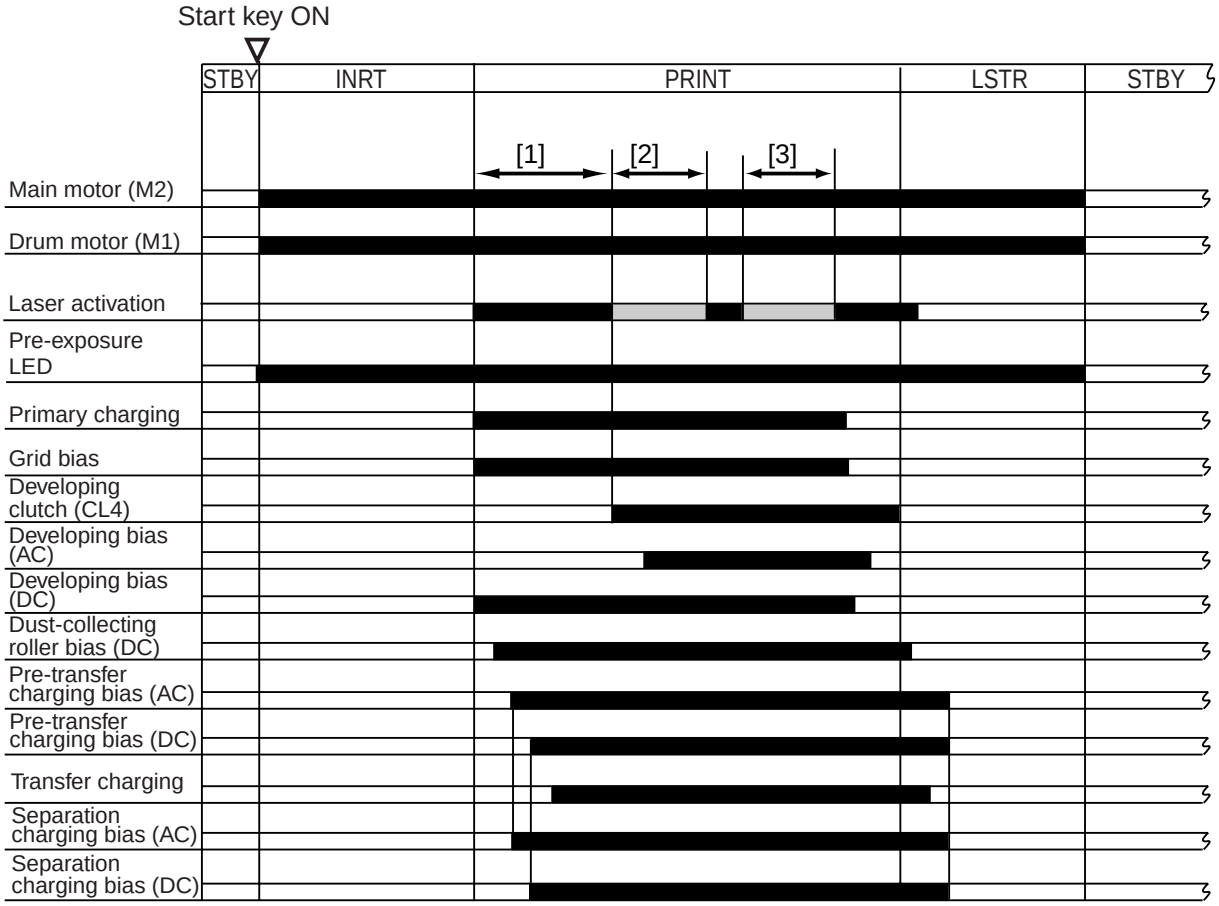

F04-102-02

Note the following about the sequence:

[1] executes a series of charging operations before the formation of images, thereby stabilizing the drum potential.

[2] executes image formation 1.

[3] executes image formation 2.

COPYRIGHT © 2000 CANON INC.

2. Potential Control

2.1 Outline

The functions and control mechanisms related to the potential control system are as follows:

1. Controlling potential for the copier/printer
2. Correcting power (APC, i.e., Auto Power Control)
3. Determining primary current (VD control)
4. Determining laser output (VL control)
5. Determining developing bias (DC; VDC control)

The control system related to potential control is designed as follows:

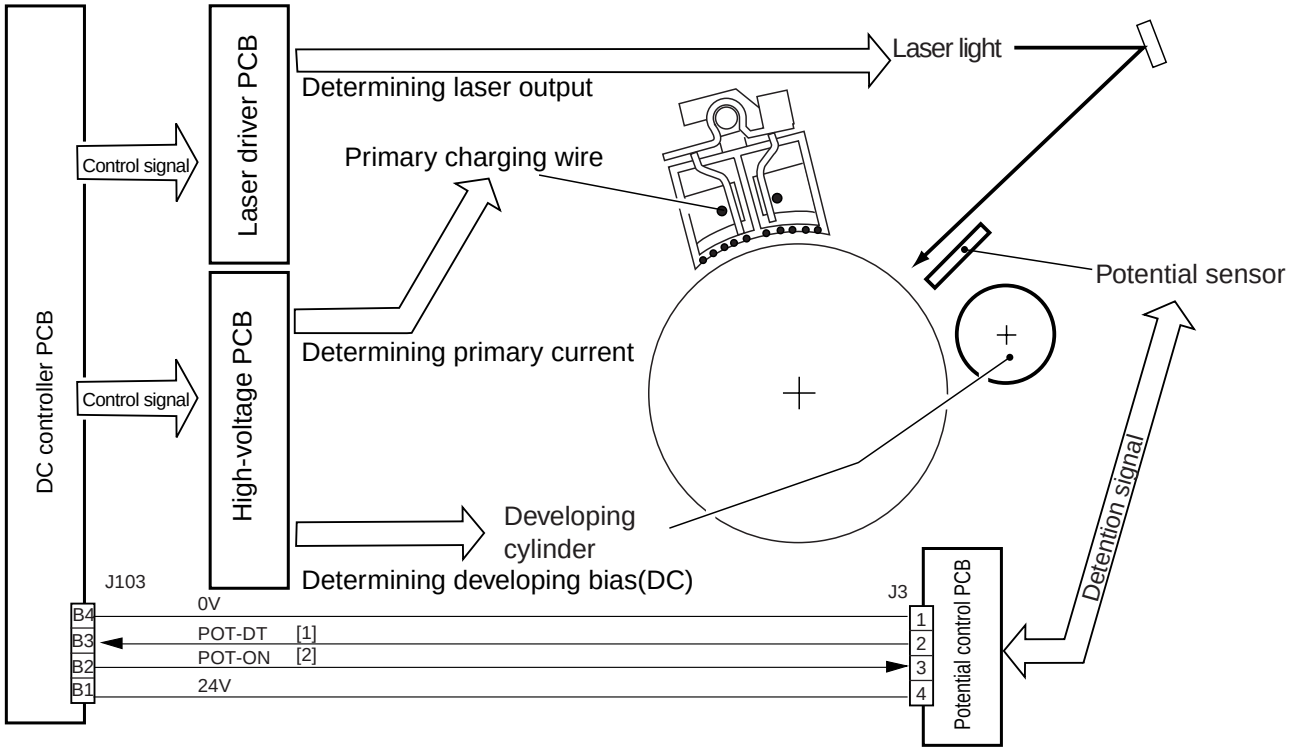

F04-201-01 Block Diagram of the Control System

The signals used are as follows:

[1] POT-DT: drum surface potential measurement value.

[2] POT -ON: when '1', the potential sensor turns on.

2.1.1 Controlling Potential for Printing/Copying

The machine's potential control consists of potential control for printing and level of potential control for copying.

The mechanism used to control potential for printing uses a standard target potential (VD) of 420 V to ensure the reproduction of line widths.

Its mechanism used to control potential for copying uses a standard target level of potential (VD) of 370 V to help limit the consumption of toner.

The potential is controlled at such times as shown below and is of the nature described:

	Warm-up
Purpose	To control potential for copier/printer mode. To set coefficient between copier and printer modes
Conditions	If the fixing temperature is 150°C or lower when the main power switch is on.
Duration	About 10 sec during warm-up
Service Mode	May be turned on/off: COPIER>OPTION>BODY>PO-CNT
Default	ON (potential control for both copier and printer modes)

T04-201-01

As part of making service mode settings, potential control may be enabled or disabled; it may be set for execution 10 min and 60 min after the main power switch is turned on to the following specifics:

	10 and 60 min after main power switch is turned on
Purpose	Sensitivity potential control in keeping with changes in drum temperature. To suit changes in the efficiency of charging.
Conditions	At the start of the first job 10 and 60 min after the main power switch is turned on.
Duration	OFF: not executed (default) Reduced mode: 5 sec (approx.) Standard mode: 10 sec (approx.)
Service Mode	May be turned off or set to reduced or standard:COPIER>OPTION>BODY>PO-CNTMD
Default	OFF

T04-201-02

COPYRIGHT © 2000 CANON INC.

• The sequence of operations is as follows during warm-up.

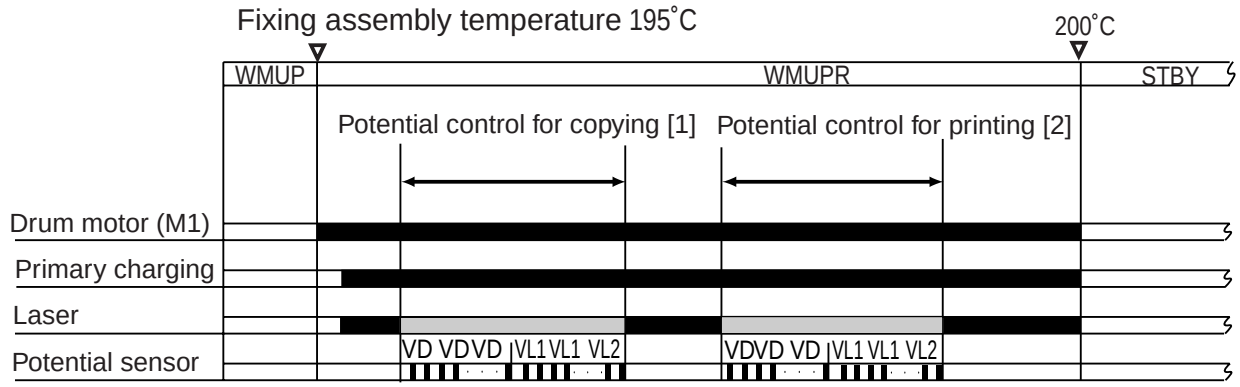

F04-201-02

Note the following about the sequence:

[1] Potential control for copying; potential is measured as follows: of VD, 8 times max; of VL1, 8 times max; of VL2, once.

[2] Potential control for printing; potential is measured as follows: of VD, 8 times max; of VL1, 8 times max; of VL2, once.

COPIER>OPTION>BODY>PO-CNT (turning on/off potential control)

0: potential control OFF

1: potential control ON

- Any of the following three may be selected for potential control executed 10 and 60 min after the main power switch is turned on (COPIER>OPTION>BODY>PO-CNTMD):

[1] OFF (default); no potential control is executed.
[2] Reduced mode; reduces the duration by assuming the potential of the other mode after potential control.
[3] Standard mode; executes potential control for both copying and printing in succession.

- Reduced Mode (selected in service mode)

One of the two types of potential control is selected, while assuming the control value of the other mode.

During warm-up after power-on, the primary current, laser output, and developing bias DC value are determined for copying and printing, and the ratio is stored in memory.

When potential is controlled again after power-on, potential control for the preceding mode used is executed; for the other, the ratio obtained at power-on is used.

The following shows the sequence of operations for reduced mode:

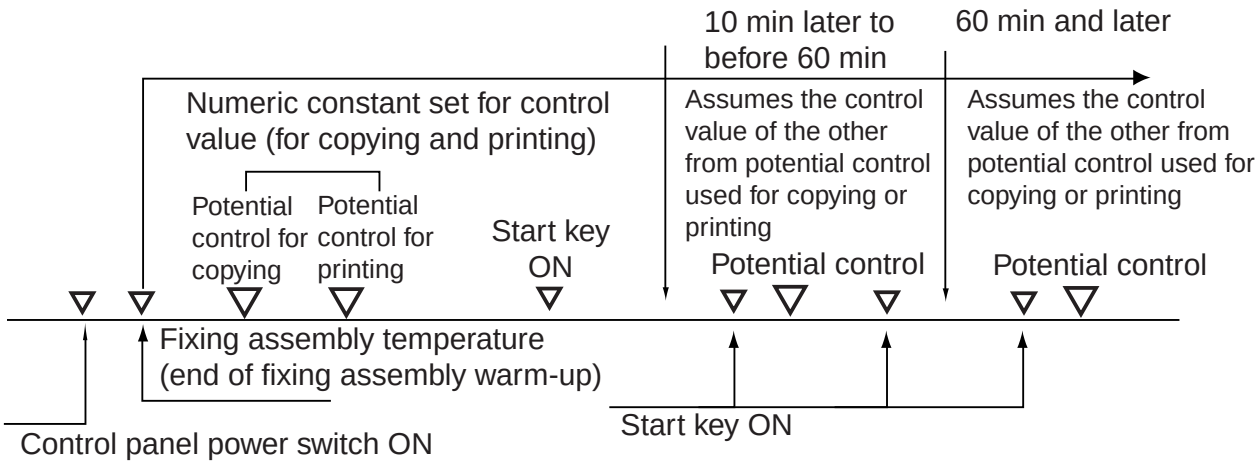

F04-201-03

COPYRIGHT © 2000 CANON INC.

• Standard Mode (selected in service mode)

The two types of potential control (for copying and printing) are executed in succession:

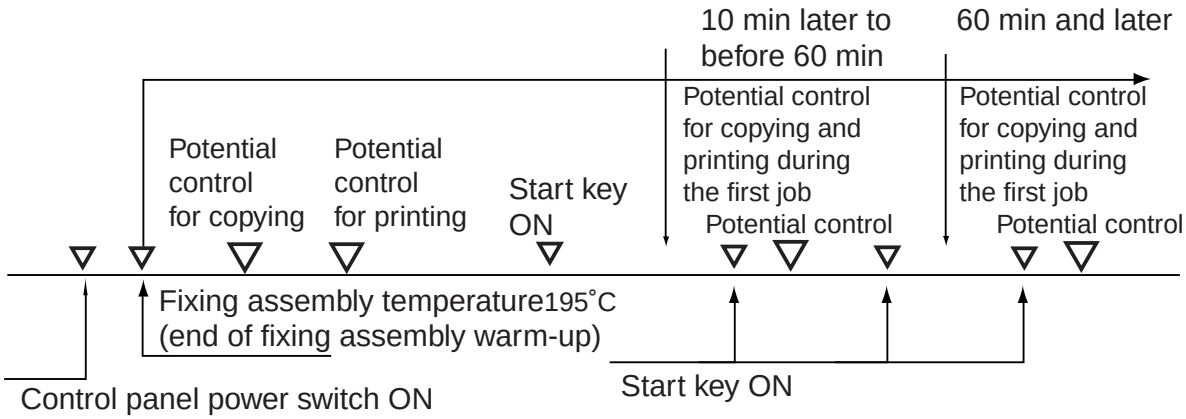

F04-201-04

COPIER>OPTION>BODY>PO-CNT (turning on/off potential control)

0: potential control OFF

1: potential control ON (default)

COPIER>OPTION>BODY>PO-CNTMD (selecting potential control mode)

0: 10 min, 60 min potential control OFF (default)

1: 10 min, 60 min reduced mode

2: 10 min, 60 min normal mode

COPIER>OPTION>TEMPO>F-POT-SW

If transfer separation faults occur because of a fault (error) in the potential sensor, enter '1'.

Use it as an emergency remedy until the potential sensor is replaced.

COPIER>OPTION>TEMPO>F-POT-D

It becomes valid when '1' is set to COPIER>OPTION>TEMPO>F-POT-SW.

0: for text-oriented users (originals with low image ratio; default)

1: for photo-oriented users (originals with high image ratio)

2: to prevent re-transfer (white spots near 50 mm of leading edge)

COPIER>OPTION>TEMPO>F-HUM-SW

Enter '1' if the environment sensor is faulty (out of order).

Use it as an emergency remedy until the environment sensor is replaced.

COPIER>OPTION>TEMPO>F-HUM-D

It becomes valid when '1' is set to COPIER>OPTION>TEMPO>F-HUM-SW.

Enter the humidity reading of the site of installation. (adjustment range: 30% to 99%; default: 35%)

COPYRIGHT © 2000 CANON INC.

COPIER>FUNCTION>DPC>DPC (forced execution of potential control)
ON: executes potential control
COPIER>ADJUST>V-CONT>EPOTOFST (entering offset value for potential sensor)
COPIER>ADJUST>V-CONT>DE-OFST (adjusting Vdc for copying)
COPIER>ADJUST>V-CONT>VD-OFST (entering offset value for VD target potential for copying)
COPIER>ADJUST>V-CONT>DE-OFS-P (adjusting Vdc for printing)
COPIER>ADJUST>V-CONT>VD-OFS-P (entering offset value for VD target potential for printing)
COPIER>FUNCTION>DPC>OFST (adjusting potential sensor offset)
Enter the value indicated on the service label if the RAM on the DC controller PCB has been replaced.
For adjustment, see “Standards and Adjustments” in Chapter 2 of Troubleshooting

COPYRIGHT © 2000 CANON INC.

2.2 Determining Primary Current

To measure the dark area potential (VD) for the first time after the power switch is turned on, the current used during previous measurement is let to flow, and the potential sensor is used to measure the surface potential of the drum.

The DC controller PCB compares the surface potential of the drum against the target potential; if the measured potential is ±6 V or higher than the target value, the primary current is corrected, and the potential is measured once again. The potential is measured as many as eight times, and the primary charging current is corrected as many as eight times.

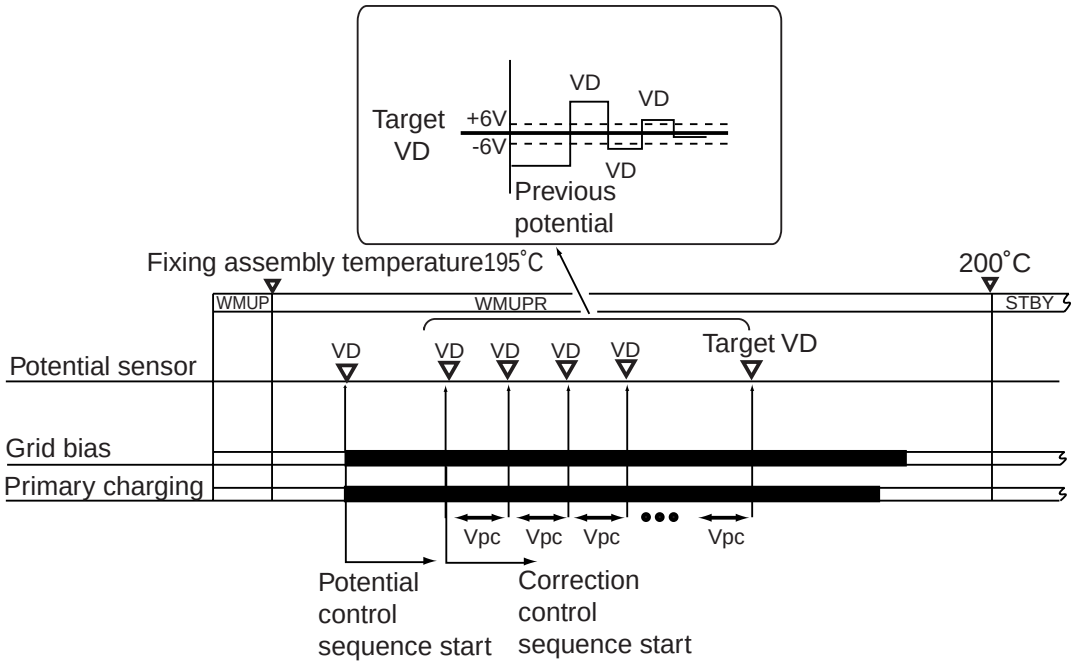

F04--202-01

2.3 Determining the Laser Output

To measure the light area potential (VL1) after the power switch is turned on, the potential based on the previous laser output (LP0) is let to flow, and the surface potential of the drum is measured by the potential sensor.

The DC controller PCB compares the surface potential of the drum against the target potential; if the measured potential is ±6 V or higher, the potential of the laser output is corrected, and the potential is corrected once again.

The potential is measured as many as eight times, and the laser output is corrected as many as eight times. In addition, the developing bias for light area (VL2) is measured under the corrective conditions used to determine the laser output (LP) needed for target potential.

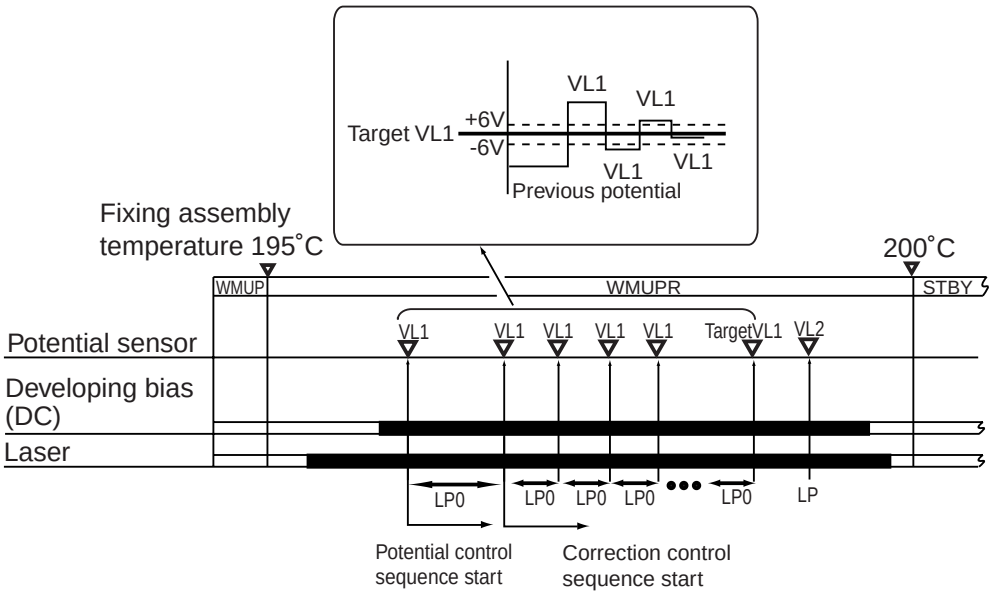

F04-203-01

COPYRIGHT © 2000 CANON INC.

2.4 Determining the Developing Bias

The developing bias (Vdc) is determined as follows based on the drum surface potential (VL2):

Vdc = VL2 + △Vdc

In terms of copying potential, △Vdc = 110 V

In terms of printing potential, △Vdc = 85 to 110 V

(The potential for printing varies in keeping with the reading of the environment sensor to ensure the reproduction of appropriate line widths.)

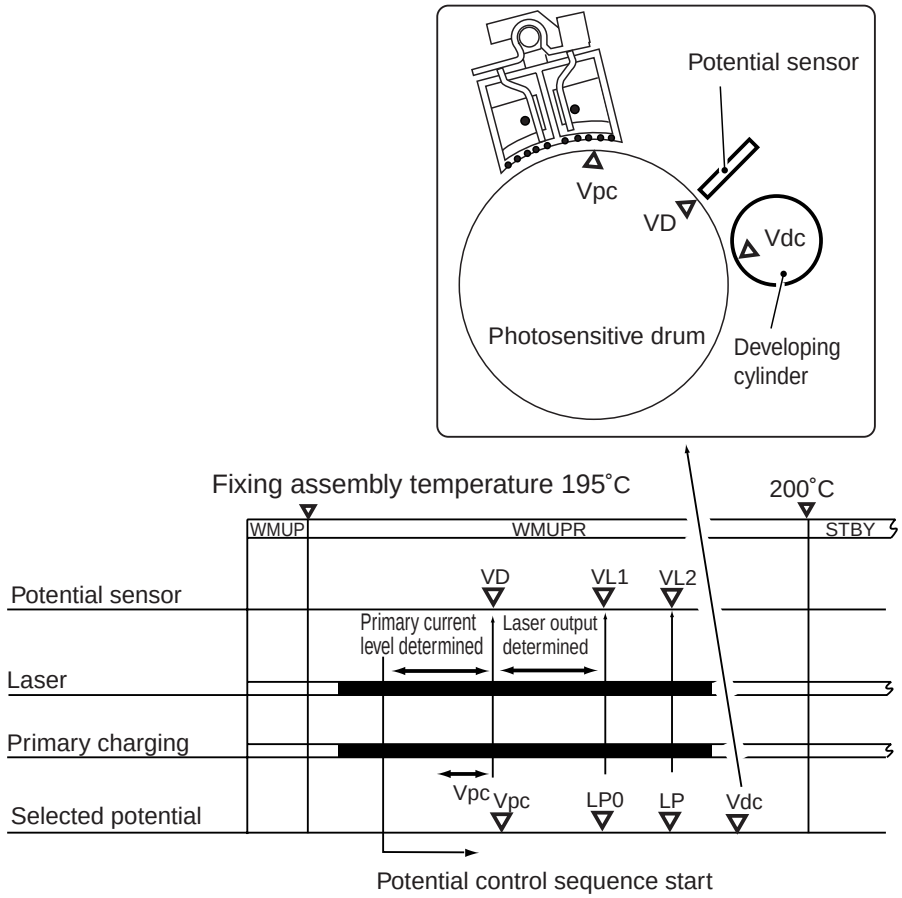

F04-204-01

2.5 APC Correction

The surface potential fluctuates in keeping with the increase/decrease in the laser output caused by changes in laser temperature. To maintain the surface potential to a specific level, the control value of the laser output is corrected.

The following shows the types of correction used for the laser output:

[1] Sheet-to-Sheet APC Control

Purpose: To maintain a specific level of surface potential without lowering productivity when executing jobs in succession, the potential after laser output is measured between sheets, ultimately correcting the control value of the laser output.

Timing: The control is executed during the first sheet-to-sheet interval each minute from the start of continuous printing.

Potential measurement: The drum potential shows a discrepancy around the drum periphery so that the average of potential levels is obtained. Based on the result, an appropriate corrective value is obtained for the laser output. If measurement is not possible for some difficulty (as in measuring between sheets), the attempt at measurement is continued for a further 1 min.

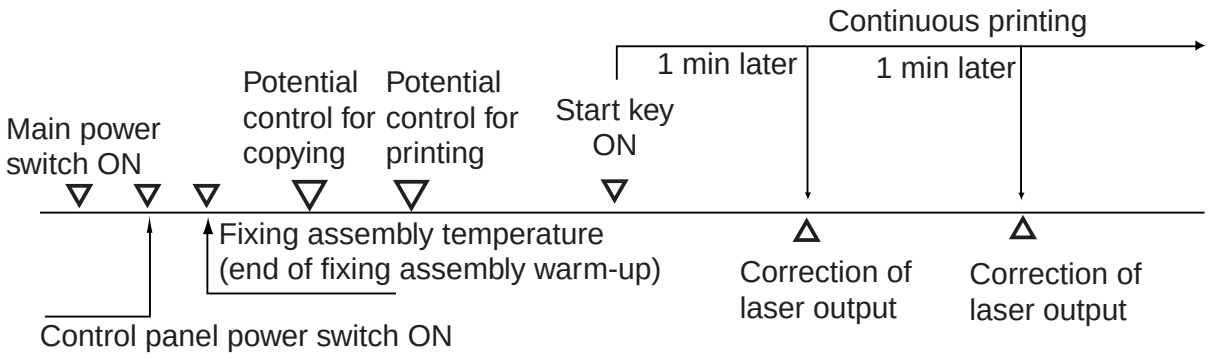

F04-205-01

[2] Initial Rotation APC Control

Purpose: To make up for the change in VL potential in the laser output caused by changes in temperature after a while, the surface potential of the drum is measured, and the control value of the laser output is corrected.

Timing: The control is executed during initial rotation for the first job 60 min after the end of jobs.

Potential measurement: The drum potential shows a discrepancy around the drum periphery so that the average of potential levels is obtained. Based on the result, an appropriate corrective value is obtained for the laser output.

COPYRIGHT © 2000 CANON INC.

[3] Last Rotation APC Control

Purpose: If intermittent printing is repeated in a short period of time, the absence of potential control will change the VL potential of the laser output. To make up for the change, an appropriate correction value is obtained for the laser output control value, and the updated value is used for the next job.

Timing: During last rotation for the first job 30 min after the laser output correction.

Potential measurement: The drum potential shows a discrepancy around the drum periphery so that the average of potential levels is obtained. Based on the result, an appropriate corrective value is obtained for the laser output.



COPIER>OPTION>BODY>LAPC-SW (switching laser APC correction)

0: ON (executes APC if left alone for 10 min)
1: ON (default; executes initial rotation APC if left alone for 60 min.)
2: ON (executes initial rotation APC if left alone for 120 min.)
3: ON (turns off initial rotation APC only)
4: OFF

COPYRIGHT © 2000 CANON INC.

2.6 Density Adjustment in Each Mode

For the following operation modes, the developing bias determined during potential control is corrected, and the result is used as the target value in each specific mode for density adjustment.

[1] Density Adjustment in Copying
Purpose: Density adjustment is executed to obtain a level of density suited to the needs of the user.
Correction: The developing bias is corrected in keeping with the F value setting, and it is also performed as part of image processing.

[2] Density Adjustment During Printing
Purpose: Density adjustment is executed to obtain a level of density suited to the needs of the user.
Correction: The developing bias is corrected in keeping with the F value setting, and it is also performed as part of image processing.

2.6.1 Density Adjustment During Copying

The developing bias is raised to decrease the copy density. Too high a developing bias will result in hazy images, while too low a bias will result in foggy images.

To avoid these problems, the changes in the developing bias are corrected and correction is also executed as part of image processing (binary density processing) near the upper and lower limits of the bias.

F value	Developing DC bias standard value (V)	Shift (V)	Image processing	Image density
1	240	60	Yes	Lighter
2	220	40	No	
3	180	0	No	
4	140	-40	No	
5	120	-60	Yes	Darker

T04-206-01

COPYRIGHT © 2000 CANON INC.

2.6.2 Density Adjustment During Printing

The developing bias is raised to decrease the print density. Too high a developing bias, however, will result in hazy images. Near the lower limit of the developing bias, the changes in the developing bias are corrected and correction is also executed as part of image processing (thickening).

F value	Developing DC bias standard value (V)	Shift (V)	Thickening*1	Image density
1	203	48	No	Lighter
2	190	35	No	
3	179	24	No	
4	167	12	No	
5	155	0	No	
6	138	-17	No	
7	122	-33	No	
8	105	-50	No	
9	105	-50	Yes	Darker

*1: All may be set to 'yes' using 'fine line correction' in user mode.

T04-206-02



COPIER>OPTION-BODY>CNT-W/PR (turning on/off variable density mode during printing)

1: corrects target value to enable changing of density during printing (default).

0: disables changing of density during printing.

COPYRIGHT © 2000 CANON INC.

3. Controlling Charging

3.1 Controlling Pre-Exposure LED

3.1.1 Outline

The machine is equipped with a pre-exposure LED array to prevent adhesion of excess toner to the photosensitive drum because of residual charge, and its system of control serves the following functions:

1. Turning On/Off the Pre-Exposure LED Array

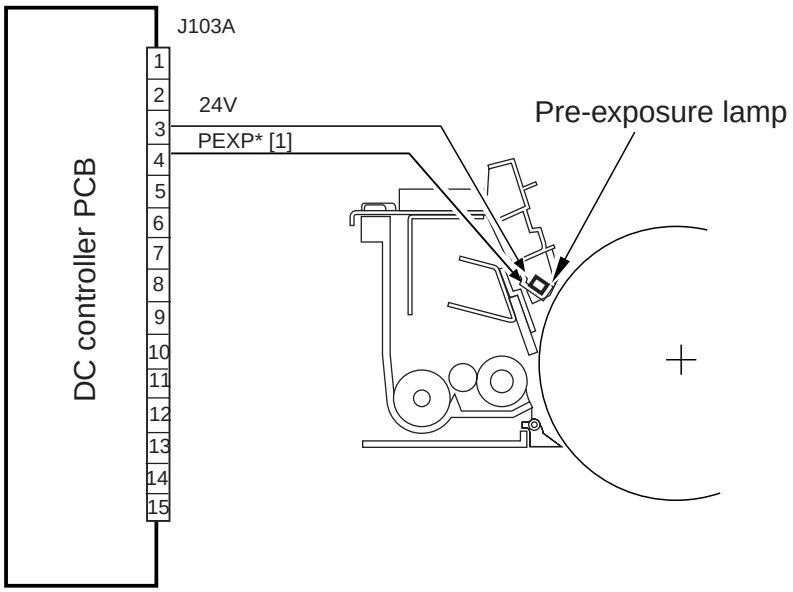

F04-301-01

The system uses the following signals:
[1] pre-exposure LED control signal: when '0', LED turns on.

COPYRIGHT © 2000 CANON INC.

3.2 Controlling Primary Charging

3.2.1 Outline

The primary charging control system serves the following functions:

1. Turning on/off the primary corona current.
2. Controlling the primary corona current to a specific level.
3. Controlling the grid bias to a specific level (fixed to 850 V by varistor).

The system used to control primary charging is constructed as follows:

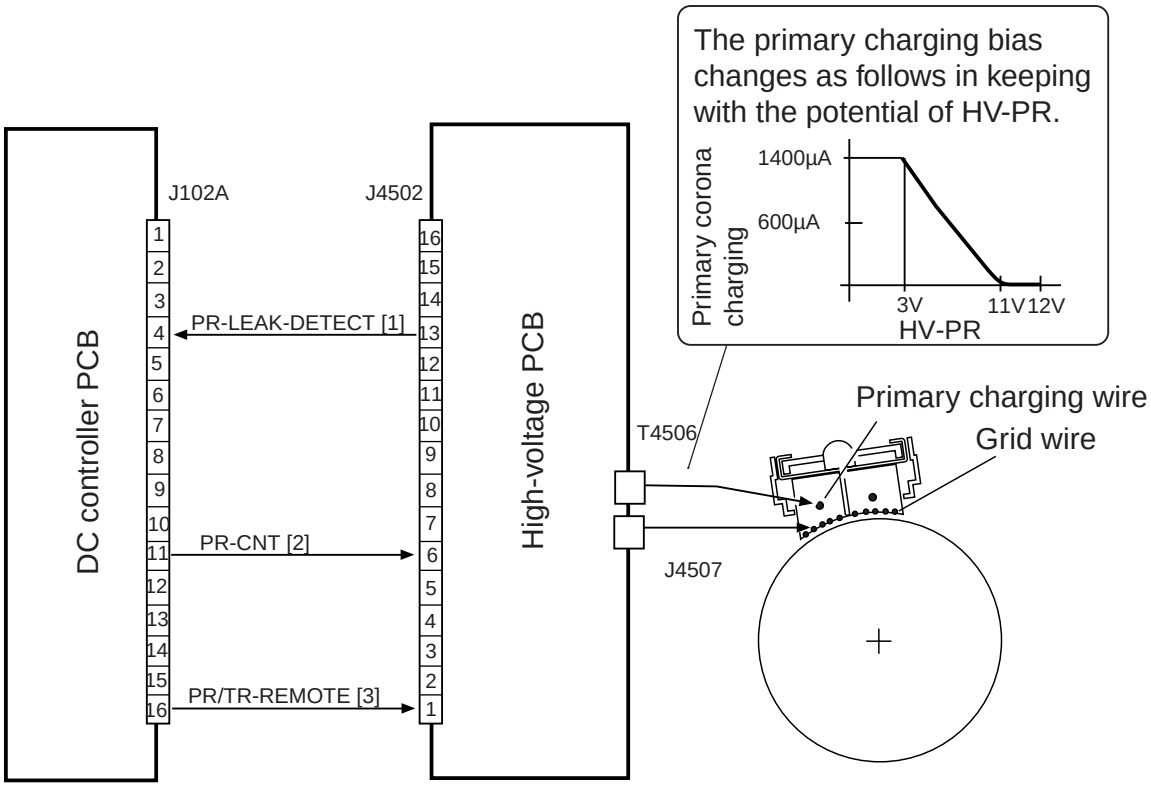

F04-302-01

The following signals are used:

[1] primary charging leakage detection signal; '0' upon detection of an excessively high or low level of current.

[2] primary corona current control signal; the output of the primary corona current turns ON when the voltage is about 3 V or higher or lower than 11 V; it turns OFF when the level is about 12 V or higher.

[3] high-voltage remote signal; turns on/off the output of primary corona current.

COPYRIGHT © 2000 CANON INC.

3.2.2 Primary Charging Assembly Cleaning Mechanism

The system used to clean the primary charging wire is turned on at such times as follows, and the system is constructed as shown in the following figure:

Timing of Cleaning

1. If the temperature of the fixing roller is 100°C or lower at power-on.
2. If wire cleaning is executed in user mode.
3. At the end of making 2000 prints*1 after the end of cleaning.

*1: Default; may be changed in service mode: COPIER>OPTION> BODY>W-CLN-P.

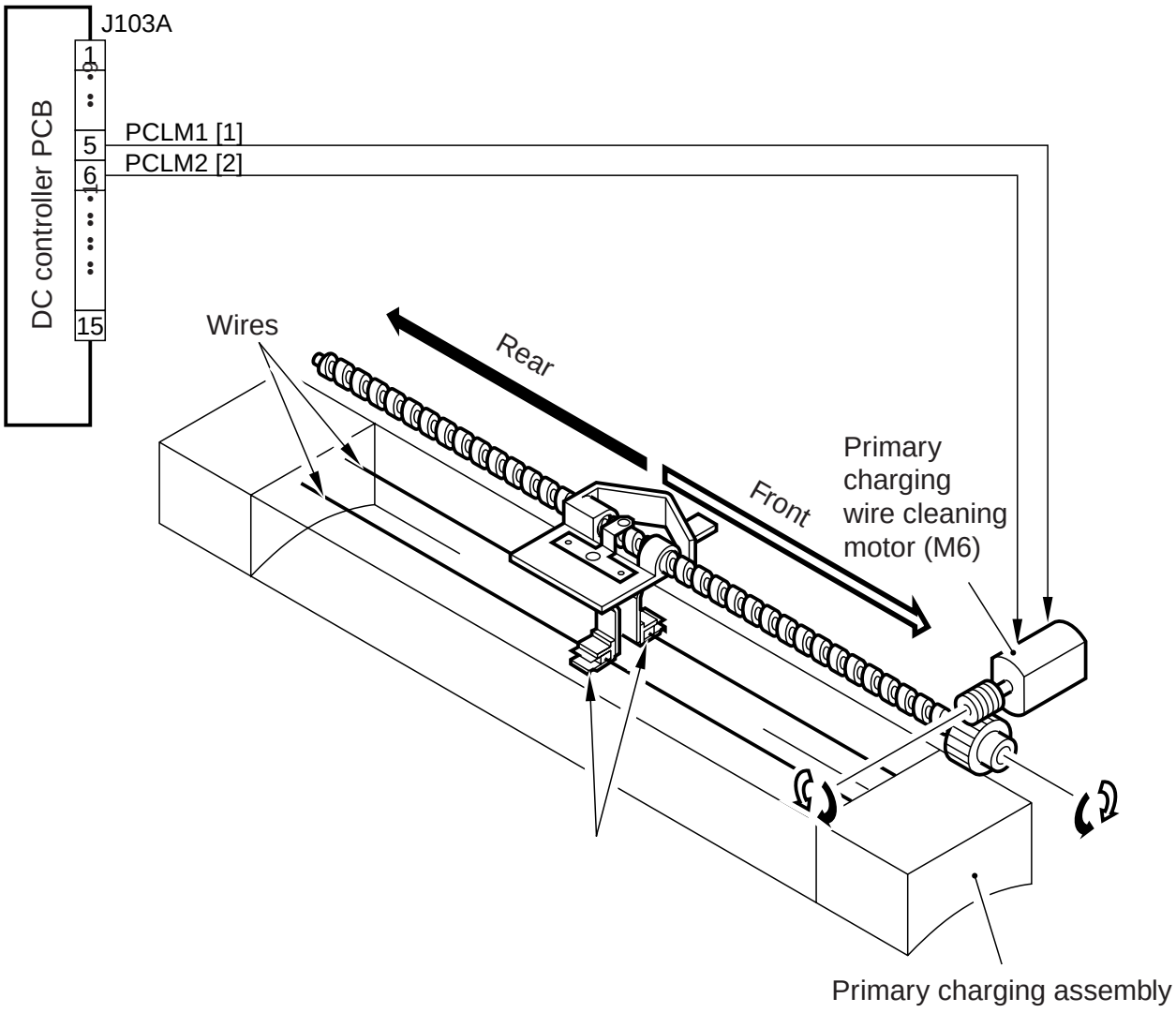

F04-302-02

The following signals are used:

[1] primary charging wire cleaning motor CCW drive signal 1; when '1', the wire cleaner moves to the rear.

[2] primary charging wire cleaning motor CW drive signal 2; when '1', the wire cleaner moves to the front.

COPYRIGHT © 2000 CANON INC.

3.2.3 Others

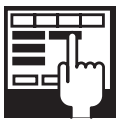

COPIER>ADJUST>HV-PRI-GRID (entering output adjustment value for grid bias)

Enter the value indicated on the service label if the RAM on the DC controller PCB has been replaced.

COPIER>FUNCTION>CLEANING>WIRE-CLN

Execute auto cleaning if (five round trips) the primary charging wire or the transfer charging wire has been replaced.

COPIER>OPTION>BODY>W-CLN-P

Set the intervals at which auto cleaning of the primary charging wire is executed in terms of the number of prints.

COPYRIGHT © 2000 CANON INC.

3.3 Dust-Collecting Roller Bias

3.3.1 Outline

The machine is equipped with a dust-collecting roller for collection of stray toner occurring after development. The toner found on the surface of the dust-collecting roller is removed by a scraper.

The dust-collecting roller bias is controlled for the following:

1. Turning on/off the dust-collecting roller bias.

The system used to control the dust-collecting roller is constructed as follows:

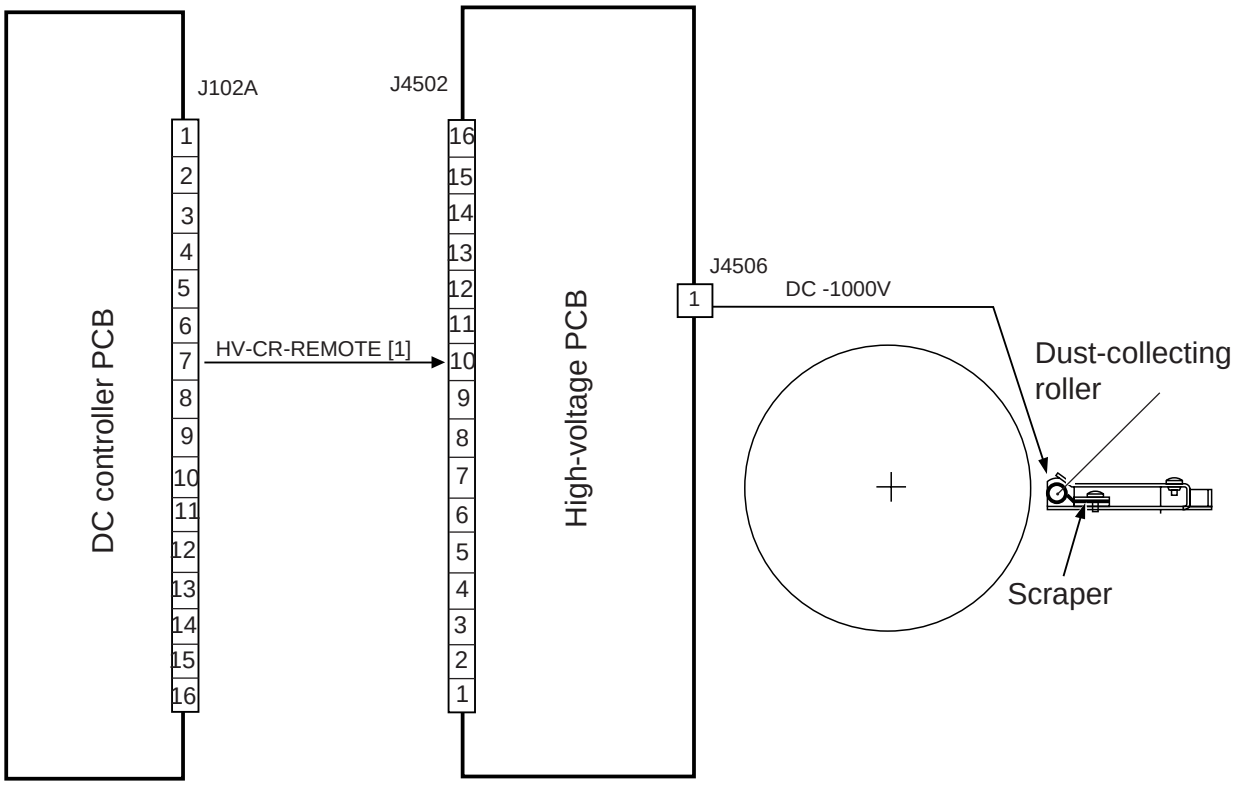

F04-303-01

The following signal is used for the system:

[1] dust-collecting roller bias remote signal; if '1', the dust-collecting roller bias turns on.

COPYRIGHT © 2000 CANON INC.

3.4 Controlling the Pre-Transfer Charging

3.4.1 Outline

The system used for pre-transfer charging serves the following functions:

1. Controlling the DC bias to a specific level of current.
2. Controlling the AC bias to a specific level of voltage.
3. Controlling the output to suit the environment (fuzzy control).

The system used to control the pre-transfer charging is constructed as follows:

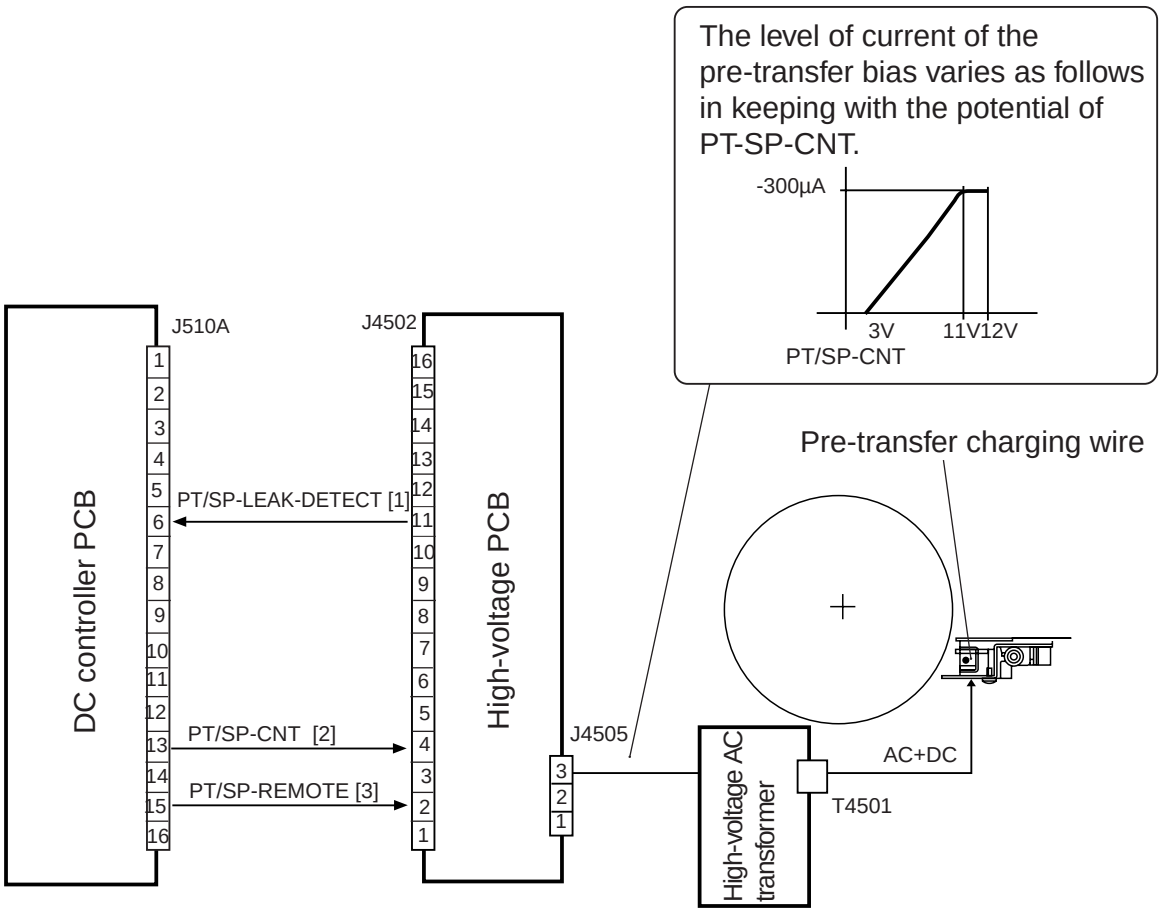

F04-304-01

The following signals are used:

[1] pre-transfer/separation charging leakage detection signal: '0' when an excessively high or low level of current is detected.

[2] pre-transfer charging control signal; the output of pre-transfer current turns ON when the voltage is about 3 V or more and less than 11 V; it turns OFF when the voltage is about 12 V or more.

[3] pre-transfer/separating charging remote signal; turns on/off the output of the pre-transfer/separation current.

3.4.2 Controlling the Output to Suit the Environment (fuzzy control)

The pre-transfer charging current is optimized in relation to the site conditions (i.e., base on the data from the environment sensor).

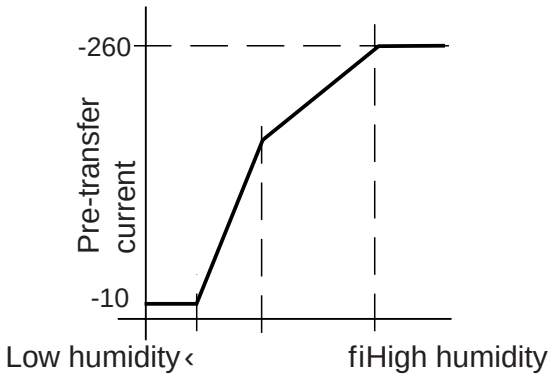

F04-304-02



COPIER>OPTION>BODY>FUZZY (turning on/off fuzzy control)

0: fuzzy control ON (default)
1: low humidity mode (uses a lower-than-standard pre-transfer charging current)
2: normal humidity mode
3: high humidity mode (use higher-than-standard pre-transfer charging current)

Setting it to '1' through '3' will make the control independent of the reading from the environment sensor.

COPYRIGHT © 2000 CANON INC.

3.4.3 Cleaning Mechanism for the Pre-Transfer Charging Assembly

The pre-transfer charging wire is cleaned at such times as shown below, and its cleaning mechanism is constructed as follows:

Timing of Cleaning

1. If the temperature of the fixing roller is 100°C or lower at power-on.
2. When wire cleaning is executed in user mode.
3. At the end of last rotation for printing of each 2000 prints*1.

*1: Default; may be changed in service mode: COPIER>OPTION>BODY>W-CLN-P.

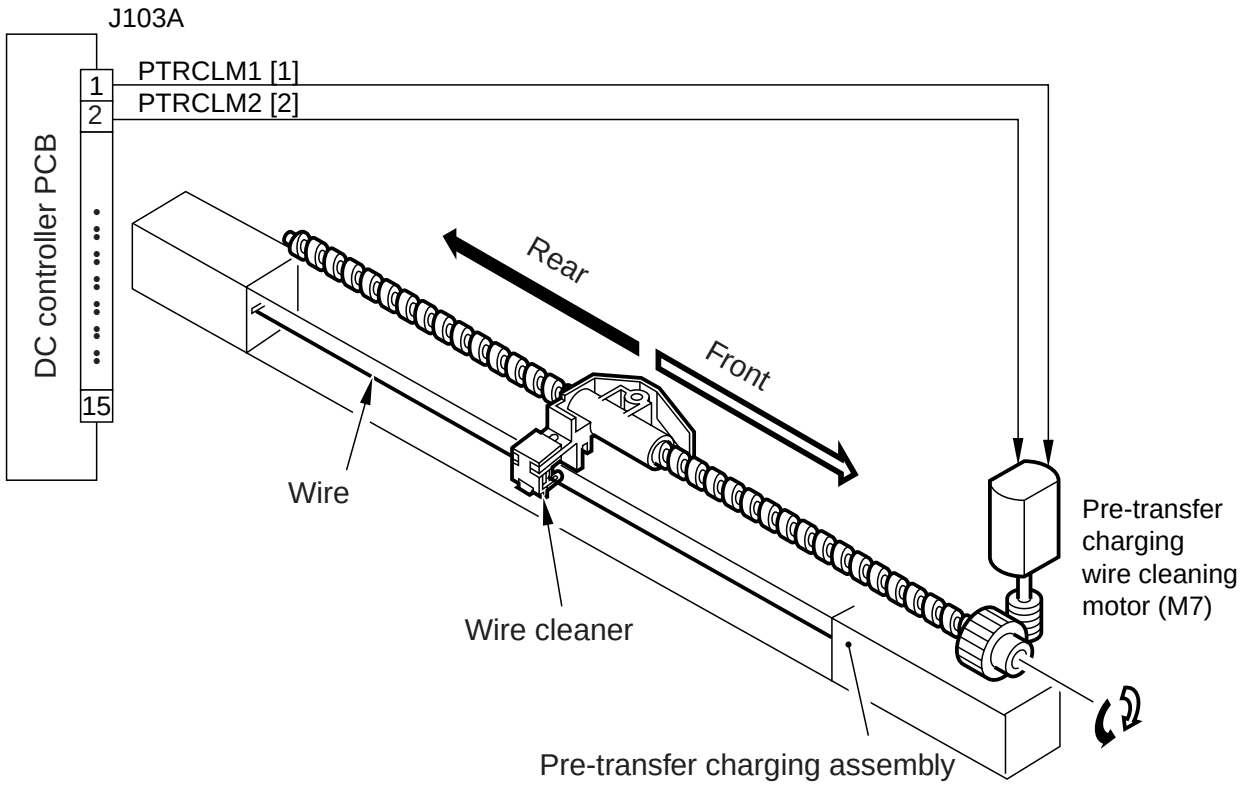

F04-304-03

The following signals are used:

[1] pre-transfer charging wire cleaning motor CW drive signal; when '1', the wire cleaner moves to the rear.

[2] pre-transfer charging wire cleaning motor CCW drive signal; when '1', the wire moves to the front.

3.4.4 Others



COPIER>ADJUST>HV-TR>PRE-TR (entering the output adjustment value of pre-transfer charging wire current)

Enter the value indicated on the service label if the RAM on the DC controller PCB has been cleared.

COPIER>ADJUST>HV-TR>H-PRE-TR (entering the offset value of pre-transfer high-voltage output for high-voltage unit)

Enter the value indicated on the label attached to the new high-voltage unit if the RAM on the DC controller PCB has been cleared or the high-voltage unit has been replaced.

COPIER>ADJUST>HV-TR>D-PRE-TR (entering offset value of pre-transfer high-voltage output of DC controller PCB)

Enter the value indicated on the label attached to the new DC controller PCB if the RAM on the DC controller PCB has been cleared or the DC controller PCB has been replaced.

COPIER>OPTION>BODY>W-CLN-P

Set the intervals at which auto cleaning of the primary charging wire is executed in terms of the number of prints

COPYRIGHT © 2000 CANON INC.

3.5 Controlling Transfer Charging

3.5.1 Outline

The system used to control transfer charging serves the following functions:

1. Controlling the DC bias to a specific level of current.
2. Controlling the output to suit the environment (fuzzy control).

The following shows the construction of the control system related to the transfer charging control system.

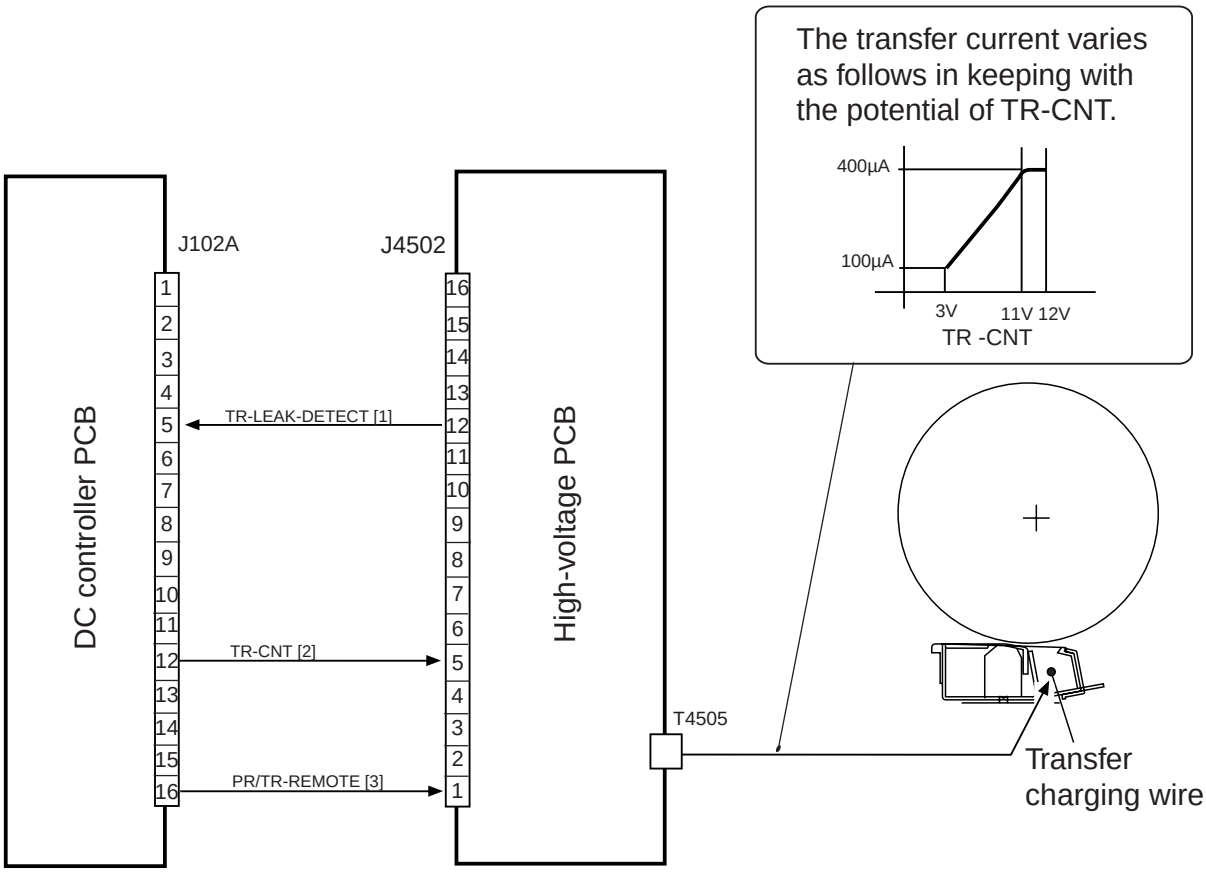

F04-305-01

The system uses the following signals:

[1] transfer charging leakage detection signal; '0' when an excessively high or low current is detected.

[2] transfer charging current control signal; when about 3 V or higher and lower than 11 V, the output of the transfer current turns ON; when about 12 V or higher, it turns OFF.

[3] high-voltage remote signal; turns on/off the transfer current output.

3.5.2 Controlling the Output to Suit the Environment (fuzzy control)

The output of the transfer current is optimized to suit the environment (identified using data from the environment sensor).

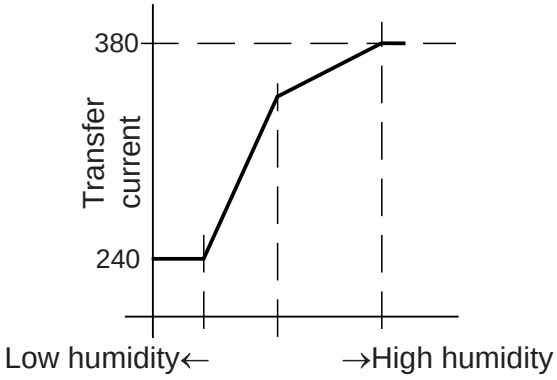

F04-305-02



COPIER>OPTION>BODY>FUZZY (turning on/off; fuzzy control)

0: fuzzy control ON (default)
1: low humidity environment mode (pre-transfer charging current lower than standard)
2: normal humidity environment mode
3: high humidity environment mode (pre-transfer charging current higher than standard)

Setting it to '1' through '1' will make control independent of the environment sensor.

COPYRIGHT © 2000 CANON INC.

3.5.3 Cleaning Mechanism for the Transfer Charging Assembly

The transfer charging wire is cleaned at such times as follows, and its control mechanism is constructed as follows:

Timing of Cleaning

1. If the temperature of the fixing roller is 100°C or lower at power-on.
2. When cleaning is executed in user mode.
3. At the end of making 2,000 prints*1 after cleaning

*1: Default; may be changed in service mode: COPIER>OPTION>BODY>W-CLN-P.

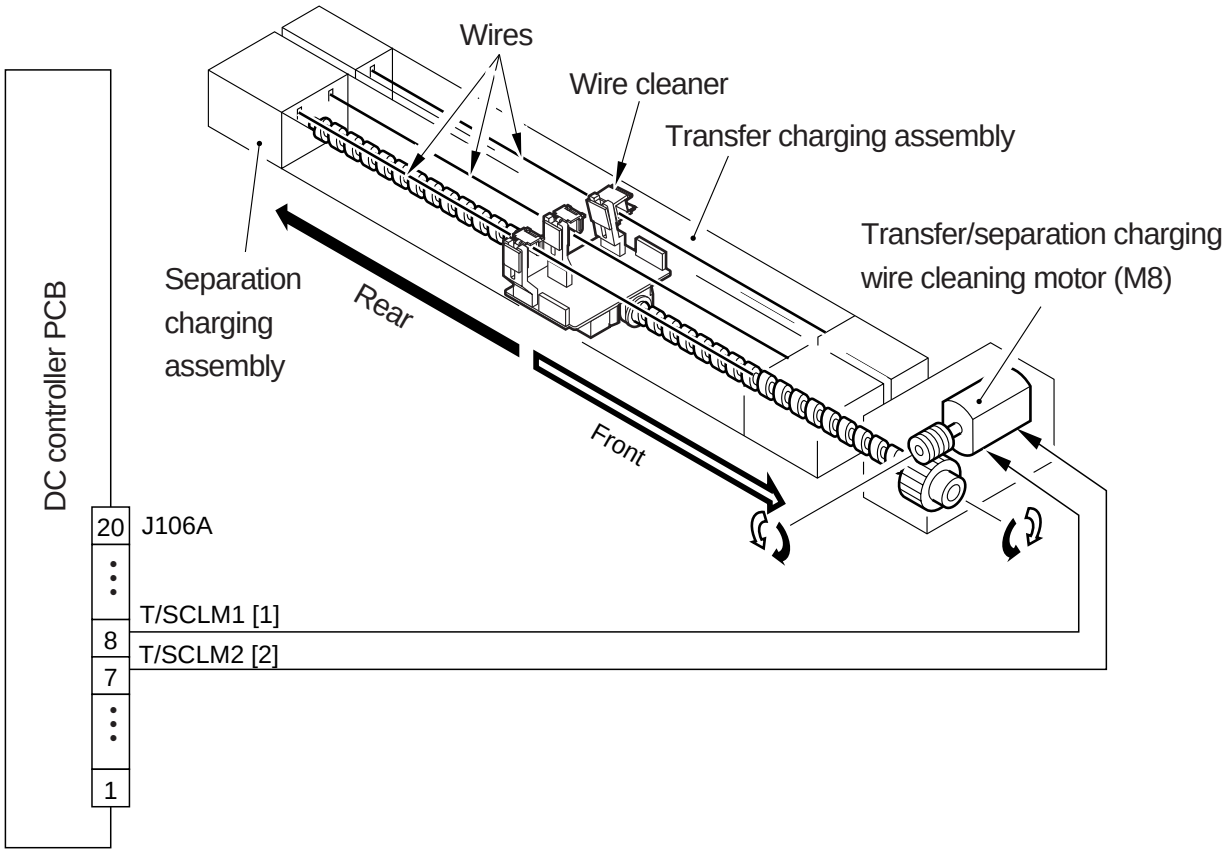

F04-305-03

The system uses the following signals:

[1] transfer charging wire cleaning motor CW drive signal; when '1', the wire cleaner moves to the rear.

[2] transfer charging wire cleaning motor CCW drive signal; when '1', the wire cleaner moves to the front.

3.5.4 Others



COPIER>ADJUST>HV-TR>TR-N1
(Use it to adjust the output of the transfer charging current for the first side of a double-sided print or for a single-sided print of plain paper.)
COPIER>ADJUST>HV-TR>TR-N2
(Use it to adjust the output of the transfer charging current for the second side of a duplexing print of plain paper.)
Enter the value indicated on the service label if the RAM on the DC controller PCB has been cleared.
COPIER>ADJUST>HV-TR>HVT-TR
(Use it to enter the offset value for the transfer high-voltage output of the high-voltage unit.)
Enter the value indicated on the label attached to the new high-voltage unit if the RAM on the DC controller PCB has been cleared or the high-voltage unit has been replaced.
COPIER>ADJUST>HV-TR>D-HV-TR
(Use it to enter the offset value for the thermistor high-voltage output of the DC controller PCB.)
Enter the value on the label attached to the DC controller PCB if the RAM on the DC controller PCB has been cleared or the DC controller PCB has been replaced.
COPIER>FUNCTION>CLEANING>WIRE-CLN
Execute auto cleaning of the charging wire (five round trips) if the primary charging wire or the transfer charging wire has been replaced.
COPIER>OPTION>BODY>W-CLN-P
Set the interval at which auto cleaning of the charging wire is executed in terms of the number of prints.

COPYRIGHT © 2000 CANON INC.



COPIER>OPTION>BODY>TR-SP-C1
(Use it to switch the transfer/separation output value for pickup from the right deck.)
COPIER>OPTION>BODY>TR-SP-C2
(Use it to switch the transfer/separation output for pickup from the left deck.)
COPIER>OPTION>BODY>TR-SP-C3
(Use it to switch the transfer/separation output value for pickup from the cassette 3.)
COPIER>OPTON>BODY>TR-SP-C4
(Use it to switch the transfer/separation output value for pickup from the cassette 4.)
COPIER>OPTION>BODY>TR-SP-MF
(Use it to switch the transfer/separation output for pickup from the manual feed tray.)
COPIER>OPTION>BODY>TR-SP-DK
(Use it to switch the transfer/separation output for pickup from the side paper deck.)
The transfer/separation output value is switched for pick up from each respective source of paper with the aim of responding to various problems:
0: normal (default)
1: prevents double transfer
2: prevents separation faults
3: prevents transfer faults

COPYRIGHT © 2000 CANON INC.

3.6 Controlling Separation Charging

3.6.1 Outline

The system used to control separation charging serves the following functions:

1. Controlling the DC bias to a specific level of current.
2. Controlling the AC bias to a specific level of voltage.
3. Corrects the output to suit the environment and the density of the original used (surface potential of the drum; fuzzy control).

The system used to control separation charging is constructed as follows:

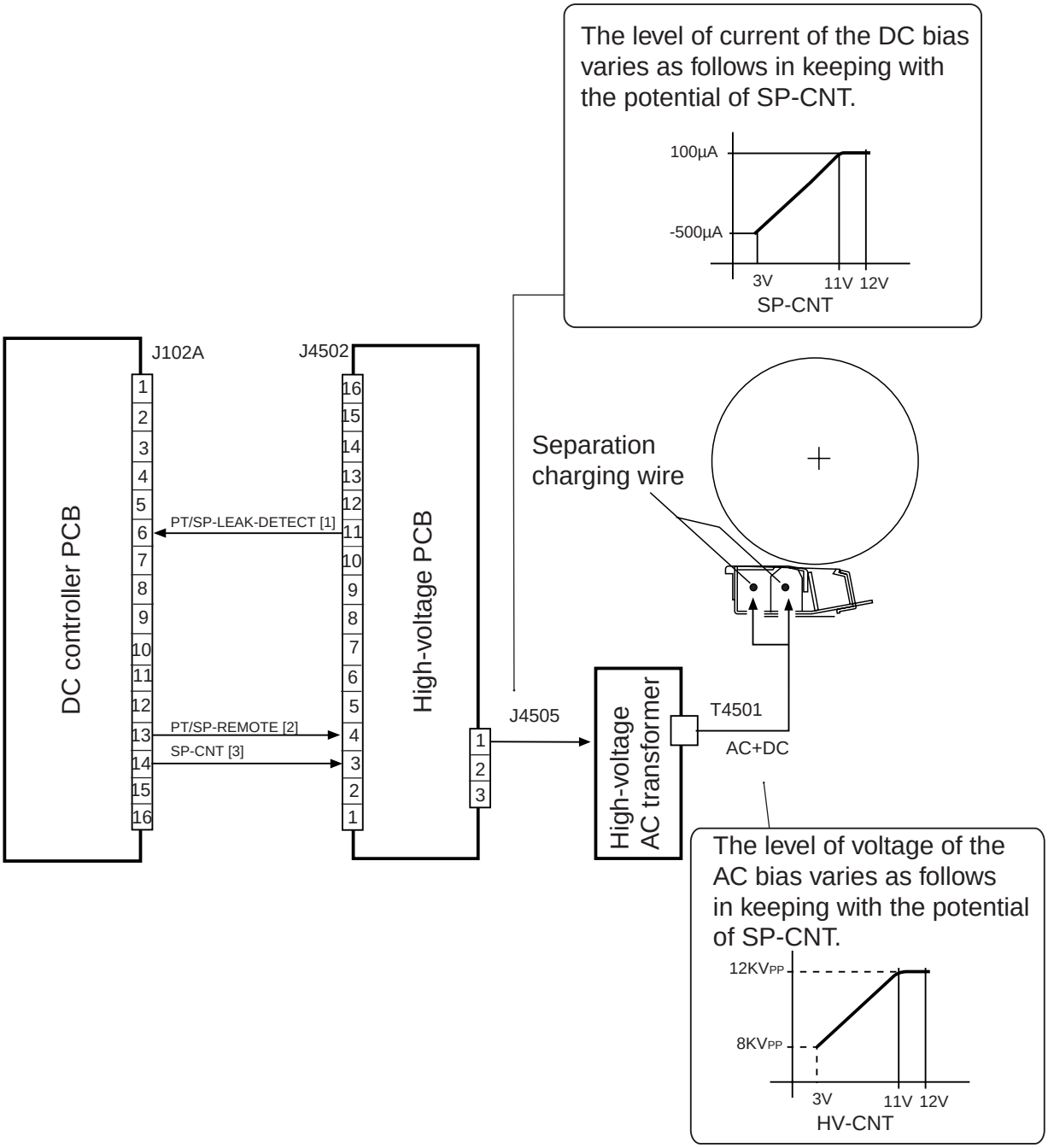

F04-306-01

COPYRIGHT © 2000 CANON INC.

The following signals are used:

[1] separation charging leakage detection signal; '0' when an excessively high or low level of current is detected.

[2] separation charging current control signal; when about 3 V or higher and lower than 11 V, the output of the separation current turns ON; when about 12 V or higher, it turns OFF.

[3] separation charging remote signal; turns on/off the output of the separation current.

COPYRIGHT © 2000 CANON INC.

3.6.2 Correcting the Output to Suit the Environment and the Density of the Original Used

The output of separation current is optimized to suit the environment (identified by data from the environment sensor) and the density of the original used (surface potential of the drum); the control is in the three levels of High, Medium, and Low.

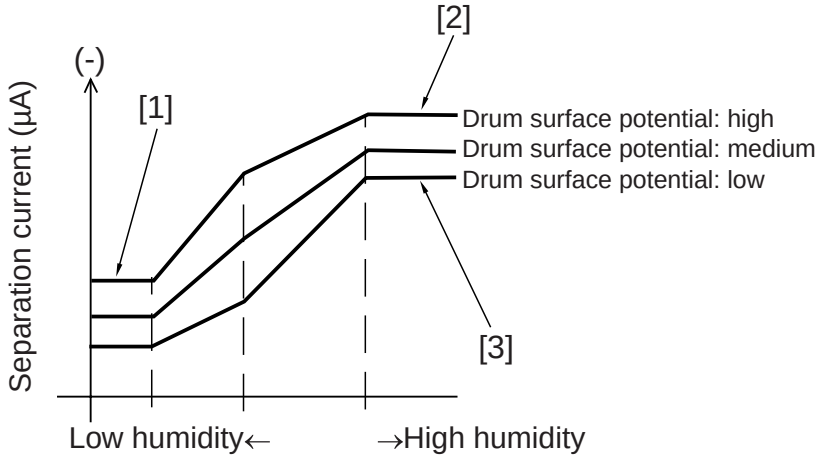

F04-306-02

[1] In a low humidity environment, paper becomes dry, tending to become charged (high resistance); the output is decreased to make up for this.
[2] If the potential of the drum is low, increase the output to prevent separation faults.
[3] If the potential of the drum is high, decrease the level of current to prevent double transfer.

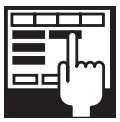

COPIER>OPTION>BODY>FUZZY (turning on/off fuzzy control)

0: fuzzy control ON (default)
1: low humidity mode (uses a lower-than-standard level of pre-transfer charging current)
2: normal humidity environment mode
3: high humidity environment mode (uses a higher-than-standard level of transfer charging current)

Setting to '1' through '3' makes the mechanism independent of the environment sensor.

COPYRIGHT © 2000 CANON INC.

3.6.3 Others



COPIER>ADJUST>HV-SP>SP-N1 (Use it to adjust the output for the first side of a double-side print or for a single-sided print of plain paper.)
COPIER>ADJUST>HV-SP>SP-N2 (Use it to adjust the output of the second side of a double-sided print of plain paper.)
If the RAM on the DC controller PCB has been cleared, enter the value indicated on the service label.
COPIER>AJDUST>HV-SP>HVT-SP (Enter the offset value for the separation high-voltage output of the high-voltage unit.)
Enter the value indicated on the label attached to the new high-voltage unit if the RAM on the DC controller PCB has been cleared or the high-voltage unit has been replaced.
COPIER>ADJUST>HV-SP>D-HV-SP (Use it to enter the offset for the separation high-voltage of the DC controller PCB.)
Enter the value indicated on the new DC controller PCB if the RAM on the DC controller PCB has been cleared or the DC controller PCB has been replaced.



COPIER>OPTION>BODY>TR-SP-C1 (Use it to switch the transfer/separation output value for pickup from the right deck.)
COPIER>OPTION>BODY>TR-SP-C2 (Use it to switch the transfer/separation output value for pickup from the left deck.)
COPIER>OPTON>BODY>TR-SP-C3 (Use it to switch the transfer/separation output value for pickup from the cassette 3.)
COPIER>OPTION>BODY>TR-SP-C4 (Use it to switch the transfer/separation output for pickup from the cassette 4.)
COPIER>OPTION>BODY>TR-SP-MF (Use it to switch the transfer/separation output for pickup from the manual feed tray.)
COPIER>OPTION>BODY>TR-SP-DK (Use it to switch the transfer/separation output for pickup from the side paper deck.)
The transfer/separation output value is switched for each source of paper to prevent various problems:
0: normal (default)
1: prevents double transfer
2: prevents separation faults
3: prevents transfer faults

COPYRIGHT © 2000 CANON INC.

4. Hopper/Developing Assembly

4.1 Outline

The following component parts are associated with the developing assembly:

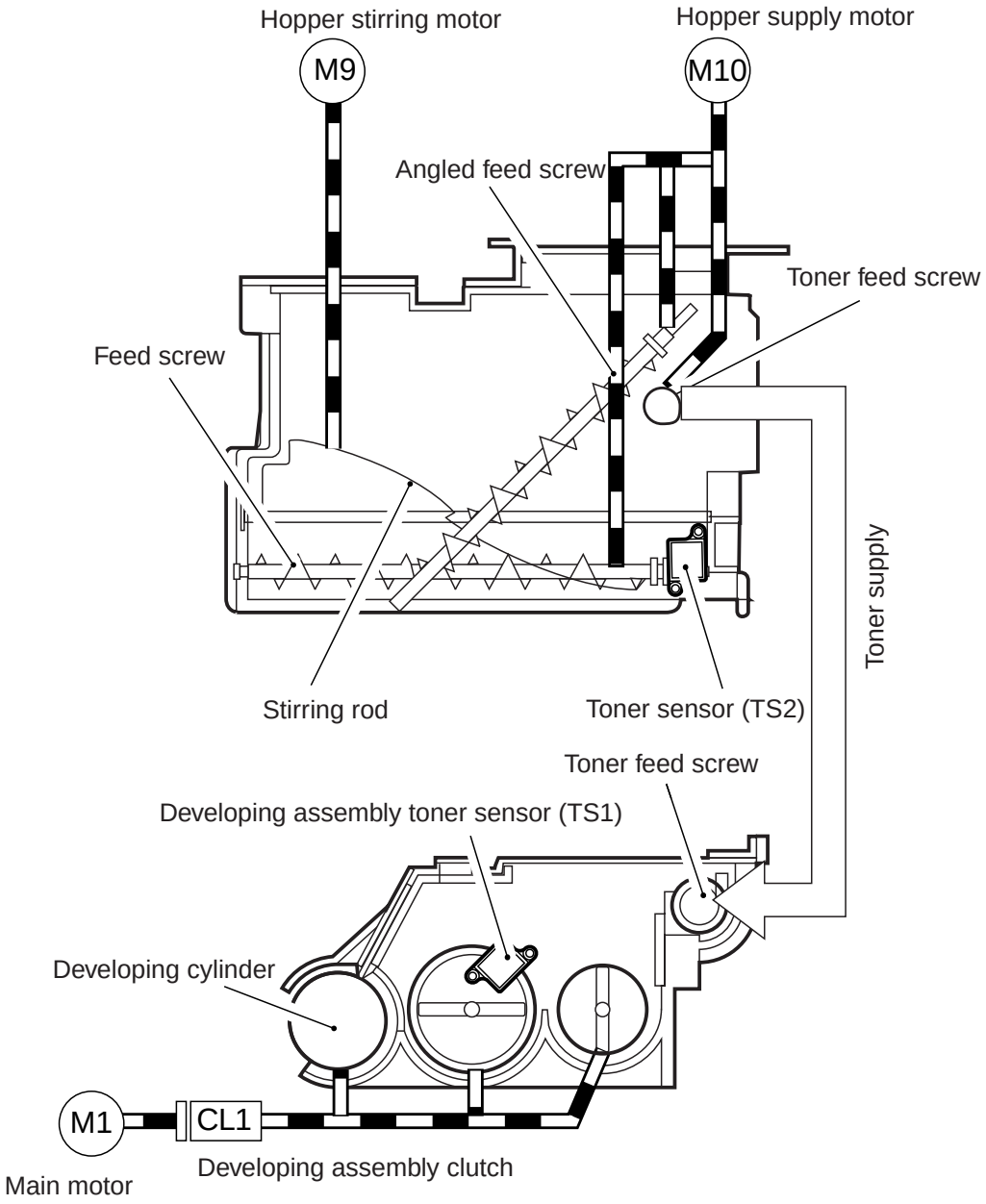

F04-401-01

COPYRIGHT © 2000 CANON INC.

4.2 Controlling the Drive to the Hopper/Developing Assembly

The system used to control the drive of the developing assembly is constructed as follows:

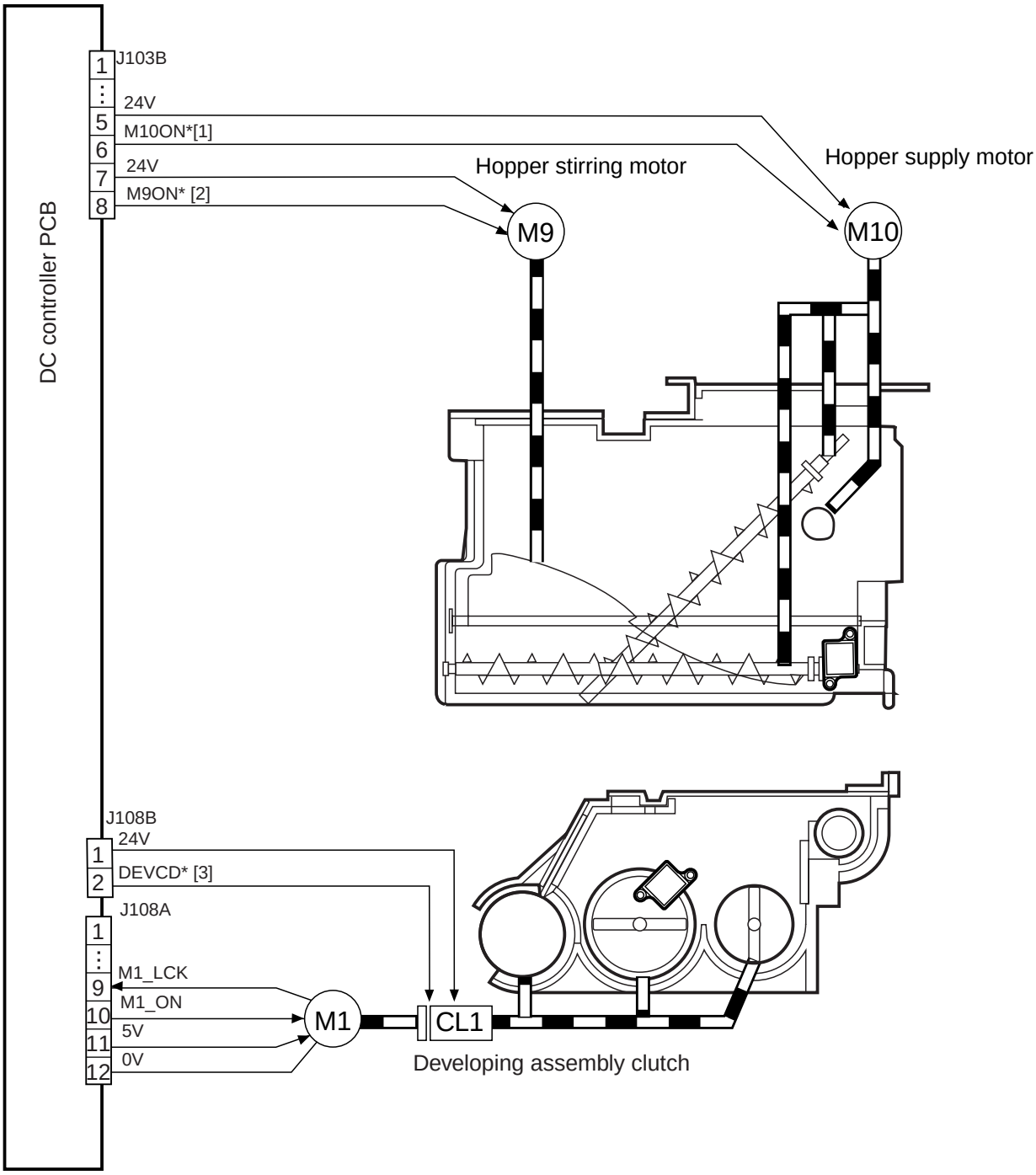

F04-402-01

The following signals are used:

[1] hopper stirring motor drive signal; when '0', the motor rotates to stir the toner.
[2] hopper supply motor drive signal; when '0', the motor rotates to supply toner.
[3] developing assembly clutch drive signal; when '0', the developing assembly clutch turns on.

COPYRIGHT © 2000 CANON INC.

4.3 Controlling the Developing Bias

The system used to control the developing bias serves the following functions:

[1] Controlling the DC bias to a specific level of voltage.

[2] Controlling the AC bias to a specific level of voltage.

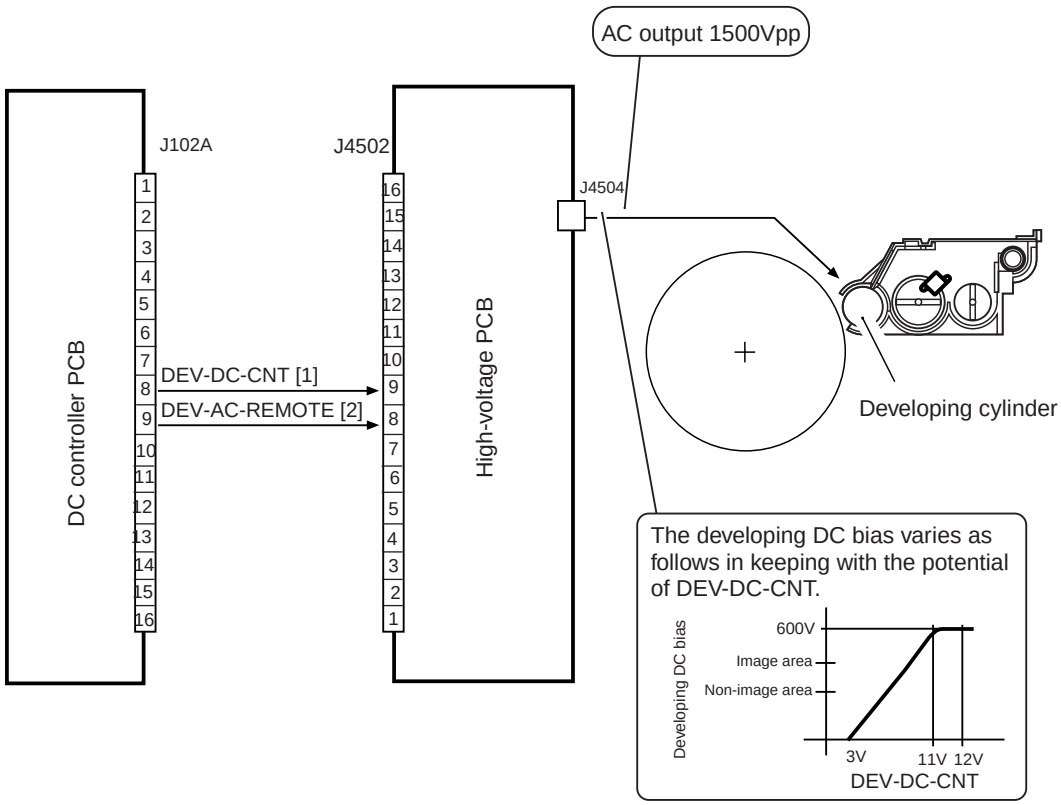

F04-403-01

The following signals are used:

[1] developing DC bias current control signal; if about 3 V or higher and lower than 11 V, the output of developing DC bias current turns ON; if about 12 V or higher, it turns OFF.

[2] developing DC bias remote signal; turns on/off the output of developing DC bias current.

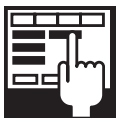

COPIER>ADJUST>DEVELOP>BIAS

(Use it to enter the adjustment value for developing bias.)

Enter the value indicated on the service lable if the RAM on the DC controller PCB has been cleared (from 0 to obtain darker images to 600 to obtain lighter image).

COPIER>ADJUST>DEVLEOP>HVT-DE

(Use it to enter the offset value for the output of developing high voltage for the high-voltage unit.)

Enter the value indicated on the label attached to the new high-voltage unit if the RAM on the DC controller PCB has been cleared or the DC controller PCB has been replaced (from 100 to obtain lighter images to +100 to obtain darker images).

COPIER>ADJUST>DEVELOP>D-HV-DE

(Use it to enter the offset value for the output of developing high voltage of the DC controller PCB.)

Enter the value indicated on the label attached to the DC controller PCB if the RAM on the DC controller PCB has been cleared or the DC controller PCB has been replaced. (from -100 to obtain lighter images to +100 to obtain darker images).

COPIER>ADJUST>V-CONT>DE-OFST

(adjusting Vdc for copying)

COPIER>ADJUST>V-CONT>DE-OFST-P

(adjusting Vdc for printing)

Enter the value indicated on the service label if the RAM on the DC controller PCB has been cleaned.

COPYRIGHT © 2000 CANON INC.

4.4 Detecting the Level of Toner and Controlling the Supply of Toner

The following component parts are associated with the toner supply system:

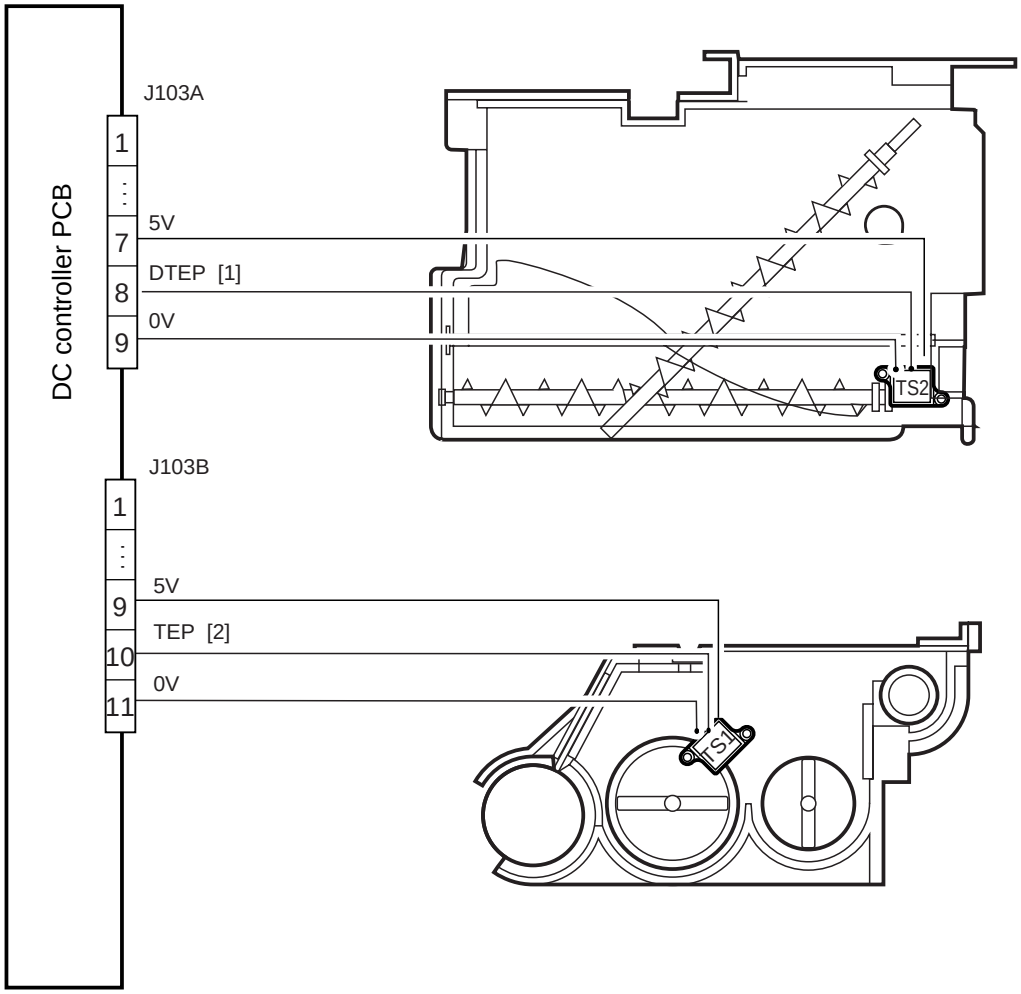

F04-404-01

The following signals are used:

[1] developing assembly toner level detection signal; when the absence of toner is detected, '0'.

[2] hopper toner level detection signal; when the absence of toner is detected, '0'.

4.4.1 Sequence of Operations (toner supply)

The toner inside the developing assembly is monitored by the developing assembly toner sensor (TS1); when it drops below a specific level, the developing assembly toner level signal goes '0' and is sent to the DC controller PCB.

When the DC controller PCB detects the developing assembly toner level signal for 0.3 sec or more, the hopper motor drive signal will be issued so that the hopper will start to supply toner.

The supply of toner stops when the toner inside the developing assembly reaches a specific level and, as a result, the developing assembly toner level signal '1' is detected for 0.7 sec or more.

The level of toner inside the hopper is monitored by the hopper toner sensor while toner is supplied by the hopper motor or toner is being stirred.

When the toner inside the hopper drops below a specific level, the hopper toner level detection signal goes '0'. When the DC controller PCB detects the signal for 1.9 sec or more, the machine will indicate the Add Toner message on its control panel.

The following shows the sequence of operations used by the hopper to supply the developing assembly with toner.

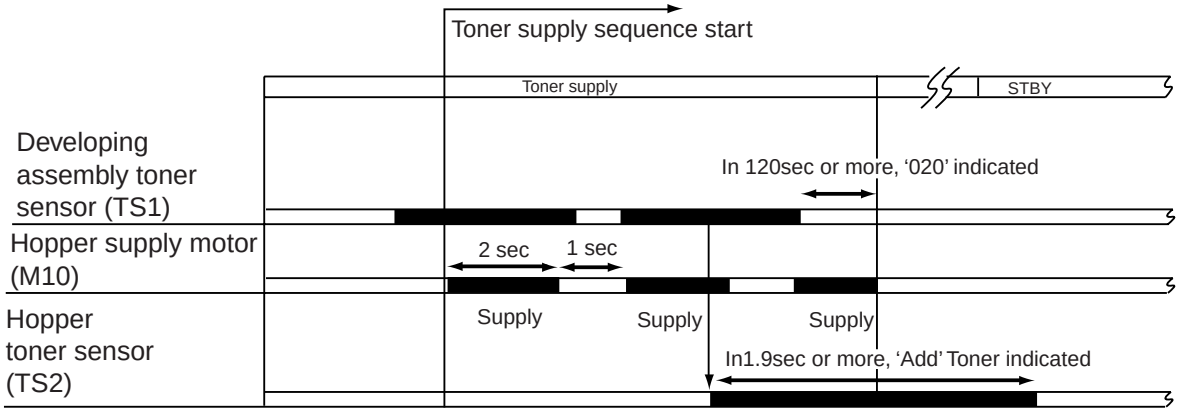

F04-404-02

Error

E020 (toner supply error)
It is indicated when the toner sensor (TS1) inside the developing assembly detects the absence of toner for 120 sec or more.

COPYRIGHT © 2000 CANON INC.

5. Drum Cleaner Unit

5.1 Outline

The following component parts are associated with the drum cleaner unit:

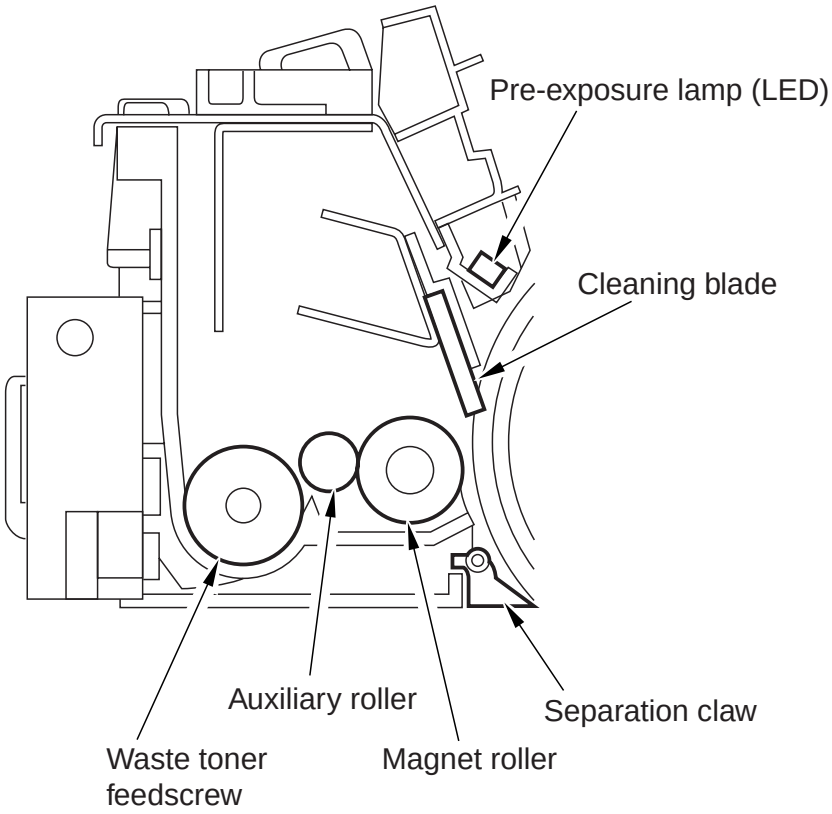

F04-501-01

5.2 Detecting the Waste Toner

The system used to detect waste toner (full condition) is constructed as follows:

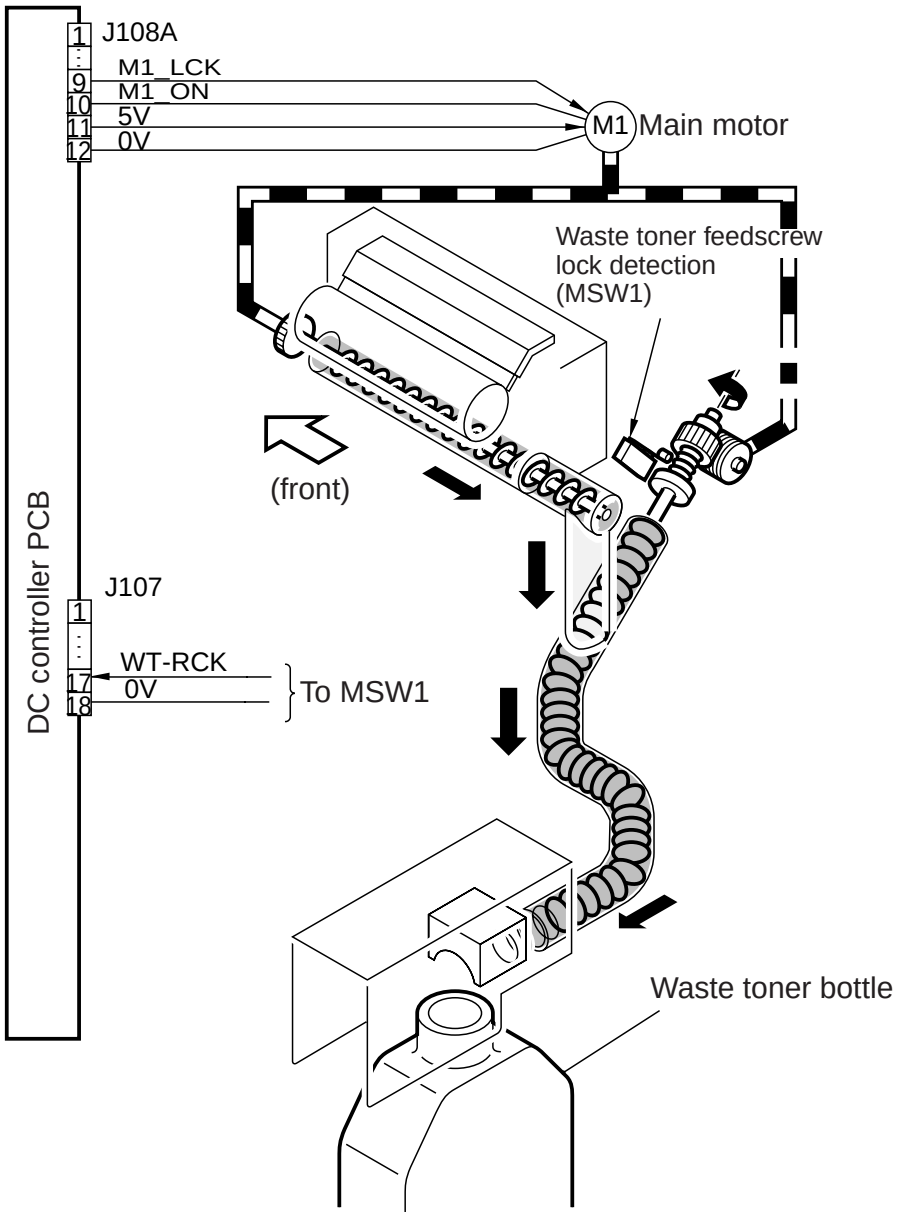

F04-502-01

COPYRIGHT © 2000 CANON INC.

Error

E013 (waste toner lock)
It is indicated when the waste toner lock sensor (MSW2) remains on for 4 sec or more.

Memo

The waste toner bottle is capable of holding as much toner as may be used for a maximum of about 500,000 prints.

COPYRIGHT © 2000 CANON INC.

6. Controlling the Drum Heater

6.1 Outline

The system used to control the drum heater is constructed as follows:

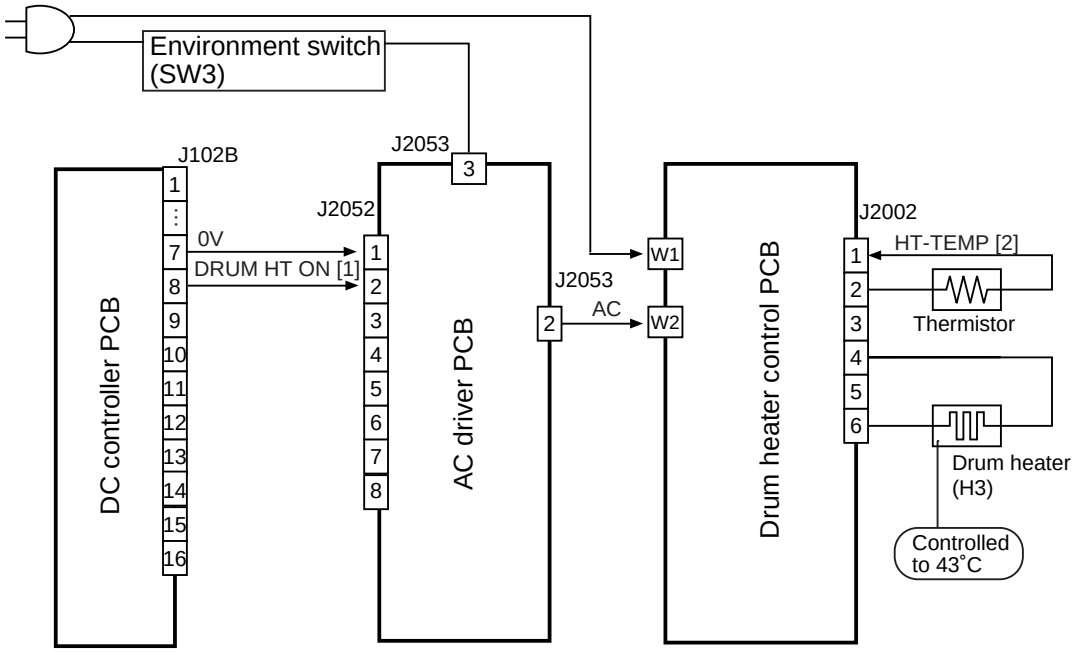

F04-601-01

The following signals are used:

[1] drum heater drive control signal; when '1', AC power is supplied to the drum heater control PCB.

[2] thermistor temperature detection signal; feeds voltage of a level suited to the detected temperature.

COPYRIGHT © 2000 CANON INC.

• Turning On/Off the Drum Heater

		Environment sensor (SW3)	Drum heater (H3)
Power OFF		ON	Half wave
		OFF	OFF
Wait	Main motor (M2) OFF	ON	Full wave
		OFF	Full wave
	Main motor (M2) ON	ON	Half wave (full wave if 120/230 V)
		OFF	Half wave (full wave if 120/230 V)
Printing		ON	Half wave (full wave if 120/230 V)
		OFF	Half wave (full wave if 120/230 V)
Standby, Jam, Front cover open		ON	Full wave
		OFF	Full wave
Power save mode		ON	Full wave
		OFF	Full wave

T04-601-01

COPYRIGHT © 2000 CANON INC.

The drum heater is controlled to 43°C by the drum heater control PCB.

When wear of the drum or parts associated with charging assemblies advances, halftone images can become distorted if printed in a high temperature/humidity environment (much moisture in the air).

To prevent distortion, SW2001-1 on the drum heater control PCB may be turned on to change from 43°C to 47°C (default: OFF, control at 43°C).

If the switch is turned on (controlled to 47°C) in a low temperature/humidity environment (little moisture in the air), however, printing of halftone images can cause fusion, requiring the operation of the switch to suit the environment as follows:

1. Remove the drum heater control PCB. (See p. 4-51P.)
2. Shift SW2001-1 on the drum heater control PCB to ON (controlled to 47°C).

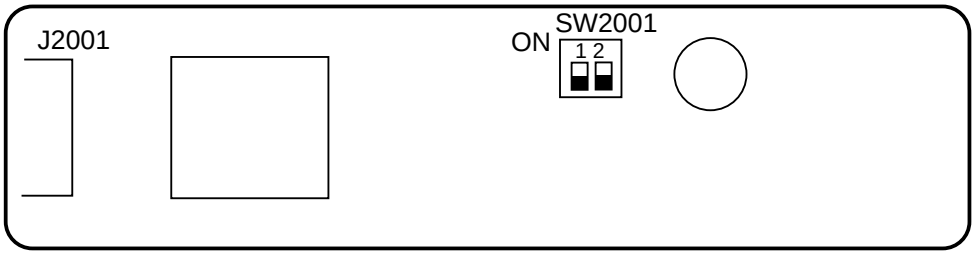

F04-601-02

SW2001-1	SW2001-2
ON (controlled to 47°C)	Not used
OFF (default: controlled to 43°C)	

T04-601-02

COPYRIGHT © 2000 CANON INC.

7. Disassembly and Assembly

The machine's mechanical characteristics and features are as described herein, and the machine may be disassembled or assembled as instructed while keeping the following in mind:

1. ⚠ The power plug must be disconnected for the work.
2. Unless otherwise indicated, the machine may be assembled by reversing the steps used to disassemble it.
3. The screws must be identified by type (length, diameter) and location.
4. The mounting screw of the grounding wire and the varistors is equipped with a toothed washer to ensure electrical continuity. They must not be left out when fitting the screws.
5. As a rule, the machine must not be operated with any of its parts removed.
6. The front door switch or the main power switch must be turned off before sliding out the duplex unit or the fixing/feeding unit.
7. ⚠ Toner must not be thrown away into fire to avoid explosion.

COPYRIGHT © 2000 CANON INC.

7.1 Pre-Exposure Lamp Unit

7.1.1 Removing the Pre-Exposure Lamp Unit

1) Open the front cover, and slide out the hopper unit to draw out the fixing/feeding unit.
2) Take out the process unit. (See p. 4-54P.)
3) Remove the primary charging assembly.
4) Remove the potential sensor unit.
5) Remove the two mounting screws [1], and remove the potential sensor rail stay [2].
6) Disconnect the connector [3], and remove the two mounting screws [4]; then, detach the pre-exposure lamp unit [5].

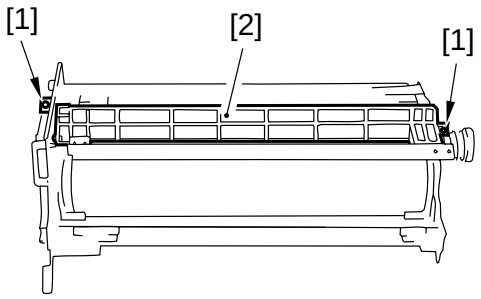

F04-701-01

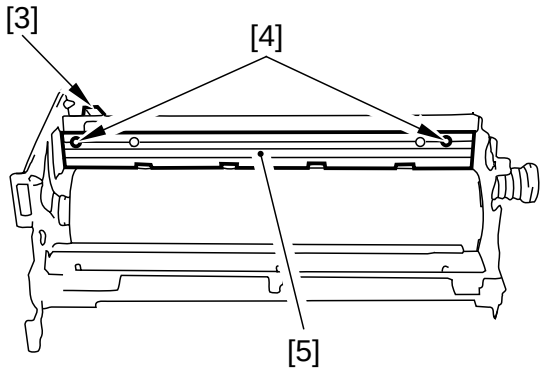

F04-701-02

COPYRIGHT © 2000 CANON INC.

7.2 Photosensitive Drum

Points to Note When Handling the Photosensitive Drum

The machine's photosensitive drum is made of high-sensitivity amorphous silicon, and its sensitivity can start to deteriorate depending on how and where it is placed, requiring the following:

1. Whenever the process unit is removed from the machine or the photosensitive drum is removed from the process unit, be sure to protect the photosensitive drum against light. Use the photosensitive drum protective sheet or wrap six or more sheets of A3 or larger copy paper.
2. Do not place the process unit or the photosensitive drum in an area subject to the direct rays of the sun.
3. Do not place the process unit or the photosensitive drum in an area subject to high or low temperature or humidity or where temperature or humidity tend to fluctuate rapidly.
4. Do not place the process unit or the photosensitive drum in an area subject to dust, ammonium gas, or organic solvent/gas.
   The foregoing requirements commonly apply to all photosensitive drums.

7.2.1 Removing the Drum Unit

1) Open the front cover, and slide out the hopper unit.
2) Remove the process unit. (See p. 4-54P.)
3) Remove the primary charging assembly and the pre-transfer charging assembly.
4) Remove the potential sensor assembly.
5) Remove the potential sensor rail stay.
6) Remove the three mounting screws [1], and detach the gear plate [2].

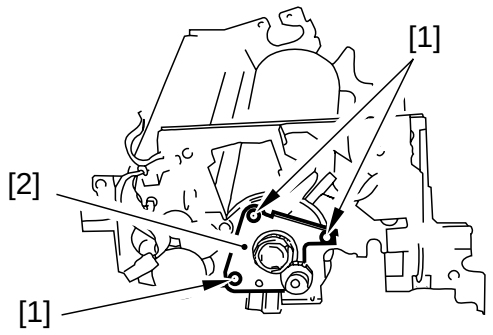

F04-702-01

7) Remove the two mounting screws [3], and detach the front side stay [4].

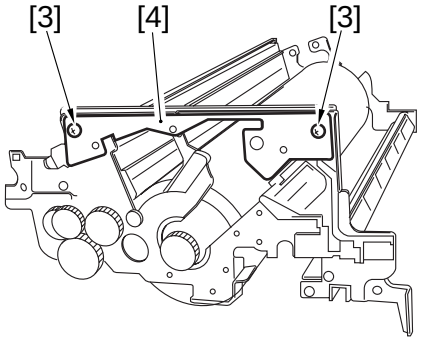

F04-702-02

8) Holding it as indicated, detach the photosensitive drum [5].

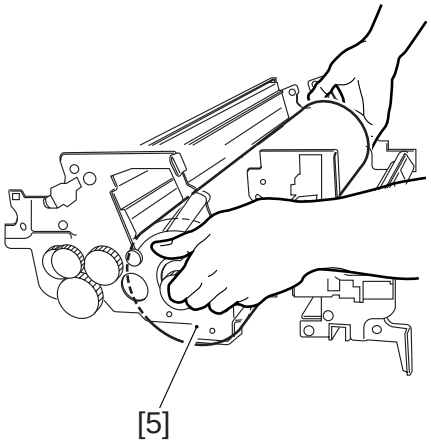

F04-702-03

Take care not to damage the photosensitive drum when removing it. The bearing at the rear and the gear at the front of the drum need not be removed.

If the temperature of the fixing assembly is 150°C or higher when replacing the drum unit, be sure to execute the following in service mode; otherwise, potential control will not be executed:
COPIER>FUNCTION>DPC>DPC.

7.2.2 Replacing the Drum Heater

1) Remove the photosensitive drum from the process unit.
2) Remove the two mounting screws [1], and detach the flange [2] from the front.

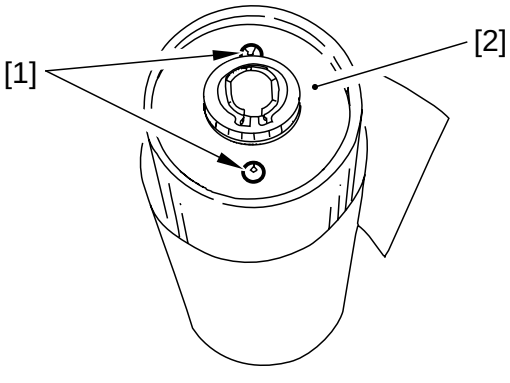

F04-702-04

COPYRIGHT © 2000 CANON INC.

Protect the removed photosensitive drum against dirt and scratches with five to six sheets of copy paper or with the drum protective sheet stored near the waste toner case.

3) Remove it from the rear together with the drum heater control PCB [3].
4) Disconnect the connector [4], and detach the drum heater [5] from the photosensitive drum.

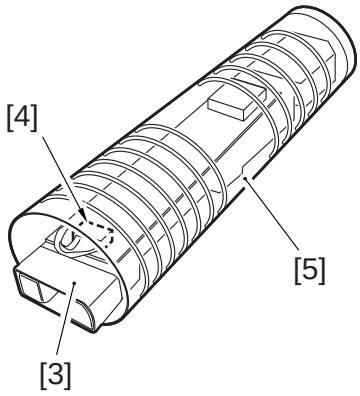

F04-702-05

7.2.3 Mounting the Photosensitive Drum

Mount the photosensitive drum by reversing the steps used to remove it; however, be sure not to soil or scratche the drum and not to trap the cable of the drum heater.

7.2.4 Setting the DIP Switch for the Drum Heater Control PCB

1) Remove the drum heater assembly. (See p. 4-52P.)
2) Disconnect the connector [1], and detach the drum heater assembly [2].
3) Set the DIP switch (SW2001-1) [3] on the drum heater control PCB.

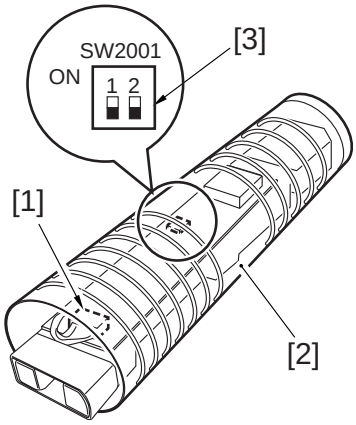

F04-702-06

7.3 Process Unit

7.3.1 Removing the Process Unit

1) Open the front cover.
2) Remove the developing assembly. (See p. 4-73P.)
3) Remove the hopper assembly. (See p. 4-78P.)
4) Remove the primary charging cooling fan.
5) Slide out the fixing/feeding assembly, and place the drum protective sheet [1] on the registration roller assembly.
6) Disconnect the four connectors [2], and remove the two mounting screws [3].

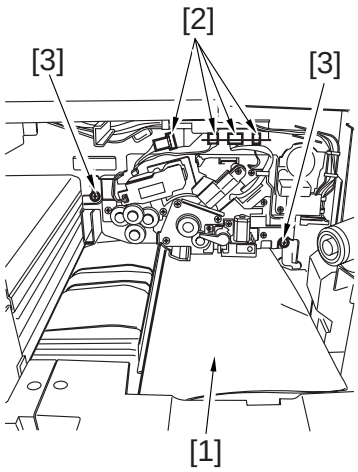

F04-703-01

COPYRIGHT © 2000 CANON INC.

7) Insert the drum rotating tool [4] into the slot [5] in the drum shaft. While keeping the drum in place so that it will not rotate counterclockwise, insert a screwdriver into the center opening [6] in the drum rotating tool to remove the drum fixing screw.



If the drum is let to rotate counterclockwise, the cleaning blade will not come into contact with the drum correctly, leading to cleaning faults. Be sure to fix the drum in place first before removing the drum fixing screw to avoid the problem.



If the hopper assembly is released but not removed, be sure to open the right upper door and the right lower door so that there will be space.

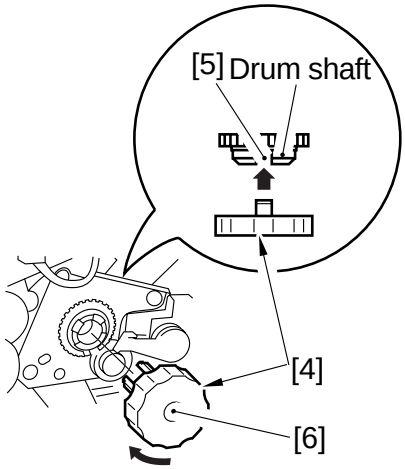

F04-703-02

8) Slide out the process unit [7] until it stops.

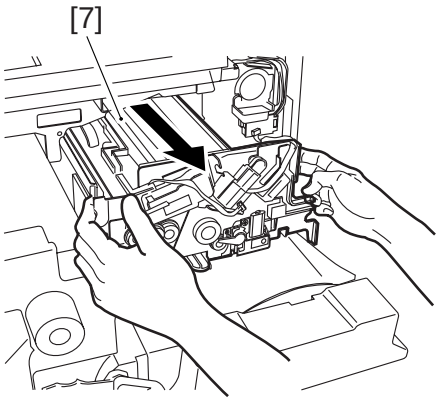

F04-703-03

9) Holding the grip [8] of the process unit as indicated, take it out.

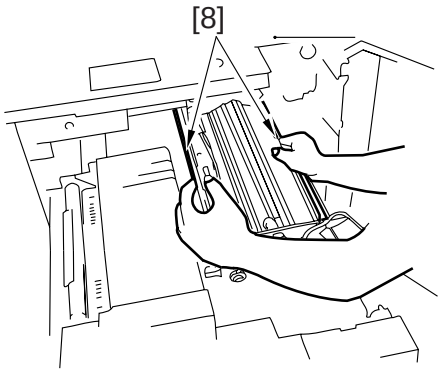

F04-703-04

7.3.2 Mounting the Process Unit

Mount the process unit by reversing the steps used to remove it with the following in mind:

1) On the left rail, place the process rail along the guide plate [1] at the front/ rear of the rail.
On the right rail [2], place the process unit on the L-shaped stay.

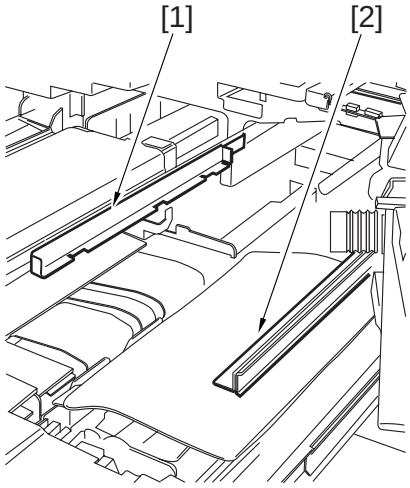

F04-703-05

2) After sliding the process unit into the machine, match the slot in the drum shaft and the slot in the drum using the drum rotating tool [3]. Then, insert the drum fixing tool [4], and fit the mounting screw [5] into the center opening of the drum rotating tool; then, tighten the mounting screw.

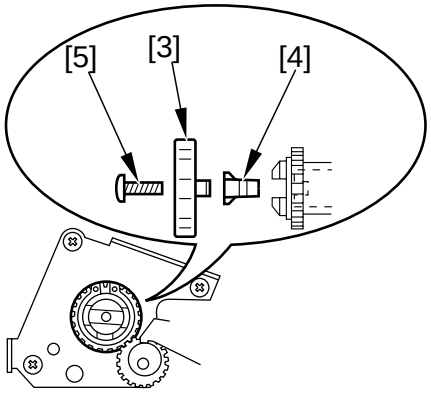

F04-703-06

COPYRIGHT © 2000 CANON INC.

7.4 Potential Sensor/Potential Control PCB

7.4.1 Removing the Potential Sensor/Potential Control PCB

Be sure to replace the potential sensor and the potential control PCB at the same time.

1) Open the front cover, and slide out the hopper unit.
2) Remove the developing assembly and the primary cooling fan.
3) Disconnect the connector [1], and remove the screw [2]; then, detach the potential sensor assembly [3].

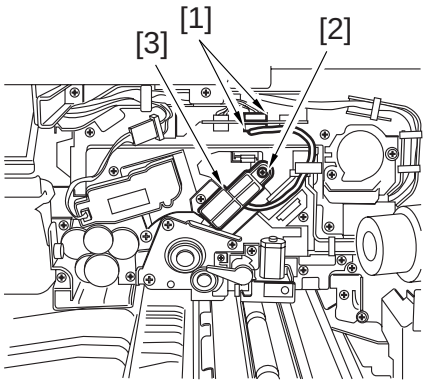

F04-704-01

4) Remove the three screws [4], and detach the front door switch cover [5].

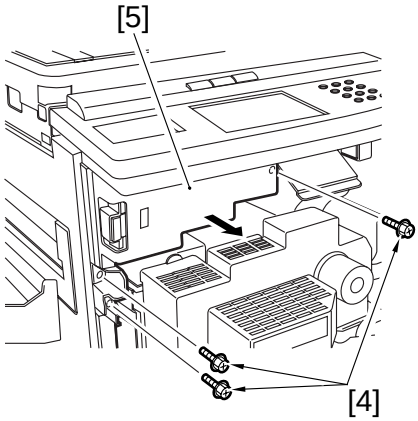

F04-704-02

5) Free the cable [6] from the cable guide.
6) Remove the six screws [7], and detach the door switch assembly [8].

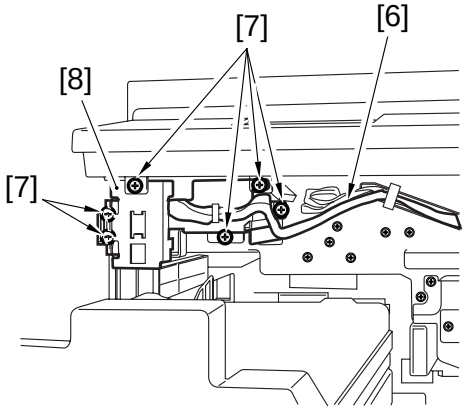

F04-704-03

7) Remove the two screws [9], and detach the potential control PCB together with the mounting base [10].

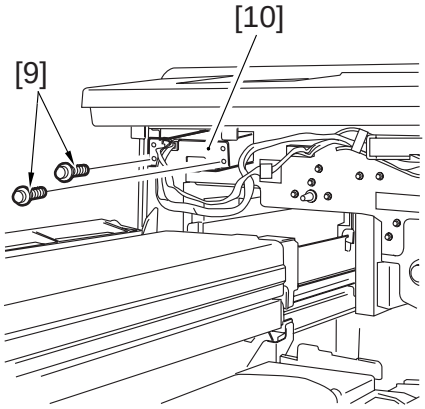

F04-704-04

8) Remove the four screws [11] and three connectors [12], and detach the potential control PCB [13].

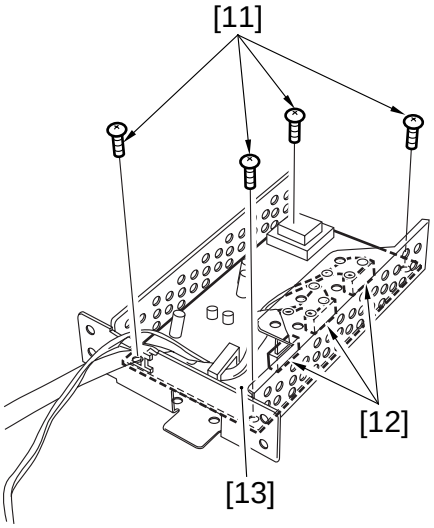

F04-704-05

COPYRIGHT © 2000 CANON INC.

7.4.2 Adjusting the Potential Sensor

The potential sensor and the potential control PCB are adjusted in a pair, requiring simultaneous replacement.

1) Start service mode, and set '0' to the following to disable potential control: COPIER>OPTION>BODY>PO-CNT.
2) Replace the potential control PCB.
3) Connect the connector of the potential sensor to the connector of the machine.
4) Fit the potential checking electrode (FY9-3012) [2] to the potential sensor [1].

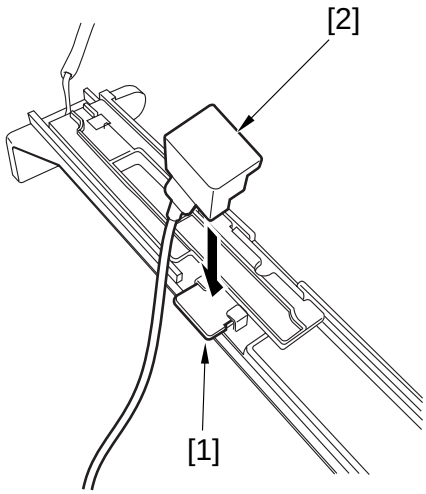

F04-704-06

When fitting the checking electrode to the potential sensor [2], be sure that the magnet of the checking electrode does not come into contact with the potential sensor cover.

5) Connect the clip [3] of the checking electrode to the frame of the machine (GND).

Be sure to keep the clip [3] fully away from the sensor and not to bring it in contact with the cover of the sensor.

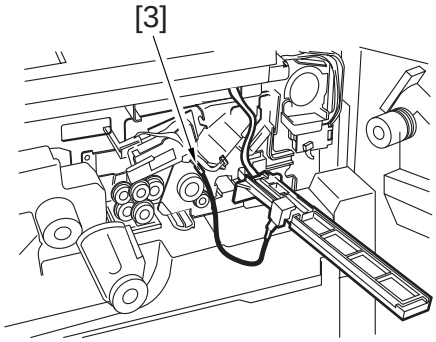

F04-704-07

6) Insert the door switch actuator into the door switch assembly.
7) Connect the power plug to the power outlet, and turn on the main power switch.
8) Execute the following in service mode: COPIER>FUNCTION>DPC>OFST.
9) Record the setting of <OFST> on the service label.
10) Start service mode, and set '1' to the following to enable potential control: COPIER>OPTION>BODY>PO-CNT.
11) Check to make sure that the data lamp in the control panel is off; then, turn off the main power switch.
12) Disconnect the power plug from the power outlet.
13) Remove the checking electrode from the potential sensor.
14) Mount the potential sensor.

COPYRIGHT © 2000 CANON INC.

7.5 Primary Charging Assembly

7.5.1 Removing the Primary Charging Assembly

1) Open the front cover, and slide out the hopper assembly.
2) Loosen the mounting screw [1], and slide up the fixing member [2] to secure the fixing member in place.
3) Disconnect the connector [3], and remove the primary charging assembly [4].

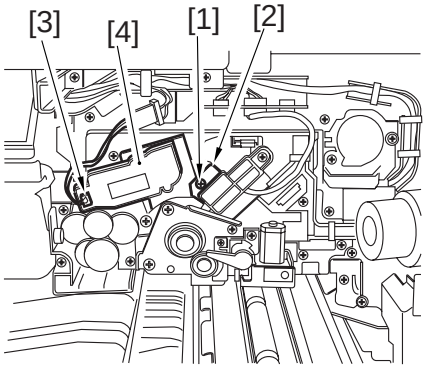

F04-705-01

If you have replaced the primary charging wire or the primary charging assembly, be sure to execute the following in service mode to clean the wire: COPIER>FUNCTION> CLEANING>WIRE-CLN. Further, be user to use a strengthened polishing pad (blue holder) as the cleaning pad.

7.6 Pre-Transfer Charging Assembly

7.6.1 Removing the Pre-Transfer Charging Assembly

1) Open the front cover, and slide out the hopper assembly.
2) Remove the mounting screw [1], and disconnect the connector [2]; then, detach the pre-transfer assembly [3].

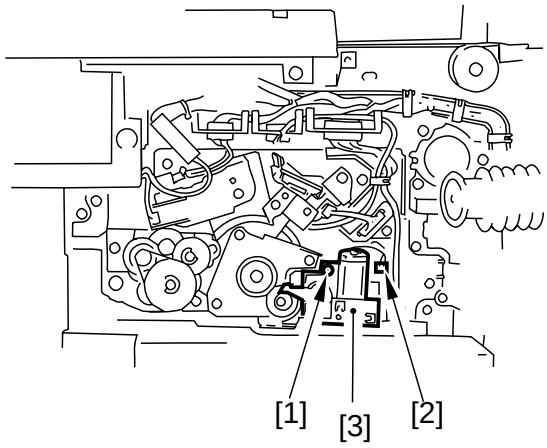

F04-706-01

When you have mounted the pre-transfer charging assembly, be sure to execute 'wire cleaning' in user mode. (If the surface temperature of the fixing upper roller is 100°C or lower, you need not execute this, as the wire will be cleaned automatically.

COPYRIGHT © 2000 CANON INC.

7.7 Transfer/Separation Charging Assembly

7.7.1 Removing the Transfer/Separation Charging Assembly

1) Open the front cover, and slide out the fixing/feeding unit.
2) Remove the feeding right front cover.
3) Remove the mounting screw [1], and detach the fixing guide [2].

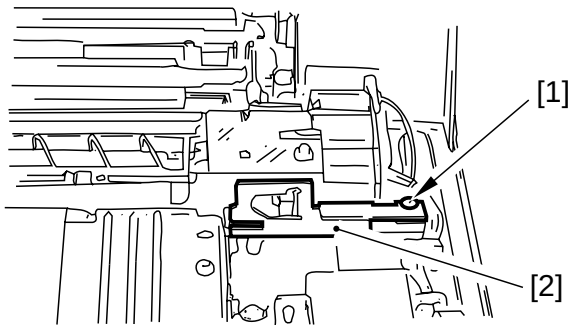

F04-707-01

4) Disconnect the connector [3], and slide out the transfer/separation charging assembly [4] to the front; then, detach it by pulling it up at an angle.

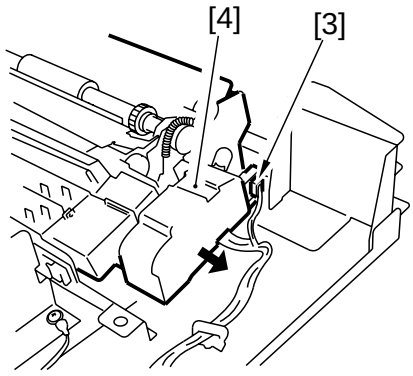

F04-707-02

7.7.2 Mounting the Transfer/Separation Charging Assembly

Mount the transfer/separation charging assembly by reversing the steps used to remove it while keeping the following in mind.

1) Make sure that the four protrusions [1] on the transfer/separation charging assembly are correctly fitted into the cut-offs [2] in the fixing/feeding unit.

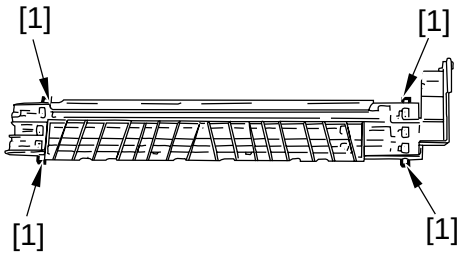

F04-707-03

2) Make sure that the leaf spring [3] of the fixing/feeding unit comes in contact with the frame of the transfer/separation charging assembly (slide from the front).

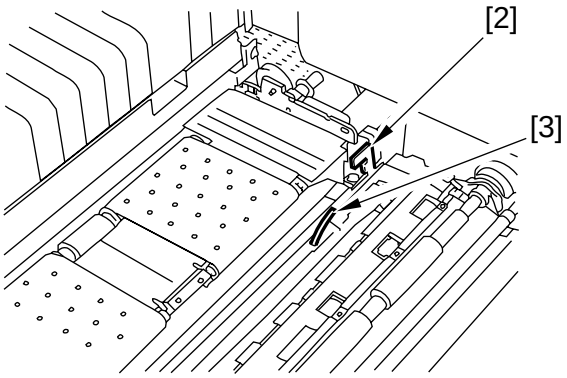

F04-707-04

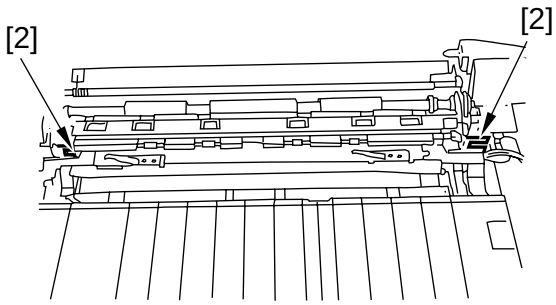

F04-707-05

3) Mount the fixing guide plate [4] with a mounting screw [5].

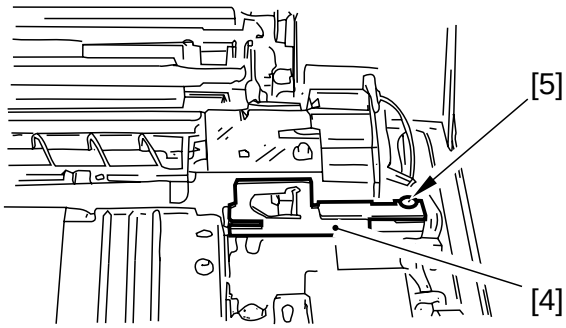

F04-707-06

COPYRIGHT © 2000 CANON INC.

4) If you have replaced the transfer charging wire or the transfer/separation charging assembly be sure to execute the following in service mode to clean the wire:
COPIER>FUNCTION>CLEANING>WIRE-CLN.
If you have replaced the separation charging wire or the separation charging assembly, be sure to execute 'wire cleaning' in user mode. (If the surface temperature of the fixing upper roller is 100°C or lower, you need not execute this mode, as the wire will be cleaned automatically.)



Further, be sure to use a strengthened polishing pad (blue holder) as the cleaning pad.

COPYRIGHT © 2000 CANON INC.

7.8 Charging Wire

7.8.1 Outline

The photosensitive drum is surrounded by three charging wires (for primary charging, pre-transfer, and transfer/separation).

These charging wires are newly adopted brown wires (0.06 mm in diameter). Do not use a gold-plated wire, which has been used in the past; otherwise, image faults may occur.

Further, be sure to use a strengthened polishing pad (in a blue holder) as the cleaning pad for the primary charging assembly and the transfer charging assembly.

7.8.2 Removing the Wire Cleaner of the Primary Charging Assembly

1) Pick the wire cleaner, and disengage the hook with a flat-blade screwdriver.

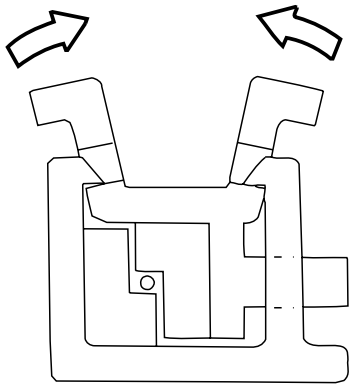

F04-708-01

7.8.3 Routing the Charging Wire

All charging wires (except the grid wire) are routed more or less in the same way; the following cites the primary charging assembly:

1) Remove the shielding plate (left, right) of the charging assembly. To prevent deformation (slack) in the primary charging assembly, be sure to work separately for the left shielding plate and the right shielding plate (i.e., do not loosen the mounting screws [1] of both shielding plates at the same time).
2) Remove the wire cleaner.

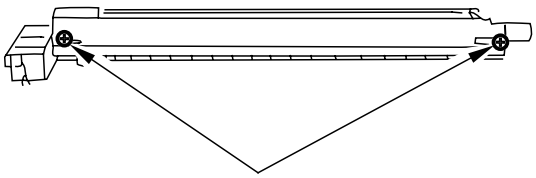

F04-708-02

For other charging assemblies, remove the two lids.

COPYRIGHT © 2000 CANON INC.

3) Free a length of about 5 cm of charging wire from the charging wire reel (0.06 mm in diameter), and form a loop at its end with a diameter of about 2 mm.

REF.

To form a loop, wind the charging wire around a hex key once, and turn the hex key three to four times; then, twist the charging wire.

4) Cut the end (excess) of the twisted charging wire.
5) Hook the loop on the stud.

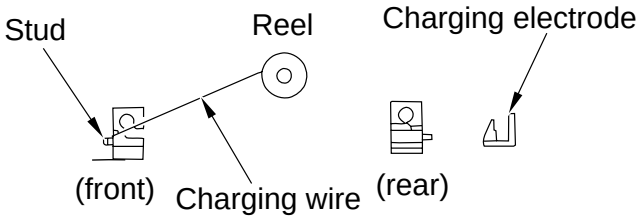

F04-708-03

6) At the rear, hook the charging wire on the charging wire positioner; then, hook the charging wire tension spring on the charging wire where indicated to F04-708-04.



F04-708-04

7) Cut off the excess of the charging wire with nippers.
8) Pick the end of the charging wire tension spring with tweezers, and hook it on the charging power supply electrode. In the case of the pre-transfer charging assembly, hook the spring on the pin at the front.

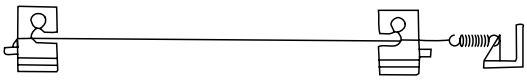

F04-708-05

Make sure of the following:
- The charging wire must not be bent or twisted.
- The charging wire must be fitted in the V-groove of the charging wire positioner.

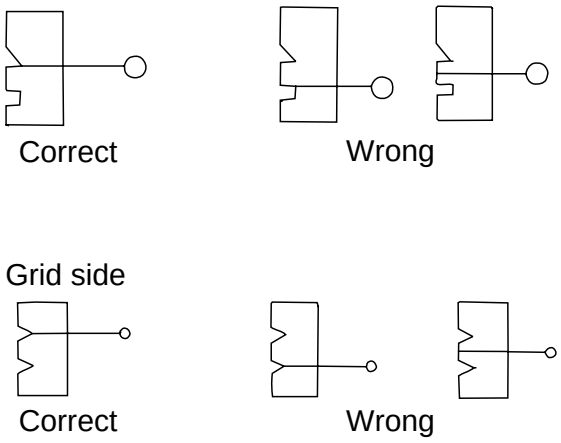

F04-708-06

9) Attach a cushoin in front of the charging wire. (This does not apply to the primary charging assembly.)
10) Mount the shielding plate (left, right).

For other charging assemblies, mount the two lids.

11) Mount the wire cleaner. At this time, pay attention to make sure that the wire cleaner is oriented correctly.
12) Wipe the charging wire with lint-free paper moistened with alcohol.

COPYRIGHT © 2000 CANON INC.

7.8.4 Routing the Grid for the Primary Charging Assembly

1) Loosen the two mounting screws used to secure the left and right shielding plates in place.
2) Loosen the three mounting screws used to secure the motor unit in place at the front.

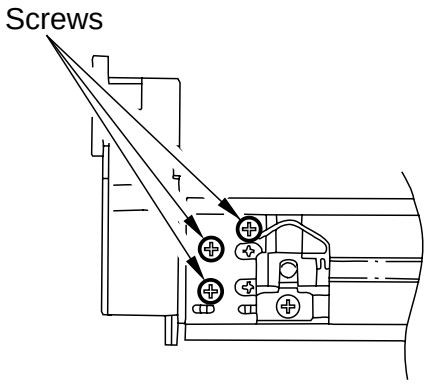

F04-708-07

3) Loosen the mounting screw, and move it in the direction indicated; then, fix it in place temporarily.
4) Free a length of about 5 cm of charging wire from the charging wire reel (0.1 mm in diameter), and form a loop at its end with a diameter of about 2 mm.

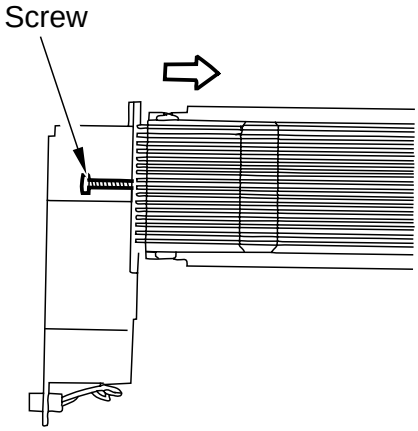

F04-708-08

REF.

To form a loop, wind the charging wire around a hex key once, and turn the hex key three to four times; then, twist the charging wire.

5) Cut the twisted charging wire (excess) with nippers.
6) Hook the loop on stud A.
7) After routing the wire for 31 runs, lead it through section B, and give it a half turn; then, put it between the washer and the motor unit, and wind it once around the mounting screw (clockwise), and secure it in place with a mounting screw.

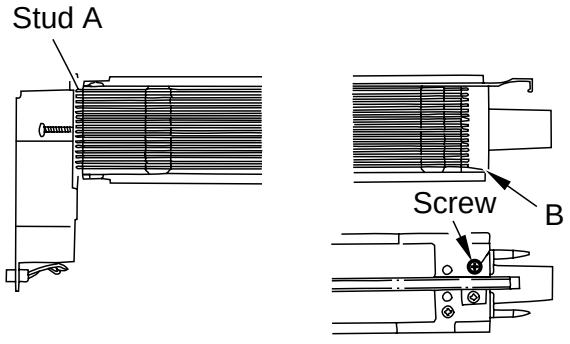

F04-708-09

8) Cut the excess of the charging wire with nippers.
9) Tighten the mounting screw loosened in step 3).
   Keep tightening until the tension of the grid wire is even.
   Be sure to pay attention to avoid deformation (slack) of the charging assembly (as by tightening the mounting screw found on the front of the left/right shielding plate early).
10) Tighten the mounting screws loosened in steps 1) and 2).
11) Wipe the grid wire with lint-free paper moistened with alcohol.



1. Check to make sure that the grid wire is free of bending and twisting.
2. Be sure that the runs are laid at equal intervals (i.e., the wire is in the groove of the block).

COPYRIGHT © 2000 CANON INC.

7.8.5 Adjusting the Height of the Charging Wire

Charging assembly	Height of charging wire	Tolerance
Primary	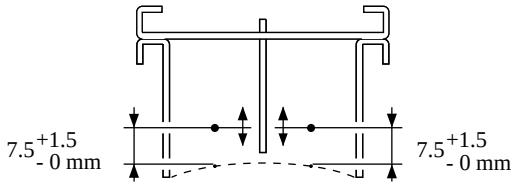 A	±1mm
Pre-transfer	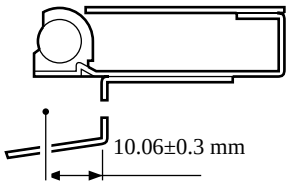 B	No height adjusting mechanism
Transfer	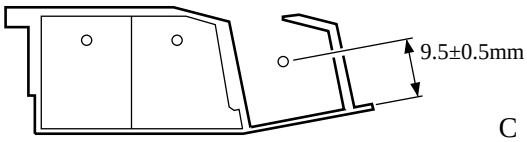 C	±2mm
Separation	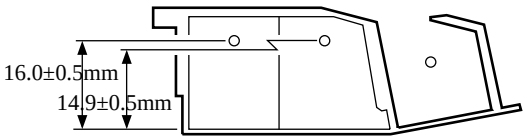 D	±2mm

T-04-708-01

REF.

The height (position) of the primary charging wire and the transfer charging wire may be adjusted by turning the screw found at the back of the charging assembly; a single turn changes the position of the charging wire by about 0.7 mm.

COPYRIGHT © 2000 CANON INC.

7.8.6 Cleaning the Primary Anti-Stray Sheet

1) Open the front cover.
2) Remove the developing assembly.
3) Remove the hopper assembly.
4) Remove the process unit. (See p. 4-54P.)
5) Remove the two screws [1], and remove the potential sensor rail stay [2].

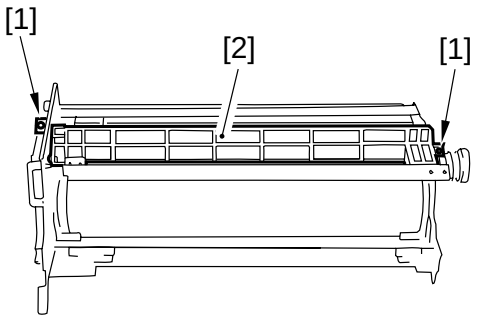

F04-708-10

6) Clean the primary anti-stray sheet [3].

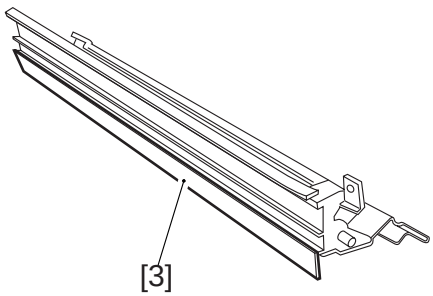

F04-708-11

COPYRIGHT © 2000 CANON INC.

7.9 Developing Assembly

The machine's developing assembly is not equipped with a cover to protect the developing cylinder.
If you must remove the developing assembly, be sure to exercise care not to damage the developing cylinder.
When the developing assembly is outside the machine, be sure not to mount the developing assembly locking assembly. The toner collecting in the path from the hopper to the developing assembly can start to move astray because of the vibration occurring during inspection or repair work.

7.9.1 Removing the Developing Assembly from the Machine

1) Open the right upper cover, and remove the mounting screw; then, detach the door stopper tape.
2) Remove the mounting screw [1], and push the developing locking assembly [2] in the direction of the arrow to detach.

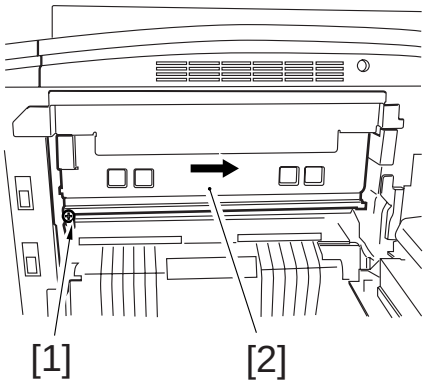

F04-709-01

3) Disconnect the connector [3], and take the developing assembly [4] out of the machine slowly.

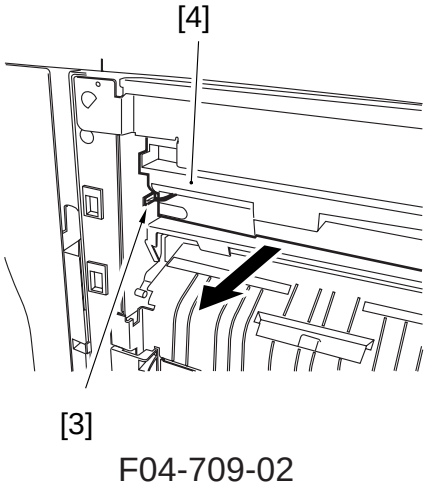

F04-709-02

7.9.2 Removing the Blade Unit

1) Take the developing assembly out of the machine.
2) Remove the two mounting screws [1], and detach the developing assembly cover [2].

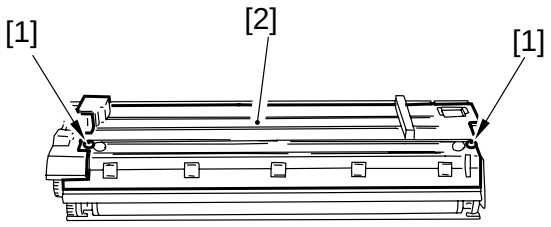

F04-709-03

3) Place a newspaper on the floor or a desk, and pour out the toner onto the newspaper from the developing assembly.
4) Remove the two mounting screws [3], and detach the blade unit [4] together with its mounting base.

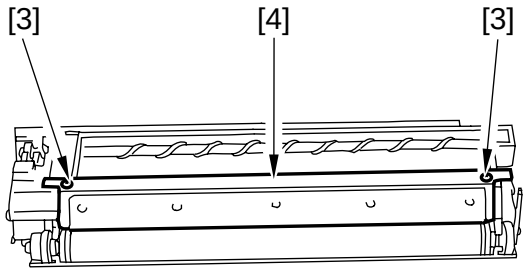

F04-709-04

The blade must be mounted with a high accuracy. Do not remove it on its own in the field (i.e., be sure to remove it intact with its mounting base).

COPYRIGHT © 2000 CANON INC.

7.9.3 Mounting the Blade

Mount the blade by reversing the steps used to remove it.

1) Push the blade mounting base against the developing assembly, and tighten the two mounting screws.
   When mounting the blade, place copy paper on the developing cylinder first to protect the developing cylinder.

7.9.4 Removing the Developing Cylinder/Magnetic Seal

1) Remove the developing assembly from the machine.
2) Remove the blade unit.
3) Remove the two mounting screws [1], and detach the gear unit [2] together with the gear.

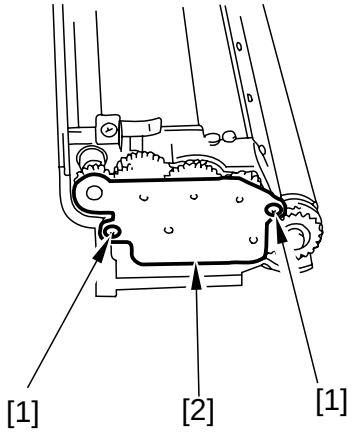

F04-709-05

When removing the gear unit, be sure to take care, as the gear attached to the screw will become free.

4) Remove the grip ring [3] mounted to the cylinder shaft at the rear; then, remove the gear [4], parallel pin [5], and push-on roll [6].

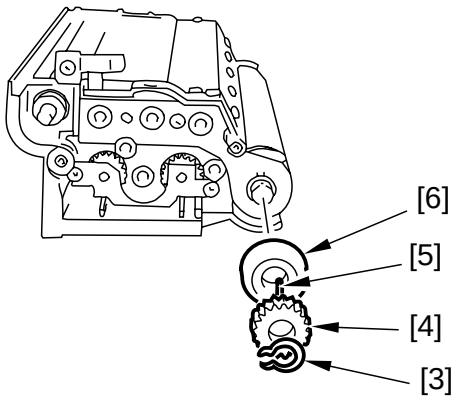

F04-709-06

5) Remove the two mounting screws [7], and detach the electrode plate [8].

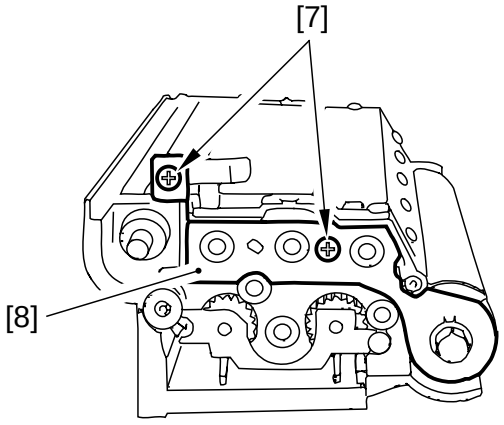

F04-709-07

6) Remove the mounting screw [9], and detach the magnetic positioning plate [10].

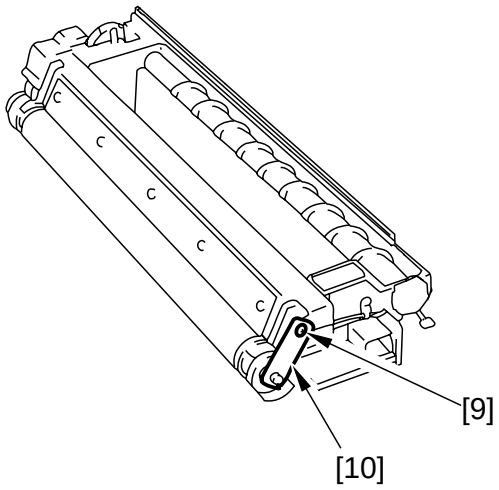

F04-709-08

7) Remove the grip ring [11] mounted to the cylinder shaft at the front, and detach the push-on roll [12].

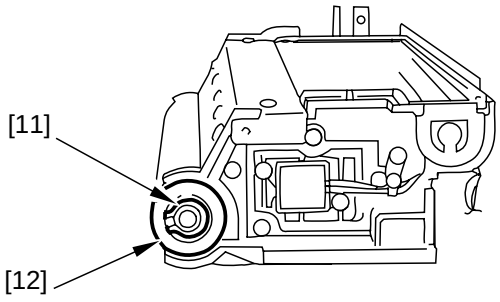

F04-709-09

COPYRIGHT © 2000 CANON INC.

8) Remove the two mounting screws [13], and detach the blade [14] together with its mounting plate.

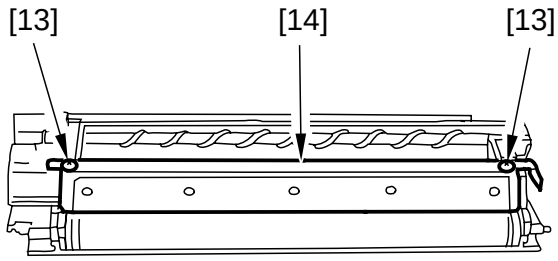

F04-709-10

9) Remove the bearing [15] at the front and the rear, and detach the developing cylinder [16].

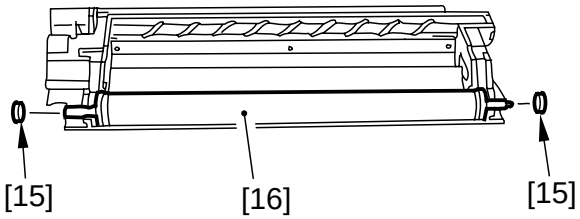

F04-709-11

Do not leave fingerprints or oils on the surface of the developing cylinder. Otherwise, dry wipe it with lint-free paper. (Do not use solvent.)

7.9.5 Cleaning the Developing Anti-Stray Sheet

1) Remove the developing assembly, and clean the developing anti-stray sheet [1].

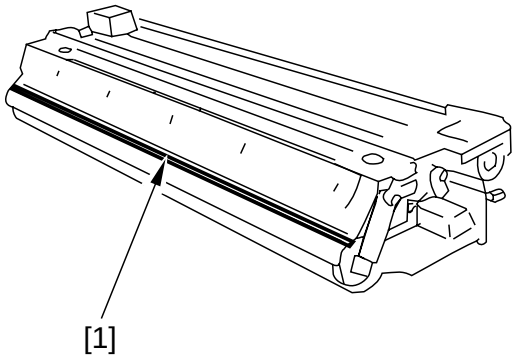

F04-709-12

7.10 Hopper Assembly

7.10.1 Removing the Hopper Assembly from the Machine

1) Slide out the hopper assembly to the front. (See p. 3-11P.)
2) Remove the mounting screw [1], and detach the hopper assembly [2].

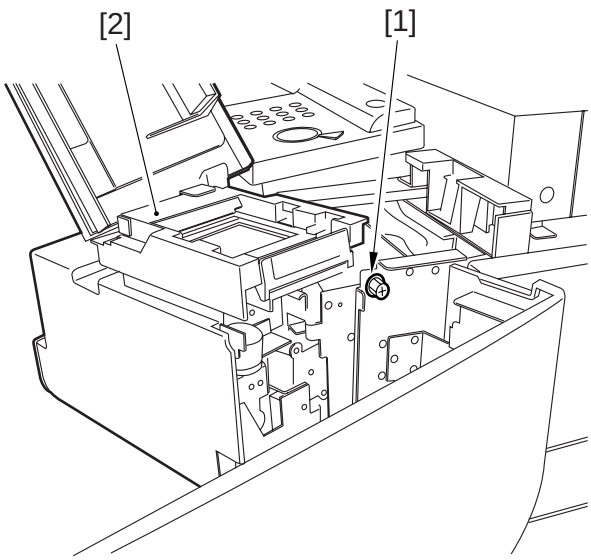

F04-710-01

COPYRIGHT © 2000 CANON INC.

7.11 Drum Cleaner

7.11.1 Construction

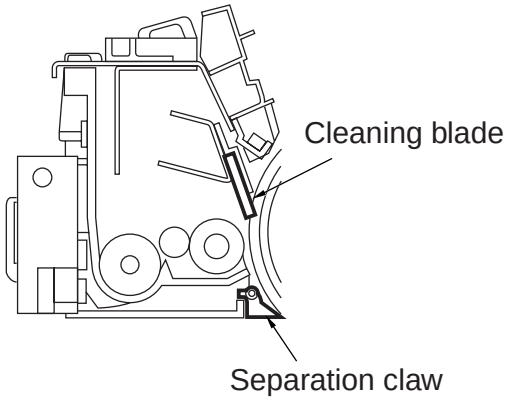

F04-711-01

7.11.2 Removing the Cleaning Blade

1) Slide out the process unit from the machine. (See p. 4-54P.)
2) Remove the primary charging assembly.
3) Disconnect the connector [1] of the AC line of the drum heater.
4) Remove the four mounting screws [2], and detach the cleaning blade assembly [3].

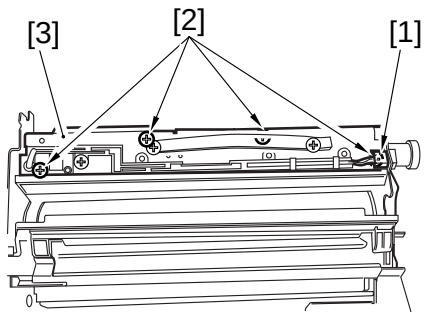

F04-711-02

5) Remove the E-ring [4] from under the cleaning blade assembly, and detach the pressure spring [5].

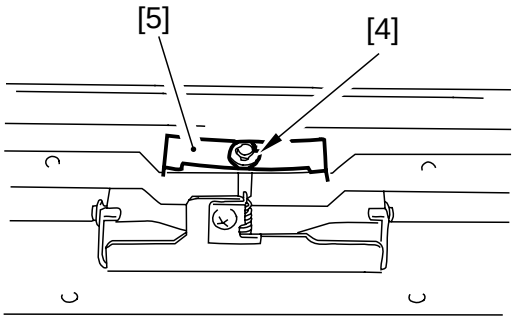

F04-711-03

6) Disconnect the connector [6], and remove the two screws [7]; then, detach the pre-exposure LED assembly [8].

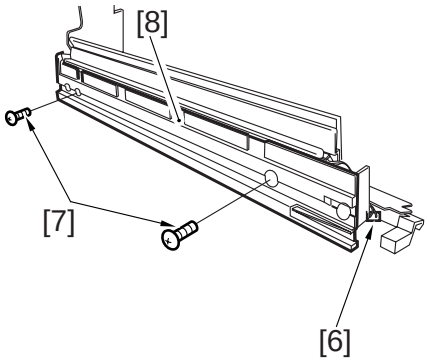

F04-711-04

7) Loosen the five mounting screws [9], and detach the blade support plate from the cleaning blade.

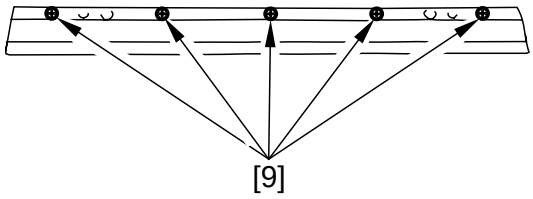

F04-711-05

7.11.3 Mounting the Cleaning Blade

When mounting the cleaning blade, be sure that the side with the marking [1] will be the face.

1) Push in the cleaning blade [2] until it butts slightly again the rear.

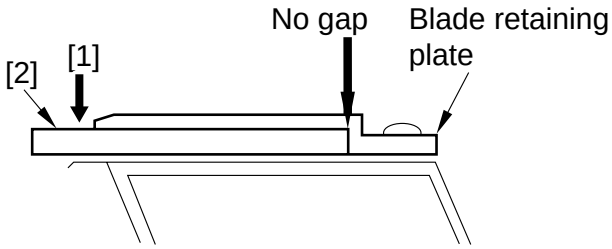

F04-711-06

COPYRIGHT © 2000 CANON INC.

2) Tighten the five mounting screws [2] lightly, stopping to turn them when resistance is felt.
3) Turn the screws tightened lightly in step 2) about 20° to 30° in the order indicated, tightening them fully.

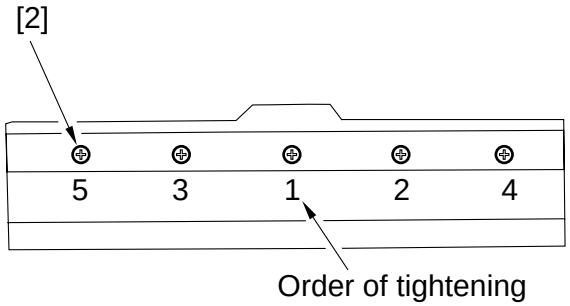

F04-711-07

After mounting the cleaning blade, check to make sure that the edge of the blade is not appreciably bent.
Further, be sure to clean the groove in the blade support plate before mounting the blade, as toner or the like in the groove can start to bend the blade.

7.11.4 Mounting the Side Seal

1) Mount the side seal [1] to the cleaner housing where indicated (both ends). AT this time, be sure that the edge of the side seal is positioned as follows:
   - When replacing the side seal [1] at the front, push the magnet roller [2] toward the rear and then make sure that the inner end of the side seal is within the area [3] of the washer.
   - When replacing the side seal [1] at the rear, push the magnet roller [2] toward the front and then make sure that the inner end of the side seal is within the area [3] of the washer.
2) The bottom end of each side seal [1] must be 0 to 0.5 mm from the corner of the cleaner hosing; i.e., point of reference [3].
3) Attach the side seal [1] at the front and the rear to the cleaner housing while making sure its position is as indicated.

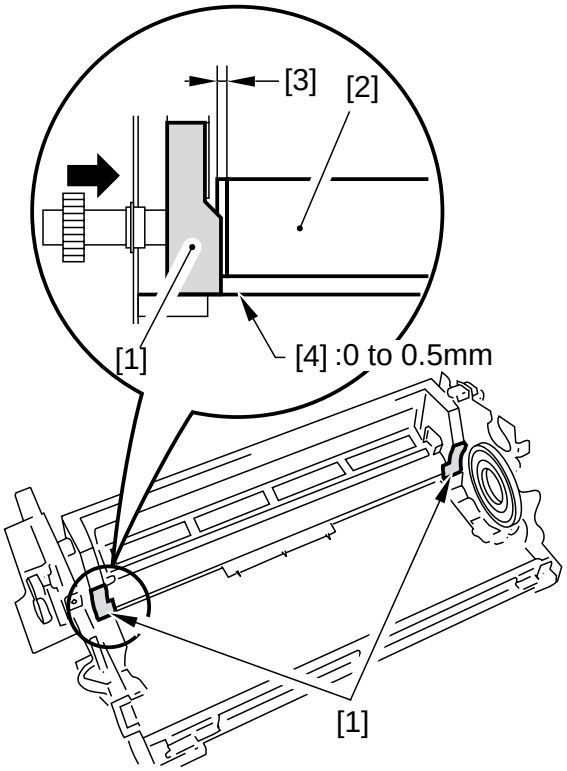

F04-711-08

COPYRIGHT © 2000 CANON INC.

7.11.5 Cleaning the Cleaner Side Scraper

Perform the following when replacing the cleaning blade (every 500,000 sheets).

1) Remove the cleaning blade.
2) Remove any paper lint collecting at the tip of the side scarper (A, i.e., between magnet roller and toner guide roller) using tweezers or the like.
3) Remove the toner from the surface of the magnet roller. (Roll copy paper into a U to scoop it up.)

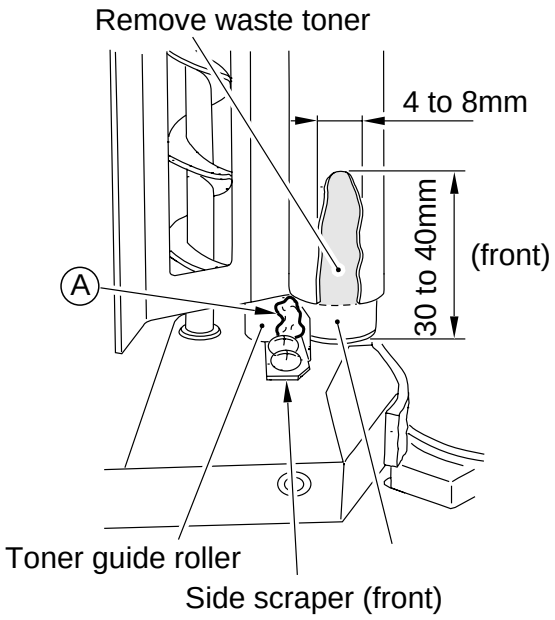

F04-711-09

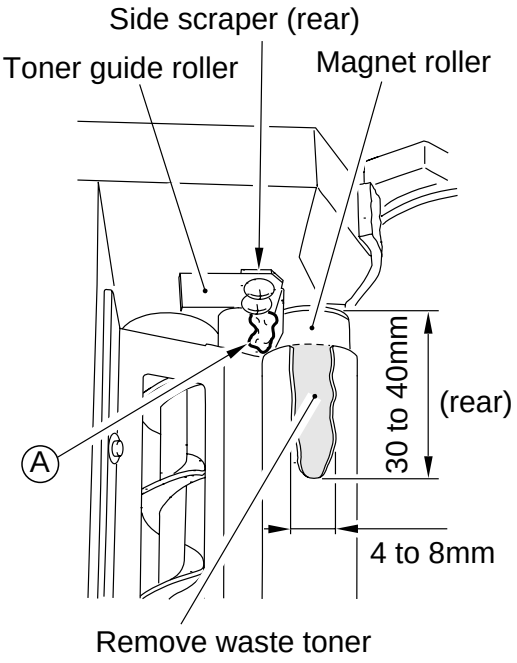

F04-711-10

4) Turn the magnet roller clockwise (viewing from the front).
5) Repeat steps 3) through 5) until the area from which toner was removed in step 3) is once again coated with an even layer of toner.

7.12 Separation Claw/Separation Claw Drive Assembly

7.12.1 Removing from the Drum Unit

1) Remove the process unit from the machine. (See p. 4-54P.)

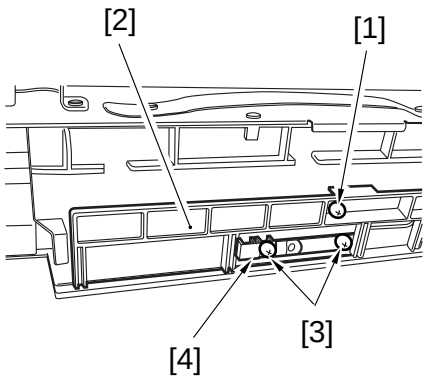

F04-712-01

1.Take care not to break the separation claw.
2.Take care not to damage the photosensitive drum.

2) Remove the screw [1], and detach the cover [2].
3) Remove the two screws [3], and detach the claw holder [4].

COPYRIGHT © 2000 CANON INC.

CHAPTER 5

PICK-UP/FEEDING SYSTEM

COPYRIGHT © 2000 CANON INC.

1. Outline

1.1 Specifications and Construction

The pickup/feeding system has the following main functions, and is constructed as shown in the following figure:

Item	Description	
Paper feed reference	Center	
Paper stacking	Paper deck (right, left):	1500 sheets each (of 80 g/m^2)
	Front cassette (3/4):	550 sheets each (of 80/m^2)
	Manual feed tray:	50 sheets (80 g/m^2)
Paper size configuration	Paper deck (left/right):	By service person
	Front cassette 3:	By user
	Front cassette 4 (100-V model):	By user
	Front cassette 4 (120/230-V model):	By service person
	Manual feed tray:	By user
Double-sided copying	Through path	
Related user mode	Cassette auto selection on/off	
	Paper icon selection	
Related mechanical adjustment	Deck horizontal registration	
	Cassette horizontal registration	
	Manual tray horizontal registration	

T05-101-01

COPYRIGHT © 2000 CANON INC.

1.2 Arrangement of Roller and Sensors

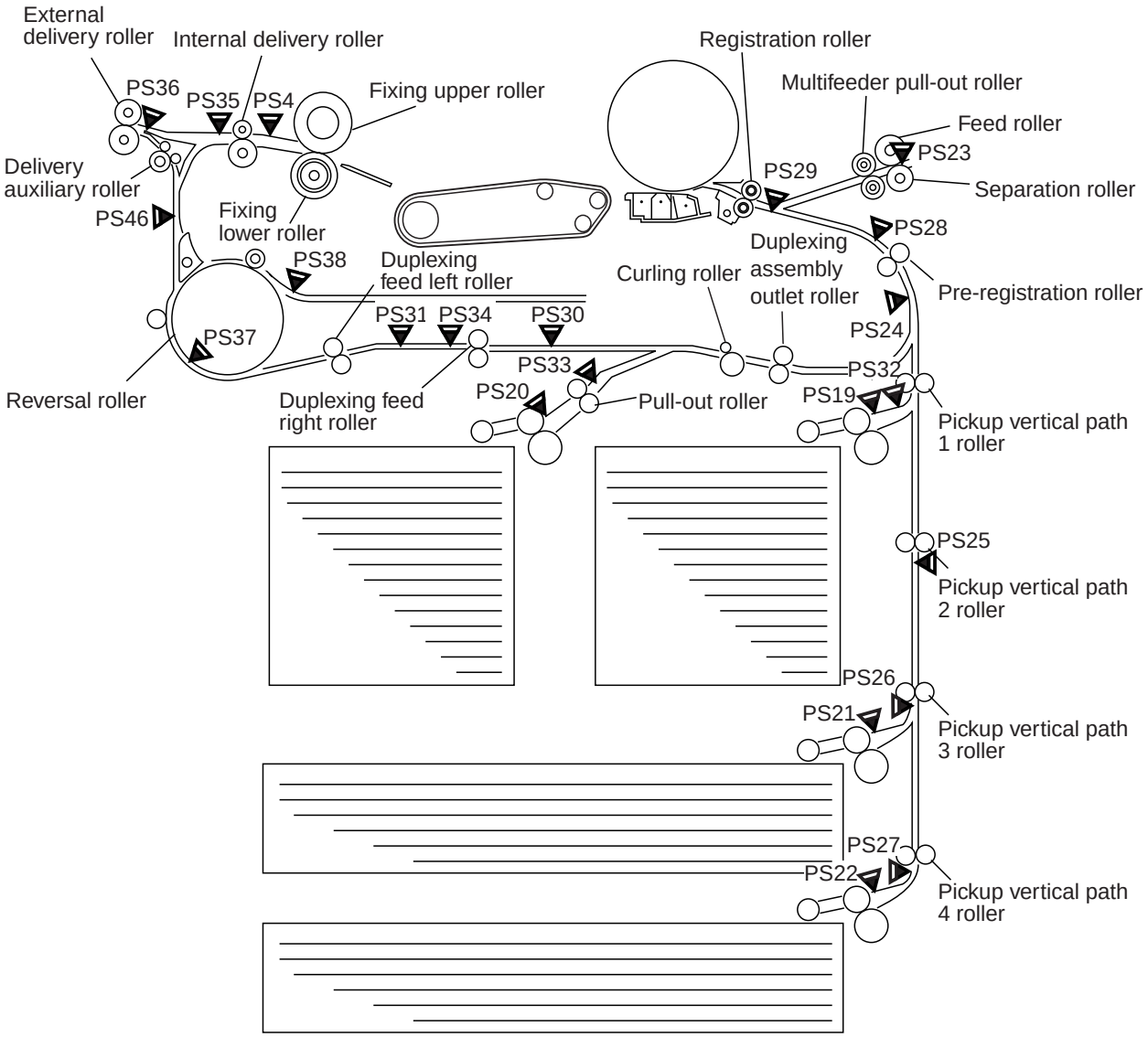

F05-102-01

COPYRIGHT © 2000 CANON INC.

The following sensors are used to monitor the movement of paper:

Notation	Name
PS4	Claw jam sensor
PS19	Right deck retry sensor
PS20	Left deck retry sensor
PS21	Cassette 3 retry sensor
PS22	Cassette 4 retry sensor
PS23	Manual feed paper sensor
PS24	Vertical path 1 paper sensor
PS25	Vertical path 2 paper sensor
PS26	Vertical path 3 paper sensor
PS27	Vertical path 4 paper sensor
PS28	Laser write start sensor
PS29	Registration paper sensor
PS30	Duplexing pre-registration sensor
PS31	Duplexing horizontal registration sensor
PS32	Right deck feed paper sensor
PS33	Left deck feed paper sensor
PS34	Duplexing paper sensor
PS35	Internal delivery sensor
PS36	External delivery sensor
PS37	Reversal sensor 1
PS38	Reversal sensor 2
PS46	Delivery assembly jam sensor

T05-102-01

COPYRIGHT © 2000 CANON INC.

2. Pickup Assembly

2.1 Pickup Control System

The following figure shows the system used to control deck pickup operations:
F05-201-01

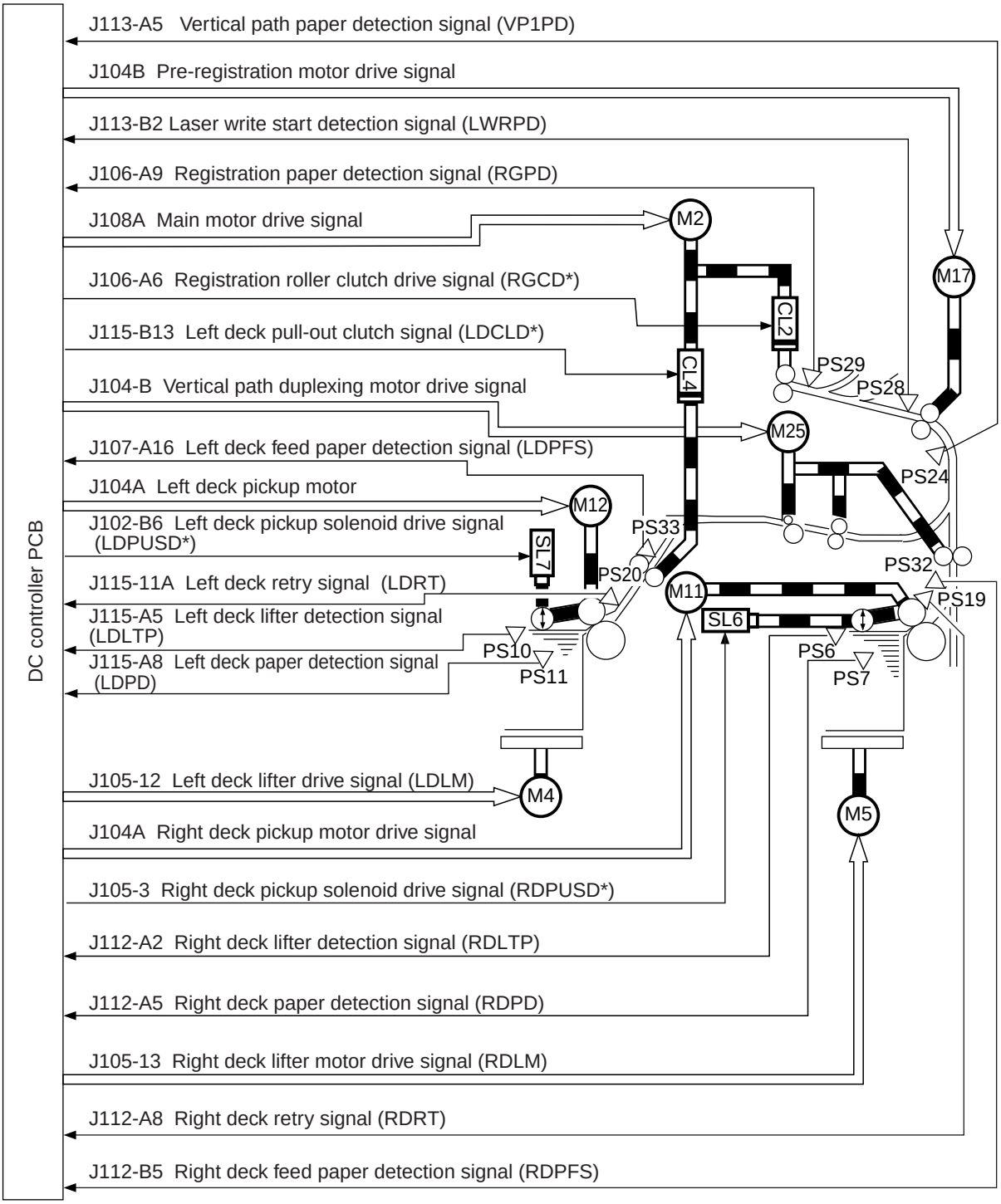

F05-201-01

COPYRIGHT © 2000 CANON INC.

The following figure shows the system used to control cassette pickup operations:
F05-201-02

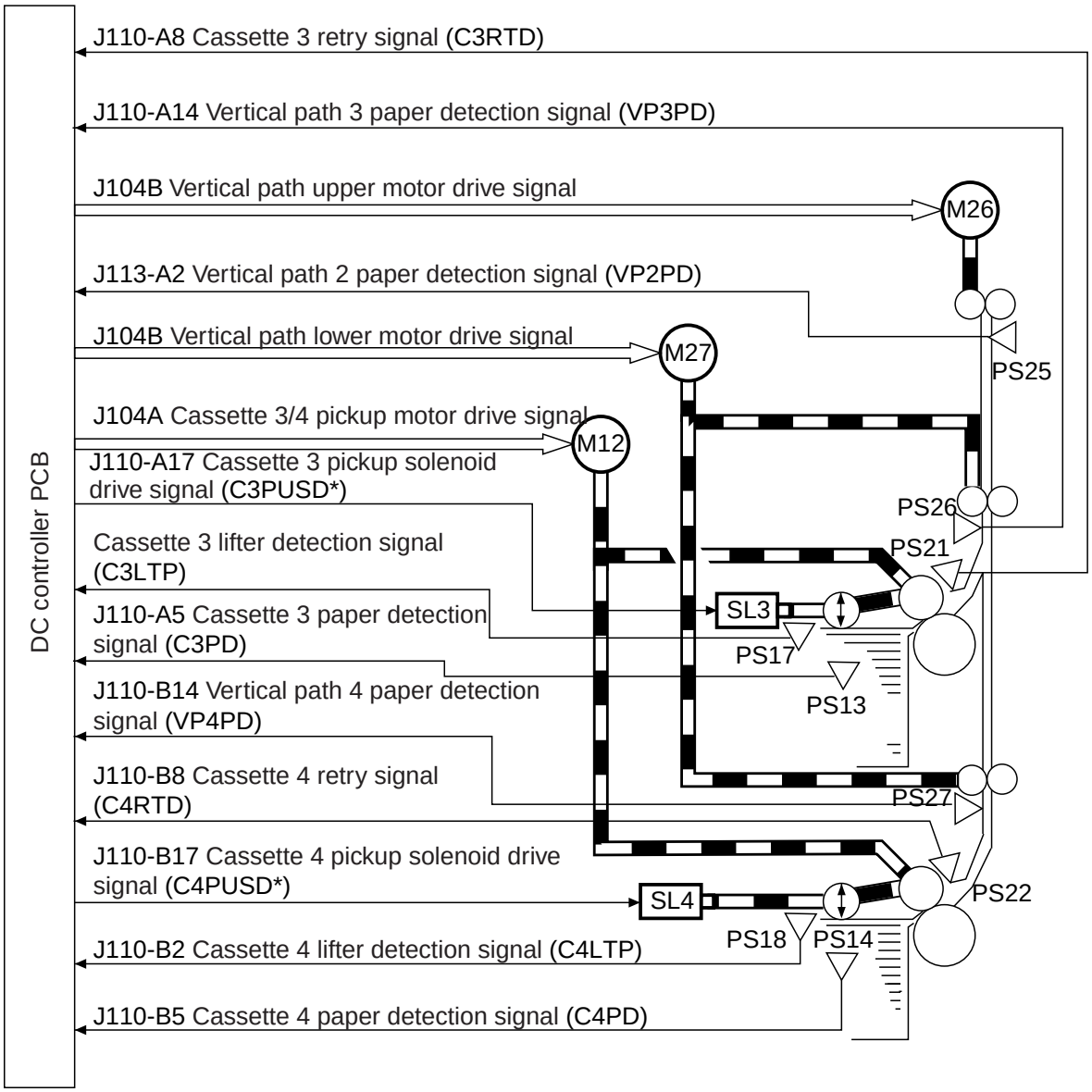

F05-201-02

2.1.1 Outline

The paper inside the deck/cassette is held up by a lifter so that it remains in contact with the pickup roller, which is driven by the pickup motor (M11, M12, M24).

The pickup motor (M11, M12, M24) turns on, and the pickup roller rotates to feed paper.

The pickup solenoid (SL3, SL4, SL6, SL7) turns, and the pickup roller moves away from the paper.

The feed roller and the separation roller make sure that only one sheet of paper is moved farther to the paper path.

The sheet of paper moves through the vertical path assembly, and reaches the registration roller.

The pickup motor (M11, M12, M24) is a stepping motor, adopted to ensure good separation and high durability.

COPYRIGHT © 2000 CANON INC.

2.1.2 Sequence of Operations (pickup)

a. Right Deck

- A4, 2 Sheets, Continuous

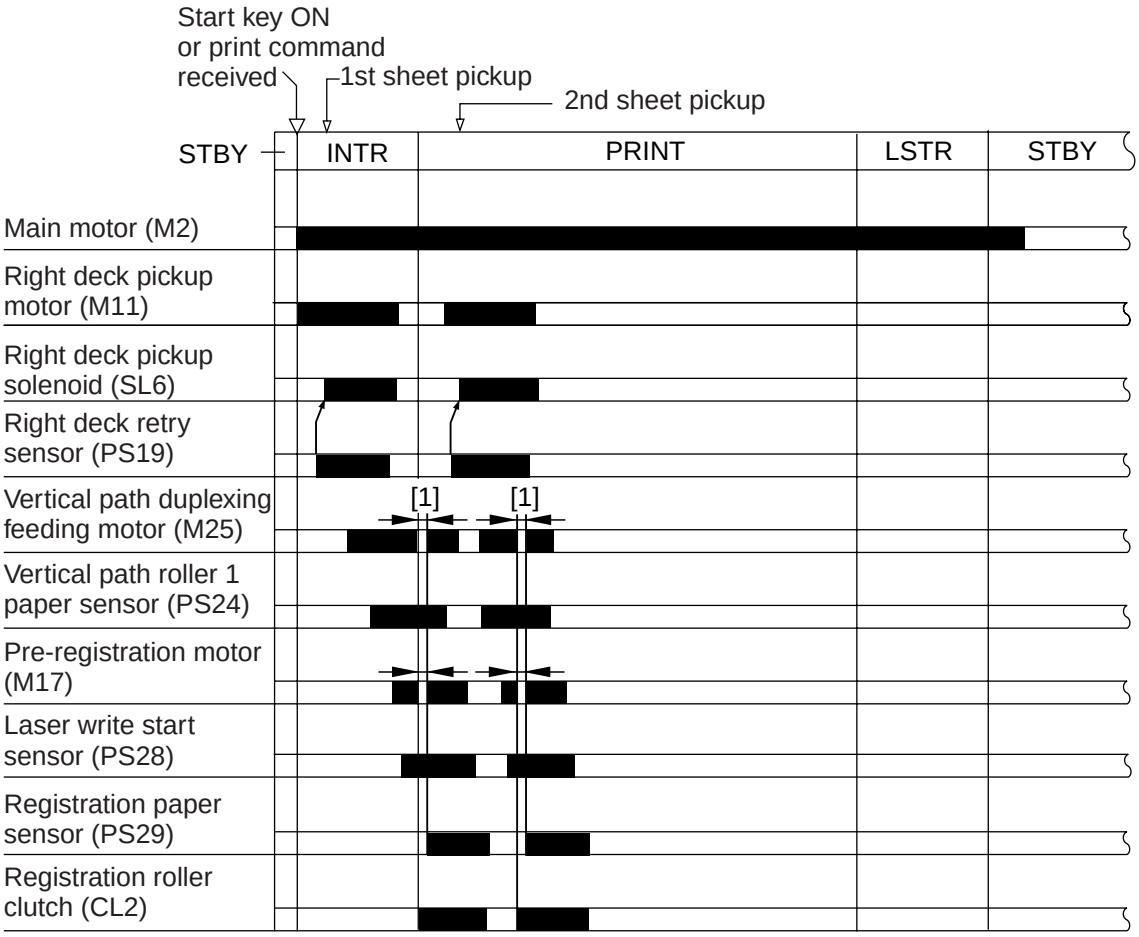

[1] : Rests to arch against the registration roller.

F05-201-03

b. Cassette 3

• A4, 2 Sheets, Continuous

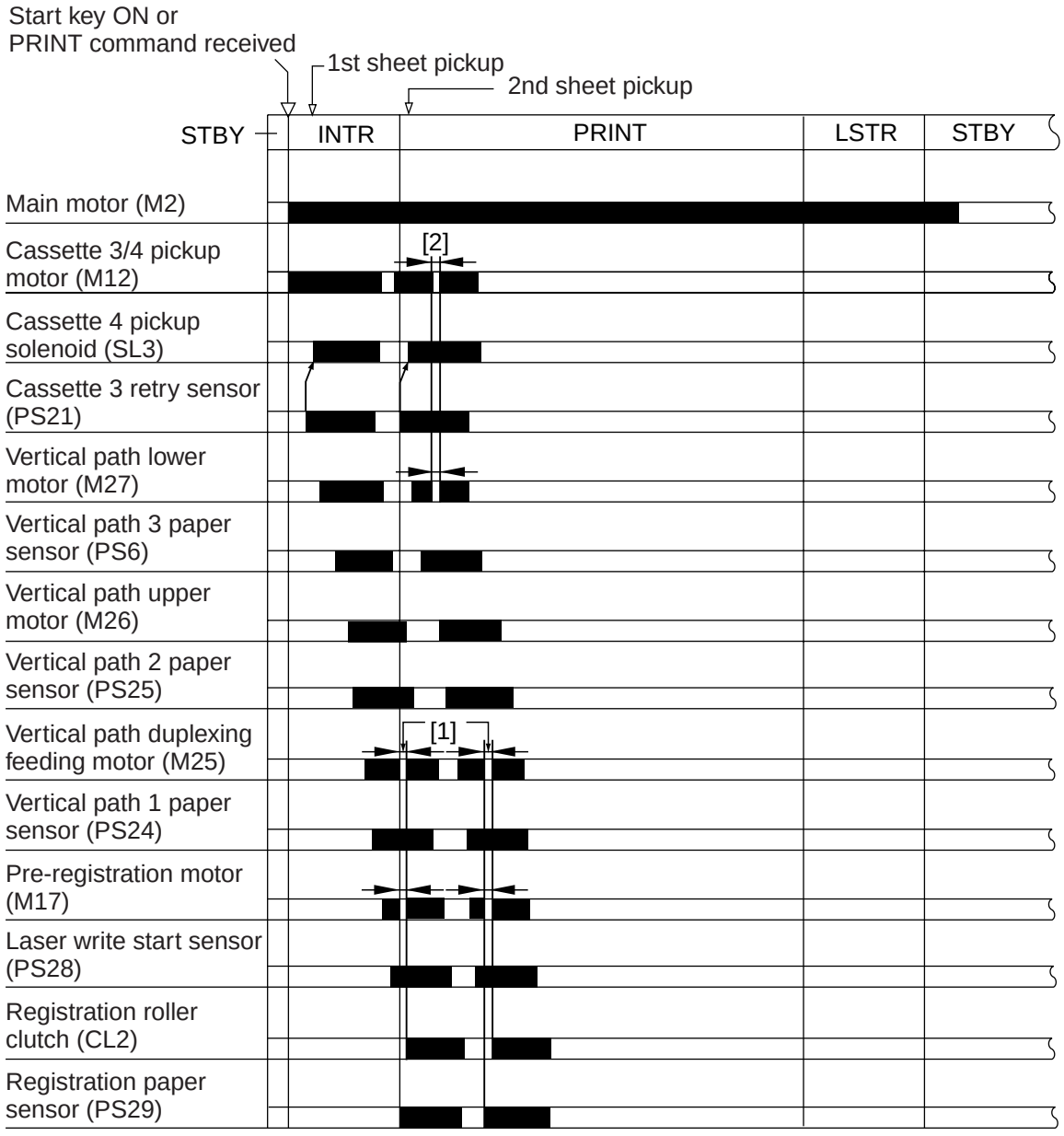

[1] : Rests to arch against the registration roller.
[2] : Rests to adjust the sheet-to-sheet interval 20 mm from the vertical

F05-201-04

COPYRIGHT © 2000 CANON INC.

2.1.3 Pickup Retry Operation

If the retry sensor (PS19, PS20, PS21, PS22) detects a delay (as caused by wear on the pickup roller), the machine executes pickup retry operation.

If a delay is detected once again after a retry, the machine will indicate the Jam message in its control panel.

The following is the sequence of retry operations:

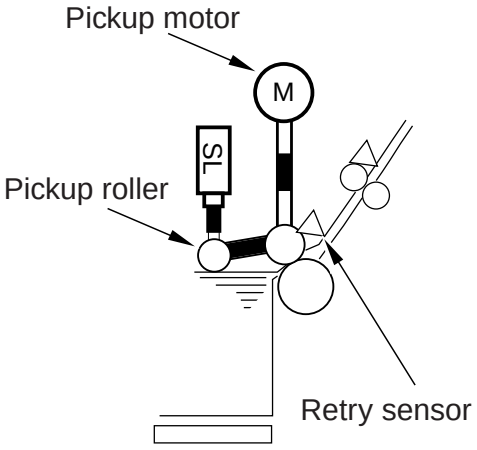

F05-201-05

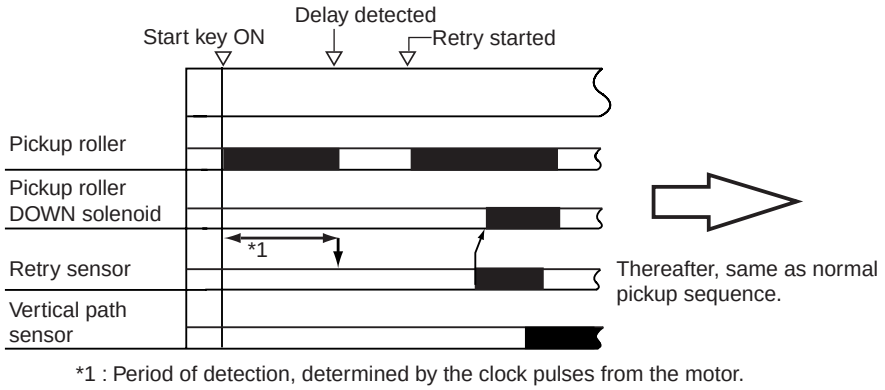

*1 : Period of detection, determined by the clock pulses from the motor.

F05-201-06

2.1.4 Others



The following is used to switch the temperature control mechanism for the fixing heater to use thick paper sequence when a specific source is selected:
COPIER>OPTION>CST>C1-DWSW
C1: front deck (right)
COPIER>OPTION>CST>C2-DWSW
C2: front deck (left)

COPYRIGHT © 2000 CANON INC.

2.2 Lifter Movement

2.2.1 Outline

When the deck or the cassette is pushed in, the cassette open/closed sensor turns on and, at the same time, the pickup roller moves down. The condition causes the light-blocking plate to move away from the lifter sensor, consequently turning on the cassette lifter motor to move up the lifter.

The lifter keeps moving up unitil the lifter sensor detects the surface of paper. In the case of the right/left deck, a limiter is mounted to prevent the lifter from moving farther up than the lifter sensor.

When the open button of the deck or the cassette is pressed, the drive transmission gear of the lifter becomes free, allowing the lifter to move down on its own weight.

	Right deck	Left deck	Cassette 3	Cassette 4
Cassette open/ closed detection	Right deck open/closed sensor (PS5)	Left deck open/ closed sensor (PS9)	Cassette 3 open/ closed sensor (PS15)	Cassette 4 open/ closed sensor (PS16)
Lifter position detection	Right deck lifter sensor (PS6)	Left deck lifter sensor (PS10)	Cassette 3 lifter sensor (PS17)	Cassette 4 lifter sensor (PS18)
Paper detection	Right deck paper sensor (PS7)	Left deck paper sensor (PS11)	Cassette 3 paper sensor (PS13)	Cassette 4 paper sensor (PS14)
Paper level detection	Right deck paper level upper sensor (PS47) Right deck paper level lower sensor (PS48)	Left deck paper level upper sensor (PS49) Left deck paper level lower sensor (PS50)	Cassette 3 paper level detection PCB (variable resistor)	Cassette 4 paper level detection PCB (variable resistor)
Lifter UP limiter	Right deck limit sensor (PS8)	Left deck limit sensor (PS9)	—	—
Drive motor	Right deck lifter motor (M5)	Left deck lifter motor (M4)	Cassette 3 lifter motor (M20)	Cassette 4 lifter motor (M21)

T05-202-01

COPYRIGHT © 2000 CANON INC.

The following figures show the components of the deck and the cassette:

- Deck

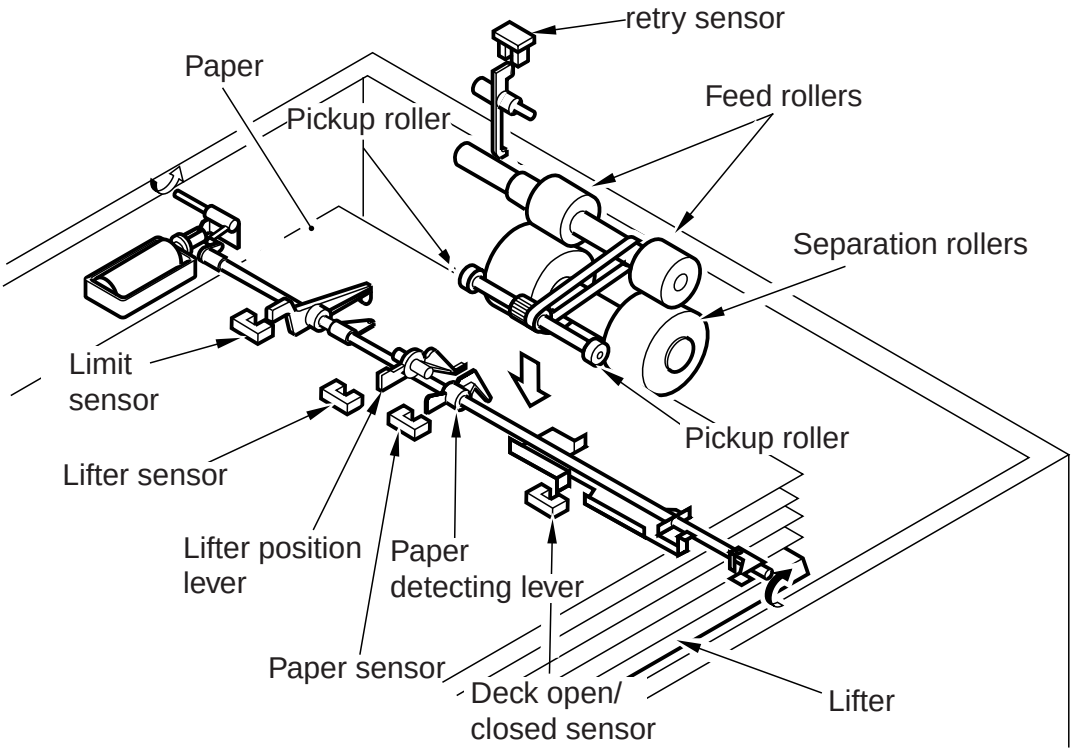

F05-202-01

- Cassette

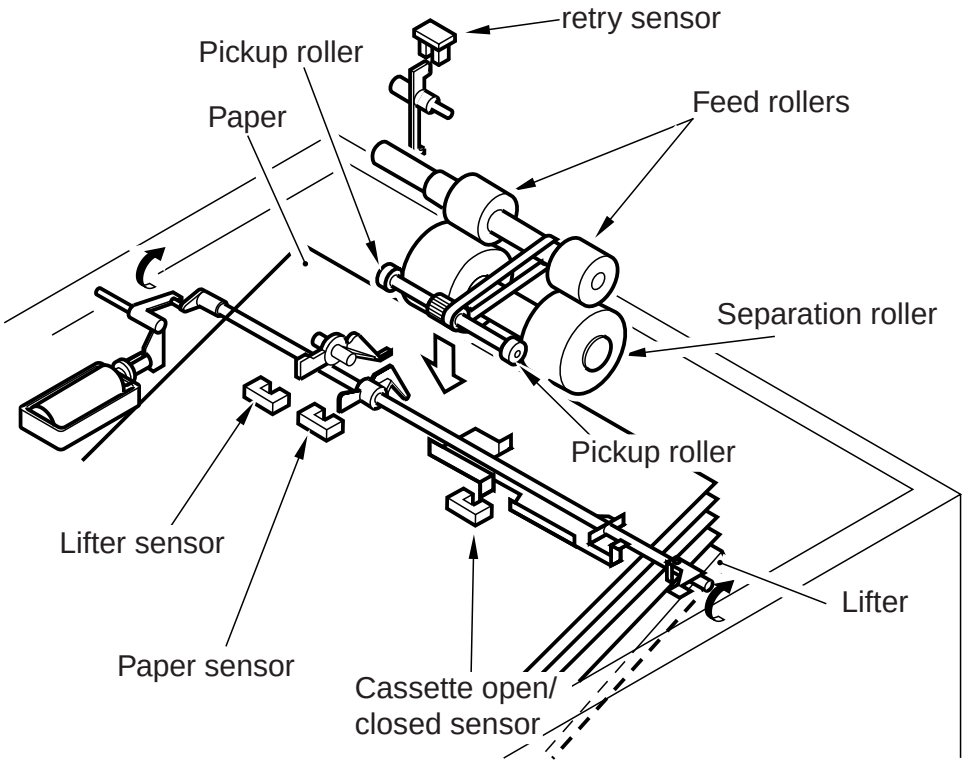

F05-202-02

COPYRIGHT © 2000 CANON INC.

2.2.2 Lifter Limiter Control Circuit (right/left deck)

When the CPU on the DC controller PCB generates the motor drive signal, the lifter motor turns on to move up the lifter. When the deck reaches the lifter sensor, the deck lifter detection signal is sent to the CPU, which in response will stop the deck lifter drive motor.

The deck lift sensor is mounted in consideration of the motor failing to stop. When the surface of paper reaches the deck limiter, the limit signal will be sent to the DC controller PCB to cut the drive signal, thereby stopping the lifter motor.

The following is a block diagram of the control circuit:

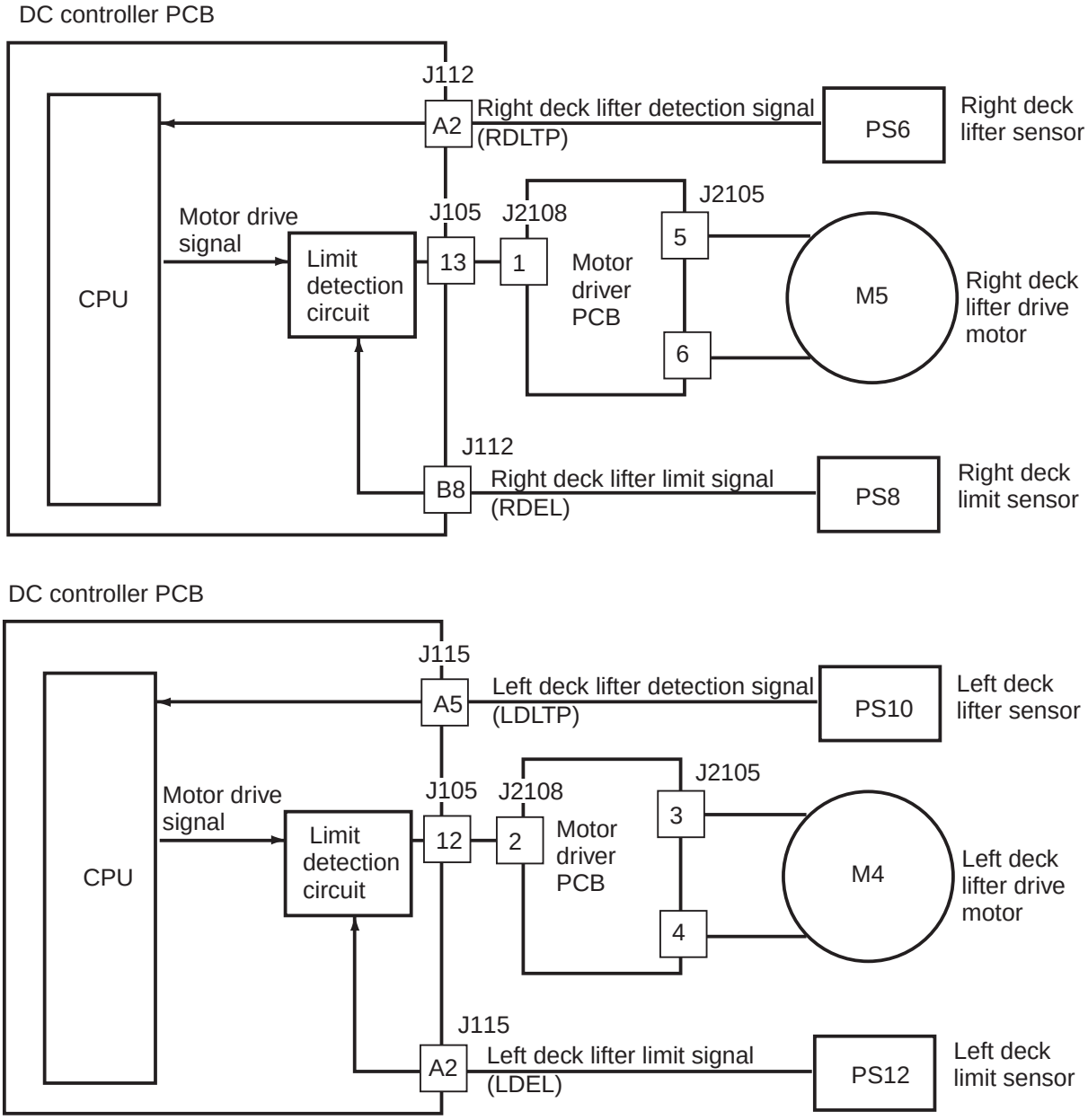

F05-202-03

2.2.3 Detecting the Presence/Absence of Paper

The presence/absence of paper in the deck or the cassette is detected by the cassette paper sensor.

• Paper Is Present

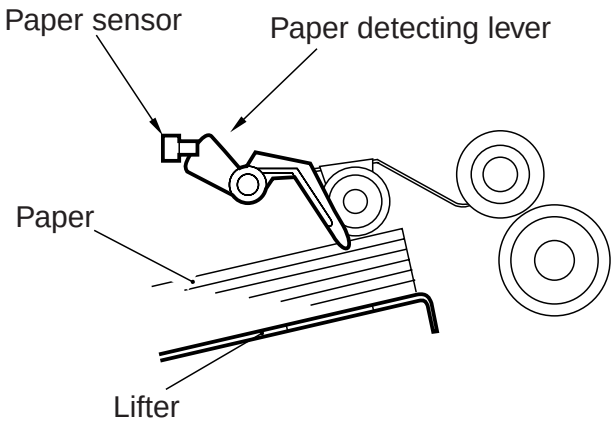

F05-202-04

• Paper Is Absent

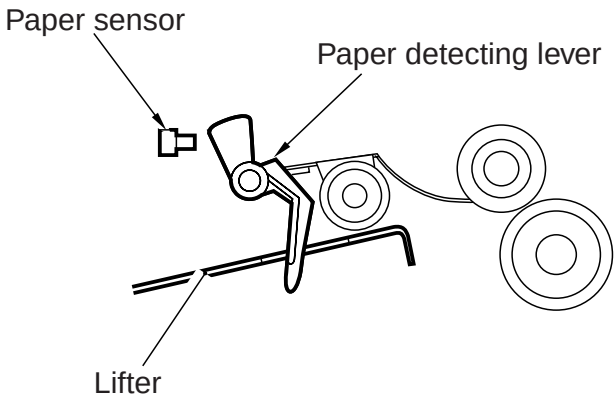

F05-202-05

2.2.4 Detecting the Level of Paper

a. Outline

The machine indicates the level of paper in the deck or the cassette on the control panel in four levels (including absence):

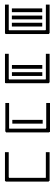

F05-202-06

3 bars	100% to about 50% of capacity
2 bars	50% to about 10% of capacity
1 bar	10% or less of capacity
No bar	Absence of paper

T05-202-02

COPYRIGHT © 2000 CANON INC.

b. Operation

In the case of the right/left deck, two sensors are used to detect the position of the deck base plate, and the level of paper is identified with reference to the state of the sensors (on/off).

The absence of paper is detected by an exclusive sensor (See 2.2.3 “Detecting the Presence/Absence of Paper”).

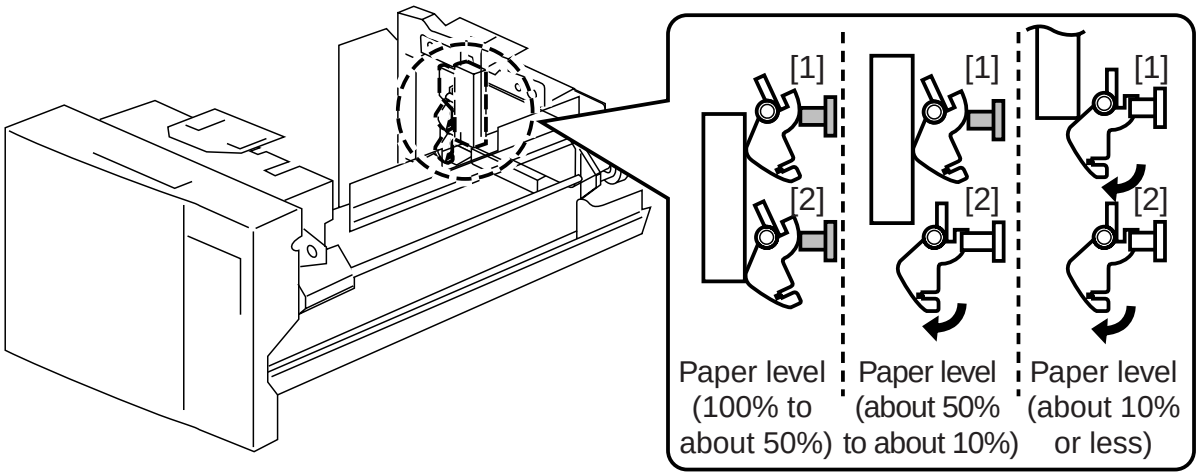

F05-202-07

	Right deck			Left deck		
Paper level	[1] Sensor (PS47)	[2] Sensor (PS48)	Sensor (PS7)	[1] Sensor (PS49)	[2] Sensor (PS50)	Sensor (PS11)
100% to about 50%	ON	ON	ON	ON	ON	ON
about 50% to about 10%	OFF	ON	ON	OFF	ON	ON
about 10% or less	OFF	OFF	ON	OFF	OFF	ON
absent	OFF	OFF	OFF	OFF	OFF	OFF

T05-202-03

In the case of the cassette 3/4, the level of paper is identified with reference to the resistance read of the variable resistor operating in conjunction with the movement of the lifter drive shaft.

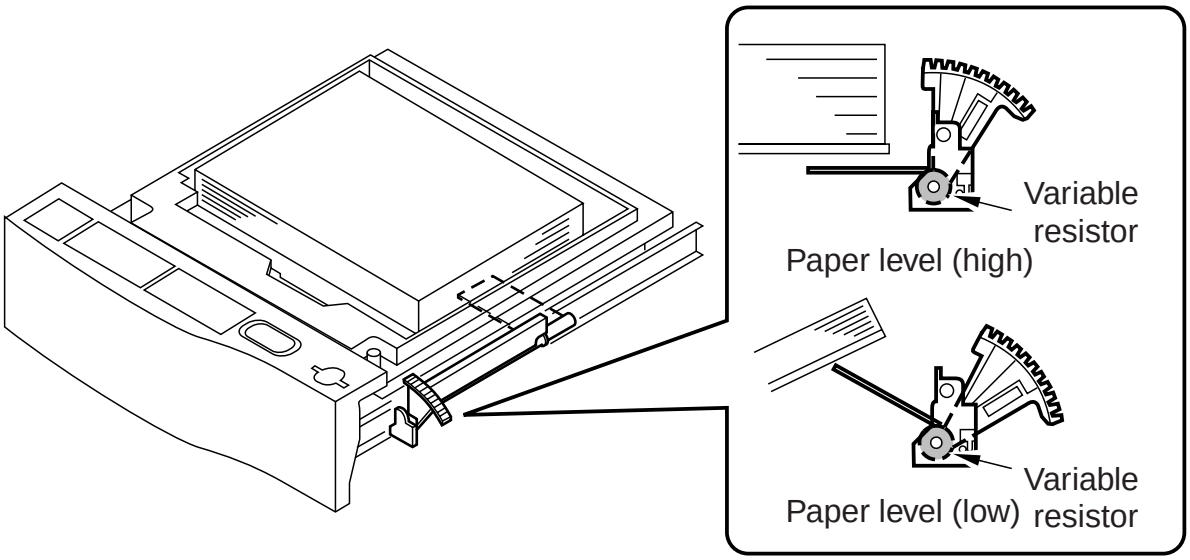

F05-202-08

COPIER>ADJUST>CST-ADJ>C3-LVOL
when 50 sheets exist in the cassette 3
COPIER>ADJUST>CST-ADJ>C3-HVOL
when 275 sheets exist in the cassette 3
COPIER>ADJUST>ST-ADJ>C4-LVOL
when 50 sheets exist in the cassette 4
COPIER>ADJUST>CST-ADJ>C4-HVOL
when 275 sheets exist in the cassette 4

COPYRIGHT © 2000 CANON INC.

2.3 Identifying the Size of Paper in the Cassette

2.3.1 Right/Left Deck

The right/left deck does not possess a paper size detection mechanism, and its size configuration is changed as follows (A4, B5, LTR):

[1] Changing the position of the paper size guide plate of the cassette.
[2] Registering the new paper size in service mode.

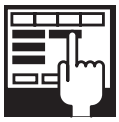

COPIER>OPTION>CST>P-SZ-C1
right deck paper size
Settings:
6: A4; 15: B5; 18: LTR
COPIER>OPTION>CST>P-SZ-C2
left deck paper size
Settings:
6: A4; 15: B5; 18: LTR

2.3.2 Cassette 3/4

a. Outline

The size of paper inside the cassette is identified by the paper size sensor mounted to the rear of the cassette holder.

When the cassette is slid into the cassette holder, the paper size sensor is activated by the boss on the cassette, enabling the identification of paper width and length. Based on the width and the length, the DC controller identifies the size of the paper, and sends the result to the controller unit and the reader unit.

The boss used to press the paper size sensor operates in conjunction with the guide plate inside the plate, i.e., its position is determined when the guide plate is set to suit a particular paper size.

The cassette 4 of the 120/230-V model, however, is not equipped with a paper size detection mechanism, requiring switching of the paper size.

b. Identifying the Size of Paper

The paper length sensor consists of two photointerrupters, and the combination of outputs from these two photointerrupters is used to find out the length of paper.

The paper width sensor, on the other hand, is a variable resistor, and the resistance it reads is used to find out the width of paper.

COPYRIGHT © 2000 CANON INC.

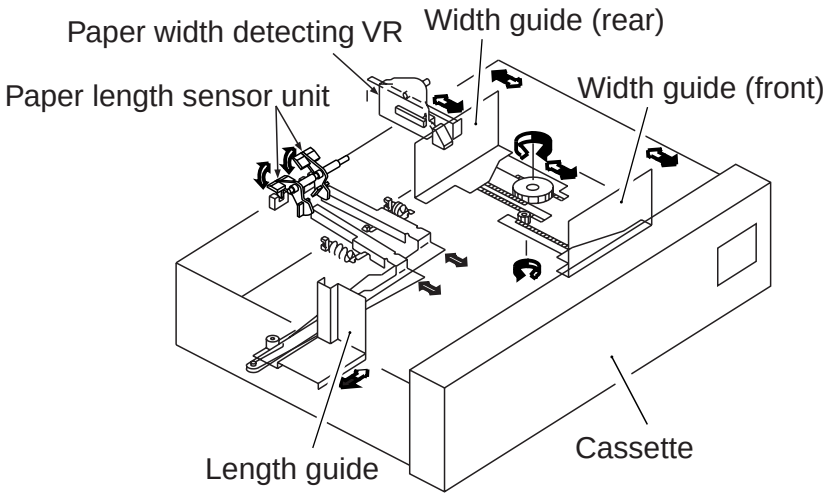

F05-203-01

	Cassette 3	Cassette 4*1
Paper length detection	SV2 (2 photointerrupters)	SV1 (2 photointerrupters)
Paper width detection	SVR4	SVR5

*1 Not standard with the 120/230V model

T05-203-01

c. Changing the Paper Size Configuration of the Cassette 4 (120/230-V model only)

The paper size configuration of the cassette 4 can be configured as follows:

[1] Changing the position of the paper size guide plate inside the cassette.

[2] Registering the new paper size in silence mode.



COPIER>OPTION>CST>P-SZ-C4

cassette 4 paper size

COPYRIGHT © 2000 CANON INC.

2.3.3 Markings on the Width Guide Rail

The width guide rail found inside the cassette is provided with paper size positioning holes, given markings from A through M as shown below.

These markings can help determine whether the correct paper width is selected, as when the user reports skew movement of paper (Note that this information is not disclosed to the user).

Marking	Paper name	Remarks
A	STMT-R	
B	A5-R	
C	B5-R	
D	KLGL-R	
E	GLTR-R	
F	G-LGL	U3
G	A4-R	
H	LGL/LTR-R	
I	FLSC	U2
J	B4/B5	
K	G-LTR	U1
L	279.4×431.8mm (11"×17") / LTR	U4
M	A3/A4	

T05-203-02

COPYRIGHT © 2000 CANON INC.

2.3.4 Paper Sizes

The DC controller PCB identifies the size of paper based on inputs of paper width and length as shown in the following table, and sends the result of identification to the controller unit.

The paper sizes in the following table are selected from specific groups.

The asterisk (*) indicates a factory setting.

Paper width sensor (slice level) Unit: mm	Paper length sensor	PS102/ PS104	PS101/ PS103	PS102/ PS104	PS101/ PS103	PS102/ PS104	PS101/ PS103	PS102/ PS104	PS101/ PS103
	Signal	SZ 2	SZ 1	SZ 2	SZ 1	SZ 2	SZ 1	SZ 2	SZ 1
	ON/ OFF	0	0	0	1	1	0	1	1
288.5		A4		-		A3		-	
273.7		(U4)		-		279.4 431.8mm (11”×17”)		-	
261.8		(U1)		-		-		-	
238.0		B5		-		B4		-	
212.9		STMT		LTRR		LGL		(U2)	
206.6		A5		A4R		-		(U3)	
196.6		G-LTRR		-		-			
186.0		K-LGLR		-		-		-	
165.2		B5R		-		-		-	
144.1		A5R		-		-		-	
		STMTR		-		-		-	

T05-203-03

Group		Size
U1	*	G-LTR
		K-LGL
U2	*	FOOLSCAP
		OFFICIO
		E-OFFI
		A-OFFI
		M-OFI
U3	*	G-LGL
		FOLIO
		AUS-FLS
	*	LTR
		A-LTR

T05-203-04

COPYRIGHT © 2000 CANON INC.



COPIER>OPTION>CST>CST-U1
31: G-LTR*; 22: K LGL
COPIER>OTPION>CST>CST-U2
24: FLSC*; 26: OFI; 27: E-OFI; 36: A-OFI; 37: M-OFI
COPIER>OPTION>CST>CST-U3
34: G-LGL*; 35: FOLI; 25: A-FLS
COPIER>OPTION>CST>CST-U4
18: LTR*; 29: A-LTR
*Factory setting.
COPIER>ADJUST>CST-ADJ>C3-STMTR
Used to adjust the paper width basic value for STMTR in the cassette 3.
COPIER>ADJUST>CST-ADJ>C3-A4R
Used to adjust the paper width basic value for A4R in the cassette 3.
COPIER>CST-ADJ>C4-STMTR
Used to adjust the paper width basic value for STMTR in the cassette 4.
COPIER>ADJUST>CST-ADJ>C4-A4R
Used to adjust the paper width basic value for A4 in the cassette 4.
COPIER>OPTION>BODY>C1-DWSW
Used to switch the fixing temperature control mechanism for pickup for the right deck.
COPIER>OTPON>BODY>C2-DWSW
Used to switch the fixing temperature control mechanism for pickup for the left deck.

COPYRIGHT © 2000 CANON INC.

• Paper Types Supported by the Machine

Paper name	Notation	Size (vertical x horizontal; mm)
A3	A3	(297±1)×(420±1)
A4R	A4R	(210±1)×(297±1)
A4	A4	(297±1)×(210±1)
A5	A5	(210±1)×(148.5±1)
A5R	A5R	(148.5±1)×(210±1)
B4	B4	(257±1)×(364±1)
B5R	B5R	(182±1)×(257±1)
B5	B5	(257±1)×(182±1)
11×17	11×17	(279±1)×(432±1)
LTRR	LTRR	(216±1)×(279±1)
LTR	LTR	(279±1)×(216±1)
STMT	STMT	(216±1)×(139.5±1)
STMR	STMTR	(139.5±1)×(216±1)
LEGAL	LGL	(216±1)×(356±1)
Korean Government	K-LGL	(265±1)×(190±1)
Korean Government R	K-LGLR	(190±1)×(265±1)
FOOLSCAP	FLSC	(216±1)×(330±1)
Australian Foolscap	A-FLS	(206±1)×(337±1)
OFICIO	OFI	(216±1)×(317±1)
Ecuadorian Officio	E-OFI	(220±1)×(320±1)
Bolivian Officio	B-OFI	(216±1)×(355±1)
Argentine LTR	A-LTR	(280±1)×(220±1)
Argentine LTRR	A-LTRR	(220±1)×(280±1)
Government LTR	G-LTR	(267±1)×(203±1)
Government LTRR	G-LTRR	(203±1)×(267±1)
Argentine LGL	A-LGL	(220±1)×(340±1)
Government LGL	G-LGL	(203±1)×(330±1)
FOLIO	FOLI	(210±1)×(330±1)
Argentine Officio	A-OFI	(220±1)×(340±1)

T05-203-05

COPYRIGHT © 2000 CANON INC.

2.4 Manual Feed Tray Pickup Assembly

2.4.1 Pickup Operation

The presence/absence of paper on the manual feed tray is detected by the manual feed paper sensor (PS23). The manual feed pull-out roller is driven by the main motor by way of the manual feed pickup clutch (CL3). When the clutch is engaged, the manual feed holding plate solenoid turns on to shift up the manual feed holding tray. This condition allows the gear of the feed roller to receive the drive of the main motor so that the feed roller makes a single rotation to move paper. (The paper is moved as far as the registration roller by the work of the manual feed pull-off roller while the feed roller rotates.)

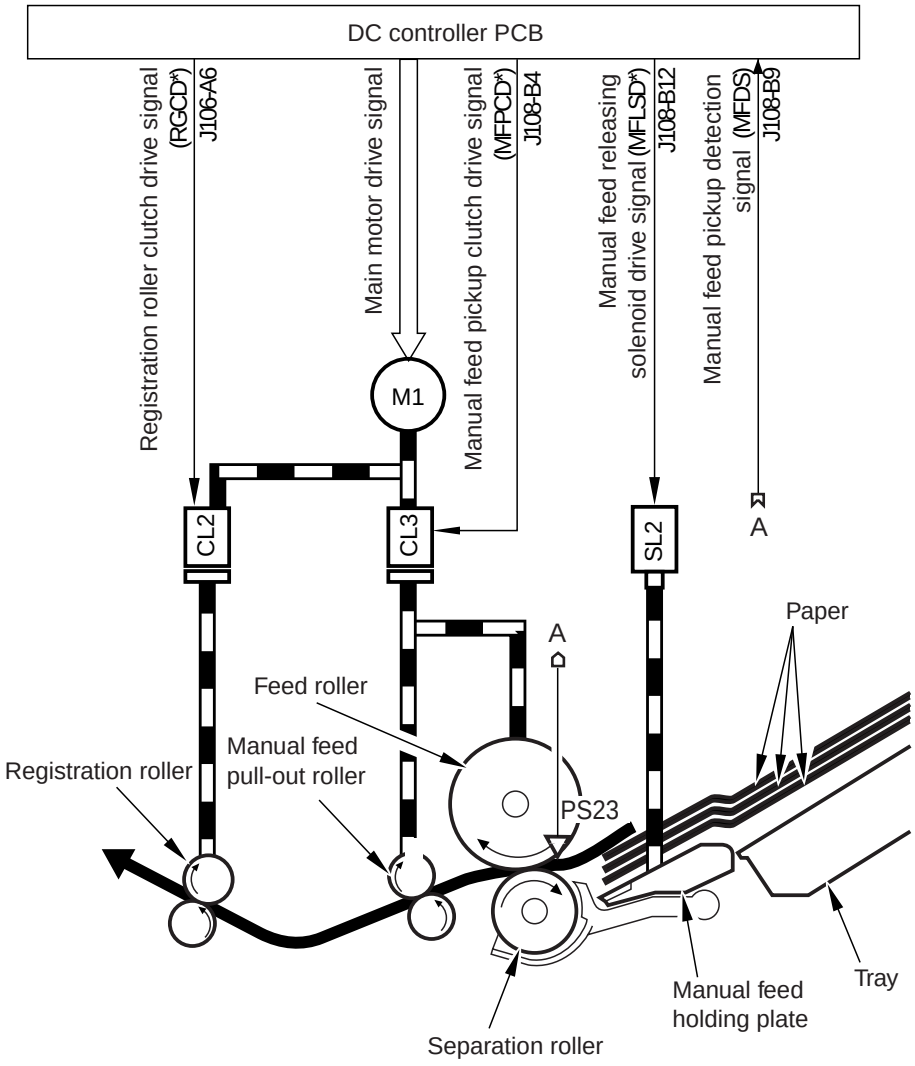

F05-204-01

2.4.2 Detecting the Size of Paper on the Manual Feed Tray

The side guide on the manual feed tray is set by the user to suit the width of paper. The resistance of the variable resistor changes in keeping with the movement of the side guide, and the reading is sent to the DC controller PCB for identification of the width of paper. The machine is not equipped with a mechanism to detect the length of paper, requiring the user to select a specific size.

The detected width of paper is for control of the laser, and the length of paper is detected when the manual feed tray is used with reference to the period of time during which the pre-registration paper sensor (PS23) remains on.

The paper width basic value must always be entered newly whenever the variable resistor has been replaced.

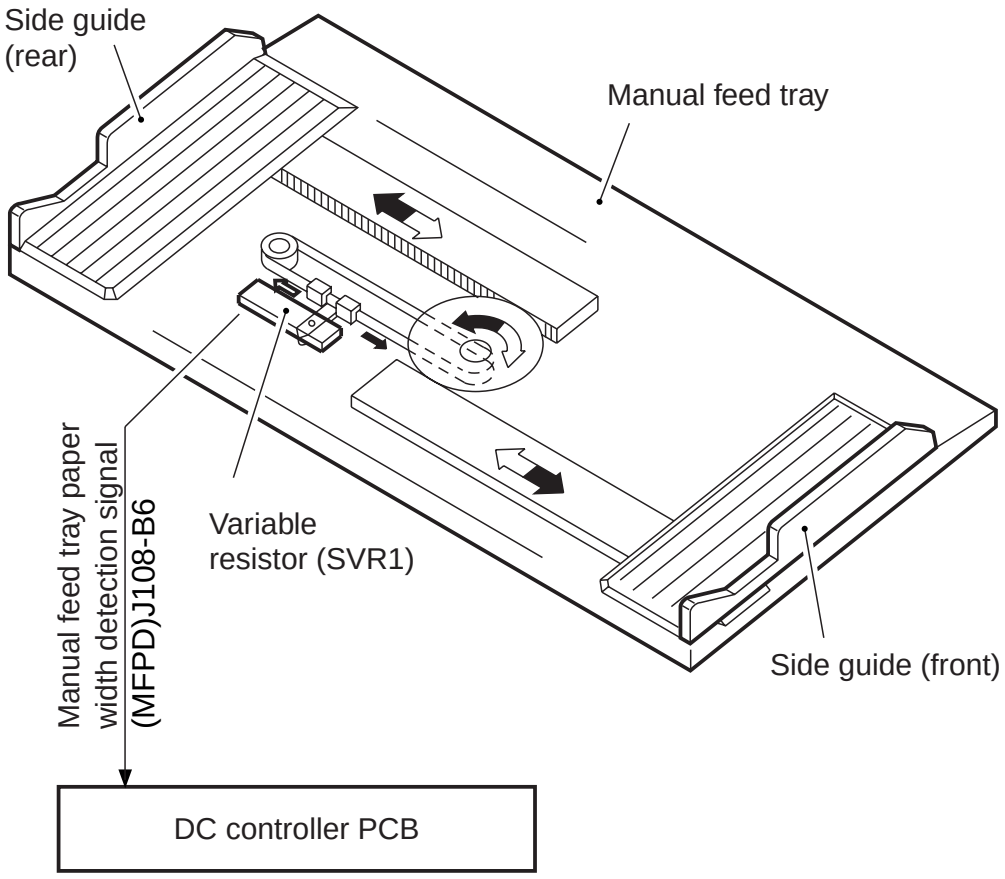

F05-204-02

COPIER>ADJUST>CST>ADJ>MF-A4R
Used to enter the paper width basic value for A4R for the manual feed tray.
COPIER>ADJUST>CST-ADJ>MF-A6R
Used to enter the paper width basic value for A6R for the manual feed tray.
COPIER>ADJUST>CST-ADJ>MF-A4
Used to enter the paper width basic value for A4 paper for the manual feed tray.

COPYRIGHT © 2000 CANON INC.

3. Controlling the Registration Clutch

3.1 Outline

The registration clutch is controlled so that print paper and the image on the drum match at a specific point, and the timing at which it is turned on may be adjusted in service mode (ADJUST>FEED-ADJ>REGIST).

3.2 Control System

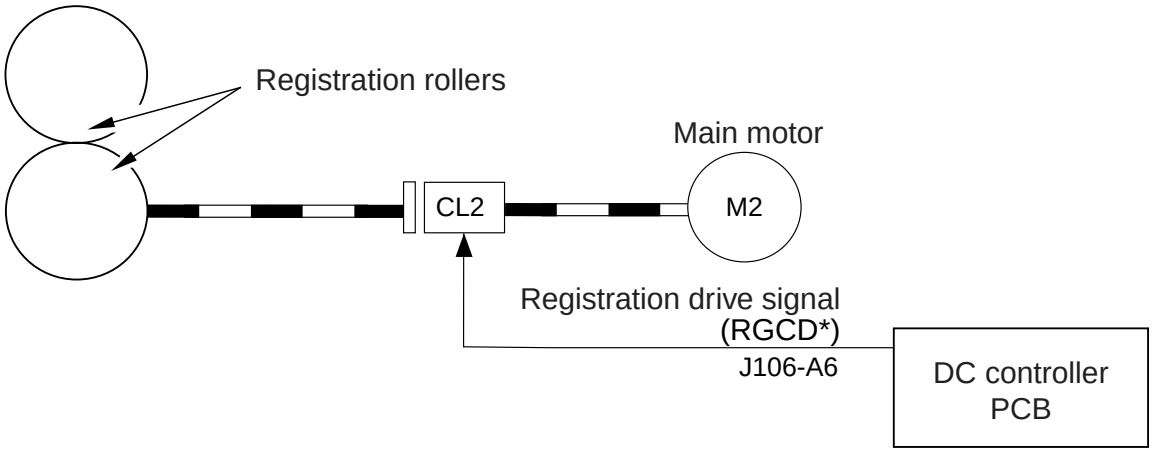

F05-302-01

4. Double-Sided Prints

4.1 Control System

4.1.1 Sending Paper to the Reversing Assembly After Printing on the First Side

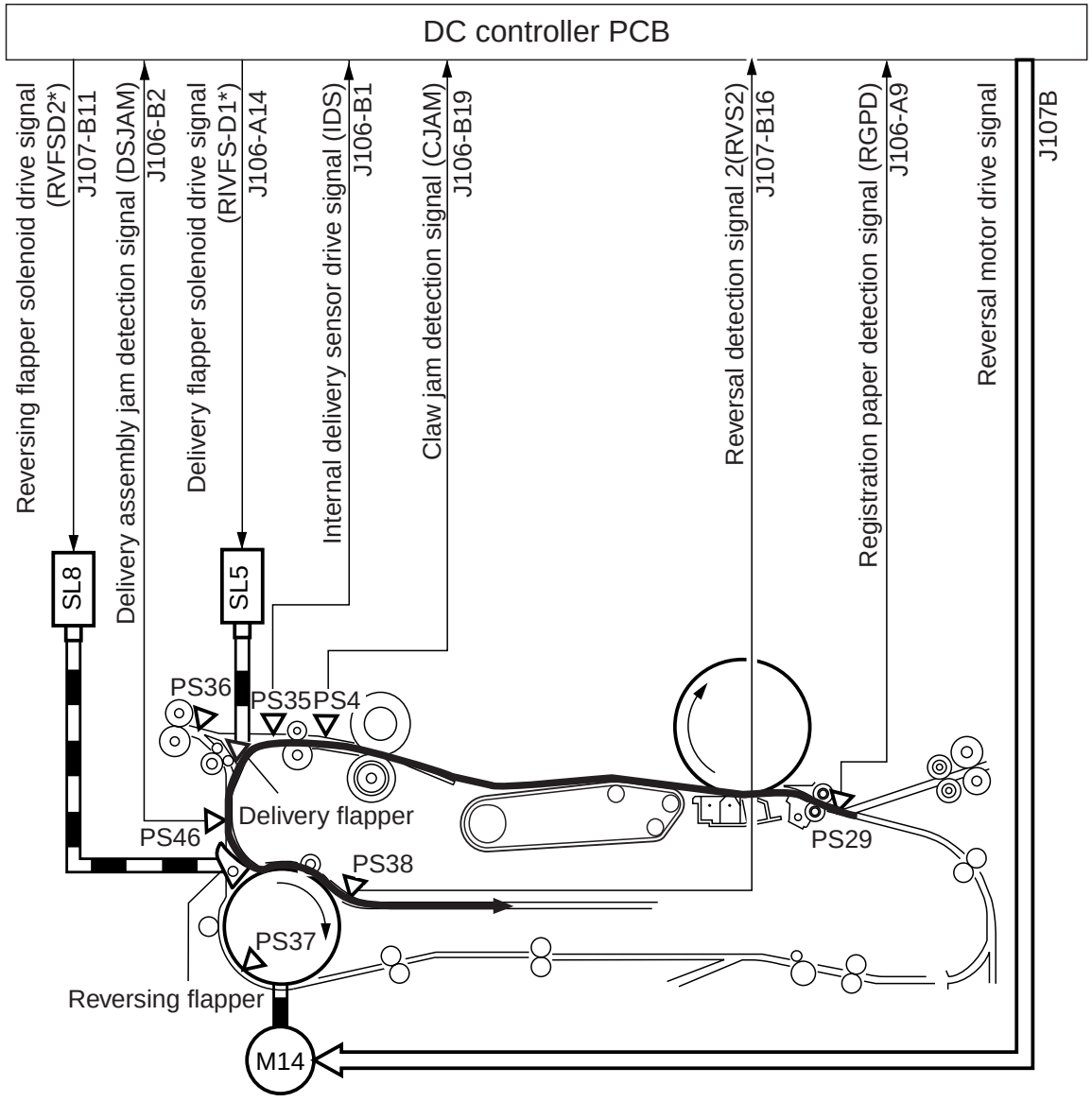

F05-401-01

COPYRIGHT © 2000 CANON INC.

4.1.2 Sending Paper from the Reversing Assembly to the Duplexing/Feeding Assembly

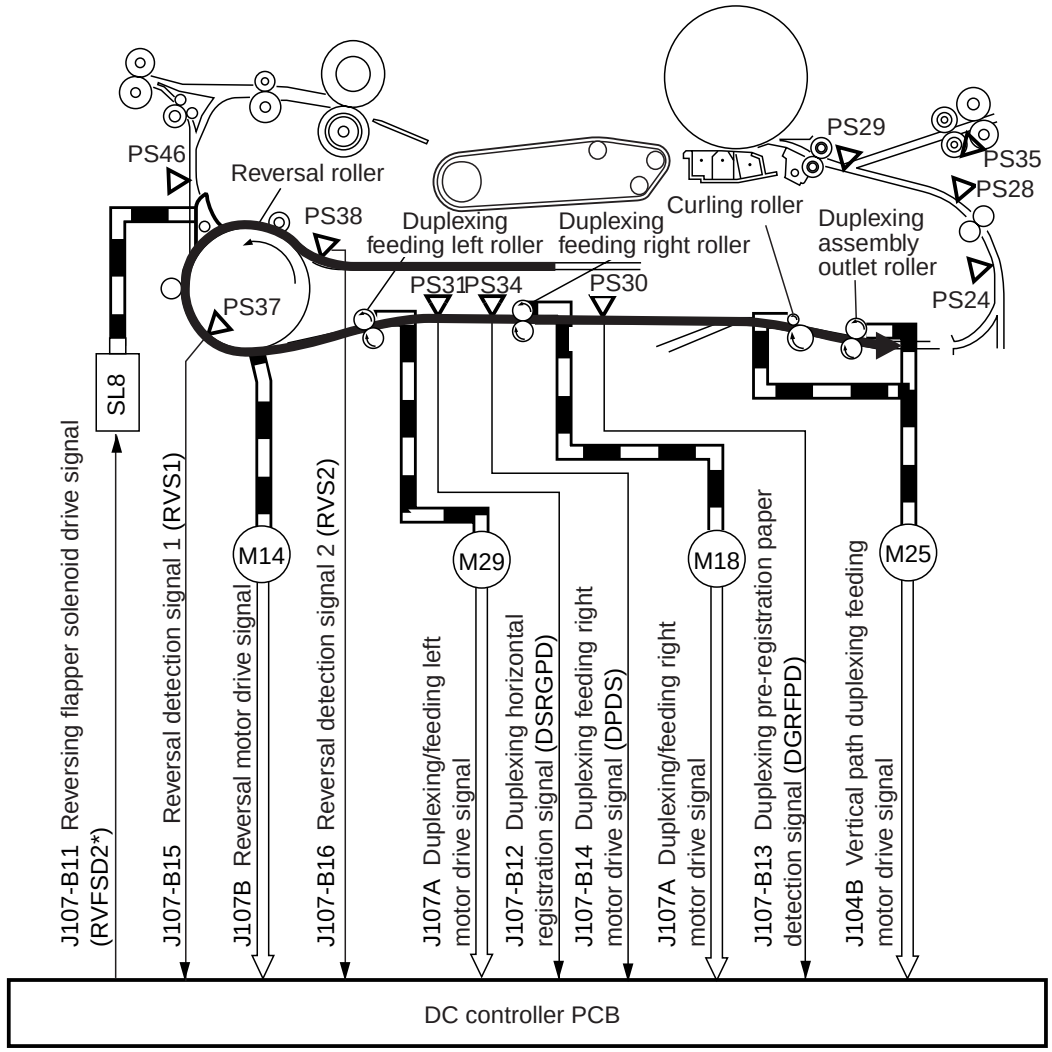

F05-401-02

4.1.3 Outline

The feeding path for the first side of a double-sided print is formed when the delivery flapper solenoid (SL5) tuns off and the reversing flapper solenoid (SL8) turns on, thereby shifting up the delivery flapper and the reversing flapper.

When the leading edge of a sheet after printing on its first side reaches the delivery assembly jam sensor (PS48), the reversing flapper solenoid turns on. After the delivery assembly jam sensor (PS48) turns on and when the paper reaches a specific point, the reversal motor (M14) starts to rotate to move the paper to the duplexing reversing assembly.

When the paper moves past the reversal sensor 2 (PS38) and reaches a specific point, the reversal motor (M19) stops to rotate, holding the paper in wait in the reversing assembly.

When the reversal motor (M14) starts to rotate once again (in reverse this time), the paper in the reversing assembly is moved to the duplexing wait position by the work of the duplexing feed left/right roller, which is driven by the duplexing feeding left/right motor (M29, M18).

The duplexing feed right roller also causes the paper to arch while moving it, thereby removing the skew. The horizontal registration operation is executed in 100 msec after the paper is made to arch.

Thereafter, the duplexing feed left/right motor (M29, M18) turns on once again to feed the paper to the duplexing wait position.

COPYRIGHT © 2000 CANON INC.

4.2 Sequence of Operations (printing)

- A4, 4Sheets→Double-Sided Prints

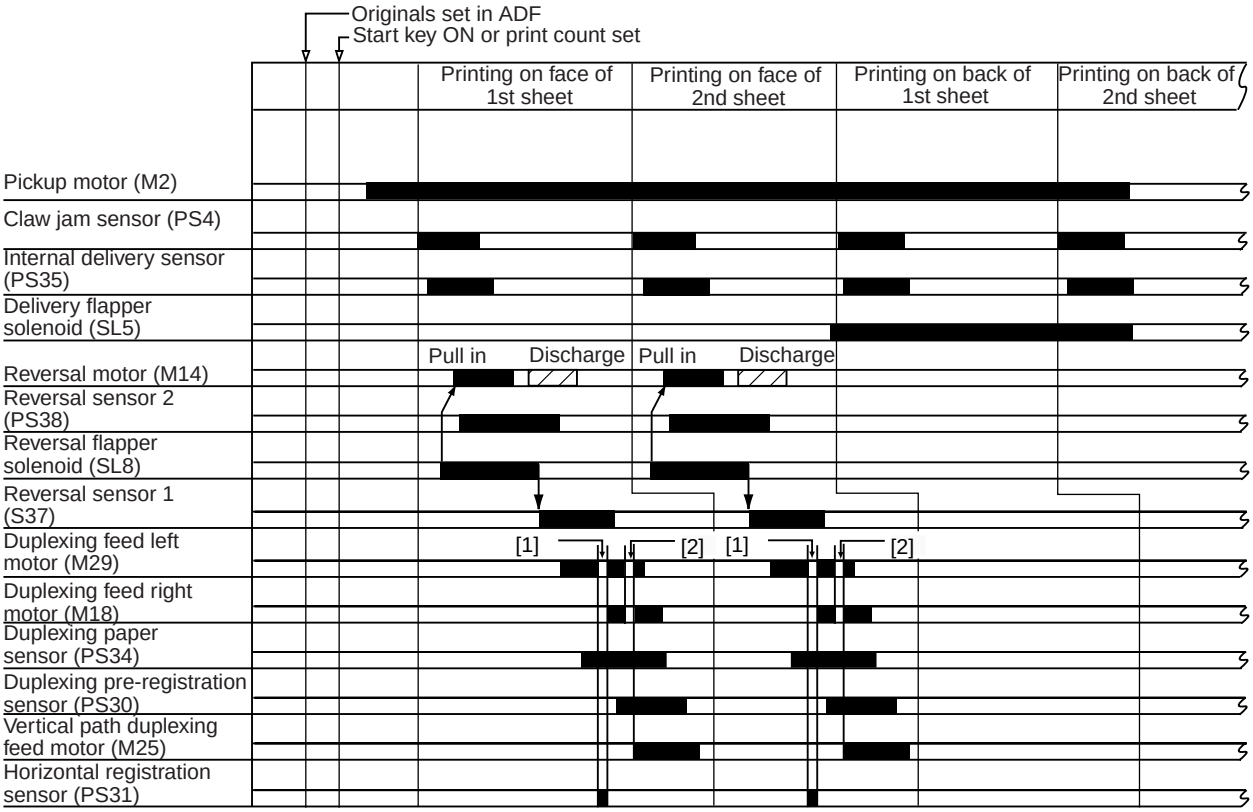

[1]:stops to arch against the duplexing feed right roller.
[2]:stops for control of the sheet-to-sheet distance in duplexing wait

F05-402-01

4.3 Through-Path Operation

4.3.1 Outline

The term “through-path” is used to refer to the moving of paper to the duplexing feed assembly after it has been moved to the reversing assembly by the work of the delivery flapper and the reversing flapper.

The machine is capable of reordering page images in its memory, eliminating the need to print according to the order of originals; as a result, it need not hold paper as long as other models would, speeding up double-sided printing. As many as two sheets of paper may exist between the registration sensor and the duplexing paper sensor at a time.



COPIER>ADJUST>FEED-ADJ>ADJ-REFE

Use it to adjust image write start position in main scanning direction for re-pickup.

(-100 to 100 mm)

COPYRIGHT © 2000 CANON INC.

4.3.2 Outline of Operations

The following shows through-path operation when printing one set of duplexing prints of 10 originals.

1) The 1st sheet is picked from the deck.

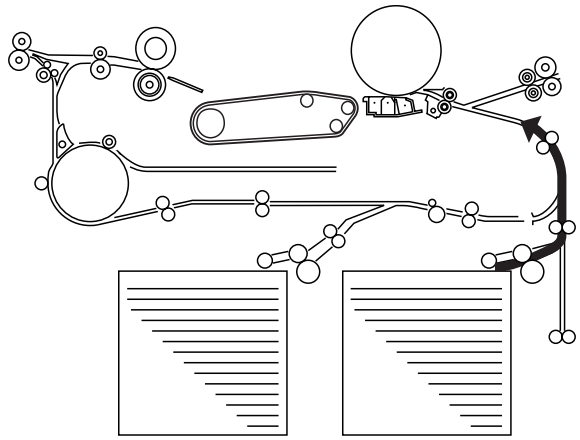

2) The 1st side is printed on the 1st sheet.
The 2nd sheet is picked up.

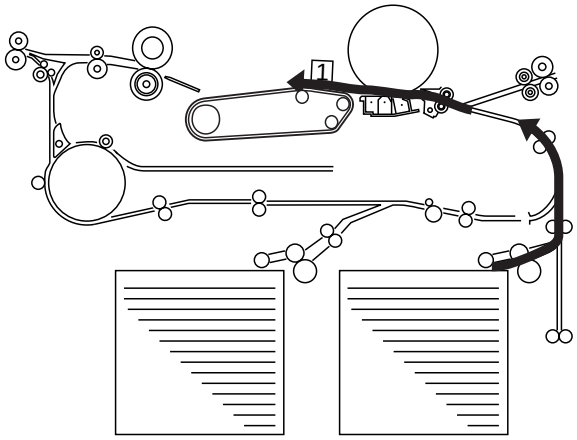

3) The 3rd side is printed on the 2nd sheet.
The 1st sheet is moved to the reversing assembly.
The 3rd sheet is picked up.

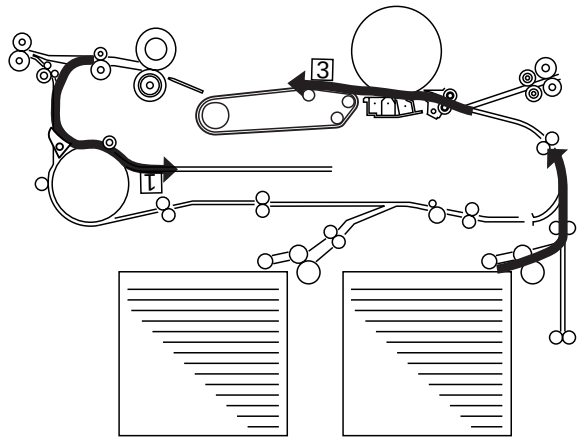

4) The 1st sheet is moved to the duplexing feeding assembly.

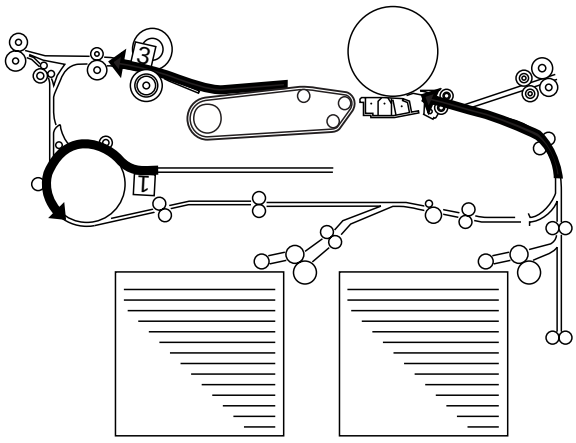

F05-403-01

COPYRIGHT © 2000 CANON INC.

5) The 1st sheet is moved to duplexing wait position.
The 2nd sheet is moved to the reversing assembly.
The 5th side is printed on the 3rd sheet.

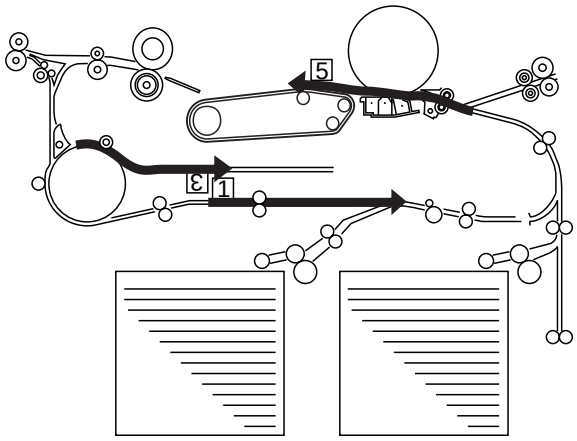

6) The 1st sheet is repicked from duplexing wait position.
The 2nd sheet is moved to the duplexing feeding assembly.

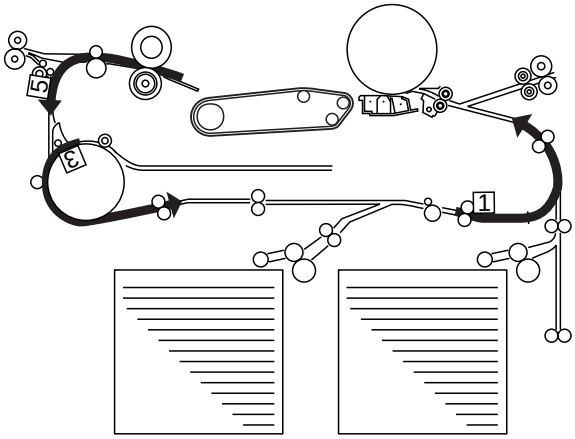

7) The 2nd side is printed on the 1st sheet.
The 2nd sheet is moved to duplexing wait position.
The 4th sheet is picked up.

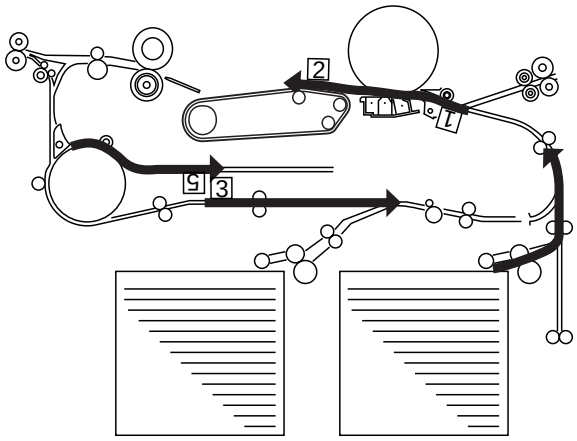

8) The 7th side is printed on the 4th sheet, and the 1st sheet is delivered.

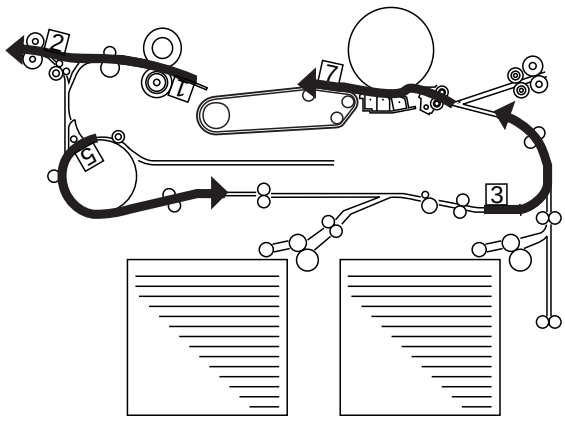

F05-403-02

COPYRIGHT © 2000 CANON INC.

9) The 4th side is printed on the 2nd sheet, and the 3rd sheet is held in wait in duplexing wait position.
The 5th sheet is picked up.

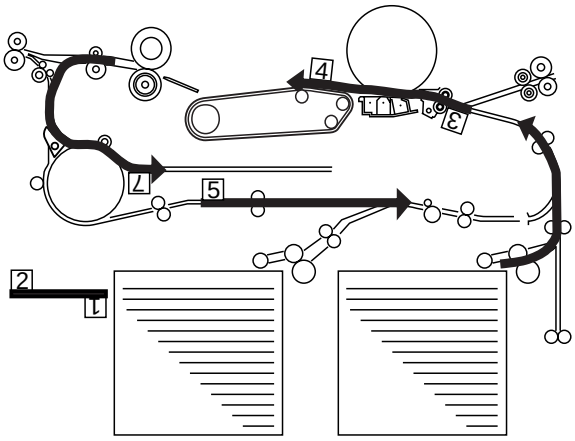

10) The 2nd sheet is delivered.
The 9th side is printed on the 5th sheet.

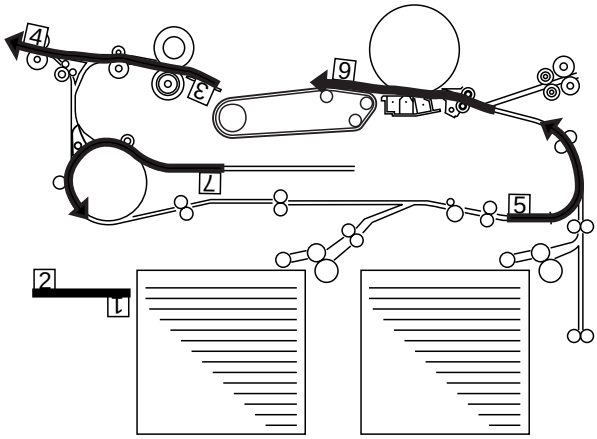

11) The 6th side is printed on the 3rd sheet.
The 4th sheet is held in wait in duplexing wait position.

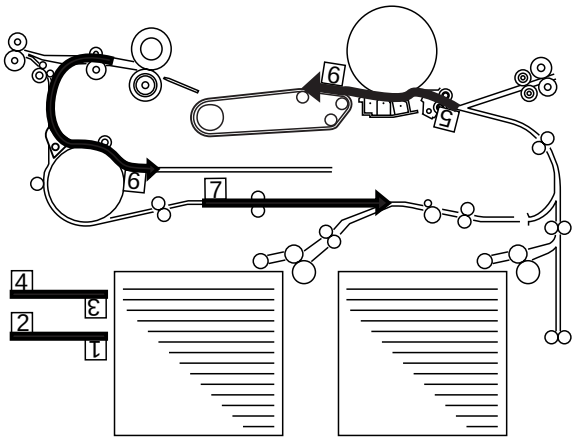

12) The 3rd sheet is delivered.

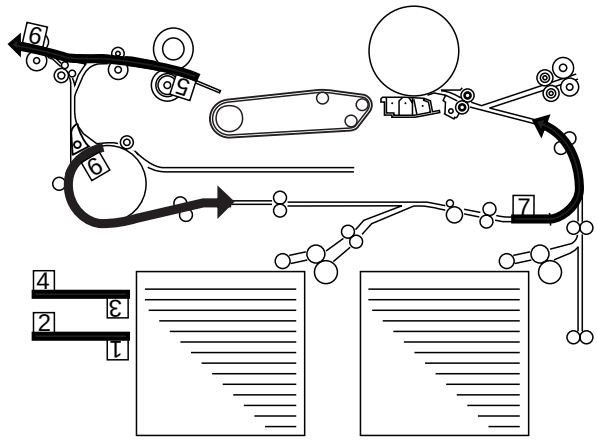

F05-403-03

13) The 8th side is printed on the 4th sheet.

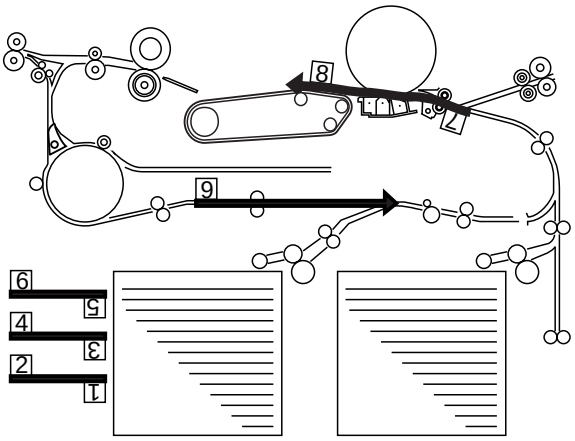

14) The 4th sheet is delivered, and the 10th side is printed on the 5th side.

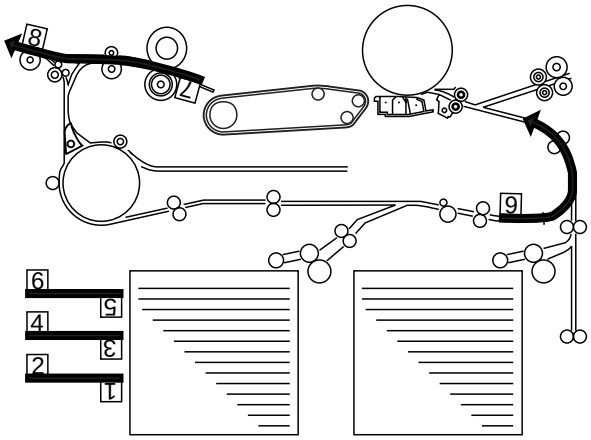

15) The 5th sheet is delivered.

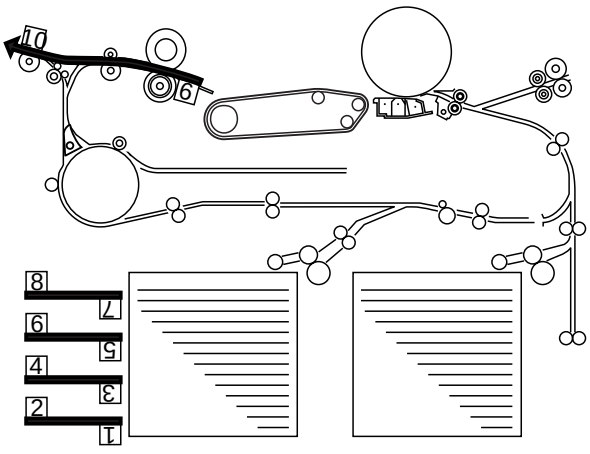

F05-403-04

COPYRIGHT © 2000 CANON INC.

4.4 Detecting Horizontal Registration Position

4.4.1 Outline

Paper position:	detected by the duplexing horizontal registration sensor (PS31).
Detection:	started when the duplexing paper sensor (PS34) turns on.
Drive:	from the duplexing horizontal registration motor (M16).
Position:	measured with reference to pulses from the duplexing horizontal registration motor (1 pulse = 0.16 mm, approx.).
Related service mode:	COPIER>ADJUST>FEED-ADJ>ADJ-REFE
Related error code:	E051 (home position not detected within specific time)

T05-404-01

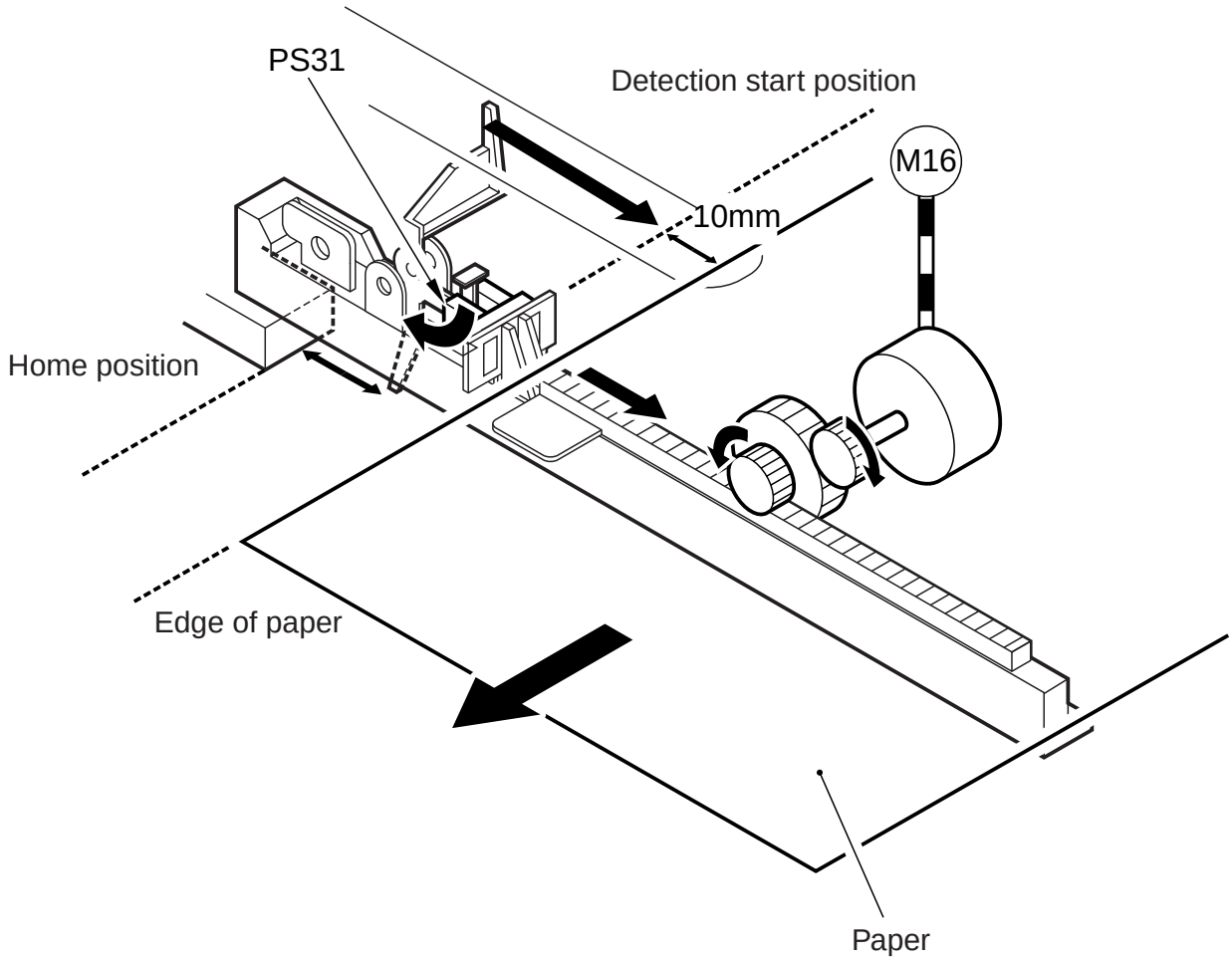

F05-404-01

4.4.2 Operation

The home position of the duplexing horizontal registration sensor is detected each time the main power switch is turned on, jam recovery is made, or front cover is closed; and the sensor moves to the start position (for A4) when the registration sensor turns on.

When paper moved to the duplexing feeding assembly reaches the duplexing paper sensor (PS34), the horizontal registration motor (M16) turns on, and the duplexing horizontal registration sensor (PS31) starts detection of the edge of the paper; this is done during the 100-msec period in which the duplexing feed right motor (M19) remains at rest, and each time a double-sided print is made.

The start position for detection is set to about 10 mm from the edge of paper, determined in reference to an ideal position of paper obtained based on the position of the slide guide of the manual feed tray and the size of the cassette being used when the registration sensor turns on.

The detection of paper is done with reference to the start position, and the discrepancy between the start position and the actual position of the paper is identified with reference to the number of pulses (a signal pulse being about 0.16 mm) generated by the motor.

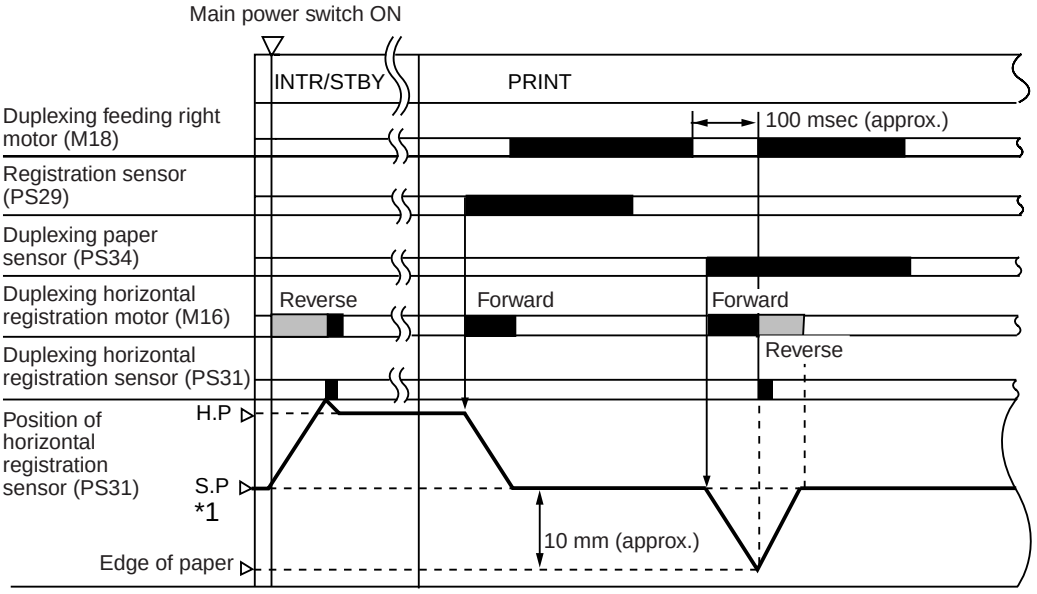

*1: While the light-blocking plate is absent, the edge of paper and butting against the sensor are detected.

*2: Different paper sizes result in different paper edge positions, thus different S.P.

H.P: Start position of the duplexing horizontal sensor.

S.P: Start position of detection by the duplexing registration sensor.

F05-404-02

COPYRIGHT © 2000 CANON INC.

5. Controlling the Pickup Assembly

5.1 Pickup Assembly Motors

The pickup assembly possesses as many as 12 2-phase stepping motors of magnetic excitation type. Each motor is supplied with 24-V power from the motor driver PCB, and is turned on/off and its direction of rotation is controlled by pulse signals from the DC controller PCB.

The following table shows each motor used in the pickup assembly, and the figure that follows it is a block diagram of the pickup motor control circuit for the cassette 3/4 by way of providing an example of the pickup motor control circuit:

Zone	Motor name	Notation	Unit	Error detection
Pickup	Right deck pickup motor	(M11)	See F05-201-01	Motor error Jam
	Left deck pickup motor	(M24)	See F05-201-01	Same as above.
	Cassette 3/4 pickup motor	(M12)	See F05-201-02	Same as above.
Vertical path	Vertical path upper motor	(M26)	See F05-201-02	Same as above.
	Vertical path lower motor	(M27)	See F05-201-02	Same as above.
	Vertical path duplexing feed motor	(M25)	See F05-401-02	Same as above.
Reversal/ duplexing	Reversal motor	(M14)	See F05-401-01	Same as above.
	Duplexing feed left motor	(M29)	See F05-401-02	Same as above.
	Duplexing feed right motor	(M18)	See F05-401-02	Same as above.
	Duplexing horizontal registration motor	(M16)	See F05-404-01	Same as above.
Other	Pre-registration motor	(M17)	See F05-201-01	Error code indication 'E051'
	Delivery motor	(M13)	-	Motor error Jam

T05-501-01

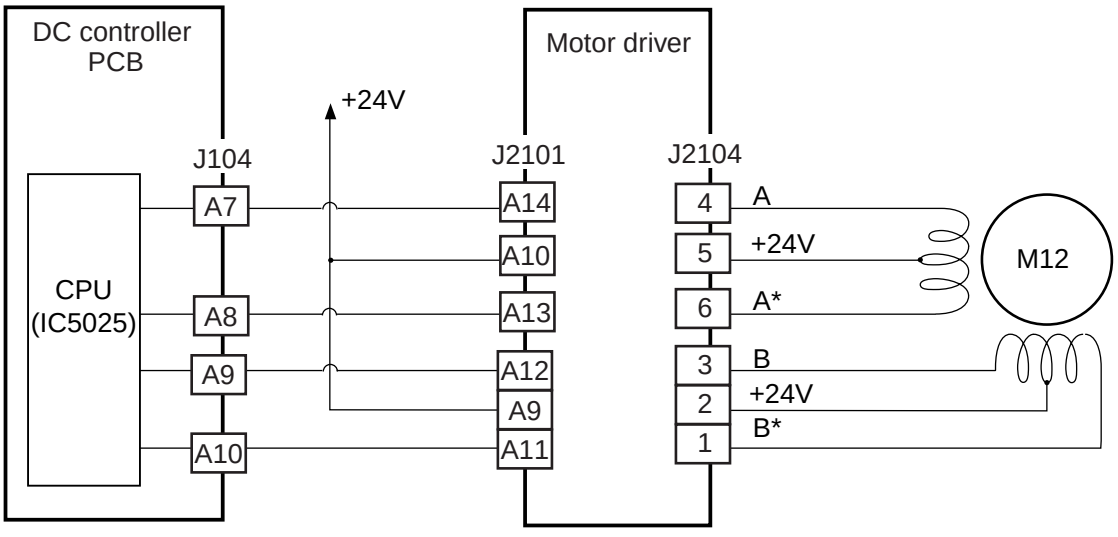

F05-501-01

6. Controlling the Delivery Assembly

6.1 Reversal Delivery Operation

The machine delivers its output using a face-up or face down method.

Method of delivery	Mode of operation
Face-up	• Prints multiple copies of a single original • In manual feed mode, when a default size is selected while the selected paper type is not plain paper
Face-down	• Other than above

T05-601-01

The following takes place when the output is delivered face-down:

1) The paper is moved to the duplexing feeding assembly.

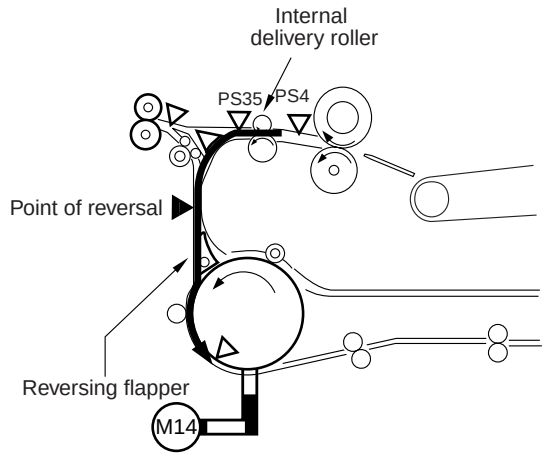

F05-601-01

2) The internal delivery sensor (PS35) turns on, and the paper is moved over a specific distance; then, the reversal motor (M14) turns on to stop the paper when its trailing edge turns on the reversal sensor 1 (PS37).

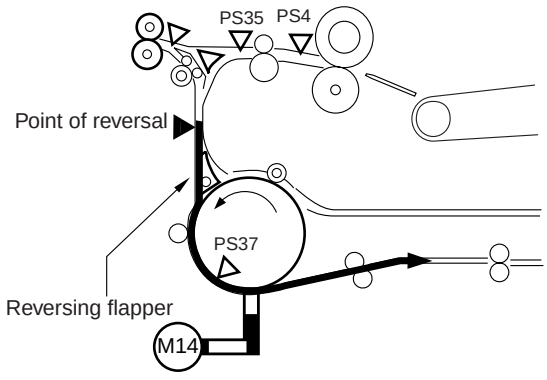

F05-601-02

COPYRIGHT © 2000 CANON INC.

3) The reversal motor (M14) rotates once again to move the paper in the direction of delivery with the trailing edge of the paper leading the way.

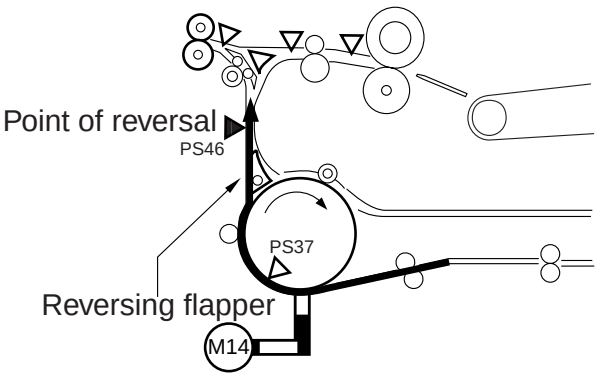

F05-601-03

4) The reversal motor (M14) stops when the external sensor (PS36) turns on and the trailing edge of the paper moves past the reversing roller. The fixing motor (M19) rotates, and the paper is delivered by the work of the external delivery roller.

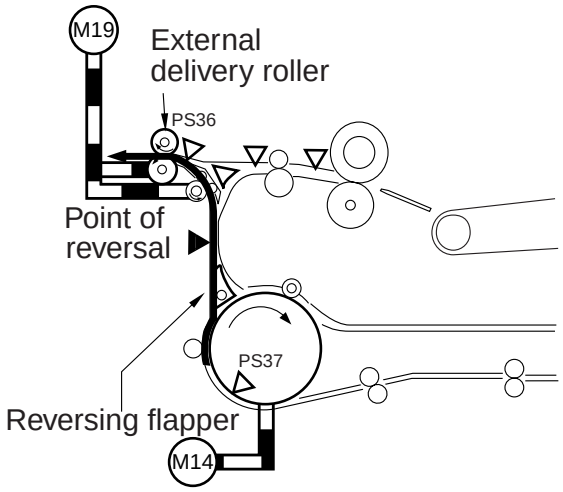

F05-601-04

COPIER>OPTION>BODY>TPR-DECL (switching delivery path to improve stacking for delivering thick paper in face-down mode)
0: normal (default)
1: causes paper to pass over the reversing roller for delivery (face-down) after de-curling

7. Controlling the Cassette Heater

The system used to control the cassette heater is constructed as follow:

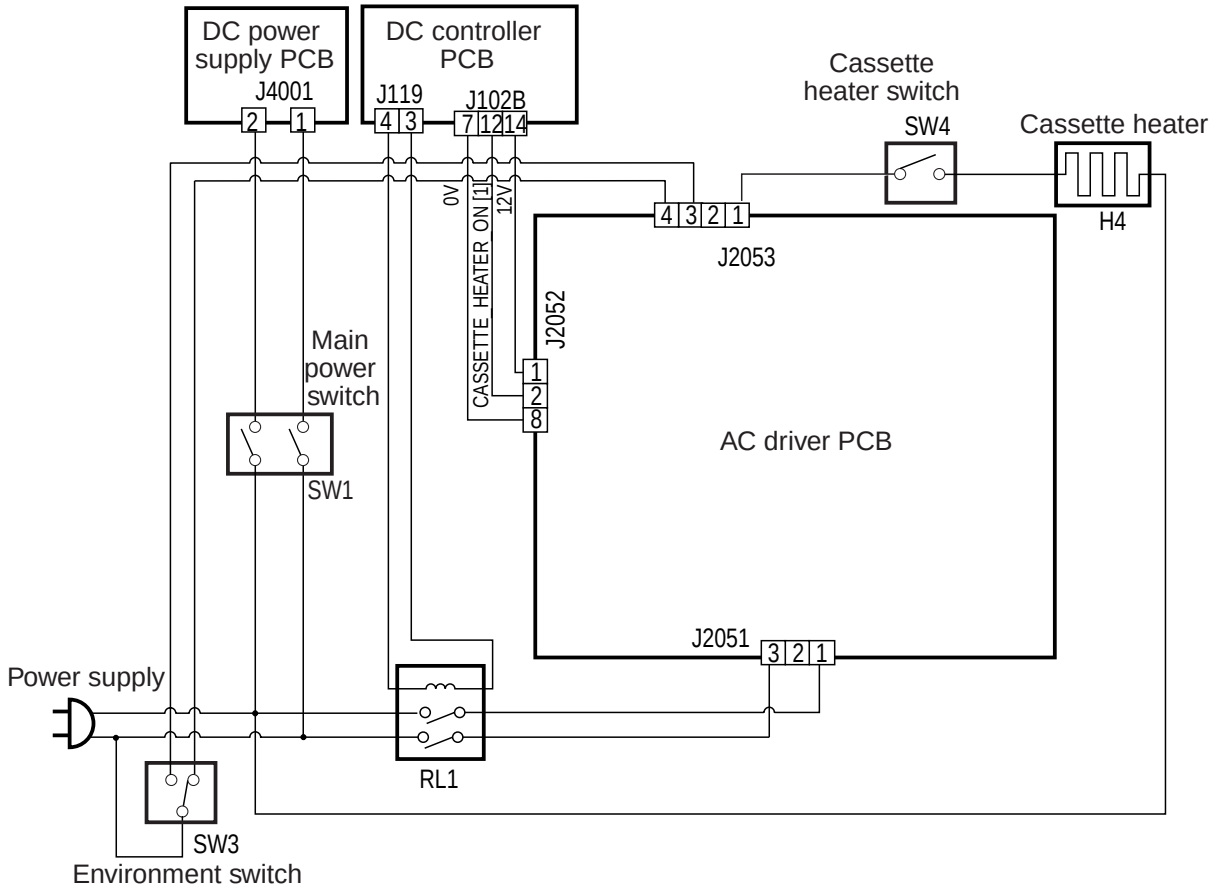

F05-700-01

The following signal has the function indicated:

[1] Cassette Heater Drive Control Signal:
When '1', supplies the AC driver PCB with AC power.

The cassette heater switch (SW4) serves to supply power to the heater through the AC line or to deprive it of power.
If the environment switch (SW3) is off, the heater will not be supplied with power through the AC line even if the cassette heater switch (SW4) remains on.

COPYRIGHT © 2000 CANON INC.

- The cassette heater (H4) used for the 100-V model operates as follows, assuming that the environment switch (SW3) remains on:

	Main power switch (SW1)		Standby/front cover open		During printing		In power save mode	
Cassette heater switch (SW4)	ON	OFF	ON	OFF	ON	OFF	ON	OFF
Cassette heater (H4)	ON	OFF	ON	OFF	OFF	OFF	ON	OFF

T05-700-01

- The cassette heater (H4) used for the 230-V model operates as follows, assuming that the environment switch (SW3) remains on:

	Main power switch (SW1) OFF		Standby/front cover open		During printing		In power save mode	
Cassette heater switch (SW4)	ON	OFF	ON	OFF	ON	OFF	ON	OFF
Cassette heater (H4)	ON	OFF	ON	OFF	ON	ON	ON	ON

T05-700-02

COPYRIGHT © 2000 CANON INC.

8. Detecting Jams

8.1 Outline

8.1.1 Arrangement of Jam Sensors

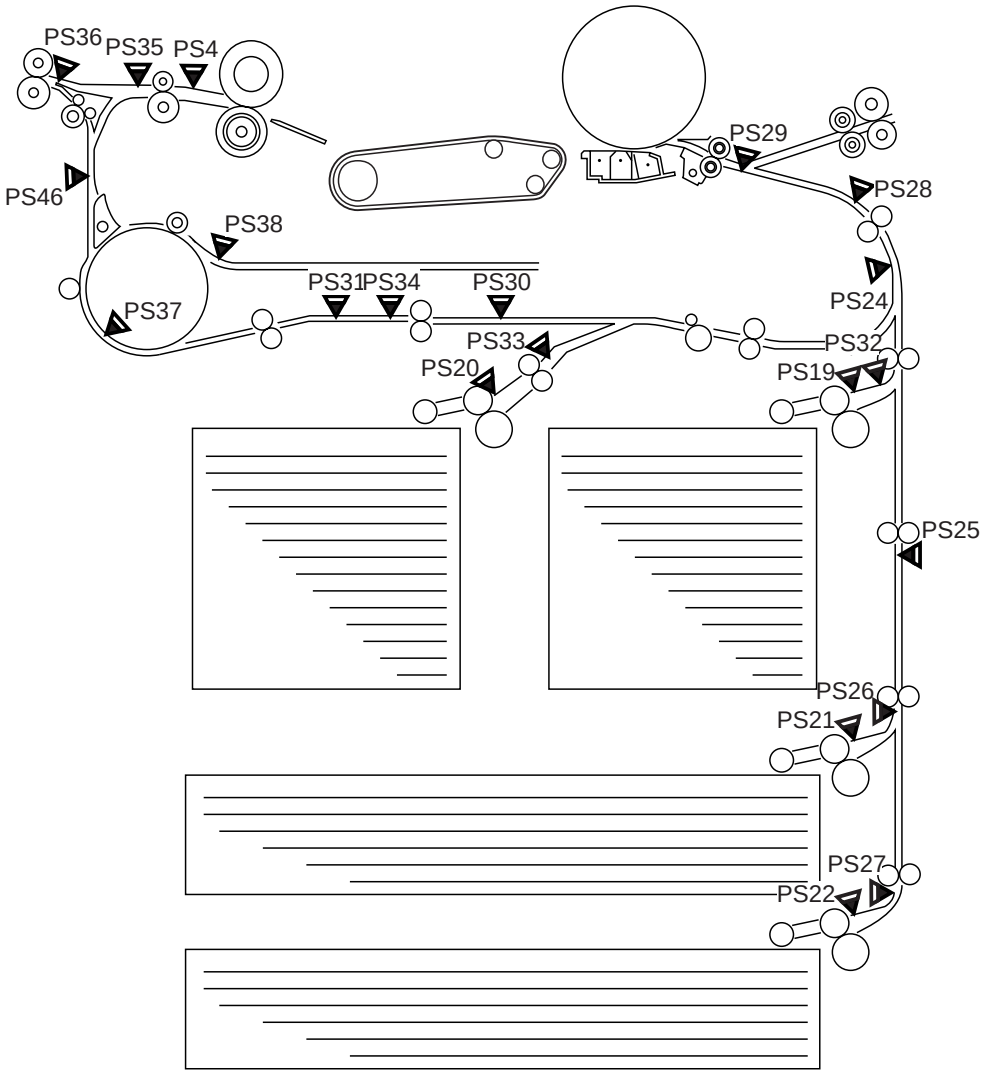

F05-801-01

COPYRIGHT © 2000 CANON INC.

8.1.2 Types of Jams

Sensor		Delay jam	Stationary jam	Power-on stationary jam
Right deck retry sensor	PS19	Yes	No	No
Left deck retry sensor	PS20	Yes	No	No
Cassette 3 retry sensor	PS21	Yes	No	No
Cassette 4 retry sensor	PS22	Yes	No	No
Right deck feed paper sensor	PS32	Yes	Yes	Yes
Left deck feed paper sensor	PS33	Yes	Yes	Yes
Vertical path 1 paper sensor	PS24	Yes	Yes	Yes
Vertical path 2 paper sensor	PS25	Yes	Yes	Yes
Vertical path 3 paper sensor	PS26	Yes	Yes	Yes
Vertical path 4 paper sensor	PS27	Yes	Yes	Yes
Laser write start sensor	PS28	Yes	Yes	Yes
Registration paper sensor	PS29	Yes	Yes	Yes
Claw jam sensor	PS4	No	Yes	Yes
Internal delivery sensor	PS35	Yes	Yes	Yes
External delivery sensor	PS36	Yes	Yes	Yes
Reversal sensor 1	PS37	Yes	No	No
Reversal sensor 2	PS38	Yes	No	No
Duplexing paper sensor	PS34	Yes	Yes	Yes
Duplexing pre-registration sensor	PS30	Yes	Yes	Yes
Delivery assembly jam sensor	PS46	No	No	Yes

T05-801-01

COPYRIGHT © 2000 CANON INC.

8.2 Sequence of Operations (jam detection)

8.2.1 Delay Jam

a. Pickup from the Cassette (right deck, left deck, cassette 3/4)

- The leading edge of paper does not reach the sensor within a specific period of time after the motor turns on.

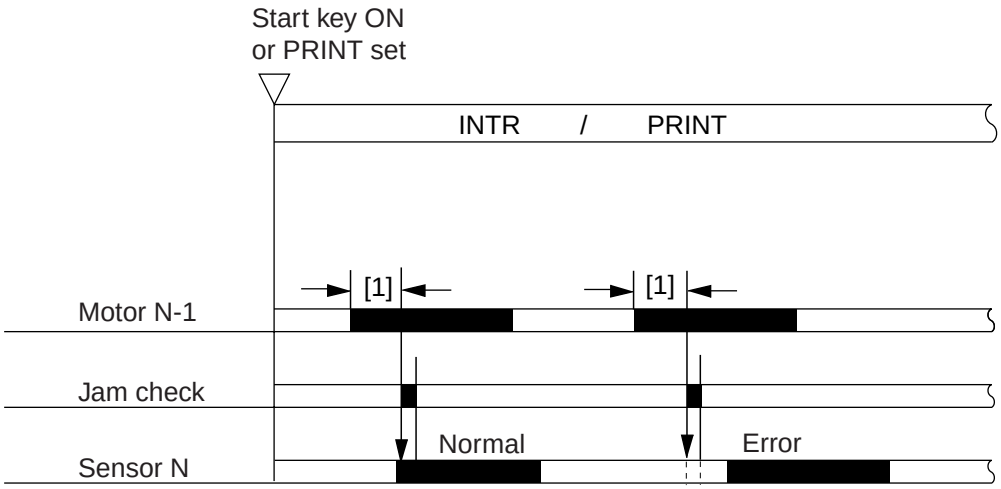

[1]: specific feed period.

F05-802-01

Pickup assembly	Motor N-1	DelSzzay sensor N
Right deck	Right deck pickup motor (M11)	Right deck retry sensor (PS19)
Left deck	Left deck pickup motor (M24)	Left deck retry sensor (PS20)
Cassette 3	Cassette 3/4 pickup motor (M12)	Cassette 3 retry sensor (PS21)
Cassette 4	Cassette 3/4 pickup motor (M12)	Cassette 4 retry sensor (PS22)

T05-802-01

COPYRIGHT © 2000 CANON INC.

b. Other Delay Jams

With the exception of the pickup sensor delay jam, the following timing of detection applies:

The feed time between the sensor N-1 and the delay jam sensor N is under control with reference to the clock pulses from the main motor, and a delay jam will be identified if the leading edge of paper does not reach the delay jam sensor N within a specific feed period.

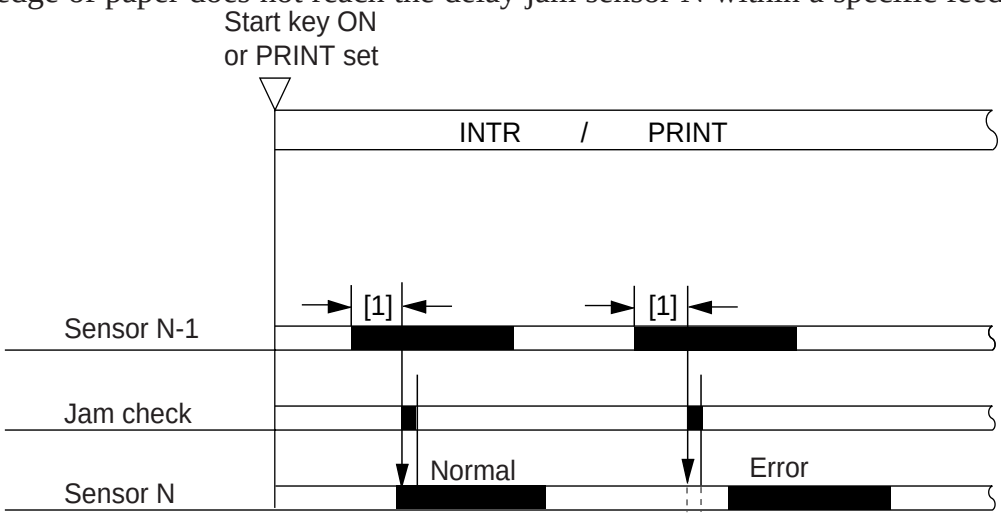

[1]: specific feed period

F05-802-02

Delay jam sensor N	Sensor N-1
Right deck feed paper sensor (PS32)	Right deck retry sensor (PS19)
Left deck feed paper sensor (PS33)	Left deck retry sensor (PS20)
Vertical path 1 paper sensor (PS24)	Vertical path 2 paper sensor (PS25)
Vertical path 1 paper sensor (PS24)	Left deck feed paper sensor (PS33)
Vertical path 1 paper sensor (PS24)	Duplexing pre-registration sensor (PS30)
Vertical path 2 paper sensor (PS25)	Vertical path 3 paper sensor (PS26)
Vertical path 3 paper sensor (PS26)	Vertical path 4 paper sensor (PS27)
Vertical path 3 paper sensor (PS26)	Cassette 3 retry sensor (PS21)
Vertical path 4 paper sensor (PS27)	Cassette 4 retry sensor (PS22)
Laser write start sensor (PS28)	Vertical path 1 paper sensor (PS24)
Registration paper sensor (PS29)	Laser write start sensor (PS28)
Internal delivery sensor (PS35)	Claw jam sensor (PS4)
External delivery sensor (PS36)	Internal delivery sensor (PS35)
External delivery sensor (PS36)	Delivery assembly jam sensor (PS46)
Reversal sensor 1 (PS37)	Delivery assembly jam sensor (PS46)
Reversal sensor 2 (PS38)	Delivery assembly jam sensor (PS46)
Duplexing paper sensor (PS34)	Reversal sensor 2 (PS38)
Duplexing pre-registration sensor (PS30)	Duplexing pre-registration sensor (PS30)

T05-802-02

COPYRIGHT © 2000 CANON INC.

8.2.2 Stationary Jams

a. Ordinary Stationary Jam

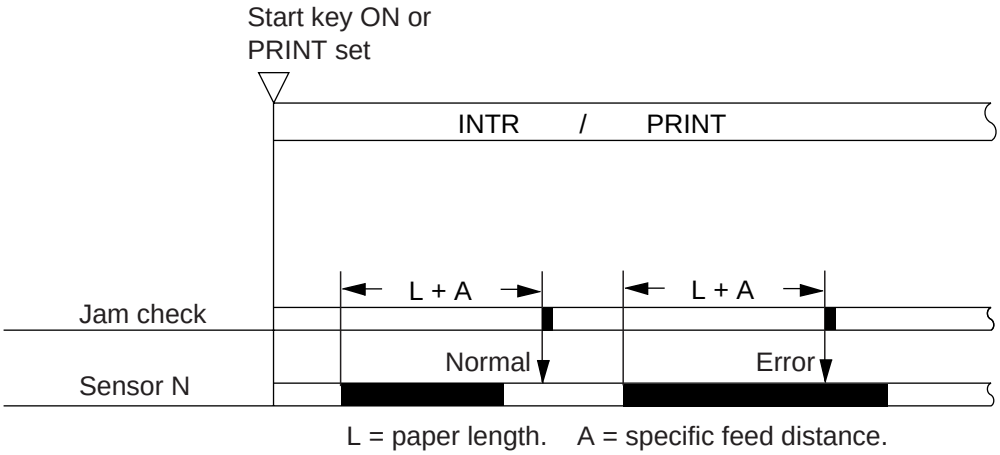

F05-802-03

Stationary jam sensor N
Right deck feed paper sensor
Left deck feed paper sensor
Vertical path 1 paper sensor
Vertical path 2 paper sensor
Vertical path 3 paper sensor
Vertical path 4 paper sensor
Laser write start sensor
Registration paper sensor
Claw jam sensor
Internal delivery sensor
External delivery sensor
Reversal sensor 1
Reversal sensor 2
Duplexing paper sensor
Duplexing pre-registration sensor

T05-802-03

b. Stationary Jam at Power-On

A stationary jam at power-on is identified in reference to the presence/absence of paper over a specific sensor about 1 sec after the control panel power switch is turned on.

COPYRIGHT © 2000 CANON INC.

8.2.3 Jam History

The machine keeps a record of jams that occur inside it, and allows a check in service mode.



COPIER>DISPALY>JAM
Use it to display jam data.
COPIER>FUNCTION>JAM-HIST
Use it to clear the jam history.

The machine remembers the following in the event of a jam, and will resume operation using the data after removal of the jam:

- Remaining number of copies
- Copying mode

9. Disassembly and Assembly

The machine's mechanical characteristics and features are as described herein, and the machine may be disassembled or assembled as instructed while keeping the following in mind:

1. ⚠ The power plug must be disconnected for the work.
2. Unless otherwise indicated, the machine may be assembled by reversing the steps used to disassemble it.
3. The screws must be identified by type (length, diameter) and location.
4. The mounting screw of the grounding wire and the varistors is equipped with a toothed washer to ensure electrical continuity. They must not be left out when fitting the screws.
5. As a rule, the machine must not be operated with any of its parts removed.
6. The front door switch or the main power switch must be turned off before sliding out the duplex unit or the fixing/feeding unit.
7. ⚠ Toner must not be thrown away into fire to avoid explosion.

COPYRIGHT © 2000 CANON INC.

9.1 Manual Feed Tray Assembly

9.1.1 Removing the Right Upper Cover

1) Remove the two screws [1], and detach the cover [2].

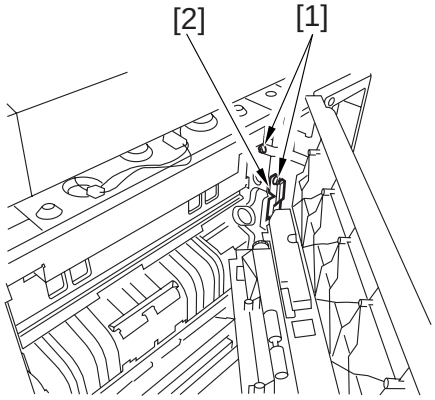

F05-901-01

2) Disconnect the connector [3], and detach the right upper cover [4].

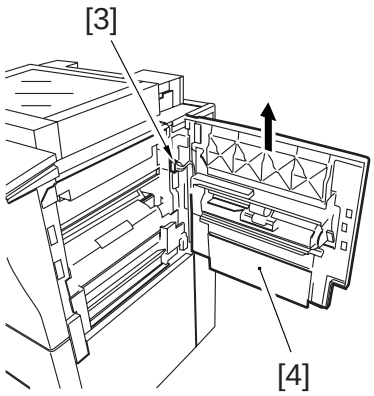

F05-901-02

9.1.2 Opening of the Right Upper Cover

1) Open the right upper cover, and remove the mounting screw [1].

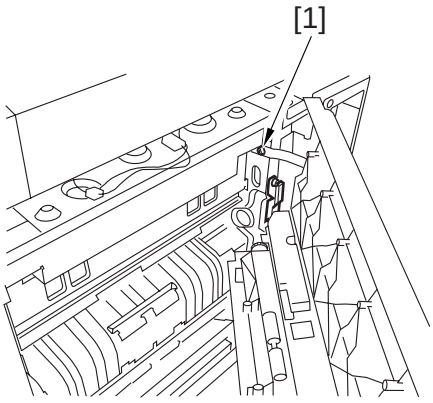

F05-901-03

9.1.3 Removing the Manual Feed Pull-Out Roller Unit

1) Open the right upper cover. (See p. 5-49P.)
2) Remove the two stop rings [1] (left, right), and shift the two bushings [2]; then, detach the manual feed pull-out roller unit.

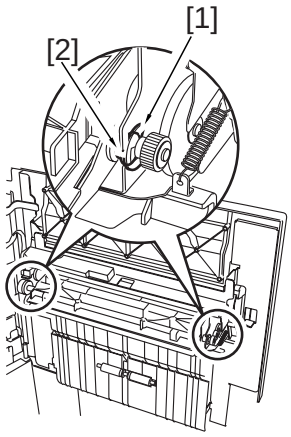

F05-901-04

9.1.4 Removing the Feeding Roller

1) Open the right upper cover. (See p. 5-49P.)
2) Remove the manual feed pull-out roller unit. (See p. 5-50P.)
3) Remove the stop print [1], and detach the pickup roller [2].

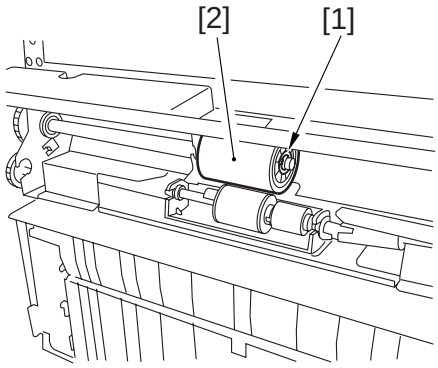

F05-901-05

9.1.5 Removing the Separation Roller

1) Remove the manual feed pull-out roller unit. (see p. 5-50P.)
2) Remove the two stop rings [1] (left, right), and remove the two bushings [2]; then, detach the separation roller assembly [3].

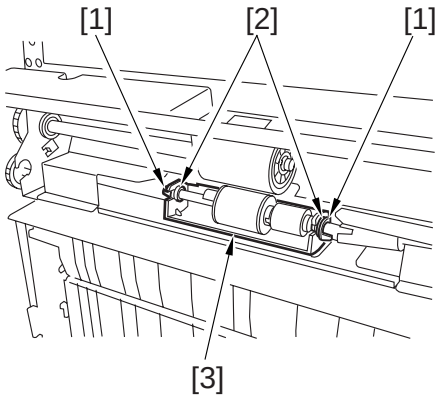

F05-901-06

COPYRIGHT © 2000 CANON INC.

3) Disengage the hook [4] of the separation roller assembly, and detach the separation roller [5].

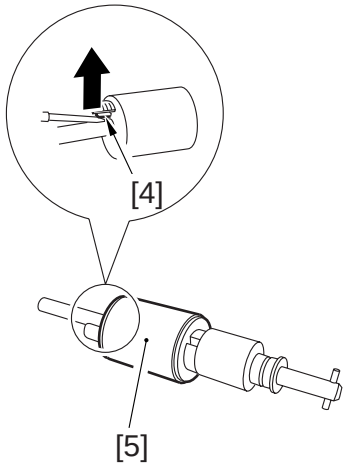

F05-901-07

9.1.6 Adjusting the Pressure of the Separation Roller

1) Remove the right upper cover.
2) Remove the upper guide [1].
3) If double feeding or pickup failure occurs during pickup, adjust the position of the pressure spring of the separation roller.

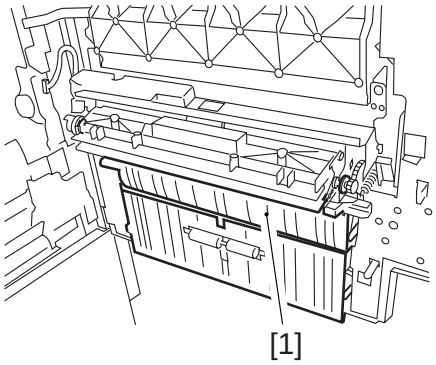

F05-901-08

- If double feeding occurs, remove the mounting screw [2], and shift down the mounting base [3]; then, fix it in hole A using a mounting screw [2].
- If pickup failure occurs, remove the mounting screw [2], and shift the mounting base [3] up; then, fix it in hole B using a mounting screw [2].

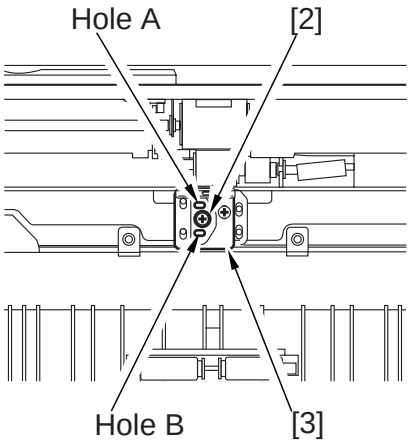

F05-901-09

9.1.7 Removing the Manual feed Tray Paper Sensor

1) Open the right upper cover. (See p. 5-49P.)
2) Remove the mounting screw [1], and detach the cover [2].

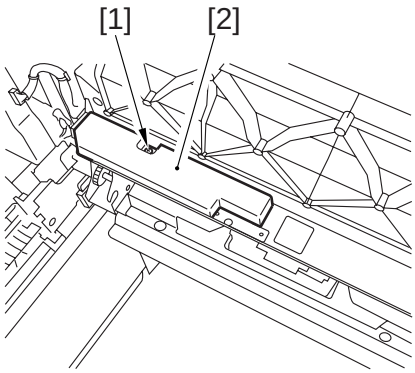

F05-901-10

3) Remove the mounting screw [3], and detach the sensor unit [4].

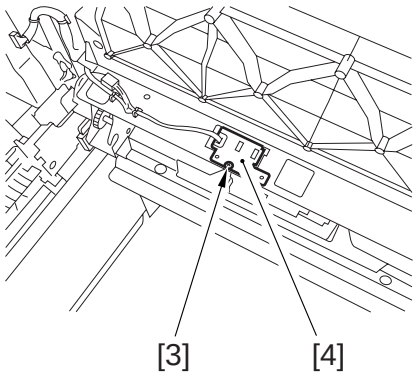

F05-901-11

4) Free the harness [5] from the harness guide [6], and disconnect the connector [7].
5) Remove the sensor [8].

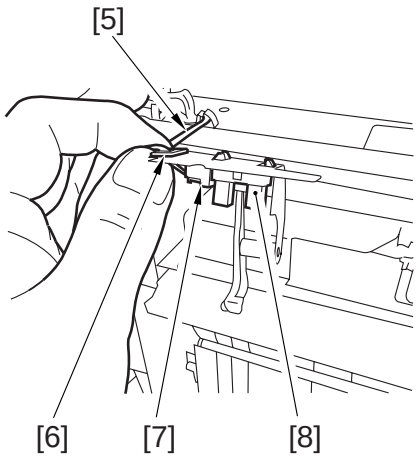

F05-901-12

COPYRIGHT © 2000 CANON INC.

9.1.8 Attaching the Side Guide Timing Belt in the Manual Feed Tray Assembly

1) Butt the rack plate [1] of the manual feed tray against section A (open state).
2) Move the slide volume in the direction of B, and attach the timing belt [2] onto the pulley [3].

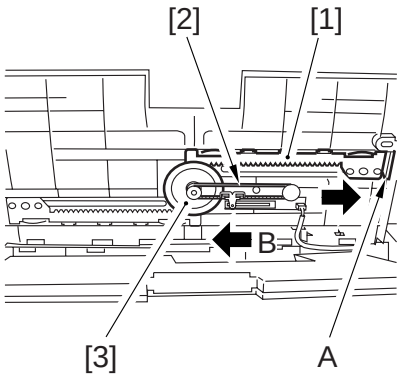

F05-901-13

9.1.9 Removing the Manual Feed Pull-Out Roller

1) Open the right upper cover. (See p. 5-49P.)
2) Remove the manual feed pull-out roller unit. (See p. 5-50P.)
3) Remove the two E-rings [1] (left, right).
4) Remove the stopper [2], two gears [3], and two bushings [4].
5) Remove the two E-rings [5] and two bushings [6]; then, detach the manual feed pull-out roller.

When removing the stopper [2] and the gear [3], take care not to lose the three parallel pins [6]; they will slip off.

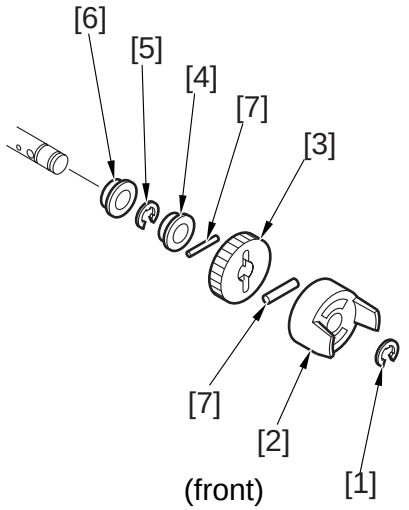

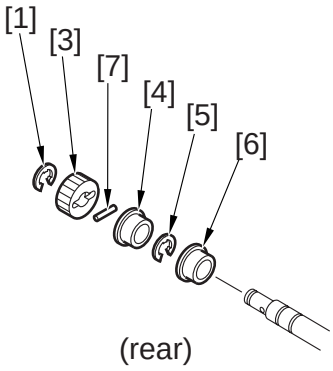

F05-901-14

9.2 Deck Pickup Assembly

9.2.1 Removing the Right Deck Pickup Assembly

1) Slide out the right deck.
2) Open the right upper cover and the right lower cover.



An attempt to remove the pickup assembly without removing the deck will cause the lifter to get trapped, not holding the pickup assembly from sliding out.

3) Remove the mounting screw [1], and detach the connector cover [2]; then, disconnect the connector [3].
4) Remove the three mounting screws [4], and detach the pickup assembly [5].

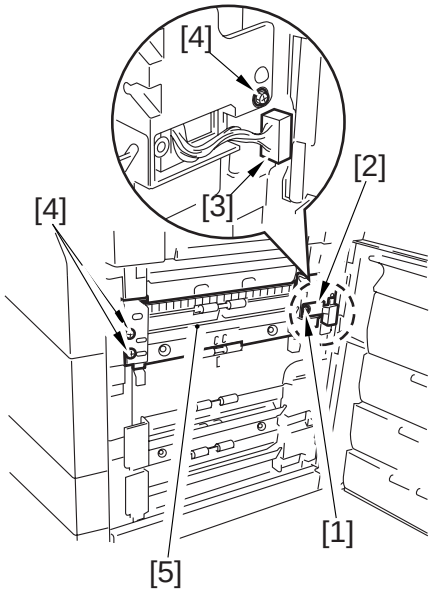

F05-902-01

9.2.2 Removing the Left Deck Pickup Assembly

1) Slide out the left/right deck.
2) Remove the two stoppers [2] found on the left and right sides of the left deck [1]; then, detach the left deck [1].

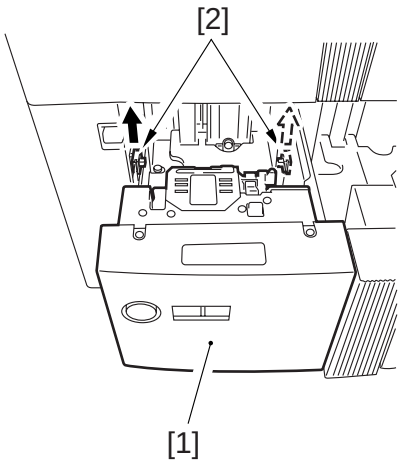

F05-902-02

COPYRIGHT © 2000 CANON INC.

3) Disconnect the connector [3] from inside the machine, and remove the locking support [4].

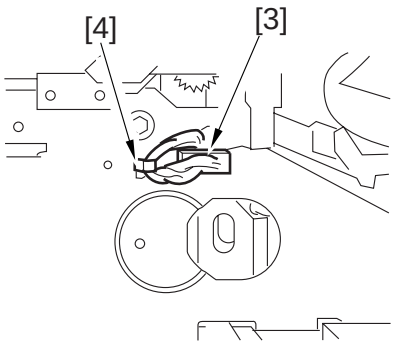

F05-902-03

4) Remove the two screws [5], and detach the two pickup fixing plates [6]; then, detach the cassette 2 pickup assembly [7].



Keep supporting the pickup assembly; otherwise, the pickup assembly could drop when the fixing plate is removed.

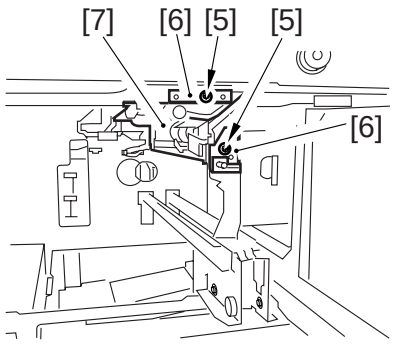

F05-902-04

9.2.3 Removing the Cassette 3 Pickup Assembly

Use the steps used to remove the right deck pickup assembly.

9.2.4 Removing the Cassette 4 Pickup Assembly

Use the steps used to remove the right deck pickup assembly.

9.2.5 Removing the Pickup Roller

1) Remove the pickup assembly from the machine.
2) Remove the two resin E-rings [1] on the outside, and detach the pickup roller [2] in the direction of the arrow.

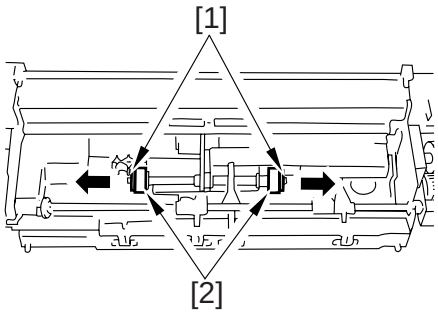

F05-902-05

■ Orientation of the Pickup Roller
The pickup roller may be mounted by reversing the steps used to remove it while keeping the following in mind:

- The pickup rollers used at the front and the rear are not interchangeable.
- The pickup roller for the front has a gold-colored collar.
  When mounting the pickup roller [1] to the pickup assembly, be sure that the round marking [2] on the side of the roller and the round marking [3] on the collar (gold-colored) are toward the front of the machine.

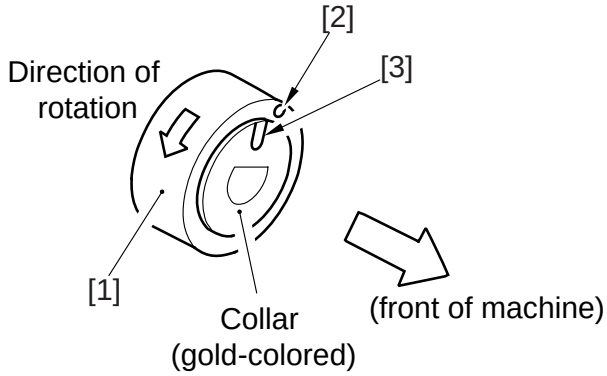

F05-902-06

- The collar of the pickup roller of the rear of the machine is silver-colored.
  When mounting the pickup roller [4] to the pickup assembly, be sure that the marking [5] on the color (silver-colored) is toward the rear of the machine.

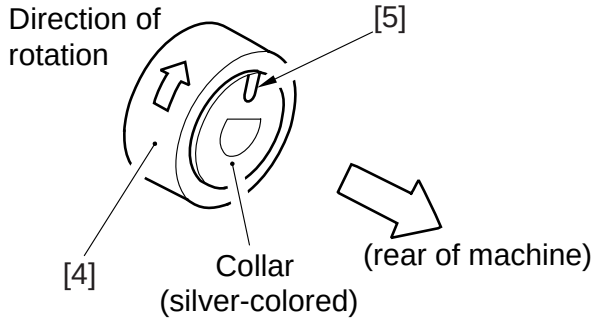

F05-902-07

9.2.6 Removing the Feeding Roller

1) Remove the pickup assembly form the machine.
2) Remove the screw [2], and detach the feeding roller cover [1]. (For the left deck pickup assembly, skip this step.)
3) Remove the resin E-ring [3] found at the front of the feeding roller.
4) Remove the resin E-ring [4] found at the front and the pickup roller [5]; then, detach the feeding roller [7] together with the timing belt [6].

Cassette 3/4
Right deck pickup assembly

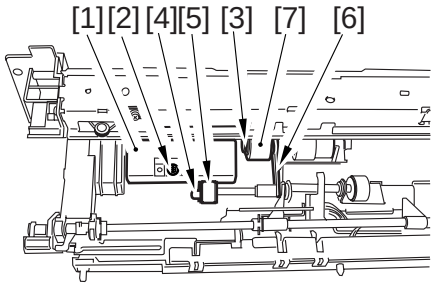

Left deck pickup assembly

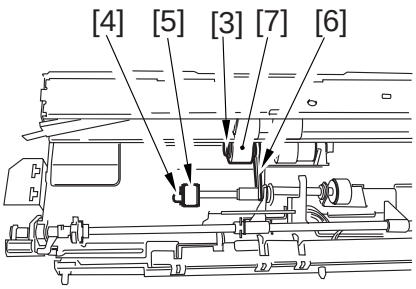

F05-902-08

COPYRIGHT © 2000 CANON INC.

9.2.7 Orientation of the Feeding Roller of the Deck/Cassette Pickup Assembly

When mounting the feeding roller assembly [1] to the cassette pickup assembly, be sure that the belt pulley [2] is at the front of the machine.



Check to make sure that the protrusion in the roller plate and the roller are engaged securely.

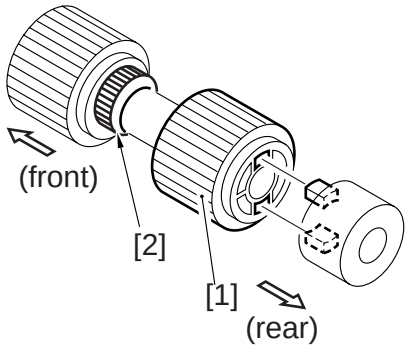

F05-902-09

9.2.8 Removing the Separation Roller

1) Remove the two mounting screws [1], and detach the feed guide plate [2]; then, detach the open/close guide [3]. (Skip this step for the left deck pickup assembly.)

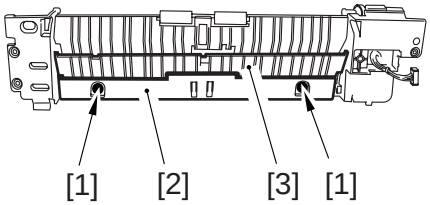

F05-902-10

2) Remove the two mounting screws [4], and detach the separation roller assembly [5] form the joint.
(For the left deck pickup assembly, remove one screw [6].)

Cassette 3/4
Right deck pickup assembly

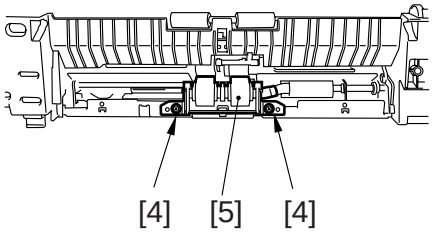

Left deck pickup assembly

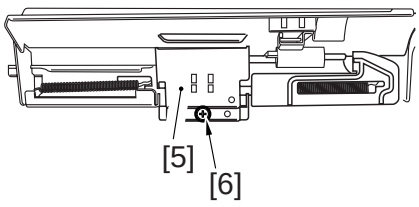

F05-902-11

3) Detach the separation roller [7] from the separation roller shaft support.

Cassette 3/4
Right deck pickup assembly

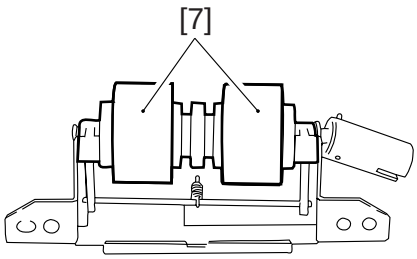

Left deck pickup assembly

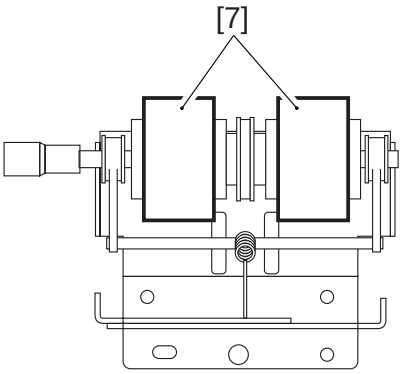

F05-902-12

The urethane sponge used in the part is pink at the beginning, and changes to yellow over time (accelerated if exposed to light; it may appear to change to orange before turning pink). This is a common characteristic of urethane sponge, and does not indicate physical deterioration (performance). In addition, note that the part is not classified by color.

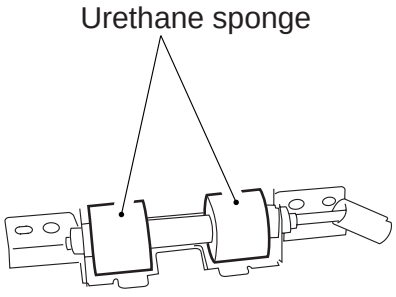

F05-902-13

COPYRIGHT © 2000 CANON INC.

9.2.9 Adjusting the Separation Roller Pressure

If double feeding or pickup failure occurs during pickup, change the position for the pressure spring of the separation roller.

- If double feeing occurs, move the spring in the direction of arrow B.
- If pickup failure occurs, change the spring in the direction of arrow A.

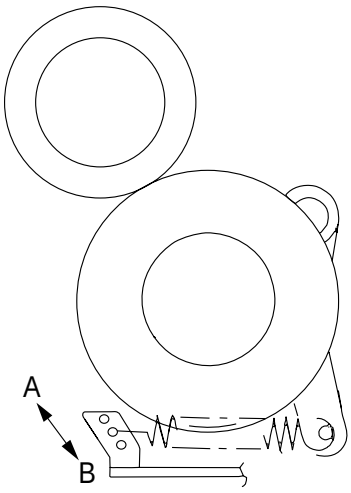

F05-902-14

9.2.10 Orientation of the Separation Roller

Keep the following in mind when replacing the separation roller.

Mounting the separation roller in the wrong orientation will lead to interference against crimping washer. Make sure it is mounted in the correct orientation.

Cassette 3/4
Right deck pickup assembly

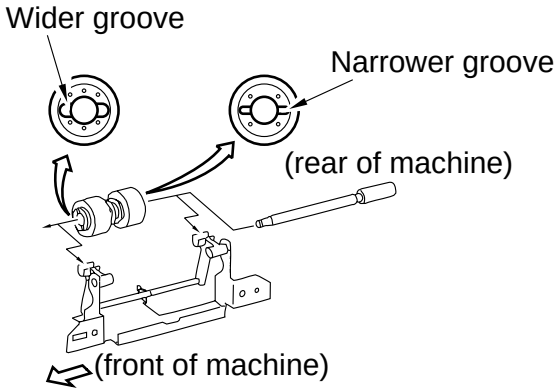

Left deck pickup assembly

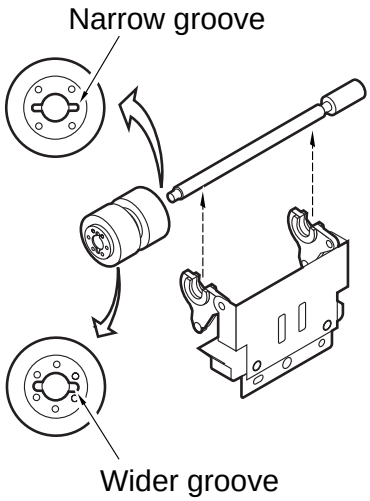

F05-902-15

9.2.11 Adjusting the Left/Right Registration for the Front Deck

1) Loosen the four screws [2] and the two fixing screws [3] on the cassette front cover [1].

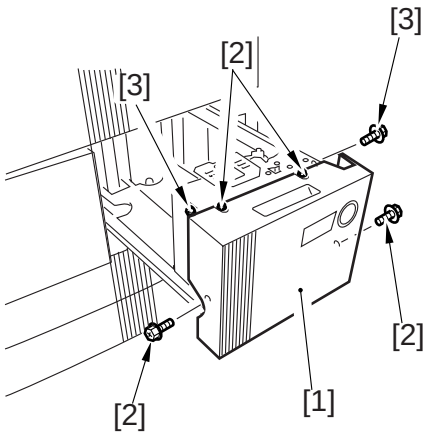

F05-902-16

2) Move the cassette guide assembly (front) [4] to the front or the rear to make adjustments.

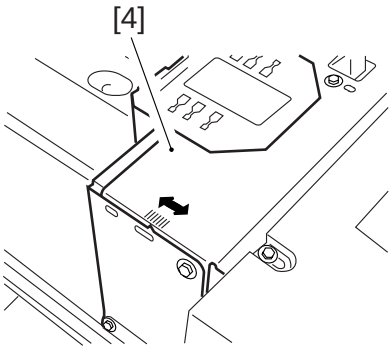

F05-902-17

9.2.12 Adjusting the Registration for the Cassette 3/4

1) Loosen the two fixing screws [1] found on the left and right of the cassette.

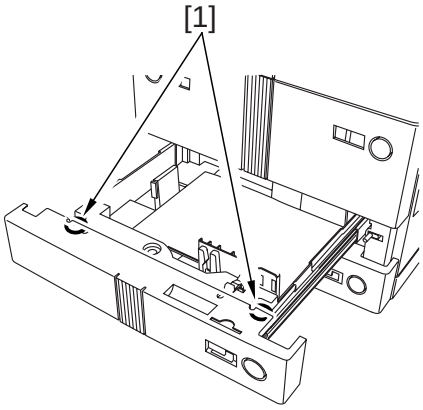

F05-902-18

COPYRIGHT © 2000 CANON INC.

2) Remove the paper size plate [2], and make adjustments using the adjusting screw [3] found at the rear of the widow of the paper size plate [2]; thereafter, tighten the two fixing screws [1].
Then, be sure to execute the following in service mode:
COPIER>FUNCTION>CST-C3-STMTR/A4R or C4-STMTR/A4R.

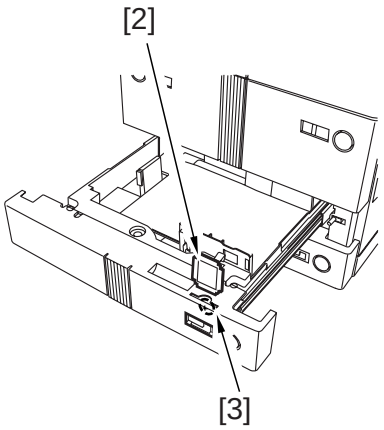

F05-902-19

9.2.13 Removing the Lifter Motor M20 (M21) of the Cassette 3 (4)

1) Slide out the right deck and the cassette 3/4.
2) Take out the cassette right cover. (See 9.3.2 “Removing the Vertical Path Roller 2.”)
3) Remove the two fixing screws [1] of the lifter motor M20 (M21), and disconnect the connector [2]; then, detach the lifter motor [3].

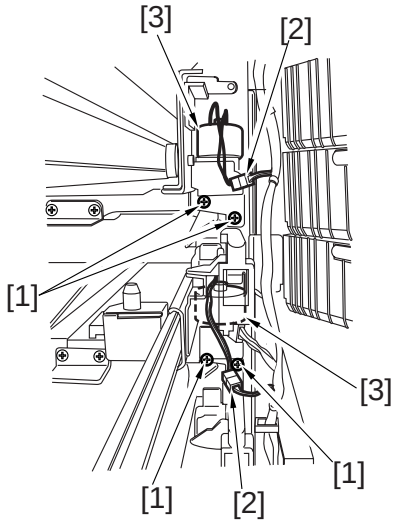

F05-902-20

9.2.14 Adjusting the Position of the Lifter Motor M20 (M21) of the Cassette 3 (cassette 4)

1) Remove the guide plate [1] of the vertical path roller 2. (See 9.3.2 “Removing the Vertical Path Roller 2.”)
(In the case of the lifter motor M21, remove the cassette 3 pickup assembly [2]; for instructions, see 9.2.1 “Removing the Right Deck.”)

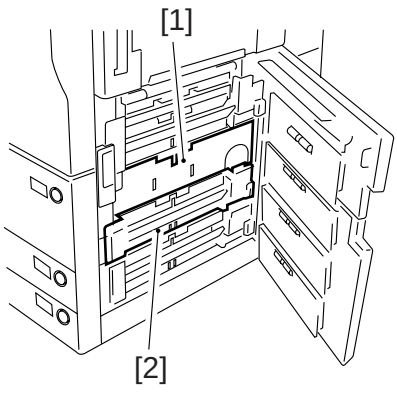

F05-902-21

2) While keeping the lifter motor M20 (M21) [3] to the right, tighten the screw [4] temporarily.

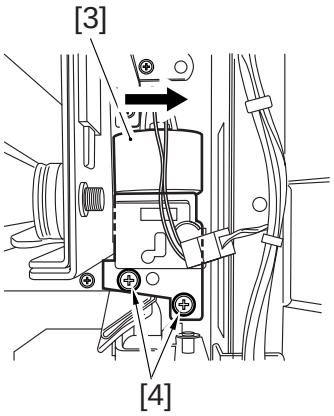

F05-902-22

3) Set the cassette 3 (cassette 4) in the machine without paper.
4) Check to make sure that the lifter drive gear [5] is engaged with the lifter motor gear [6] from the right side of the machine; then, check also to make sure that the lifter drive gear is fully away from the lifter gear when the release button [7] of the cassette 3 (cassette 4) is pressed halfway.

The expression “pressing the release button halfway” means the following:
- The separation roller moves down.
- The cassette is about to slide out.

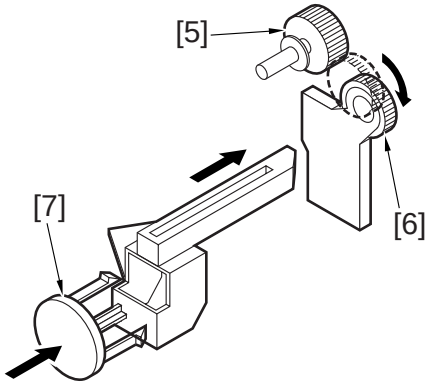

F05-902-23

5) If the filter drive gear is not fully away from the lifter motor gear, move the left motor M20 (M21) [7] to the left, and press the release button halfway once again to make a check.

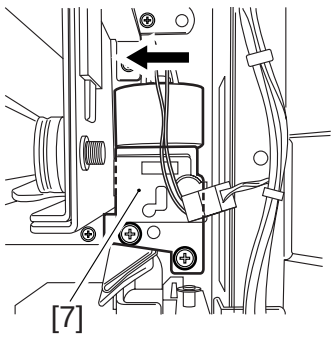

F05-902-24

COPYRIGHT © 2000 CANON INC.

6) Fully tighten the two screws of the lifter motor M20 (M21).
7) Mount back the removed parts, and turn on the machine.
8) Press the cassette release button under the following conditions, and turn on the machine:

- the cassette contains no paper.
- the cassette contains about 550 sheets of paper.

9.2.15 Adjusting the Position of the Cassette 3/4 Pickup Solenoid (SL3, 4)

Adjust the position of the solenoid using the two screws [3] so that the distance from the bottom of the pickup assembly to section A of the roller arm is 36±0.5 mm when [1] and [2] are operated as shown.

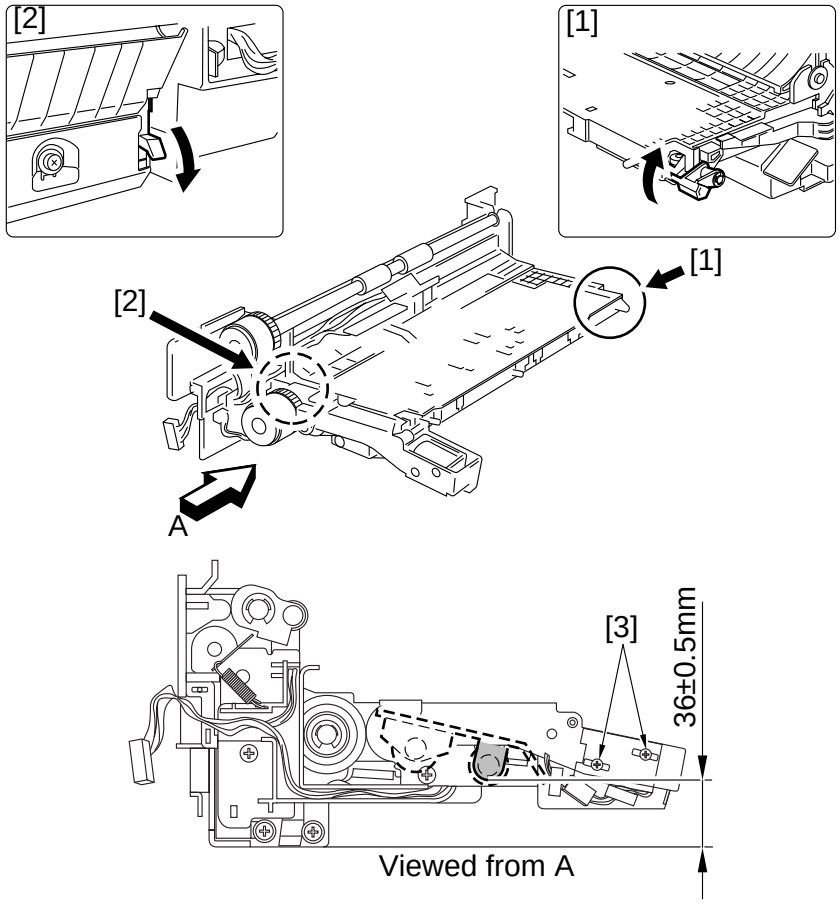

F05-902-25

9.3 Vertical Path Roller Assembly

9.3.1 Removing the Vertical Path Roller 1

1) Remove the right deck pickup assembly.
2) Remove the following from the front:
   E-ring [1], 1 pc.
   bushing [2], 1 pc.
3) Remove the following from the rear:
   E-ring [3], 1 pc.
   bushing [4], 2 pc.
   roller base [5]
   blue gear [6]
   parallel pin [7]

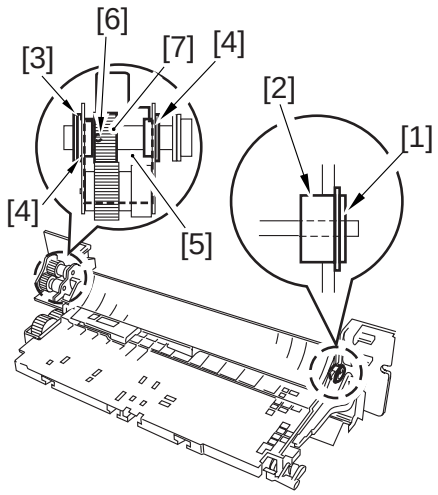

F05-903-01

4) Remove the guide plate [8], and detach the vertical path roller 1 [9].

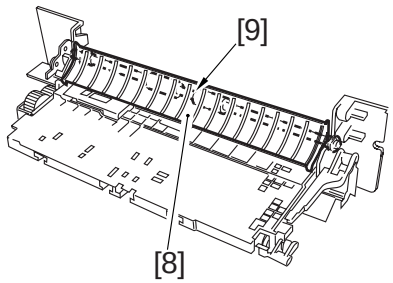

F05-903-02

9.3.2 Removing the Vertical Path Roller 2

1) Slide out the right deck and the cassette 3/4.
2) Remove the three screws [1], and detach the cassette holder right cover [2].

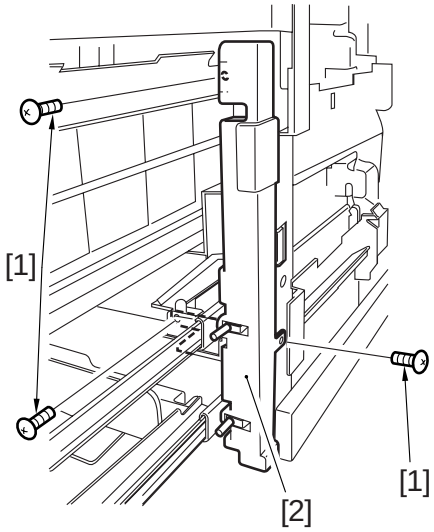

F05-903-03

COPYRIGHT © 2000 CANON INC.

3) Disconnect the connector [3], and remove the screw [4]; then, detach the guide plate [5].

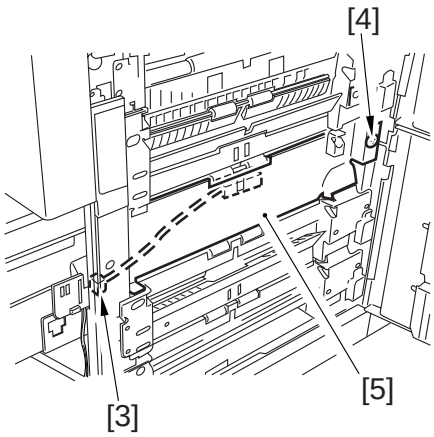

F05-903-04

4) Remove the E-ring [6] from the front of the roller shaft, and move the bearing [7] toward the inside; then, detach the vertical path roller 2 [8].

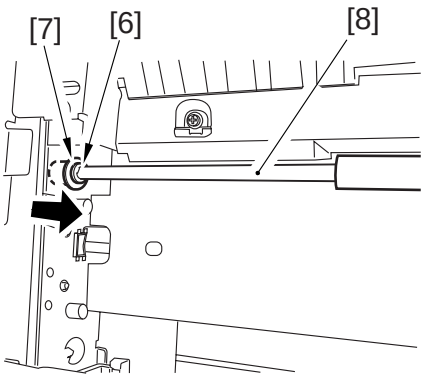

F05-903-05

9.3.3 Removing the Vertical Path Roller 3/4

1) Remove the cassette pickup assembly.
2) Remove the following from the front:
   E-ring [1], 1 pc.
   spacer [2], 1 pc.
   bearing [3], 1 pc.
3) Remove the following from the rear:
   E-ring [3], 3 pc.
   bushing [4], 2 pc.
   roller mount [5]
   blue gear [6]
   parallel pin [7]
4) Remove the vertical path roller 2/3 [8].

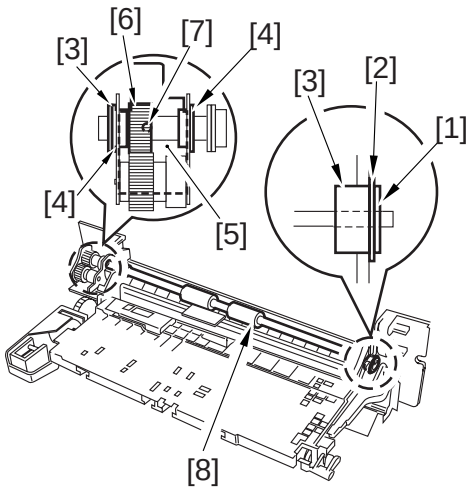

F05-903-06

9.4 Registration Feeding Assembly

9.4.1 Removing the Registration Clutch

1) Remove the fixing/feeding unit from the machine.
2) Loosen the two sems screws [1], and detach the stopper [2].
3) Disconnect the connector [3], and remove the registration clutch [4].

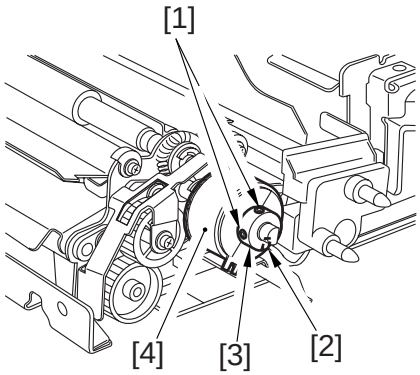

F05-904-01

9.4.2 Removing the Registration Roller

1) Remove the fixing/feeding unit from the machine.
2) Remove the feeding right cover of the fixing/feeding unit.
3) Remove the transfer separation charging assembly.
4) Remove the registration clutch.
5) Remove the two mounting screws [1], and detach the protection cover [2].

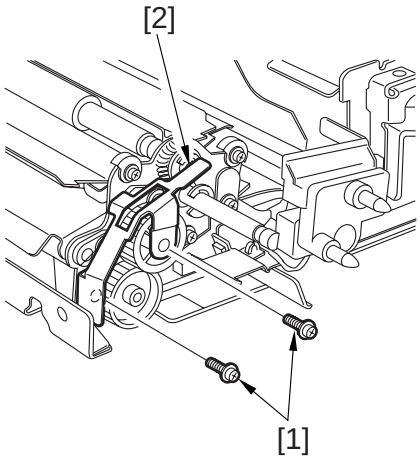

F05-904-02

COPYRIGHT © 2000 CANON INC.

6) Remove the following from the back:
spring [3]
E-ring [4]
spacer [5]
bearing [6]
stopper [7]

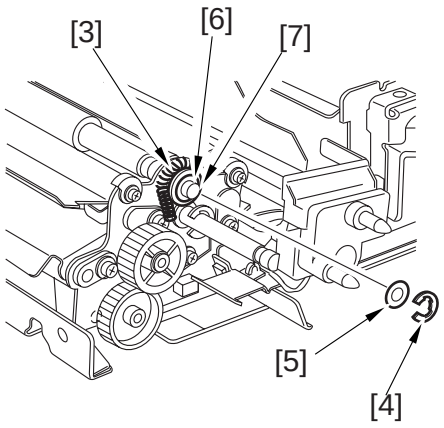

F05-904-03

7) Remove the following from the front:
screw [8]
spring [9]
E-ring [10]
spacer [11]
bearing [12]
stopper [13]
break [14]
8) Remove the registration roller [15].

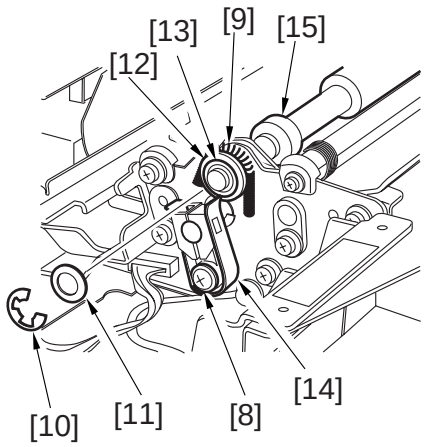

F05-904-04

9.5 Feeding Assembly

9.5.1 Removing the Feeding Belt

1) Slide the fixing/feeding unit from the machine.
2) Remove the fixing front cover, feeding right cover, and feeing left cover.
3) Disconnect the two connectors [1], and remove the screw [2]; then, detach the harness guide [3].

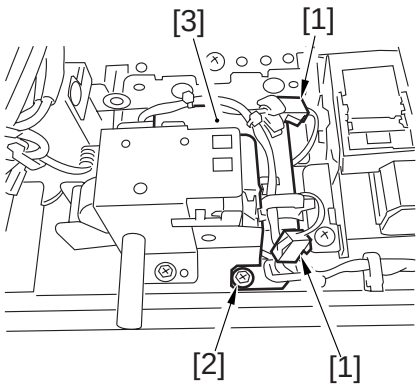

F05-905-01

4) Remove the two mounting screws [4], and detach the fixing/feeding unit releasing lever support [5].

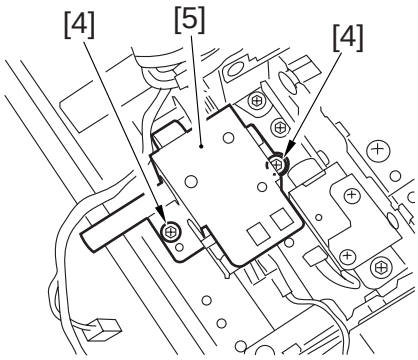

F05-905-02

5) Remove the E-ring [6], bearing [7], and two screws [8] from the front.

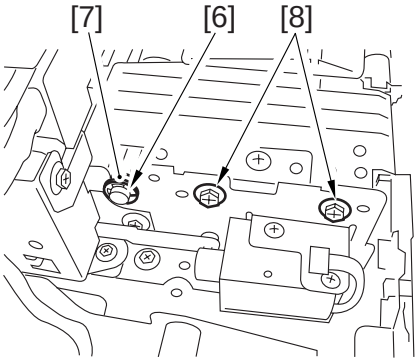

F05-905-03

6) Remove the E-ring [9], pulley [10], pin [11], three screws [12], E-ring [13], and bearing [14]; then, detach the feeding belt unit [15].

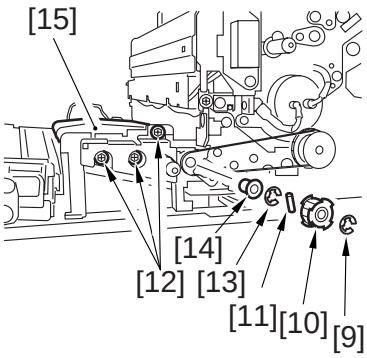

F05-905-04

COPYRIGHT © 2000 CANON INC.

7) Remove the mounting screw [16], and detach the cover [17].
8) Detach the feeding belt [18] and the postcard belt [19].

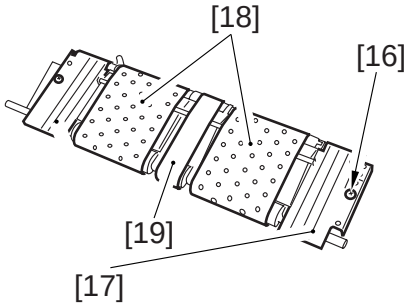

F05-905-05

9.5.2 Removing the Fixing/Feeding Unit Releasing Lever Switch

1) Slide the fixing/feeding unit out of the machine.
2) Remove the feeding right cover and the feeding left cover.
3) Disconnect the two connectors [1], and remove the screw [2]; then, detach the harness guide [3].

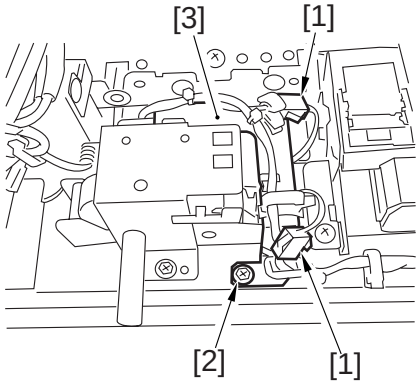

F05-905-06

4) Remove the two mounting screws [4], and detach the fixing/feeding unit releasing lever support [5].

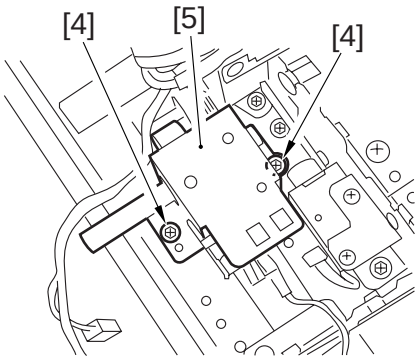

F05-905-07

5) Remove the two mounting screws [6], and detach the releasing lever switch [7].

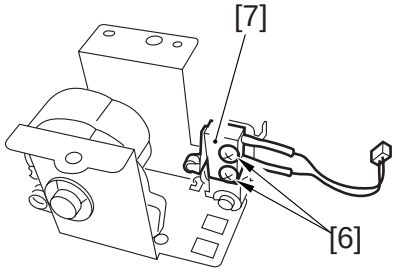

F05-905-08

9.6 Duplex Unit

9.6.1 Removing the Duplex Unit

1) Slide the duplex unit out of the machine.
2) Remove the three screws [1] and two knobs [2]; then, detach the front cover [3].
3) Holding the left and right grips [4] of the duplex unit, take it out of the machine.



Take care not to trap your hand between the grip and the rail. Further, do not place the duplex unit where it may suffer damage.

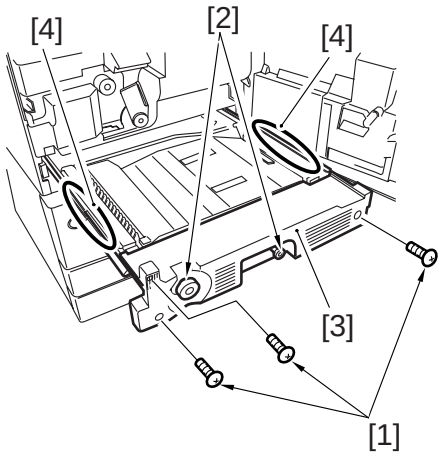

F05-906-01

9.6.2 Removing the Reversing Flapper Solenoid

1) Remove the duplex unit from the machine.
2) Disconnect the connector [1], and free the harness [3] from the guide [2].
3) Remove the two mounting screws [4], and detach the reversing flapper solenoid [5].
   (The steps of installation refer to 9.6.17 “Mounting the Reversing Flapper solenoid”.)

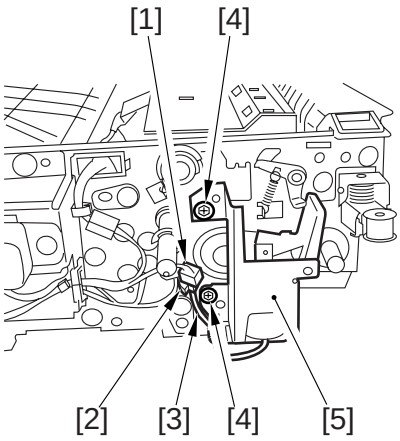

F05-906-02

9.6.3 Removing the Reversal Motor

1) Remove the front cover of the duplex unit.
2) Disconnect the connector [1].
3) Remove the three mounting screws [2], and detach the reversal motor [3] together with its support plate.

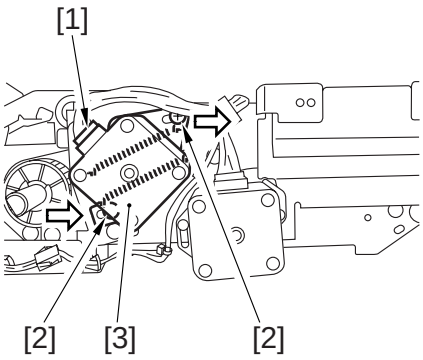

F05-906-03

COPYRIGHT © 2000 CANON INC.

4) Remove the two mounting screws [4], and detach the reversal motor [5] from the support plate.

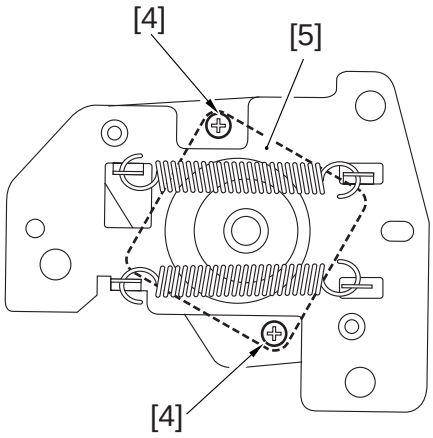

F05-906-04

9.6.4 Mounting the Reversal Motor

1) While the spring [1] has most tension, tighten the two mounting screws [2] temporarily.

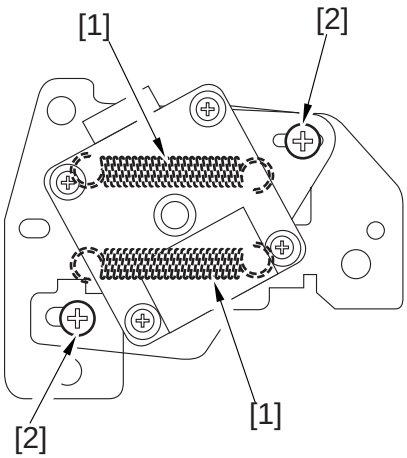

F05-906-05

2) Mount the support plate [4] (2 pc.) and the motor [5] using three mounting screws [3]; then, attach the timing belt [6].

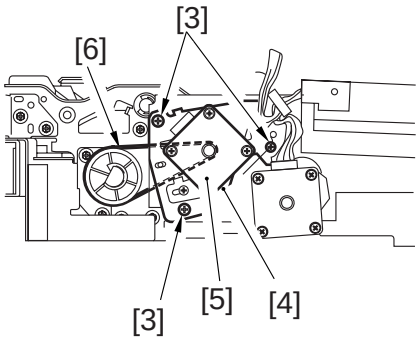

F05-906-06

3) Loosen the two screws [2] that have been tightened temporarily, and check to make sure that the spring provides tension; then, tighten the screws [2].

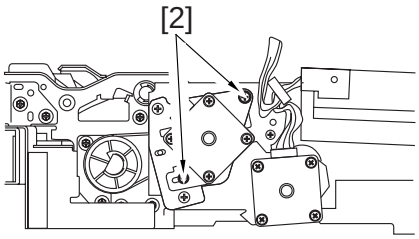

F05-906-07



At the end, be sure the timing belt has tension.

9.6.5 Removing the Duplexing Feeding Left Motor

1) Remove the front cover of the duplex unit.
2) Disconnect the connector [1], and remove the two screws [2]; then, detach the duplex feeding left motor [3].

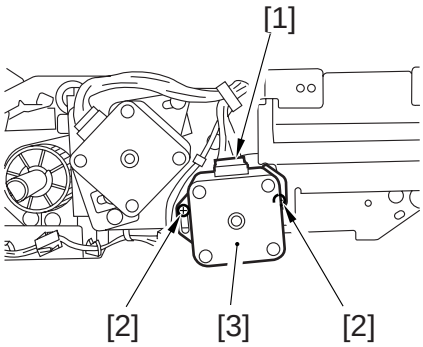

F05-906-08

9.6.6 Removing the Duplex Feeding Right Motor

1) Remove the front cover of the duplex unit.
2) Disconnect the connector [1], and remove the two screws [2]; then, detach the duplex feeding right motor [3].

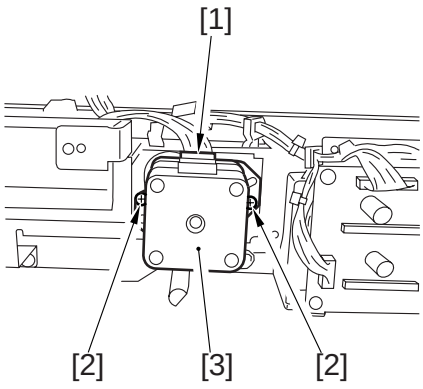

F05-906-09

COPYRIGHT © 2000 CANON INC.

9.6.7 Removing the Horizontal Registration Motor

1) Remove the duplex unit from the machine.
2) Remove the horizontal registration unit.
3) Disconnect the connector [1], and free the harness [2] from the harness guide [3].
4) Remove the two mounting screws [4], and detach the horizontal registration motor [5].

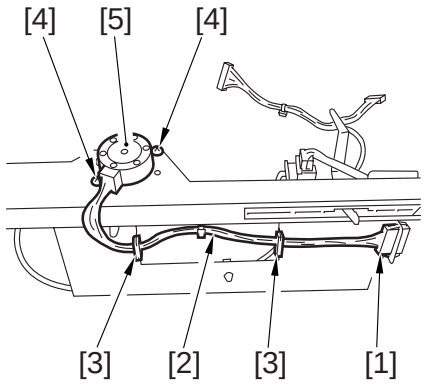

F05-906-10

9.6.8 Removing the Duplex Pre-Registration Sensor

1) Slide the duplex unit out the machine.
2) Remove the two mounting screws [1], and detach the cover [2].

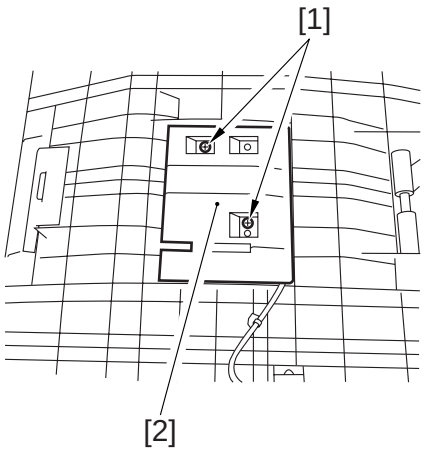

F05-906-11

3) Remove the two mounting screws [3], and detach the sensor together with its base [4].

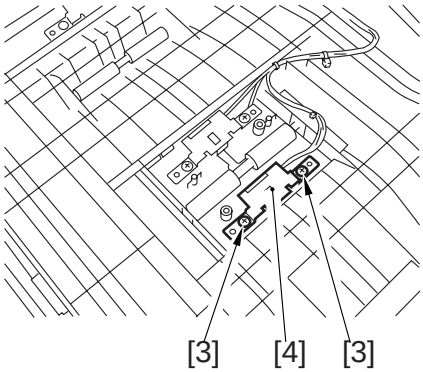

F05-906-12

4) Disconnect the connector [5], and remove the sensor [6].

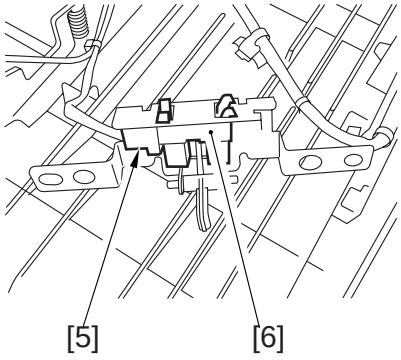

F05-906-13

9.6.9 Removing the Duplex Paper Sensor

1) Slide the duplex unit out of the duplex unit.
2) Remove the two mounting screws [1], and detach the cover [2].

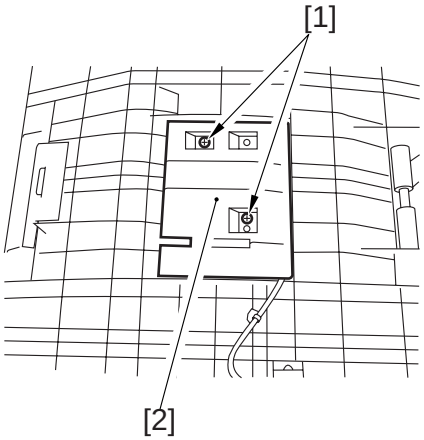

F05-906-14

3) Remove the two mounting screws [3], and detach the sensor together with its base [4].

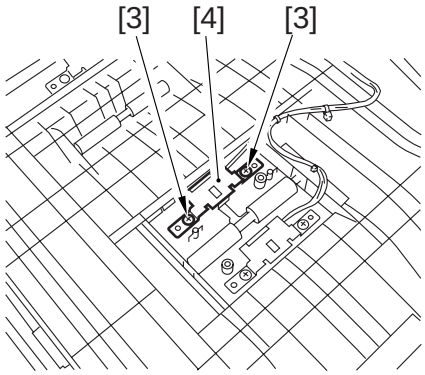

F05-906-15

4) Disconnect the connector [5], and remove the sensor [6].

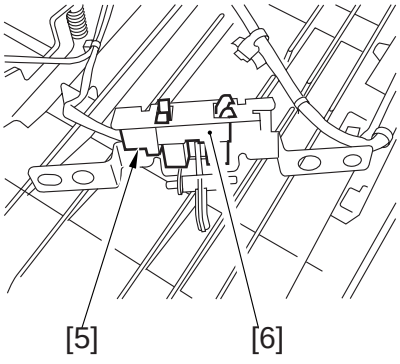

F05-906-16

COPYRIGHT © 2000 CANON INC.

9.6.10 Removing the Reversal Sensor 1

1) Slide the duplex unit out of the machine.
2) Remove the two mounting screws [1], and detach the sensor together with its base [2].

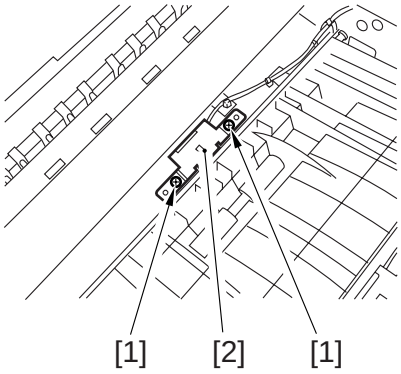

F05-906-17

3) Disconnect the connector [3], and detach the sensor [4].

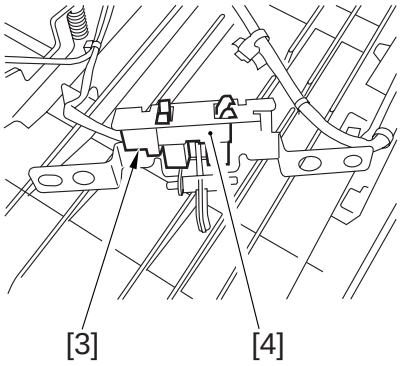

F05-906-18

9.6.11 Removing the Reversal Sensor 2

1) Slide the duplex unit out of the machine.
2) Remove the two mounting screws [1], and detach the sensor together with its base [2].

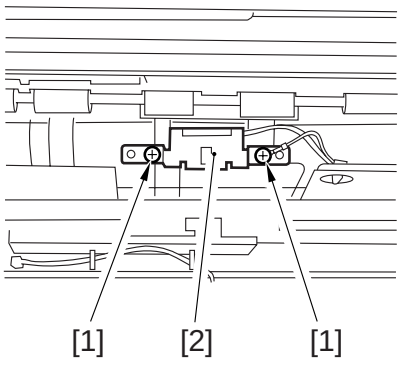

F05-906-19

3) Disconnect the connector [3], and remove the sensor [4].

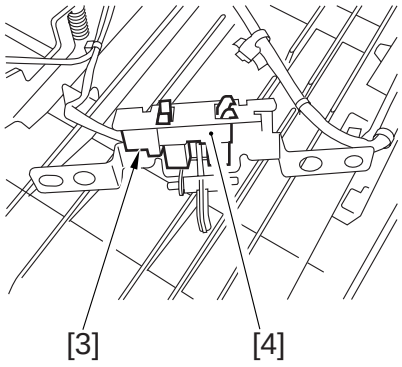

F05-906-20

9.6.12 Removing the Left Deck Feed Paper Sensor

1) Disconnect the connector [1] and remove the two mounting screws [2] from the bottom of the duplex unit; then, detach the sensor together with its base [3].

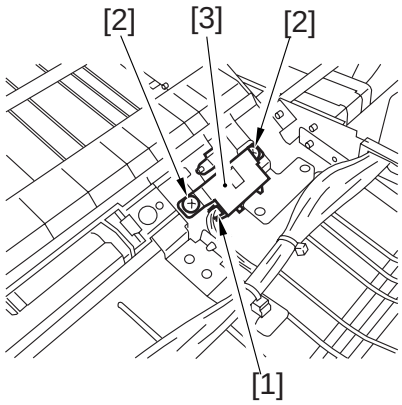

F05-906-21

2) Remove the left deck feed paper sensor [4].

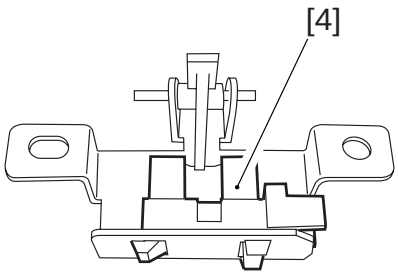

F05-906-22

COPYRIGHT © 2000 CANON INC.

9.6.13 Removing the Horizontal Registration Sensor

1) Remove the duplex unit from the machine.
2) Remove the horizontal registration unit.
3) Disconnect the connector [1], and remove the horizontal registration sensor [2].

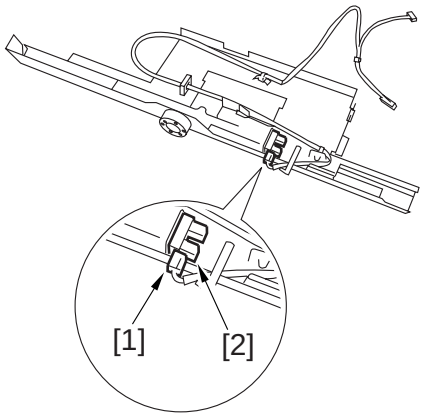

F05-906-23

9.6.14 Removing the Duplex Driver PCB

1) Slide the duplex driver out of the machine.
2) Remove the front cover of the duplex driver.
3) Disconnect all connectors from the duplex driver PCB.
4) Remove the four mounting screws [1], and detach the duplex driver PCB [2].

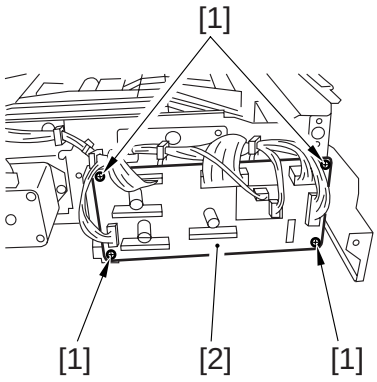

F05-906-24

9.6.15 Removing the Horizontal Registration Unit

1) Remove the duplex unit from the machine.
2) Remove the front cover of the duplex unit.
3) Turn over the duplex unit.
4) Remove the mounting screw [1] from the front.
5) Remove the mounting screw [2] and disconnect the connector [3] from the rear; then, detach the horizontal registration unit [4].

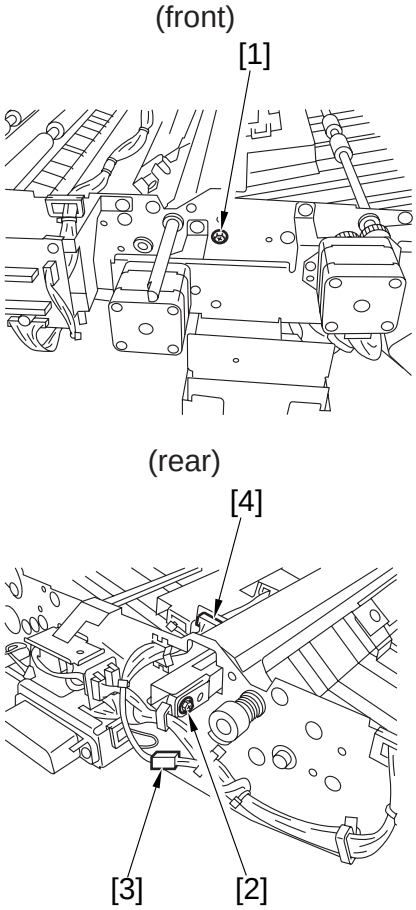

F05-906-25

9.6.16 Removing the Duplex Feeding Fan

1) Slide out the duplex unit, and detach the front cover of the duplex unit.
2) Remove the two mounting screws [1], and disconnect the connector [2]; then, detach the fan together with its base [3].

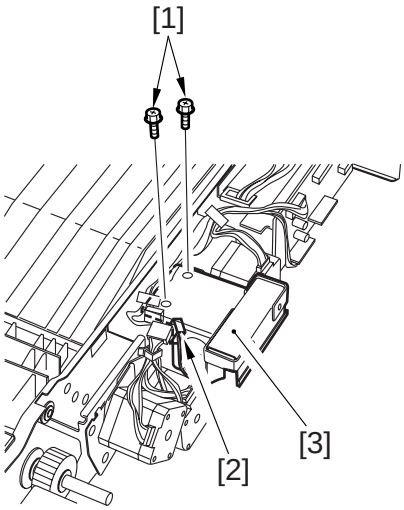

F05-906-26

COPYRIGHT © 2000 CANON INC.

3) Remove the two mounting screws [4], and detach the duplex feeding fan [5].



Be sure that the arrow indicating the direction of air is as indicated when mounting the duplex feeldng fan.

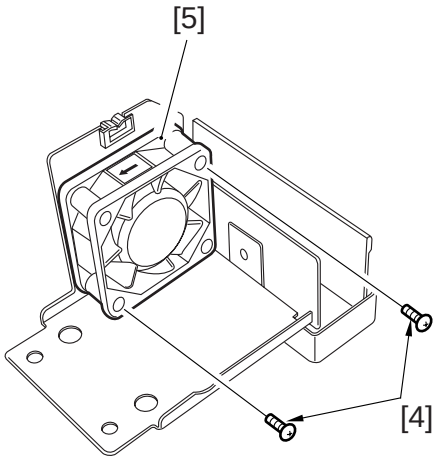

F05-906-27

9.6.17 Mounting the Reversing Flapper Solenoid

1) Adjust the position of the solenoid using two screws [2] so that the drive lever [1] is fully pushed when the solenoid turns on (i.e., the plunger is drawn).

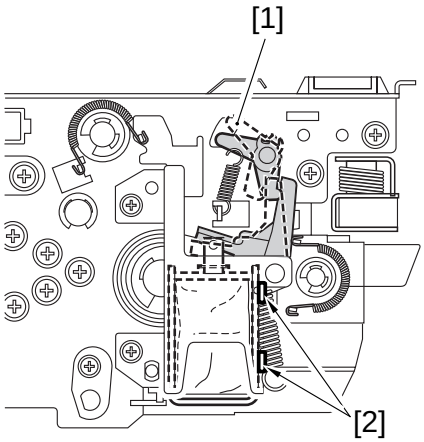

F05-906-28

CHAPTER 6

FIXING SYSTEM

COPYRIGHT © 2000 CANON INC.

1. Outline of Operation

1.1 Outline

The fixing system has the following major functions:

Item	Descriptions
Fixing method	Heat roller
Fixing heater	
100-Vmodel	Main heater: controlling temperature mainly during printing Sub heater: controlling temperature during standby
120/230-V model	Main heater/Sub heater: controlling temperature during printing
Control temperature	200°C (in STBY)
Temperature detection	[1] Main thermistor (temperature control, error detection) [2] Sub thermistor (error detection) [3] Thermal switch (error detection)
Fixing temperature control	[1] Power-on sequence [2] Model-specific sequence [3] Ambient temperature sequence
Cleaning method	Web roller (driven by solenoid and one-way clutch)
Error detection	[1] By thermistor (temperature error) [2] By thermal switch (overheating)
Other	[1] Control of fixing assembly inlet guide drive (about 1 mm up/down) • High if original is B5R or longer • Low if original is shorter than B5R [2] Control of reciprocating movement of thermistor (about 12 mm) [3] Control of reciprocating movement of upper separation claw (about 3 mm)

T06-101-01

COPYRIGHT © 2000 CANON INC.

The fixing system is constructed of the following components:

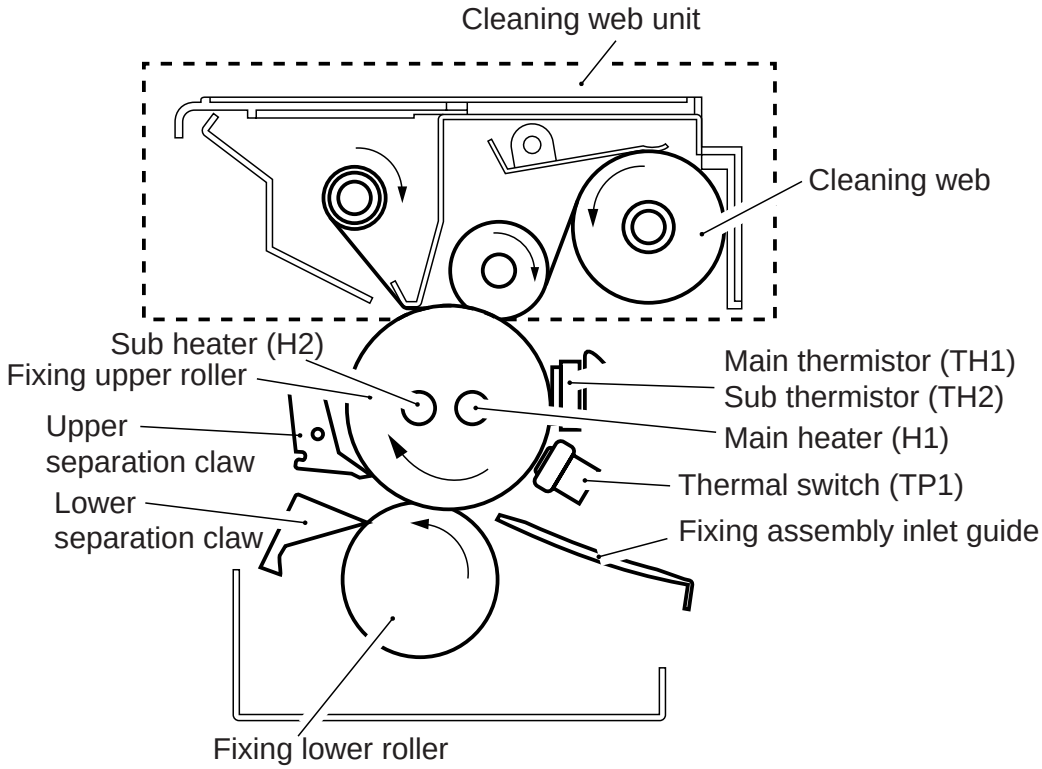

F06-101-01

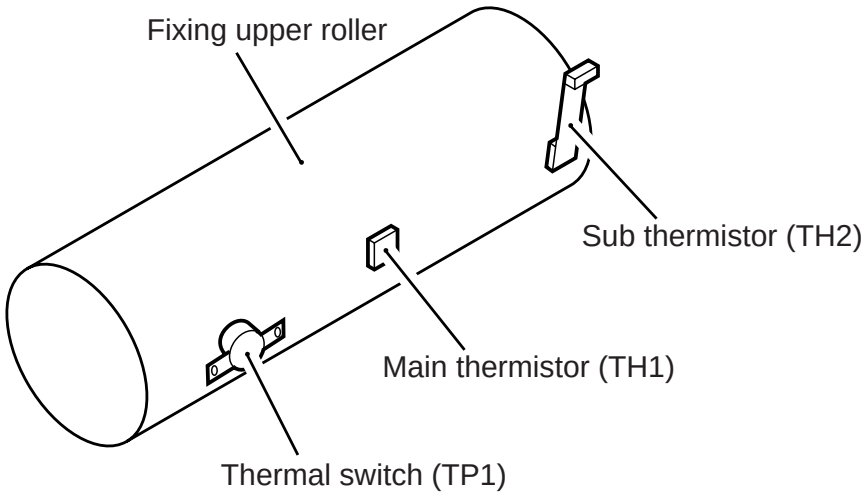

F06-101-02

COPYRIGHT © 2000 CANON INC.

Component	Notation	Description
Fixing upper roller		Heat roller (50-mm dia.)
Fixing lower roller		Pressure roller (38-mm dia.)
Fixing motor	M19	24VDC
Fixing assembly inlet guide drive solenoid	SL1	24VDC
Main heater	H1	120/230-V model: 600 W 100-V model: 700 W
Sub heater	H2	120/230-V model: 600 W 100-model: 470 W
Main thermistor	TH1	Used for temperature control, error detection
Sub thermistor	TH2	Used for error detection
Thermal switch	TP1	Operates at 240 ±10°C
Cleaning web		• Driven by web drive solenoid (SL2) • For large-size paper (B4 or larger), turns on twice for the 1st sheet, and then once for the 2nd and 3rd sheets; repeats the sequence thereafter • For small-size paper (smaller than B4), turns on once for the 1st and 2nd sheets, and remains off for the 3rd sheet; repeats the sequence thereafter
Upper separation claw		Moves in reciprocating motions (about 3 mm) Moves up/down (about 1.8 mm)

T06-101-02

COPYRIGHT © 2000 CANON INC.

1.2 Basic Sequence of Operations (fixing system)

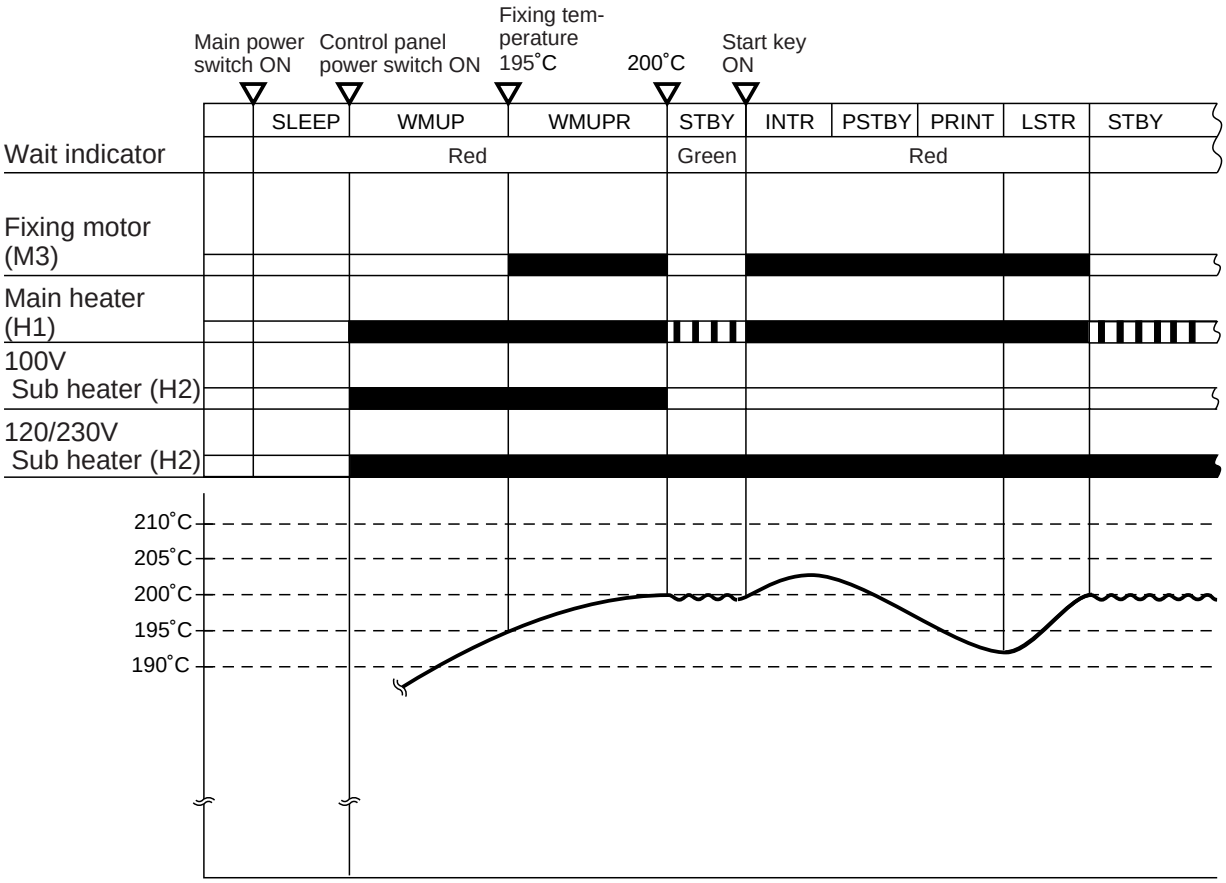

F06-102-01

COPYRIGHT © 2000 CANON INC.

2. Fixing Drive System

2.1 Outline

The following are control times associated with the fixing drive system:

1. Fixing roller drive
2. Cleaning web drive
3. Fixing assembly inlet guide drive
4. Thermistor reciprocating mechanism drive
5. Upper separation claw reciprocating mechanism

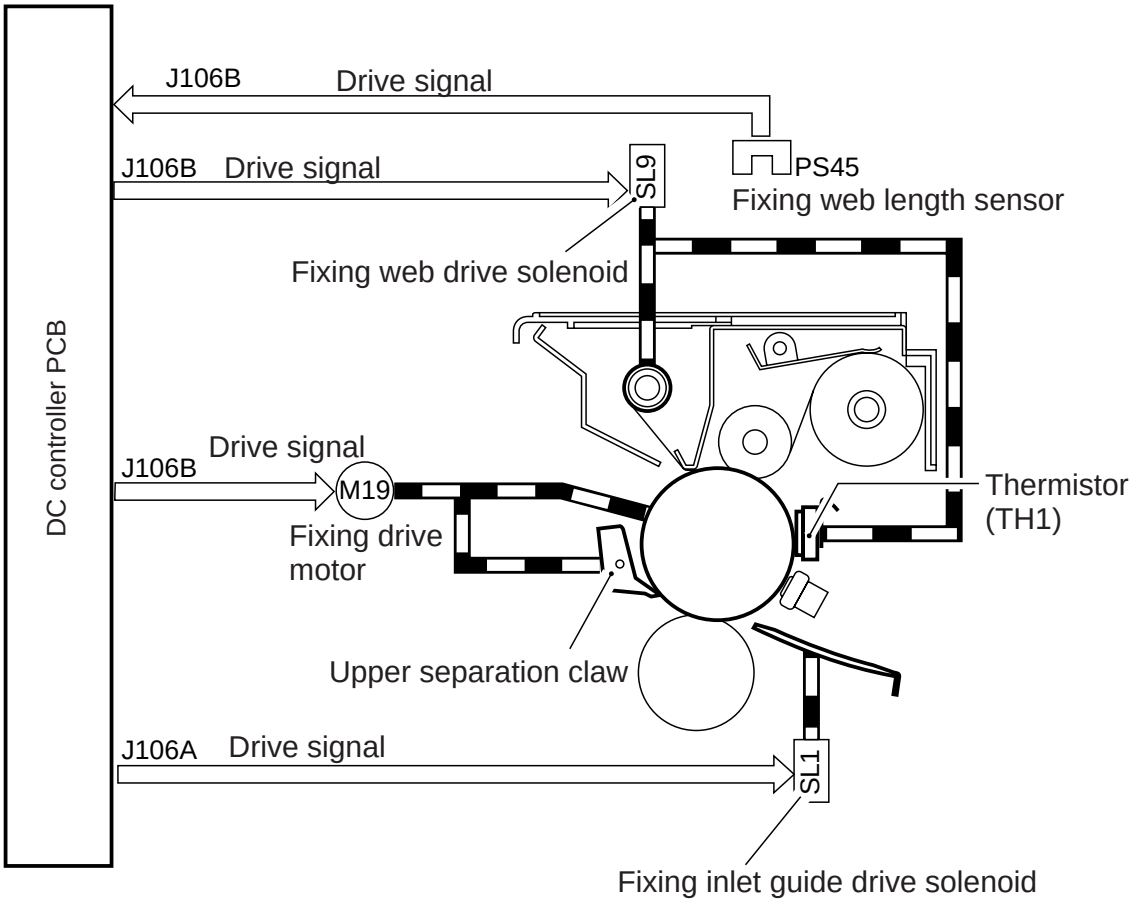

F06-201-01

2.2 Controlling the Drive of the Fixing Roller

The system used to control the fixing roller is constructed as follows:

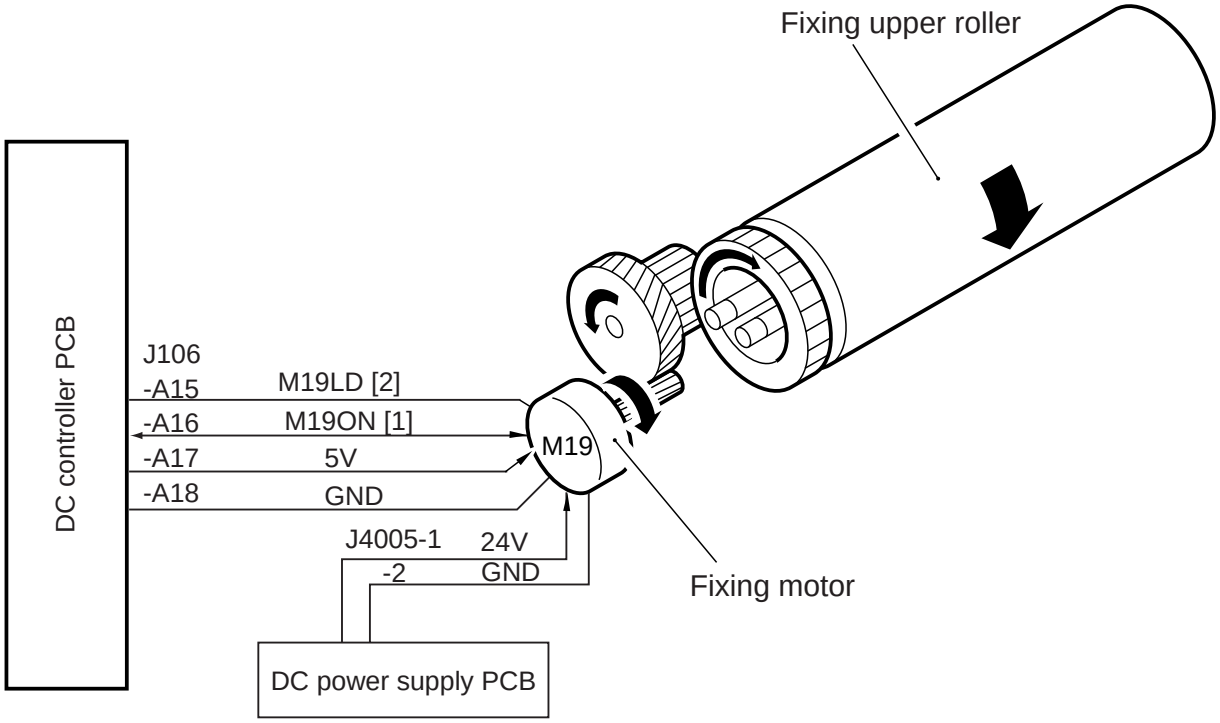

The system makes use of the following signals:

[1] Fixing motor drive signal; when '1', the motor turns on.
[2] Fixing motor drive lock signal; when the speed of rotation of the fixing motor reaches a specific level, '0'.

F06-202-01

Error

E014 (fixing motor speed error)
It is indicated when the drive lock signal is absent for 2 sec or more 2 sec after the fixing motor drive signal (M19ON) is generated.

COPYRIGHT © 2000 CANON INC.

2.3 Controlling the Drive of the Cleaning Web

The cleaning web used to clean the fixing upper roller is advanced by the fixing web solenoid (SL9; one-way clutch).

The length of the cleaning web is detected by any of the following two ways:

1. When the web detecting lever drops through the cut-out, it blocks the fixing web length sensor (PS45), causing the message "Web Running Out" to appear in the control panel; 'E005' will appear when the web has been drawn for 2000 times (COPIER>COUNTER>MISC>FIX-WEB; 3,000 A4 prints) without replacement.
2. The soft counter continues to keep track of the number of times the web is drawn (COPIER>COUNTER>DRBL-1>FIX-WEB), and the message "Web Running Out" will appear when the count reaches '300,000'.
   See F06-203-01 for the construction of the control mechanisms used for the cleaning web.

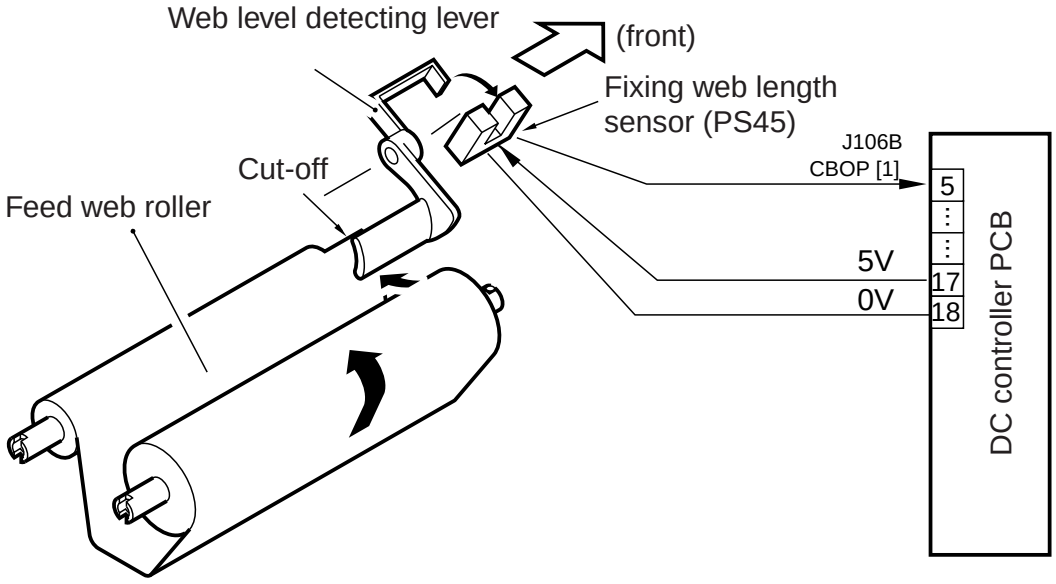

F06-203-01

The system makes use of the following signal:

[1] Fixing web length detection signal; when the fixing web runs out, '1'.

COPIER>OPTOIN>USER>WEB-DISP
Use it to enable/disable the Replace Web message.

Be sure to reset the following to '0' in service mode whenever you have replaced the fixing web:
COPIER>COUNTER>MISC>FIX-WEB and
COPIER>COUNTER>DRBL-1>FIX-WEB.

2.4 Controlling the Drive of the Fixing Assembly Inlet Guide

The machine changes the height of the fixing assembly inlet guide to suit specific paper sizes, thereby ensuring correct movement of paper. The height is controlled by the fixing assembly inlet solenoid operated by the following control system:

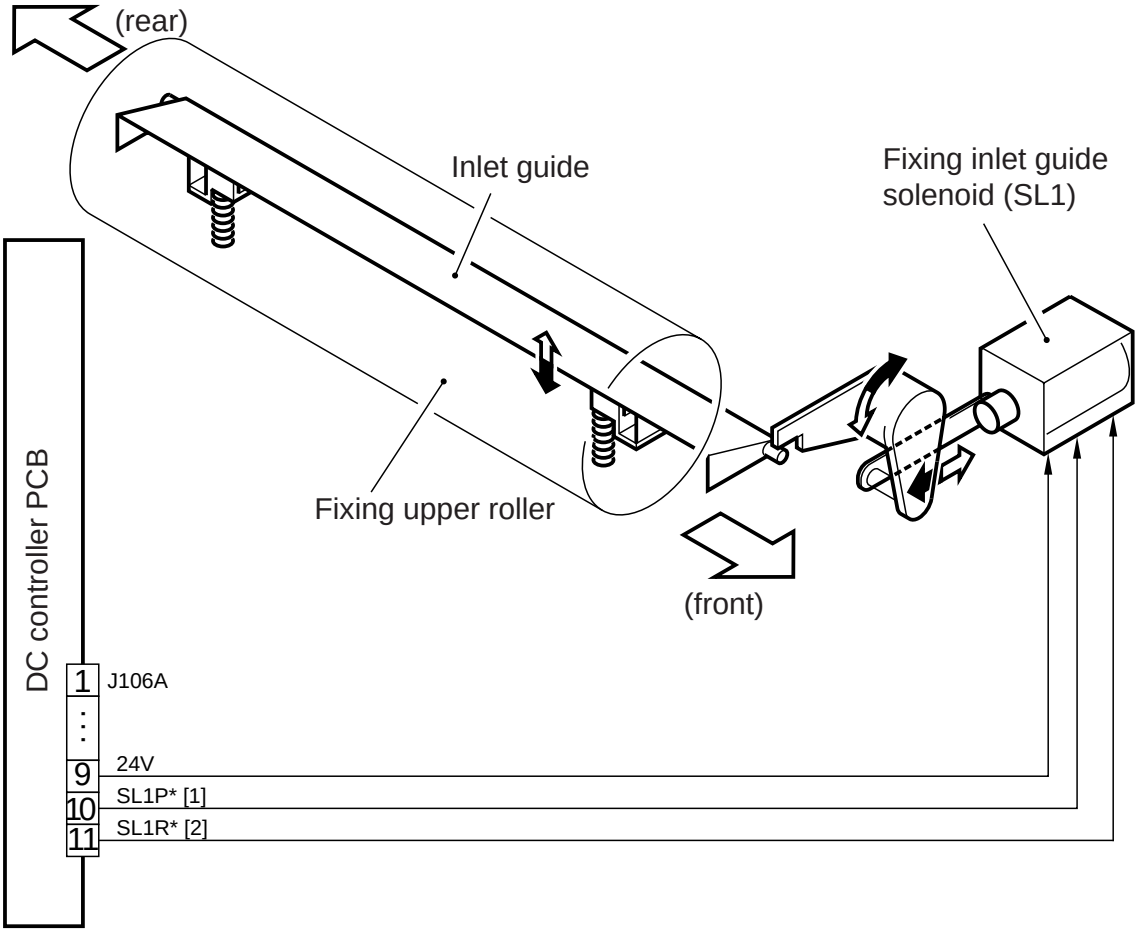

F06-204-01

The system uses the following signals:

[1] Fixing assembly inlet guide drive signal; when '0', the fixing assembly inlet guide moves up.
[2] Fixing inlet guide drive signal; when '0', the fixing assembly inlet guide moves down.

COPYRIGHT © 2000 CANON INC.

2.5 Controlling the Reciprocating Mechanisms of the Thermistor

To prevent damage to the fixing upper roller by the main thermistor (TH1), the main thermistor is moved back and forth over a distance of about 12 mm in the axial direction of the fixing upper roller.

The drive comes from the web drive solenoid (SL9), and is sent to the reciprocating cam by way of a one-way arm.

The control system of the thermistor reciprocating mechanism is constructed as follows:

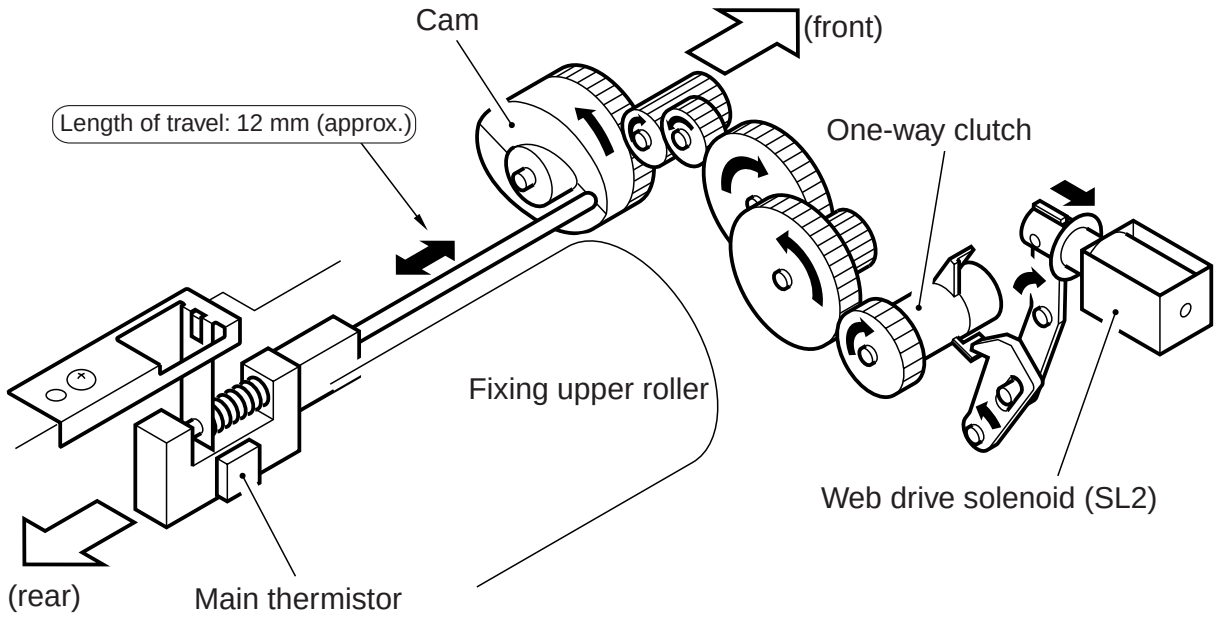

F06-205-01

2.6 Controlling the Reciprocating Mechanism of the Upper Separation Claw

To prevent damage to the fixing upper roller by the upper separation claw, the upper separation claw is moved back and forth in the axial direction of the fixing upper roller.

The system used to control the reciprocating mechanism of the upper separation claw is constructed as follows:

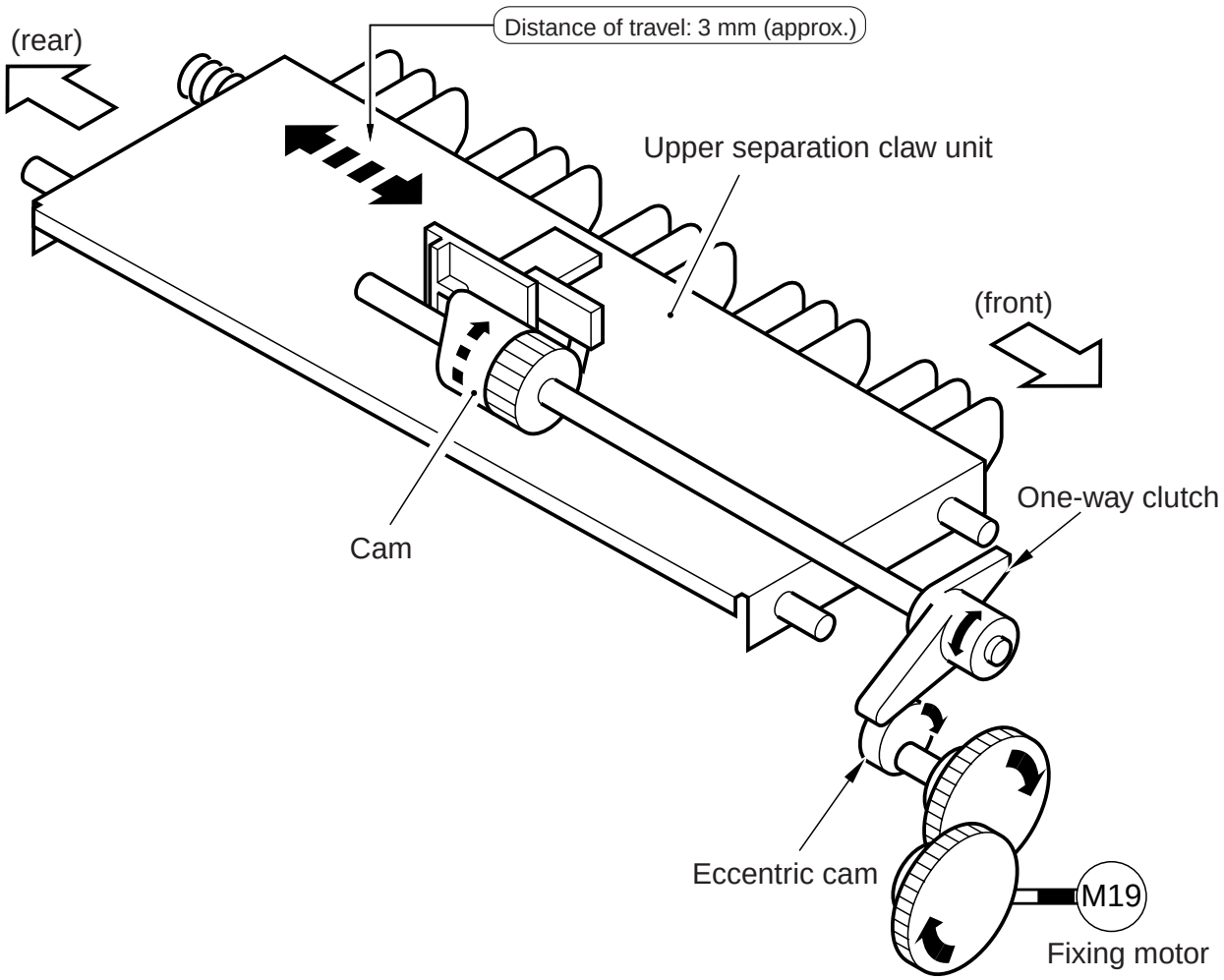

F06-206-01

COPYRIGHT © 2000 CANON INC.

3. Controlling the Fixing Temperature

3.1 Outline

The following are control items associated with the fixing temperature control system:

1. Fixing heater temperature control
2. Thermistor error detection

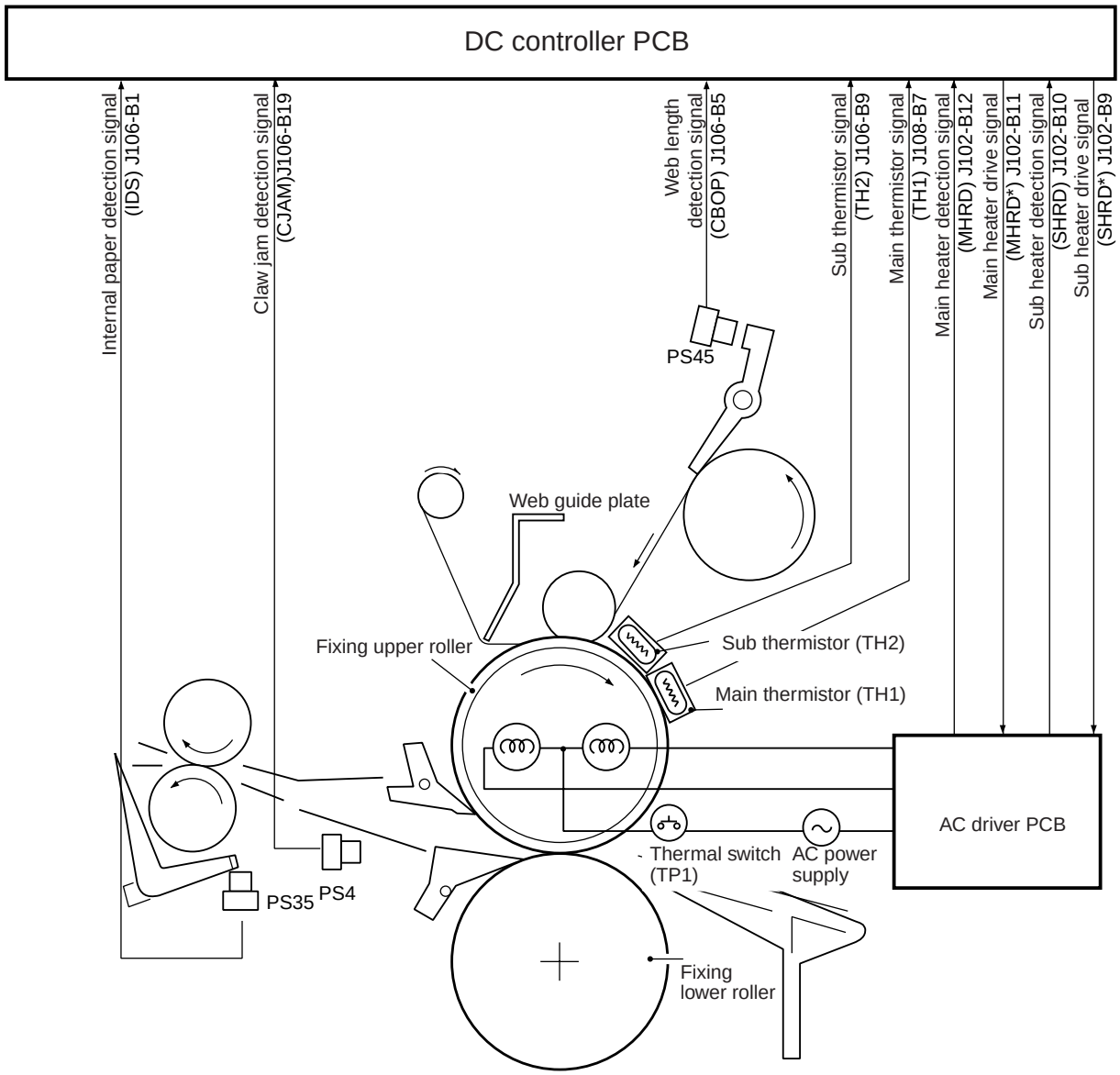

F06-301-01

3.2 Temperature Control

The machine uses the following methods to control the fixing temperature:

State	Item	Description
Normal	[1] Power-on sequence	Used if the fixing roller is 75°C or lower at power-on.
	[2] Model-specific sequence	Used to suit the rated voltage of the model (100 V or 120/230 V).
	[3] Ambient temperature sequence	Used as follows depending on the machine inside temperature detected by the environment sensor: if 18°C or more, H mode; if between 12°C and 18°C, M mode; if less than 12°C, L mode.
	[4] Down sequence (text mode)	Used to prevent faulty fixing in continuous printing mode.
	[5] Down sequence halftone mode (other than text mode)	Used to prevent faulty fixing of halftone images in continuous printing mode.
	[6] Edge overheating prevention mode	Used to prevent overheating of the edges of the fixing roller when small-size paper is used.
	[7] Jam recovery mode	Used if transfer paper is in the fixing/feeding unit in the presence of a jam.
	[8] Power save mode	Used to decrease the control temperature, thus saving on power consumption.
Setting in service mode	[9] Wait time reduction mode	Used to decrease the print start temperature by 15°C to reduce print time; for iR5000, 4 min or less; for iR6000, 1 min or less.
	[10] Priority on fixing mode	Used to switch the down sequence temperature; increases the fixing temperature by 10°C.
	[11] Priority on productivity mode	Used to switch the down sequence temperature; decreases the fixing temperature by 10°C.
	[12] Thick paper mode (120/230-V model only)	Used to increase the fixing temperature at the start of printing to 203°C or higher to improve fixing (after power-on, 211°C in M/L mode).
	[13] Special paper mode	Used to hold printing unit if the fixing temperature reaches 180°C for special paper.

T06-302-01

COPYRIGHT © 2000 CANON INC.

3.2.1 Normal Sequence

In normal sequence, the control will be as follows:

- If the surface of the fixing upper roller is 75°C or lower (60 min from power-on).

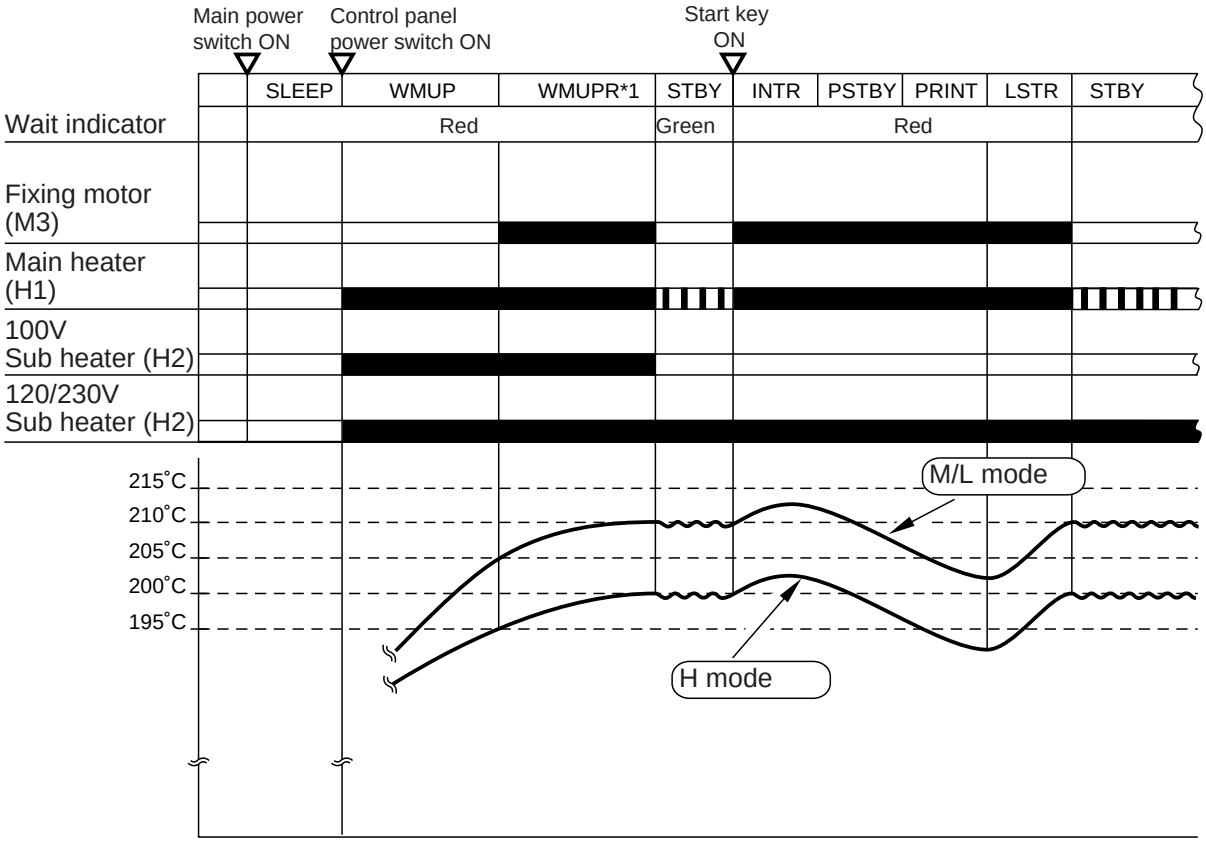

*1:WMUPR in H mode is longer by 1 min.

F06-302-01

	Ambient temperature	H mode	M/L mode
Control temperature	Initial multiple rotation	195°C	205°C
	Standby	200°C	210°C
	Start of printing	200°C	210°C
	During printing	203°C	212°C

T06-302-02

- 60 min or more from power-on

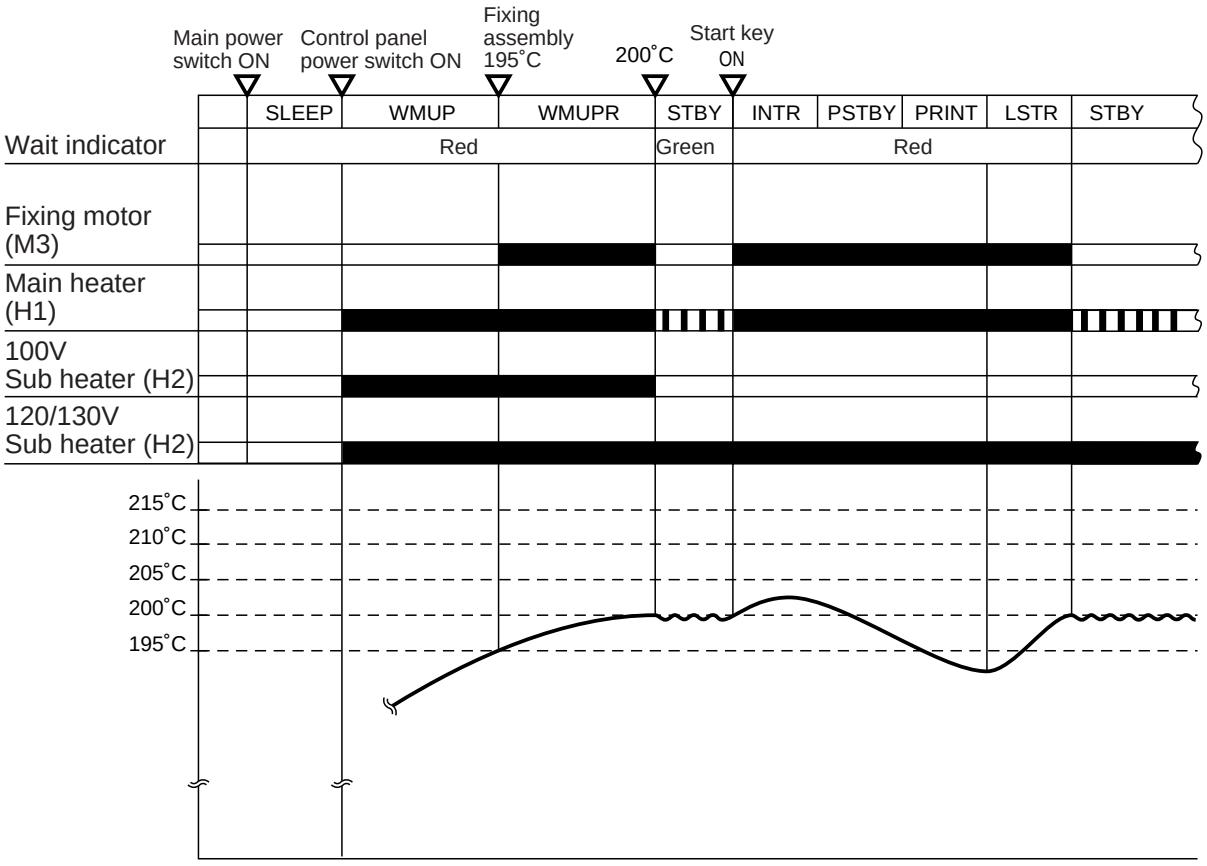

F06-302-02

Control temperature	
Initial multiple rotation	195°C
Standby	200°C
Start of printing	200°C
During printing	203°C

T06-302-03

COPYRIGHT © 2000 CANON INC.

3.2.2 Temperature Control by Mode

a. Down Sequence (text mode)

If the main thermistor (TH1) of the fixing upper roller detects any of the following levels of temperature, the machine increases the sheet-to-sheet interval to maintain a specific fixing temperature so as to prevent faulty fixing in continuous printing mode.

iR5000 Down Sequence

Model		100-V	120/230-V
Control temperature	50 cpm return mode	170°C	175°C
	40 cpm mode	165°C	170°C
	35 cpm mode	160°C	165°C
	print stop	155°C	160°C

T06-302-04

iR6000 Down Sequence

Control temperature	60 cpm return mode	175°C
	50 cpm mode	170°C
	40 cpm mode	165°C
	print stop	160°C

T06-302-05

COPYRIGHT © 2000 CANON INC.

b. Halftone Mode (other than text mode)

The machine uses a higher down sequence temperature for modes other than text mode to prevent faulty fixing of halftone images.

If text mode is used in combination with a non-text mode, the machine will use non-text mode down sequence throughout the job by placing priority on fixing.

iR5000 Down Sequence

Model		100-V	120/230-V
Control temperature	50 cpm return mode	180°C	185°C
	40 cpm mode	175°C	180°C
	35 cpm mode	170°C	175°C
	print stop	165°C	170°C

T06-302-06

iR6000 Down Sequence

Control temperature	60 cpm return mode	185°C
	50 cpm mode	180°C
	40 cpm mode	175°C
	print stop	170°C

T06-302-07

COPYRIGHT © 2000 CANON INC.

c. Overheating of the Ends

In a low-temperature environment (machine temperature of lower than 12°C), an error can occur as a result of overheating of the edges (as when small-size paper is used) while copying temperature is controlled to 212°C and the temperature of the fixing upper roller is 75°C for a period of 60 min from power-on.

If continuous printing is performed for 3 min or more, printing temperature is switched from 212°C to 205°C to prevent overheating.

d. Jam Recovery Mode

The sequence used after jam removal differs depending on the following conditions:

1. If paper exists in the fixing/feeding assembly,
   The fixing heater will be turned off in response to a jam, and post-jam removal initial multiple rotation will be excluded.
2. If no paper exists in the fixing/feeding assembly,
   The temperature control mechanism is turned on without turning off the fixing heater, and the machine will be ready for printing immediately after jam removal.

e. Power Save Mode

A press on the Power Save key on the control panel causes the machine to decrease the control temperature used in standby, thus reducing power consumption. The mode may be changed as follows in user mode:

Rate of saving	Control temperature	Recovery time*	
		100V	120/230V
-10%	180°C	50 sec	0 sec
-25%	155°C	90 sec	55 sec
-50%	110°C	180 sec	140 sec
Low power mode	140°C	-	

*Period of time before the machine starts standby state in response to a second press on the Power Save key.

T06-302-08

3.3 Detecting Errors

The system used to control the fixing temperature checks for the following errors:

1. Temperature error by the main thermistor (TH1)
2. Sensor error by the sub thermistor (TH2)
3. Overheating error by the thermal switch (TP1)

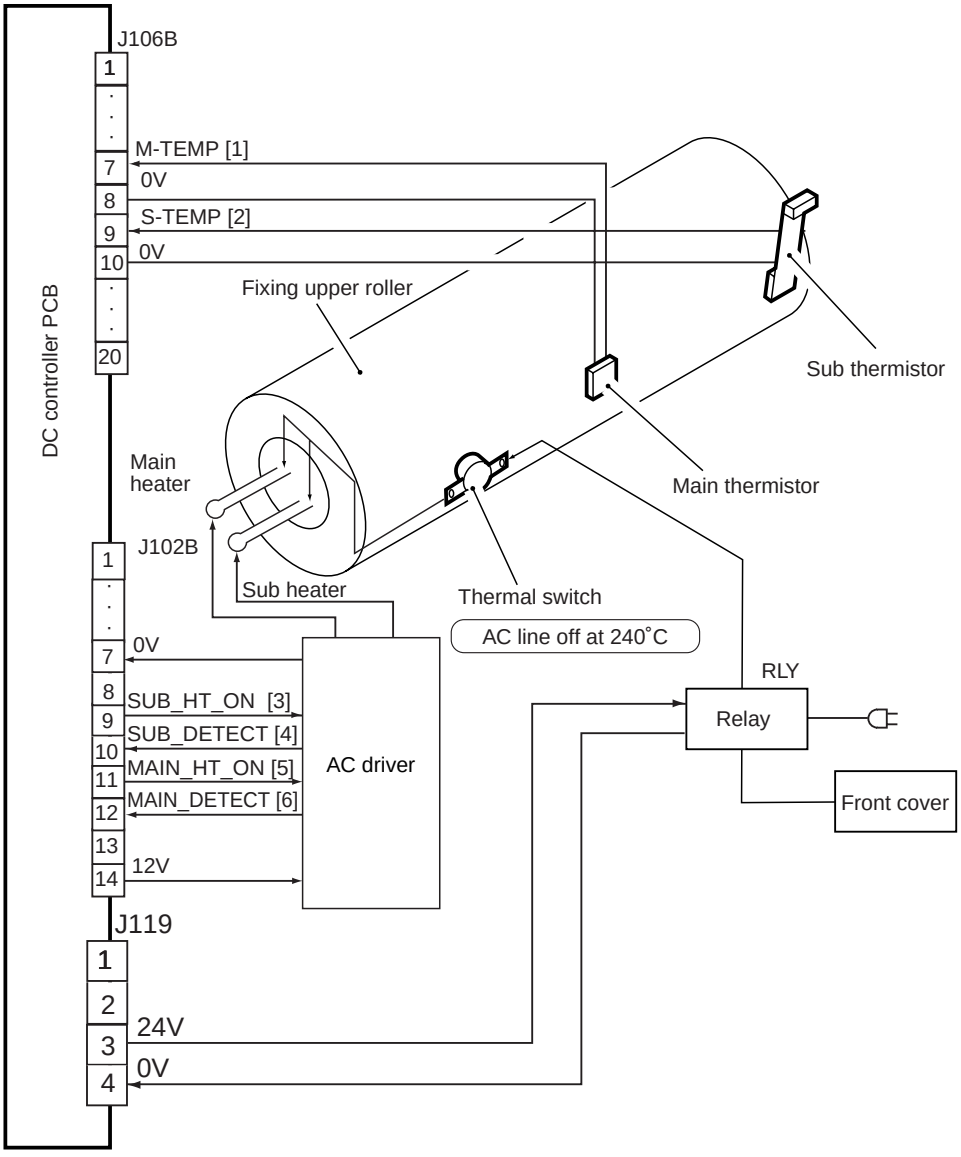

F06-303-01

COPYRIGHT © 2000 CANON INC.

The control system makes use of the following signals:

[1] Fixing roller temperature detection signal 1; generates a voltage suited to the temperature detected by the main thermistor.
[2] Fixing roller temperature detection signal 2; generates a voltage suited to the temperature detected by the sub thermistor.
[3] Sub heater drive signal; when '1', the sub heater turns on.
[4] Sub heater temperature detection signal; when the sub heater is supplied with power, '0'.
[5] Main heater drive signal; when '1', the main heater turns on.
[6] Main heater temperature detection signal; when the main heater is supplied with power, '0'.

Error

E000
The main thermistor (TH1) has poor contact or an open circuit. The thermal switch (TP1) has an open circuit. The fixing heater has an open circuit. The AC driver PCB is faulty. The DC controller PCB is faulty.
E001
The main thermistor (TH1) has a short circuit. The sub thermistor (TH2) has detected overheating. The AC driver PCB is faulty. The DC controller PCB is faulty.
E002
The main thermistor (TH1) has poor contact or an open circuit. The thermal switch (TP1) has an open circuit. The fixing heater has an open circuit. The AC driver PCB is faulty. The DC controlled PCB is faulty.
E003
The main thermistor (TH1) has poor contact or an open circuit. The thermal switch (TP1) has an open circuit. The fixing heater has an open circuit. The AC driver PCB is faulty. The DC controller PCB is faulty.
E004
The AC driver PCB is faulty. The DC controller PCB is faulty.
E005
The fixing web has been taken up. The fixing web length sensor (PS45) is faulty. The DC controller PCB is faulty.
If 'E000' through 'E004' is indicated, the error code indication will not be reset even when the main power switch is turned off and then on, requiring resetting in service mode (COPIER>FUNCTION>CLEAR>ERR).

COPYRIGHT © 2000 CANON INC.

4. Disassembly and Assembly

The machine's mechanical characteristics and features are as described herein, and the machine may be disassembled or assembled as instructed while keeping the following in mind:

1. ⚠ The power plug must be disconnected for the work.
2. Unless otherwise indicated, the machine may be assembled by reversing the steps used to disassemble it.
3. The screws must be identified by type (length, diameter) and location.
4. The mounting screw of the grounding wire and the varistors is equipped with a toothed washer to ensure electrical continuity. They must not be left out when fitting the screws.
5. As a rule, the machine must not be operated with any of its parts removed.
6. The front door switch or the main power switch must be turned off before sliding out the duplex unit or the fixing/feeding unit.
7. ⚠ Toner must not be thrown away into fire to avoid explosion.

COPYRIGHT © 2000 CANON INC.

4.1 Fixing Assembly

4.1.1 Removing the Fixing/Feeding Unit

1) Slide the duplex feeding unit out of the machine.
2) Remove the three screws [1], and two knobs [2], and detach the duplex feeding unit front cover [3].

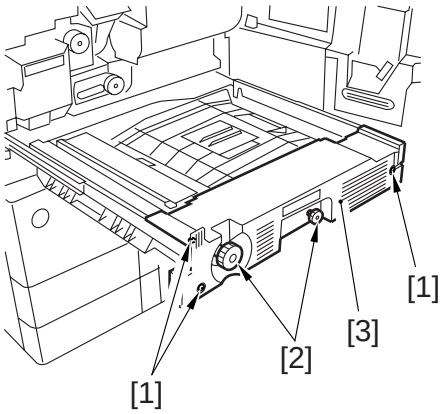

F06-401-01

3) Slide the fixing/feeding unit out of the machine.
4) While pressing the stoppers [5] on both ends of the fixing/feeding unit slide rail [4], pull the fixing/feeding unit farther toward the front.
5) With the fixing/feeding unit fully out, insert a think screwdriver into the hole [6] of the rails on both sides; then, while releasing the stoppers, pull the fixing/feeding unit [7] to the front to detach.



To slide in the unit, fit the part of the slide rails into the rails of the machine, and push the unit straight inside.

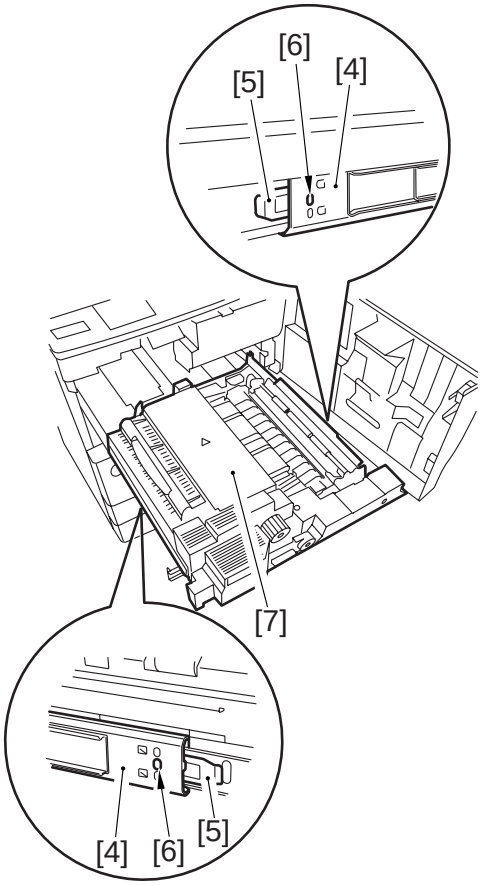

F06-401-02

4.1.2 Removing the Fixing Assembly

1) Slide out the fixing/feeding unit.
2) Remove the three screws [1] and the knob [2]; then, detach the fixing/feeding left cover [3].

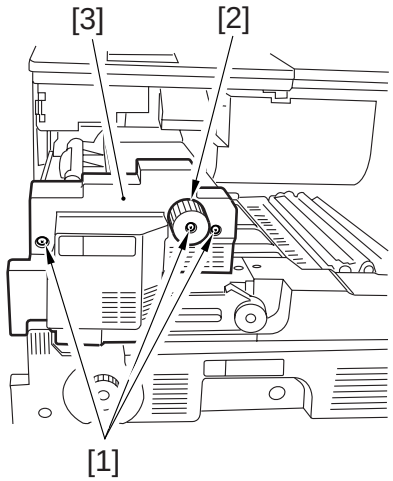

F06-401-03

3) Disconnect the two connectors [4], and remove the three screws [5]; then, detach the fixing drive assembly [6].

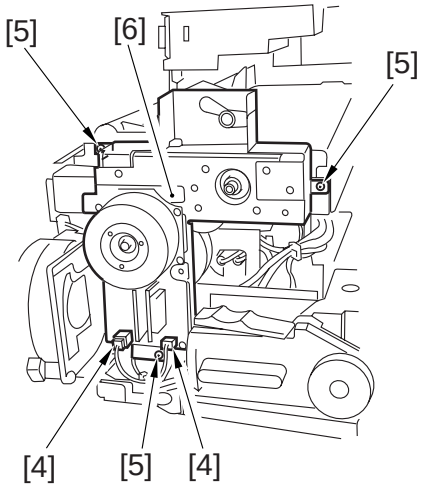

F06-401-04

4) Disconnect the three connectors [7], and free the harness from the harness guide.

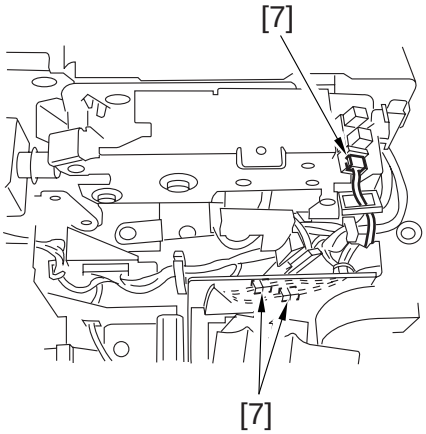

F06-401-05

COPYRIGHT © 2000 CANON INC.

5) Remove the mounting screw [8], and detach the cover [9].

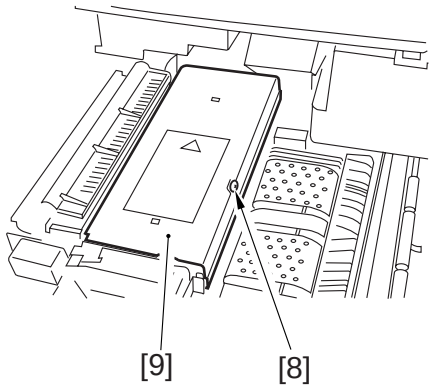

F06-401-06

6) Open the fixing delivery assembly, and remove the two screws [10]; then, holding the front [12] and the rear [13] of the fixing assembly [11], remove the fixing assembly from the machine.

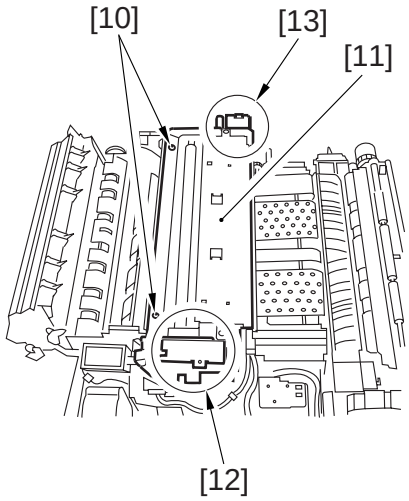

F06-401-07

4.2 Fixing Roller Cleaning Assembly

4.2.1 Removing the Fixing Web

1) Slide out the fixing/feeding unit.
2) Remove the screw [1], and detach the fixing assembly upper cover [2].

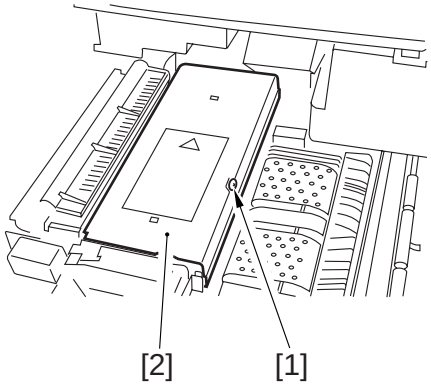

F06-402-01

3) Remove the two screws [3] used to hold the fixing web assembly in place, and open the fixing web upper assembly.

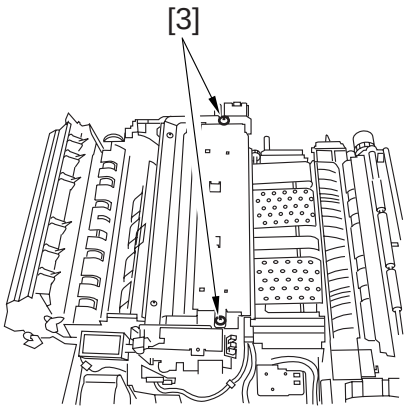

F06-402-02

4) While pushing the web feed roller [4] and the web take-up roller [5] toward the rear, remove the web [6].

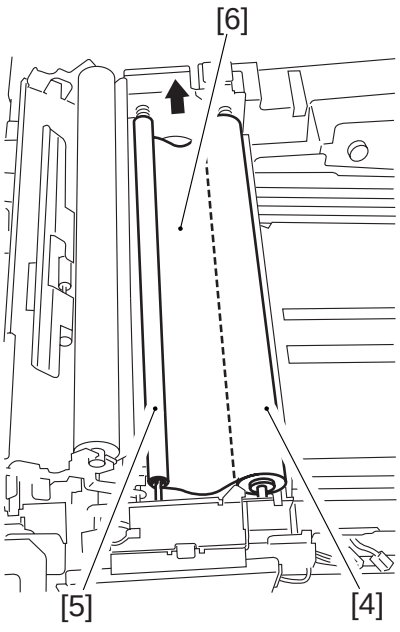

F06-402-03

COPYRIGHT © 2000 CANON INC.

Cleaning the Silicone Oil Pan
Be sure to remove the silicone oil collecting in the oil pan [7] (found under the web feed roller).
Further, if silicone oil should drip, be sure to wipe it clean.

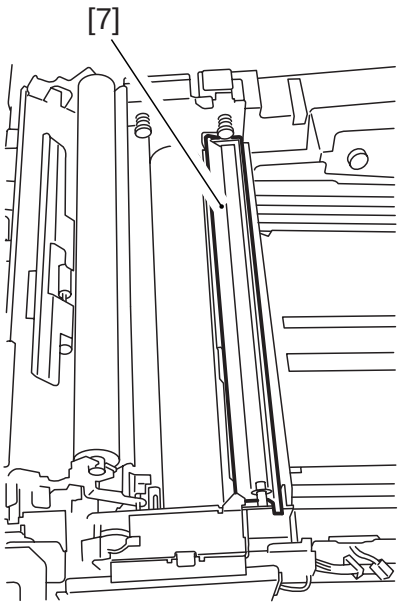

F06-402-04

4.2.2 Mounting the Fixing Web

Mount the fixing web by reversing the steps used to remove it.

1) Wind the web [2] around the web take-up roller [1] two or three times while making sure that the arm guide plate [3] will be outside the take-up roller (when attaching to the front).
At this time, check to make sure that the area of contact with the roller is impregnated with oil.

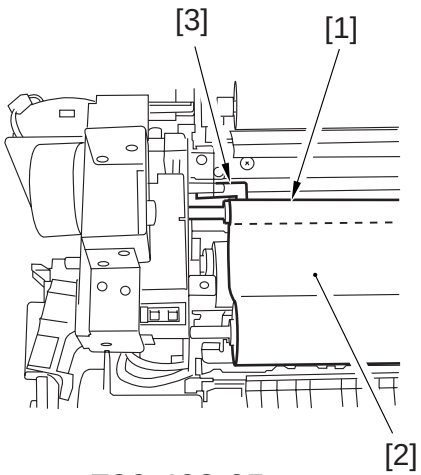

F06-402-05

Check to make sure that the fixing web is not askew and it is not slack or wrinkled. In addition, be sure that the web is wound and attached as shown.

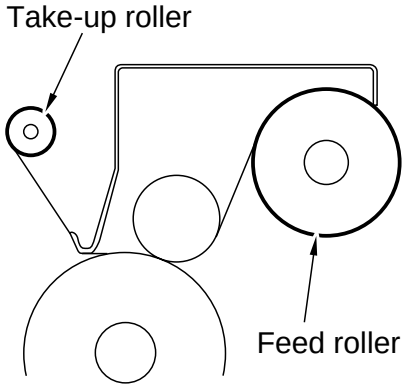

F06-402-06

2) After attaching the fixing web, move the plunger [4] of the web feed solenoid in the direction of the arrow until the fixing belt is taut.

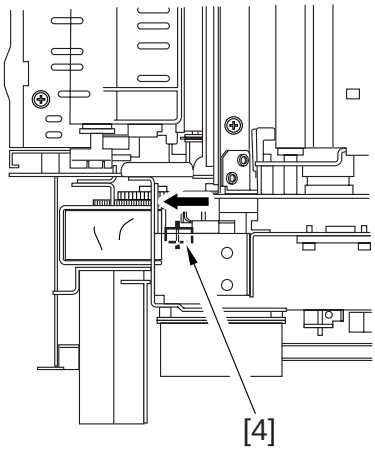

F06-402-07

Whenever you have replaced the fixing web, be sure to set '0' to the following in service mode:
COPIER>COUNTER>MISC>FIX-WEB
COPIER>COUNTER>DRBL-1>FIX-WEB.

4.2.3 Adjusting the Fixing Web Solenoid (SL9)

a. If the fixing web is new,

Adjust the position of the solenoid using the screw [2] so that the distance of travel of the drive lever [1] is 8.6 mm.

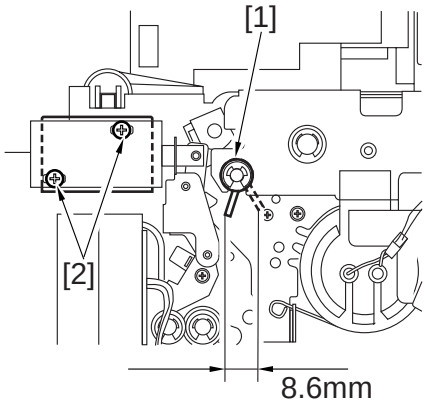

F06-402-08

b. If the fixing web has been used,

Before removing the solenoid, find out the position [A] of the drive lever when the solenoid turns on; then, after replacing the solenoid, make adjustments using the screw [2] so that the position of the drive lever [1] is as it was before replacement.

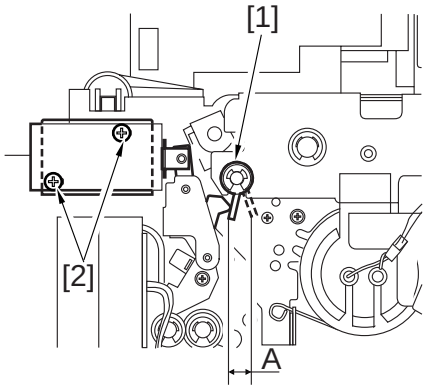

F06-402-09

COPYRIGHT © 2000 CANON INC.

4.3 Fixing Heater and the Control Parts

4.3.1 Removing the Main/Sub Heater

1) Remove the fixing assembly from the machine.
2) Remove the two fastons [1] and the two screws [2] at the rear; then, detach the heater positioning plate (rear) [3].

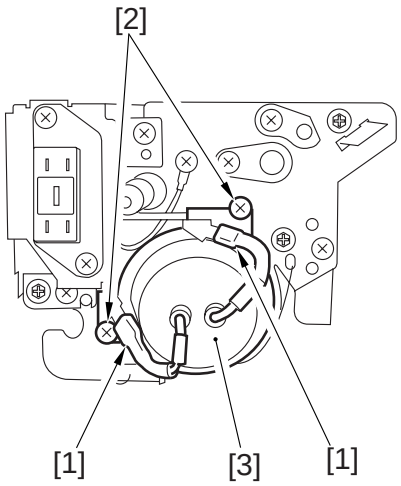

F06-403-01

3) Remove the screw [4] and the faston [5] at the front, and detach the harness cover [6].



The harness is equipped with a tie-wrap. Be sure to use a new tie-wrap if you have cut the tie-wrap.

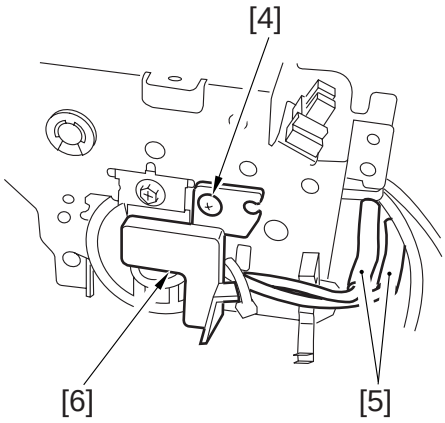

F06-403-02

4) Remove the screw [7], and detach the heater positioning plate (front) [8].
5) Remove the main heater and the sub heater.

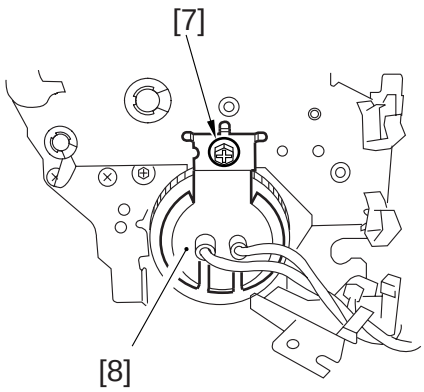

F06-403-03

4.3.2 Mounting the Main/Sub Heater

Mount the fixing heater by reversing the steps used to remove it while keeping the following in mind:

a. Do not touch the surface of the heater.
b. Orient both heaters so that the side with the longer harness is toward the front.
c. Mount the main heater [1] to the right and the sub heater [2] to the left (viewing from the front of the fixing assembly).
d. Stagger the heater so that its protrusion will not interfere.
e. When mounting the faston of the fixing heater at the rear, be sure that the faston terminals (A, B) do not face the outside; rather, they must be parallel with the holder.

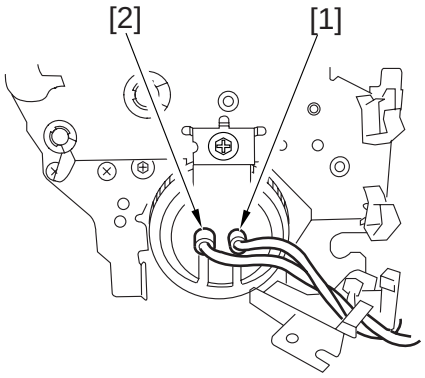

F06-403-04

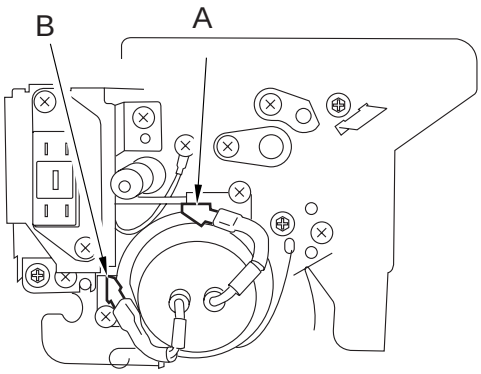

F06-403-05

4.3.3 Removing the Thermal Switch

1) Remove the fixing assembly form the machine.
2) After detaching the fixing web, remove the two screws [1], and detach the oil pan [2] and the fixing harness cover [3].

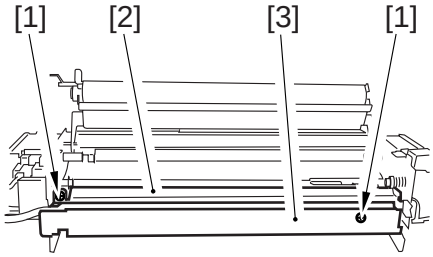

F06-403-06

COPYRIGHT © 2000 CANON INC.

3) Remove the two fastons [4] and the screw [5]; then, detach the thermal switch holder [6].
4) Remove the four screws [7], and detach the thermal switch assembly [8].

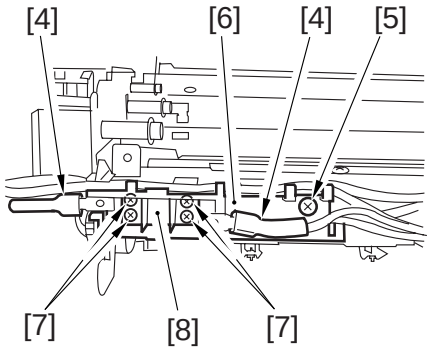

F06-403-07

5) Remove the two screws [9], and detach the thermal switch [10].

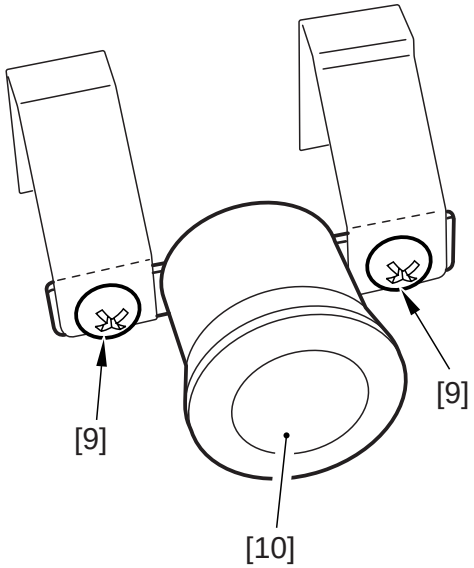

F06-403-08

4.3.4 Removing the Main Thermistor

1) Remove the fixing assembly from the machine.
2) Remove the fixing web and the oil pan.
3) Remove the fixing harness cover.
4) Remove the two screws [1], and detach the insulating plate [2].

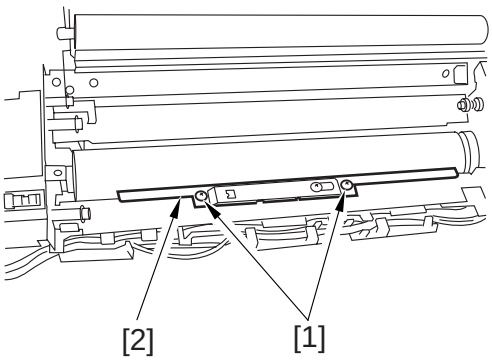

F06-403-09

5) Free the harness [3] of the thermistor from the harness guide.
6) Remove the screw [4], and shift the thermistor assembly [5] to detach.

When shifting the thermistor assembly to the rear, take care not to damage the fixing roller by the thermistor assembly. When mounting the thermistor, be sure that the harness [3] is on the inner side of the harness guide [6] of the mounting plate. Further, take care not to deform section A when detaching and attaching the thermistor.

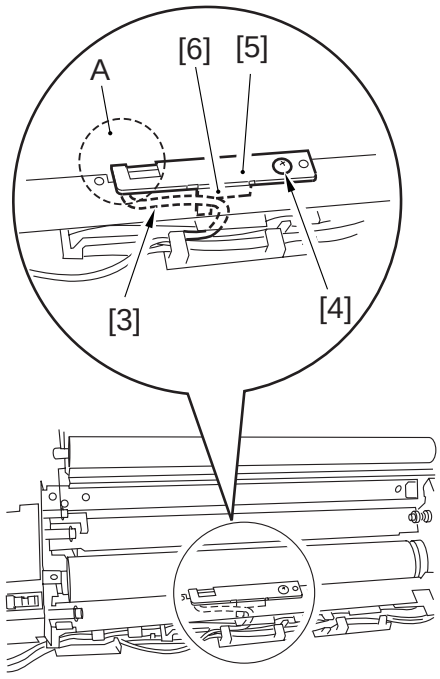

F06-403-10

7) Remove the two thermistor retaining springs [7], and detach the main thermistor [8].

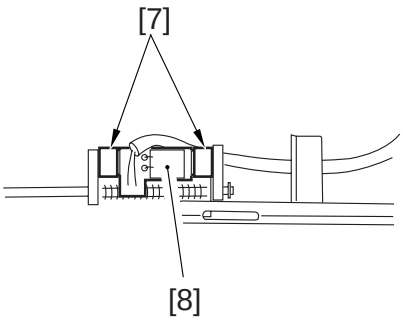

F06-403-11

COPYRIGHT © 2000 CANON INC.

4.3.5 Removing the Sub Thermistor

1) Slide out the fixing assembly from the machine.
2) Remove the fixing web and the oil pan.
3) Remove the fixing harness cover.
4) Free the harness [1] of the sub thermistor from the harness guide.
5) Remove the screw [2], and detach the sub thermistor assembly [3].

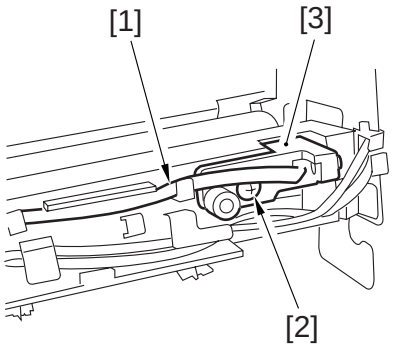

F06-403-12

6) Remove the screw [4], and detach the sub thermistor [5].

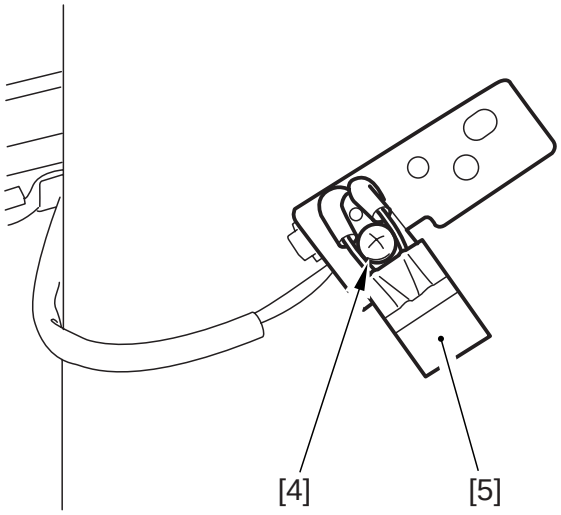

F06-403-13

4.4 Fixing Roller Assembly

4.4.1 Removing the Fixing Upper Roller

1) Remove the fixing assembly form the machine.
2) Remove the fixing web, and clean the oil pan.
3) Remove the two fixing heaters.
4) Remove the stopper [1], one each from the front and the rear.
5) While paying attention to the thermal switch and the thermistor, detach the upper roller assembly.

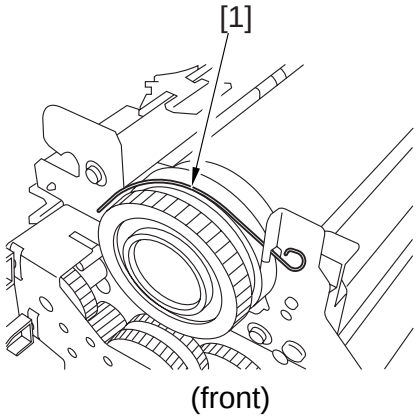

F06-404-01

6) Remove the C-ring [2] at the front, and remove the gear [3], bushing [4], and bearing [5].
7) Remove the C-ring [6] at the rear, and remove the gear [7], bearing [8], and bushing [9].

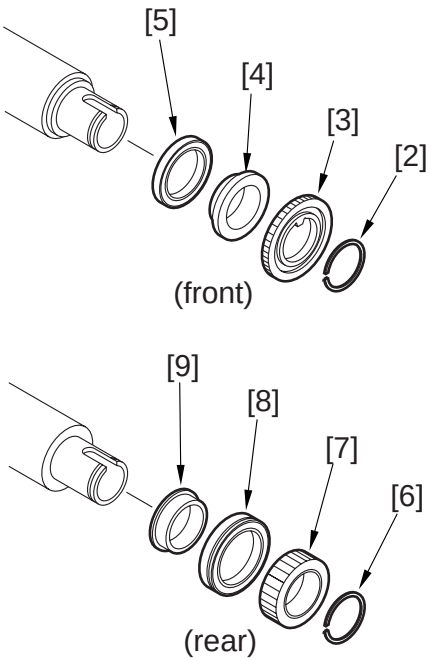

F06-404-02

COPYRIGHT © 2000 CANON INC.

4.4.2 Mounting the Fixing Upper Roller

Mount the upper roller by reversing the steps used to remove it.

a. To avoid soiling or scratching the surface of the roller, wrap the upper roller with paper after removal.
b. Mount it so that cut-off A is toward the rear as shown.
c. Before mounting it, clean the electrode plate and the electrode terminals.

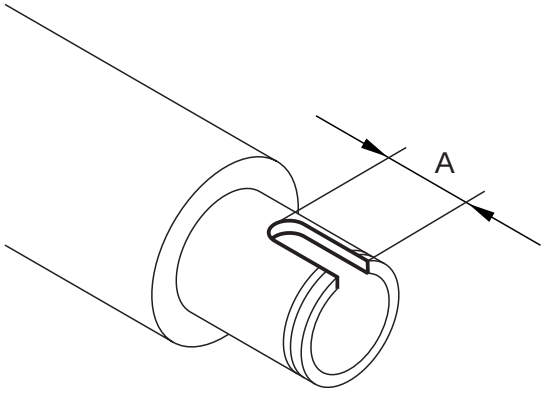

F06-404-03

4.4.3 Removing the Fixing Lower Roller

1) Remove the fixing assembly from the machine.
2) Remove the fixing web, and clean and remove the oil pan.
3) Open the fixing upper unit.
4) Remove the two screws [1], and detach the lower separation claw support plate [2].

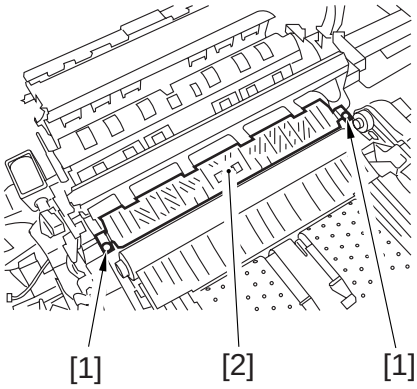

F06-404-04

5) Remove the lower roller [3] from the fixing assembly; then, remove the E-ring [4] and the bearing [5] from both front and rear.

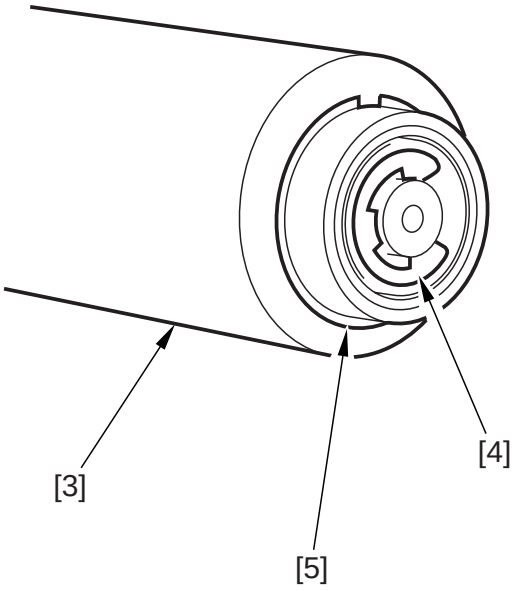

F06-404-05

4.4.4 Adjusting the Nip

a. Taking Measurements

Wait for 15 min after the machine completes warm-up, and make 20 A4 copies before starting to measure the nip:

1) Place A4/LTR paper, and select A4/LTR on the control panel.
2) Make the following selections in service mode to discharge the paper: COPIER>FUNCTION>FIXING>NIP-CHK.

b. Standard

1) Measure the points indicated.



a and c are prints 10 mm from both edges of the sheet.

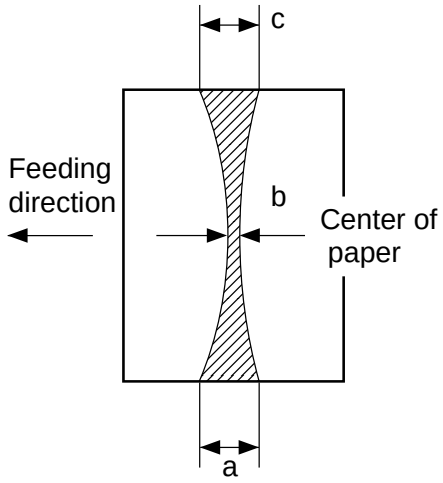

F06-404-06

2) Check to make sure the measurements are as indicated; if not, go to c to make adjustments.



Be sure that both upper and lower rollers are sufficiently heated when taking measurements.

Dimension	When both upper and lower rollers are sufficiently heated.
b	7.8mm ± 0.5mm
| a - c |	0.5mm or less

T06-404-01

c. Making Adjustments

1) Take the fixing assembly out of the machine.
2) Open the delivery assembly.
3) Adjust the nip using the adjusting screw [1] at the front and the rear.

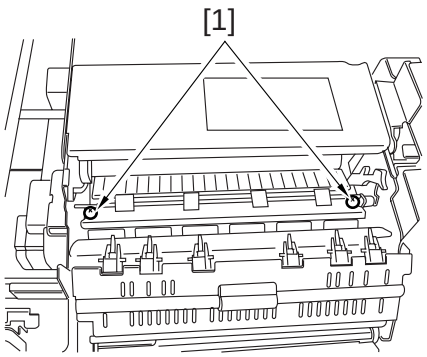

F06-404-07

COPYRIGHT © 2000 CANON INC.

4.5 Fixing Separation Assembly

4.5.1 Removing the Upper Separation Claw

1) Slide the fixing/feeding unit out of the machine.
2) Release the spring [1] used to open the fixing/delivery assembly, and remove the upper separation claw [2].

When mounting it, take care not to chip the tip of the upper separation claw [2].

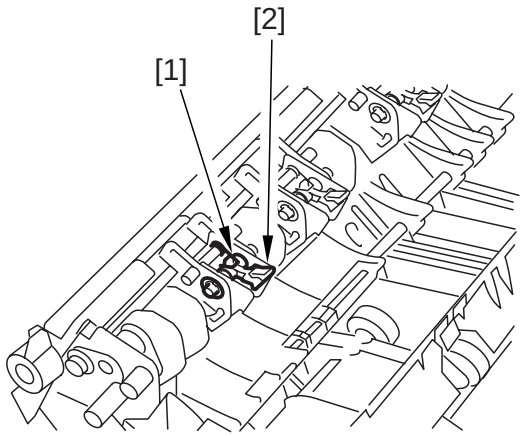

F06-405-01

4.5.2 Removing the Lower Separation Claw

1) Remove the fixing assembly from the machine.
2) Remove the two screws, and detach the lower separation claw assembly.
3) Remove the spring [1] of the lower separation claw.

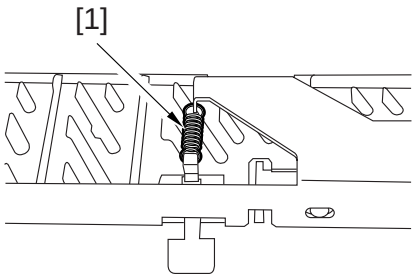

F06-405-02

4) Remove the three screws [2], and detach the lower separation claw support plate [3] and the separation claw.

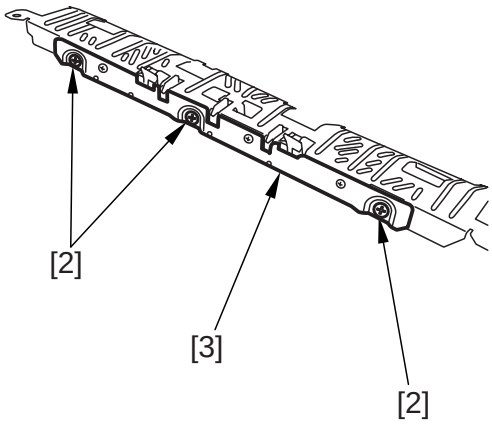

F06-405-03

4.6 Delivery Assembly

4.6.1 Removing the External Delivery Roller

1) Remove the fixing/feeding unit out of the machine. Remove the two screws [1], and detach the delivery roller guide [2].

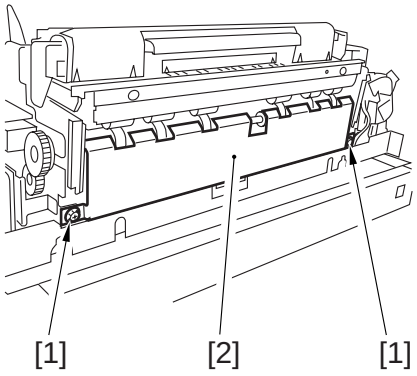

F06-406-01

2) Remove the screw [3] and the bushing [4]; then, detach the delivery unit [5].
3) Remove the E-ring [6] at the front, and detach the bearing [7].

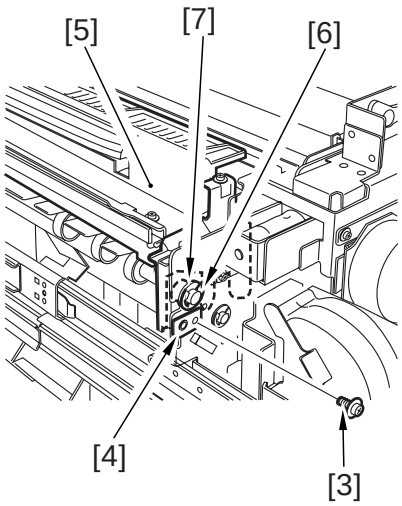

F06-406-02

4) Slide the external delivery roller assembly [8] toward the rear to detach.

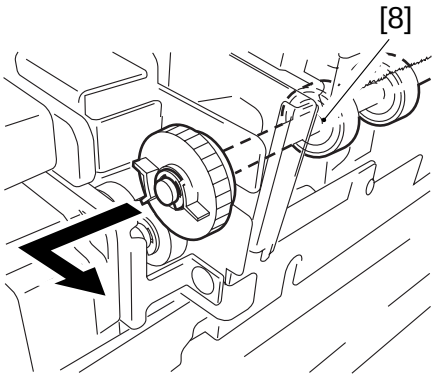

F06-406-03

COPYRIGHT © 2000 CANON INC.

5) Remove the six E-rings [9] of the rollers, and detach the six rollers [11].



Each roller is equipped with a parallel pin [10]. Take care not to drop it.

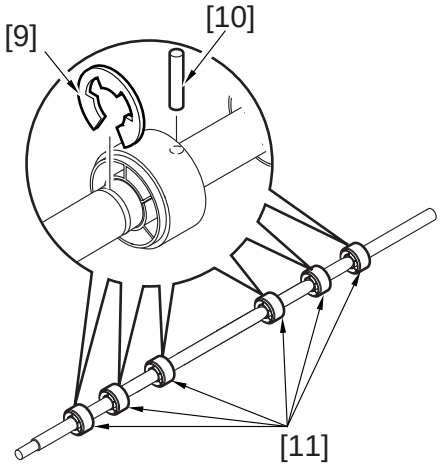

F06-406-04

4.6.2 Removing the Internal Delivery Roller

1) Remove the fixing assembly from the machine.
2) Remove the lower separation claw plate.
3) Remove the two E-rings [1] at the front, and remove the gear [2] and the bearing [3].

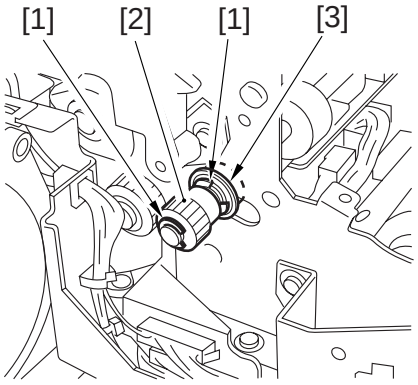

F06-406-05

4) Remove the E-ring [4] at the rear, and remove the bearing [5] and the internal delivery roller [6].

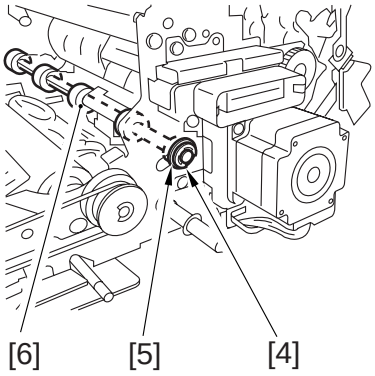

F06-406-06

4.6.3 Adjusting the Position of the Delivery Flapper Solenoid (SL5)

Adjust the position of the solenoid using the screw [2] so that the drive lever [1] is fully pushed when the solenoid turns on (i.e., the plunger is drawn).

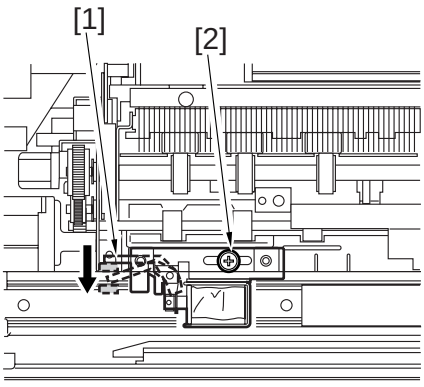

F06-406-07

COPYRIGHT © 2000 CANON INC.

4.7 Paper Sensor

4.7.1 Removing the Claw Jam Sensor

1) Remove the fixing assembly from the machine.
2) Remove the two screws from the lower separation claw assembly.
3) Remove the internal delivery roller.
4) Remove the mounting screw [1], and detach the sensor together with its support plate [2].

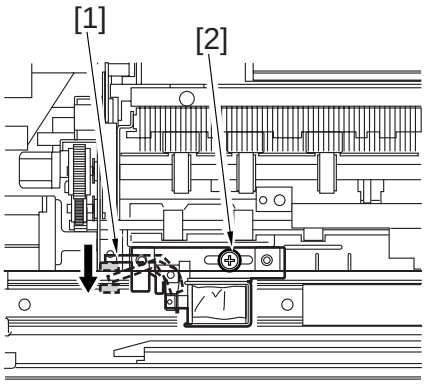

F06-407-01

5) Disconnect the connector [3], and remove the snap-on assembly; then, detach the claw jam sensor [4].

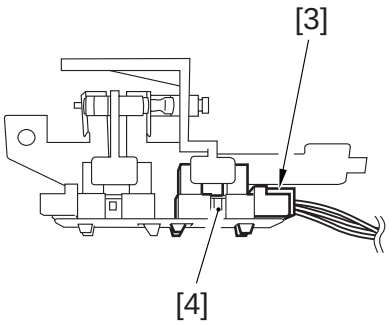

F06-407-02

4.7.2 Removing the Internal Delivery Sensor

1) Remove the fixing assembly from the machine.
2) Remove the two screws, and detach the lower separation claw assembly.
3) Remove the internal delivery roller.
4) Remove the mounting screw [1], and detach the sensor together with its sensor support plate [2].

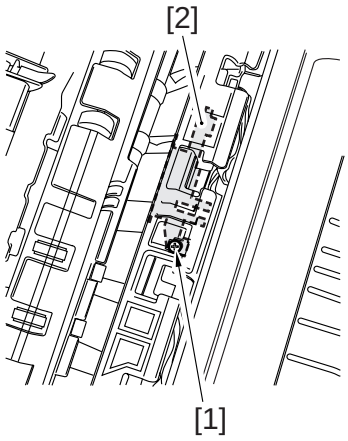

F06-407-03

COPYRIGHT © 2000 CANON INC.

5) Disconnect the connector [3], and remove the snap-on assembly; then, detach the internal delivery sensor [4].

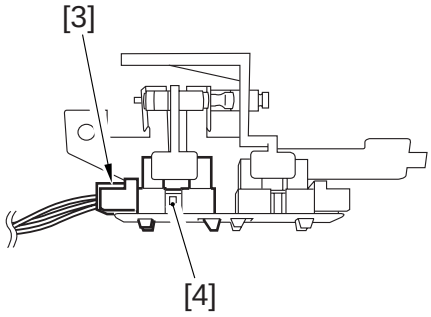

F06-407-04

4.7.3 Removing the Delivery Jam Sensor

1) Remove the fixing assembly from the machine.
2) Remove the external delivery roller.
3) Remove the two screws [1], and detach the sensor support plate [2].

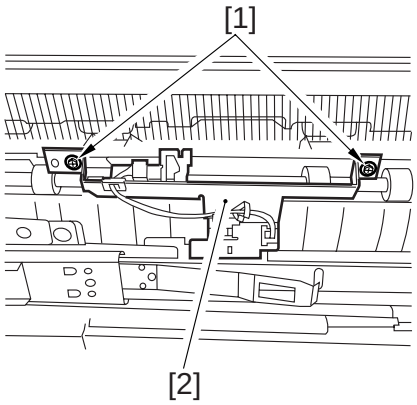

F06-407-05

4) Disconnect the connector [3], and detach the delivery jam sensor [4].

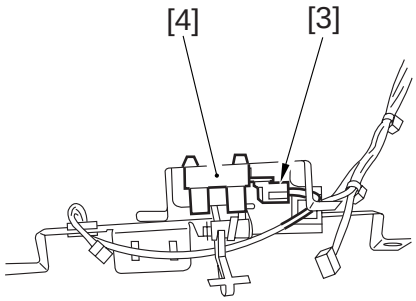

F06-407-06

COPYRIGHT © 2000 CANON INC.

4.7.4 Removing the External Delivery Sensor

1) Remove the fixing/feeding unit from the machine.
2) Remove the external delivery roller.
3) Remove the two sensors [1], and detach the sensor support plate [2].

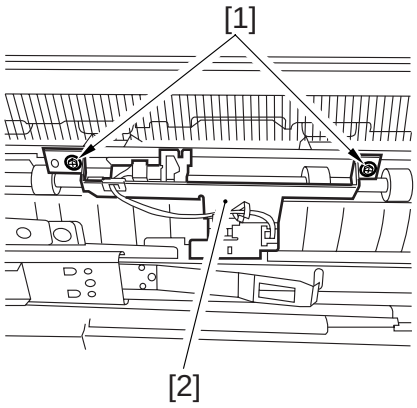

F06-407-07

4) Disconnect the connector [3], and detach the external delivery sensor [4].

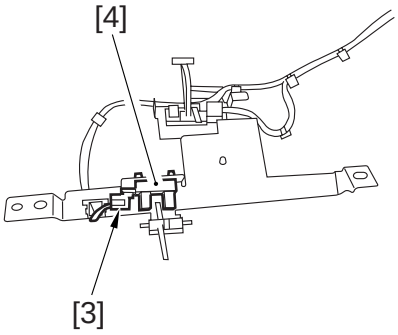

F06-407-08

4.8 Fixing Assembly Inlet Guide Assembly

4.8.1 Adjusting the Position of the Fixing Assembly Inlet Guide Solenoid (SL1)

Adjust the position of the solenoid using the two screws [1] so that the guide is as indicated when the solenoid turns on.

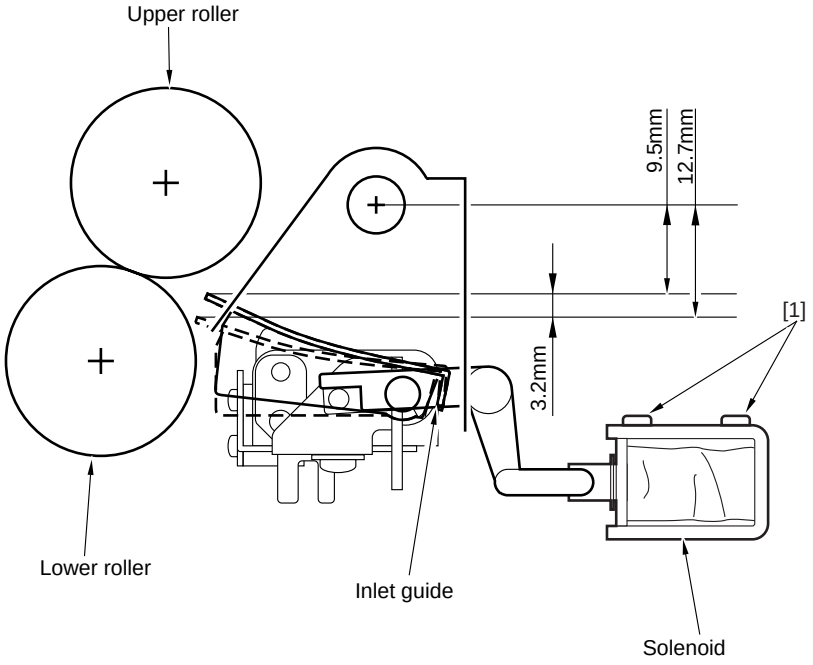

F06-408-01

4.8.2 Adjusting the Position of the Fixing Assembly Inlet Guide

- Points to Note When Making Adjustments in the Field

1. The inlet guide must be positioned as indicated.
2. The inlet guide must shift down when the solenoid (SL1) turns on .
3. The height of the inlet guide must be such that the difference between front and rear is 0.5 mm or less.
4. The height of the inlet guide must be adjusted by loosening the fixing screw on the height adjusting support plate.



If the inlet guide base is removed, the position of the inlet guide will have to be adjusted. Do not loosen the mounting screw on the inlet guide base in the field. Otherwise, be sure to adjust it with reference to the index on the fixing assembly base.

COPYRIGHT © 2000 CANON INC.

CHAPTER 7

EXTERNALS AND CONTROLS

COPYRIGHT © 2000 CANON INC.

1. Control Panel

1.1 Outline

The machine's control panel consists of the following PCBs and a touch panel (LCD) capable of display at a resolution of 320×240 dots:

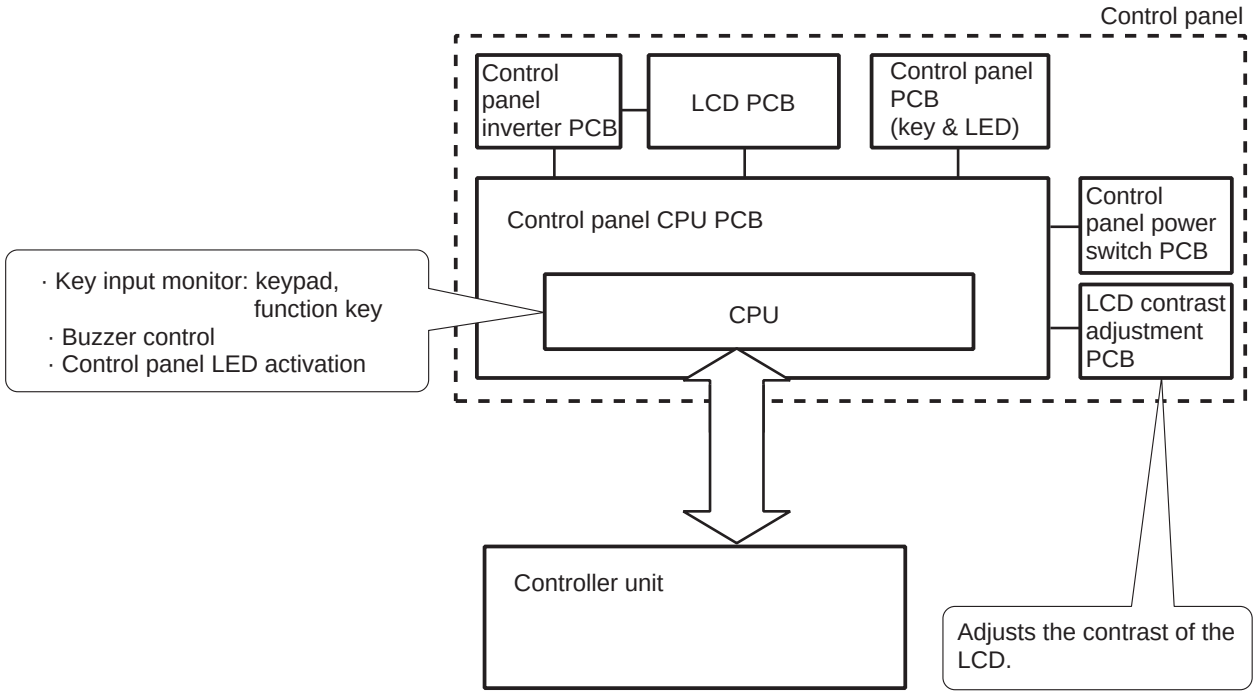

F07-101-01

COPIER>FUNCTION>PANEL>LCD-CHK
Used to check missing dots in the LCD display.
COPIER>FUNCTION>PANEL>LED-CHK
Used to start a check on the activation of LEDs in the control panel.
COPIER>FUNCTION>PANEL>LED-OFF
Used to end a check on the activation of LEDs in the control panel.
COPIER>FUNCTION>PANEL>KEY-CHK
Used to start a check on key inputs.
COPIER>FUNCTION>PANEL>TOUCHCHK
Used to adjust the coordinates in the touch panel.

COPYRIGHT © 2000 CANON INC.

2. Fans

2.1 Arrangement, Functions, and Error Codes

The names, functions, and associated error codes of the fans used in the machine are as follows:

Notation	Name	Function	2-speed control (voltage)	Error code
FM1	Feed fan	Draws print paper to the feed belt.	Yes (24/12 V)	E805
FM2	Primary charging assembly cooling fan	Cools the primary charging assembly and cleaner.	Yes (24/12V)	E824
FM3	Heat discharge fan	Discharges exhaust of each fan to the outside of the machine.	Yes (24/12V)	E805
FM4	Controller cooling fan	Cools the laser unit, drive unit, and controller.	Yes (24/12V)	E121
FM5	De-curling fan	Removes curling of print paper after fixing.	Yes (24/12V)	-
FM6	DC power supply fan	Cools the power supply PCB.	Yes (24/12V)	E804
FM7	Hard disk fan	Cools the hard disk.	Yes (24/12V)	E607
FM8	Duplexing feeding fan	Cools the duplexing feeding motor.	Yes (24/12V)	-

T07-201-01

COPYRIGHT © 2000 CANON INC.

The arrangement of the fans and the direction of air are as follows:

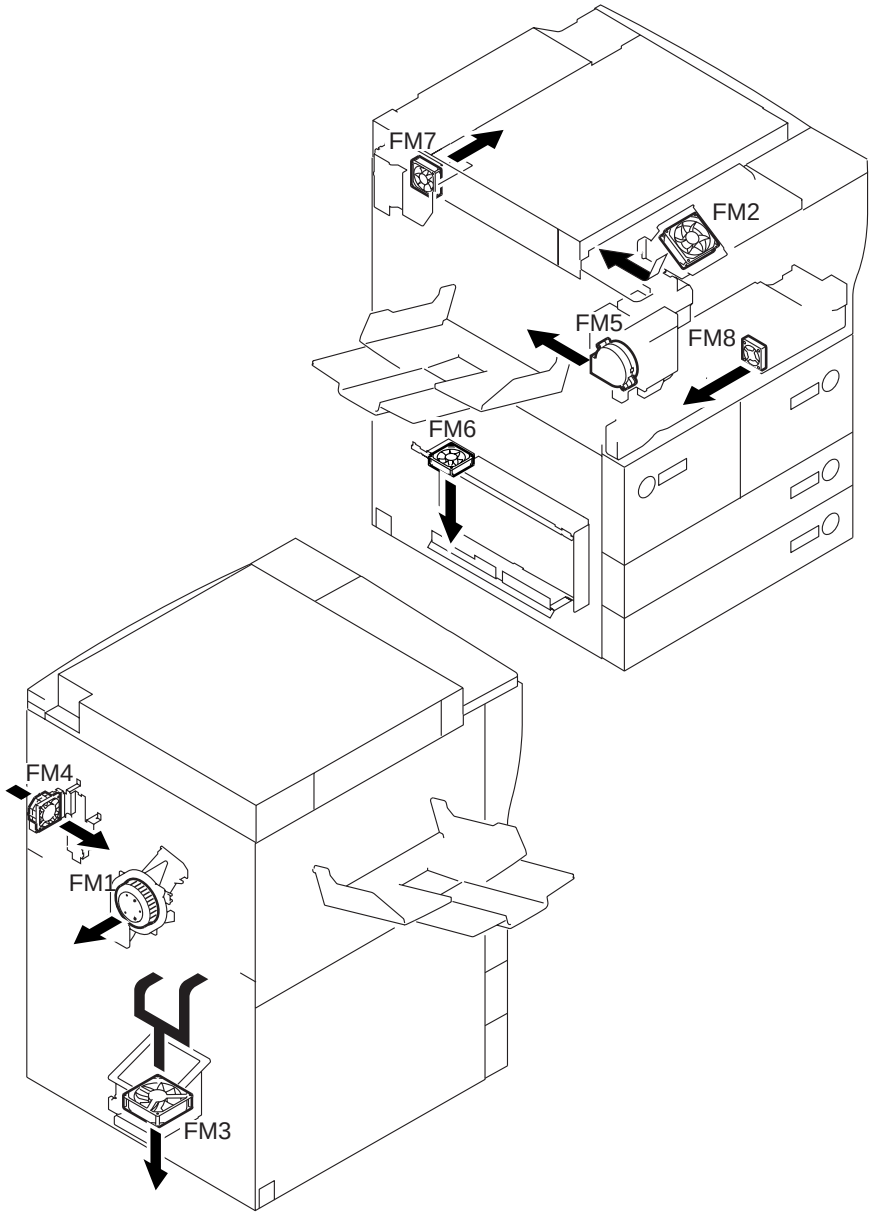

F07-201-01

2.2 Operation

2.2.1 Controlling the Speed

Some of the fans used in the machine are controlled to two different speeds (F07-202-01), switched over by changing the voltage by the work of the voltage switching circuit of each fan.

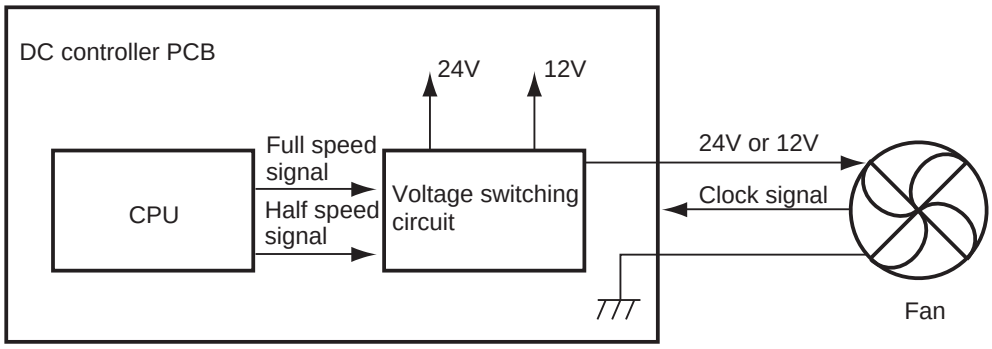

F07-202-01

2.2.2 Sequence of Operations

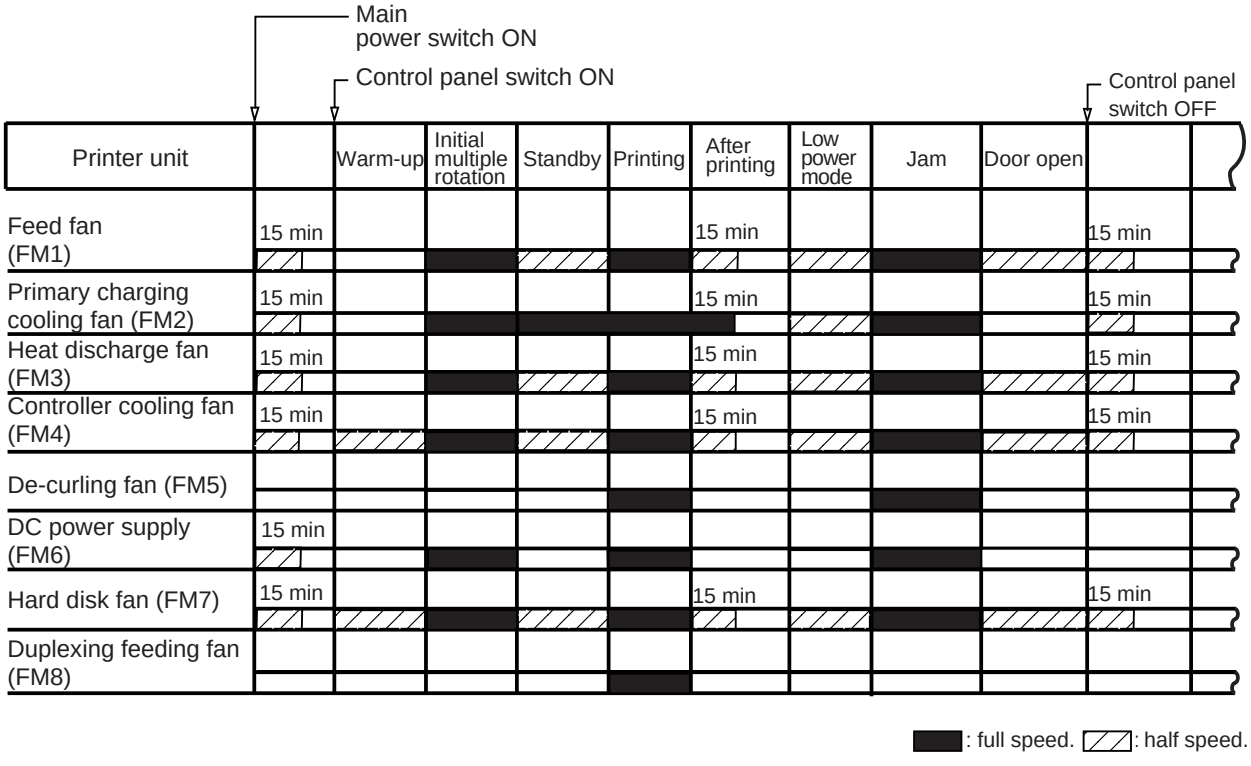

F07-202-02

COPYRIGHT © 2000 CANON INC.

3. Power Supply

3.1 Power Supply

3.1.1 Outline

The machine's DC power supply is controlled by the DC power supply PCB; the associated PCBs, parts, functions, and arrangement of distribution are as follows:

Name	Description
DC power supply PCB	• Generates DC power from AC power. • Protects against overcurrent.
Rush current prevention PCB	• Limits rush current to the fixing/feeding assembly, duplexing unit, and high-voltage PCB.
Fuse PCB	• Protects the lens heater (H6) and mirror heater (H7) against overcurrent.
Main power switch (SW1)	• Serves as the power switch of a load other than the drum heater (H3), cassette heater (H4), and deck heater (H5).
Environment switch (SW3)	• When off, the drum heater (H3) operates in conjunction with the turning on/off of the main power switch; if on, the drum heater (H3) will remain powered at all times.
Cassette heater switch (SW4)	• Serves as the switch to turn on/off the cassette heater (H4) and deck heater (H5).
Main relay (RL1)	• Cuts off the AC line to the fixing heater and AC driver.

T07-301-01

COPYRIGHT © 2000 CANON INC.

3.1.2 Distribution of Power Among Switches

The machine's power is supplied to each load in conjunction with its respective switch:

		Control panel switch OFF				Control panel switch ON					
						Standby		Printing		Power save	
Control side	Main power switch (SW1)	OFF	OFF	ON	ON	ON	ON	ON	ON	ON	ON
	Environment switch (SW3)	OFF	ON	ON	ON	ON	ON	ON	ON	ON	ON
	Cassette heater switch (SW4)	OFF	ON	OFF	ON	OFF	ON	OFF	ON	OFF	ON
Load side	Drum heater (H3)	OFF	Half wave	Half wave	Half wave	Full wave	Full wave	Half wave	Half wave*1	Full wave	Full wave
	Cassette healer (H4)/deck heater (H5)	OFF	ON	OFF	ON	OFF	ON	OFF	OFF	OFF	ON
	Lens heater (H6)/ mirror heater (H7)	OFF	ON	OFF	ON	OFF	ON	OFF	OFF	OFF	ON
	DC power supply PCB	OFF	OFF	ON	ON	ON	ON	ON	ON	ON	ON
	Main relay (RL1)	OFF	OFF	ON	ON	ON	ON	ON	ON	ON	ON

*1: If underlined, applies to the 100-V model; the 120/230-V model is subjected to full-wave control.

T07-301-02

The following are the default settings of the cassette heater switch (SW4) and the environment switch (SW3):

Default setting	100-V model	120-V model	230-V model
Cassette heater switch (SW4)	OFF	Not provided	OFF
Environment switch (SW3)	ON	OFF	OFF

T07-301-03

COPYRIGHT © 2000 CANON INC.

The following shows arrangement of the machine's power supplies:

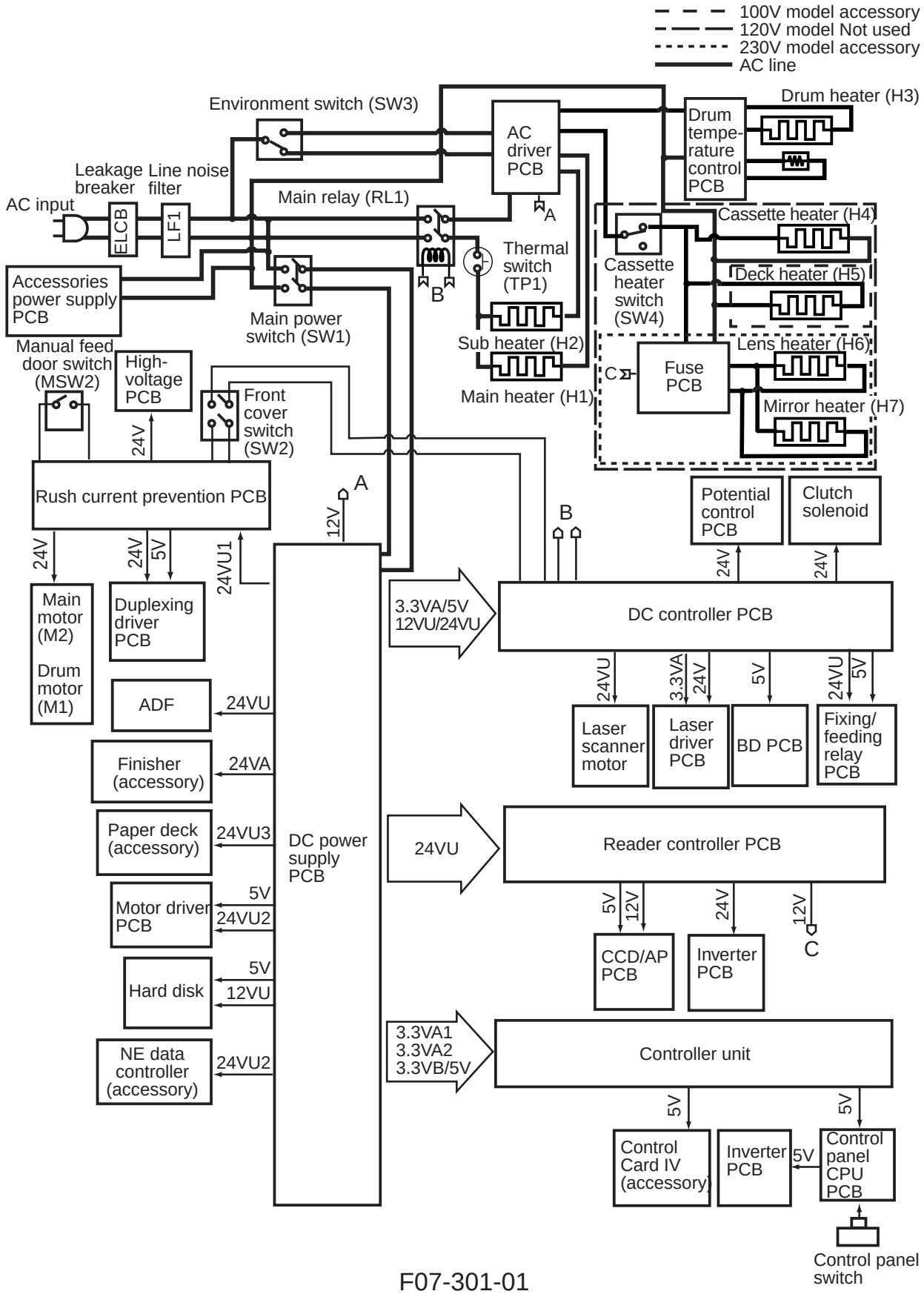

F07-301-01

3.1.3 Output of Power Supplies

The outputs of the machine's power supplies are controlled by the main power switch, control panel power switch, or signal from the printer board.

The output is controlled by the DC power supply PCB as follows based on the combination of the signal from the printer board and the state of the power switch and the control panel switch:

Main power switch (SW1)	Control panel switch or print board signal	Power output from DC power supply PCB	Remarks
OFF	OFF	None	If the environment switch (SW3) is ON, the drum heater will be supplied with power (AC). In addition, if the heater switch (SW4) is ON, the cassette heater is supplied with power (AC).
ON	OFF	3.3VB*	*Supply is sent to the following: 3.3 VB:controller unit
ON	ON	All	

T07-301-04

COPYRIGHT © 2000 CANON INC.

3.2 Rated Outputs of the DC Power Supply

Output	3VA1	3VA2	3VA3	3VB	5V	12VU
Connector	J4014-1	J4017-1	J4003-7	J4015-1	J4003-5	J4003-3
	J4014-2	J4017-2		J4015-2	J4004-1	J4003-4
	J4014-3	J4017-3		J4015-3	J4008-1	
	J4014-4	J4017-4			J4009-1	
	J4014-5	J4017-5			J4016-1	
					J4016-2	
Output voltage tolerance		±3%		+2% -2.5%	±3%	±5%
Rated output voltage		3.4V		3.5V	5.1V	12.0V
Rated output current		9.0A		2.5A	4.5A	1.0A
Level of activation (overcurrent protection)		5.5 to 8.0A		4.0 to 8.0A	1.0 to 5.0A	2.5 to 5.0A

T07-302-01

Output	24VU1	24VU2	24VU3	24VU4	24VA
Connector	J4005-1	J4004-3	J4003-1	J4007-1	J4013-2
		J4009-3	J4006-1	J4003-1	
				J4010-1	
				J4011-1	
Output voltage tolerance		±5%			+7% -5%
Rated output voltage		24.0V			24.0V
Rated output current		15.0A			4.0A
Level of activation (overcurrent protection)		5.5 to 8.0A			5.0 to 8.0A

T07-302-02

* However, the AC input must be 85 to 135 V for the 100-V model, and 187 to 264 V for the 230-V model.

COPYRIGHT © 2000 CANON INC.

3.3 Protection Mechanism

The machine is designed to automatically turn off the output of DC power as soon as the over-current protection circuit of the DC power supply PCB turns on.

When the over-current detection circuits a high level of current, the machine will stop outputs [1], [2], and [3]; in other words, the over-current detection circuit 1 is arranged at an upper level of detective circuitry, and its activation will turn off all outputs located under it.

When the over-current detection circuit 2 detects over-current, the machine will stop outputs [2] and [3]. Likewise, when the over-current circuit 3 detects a high level of current, the machine will stop output [3].

The machine is also equipped with a fuse to cut off outputs in the event any of the elements in circuits fails.

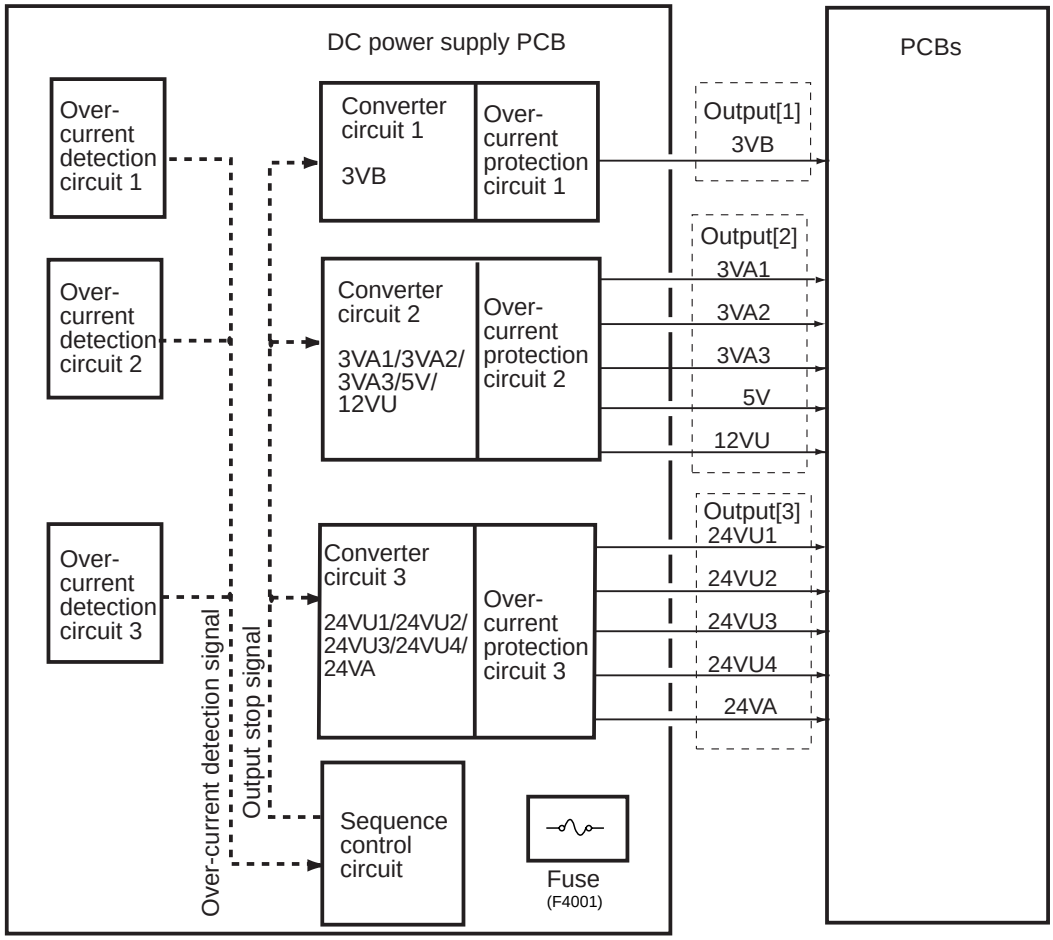

F07-303-01

COPYRIGHT © 2000 CANON INC.

Detection by	Machine operation	Resetting
Overcurrent detection circuit 1	Stops outputs [1], [2], and [3] of the DC power supply PCB.	Turn off the main power switch, and remove the cause; then, leave the machine alone for about 3 min, and turn on the main power switch.
Overcurrent detection circuit 2	Stops outputs [1] and [2] of the DC power supply PCB.	Remove the cause, and turn off and then on the control panel power switch.
Overcurrent detection circuit 3	Stops output [3] of the DC power supply PCB.	Remove the cause; then, turn off and then on the control panel power switch.

T07-303-01

COPYRIGHT © 2000 CANON INC.

4. Others

4.1 Silent Mode

In silent mode, the revolution of the laser scanner motor is reduced (1/2) to lower the machine's operating noise when it is in standby state. (The time interval used by the machine to shift to silent mode is set in user mode.)

The machine has to wait until the revolution of the laser scanner motor returns from silent mode to normal, taking a while longer than otherwise before it starts printing.

COPYRIGHT © 2000 CANON INC.

5. Disassembly and Assembly

The machine's mechanical characteristics and features are as described herein, and the machine may be disassembled or assembled as instructed while keeping the following in mind:

1. ⚠ The power plug must be disconnected for the work.
2. Unless otherwise indicated, the machine may be assembled by reversing the steps used to disassemble it.
3. The screws must be identified by type (length, diameter) and location.
4. The mounting screw of the grounding wire and the varistors is equipped with a toothed washer to ensure electrical continuity. They must not be left out when fitting the screws.
5. As a rule, the machine must not be operated with any of its parts removed.
6. The front door switch or the main power switch must be turned off before sliding out the duplex unit or the fixing/feeding unit.
7. ⚠ Toner must not be thrown away into fire to avoid explosion.

COPYRIGHT © 2000 CANON INC.

5.1.1 External Covers

Remove the external covers for cleaning, inspecting, and repairing the inside of the machine. Those covers that may be detached without difficult are omitted from the discussions; the number in parentheses indicates the number of mounting screws used.

[1] Front cover (1)
[2] Upper cover (3)
[3] Upper cover base (4)
[4] Right rear paper cover (3)
[5] Right rear lower cover (2)
[6] Reader right cover (2)
[7] Reader front cover
(right upper cover, right upper cover base, reader right/left cover; 2 screws)

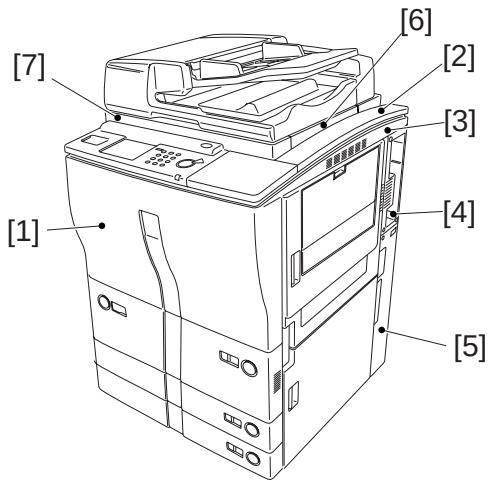

Externals 1
F07-501-01

[8] Rear upper cover (4)
[9] PCB cover (4)
[10] Rear lower cover (7)
[11] Filter cover (1)
[12] Left lower cover (5; 2 grip covers)
[13] Left upper cover (6; delivery assembly cover)
[14] Delivery assembly cover (3)
[15] Reader rear cover (5; ADF connector)
[16] Reader left cover (2)

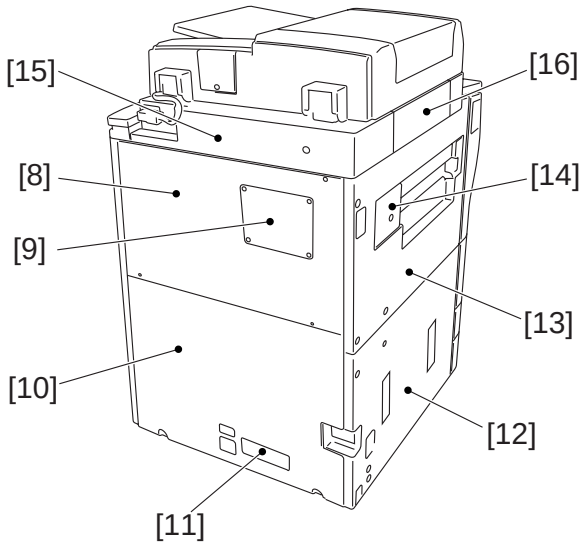

Externals 2
F07-501-02

COPYRIGHT © 2000 CANON INC.

5.1.2 Removing the Front Cover

1) Open the front cover [1], and remove the screw [3] of the door tape [2].
2) Remove the stopper [4], and detach the hinge shaft [5] by pulling it up.
3) Pull the front door up at an angle to detach.

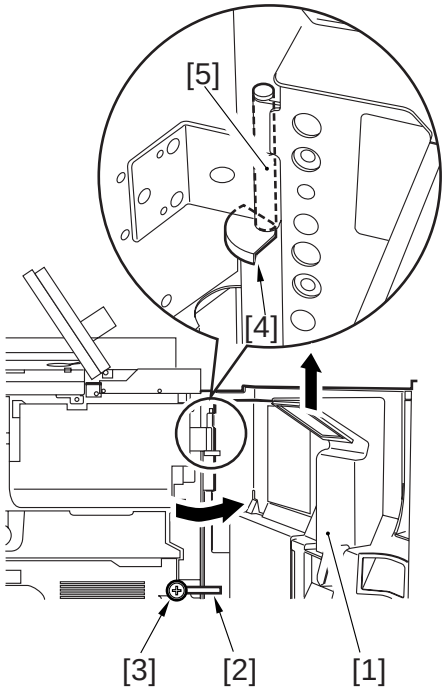

F07-501-03

5.2 Arrangement of Electrical Parts (rear of the machine)

The following shows the arrangement of the electrical parts found on the back of the machine (after removing the following four parts):

- main controller box assembly (p. 7-22P)
- DC controller PCB (p. 7-46P)
- waste toner bottle (p. 7-33P)
- high-voltage PCB (p. 7-24P)

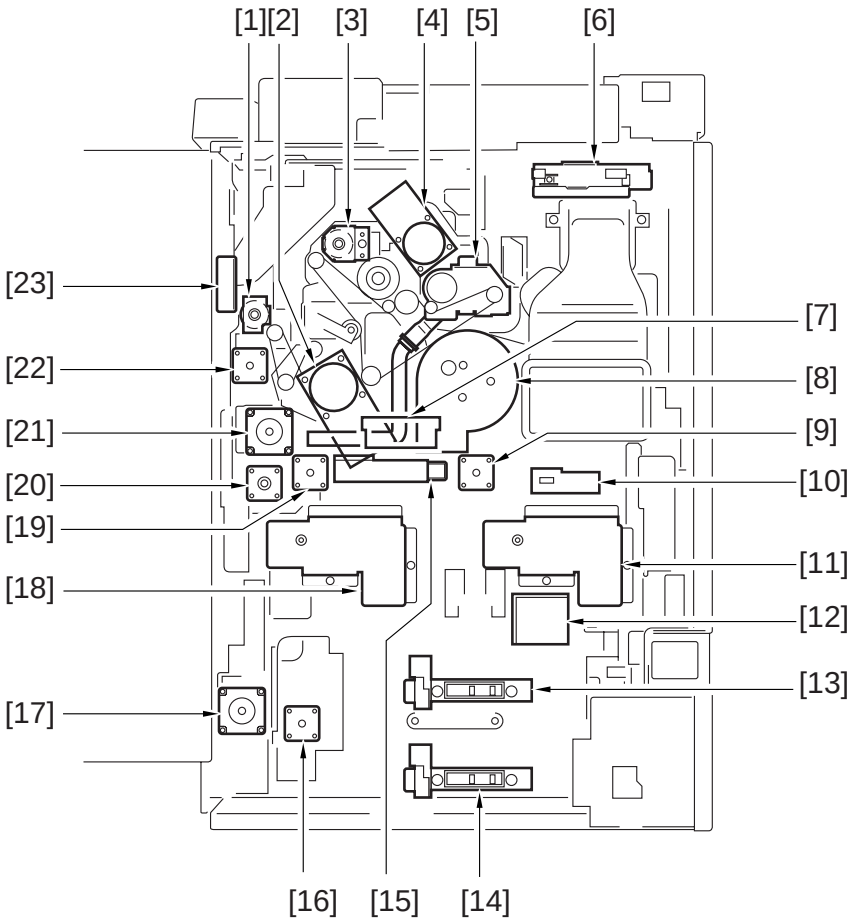

F07-502-01

COPYRIGHT © 2000 CANON INC.

[1] Manual feed pickup drive clutch (CL3)
[2] Main motor (M2)
[3] Developing clutch (CL1)
[4] Drum motor (M1)
[5] Waste toner drive assembly
[6] HDD
[7] Left deck pull-out drive assembly
- Left deck pull-out clutch (CL4)

[8] Feeding fan (FM1)
[9] Left deck pickup motor (M24)
[10] Left deck pickup releasing solenoid (SL7)
[11] Left deck lifter drive assembly
- Left deck lifter motor (M4)
- Left deck level sensor upper/lower (PS49, PS50)

[12] Power supply transformer
[13] Cassette 3 length detection
- cassette 3 level detection (SVR2)
- cassette 3 paper width detection (SVR4)

[14] Cassette 4 length detection
- cassette 4 level detection (SVR3)
- cassette 4 paper width detection (SVR5)

[15] Right deck pickup releasing solenoid (SL7)
[16] Vertical path lower motor (M27)
[17] Right deck pickup motor (M11)
[18] Right deck lifter drive assembly
- right deck lifter motor (M5)
- right deck level sensor upper/lower (PS47, PS48)

[19] Right deck pickup motor (M11)
[20] Vertical path upper motor (M26)
[21] Vertical path duplex feeding motor (M25)
[22] Pre-registration motor (M17)
[23] Controller cooling fan (FM4)

COPYRIGHT © 2000 CANON INC.

5.3 Control Panel

5.3.1 Removing the Control Panel

1) Remove the reader left/right/front cover.
2) Open the front cover, and slide out the pickup feeding unit to the front.
3) Remove the three screws [1], and detach the front door switch cover [2].

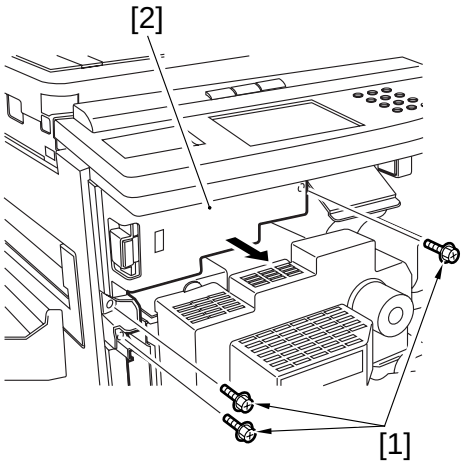

F07-503-01

4) Remove the five screws [3], and disconnect the connector [4]; then, detach the control panel [5].

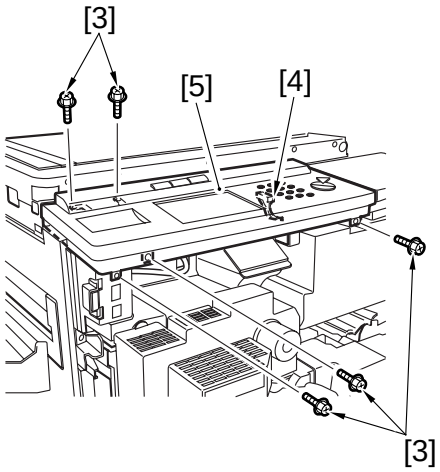

F07-503-02

5.3.2 Removing the Control Panel Control PCB and Keypad PCB

1) Remove the control panel.
2) Remove the screw [1], and detach the control panel base [2]; then, remove the four screws [3], and detach the base cover [4].

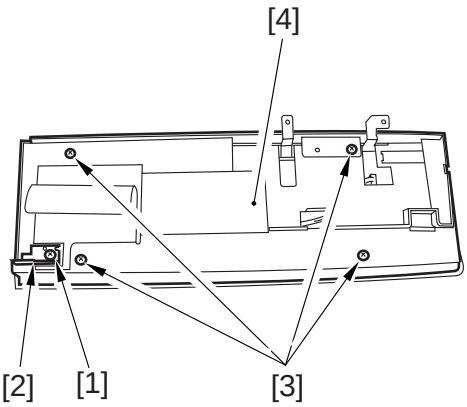

F07-503-03

COPYRIGHT © 2000 CANON INC.

3) Remove the nine screws [5], and detach the control panel shielding plate [6].

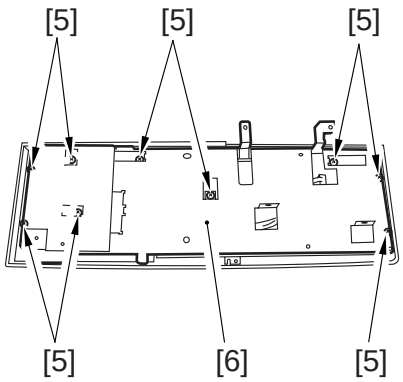

F07-503-04

4) Disconnect the six connectors [7], and remove the two flexible cables [8] and the three screws [9]; then, detach the control panel control PCB [10].

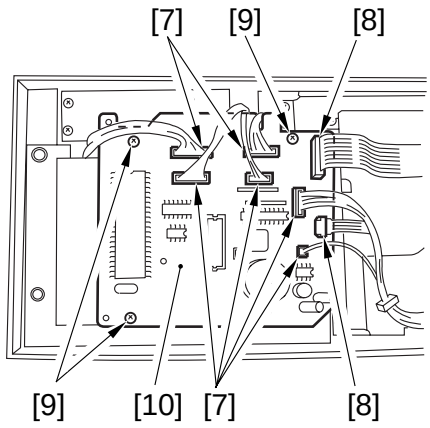

F07-503-05

5) Remove the insulating sheet [11], and remove the nine screws [12]; then, detach the keypad PCB [13].

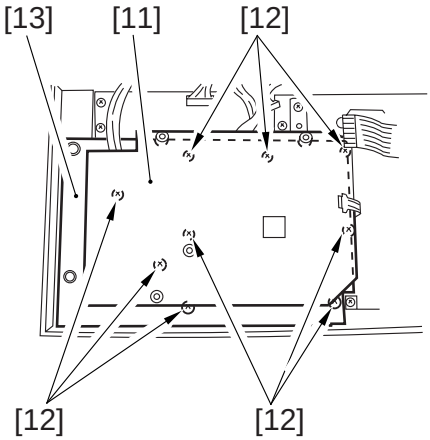

F07-503-06

5.3.3 Removing the Touch Panel

1) Perform steps 1) through 3) used to remove the control panel control PCB to detach the control panel shielding plate.
2) Remove the four cable clamps [1], the grounding screw [2], and the two screws [3]; then, detach the touch panel shielding plate [4].

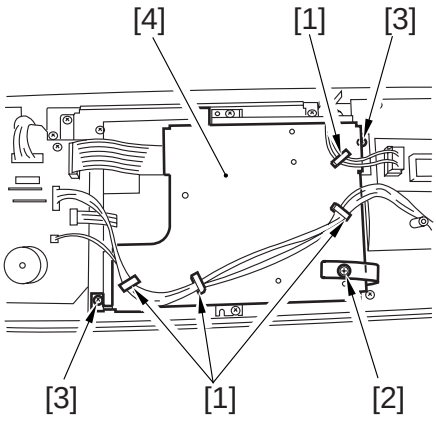

F07-503-07

3) Disconnect the connector [5], and remove the two flexible cables [6] and the four screws [7]; then, detach the touch panel unit [8].

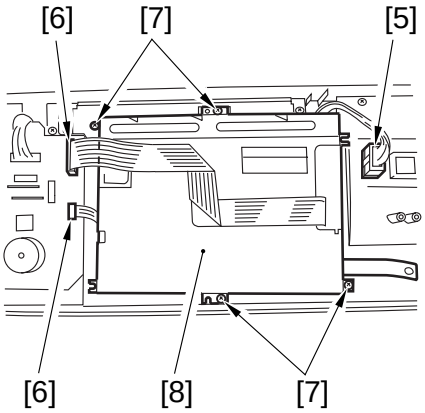

F07-503-08

COPYRIGHT © 2000 CANON INC.

5.4 PCBs

5.4.1 DC Controller PCB

1) Remove the rear upper cover.
2) Disconnect the 26 connectors, and remove the seven screws [1]; then, detach the DC controller PCB [2].

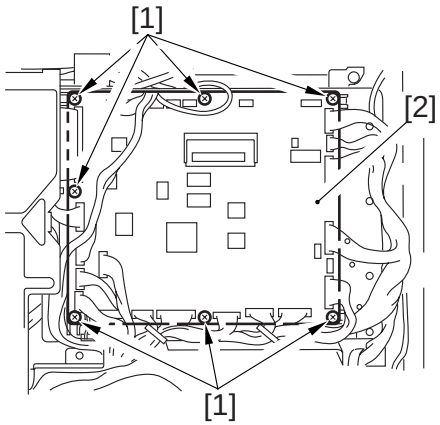

F07-504-01

Keep the following three points in mind when replacing the PCBs:

- Be sure to transfer the six EEP-ROMs from the old to new PCBs; at that time, be sure to refer to the color of each round label attached to the EEP-ROM for correct transfer.
- Be sure to enter the values indicated on the label [3] on the new PCB in service mode by making the following selections:
  COPIER>ADJUST>HV-TR>D-PRE-TR
  COPIER>ADJUST>HV-TR>D-HV-TR
  COPIER>ADJUST>HV-SP>D-HV-SP
  COPIER>ADJUST>DEVELOP>D-HV-DE
- Be sure to transfer the shorting connector [4] of J303 on the PCB from the old to new PCB. (Keep in mind that failure to do so will disable the control panel indication.)

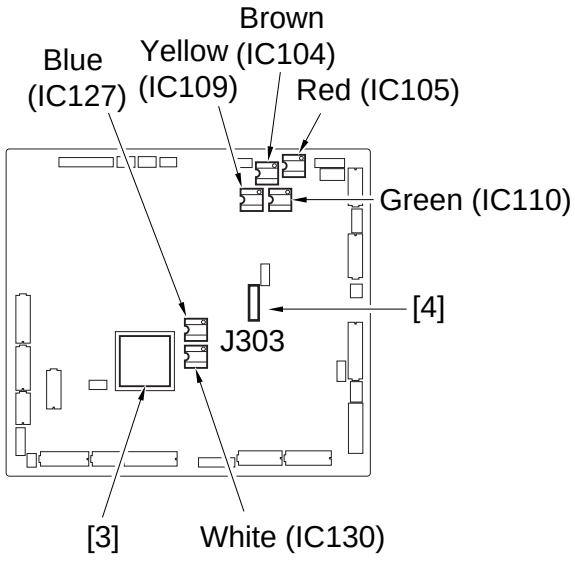

F07-504-02

5.4.2 Main Controller Box and the Main Controller PCB

1) Remove the rear upper cover.
2) Remove the right rear upper cover.
3) Remove the screw [1], and detach the controller cover [2].

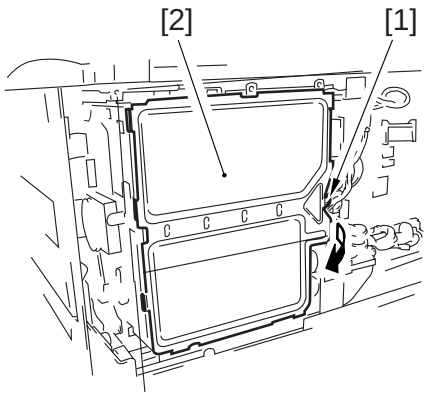

F07-504-03

4) Remove the five screws [3], and slide out the main controller box [4].
5) When removing the main controller box [4], disconnect all connectors of the main controller PCB in advance.
6) Remove the two screws [5], and detach the two PCB guides [6].

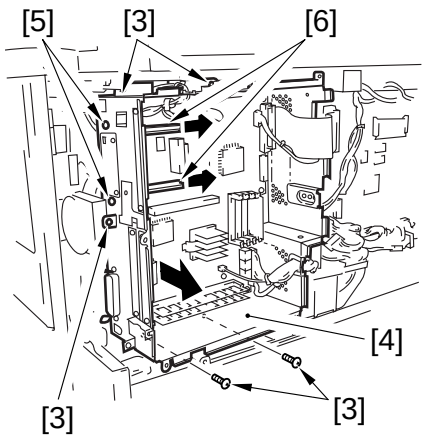

F07-504-04

7) Disconnect the ten connectors, and remove the 11 screws [7]; then, detach the main controller PCB [8].

When replacing the main controller PCB, remove the screw [9], and be sure to replace the counter memory PCB [10] with a new one.

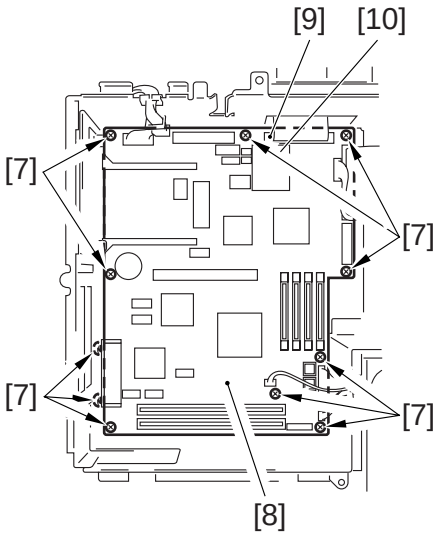

F07-504-05

COPYRIGHT © 2000 CANON INC.

5.4.3 Power Supply PCB

1) Remove the left lower cover.
2) Remove the seven screws [1], and detach the shielding plate [2].

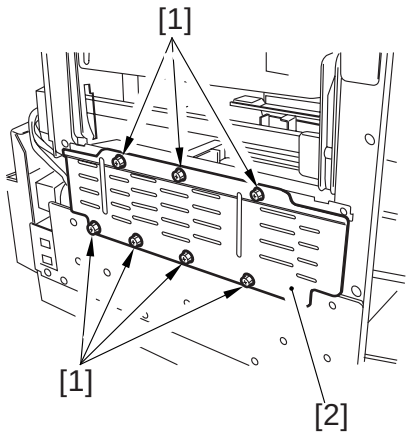

F07-504-06

3) Remove the 11 screws [3], and detach the power supply cover [4].

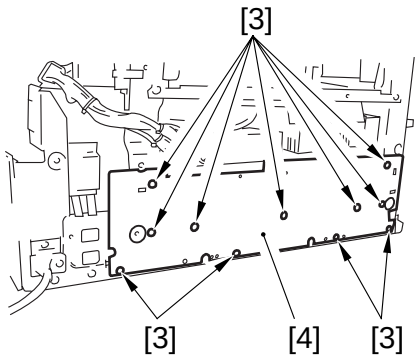

F07-504-07

4) Disconnect the 15 connectors, and remove the two screws [5]; then, detach the power supply PCB [6].

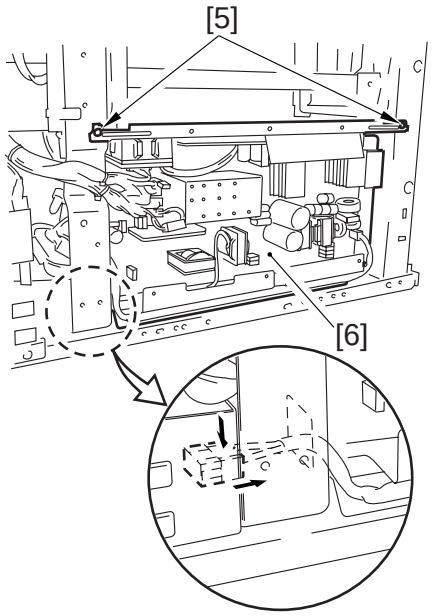

F07-504-08

COPYRIGHT © 2000 CANON INC.

5.4.4 High-Voltage Power Supply PCB

1) Remove the rear lower cover.
2) Remove the five screws [1], and disconnect the nine connectors; then, detach the high-voltage power supply PCB [2].

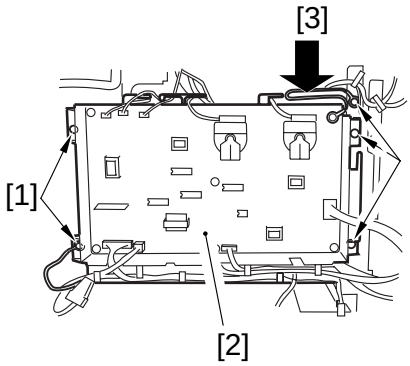

F07-504-09

When replacing the PCBs, keep the following mind:

- Be sure to enter the values indicated on the label attached to the new PCB (indicated by an arrow [3]) in service mode by making the following selections:
  COPIER>ADJUST>HV-TR>H-PRE-TR
  COPIER>ADJUST>HV-TR>HVT-TR
  COPIER>ADJUST>HV-SP>HVT-SP
  COPIER>ADJUST>DEVELOP>HVT-DE

COPYRIGHT © 2000 CANON INC.

5.4.5 Accessories Power Supply PCB

1) Remove the rear lower cover and the left lower cover.
2) Remove the six screws [1], and disconnect the six connectors [2]; then, detach the power cord base [3].

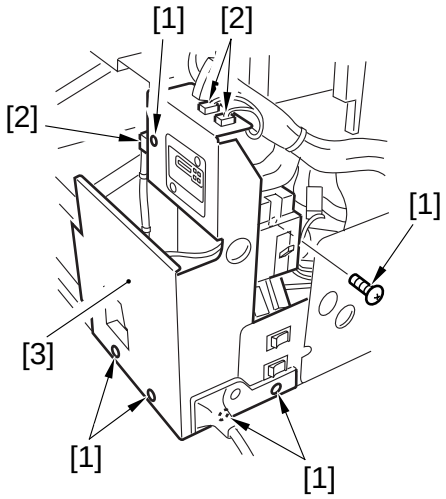

F07-504-10

3) Remove the three screws [4], and disconnect the two connectors [5]; then, detach the accessories power supply PCB [6].

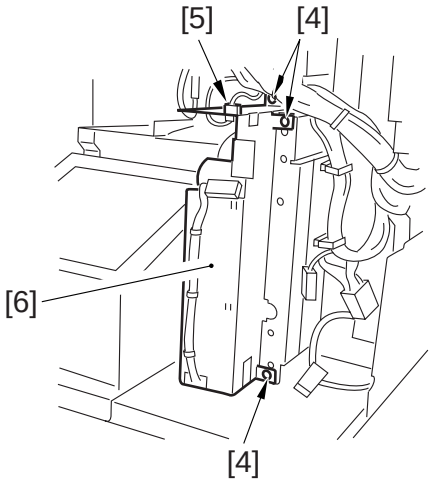

F07-504-11

5.4.6 AC Driver PCB

1) Remove the rear upper/lower cover and the left upper/lower cover.
2) Remove the two screws [1], and disconnect the three connectors [2]; then, detach the AC driver PCB [3].

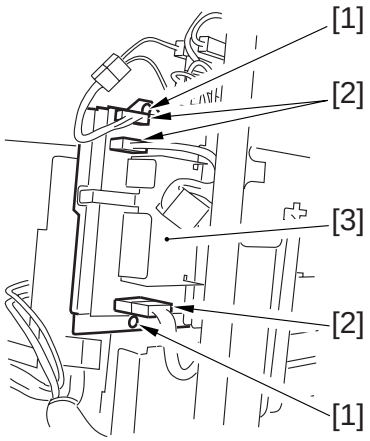

F07-504-12

COPYRIGHT © 2000 CANON INC.

5.4.7 Motor Driver PCB

1) Remove the right rear lower cover/rear lower cover, and detach the waste toner bottle.
2) Remove the two screws [1], and detach the PCB cover [2].

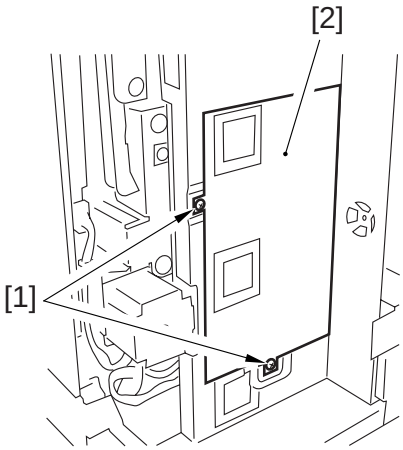

F07-504-13

3) Remove the six screws [3], and disconnect the 11 connectors; detach the motor driver PCB [4].

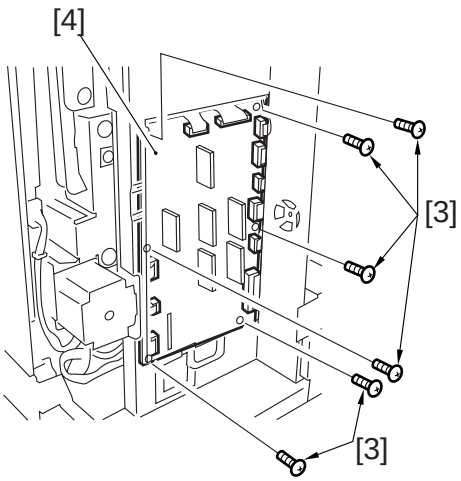

F07-504-14

5.4.8 Anti-Rush Current PCB

1) Remove the DC controller PCB.
2) Remove the screw [1], and disconnect the three connectors [2]; then, detach the anti-rush current PCB [3] from the printer controller mounting base.

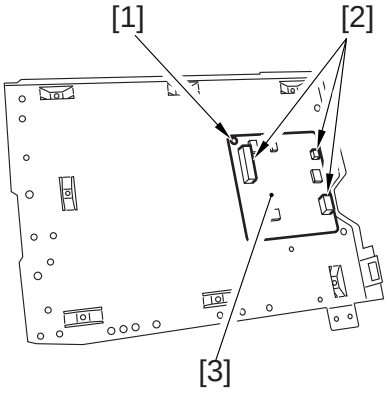

F07-504-15

COPYRIGHT © 2000 CANON INC.

5.4.9 Serial Number PCB

1) Remove the DC controller PCB.
2) Remove the two screws [1], and disconnect the connector [2]; then, detach the fixing assembly terminal base [3].
3) Remove the four screws [4], and disconnect the connector [5]; then, detach the serial number PCB [6].

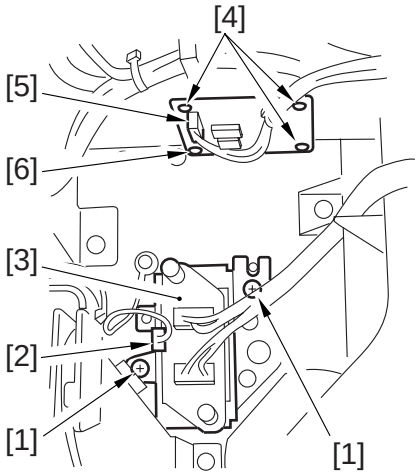

F07-504-16

5.5 Fans

5.5.1 Exhaust Fan

1) Remove the rear lower cover.
2) Remove the three screws [1], and disconnect the connector [2]; then, detach the exhaust fan duct [3].

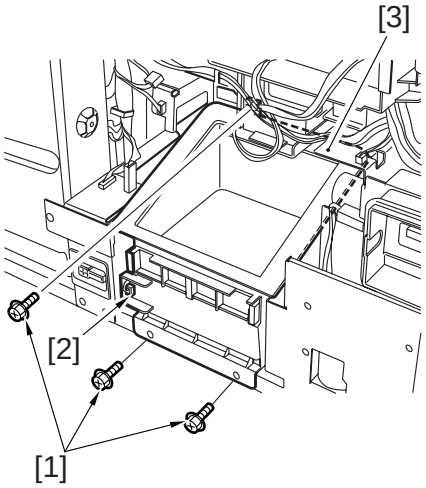

F07-505-01

3) Remove the two screws [4], and disconnect the connector [5]; then, detach the fan grille [6] to detach the exhaust fan [7].

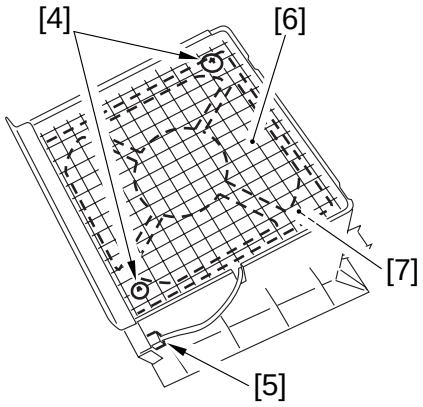

F07-505-02

5.5.2 Feeding Fan

1) Remove the DC controller PCB.
2) Remove the three screws [1], and detach the primary fan cover [2].
3) Remove the three screws [3], and detach the primary fan [4].

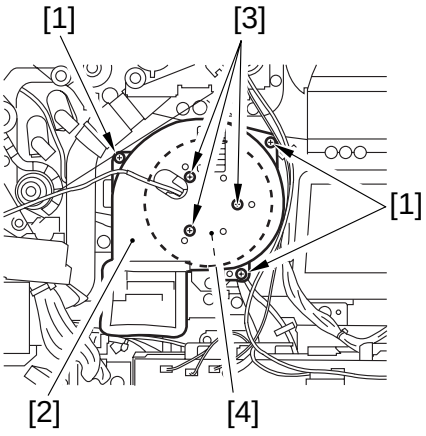

F07-505-03

COPYRIGHT © 2000 CANON INC.

5.5.3 HDD Fan

1) Remove the rear upper cover and the reader rear cover.
2) Remove the HDD unit. (See p. 7-44P.)
3) Remove the screw [1], and disconnect the connector [2]; then, detach the HDD fan unit [3].

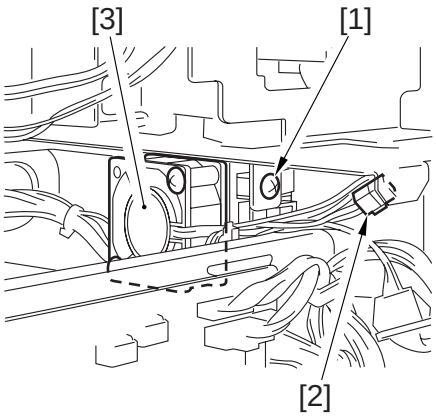

F07-505-04

4) Remove the two screws [4], and detach the HDD fan [6] from the duct [5].

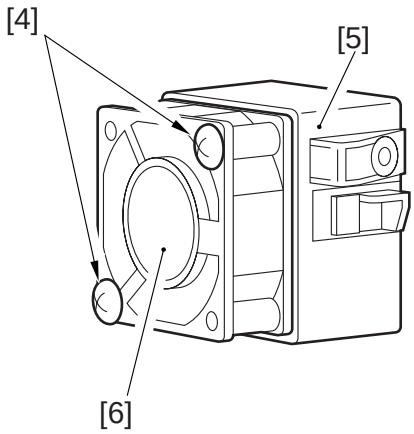

F07-505-05

5.5.4 DC Power Supply Fan

1) Remove the power supply PCB.
2) Disconnect the connector [1], and remove the three screws [2]; then, detach the DC power supply fan [3].

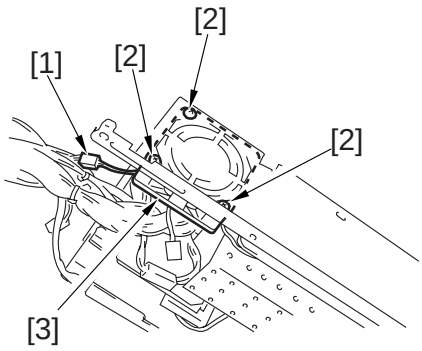

F07-505-06

5.6 Drive System

5.6.1 Left Deck Drive Assembly

1) Remove the high-voltage power supply PCB.
2) Remove the four screws [1], and disconnect the connector [2]; then, detach the left deck drive assembly [3].

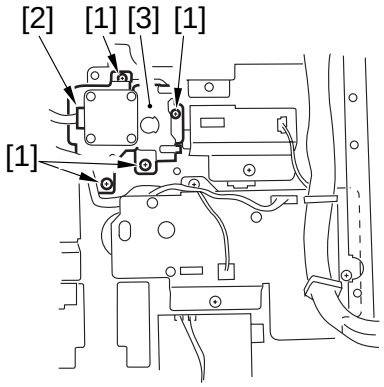

F07-506-01

5.6.2 Vertical Path Duplex/Right Deck Drive Assembly

1) Remove the waste toner bottle holder.
2) Remove the the five screws [1], and detach the grip base [2].

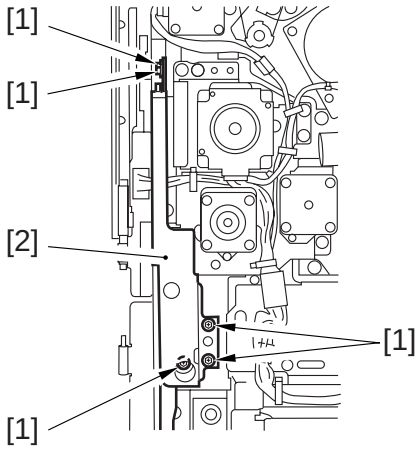

F07-506-02

3) Remove the four screws [3], and disconnect the five connectors [4]; then, release the four cable clamps [5], and detach the vertical path duplex/right deck drive assembly [6].

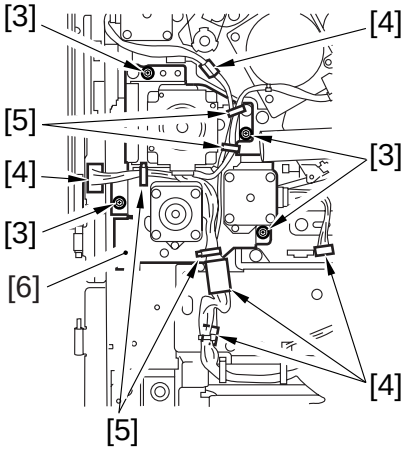

F07-506-03

COPYRIGHT © 2000 CANON INC.

5.6.3 Main Motor Drive Assembly

1) Loosen the belt tensioner [1], and detach the main motor belt [2].
2) Loosen the screw [3] to release the belt tensioner [4]; then, detach the belt [5].
3) Remove the screw [6], and detach the fixing member [7].
4) Remove the five screws [8], and disconnect the connector [9]; then, detach the main motor drive assembly [10].

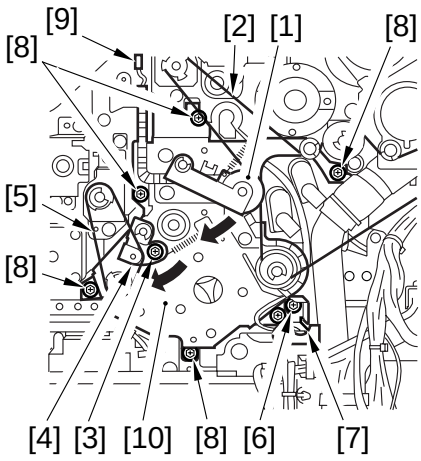

F07-506-04

5.6.4 Manual Feed Pickup Drive Assembly

1) Remove the main controller box.
2) Remove the two screws [1], and detach the scanner fan duct [2].
3) Loosen the screw [3] to release the belt tensioner [4], and detach the belt [5].

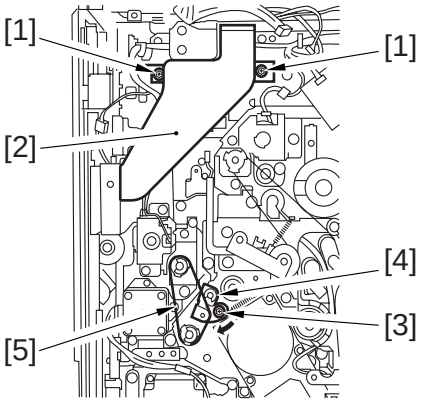

F07-506-05

4) Remove the four screws [6], and disconnect the three connectors [7]; then, detach the manual feed pickup drive assembly [8].

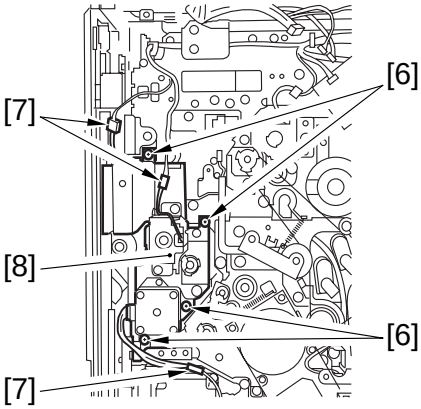

F07-506-06

5.6.5 Waste Toner Drive Assembly

1) Remove the DC controller base.
2) Remove the flywheel, and loosen the belt tensioner to detach the main motor belt.
3) Remove the waste toner bottle holder.
4) Remove the three screws [1], and detach the waste toner drive assembly [2].

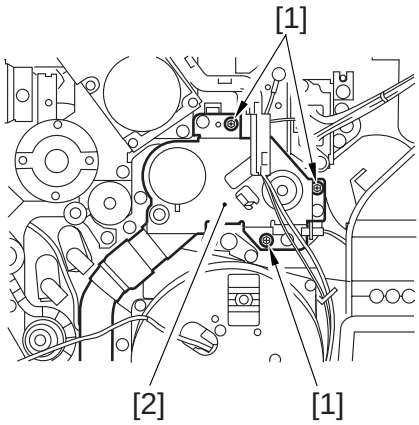

F07-506-07

5.6.6 Left Deck Pull-Out Roller Drive Assembly

1) Remove the DC controller base.
2) Remove the feeding fan. (See p. 7-28P.)
3) Remove the waste toner bottle holder.
4) Remove the waste toner drive assembly.
5) Remove the main motor.
6) Remove the four screws [1], and disconnect the connector [2]; then, detach the left deck pull-out roller drive assembly [3].

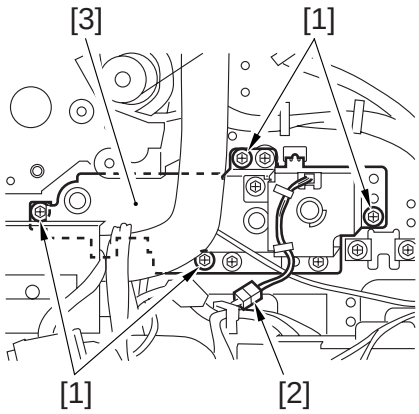

F07-506-08

5.6.7 Drum Drive Assembly

1) Slide out the hopper assembly.
2) Remove the drum fixing member, and slide out the process unit.
3) Remove the feeding fan assembly.
4) Remove the main motor drive assembly.
5) Remove the high-voltage PCB.
6) Remove the five screws [1], and disconnect the four connectors [2]; then, pull out the drum drive assembly [3].

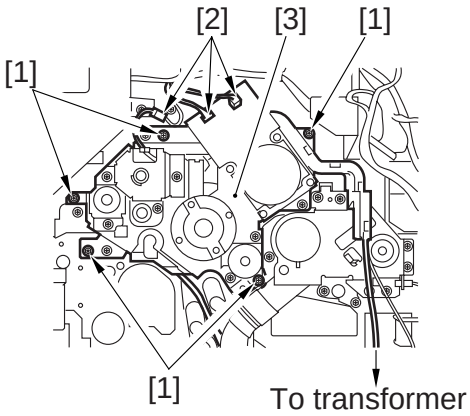

F07-506-09

COPYRIGHT © 2000 CANON INC.

5.6.8 Waste Toner Bottle Assembly, Lifter Drive Assembly, Vertical Path Drive Assembly, and Cassette Pickup Drive Assembly

1) Remove the main controller box.
2) Remove the right rear lower cover, rear lower cover, and waste toner bottle.
3) By referring to step 3) for the main motor, remove the main power switch base out of the way.
4) Remove the two screws [1], and disconnect the two connectors [2]; then, detach the connector base [3].

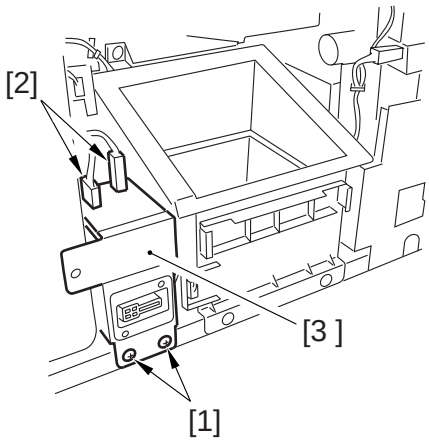

F07-506-10

5) Remove the three screws [4], and detach the waste toner holder [5].

Take care not to let the waste toner go astray.

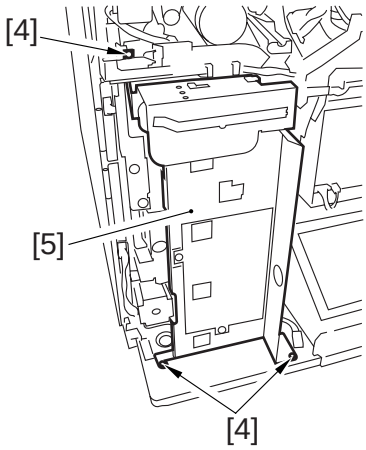

F07-506-11

6) Remove the four screws [6], and disconnect the 11 connectors; then, detach the motor driver PCB [7] together with its base.

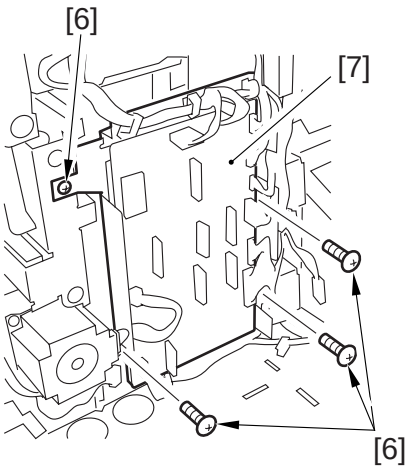

F07-506-12

COPYRIGHT © 2000 CANON INC.

7) Remove the two screws [8], and detach the cassette pickup motor [9].

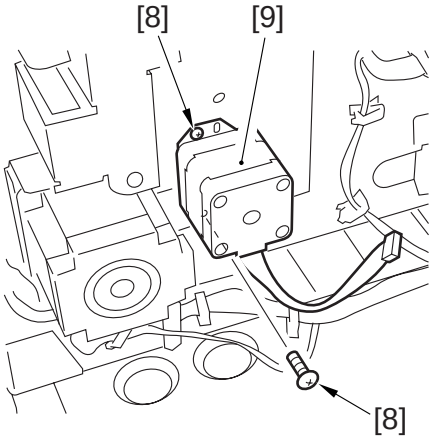

F07-506-13

8) Remove the three screws [10], and disconnect the two connectors [11]; then, remove the lifter drive assembly [12].

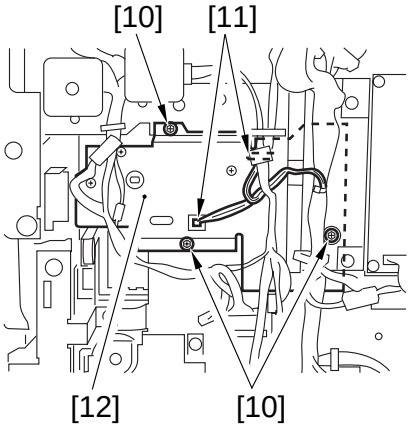

F07-506-14

9) Remove the three screws [13], and detach the vertical path drive assembly [14].
10) Remove the cassette 3/4 pickup assembly. (See p. 5-55P.)
11) Remove the three screws [15], and detach the cassette pickup drive assembly [16].

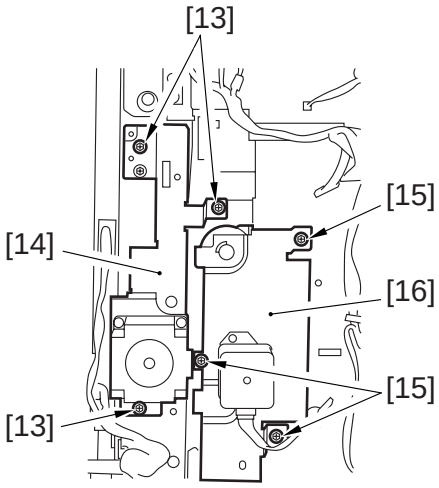

F07-506-15

COPYRIGHT © 2000 CANON INC.

5.6.9 Left Deck Lifter Drive Assembly

1) Remove the high-voltage power supply PCB.
2) Remove the three screws [1], and disconnect the two connectors [2]; then, detach the left deck lifter drive assembly [3].

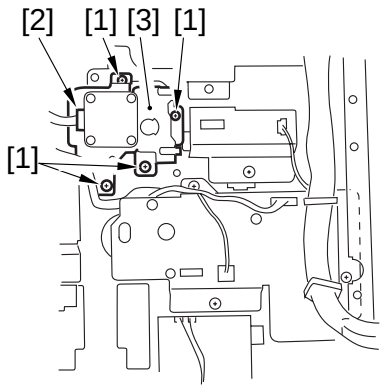

F07-506-16

COPYRIGHT © 2000 CANON INC.

5.7 Motor

5.7.1 Vertical Path Lower Motor (M27)

1) Remove the right lower cover/rear lower cover.
2) Remove the waste toner box.
3) Remove the four screws [1], and disconnect the connector; then, detach the vertical path lower motor [2].

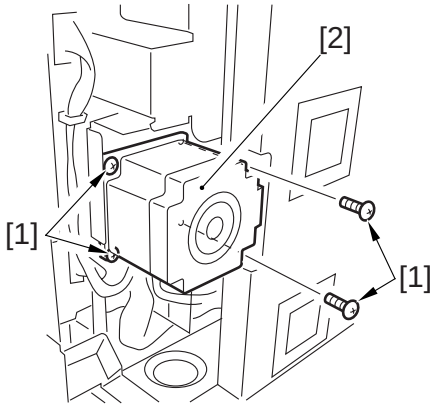

F07-507-01

5.7.2 Main Motor (M2)

1) Remove the main controller box.
2) Remove the right rear lower cover.
3) Remove the three screws [1], and release the two clamps [2]; then, remove the main power switch base [3] out of the way.

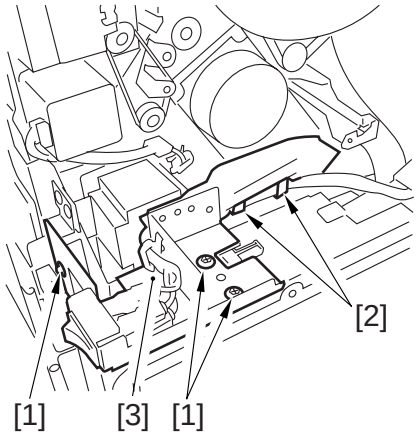

F07-507-02

4) Remove the three screws [4], and disconnect the connector [5]; then, detach the main motor [6].

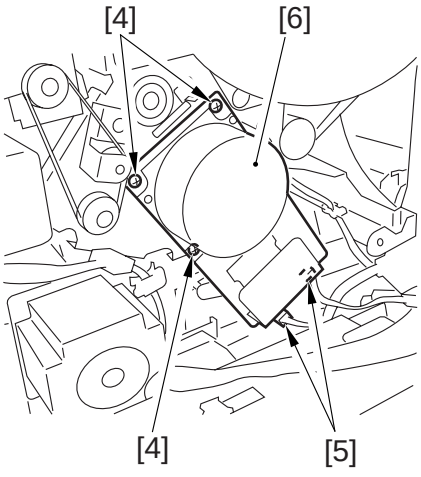

F07-507-03

COPYRIGHT © 2000 CANON INC.

5.7.3 Vertical Path Duplex Motor (M25), Vertical Path Upper Motor (M26), Deck Right Motor (M11), Lifter Right Motor (M5), and Cassette Pickup Motor (M12)

1) Remove the main controller box.
2) Remove the right rear lower cover, rear lower cover, an waste toner bottle.
3) By referring to step 3) for the main motor, remove the main power switch base out of the way.
4) Remove the two screws [1], and disconnect the two connectors [2]; then, detach the connector base [3].

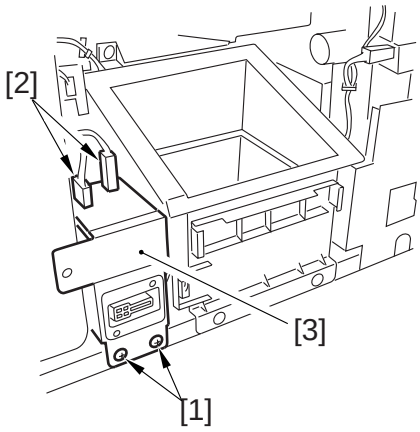

F07-507-04

5) Remove the three screws [4], and detach the waste toner bottle holder [5].

Take care not to let the waste toner go astray.

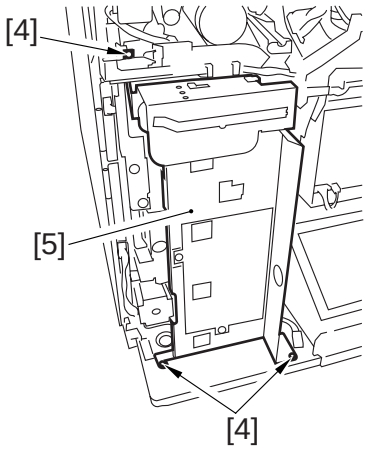

F07-507-05

6) Remove the three screws [6], and disconnect the connector [7]; then, detach the vertical path duplex motor [8].
7) Remove the two screws [9], an disconnect the connector [10]; then, detach the vertical path upper motor [11].
8) Remove the two screws [12], and disconnect the connector [13]; then, detach the deck right motor [14].

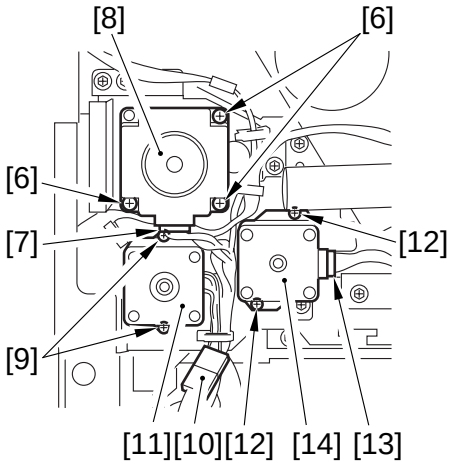

F07-507-06

9) Remove the four screws [15], and disconnect the 11 connectors; then, detach the motor driver PCB [16] together with its base.

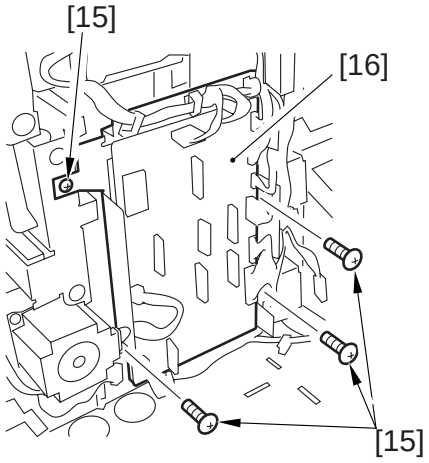

F07-507-07

10) Remove the two screws [17], and detach the cassette pickup motor [18].

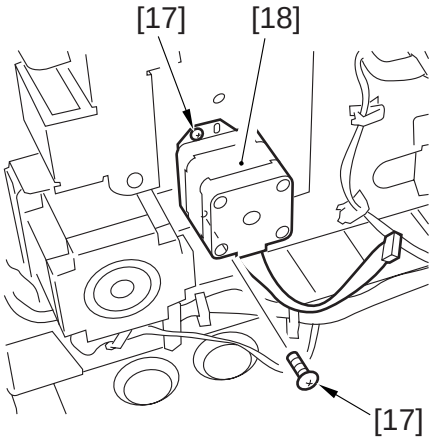

F07-507-08

5.7.4 Pre-Registration Motor (M17) and Drum Motor (M1)

1) Remove the reader rear cover, rear upper cover, and right rear upper cover.
2) Remove the main controller box.
3) Remove the E-ring [1] and bushing [2].
4) Disconnect the connector [3], and remove the two screws [4]; then, detach the pre-registration motor (M17) [5].
5) Remove the two screws [6], and detach the flywheel [7].

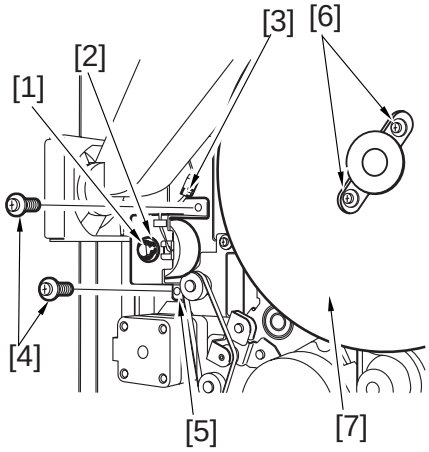

F07-507-09

COPYRIGHT © 2000 CANON INC.

6) Disconnect the two connectors [8], and remove the four screws [9]; then, detach the drum motor [10].

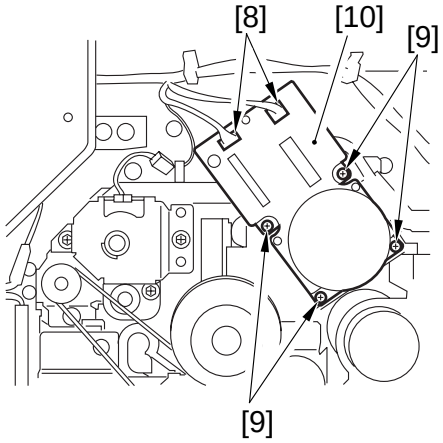

F07-507-10

5.8 Solenoid

5.8.1 Right Deck Pickup Roller Releasing Solenoid (SL6)

1) Remove the left deck drive assembly.
2) Remove the waste toner bottle holder.
3) Remove the three screws [1], and detach the cable support base [2].

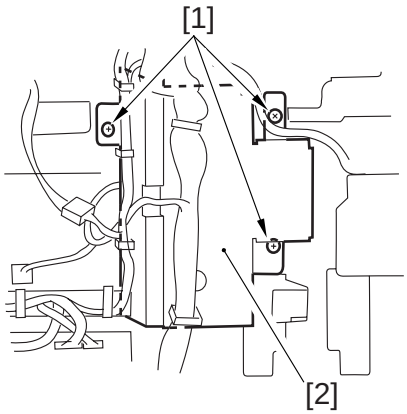

F07-508-01

4) Remove the two screws [3], and detach the right deck pickup roller releasing solenoid [4].

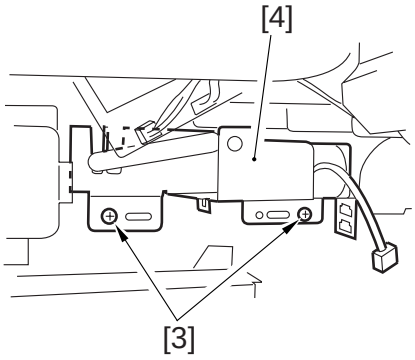

F07-508-02

5.8.2 Adjusting the Position of the Right Deck Pickup Solenoid (SL6)

Adjust the position of the solenoid so that the left edge of the arm 2 is 57.2 ± 0.5 mm from the center of the hole A in the solenoid mounting base.

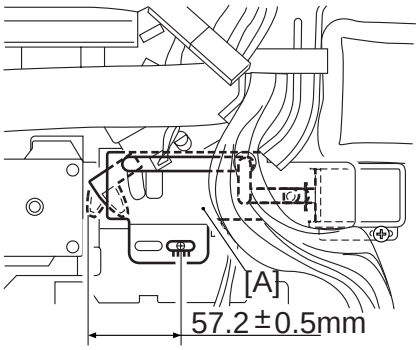

F07-508-03

COPYRIGHT © 2000 CANON INC.

5.8.3 Right Deck Pickup Roller Releasing Solenoid (SL7)

1) Remove the high-voltage power supply PCB.
2) Remove the screw [1], and disconnect the connector [2]; then, detach the pickup roller releasing solenoid [3].

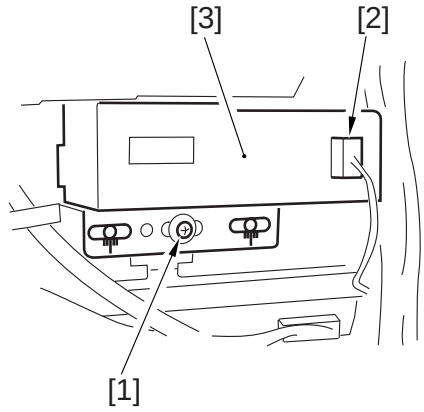

F07-508-04

5.8.4 Adjusting the Position of the Left Deck Pickup Solenoid (SL7)

When replacing the solenoid on its own, be sure to mount it in its initial position. (Take note of the position of the fixing screw [2] before detaching the left deck pickup solenoid from the support plate [1]. Or, mark the position of the solenoid on the support plate with a scriber.)

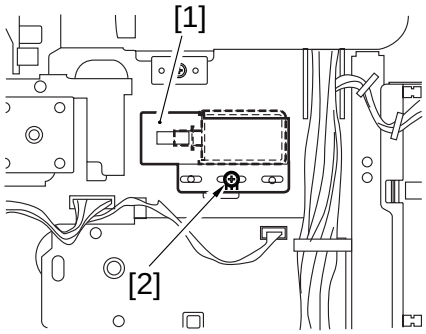

F07-508-05

5.9 Clutches

5.9.1 Manual Feed Pickup Clutch/Developing Clutch

1) Remove the reader rear cover/rear upper cover/right rear upper cover.
2) Remove the main controller box.
3) Remove the grip ring [1] and bushing [2]; then, disconnect the connector [3], and remove the two screws [4], and detach the manual feed pickup clutch (CL4) [5].
4) Remove the two screws [6], and detach the flywheel [7].

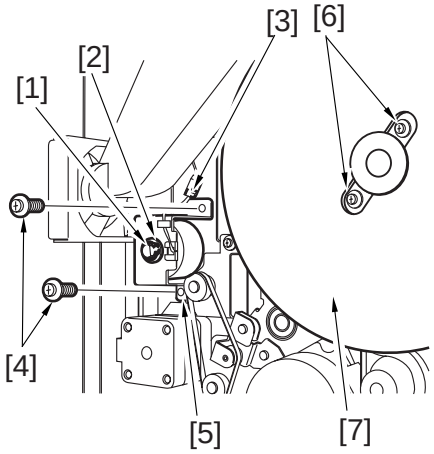

F07-509-01

5) Remove the three screws [8], and disconnect the connector [9]; then, detach the developing clutch (CL1) [10].

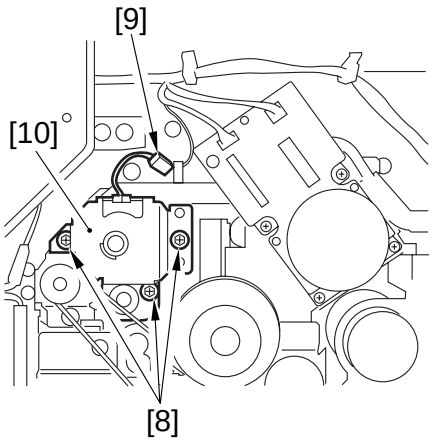

F07-509-02

COPYRIGHT © 2000 CANON INC.

5.10 Sensors

5.10.1 Cassette 3/4 Paper Size (width/length) Sensor

1) Remove the exhaust fan duct.
2) If the cassette 4 sensor is to be removed, remove the two screws [1], disconnect the two connectors [2], and detach the connector base [3].

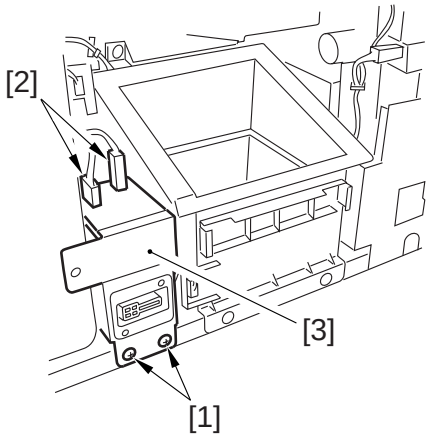

F07-510-01

3) Remove the two screws [4] each, and disconnect the connector [5]:
   - cassette 3 paper size width sensor [6]
   - cassette 3 paper side length sensor [7]
   - cassette 4 paper size width sensor [8]
   - cassette 4 paper side length sensor [9]

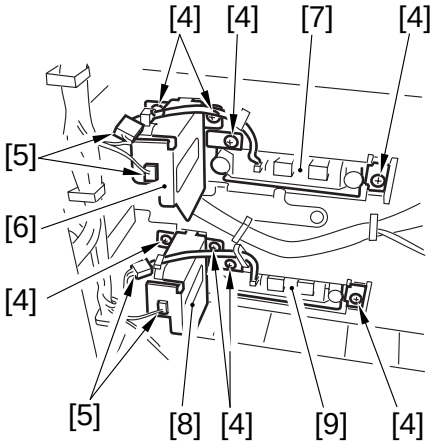

F07-510-02

5.11 HDD

Points to Note When Replacing the HDD
1. Take care to avoid damage by static charge.
2. Keep the HDD unit from impact.

1) Remove the rear upper cover and the reader rear cover.
2) Remove the three screws [1], and detach the cover [2].

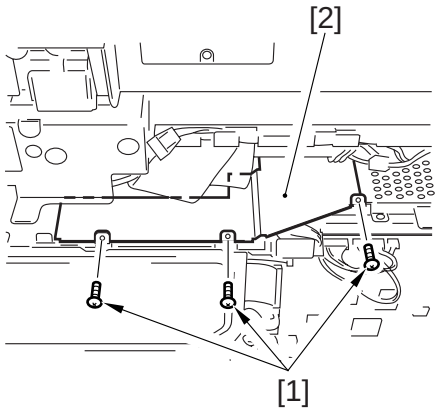

F07-511-01

3) Remove the two screws [3], and disconnect the two connectors ; then, remove the HDD unit [4].

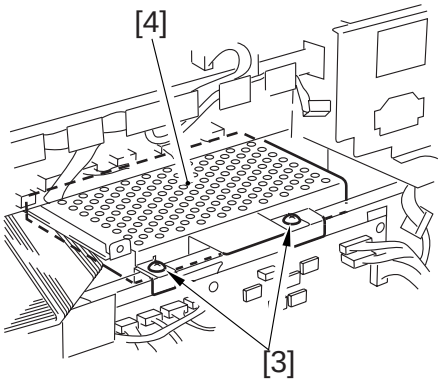

F07-511-02

COPYRIGHT © 2000 CANON INC.

4) Remove the six screws [5], and detach the HDD [6].



When mounting the HDD unit, be sure that the flat cable is under the plastic sheet of the HDD upper case.

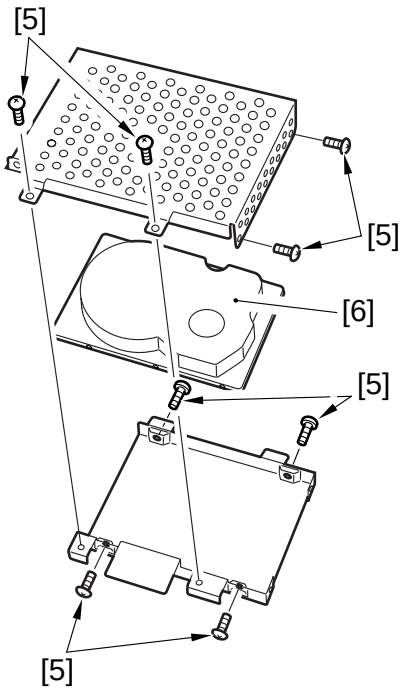

F07-511-03

5.12 Others

5.12.1 DC Controller PCB Base

1) Remove the HDD unit. (See p. 7-44P.)

When mounting the HDD unit, be sure that the flat cable is under the plastic sheet of the HDD upper case.

2) Remove the nine screws [1], and disconnect the 26 connectors; then, detach the DC controller PCB base.

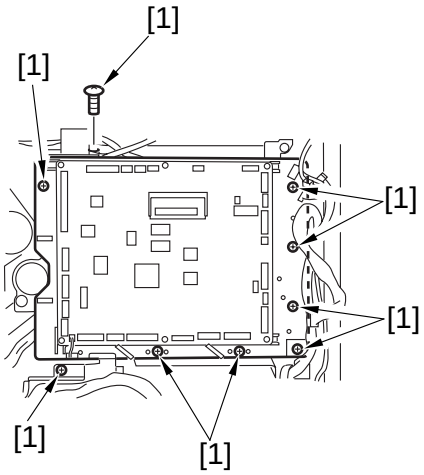

F07-512-01

5.12.2 Relay

1) Remove the rear upper/lower cover and left upper/lower cover.
2) Disconnect the cable connected to the relay, and remove the two screws [1]; then, detach the relay [2].

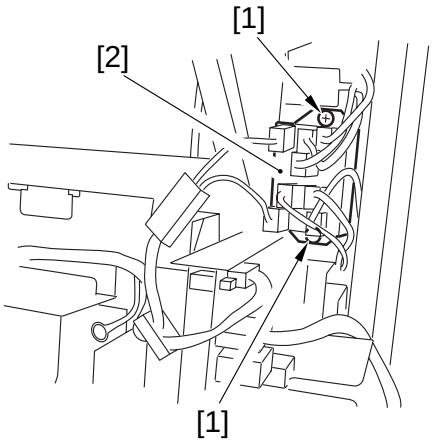

F07-512-02

COPYRIGHT © 2000 CANON INC.

5.12.3 Power Supply Transformer

1) Remove the high-voltage power supply PCB.
2) Remove the two screws [1], and disconnect the two connectors [2]; then, slide the transfer unit [3] to the left to detach.

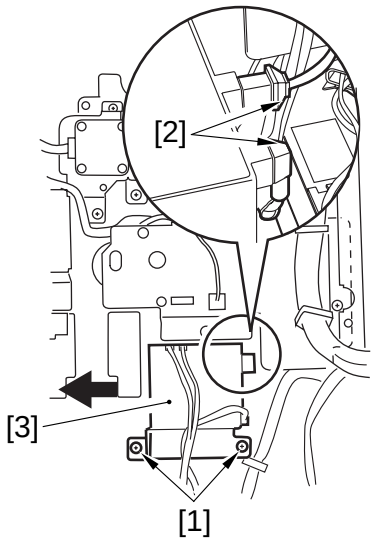

F07-512-03

3) Remove the two screws [4], and disconnect the connector [5]; then, detach the transformer [6].

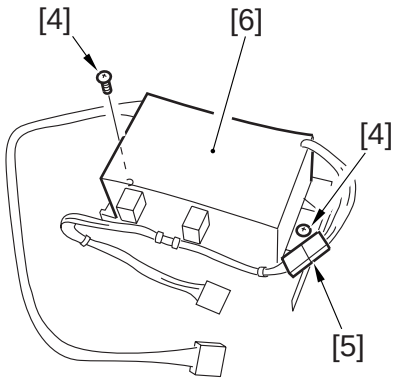

F07-512-04

CHAPTER 8

PAPER DECK

COPYRIGHT © 2000 CANON INC.

1. Paper Deck

1.1 Inputs to and Outputs from the Deck Driver

1.1.1 Inputs to the Driver (1/2)

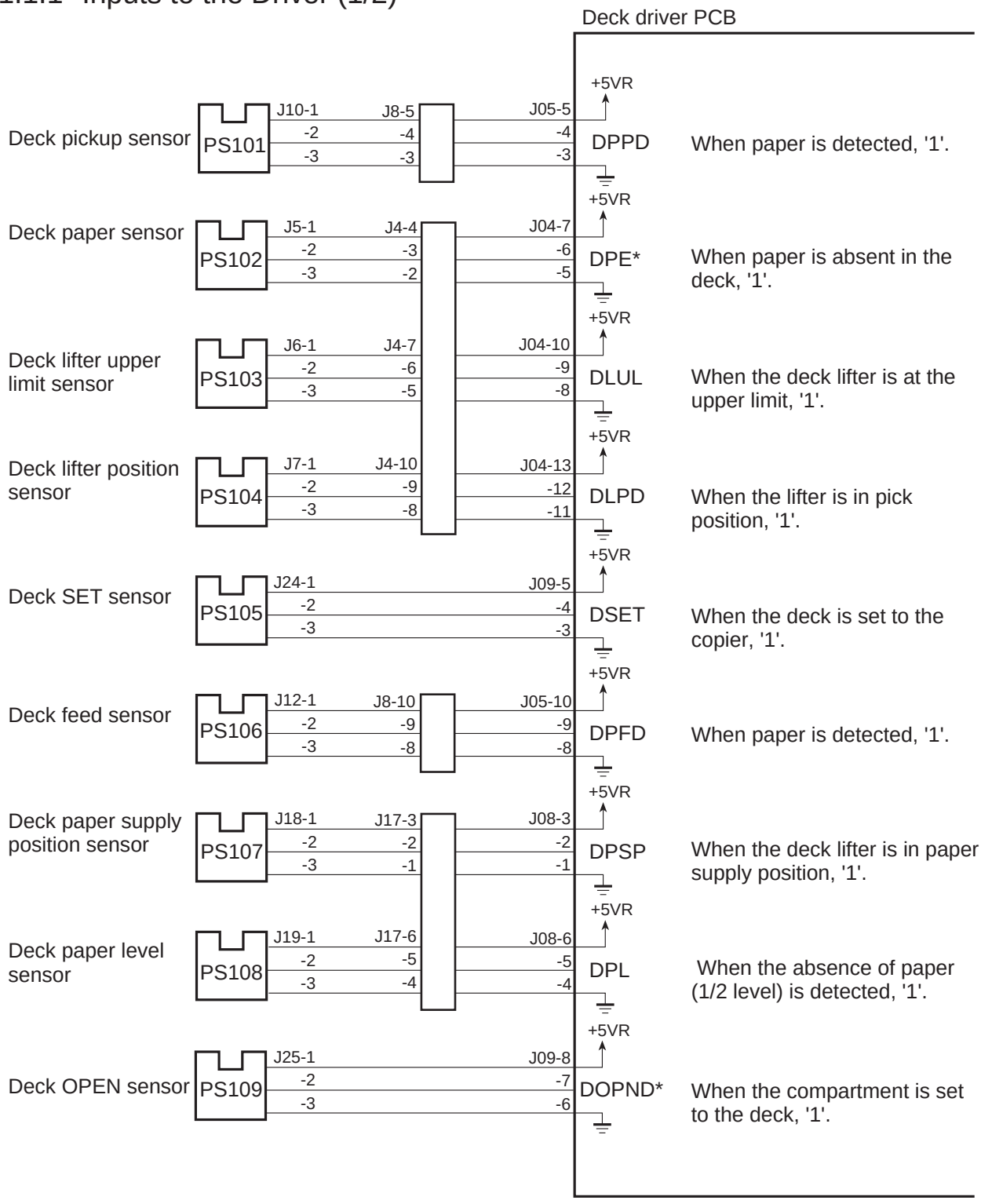

F08-101-01

COPYRIGHT © 2000 CANON INC.

1.1.2 Outputs from the Deck Driver (2/2)

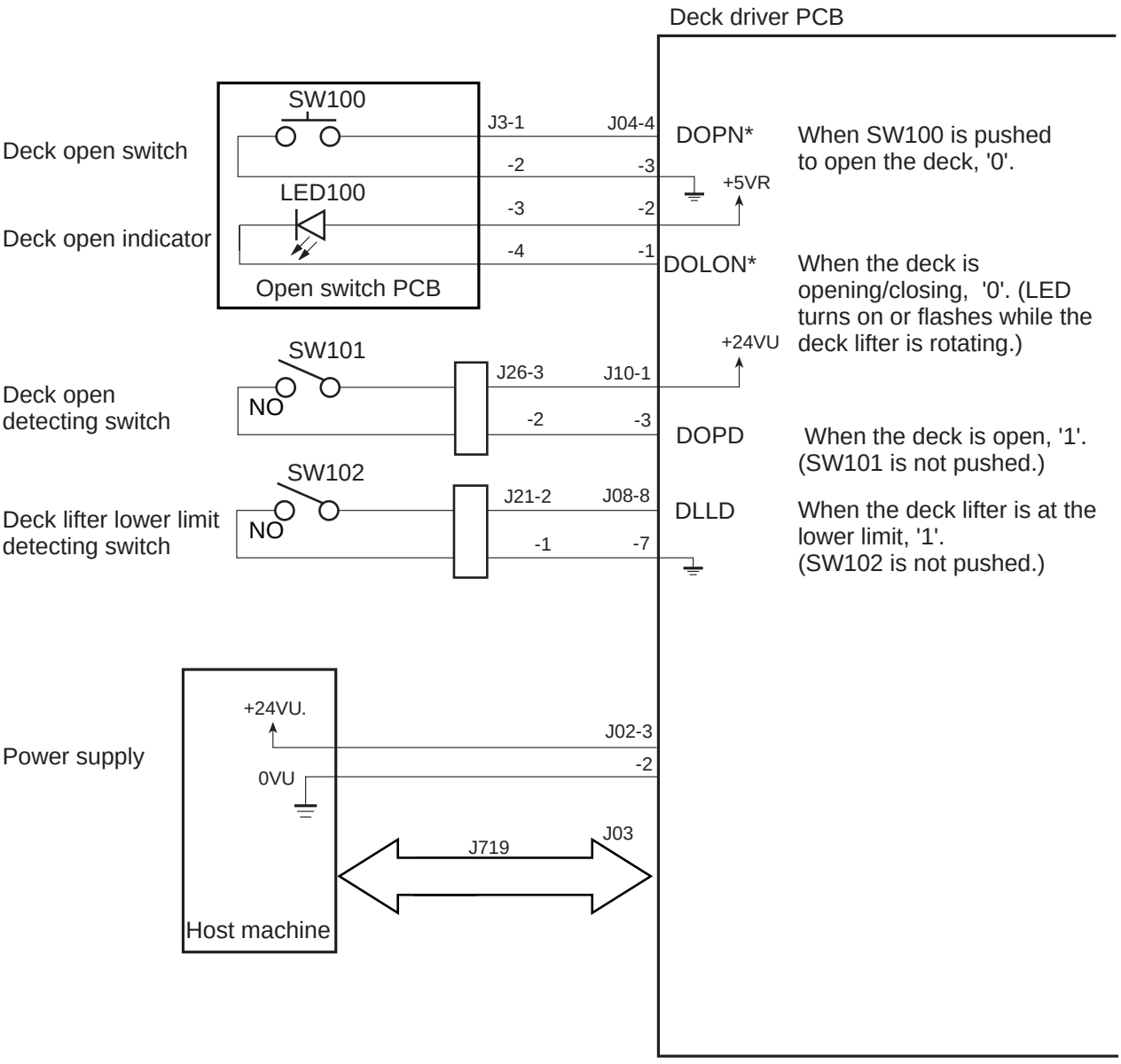

F08-101-02

COPYRIGHT © 2000 CANON INC.

1.1.3 Outputs form the Deck Driver (1/1)

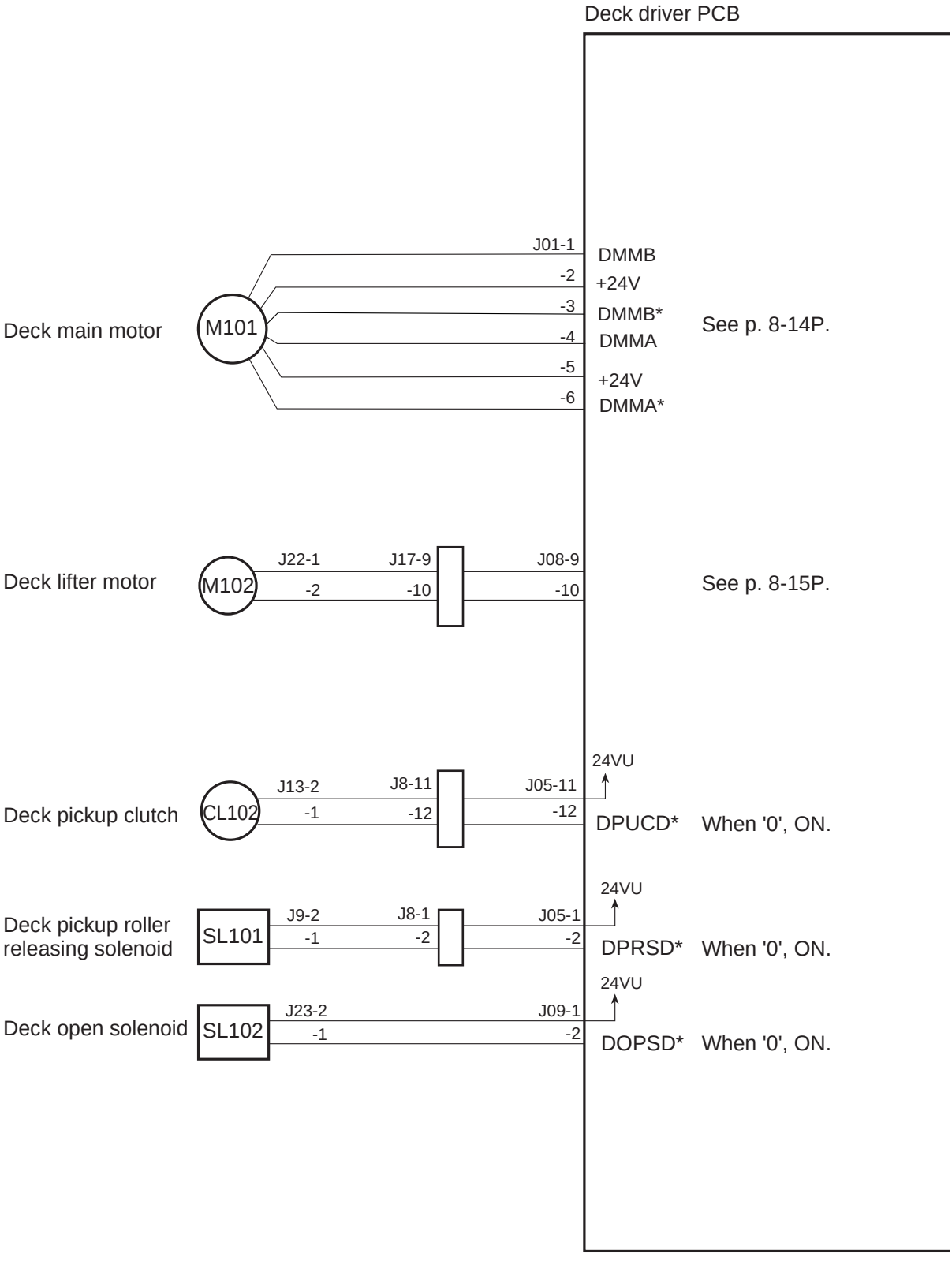

F08-101-03

1.2 Pickup

1.2.1 Outline

The paper deck (hereafter deck) is capable of accommodating as many as 3500 sheets of paper (A/LTR/B5; of 80 g/m2), and is designed to feed paper in response to control signals from the DC controller of its host machine.

The lifter of the deck is driven by the deck lifter motor (M102), and paper is picked up and fed using the drive from the deck main motor (M101).

1.2.2 Pickup Operation

The paper inside the deck is held up by the lifter, and is kept in position at a specific point of pickup.

When the Start key is pressed and, as a result, the deck pickup clutch (CL102) turns on, the drive of the deck main motor (M101) rotates the pickup roller to pickup paper. At this time, the pickup/feed roller and the separation roller serve to make sure that only one sheet of paper is moved forward; then, when the deck pickup sensor (PS101) detects the paper, the deck pickup roller releasing solenoid (SL101) turns on to move the pickup roller away from the surface of the paper.

The paper is moved to the registration roller of the host machine, and is made to arch for removal of the skew.

The registration roller controls the paper so that its leading edge will match the image on the photosensitive drum.

COPYRIGHT © 2000 CANON INC.

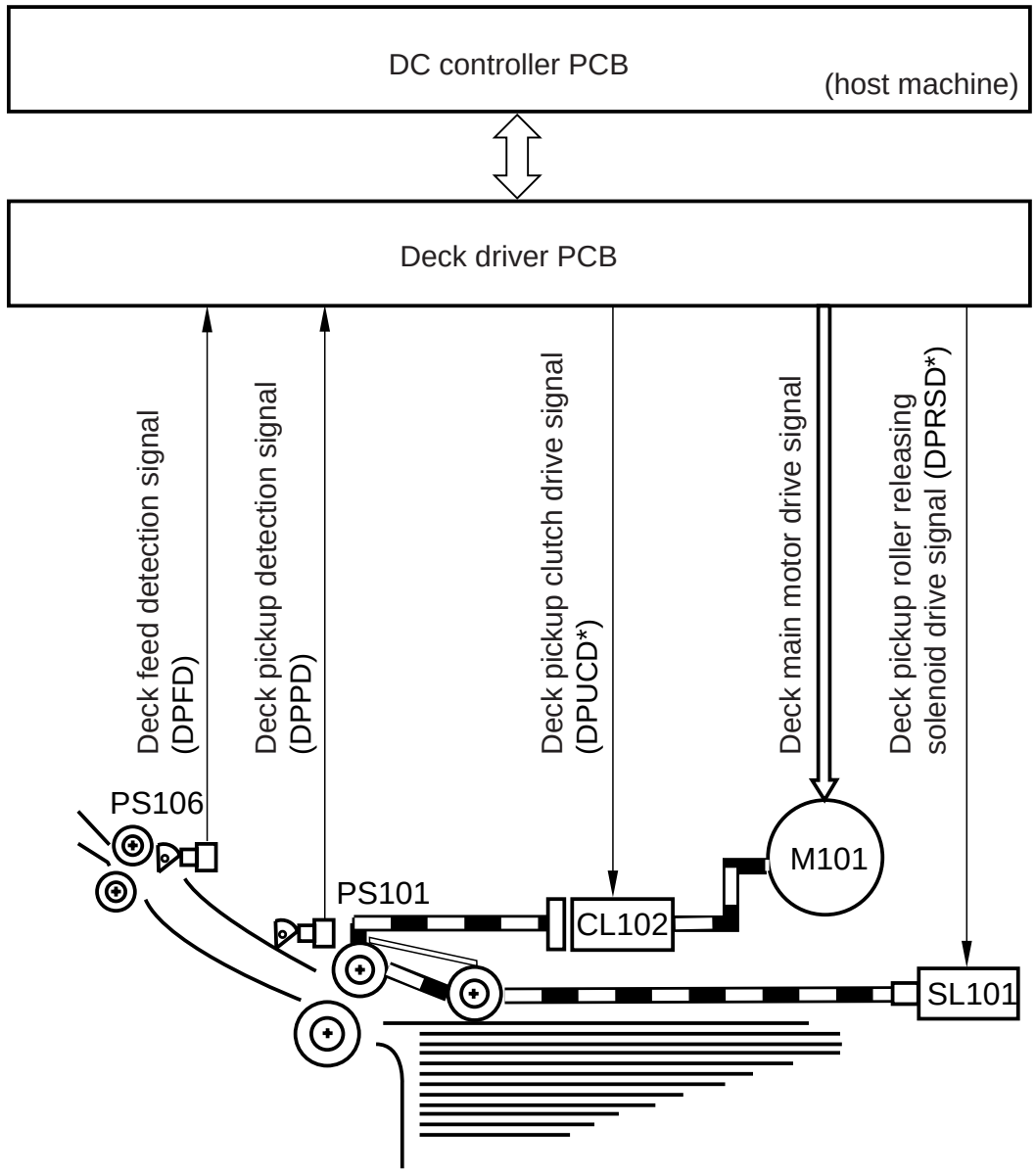
DC controller PCB
(host machine)
Deck driver PCB
Deck feed detection signal (DPFD)
Deck pickup detection signal (DPPD)
Deck pickup clutch drive signal (DPUCD*)
Deck main motor drive signal
Deck pickup roller releasing solenoid drive signal (DPRSD*)
PS106
PS101
CL102
M101
SL101

F08-102-01

1.2.3 Sequence of Operations (pickup from the deck)

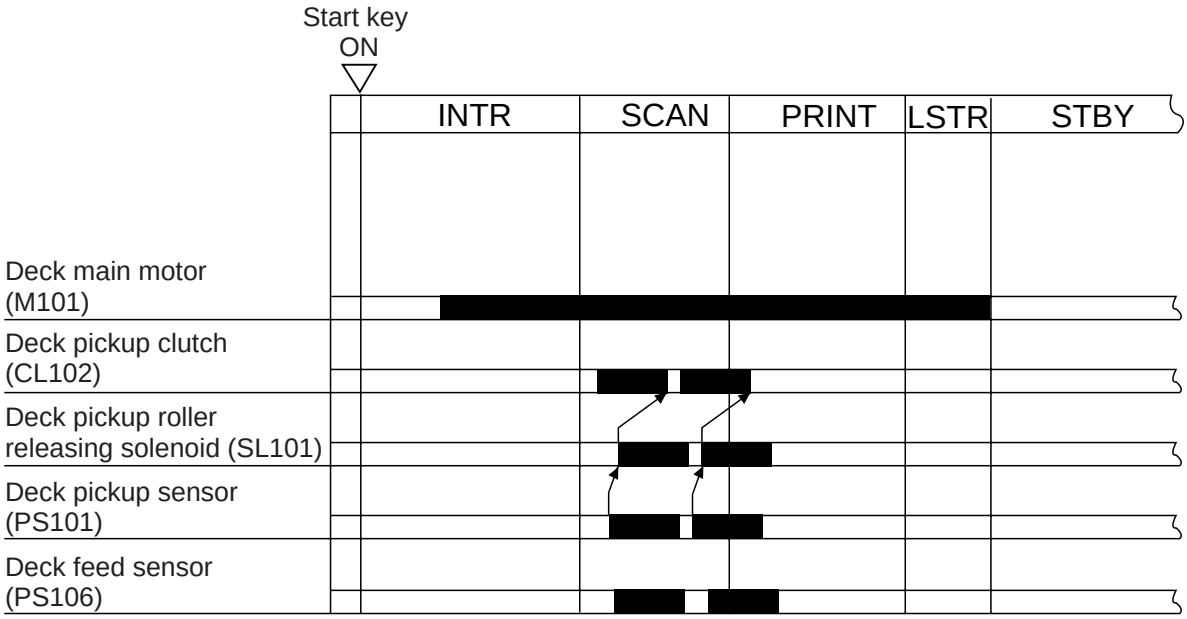

F08-102-02

COPYRIGHT © 2000 CANON INC.

1.3 Detecting Paper in the Deck

1.3.1 Detecting the Presence/Absence of Power

The presence/absence of paper inside the deck is detected by the deck paper sensor (PS102). When paper runs out and, as a result, the paper detecting lever of the pickup roller assembly moves past the deck paper sensor, the Add Paper message will be indicates in the control panel of the host machine.

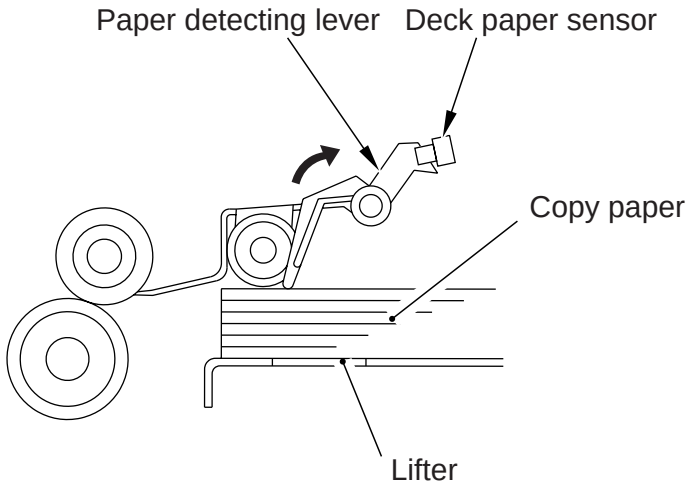

F08-103-01

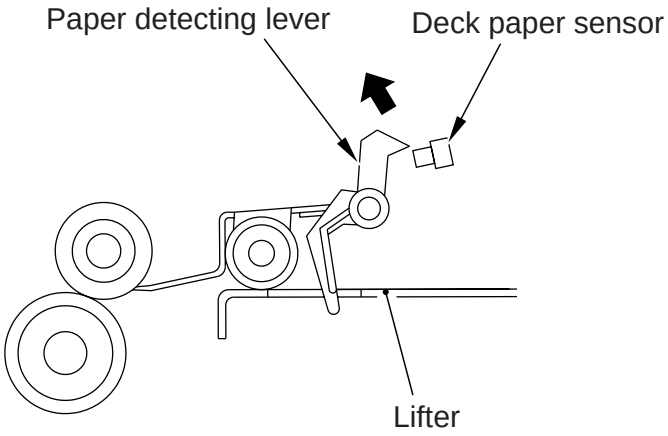

F08-103-02

1.3.2 Switching the Deck Paper Size

The paper size of the deck may be switched by relocating the guide plate inside the deck to suit the needs of the user; the new paper size must then be entered in service mode (COPIER>OPTION>ACC>DK-P).

1.3.3 Detecting the Level of Paper in the Deck

The machine uses the deck paper supply position sensor (PS107), deck paper level sensor (PS108), and deck paper sensor (PS102) to check the level of paper inside its compartment; it can also indicate the detected level in the control panel of its host machine.

The following shows how the level is determined with reference to the combination of the states of sensors and how each level is indicated:

Level of paper	PS102	PS107	PS108	Indication in control panel
100% to about 50%	1	1	1	
about 50% to about 10%	1	1	0	
less than 10%	1	0	0	
No paper	0	0	0	

1: light-blocking plate over the sensor.
0: light-blocking plate not over the sensor.

T08-103-01

COPYRIGHT © 2000 CANON INC.

1.4 Deck Lifter

1.4.1 Detecting the Presence/Absence of Paper

The lifter of the deck is connected to a reel by means of a cable, and is driven by the drive of the deck lifter motor (M102). The lifter is moved up or down by changing the direction of motor rotation.

When the compartment is slid into the deck, the deck OPEN detecting switch is pushed; then, the lifter moves up as soon as the deck OPEN sensor (PS109) detects the light-blocking plate. The deck keeps moving up, and stops when the deck lifter position sensor (PS104) detects the top surface of the stack of paper on the lifter.

If the lifter fails to stop moving up after the sensor lever blocks the deck lifter position sensor for some reason, the deck lifter upper limit sensor (PS103) will turn on to prevent damage otherwise caused by the deck.

The lifter, on the other hand, starts to move down when the deck open switch (SW100) is pushed; it continues to move down unit it moves past the sensor lever of the deck paper supply position sensor (PS107), i.e., the falling edge of the sensor output.

When paper is supplied in this condition, it will push down the lever of the deck paper supply position sensor, and the lifter in response will move farther down until the stack of paper moves past the sensor lever.

The lifter repeats the descent each time paper is supplied until the deck lifter lower limit detecting switch (SW102) is pushed.

COPYRIGHT © 2000 CANON INC.

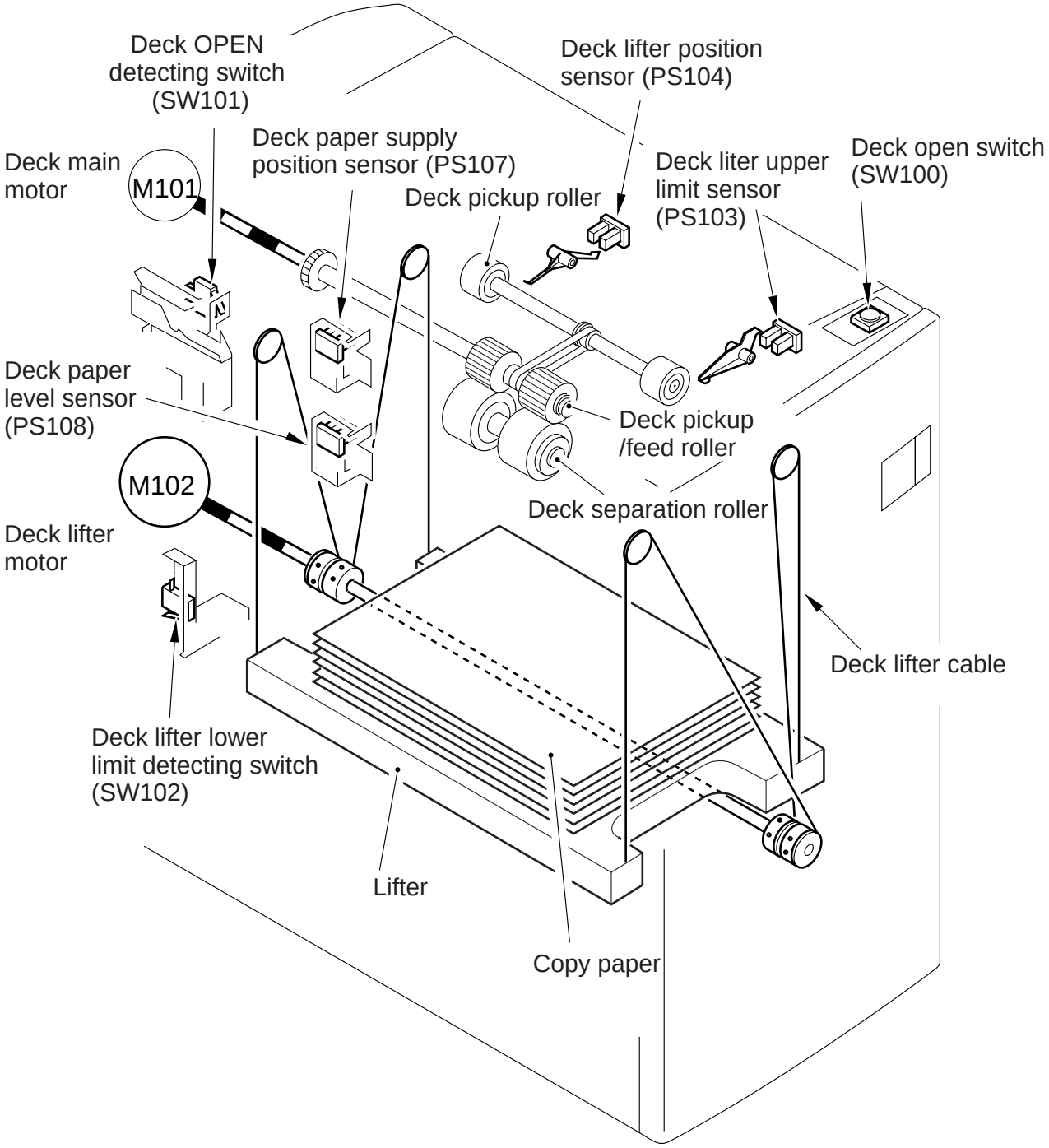

F08-104-01

COPYRIGHT © 2000 CANON INC.

1.4.2 Indicating the Level of Paper on the Deck Front Cover

The drive of the deck lifter motor (M102) is received by a coupling, and is then transmitted to the rack through a drive belt. The rack is equipped with a black belt, moving up and down within the display window in the deck front cover in keeping with the movement of the rack.

When the level of paper decreases and, as a result, the lifter moves to pickup position, the area of the black belt within the display window increases, while the area of white (indicating the amount of paper) decreases, enabling a check on the level of paper.

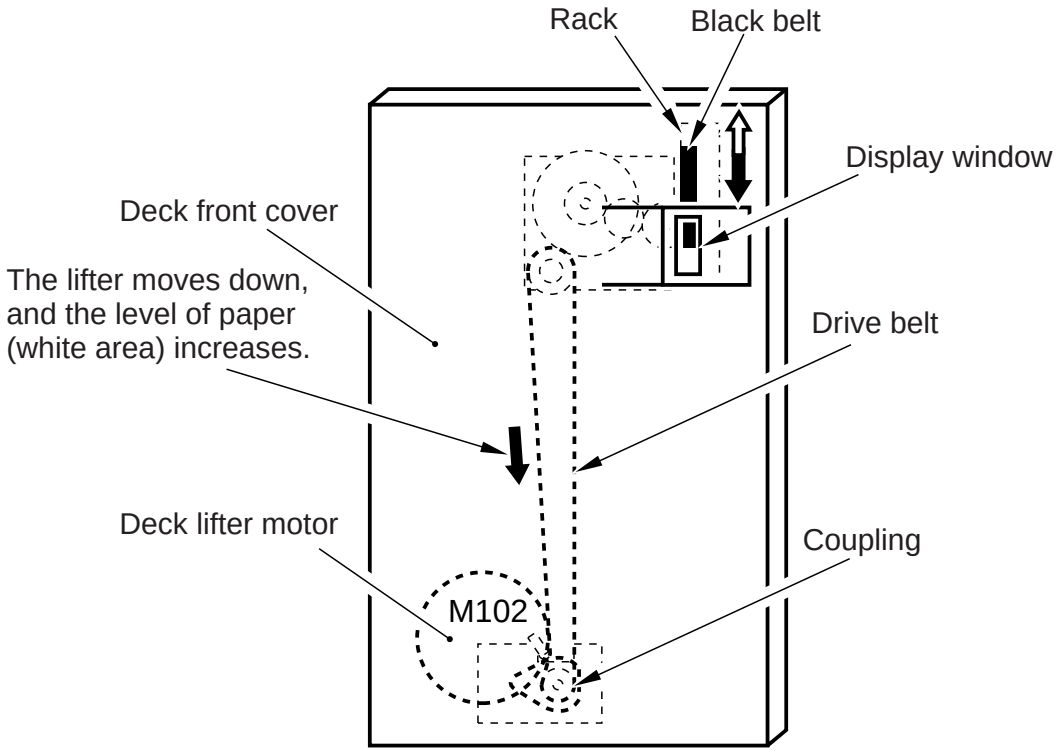

F08-104-02

1.5 Opening/Closing the Compartment

1.5.1 Opening/Closing the Compartment

When the deck open switch (SW100) is pushed, the deck open solenoid (SL102) turns on to release the compartment, which is then pushed forward several centimeters to the front by the force of a spring. At the same time, the deck lifter motor (M102) starts to rotate, and the lifter inside the deck starts to move down.

When the compartment is slid inside the deck by hand, on the other hand, the deck open sensor (PS109) detects the light-blocking plate of the compartment, and the lifter is let to move up to pickup position.

When the deck lifter motor rotates for opening or closing the deck, the deck open indicator (LED100) located on the open switch PCB remains on or flashes.

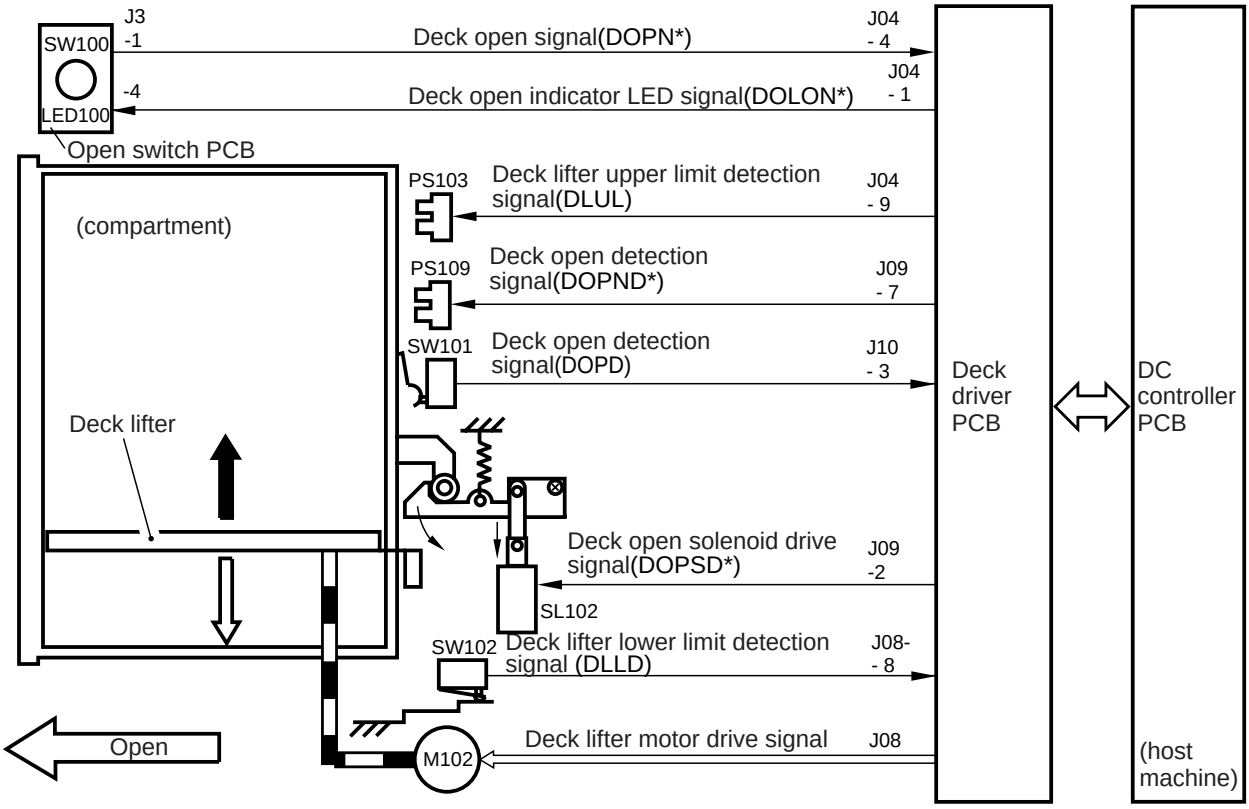

F08-105-01

COPYRIGHT © 2000 CANON INC.

1.5.2 Sequence of Operations (opening/closing the compartment)

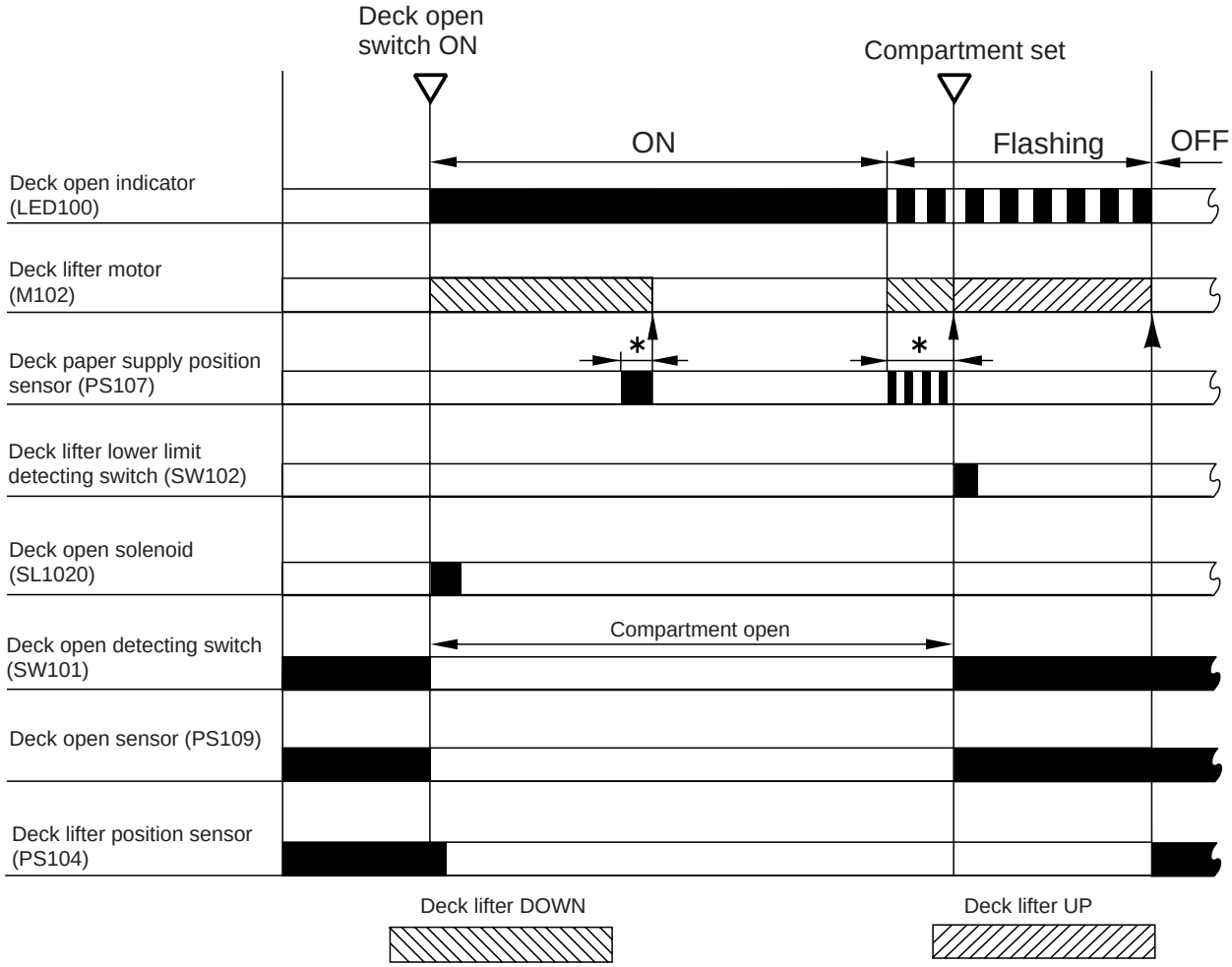

* : Varies depending on the size of the stack.

F08-105-02

1.6 Controlling the Deck

1.6.1 Controlling the Deck Main Motor (M101)

The deck main motor is a stepping motor controlled by the DC controller of the host machine. The following figure shows the circuit used to drive the deck main motor, and has the following functions:

[1] Turing on and off the deck main motor.

[2] Changing the speed of rotation of the deck main motor

a. Turning On and Off the Motor

The deck main motor is turned on or off by controlling the output of the pulse signals from the host machine. (DMMA, DMMA*, DMMB, DMMB*).

b. Changing the Speed of Rotation of the Motor

The deck is designed to automatically change the speed at which paper is moved in consideration of future models of its host machine. As such, its speed is changed by the motor clock signals (M-CLK) arriving at the deck driver PCB from the DC controller of its host machine.

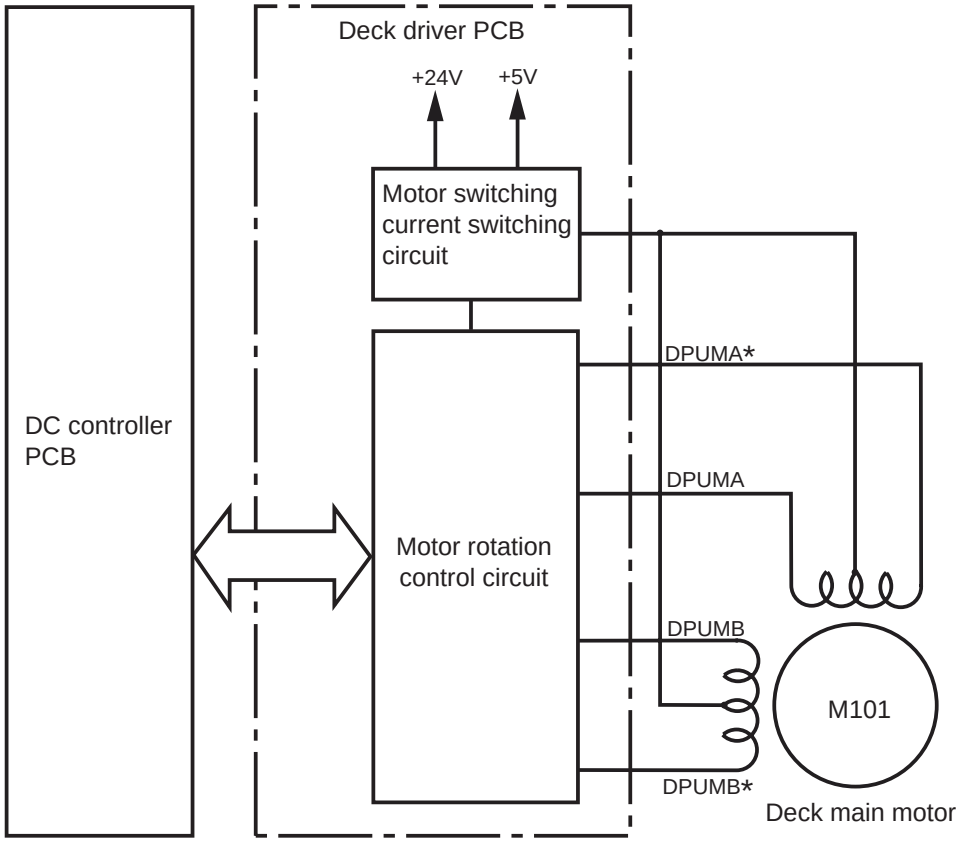

F08-106-01

COPYRIGHT © 2000 CANON INC.

1.6.2 Controlling the Deck Lifter Motor (M102)

The deck lifter motor control circuit is located on the deck driver PCB. (See F08-106-02 for its block diagram.)

The combination circuit shown in the figure consists of various logic circuits, and serves to drive the deck lifter motor clockwise or counterclockwise based on the combination of the output signals form the various sensors, deck lifter motor drive signal (DLMON*) from the DC controller of the host machine, and deck lifter UP signal (DLUP*).

If the deck lifter position sensor (PS104) does not detect the lifter within a specific period of time in the presence of the deck lifter UP signal, the machine will indicate an error code ('05'; may be checked in service mode COPIER>DISPLAY>ALARM1>BODY).

[1] Conditions for Moving Up the Lifter

- The lifter is connected to its host machine; i.e., the deck set signal (DSET) is '1'.
- The compartment is closed; i.e., the deck open detection signal (DOPND*) is '1'.
- The compartment is closed; i.e., the deck open detecting switch is ON.
- The deck lifter upper limit detection signal (DLUL) is '0' and, in addition, the deck lifter position detection signal (DLPD) is '0'.
- The deck lifter motor drive signal (DLMON*) is '0'.
- The deck lifter UP signal (DLUP*) is '0'.

The above conditions will cause the lifter to move up.

[2] Conditions for Moving Down the Lifter

- The lifter is open; i.e., the deck open detection signal (DOPND*) is '0'.
- The deck lifter lower limit detection signal (DLLD) is '0' and, in addition, the deck lifter position detection signal (DLPD) is '0'.
- The deck lifter motor drive signal (DLMON*) is '0'.
- The deck UP signal (DLUP*) is '1'.

The above conditions cause the lifter to move down.

COPYRIGHT © 2000 CANON INC.

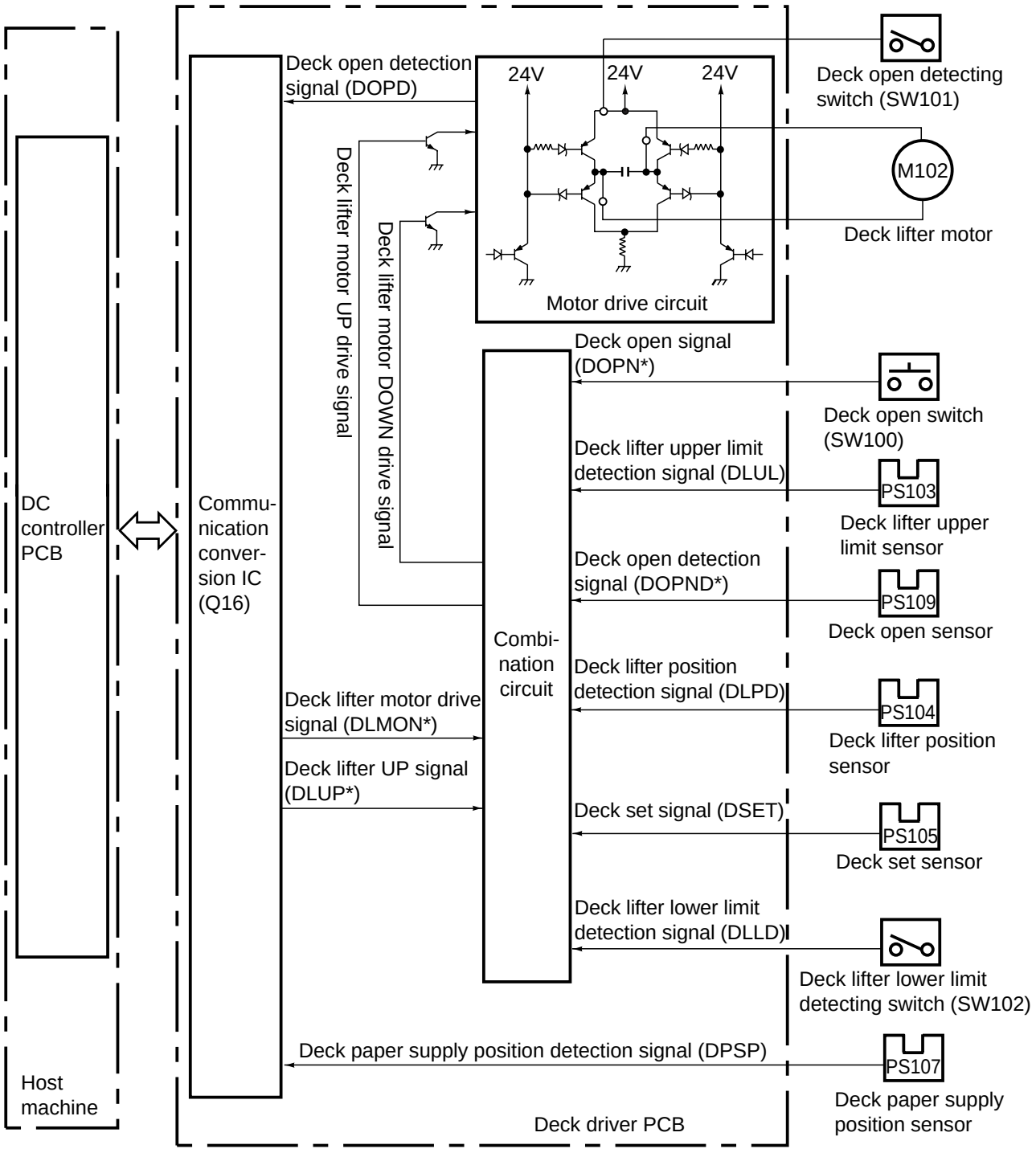

Note: The communication conversion IC (Q16) in the diagram performs serial ⟷ parallel signal conversion.

F08-106-02

COPYRIGHT © 2000 CANON INC.

2. Detecting Jams

2.1 Outline

The paper deck is equipped with two sensors used to see if paper is moving properly. A jam is identified in relation to the output of the sensors at such times as programmed in the DC controller of the host machine.

When the DC controller of the host machine identifies a jam, the machine will discharge all sheets moving ahead of the jam and then stop operation, at which time it will show instructions on jam removal in the control panel of its host machine.

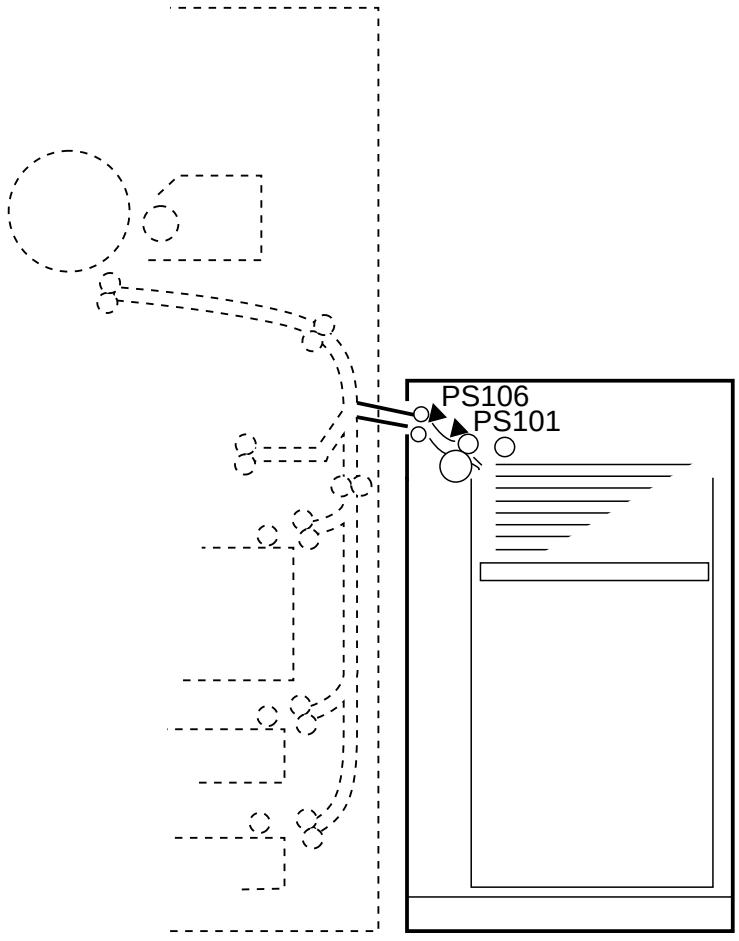

F08-201-01

Notation	Name	Function
PS106	Deck feed sensor	Detects delay.
PS101	Deck pickup sensor	Detects delay.

T08-201-01

COPYRIGHT © 2000 CANON INC.

The DC controller of the host machine identifies a jam under the following conditions:

1. When the host machine is turned on, or at the end of wait-up or in standby, paper exits over the deck feed sensor (PS106).

- Deck Pickup/Vertical Path Delay Jam

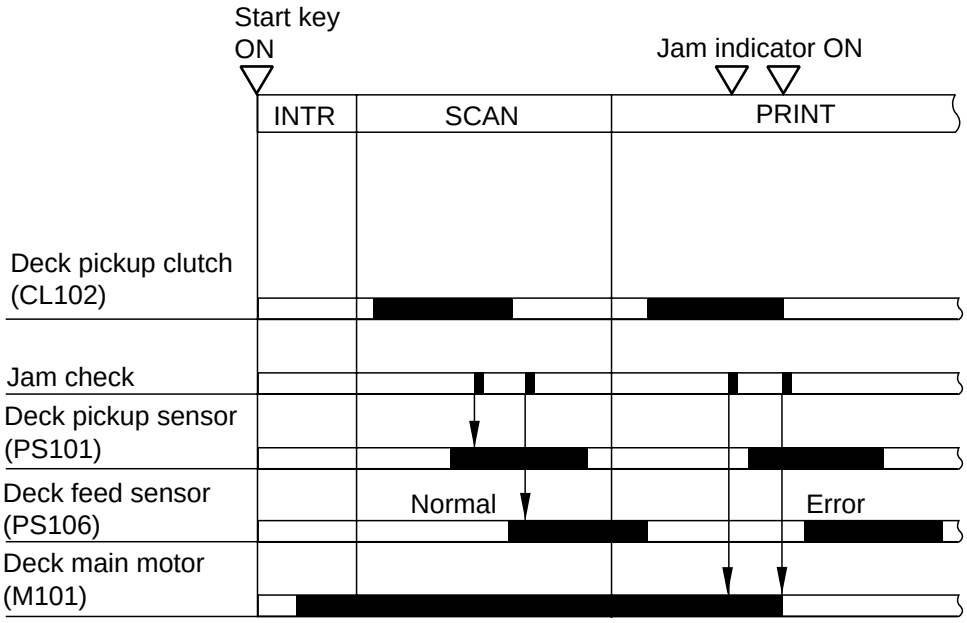

F08-201-02

COPYRIGHT © 2000 CANON INC.

3. Disassembly and Assembly

Be sure to observe the following when disassembling or assembling the machine:

1. ⚠ Disconnect the power plug of the host machine before starting the work.
2. Unless otherwise noted, assemble the machine by reversing the steps used to disassemble it.
3. Identify the screws by type (length, diameter) and location.
4. Some mounting screws are equipped with a toothed washer to protect against static electricity. Be sure to use each washer.
5. As a rule, do not operate the machine while any of its parts are removed.
6. ⚠ If the deck is equipped with a drier heater, be sure to disconnect the power plug of the heater before starting the work.

COPYRIGHT © 2000 CANON INC.

3.1 External Covers

[1] Deck releasing grip
[2] Front upper cover
[3] Compartment open/close switch
[4] Front cover
[5] Right cover
[6] Upper cover
[7] Rear cover

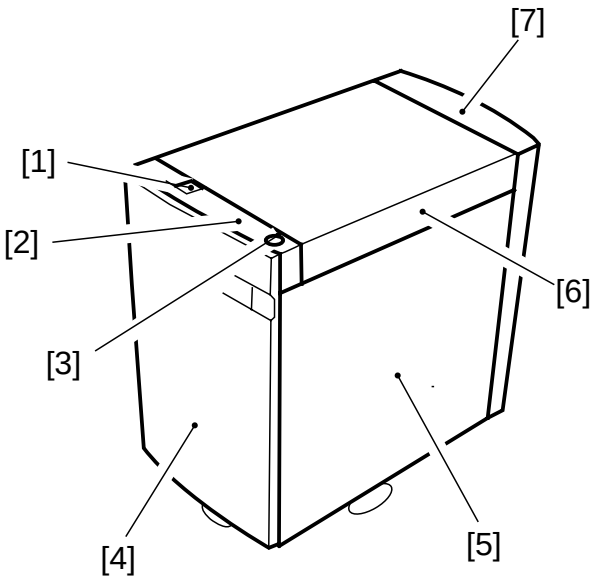

F08-301-01

3.1.1 Removing the Front Cover

1) Disconnect the deck from its host machine; then, push down the latch plate [2] of the compartment [1] with your finger to open the compartment [1].

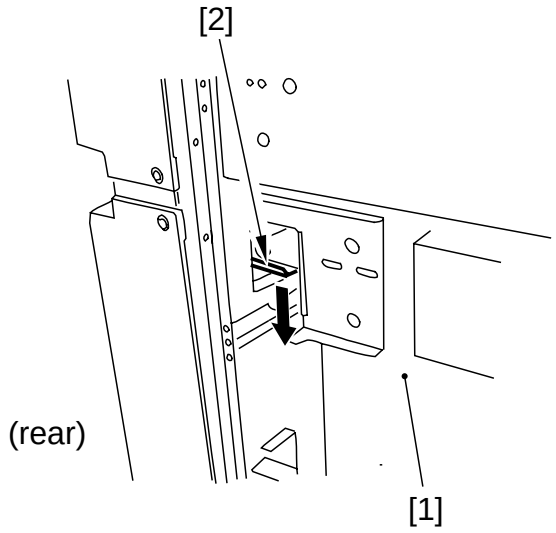

F08-301-02

COPYRIGHT © 2000 CANON INC.

2) Loosen the four screws [3], and detach the front cover [4] to the front.

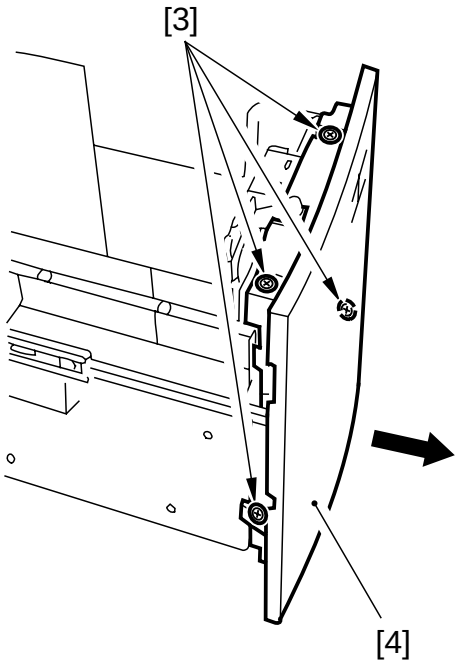

F08-301-03

When mounting the front cover to the deck, be sure to match it against the coupling for the paper level indicator.

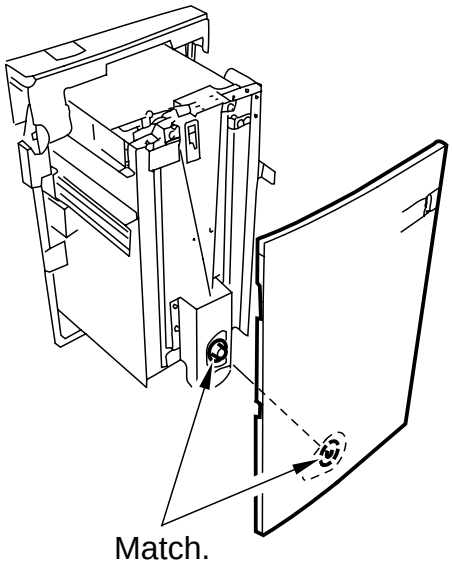

F08-301-04

When mounting the front cover, be sure that the gap between the front cover and the front upper cover is 3±1 mm.

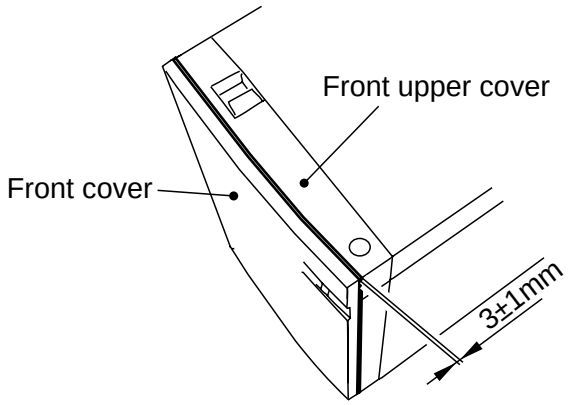

F08-301-05

If you inadvertently moved the paper level indicator belt behind the front cover when removing the front cover, or moved the deck lifter, move the deck lifter to its lower limit, and then move the drive belt in the direction of the arrow (shown in the figure to the right) until it stops so that the area of white increase; then, mount the front cover.
(If the deck is operated without matching the paper level indicator and the deck lifter position, the drive mechanisms of the paper level indicator can suffer damage.)

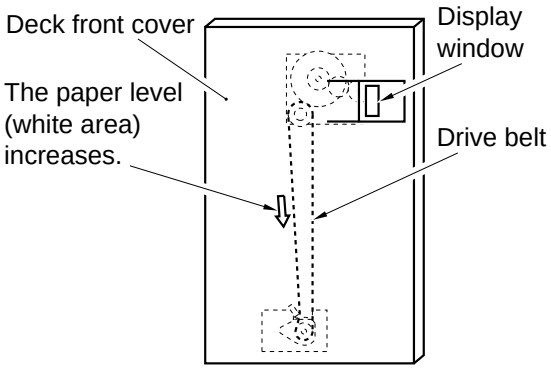

F08-301-06 Front View

COPYRIGHT © 2000 CANON INC.

3.1.2 Removing the Rear Cover

1) Disconnect the deck from the host machine, and remove the six screws [1]; then, detach the rear cover [2].

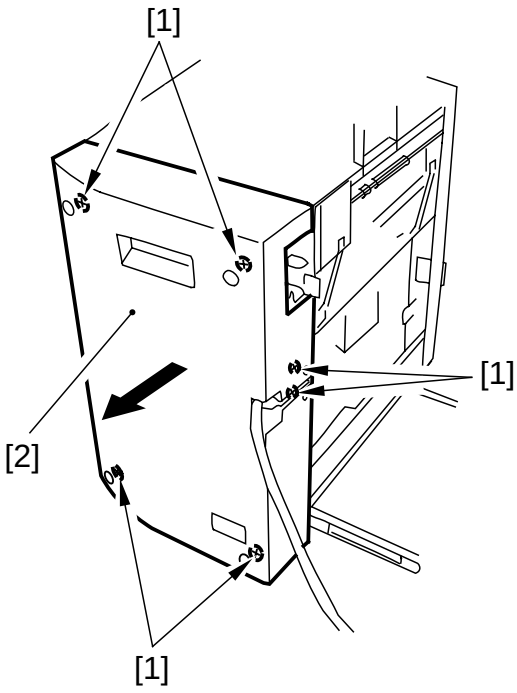

F08-301-07

3.1.3 Removing the Right Cover

1) Remove the three screws [1]; then, shift the right cover [2] to the front, and detach it to the rear.

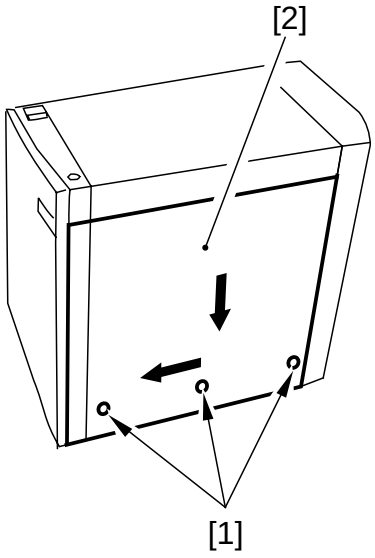

F08-301-08

3.1.4 Removing the Upper Cover

1) Remove the rear cover. (See p. 8-23P.)
2) Push down the latch plate [2] of the compartment [1] with your finger to open the compartment [1].

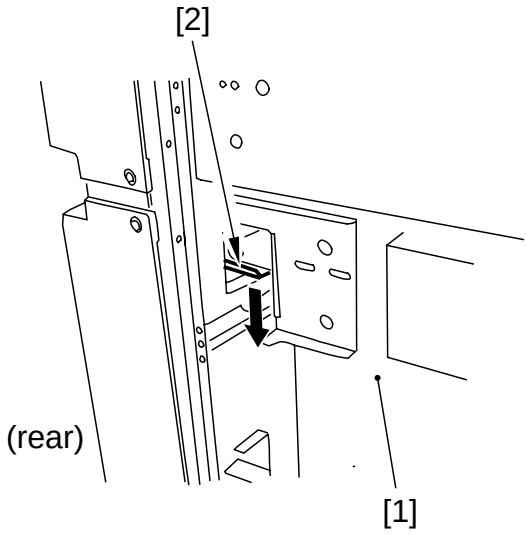

F08-301-09

3) Remove the three screws [3], and disconnect the connector [4]; then, remove the front upper cover [5].

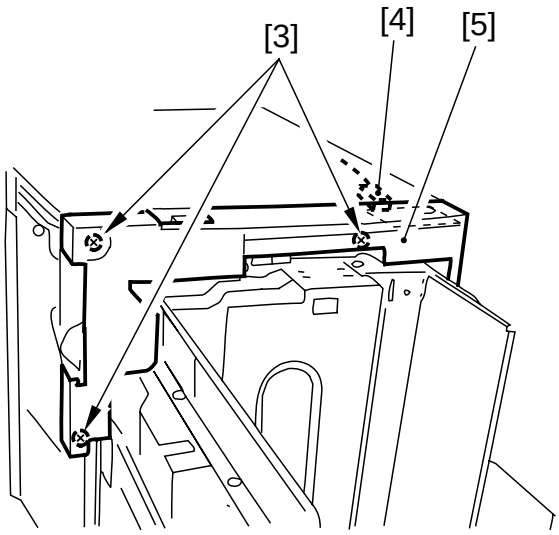

F08-301-10

4) Close the deck vertical path assembly, and remove the two screws [6]; then, detach the upper cover [7].

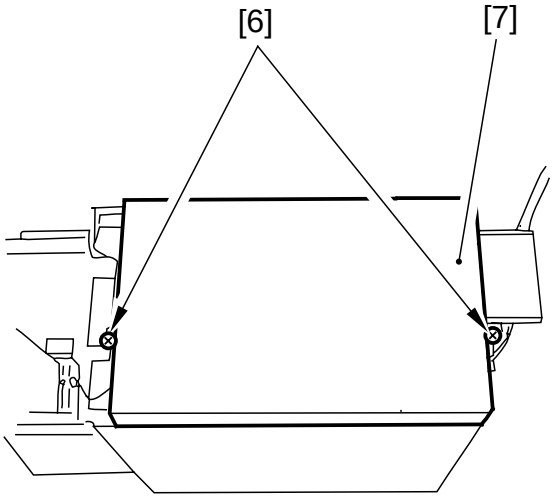

F08-301-11

COPYRIGHT © 2000 CANON INC.

3.2 General Descriptions

3.2.1 Disconnecting the Deck from the Host Machine

1) Place a stack of copy paper [3] (about 8 cm in height) on the floor for the deck [2] to prevent deforming the roll support plate [1].

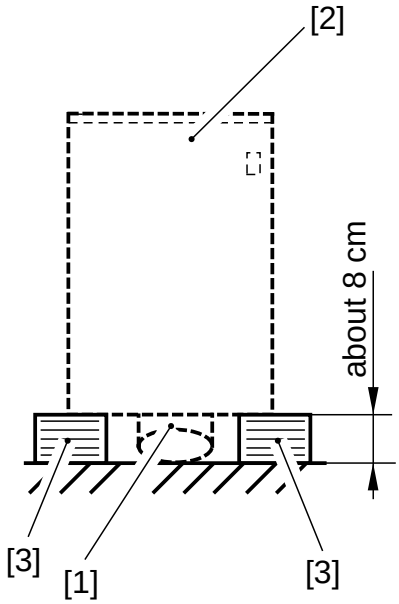

F08-302-01

2) Remove the right cover. (See p. 8-23P.)

3) Remove the four screws [5], and detach the deck [6] from the deck base [7].

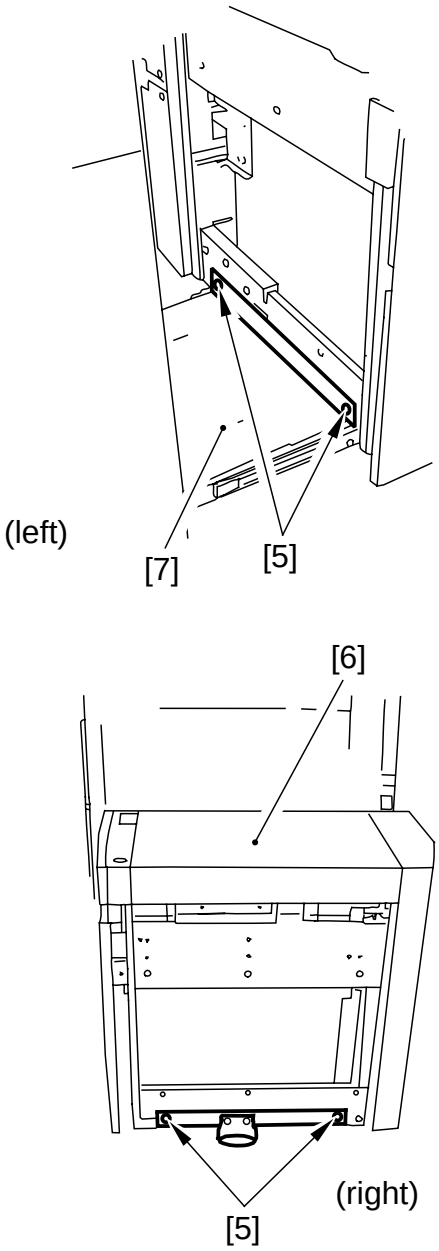

F08-302-02

4) Holding the deck [8] as shown, place it on the stack of paper prepared in step 1.

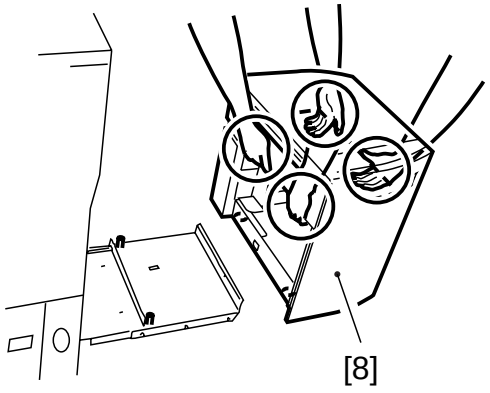

F08-302-03

COPYRIGHT © 2000 CANON INC.

3.2.2 Removing the Compartment

1) Place a stack of copy paper [3] (about 8 cm in height) on the floor for the deck [2] to prevent deforming the roll support plate [1].

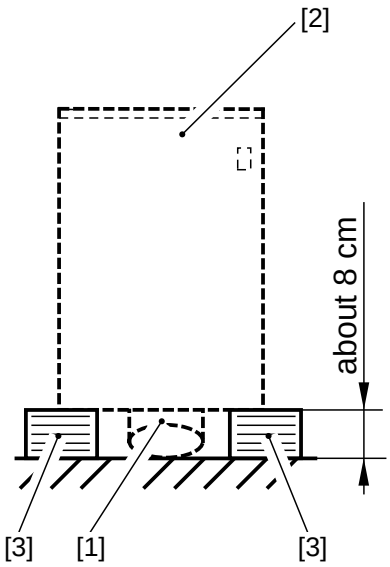

F08-302-04

2) Disconnect the deck from the host machine, and push down the latch plate [5] of the compartment [4] to open the compartment [4].

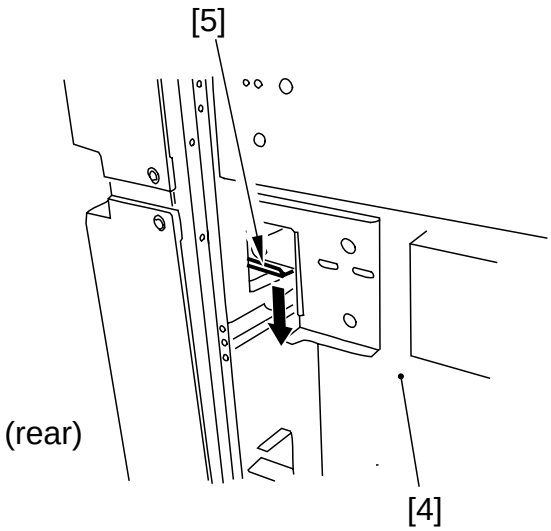

F08-302-05

3) Remove the screw [6] and the stopper plate [7], and pull out the compartment [8] to the front.

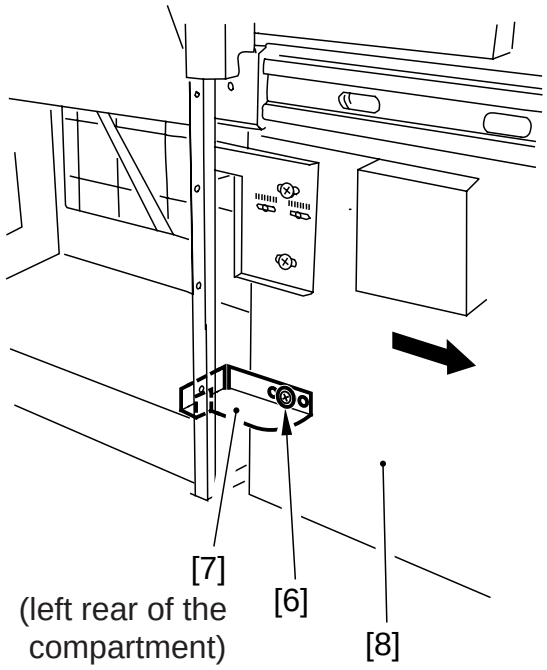

F08-302-06

4) Remove the right cover. (See p. 8-23P.)
5) Remove the screw [9] of the harness guide, and disconnect the connector [10]; then, remove the three screws [12] each (left, right) of the compartment rails [11]. Then, while lifting the compartment [8] slightly, detach it to the front.
6) Place the compartment [8] on the stack of paper prepared in step 1.

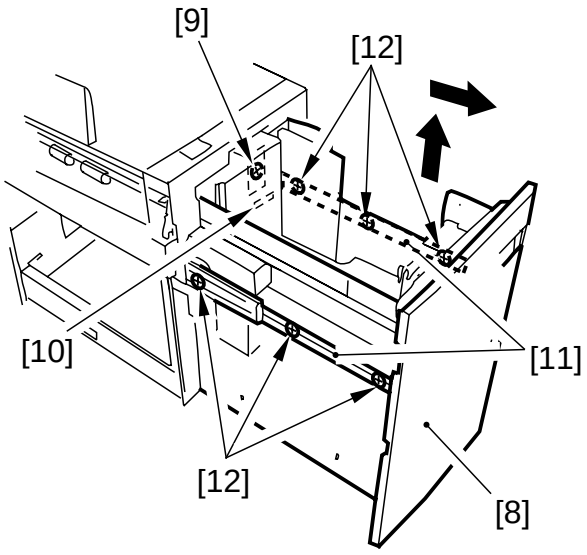

F08-302-07

COPYRIGHT © 2000 CANON INC.

3.2.3 Changing the Deck Paper Size Configuration

If the deck paper size configuration must be changed to suit the needs of the user, perform the following:

1) Open the compartment of the deck, and remove all paper.
2) If the lifter of the deck is up, turn on the host machine; then, push down the sensor lever [2] of the paper supply position sensor located inside the compartment [1] to move the lifter to its lower limit.

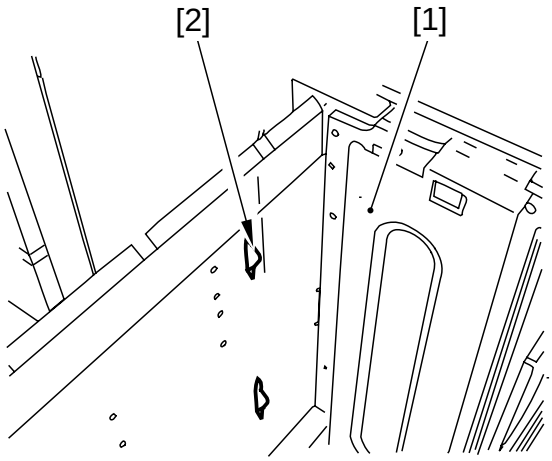

F08-302-08

3) Remove the screw [3], and mount the paper rear end guide plate [4] to suit the new paper size.
4) Remove the front cover.
5) Remove the screw [5], and mount the left/right guide plate [6] to suit the new paper size.
6) Enter the new paper size using the service mode of the host machine (COPIER>OPTION>ACC>DK-P; 0: A4, 1: B5, 2: LTR).

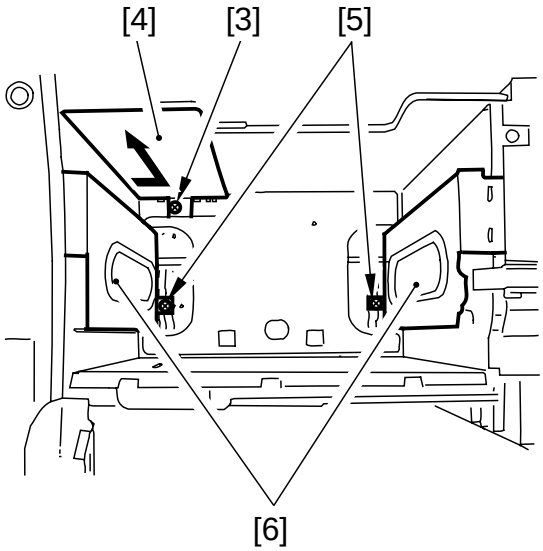

F08-302-09

3.2.4 Adjusting the Deck Registration

If the left/right registration (0±1.5 mm) must be adjusted, perform the following:

1) Slide out the compartment, and adjust the position of the latch plate [1] of the deck open solenoid (SL102) using the two screws [2]. (At this time, use the index [3] on the latch plate as a reference.)

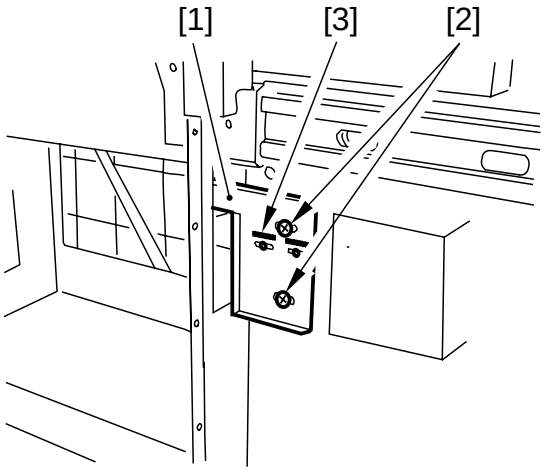

(left rear of the compartment)

F08-302-10

3.2.5 Adjusting the Roll Position

If the compartment cannot be opened/closed smoothly, requiring adjustment of the roll located at the front of the deck, perform the following:

1) Remove the front cover. (See p. 8-20P.)
2) While keeping the compartment fully slid out, adjust the four mounting screws [4] on the roll support plate [3] so that the roll [1] is about 3 mm from the floor [2].

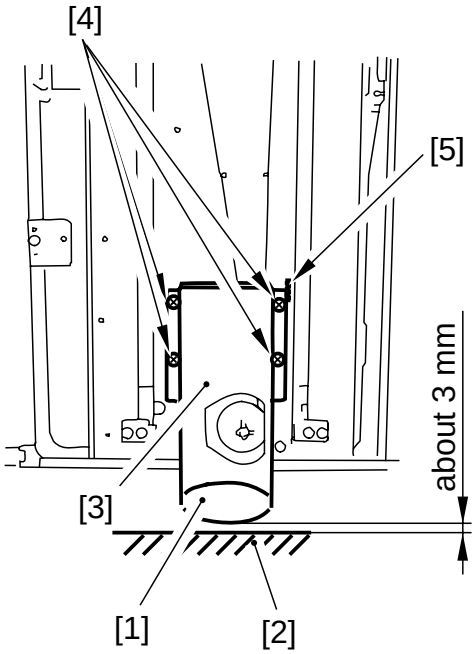

F08-302-11

COPYRIGHT © 2000 CANON INC.

3.3 Drive Mechanisms

3.3.1 Removing the Deck Pickup Clutch (CL102)

1) Remove the deck pickup unit. (See p. 8-38P.)
2) Disconnect the connector [1], and remove the E-ring [2]; then, remove the deck pickup clutch [3].

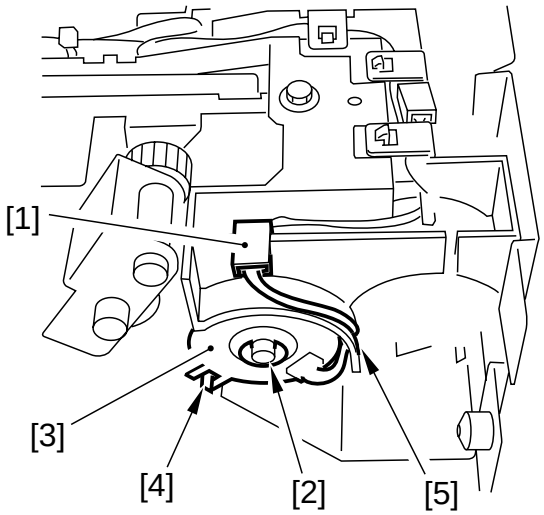

F08-303-01

When mounting the pickup clutch, be sure to engage the clutch with the stop ring [4]. In addition, be sure to hook the harness on the U-groove [5] of the guide.

3.3.2 Removing the Deck Main Motor (M101)

1) Disconnect the deck from its host machine, and remove the six screws; then, detach the rear cover.
2) Disconnect the connector [1], and remove the two screws [2]; then, remove the deck main motor. At this time, take care not to damage the gear found at the tip of the motor spindle.

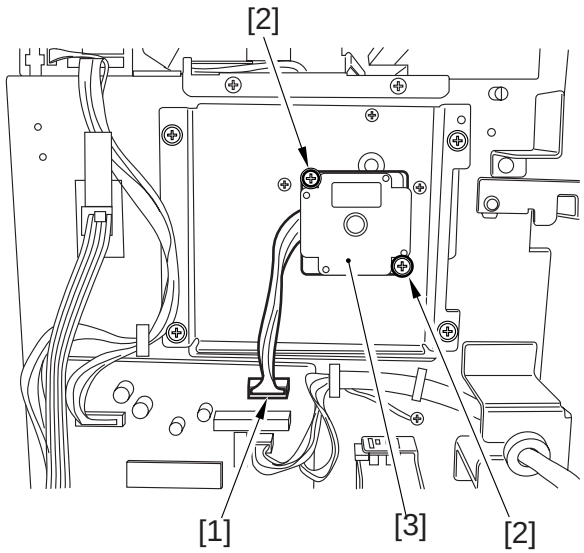

F08-303-02

3.3.3 Removing the Deck Lifter Motor (M102)

1) Open the compartment of the deck, and remove all paper.
2) Turn on the host machine; if the lifter of the deck is up, push the sensor lever [1] of the paper supply position sensor found inside the compartment with your finger to move the lifter [2] about 7 cm from the base plate of the compartment. Then, insert a hex wrench into the hole of the lifter drive shaft [3] to hold the shaft in place.

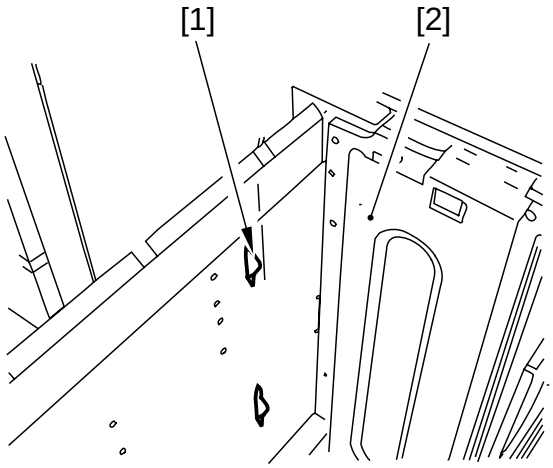

F08-303-03

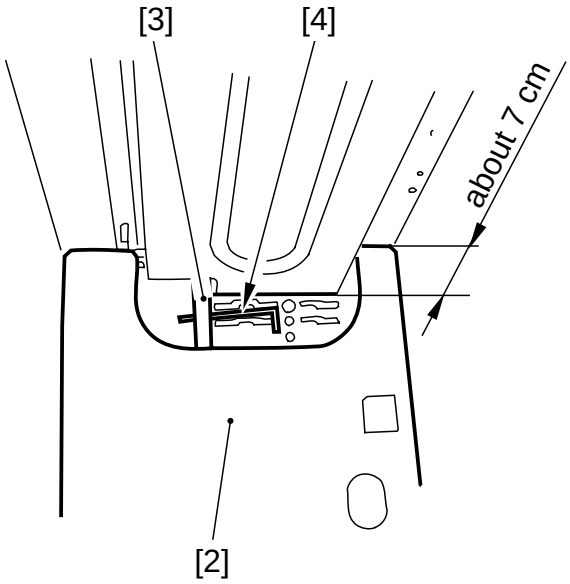

F08-303-04

COPYRIGHT © 2000 CANON INC.

3) Disconnect the compartment from the deck. (See p. 8-27P.)
4) Disconnect the connector [5], and remove the five screws [6]; then, detach the deck lifter motor unit [7].

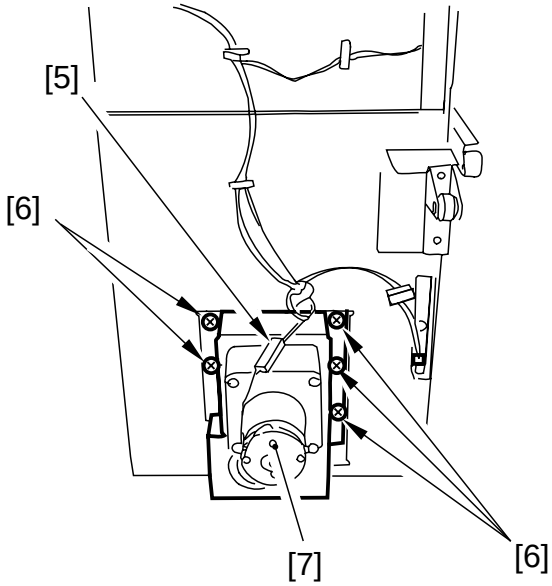

F08-303-05

3.3.4 Removing the Lifter Cable (front of the deck)

1) Open the compartment of the deck, and remove all paper.
2) Remove the screw, and detach the paper rear end guide plate from inside the compartment.
3) Push down the sensor lever [1] of the paper supply position sensor inside the compartment to move down the lifter until the left/right hole in the compartment side plate and the left/right hole in the lifter match; then, insert two long screwdrivers to hold the lifter in position.

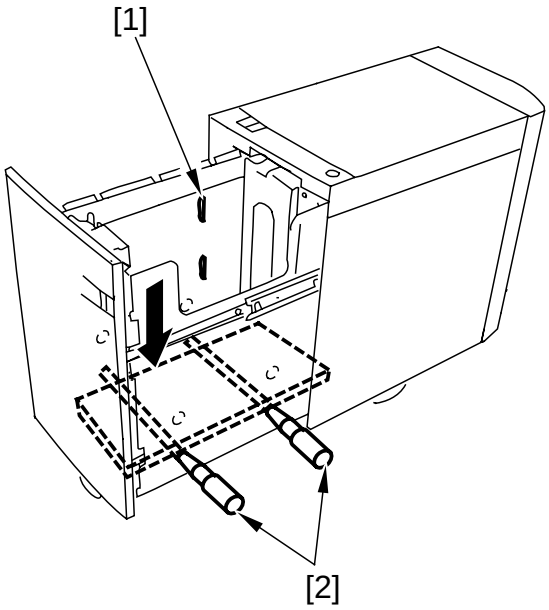

F08-303-06

4) Remove the front cover of the deck. (See p. 8-20P.)
5) Remove the four screws [3], and detach the roll support plate [4].

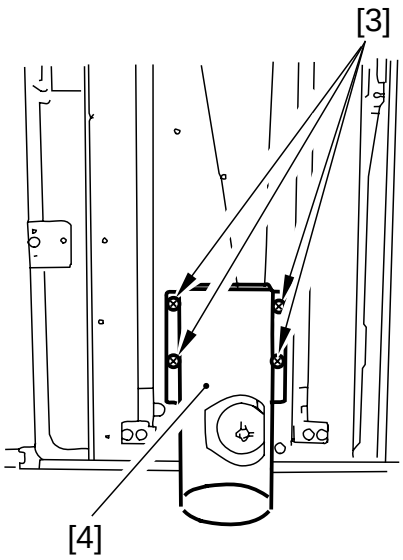

F08-303-07

6) Remove the coupling shaft [5] and the E-ring [6], and detach the pulley cover [7].
7) Remove the two screws [8], and remove the cable fixing plate [9] on the left; then, detach the lifter cable [10].
8) Remove the two screws [11] and the cable fixing plate [12] on the right; then, detach the lifter cable [13].
9) If you are removing the lifter cable [13] found inside from the pulley [14] also found inside, remove the two set screws [16] of the pulley [15] found on the outside, and detach the pulley [15] also found on the outside.

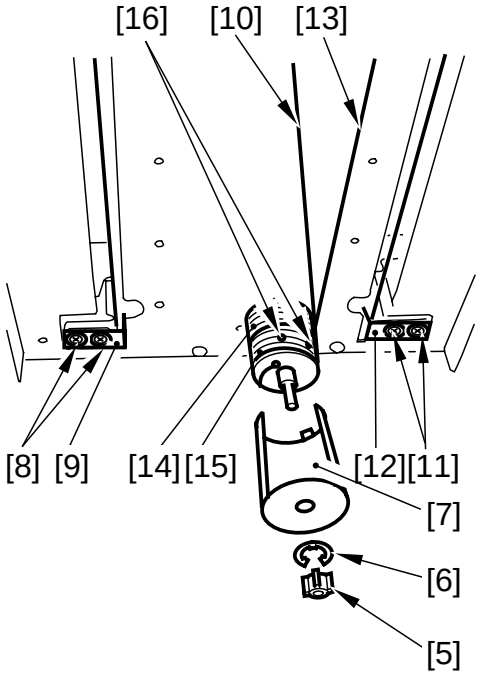

F08-303-08

COPYRIGHT © 2000 CANON INC.

3.3.5 Removing the Lifter Cable (rear of the deck)

1) Open the compartment of the deck, and remove all paper.
2) Remove the screw, and detach the paper rear guide plate from inside the compartment.
3) Push the paper supply position sensor [1] found inside the compartment with your finger to move down the lifter until the left/right hole in the compartment side plate and the left/right hole in the lifer match; then, insert two long screwdrivers [2]. At this time, try matching the top surface of the lifter with the marking on the left side plate of the compartment to facilitate the work.
4) Remove the compartment. (See p. 8-27P.)
5) Remove the screw [3], and detach the sensor plate [4].
6) Remove the screw [5], and detach the upper/lower sensor cover [6].
7) Disconnect the five connectors [7], and remove the five screws [8]; then, detach the metal plate [9].

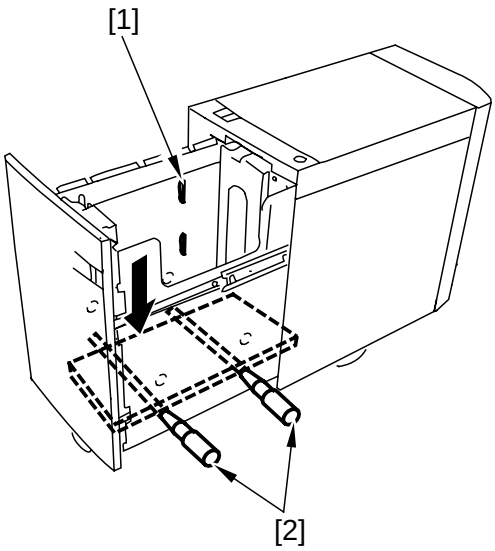

F08-303-09

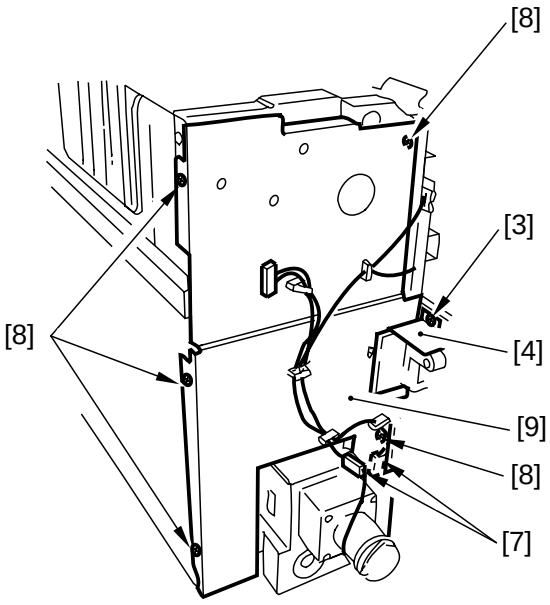

F08-303-10

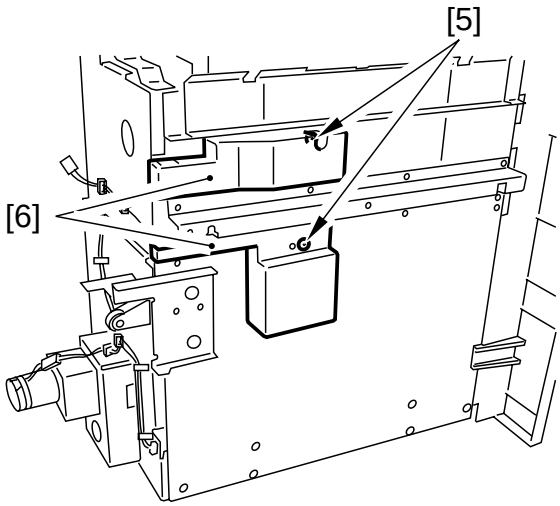

F08-303-11

8) Insert a hex wrench [11] into the home in the lifter drive shaft [10] to hold it in place.

If you failed to hold the lifter drive shaft as shown, the lifter cable will become slack when you move the lifter motor unit.

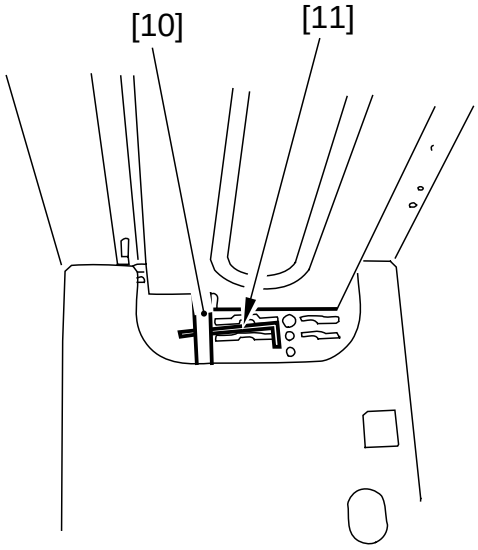

F08-303-12

9) Remove the five screws [12], and detach the lifter motor unit [13].

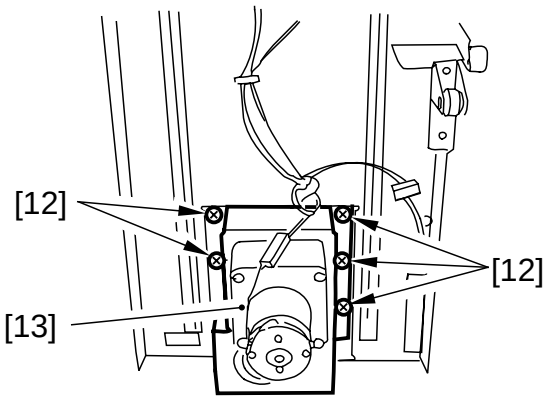

F08-303-13

COPYRIGHT © 2000 CANON INC.

3.3.6 Routing the Lifter Cable

1) Check to make sure that the lifter drive shaft and the lifter are held in place with a hex wrench [1] and long screwdrivers [2].
2) Secure the cable fixing plate [3] to the lifter with two screws.
3) Hook the lifter cable on the pulley [4].
4) Hook the ball of the lifter cable on the pulley [5] of the lifter drive shaft; then, wind the cable along the groove of the pulley about 1.5 times by hand. At this time, try to keep the lifter cable taut, i.e., the long screwdrivers used to hold the lifter in position are lifted slightly by the lifter cable.
5) Secure the pulley to the lifter drive shaft with two set screws [6].
6) Secure all pulleys you have removed to the lifter drive shaft; then, measure the distance from the base plate of the compartment to the top surface of the lifter, thereby making sure that the lifter is level.

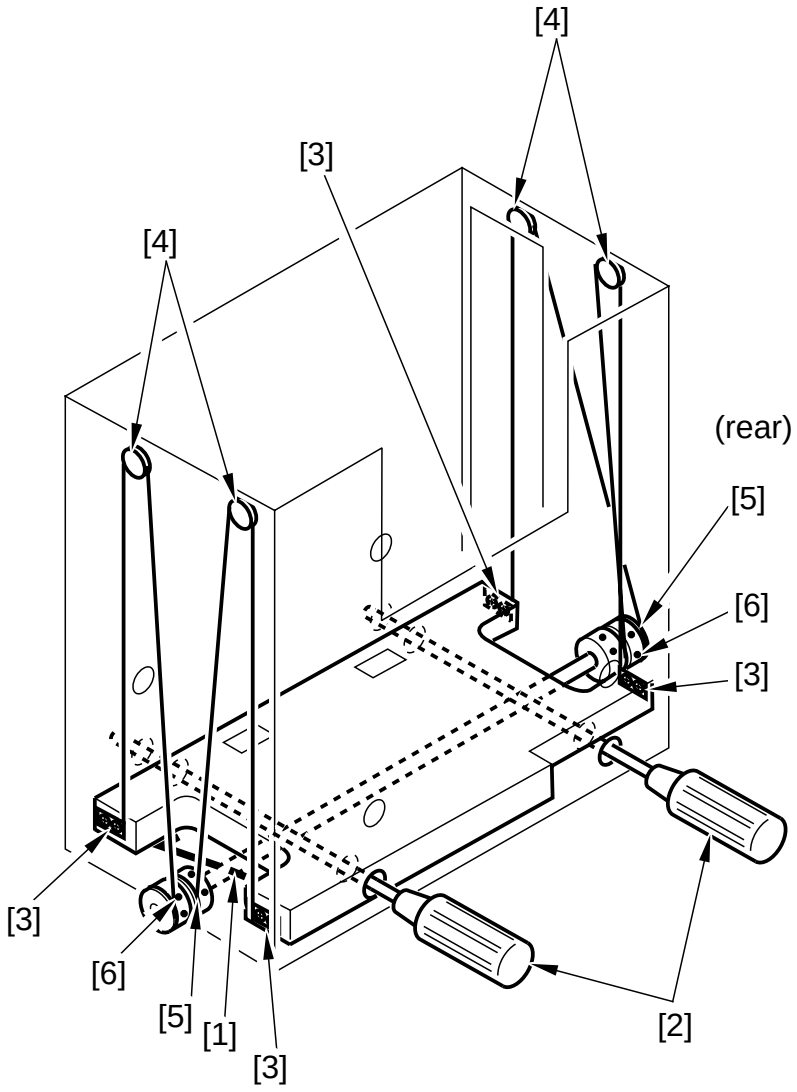

F08-303-14

3.4 Feeding Mechanisms

3.4.1 Removing the Deck Pickup Unit

1) Remove the upper cover. (see p. 8-24P.)
2) Disconnect the two connectors [1], and remove the five screws [2].
3) Remove the deck pickup unit [3].

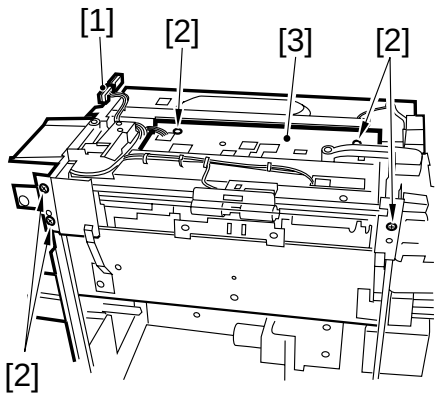

F08-304-01

When mounting the deck pickup unit [3], be sure to secure the three screws shown.

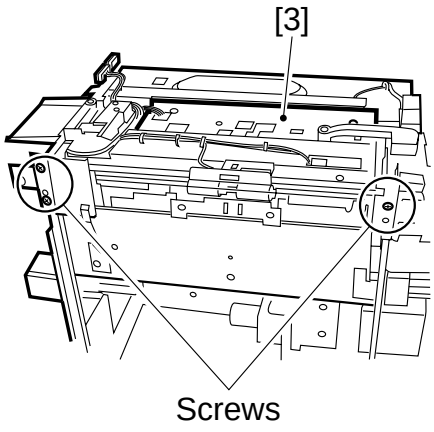

F08-304-02

3.4.2 Removing the Deck Pickup Roller

1) Remove the deck pickup unit. (See p. 8-38P.)
2) Turn over the deck pickup unit, and remove the two resin rings [1]; then, detach the deck pickup rollers [2].

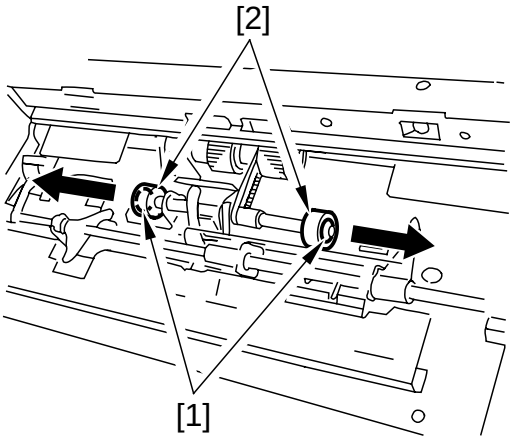

F08-304-03

COPYRIGHT © 2000 CANON INC.

3.4.3 Orientation of the Deck Pickup Roller

When mounting the deck pickup roller [1] at the front of the machine, be sure that the marking [2] on the collar (silver) is toward the front and the marking [3] on the side of the roller is toward the rear of the machine.

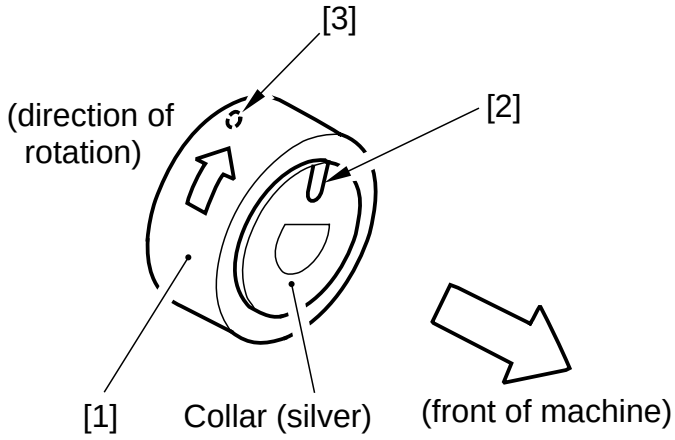

F08-304-04

When mounting the deck pickup roller [4] at the rear of the machine, be sure that the marking [5] found on the side of the roller and the marking [6] found on the collar (silver) are toward the rear of the machine.

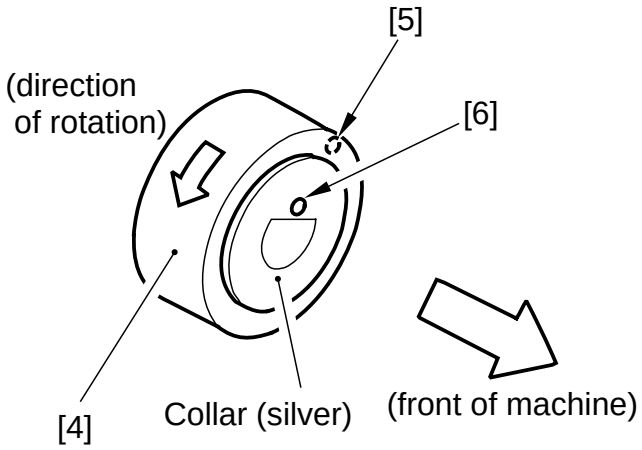

F08-304-05

3.4.4 Removing the Deck Pickup/Feed Roller

1) Remove the deck pickup unit. (See p. 8-38P.)
2) Turn over the deck pickup unit.
3) Remove the resin ring [1], and detach the deck pickup/feed roller [2] and the drive belt [3] toward the front.

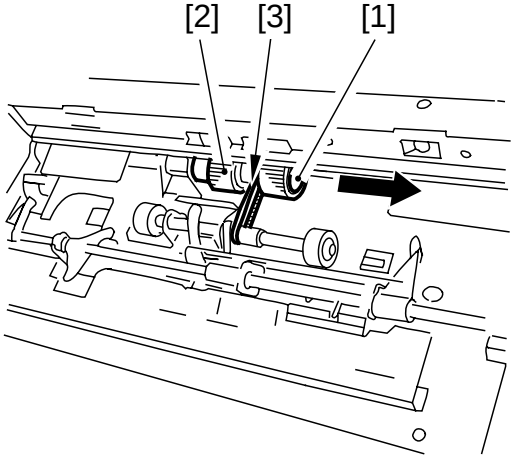

F08-304-06

COPYRIGHT © 2000 CANON INC.

3.4.5 Orientation of the Deck Pickup/Feed Roller

When mounting the deck pickup/feeding roller [1], be sure that the belt pulley [2] is toward the front of the machine. The pickup/feed roller rubber may be attached to the pickup/feed roller shaft in any orientation.

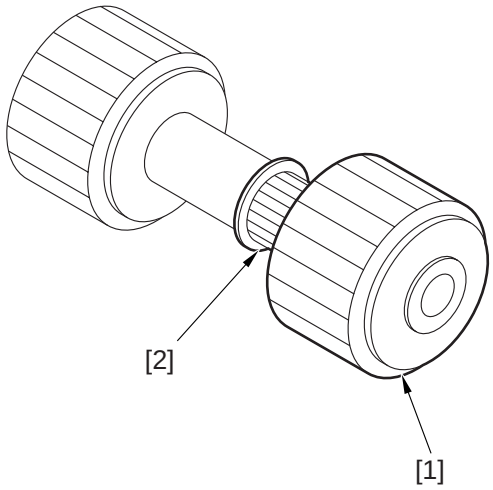

F08-304-07

3.4.6 Removing the Deck Separation Roller

1) Disconnect the deck from the host machine; then, remove the two screws [1], and detach the separation roller support plate [2].
2) Remove the joint, and detach the deck separation roller [3].

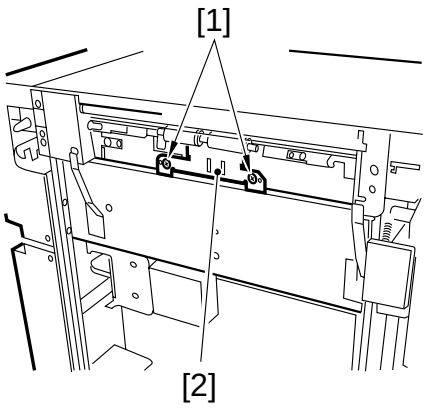

F08-304-08

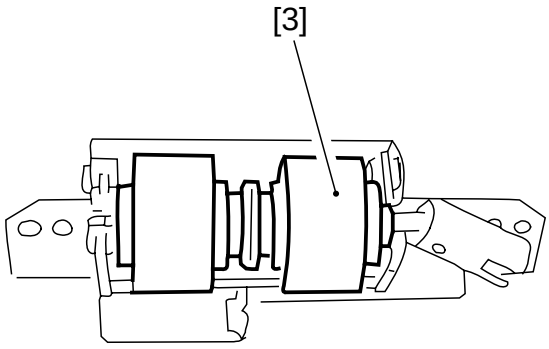

F08-304-09

COPYRIGHT © 2000 CANON INC.

The urethane sponge used on the deck separation roller is pink when new, and changes to orange and yellow as time goes by. The change is accelerated particularly when it is exposed to light, and all this is a general characteristic of urethane sponge, not affecting its quality. Multiple parts do not exist distinguished by color.

3.4.7 Adjusting the Pressure of the Deck Separation Roller

If pickup failure or double feeding occurs when the deck is used, adjust the position of the pressure sponge of the deck separation roller:

- If pickup failure occurs, move the spring in the direction of arrow A.
- If double feeding occurs, move the spring in the direction of arrow B.

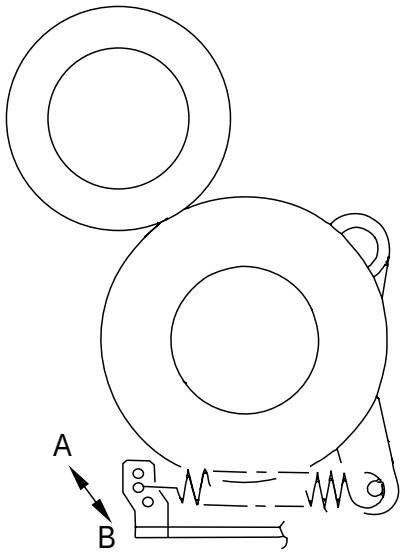

F08-304-10

3.4.8 Position of the Deck Pickup Roller Releasing Solenoid (SL101)

Take note of the positions of the two fixing screws [2] of the solenoid with reference to the index on the support plate before removing the deck pickup roller releasing solenoid [1] from the support plate; or, mark the position of the solenoid on the support plate with a scriber.

If the solenoid is to be mounted on its own, be sure to locate it in its initial position.

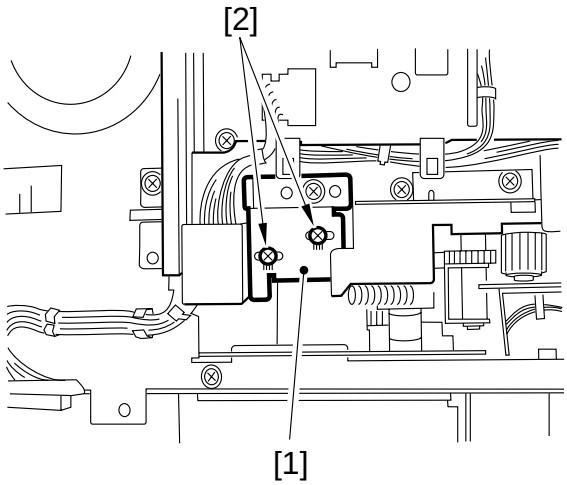

F08-304-11

COPYRIGHT © 2000 CANON INC.

3.5 Electrical Mechanisms

3.5.1 Removing the Deck Driver PCB

1) Disconnect the deck from its host machine; then, remove the six screws, and detach the rear cover.
2) Disconnect the eight connectors [1], and remove the four screws [2]; then, detach the deck driver PCB [3].

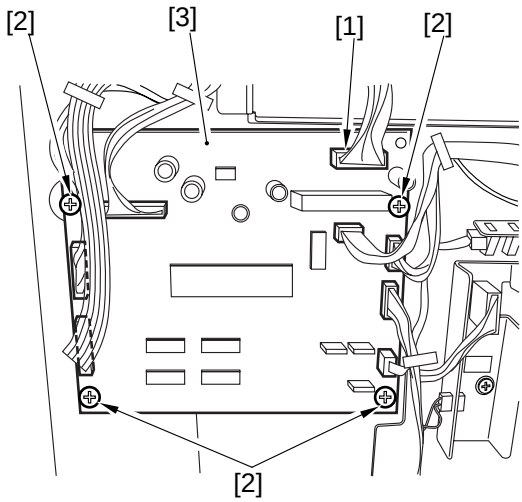

F08-305-01

3.5.2 Removing the Open Switch PCB

1) Disconnect the deck from the host machine, and push the latch plate [2] of the compartment [1] with your finger to open the compartment.

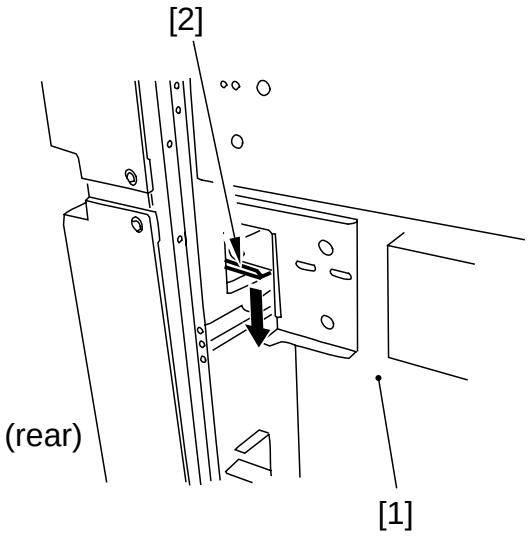

F08-305-02

2) Remove the three screws [3], and disconnect the connector [4]; then, detach the front upper cover [5].

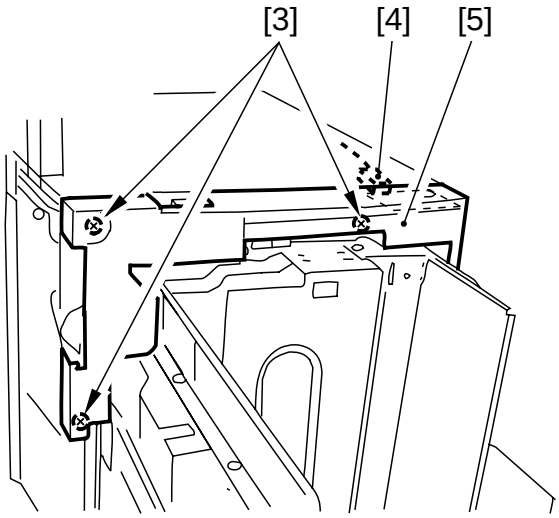

F08-305-03

3) Remove the two screws [6], and detach the open switch PCB [7].

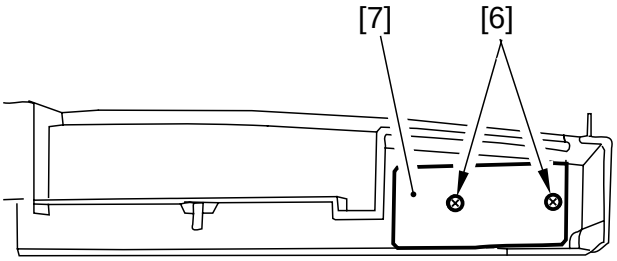

F08-305-04

When mounting the upper front cover, be sure to avoid biting the harness by the open switch PCB or forgetting to connect the connectors.

COPYRIGHT © 2000 CANON INC.

CHAPTER 9

SHIFT TRAY

COPYRIGHT © 2000 CANON INC.

1. Specifications

Item	Description	Remarks
Method of stacking	By tray lifter (using weight of paper, i.e., coil spring) Sorting by shifting trays	
Mode of stacking	Sort: w/ offset Non-sort: w/o offset	
Method of operation	Ascent/descent: by coil springs (descent by weight of paper) Shift: by motor	
Stack size	A3, A4, A4R, A5R, B4, B5, B5R 11×17, LTR, LTR-R, LGL, STMT-R postcard, transparency	Postcards and transparencies may not be sorted.
Weight of paper	64 to 200 g/m^2 By group	
Offset		
Distance of offset	55 mm	
Stack height	Sort: 500 sheets. (paper of 64 g/m^2) Non-sort: 250 sheets. (paper of 64 g/m^2)	
Alignment	Sort: 50 mm or less (direction of delivery) 20 mm or more (direction of shift, stack-to-stack) stack - 5 mm or less (direction of shift, within stack) Non-sort: 100 mm or less	
Detection of limit	Of height, by 2 sensors of reflecting type	Stops printing upon detection.
Power supply	24VDC/5 V (supplied by host machine)	
Maximum power consumption	2 W or less	
Dimensions	365.3 (W) x 547.0 (D) x 255.7 (H) mm	
Weight	4.2 kg	
Operating environment	Same as host machine	

T09-101-01

COPYRIGHT © 2000 CANON INC.

2. Names of Parts

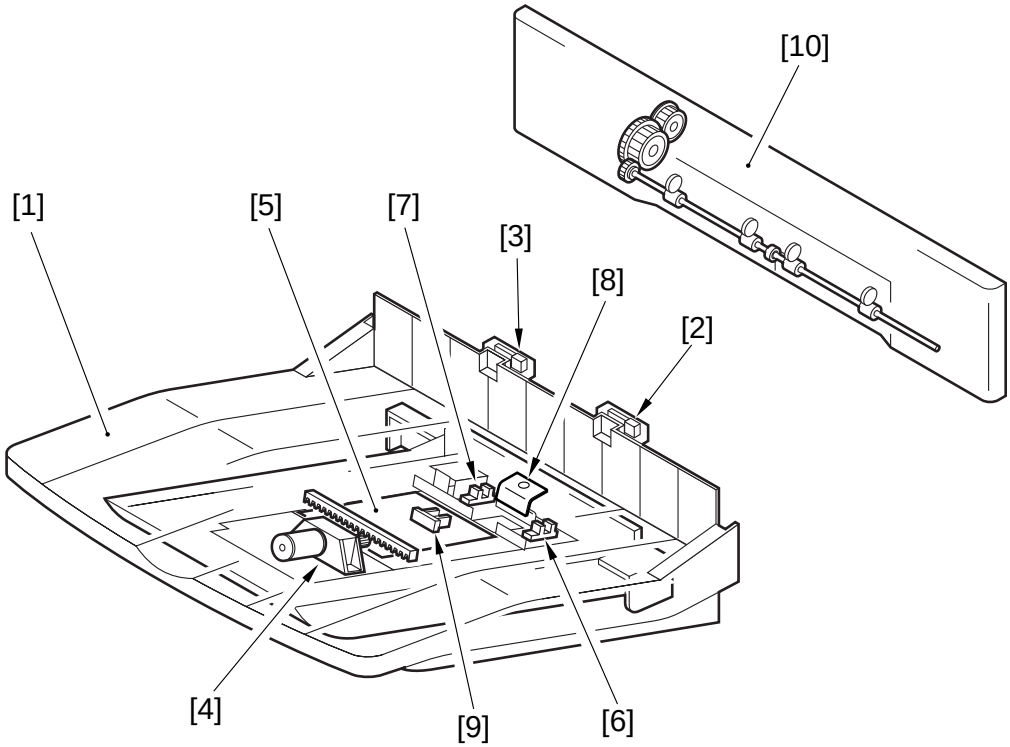

F09-201-01

[1] Tray
[2] Limit sensor (front)
[3] Limit sensor (rear)
[4] Tray drive unit
[5] Shift tray driver PCB
[6] HP sensor (front)
[7] HP sensor (rear)
[8] Light-blocking plate
[9] Tray paper sensor
[10] Delivery unit

COPYRIGHT © 2000 CANON INC.

3. Outline of the Electrical Circuit

3.1 Shift Tray Driver PCB

The shift tray driver PCB drives the shift motor in response to the shift control signal from the host machine, and provides the host machine with various sensor signals for control of shifting operations.

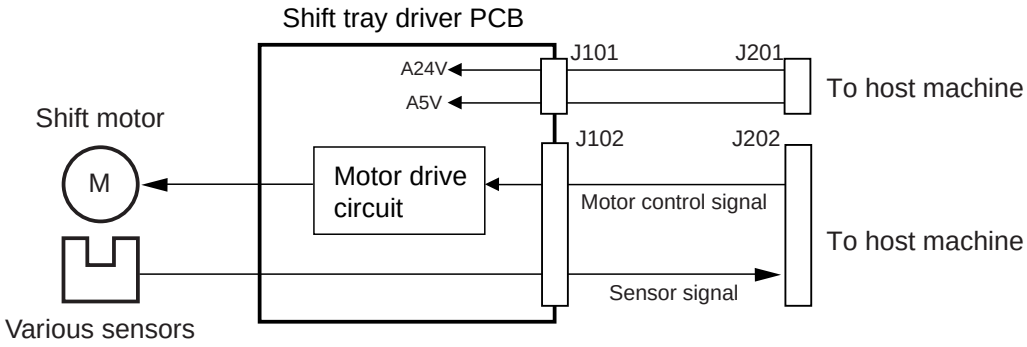

F09-301-01

3.2 Inputs to and Outputs from the Shift Tray Driver PCB

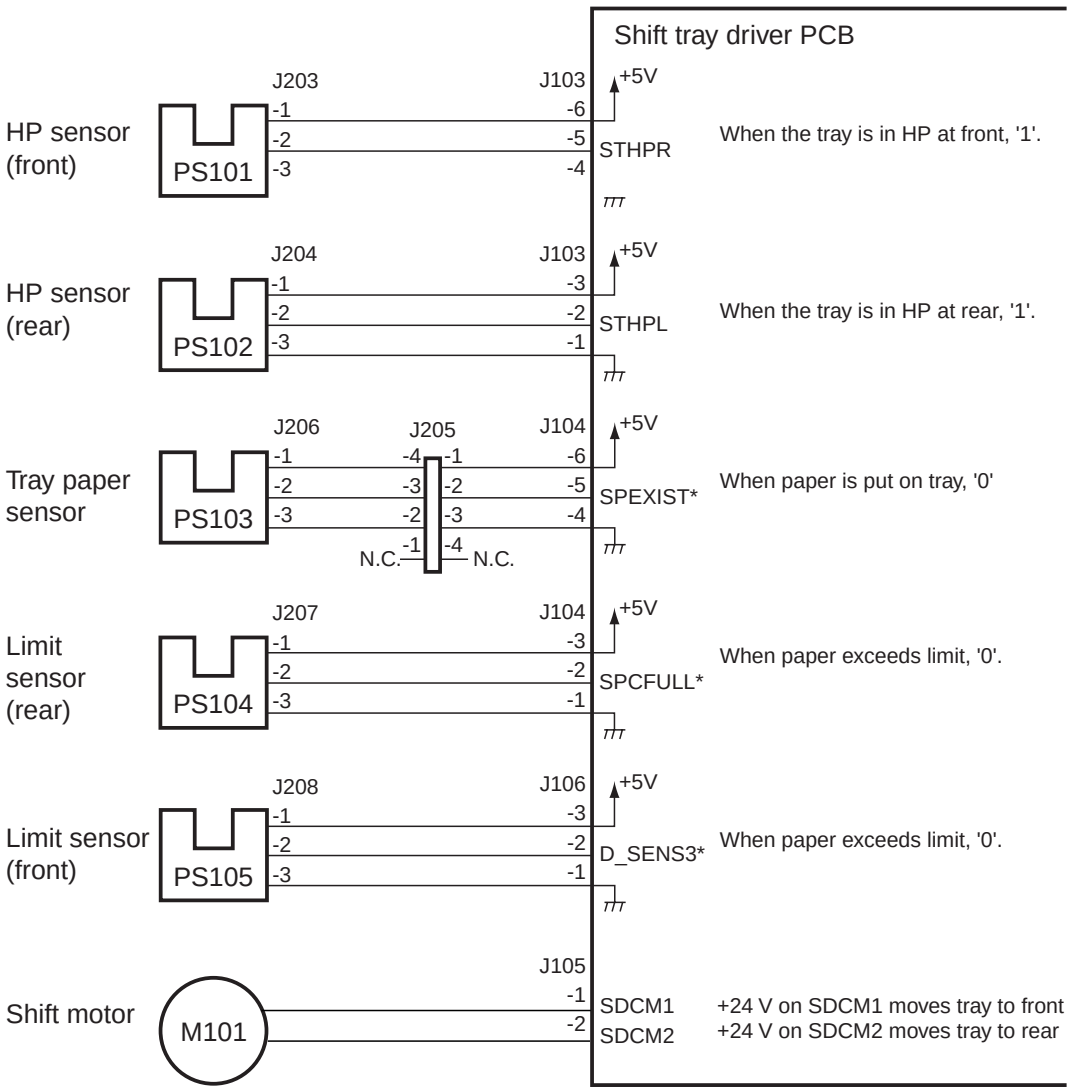

F09-302-01

COPYRIGHT © 2000 CANON INC.

4. Outline of Operations

4.1 Shifting

The machine shifts the tray to the front and the rear (over a distance of 55 mm) to sort (offset) sheets into groups. The tray is driven by a DC motor, and the rotation of the motor is converted into shifting motions by means of a rack and pinion gears.

The stop position of the tray at the front and the rear is controlled by the HP sensors mounted to the front and the rear.

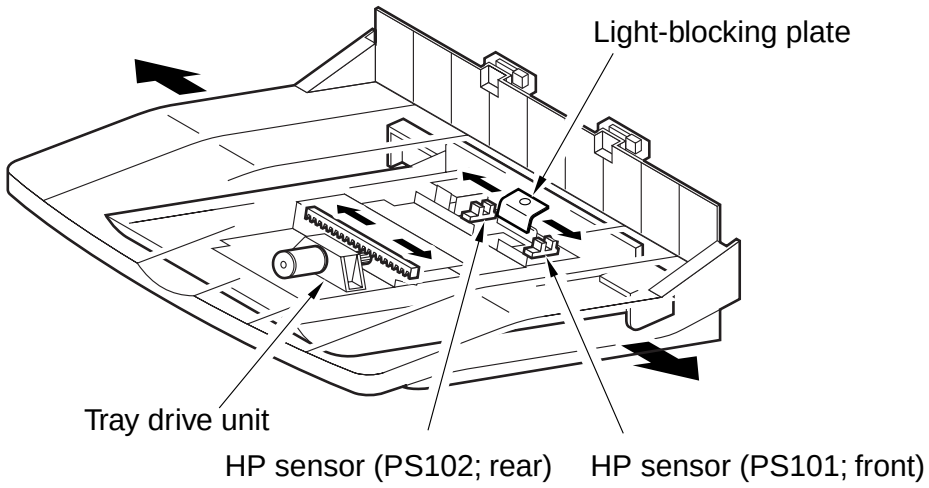

F09-401-01

4.2 Stacking

The machine's tray is supported by coil springs, and the tray moves down under the weight of the paper deposited on it. The stack is monitored by limit sensors (reflecting type photosensors); when the stack reaches a specific height, the shift tray driver PCB sends the FULL signal to the host machine.

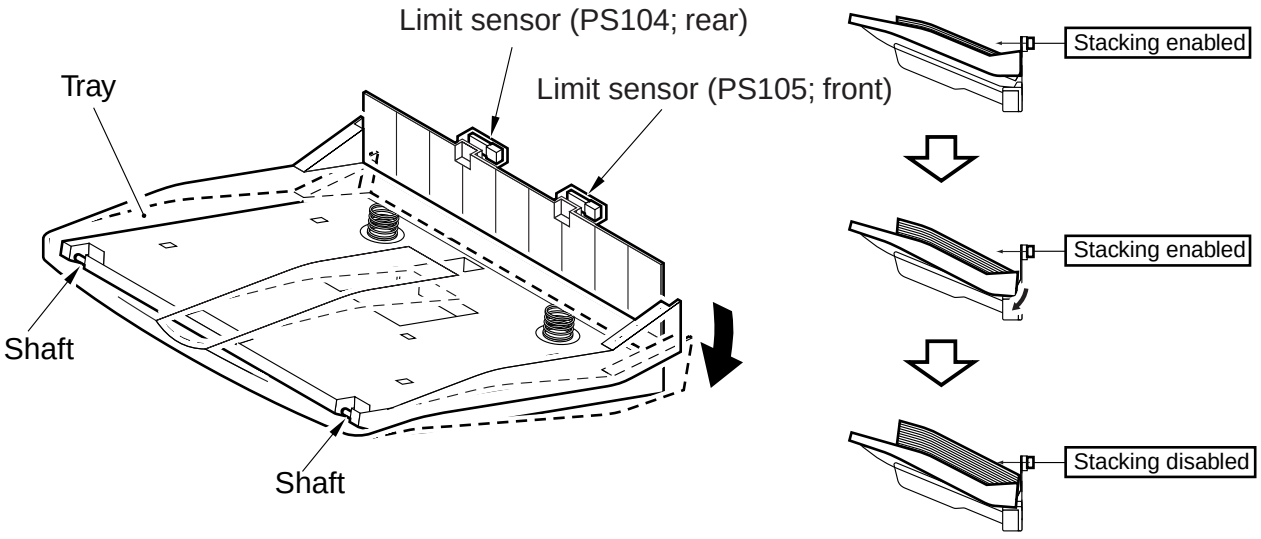

F09-402-01

COPYRIGHT © 2000 CANON INC.

4.3 Detecting paper

The presence/absence of paper on the tray is detected by the tray paper sensor mounted on the tray.

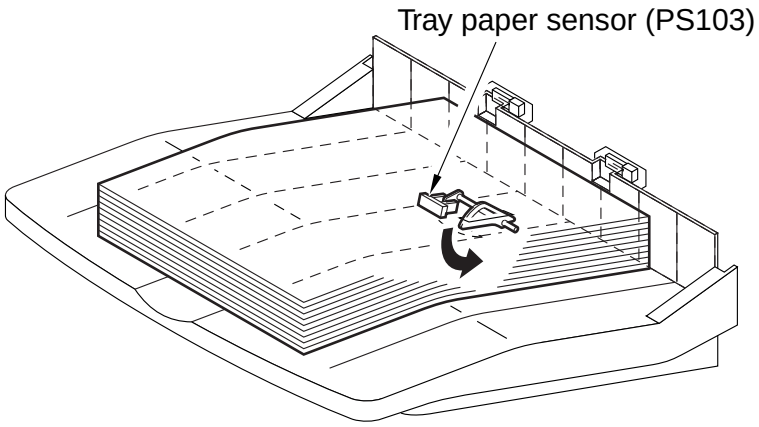

F09-403-01

4.4 Delivery

The sheets delivered by the host machine is moved through the delivery unit and then deposited on the tray. The delivery unit assembly is driven by the delivery motor through gears of the host machine's delivery assembly.

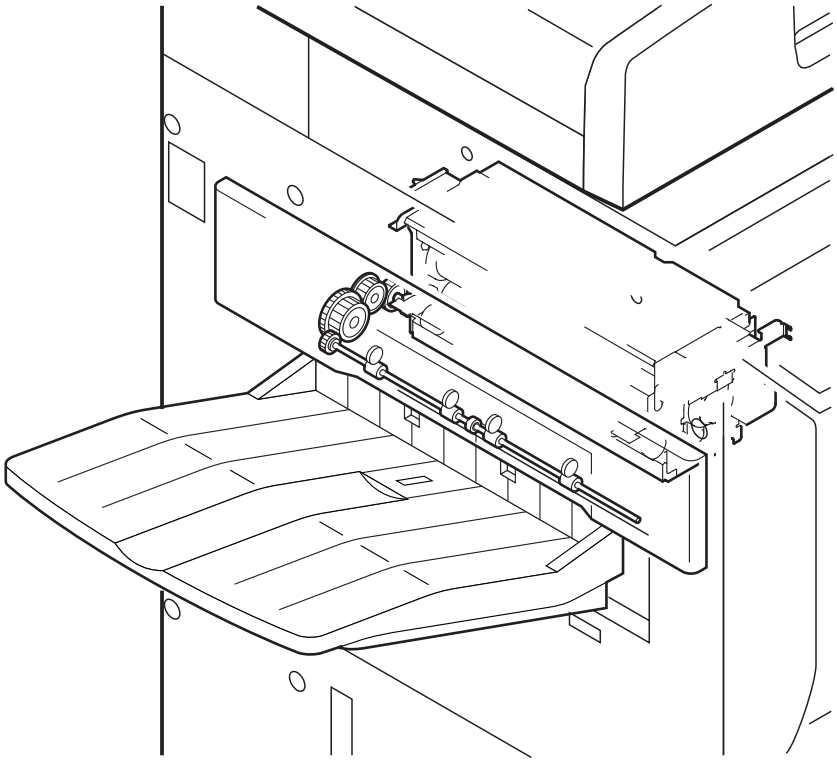

F09-404-01

COPYRIGHT © 2000 CANON INC.

5. Maintenance and Inspection

5.1 Adjusting the Limit Sensor Position

Be sure to perform the following work if you have disassembled or replaced the limit sensor (front, rear).

5.1.1 Related Service Mode

COPIER>FUNCTION>SNES-ADJ>STCK-LIMIT

Use it to adjust the position of the limit sensor (PS104, PS105) of the shift tray.

- 'ON' is indicated if either of the limit sensors (or both sensors) detects paper.
- 'OFF' is indicated if neither of the limit sensors detects paper.

5.1.2 Making Adjustments

1) Turn off the host machine's main power switch.
2) Remove the delivery unit from the main machine. (Keep the tray connected to the host machine.)
3) Temporarily fix the limit sensor (font, rear) at the point farthest from the paper.
4) Place a stack of 60 mm in height on the shift tray (where either of the limit sensors can detect it).
5) Turn off the host machine's main power switch; then, select 'STCK-LIMIT', and press the OK key.
6) While referring to the indication, move the sensor toward the paper until 'ON' is indicated; and secure the sensor in place.
7) Move the paper where it is detected by the paper.
8) Repeat steps 4) through 6) for the sensor.
9) After making the adjustments, turn off the host machine's main power switch.
10) Mount the delivery unit.

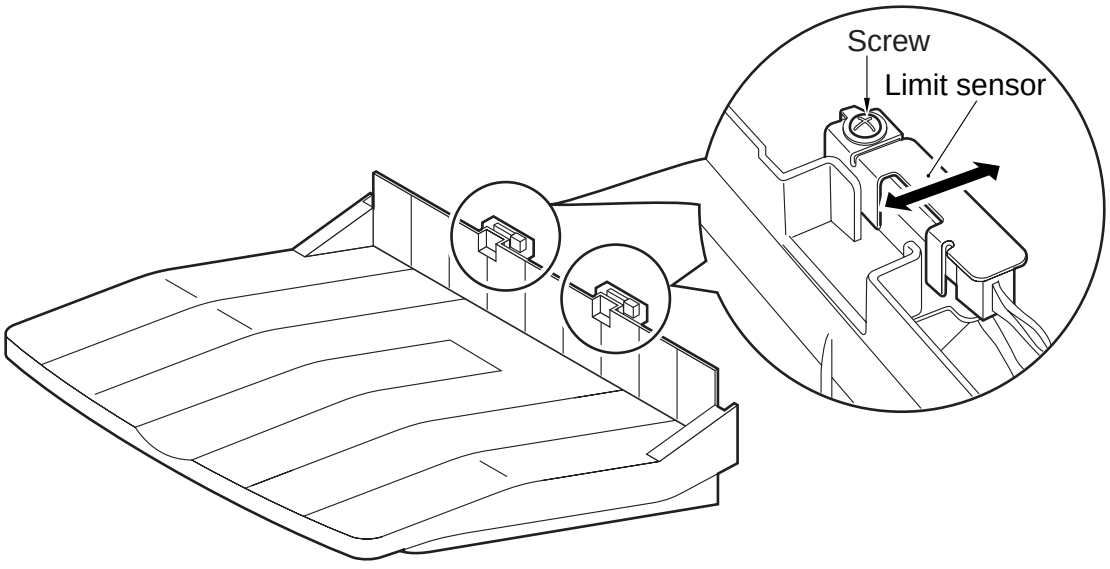

F09-501-01

1) When adjusting the position of the limit senor (front, rear), be sure to start at the point farthest from the paper, moving closer to the sensor.
2) The grounding wire terminal of the limit sensor (front, rear) must be level in relation to the sensor as shown; in addition, make sure that the bend of the terminal must face downward.

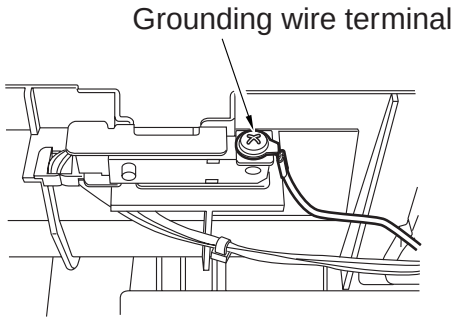

F09-501-02

COPYRIGHT © 2000 CANON INC.

6. Disassembly and Assembly

The machine's mechanical characteristics and features are as described herein, and the machine may be disassembled or assembled as instructed while keeping the following in mind:

1. ⚠ The power plug must be disconnected for the work.
2. Unless otherwise indicated, the machine may be assembled by reversing the steps used to disassemble it.
3. The screws must be identified by type (length, diameter) and location.
4. The mounting screw of the grounding wire and the varistors is equipped with a toothed washer to ensure electrical continuity. They must not be left out when fitting the screws.
5. As a rule, the machine must not be operated with any of its parts removed.
6. The front door switch or the main power switch must be turned off before sliding out the duplex unit or the fixing/feeding unit.
7. ⚠ Toner must not be thrown away into fire to avoid explosion.

COPYRIGHT © 2000 CANON INC.

6.1 Removing the Shift Tray Driver PCB

1) Remove the shift tray from the machine.
2) Release the two retaining claws [1], and detach the cable retaining plate [2].

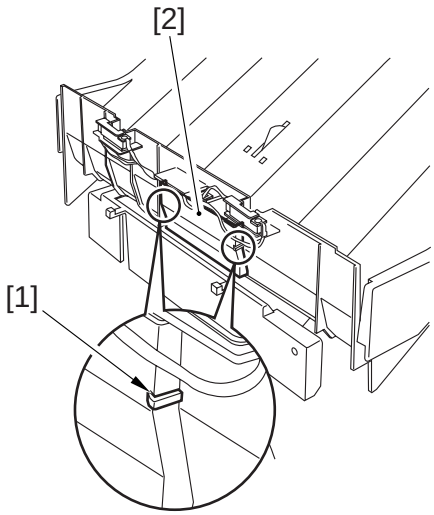

F09-601-01

3) Remove the two screws [3], and detach the two limit sensors [4] and the two grounding wires.
4) Free the cable of the limit sensor from the cable clamp [5], and disconnect the connector [6].

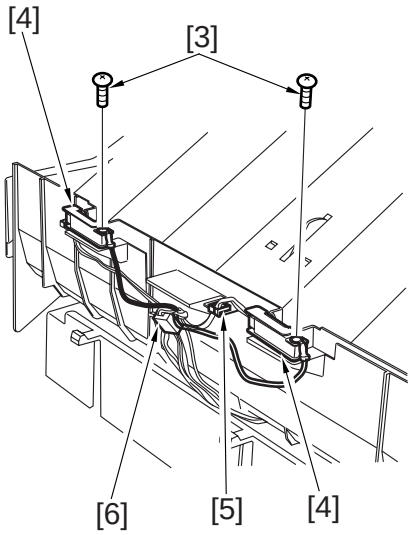

F09-601-02

COPYRIGHT © 2000 CANON INC.

5) Remove the four screws [7] from the back of the shift tray, and remove the four shaft retainers [8]; then, detach the tray drive assembly [9].

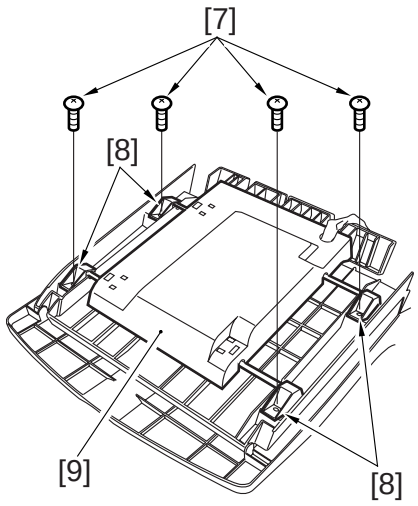

F09-601-03

6) Pull off the shaft [10] from the tray drive assembly, and remove the three screws [11]; then, detach the shielding cover [12].

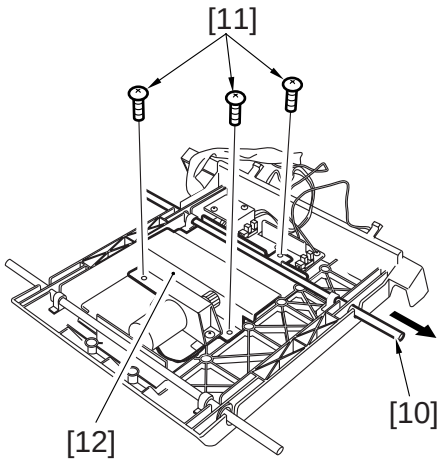

F09-601-04

7) Remove the four screws [13], and detach the shift tray driver PCB [14].

Points to Note When Mounting
Be sure to adjust the position of the limit sensor (front, rear; see 5.1 “Adjusting the Limit sensor Position.”)

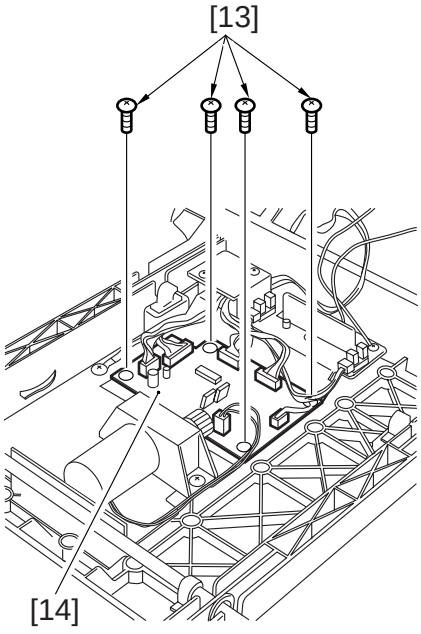

F09-601-05

6.2 Removing the Tray Drive Unit

1) Perform steps 1) through 6) to detach the shift tray driver PCB.
2) Remove the two screws [15], and disconnect the connector [16]; then, detach the tray drive unit [17].

Points to Note When Mounting
Be sure to adjust the position of the limit sensor (front, rear; see 5.1 “Adjusting the Limit sensor Position.”)

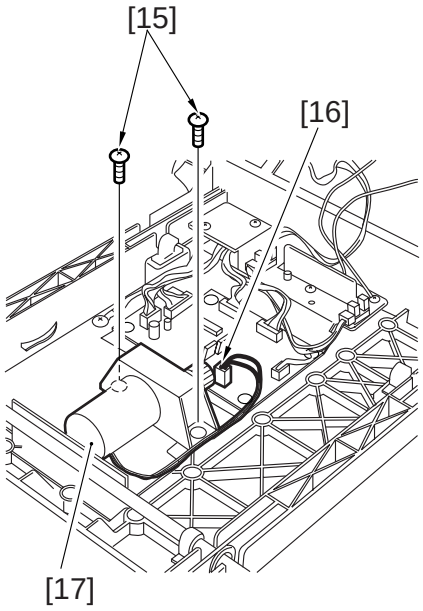

F09-602-01

COPYRIGHT © 2000 CANON INC.

TROUBLESHOOTING
SERVICE MANUAL

COPYRIGHT © 2000 CANON INC.

Contents

CHAPTER 1 MAINTENANCE AND INSPECTION

1. Periodically Replaced Parts 1-1T
   - 1.1 Guide to Timing of Replacement 1-1T
   - 1.2 Reader Unit 1-1T
   - 1.3 Printer Unit 1-2T
2. Consumables and Durables 1-3T
   - 2.1 Guide to Timing of Replacement 1-3T
   - 2.2 Reader Unit 1-3T
   - 2.3 Printer Unit 1-4T
   - 2.4 Side Paper Deck 1-5T
3. Periodical Servicing 1-6T
4. Periodical Servicing Chart 1-9T
   - 4.1 Reader Unit 1-9T
   - 4.2 Printer Unit 1-9T
5. Points to Note for Periodical Servicing 1-12T
6. Cleaning the photosensitive drum 1-13T

CHAPTER 2 IMAGE ADJUSTMENT BASIC PROCEDURE

1. Making Pre-Checks 2-1T
2. Making Checks on the Printer Unit (1/2) 2-2T
3. Making Checks on the Printer Unit (2/2) 2-3T
4. Making Checks on the Reader Unit 2-4T

CHAPTER 3 STANDARDS AND ADJUSTMENTS

1. Image Adjustments 3-1T
   - 1.1 Standards of Image Position ... 3-1T
   - 1.2 Checking the Image Position .. 3-2T
   - 1.3 Adjusting the Left/Right Image Margin 3-2T
     - 1.3.1 Cassette 3/4 ..... 3-2T
     - 1.3.2 Left/Right Front Deck 3-3T
     - 1.3.3 Manual Feed Tray 3-3T
     - 1.3.4 Duplex Feeding Unit 3-4T
     - 1.3.5 Side Paper Deck 3-4T
   - 1.4 Adjusting the Image Leading Edge Margin 3-5T
   - 1.5 Adjusting the Left/Right Non-Image Width 3-5T
   - 1.6 Adjusting the Leading Edge Non-Image Width 3-6T
2. Scanning System 3-7T
   - 2.1 Replacing the Scanner Drive Cable 3-7T
   - 2.2 Adjusting the Position of the Scanner Mirror Base 3-7T
   - 2.3 After Replacing the Scanning Lamp 3-7T
3. Image Formation System 3-8T
   - 3.1 Routing the Grid Wire of the Primary Charging Assembly 3-8T
   - 3.2 Routing the Charging Wire of Charging Assemblies 3-8T

COPYRIGHT © 2000 CANON INC.

3.3 Mounting the Drum Cleaning Blade 3-8T
3.4 Mounting the Developing Blade 3-8T
3.5 Replacing the Potential Sensor/ Potential Control PCB 3-8T
4. Pickup/Feeding System 3-9T
4.1 Orientation of the Deck/Cassette Pickup Roller 3-9T
4.2 Orientation of the Deck/ Cassette Separation Roller 3-10T
4.3 Orientation of the Feeding Roller of the Deck/Cassette Pickup Assembly 3-10T
4.4 Orientation of the Pickup Roller of the Side Paper Deck 3-11T
4.5 Orientation of the Feeding Roller of the Side Paper Deck 3-12T
4.6 Adjusting the Pressure of the Separation Roller of the Deck/ Cassette 3-13T
4.7 Adjusting the Pressure of the Separation Roller of the Manual Feed Tray 3-14T
4.8 Adjusting the Fixing Inlet Guide Solenoid (SL1) 3-15T
4.9 Adjusting the Position of the Pickup Solenoid (SL3, SL4) of the Cassette 3/4 ..... 3-16T
4.10 Adjusting the Position of the Delivery Flapper Solenoid (SL5) 3-17T
4.11 Adjusting the Position of the Right Deck Pickup Solenoid (SL6) 3-17T
4.12 Adjusting the Position of the Left Deck Pickup Solenoid (SL7) 3-18T
4.13 Adjusting the Position of the Reversing Flapper Solenoid (SL8) 3-18T
4.14 Adjusting the Position of the Fixing Web Solenoid (SL9) 3-19T
4.14.1 New Fixing Web 3-19T
4.14.2 Existing Fixing Web 3-19T
4.15 Position of the Side Paper Deck Pickup Roller Releasing Solenoid 3-20T
4.16 Attaching the Timing Belt of the Manual Feed Tray Assembly 3-20T
4.17 Attaching the Drive Belt 3-21T
5. Fixing System 3-22T
5.1 Points to Note When Mounting the Fixing Heater 3-22T
5.2 Position of the Fixing Inlet Guide 3-22T
5.3 Adjusting the Lower Roller Pressure (nip) 3-23T
5.3.1 Taking Measurements 3-23T
5.3.2 Standards 3-23T
5.3.3 Making Adjustments 3-23T
6. Laser Exposure System 3-24T
6.1 When Replacing the Scanner Unit 3-24T
7. Electrical Parts 3-25T
7.1 When Replacing the CCD Unit 3-25T
7.2 When Replacing the Reader controller PCB 3-25T
7.3 When Replacing the Main Controller PCB 3-26T
7.4 When Replacing the HDD Unit 3-26T
7.5 When Replacing the DC Controller PCB 3-27T
7.6 When Replacing the High-Voltage PCB 3-28T
8. Checking the Surface Potential Control System 3-29T
8.1 Outline 3-29T
8.2 Disabling the Auto Control Mechanism 3-29T
8.3 Zero Level Check 3-30T
8.3.1 Method 1 ..... 3-30T
8.3.2 Method 2 ..... 3-32T
8.4 Checking the Potential System 3-35T

COPYRIGHT © 2000 CANON INC.

8.5 Conversion Table for the Potential Control System 3-37T
8.6 Emergency Measures for a Fault in the Potential Sensor ... 3-41T
9. Checking the Environment Sensor 3-42T
9.1 Procedure 3-42T
9.2 Emergency Measure for a Fault in the Environment Sensor 3-42T
10. Checking the Photointerrupters 3-43T
10.1 Using a Meter 3-43T
10.2 Using Service Mode 3-43T
10.3 Check List 3-43T

CHAPTER 4 TROUBLESHOOTING IMAGE FAULTS/ MALFUNCTIONS

1. Making Initial Checks in the Event of an Image Fault 4-1T
1.1 Site Environment 4-1T
1.2 Checking the Originals for Symptoms 4-1T
1.3 Copyboard Cover, Copyboard Glass, and Standard White Plate 4-1T
1.4 Checking the Charging Assemblies 4-1T
1.5 Checking the Developing Assembly 4-2T
1.6 Checking the Paper 4-2T
1.7 Checking the Periodically Replaced Parts 4-2T
1.8 Image Adjustment Basic Procedure 4-2T
1.9 Others 4-2T
2. Samples of Image Faults 4-4T
3. Troubleshooting Image Faults 4-5T
3.1 The image is too light (halftone) 4-5T
3.2 The print is too light (including solid black area) 4-6T
3.3 The print is too light (overall, appreciably) 4-6T
3.4 The print has uneven density (darker at front) 4-7T
3.5 The print has uneven density (lighter at front) 4-7T
3.6 The print is foggy (overall) 4-8T
3.7 The print if foggy vertically 4-9T
3.8 The print has black lines (vertical, blurred, thick) 4-9T
3.9 The print has black lines (vertical, fine) 4-10T
3.10 The print has white spots (vertical) 4-11T
3.11 The print has white lines (vertical) 4-11T
3.12 The print has white spots (horizontal) 4-12T
3.13 The back of the print is soiled 4-13T
3.14 The print has fixing faults 4-14T
3.15 The print has a displaced leading edge (appreciably large margin) 4-15T
3.16 The print has a displaced leading edge (large margin) 4-15T
3.17 The print has a displaced leading edge (no margin) 4-15T
3.18 The print has a blurred image 4-16T
3.19 The print is foggy (horizontally) 4-17T
3.20 The print has poor sharpness 4-17T
3.21 The print is blank 4-18T
3.22 The print is solid black 4-19T
4. Troubleshooting Malfunctions 4-20T

COPYRIGHT © 2000 CANON INC.

4.1 Troubleshooting by Malfunction 4-20T
4.1.1 E000 ..... 4-20T
4.1.2 E001 ..... 4-20T
4.1.3 E002 ..... 4-21T
4.1.4 E003 ..... 4-21T
4.1.5 E004 ..... 4-21T
4.1.6 E005 ..... 4-21T
4.1.7 E010 ..... 4-22T
4.1.8 E012 ..... 4-22T
4.1.9 E013 ..... 4-23T
4.1.10 E014 ..... 4-23T
4.1.11 E020 ..... 4-24T
4.1.12 E032 ..... 4-24T
4.1.13 E061 ..... 4-24T
4.1.14 E100 ..... 4-25T
4.1.15 E110 ..... 4-25T
4.1.16 E121 ..... 4-25T
4.1.17 E196 ..... 4-26T
4.1.18 E202 ..... 4-26T
4.1.19 E204 ..... 4-27T
4.1.20 E220 ..... 4-27T
4.1.21 E225 ..... 4-27T
4.1.22 E240 ..... 4-28T
4.1.23 E243 ..... 4-28T
4.1.24 E248 ..... 4-28T
4.1.25 E302 ..... 4-29T
4.1.26 E601 ..... 4-29T
4.1.27 E602 ..... 4-30T
4.1.28 E607 ..... 4-30T
4.1.29 E677 ..... 4-30T
4.1.30 E710 ..... 4-31T
4.1.31 E711 ..... 4-31T
4.1.32 E712 ..... 4-32T
4.1.33 E713 ..... 4-32T
4.1.34 E717 ..... 4-33T
4.1.35 E719 ..... 4-33T
4.1.36 E732 ..... 4-33T
4.1.37 E733 ..... 4-33T
4.1.38 E740 ..... 4-34T
4.1.39 E741 ..... 4-34T
4.1.40 E742 ..... 4-35T
4.1.41 E743 ..... 4-35T
4.1.42 E804 ..... 4-35T
4.1.43 E805 ..... 4-36T
4.1.44 E824 ..... 4-36T
4.2.1 AC power is absent 4-38T
4.2.2 DC power is absent 4-38T
4.2.3 Pickup fails 4-39T
4.2.4 The lifter fails to move up (pickup from front deck) 4-41T
4.2.5 The lifter fails to move up (pickup from cassette) 4-41T
4.2.6 Pickup fails (manual feed) 4-42T
4.2.7 The vertical path roller fails to rotate 4-43T
4.2.8 The registration roller fails to operate 4-44T
4.2.9 The No. 1 mirror mount fails to operate 4-44T
4.2.10 The pre-exposure LED fails to turn on 4-45T
4.2.11 The scanning lamp fails to turn on 4-45T
4.2.12 The hopper stirring motor (M9) fails to operate 4-46T
4.2.13 The hopper supply motor (M10) fails to operate 4-46T
4.2.14 The drum heater fails to operate 4-47T
4.2.15 The Add Toner message fails to turn on 4-47T
4.2.16 The Add Toner message fails to turn off 4-47T
4.2.17 The Set Control Card message fails to turn on 4-48T
4.2.18 The Set Control Card message fails to turn off ... 4-48T
4.2.19 The Add Paper message fails to turn on (front deck) 4-48T
4.2.20 The Add Paper message fails to turn off (cassette 3/4) 4-48T
4.2.21 The fixing heater fails turn on 4-49T

COPYRIGHT © 2000 CANON INC.

4.2.22 Pickup fails (paper deck) 4-49T
4.2.23 The deck lifter fails to move up (side paper deck) 4-50T
5. Troubleshooting Feeding Faults ... 4-52T
5.1 Paper Jams 4-52T
5.1.1 Pickup assembly 4-53T
5.1.2 Separation/Feeding assembly 4-53T
5.1.3 Fixing/Delivery assembly 4-54T
5.1.4 Fixing/Delivery assembly (face-down delivery assembly) 4-55T
5.1.5 Cleaning Assembly 4-56T
5.1.6 Feeding Assembly 4-56T
5.2 Feeding Faults 4-58T
5.2.1 Double Feeding 4-58T
5.2.2 Wrinkles 4-58T
6. Arrangement and Functions of Electrical Parts 4-59T
6.1 Clutches 4-59T
6.1.1 Reader Unit 4-59T
6.1.2 Printer Unit 4-59T
6.2 Solenoids and Switches 4-60T
6.2.1 Reader Unit 4-61T
6.2.2 Printer Unit 4-61T
6.3 Motors 4-62T
6.3.1 Reader Unit 4-63T
6.3.2 Printer Unit 4-63T
6.4 Fans 4-64T
6.4.1 Reader Unit 4-65T
6.4.2 Printer unit 4-65T
6.5 Sensors 4-66T
6.5.1 Reader Unit 4-68T
6.5.2 Printer Unit 4-68T
6.6 Lamps, Heaters, and Others ... 4-70T
6.6.1 Reader Unit 4-71T
6.6.2 Printer Unit 4-71T
6.7 PCBs 4-72T
6.7.1 Reader Unit 4-73T
6.7.2 Printer unit 4-73T
6.8 Variable Resistors (VR), Light-Emitting Diodes (LED), and Check Pins by PCB 4-74T
6.8.1 Main Controller PCB 4-74T
6.8.2 DC Controller PCB 4-75T
6.8.3 Reader Controller PCB 4-76T
6.8.4 Power Supply PCB 4-76T
6.8.5 HVT PCB 4-77T
6.8.6 Drum Heater Control PCB 4-77T

CHAPTER 5 SERVICE MODE

1. Organization of Service Mode 5-1T
1.1 Outline 5-1T
1.2 Starting Service Mode and Making Selections 5-2T
1.3 Ending Service Mode 5-3T
1.4 Backing Up Service Mode 5-3T
1.5 Basic Operations 5-4T
1.5.1 Initial Screen 5-4T
1.5.2 Level 1/Level 2 Screen 5-4T
1.5.3 Level 3 Screen 5-5T
2. DISPLAY (control/display mode) 5-6T
2.1 COPIER 5-6T
2.2 FEEDER 5-19T
3. I/O (I/O display mode) 5-20T
3.1 DC-CON 5-21T
3.2 R-CON 5-29T
3.3 MN-CON 5-31T
3.4 FEEDER 5-33T
3.5 SORTER 5-36T
3.5.1 Finisher Block 5-36T
3.5.2 Saddle Stitcher Unit 5-41T
4. ADJUST (adjustment mode) 5-44T
4.1 COPIER 5-44T
4.2 FEEDER 5-57T
4.3 SORTER 5-58T
5. FUNCTION (operation/ inspection mode) 5-59T
5.1 COPIER 5-59T
5.2 FEEDER 5-75T

COPYRIGHT © 2000 CANON INC.

6. OPTION (settings mode) 5-76T
6.1 COPIER 5-76T
6.2 FEEDER 5-92T
6.3 SORTER 5-92T
6.4 BOARD 5-93T
7. TEST (test print mode) 5-94T
8. COUNTER (counter mode) 5-98T

CHAPTER 6 SELF DIAGNOSIS

1. Error Codes 6-1T
1.1 List of Error Codes 6-1T
1.2 Self Diagnosis of the ADF 6-13T
1.3 Self Diagnosis of the Finisher 6-14T
1.4 Self Diagnosis of the Saddle Stitcher 6-18T

APPENDIX

A. GENERAL TIMING CHART A-1
B. LIST OF SIGNALS/ABBREVIATIONS A-3
C. General Circuit Diagram A-9
D. PAPER DECK -G1 GENERAL CIRCUIT DIAGRAM A-11
E. SHIFT TRAY GENERAL CIRCUIT DIAGRAM A-12
F. List of Special Tools A-13
G. List of Solvents/Oils A-15

COPYRIGHT © 2000 CANON INC.

CHAPTER 1

MAINTENANCE AND INSPECTION

COPYRIGHT © 2000 CANON INC.

1. Periodically Replaced Parts

Some parts of the machine must be replaced on a periodical basis to ensure a specific level of machine performance. (Once they fail, the consequences are likely to be considerable.)

Whenever possible, schedule the replacement to coincide with a scheduled visit to the user's.

1.1 Guide to Timing of Replacement

You can check the timing of replacement for periodically replaced parts in service mode: COPIER>COUNTER>PRDC-1.

1.2 Reader Unit

The reader unit does not have parts that require periodical replacement.

COPYRIGHT © 2000 CANON INC.

1.3 Printer Unit

As of June 2000

No.	Part name	Part No.	Q'ty	Life	Remarks
1	Primary, pre-transfer, transfer, separation charging wire	FB4-3687	AR	500,000*	
2	Primary grid wire	FY1-0883	AR	500,000	
3	Primary charging wire cleaner 1	FF5-6883	2	500,000	Strengthened polish type (blue)
4	Primary charging wire cleaner 2	FF2-6884	2	500,000	Strengthened polish type (blue)
5	Transfer charging wire cleaner 1	FF5-6883	1	500,000	Strengthened polish type (blue)
6	Transfer charging wire cleaner 2	FF5-6884	1	500,000	Strengthened polish type (blue)
7	Separation charging wire cleaner	FF5-3090	1	500,000	
8	Pre-transfer charging wire cleaner	FF5-3090	1	500,000	
9	Main thermistor	FH7-7529	1	500,000	
10	Sub thermistor	FG5-8812	1	500,000	
11	Ozone filter	FB5-5570	1	500,000	
12	Thermal switch	FH7-7154	1	1,000,000	

*Do not use the old type (gold plated). After replacement of the charge wire, be sure to execute wire cleaning in service mode. (COPIER>FUNCTION>CLEANING>WIRE-CLN)

T01-103-01



The indicated life of each part is for reference only, and is subject to the site environment and the conditions of use.

COPYRIGHT © 2000 CANON INC.

2. Consumables and Durables

Some parts of the machine are likely to require replacement because of wear or damage once or more over the period of machine warranty. Replace them when they fail.

2.1 Guide to Timing of Replacement

You can check the timing of replacement for durables in service mode: COPIER>COUNTER>DRBL-1.

2.2 Reader Unit

The reader unit does not have parts that are classified as “consumables” or “durables.”

COPYRIGHT © 2000 CANON INC.

2.3 Printer Unit

As of June 2000

No.	Part name	Part No.	Q'ty	Life	Remarks
1	Pickup/feeding roller (manual feed roller)	FB1-8581	1	120,000	
2	Separation roller (manual feed tray)	FB5-0873	1	120,000	
3	Pickup roller	FF5-1220	8	250,000	Each holder uses 2 pc.
4	Pickup/feeding roller (deck, cassette)	FF5-9779	8	250,000	Each holder uses 2 pc.
5	Separation roller (deck, cassette)	FB2-7777	4	250,000	
6	Cleaner separation claw	FB2-6899	3	500,000	
7	Pre-separation charging assembly scraper	FA4-1867	1	500,000	
8	Fixing upper roller	FB4-3690	1	500,000	
9	Fixing lower roller	FB5-3619	1	500,000	
10	Fixing web	FY1-1157	1	500,000	
11	Insulating bush (front/rear)	FB5-3613	2	500,000	Replace simultaneously with fixing upper roller.
12	Delivery upper separation claw	FB5-3625	6	500,000	
13	Delivery lower separation claw	FA2-9037	2	1,000,000	
14	Developing cylinder	FG5-8235	1	1,000,000	
15	Developing assembly roll	FB2-6933	2	1,000,000	
16	Cleaning blade	FA4-1827	1	1,000,000	Both edges are used; each for 500,000; apply toner upon replacement.
17	Primary corona assembly	FG6-5927	1	1,000,000	
18	Transfer/separation corona assembly	FG6-5911	1	1,000,000	
19	Pre-transfer corona assembly	FG6-5045	1	1,000,000	

T01-203-01

COPYRIGHT © 2000 CANON INC.

2.4 Side Paper Deck

As of June 2000

No.	Part name	Part No.	Q'ty	Life	Remarks
1	Pickup roller (front)	FF5-1220	1	250,000	
2	Pickup roller (rear)	FF5-1221	1	250,000	
3	Feeding roller	FF5-9779	1	250,000	
4	Separation roller	FB2-7777-020	1	250,000	

T01-204-01

COPYRIGHT © 2000 CANON INC.

3. Periodical Servicing



1. As a rule, provide periodical servicing very 250,000 prints.
2. Check with the Service Book before starting on a visit, and take parts for which replacement is expected.
3. If you cleaned any charging wire with solvent, be sure that it has dried completely before mounting it to the machine.

As of June 2000

Work steps

1. Report to the person in charge: check the general condition.
2. Record the counter reading: check faulty prints.
3. Make test prints, and check the following:
   1) image density against standards;
   2) white background for soiling;
   3) characters for clarity;
   4) margin;
   5) fixing, registration for displacement, and back for soiling.
      Then, check the margins against standards (single-sided): for leading edge, 4.0 +1.5/-1.0 mm; for left/right, 2.5 ±1.5 mm; for trailing edge, 2.0 ±1.5 mm.
4. Clean the charging assemblies; dry wipe with lint-free paper, and clean with alcohol:
   1) charging wire (primary, pre-transfer, transfer/separation),
   2) grid wire (primary charging assembly),
   3) shielding plate of each charging assembly,
   4) roller electrode.

COPYRIGHT © 2000 CANON INC.

Points to Note When Replacing/Cleaning the Charging Wires and Replacing the Charging Wire Cleaner

1. At the end of the following work, check to make sure that the charging wire is in the middle of the cleaner; otherwise, image faults can occur:
   a. If you have cleaned the charging wire;
   b. If you have replaced the charging wire and the charging wire cleaner; or
   c. If you have moved the charging wire cleaner by hand.

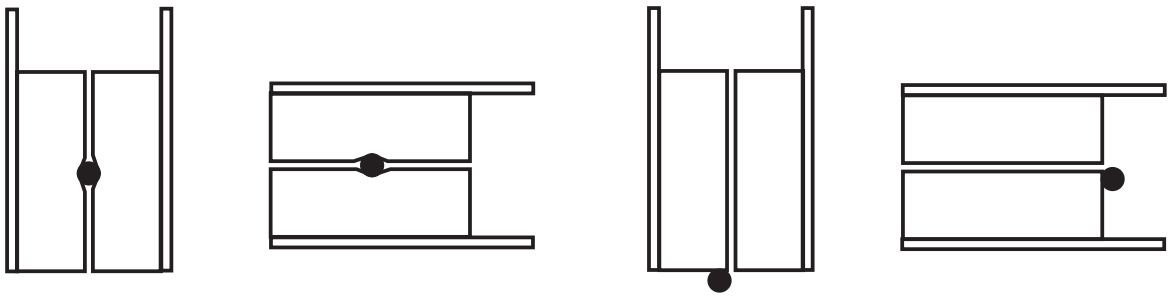

Correct position Incorrect position

2. Each charging wire uses a different type of charging wire cleaner; pay attention during replacement:
   a. For the primary/transfer charging wire cleaner, use a strengthened type (blue holder).
   b. For the separate/pre-transfer charging wire cleaner, use a regular type (brown holder).
3. If you have replaced the primary/transfer charging wire, be sure to execute wire cleaning in service mode.

T01-301-01

5. Clean the optical system with a blower brush; if the dirt is excessive, use alcohol.
   1. No. 1/2/3 mirror, 2. Dust-proof glass, 3. Scanning reflecting plate, 4. Standard white plate
6. Perform the following for the optical path:
   (1) For the scanner drive, check the cable for tension, and make adjustments as needed. (The scanner cable need not be inspected/adjusted except after making the first 250,000 copies.)
   (2) For the scanner rail, clean the slide portions, and apply silicone oil (FY9-6011).
7. Check the waste toner case. If it is more than half full, pour out the toner into a plastic bag for collection; or, replace the case.

(1) You must comply with the applicable regulations imposed by the administrative body for disposal of waste toner.
(2) Do not throw away waste toner into fire. (It may cause explosion, and can be extremely hazardous.)

COPYRIGHT © 2000 CANON INC.

8. Clean each filter by removing matter adhering to its surface: 1. ozone filter, 2. dust-proofing filter.
9. Clean the developing assembly (developing assembly rolls).
10. Clean the pickup/feeding assembly: 1. transfer guide (upper/lower) plate, 2. registration roller (upper, lower), 3. feeding belt, 4. each feeding roller.
11. Clean the fixing/delivery assembly: 1. separation law (upper, lower), 2. each feeding roller, 3. inlet guide, 4. web (check), 5. inlet guide oil dish, 6. thermistor, 7. sub thermistor, 8. thermal switch.
12. Clean the cleaning assembly (side scraper).
13. Clean the copyboard glass and the reading glass.
14. Make test prints.
15. Make sample prints.
16. Check the operation of the leakage breaker:
    While the power switch is on, press the test switch of the leakage breaker to see that it operates normally (i.e., the lever shifts to 'OFF' and the power is cut). If it does not operate normally, replace it and make a check once again.
    To reset,
    After checking its operation, turn off the power switch, shift the lever to 'ON', and turn on the power switch.

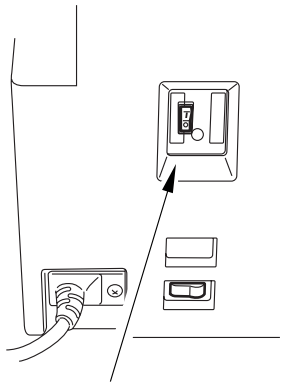

17. Put the sample prints into order; then, clean up the area around the machine.
18. Record the final counter reading.
19. Fill out the Service Book, and report to the person in charge.
    Do not forget to add the above check to the history of checks made on the leakage breaker (Service Book).

COPYRIGHT © 2000 CANON INC.

4. Periodical Servicing Chart



Do not use solvents or oils other than those indicated.

4.1 Reader Unit

△: Clean ●: Replace ×: Lubricate □: Adjust ◎: Inspect

Unit	Part	Intervals					Remarks
		Upon installation	every 250,000	every 500,000	every 750,000	every 1,000,000	
Scanner	Scanner cable		◎□				Only at fist 250,000 (inpection/ adjustment).
Optical path	Scanner rail		△×				Silicone oil (FY9-6011)
	Copyboard glass		△				
	No. 1 through No. 3 mirrors		△				
	Scanner reflecting plate		△				

4.2 Printer Unit

△: Clean ●: Replace ×: Lubricate □: Adjust ◎: Inspect

Unit	Part	Intervals					Remarks
		Upon installation	every 250,000	every 500,000	every 750,000	every 1,000,000	
Externals/ controls	Ozone filter (FM3)			●			
	Dust-proofing filter (FM2)		△				Remove dust from surface.
Laser optical path	Dust-proof glass		△				
Charging assembly	Charging wire (primary, pre-transfer, trans-fer/separation)	△		●			After replace-ment, execute wire cleaning 5 times.

COPYRIGHT © 2000 CANON INC.

Unit	Part	Intervals					Remarks
		Upon installation	every 250,000	every 500,000	every 750,000	every 1,000,000	
Charging assembly	Charging wire cleaner (primary, pre-transfer, transfer/separation)			●			Replace with charging wire simultaneously.
	Grid wire (primary)	△	△	●			
	Charging assembly shielding plate (each charging assembly)	△	△				
	Roller electrode	△	△				
	Primary anti-stray toner sheet		△				
Photosensitive drum	Photosensitive drum			△			Use alcohol and drum cleaning powder (CK-0429); for instructions, see 6. “Cleaning the Photosensitive Drum.”
	Electrode (for slip ring of drum heater)					△×	Clean with alcohol; 1) electrode, 2) protruding wall of electrode (where FY9-6008 is applied). · Charge collecting brush
Developing assembly	Developing cylinder	◎					
	Developing assembly roll		△				

COPYRIGHT © 2000 CANON INC.

Unit	Part	Intervals					Remarks
		Upon installation	every 250,000	every 500,000	every 750,000	every 1,000,000	
Developing assembly	Anti stray-toner sheet		△				
Cleaner	Side scraper			△			
	Toner dish (rear, front)		△				
Fixing assembly	Inlet guide		△				
	Web	◎					
	Oil dish			△			
	Thermistor		△	●			
	Sub thermistor		△	●			
	Thermal switch					●	
Delivery assembly	Separation claw (upper, lower)		△	●			
Waste toner collection area	Waste toner box		◎				Inspect case, and remove toner.
Pickup/ feeding assembly	Transfer guide		△				
	Registration roller (upper, lower)		△				
	Feeding belt		△				
	Feeding rollers		△				

COPYRIGHT © 2000 CANON INC.

5. Points to Note for Periodical Servicing

Unless otherwise instructed, clean with lint-free paper and alcohol.

- Make a thorough check of the block (front, rear) for melting by leakage, deformation by heat, cracking, discoloration (yellowing). If a fault is found, replace the part with a new one immediately.
- Check the block (front, rear) including its inside.
- Do not use a cloth on which metal powder is found.
- If you have used solvent, make sure that the part has dried completely before mounting it back to the machine.
- Do not use a moist cloth unless specifically indicated.
- Be sure to provide scheduled servicing/replacement at the specified intervals.

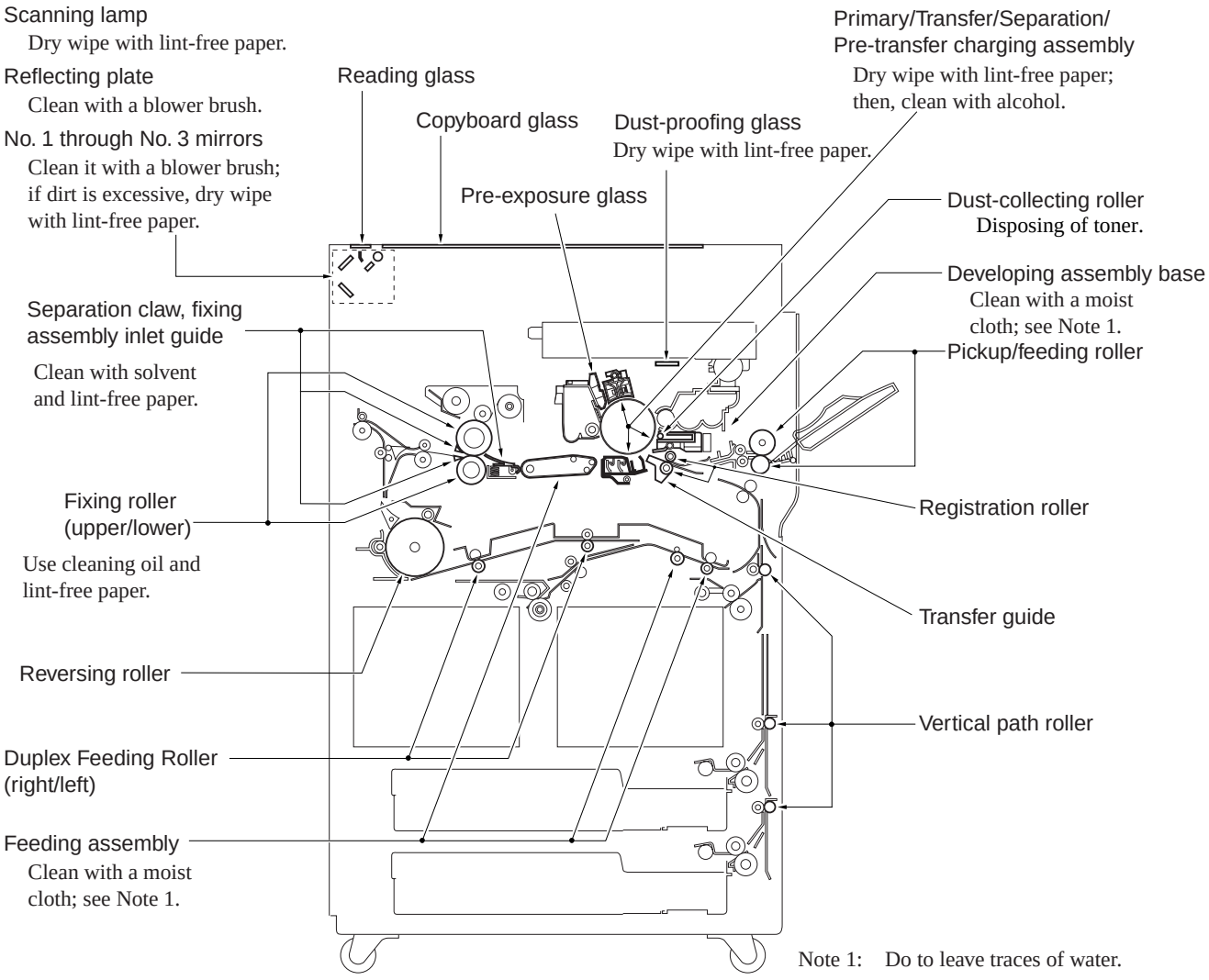

Note 1: Do to leave traces of water.

COPYRIGHT © 2000 CANON INC.

6. Cleaning the photosensitive drum

Do not rotate the magnet roll during work. Otherwise, waste toner may fall through the cleaner assembly.

1) Slide out the process unit. (Be sure to place the drum protective sheet over the fixing/feeding unit.)
2) Take out the photosensitive drum.
3) Moisten lint-free paper [1] with 5 to 10 cc of alcohol [2]; then, pour 0.2 to 0.3 g of drum cleaning powder (CK-0429) [3] on the lint-free paper.
4) While butting the lint-free paper relatively strongly against the photosensitive drum, wipe the surface of the drum from the front to the rear and from the rear to the front.

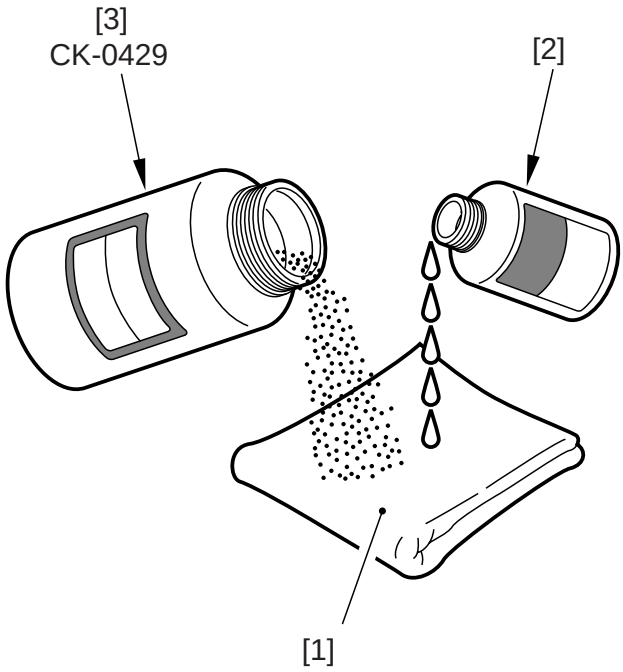

F01-601-01

- Keep the widths of cleaning to 5 to 10 cm in the peripheral direction of the drum.
- Move the lint-free paper back and forth 15 to 20 times over a single area.
  Forcing the lint-free paper will not affect the life of the drum.

5) When the alcohol has evaporated, dry wipe the surface with lint-free paper. If the area is uneven, go back to step 4), and increase the back-and-forth movements.
6) Rotate the drum for the width (5 to 10 cm), and repeat steps 3) through 5) until the entire area of the surface has been cleaned.

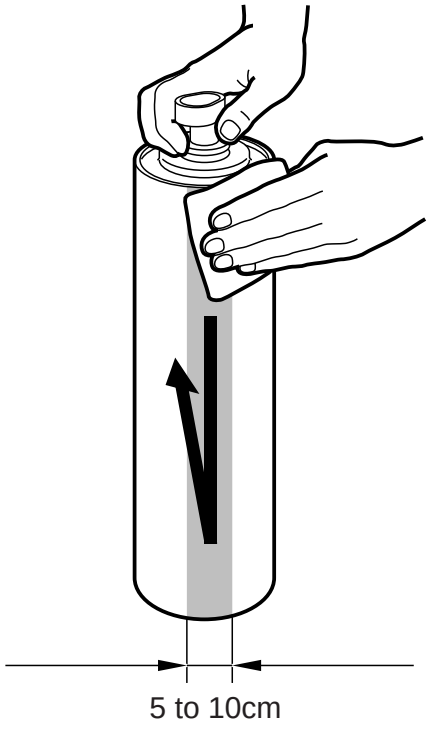

F01-601-02

COPYRIGHT © 2000 CANON INC.

CHAPTER 2

IMAGE ADJUSTMENT BASIC PROCEDURE

COPYRIGHT © 2000 CANON INC.

1. Making Pre-Checks

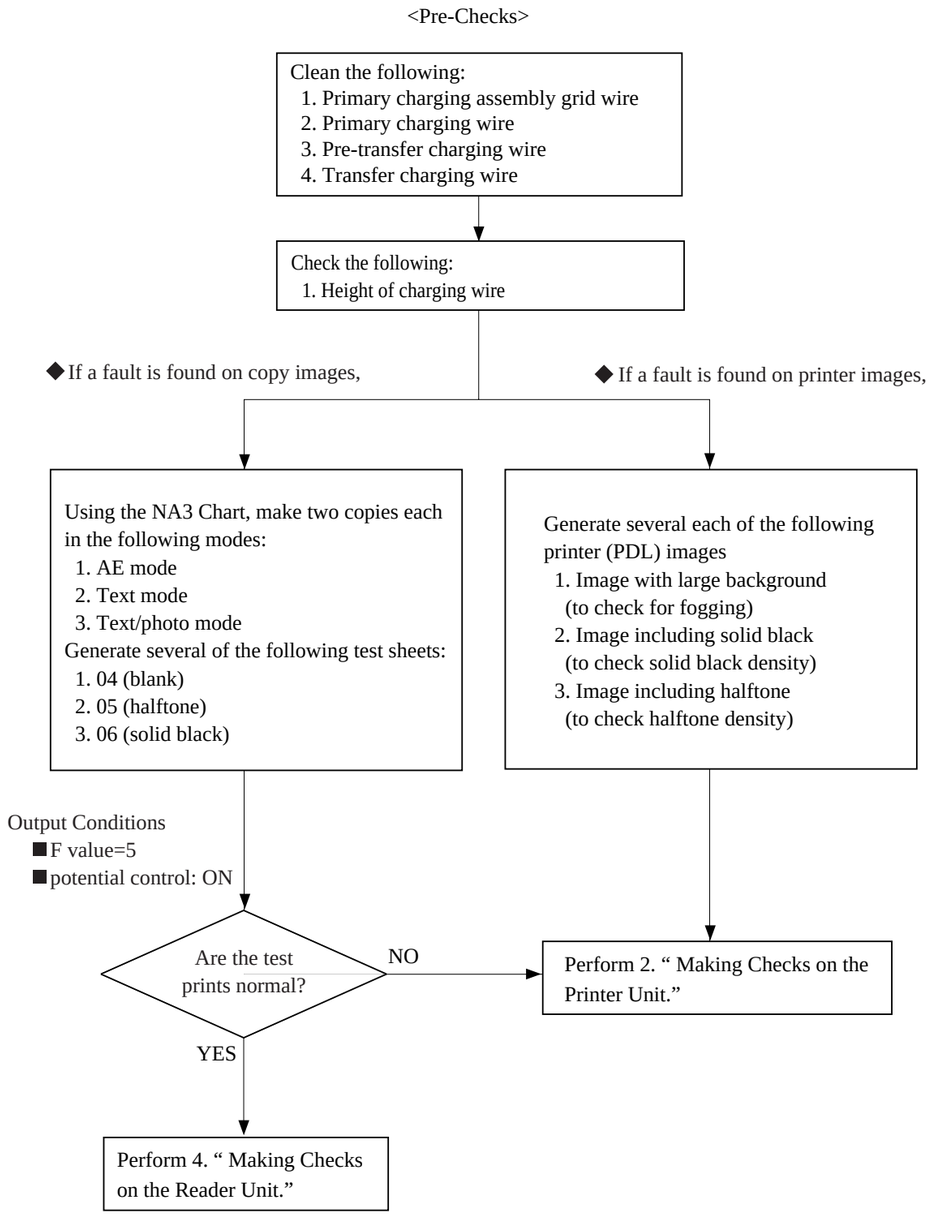

⚠ Points to Note When Making Checks on the Printer Side

The machine's potential control mechanism is designed for both copier image output and printer (PDL) image output, and its parameters for potential control in service mode may be adjusted independently of each other.

As such, when an image fault occurs, try to find out which side is causing it, and generate the appropriate images (data) for adjustment of related parameters.

COPYRIGHT © 2000 CANON INC.

2. Making Checks on the Printer Unit (1/2)

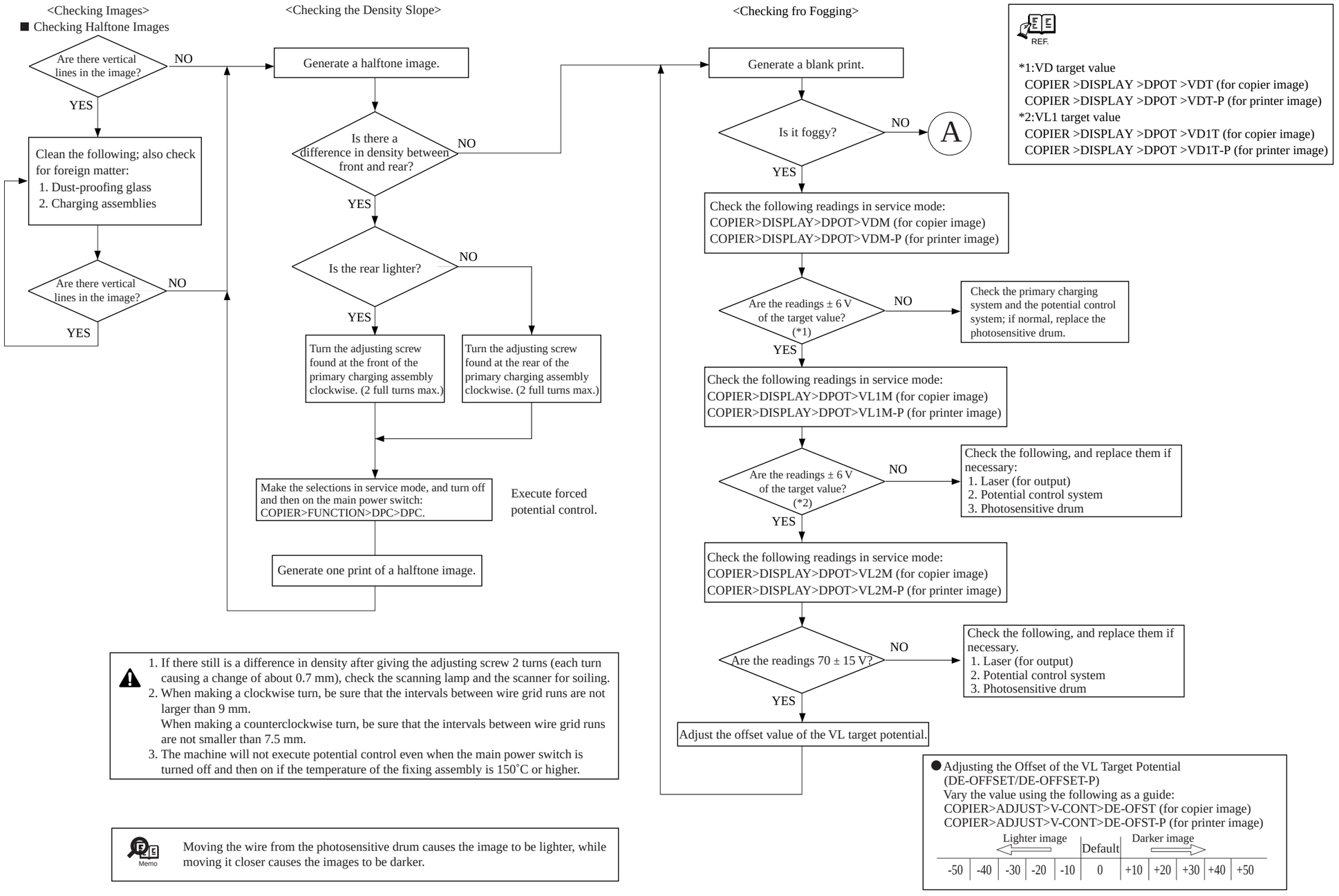

1. If there still is a difference in density after giving the adjusting screw 2 turns (each turn causing a change of about 0.7 mm), check the scanning lamp and the scanner for soiling.
2. When making a clockwise turn, be sure that the intervals between wire grid runs are not larger than 9 mm.
   When making a counterclockwise turn, be sure that the intervals between wire grid runs are not smaller than 7.5 mm.
3. The machine will not execute potential control even when the main power switch is turned off and then on if the temperature of the fixing assembly is 150˚C or higher.

Memo

Moving the wire from the photosensitive drum causes the image to be lighter, while moving it closer causes the images to be darker.

COPYRIGHT © 2000 CANON INC.

3. Making Checks on the Printer Unit (2/2)

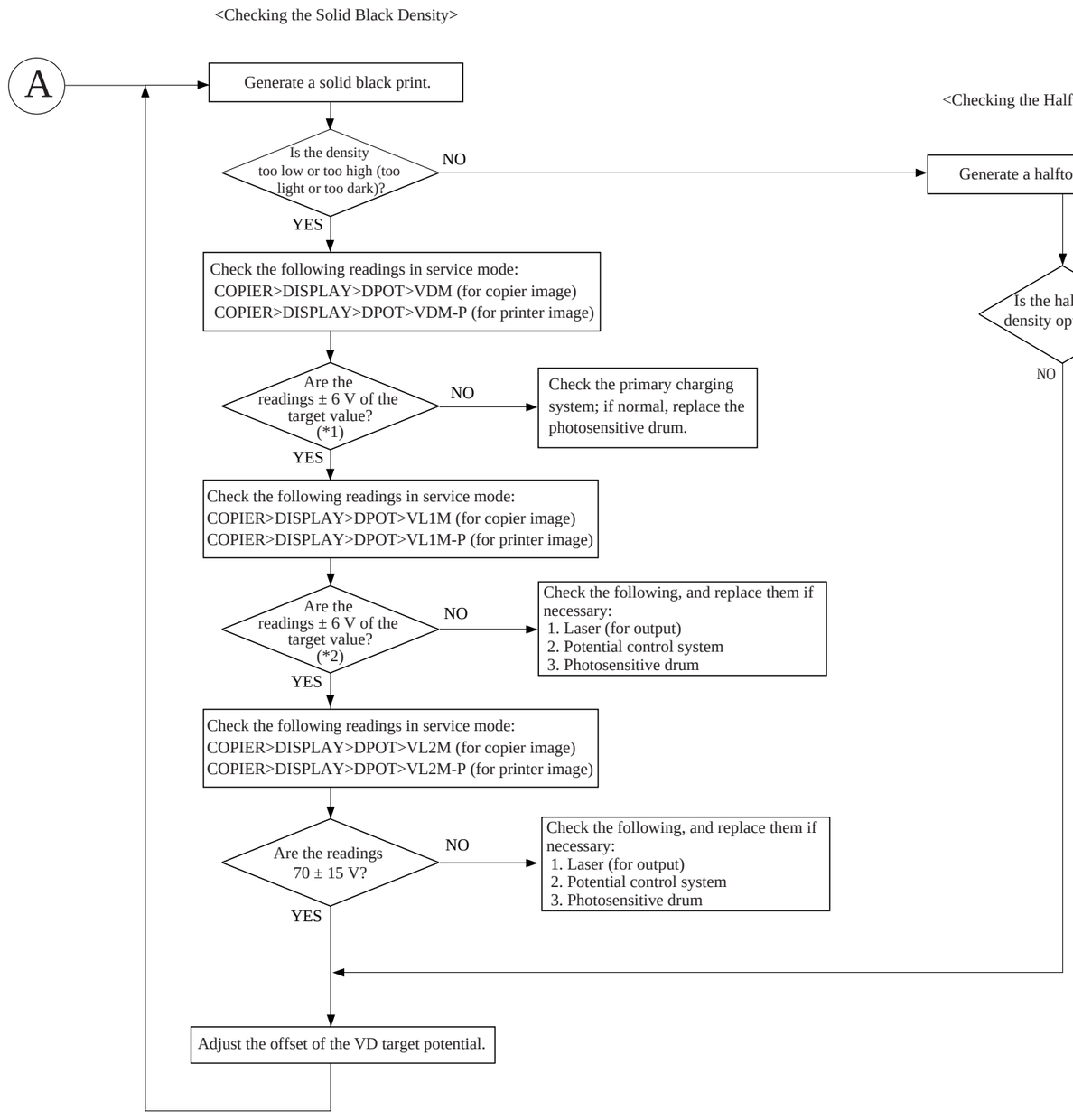

REF.

*1:VD target value
COPIER >DISPLAY >DPOT >VDT (for copier image)
COPIER >DISPLAY >DPOT >VDT-P (for printer image)
*2:VL1 target value
COPIER >DISPLAY >DPOT >VD1T (for copier image)
COPIER >DISPLAY >DPOT >VD1T-P (for printer image)

● Adjusting the Offset Value of the VD Target Potential (VD-OFFSET/VD-OFFSET-P)
COPIER>ADJUST>V-CONT>VD-OFST (for copier image)
COPIER>ADJUST>V-CONT>VD-VD-OFST-P (for printer image)

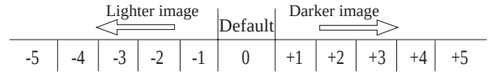

COPYRIGHT © 2000 CANON INC.

4. Making Checks on the Reader Unit

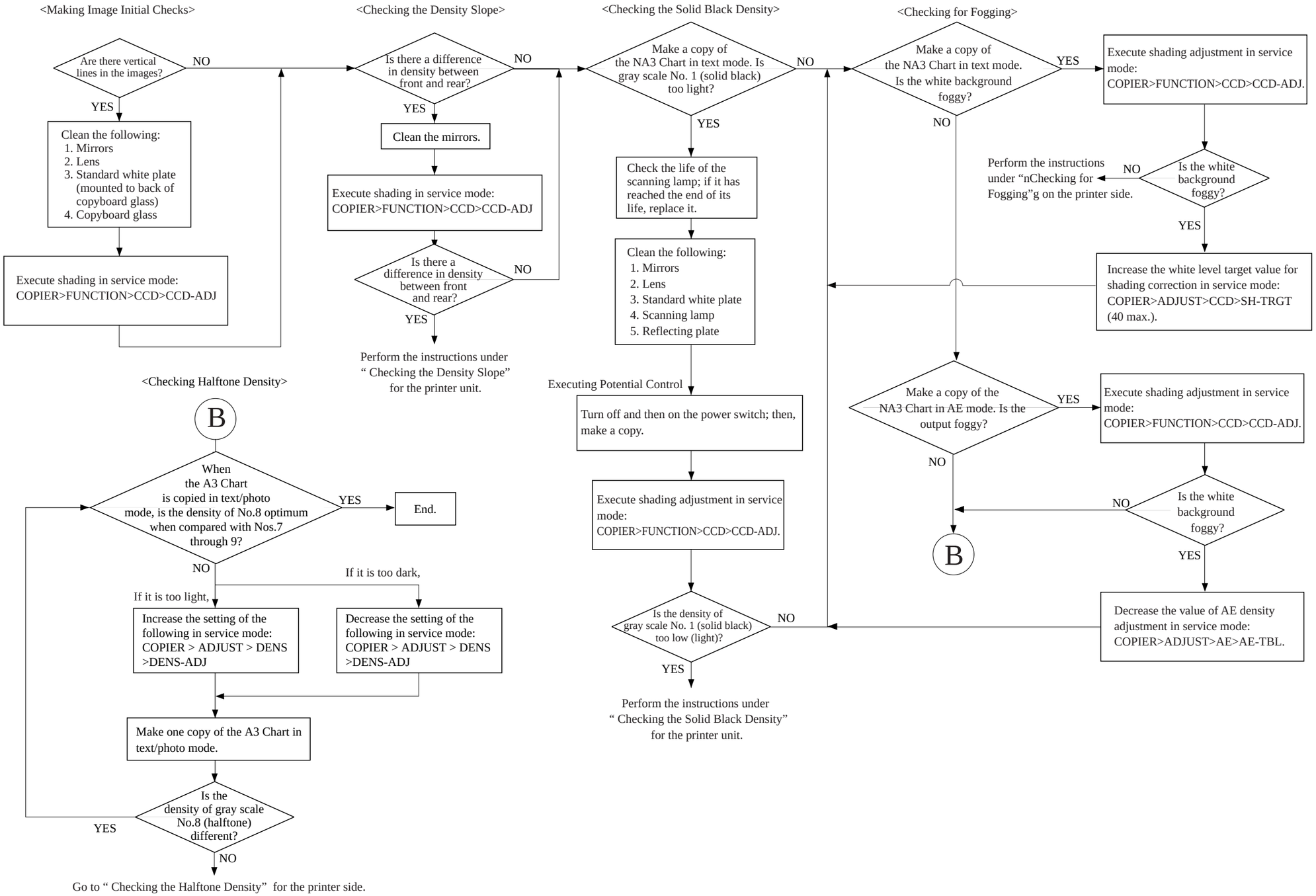

COPYRIGHT © 2000 CANON INC.

CHAPTER 3

STANDARDS AND ADJUSTMENTS

COPYRIGHT © 2000 CANON INC.

1. Image Adjustments

1.1 Standards of Image Position

The image margin/non-image width of a print made in Direct must be as follows:

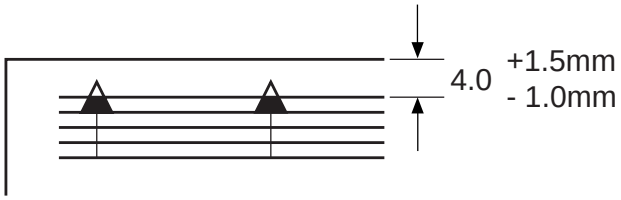

F03-101-01 Image Leading Edge Margin

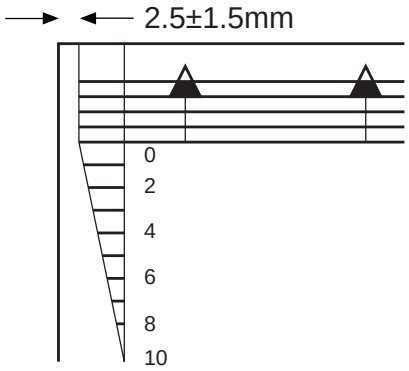

F03-101-02 Left/Right Image Margin

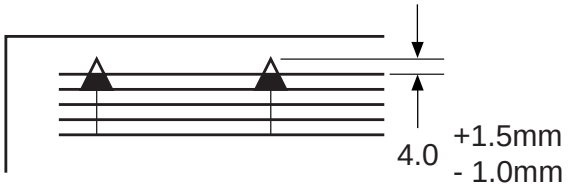

F03-101-03 Leading Edge Non-Image Width

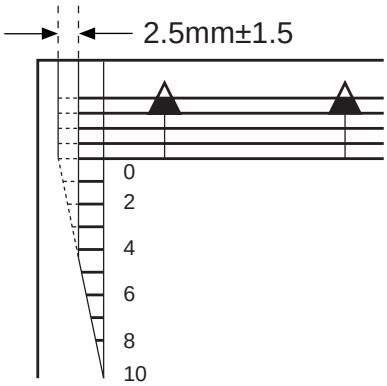

F03-101-04 Left/Right Non-Image Width

1.2 Checking the Image Position

Make prints using the following as the source of paper (10 prints each), and check to see that the image margin and the non-image width are as indicated:

- Each cassette
- Front deck (left, right)
- Manual feed tray
- Duplex feeding unit
- Side paper deck

If not as indicated, adjust the image position in the following order:

1. Adjusting the left/right image margin (registration)
2. Adjusting the image leading edge margin (registration)
3. Adjusting the left/right non-image width (CCD read start position)
4. Leading edge non-image width (scanner image leading edge position)

1.3 Adjusting the Left/Right Image Margin

1.3.1 Cassette 3/4

1) Loosen the two fixing screws [1] found on the left and the right of the cassette.

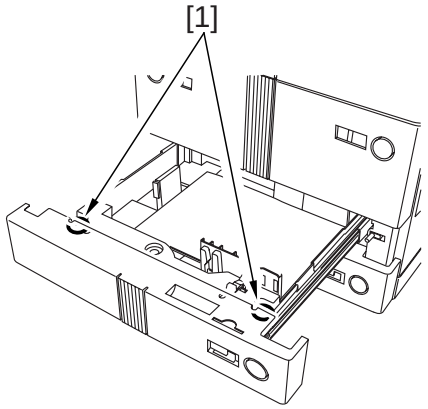

F03-103-01

2) Remove the paper size plate [2], and turn the adjusting screw [3] found in the opening of the paper size plate [2] to adjust the position; then, tighten the two fixing screws [1].
After making the adjustment, be sure to execute the following service mode: COPIER>FUNCTION>CST>C3-STMTR/A4R or C4-STMTR/A4R

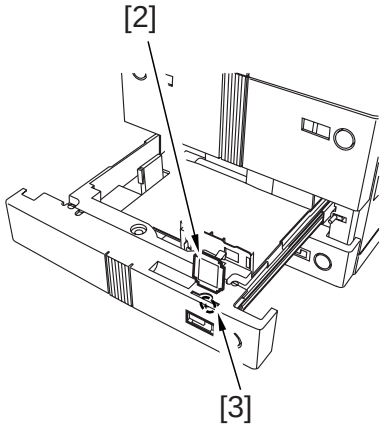

F03-103-02

COPYRIGHT © 2000 CANON INC.

1.3.2 Left/Right Front Deck

1) Loosen the four screws [2] and the two fixing screws [3] of the cassette front cover [1].

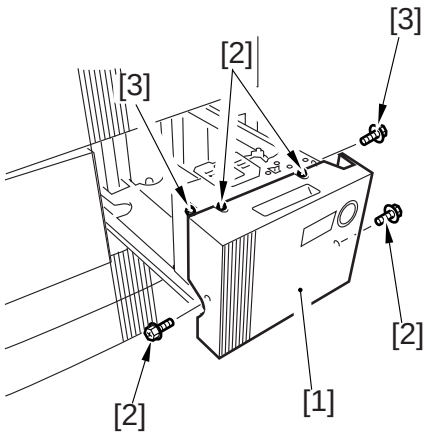

F03-103-03

2) Move the cassette guide assembly (front) [4] to the front or the rear to make adjustments.

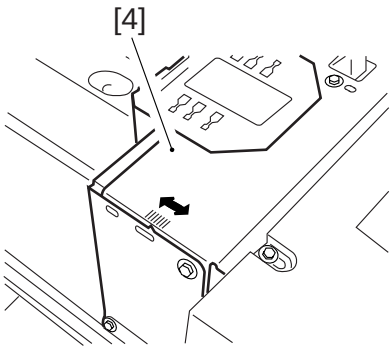

F03-103-04

1.3.3 Manual Feed Tray

1) Loosen the two mounting screws [1] of the manual feed tray, and adjust the position of the manual feed tray.

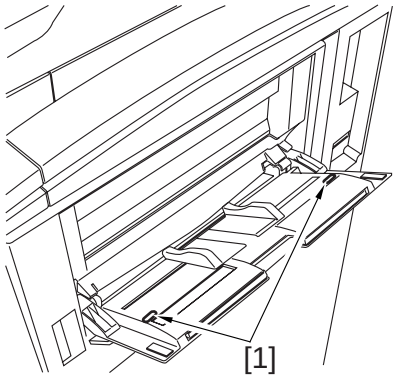

F03-103-05

COPYRIGHT © 2000 CANON INC.

1.3.4 Duplex Feeding Unit

1) Adjust the image margin as indicated using service mode: COPIER>ADJUST>Feed-ADJ>ADJ-REFE.

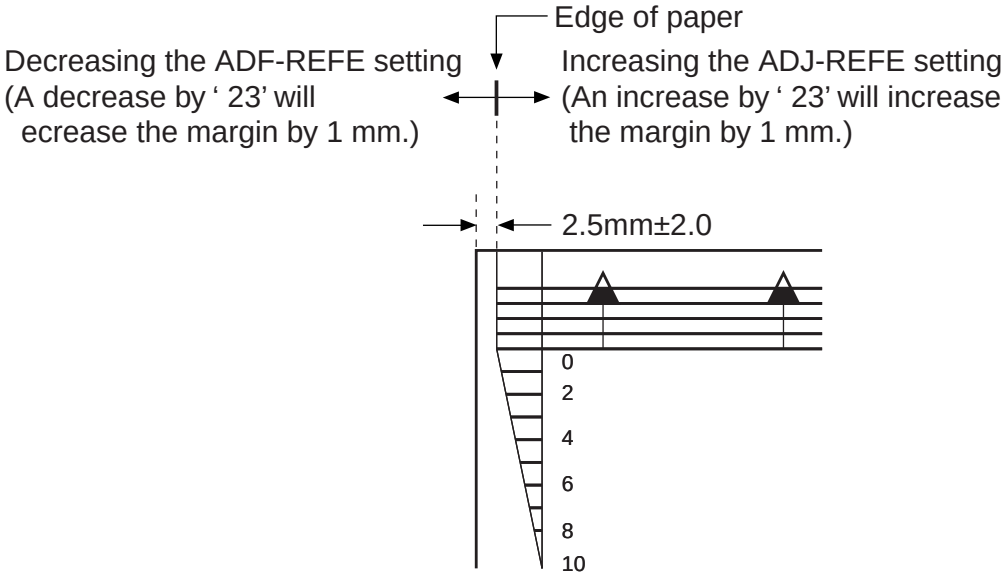

F03-103-06

1.3.5 Side Paper Deck

1) Slide out the compartment, and turn the two screws to adjust the position of the latch plate of the deck open solenoid. (At this time, use the index on the latch plate as a guide.)

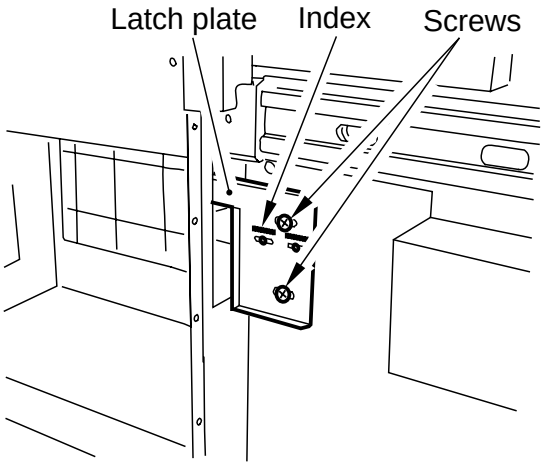

F03-103-07

COPYRIGHT © 2000 CANON INC.

1.4 Adjusting the Image Leading Edge Margin

1) Adjust the image margin in service mode so that it is as indicated:
COPIER>ADJUST>Feed-ADJ>REGIST.

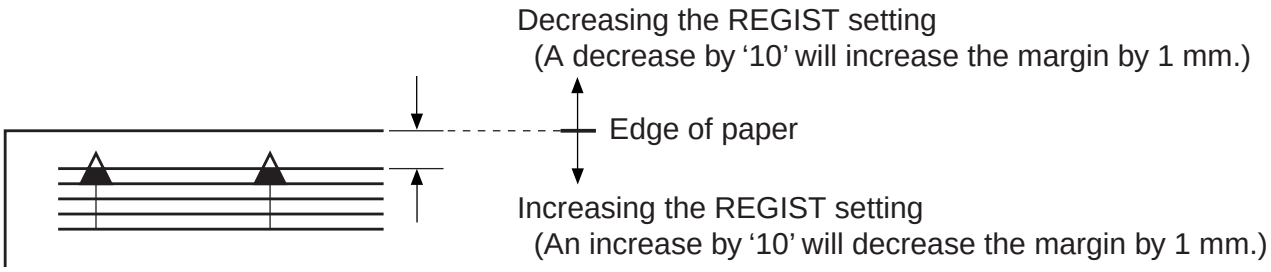

F03-104-01

1.5 Adjusting the Left/Right Non-Image Width

1) Adjust the non-image width in service mode so that it is as indicated:
COPIER>ADJUST>ADJ-XY>ADJ-Y.

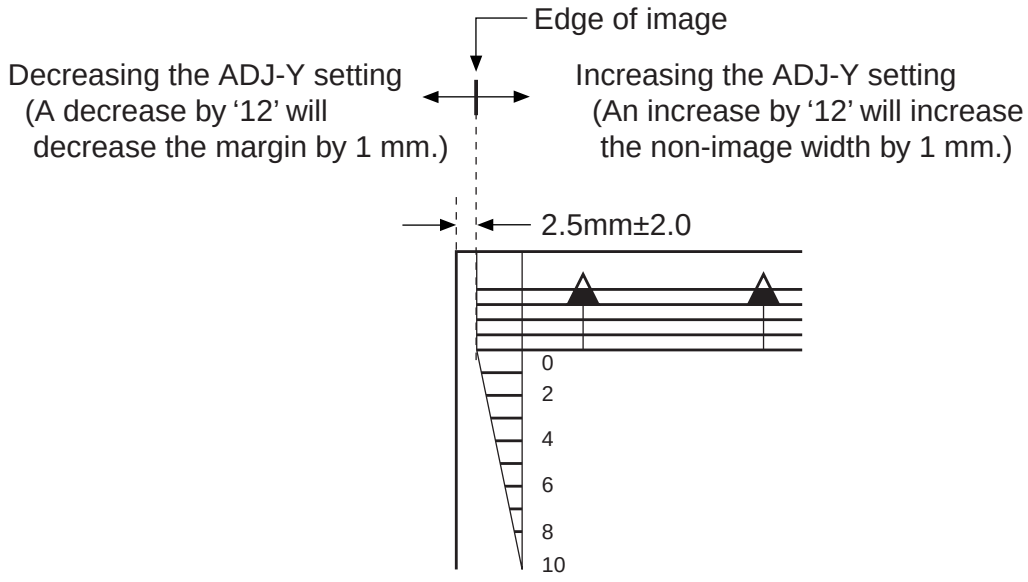

F03-105-01

1.6 Adjusting the Leading Edge Non-Image Width

1) Adjust the non-image width in service mode so that it is as indicated: COPIER>ADJUST>ADJ-XY>ADJ-X.

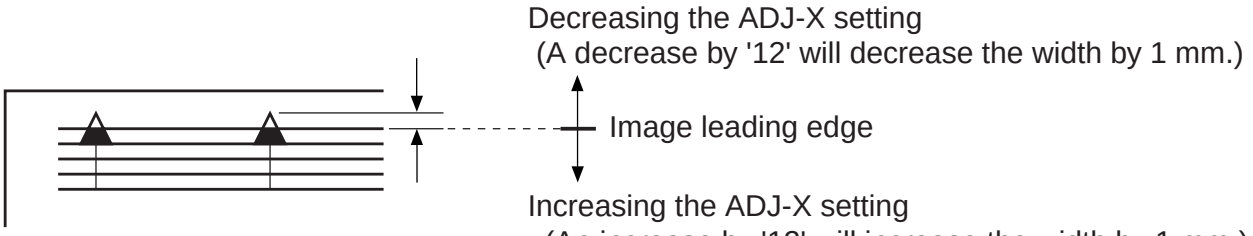

F03-106-01

COPYRIGHT © 2000 CANON INC.

2. Scanning System

2.1 Replacing the Scanner Drive Cable

See the Reader Manual: Chap. 2>5. “Disassembly/Assembly”

2.2 Adjusting the Position of the Scanner Mirror Base

See the Reader Manual: Chap. 2> 5. “Disassembly/Assembly”

2.3 After Replacing the Scanning Lamp

See the Reader Manual: Chap. 2>5. “Disassembly/Assembly”

COPYRIGHT © 2000 CANON INC.

3. Image Formation System

3.1 Routing the Grid Wire of the Primary Charging Assembly

See the Printer Manual: Chap. 4>7.8 “Charging Wire”

3.2 Routing the Charging Wire of Charging Assemblies

See the Printer Unit: Chap. 4>7.8 “Charging Wire”

3.3 Mounting the Drum Cleaning Blade

See the Printer Manual: Chap. 4>7.11 “Drum Cleaner”

3.4 Mounting the Developing Blade

See the Printer Manual: Chap. 4>7.8 “Developing Assembly”

3.5 Replacing the Potential Sensor/Potential Control PCB

See the Printer Unit: Chap. 4>7.4 “Potential Sensor Assembly”



1. The potential sensor and the potential control PCB are adjusted as a single unit; be sure to replace both at the same time.
2. If you have replaced the sensor and the PCB, be sure to execute offset adjustment of the sensor.

COPYRIGHT © 2000 CANON INC.

4. Pickup/Feeding System

4.1 Orientation of the Deck/Cassette Pickup Roller

The pickup roller may be mounted by reversing the steps used to remove it; however, be sure to keep the following in mind:

- The pickup rollers used at the front and the rear of the machine are not interchangeable.
- The collar of the pickup roller used at the front of the machine is gold-colored.

When mounting the pickup roller [1] to the pickup assembly, make sure that the round marking [2] found on the side of the roller and the round marking [3] found on the collar (gold-colored) are toward the front of the machine.

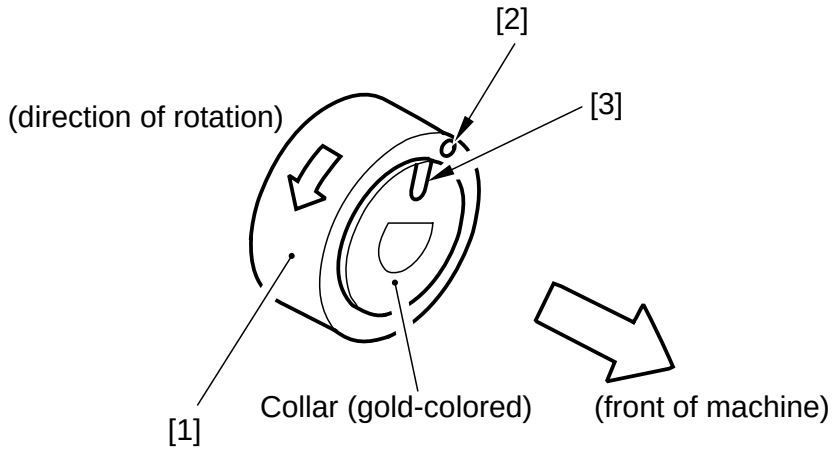

F03-401-01

- The collar of the pickup roller used at the rear of the machine is silver-colored. When mounting the pickup roller [4] to the pickup assembly, make sure that the round marking [5] found on the side o the roller is toward the front of the machine while the round marking on the collar (silver-colored) is toward the rear of the machine.

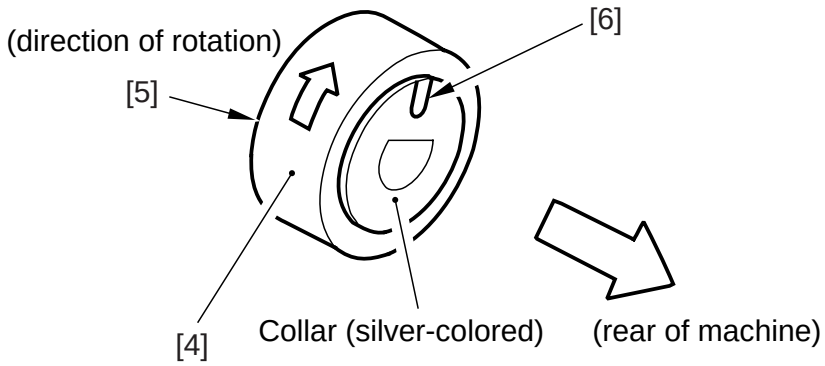

F03-401-02

4.2 Orientation of the Deck/Cassette Separation Roller

When replacing the separation roller, be sure it is oriented as follows:

Cassette 3/4, Right Pickup Assembly

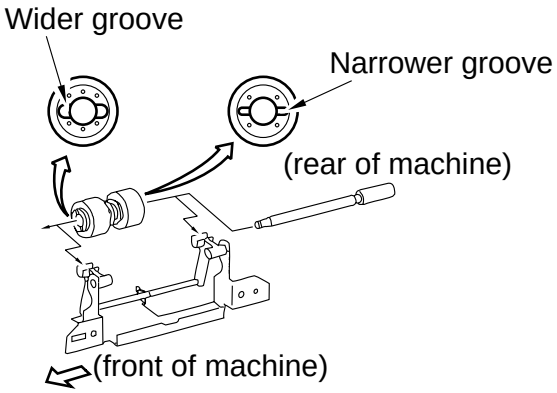

Left Deck Pickup Assembly

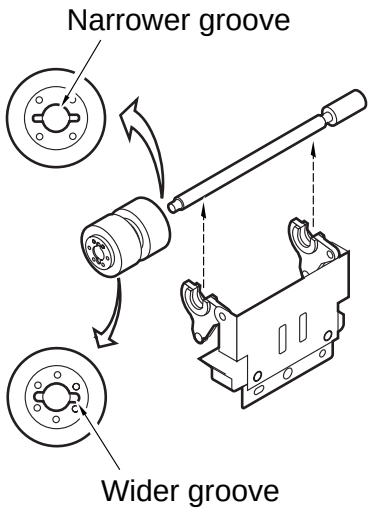

F03-402-01

4.3 Orientation of the Feeding Roller of the Deck/Cassette Pickup Assembly

When mounting the feeding roller assembly of the deck/cassette pickup assembly, be sure the belt pulley [2] is toward the front of the machine.

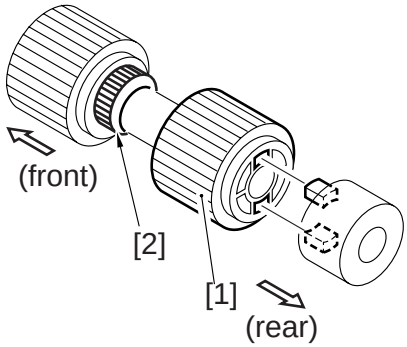

F03-403-01

COPYRIGHT © 2000 CANON INC.

4.4 Orientation of the Pickup Roller of the Side Paper Deck

The pickup roller may be mounted by reversing the steps used to remove it; however, be sure to keep the following in mind:

- The pickup rollers used at the front and the rear of the machine are not interchangeable.
- The collar of the pickup roller used at the front of the machine is silver-colored.

When mounting the pickup roller [1] to the pickup assembly, be sure that the round marking [2] found on the collar (silver-colored) is toward the front of the machine.

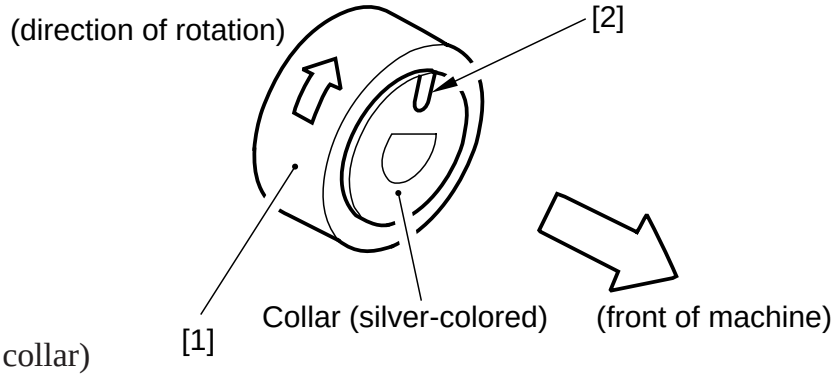

[1] Pickup roller
[2] Marking (on collar)

F03-404-01

- The collar on the pickup roller found at the rear of the machine is gold-colored.

When mounting the pickup roller [4] to the pickup assembly, be sure that the round marking [5] found on the side of the roller and the round marking [6] found on the collar (gold-colored) are toward the rear of the machine.

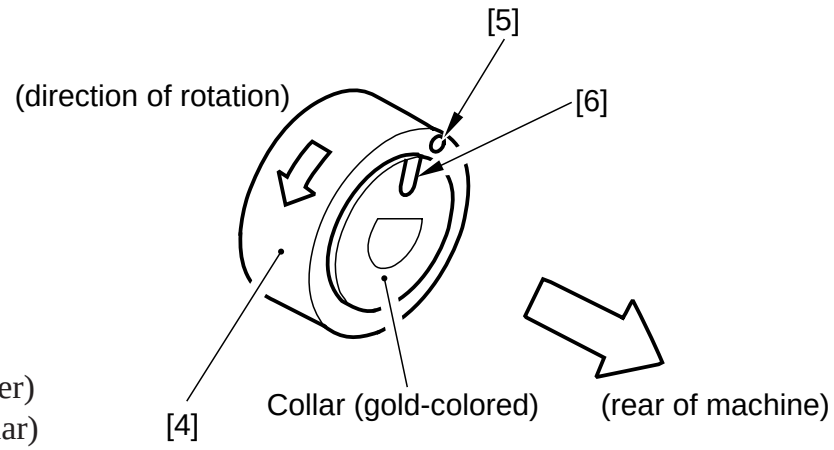

[4] Pickup roller
[5] Marking (roller)
[6] Marking (collar)

F03-404-02

4.5 Orientation of the Feeding Roller of the Side Paper Deck

When mounting the feeding roller assembly [1] to the side paper deck, be sure that the belt pulley [2] is toward the front of the machine. When mounting the feeding roller [3] to the feeding roller shaft [4], be sure that the round marking [5] is toward the rear of the machine.

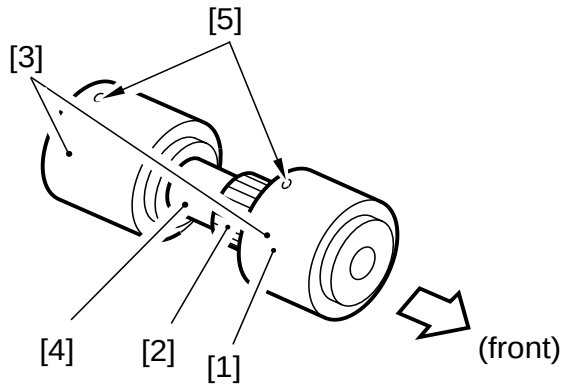

F03-405-01

COPYRIGHT © 2000 CANON INC.

4.6 Adjusting the Pressure of the Separation Roller of the Deck/Cassette

If double feeding or pickup failure occurs during pickup, change the position of the pressure spring of the separation roller:

- If double feeding occurs, move the hook of the spring in the direction of B.
- If pickup failure occurs, move the hook of the spring in the direction of A.

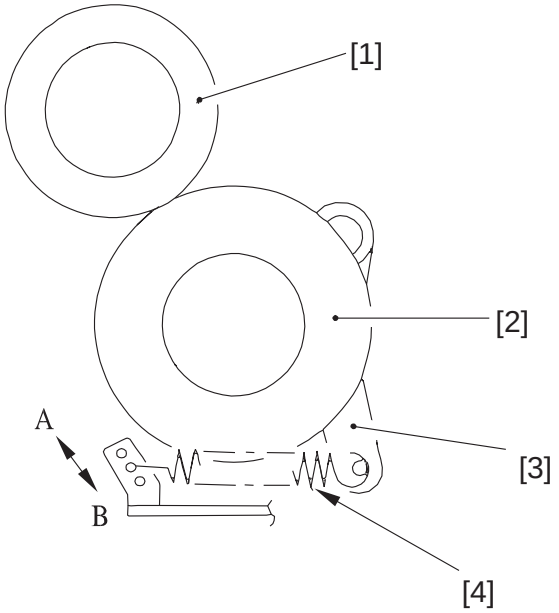

[1] Feeding roller [2] Separation roller
[3] Pressure lever [4] Pressure spring

F03-406-01

COPYRIGHT © 2000 CANON INC.

4.7 Adjusting the Pressure of the Separation Roller of the Manual Feed Tray

If double feeding or pickup failure occurs during pickup, adjust the position of the pressure spring of the separation roller.

1) Remove the right upper cover.
2) Remove the upper guide [1].

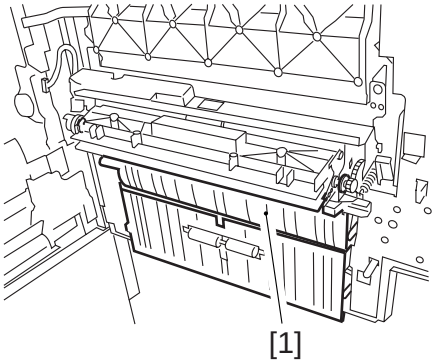

F03-407-01

- If double feeding occurs, remove the mounting screw [2], and lower the mounting base [3]; then, tighten the mounting screw [2] in hole A.
- If pickup failure occurs, remove the mounting screw [2], and raise the mounting base [3]; then, tighten the mounting screw [3] in hole B.

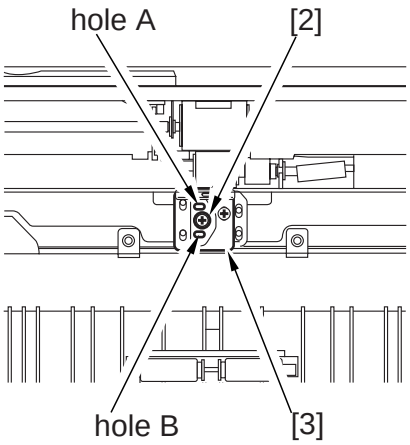

F03-407-02

COPYRIGHT © 2000 CANON INC.

4.8 Adjusting the Fixing Inlet Guide Solenoid (SL1)

Adjust the position of the solenoid using the two screws [1] so that the guide will be positioned as indicated when the solenoid turns on.

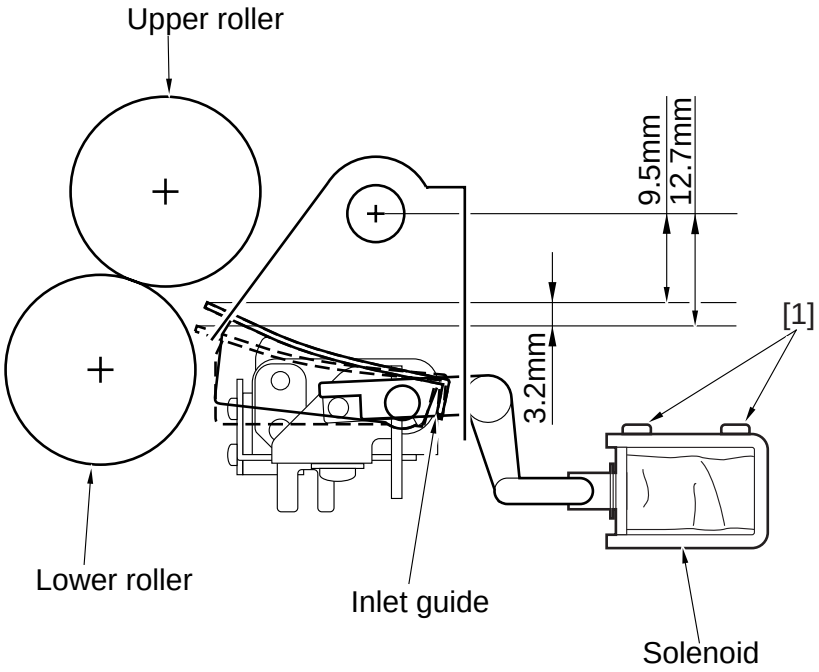

F03-408-01

4.9 Adjusting the Position of the Pickup Solenoid (SL3, SL4) of the Cassette 3/4

Adjust the position of the solenoid using the two screws [3] so that the distance from the bottom of the pickup assembly to A of the roller arm is 36±0.5 mm when [1] and [2] are operated.

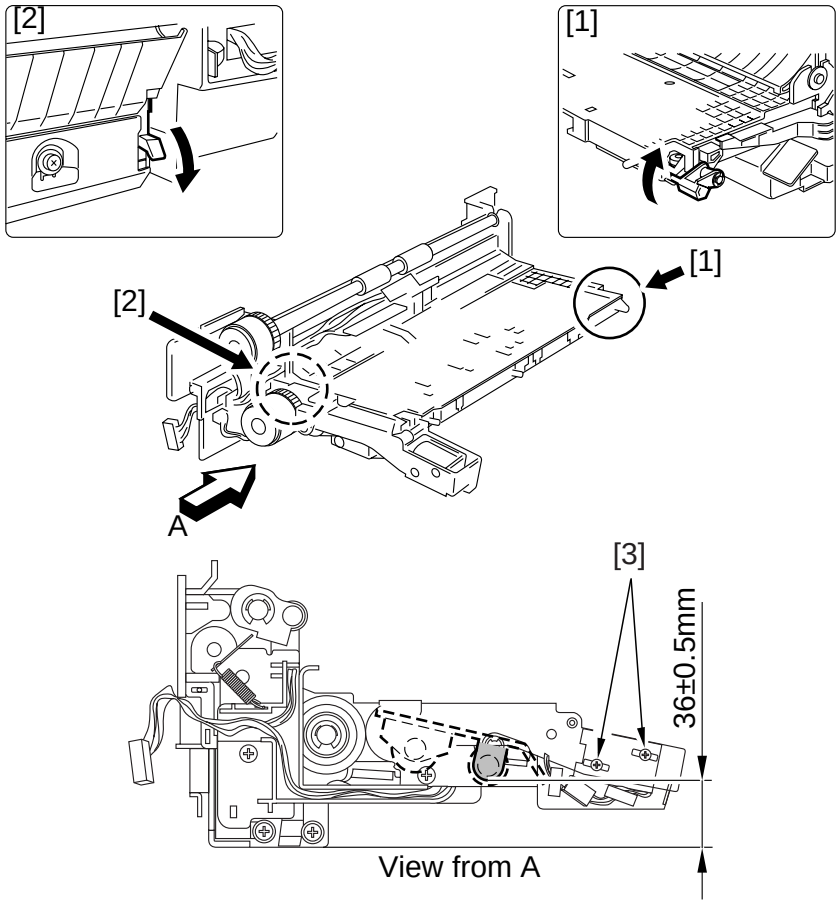

F03-409-01

COPYRIGHT © 2000 CANON INC.

4.10 Adjusting the Position of the Delivery Flapper Solenoid (SL5)

Adjust the position of the mounting screw [2] using the screw [2] so that the drive lever [1] is pushed fully when the solenoid turns on (i.e., when the plunger is drawn).

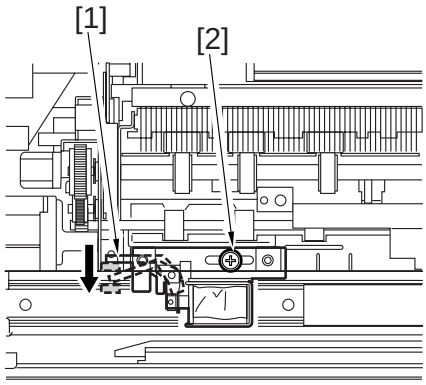

F03-410-01

4.11 Adjusting the Position of the Right Deck Pickup Solenoid (SL6)

Adjust the position of the solenoid so that the left edge of the arm 2 is 57.2 ± 0.5 mm from the center of hole A of the solenoid mounting base.

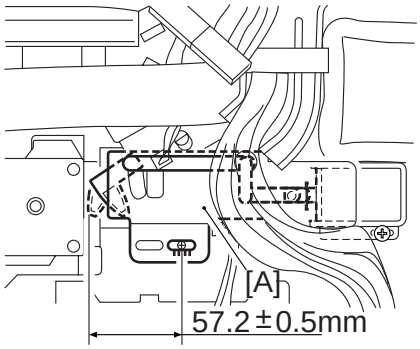

F03-411-01

4.12 Adjusting the Position of the Left Deck Pickup Solenoid (SL7)

Before removing the left deck pickup solenoid from the support plate [1], take note of its position with reference to the fixing screw [2] of the solenoid. Or, mark the position for the solenoid by drawing a line on the support plate with a scriber.

When mounting the solenoid on its own, be sure to secure it in its original position.

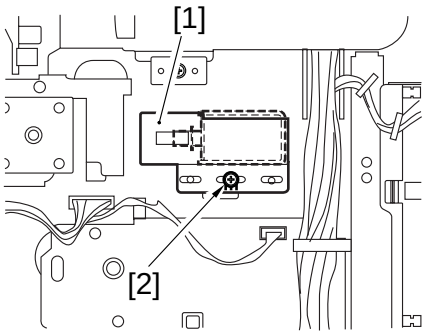

F03-412-01

4.13 Adjusting the Position of the Reversing Flapper Solenoid (SL8)

1) Adjust the potion of the solenoid so that the drive lever [1] is pushed fully when the solenoid turns on (i.e., when the plunger is drawn).

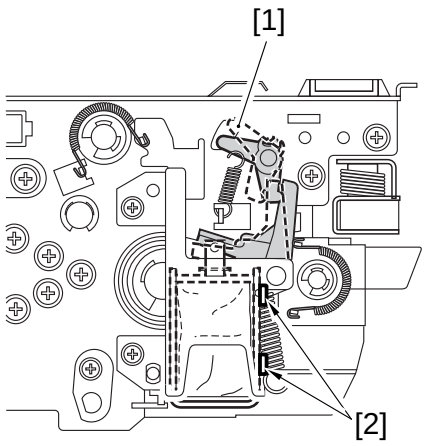

F03-413-01

COPYRIGHT © 2000 CANON INC.

4.14 Adjusting the Position of the Fixing Web Solenoid (SL9)

4.14.1 New Fixing Web

Adjust the position for the solenoid using the screw [2] so that the distance of travel of the drive lever [1] is 8.6 mm.

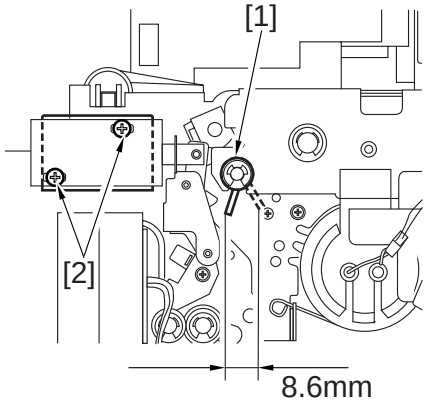

F03-414-01

4.14.2 Existing Fixing Web

Before removing the solenoid, take note of the position [A] of the drive lever when the solenoid turns on. After replacing the solenoid, adjust its position using the screw [2] so that the drive lever [1] will be positioned as it was before replacement when the solenoid turns on.

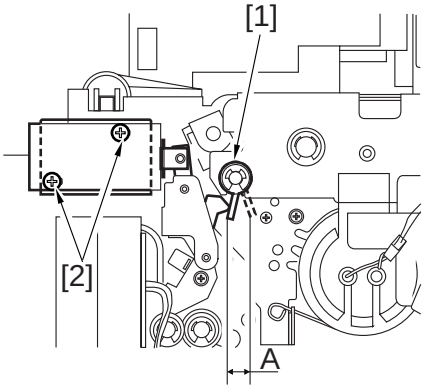

F03-414-02

COPYRIGHT © 2000 CANON INC.

4.15 Position of the Side Paper Deck Pickup Roller Releasing Solenoid

Before removing the deck pickup roller releasing solenoid [1] from the support plate, take note of the position of the two fixing screws [2] of the solenoid with reference to the index on the support plate. Or, draw a line on the support plate so that it will serve as a reference when positioning the solenoid.

When mounting the solenoid on its own, be sure to secure it in its original position.

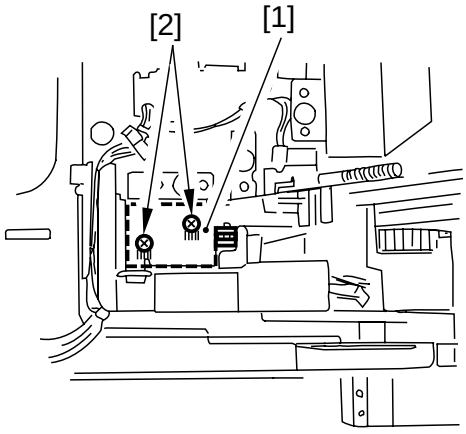

F03-415-01

4.16 Attaching the Timing Belt of the Manual Feed Tray Assembly

1) Butt the rack plate [1] of the manual feed tray against A (open state}.
2) Move the slide volume in the direction of B, and attach the timing belt [2] to the pulley [3].

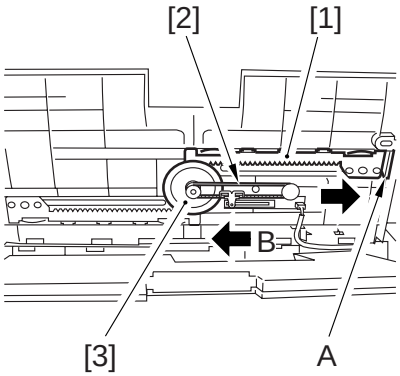

F03-416-01

COPYRIGHT © 2000 CANON INC.

4.17 Attaching the Drive Belt

Attach the drive belt on the pulley and the rollers as indicated.

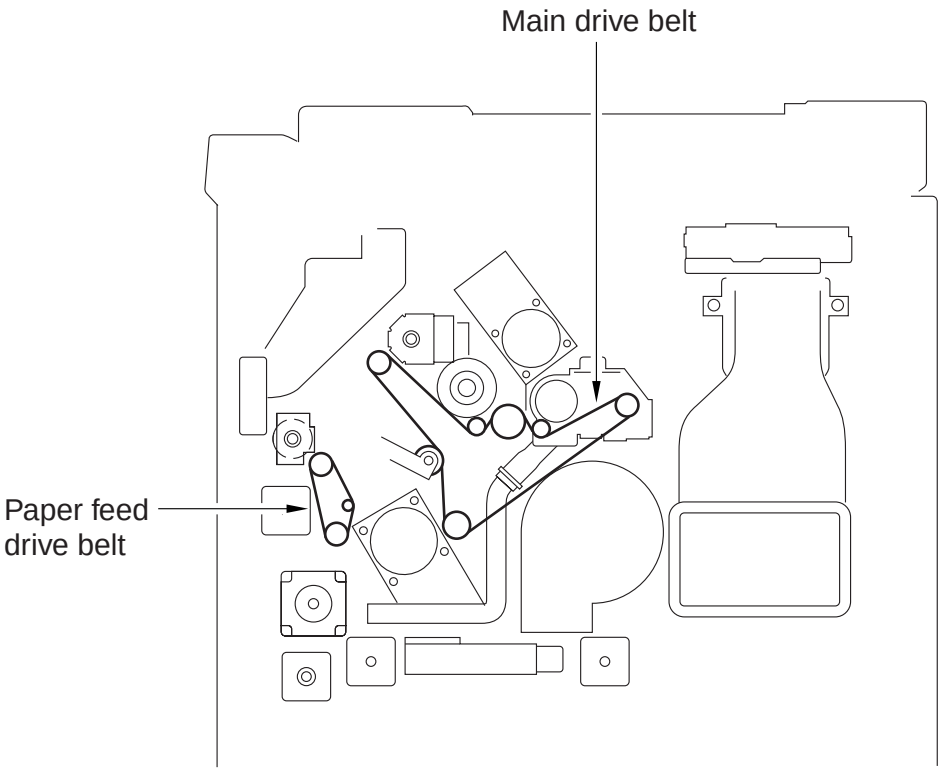

F03-417-01

COPYRIGHT © 2000 CANON INC.

5. Fixing System

5.1 Points to Note When Mounting the Fixing Heater

1) Do not touch the surface of the heater.
2) For both heaters, be sure that the side with the longer harness is toward the front.
3) Mount the main heater [1] to the right side and the sub heater [2] to the left side (viewing from the front of the fixing assembly).
4) Be user that the protrusions of the heaters will not interfere, i.e., stagger them.
5) When mounting the faston to the fixing heater at the rear, do not bend the faston terminals (A, B) as if to direct it toward the outside.
   Be sure it is parallel to the holder.

5.2 Position of the Fixing Inlet Guide

- Points to Note When Making Adjustments in the Field

1) For the position of the inlet guide, see the instructions under 2.4.1, i.e., adjusting the position of the fixing inlet guide solenoid (SL1).
2) The inlet guide will move down when the solenoid (SL1) turns on.
3) The difference in the height of the inlet guide between front and rear must be within 0.5 mm.
4) The height of the inlet guide may be adjusted by loosening the fixing screw on the height adjusting support plate.



Removing the inlet guide base will require adjustment of the position of the inlet guide. To avoid the adjustment, try not to loosen the mounting screw on the inlet guide base. If you loosened it for some unavoidable reason, be sure to position it correctly with reference to the index on the fixing assembly base.

COPYRIGHT © 2000 CANON INC.

5.3 Adjusting the Lower Roller Pressure (nip)

5.3.1 Taking Measurements

Wait for 15 min after the machine ends its warm-up; then, make 20 A4 copies before starting the work:

1) Place A4 or LTR paper, and select A4 or LTR in the control panel.
2) Make the following selections in service mode to discharge the paper: COPIER>FUNCTION>FIXING>NIP-CHK

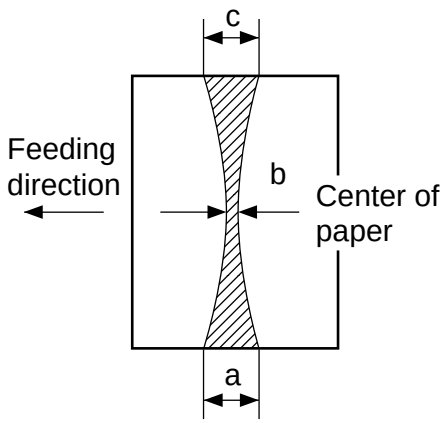

b : 7.8mm ± 0.5mm
a-c : 0.5mm or less

F03-503-01

5.3.2 Standards

1) Measure the width of a, b and c.

a and c are points 10 mm from both edges of paper.

2) Check to see if the measurements are as indicated. Otherwise, make the adjustment under c.

Be sure that both upper and lower rollers are fully heated when taking measurements.

5.3.3 Making Adjustments

1) Slide the fixing assembly out of the machine.
2) Open the delivery assembly.
3) Adjust the nip using the adjusting screw [1] found at the front and the rear.

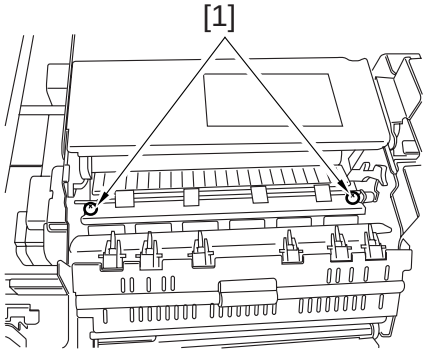

F03-503-02

6. Laser Exposure System

6.1 When Replacing the Scanner Unit

If the temperature of the fixing assembly is 150°C or higher when the scanner unit is replaced, force potential control in service mode:

1) Make the following selections in service mode: COPIER>FUNCTION>DPC>DPC.
2) Turn off and then on the main power switch.

COPYRIGHT © 2000 CANON INC.

7. Electrical Parts

7.1 When Replacing the CCD Unit

1) Replace the CCD unit.
2) After assembling the machine, connect the power plug to the power outlet, and turn on the main power switch.
3) Execute the following modes:
   CCD auto adjustment: COPIER>FUNCTION>CCD>CCD-ADJ
   CCD edge gain correction position auto adjustment:
   COPIER>FUNCTION>CCD>EGGN-POS
6) When the following data is updated (automatically), record them on the service label:
   COPIER>ADJUST>CCD>all items

7.2 When Replacing the Reader controller PCB

1) Print out the data of user mode/service mode.
2) Replace the reader controller PCB.
3) Remove the EEPROM (1 pc.) from the existing PCB, and mount it to the new PCB.
4) After assembling the machine, connect the power plug to the power outlet, and turn on the main power switch.
5) Check to make sure that the following service mode settings are the same as the data before replacement:
   COPIER>ADJUST>AE>all items
   COPIER>ADJUST>ADJ-XY>all items
   COPIER>ADJUST>CCD>all items

If any service mode setting is faulty, enter the respective setting recorded on the service label in service mode.

COPYRIGHT © 2000 CANON INC.

7.3 When Replacing the Main Controller PCB

1) Replace the main controller PCB.
2) Remove the counter memory PCB from the existing PCB, and mount it to the new PCB.
3) After assembling the machine, connect the power plug to the power outlet, and turn on the main power switch.

7.4 When Replacing the HDD Unit



When replacing the HDD unit, be sure to keep the following in mind:
1. Take appropriate measures against static charges.
2. Keep the HDD unit protected from impact.

1) Replace the HDD unit.
2) After assembling the machine, connect the power plug to the power outlet.
3) Connect a PC to which the Service Support Tool has been installed.
4) Turn on the PC, and turn on the main power switch while holding down both ‘2’ and ‘8’ on the keypad.
5) Using the Service Support Tool, format the HDD unit and install the system software.

COPYRIGHT © 2000 CANON INC.

7.5 When Replacing the DC Controller PCB

1) Print out the data of user mode/service mode.
2) Replace the DC controller PCB.
3) Remove the EEPROMs (6 pc.) from the existing PCB, and mount them to the new PCB.
4) After assembling the machine, connect the power plug to the power outlet, and turn on the main power switch.
5) Enter the values recorded on the label attached to the new DC controller PCB in service mode:

   COPIER>ADJUST>DEVELOP>D-HV-DE

   COPIER>ADJUST>HV-TR>D-PRE-TR

   COPIER>ADJUST>HV-TR>D-HV-TR

   COPIER>ADJUST>HV-SP>D-HV-SP
6) Check to make sure that the following service mode settings are the same as the data obtained before replacing the PCB:

   COPIER>ADJUST>LASER>(all items)

   COPIER>ADJUST>DEVELOP>(all items except D-HV-DE)

   COPIER>ADJUST>DENS>(all items)

   COPIER>ADJUST>BLANK>(all items)

   COPIER>ADJUST>V-CONT>(all items)

   COPIER>ADJUST>HV-PRI>(all items)

   COPIER>ADJUST>HV-TR>(all items except D-PRE-TR and D-HV-TR)

   COPIER>ADJUST>HV-SP>(all items except D-HV-SP)

   COPIER>ADJUST>FEED-ADJ>(all items)

   COPIER>ADJUST>CST-ADJ>(all items)

   COPIER>ADJUST>MISC>(all items)

If a fault is found in the service mode settings, enter the respective setting recorded on the service label in service mode; however, enter the settings recorded on the label attached to the high-voltage unit for the following service mode items:

COPIER>ADJUST>DEVELOP>HVT-DE
COPIER>ADJUST>HV-TR>HVT-TR
COPIER>ADJUST>HV-TR>H-PRE-TR
COPIER>ADJUST>HV-SP>HVT-SP

COPYRIGHT © 2000 CANON INC.

7.6 When Replacing the High-Voltage PCB

1) Replace the high-voltage PCB.
2) After assembling the machine, connect the power plug, and turn on the main power switch.
3) Enter the values recorded on the label attached to the new high-voltage PCB in the following service mode items:
   COPIER>ADJUST>DEVELOP>HVT-DE
   COPIER>ADJUST>HV-TR>HVT-TR
   COPIER>ADJUST>HV-TR>H-PRE-TR
   COPIER>ADJUST>HV-SP>HVT-SP

COPYRIGHT © 2000 CANON INC.

8. Checking the Surface Potential Control System

8.1 Outline

In the event of an image fault, it is important to find out if the cause is within the static latent image formation block (including the photosensitive drum and the potential control system) or is with the developing/transfer mechanism; and to isolate the cause, the surface potential must first be checked in service mode.

8.2 Disabling the Auto Control Mechanism

The potential control system may be checked by disabling the auto control mechanism (referred to hereafter as “non-auto control mode).

If improvements are noted in the images made in non-auto control mode, the potential measurement unit and the DC controller PCB may be suspected.

Further, non-auto control mode may also be made use of as an emergency measure against an error in the auto control mechanism.



In non-auto control mode, all control settings (corona current, intensity, developing bias) will automatically be set to the standard settings stored in the ROM.

Starting Non-Auto Control Mode

1) Make the following selections in service mode, and enter ‘0’: COPIER>OPTION>BODY>PO-CNT; then, press the OK key.
2) Press the Reset key twice.

COPYRIGHT © 2000 CANON INC.

8.3 Zero Level Check

A "zero level check" is a check made to find out whether the control system of the DC controller PCB identifies 0 V when the drum surface potential is 0 V.

A zero level check may be made in either of two ways, so as to find out whether a circuit on the the DC controller PCB or the potential measurement circuit is normal:

1) Method 1: for checking the level shift circuit of the DC controller PCB
2) Method 2: for checking the potential measurement circuit

8.3.1 Method 1

1) Turn off the main power switch.
2) Remove the rear upper cover.
3) Short CP106 [1] and CP105 [2] on the DC controller PCB using a cable whose both ends are equipped with an alligator clip or a probe.



When shorting CP106 and CP105, be sure to keep the shorting tool away from other elements or the pattern on the PCB.

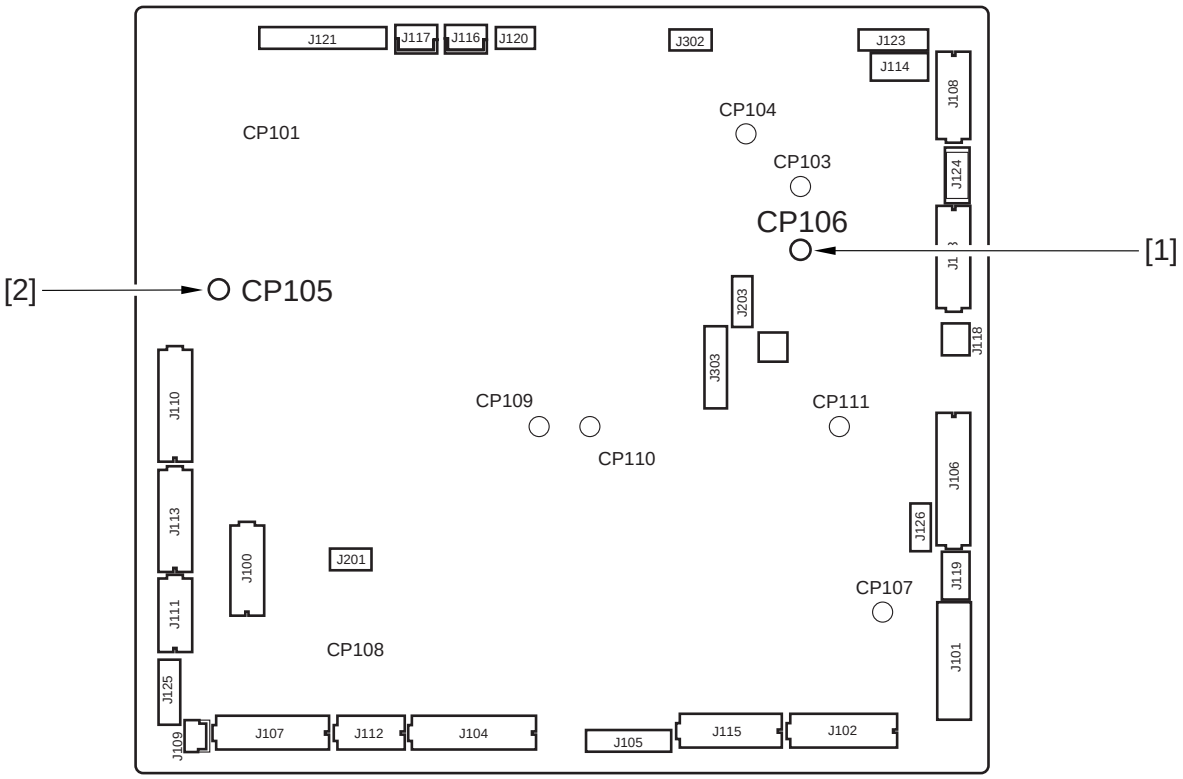

F03-803-01

COPYRIGHT © 2000 CANON INC.

4) Open the front cover, and slide out the pickup feeding unit to the front.
5) Remove the three screws [3], and detach the front switch cover [4].

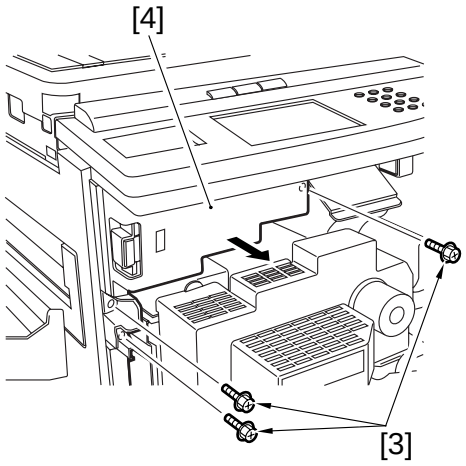

F03-803-02

6) Free the cable of the potential control PCB from the cable clamp, and disconnect the connector (4-pin) [5] connected to the DC controller PCB.

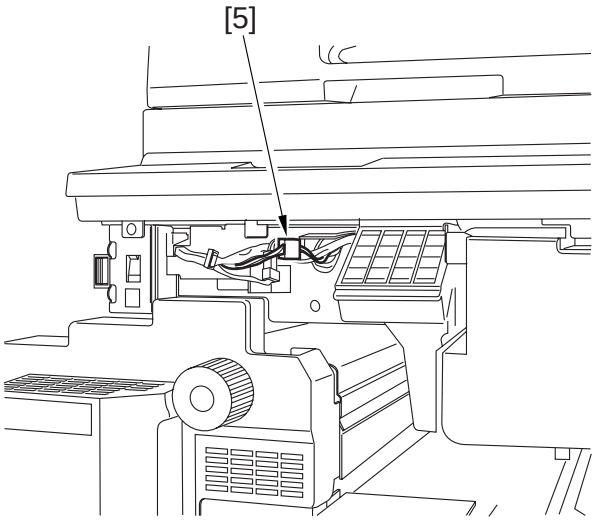

F03-803-03

7) Put the pickup feeding unit back into its initial position, and fit the door switch tool in the door switch assembly; then, turn on the main power switch.
8) Make the following selections in service mode, and check to find out that the reading during initial rotation is between 0 and 30: COPIER>DISPLAY>DPOT>DPOT-K.
If the reading is not between 0 and 30, suspect a fault on the DC controller PCB.
9) Turn off the main power switch, and remove the door switch tool.
10) Remove the jumper wire from the DC controller PCB.

COPYRIGHT © 2000 CANON INC.

11) Connect the connector of the cable (of the potential control PCB).
12) Mount the front switch cover, and close the front cover.
13) Mount the rear upper cover.
14) Turn on the main power switch.

8.3.2 Method 2

1) Disable potential control so that the machine will be in non-auto control mode.
2) Turn off the main power switch.
3) Remove the potential sensor from the machine.
4) Connect the connector of the potential controller to the connector on the machine side.
5) Fit the electrode (FY9-3012) [2] designed for checking potential sensors to the potential sensor [1].

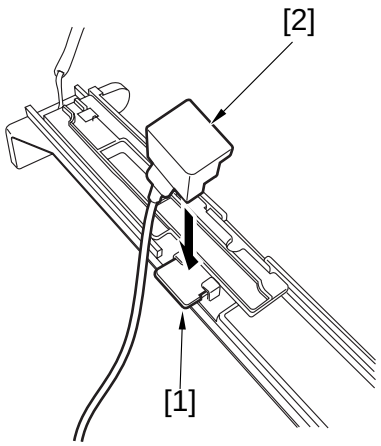

F03-803-04

When fitting the electrode to the potential sensor, be sure to keep the magnet of the electrode away from the potential sensor cover.

6) Connect the clip [3] designed for making checks to the frame of the machine frame (GND).

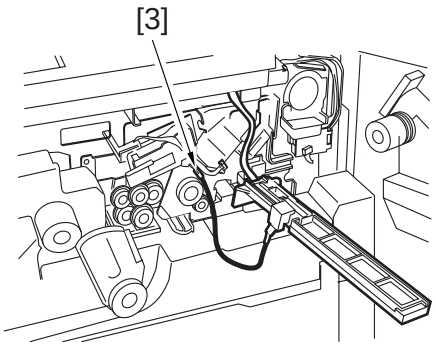

F03-803-05

COPYRIGHT © 2000 CANON INC.

Be sure to fit the clip [3] fully away from the sensor window, not letting it coming into contact with the cover of the sensor.

7) Insert the door switch tool into the door switch assembly.
8) Turn on the main power switch.

Be sure not to touch the potential senor assembly after turning on the power switch.

9) Make the following selections in service mode, and check to make user that the reading during initial rotation is between 0 and 30: COPIER>DISPLAY>DPOT>DPOT-K.

REF.

1. If the reading is as indicated for method 1 but is not so for method 2, suspect dirt on the or and a fault in the potential measurement unit.
2. If the reading is as indicated for both method 1 and method 2, the signal paths and the operations from the potential sensor unit to the microprocessor on the DC controller PCB may be assumed to be normal.

10) Turn off the main power switch.
11) Detach the electrode designed for checking potential sensors.
12) Mount the potential sensor support plate.
13) Turn on the main power switch.
14) Enable potential control.

COPYRIGHT © 2000 CANON INC.

Blank Page

COPYRIGHT © 2000 CANON INC.

8.4 Checking the Potential System

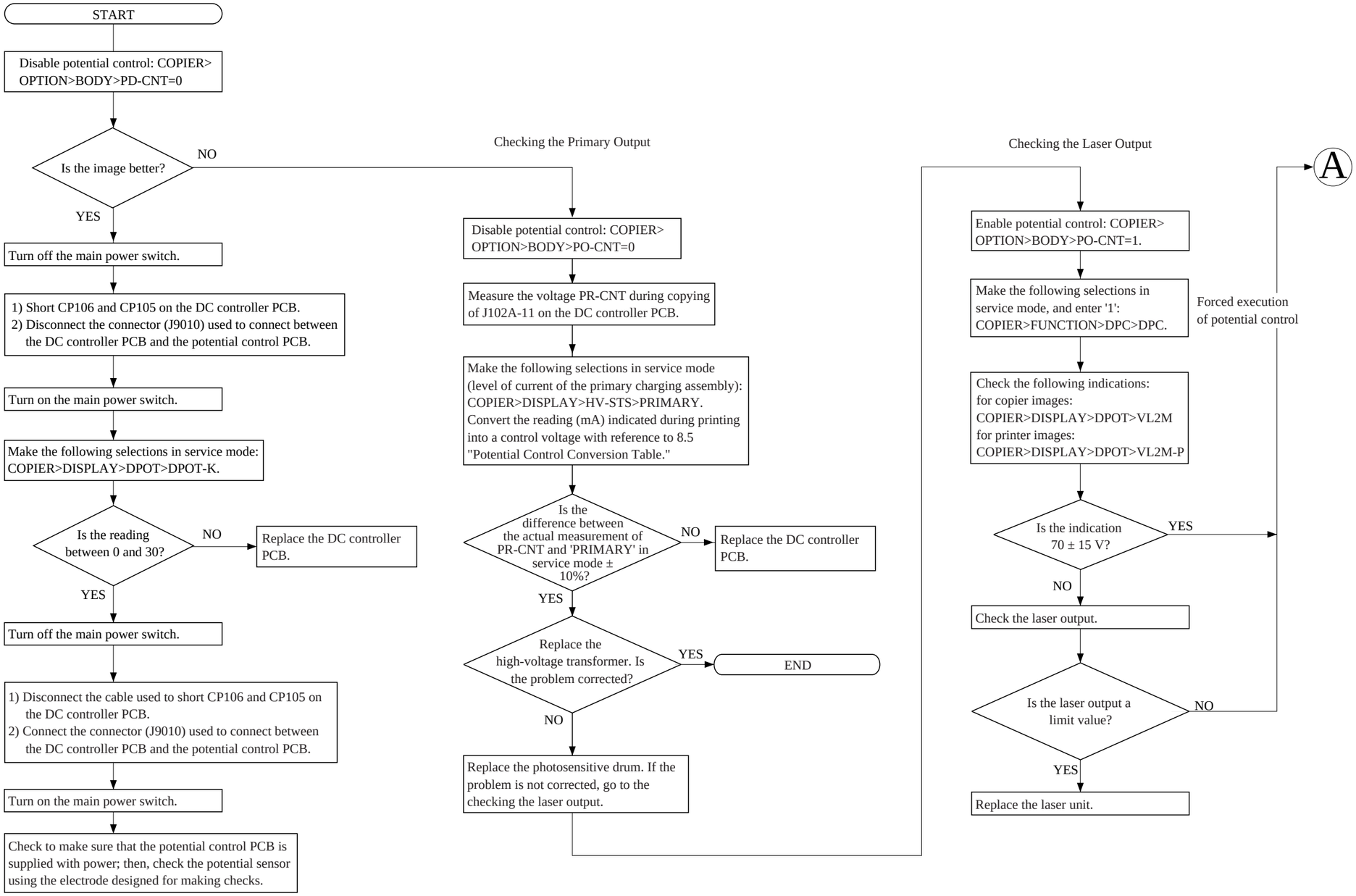

COPYRIGHT © 2000 CANON INC.

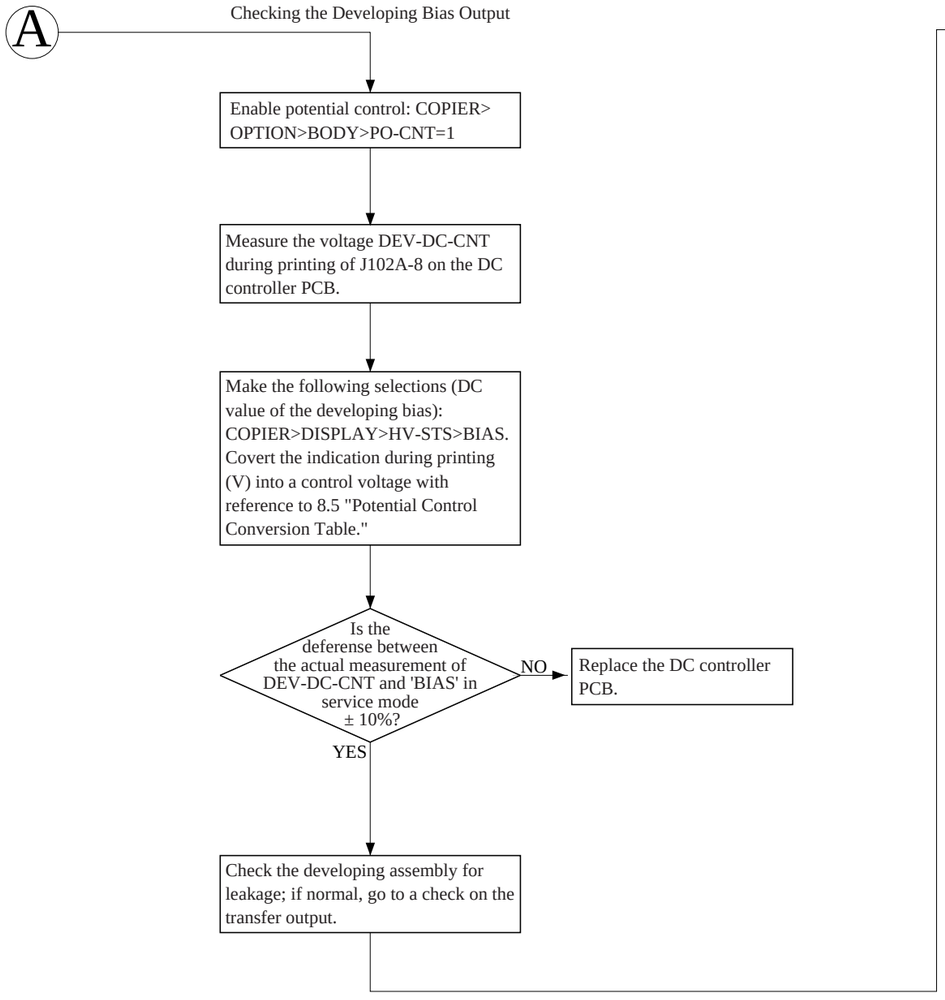

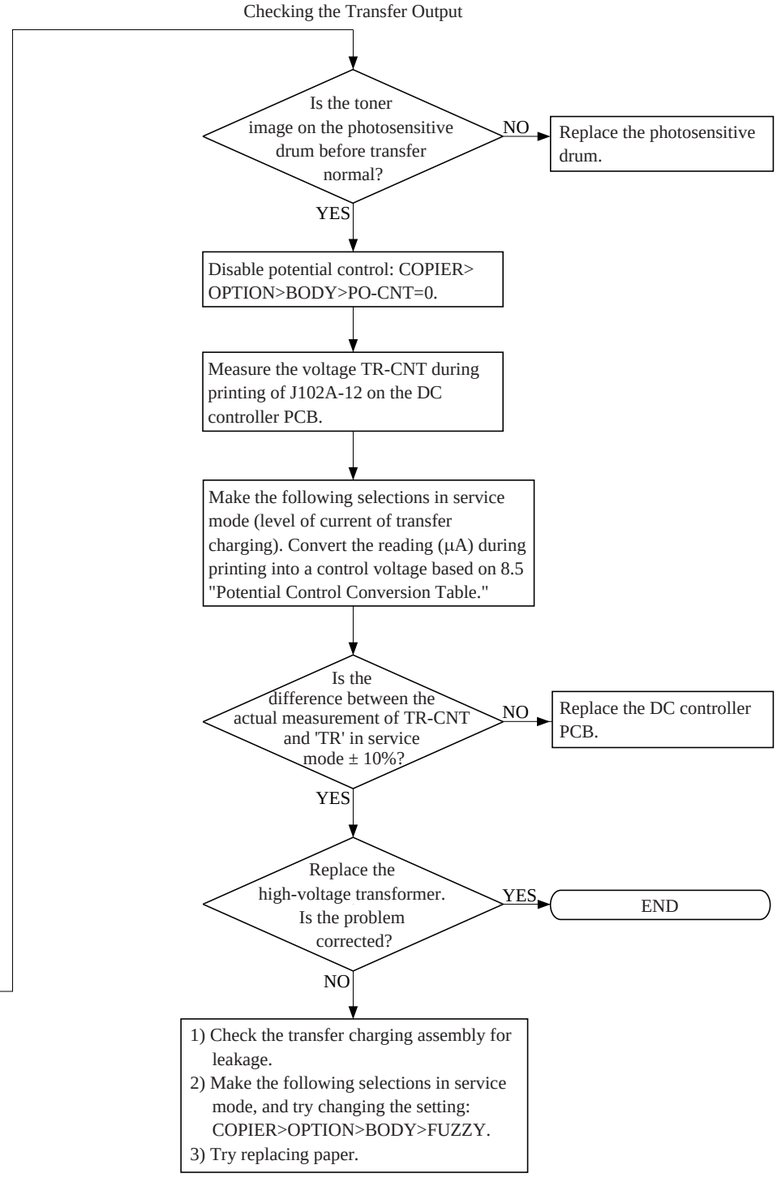

COPYRIGHT © 2000 CANON INC.

8.5 Conversion Table for the Potential Control System

Control[V]	Primary[μA]	Developing bias[V]	Pre-transfer[μA]	Transfer[μA]	Separation[μA]
3.00	1,400	0	0	440	100
3.05	1,391	3	-2	437	96
3.10	1,382	7	-4	434	92
3.15	1,373	11	-6	431	88
3.20	1,365	15	-8	429	85
3.25	1,356	18	-10	426	81
3.30	1,347	22	-12	426	77
3.35	1,338	26	-14	420	73
3.40	1,330	30	-16	418	70
3.45	1,321	33	-18	415	66
3.50	1,312	37	-20	412	62
3.55	1,303	41	-22	409	58
3.60	1,295	45	-24	407	55
3.65	1,286	48	-26	404	51
3.70	1,277	52	-28	401	47
3.75	1,268	56	-30	398	43
3.80	1,260	60	-33	396	40
3.85	1,251	63	-35	393	36
3.90	1,242	67	-37	390	32
3.95	1,233	71	-39	387	28
4.00	1,225	75	-41	385	25
4.05	1,216	78	-43	382	21
4.10	1,207	82	-45	379	17
4.15	1,198	86	-47	376	13
4.20	1,190	90	-49	374	10
4.25	1,181	93	-51	371	6
4.30	1,172	97	-53	368	2
4.35	1,163	101	-55	365	-1
4.40	1,155	105	-57	363	-5
4.45	1,146	108	-59	360	-8
4.50	1,137	112	-61	357	-12
4.55	1,128	116	-63	354	-16
4.60	1,120	120	-66	352	-20
4.65	1,111	123	-68	349	-23
4.70	1,102	127	-70	346	-27
4.75	1,093	131	-72	343	-31
4.80	1,085	135	-74	341	-35
4.85	1,076	138	-76	338	-38
4.90	1,067	142	-78	335	-42
4.95	1,058	146	-80	332	-46

COPYRIGHT © 2000 CANON INC.

Control[V]	Primary[μA]	Developing bias[V]	Pre-transfer[μA]	Transfer[μA]	Separation[μA]
5.00	1,050	150	-82	330	-50
5.05	1,041	153	-84	327	-53
5.10	1,032	157	-86	324	-57
5.15	1,023	161	-88	321	-61
5.20	1,015	165	-90	319	-65
5.25	1,006	168	-92	316	-68
5.30	997	172	-94	313	-72
5.35	938	176	-96	310	-76
5.40	980	180	-99	308	-80
5.45	971	183	-101	305	-83
5.50	962	187	-103	302	-87
5.55	953	191	-105	299	-91
5.60	945	195	-107	297	-95
5.65	936	198	-109	294	-98
5.70	927	202	-111	291	-102
5.75	918	206	-113	288	-106
5.80	910	210	-115	286	-110
5.85	901	213	-117	283	-113
5.90	892	217	-119	280	-117
5.95	883	221	-121	277	-121
6.00	875	225	-123	275	-125
6.05	866	228	-125	272	-128
6.10	857	232	-127	269	-132
6.15	848	236	-129	266	-136
6.20	840	240	-132	264	-140
6.25	831	243	-134	261	-143
6.30	822	247	-136	258	-147
6.35	813	251	-138	255	-151
6.40	805	255	-140	253	-155
6.45	796	258	-142	250	-158
6.50	787	262	-144	247	-162
6.55	778	266	-146	244	-166
6.60	770	270	-148	242	-170
6.65	761	273	-150	239	-173
6.70	752	277	-152	236	-177
6.75	743	281	-154	233	-181
6.80	735	285	-156	231	-185
6.85	726	288	-158	228	-188
6.90	717	292	-160	225	-192
6.95	708	296	-162	222	-196

COPYRIGHT © 2000 CANON INC.

Control[V]	Primary[µA]	Developing bias[V]	Pre-transfer[µA]	Transfer[µA]	Separation[µA]
7.00	700	300	-165	220	-200
7.05	691	303	-167	217	-203
7.10	682	307	-169	214	-207
7.15	673	311	-171	211	-211
7.20	665	315	-173	209	-215
7.25	656	318	-175	204	-218
7.30	647	322	-177	203	-222
7.35	638	326	-179	200	-226
7.40	630	330	-181	198	-230
7.45	621	333	-183	195	-233
7.50	612	337	-185	192	-237
7.55	603	341	-187	189	-241
7.60	595	345	-189	187	-245
7.65	586	348	-191	184	-248
7.70	577	352	-193	181	-252
7.75	568	356	-195	178	-256
7.80	560	360	-198	176	-260
7.85	551	363	-200	173	-263
7.90	542	367	-202	170	-267
7.95	533	371	-204	167	-271
8.00	525	375	-206	165	-275
8.05	516	378	-208	162	-278
8.10	507	382	-210	159	-282
8.15	498	386	-212	156	-286
8.20	490	390	-214	154	-290
8.25	481	393	-216	151	-293
8.30	472	397	-218	148	-297
8.35	463	401	-220	145	-301
8.40	455	405	-222	143	-305
8.45	446	408	-224	140	-308
8.50	437	412	-226	137	-312
8.55	428	416	-228	134	-316
8.60	420	420	-231	132	-320
8.65	411	423	-233	129	-323
8.70	402	427	-235	126	-327
8.75	393	431	-237	123	-331
8.80	385	435	-239	121	-335
8.85	376	438	-241	118	-338
8.90	367	442	-243	115	-342
8.95	358	446	-245	112	-346

COPYRIGHT © 2000 CANON INC.

Control[V]	Primary[μA]	Developing bias[V]	Pre-transfer[μA]	Transfer[μA]	Separation[μA]
9.00	350	450	-247	110	-350
9.05	341	453	-249	107	-353
9.10	332	457	-251	104	-357
9.15	323	461	-253	101	-361
9.20	315	465	-255	99	-365
9.25	306	468	-257	96	-368
9.30	297	472	-259	93	-372
9.35	288	476	-261	90	-376
9.40	280	480	-264	88	-380
9.45	271	483	-266	85	-383
9.50	262	487	-268	82	-387
9.55	253	491	-270	79	-391
9.60	245	495	-272	77	-395
9.65	236	498	-274	74	-398
9.70	227	502	-276	71	-402
9.75	218	506	-278	68	-406
9.80	210	510	-280	66	-410
9.85	201	513	-282	63	-413
9.90	192	517	-284	60	-417
9.95	183	521	-286	57	-421
10.00	175	525	-288	55	-425
10.05	166	528	-290	52	-428
10.10	157	532	-292	49	-432
10.15	148	536	-294	46	-436
10.20	140	540	-297	44	-440
10.25	131	543	-299	41	-443
10.30	122	547	-301	38	-447
10.35	113	551	-303	35	-451
10.40	105	555	-305	33	-455
10.45	96	558	-307	30	-458
10.50	87	562	-309	27	-462
10.55	78	566	-311	24	-466
10.60	70	570	-313	22	-470
10.65	61	573	-315	19	-473
10.70	52	577	-317	16	-477
10.75	43	581	-319	13	-481
10.80	35	585	-321	11	-485
10.85	26	588	-323	8	-488
10.90	17	592	-325	5	-492
10.95	8	596	-327	2	-496
11.00	0	600	-330	0	-500

COPYRIGHT © 2000 CANON INC.

8.6 Emergency Measures for a Fault in the Potential Sensor

If transfer separation fails because of a fault in the potential sensor, try using the following service mode items to get around the problem; keep in mind, however, that this is no more than a temporary measure used until the replacement of the potential sensor:

1. COPIER>OPTION>TEMPO>F-POT-SW
   If the potential sensor has gone out of order and transfer separation faults occur as a result, enter '1'.
2. COPIER>OPTION>TEMPO>F-POT-D
   The above service mode item must be set to '1':
   0: if the user mainly uses originals with a low image ratio (text-oriented; default)
   1: if the user mainly uses originals with a high image ratio (photo-oriented)
   2: if retransfer (white spots around 50 mm along the leading edge)

COPYRIGHT © 2000 CANON INC.

9. Checking the Environment Sensor

9.1 Procedure

Check the environment sensor using the environment sensor tool to see that it operates normally.

1) Make the following selections in service mode, and obtain the following data:
   COPIER>DISPLAY>ANALOG.
   Data A
   TEMP: machine inside temperature (°C) data A1
   HUM: machine inside humidity (%) data A2
2) Press the Reset key twice, and turn off the main power switch.
3) Remove the environment sensor, and attach the environment sensor tool (FY9-3014).
4) Turn on the main power switch, and level the machine alone for 5 min.
5) Make the following selections in service mode, and obtain the following data:
   COPIER>DISPLAY>ANALOG.
   Data B
   TEMP: machine inside temperature (°C) data B1
   HUM: machine inside humidity (%) data B2
6) Compare data A and data B; if the difference is not as indicated, replace the environment sensor.
   - difference between data A1 and data B1: 0±5
   - difference between data A2 and data B2: 0±20
7) Press the Reset key twice, and turn off the main power switch.
8) Detach the environment sensor tool, and attach the environment sensor.



The environment sensor tool (FY9-3014) is adjusted at the factory to high precision. Be sure to store it in an air-tight container with a drying agent.

9.2 Emergency Measure for a Fault in the Environment Sensor

If the environment sensor has gone out of order, the machine may be used by entering humidity data in the following service mode item; keep in mind, however that this is no more than a temporary measure used until replacement of the environment sensor:

1. COPIER>OPTION>TEMPO>F-HUM-SW
   Enter ‘1’ if the environment senor has gone out of order.
2. COPIER>OPTION>TEMPO>F-HUM-D
   The above service mode item must be set to ‘1’.
   Enter the humidity of the site of installation (between 30% and 99%; default, 35%)

COPYRIGHT © 2000 CANON INC.

10. Checking the Photointerrupters

The machine's photointerrupters may be checked by means of a meter or service mode.

10.1 Using a Meter

1) Set the meter range to 300 VDC.
2) Connect the - probe of the meter to the GND terminal of the PCB to check.
3) Connect the + probe of the meter to the terminals indicated.
4) Make checks as instructed.

10.2 Using Service Mode

1) Enter service mode, and select I/O.
2) Bring up the I/O address to check, and make checks as indicated.



Turning on and off the sensor can turn on the machine's motors. Take full care.

10.3 Check List

Guide to Connector No.
D: DC controller PCB
R: reader controller PCB

Reader Unit (service mode: COPIER>I/O>R-CON)

Sensor	Connector No. I/O address	Checks			I/O display	Voltage display
PS39	R>J5012-2	Move the No. 1 mirror base	Light-blocking plate	Present	1	5V
Scanner HP sensor	IO-P6-4	by hand.		Absent	0	0V
PS40	R>J5012-5	Move the sensor lever by hand.	Copyboard (ADF)	Closed	1	5V
Copyboard cover sensor	IO-P6-7			Open	0	0V
PS43	R>J5006-2	Place an original on the copyboard.	Paper	Present	0	0V
Original sensor	IO-P4-6			Absent	1	5V

T03-1003-01

COPYRIGHT © 2000 CANON INC.

Printer Unit (service mode: COPIER>I/O>DC-CON)

Sensor	Connector No. / I/O address	Checks			I/O display	Voltage display
PS2	D>J113-A14	Open and close the right lower cover.	Cover	Open	-	0V
Right lower cover open/closed sensor	—			Closed	-	5V
PS3	D>J103-B14	Open and close the manual feed tray.	Tray	Open	0	0V
Manual feed tray open/closed sensor	IO-P03-13			Closed	1	5V
PS4	D>J106-B19	Put paper over the point of detection.	Paper	Present	0	0V
Claw jam sensor	IO-P01-14			Absent	1	5V
PS5	D>J112-B2	Open and close the right deck.	Right deck	Open	0	0V
Right deck open/closed sensor	IO-P03-11			Closed	1	5V
PS6	D>J112-A2	Put paper in the right deck.	Paper	Present	1	5V
Right deck lifter sensor	IO-P03-1			Absent	0	0V
PS7	D>J112-A5	Put paper in the right deck.	Paper	Present	1	5V
Right deck paper sensor	IO-P01-7			Absent	0	0V
PS8	D>J112-B8	Put paper in the right deck.	Paper	Present	1	5V
Right deck limit sensor	IO-P02-4			Absent	0	0V
PS9	D>J115-A14	Open and close the left deck.	Left deck	Open	0	0V
Left deck open/closes sensor	IO-P03-12			Closed	1	5V
PS10	D>J115-A5	Put paper in the left deck.	Paper	Present	1	5V
Left deck lifter sensor	IO-P03-3			Absent	0	0V
PS11	D>J115-A8	Put paper in the left deck.	Paper	Present	1	5V
Left deck paper sensor	IO-P01-9			Absent	0	0V
PS12	D>J115-A2	Put paper in the left deck.	Paper	Present	1	5V
Left deck limit sensor	IO-P03-4			Absent	0	0V
PS13	D>J110-A5	Put paper in the cassette 3.	Paper	Present	1	5V
Cassette 3 paper sensor	IO-P01-3			Absent	0	0V
PS14	D>J110-B5	Put paper in the cassette 4.	Paper	Present	1	5V
Cassette 4 paper sensor	IO-P01-5			Absent	0	0V
PS15	D>J110-A11	Open and close the cassette 3.	Cassette	Open	0	0V
Cassette 3 open/closed sensor	IO-P04-3			Closed	1	5V
PS16	D>J110-B11	Open and close the cassette 4.	Cassette	Open	0	0V
Cassette 4 open/closed sensor	IO-P04-4			Closed	1	5V
PS17	D>J110-A2	Put paper in the cassette 3.	Paper	Present	1	5V
Cassette 3 lifter sensor	IO-P03-5			Absent	0	0V
PS18	D>J110-B2	Put paper in the cassette 4.	Paper	Present	0	0V
Cassette 4 lifter sensor	IO-P03-6			Absent	1	5V
PS19	D>J112-A8	Put paper over the point of	Paper	Present	1	5V
Right deck re-tray sensor	IO-P01-2	detection.		Absent	0	0V

T03-1003-02

COPYRIGHT © 2000 CANON INC.

Sensor	Connector No. I/O address	Checks			I/O display	Voltage display
PS20 Left deck re-try sensor	D>J115-A11 IO-P02-2	Put paper over the point of detection.	Paper	Present Absent	1 0	5V 0V
PS21 Cassette 3 re-try sensor	D>J110-A8 IO-P02-0	Put paper over the point of detection.	Paper	Present Absent	1 0	5V 0V
PS22 Cassette 4 re-try sensor	D>J110-B8 IO-P02-1	Put paper over the point of detection.	Paper	Present Absent	1 0	5V 0V
PS23 Manual paper sensor	D>J108-B9 IO-P01-0	Put paper on the manual feed tray.	Paper	Present Absent	0 1	5V 0V
PS24 Vertical path 1 paper sensor	D>J113-A5 IO-P01-8	Open the right cover, and move the sensor lever.	Light-blocking plate	Present Absent	1 0	5V 0V
PS25 Vertical path 2 paper sensor	D>J113-A2 IO-P01-10	Open the right cover, and move the sensor lever.	Light-blocking plate	Present Absent	1 0	5V 0V
PS26 Vertical path 3 paper sensor	D>J110-A14 IO-P01-4	Open the right cover, and move the sensor lever.	Light-blocking plate	Present Absent	1 0	5V 0V
PS27 Vertical path 4 paper sensor	D>J110-B14 IO-P01-6	Open the right cover, and move the sensor lever.	Light-blocking plate	Present Absent	1 0	5V 0V
PS28 Laser write start sensor	D>J113-B2 IO-P02-8	Put paper over the point of detection.	Paper	Present Absent	1 0	5V 0V
PS29 Registration paper sensor	D>J106-A9 IO-P01-1	Put paper over the point of detection.	Paper	Present Absent	1 0	5V 0V
PS30 Duplex pre-registration sensor	D>J107-B13 IO-P02-5	Put paper over the point of detection.	Paper	Present Absent	1 0	5V 0V
PS31 Duplex horizontal registration sensor	D>J107-B12 IO-P02-6	Put paper over the point of detection.	Paper	Present Absent	0 1	5V 0V
PS32 Right deck feed paper sensor	D>J112-B5 IO-P03-2	Put paper over the point of detection.	Paper	Present Absent	1 0	5V 0V
PS33 Left deck feed paper sensor	D>J107-A16 IO-P01-15	Put paper over the point of detection.	Paper	Present Absent	1 0	5V 0V
PS34 Duplex sensor	D>J107-B14 IO-P02-11	Put paper over the point of detection.	Paper	Present Absent	1 0	5V 0V
PS35 Inside delivery sensor	D>J106-B1 IO-P01-12	Put paper over the point of detection.	Paper	Present Absent	0 1	5V 0V
PS36 Outside delivery sensor	D>J106-B20 IO-P01-11	Put paper over the point of detection.	Paper	Present Absent	1 0	5V 0V
PS37 Reversal sensor 1	D>J107-B15 IO-P02-3	Put paper over the point of detection.	Paper	Present Absent	1 0	5V 0V

T03-1003-03

COPYRIGHT © 2000 CANON INC.

Sensor	Connector No. I/O address	Checks			I/O display	Voltage display
PS38	D>J107-B16	Put paper over the point of	Paper	Present	1	5V
Reversal sensor 2	IO-P02-7	detection.		Absent	0	0V
PS45	D>J106-B5	Put paper over the	Web	Present	0	0V
Fixing web length sensor	IO-P02-12	sensor.		Short	1	5V
PS46	D>J106-B2	Put paper over the point of	Paper	Present	1	5V
Delivery assembly jam sensor	IO-P06-2	detection.		Absent	0	0V
PS47	D>J115-B2	Remove the deck from the machine,	Light-blocking	Present	1	5V
Right deck level (upper) sensor	IO-P05-8	and move the sensor lever.	plate	Absent	0	0V
PS48	D>J115-B5	Remove the deck from the machine,	Light-blocking	Present	1	5V
Right deck level (lower) sensor	IO-P05-12	and move the sensor lever.	plate	Absent	0	0V
PS49	D>J115-B8	Remove the deck from the machine,	Light-blocking	Present	1	5V
Left deck level (upper) sensor	IO-P05-9	and move the sensor lever.	plate	Absent	0	0V
PS50	D>J115-B11	Remove the deck from the machine,	Light-blocking	Present	0	0V
Left deck level (lower) sensor	IO-P05-13	and move the sensor lever.	plate	Absent	1	5V

T03-1003-04

COPYRIGHT © 2000 CANON INC.

CHAPTER 4

TROUBLESHOOTING IMAGE FAULTS/ MALFUNCTIONS

COPYRIGHT © 2000 CANON INC.

1. Making Initial Checks in the Event of an Image Fault

1.1 Site Environment

The site must meet the following requirements:

1. The main source of power must provide the rated voltage. (The power plug must remain connected throughout the night.)
2. The site must not be subject to high temperature/humidity (near a water faucet, water boiler, humidifier) or low temperature. It must not be near a source of fire, and must not be subject to dust.
3. The site must not be subject to ammonium gas.
4. The site must be free of the direct rays of the sun; otherwise, curtains must be provided to block out the rays.
5. The room must be well ventilated.
6. The floor must keep the machine level.
7. The source of power must provide power night and day.

Check the site of installation to see if it meets the requirements.

1.2 Checking the Originals for Symptoms

Try to find out where the problem is caused by the originals or the machine:

1. The copy density is optimum when it is as indicated by the index (5±1).
2. An original with a reddish background prevents good contrast; e.g., red slips.
3. Check the original for density:



A diazo copy (used as an original) or an original with transparency tends to produce prints that are likely to be judged “foggy.”.
An original prepared in pencil tends to produce prints that are likely to be judged “light.”.

1.3 Copyboard Cover, Copyboard Glass, and Standard White Plate

Check the copyboard cover, copyboard glass, and standard white plate for dirt and scratches. If soiled, clean it with mild detergent or alcohol; if scratched, replace it.

1.4 Checking the Charging Assemblies

1. Check each charging assembly for soiling and each charging wire for a fault (scratch, rust, etc.).
2. Clean the charging wire of each charging assembly and the shielding plate; if the dirt is excessive, replace it.
3. Check the type and the height of each charging assembly.
4. Check to make sure that each charging assembly is correctly mounted.
5. Check the charging wire cleaning pad (of each charging assembly) for displacement.

COPYRIGHT © 2000 CANON INC.

1.5 Checking the Developing Assembly

1) Check to make sure that the rolls on both ends of the developing assembly are in contact with the drum.
   Otherwise, “light images” may occur.
2) Check to make sure that the surface of the developing cylinder is coated with an even layer of toner.
   Otherwise, “light images” or “uneven density” may occur.

1.6 Checking the Paper

1) Check to see if the paper is of a recommended type.
   Advise the user that the use of paper not of a recommended type may not bring abut the best image quality.
2) Check to find out if the paper is moist.
   Try using paper fresh out of package.
   Advise the user that the use of moist paper will adversely affect transfer, generating poor images. Advise him/her on the correct method of storing paper.

1.7 Checking the Periodically Replaced Parts

Check with the Scheduled Servicing Chart and the Periodically Replaced Parts Table; if any part has reached the end of its life, replace it.

1.8 Image Adjustment Basic Procedure

If the prints have uneven density (difference in density between front and rear), light images, or foggy background, perform the Image Adjustment Basic Procedure.

1.9 Others

Bringing in a machine from a cold to warm room in winter for installation can cause condensation inside the machine, leading to various problems.


Memo

1. Condensation in the scanner (glass, mirror, lens) can cause dark images.
2. Condensation in the charging system can cause electrical leakage.
3. Condensation on the pickup/feeding guide plate can cause paper feeding faults.
   If condensation is noted, dry wipe the parts, or leave the machine alone while powered for 60 min or so.

 COPYRIGHT © 2000 CANON INC.

2. Samples of Image Faults

Note: The samples are made artificially to provide an idea of faulty copies, and may not represent actual faults.
(The NA-3 Test Sheet was copied in DIRECT mode on A4 paper, and reduced for printing.)

1. The copy is too light (halftone only).

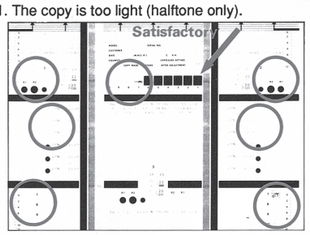

2. The copy is too light (both halftone and solid black).

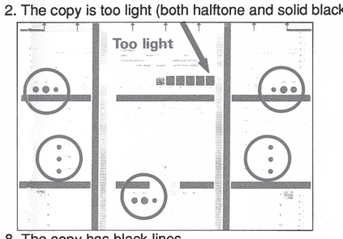

3. The copy is too light (entire copy, appreciably).

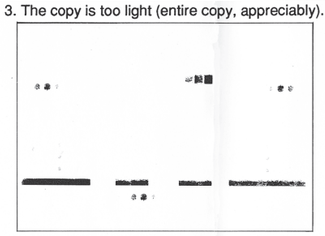

4. The copy has uneven density (darker along front).

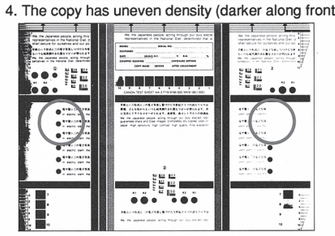

5. The copy has uneven density (lighter along front).

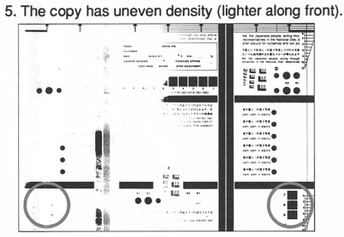

6. The copy is foggy (entire copy).

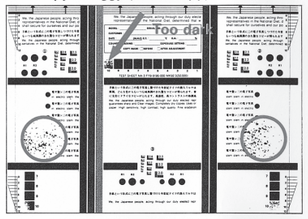

7. The copy is foggy (feeding direction).

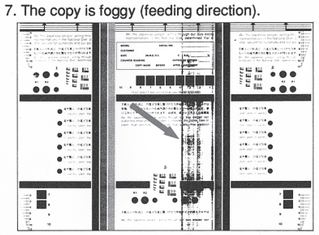

8. The copy has black lines (feeding direction, fuzzy, thick).

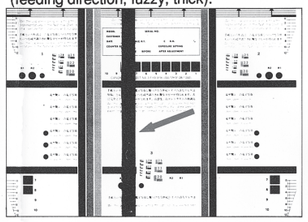

9. The copy has black lines (feeding direction, fine).

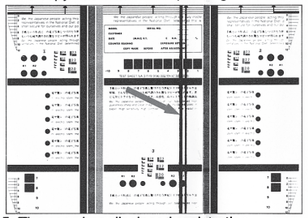

10. The copy has white strips (feeding direction).†

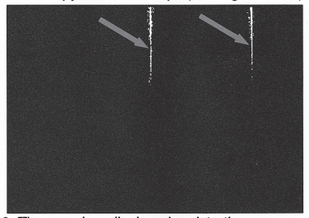

11. The copy has white lines (feeding direction).*

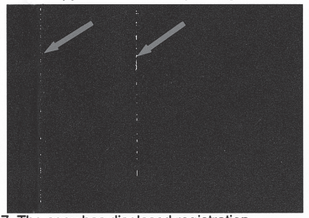

12. The copy has white strips (cross-feeding direction).

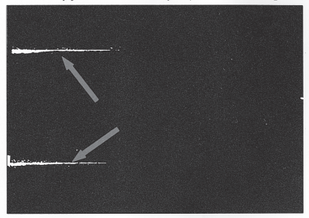

13. The back of the copy is soiled.

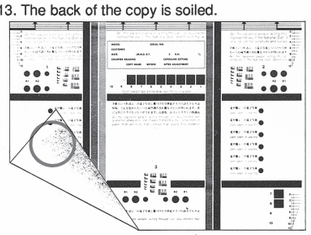

14. The copy has poor fixing.

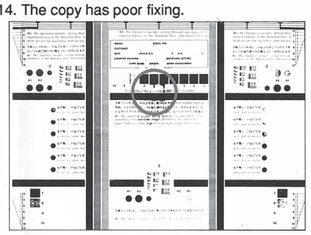

15. The copy has displaced registration (leading edge, extremely excessive margin).

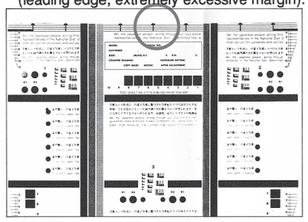

16. The copy has displaced registration (leading edge, excessive margin).

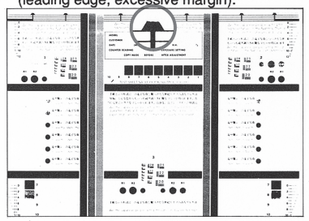

17. The copy has displaced registration (leading edge, no margin).

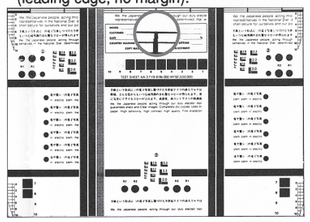

18. The copy has blurred images.

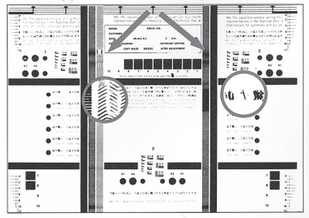

19. The copy is foggy (cross-feeding direction).

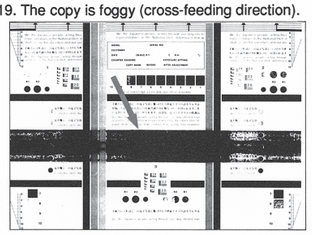

20. The copy has poor sharpness.

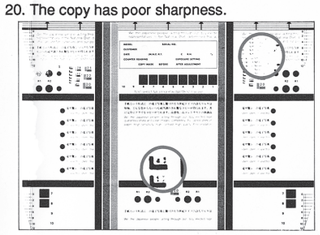

21. The copy is blank.

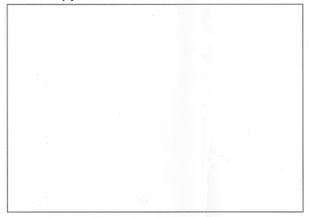

22. The copy is solid black.



* Copies made with the copyboard lifted; faults may also appear on normally made copies.
† Strips may vary in width.

COPYRIGHT © 2000 CANON INC.

3. Troubleshooting Image Faults

3.1 The image is too light (halftone)

AE adjustment	1) Make prints in AE mode. Is the density normal? YES: End.
Developing assembly	2) Are the rolls of the developing assembly in firm contact with the photosensitive drum? YES: Check to see if the surface of the developing cylinder is coated with an even layer of toner. NO: Check to find out if the developing assembly locking unit is mounted correctly.

COPYRIGHT © 2000 CANON INC.

3.2 The print is too light (including solid black area)
3.3 The print is too light (overall, appreciably)

	1) Turn off the main power switch in the middle of printing. At this time, is the toner image on the surface of the photosensitive drum (before transfer) more or less normal? YES: The cause is in a process that follows transfer. Go to step 3).
Developing assembly	
	2) Are the rolls of the developing assembly in firm contact with the photosensitive drum? NO: Check to see if the developing assembly locking unit is mounted correctly. YES: Check the control system of the developing bias.
Pre-transfer charging assembly	
	3) Is the pre-transfer charging assembly fitted securely? NO: Fit the charging assembly securely.
Transfer faults	
	4) Is the transfer/separation charging assembly fitted securely? NO: Fit the transfer/separation charging assembly securely. 5) Try changing the setting of the following in service mode between '1' and '3': COPIER>OPTION>BODY>FUZZY. Is the problem corrected? YES: End. (The problem is due to the environment.) NO: Set '0' to 'FUZZY', and go to the next step. 6) Measure the resistance between the transfer guide and the base (metal) with a meter. Is it 0Ω? YES: Check to find out if the transfer guide is in contact with a metal area (e.g., side plate of the feeding assembly). NO: Check the high-voltage transformer (HVT) and the DC controller PCB.

 COPYRIGHT © 2000 CANON INC.

3.4 The print has uneven density (darker at front)
3.5 The print has uneven density (lighter at front)

Pre-exposure lamp	1) Does the pre-exposure lamp turn on at an even intensity across its length during printing? NO: 1. Replace the pre-exposure lamp. 2. Replace the DC controller PCB.
Developing assembly	2) Are the rolls of the developing assembly in firm contact with the photo-sensitive drum? NO: Check to see if the developing assembly locking unit is mounted correctly. 3) Is the surface of the developing cylinder coated with an even layer of toner? NO: 1. Clean the edge of the blade of the developing assembly. (dry wiping) 2. Clean the surface of the developing cylinder. 3. Check to see if the toner inside the developing assembly is thicker on one side. YES: Check the nip of the fixing roller.

COPYRIGHT © 2000 CANON INC.

3.6 The print is foggy (overall)

Potential control system	
	1) Set '0' to the following in service mode to turn off potential control: COPIER>OPTION>BODY>PC-CNT> Is the problem corrected? YES: The cause is in the potential control mechanisms. Make checks according to the instructions for the potential control mechanism in Chapter 3 "Standards and Adjustments."
Photosensitive drum cleaner unit	
	2) Is the cleaning blade mounted correctly? NO: Mount the cleaning blade correctly.
Pre-exposure lamp/DC controller PCB	
	3) Is the pre-exposure lamp on during printing? NO: 1. Replace the pre-exposure lamp. 2. Replace the DC controller PCB.
Developing assembly	
	4) Are the developing rolls worn? YES: Replace the developing rolls.
Photosensitive drum	
	5) Is the photosensitive drum soiled? YES: Clean the photosensitive drum. NO: Replace the photosensitive drum.

 COPYRIGHT © 2000 CANON INC.

3.7 The print if foggy vertically
3.8 The print has black lines (vertical, blurred, thick)

Reader unit	1) Does the problem occur on copy images only? YES: The cause is in the reader unit. Check the following: 1. Scanning lamp for dirt and life 2. Reflecting plate, mirrors, lens, and glass for dirt 3. Standard white plate (back of copyboard glass) for dirt
Fixing assembly	2) During printing, turn off the main power switch while paper is in the feeding assembly; then, check the image on the paper. Is it normal? YES: The cause is in a process after the fixing system. Check the following: 1. Fixing assembly upper roller for dirt 2. Web for dirt
Potential control system	3) Set '0' to the following in service mode to turn off potential control: COPIER>OPTION>BODY>PC-CNT. Is the problem corrected? YES: The problem is in the potential control system. Make checks for the potential control system in Chapter 3 "Standards and Adjustments."
Primary charging assembly	4) Clean the primary charging wire, grid wire, and shielding plate. Is the problem corrected? YES: End.
Pre-exposure lamp	5) Clean the pre-exposure lamp. Is the problem corrected? YES: End.
Developing assembly, Photosensitive drum cleaner unit	6) Is the surface of the developing cylinder coated with an even layer of toner? NO: 1. Check the edge of the blade of the developing assembly. 2. Check the surface of the developing cylinder. YES: 1. Check the edge of the cleaning blade of the photosensitive drum. 2. Check the photosensitive drum cleaner unit.

COPYRIGHT © 2000 CANON INC.

3.9 The print has black lines (vertical, fine)

Reader unit	1) Does the problem occur only in copy images? YES: 1. Check the standard white plate and mirrors for dirt. 2. Execute the following in service mode: COPIER>FUNCTION>CCD>CCD-ADJ.
Dust-proofing glass.	2) Clean the Dust-proofing glass. Is the problem corrected? YES: End.
Fixing system	3) During printing, turn off the main power switch while paper is in the feeding assembly; then, check the image. Is it normal? YES: The cause is in a process after the fixing system. Check the following: 1. Fixing assembly upper roller for scratches and black lines. 2. Web for dirt 3. Thermistor and separation claw for dirt, and reciprocating operation
Primary charging assembly	4) Clean the primary charging assembly. Is the problem corrected? YES: End.
Photosensitive drum cleaner unit	5) Is there paper or foreign matter trapped in the cleaning blade assembly? YES: Remove the foreign matter, and clean the cleaning blade and the casing of the cleaner unit. 6) Are there scratches on the edge of the cleaning blade? (Feel the edge of the blade with your finger to find out.) YES: Turn it over to use the other edge. If both edges have scratches, replace it.
Photosensitive drum, Developing system	7) Are there scratches or black lines in the peripheral direction of the surface of the photosensitive drum? YES: Replace the photosensitive drum. If scratches are found, be sure to find out the cause. NO: Check the developing system.

 COPYRIGHT © 2000 CANON INC.

3.10 The print has white spots (vertical)
3.11 The print has white lines (vertical)

Reader unit	1) Does the problem occur only in copy images? YES: The cause is in the reader unit. Check the following: 1. Standard white plate (back of copyboard glass) for dirt 2. Execute the following in service mode: COPIER>FUNCTION>CCD>CCD-ADJ. 3. Execute the following in service mode: COPIER>FUNCTION>CCD>SH-PS-ST.
Fixing assembly	2) Generate test print TYPE [00]. Turn off the main power switch immediately before the paper enters the fixing assembly, and check the image. Is it normal? YES: The cause is in a process after the fixing system. Check the following: 1. Fixing assembly upper roller for offset
Photosensitive drum	3) Are there scratches in the peripheral direction of the surface of the photosensitive drum that match the image? YES: Find out the cause of the scratches, and replace the photosensitive drum.
Developing assembly	4) Is the surface of the developing cylinder coated with an even layer of toner? NO: Check the edge of the blade of the developing assembly for paper lint or the like.
Transfer/Separation charging assembly, Pre-transfer charging assembly	5) Clean the pre-transfer charging assembly and the transfer/separation charging assembly. Is the problem corrected? YES: End. NO: Try changing the setting of the following in service mode: COPIER>OPTION>BODY>FUZZY.

COPYRIGHT © 2000 CANON INC.

3.12 The print has white spots (horizontal)

Reader unit	1) Does the problem occur only in copy images? YES: 1. Check the scanner rail for foreign matter. 2. Check the scanner cable for tension
Charging wire	2) Does the problem occur at even intervals? YES: Clean each charging wire.
Developing assembly, Photosensitive drum	3) Does the problem occur at intervals of about 52 mm? YES: Check the developing assembly: 1. Clean the developing rolls. 2. Dry wipe the surface of the developing cylinder. 3. If scratches are found on the surface of the developing cylinder, replace the developing cylinder. NO: Check the photosensitive drum. 1. Clean the photosensitive drum. 2. If scratches are found on the surface of the photosensitive drum, find out the cause and replace the photosensitive drum.

 COPYRIGHT © 2000 CANON INC.

3.13 The back of the print is soiled

Transfer guide	1) Is the transfer guide soiled with toner? YES: 1. Clean the transfer guide. 2. Check the transfer guide bias. 3. Check the developing assembly for leakage of toner.
Drum cleaner	2) Is the paper feeding assembly soiled with toner? YES: 1. Clean the feeding assembly. 2. Check the drum cleaner assembly for leakage of waste toner.
Fixing assembly	3) Is the fixing assembly lower roller soiled? YES: 1. Clean the fixing assembly lower roller. 2. Clean the fixing assembly inlet guide. 3. Check the fixing upper roller and the web for dirt. NO: Check the following: 1. Registration roller for dirt. 2. Delivery roller and separation claw for dirt.

COPYRIGHT © 2000 CANON INC.

3.14 The print has fixing faults

Copy paper	1) Is the paper of a type that has poor fixing performance (e.g., thick paper)? YES: Set '2' (thick paper mode) in service mode: COPIER>OPTION>BODY>FSPD-S. Perform the following, and advise the user: a. Set the source of paper (cassette, deck) to 'Heavy'. Additional Function>common settings>store paper type>source of paper>'Heavy' b. Advise the user to always use the selected source of paper (after depositing thick paper) whenever using thick paper. 2) Is the paper of a recommended type? NO: Try using recommended paper. If the results are good, advise the user to use recommended paper.
Fixing assembly	3) Does the problem occur vertically? YES: Check the fixing roller for scratches and dirt. NO: Check the fixing roller for nip.

 COPYRIGHT © 2000 CANON INC.

3.15 The print has a displaced leading edge (appreciably large margin)
3.16 The print has a displaced leading edge (large margin)
3.17 The print has a displaced leading edge (no margin)

Placement of originals	1) Is the original placed correctly? NO: Place the original correctly.
Pickup assembly	2) Make prints using the following source of paper. Is the displaced leading edge different? 1. Let/right front deck 2. Cassettes 3. Side paper deck 4. Duplex feeding assembly (double-sided print) YES: Check the source of paper in question for the following: 1. Life of each roller 2. Paper lint on each roller 3. Dirt on the paper path
Registration clutch, Registration roller	3) Make adjustments in service mode: COPIER>ADJUST>Feed-ADJ>REGIST. Is the problem corrected? YES: End. NO: 1. Check the registration roller for deformation/wear. 2. Check the registration roller drive system.

COPYRIGHT © 2000 CANON INC.

3.18 The print has a blurred image

Reader unit	1) Does the problem occur only in copy images? YES: Go to step 2). NO: Go to step 5).
Scanner drive cable	2) While the scanner is moving, is the cable wound on the cable pulley in lengths laid on top of one another? YES: 1. Route the cable once again. 2. If the cable has a fault, replace it.
Scanner drive belt	3) Is the belt too taut or too slack? YES: 1. Attach the belt properly. 2. If the belt has a fault, replace it.
Scanner rail	4) Move the No. 1 mirror base slowly by hand. Does it move smoothly? YES: Check the each mirror to see if it is free of wobbling. NO: Clean the surface of the scanner rail, and apply a small amount of silicone oil so that the No. 1 mirror base moves smoothly.
Photosensitive drum	5) Does the problem occur at intervals of about 250 mm? YES: 1. Check the drum gear. 2. Check the ends of the drum (in contact with the developing rolls) for scratches and protrusions.
Drum drive gear	6) Does the problem occur at intervals of about 3 mm? YES: Check the drum drive gear.
Developing gear	7) Does the problem occur at intervals of about 2.5 mm? YES: 1. Check the developing assembly. 2. Check to find out if the end of the drum is coated with toner; if so, clear it.
Drum drive system	8) Does the problem occur at intervals of about 10 mm? YES: Check the cleaner assembly and the drum drive system.
Laser scanner unit	9) Is the problem noted at intervals of about 0.5 mm? YES: Check the laser scanner unit. (The polygon mirror may be faulty.)

 COPYRIGHT © 2000 CANON INC.

3.19 The print is foggy (horizontally)

	1) Make a copy in Direct. Does the problem occur in the same position? YES: Go to step 3).
Reader unit	2) Does the scanning lamp flicker while the scanner is moving forward? YES: Check the scanning lamp and the inverter PCB. NO: Check the scanner drive system of the reader unit.
Scanner, Feeding system (wobbling)	3) Make a reduced copy, and compare it against a copy made in Direct. Is the position of the problem different? NO: Check the scanner. YES: Check the feeding system.

3.20 The print has poor sharpness

Reader assembly	1) Does the problem occur only in copy mages? YES: Go to step 2). NO: Go to step 4).
Copyboard glass	2) Is the copyboard glass coated with oil? YES: Clean the copyboard glass.
Mirrors	3) Is the horizontal reproduction on in copies made in Direct within standards? NO: Adjust the distance between No. 1 mirror and No. 2 mirror. YES: Clean the scanning lamp, reflecting plate, mirrors, and lens.
Dust-proofing glass, Photosensitive drum	4) Clean the durst-proofing glass. Is the problem corrected? YES: End.
Sharpness	5) Try changing the level of sharpness in service mode. Is the problem corrected? COPIER>OPTION>BODY>SHARP (A lager setting increases the sharpness.) YES: End. NO: Replace the photosensitive drum.

COPYRIGHT © 2000 CANON INC.

3.21 The print is blank

Reader unit	1) Does the problem occur only in copy images? YES: Check the connection of the following PCBs; if normal, replace the PCB. 1. CCD/AP PCB 2. DC controller PCB
Primary charging assembly	2) Make the following selections in service mode: COPIER>DISPLAY>DPOT. (Copier) Are the readings <VDM> ± 6V of the <VDT> ? (Printer) Are the readings <VDM-P> ± 6V of the <VDT-P> ? NO: 1. Check the primary charging assembly. 2. Check the HVT PCB. 3. Check the potential sensor and the potential control PCB.
Developing assembly locking unit	3) During printing, is the developing assembly locked against the photosensitive drum? NO: Check the mechanism of the developing assembly locking unit.
Developing assembly drive assembly	4) During copying, is the developing assembly rotating? NO: Check the drive system for the developing assembly.
Transfer charging assembly	5) Is the transfer charging assembly fitted fully and securely? NO: Fit it securely. 6) Is leakage found in the transfer charging assembly? YES: Check the transfer charging assembly. NO: 1. Replace the DC controller PCB. 2. Replace the main controller PCB.

 COPYRIGHT © 2000 CANON INC.

3.22 The print is solid black

Reader unit/Printer unit (isolation)	1) Does the problem occur only in copy images? YES: Got to step 2). NO: Go to step 3).
Scanning lamp	2) Is the scanning lamp on? NO: See “The scanning lamp fails to turn on.” YES: Check the connection of the following PCBs; if normal, replace the PCB. 1. CCDAP PCB 2. DC controller PCB
Laser unit	3) Make the following selections in service mode: COPIER>DISPLAY>MISC>LPOWER. Is the laser output present during printing? NO: Replace the laser unit. YES: 1. Replace the DC controller PCB. 2. Replace the main controller PCB.

COPYRIGHT © 2000 CANON INC.

4. Troubleshooting Malfunctions

4.1 Troubleshooting by Malfunction

4.1.1 E000

Thermistor (TH1, TH2)

1) Clear E000, and turn off and then on the main power switch. Make the following selections in service mode: COPIER>DISPLAY>ANALOG. Does <FIX-U> show an increase in temperature?

YES: The thermistor is faulty. Check the following:
- thermistor for mounting condition
- thermistor for soiled surface
- connection

Fixing heater (H1, H2; open circuit)

2) Is the electrical continuity of the fixing upper heater normal?

NO: Replace the fixing heater.

DC controller PCB, AC driver PCB (faulty)

3) Turn off the main power switch, and let the fixing upper roller cool. Then, turn on the main power switch. Clear E000, and trun off and then on the main power switch. Make the following in service mode: COPIER>I/O>DC-CON. Are bit 4 and bit 5 of IO-P12 '0'?

YES: Check the wiring; if normal, replace the DC controller PCB.

NO: Check the wiring; if normal, replace the AC driver PCB.

4.1.2 E001

AC driver PCB (fixing heater drive circuit; short circuit)

1) While keeping the main power switch off, let the fixing upper roller cool. While at it, check each thermistor for a soiled surface, poor mounting, and poor connection.
Turn on the main power switch, and clear E001; then, turn off and then on the power switch. Make the following selections in service mode: COPIER>DISPLAY>ANALOG. Is <FIX-U> about 230°C or higher?

YES: Replace the AC driver PCB.

Thermistor (TH1, TH2), DC controller PCB

2) Try replacing the thermistor. Is the problem corrected?

YES: End.

NO: Check the wiring; if normal, replace the DC controller PCB.

COPYRIGHT © 2000 CANON INC.

4.1.3 E002
4.1.4 E003

General condition

1) Turn on the main power switch, and clear E002/E003. Then, turn off and then on the main power switch. Is the fixing heater operating?

NO: See "The fixing heater fails to operate."

General condition

2) Is the connection of the connectors on the DC controller PCB and in the fixing assembly good? In addition, is the wiring from the thermistor to the DC controller PCB good?

NO: Correct the connection/wiring.

Main thermistor (TH1; mounting)

3) Is the thermistor in even contact with the fixing upper roller?

NO: Mount it correctly.

Main thermistor (TH1; soiling)

4) Clean the area of contact of the thermistor. Is the problem corrected?

YES: End.

Main thermistor (TH1; faulty)

5) Try replacing the thermistor. Is the problem corrected?

YES: End.

Fixing heater (H1, H2), DC controller PCB

6) Try replacing the heater. Is the problem corrected?

YES: End.

NO: Replace the DC controller PCB.

4.1.5 E004

Fixing heater (H1, H2), AC driver PCB, DC controller PCB

1) Try replacing the fixing heater. Is the problem corrected?

YES: End.

2) Try replacing the AC driver PCB. Is the problem corrected?

YES: End.

NO: Check the wiring; if normal, replace the DC controller PCB.

4.1.6 E005

Fixing web

1) Is the fixing web taken up?

YES: Replace the web with a new one.

COPYRIGHT © 2000 CANON INC.

Service mode

2) After replacing the fixing web, has the fixing web counter been reset in service mode (COPIER>COUNTER>MISC>FIX-WEB) ?

NO: Reset the counter.

Fixing web length detecting lever.

3) Is the position of the web length detecting lever correct?

YES: Correct the position of the lever.

Fixing web length sensor (PS45), DC controller PCB

4) Is the fixing web length sensor normal? (See the instructions on how to check the photointerrupters.)

NO: Replace the sensor.

YES: Replace the DC controller PCB.

4.1.7 E010

Connector

1) Is the connector of the main motor connected?

NO: Connect the connector.

Main motor (M2), DC controller PCB

2) When the Start key is pressed, does the voltage between J108-A6 (+) and J108-A8 (-) on the DC controller PCB change from 0 to about 5 V?

YES: Replace the main motor.

NO: Check the wiring; if normal, replace the DC controller PCB.

4.1.8 E012

1) Are the connectors of the drum (J601, J602) connected securely?

NO: Connect them securely.

DC power supply PCB

2) Turn on the main power switch, and measure the voltage of the connectors of the drum motor. Is it as indicated?

J601-1:24 V (approx.)

J601-2:0 V

NO: Check the wiring; if normal, replace the DC power supply PCB.

COPYRIGHT © 2000 CANON INC.

Drum motor (M1), DC controller PCB

3) Turn on the main power switch, and measure the voltage of the connectors of the drum motor. Is it as follows?

J602-2:5 V
J602-3:5 V
J602-1:0 V

YES: Replace the drum motor.
NO: Check the wiring; if normal, replace the DC controller PCB.

4.1.9 E013

Waste toner feedscrew (locked)

1) Is the waste toner feedscrew drive gear pushing the waste toner feedscrew lock detecting switch (MSW2)?

YES: Connect the connector.

Waste toner feedscrew lock detecting switch (MSW2), DC controller PCB

2) Make the following selections in service mode: COPIER>I/O>DC-CON. Is bit 15 of IO-P02 '0'?

YES: It is likely that the feedscrew inside the waste toner pipe is prevented from rotating because of some fault. If the outlet of the waste toner pipe is clogged with toner, remove the waste toner drive unit, and remove the toner. If otherwise, try turning the main motor clockwise by hand. If the screw rotates, wait and see what happens; if the screw does not rotate, replace the waste toner feeding unit.
NO: Check the wiring; if normal, replace the DC controller PCB.

4.1.10 E014

Connectors

1) Are the connectors of the fixing motor connected?

NO: Connect the connectors.

Fixing motor (M19), DC controller PCB

2) When the Start key is pressed, does the voltage between J106-B16 (+) and J106-B18 (-) on the DC controller PCB change from 0 to about 5 V?

YES: Replace the fixing motor.
NO: Check the wiring; if normal, replace the DC controller PCB.

4.1.11 E020

General condition

1) Is the developing assembly locking plate mounted correctly?

NO: Mount the plate correctly.

General condition

2) Is the shutter releasing member of the hopper mouth mounted correctly to the developing assembly locking plate?

NO: It is likely that the inside of the hopper is clogged with toner. Remove and then mount back the shutter releasing member to remove the clog, or replace the hopper unit.

General condition, Developing assembly toner sensor (TS1)

3) Is the developing assembly adequately provided with toner?

YES: Check the developing assembly toner sensor.

General condition, Hopper toner sensor (TS2)

4) Is the hopper adequately provided with toner?

NO: Check the hopper toner sensor.

Hopper connector, Hopper supply motor (M10)

5) Is the connection of the hopper connector normal?

NO: Connect the connector securely.

YES: Check the hopper supply motor.

4.1.12 E032

Connector

1) Is the remote diagnostic device connected securely?

NO: Connect it securely.

Remote diagnostic device

2) Try replacing the remote diagnostic device. Is the problem corrected?

YES: End.

NO: Check the wiring; if normal; replace the main controller PCB.

4.1.13 E061

Laser shutter

1) Remove the laser scanner unit. Is the laser shutter mechanism normal?

NO: Correct the laser shutter mechanism.

Potential sensor unit

2) Is the potential sensor normal? (See "Checking the Surface Potential Control System" under "Standards and Adjustments.")

COPYRIGHT © 2000 CANON INC.

Laser unit, DC controller PCB

3) Try replacing the laser unit. Is the problem corrected?

YES: End.

NO: Check the wiring; if normal, replace the DC controller PCB.

4.1.14 E100

BD PCB

1) Try replacing the BD PCB. Is the problem corrected?

YES: End.

Laser output

2) Try replacing the laser unit. Is the problem corrected?

YES: End.

Laser scanner unit, DC controller PCB

3) Try replacing the laser unit. Is the problem corrected?

YES: End.

NO: Check the wiring; if normal, replace the DC controller PCB.

4.1.15 E110

Connectors

1) Is the connector (J116) on the DC controller PCB connected securely?

NO: Connect the connector securely.

Connector

2) Open the manual feed cover, and remove the developing assembly locking plate. Is the relay connector (5-pin) behind the laser scanner plate connected securely? (Do NOT detach the lid of the laser scanner unit.)

NO: Connect it securely.

Laser scanner unit, DC controller PCB

3) Try replacing the laser scanner unit. Is the problem corrected?

YES: End.

NO: Check the wiring; if normal, replace the DC controller PCB.

4.1.16 E121

Foreign object

1) Is there a foreign object that hinders the rotation of the fan in the rotating mechanism of the controller cooling fan?

YES: Remove the foreign object.

Connector

2) Is the connector (J108) on the DC controller PCB connected correctly?

NO: Connect the connector securely.

Controller cooling fan (FM4), DC controller PCB

3) Try replacing the controller cooling fan. Is the problem corrected?

YES: End.

NO: Check the wiring; if normal, replace the DC controller PCB.

4.1.17 E196

EEPROMs

1) If the EEPROMs (6 pc.) have been removed from the DC controller PCB, have they been put back in their initial sockets?

IC Nos. and Stickers on the EEPROMs

IC104: brown, IC105: red, IC109: yellow,

IC110: green, IC127: blue, IC130: white

EEPROMs

2) Are all EEPROMs securely connected to the sockets of the DC controller PCB?

NO: Connect them correctly.

Data

3) Execute the following in service mode: COPIER>FUNCTION>CLEAR>DC-CON. Is the problem corrected? Thereafter, be sure to enter the service mode data once again.

YES: Check the operation; if normal, end the work.

EEPROM, DC controller PCB

4) Try replacing the EEPROM. Is the problem corrected? Thereafter, be sure to enter the service mode data once again.

YES: End.

NO: Check the wiring; if normal, replace the DC controller PCB.

4.1.18 E202

General condition

1) Is the scanner in its home position when E202 is indicated?

NO: See “The scanner fails to move forward.”

COPYRIGHT © 2000 CANON INC.

Scanner HP sensor (PS39), Reader controller PCB

2) Is the scanner HP sensor normal? (Check the instructions on how to check photointerrupters.)

NO: Replace the sensor.

YES: Check the wiring; if normal, replace the reader controller PCB.

4.1.19 E204

Wrong operation

1) Turn off and then on the main power switch. Is the problem corrected?

YES: Check the operation once again; if normal, end the work.

Sensor (sensitivity)

2) Adjust the sensitivity of the ADF read sensor. Is the problem corrected?

YES: End.

Read sensor (S2)

3) Try replacing the ADF read sensor. Is the problem corrected?

YES: End.

ADF controller PCB, Reader controller PCB

4) Try replacing the ADF controller PCB. Is the problem corrected?

YES: End.

NO: Check the wiring; if normal, replace the reader controller PCB.

4.1.20 E220

Wiring

1) Is the wiring from the xenon lamp to the reader controller PCB normal?

NO: Disconnect and then connect the connectors; correct or replace the wiring.

Inverter PCB, Reader controller PCB

2) Try replacing the lamp inverter PCB. Is the problem corrected?

YES: End.

NO: Replace the reader controller PCB.

4.1.21 E225

Xenon lamp (LA2)

1) Try replacing the xenon lamp. Is the problem corrected?

YES: End.

COPYRIGHT © 2000 CANON INC.

CCD unit, Reader controller PCB

2) Try replacing the CCD unit. Is the problem corrected?

YES: End.

NO: Check the wring; if normal, replace the reader controller PCB.

4.1.22 E240

Wiring

1) Is the wiring from the main controller PCB to the DC controller PCB normal?

YES: End.

DC controller PCB, Main controller PCB

2) Try replacing the DC controller PCB. Is the problem corrected?

YES: End.

NO: Check the wiring; if normal, replace the main controller PCB.

4.1.23 E243

Wrong operation

1) Turn off and then on the power switch. Is the problem corrected?

YES: Check the operation once again; if normal, end the work.

Control panel CPU PCB, Main controller PCB

YES: End.

NO: Check the wiring; if normal, replace the main controller PCB.

4.1.24 E248

EEPROMs

1) Are the EEPROMs connected securely to the sockets of the reader controller PCB?

NO: Connect them securely.

Data (faulty)

2) Execute the following in service mode: COPIER>FUNCTION>CLEAR>R-CON. Is the problem corrected?
Thereafter, be sure to enter the service mode data.

YES: Check the operation; if normal, end the work.

EEPROM, Reader controller PCB

3) Try replacing the EEPROM. Is the problem corrected?
Thereafter, be sure to enter the service mode data newly.

YES: End.

NO: Check the wiring; if normal, replace the reader controller PCB.

COPYRIGHT © 2000 CANON INC.

4.1.25 E302

Connectors

1) Are the connectors (J6001/J6002) on the CCD/AP PCB and the connectors (J5002/J5003) on the reader controller PCB connected securely?

NO: Connect the connectors securely.

CCD unit

2) Try replacing the CCD unit. Is the problem corrected?

YES: End.

Reader controller PCB, Main controller PCB

3) Try replacing the reader controller PCB. Is the problem corrected?

YES: End.

NO: Check the wiring; if normal, replace the main controller PCB.

4.1.26 E601

a. E601-0000

Wiring

1) Are the connection and the cable of the connector (J1017) on the main controller PCB and the connector (J1551) on the hard disk drive normal?

NO: Correct the connection/cable.

Hard disk drive (HDD), Main controller PCB

2) Try replacing the hard disk drive and downloading the system software. Is the problem corrected?

YES: End.

NO: Replace the main controller PCB.

b. E601-0001

Wiring

1) Are the connection and the cable of the connector (J122) on the DC controller PCB and the connector (J1015) on the main controller PCB normal?

NO: Correct the connection/cable.

DC controller PCB, Main controller PCB

2) Try replacing the DC controller PCB. Is the problem corrected?

YES: End.

NO: Replace the main controller PCB.

4.1.27 E602

Wiring

1) Are the connection and the cable of the connector (J1017) on the main controller PCB and the connector (J1551) on the hard disk drive normal?

NO: Correct the connection/cable.

Hard disk drive (HDD), Main controller PCB

2) Try replacing the hard disk drive and downloading the system software. Is the problem corrected?

YES: End.

NO: Replace the main controller PCB.

4.1.28 E607

Foreign object

1) Is there a foreign object that hinders the rotation of the fan in the rotating mechanism of the hard disk fan?

YES: Remove the foreign object.

Connector

2) Is the connector (J124) on the DC controller PCB connected securely?

NO: Connect it securely.

Hard disk fan (FM7), DC controller PCB

3) Try replacing the hard disk fan. Is the problem corrected?

YES: End.

NO: Check the wiring; if normal, replace the DC controller PCB.

4.1.29 E677

Connector

1) Is the connection of the printer board (accessory) normal?

NO: Correct the connection.

Printer board, Main controller PCB

2) Try replacing the printer board.

YES: End.

NO: Check the wiring; if normal, replace the main controller PCB.

COPYRIGHT © 2000 CANON INC.

4.1.30 E710

a. E71-0001

Wrong operation, Reader controller PCB

1) Turn off and then on the power switch. Is the problem corrected?

YES: Check the operation once gain; if normal, end the work.

NO: Replace the reader controller PCB.

b. E710-0002

Wrong operation, DC controller PCB

1) Turn off and then on the main power switch. Is the problem corrected?

YES: Check the operation once again; if normal, end the work.

NO: Replace the DC controller PCB.

c. E71-0003

Wrong operation, Main controller PCB

1) Turn off and then on the power switch. Is the problem corrected?

YES: Check the operation once gain; if normal, end the work.

NO: Replace the main controller PCB.

4.1.31 E711

a. E711-0001

Wrong operation

1) Turn off and then on the main power switch. Is the problem corrected?

YES: Check the operation once again; if normal, end the work.

Connector, ADF controller PCB

2) Is the interface cable between the ADF controller PCB and the reader controller PCB normal?

NO: Correct the cable.

YES: Replace the ADF controller PCB.

b. E711-0002

Wrong operation

1) Turn off and then on the main power switch. Is the problem corrected?

YES: Check the operation once gain; if normal, end the work.

Connector, Finisher controller PCB

2) Is the interface cable between the finisher controller PCB and the DC controller PCB normal?

NO: Correct the cable.

YES: Replace the finisher controller PCB.

COPYRIGHT © 2000 CANON INC.

c. E711-0003

Wrong operation

1) Turn off and then on the main power switch. Is the problem corrected?

YES: Check the operation once again; if normal, end the work.

Connector, Remote diagnostic device PCB

2) Is the interface cable between the remote diagnostic device PCB and the main controller PCB normal?

NO: Correct the cable.

YES: Replace the remote diagnostic device PCB.

4.1.32 E712

Wrong operation

1) Turn off and then on the main power switch. Is the problem corrected?

YES: Check the operation once again; if normal, end the work.

Connector

2) Is the cable between the ADF controller PCB and the reader controller PCB normal?

NO: Correct the cable.

ADF controller PCB, Reader controller PCB

3) Try replacing the ADF controller PCB. Is the problem corrected?

YES: End.

NO: Replace the reader controller PCB.

4.1.33 E713

Wrong operation

1) Turn off and then on the main power switch.

YES: Check the operation once again; if normal, end the work.

Connectors

2) Is the interface cable between the finisher controller PCB and the DC controller PCB normal?

NO: Correct the cable.

Finisher controller PCB, DC controller PCB

3) Try replacing the finisher controller PCB. Is the problem corrected?

YES: End.

NO: Replace the DC controller PCB.

COPYRIGHT © 2000 CANON INC.

4.1.34 E717

Connector

1) Is the remote diagnostic device PCB connected securely?

NO: Connect it securely.

Remote diagnostic device PCB, Main controller PCB

2) Try replacing the remote diagnostic device PCB. Is the problem corrected?

YES: End.

NO: Replace the main controller PCB.

4.1.35 E719

Connector

1) Is the coin vendor connected securely?

NO: Connect the coin vendor securely.

Coin vendor, Main controller PCB

3) Try connecting to a different coin vendor. Is the problem corrected?

YES: End.

NO: Replace the main controller PCB.

4.1.36 E732

Wrong operation

1) Turn off and then on the main power switch. Is the problem corrected?

YES: Check the operation once again; if normal, end the work.

Connectors, Reader controller PCB

2) Is the connection of the connector (J1014) on the main controller PCB and the connector (J5004) on the reader controller PCB normal? Further, is the cable between these connectors normal?

NO: Correct the connectors/cable.

YES: Replace the reader controller PCB.

4.1.37 E733

Wrong operation

1) Turn off and then on the main power switch. Is the problem corrected?

YES: Check the operation once again; if normal, end the work.

COPYRIGHT © 2000 CANON INC.

Connectors, DC controller PCB

2) Is the connection of the connector (J1015) on the main controller PCB and the connector (J122) on the DC controller PCB normal? Further, is the cable between these connectors normal?

NO: Correct the connectors/cable.

YES: Replace the DC controller PCB.

4.1.38 E740

Wrong operation

1) Turn off and then on the main power switch. Is the problem corrected?

YES: Check the operation once again; if normal, end the work.

General condition

2) Is the detail code '0002'?

YES: Go to step 4.

Connectors

3) Are the connectors of the Network PCB and the connectors of the main controller PCB normal? Further, is the cable between these connectors normal?

NO: Correct the connectors/cable.

MAC address setting

4) Have the MAC address checked by the network administrator, and reset it. Is the problem corrected?

YES: End.

LAN card, Main controller PCB

5) Try replacing the Network PCB. Is the problem corrected?

YES: End.

NO: Replace the main controller PCB.

4.1.39 E741

Disabling each PCI slot in service mode (BOARD>PCI1-OFF through PCI3-OFF) will limit the occurrence of errors.

Wrong operation

1) Turn off and then on the main power switch. Is the problem corrected?

YES: Check the operation; if normal, end the work.

Board

2) Is the connection between the riser PCB and the main controller PCB normal? Further, is the cable normal?

NO: Correct the connection/cable.

COPYRIGHT © 2000 CANON INC.

Riser board, Main controller PCB

3) Try replacing the riser PCB. Is the problem corrected?

YES: End.

NO: Replace the main controller PCB.

4.1.40 E742

Disabling the PCI slot in service mode (BOARD>PCI1-OFF through PCI3-OFF) can limit the occurrence of errors.

Wrong operation

1) Turn off and then on the main power switch. Is the problem corrected?

YES: Check the operation once gain; if normal, end the work.

RIP1 board

2) Execute the following in service mode: BOARD>RIP1-CHK. Does the generated test print show 32-dot lines?

NO: Check the connection; if normal, replace the RIP1 PCB.

YES: Replace the main controller PCB.

4.1.41 E743

Wrong operation

1) Turn off and then on the main power switch. Is the problem corrected?

YES: Check the operation once again; if normal, end the work.

Connector, Main controller PCB

2) Is the connection of the connector (J1014) on the main controller PCB and the connector (J5004) on the reader controller PCB normal? Further, is the cable between these connectors normal?

NO: Correct the connection/cable.

YES: Replace the main controller PCB.

4.1.42 E804

Foreign object

1) Is there a foreign object that hinders the rotation of the fan in the rotating mechanism of the DC power supply fan?

YES: Remove the foreign object.

Connector

2) Is the connector (J102) on the DC controller PCB connected securely?

NO: Connect the connector securely.

DC power supply fan (FM6), DC controller PCB

3) Try replacing the DC power supply fan. Is the problem corrected?

YES: End.

NO: Check the wiring; if normal, replace the DC controller PCB.

4.1.43 E805

a. E805-0001

Foreign object

1) Is there a foreign object that hinders the rotation of the fan in the rotating mechanism of the heat discharge fan?

YES: Remove the foreign object.

Connector

2) Is the connector (J111) on the DC controller PCB connected securely?

NO: Connect it securely.

Heat discharge fan (FM3), DC controller PCB

3) Try replacing the heat discharge fan. Is the problem corrected?

YES: End.

NO: Check the wiring; if normal, replace the DC controller PCB.

b. E805-0002

Foreign object

1) Is there a foreign object that hinders the rotation of the fan in the rotating mechanisms of the feeding fan?

YES: Remove the foreign object.

Connector

2) Is the connector (J109) on the DC controller PCB connected securely?

NO: Connect the connector securely.

Feeding fan (FM1), DC controller PCB

3) Try replacing the feeding fan. Is the problem corrected?

YES: End.

NO: Check the wiring; if normal, replace the DC controller PCB.

4.1.44 E824

Foreign object

1) Is there a foreign object that hinders the rotation of the fan in the rotating mechanisms of the primary charging cooling fan?

YES: Remove the foreign object.

COPYRIGHT © 2000 CANON INC.

Fan (direction, mounting condition)

2) Are the orientation and the mounting of the primary charging cooling fan normal?

NO: Mount the cooling fan correctly.

Connector

3) Is the connector (J103) on the DC controller connected securely?

NO: Connect the connector securely.

Primary charging cooling fan (FM6), DC controller PCB

4) Try replacing the primary charging cooling fan. Is the problem corrected?

YES: End.

NO: Check the wiring; if normal, replace the DC controller PCB.

COPYRIGHT © 2000 CANON INC.

4.2.1 AC power is absent

Power plug

1) Is the power plug connected to the power outlet?

NO: Connect the power plug.

Power source

2) Is there rated AC voltage present at the power outlet?

NO: The problem is not in the machine. Advise the user.

Leakage breaker

3) Has the leakage breaker located in the left bottom of the machine turned on (i.e., is the switch at the ○ marking)?

NO: Remove the cause that turned on the leakage breaker, and shift the switch of the leakage breaker to the | marking.

Power cord, Line noise filter (LF1)

4) Try replacing the power cord/line filter. Is the problem corrected?

NO: Check the wiring of the AC power supply line and the connectors for poor contact.

Main power switch (SW1), Wiring

5) Is the resistance 0Ω when the switch is turned on and ∞Ω when the switch is turned off?

NO: Replace the power switch.

YES: Check the wring of the AC power line and the connectors for poor contact.

4.2.2 DC power is absent

AC power supply

1) Is there rated AC voltage between connectors J4001-1 and J4001-2 on the DC power supply PCB?

NO: See “AC power is absent.”

Fuse (F4001)

2) Is the fuse on the DC power supply PCB blown?

YES: Remove the cause of the fuse, and replace the fuse.

COPYRIGHT © 2000 CANON INC.

Wiring, DC load, DC power supply PCB

3) Turn off the main power switch. Is the voltage between the following terminals on the DC power supply PCB as indicated when the power is turned on in about 3 min?

Connector	Output voltage	Remarks
J4014-1 to 5	3VA1	± 3%
J4017-1 to 5	3VA2	± 3%
J4003-7	3VA3	± 3%
J4015-1 to 3	3VB	+ 2%, - 2.5%
J4003-5	5V	± 3%
J4004-1	5V	± 3%
J4008-1	5V	± 3%
J4009-1	5V	± 3%
J4016-1, 2	5V	± 3%
J4003-3, 4	12VU	± 5%
J4005-1	24VU1	± 5%
J4004-3	24VU2	± 5%
J4009-3	24VU2	± 5%
J4003-1	24VU3	± 5%
J4006-1	24VU3	± 5%
J4007-1, 3	24VU4	± 5%
J4010-1	24VU4	± 5%
J4011-1	24VU4	± 5%
J4013-2	24VA	+ 7%, - 5%

However, the above output voltages assume tolerances of ±10% in the AC input power.

YES: Check the wiring from the DC power supply PCB to each load.
NO: Replace the DC power supply PCB.

4.2.3 Pickup fails

General condition

1) Slide out and then in the cassette. Is the sound of the lifter falling and the lifter motor rotating heard?

NO: See “The lifter fails to move up.”

Sensor

2) In service mode (COPIER>DISPLAY>JAM), find out which sensor has detected the jam. Is the sensor normal?

NO: Check the wiring and the sensor lever; if normal, replace the sensor.

Drive motor

3) Is each drive motor mounted correctly?

NO: Mount the motor correctly.

COPYRIGHT © 2000 CANON INC.

Right upper cover, Right lower cover

4) Are the right upper cover and the right lower cover closed fully?

NO: Close the covers. If there is a gap, correct it.

Pressure spring

5) Are the springs of the right upper cover and the right lower cover exerting pressure on the vertical path rollers 1, 2, 3, and 4?

NO: Check the pressure springs.

Pre-registration motor (M17), vertical path duplex/feeding motor (M25), Vertical path upper motor (M26), Vertical path lower motor (M27)

6) Open the right upper cover and the right lower cover, and put paper over the cover open/closed sensor assembly; then, turn on (MTR-ON) the motor in question in service mode (COPIER>FUNCTION>PART-CHK>MTR). Does the vertical path rollers 1, 2, 3, and 4 or the pre-registration roller rotate?

Motor	Code
Pre-registration motor	22
Vertical duplex/ feeding motor	15
Vertical path upper motor	17
Vertical path lower motor	16

NO: Check the wiring and the motor driver PCB; if normal, replace the motor.

Registration roller clutch

7) Is the leading edge of paper as far as the registration roller assembly?

YES: See “The registration roller fails to rotate.”

Pickup assembly

8) Open the right upper cover and the right lower cover, and put paper over the door switch. When the Start key is pressed, does the feeding/separation roller rotate to move paper normally?

NO: Check the pickup assembly by referring to 5. “Troubleshooting Feeding Faults.”

Right deck pickup motor (M11), Left deck pickup motor (M24), Cassette 3/4 pickup motor (M12), DC controller PCB

9) Set the meter range to 30 VDC, and connect the meter probes to the connectors on the DC controller PCB of the motor in question as indicated. Does the voltage change from 24 to 0 V when the Start key is pressed?

Motor	+	-
Right deck pickup motor	J104-A5, A6	GND
Left deck pickup motor	J104-B4, B3	GND
Cassette 3/4 pickup motor	J104-A11, A12	GND

YES: Check the wiring and the motor driver PCB; if normal, replace the motor.

NO: Replace the DC controller PCB.

COPYRIGHT © 2000 CANON INC.

4.2.4 The lifter fails to move up (pickup from front deck)

Gear, Lever

1) Remove the deck, and move up the lifter by hand. Does it move smoothly?

NO: Check the gear and the lever.

Spring, Lever

2) Push up the pickup roller releasing lever with a finger. Does the pickup roller move down?

NO: Remove the pickup assembly, and check the springs and the lever.

Right deck open/closed sensor (PS5), Left deck open/closed sensor (PS9)

3) When the deck is inserted, is the voltage of the following connectors on the DC controller PCB about 5 V?

Sensor	+	-
Right deck open/closed sensor	J112-B2	J112-B1
Left deck open/closed sensor	J115-A14	J115-A13

NO: Check the sensor flag and the wiring; if normal, replace the sensor.

Right deck limit sensor (PS8), Left deck limit sensor (PS12)

4) Is the voltage of the following connectors on the DC controller PCB about 0 V?

Sensor	+	-
Right deck limit sensor	J112-B8	J112-B7
Left deck limit sensor	J115-A2	J115-A1

NO: Check the sensor flag and the wiring; if normal, replace the sensor.

Right deck lifter motor (M5), Left deck lifter motor (M4), DC controller PCB

5) Turn on the main power switch, and set the meter range to 30 VDC; then, connect the - probe of the meter to GND and the + probe to the following connectors of the DC controller PCB. Does the voltage change from about 0 V to 24 V when the deck is inserted?

Motor	+	-
Right deck lifter motor	J105-13	GND
Left deck lifter motor	J105-12	GND

YES: Check the wiring and the motor drive PCB; if normal, replace the motor.

NO: Replace the controller PCB.

4.2.5 The lifter fails to move up (pickup from cassette)

Cassette size detecting switch, Service mode

1) Is the size of the cassette indicated on the control panel?

NO: Check the cassette size detecting switch. Or, check the cassette paper size setting in service mode.

COPYRIGHT © 2000 CANON INC.

Cassette latch

2) Is the movement of the cassette open button assembly normal?

NO: Mount it correctly.

Spring, Lever

3) Move up the pickup roller releasing lever with your finger. Does the pickup roller move down?

NO: Remove the pickup assembly, and check the spring and the lever.

Cassette 3 open/closed sensor (PS15), Cassette 4 open/closed sensor (PS16)

4) When the deck is inserted, is the voltage of the following connectors on the DC controller PCB about 5 V?

Sensor	+	-
Cassette 3 open/closed sensor	J110-A11	J110-A10
Cassette 4 open/closed sensor	J110-B11	J110-B10

NO: Check the sensor flag and the wiring; if normal, replace the sensor.

Cassette 3 lifter motor (M20), Cassette 4 lifter motor (M21), DC controller PCB

5) Turn on the main power switch, and set the meter range to 30 VDC; then, connect the - probe of the meter to GND and the + probe to the following connectors from the DC controller PCB. When the cassette is inserted, does the voltage change from about 0 to 24 V?

Motor	+	-
Cassette 3 lifter motor	J105-11	GND
Cassette 4 lifter motor	J105-10	GND

YES: Check the wiring and the motor drive PCB; if normal, replace the motor.

NO: Replace the DC controller PCB.

4.2.6 Pickup fails (manual feed)

Wiring

1) Is the connector (to the machine) of the manual pickup tray assembly connected correctly?

NO: Connect the connector correctly.

General condition

2) Is the leading edge of paper as far as the registration roller?

YES: See “The registration roller fails to rotate.”

Feeding roller, Separation roller

3) Is the orientation of the feeding roller and the separation roller correct?

NO: Mount the roller correctly.

Manual feed paper sensor (PS23)

4) When paper is placed on the manual feed pickup tray, does bit 0 of COPIER>I/O>DC-CON>IO-P01 change from ‘1’ to ‘0’?

NO: Check the wiring and the sensor flag; if normal, replace the sensor.

COPYRIGHT © 2000 CANON INC.

Manual feed pickup clutch (CL3)

5) Execute 'code: 1' by making the following selections in service mode: COPIER>FUNCTION>PART-CHK>CL. Is the sound of the clutch operating heard?

NO: Check the wiring; if normal, replace the clutch.

Manual feed releasing solenoid (SL2)

6) Execute 'code : 5' by making the following selections in service mode: COPIER>FUNCTION>PART-CHK>SL. Does the solenoid turn on?

NO: Check the wiring and the link; if normal, replace the solenoid.

DC controller PCB

7) Try replacing the DC controller PCB. Is the problem corrected?

YES: End.

NO: Check the wiring to the solenoid and the connection of the connectors.

4.2.7 The vertical path roller fails to rotate

Belt, Gear, Coupling

1) It the drive from the vertical path duplex/feeding motor (M25) transmitted to each vertical path roller through the belt, gear, and coupling?

NO: Mount the belt, gear, and coupling correctly.

Vertical path duplex/feeding motor (M25)

2) Execute 'code: 15' by making the following selections in service mode: COPIER>FUNCTION>PART-CHK>MTR. Does the motor operate?

NO: Check the wiring and the motor driver PCB; if normal, replace the motor.

Vertical path upper motor (M26)

3) Execute 'code: 17' by making the following selections in service mode : COPIER>FUNCTION>PART-CHK>MTR. Does the motor operate?

NO: Check the wiring and the motor driver PCB; if normal, replace the motor.

Vertical path lower motor (M27)

4) Execute 'code: 16' by making the following selections in service mode: COPIER>FUNCTION>PART>CHK>MTR. Does the motor operate?

NO: Check the wiring and the motor driver PCB; if normal, replace the motor.

COPYRIGHT © 2000 CANON INC.

Pre-registration motor (M17)

5) Execute 'code: 22' by making the following selections in service mode: COPIER>FUNCTION>PART-CHK>MTR. Does the motor operate?

NO: Check the wiring and the motor driver PCB; if normal, replace the motor.

DC controller PCB

6) Try replacing the DC controller PCB. Is the problem corrected?

YES: End.

4.2.8 The registration roller fails to operate

Gear, Coupling

1) Is the drive from the main motor (M2) transmitted to the registration roller through the gear and coupling?

NO: Mount the gear and coupling correctly.

Registration paper sensor (PS29)

2) Place paper over the sensor. Does bit 1 of COPIER>I/O>DC-CON>IO-P01 in service mode change from '0' to '1'?

NO: Check the wiring and the sensor flag; if normal, replace the sensor.

Registration roller clutch (CL2)

3) Execute 'code: 5' by making the following selections in service mode: COPIER>FUNCTION>PART-CHK>CL. Does the clutch operate?

NO: Check the wiring and fixing/feeding relay PCB; if normal, replace the clutch.

DC controller PCB

4) Try replacing the DC controller PCB. Is the problem corrected?

YES: End.

4.2.9 The No. 1 mirror mount fails to operate

Cable (broken, displaced)

1) Is the scanner drive cable routed correctly?

NO: Route the scanner drive cable correctly.

Foreign obstacle (in scanner path)

2) Is the scanner rail free of dirt? Further, does the scanner move smoothly when pushed by hand?

NO: Check the scanner rail for surface dirt and foreign matter or object; as necessary, clean, lubricate, or correct.
If the surface of the rail is soiled, clean it with alcohol, and apply a small amount of silicone oil (FY9-6010).

COPYRIGHT © 2000 CANON INC.

Wiring, Connector

3) Are the connection and the wiring of the connectors from J5004 on the reader controller PCB to J1014 on the main controller PCB normal?

NO: Correct the wiring, and connect the connectors securely.

Scanner motor (M3), Reader controller PCB

YES: End.

NO: Replace the reader controller PCB.

4.2.10 The pre-exposure LED fails to turn on

Pre-exposure LED (LA1)

1) Press the Start key. Does the state of bit 4 in service mode (COPIER>I/O>DC-CON>IO-P15) change from '0' to '1'?

YES: Check the wiring from the DC controller PCB to the pre-exposure LED; if normal, replace the pre-exposure LED.

Pre-exposure LED (LA1), DC controller PCB

2) Set the meter range to 30 VDC. Does the voltage between J103-A3 (+) and J103-A4 (GND) on the DC controller PCB change from 0 to 24 V?

YES: Check the wiring from the DC controller PCB to the pre-exposure LED; if normal, replace the pre-exposure LED.

NO: Replace the DC controller PCB.

4.2.11 The scanning lamp fails to turn on

Lamp (mounting)

1) Is the scanning lamp mounted correctly?

NO: Disconnect the power plug from the power outlet, and mount the lamp correctly.

Reader controller PCB

2) Press the Start key. Does bit 7 in service mode (COPIER>I/O>R-CON>IO-P1) change from '1' to '0'?

NO: Replace the reader controller PCB.

Inverter PCB

3) Try replacing the inverter PCB. Is the problem corrected?

YES: End.

Scanning lamp (LA2), Reader controller PCB

4) Try replacing the scanning lamp. Is the problem corrected?

YES: End.

NO: Replace the reader controller PCB.

COPYRIGHT © 2000 CANON INC.

4.2.12 The hopper stirring motor (M9) fails to operate

General condition

1) Execute 'code: 5' (MTR-ON) in service mode (COPIER>FUNCTION>PART-CHK>MTR). Does the motor operate?

Hopper toner sensor (TS2)

2) Is bit 10 in service mode (COPIER>I/O>DC-CON>IO-P02) '0', indicating the absence of toner?

YES: If the hopper is adequately supplied with toner, replace the sensor.

DC controller PCB

3) Execute 'code: 5' (MTR-ON) in service mode (COPIER>FUNCTION>PART-CHK>MTR) to turn on the motor. Does the voltage between J103-B7 (+) and J103-B8 (GND) on the controller PCB change to about 24 V?

NO: Replace the DC controller PCB.

Relay connector (J153, J158)

4) Is the connection of the relay connector secure?

NO: Connect it securely.

4.2.13 The hopper supply motor (M10) fails to operate

General condition

1) Execute 'code: 6' (MTR-ON) in service mode (COPIER>FUNCTION>PART-CHK>MTR). Doe the motor operate? Be sure to turn off the motor within about 10 sec to prevent clogging with toner.

NO: Go to step 3).

Hopper toner sensor (TS2)

2) Is bit 10 in service mode (COPIER>I/O>DC-CON>IO-02) '0', indicating the absence of toner?

YES: If the hopper is adequately supplied with toner, replace the sensor.

DC controller PCB

3) Execute 'code: 6' in service mode (MTR-ON) (COPIER>FUNCTION>PART-CHK>MTR) to operate the motor. Does the voltage between J103-B5 (+) and J103-B6 (GND) on the DC controller PCB change to about 24 V?

NO: Replace the DC controller PCB.

Relay connector (J153, J155)

4) Is the connection of the relay connector secure?

NO: Connect it securely.

COPYRIGHT © 2000 CANON INC.

4.2.14 The drum heater fails to operate

General condition

1) Open the front cover, and release the fixing/feeding unit. Is the end of the photosensitive drum warm? (Do not touch the surface of the photosensitive drum.)

YES: The drum heater is normal.

Environment switch

2) Is the setting of the environment switch located at the left bottom of the machine 'ON" (powered at all times)?

NO: Set it to 'ON'. If set to 'OFF', it is linked to the main power switch.

DC controller PCB, AC driver PCB

3) Set the meter range to 12 VDC. Connect the probes of the meter to J102-B8 (+) and J102-B7 (-) on the DC controller PCB. Is the voltage between terminals about 2 V during copying and 0 V during standby?

NO: Replace the DC controller PCB.

Drum heater (H3)

4) Remove the drum, and set the meter range to Ωx1. Does the index of the meter swing when the probes of the meter are connected to both ends of the heater?

NO: Replace the drum heater.

YES: Replace the heater control PCB.

4.2.15 The Add Toner message fails to turn on

General condition

1) Is there toner in the hopper?

YES: Go to step 2).

Hopper toner sensor (TS2), DC controller PCB

2) Replace the hopper toner sensor. Is the problem corrected?

NO: Check the wiring; if normal, replace the DC controller PCB.

4.2.16 The Add Toner message fails to turn off

Toner (amount)

1) Is there toner in the hopper?

NO: Supply toner. (Find out how the user is supplying toner.)

COPYRIGHT © 2000 CANON INC.

Hopper toner sensor (TS2), DC controller PCB

2) Is bit 10 in service mode (COPIER>I/O>DC-CON>IO-P02) '0', indicating the absence of toner?

YES: Replace the hopper toner sensor.

NO: Check the wiring; if normal, replace the DC controller PCB.

4.2.17 The Set Control Card message fails to turn on

CC-IV

1) Can a print be made without inserting a control card?

YES: Check to find out if the connector of the CC-IV has a short circuit.

Control panel, Main controller PCB

2) Try replacing the control panel. Is the message indicated?

YES: End.

NO: Check the wiring from the control panel to the main controller PCB; if normal, replace the main controller PCB.

4.2.18 The Set Control Card message fails to turn off

Control card

1) Is the control card inserted correctly?

NO: Insert the control card correctly.

CC-IV, Main controller PCB

2) Can a print be made by pressing the Start key?

YES: Replace the CC-IV.

NO: Replace the main controller PCB.

4.2.19 The Add Paper message fails to turn on (front deck)

Right deck paper sensor (PS7), Left deck paper sensor (PS11)

1) Is the deck paper sensor mounted correctly? Further, is the movement of the sensor flag normal?

NO: Mount the sensor correctly.

4.2.20 The Add Paper message fails to turn off (cassette 3/4)

Cassette 3 paper sensor (PS13), Cassette 4 paper sensor (PS14)

1) Is the cassette paper sensor mounted correctly? Further, is the movement of the sensor flag normal?

NO: Mount the sensor correctly.

COPYRIGHT © 2000 CANON INC.

Cassette pickup assembly

2) Is the lifter mechanism of the cassette normal?

NO: Replace the lifter unit or the cassette pickup assembly.

4.2.21 The fixing heater fails turn on

Fixing/feeding lock sensor (MSW3)

1) Is the fixing/feeding lock sensor mounted correctly?

NO: Mount the fixing/feeding lock sensor correctly.

YES: Replace the sensor.

Thermal switch (TP1)

2) Connect the probes of the meter to both terminals of the thermal switch. Is there electrical continuity?

NO: Replace the thermal switch.

Main relay (RL1)

3) Try replacing the main relay. Is the problem corrected?

YES: End.

Fixing heater (H1, H2)

4) Connect the probes of the meter to both terminals of the fixing heater. Is there electrical continuity?

NO: Replace the fixing heater.

AC driver PCB, DC controller PCB

5) Is the voltage between the following connectors on the DC controller PCB about 5 V?

Heater	+	-
Main heater (H1)	J102-B11	J102-B7
Sub heater (H2)	J102-B9	J102-B7

YES: Replace the AC driver PCB.

NO: Replace the DC controller PCB.

4.2.22 Pickup fails (paper deck)

Right upper cover, Right lower cover

1) Are the right upper cover and the right lower cover closed properly?

NO: Close the covers.

Lifter

2) Slide out the compartment from the deck. Does the lifter move down? Further, does the lifter move up when the compartment is slid inside the deck?

NO: See “The deck lifter fails to move up.”

COPYRIGHT © 2000 CANON INC.

Deck pickup roller

3) Does the deck pickup roller rotate?

YES: If the roller is soiled, clean it with alcohol. If it is deformed because of wear, replace it.

Belt (displacement)

4) Is the belt used to transmit drive to the deck pickup roller attached correctly?

NO: Attach the belt correctly.

Gear

5) Is the drive from the deck main motor transmitted through the gear?

NO: Check the gear.

Deck pickup clutch (CL102), Deck driver PCB

6) Measure the voltage of the connector on the deck driver PCB. Does the voltage change from 24 to 0 V when the Start key is pressed?

Clutch	+	-
Deck pickup clutch	J05-11	J05-12

YES: Check the wiring; if normal, replace the clutch.

NO: Replace the deck driver PCB.

4.2.23 The deck lifter fails to move up (side paper deck)

Deck

1) Is the deck mounted correctly?

NO: Mount the deck correctly.

Lifter cable

2) Is the lifter cable routed correctly?

NO: Route the lifter cable correctly.

Spring, Lever

3) Push up the deck pickup roller releasing lever with your finger. Does the roller move down?

NO: Remove the pickup assembly, and check the spring and the lever.

Deck lifter motor (M102)

4) Does the deck lifter motor rotate?

YES: Go to step 6).

Deck open detecting switch (SW101), Deck driver PCB

5) Does the voltage between J10-1 (+) and J10-3 (GND) on the deck driver PCB change from about 0 to 5 V when the deck is closed?

YES: Check the wiring to the switch; if normal, replace the switch.

NO: Replace the deck driver PCB.

COPYRIGHT © 2000 CANON INC.

Deck lifter lower limit detecting switch (SW102), Deck driver PCB

6) Is the voltage between J08-8 (+) and J08-7 (GND) on the deck driver PCB as follows when the deck is opened/closed?

opened: 0 V
closed: 5 V

YES: Check the lever and the wiring; if normal, replace the switch.
NO: Replace the deck driver PCB.

5. Troubleshooting Feeding Faults

5.1 Paper Jams

Jams occurring in the machine may be grouped into the following by location:

1. Pickup assembly
2. Separation/feeding assembly
3. Fixing/delivery assembly
4. Drum cleaning assembly
5. Duplex reversing assembly
6. Feeding assembly

The troubleshooting procedures that follow are organized according to location; to find out the location and the nature of a jam, use service mode (COPIER>DISPLAY>JAM).

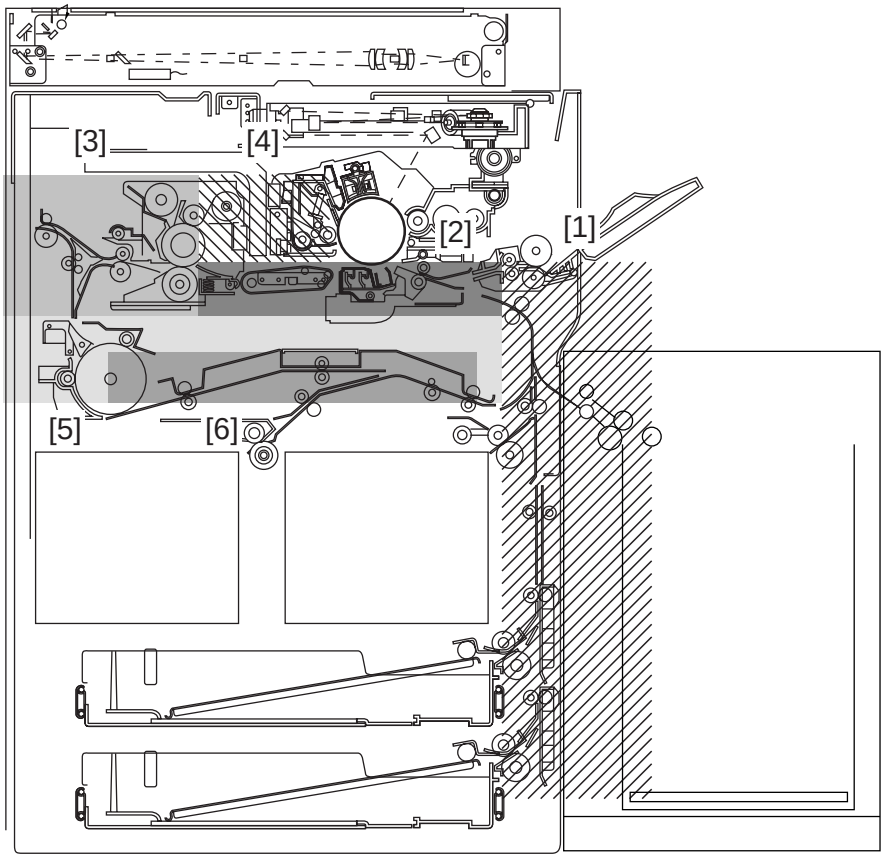

F04-501-01

COPYRIGHT © 2000 CANON INC.

5.1.1 Pickup assembly

Pickup assembly

1) Is the print paper curled or wavy?

YES: Replace the paper. Advise the user on the correct method of storing paper.

2) Try paper of a recommended type. Is the problem corrected?

YES: Advise the user to use recommended paper.
DC controller PCB, Pickup clutch

DC controller PCB, Pickup clutch

3) Are the pickup roller of the selected cassette or the deck and the feeding roller of the manual feed tray rotating during printing?

NO: See "Pickup fails" for each source of paper.

Pickup roller

4) Is the pickup roller deformed or worn?

YES: Replace the pickup roller.

Guide plate

NO: Check the guide plate for deformation.

5.1.2 Separation/Feeding assembly

Print paper

1) Is the leading edge of print paper past the registration roller?

YES: Go to step 5.

NO: Check the distance between the upper and lower guides in front of the registration roller; then, make adjustments as needed.

Registration roller

2) Is the coupling of the registration roller engaged correctly?

NO: Mount the fixing/feeding unit correctly.

3) Is the registration roller deformed (worn) or soiled?

YES: If dirt is found, clean it with alcohol; if deformation (e.g., wear) is found, replace it.

4) Are the retaining springs on both ends of the registration roller mounted correctly?

NO: Mount them correctly.

YES: Check the transfer guide for foreign matte and deformation.

Registration clutch

5) Is the operation of the registration clutch normal?

NO: Check the registration clutch.

COPYRIGHT © 2000 CANON INC.

Transfer/Separation charging assembly

6) Is the transfer/separation charging assembly mounted securely?

YES: Check the transfer/separation charging assembly.

7) Are there burrs on the paper guide of the transfer/separation charging assembly?

YES: Remove the burrs.

8) Is there foreign matter on the transfer/separation charging assembly?

YES: Remove the foreign matter.

Print paper

9) Try paper of a recommended type. Is the problem corrected?

YES: Advise the user to use recommended paper.

Separation claws (cleaning assembly)

10) Are the separation claws under the cleaning assembly damaged?

YES: Replace the separation claws.

11) Is the spring of the separation claw displaced?

YES: Mount the spring correctly.

Feeding belt

12) Are the three feeding belts rotating correctly?

YES: Check to see if the feeding fan is operating.

Feeding fan

YES: Check to make sure that the feeding fan is operating.

5.1.3 Fixing/Delivery assembly

Separation claws (delivery assembly)

1) Are the separation claws worn/deformed?

YES:

1. Replace the separation claws.
2. If dirt is found, clean them with solvent.

Upper/lower roller (fixing assembly)

2) Is the upper/lower roller of the fixing assembly worn or scratched?

YES: Replace the roller.

Paper guide (fixing assembly)

3) Is the paper guide soiled with toner?

YES: Clean it with solvent.

4) Is the height of the paper guide normal?

NO: Adjust it.

5) Is the inlet guide switched over to suit the passage of small-size paper and large-size paper?

NO: Check the fixing assembly inlet guide drive solenoid (SL1).

COPYRIGHT © 2000 CANON INC.

Nip

6) Is the lower roller pressure (nip) as indicated?

NO: Adjust it.

Web

7) Is the web taken up correctly?

NO: Check the fixing cleaning assembly.

8) Move the plunger of the fixing web solenoid (SL9) by hand. Is the web taken up?

NO: Check the fixing web drive assembly.

Delivery assembly sensor lever

9) Does each sensor lever of the delivery assembly move smoothly?

NO: Adjust it so that it moves smoothly.

Delivery sensor

10) Are the external delivery sensor (PS36) and the fixing assembly outlet sensor (PS4) normal?

NO: Replace the sensor.

Delivery paper deflecting plate

11) Move the delivery paper deflecting plate with your finger. Dos it return to its initial position by the work of the spring?

NO: Correct how the delivery paper deflecting plate is mounted.

12) Us the paper path of the delivery paper deflecting plate deformed or scratched?

YES: Replace the delivery paper deflecting plate.

Delivery roller drive assembly

13) Does the delivery roller move smoothly?

NO: Check the delivery roller drive assembly.

Leading edge margin

14) Is the leading edge margin of print paper 0.3 mm or more and 5.5 mm or less?

NO: Make adjustments in service mode so that the margin is as indicated.

5.1.4 Fixing/Delivery assembly (face-down delivery assembly)

Delivery sensor

1) Is the internal delivery sensor (PS35) normal?

NO: Replace the sensor.

Reversal sensor

2) Is the reversal sensor 2 (PS3) normal?

NO: Replace the sensor.

Delivery flapper solenoid (SL5)

3) Does the delivery flapper move correctly?

NO: Correct the potion of the delivery flapper solenoid, or replace it.

Reversal flapper solenoid (SL8)

4) Does feeding reversal flapper move correctly?

NO: Correct the position of the reversal flapper solenoid, or replace it.

Reversal motor (M14)

5) Does the reversal motor (M14) rotate at the correct timing?

NO: Replace the reversal motor (M14).

5.1.5 Cleaning Assembly

Transfer/Separation charging assembly, Pre-transfer charging assembly

1) Are feeding transfer/separation charging assembly and the pre-transfer charging assembly fitted correctly?

NO: Fit the transfer/separation charging assembly correctly.

2) Is the height of the charging wire as indicated?

NO: Adjust the height of the charging wire.

Separation claws (cleaning assembly)

3) Are the separation claws under the cleaning assembly damaged?

YES: Replace the separation claws.

4) Is the spring of the separation claws displaced?

YES: Mount the spring correctly.

Print paper, High-voltage transformer, DC controller PCB

5) Try paper of a type recommended by Canon. Is the problem corrected?

YES: Advise the user to use recommended paper.

NO:

1. Check the high-voltage transformer.
2. Check the DC controller PCB.

5.1.6 Feeding Assembly

1) Is the duplex feeding assembly mounted correctly?

NO: Mount it correctly.

Sensor lever

2) Do the sensor levers of the reversal sensor 1 (PS37), duplex paper sensor (PS34), and the duplex pre-registration paper sensor (PS30) move smoothly?

NO: Adjust them so that they move smoothly.

Sensor

3) Are the reversal sensor 1 (PS37), duplex paper sensor (PS34), and duplex pre-registration paper sensor (PS30) normal?

NO: Replace any faulty sensor.

COPYRIGHT © 2000 CANON INC.

Motor

4) Do the reversal motor (M14), duplex feeding left motor (M29), duplex feeding right motor (M18), and vertical path duplex motor (M25) rotate at the correct timing?

NO: Replace the motor.

COPYRIGHT © 2000 CANON INC.

5.2 Feeding Faults

5.2.1 Double Feeding

Separation roller

1) Is the separation roller deformed or worn?

YES: Replace the separation roller.

Spring

NO: Replace the spring used to pull the separation roller.

5.2.2 Wrinkles

Pickup assembly

1) Turn off the power while print paper is moving through the feeding assembly. At this time, is the print paper wrinkled? Or, is the paper askew?

YES: Check the pickup assembly.
Check the guide in front of the registration roller.
Check the registration roller.
Check the operation for the feeding fan.
Check the separation charging assembly.

Print paper

2) Try paper fresh out of package. Is the problem corrected?

YES: The paper may be moist. Advise the user on the correct method of storing paper.

3) Try paper recommended by Canon. Is the problem corrected?

YES: Advise the user to use recommended paper.

Paper guide, Fixing assembly inlet drive solenoid (SL1)

4) Is the paper guide coated with toner or foreign matter?

YES: Clean it with solvent.

5) Are the height of the paper guide and the movement of the solenoid correct?

NO: Correct the height of the paper guide and the operation of the solenoid.

Lower roller pressure

6) Is the lower roller pressure (nip) as indicated?

NO: Adjust it.

Upper/lower roller

YES: Try replacing the upper and lower roller one after the other.

COPYRIGHT © 2000 CANON INC.

6. Arrangement and Functions of Electrical Parts

6.1 Clutches

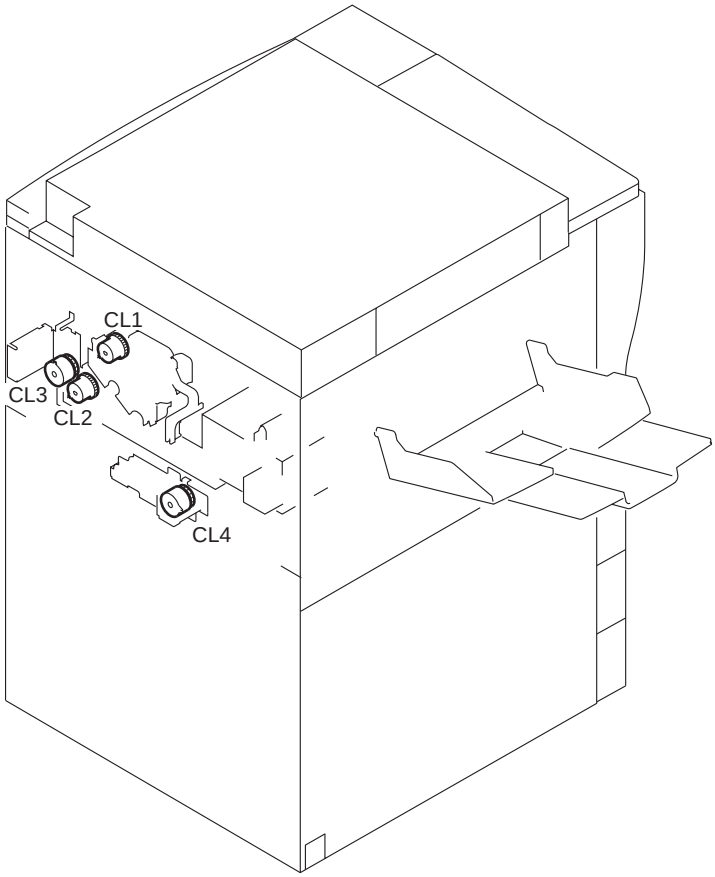

F04-601-01

6.1.1 Reader Unit

The reader unit does not have a clutch.

6.1.2 Printer Unit

Symbol	Name	Notation	Function
CL	Clutch	CL1	Drives the developing cylinder.
		CL2	Drives the registration roller.
		CL3	Drives the manual feed pickup roller.
		CL4	Drives the left deck pull-off roller.

6.2 Solenoids and Switches

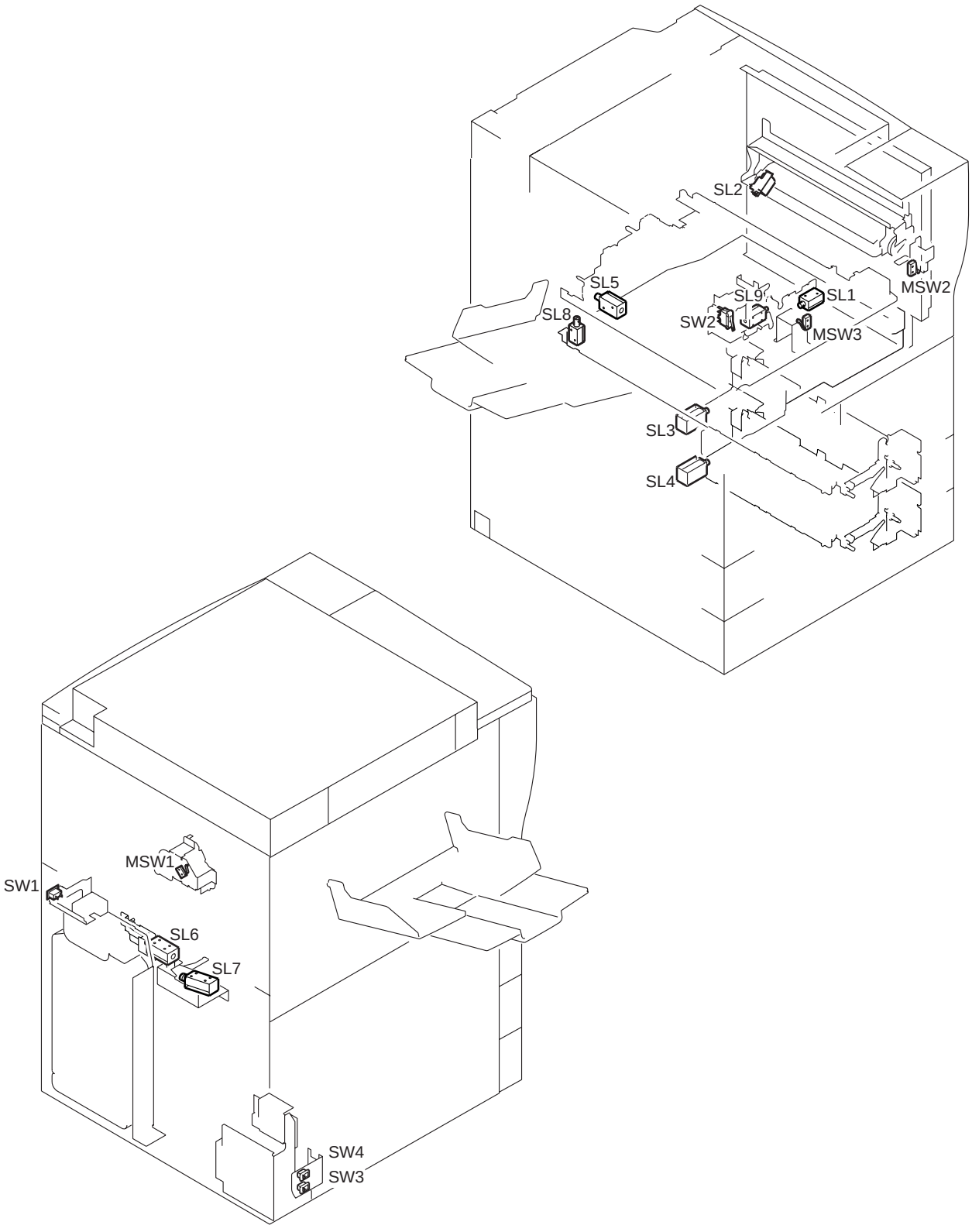

F04-602-01

COPYRIGHT © 2000 CANON INC.

6.2.1 Reader Unit

The reader unit does not have a solenoid or a switch.

6.2.2 Printer Unit

Symbol	Name	Notation	Function
	Solenoid	SL1	Drives the fixing assembly inlet guide.
		SL2	Drives the manual feed pickup mechanism.
		SL3	Drives the cassette 3 pickup mechanism.
		SL4	Drives the cassette 4 pickup mechanism.
		SL5	Drives the delivery flapper.
		SL6	Drives the right deck pickup mechanism.
		SL7	Drives the left deck pickup mechanism.
		SL8	Drives the reversing flapper.
		SL9	Drives the fixing web.
	Switch	SW1	Main power switch
		SW2	Front cover switch
		SW3	Environment switch
		SW4	Cassette heater switch
		MSW1	Detects the state (locked) of the waste toner screw.
		MSW2	Detects the state (open/closed) of the manual feed tray cover detection
		MSW3	Detects the attachment/detachment of the fixing/feeding unit.

COPYRIGHT © 2000 CANON INC.

6.3 Motors

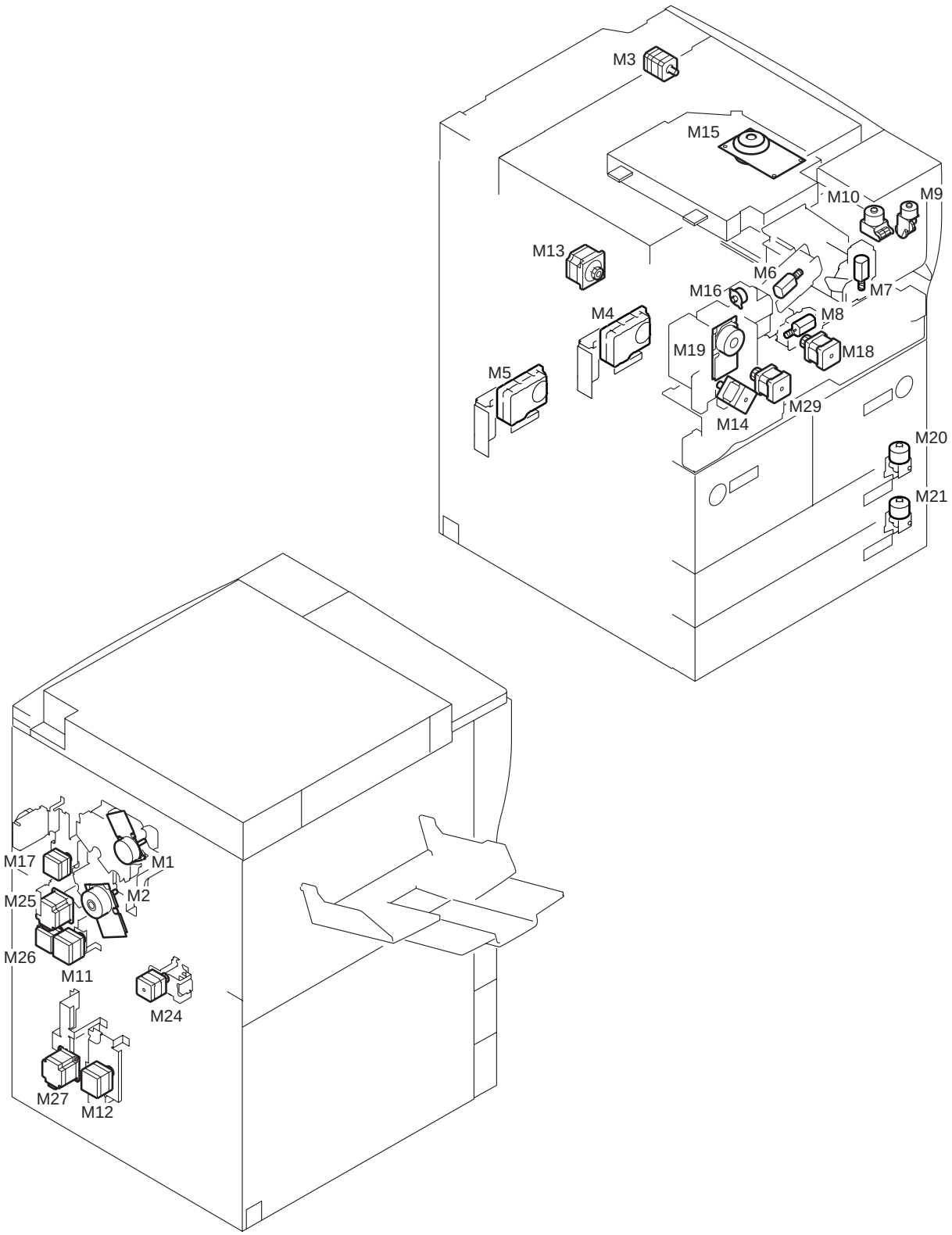

F04-603-01

COPYRIGHT © 2000 CANON INC.

6.3.1 Reader Unit

Symbol	Name	Notation	Function
	Motor	M3	Scanner motor

6.3.2 Printer Unit

Symbol	Name	Notation	Function
	Motor	M1	Drum motor
		M2	Main motor
		M4	Left deck lifter motor
		M5	Right deck lifter motor
		M6	Primary charging wire cleaning motor
		M7	Pre-transfer charging wire cleaning motor
		M8	Transfer/separation charging wire cleaning motor
		M9	Hopper stirring motor
		M10	Hopper supply motor
		M11	Right deck pickup motor
		M12	Cassette 3/4 pickup motor
		M13	Delivery motor
		M14	Reversal motor
		M15	Laser scanner motor
		M16	Duplex horizontal registration motor
		M17	Pre-registration motor
		M18	Duplex feeding right motor
		M19	Fixing motor
		M20	Cassette 3 lifter motor
		M21	Cassette 4 lifter motor
		M24	Left deck pickup motor
		M25	Vertical path duplex feeding motor
		M26	Vertical path upper motor
		M27	Vertical path lower motor
		M29	Duplex feeding left motor

COPYRIGHT © 2000 CANON INC.

6.4 Fans

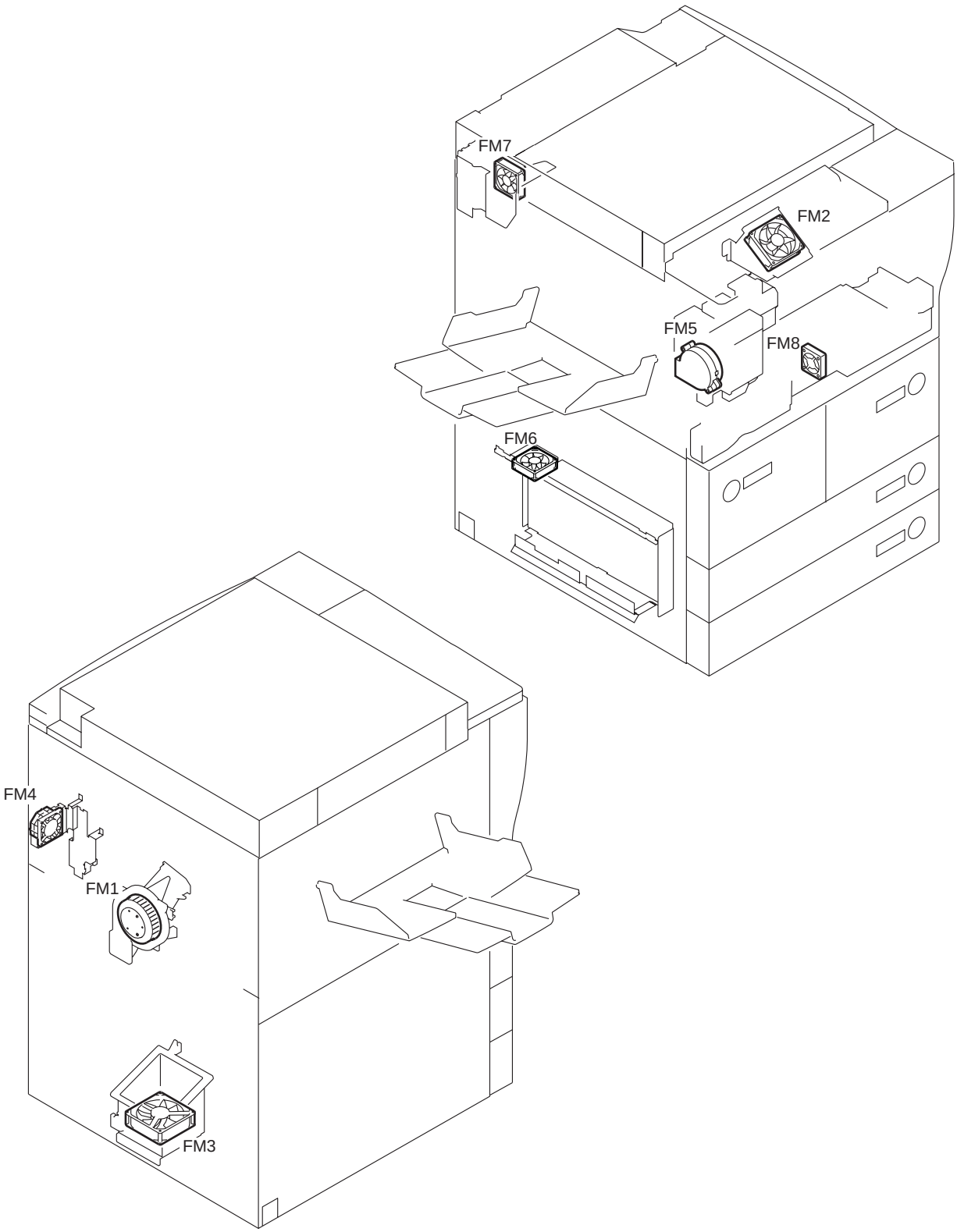

F04-604-01

COPYRIGHT © 2000 CANON INC.

6.4.1 Reader Unit

The reader unit does not have a fan.

6.4.2 Printer unit

Symbol	Name	Notation	Function
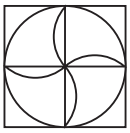	Fan	FM1	Feeding fan
		FM2	Primary charging cooling fan
		FM3	Heat discharging fan
		FM4	Controller cooling fan
		FM5	De-curling fan
		FM6	DC power supply fan
		FM7	HDD fan
		FM8	Duplex feeding fan

COPYRIGHT © 2000 CANON INC.

6.5 Sensors

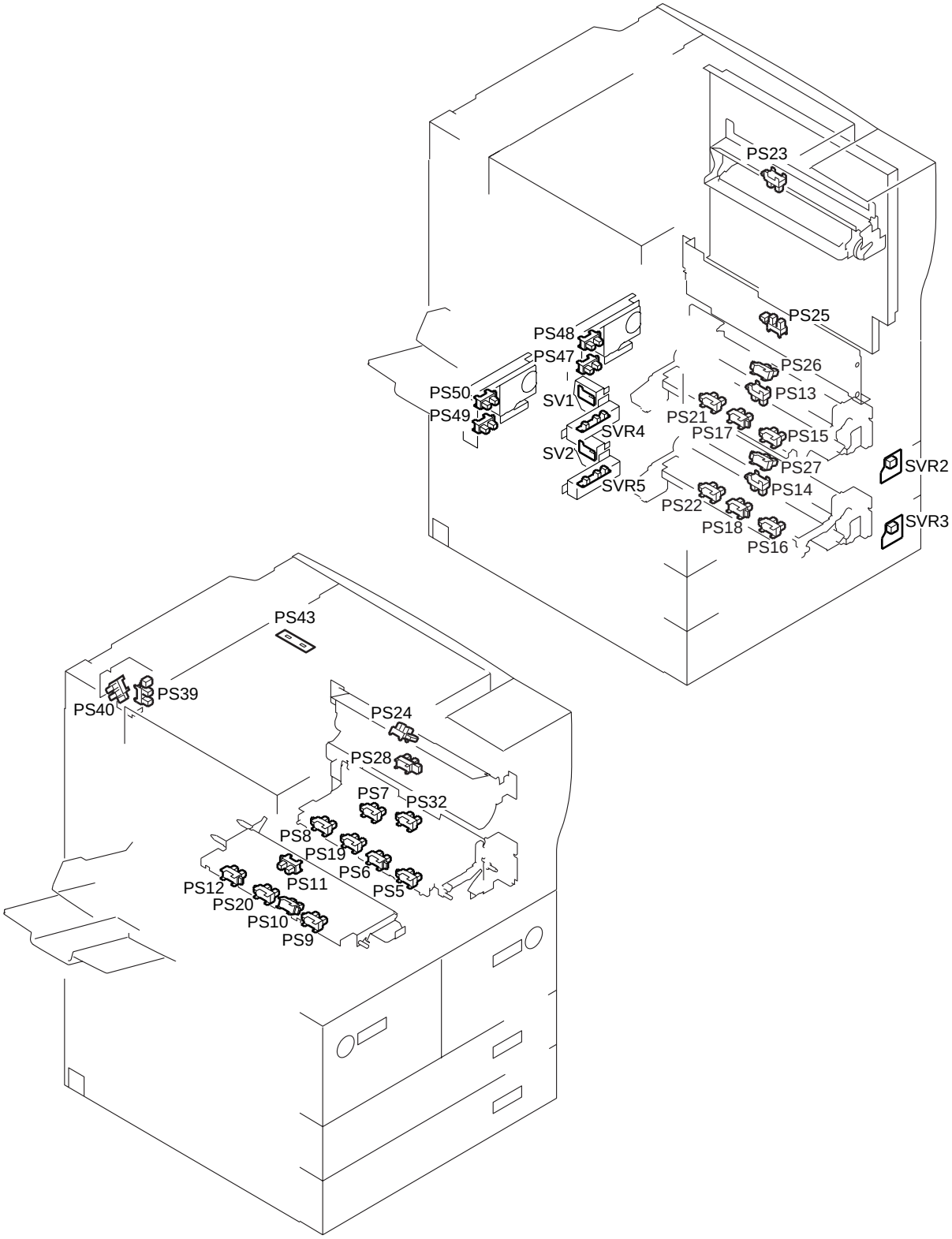

F04-605-01

COPYRIGHT © 2000 CANON INC.

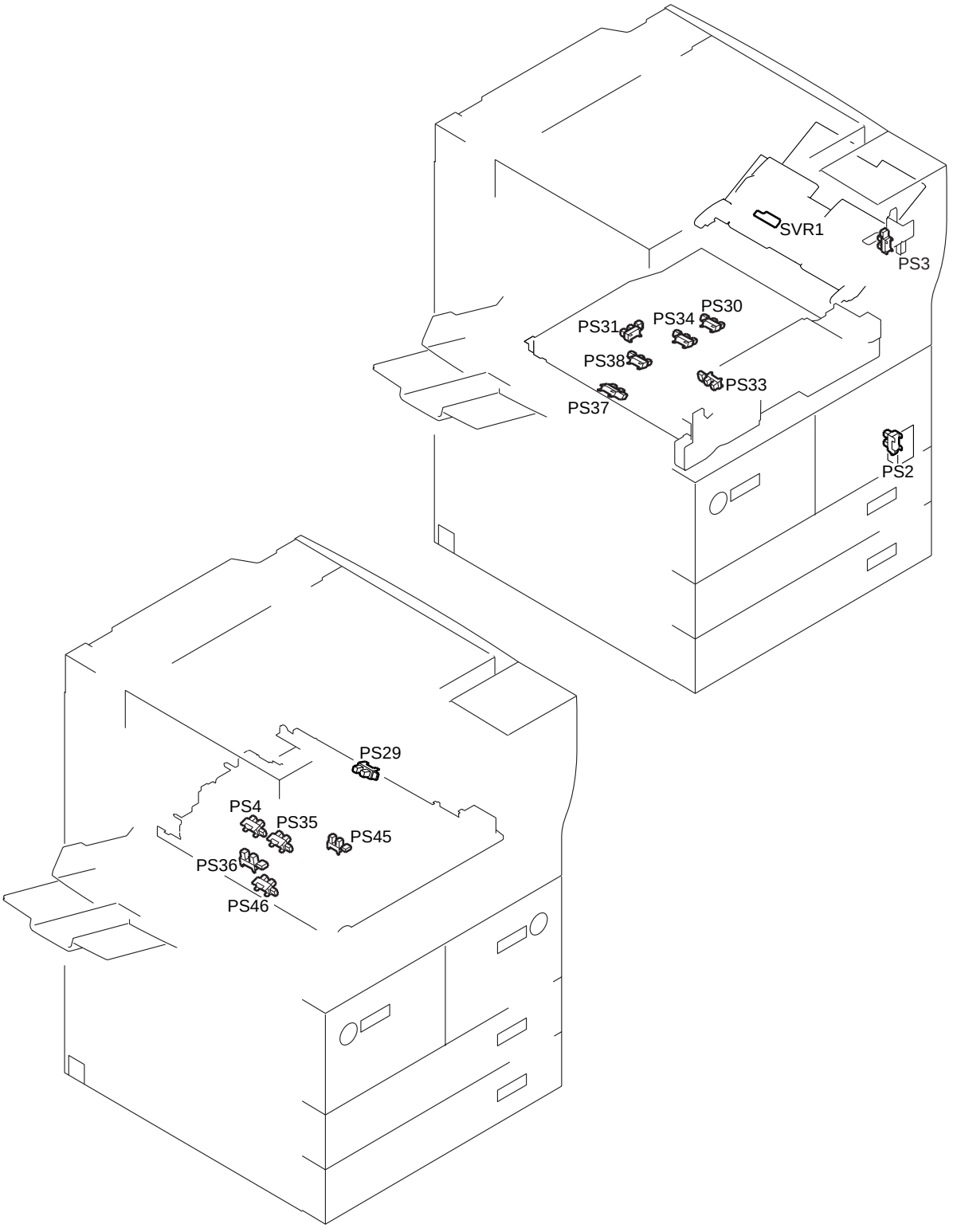
SVR1
PS3
PS30
PS34
PS31
PS38
PS33
PS37
PS2
PS29
PS4
PS35
PS45
PS36
PS46

F04-605-02

6.5.1 Reader Unit

Symbol	Name	Notation	Function
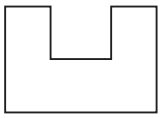	Photointerrupter	PS39	Scanner HP sensor
		PS40	Copyboard cover sensor
	Photosensor	PS43	Original sensor

6.5.2 Printer Unit

Symbol	Name	Notation	Function
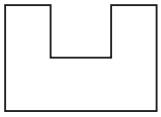	Photointerrupter	PS2	Right lower cover open/closed sensor
		PS3	Manual feed tray open/closed sensor
		PS4	Claw jam sensor
		PS5	Right deck open/closed sensor
		PS6	Right deck lifter sensor
		PS7	Right deck paper sensor
		PS8	Right deck limit sensor
		PS9	Left deck open/closed sensor
		PS10	Left deck lifter sensor
		PS11	Left deck paper sensor
		PS12	Left deck limit sensor
		PS13	Cassette 3 paper sensor
		PS14	Cassette 4 paper sensor
		PS15	Cassette 3 open/closed sensor
		PS16	Cassette 4 open/closed sensor
		PS17	Cassette 3 lifter sensor
		PS18	Cassette 4 lifter sensor
		PS19	Right deck re-try sensor
		PS20	Left deck re-try sensor
		PS21	Cassette 3 re-try sensor
		PS22	Cassette 4 re-try sensor
		PS23	Manual feed paper sensor
		PS24	Vertical path 1 paper sensor
		PS25	Vertical path 2 paper sensor
		PS26	Vertical path 3 paper sensor
		PS27	Vertical path 4 paper sensor
		PS28	Laser write start sensor
		PS29	Registration paper sensor
		PS30	Duplex pre-registration sensor

COPYRIGHT © 2000 CANON INC.

Symbol	Name	Notation	Function
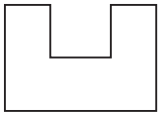	Photointerrupter	PS31	Duplex horizontal registration sensor
		PS32	Right deck feed paper sensor
		PS33	Left deck feed paper sensor
		PS34	Duplexing paper sensor
		PS35	Internal delivery sensor
		PS36	External delivery sensor
		PS37	Reversal sensor 1
		PS38	Reversal sensor 2
		PS45	Fixing web length sensor
		PS46	Delivery jam sensor
		PS47	Right deck level sensor (upper)
		PS48	Right deck level sensor (lower)
		PS49	Left deck level sensor (upper)
		PS50	Left deck level sensor (lower)
	Photointerrupter	SV1	Detects the length of paper in the cassette 4. (100-V model only)
		SV2	Detects the length of paper in the cassette 3.
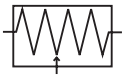	Slide resistor	SVR1	Detects the width of paper on the manual feed tray.
		SVR2	Detects the level of paper in the cassette 3.
		SVR3	Detects the level of paper in the cassette 4.
		SVR4	Detects the width of paper in the cassette 3.
		SVR5	Detects the width of paper in the cassette 4. (100-V model only)

COPYRIGHT © 2000 CANON INC.

6.6 Lamps, Heaters, and Others

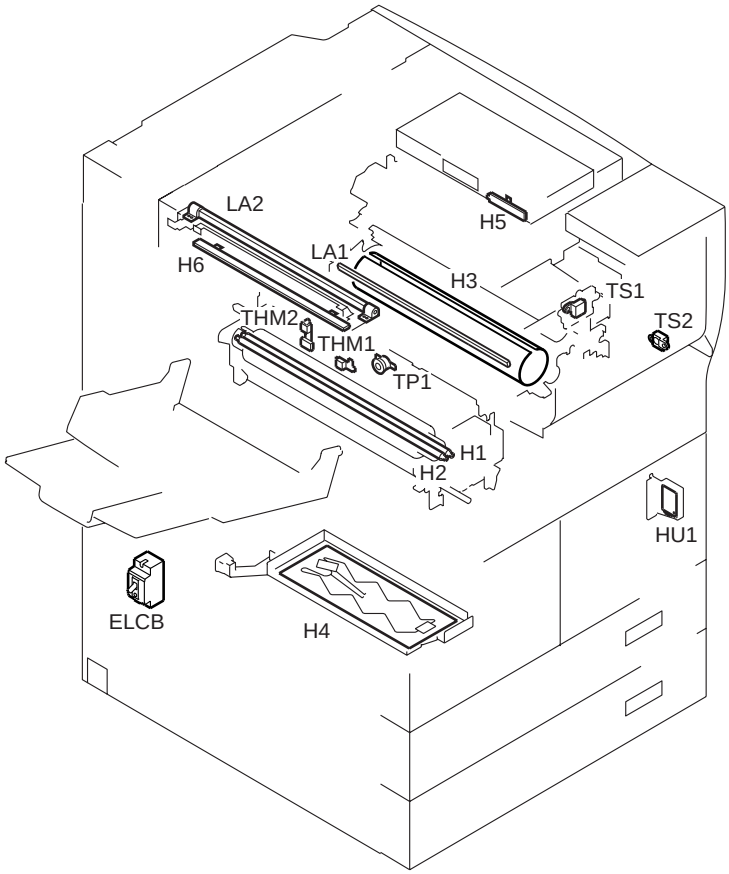

F04-606-01

COPYRIGHT © 2000 CANON INC.

6.6.1 Reader Unit

Name	Notation	Function
Lamp	LA2	Scanning lamp
Heater	H5	Lens heater (standard in 100-V model)
	H6	Mirror heater (standard in 100-V model)

6.6.2 Printer Unit

Name	Notation	Function
Lamp	LA1	Pre-exposure lamp (LED)
Heater	H1	Fixing main heater
	H2	Fixing sub heater
	H3	Drum heater
	H4	Cassette heater (standard in 100-V model)
Thermistor	TH1	Fixing heater main thermistor
	TH2	Fixing heater sub thermistor (ends)
Thermal switch	TP1	Fixing heater thermal switch
Leakage breaker	ELCB	Leakage breaker
Toner sensor	TS1	Developing assembly toner sensor
	TS2	Hopper toner sensor
Environment sensor	HUM1	Temperature/humidity sensor (machine internal temperature sensor)

COPYRIGHT © 2000 CANON INC.

6.7 PCBs

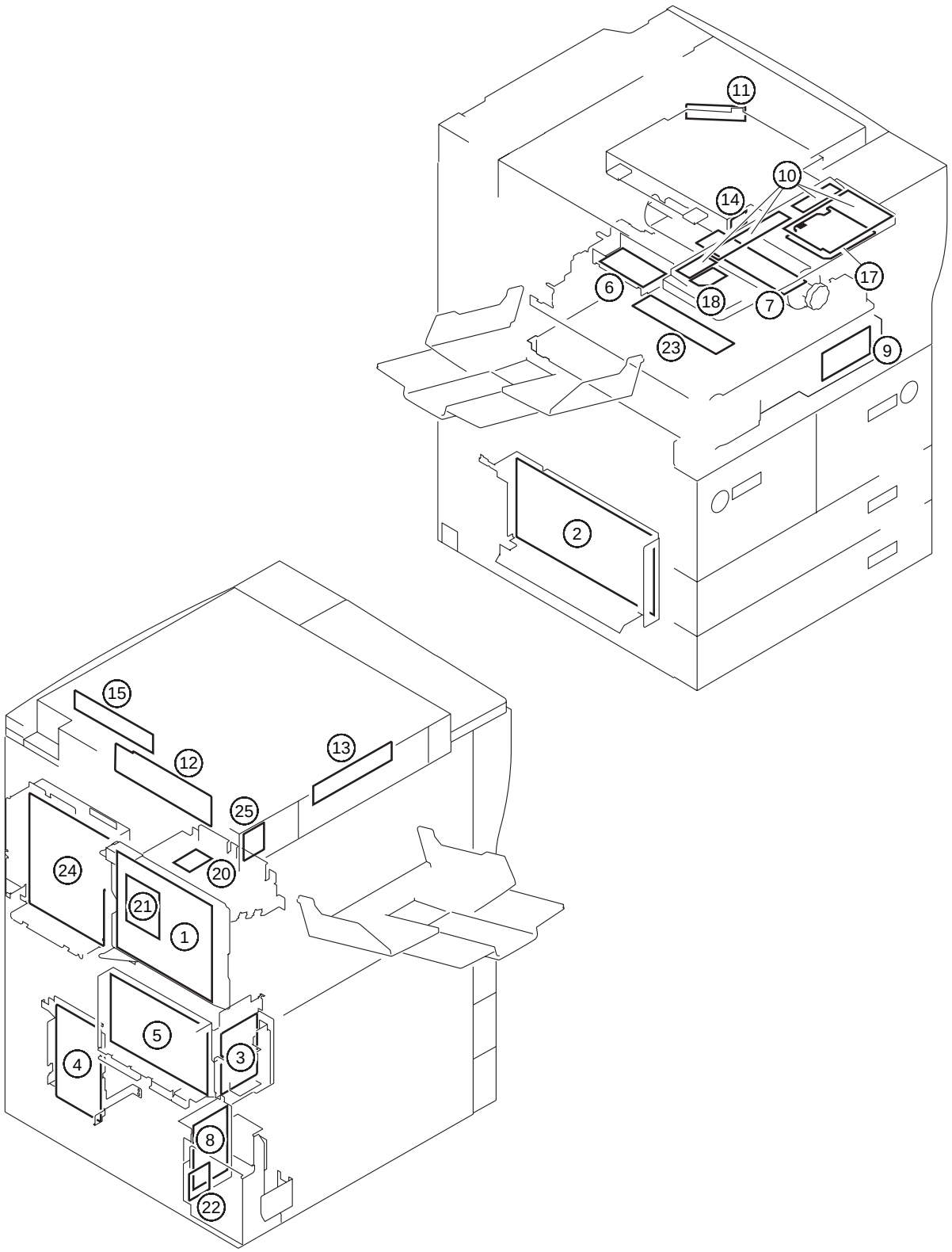

F04-607-01

COPYRIGHT © 2000 CANON INC.

6.7.1 Reader Unit

Ref.	Name	Function
12	Reader controller PCB	Controls the reader unit/ADF.
13	CCD/AP PCB	Drives the CCD/processes analog images.
15	Inverter PCB	Controls the scanning lamp.
25	Fuse PCB	Controls the mirror/lens heater. (standard in 100-V model)

6.7.2 Printer unit

Ref.	Name	Function
1	DC controller PCB	Controls the power supply of the printer unit/finisher.
2	DC power supply PCB	Supplies DC power.
3	AC driver PCB	Controls the AC circuit.
4	Motor driver PCB	Controls the motor.
5	HVT PCB	Generates high-voltage.
6	Potential control PCB	Controls the surface potential of the photosensitive drum.
7	Drum heater control PCB	Controls the drum heater.
8	Accessories power supply PCB	Supplies power to the finisher.
9	Duplex driver PCB	Controls the sensor, motor, and solenoid of the duplex unit.
10	Control panel PCB	Controls the keys and LEDs.
11	Laser driver PCB	Controls the laser drive.
14	BD PCB	Detects the laser beam.
17	Control panel CPU PCB	Controls the control panel.
18	LCD contrast adjustment PCB	Adjusts the contrast of the control panel.
20	Serial number PCB	Controls the serial number.
21	Anti-rush current PCB	Prevents rush current in the fixing/feeding assembly and the duplex unit.
22	Capacitor PCB	Removes noise.
23	Fixing/feeding relay PCB	Relays signals of sensors and motors of the fixing/feeding unit.
24	Main controller PCB	Processes digital images/controls the system.

COPYRIGHT © 2000 CANON INC.

6.8 Variable Resistors (VR), Light-Emitting Diodes (LED), and Check Pins by PCB

Of the VRs, LEDs, and switches found on the machine, those used in the field are discussed:

1. Some LEDs have leakage current and emit dim light when off; this is a normal condition and must be kept in mind:
2. VRs that may be used in the field: ⊘

   VRs that must not be used in the field: ⊘

Any VR and check pin not found in the lists is for use at the factory, requiring special tools and high accuracy. Do not touch them in the field.

6.8.1 Main Controller PCB

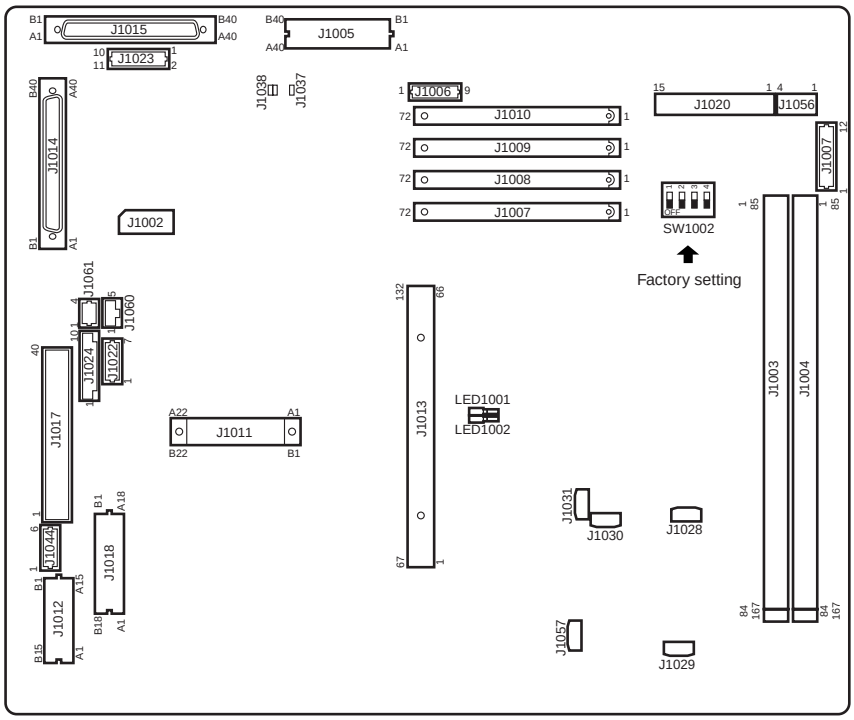

F06-608-01

The DIP switch (SW1002) is for the factory. Do not use it in the field. (It is used when making settings before shipment of the machine.)

COPYRIGHT © 2000 CANON INC.

6.8.2 DC Controller PCB

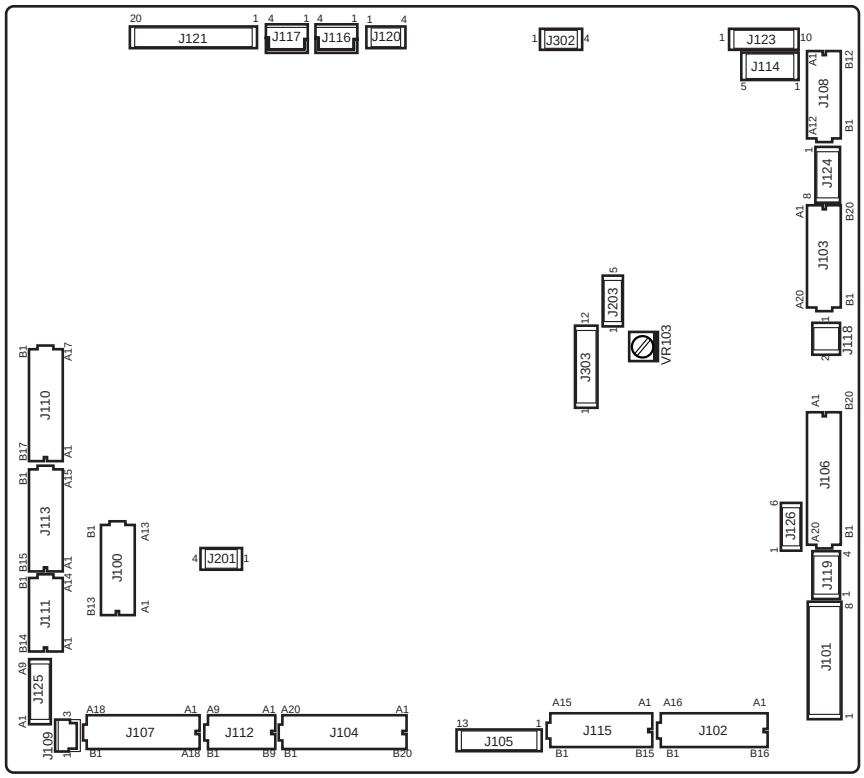

F04-608-02

The shorting connectors of J303 are set as follows; be sure to transfer the shorting connectors to the new PCB upon replacement:

J303-	100V	120V	230V
1		○	○
2		○	○
3	○		○
4	○		○
5	○	○	
6	○	○	
7			
⋮			
12			

○ :shorted by a jumper wire.

F04-608-03

6.8.3 Reader Controller PCB

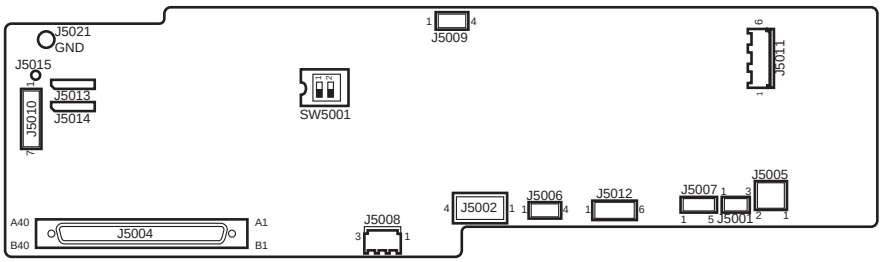

F04-608-04

	SW5001-1	SW5001-2
ON:	Inch series.	Not used.
OFF:	AB series	Not used.

6.8.4 Power Supply PCB

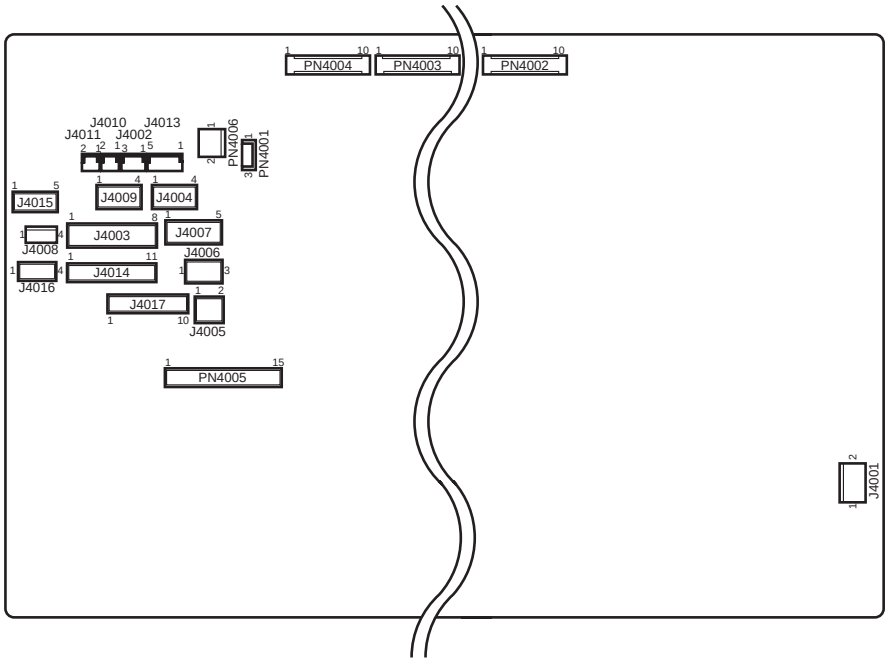

F04-608-05

COPYRIGHT © 2000 CANON INC.

6.8.5 HVT PCB

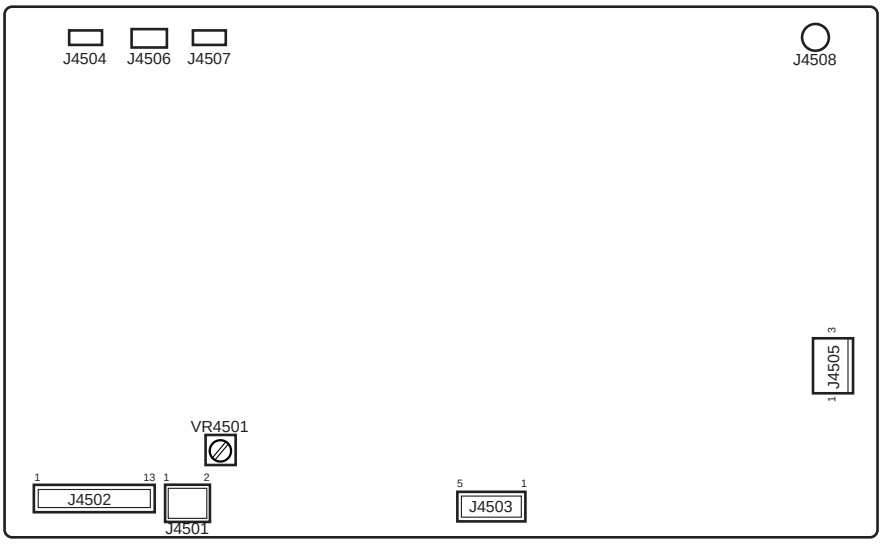

F04-608-06

6.8.6 Drum Heater Control PCB

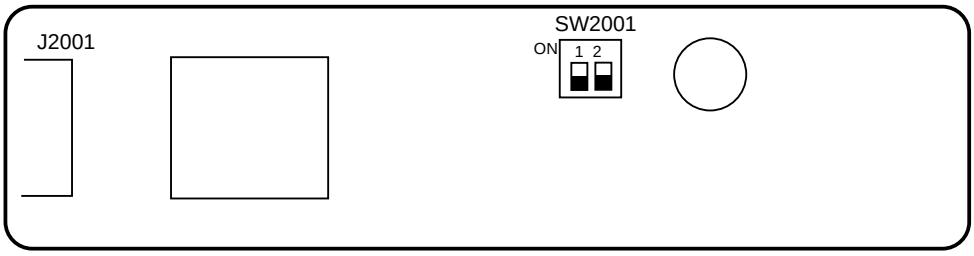

F04-608-07

	SW2001-1	SW2001-2
ON:	controlled to 47°C	Not used.
OFF:	controlled to 43°C (default)	Not used.

For details of drum heater control, see 6. “Controlling the Drum Heater” in Chapter 4.

CHAPTER 5

SERVICE MODE

COPYRIGHT © 2000 CANON INC.

1. Organization of Service Mode

1.1 Outline

The screens in service mode are grouped into three: Initial screen, Level 1/Level 2 screen, and Level 3 screen.

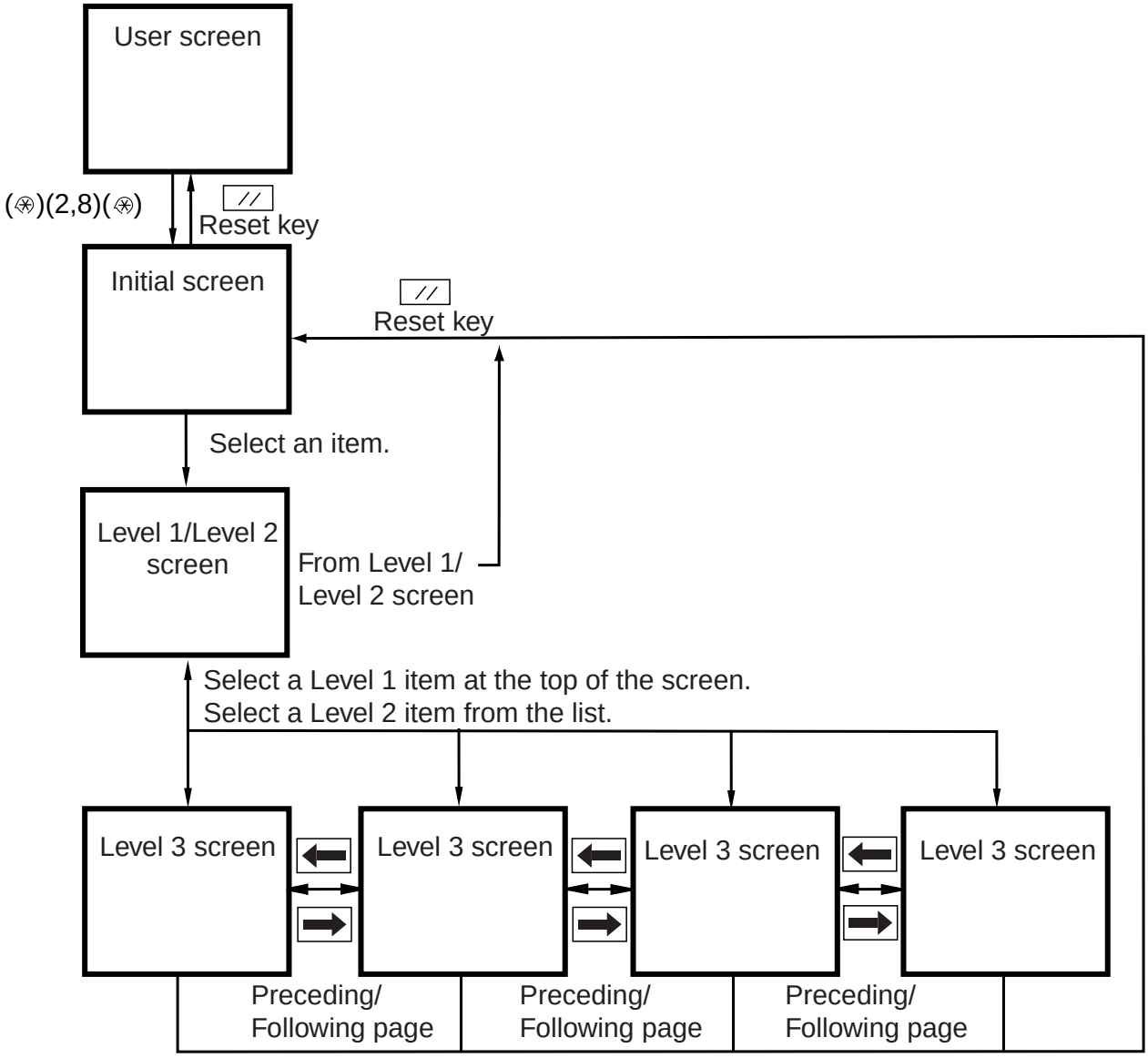

F05-101-01

The machine's service mode is divided into the following seven types:

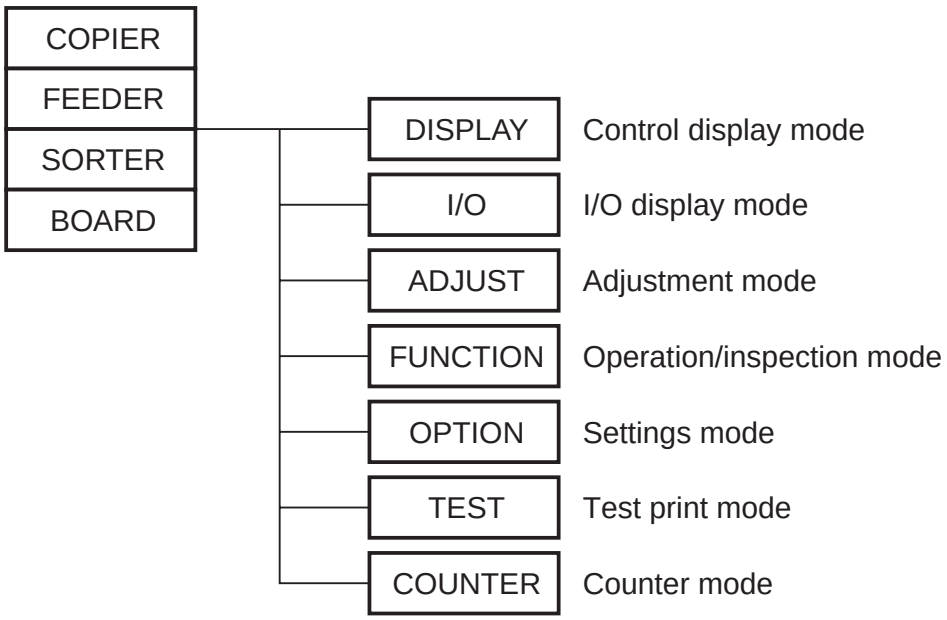

F05-101-02

1.2 Starting Service Mode and Making Selections

1) Press the user mode key (⊛) on the control panel.
2) Press the 2 and 8 keys at the same time.
3) Press the user mode key (⊛).

In response, the Initial screen will appear.

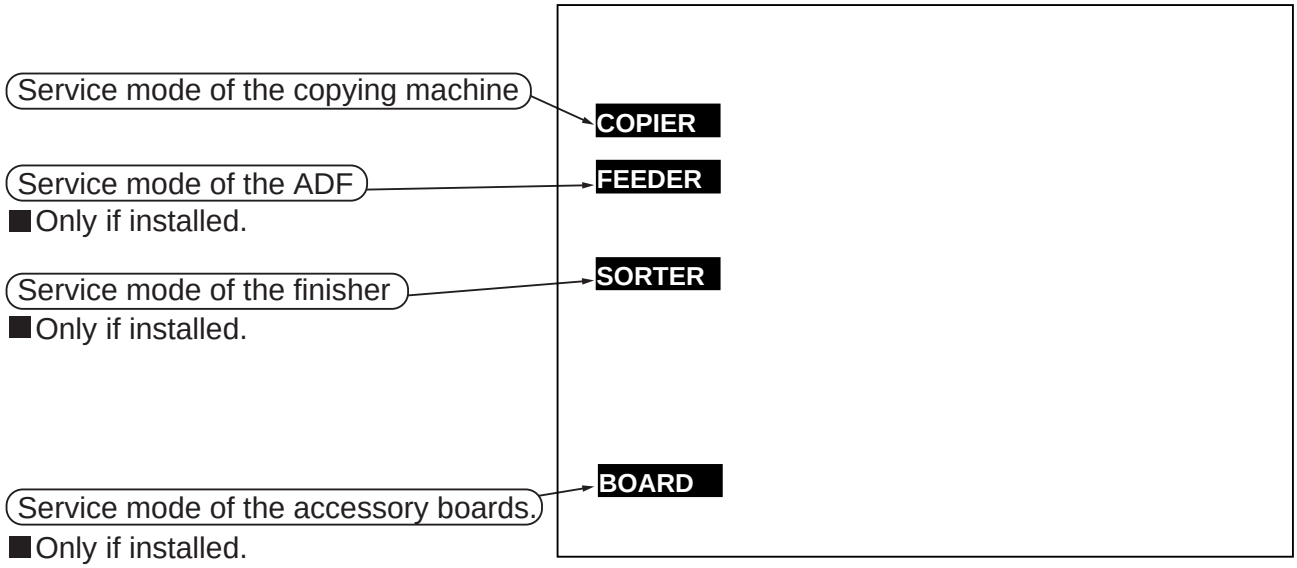

F05-102-01

COPYRIGHT © 2000 CANON INC.

1.3 Ending Service Mode

Press the Reset key once to return to the service mode Initial screen (F05-102-01).

Press the Reset key twice to end service mode and to return to the User (standard) screen.



If you used ADJUST, FUNCTION, or OPTION in service mode, be sure to turn off and then on the power switch after ending service mode.

1.4 Backing Up Service Mode

Each machine is adjusted before shipment from the factory, and adjustment settings are indicated on the service label (attached to the service book case found behind the front cover).

If you have replaced the reader controller PCB or the DC controller PCB, be sure to remove the EEPROM from the old PCB and mount it to the new PCB.

If you have initialized the RAM, the ADJUST and OPTION settings are replaced with the default settings. If you have made adjustments and changed service mode settings in the field, be sure to record the new settings on the service label. (If the label does not show an appropriate item, make use of its blank space.)

If you want, you can print out all service mode settings at once using service mode (COPIER>FUNCTION>MIS-P>P-PRINT).

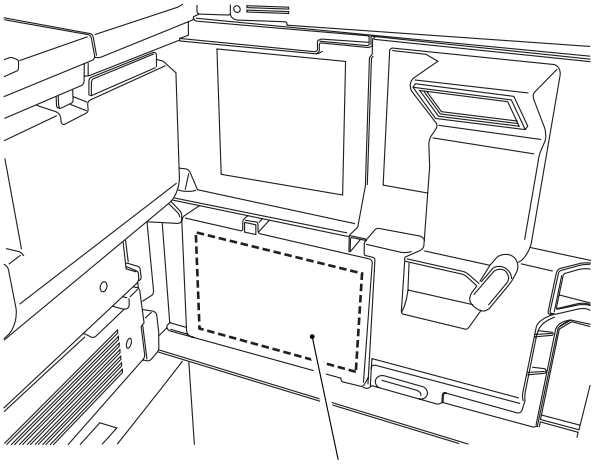

F05-104-01 Service Label

1.5 Basic Operations

1.5.1 Initial Screen

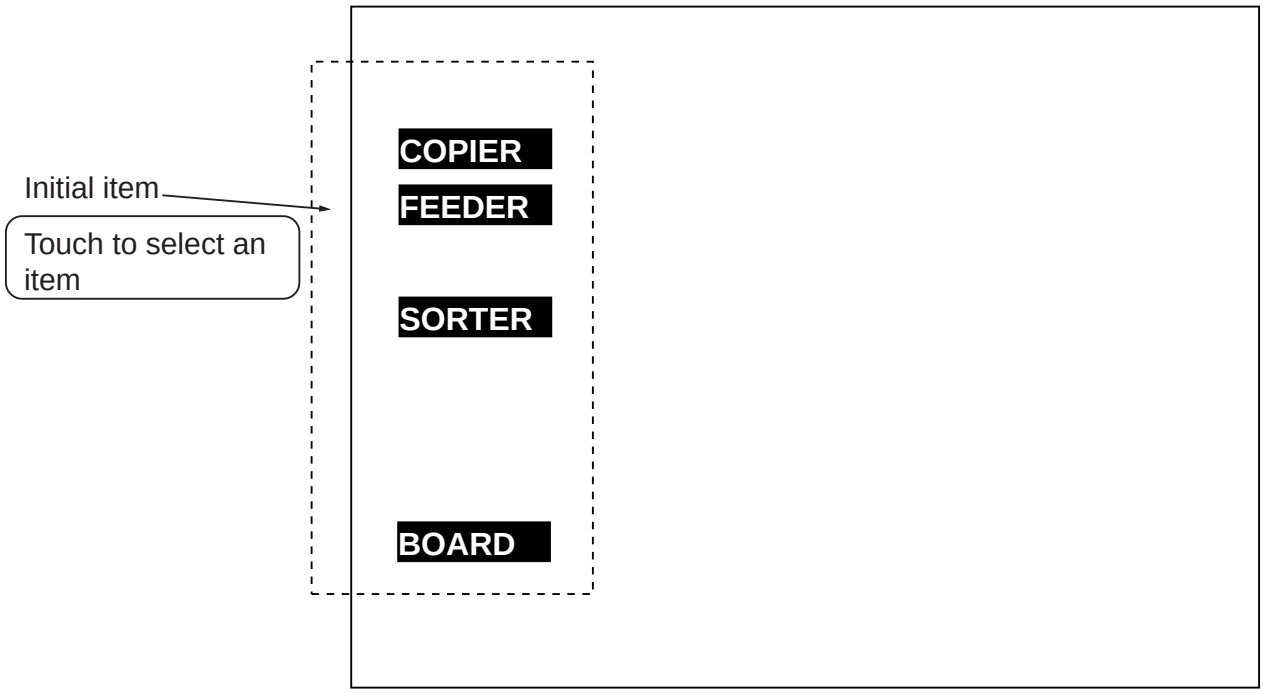

F05-105-01

1.5.2 Level 1/Level 2 Screen

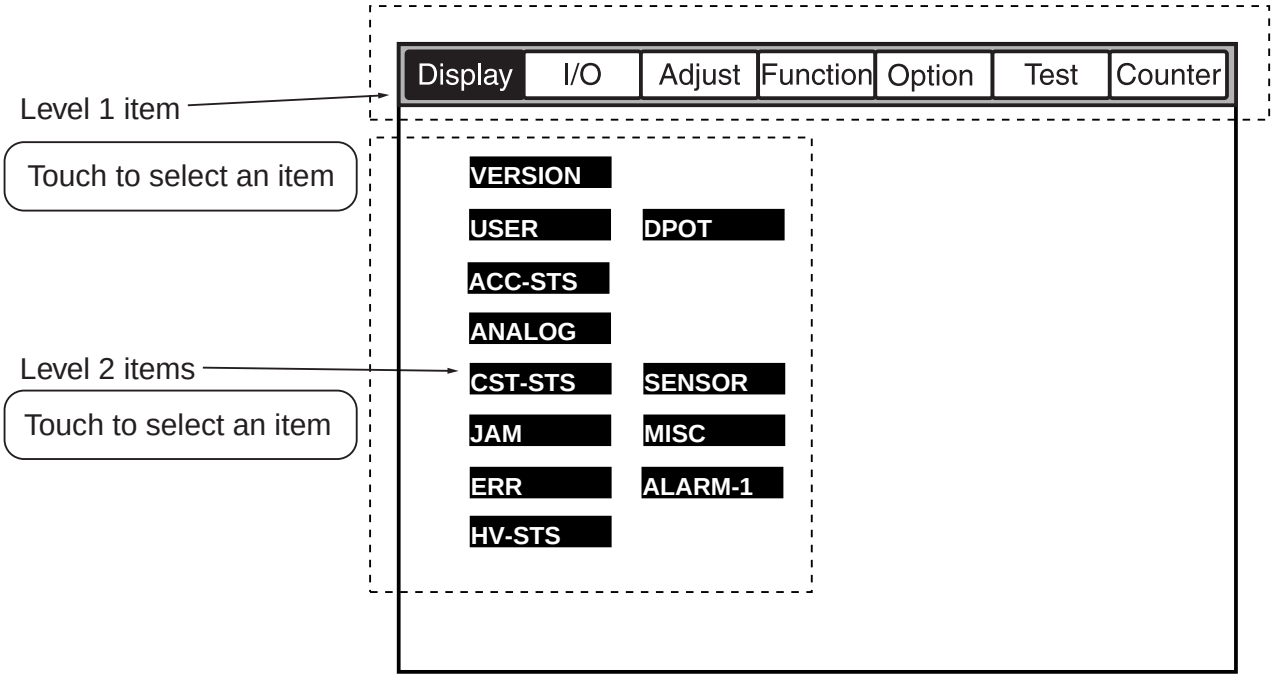

F05-105-02

COPYRIGHT © 2000 CANON INC.

1.5.3 Level 3 Screen

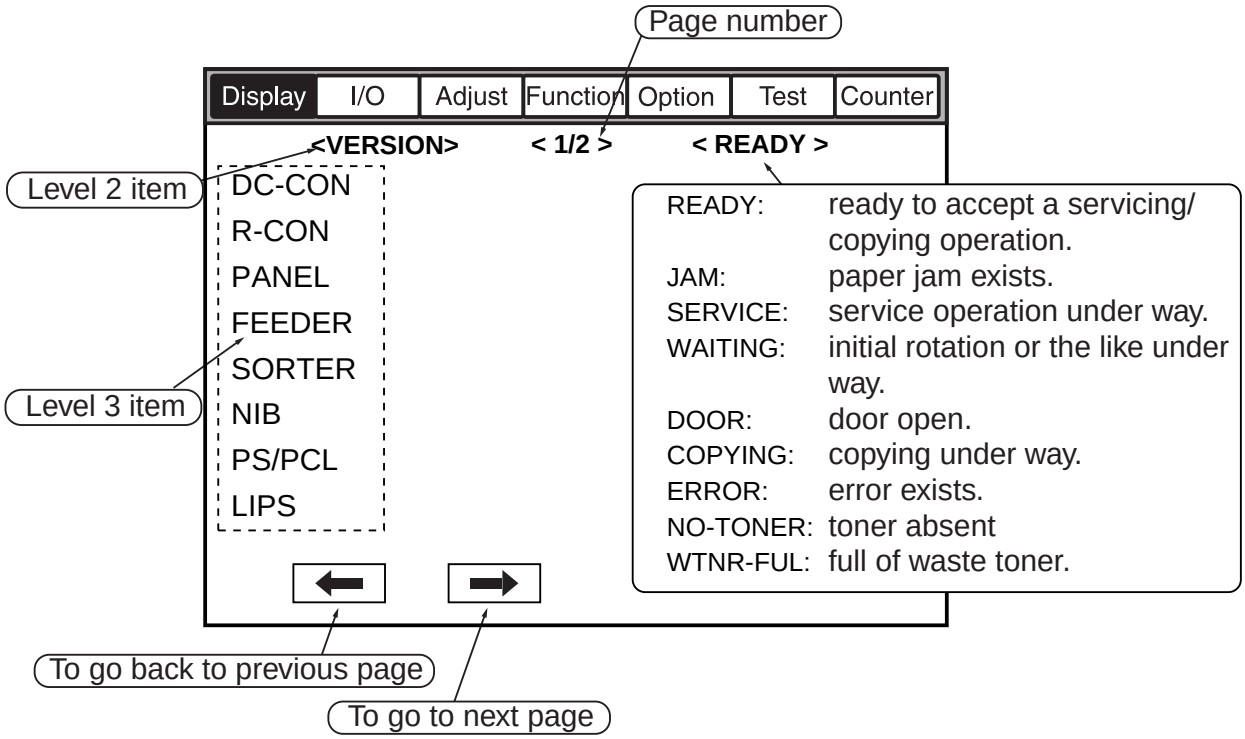

F05-105-03

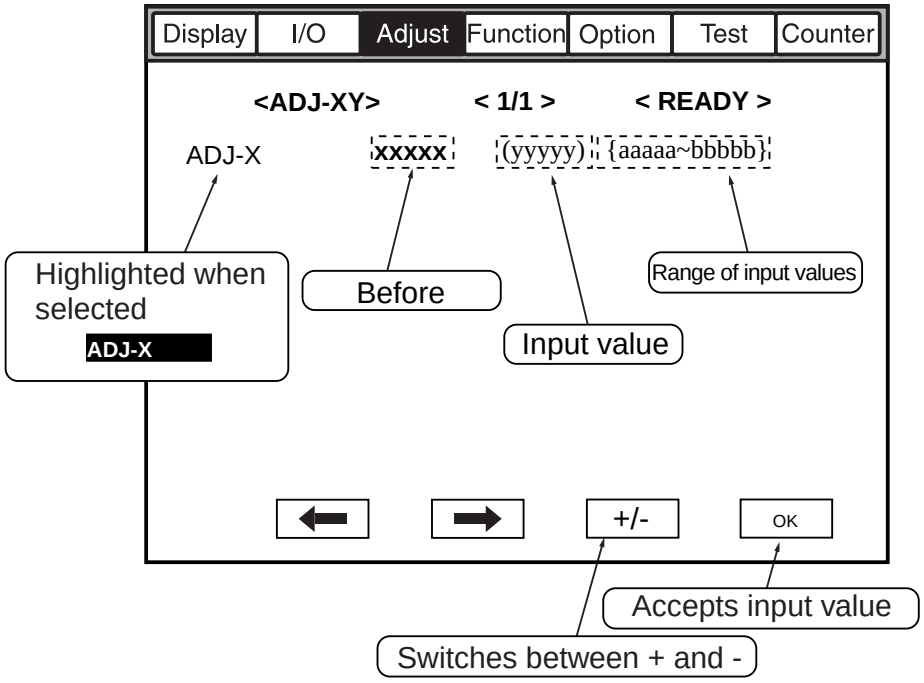

Stop key: stops the ongoing operation.

Clear key: clears a value.

Start key: makes copies without ending service mode.

F05-105-04

2. DISPLAY (control/display mode)

2.1 COPIER

The following screen appears in response to COPIER>DISPLAY; for the items, see the pages that follow:

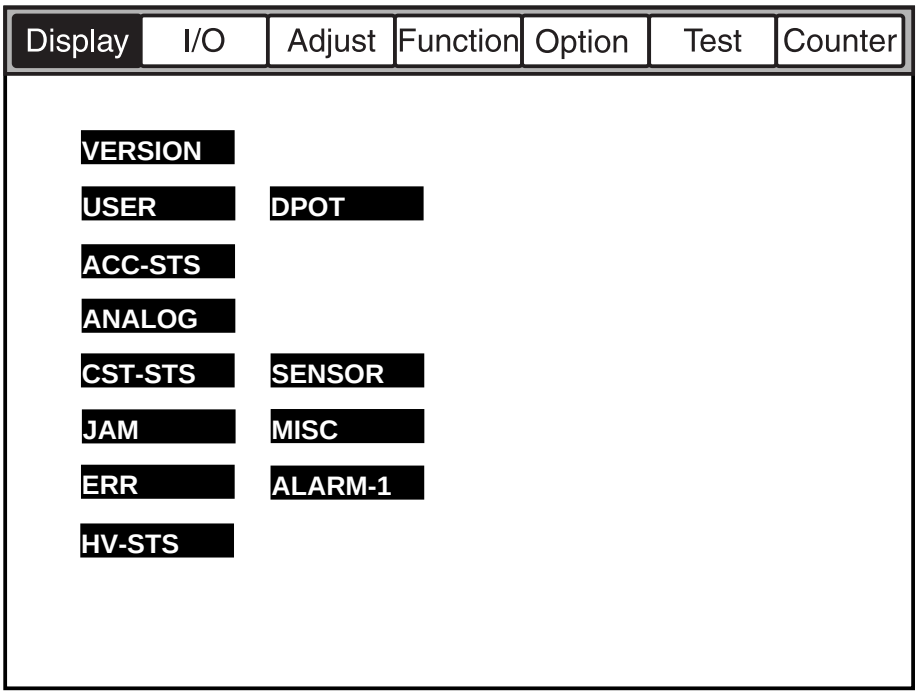

F05-201-01

COPYRIGHT © 2000 CANON INC.

<VERSION>

Indicates the PCB ROM versions of the machine and accessories.
Indication<xx, yy> xx: version number yy:R & D control number.

DC-CON	Indicates the ROM version of the DC controller PCB.
R-CON	Indicates the ROM version of the reader controller PCB.
PANEL	Indicates the ROM version of the control panel CPU PCB.
FEEDER	Indicates the ROM version of the feeder controller PCB.
SORTER	Indicates the ROM version of the finisher controller PCB.
NIB	Indicates the version of the network software.
PS/PCL	Indicates the version of the printer board (PS/PCL).
LIPS	Indicates the version of the printer board (LIPS).
SDL-STCH	Indicates the ROM version of the saddle stitcher controller PCB.
MN-CONT	Indicates the version of the software of the main controller PCB.
RIP1	Indicates the version of the RIP1 board.
BOOT-ROM	Indicates the ROM version of the boot ROM of the main controller block.
DIAG-DVC	Indicates the version of the self diagnosis device.

COPYRIGHT © 2000 CANON INC.

<USER>

Indicates the User screen and items related to the user.

LANGUAGE	Indicates the language/paper size configuration used. Display <LANGUAGE xxyy. zz. aa> xx (2 higher-order digits): country code yy (2 lower-order digits) : language code zz : destination code (00: CANON, 01: OEM) aa : paper size configuration code (00: AB, 01: Inch, 02: A, 03: all sizes)
COUNTER	Indicates the type of control of the software counter. (00: 100 V, 01: USA, Europe)
MODEL	Indicates the identification of the model. (0: iR5000, 1: iR6000)

<ACC-STS>

Indicates the connection of accessories.

FEEDER	Indicates the connection of the ADF. (0: not connected, 1: connected)
SORTER	Indicates the state (connection) of the finisher and the puncher unit. Display: xy x= 0: finisher, 1: saddle finisher, 3: shift tray y= 0: none, 1: 2-hole, 2: 2/3-hole, 3: 4-hole (FRN), 4: 4-hole (SWDN)
DECK	Indicates the connection of the paper deck (accessory). (0: not connected, 1: connected)
CARD	Indicates the connection of the control card. (0: not connected, 1: connected)
DATA-CON	Indicates the connection of a self diagnosis device. (0: none, 1: copy data controller, 2: remote diagnostic device)

COPYRIGHT © 2000 CANON INC.

RAM	Indicates the size of the memory mounted to the main controller. (64 MB, 128 MB)
NIB	Indicates the connection of a network board. (0: none, 1: Etherboard, 2: Token-Ring, 3: both)
LIPS-RAM	Indicates the size of the memory mounted on the LIPS board. (xx MB)
LIPS	Indicates the connection of the LIPS board. (0: not connected, 1: connected)
PS/PCL	Indicates the connection of a PS/PCL board. (0: none, 1: PS/PCL, 2: PS Kanji)
RIP1	Indicates the connection of the RIP1 board. (0: not connected, 1: connected)

<ANALOG>

Indicates the measurement taken by the analog sensor.

TEMP	Indicates the machine's internal temperature. (by environment sensor) Unit: °C
HUM	Indicates the machine's internal humidity. (by environment sensor) Unit: %RH
FIX-U	Indicates the temperature of the upper fixing roller. Unit: °C

COPYRIGHT © 2000 CANON INC.

<CST-STS>

Indicates the paper size of the cassette and the manual feeder.

WIDTH-C3	Indicates the paper width of the cassette 3 in terms of paper size.
WIDTH-C4	Indicates the paper width of the cassette 4 in terms of paper size. (100-V model only)
WIDTH-MF	Indicates the paper width of the manual feeder in terms of paper size.

COPYRIGHT © 2000 CANON INC.

<JAM>

Indicates jam data.

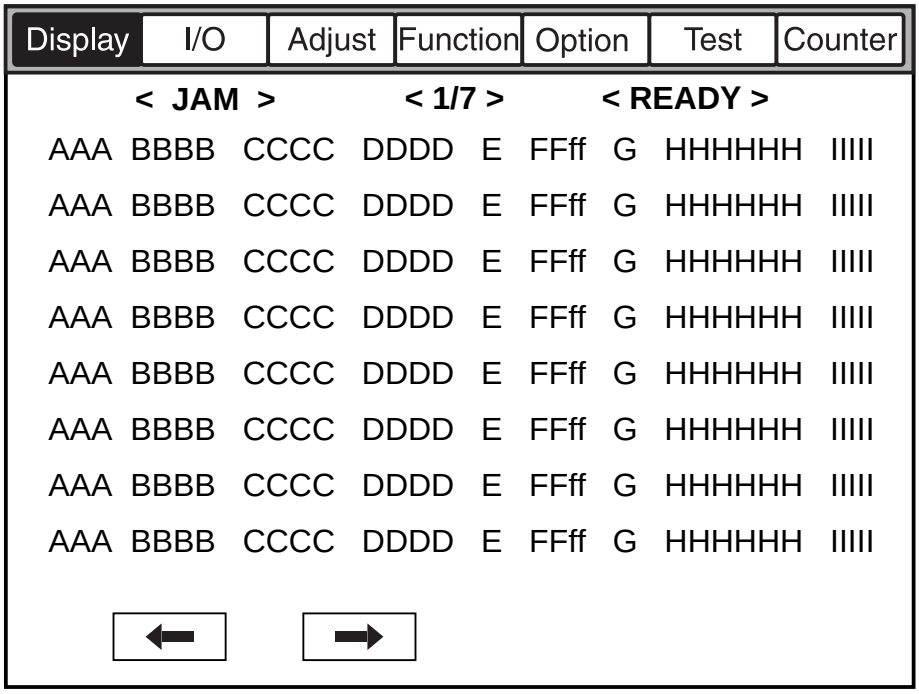

F05-201-02

Item	Description	Remarks
AAA	Indicates the numbers of jams (larger the number, the more past the jam).	1 to 50 (50 max.)
BBBB	Indicates the date of occurrence.	month, day (2 digits each)
CCCC	Indicates the hour of occurrence.	24-hour notation
E	Indicates the location of occurrence.	0: copying machine 1: feeder 2: finisher
FFff	Jam code	FF: jam type (T05-201-01) ff: jam sensor (T05-201-02) (For the feeder, T05-201-04.)
G	Indicates the source of paper.	(T05-201-03)
HHHHHH		
IIIII	Indicates the paper size.	

FF: Types of Jams

Code	Type
00xx	none
01xx	delay jam
02xx	stationary jam
0Axx	stationary jam at power-on
0Bxx	front cover open jam

T05-201-01

ff: Jam Sensor

Code	Sensor
xx01	registration paper sensor (PS29)
xx02	laser write start sensor (PS28)
xx03	vertical path 1 paper sensor (PS24)
xx04	vertical path 2 paper sensor (PS25)
xx05	vertical path 3 paper sensor (PS26)
xx06	vertical path 4 paper sensor (PS27)
xx07	right deck feed paper sensor (PS32)
xx08	left deck feed paper sensor (PS33)
xx0B	right deck re-try sensor (PS19)
xx0C	left deck re-try sensor (PS20)
xx0D	cassette 3 re-try sensor (PS21)
xx0E	cassette 4 re-try sensor (PS22)
xx0F	claw jam sensor (PS4)
xx10	internal delivery sensory (PS35)
xx11	external delivery sensor (PS36)
xx12	delivery assembly jam sensor (PS46)
xx13	reversal sensor 2 (PS38)
xx14	reversal sensor 1 (PS37)
xx15	duplexing paper sensor (PS34)
xx16	duplexing pre-registration sensor (PS30)
xx1E	deck pickup sensor (PS101)
xx1F	deck feed sensor (PS106)
xx32	buffer path sensor (PI14)
xx33	inlet sensor (PI1)
xx34	delivery sensor (PI3)
xx35	staple tray sensor (PI4)
xx36	vertical path paper sensor (PI17S)
xx37	delivery sensor (PI11S)

T05-201-02

G: Source of Paper

Code	Description
1	right front deck
2	left front deck
3	cassette 3
4	cassette 4
5	not used
6	not used
7	paper deck (accessory)
8	manual feed tray
9	duplexing block

T05-201-03

FFff: Sensors for and Types of Jams in the Feeder

x=1: 1st original picked up.

x=0: 2nd or subsequent original picked up.

Code	Description	Sensor
00x1	Post-separation sensor (S3) delay	S3
00x2	Post-separation sensor (S3) stationary	S2, S3
00x3	Registration senor (PI1) delay	S3, PI1
00x4	Registration sensor (PI1) stationary	PI1
00x5	Read sensor (S2) delay	S2
00x6	Read sensor (S2) stationary	S2
00x7	Delivery reversal sensor (S1) delay	S1, S2
00x8	Delivery reversal sensor (S1) stationary	S1, S2
00x9	User ADF open	PI2
00xA	ADF open	PI2
00xB	User cover open	SW2
00xC	Cover open	SW2
00xD	Residual	PI1, S1, S2, S3
00xE	Pickup fault	PI5
00xF	Timing error	S2

T05-201-04

COPYRIGHT © 2000 CANON INC.

<ERR>

Indicates error data.

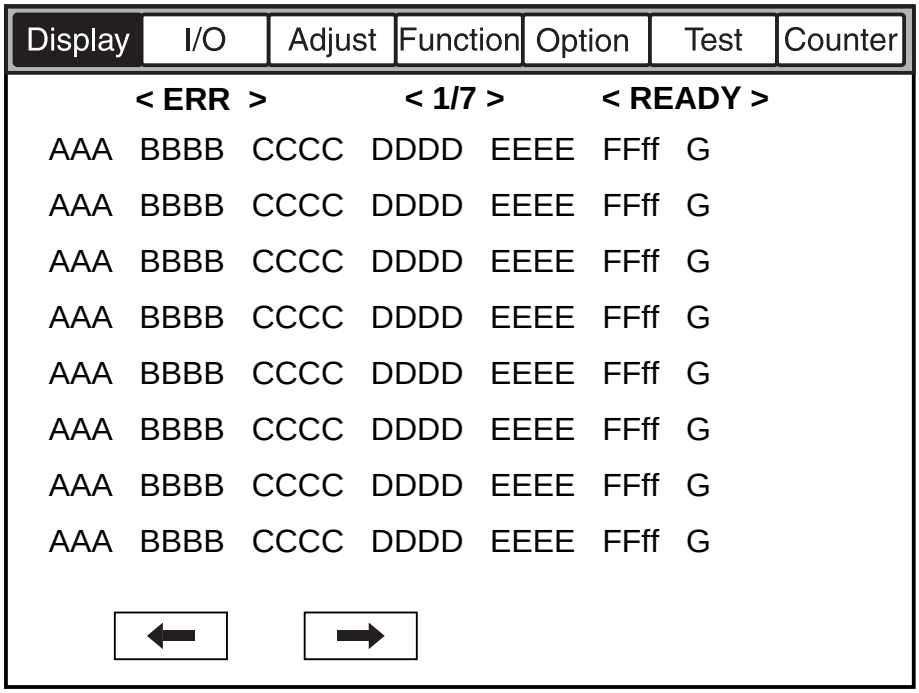

F05-201-03

Item	Description	Remarks
AAA	Indicates the numbers of errors (the higher the number, the more recent the error).	1 to 50 (50 max.)
BBBB	Indicates the date of occurrence.	month, day (2 digits each)
CCCC	Indicates the time of occurrence.	24-hour notation
DDDD	Indicates the return time.	24-hour notation
EEEE	Indicates the error code in question.	See “Self Diagnosis” in Chapter 6.
FFff	Indicates the detailed code in question.	if none, ‘0000’.
G	Indicates the location of occurrence.	0: copying machine/ main controller 1: feeder 2: finisher 3: C.F.F. 4: reader 5: printer 6: PDL 7: fax

<HV-STS>

Indicates the measurements taken of the voltage/current system.

PRIMARY	Indicates the level of primary charging current.
PRE-TR	Indicates the level of current for pre-transfer (post) charging.
TR	Indicates the level of transfer charging current.
SP	Indicates the level of separation charging current.
BIAS	Indicates the level of developing bias DC.
SP-N2	Indicates the level of separation charging current for the 2nd side of a double-sided print.
TR-N2	Indicates the level of transfer charging current for the 2nd side of a double-sided print.

COPYRIGHT © 2000 CANON INC.

<DPOT>

Indicates the photosensitive drum surface potential control data.

DPOT-K	Indicates the surface potential of the photosensitive drum. (unit: V)
VL1T	Indicates the target value of the light-area potential (VL1) for copying.
VL1M	Indicates the measurement taken of the light-area potential (VL1) for copying. (optimum value: VL1T ± 6 V; reference only)
VL2M	Indicates the measurement taken of the light-area potential (VL2) for copying. (optimum value: 70 ± 15 V; reference only)
VDT	Indicates the target dark-area potential (VD) for copying.
VDM	Indicates the measurement of the dark-area potential (VD) for copying. (optimum value: VDT ± 6 V; reference only)
VL2M-P	Indicates the measurement of the light-area potential (VL2) for printer (PDL) images. (optimum value: 70 ± 15 V; reference only)
VL1M-P	Indicates the measurement of the light-area potential (VL1) for printer (PDL) images. (optimum value: VL1T-P ± 6 V)
VL1T-P	Indicates the measurement of the light-area potential (VL1) for printer (PDL) images.
VDM-P	Indicates the measurement of the dark-area potential (V) for printer (PDL) images.
VDT-P	Indicates the target level of dark-area potential (VD) for printer (PDL) images.
LLMT-P	Indicates the laser power voltage control mechanism for printer (PDL) images. (0: normal, 1: error)

COPYRIGHT © 2000 CANON INC.

PLMT-P	Indicates the primary charging current control mechanism for printer (PDL) images. (0: normal, 1: error)
LLMT	Indicates the laser power voltage control mechanism for copying. (0: normal, 1: error)
PLMT	Indicates the primary charging current control mechanism for copying. (0: normal, 1: error)
BIAS-P	Indicates the result of potential control for the developing bias for copying.
BIAS-C	Indicates the result of potential control for the developing bias for copying.
LPOWER-P	Indicates the result of potential control for the laser intensity during output of printer (PDL) images. (range of indication: 0 to 255, 0: error)
LPOWER-C	Indicates the result of potential control for the laser intensity during output of copy images. (range of indication: 0 to 255, 0: error)
PRIM-P	Indicates the result of potential control for the primary charging current for printer (PDL) images. (range of indication: 0 to 1400 µA, optimum value: 500 to 1000 µA)
PRIM-C	Indicates the result of potential control for the primary charging current for copying. (range of indication: 0 to 1400 µ, optimum value: 500 to 1000 µA)

<SENSOR>

Indicates the state of sensors.

DOC-SZ	Indicates the size of the original detected by the original size sensor.
LPOWER	Indicates the laser intensity on a real-time basis.

COPYRIGHT © 2000 CANON INC.

<ALARM-1>

Indicates alarm data.

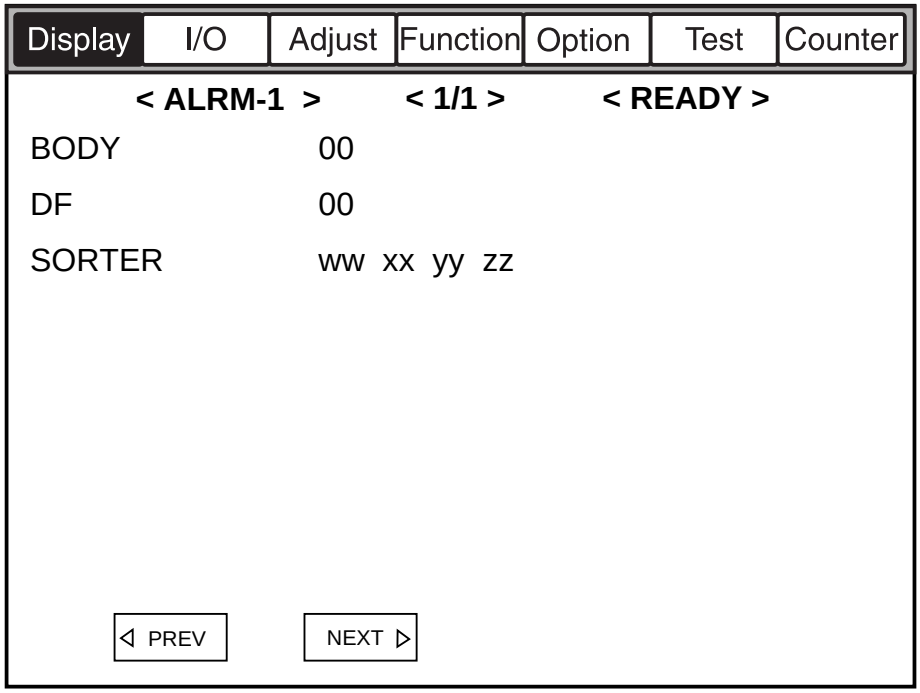

F05-201-04

COPYRIGHT © 2000 CANON INC.

Item	Description	Remarks
BODY	Indicates alarms associated with the copying machine.	01: right front deck lifter fault 02: left front deck lifter fault 03: cassette 3 lifter fault 04: cassette 4 lifter fault 05: paper deck lifter fault 10: primary charging assembly leakage 11: transfer charging assembly leakage 12: separation charging assembly leakage 20: de-curling fan (FM5) locked 21: duplex unit feed fan (FM8) locked 30: duplex unit horizontal registration HP detection fault 31: shift tray alarm
DF	Indicates alarms associated with the ADF.	For details, see the Service Manual of the ADF.
SORTER	Indicates the alarms associated with the finisher.	For details, see the Service Manual of the finisher. ww: staple alarm of finisher xx: staple alarm of saddle stitcher yy: stack alarm zz: tray alarm

COPYRIGHT © 2000 CANON INC.

2.2 FEEDER

FEEDSIZE	Indicates the size of an original detected by the ADF.

3. I/O (I/O display mode)

The following screen appears in response to COPIER>I/O; for the items, see the pages that follow:

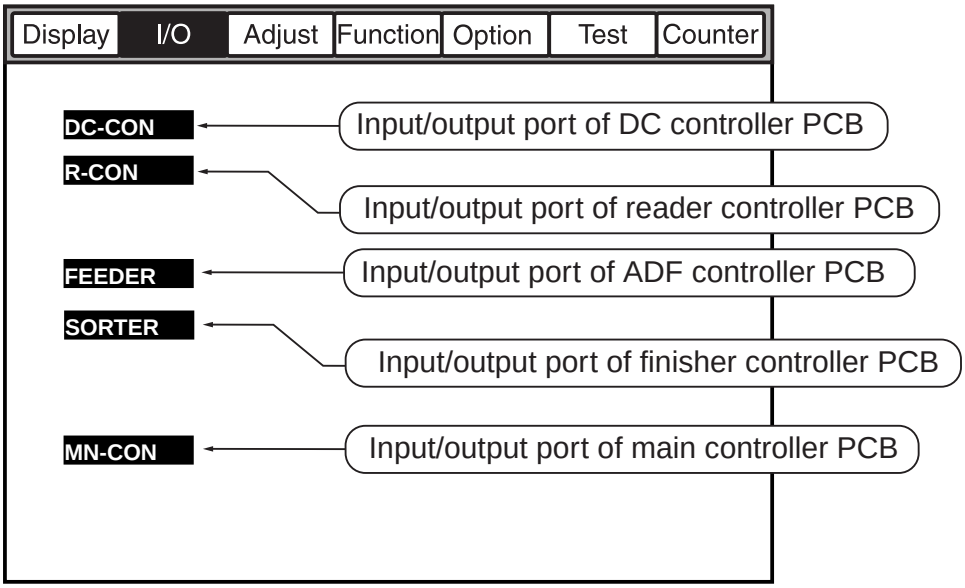

F05-300-01

<Guide to the Screen>

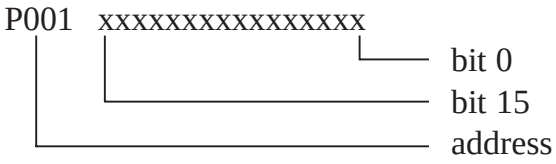

COPYRIGHT © 2000 CANON INC.

3.1 DC-CON

Indicates the input/output ports of the DC controller PCB.

<DC-CON (1/8)>

Address	Bit	Notation	Description	Remarks
IO-P01	0	PS23	manual feed paper sensor signal	0: paper present
	1	PS29	registration paper sensor signal	1: paper present
	2	PS19	right deck re-try sensor signal	1: paper present
	3	PS13	cassette 3 paper sensor signal	1: paper present
	4	PS26	vertical path 3 paper sensor signal	1: paper present
	5	PS14	cassette 4 paper sensor signal	1: paper present
	6	PS27	vertical path 4 paper sensor signal	1: paper present
	7	PS7	right deck paper sensor signal	1: paper present
	8	PS24	vertical path 1 paper sensor signal	1: paper present
	9	PS11	left deck paper sensor signal	1: paper present
	10	PS25	vertical path 2 paper sensor signal	1: paper present
	11	PS36	external delivery sensor signal	1: paper present
	12	PS35	internal delivery sensor signal	0: paper present
	13		not used	
	14	PS4	claw jam sensor signal	0: paper present
	15	PS33	left deck feed paper sensor	1: paper present
IO-P02	0	PS21	cassette 3 re-try sensor signal	1: paper present
	1	PS22	cassette 4 re-try sensor signal	1: paper present
	2	PS20	left deck re-try sensor signal	1: paper present
	3	PS37	reversal sensor 1 signal	1: paper present
	4	PS8	right pre-registering limit sensor signal	1: limit
	5	PS30	duplexing pre-registration senor signal	1: paper present
	6	PS31	duplexing horizontal pre-registration sensor signal	0: paper present
	7	PS38	reversal sensor 2 signal	1: paper present
	8	PS28	laser write start sensor signal	1: paper present
	9	TS1	developing assembly toner sensor signal	0: toner absent
	10	TS2	hopper toner sensor signal	0: toner absent
	11	PS34	duplexing paper senor signal	1: paper present
	12	PS45	fixing web length detection signal	1: absent
	13		not used	
	14		hopper connector detection signal	1: disconnected
	15	MSW1	waste toner screw lock detection signal	0: clogged
IO-P03	0	MSW2	manual feed cover open/closed detection signal	1: closed
	1	PS6	right deck lifter sensor signal	1: paper present
	2	PS32	right deck feed paper sensor signal	1: paper present

<DC-CON (2/8)>

Address	Bit	Notation	Description	Remarks
	3	PS10	left deck lifter sensor signal	1: paper present
	4	PS12	left deck limit sensor signal	1: limit
	5	PS17	cassette 3 lifter sensor signal	1: paper present
	6	PS18	cassette 4 lifter sensor signal	1: paper present
	7		cassette 4 universal detection	0: universal
	8	SV1	cassette 4 length detection signal 0	
	9	SV1	cassette 4 length detection signal 1	
	10	CL2	registration roller clutch drive signal	1: ON
	11	PS5	right deck open/closed detection sensor signal	1: closed
	12	PS9	left deck open/closed sensor signal	1: closed
	13	PS3	right cover open/closed detection signal	1: closed
	14		not used	
	15	SW2	front cover open/closed detection signal	0: closed
IO-P04	0		duplexing unit detection signal	0: connected
	1		fixing/feeding unit detection signal	0: connected
	2		hard disk unit detection signal	1: absent
	3	PS15	cassette 3 open/closed sensor signal	1: closed
	4	PS16	cassette 4 open/closed sensor signal	1: closed
	5	SV2	cassette 3 size detection signal 0	
	6	SV2	cassette 3 size detection signal 1	
	7		not used	
	8	TH2	fixing sub thermistor error detection signal 1	1: error
	9	TH1	fixing main thermistor error detection signal	1: error
	10		E001 error hard detection signal	1: error
	11		fixing sub thermistor error detection signal 2	1: error
	12	RL1	main relay OFF detection signal	
	13		main SSR error signal	1: error
	14		sub SSR error signal	1: error
	15		DC controller switch signal	1: new
IO-P05	0	FM1	separation feeder fan stop detection signal	1: stop
	1	FM2	primary charging cooling fan stop detection signal	1: stop
	2	FM6	DC power supply fan stop detection signal	1: stop
	3	FM3	heat discharge fan stop detection signal	1: stop
	4	FM7	hard disk fan stop detection signal	1: stop
	5	FM4	controller cooling fan stop detection signal	1: stop
	6	FM8	duplexing feed fan stop detection signal	1: stop
	7	FM5	de-curling fan stop detection signal	1: stop
	8	PS47	right deck paper level sensor (upper) signal	1: paper present

COPYRIGHT © 2000 CANON INC.

<DC-CON (3/8)>

Address	Bit	Notation	Description	Remarks
	9	PS49	left deck paper level sensor (upper) signal	1: paper present
	10		SSR error signal	1: error
	11		not used	
	12	PS48	right deck paper level sensor (lower) signal	1: paper present
	13	PS50	left deck paper level sensor (lower) signal	1: paper present
	14		not used	
	15	PS104/ 105	shift tray full sensor signal	0: full
IO-P06	0	M19	fixing motor clock detection	1: locked
	1	M15	laser scanner motor lock detection signal	1: locked
	2	PS46	delivery jam sensor signal	1: paper present
	3		for factory adjustment	
	4		for factory adjustment	
	5		for factory adjustment	
	6		for factory adjustment	
	7		not used	
	8		LZC-ERROR	
	9		LZD-ERROR	
	10		LZ-HEAT RDY	
	11		LZ-HEAT ERROR	
	12	PS103	shift tray paper sensor signal	0: paper present
	13	PS104	shift tray HP detection (front)	1: HP
	14	PS105	shift tray HP detection (rear)	1: HP
	15		shift tray connection detection signal	0: connected
IO-P07	0		flicker control signal	0: flicker
	1		power supply spec 1	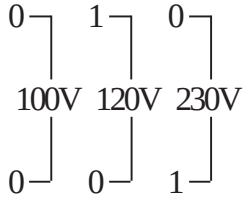
	2		power supply spec 2	
	3		SW3	
	4		SW4	
	5		SW5	
	6		duplexing feed fan detection signal	
	7		SW7	
	8		not used	
	9		not used	
	10		not used	
	11		not used	
	12		high-voltage separation error signal	

<DC-CON (4/8)>

Address	Bit	Notation	Description	Remarks
	13		high-voltage transfer error signal	
	14		high-voltage primary error signal	
	15		not used	
IO-P08	0	CL1	developing clutch drive signal	1: ON
	1	CL2	registration roller clutch drive signal	0: ON
	2	CL3	manual feed pickup clutch drive signal	1: ON
	3		not used	
	4		not used	
	5		not used	
	6	CL4	left deck pull-off clutch drive signal	1: ON
	7		not used	
	8		roller bias ON signal	0: ON
	9		developing bias AC drive signal	0: ON
	10		high-voltage high humidity switch signal	0: ON
	11		high-voltage AC driver signal	0: ON
	12		high-voltage remote signal	0: ON
	13		EEPROM select signal 1	1: ON
	14		EEPROM select signal 2	1: ON
	15		EEPROM select signal 3	1: ON
IO-P09	0		shift tray detection signal	0: ON
	1	SM101	shift tray motor (CW) signal	1: ON
	2	SM101	shift tray motor (CCW) signal	1: ON
	3	SL6	right deck pickup solenoid drive signal	0: ON
	4	SL7	left deck pickup solenoid drive signal	1: ON
	5	SL3	cassette 3 pickup solenoid drive signal	1: ON
	6	SL4	cassette 4 pickup solenoid drive signal	1: ON
	7	SL2	manual feed releasing solenoid drive signal	1: ON
	8		not used	
	9	SL5	delivery flapper solenoid drive signal	1: ON
	10	SL8	reversing flapper solenoid drive signal	0: ON
	11	SL1	fixing assembly inlet guide drive solenoid (return) drive signal	1: ON
	12	SL1	fixing assembly inlet guide drive solenoid (suction) drive signal	1: ON
	13	SL9	fixing assembly web solenoid drive signal	1: ON
	14		not used	
	15		not used	
IO-P10	0	M5	right deck lifter motor drive signal	0: ON
	1	M4	left deck lifter motor drive signal	0: ON
	2	M6	primary charging wire cleaning motor (CCW) signal	1: ON

COPYRIGHT © 2000 CANON INC.

<DC-CON (5/8)>

Address	Bit	Notation	Description	Remarks
	3	M6	primary charging wire cleaning motor (CW) signal	1: ON
	4	M7	pre-transfer charging wire cleaning motor (CW) signal	1: ON
	5	M7	pre-transfer charging wire cleaning motor (CCW) signal	1: ON
	6	M8	transfer/separation charging wire cleaning motor (CW) signal	1: ON
	7	M8	transfer/separation charging wire cleaning motor (CCW) signal	1: ON
IO-P11	0	M1	drum motor drive signal	0: ON
	1	M2	main motor drive signal	0: ON
	2		not used	
	3	M19	fixing motor drive signal	0: ON
	4	M15	laser scanner moter drive signal	0: ON
	5	M9	hopper stirring motor drive signal	1: ON
	6	M10	hopper supply motor drive signal	1: ON
	7	M15	laser scanner motor speed switch signal	0: half-speed
IO-P12	0	M21	cassette 4 lifter motor drive signal	0: ON
	1	M20	cassette 3 lifter motor drive signal	0: ON
	2		not used	
	3		not used	
	4	H1	fixing main heater ON signal	0: ON
	5	H2	fixing sub heater ON signal	0: ON
	6	H3	drum heater ON signal	0: ON
	7		not used	
IO-P13	0	FM1	separation feed fan (half-speed) signal	1: ON
	1	FM1	separation feed fan (full-speed) signal	1: ON
	2	FM2	primary charging cooling fan (half-speed) signal	1: ON
	3	FM2	primary charging cooling fan (full speed) signal	1: ON
	4		not used	
	5		not used	
	6	FM3	heat discharge fan (half-speed) signal	1: ON
	7	FM3	heat-discharge fan (full-speed) signal	1: ON
IO-P14	0	FM7	hard disk fan (half-speed) signal	1: ON
	1	FM7	hard disk fan (full-speed) signal	1: ON
	2	FM4	controller cooling fan (half-speed) signal	1: ON
	3	FM4	controller cooling fan (full-speed) signal	1: ON
	4		not used	
	5		not used	
	6	FM5	de-curling fan (half-speed) signal	1: ON
	7	FM5	de-curling fan (full-speed) signal	1: ON
IO-P15	0	RL1	main relay OFF signal	1: ON

COPYRIGHT © 2000 CANON INC.

<DC-CON (6/8)>

Address	Bit	Notation	Description	Remarks
	1		not used	
	2		not used	
	3		not used	
	4		not used	
	5	LA1	pre-exposure LED ON signal	1: ON
	6	VS1	potential sensor ON signal	1: ON
	7		fixing 12 V supply signal	0: supplied
IO-P16	0		DDI-PPRDY	
	1		DDI-CTS	
	2		not used	
	3		not used	
	4		not used	
	5		not used	
	6		not used	
	7		not used	
IO-P17	0		DDI-CPRDY	
	1		DDI-PRSST	
	2		DDI-RST	
	3		not used	
	4		not used	
	5		not used	
	6		not used	
	7		not used	
IO-P18	0		not used	
	1		not used	
	2		not used	
	3		not used	
	4		not used	
	5		not used	
	6		not used	
	7	FM8	duplexing feed fan	
IO-P19	0		not used	
	1	M14	reversal motor clock signal	
	2		not used	
	3		not used	
	4		not used	
	5	M29	duplexing feed left motor clock signal	
	6		not used	

COPYRIGHT © 2000 CANON INC.

<DC-CON (7/8)>

Address	Bit	Notation	Description	Remarks
	7	M13	delivery motor clock signal	
IO-P20	0	CL2	registration roller clutch ON signal	-
	1		not used	
	2		not used	
	3		not used	
	4		not used	
	5	M17	pre-registration motor clock signal	-
	6		not used	
	7	M18	duplexing feed right motor clock signal	-
IO-P21	0		serial 0-TXD	-
	1		serial 1-TXD	-
	2		serial 0-RXD	-
	3		serial 1-RXD	-
	4		not used	
	5		not used	
	6		not used	
	7		not used	
IO-P22	0		cassette paper width input port switch signal	1: cassette 4, 0: cassette 3
	1		not used	
	2	FM6	DC power supply fan drive signal	0: ON
	3	M16	duplexing horizontal registration motor clock signal	-
	4		not used	
	5		not used	
	6		not used	
	7		not used	
IO-P23	0		not used	
	1		not used	
	2		laser enable signal	0: enabled
	3		not used	
	4		not used	
	5	M1	drum tor INT	
	6	M2	main motor INT	
	7		error INT	
IO-P24	0		not used	
	1		not used	
	2		not used	
	3		not used	
	4		not used	

COPYRIGHT © 2000 CANON INC.

<DC-CON (8/8)>

Address	Bit	Notation	Description	Remarks
	5		pulse count INT	
	6		DMA-END-INT	
	7		DMA-REQ-INT	
IO-P25	0	SW101	deck open detection switch signal	0: closed
	1	PS102	deck paper absent sensor signal	1: paper present
	2	PS103	deck lifter upper limit sensor signal	1: upper limit
	3	PS101	deck pickup sensor signal	1: paper present
	4	PS106	deck feed sensor signal	1: paper present
	5	CL102	deck pickup clutch ON signal	1: ON
	6		not used	
	7	PS107	deck paper supply position sensor signal	1: ON
IO-P26	0	PS108	deck paper level sensor signal	1: paper present
	1	SW102	deck lifter lower limit detection signal	1: lower limit
	2	PS105	deck set sensor signal	1: connected
	3	PS109	deck open sensor signal	1: closed
	4		deck ID1	1: connected
	5		deck ID2	0: connected
	6		not used	
	7		not used	
IO-P27	0	LED100	deck open LED ON signal	1: ON
	1	SL101	deck pickup roller releasing solenoid drive signal	1: ON
	2		not used	
	3	CL102	deck pickup clutch drive signal	1: ON
	4		not used	
	5		not used	
	6	M101	deck main motor drive signal	1: ON
	7	M102	deck lifter motor drive signal	1: ON
IO-P28	0	SW102	deck lifter lower limit detection signal	1: ON
	1	SL102	deck open solenoid	1: ON
	2	M101	deck main motor fixing current setting	1: ON
	3		not used	
	4		not used	
	5		not used	
	6		not used	
	7		not used	

COPYRIGHT © 2000 CANON INC.

3.2 R-CON

Indicates the input/output ports of the reader controller PCB.

<R-CON (1/2)>

Address	Bit	Notation	Description	Remarks
IO-P1	0	M3	scanner motor clock signal	when 1→0, ON
	1	M3	scanner motor CCW/CW switch signal	0: CCW, 1: CW
	2	M3	scanner motor HOLD/OFF switch signal	0: current hold, 1: current OFF
	3	M3	scanner motor driver reset signal	1: reset
	4	M3	scanner motor stream reading current switch signal	0: stream reading current
	5	PS43	original sensor ON switch signal	0: sensor ON
	6		fan error signal	not used
	7	LA2	scanning lamp ON switch signal	0: lamp ON
IO-P2	0		SK signal to EEPROM	normal clock
	1		DDI-SPI(1)	not used
	2		DDI-SPI(2)	not used
	3		DI signal to EEPROM	DATA area
	4		DDI-SCTS	0: DDI reception ready
	5		DDI-SPRDY	0: DDI power ready
	6		DDI-SCPRDY	0: DDI power ready
	7		scanning lamp inverter error signal	1: error
IO-P3	0		DDI-S transmission	DATA area
	1		RS232C transmission (factory terminal transmission)	DATA area
	2		DDI-S reception	DATA area
	3		RS232C reception (factory terminal reception)	DATA area
	4		ITOP transmission (image leading edge signal)	not used
	5		DDI-SRTS	0: DDI transmission ready
IO-P4	0		DDI-SPO(0)	not used
	1		DDI-SPO(1)	not used
	2		DDI-SPO(2)	not used
	3		not used	
	4		not used	
	5		not used	
	6	PS43	original sensor 3 signal (AB input)	0: original present
	7	PS43	original sensor 4 signal (Inch input)	0: original present
IO-P5	0		DDI-SPRTST	0: DDI-SPRTST signal ON
	1		serial data to CCD	DATA area
	2		clock to CCD	when 0→1→0, data transmitted
	3		output to RING2	when 0→1→0, data transmitted
IO-P6	0		not used	

COPYRIGHT © 2000 CANON INC.

<R-CON (2/2)>

Address	Bit	Notation	Description	Remarks
	1		PCB check mode (for factory)	0: check mode
	2	LA2	scanning lamp (LOW/HI) switch signal	not used
	3		CS output to EEPROM	1: CP
	4	PS39	scanner HP sensor signal	1: HP
	5		ADF-ITOP (image leading edge) signal	0: ADF original image leading edge interrupt
	6	PS40	copyboard cover sensor (used as interrupt)	1: ADF (copyboard) closed
	7	PS40	copyboard cover sensor	1: ADF (copyboard) closed
IO-P7	0		WATCH-DOG pulse output	normal clock
	1		output to analog processor	when 0→1→0, data transmitted
	2		DO signal from EEPROM	Data area
IO-P8	0-7		not used	
IO-P9	0		not used	
	1		not used	
	2		not used	
	3		not used	
	4	M3	scanner motor drive control 2	default setting
	5	M3	scanner motor drive control 3	default setting
	6	M3	scanner motor drive control 4	default setting
	7	M3	scanner motor drive control (RETURN)	default setting
IO-P10	0	M3	scanner motor drive control 0, 1	default setting
	1	M3	scanner motor drive control 0, 1	default setting
	2	M3	scanner motor drive current control	default setting
	3	M3	scanner motor drive current control	default setting
	4	M3	scanner motor drive current control	default setting
	5	M3	scanner motor drive current control	default setting
	6	M3	scanner motor drive current control	default setting
	7		not used	

COPYRIGHT © 2000 CANON INC.

3.3 MN-CON

Indicates the input/output ports of the main controller PCB.

<MN-CON (1/2)>

Address	Bit	Notation	Description	Remarks
P001	3	GPDATA	not used (1 fixed)	
	2		not used (1 fixed)	
	1		not used (1 fixed)	
	0		not used (1 fixed)	
P002	3	SPI	SPRTST signal, printer start-up signal	0: reader image start
	2		DDI-S general input	not used
	1		DDI-S general input	not used
	0		DDI-S general input	not used
P003	3		DDI-S general input	not used
	2		DDI-P general input	not used
	1		DDI-P general input	not used
	0		DDI-P general input	not used
P004	3	SPO	SSCNST signal	not used
	2		3.3-V non-all night power OFF signal	0: normal (ON), 1=5W (OFF) sleep mode
	1		DDI-S general output	not used
	0		DDI-S general output	not used
P005	3	PPO	PPRTST signal	0: printer image start
	2		DDI-P general output	not used
	1		DDI-P general output	not used
	0		DDI-P general output	not used
P006	7	GPI	not used	
	6		serial EEPROM D0	access port to EEPROM
	5		operation enable (coin robot)	1: enabled
	4		operation enable (CC-IV)	1: enabled
	3		serial ROM connection detection	1: connected
	2		flash ROM R/B#	0: writing/deleting
	1		parallel EEPROM R/B#	0: writing
	0		battery alarm	not used
P007	15	GPO	FAX SSB forced reset	not used
	14		parallel EEPROM write protect	0: write enabled
	13		color UI I/F enable	not used
	12		LCD back-light control	1: ON
	11		coin robot delivery count	1: count
	10		coin robot pickup count	1: count

COPYRIGHT © 2000 CANON INC.

<MN-CON (2/2)>

Address	Bit	Notation	Description	Remarks
	9		delivery count	1: counter
	8		pickup count	1: counter
	7		serial EEPROM DIN	access port to EEPROM
	6		serial EEPROM SCK	access port to EEPROM
	5		serial EEPROM CS	access port to EEPROM
	4		PCI (PDL) soft reset	0: LIPS board forced reset
	3		not used	
	2		SPO[2]	not used
	1		flash ROM write protect	not used
	0		battery charge control	not used
P008	7	IPCPA	board version	for factory
	6		board version	for factory
	5		board version	for factory
	4		BWUI detect	0: B/W UI present
	3		Color UI detect	0: color UI present
	2		FAX SSB identification	not used
	1		FAX SSB identification	not used
	0		FAX SSB identification	not used

COPYRIGHT © 2000 CANON INC.

3.4 FEEDER

Indicates the input/output ports of the ADF controller PCB.

<FEEDER (1/3)>

Address	Bit	Notation	Description	Remarks
IO-P01	0	M2	feed motor drive clock	
	1		not used	
	2	M2	feed motor clock LB	
	3	M1	pickup motor clock LB	
	4		not used	
	5	M3	delivery reversal motor clock LB	
	6	PI3	large/small identification sensor signal	1: paper present (large)
	7	PI4	A4R/LTRR identification sensor signal	1: A4R
IO-P02	0	M1	pickup motor drive clock signal	
	1	M1	pickup motor mode signal	
	2	M1	pickup motor CW/CCW signal	
	3	M1	pickup motor enable output	
	4		not used	
	5	M2	feed motor enable output	1: enable
	6	CL1	pickup clutch drive signal	1: ON
	7	SL1	locking solenoid signal	1: attracted
IO-P03	0		serial communication	transmission (TxD0)
	1		image leading edge signal	
	2		serial communication	reception (RxD0)
	3		EEPROM data output	transmission (TxD1)
	4		EEPROM clock	(SCK0)
	5		EEPROM chip select	
	6		not used	
	7		not used	
IO-P04	0	VR1	original width VR signal	(AN0)
	1	S3	post-separation sensor analog signal	(AN1)
	2	S2	read sensor analog signal	(AN2)
	3	S1	delivery reversal sensor analog signal	(AN3)
	4		not used	
	5		not used	
	6		not used	
	7		not used	
IO-P05	0		external WDT clock output	
	1		D/A data output	
	2		D/A clock output	

<FEEDER (2/3)>

Address	Bit	Notation	Description	Remarks
	3		D/A load signal	
	4		not used	
	5		not used	
	6		not used	
	7		not used	
IO-P06	0		EEPROM data input	
	1	FM1	cooling fan lock signal	1: locked
	2	FM1	cooling fan	
	3		not used	
	4	S3	post-separation sensor signal	(IRQ0)
	5	PI1	registration 1 sensor signal	(IRQ1)
	6	S2	read sensor signal	(IRQ2)
	7	S1	delivery reversal sensor signal	(IRQ3)
IO-P07	0		not used	
	1		not used	
	2		not used	
	3		not used	
	4		not used	
	5		not used	
	6		not used	
	7	SW1	cover open switch	1: opened
IO-P08	0	PI2	ADF open/closed sensor signal	1: opened
	1	M3	delivery reversing motor excitation phase (A) output	during output, alternately ‘0’ and ‘1’
	2	M3	delivery reversing motor excitation phase (*A) output	during output, alternately ‘0’ and ‘1’
	3	M3	delivery reversing motor excitation phase key (B) output	during output, alternately ‘0’ and ‘1’
	4	M3	delivery reversing motor excitation phase (*B) output	during output, alternately ‘0’ and ‘1’
	5	M2	feed motor mode output	
	6	M2	feed motor mode output	
	7	M2	feed motor (CW/CCW) switch signal	1: CCW
IO-P09	0		DIP switch (DIPSW8) signal	0: ON
	1		DIP switch (DIPSW7) signal	0: ON
	2		DIP switch (DIPSW6) signal	0: ON
	3		DIP switch (DIPSW5) signal	0: ON
	4		DIP switch (DIPSW4) signal	0: ON
	5		DIP switch (DIPSW3) signal	0: ON
	6		DIP switch (DIPSW2) signal	0: ON
	7		DIP switch (DIPSW1) signal	0: ON
IO-P10	0		not used	

COPYRIGHT © 2000 CANON INC.

<FEEDER (3/3)>

Address	Bit	Notation	Description	Remarks
	1		not used	
	2		not used	
	3		not used	
	4		not used	
	5		not used	
	6		not used	
	7		not used	
IO-P11	0	LED4	LED ON signal	0: ON
	1	LED3	LED ON signal	0: ON
	2	LED2	LED ON signal	0: ON
	3	LED1	LED ON signal	0: ON
	4		not used	
	5		not used	
	6		not used	
	7		not used	
AD-P01		VR1	tray volume	(hereafter, analog ports)
AD-P02		S3	post-separation sensor analog input	
AD-P03		S2	read sensor analog input	
AD-P04		S1	delivery paper reversal sensor analog input	
AD-P05			not used	
AD-P06			not used	
AD-P07			not used	
AD-P08			not used	
DA-P01		M1	pickup motor	(hereafter, analog ports)
DA-P02		M2	feed motor	
DA-P03		M3	delivery reversal motor	
DA-P04		S3	post-separation sensor_DA	
DA-P05		S3	post-separation sensor_TH	
DA-P06		S2	read sensor DA	
DA-P07		S2	read sensor TH	
DA-P08		S1	delivery reversal sensor_DA	
DA-P09		S1	delivery reversal sensor_TH	
DA-P10			not used	
DA-P11			not used	
DA-P12			not used	

COPYRIGHT © 2000 CANON INC.

3.5 SORTER

Indicates the input/output ports of the finisher controller PCB.

<Sorter (1/3)>

3.5.1 Finisher Block

Address	Bit	Notation	Description	Remarks
IO-P01	0		not used	
(output)	1		not used	
	2	M8	No. 2 feed motor phase A output	
	3	M8	No. 2 feed motor phase B output	
	4	M4	stapler shift motor phase B output	
	5	M4	stapler shift motor phase A output	
	6	M3	alignment motor phase B output	
	7	M3	alignment motor phase A output	
	8-15		not used	
IO-P02	0	M5	tray lift motor PWM	
(output)	1	M2	delivery motor PWM	
	2	M7	swing motor PWM	
	3	M1P	punch motor PWM	
	4	M2P	horizontal registration motor phase B output	
	5	M2P	horizontal registration motor phase A output	
	6	M5	tray lift motor DOWN drive output	1: down
	7	M5	tray lift motor UP drive output	1: up
	8-15		not used	
IO-P03	0		not used	
(output)	1	LED2	LED2 ON solenoid output	0: ON
	2		not used	
	3	PS1	height sensor (input)	
	4	LED1	LED1 ON signal output	1: ON
	5		height sensor external clock (input)	
	6		not used	
	7		not used	
	8-15		not used	
IO-P04	0		dust full detection signal	
(input)	1		24-V output off detection signal	
	2		horizontal registration detection signal 1	
	3		horizontal registration detection signal 2	
	4		horizontal registration detection signal 3	
	5		horizontal registration detection signal 4	
	6		trailing edge detection signal	
	7		punch LED ON signal (output)	
	8-15		not used	

COPYRIGHT © 2000 CANON INC.

Address	Bit	Notation	Description	Remarks
IO-P05	0	M9	inlet feed motor phase A output	
(output)	1	M9	inlet feed motor phase B output	
	2		not used	
	3		not used	
	4		not used	
	5		not used	
	6		not used	
	7		not used	
	8-15		not used	
IO-P06	0	PI4	stapler tray paper detection signal	0: paper present
(input)	1		punch motor clock detection signal	
	2	M1	No. 1 feed motor phase A (output)	
	3	M1	No. 1 feed motor phase B (output)	
	4		No. 2 feed motor clock input	
	5		inlet feed motor clock input	
	6		No. 1 feed motor clock input	
	7		delivery motor clock detection signal	
	8-15		not used	
IO-P07	0		not used	
(input)	1		not used	
	2		not used	
	3		not used	
	4		not used	
	5		tray lift motor clock signal 1	
	6		tray lift motor clock signal 2	
	7		swing motor clock detection signal	
	8-15		not used	
IO-P08	0		stacker EEPROM CLK signal	
(output)	1		stacker EEPROM data out signal	
	2		stitcher EEPROM CS signal	
	3		*LWR (input/output)	
	4		*HWR (output/output)	
	5		*RD (input/output)	
	6		*AS (input/output)	
	7		stacker unit EEPROM data (input)	
	8-15		not used	
IO-P09	0	PI17	buffer path inlet paper detection signal	0: paper present
(input)	1	PI3	delivery paper detection signal	1: paper present
	2	PI14	buffer path paper detection signal	0: paper present
	3	PI1	inlet paper detection signal	0: paper present
	4	PI22	stapler drive home position detection signal	1: HP
	5		not used	

COPYRIGHT © 2000 CANON INC.

Address	Bit	Notation	Description	Remarks
	6		not used	
	7		not used	
	8-15		not used	
IO-P10	0-15		not used	
IO-P11	0-15		not used	
IO-P12	0		stapler connection detection signal	0: connected
(input)	1	MS7	stapler cartridge detection	0: cartridge present
	2		staple ready signal	
	3	MS8	staple absent detection signal	0: staple present
	4		not used	
	5	PI11	tray 1 paper detection signal	0: paper present
	6	PI12	tray 2 paper detection signal	0: paper present
	7		not used	
	8-15		not used	
IO-P13	0-15		not used	
IO-P14	0		punch unit connection detection signal	
(input)	1	PI3P	punch home position detection signal	1: HP
	2	PI1P	horizontal registration home position detection signal	0: HP
	3	MS2P	front cover open detecting switch signal	0: closed
	4	MS1P	upper cover open detecting switch signal	0: closed
	5		not used	
	6		not used	
	7		not used	
	8-15		not used	
IO-P15	0		PUSH SW3	
(input)	1		PUSH SW2	
	2		punch unit EEPROM data in	
	3		stapler shift home position detection signal	0: HP
	4		alignment home position detection signal	0: HP
	5		tray open position detection signal	1: HP
	6		shutter open detection signal	1: open
	7		swing guide open detection signal	0: open
	8-15		not used	
IO-P16	0		DIP SW3 bit 1	0: ON
(input)	1		DIP SW3 bit 2	0: ON
	2		DIP SW3 bit 3	0: ON
	3		DIP SW3 bit 4	0: ON
	4		DIP SW3 bit 5	0: ON
	5		DIP SW3 bit 6	0: ON
	6		DIP SW3 bit 7	0: ON
	7		DIP SW3 bit 8	0: ON
	8-15		not used	

COPYRIGHT © 2000 CANON INC.

Address	Bit	Notation	Description	Remarks
IO-P17	0	PI15	joint detection signal	1: connected
(input)	1	PI16	cover open/closed detection signal	1: closed
	2		saddle unit connection detection signal	
	3	MS5	tray upper limit detecting switch signal	1: upper limit
	4	MS.	tray safety switch signal	0: safe
	5	MS1	cover open/closed detecting switch signal	0: closed
	6	MS4	shutter closed detecting switch signal	1: closed
	7	MS6	swing guide closed detecting switch signal	0: closed
	8-15		not used	
IO-P18	0	M7	swing motor CW drive output	1: CW
(output)	1	M7	swing motor CCW drive output	1: CCW
	2	M1P	punch motor CCW drive output	0: CCW
	3	M1P	punch motor CW drive output	0: CW
	4	M2	delivery motor CCW drive output	1: CCW
	5	M2	delivery motor CW drive output	1: CW
	6	M6	stapler motor CCW drive output	0: CCW
	7	M6	stapler motor CW drive output	0: CW
	8-15		not used	
IO-P19	0		stepping motor OFF	1: OFF
(output)	1	M2P	punch horizontal registration motor current switch	0: ON
	2	M9	inlet feed motor current switch 2	0: ON
	3	M9	inlet feed motor current swing 1	0: ON
	4	M8	No. 2 feed motor current switch 2	0: ON
	5	M8	No. 2 feed motor current switch 1	0: ON
	6	M1	No. 1 feed motor current switch 2	0: ON
	7	M1	No. 1 feed motor current switch 1	0: ON
	8-15		not used	
IO-P20	0		punch unit EEPROM data out	
(output)	1		punch unit EEPROM CS	
	2		punch unit EEPROM CLK	
	3		not used	
	4		not used	
	5		height sensor ON/OFF	
	6	M4	stapler shift motor current switch	0: ON
	7	M3	alignment motor current switch	0: ON
	8-15		not used	

COPYRIGHT © 2000 CANON INC.

Address	Bit	Notation	Description	Remarks
IO-P21	0	SL7	belt escape solenoid drive signal	1: ON
(output)	1	SL3	buffer outlet solenoid drive signal	1: ON
	2		not used	
	3	SL2	buffer inlet solenoid drive signal	1: ON
	4	SL1	flapper solenoid drive signal	1: ON
	5	SL5	paddle solenoid drive signal	1: ON
	6		solenoid timer output	
	7	SL6	escape solenoid drive signal	1: ON
	8-15		not used	
IO-P22	0-15		not used	
AD-P01	-		dust full detection signal	
AD-P02	-		24-V output OFF detection signal	
AD-P03	-		horizontal registration detection signal 1	
AD-P04	-		horizontal registration detection signal 2	
AD-P05	-		horizontal registration detection signal 3	
AD-P06	-		horizontal registration detection signal 4	
AD-P07	-		trailing edge detection signal	
DA-P01	-		punch LED ON signal (output)	

COPYRIGHT © 2000 CANON INC.

3.5.2 Saddle Stitcher Unit

Address	Bit	Notation	Description	Remarks
IO-P23	0	M6S	stitcher motor (rear) CW drive output	0: CW
(output)	1	M6S	stitcher motor (rear) CCW drive output	0: CCW
	2	M7S	stitcher motor (front) CW drive output	0: CW
	3	M7S	stitcher motor (front) CCW drive output	0: CCW
	4	M2S	paper fold motor CW drive output	0: CW
	5	M2S	paper fold motor CCW drive output	0: CCW
	6	SL1S	No. 1 deflecting plate solenoid drive signal	1: ON
	7	SL2S	No. 2 deflecting plate solenoid drive signal	1: ON
	8-15		not used	
IO-P24	0		not used	
(output)	1		not used	
	2		not used	
	3		not used	
	4		not used	
	5	SL4S	feed roller plate solenoid drive signal	1: ON
	6		solenoid timer output	
	7	M4S	paper positioning plate motor current switch	0: when ON
	8-15		not used	
IO-P25	0		24-V output OFF detection signal	1: down
(input)	1	PI15S	paper push-on plate leading edge position signal	0: leading edge
	2	PI11S	delivery detection signal	0: paper present
	3		not used	
	4		not used	
	5		not used	
	6		not used	
	7		not used	
	8-15		not used	
IO-P26	0		paper fold motor clock detection signal	
(input)	1		paper push-on plate motor clock detection signal	
	2	PI14S	paper push-on HP detection signal	1: HP
	3	PI5S	alignment plate HP detection signal	0: HP
	4		not used	
	5		not used	
	6		not used	
	7		not used	
	8-15		not used	

COPYRIGHT © 2000 CANON INC.

Address	Bit	Notation	Description	Remarks
IO-P27	0	PI7S	paper positioning HP detection signal	0: HP
(input)	1	PI16S	stitcher IN detection signal	0: in
	2	SW2	PUSH SW2 ON/OFF	
	3	PI17S	vertical path paper detection signal	1: paper present
	4	PI12S	crescent roller phase detection signal	0: HP
	5	PI13S	guide home position detection signal	0: HP
	6		not used	
	7		not used	
	8-15		not used	
IO-P28	0	M4S	paper positioning plate motor phase A output	
(output)	1	M4S	paper positioning plate motor phase B output	
	2	M8S	paper push-on plate motor PWM	
	3		feed motor current switch	0: ON
	4	M1S	feed motor phase A output	
	5	M1S	feed motor phase B output	
	6		not used	
	7	M8S	paper push-on plate motor CCW drive output	0: CCW
	8-15		not used	
IO-P29	0	M5S	alignment motor phase A output	
(output)	1	M5S	alignment motor phase B output	
	2	M2S	paper fold motor PWM	
	3	M8S	paper push-on motor CW drive output	0: CW
	4	M3S	guide motor phase A output	
	5	M3S	guide motor phase B output	
	6	M3S	guide motor current switch	0: ON
	7	M5S	alignment motor current switch	0: ON
	8-15		not used	
IO-P30	0	PI19S	No. 2 paper sensor paper detection signal	0: paper present
(input)	1	PI20S	No. 3 paper sensor paper detection signal	0: paper present
	2	MS5S	stitching HP detection signal 2	1: HP
	3	MS7S	stitching HP detection signal 1	1: HP
	4	PI8S	paper positioning plate paper detection signal	0: paper present
	5	PI6S	tray paper detection signal	0: paper present
	6	PI18S	No. 1 paper sensor paper detection signal	0: paper present
	7		not used	
	8-15		not used	
IO-P31	0	PI5S	alignment plate HP sensor connection detection	1: connected
(input)	1	PI14S	paper push-on plate HP sensor connection detection	1: connected
	2	PI3S	delivery door sensor connection detection	1: connected
	3	PI2S	front cover open/closed sensor connection detection	1: connected
	4	PI21S	paper folding HP sensor connection detection	1: connected
	5	PI21S	paper folding HP detection signal	0: HP

COPYRIGHT © 2000 CANON INC.

Address	Bit	Notation	Description	Remarks
	6		not used	
	7		not used	
	8-15		not used	
IO-P32	0-15		not used	
IO-P33	0	MS4S	staple absent detection signal 2	1: staple absent
(input)	1	MS6S	staple absent detection signal 1	1: staple absent
	2	MS1S	inlet cover open detecting switch signal	0: closed
	3	MS2S	front cover open detecting switch signal	0: closed
	4	PI3S	delivery cover open detecting signal	0: closed
	5	PI2S	front cover open detection signal	1: closed
	6	PI9S	inlet cover open detection signal	1: closed
	7	MS3S	delivery cover open detecting switch signal	1: closed
	8-15		not used	
IO-P34	0		TIP SW1 bit 8	0: ON
(input)	1		TIP SW1 bit 7	0: ON
	2		TIP SW1 bit 6	0: ON
	3		TIP SW1 bit 5	0: ON
	4		TIP SW1 bit 4	0: ON
	5		TIP SW1 bit 3	0: ON
	6		TIP SW1 bit 2	0: ON
	7		TIP SW1 bit 1	0: ON
	8-15		not used	
AD-P09	-		stitcher (rear) punching detection	(hereafter, analog ports)
AD-P10	-		stitcher (front) punching detection	
AD-P11	-		not used	
AD-P12	-	PI9	inlet cover sensor connection detection	connected at '7F' or lower*
AD-P13	-		not used	
AD-P14	-	PI13	guide HP sensor connection detection	connected at '7F' or lower*
AD-P15	-	PI16	stitcher compartment sensor connection detection	connected at '7F' or lower*
AD-P16	-	PI15	paper push-on plate leading edge position sensor connection detection	connected at '7F' or lower*

*Hexadecimal.

COPYRIGHT © 2000 CANON INC.

4. ADJUST (adjustment mode)

4.1 COPIER

The following screen appears in response to COPIER>ADJUST; for the items, see the pages that follow:

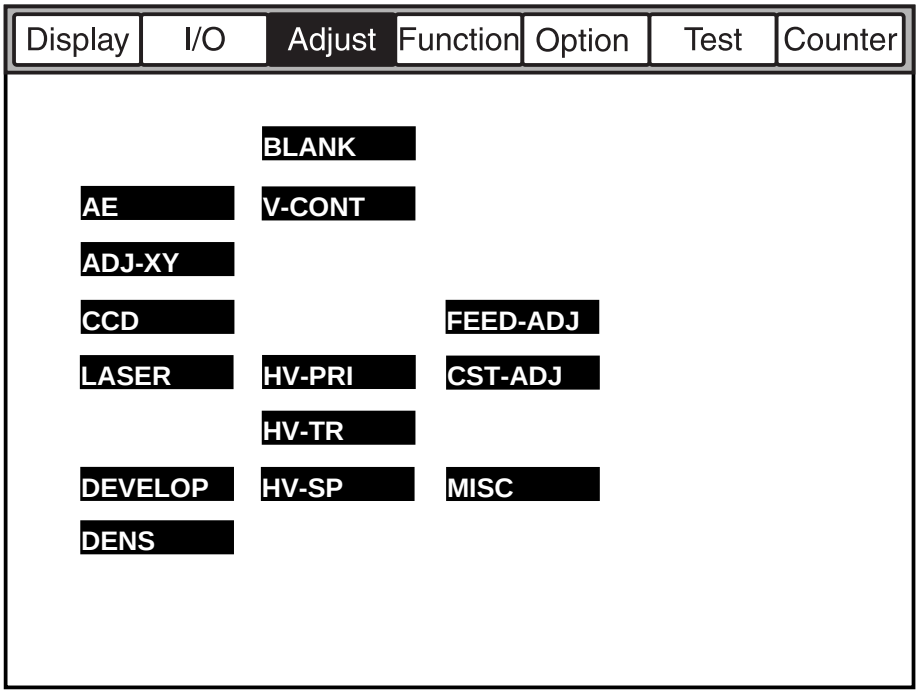

F05-401-01

COPYRIGHT © 2000 CANON INC.

<AE>

Executing AE Adjustment

If you have cleared the RAM on the reader controller PCB, enter the settings indicated on the service label.

AE-TBL

Use it to adjust the density of characters for image density adjustment.

Range of adjustment

1 to 9 Default: 5

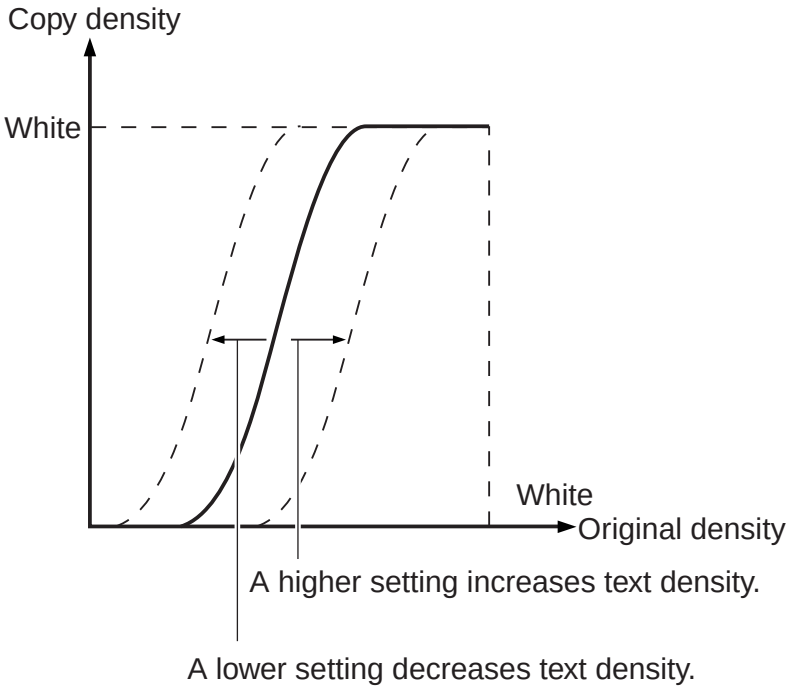

F05-401-02

<ADJ-XY>

Executing Image Read Start Position Adjustment

If you have cleared the RAM on the reader controller PCB, enter the settings indicated on the service label.

ADJ-X

Use it to adjust the scanner image leading edge position.

Range of adjustment

250 to 290 (A change of '1' causes a shift of 0.1 mm.)

Caution

Be sure to execute this mode before adjusting the margin.
Do not use this mode to create a margin.

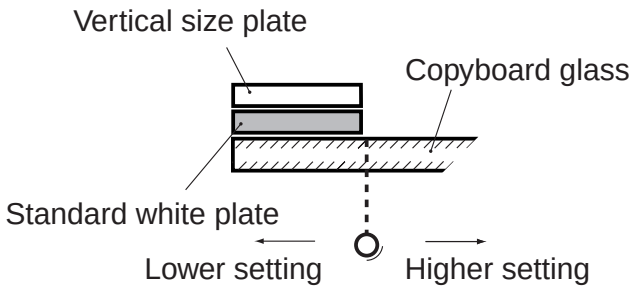

F05-401-03

ADJ-Y

Use it to adjust the CCD read start position.

Range of adjustment

100 to 400 (A change of '1' causes a shift of 0.1 mm.)

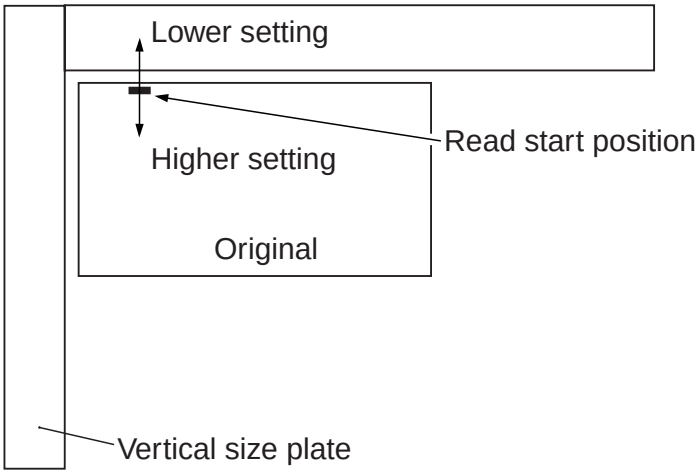

F05-401-04

COPYRIGHT © 2000 CANON INC.

ADJ-S

Use it to adjust the scanner home position.

Range of adjustment
55 to 70 (A change of '1' causes a shift of 0.1 mm.)

Caution
- Execute this mode if the copyboard glass is soiled so that the standard white plate will be read avoiding the soiled area.
- If you changed the adjustment value, be sure to open and then close the ADF (for HP search).

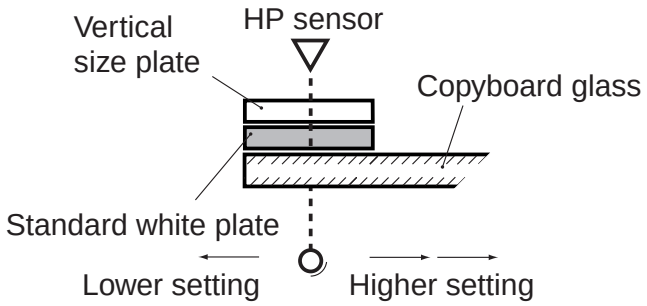

F05-401-05

ADJ-Y-DF

Use it to adjust the ADF read start position (ADF horizontal registration) in scanning direction.

Range of adjustment
100 to 400 (unit: 0.1 mm)

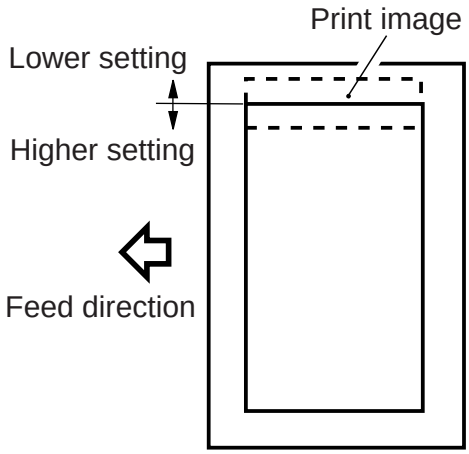

F05-401-06

STRD-POS

Use it to adjust the CCD read position for stream reading.

Range of adjustment
30 to 60 (A change of '1' causes a shift of 0.1 mm.)

<CCD>

Making CCD- and Shading-Related Adjustments

If faulty images are noted after executing COPIER>FUNCTION>CCD>CCD-ADJ, enter the settings indicated on the service label.

SH-TRGT	Use it to enter the white level target value for shading correction.
SH-RATIO	Use it to enter the data on the white label ratio (standard white paper and standard white plate) for shading correction.
EGGN-ST	Use it to enter an adjustment value for the edge gain correction start position for the CCD.
EGGN-END	Use it to enter an adjustment value for the edge gain correction end position for the CCD.

<LASER>

Adjusting the Laser Output

If you have cleared the RAM on the DC controller PCB, be sure to enter the settings indicated on the service label.

PVE-OFST	Use it to adjust the position of laser projection.
Range of adjustment	**-300 to +300**
POWER	Use it to adjust the laser power for non-potential control.
Range of adjustment	**0 to 255**

COPYRIGHT © 2000 CANON INC.

<DEVELOP>

Adjusting the Developing Bias Output

BIAS	
	Use it to enter the adjustment value for the development bias.
Range of adjustment	**0 to 600 (A higher setting makes images lighter.)**
Caution	• If you have cleared the RAM on the DC controller PCB, enter the settings indicated on the service label. • This mode is valid only when the potential control mechanism is disabled.
HVT-DE	
	Use it to enter the offset value for the development high-voltage output for the high-voltage unit.
Caution	If you have replaced the high-voltage unit or cleared the RAM on the DC controller PCB, enter the settings indicated on the new high-voltage unit.
D-HV-DE	
	Use it to enter the offset value for the development high-voltage output of the DC controller PCB.
Caution	If you have replaced the DC controller PCB or cleared the RAM on the DC controller PCB, enter the settings indicated on the label on the new DC controller PCB.

<DENS>

Making Fine Adjustments for Copy Density Auto Correction

If you have cleared the RAM on the DC controller PCB, enter the settings indicated on the service label.

DENS-ADJ	Use it to correct the density of images (copier/printer). If images are foggy or high-density areas are faint, correct the F-value table.
Range of adjustment	**1 to 9 (default: 5)**

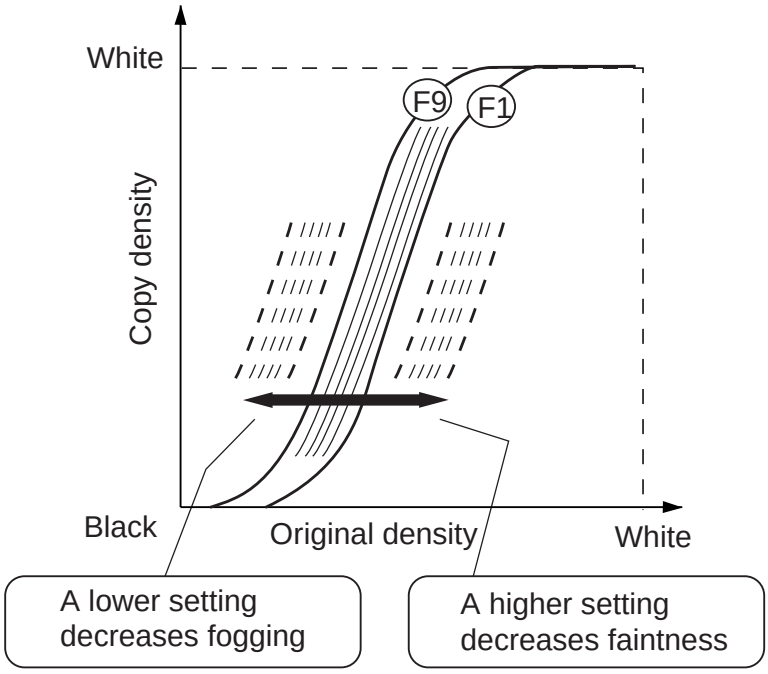

F05-401-07

<BLANK>

Adjusting the Non-Image Width

If you have cleared the RAM on the DC controller PCB, enter the value indicated on the service label.

BLANK-T	Use it to enter the image leading edge non-image width adjustment value.
Range of adjustment	**1 to 500**
BLANK-B	Use it to enter the image trailing edge non-image width adjustment value.

COPYRIGHT © 2000 CANON INC.

<V-CONT>

Adjusting the Potential Control System

- Normally, the machine's potential control is not executed if the temperature of the fixing assembly is 150°C or higher. If you have adjusted any of the following potential control-related modes, be sure to execute potential control by making the following selections: COPIER>OPTION>BODY>PO-CNT-S.
- If you have cleared the RAM on the DC controller PCB, enter the settings indicated on the service label.

EPOTOFST	Use it to enter the offset value for the potential sensor.
Range of adjustment	**0 to 255 (default: 0)**
VD-OFST	Use it to enter the offset value for the VD target potential for the copier.
Range of adjustment	**-5 to +5 (unit: 10 V; default: 0)**
DE-OFS-P	Use it to enter the offset value for the VL target potential for the printer (PDL; Vdc fine-adjustment).
Range of adjustment	**-50 to +50 (unit: V; default: 0)**
VD-OFS-P	Use it to enter the offset value for the VD target potential (VDC fine-adjustment) for the printer (PDL).
Range of adjustment	**-5 to +5 (unit: 10V; default: 0)**
DE-OFST	Use it to enter the offset value for the VL target value for the copier (Vdc fine-adjustment).
Range of adjustment	**-50 to +50 (default: 0)**

COPYRIGHT © 2000 CANON INC.

<HV-PR1>

Adjusting the Output of the Primary Charging Assembly

If you have cleared the RAM on the DC controller PCB, enter the settings indicated on the service label.

PRIMARY	Use it to enter the adjustment value of the primary current for non-potential control.
Range of adjustment	**0 to 1400**

<HV-TR>

Adjusting the Output of the Transfer Charging Assembly/Pre-Transfer Charging Assembly

TR-N1	Use it to enter the output adjustment value for the transfer charging current (for printing on the face of plain paper and printing on the 1st side of a double-sided sheet).
Caution	If you have cleared the RAM on the DC controller PCB, enter the settings indicated on the service label.
TR-N2	Use it to enter the output adjustment value for the transfer charging current (printing on the 2nd side of a double-sided plain paper sheet).
Caution	If you have cleared the RAM on the DC controller PCB, enter the settings indicated on the service label.
PRE-TR	Use it to enter the output adjustment value for the pre-transfer charging current.
Caution	If you have cleared the RAM on the DC controller PCB, enter the settings indicated on the service label.
HVT-TR	Enter the offset value for the transfer high-voltage output of the high-voltage unit.
Caution	If you have replaced the high-voltage unit or cleared the RAM on the DC controller PCB, enter the settings indicated on the label attached to the new high-voltage unit.

COPYRIGHT © 2000 CANON INC.

H-PRE-TR	Use it to enter the offset value for the pre-transfer high-voltage output of the DC controller PCB.
Caution	If you have replaced the DC controller PCB or cleared the RAM on the DC controller PCB, enter the settings indicated on the label attached to the new DC controller PCB.
D-PRE-TR	Use it to enter the offset value for the pre-transfer high-voltage output of the DC controller PCB.
Caution	If you have replaced the DC controller PCB or cleared the RAM on the DC controller PCB, enter the settings indicated on the label attached to the new DC controller PCB.
D-HV-TR	Use it to enter the offset value for the transfer high-voltage output of the DC controller PCB.
Caution	If you have replaced the DC controller PCB or cleared the RAM on the DC controller PCB, enter the settings indicated on the label attached to the new DC controller PCB.

<HV-SP>

Adjusting the Output of the Separation Charging Assembly

SP-N1	Use it to enter the output adjustment value of the separation charging current (printing on the face of a sheet of plain paper and printing on the 1st side of a double-sided sheet).
Caution	If you have cleared the RAM on the DC controller PCB, enter the settings indicated on the service label.
SP-N2	Use it to enter the output adjustment value of the separation charging current (printing on the 2nd side of a double-sided sheet of plain paper).
Caution	If you have cleared the RAM on the DC controller PCB, enter the settings indicated on the service label.
HVT-SP	Use it to enter the offset value for the separation high-voltage output of the high-voltage unit.
Caution	If you have replaced the high-voltage unit or cleared the RAM on the DC controller PCB, enter the settings indicated on the label attached to the new high-voltage unit.

D-HV-SP	
	Use it to enter the offset value for the separation high-voltage output of the DC controller PCB.
Caution	If you have replaced the DC controller PCB or cleared the RAM on the DC controller PCB, enter the settings indicated on the label attached to the new DC controller PCB.

<FEED-ADJ>

Adjusting the Feeder System

REGIST	
	Use it to adjust the timing at which the registration roller clutch turns on. • A higher setting delays the timing at which the registration roller clutch turns on, thereby decreasing the leading edge margin.
Range of adjustment	**-50 to +50 (unit: 0.1 mm)**
Caution	If you have cleared the RAM on the DC controller PCB, enter the settings indicated on the service label.
ADJ-REFE	
	Use it to adjust the horizontal registration for re-pickup. • If the image is displaced on the front, increase the setting.
Range of adjustment	**-101 to +100 (unit: 0.1 mm)**
Caution	If you have cleared the RAM on the DC controller PCB, enter the settings indicated on the service label.
RG-MF	
	Use it to adjust the timing at which the registration roller clutch turns on at time of pickup in manual feed mode. • A higher setting delays the timing at which the registration roller clutch turns on, thereby decreasing the leading edge margin.
Range of adjustment	**-50 to +50 (unit: 0.1 mm)**
Caution	If you have cleared the RAM on the DC controller PCB, enter the settings indicated on the service label.

COPYRIGHT © 2000 CANON INC.

<CST-ADJ>

Making Cassette-/Manual Feed-Related Adjustments

If you have cleared the RAM on the DC controller PCB, enter the settings indicated on the service label.

C3-STMTR	
Caution	Enter the paper width basic value (STMTR) for the cassette 3. If you have replaced the paper width detecting VR, execute FUNCTION>CST in service mode.
C3-A4R	
Caution	Use it to enter the paper width basic value (A4R) for the cassette 3. If you have replaced the paper width detecting VR, execute FUNCTION>CST in service mode.
C4-STMTR	
Caution	Use it to enter the paper width basic value (STMTR; 100-V model only) for the cassette 4. If you have replaced the paper width detecting VR, execute FUNCTION>CST in service mode.
C4-A4R	
Caution	Use it to enter the paper width basic value (A4R; 100-V model only) for the cassette 4. If you have replaced the paper width detecting VR, execute FUNCTION>CST in service mode.
MF-A4R	
Caution	Use it to enter the paper width basic value (A4R) for the manual feed tray. If you have replaced the paper width detecting VR, execute FUNCTION>CST in service mode.
MF-A6R	
Caution	Use it to enter the paper width basic value (A6R) for the manual feed tray. If you have replaced the paper width detecting VR, execute FUNCTION>CST in service mode.
MF-A4	
Caution	Use it to enter the paper width basic value (A4) for the manual feed tray. If you have replaced the paper width detecting VR, execute FUNCTION>CST in service mode.
C3-LVOL	Use it to enter the stacking capacity of the cassette 3 (50 sheets).
C3-HVOL	Use it to enter the stacking capacity of the cassette 3 (275 sheets).

COPYRIGHT © 2000 CANON INC.

C4-LVOL	Use it to enter the stacking capacity of the cassette 4 (50 sheets).
C4-HVOL	Use it to enter the stacking capacity of the cassette 4 (275 sheets).

<MISC>

Making Other Adjustments

If you have cleared the RAM on the DC controller PCB, enter the settings indicated on the service label.

ATM	Use it to select an operating environment in relation to atmospheric pressure. A low atmospheric pressure tends to cause leakage; lower the target potential control.	
Range of adjustment	**0 to 2**	**0: 1 to 0.75 atm (up to altitude of 2500m)** **1: 0.75 to 0.70 atm (up to altitude of 2500 to 3000m)** **2: 0.70 to 0.65 atm (up to altitude of from 3000 to 3500m)**

COPYRIGHT © 2000 CANON INC.

4.2 FEEDER

DOCST

Use it to adjust the original leading edge registration when the ADF is selected as the source of paper.

- A higher setting decreases the leading edge margin.
- The data will be stored on the ADF controller PCB.

Range of adjustment

-10 to +10 (unit: 0.5 mm)

Using the Mode

1) Make a print of the test chart, and check the position of the image.
2) Select the mode item, and change the setting to make adjustments.
3) Press the OK key.
4) Make a print of the test chart once again, and check to see the position of the image is as indicated.

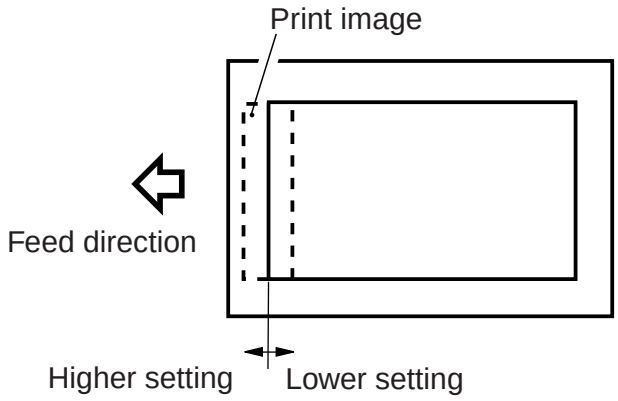

F05-402-01

LA-SPEED

Use it to adjust the original feed speed for ADF stream reading speed.

- A higher setting increases the speed.
- The data will be stored on the ADF controller PCB.

Range of adjustment

-30 to +30 (unit: 0.1%)

4.3 SORTER

PNCH-HLE

Use it to adjust the position of the punch holes (paper feeding direction) when the puncher unit is used.

- A higher setting moves the punch holes toward the leading edge (middle) of the sheet.

Range of adjustment

-4 to +2 (unit; mm)

Using the Mode

1) Make a print of the Test Chart, and check the position of the holes.
2) Select this item, and change the setting as needed.
3) Press the OK key.
4) Make a print of the Test Chart once again, and see that the position for the holes is as indicated.

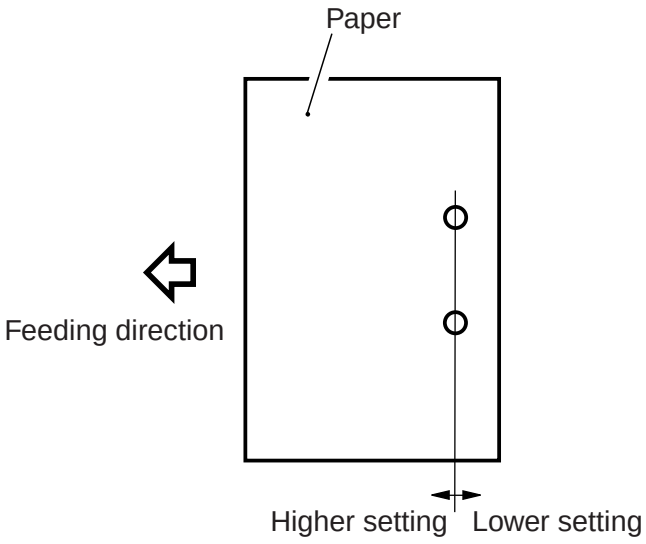

F05-403-01

COPYRIGHT © 2000 CANON INC.

5. FUNCTION (operation/inspection mode)

5.1 COPIER

The following screen appears in response to COPIER>FUNCTION; for the items, see the pages that follow:

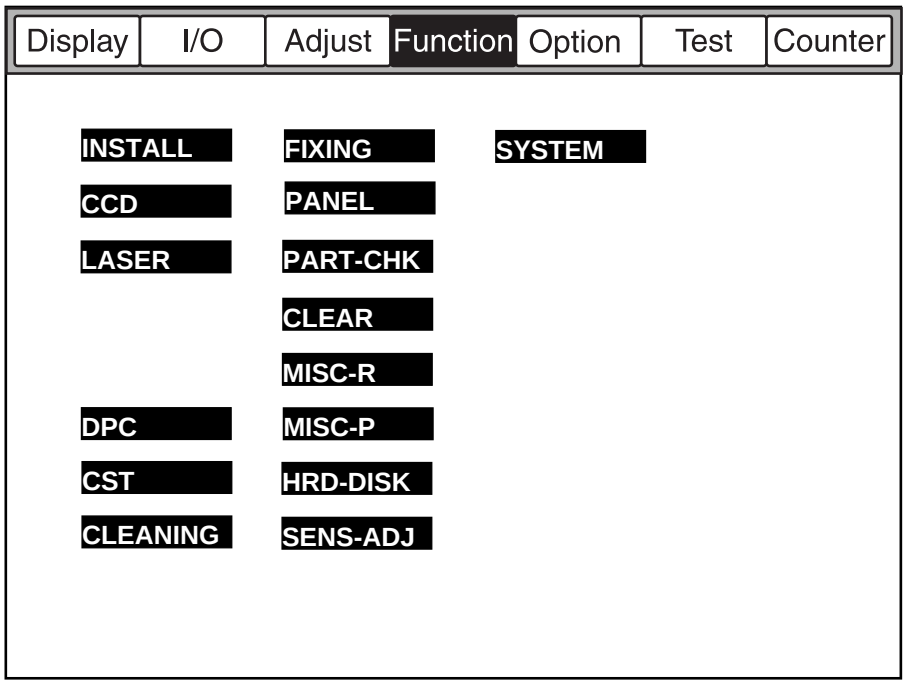

F05-501-01

COPYRIGHT © 2000 CANON INC.

<INSTALL>

Modes for Installation

TONER-S	Use it to supply toner from the hopper to the developing assembly and to stir the toner inside the developing assembly.
Caution	• Make sure that the developing assembly is properly mounted before pressing the OK key. • Do NOT turn off the power while the machine is in operation.
	Using the Mode 1) Select the mode item, and press the OK key. 2) The machine executes toner supply. (about 8 to 10 min) • While toner is being supplied, the duration (sec) is counted down starting at '600 sec'. 3) The machine stops automatically at the end of the operation.
STRD-POS	Use it to execute auto adjustment of the position of the CCD read position for stream reading mode.
Caution	• Execute this mode at time of installing an ADF or if you have removed and then installed the existing ADF.
	Using the Mode 1) Select this item, and press the OK key. • Auto adjustment is executed. 2) See that the adjustment ends automatically. 3) Record the updated setting indicated in service mode on the service label: COPIER>ADJUST>ADJ-XY>STRD-POS.

COPYRIGHT © 2000 CANON INC.

<CCD>

Executing Auto Adjustment for CCD-/Shading-Related Items

CCD-ADJ

Use it to execute CCD auto adjustment.

Caution

- Execute this mode if you have replaced the CCD unit, scanning lamp, inverter PCB, or copyboard glass (standard white plate).
- Use the whitest of all papers used by the user as the standard white paper.

Using the Mode

1) Place sheets of standard white paper (10 sheets min.) on the copyboard glass.
2) Select the mode item, and press the OK key.
   - The machine executes auto adjustment. (about 1 min)
   - The machine stops operation at the end of auto adjustment.
3) Record the updated settings on the service label (all under COPIER>ADJUST>CCD).

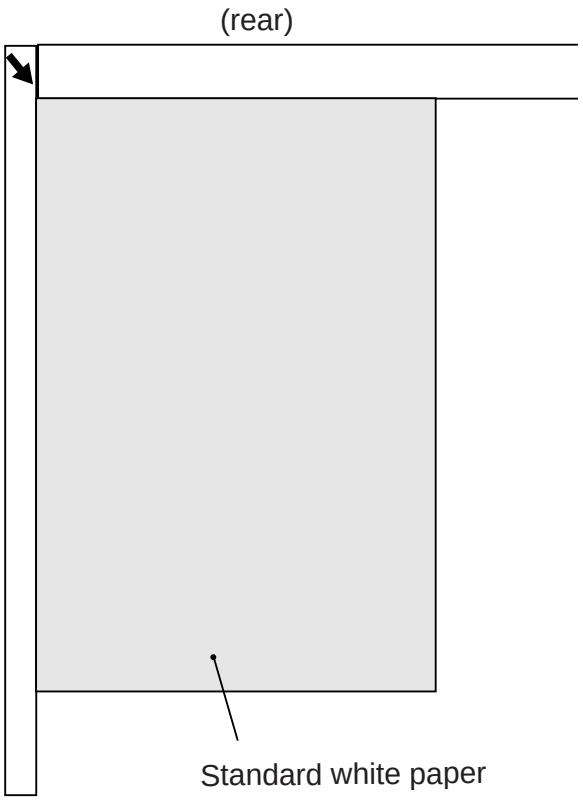

F05-501-02

SHDG-POS	
	Use it to enter the data for optimum position auto adjustment in reference to the standard white plate for shading correction.
Caution	Do not use this mode item. It is for use at the factory only.
SH-PS-ST	
	Use it to execute optimum position auto adjustment in reference to the standard white plate for shading correction.
Caution	The following must be executed before initiating auto adjustment in this mode: COPIER>FUNCTION>CCD>CCD-DJ. Using the Mode 1) Clean the back of the copyboard glass. 2) Select the mode item, and press the OK key. • The machine executes auto adjustment. (several tens of seconds) • The machine stops automatically at the end of the operation.
EGGN-POS	
	Use it to execute auto adjustment for the edge gain correction position for the CCD. (The CCD edge gain correction mechanism is effective only when an ADF is in use.)
Caution	• If the CCD unit has been replaced, be sure to execute the following in advance: COPIER>FUNCTION>CCD>CCD-ADJ. • If the CCD unit, No. 1 mirror mount, or No. 2 mirror mount has been replaced, execute this mode. Using the Mode 1) Open the ADF (copyboard cover; be sure to do so). 2) Select the item, and press the OK key. 3) Wait until auto adjustment ends (about 1 sec). 4) See that auto adjustment ends automatically and the results (OK/NG) are displayed. • If NG is indicated, check the following, and execute adjustment once a. Is the ADF (copyboard cover) open? b. Is the reading glass mounted correctly? c. Is the edge gain correcting plate attached to the reading glass normal? d. Is the scanning lamp on?

COPYRIGHT © 2000 CANON INC.

5) When the following has been updated, enter the new settings:
COPIER>ADJUST>CCD-EGGN-ST and -EGGN-END.

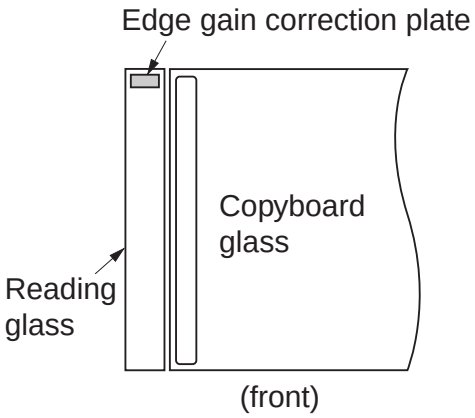

F05-501-03

<LASER>

Using Laser-Related Operations

POWER	Turning On the Laser Using the Mode 1) Select the mode item, and press the OK key. • The laser turns on. • The laser turns off automatically in 30 sec. (To turn it off earlier, press the Stop key.)

<DPC>

Using Potential Sensor-Related Operations

DPC	Use it to force potential control.
Caution	The machine will not execute potential control when the power switch is turned off and then on if the temperature of the fixing assembly is 150ºC or higher. If you have replaced the photosensitive drum or the laser unit, or changed the drum potential setting, execute potential control using this mode item. Using the Mode 1) Select the mode item, and enter '1', then, press the OK key. 2) Turn off and then on the power switch. • The machine will execute potential control.
OFST	Use it to execute offset adjustment for the potential sensor.
Caution	Do not execute this mode on its own; it is designed as part of a series of work to perform after replacing the potential sensor unit. (See the Printer Manual: Chap. 4, 7. "Disassembly and Assembly.") Using the Mode 1) Select the mode item, and press the OK key. • The machine stops the operation automatically at the end of offset adjustment.

COPYRIGHT © 2000 CANON INC.

<CST>

Executing Size Auto Adjustment for the Cassette/Manual Feed Tray

C3-STMTR C3-A4R C4-STMTR C4-A4R	
	Use it to store the paper width basic value for the cassette 3/4. STMTR width: 139.5 mm, A4R width: 210 mm
Caution	For fine adjustment after storing the basic value, make the following selections: ADJUST>CST-ADJ>C3-STMTR, C3-A4R, C4-STMTR, C4-A4R. Using the Mode 1) Place STMTR paper in the cassette, and adjust the side guide plate to suit the STMTR width. 2) Select C3-STMTR (C4-STMTR), and press the OK key. • The machine executes adjustment automatically, at the end of which the value is stored. 3) Likewise, repeat steps 1) and 2) for A4R.
MF-A4R MF-A6R MF-A4	
	Use it to store the paper width basic value for the manual feed tray.
Caution	For fine adjustment after storing the basic value, make the following selections: ADJUST>CST-ADJ>MF-A4R, MF-A6R, MF-A4. Using the Mode 1) Place A4R paper on the manual feed tray, and adjust the side guide to the A4R width. 2) Select MF-A4R, and press the OK key. • The machine executes adjustment automatically, at the end of which the value is stored. 3) Likewise, repeat steps 1) and 2) for A6R and A4.

COPYRIGHT © 2000 CANON INC.

<CLEANING>

Executing Cleaning Operations

WIRE0-CLN	Use it to execute automatic cleaning of the charging wire five times (5 round trips) consecutively.
Caution	If you have replaced the primary charging wire or the transfer charging wire, execute this mode item. Using the Mode 1) Select the mode item, and press the OK key. • The machine executes auto cleaning of the charging wire five times consecutively. • The machine stops automatically at the end of the cleaning operation.

<FIXING>

Executing Auto Adjustment for Fixing Assembly-Related Items

NIP-CHK	Use it to obtain an output for measuring the fixing nip width. Using the Mode 1) Make about 20 A4 copies of the test sheet. 2) Place an A4 sheet of paper on the manual feed tray. 3) Select the mode item (to highlight), and press the OK key. • The sheet will be picked up and stopped between the fixing rollers; it is then discharged in about 20 secs. 4) Measure the width of the area indicated.

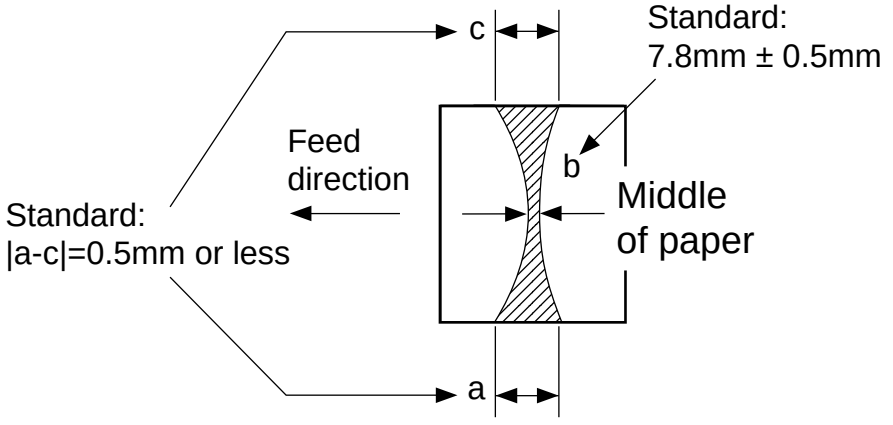

F05-501-04

Caution	a and b are points 10 mm from the edges of paper.

COPYRIGHT © 2000 CANON INC.

<PANEL>

Checking the Control Panel

LCD-CHK	Use it to check for missing dots on the touch panel. Using the Mode 1) Select the mode item, and press the OK key. • The entire face of the touch panel turns on in white and blue repeatedly. 2) Press the Stop key to stop the operation.
LED-CHK	Use it to check the LEDs on the control panel. Using the Mode 1) Select the mode item, and press the OK key. • The LEDs will turn on in sequence. 2) Select LED-OFF to end the operation.
LED-OFF	Use it to end a LED check of the control panel. Using the Mode 1) Select the mode item to end the check.
KEY-CHK	Use it to check key inputs. Using the Mode 1) Select the mode item. 2) Press any key so that its corresponding character will appear on the touch panel, indicating that the input is normal. (T05-501-01)
TOUCHKEY Caution	Use it to adjust the coordinates of the touch panel. • Use it to mach the points of presses on the touch panel and the LCD coordinates. • Execute this mode if you have replaced the LCD unit. Using the Mode 1) Select the mode item, and press the OK key. 2) Press '+' indicated on the touch panel at nine locations in sequence. 3) Select TOUCHKEY once again to end the operation.

COPYRIGHT © 2000 CANON INC.

<INPUT KEY/DISPLAY>

Key	Screen display	Key	Screen display
counter check	BILL	start	START
copy	COPY	mail box	PB
scan	OTHER	reset	RESET
0 to 9	0 - 9	energy saver	STAND BY
stop	STOP	clear	CLEAR
ID	ID	interrupt	INTERRUPT
additional functions	USER	guide	?

T05-501-01

<PART-CHK>

Checking the operation of various loads.

CL	Use it to select the clutch to check. Using the Mode 1) Select the mode item. 2) Using the keypad, enter the code of the clutch in question (T05-501-02). 3) Press the OK key.
CL-ON	Use it to check the operation of a clutch. Using the Mode 1) Select the mode item, and press the OK key. • ON → 10 secs OFF → ON → 10 secs OFF → ON → OFF

COPYRIGHT © 2000 CANON INC.

MTR	Use it to select the motor to check. Using the Mode 1) Select the mode item. 2) Using the keypad, enter the code of the motor to check (T05-501-03). 3) Press the OK key.
MTR-ON	Use it to check the operation of the motor. Using the Mode 1) Select the mode item, and press the OK key. • ON for 20 secs → OFF • The hopper motor and the duplex horizontal registration motor remains on for 10 sec and then turns off. • The shift tray motor stops at the front/rear home position.
SL	Use it to select the solenoid to check for operation. Using the Mode 1) Select the mode item. 2) Using the keypad, enter the code of the solenoid (T05-501-04). 3) Press the OK key.
SL-ON	Use it to check the operation of the solenoid. Using the Mode 1) Select the mode item, and press the OK key. • ON → OFF for 10 secs → ON → OFF for 10 secs → ON → OFF

<Code/Clutch Name>

Code	Name
1	manual feed clutch (CL3)
2	left deck pull-out clutch (CL4)
3	paper deck pickup clutch (CL102)
4	developing clutch (CL1)
5	registration roller clutch (CL2)

T05-501-02

<Code/Motor Name>

Code	Name	Code	Name
1	drum motor (M1)	13	left deck pickup motor (M24)
2	main motor (M2)	14	cassette 3/4 pickup motor (M12)
3	fixing motor (M19)	15	vertical path duplexing feed motor (M25)
4	laser scanner motor (M15)	16	vertical path lower motor (M27)
5	hopper stirring motor (M9)	17	vertical path upper motor (M26)
6	hopper supply motor (M10)	18	paper deck main motor (M101)
7	duplexing horizontal registration motor (M16)	19	reversal motor (M14)
8	right deck lifter motor (M5)	20	duplexing feed left motor (M29)
9	left deck lifter motor (M4)	21	delivery motor (M13)
10	cassette 3 lifter motor (M20)	22	pre-registration motor (M17)
11	cassette 4 lifter motor (M21)	23	duplexing feed right motor (M18)
12	right deck pickup motor (M11)	24	shift tray motor (SM 101)

T05-501-03

<Code/Solenoid Name>

Code	Name	Code	Name
1	right deck pickup solenoid (SL6)	7	delivery flapper solenoid (SL5)
2	left deck pickup solenoid (SL7)	8	reversing flapper solenoid (SL8)
3	cassette 3 pickup solenoid (SL3)	9	fixing inlet guide drive solenoid
4	cassette 4 pickup solenoid (SL4)		(SL1); return
5	manual feed releasing solenoid (SL2)	10	fixing inlet guide drive solenoid
6	paper deck pickup roller		(SL1); draw
	releasing solenoid (SL101)	11	fixing web solenoid (SL9)

T05-501-04

COPYRIGHT © 2000 CANON INC.

<CLEAR>

Cleaning the RAM, Jam History, and Error Code History

The data is cleared only when the main power switch has been turned off and then on; be sure to turn it off and then on at the end.

ERR	Use it to clear error codes. Using the Mode 1) Select the mode item, and press the OK key. 2) Turn off and then on the main power switch.
DC-CON	Use it to clear the RAM on the DC controller PCB. Using the Mode 1) Select the mode item, and press the OK key. 2) Turn off and then on the main power switch.
R-CON	Use it to clear the RAM on the reader controller PCB. Using the Mode 1) Select the mode item, and press the OK key. 2) Turn off and then on the main power switch.
SERVICE	Use it to clear the backup data of service mode (COPIER>OPTION). Using the Mode 1) Select the mode item, and press the OK key. 2) Turn off and then on the main power switch.
JAM-HIST	Use it to clear the jam history. Using the Mode 1) Select the mode item, and press the OK key. 2) Turn off and then on the main power switch.
ERR-HIST	Clearing the Error History Using the Mode 1) Select the item, and press the OK key. 2) Turn off and then on the main power switch.
E354-CLR	---
E355-CLR	---

COPYRIGHT © 2000 CANON INC.

PWD-CLR	Use it to clear the password set for 'system administrator' in user mode. Using the Mode 1) Select the mode item, and press the OK key. 2) Turn off and then on the main power switch.
CNT-MCON	Use it to clear the counter for servicing located on the main controller PCB. Using the Mode 1) Select the mode item, and press the OK key. 2) Turn off and then on the main power switch.
CNT-DCON	Use it to clear the counter for servicing found on the DC controller PCB. Using the Mode 1) Select the mode item, and press the OK key. 2) Turn off and then on the main power switch.
MMI	Use it to clear the backup data on user mode settings (spec, ID, group ID, mode memory, etc.). Using the Mode 1) Select the mode item, and press the OK key. 2) Turn off and then on the main power switch.

<MSIC-R>

Checking Reader Unit-Related Operations

SCANLAMP	Use it to check the activation of the scanning lamp. Using the Mode 1) Select the mode item, and press the OK key. • The scanning lamp will turn on. 2) Press the Stop key to turn off the lamp.

<MISC-P>

Checking Printer-Related Operations

P-PRINT	Use it to print out a list of service mode items. Using the Mode 1) Select the mode item, and press the OK key. • The machine will print out a list of service mode items.

COPYRIGHT © 2000 CANON INC.

KEY-HIST	Use it to print out the history of key inputs made on the control panel. Using the Mode 1) Select the mode item, and press the OK key. • The machine will print out the history of key inputs.
HIST-PRT	Use it to print out the history of jams and errors in service mode. Using the Mode 1) Select the item mode, and press the OK key. • The machine will print out the history of jams and errors.
USER-PRT	Use it to print out a list of user modes in service mode. Using the Mode 1) Select the mode item, and press the OK key. • The machine will print out a list of user modes.
PRE-EXP	Use it to check the activation of the pre-exposure LED. Using the Mode 1) Select the mode item, and press the OK key. • The pre-exposure LED will remain on for about 3 secs and will turn off.

<HRD-DISK>

Use it to check the operation of the hard disk.

SCANDISK Caution	Use it to detect an error on the hard disk. Use it on a hard disk found to have a problem. Using the Mode 1) Select the mode item, and press the OK key. • Once operation starts, counting is executed starting with 0%; the opera tion ends at 100% (in about 25 mins).
FORMAT Caution	Use it to initialize the image area of the hard disk. • Use it on a normal hard disk. • Use it at time of shipment from the factory or upon replacement of the hard disk. Using the Mode 1) Select the mode item, and press the OK key. • The operation will end in about 1 sec, and the power will turn off.

<SENS-AJD>

Use it to check the operation of sensors.

STCK-LMT	
	Use it to adjust the position of the full sensor (PS104, PS105) of the shift tray. • If either of the full sensors (or both) detects paper, the machine will indicate ‘ON’. • If neither of the sensors detects paper, the machine will indicate ‘OFF’.
Caution	• Use this mode when the full sensor has been replaced. • Be sure to move the sensors starting at the point farthest from the paper, moving them closer to the paper (in keeping with the characteristics of the sensors).
	Using the Mode 1) Keep both sensors at the point farthest from the paper. 2) Place a stack of sheets (about 60 mm high) at the point of detection of either sensor on the shift tray. 3) Select the mode item, and press the OK key. 4) By referring to the indication, move the sensor closer to the paper, and fix it in position where the indication changes to ‘ON’. 5) Move the paper to the position of detection of the other sensor. 6) Repeat step 4) for the other sensor. 7) Press the Stop key to end the adjustment.

<SYSTEM>

Checking System-Related Operations

DOWNLOAD	
	Use it to switch to download mode of the system program.
Caution	
	Using the Mode 1) Turn off the machine and the PC. 2) Disconnect the network-related cable connected to the machine. 3) Connect the machine with the PC with a bi-Centronics cable. 4) Turn on the PC. 5) Turn on the machine. 6) Select the mode item, and press the OK key. 7) Start downloading using the service support tool. 8) At the end of the operation, turn off and then on the main power switch.

COPYRIGHT © 2000 CANON INC.

5.2 FEEDER

SENS-INT	
	Use it to adjust the sensitivity of each sensor of the ADF.
Caution	Be sure to clean the sensor before executing this mode.
	Using the Mode
	1) Select the mode item, and press the OK key.
	• The machine stops operation at the end of the adjustment.

COPYRIGHT © 2000 CANON INC.

6. OPTION (settings mode)

6.1 COPIER

The following screen appears in response to COPIER>OPTION; for the items, see the pages that follow:

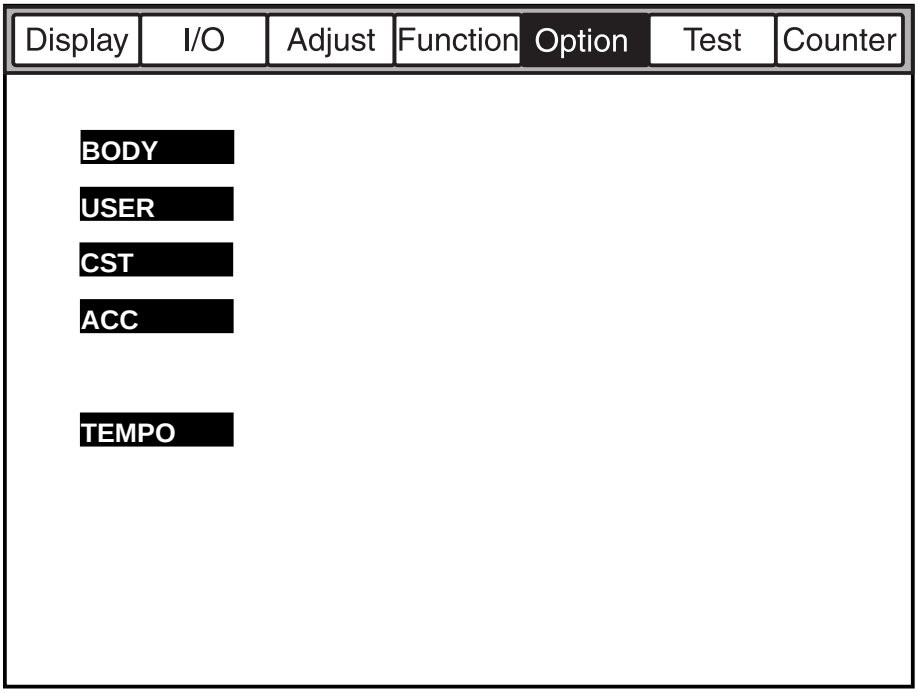

F05-601-01

COPYRIGHT © 2000 CANON INC.

BODY

Use it to make machine settings.

PO-CNT	
	Use it to turn on/off potential control.
Settings	**0: off, 1: on (default)**
PO-CNTMD	
	Use it to select a potential control mode.
Settings	**0: one at time of power-up (default)** **1: 10 mins and 60 mins after power-up (reduced mode)** **2: 10 mins and 60 mins after power-up (normal mode)**
W-CLN-P	
	Use it to set the intervals at which auto cleaning of the primary charging wire is executed in terms of the number of prints.
Settings	**100 to 2000 (default: 2000)**
MODEL-SZ	
	Use it to switch default ratios display and ADF original size detection by site.
Settings	**0: AB (6R5E), 1: INCH (5R4E), 2: A (3R3E), 3: AB/INCH (6R5E)**
FIX-TEMP	
	Use it to select down sequence mode.
Settings	**0: OFF, 1: priority on fixing while controlling down sequence temperature to +10°C for all, 2: priority on productivity while controlling down sequence temperature to -5°C for all**
IDL-MODE	
	Use it to select idle rotation mode for the developing assembly.
Settings	**0: OFF (no idle rotation; default)** **1: auto control by environment sensor** **2: idle rotation started when fixing temperature reaches 100°C** **3: idle rotation started when main power switch is turned on**
FSPD-S1	
	Use it to switch fixing control for special paper. • The selection of this mode disables the function of OHP-TEMP and WARM-UP. • The special paper mode (2 below) is valid for the 120/230-V model only, and is executed when a source of paper assigned to thick paper is selected.
Settings	**0: normal mode (plain paper; default), 1: special paper 1 mode (in high humidity environment, reduces fixing temperature),** **2: special paper mode (thick paper)**

COPYRIGHT © 2000 CANON INC.

FUZZY	
	Use it to turn on/off fuzzy control and to make environment settings. • The selection will affect pre-transfer, transfer, and separation charging currents. • Selecting 1 through 3 will make the operation independent of the environment sensor.
Settings	**0: fuzzy control ON (default), 1: low humidity environment mode (current level lower than standard),** **2: normal humidity environment mode, 3: high humidity environment mode (current level higher than standard)**
TSPLY-SW	
	Use it to switch the toner supply sequence executed in conjunction with the humidity sensor.
Settings	**0: changes control of toner supply motor by humidity data automatically (default)** **• medium/low humidity: ON for 2 sec, OFF for 1 sec** **• high humidity: ON for 4 sec, OFF for 2 sec** **1: uses fixed pattern (ON for 2 sec, OFF for 1 sec)**
SCANSLCT	
	Use it to turn on/off the ADF original size detection mechanism. • When ON, the scan size is determined according to the detected original size.
Settings	**0: OFF (default), 1: ON**
OHP-TEMP	
	Use it to switch the temperature setting for transparency mode. • The control mechanism will use a lower fixing temperature to improve separation of transparencies from the fixing roller.
Caution	This mode is disabled if WARM-UP, FSPD-S1 is set.
Settings	**0: OFF (default)** **1: normal temperature control -5°C** **2: normal temperature control -10°C** **3: normal temperature control -15°C** **4: normal temperature control -20°C**
F-GD-CNT	
	Use it to select the descent mode for the fixing inlet guide. • Move down the inlet guide if uneven density or light images occur as a result of uneven fixing.
Settings	**0: normal control (default)** **1: moves down inlet guide for 1st side only (A4R/297 mm or larger)**

COPYRIGHT © 2000 CANON INC.

CONFIG	
	Use it to select multiple pieces of firmware retained on the hard disk so as to make appropriate settings: country, language, model, paper size series.
Settings	**XXYYZZAA XX: country (JP), YY: language (ja), ZZ (00); model, AA (00): paper size series; display will be in the following sequence and the parentheses indicate default settings: COPIER>DISPLAY>USER>LANGUAGE.** Using the Mode 1) Select CONFIG. 2) Select an item (to highlight), and press the +/- key to scan through the items. 3) When the appropriate setting has appeared for each item, press the OK key.
WARM-UP	
	Use it to reduce the warm-up time if the room temperature is likely to be about 18°C or higher when the machine is first turned on. In the case of the iR5000 Series, the multiple rotation initial, standby, and print start temperatures are reduced by 15°C. In the case of the iR6000 Series (100-V model), the period of initial multiple rotation is reduced by 1 min.
Caution	• For the 120/230-V model, the same control mechanism is used for both iR6000 Series and iR5000 Series. • This mode is disabled if FSPD-S1 is set.
Settings	**0: standard (default), 1: reduced mode (as above)**
SHARP	
	Use it to change the sharpness level of the image. • A higher setting makes the images sharper.
Settings	**1 to 5 (default: 3)**
LAPC-SW	
	Use it to switch laser APC correction.
Settings	**0: ON (initial rotation APC executed if left alone for 10 min), 1: ON (initial rotation ON APC executed if left alone for 60 min; default), 2: (initial rotation APC executed if left alone for 120 min) 3: initial rotation APC only off; 4: OFF**
FDW-DLV	
	Use it to switch face-up delivery to ensure stacking performance when making multiple prints.
Settings	**0: normal (all in face-up delivery, if single original; default)** **1: face-up delivery for single print of single original, face-down delivery for multiple prints)**

COTDPC-D	
	For factory use.
Settings	**0 to 3 (default: 0)**
EVL-VDT	
	Use it to switch the drum target potential (VDT) and the developing bias (Vdc) to reduce traces of black fixing separation claws caused by an excess deposit of toner in a low-humidity environment.
Settings	**0: no change** **1: for copy image, VDT -35 V; for printer image, VDT -25 V/Vdc +25 V (default)** **2: for copy image, VDT -50 V; for printer image, VDT -50 V/Vdc +25 V** **3: for copy image, VDT -35 V; for printer image, no change** **4: for copy image, VDT -50 V; for printer image, no change** **5: for copy image, no change; for printer image, VDT -25 V/Vdc +25 V** **6: for copy image, no change; for printer image, VDT -50 V/Vdc +25 V**
RMT-LANG	
	Use it to switch the language for remote UI driven over the WEB.
Settings	**Use it to select a language code (ja, en, etc.) to identify the site; expressed as in service mode (COPIER>DISPLAY>USER>LANGUAGE).** Using the Mode 1) Select RMT-LANG. 2) Each press on the +/- key brings up a different language code. 3) When the desired language code has appeared, press the OK key.
HI-HUME	
	Use it to switch the developing bias frequency if separation faults occur in a high-humidity environment.
Caution	If separation faults occur in the above environment, set it to '1'.
Settings	**0: 2700 Hz (default), 1: 2000 Hz**
TR-SP-C1	
	Use it to switch the transfer/separation output level when the right deck is used as the source of paper to prevent various problems.
Settings	**0: normal (default), 1: to prevent re-transfer** **2: to prevent separation fault, 3: to prevent transfer fault**
TR-SP-C2	
	Use it to switch the transfer/separation output level when the left deck is used as the source of paper to prevent various problems.
Settings	**0: normal (default), 1: to prevent re-transfer** **2: to prevent separation fault, 3: to prevent transfer fault**

COPYRIGHT © 2000 CANON INC.

TR-SP-C3	
	Use it to switch the transfer/separation output level when the cassette 3 is used as the source of paper to prevent various problems.
Settings	**0: normal (default), 1: to prevent re-transfer** **2; to prevent separation fault, 3: to prevent transfer fault**
TR-SP-C4	
	Use it to switch the transfer/separation output level when the cassette 4 is used as the source of paper to prevent various problems.
Settings	**0: normal (default), 1: to prevent re-transfer** **2: to prevent separation fault, 3: to prevent transfer fault**
TR-SP-MF	
	Use it to prevent the transfer/separation output level when the manual feed tray is used to prevent various problems.
Settings	**0: normal (default), 1: to prevent re-transfer** **2: to prevent separation fault, 3: to prevent transfer fault**
TR-SP-DK	
	Use it to switch the transfer/separation output level when the paper deck is used as the source of paper to prevent various problems.
Settings	**0: normal (default), 1: to prevent re-transfer** **2: to prevent separation fault, 3: to prevent transfer fault**
TPR-DECL	
	Use it to switch the delivery path to improve stacking performance in reverse delivering thick paper.
Settings	**0: normal (default), 1: move paper over reversing roller, and reverse/ delivery after removing curl**
DF_BLINE	
	Use it to turn on/off reduce mode (turning off edge emphasis) for black lines in stream reading mode.
Caution	Turning on the mode will make black lines less noticeable, but the edges of images will accordingly be less sharp
Settings	**0: OFF (default), 1: ON**

USER

Making User-Related Settings

COPY-LIM	
	Use it to change the upper limit for setting a copy count.
Settings	**1 to 999 (default: 999)**

SLEEP	
	Use it to turn on/off sleep mode.
Settings	**0: OFF, 1: ON (default)**
WEB-DISP	
	Use it to turn on/off the fixing web length warning. • If OFF (no warning), the message will appear only when service mode is started.
Settings	**0: OFF (warning not issued; default), 1: ON (warning issued)**
SIZE-DET	
	Use it to turn on/off the original size detection mechanism.
Settings	**0: OFF, 1: ON (default)**
Caution	After making the setting, be sure to turn off and then on the main power switch.
W-TONER	
	Use it to turn on/off the waste toner case full message. • When OFF (no warning) is selected, the message will appear only when service mode is started.
Settings	**0: OFF (no warning issued; default), 1: ON (warning issued)**
COUNTER1	
	Use it to indicate the type of soft counter of the control panel.
Caution	The type of soft counter 1 cannot be changed.
Settings	**101: total 1 (default: fixed to 101; see T05-601-01)**
COUNTER2	
	Use it to change the type of soft counter 2 of the control panel to suit the needs of the user or the dealer.
Settings	**000 to 804 (T05-601-01); default: 000 for 100-V model, 103 for 120/230-V model**
COUNTER3	
	Use it to change the type of soft counter 3 of the control panel to suit the needs of the user or the dealer.
Settings	**000 to 804 (T05-601-01); default: 000 for 100-V model, 203 for 120/230-V model**
COUNTER4	
	Use it to change the type of soft counter 4 of the control panel to suit the needs of the user or the dealer.
Settings	**000 to 804 (T05-601-091); default: 000 for 100-V model, 203 for 120/230-V model**

COPYRIGHT © 2000 CANON INC.

COUNTER5	
	Use it to change the type of soft counter 5 of the control panel to suit the needs of the user or the dealer.
Settings	**000 to 804 (T05-601-01; default, 000)**
COUNTER6	
	Use it to change the type of soft counter 6 of the control panel to suit the needs of the user or the dealer.
Settings	**000 to 804 (T05-601-01; default: 000)**
DATE-DSP	
	Use it to switch how the date is displayed.
Caution	For the 120V model, the default is '1'.
Settings	**0: YYYY MM/DD (default), 1: DD/MM YYYY, 2: MM/DD/YYYY**
MB-CCV	
	Use it to impose limits on the Box function by the Control Card IV (CC-IV).
Settings	**0: enables control and printing regardless of presence/absence of card in remote; in remote, makes no change** **1: enables control and printing regardless of presence/absence of card in remote; accepts print job, but stops printing in absence of card (with card, enables printing but imposes charge; default)** **2: disables control in remote; does not accept print job in remote**
B4-L-CNT	
	Use it to specify whether B4 sheets are counted as large size or small size for soft counters 1 through 6.
Settings	**0: small size (default), 1: large size**
TRAY-STP	
	Use it to prohibit suspension of printing by imposing limits to the number of sheets to staple or mixing of sizes of the finisher.
Settings	**0: normal mode (suspend printing by count/size; default)** **1: suspend printing if height sensor is ON (full of paper)**
MF-LG-ST	
	Use it to turn on the Extra Length key for sheets up to 630 mm (free in manual feed); the 630 mm limit also applies to the ADF.
Settings	**0: normal mode (default), 1: extra length mode (key indicated)**
SPECK-DP	
	Use it to enable/disable indication of a warning for dust detection in stream reading.
Settings	**0: disable indication (default), 1: enable indication**

CNT-DISP	
	Use it to enable/disable the indication of a serial number in response to the Counter Check key.
Settings	**0: enable indication (default), 1: disable indication**
PH-D-EL	
	Use it to select the number of lines for photo mode printing.
Settings	**0: 141 lines (default), 1: 134 lines**
COPY-JOB	
	Use it to prevent auto copy start when a coin robot and a card reader.
Settings	**0: copy job auto start selected (default)** **1: copy job auto start not selected**
OP-SZ-DT	
	Use it to turn on and off the original size detection mechanism in book mode.
Settings	**0: OFF (accepts input of original size from control panel; default)** **1: ON (detects original size automatically)**

COPYRIGHT © 2000 CANON INC.

<Soft Counter Specifications>

The soft counters are classified as follows according to input numbers:

100s: total	500s: scan
200s: copies	600s: box
300s: prints	700: reception prints
400s: copies + prints	800: report prints

Legend

○:	counter effective for the machine
4C:	full color
mono:	mono color (Y, M, C/R, G, B/sepia mono)
Bk:	black mono
L:	large size (larger than B4)
S:	small size (B4 or smaller)
number in counter:	count indicating large-size sheets

In service mode, the settings may be changed so that B4 or larger may be counted as large size (COPIER>OPTION>USER>B4-L-CNT).

Effective	No.	Counter type	Effective	No.	Counter type
○	000	not indicated	○	201	copy (total 1)
○	101	total 1	○	202	copy (total 2)
○	102	total 2	○	203	copy (L)
○	103	total (L)	○	204	copy (S)
○	104	total (S)	○	205	copy A (total 1)
	105	total (4C1)	○	206	copy A (total 2)
	106	total (4C2)	○	207	copy A (L)
	107	total (Mono)	○	208	copy A (S)
	108	total (Bk 1)	○	209	local copy (total 1)
	109	total (Bk 2)	○	210	local copy (total 2)
	110	total (Mono/L)	○	211	local copy (L)
	111	total (Mono/S)	○	212	local copy (S)
	112	total (Bk/L)	○	213	remote copy (total 1)
	113	total (Bk/S)	○	214	remote copy (total 2)
○	114	total (4C+Mono+Bk/	○	215	remote copy (L)
		double-sided)	○	216	remote copy (S)
		total 1 (double-sided)		217	copy (4C1)
○	115	total 2 (double-sided)		218	copy (4C2)
○	116	L (double-sided)			
○	117	S (double-sided)			

T05-601-01a

Effective	No.	Counter type	Effective	No.	Counter type
	219	copy (Mono 1)		319	print (Bk/L)
	220	copy (Mono 2)		320	print (Bk/S)
	221	copy (Bk 1)		321	print (4C+Mono/L)
	222	copy (Bk 2)		322	print (4C+Mono/S)
	223	copy (4C/L)		323	print (4C+Mono/2)
	224	copy (4C/S)		324	print (4C+Mono/1)
	225	copy (Mono/L)		325	print (4C/L/double-sided)
	226	copy (Mono/S)		326	print (4C/S/double-sided)
	227	copy (Bk/L)		327	print (Mono/L/double-sided)
	228	copy (Bk/S)			
	229	copy (4C+Mono/L)		328	print (Mono/S/double-sided)
	230	copy (4C+Mono/S)			
	231	copy (4C+Mono/2)		329	print (Bk/L/double-sided)
	232	copy (4C+Mono/1)		330	print (Bk/S/double-sided)
	233	copy (4C/L/double-sided)	○	331	PDL print (total 1)
			○	332	PDL print (total 2)
	234	copy (4C/S/double-sided)	○	333	PDL print (L)
			○	334	PDL print (S)
	235	copy (Mono/L/double-sided)		401	copy + print (4C/L)
				402	copy + print (4C/S)
	236	copy (Mono/S/double-sided)		403	copy + print (Bk/L)
				404	copy + print (Bk/S)
	237	copy (Bk/L/double-sided)		405	copy + print (Bk 2)
	238	copy (Bk/S/double-sided)		406	copy + print (Bk 1)
○	301	print (total 1)		407	copy + print (4C+Mono/L)
○	302	print (total 2)		408	copy + print (4C+Mono/S)
○	303	print (L)		409	copy + print (4C+Mono/2)
○	304	print (S)		410	copy + print (4C+Mono/1)
○	305	print A (total 1)		411	copy + print (L)
○	306	print A (total 2)		412	copy + print (S)
○	307	print A (L)		413	copy + print (2)
○	308	print A (S)		414	copy + print (1)
	309	print (4C1)	○	501	scan (total 1)
	310	print (4C1)			copy scan (total/4)
	311	print (Mono 1)	○	502	scan (total 2)
	312	print (Mono 2)	○	503	scan (L)
	313	print (Bk 1)			copy scan (L/4)
	314	print (Bk 2)	○	504	scan (S)
	315	print (4C/L)			copy scan (S/4)
	316	print (4C/S)			
	317	print (Mono/L)			
	318	print (Mono/S)			

T05-601-01b

COPYRIGHT © 2000 CANON INC.

Effective	No.	Counter type	Effective	No.	Counter type
	505	Bk scan (total 1)	○	601	box print (total 1)
		copy scan (Bk)	○	602	box print (total 2)
	506	Bk scan (total 2)	○	603	box print (L)
	507	Bk scan (L)	○	604	box print (S)
		copy scan (Bk/L)	○	701	reception print (total 1)
	508	Bk scan (S)	○	702	reception print (total 2)
		copy scan (Bk/S)	○	703	reception print (L)
	509	color scan (total 1)	○	704	reception print (S)
		copy scan (4C)	○	801	report print (total 1)
	510	color scan (total 2)	○	802	report print (total 2)
	511	color scan (L)	○	803	report print (L)
		copy scan (4C/L)	○	804	report print (S)
	512	color scan (S)			
		copy scan (4C/S)			
	513	copy scan (L)			
	514	copy scan (S)			
	515	copy scan (total)			

T05-601-01c

CST

Making Cassette-Related Settings

U1-NAME U2-NAME U3-NAME U4-NAME	
	Use it to turn on/off the paper name indication when a paper size group (U1 to U4) is detected.
Settings	**0: OFF (touch panel indicates 'U1' through 'U4'; default)** **1: ON (indicates paper name specified in CST-U1 through -U4)**
CST-U1	
	Use it to specify paper names used for paper size group U1.
Settings	**31: G-LTR (default), 22: K-LGL**
CST-U2	
	Use it to specify paper names used for paper size group U2.
Settings	**24: FOOLSCAP (default), 26: OFFICIO, 27: E-OFFI, 36: A-OFI, 37: M-OFI**
CST-U3	
	Use it to specify paper names used for paper size group U3.
Settings	**34: G-LGL (default), 29: A-LTR, 25: A-FLS**
CST-U4	
	Use it to specify paper names used for paper size group U4.
Settings	**18: LTR (default), 29: A-LTR**
P-SZ-C1 P-SZ-C2	
	Use it to specify paper size used in the front deck (C1: right deck, C2: left deck).
Caution	After electing the appropriate paper size, be sure to turn off and then on the main power switch.
Settings	**6: A4 (default), 15: B5, 18: LTR**
P-SZ-C4	
	Use it to select a paper size for the cassette 4.
Caution	• This mode is effective only for the 120/230-V model. • After electing the appropriate paper size, be sure to turn off and then on the main power switch.
Settings	**4: A3 (230-V model: default); 16: 11×17 (120-V model: default); for other size code, see T05-601-02)**

COPYRIGHT © 2000 CANON INC.

C1-DWSW C2-DWSW DK-DWSW C3-DWSW C4-DWSW	
	Use it to turn on/off the thick paper control sequence. (C1: right deck, C2: left deck, C3/C4: cassette 3/4, DK: paper deck)
Setting	**0: OFF (default), 1: ON**

<Code/Paper Names>

Code	Notation	Name	Code	Notation	Name
01	A1	A1	21	LGL	LEGAL
02	A2	A2	22	K-LGL	Korean government
03	A3R	A3R	23	K-LGLR	Korean government R
04	A3	A3	24	FLSC	FOOLSCAP
05	A4R	A4R	25	A-FLS	Australian FOOLSCAP
06	A4	A4	26	OFI	OFFICIO
07	A5	A5	27	E-OFI	Ecuadorian OFFICIO
08	A5R	A5R	28	B-OFI	Bolivian OFFICIO
09	B1	B1	29	A-LTR	Argentine LETTER
10	B2	B2	30	A-LTRR	Argentine LETTERR
11	B3	B3	31	G-LTR	Government LETTER
12	B4R	B4R	32	G-LTRR	Government LETTERR
13	B4	B4	33	A-LGL	Argentine LEGAL
14	B5R	B5R	34	G-LGL	Government LEGAL
15	B5	B5	35	FOLI	FOLIO
16	11×17	11×17	36	A-OFI	Argentine OFFICIO
17	LTRR	LETTERR	37	M-OFI	Mexico OFFICIO
18	LTR	LETTER	38		
19	STMT	STATEMENT	39		
20	STMTR	STATEMENTR	40	ALL	

T05-601-02

ACC

Use it to make accessories-related settings.

COIN	
	Use it to turn on/off the coin vendor indication. • The control card indicator used on the control panel may be used for the coin vendor.
Settings	**0: OFF (default), 1: ON (for count vendor)**
DK-P	
	Use it to set a paper of the paper deck.
Caution	After electing the appropriate paper size, be sure to turn off and then on the main power switch.
Settings	**0: A4 (default), 1: B5, 2: LTR**

TEMPO

Use it as an emergency remedy when the potential sensor or the environment sensor is faulty (out of order).

F-POT-SW	
	Use it to turn on and off the setting if a transfer fault occurs because of a fault (error) in the potential sensor. • Use it as an emergency remedy until the potential sensor is replaced.
Settings	**0: OFF (default), 1: enables F-POT-D setting**
F-POT-D	
	Use it if a transfer fault occurs because of a fault (error) in he potential sensor. • It is valid only when F-POT-SW is set to '1'. • The level of separation current is in the order of 0>1>2.
Settings	**0: for text-oriented users (originals with low image ratio)** **1: for photo-oriented users (originals with high image ratio)** **2: not used usually; however, if re-transfer (white spot at 50 mm along leading edge) occurs**
F-HUM-SW	
	Use it to turn on and off F-HUM-D if the environment senor has a fault (error). • Use it as an emergency remedy until the environment sensor is replaced.
Settings	**0: OFF (default), 1: enables F-HUM-D**

COPYRIGHT © 2000 CANON INC.

F-HUM-D	
	Use it to enter an approximate humidity level of the site of installation. • Uses the input humidity as the output of the humidity sensor. • Valid only if F-HUM-SW is set to '1'.
Settings	**30% to 99% (default: 35%)**

6.2 FEEDER

SIZE-SW	
	Use it to turn on/off the mixed size detection mechanism for AB and Inch series originals.
Settings	**0: disable (default), 1: enable**

6.3 SORTER

BLNK-SW	
	Use it to set the margin width (W) on both sides of the fold when the saddle stitcher is used.
Settings	**0: normal width (5 mm), 1: larger width (10 mm; default)**

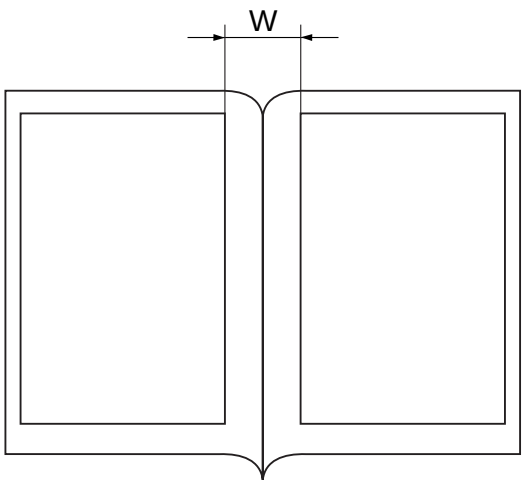

F05-603-01

COPYRIGHT © 2000 CANON INC.

6.4 BOARD

MENU-1	
	Use it to enable level 1 indication for the printer settings menu.
Settings	**0: disable indication (default), 1: enable indication**
MENU-2	
	Use it to enable level 2 indication for the printer settings menu.
Settings	**0: disable indication (default), 1: enable indication**
MENU-3	
	Use it to enable level 3 indication of the printer settings menu.
Settings	**0: disable indication (default), 1: enable indication**
MENU-4	
	Use it to enable level 4 indication for the printer settings menu.
Settings	**0: disable indication (default), 1: enable indication**
RIP1-CHK	
	Use it to check the operation of the RIP1 board. Check the generated test print. If lines of 32 dots wide are found, the board is normal; otherwise, the board is faulty. Using the Mode 1) Select the mode item, and press the OK key. 2) The machine will generate a test print. 3) Check to find out if the generated test print has lines of 32 dots wide.
PCI1-OFF	
	Use it to turn off the slot 1 function when the board inserted into the PCI slot 1 is out of order.
Settings	**0: normal (default), 1: OFF (board function not used)**
PCI2-OFF	
	Use it to turn off the slot 2 function when the board inserted into the PCI slot 2 is out of order.
Settings	**0: normal (default), 1: OFF (board function not used)**
PCI3-OFF	
	Use it to turn off the slot 3 functions when the board inserted into the PCI slot 3 is out of order.
Settings	**0: normal (default), 1: OFF (board function not used)**

7. TEST (test print mode)

The following screen appears in response to COPIER>TEST; for the items, see the pages that follow:

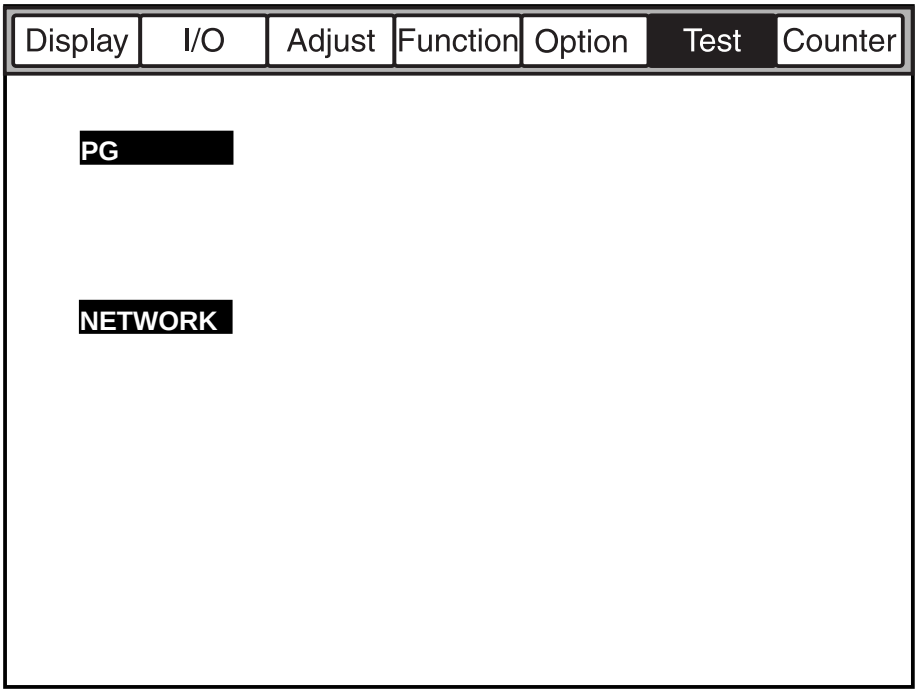

F05-701-01

COPYRIGHT © 2000 CANON INC.

PG

Use it to select the type of test print and generate it.

TYPE	
	Enter the type number of the test print, and press the OK key to generate it.
Caution	Be user to return the input to '00' after generating the test print.
Settings	**00: normal print, 01 through 08: see T05-701-01**
TXPH	
	Use it to switch between text mode and photo mode during test printing.
Settings	**0: text mode, 1: photo mode**
PG_PICK	
	Use it to select the source of paper for test printing.
Settings	**1: right deck (default), 2: left deck, 3: cassette 3, 4: cassette 4, 5 to 6: not used, 7: paper deck, 8: manual feed tray**

<TYPE Input No./Test Print Type)

Input No.	Type	Input No.	Type
00	image form CCD (normal print)	05	halftone
01	grid	06	solid black
02	17 gradations (w/ image correction)	07	vertical straight lines
03	17 gradations (w/o image correction)	08	horizontal straight lines
04	blank	-	-

T05-701-01

COPYRIGHT © 2000 CANON INC.

NETWORK

Use it to check the connections related to the network.

PING

Use it to check the connection between the machine and the network (for TCP/IP environment only).

Caution

Use this mode to check the connection to the network after installing the machine or when the connection to the network is found to be poor.

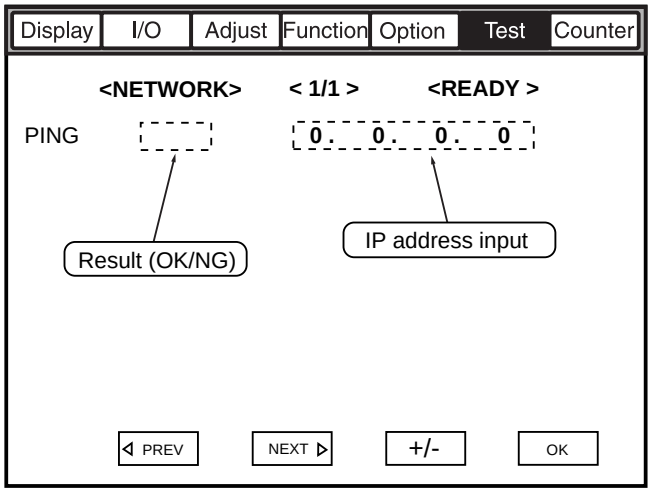

F05-701-02

Using the Mode

1) Turn off the main power switch.
2) Connect the network cable to the machine, and turn on the main power switch.
3) Inform the user's system administrator that the machine has properly been installed, asking him/her to make the appropriate network settings.
4) Inform the system administrator that the network connection will be tested, and find out the remote host address (i.e., IP address of the PC terminal on the user network) for PING.
5) Make the following selections in service mode: COPIER>TEST>NETWORK>PING; then, enter the IP address obtained in step 4), and press the OK key.

- If the connection to the network is correct, 'OK' will be indicated.
- If 'NG' is indicated, check the connection of the network cable; if cor rect, go to step 6). If a fault is found in the connection of the network cable, correct the fault, and go to step 5).

COPYRIGHT © 2000 CANON INC.

6) Make the following selections in service mode:
COPIER>TEST>NETWORK>PING; then, enter the loop back address* (127.0.0.1), and press the OK key and then the Start key.

- If 'NG' is indicated, the machine has a problem with the TCP/IP set tings; go back to step 3), and check the settings.
- If 'OK' is indicated, the machine's TCP/IP settings may be considered to be free of a problem. However, the connection of the network inter face board (NIC) or the NIC itself may have a problem. Go to step 7) to make a check.

*The address will be returned before it reaches the NIC, allowing a check on the machine's TCP/IP settings.

7) Make the following selections in service mode:
COPIER>TEST>NETWORK>PING; then, enter the local host address (i.e., the machine's IP address), and press the OK key.

- If 'NG' is indicated, the NIC connection or the NIC itself is faulty. Check the NIC connection or replace the NIC.
- If 'OK' is indicated, the machine's network settings and NIC may be considered to be free of problems. However, the environment of the user network may be faulty. Report to the system administrator, and ask for correction.

COPYRIGHT © 2000 CANON INC.

8. COUNTER (counter mode)

The following screen appears in response to COPIER>COUNTER; for the items, see the pages that follow:

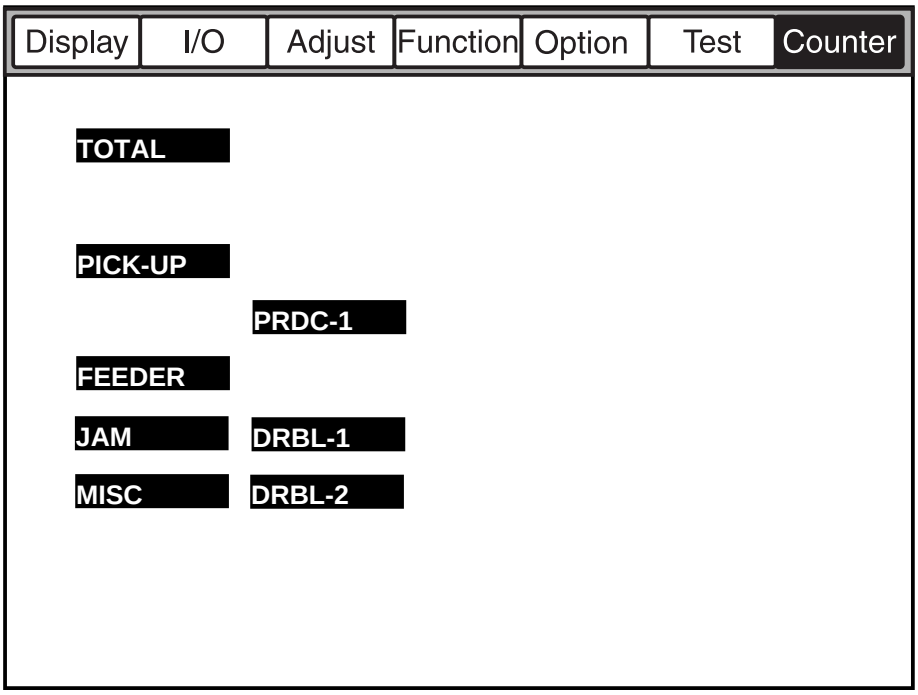

F05-801-01

<Clearing the Counter Reading>

1) Select the item to clear (to highlight).
2) Press the Clear key on the control panel.
   - The counter will be cleared, and will return to '00000000'.

<Small Size and Large Size in the Mode>

large size (L): larger than A4 or LTR.
small size (S): A4 or LTR or smaller

COPYRIGHT © 2000 CANON INC.

<Guide to Consumables Counter>

The machine is equipped with consumables counters (PRDC-1, DRBL-1, DRBL-2), providing references for parts replaced on a periodical basis or parts requiring replacement.

EX.

PRM-WIRE	/	**00000027**	/	**00500000**	/	**0%**	**!!**	**000082**
[1]		[2]		[3]		[4]	[5]	[6]

[1] Indicates the name of the part. In the case of the example, the primary charging wire.
[2] Indicates the counter reading (number of actual sheets handled); clear it by pressing the Clear key after replacing the part.
[3] Indicates the limit setting (guide to replacement); the setting may be changed by selecting the image and using the keypad (thereafter, press the OK key).
[4] Indicates the ratio of counter readings to limit levels.
[5] A single exclamation mark (!) will be indicated between 90% and 100%; two marks at 100% or higher; otherwise, no mark.
[6] Indicates an estimated number of days to replacement; in the case of the example, 82 days.

List of Counter Items

Level 1: COUNTER		Mode
Level 2: TOTAL		
Level 3:	SERVICE 1	total counter 1 for servicing
	SERVICE 2	total counter 2 for servicing
	COPY	copy counter
	PDL-PRT	PDL print counter
	BOX-PRT	Box print counter
	PMT-PRT	remote copy/print counter
	FAX-PRT	fax reception print counter
	RPT-PRT	report print counter
	2-SIDE	double-sided print counter
	SCAN	scanner counter

COPYRIGHT © 2000 CANON INC.

Level 2: PICK-UP

Level 3:	C1	right front deck (cassette 1) pickup counter
	C2	left front deck (cassette 2) pickup counter
	C3	cassette 3 pickup counter
	C4	cassette 4 pickup counter
	MF	manual feed tray pickup counter
	DK	paper deck pickup counter
	2-SIDE	duplexing 2nd side pickup counter

Level 2: FEEDER

Level 3:	FEED	feeder pickup total counter

Level 2: JAM

Level 3:	TOTAL	machine total jam counter
	FEEDER	feeder (ADF) jam counter
	SORTER	sorter (finisher) jam counter
	2-SIDE	duplexing assembly jam counter
	MF	manual feed tray jam counter
	C1	right front deck (cassette 1) jam counter
	C2	left front deck (cassette 3) jam counter
	C3	cassette 3 jam counter
	C4	cassette 4 jam counter
	DK	paper deck jam counter

Level 2: MISC

Level 3:	FIX-WEB*	fixing web counter (Be sure to reset after replacing the fixing web.)
	WST-TNR	waste toner counter (Be sure to reset after disposing of the waste toner.)

*When FIX-WEB counts up to '2000', 'E005' will be indicated.

Level 2: PRDC-1

Level 3:	PRM-WIRE	primary charging wire counter
	PRM-GRID	primary grid wire counter
	PO-WIRE	pre-transfer (post-) charging wire counter
	TR-WIRE	transfer charging wire counter
	SP-WIRE	separation charging wire counter
	FIX-TH1	fixing main thermistor (TH1) counter
	FIX-TH2	fixing sub thermistor (TH2) counter
	FX-TSW	fixing thermal switch (TP1) counter
	PRM-CLN	primary charging wire cleaner counter
	TR-CLN	transfer charging wire cleaner counter
	PO-CLN	pre-transfer charging wire cleaner counter
	SP-CLN	separation charging wire cleaner counter
	OZ-FIL3	ozone filter (FM3) counter

COPYRIGHT © 2000 CANON INC.

level 2: DRBL-1

Level 3:	PRM-UNIT	primary charging assembly counter
	PO-UNIT	pre-transfer charging assembly counter
	PO-SCRPR	pre-transfer (post-) charging assembly scraper counter
	T/S-UNIT	transfer/separation charging assembly counter
	CLN-BLD	cleaner blade counter
	SP-CLAW	cleaner separation claw counter
	DVG-CYL	developing cylinder counter
	DVG-ROLL	developing assembly roll counter
	C3-PU-RL	cassette 3 pickup roller counter
	C3-SP-RL	cassette 3 separation roller counter
	C3-FD-RL	cassette 3 feed roller counter
	C4-PU-RL	cassette 4 pickup roller counter
	C4-SP-RL	cassette 4 separation roller counter
	C4-FD-RL	cassette 4 feed roller counter
	LD-PU-RL	left front deck pickup roller counter
	LD-SP-RL	left front deck separation roller counter
	LD-FD-RL	left front deck feed roller counter
	RD-SP-RL	right front deck separation roller counter
	RD-PU-RL	right front deck pickup roller counter
	RD-FD-RL	right front deck feed roller counter
	M-SP-RL	manual feed separation roller counter
	M-FD-RL	manual feed roller counter
	M-PO-RL	manual feed pull-off roller counter
	FX-UP-RL	upper fixing roller counter
	FX-LW-RL	lower riding roller counter
	FX-IN-BS	fixing insulating bush counter
	FX-WEB*	fixing web counter (Be sure to reset after replacing the fixing web.)
	DLV-UCLW	delivery upper separation claw counter
	DLV-LCLW	delivery lower separation claw counter

*The limit of FX-WEB is set to 300,000.

COPYRIGHT © 2000 CANON INC.

Level 2: DRBL-2

Level 3:	DF-PU-RL	ADF pickup roller counter
	DF-SP-PL	ADF separation plate counter
	DF-SP-PD	ADF separation pad counter
	DF-FD-RL	ADF feed roller counter
	LNT-TAPE	ADF dust-collecting tape counter
	PD-PU-RL	paper deck pickup roller counter
	PD-SP-RL	paper deck separation roller counter
	PD-FD-RL	paper deck feed roller counter
	FIN-STPR	finisher stapler counter
	FIN-FDBL	finisher feed belt counter
	FIN-PDDL	finisher paddol counter
	SDL-STPL	saddle staple counter
	PUNCH	punch counter
	PNCH-HRS	punch harness counter

COPYRIGHT © 2000 CANON INC.

CHAPTER 6

SELF DIAGNOSIS

COPYRIGHT © 2000 CANON INC.

1. Error Codes

1.1 List of Error Codes

The machine is equipped with a mechanism to run self diagnosis to find out its condition (particularly of its sensors): CPU on the main controller PCB and the CPU on the DC controller PCB. If it finds a fault, it indicates the nature of the fault in its control panel.

The following is a list of codes and descriptions (including timing of detection); a code may have detailed codes, which may be checked in service mode (COPIER> DISPLAY>JAM/ERR).

E000	
Main Cause	The main thermistor (TH1) has poor contact or an open circuit. The thermal switch (TP1) has an open circuit. The fixing heater has an open circuit. The SSR is faulty. The DC controller PCB is faulty.
Mode of Detection	0000 After the main power switch is turned on, the temperature detected by the main thermistor does not reach 70°C.
Caution	The error must be reset in service mode (COPIER>FUNCTION> CLEAR>ERR).
E001	
Main Cause	The main thermistor (TH1) has a short circuit. The sub thermistor (TH2) has detected overheating. The SSR is faulty. The DC controller PCB is faulty.
Mode of Detection	0001 The main thermistor or the sub thermistor has detected about 230°C or higher for 2 sec. 0002 The main thermistor has detected 230°C or higher (hard circuit detection). 0003 The sub thermistor has detected about 236°C or higher.
Caution	The error must be reset in service mode (COPIER>FUNCTION> CLEAR>ERR).

COPYRIGHT © 2000 CANON INC.

E002

Main Cause	The main thermistor (TH1) has poor contact or an open circuit. The thermal switch (TP1) has an open circuit. The SSR is faulty. The DC controller is faulty.
Mode of Detection	0000 The temperature of the upper fixing roller does not reach 100°C within 2 min after it has exceeded 70°C.
Caution	The error must be reset in service mode (COPIER>FUNCTION> CLEAR>ERR).

E003

Main Cause	The main thermistor (TH1) has poor contact or an open circuit. The thermal switch (TP1) has an open circuit. The fixing heater has an open circuit. The SSR is faulty. The DC controller PCB is faulty.
Mode of Detection	0000 The temperature detected by the main thermistor is 70°C for 2 sec or more after it has reached 100°C.
Caution	The error must be reset in service mode (COPIER>FUNCTION> CLEAR>ERR).

E004

Main Cause	The SSR has a short circuit. The DC controller PCB is faulty.
Mode of Detection	0000 The SSR used to drive the fixing heater is found to have a short circuit (hard circuit detection).
Caution	The error must be reset in service mode (COPIER>FUNCTION> CLEAR>ERR).

E005

Main Cause	The fixing web has been taken up. The fixing web length sensor (PS45) is faulty. The DC controller PCB is faulty.
Mode of Detection	0000 The length of fixing web that has been taken up is in excess of the specified length.
Caution	After replacing the fixing web, be sure to reset the two web counters in service mode: COPIER>COUNTER>MISC>FIX-WEB and COPIER> COUNTER>DRBL-1>FX-WEB.

COPYRIGHT © 2000 CANON INC.

E010

Main Cause: The main motor (M2) is faulty. The DC controller PCB is faulty.

Mode of Detection:

0000 The clock pulses do not arrive for 2 secs or more after the main motor drive signal (MMFG) has been generated.

E012

Main Cause: The drum motor (M1) is faulty. The DC controller PCB is faulty.

Mode of Detection:

0000 The clock pulses do not arrive for 2 secs or more after the drum motor drive signal (DMFG) has been generated.

E013

Main Cause: The waste toner feedscrew is faulty. The water toner clock sensor (MSW2) is faulty. The DC controller PCB is faulty.

Mode of Detection:

0000 The rotation of the waste toner feedscrew goes out of order, and the switch (MSW2) is pressed multiple times during a specific period of time.

E014

Main Cause: The fixing motor (M19) is faulty. The DC controller PCB is faulty.

Mode of Detection:

0000 The motor clock signal is detected for 2 secs or more continuously after the fixing motor drive signal has been generated.

E020

Main Cause: The hopper connector is left disconnected. The hopper motor (M9/M10) is faulty. The toner sensor (TS1/TS2) is faulty. The DC controller PCB is faulty.

Mode of Detection:

0000 During printing, the toner supply signal is '0' (absence of toner) for 2 mins.

COPYRIGHT © 2000 CANON INC.

E032

Main Cause: The copy data controller or the remote diagnostic device is faulty. The Main controller PCB is faulty.

Mode of Detection:

0001 Although once connected, the copy data controller or the remote diagnostic device has become disconnected.

E061

Main Cause: The laser shutter is faulty. The laser unit is faulty. The potential measurement PCB is faulty. The DC controller PCB is faulty.

Mode of Detection:

0001 As the result of potential control, the drum surface potential (VL2) of the white background is about 200 V (generating solid black images).

0002 The primary charging output used for print output and the drum surface potential after laser output has been made are about 200 V (generating solid black images).

E100

Main Cause: The BD PCB is faulty. The laser unit is faulty. The laser driver PCB is faulty. The wiring is faulty (short circuit, open circuit). The DC controller PCB is faulty.

Mode of Detection:

0001 In 100 msec after the laser drive signal has been generated, the BD signal is not detected 50 times or more within 40 msecs.

0002 While the laser is on, the BD signal cycle is found to be outside a specific range 10 times or more.

COPYRIGHT © 2000 CANON INC.

E110

Main Cause

The laser scanner motor (M15) is faulty. The wiring is faulty (short circuit, open circuit). The DC controller PCB is faulty.

Mode of Detection

0001
- After the laser scanner motor drive signal has been generated, the motor ready signal (LMRDY*) does not arrive for 15 secs or more. (stop → full speed, half-speed → full speed)
- During the period of 'full speed → half speed', the motor ready signal does not arrive for 60 secs or more after the speed change signal has been generated.
- During the period of 'full speed rotation', the motor ready signal is not detected 50 times or more (t intervals of 100 msec).

E121

Main Cause

The controller cooling fan (FM4) is faulty. The wiring is faulty (short circuit, open circuit). The DC controller PCB is faulty.

Mode of Detection

0001 Although the controller cooling fan (FM4) is being driven, the clock signal (FM4LCK) does not arrive for 5 secs or more.

E196

Main Cause

The EEPROM on the DC controller PCB is faulty. The location of the EEPROM is wrong. The DC controller PCB is faulty.

Mode of Detection

1abb When data is written to the EEPROM, the data written and the data read do not match.

2abb When the ID read into the EEPROM and the ID into the ROM are compared, a mismatch is found.

3abb When ID in the EEPROM and the ID in the ROM are compared after the main power switch is turned on, a mismatch is found.

a: chip Nos. 0 through 5 (0: IC104, 1: IC105, 2: IC109, 3: IC110, 4: IC127, 5: IC130)

bb: chip faulty address (bit)

COPYRIGHT © 2000 CANON INC.

E202

Main Cause	The scanner HP sensor (PS39) is faulty. The scanner motor (M3) is faulty. The reader controller PCB is faulty.
Mode of Detection	0001 The scanner HP sensor does not turn off even when the scanner has been moved 40 mm forward after the main power switch has been turned on or the Start key has been pressed. 0002 The scanner HP sensor does not turn on even when the scanner has been moved 450 mm in reverse.
Caution	No code is indicated, and keys are locked. The code may be checked in service mode (COPIER>DISPLAY>ERR).

E204

Main Cause	The ADF controller PCB is faulty. The reader controller PCB is faulty.
Mode of Detection	0001 During printing, the image leading edge signal does not arrive from the ADF.
Caution	No code is indicated, and keys are locked. The code may be checked in service mode (COPIER>DISPLAY>ERR).

E220

Main Cause	The lamp inverter PCB is faulty. The reader controller PCB is faulty.
Mode of Detection	0001 The lamp inverter PCB is found to have a fault.

E225

Main Cause	The scanning lamp (xenon tube) is faulty. The inverter PCB is faulty. The CCD/AP PCB is faulty. The reader controller PCB is faulty.
Mode of Detection	0000 A specific signal level cannot be attained by CCD gain correction at power-on. 0002 The edge gain correction value changed more than a specific level compared with the correction value used for the preceding sheet.

COPYRIGHT © 2000 CANON INC.

E240

Main Cause: The main controller PCB. The DC controller PCB is faulty.

Mode of Detection:

0000 An error has occurred in the communication between the main controller PCB and the CPU of the DC controller PCB.

E243

Main Cause: The control panel CPU PCB is faulty. The main controller PCB is faulty.

Mode of Detection:

0000 An error has occurred in communication between the CPU of the control panel CPU PCB and the main controller PCB.

E248

Main Cause: The EEPROM on the reader controller PCB is faulty. The reader controller PCB is faulty.

Mode of Detection:

0001 The ID read into the EEPROM when the main power switch has been turned on and the ID in the ROM do not match.

0002 When data is written into EEPROM, the data written and the data read do not match.

0003 When data is written, the ID in the EEPROM and the ID in the ROM are found not to match.

E302

Main Cause: The CCD/AP PCB is faulty. The wiring is faulty (short circuit, open circuit). The reader controller PCB is faulty.

Mode of Detection:

0001 During shading, the reader controller PCB does not end shading in 1 sec.

0002 In stream reading, the edge white accumulation (processing) does not end after a period of 10 secs.

COPYRIGHT © 2000 CANON INC.

E601

Main Cause

The wiring is faulty (short circuit, open circuit). The hard disk drive is faulty. The DC controller PCB is faulty. The main controller PCB is faulty.

Mode of Detection

0000 The main controller PCB has detected an error in control data while an image was transmitted between the main controller PCB and the hard disk drive.

0001 The main controller PCB has found an error in the control data in transfer of images between main controller PCB and the DC controller PCB.

E602

Main Cause

The wiring is faulty (short circuit, open circuit). The hard disk drive is faulty. The main controller PCB is faulty.

Mode of Detection

0001 A mount error was detected when the hard disk was started up from the boot ROM.

0002 A data read error (from the hard disk) was detected when the hard disk was started from the boot ROM.

E607

Main Cause

The hard disk fan (FM7) is faulty. The wiring is faulty (short circuit, open circuit). The DC controller PCB is faulty.

Mode of Detection

0000 While the hard disk fan (FM7) is being driven, the clock signal (FM7CLK) does not arrive for 5 secs or more.

E677

Main Cause

The various printer board (accessories) are faulty. The main controller PCB is faulty.

Mode of Detection

0001 An error has occurred in the communication between the various printer boards (accessories) and the main controller PCB.

COPYRIGHT © 2000 CANON INC.

E710

Main Cause

The DC controller PCB is faulty. The reader controller PCB is faulty. The main controller PCB is faulty.

Mode of Detection

0001	When the main power is turned on, the IPC (IC5021) on the reader controller PCB cannot be initialized.
0002	When the main power is turned on, the IPC (IC120) on the DC controller PCB cannot be initialized.
0003	When the main power is turned on, the IPC (IC1003) on the main controller PCB cannot be initialized.

E711

Main Cause

The connector is not connected properly. The remote diagnostic device PCB is faulty. The copy data controller PCB is faulty. The ADF controller PCB is faulty. The ADF controller PCB is faulty. The finisher controller PCB is faulty.

Mode of Detection

0001	Data has been written to the error register of the IPC (IC5021) on the reader controller PCB four times or more within 1.5 secs.
0002	Data has been written to the error register of the IPC (IC120) on the DC controller PCB four times or more within 2 secs.
0003	Data has been written to the error register of the IPC (IC1003) of the main controller PCB four times or more within 2 secs.

E712

Main Cause

The connector is not connected properly. The ADF 24-V power supply is faulty. The ADF controller PCB is faulty. The reader controller PCB is faulty.

Mode of Detection

0001	Communication does not resume in 3 secs after data has been written to the error register of the communication IC (IPC) of the ADF controller PCB.
0002	The transmission bit is not enabled after a period of 10 sec at the sync register of the IPC (IC5021) on the reader controller PCB.

COPYRIGHT © 2000 CANON INC.

E713

Main Cause	The connector is not connected properly. The finisher accessories power supply PCB is faulty. The finisher controller PCB is faulty. The DC controller PCB is faulty.
Mode of Detection	0000 The communications IC (IPC) on the finisher controller has gone out of order.

E717

Main Cause	The wiring is faulty (short circuit, open circuit). The copy data controller or the remote diagnostic device is faulty. The main controller PCB is faulty.
Mode of Detection	0001 The copy data controller or the NE controller is out of order or an open circuit has been detected.
Caution	The error must be reset in service mode (COPIER>FUNCTION> CLEAR>ERR).

E719

Main Cause	The wiring is faulty (short circuit, open circuit). The coin vendor is faulty. The main controller PCB is faulty.
Mode of Detection	0001 The communication between the coin vendor and the main controller PCB has been interrupted.
Caution	The error must be reset in service mode (COPIER>FUNCTION> CLEAR>ERR).

E732

Main cause	The connector has poor contact. The reader controller PCB is faulty.
Mode of Detection	0001 The main controller PCB has detected an error in the communication between the reader controller PCB and the main controller PCB.

E733

Main cause	The connector has poor contact. The DC controller PCB is faulty.
Mode of Detection	0001 The main controller PCB has detected an error in the communication between the DC controller PCB and the main controller PCB.

COPYRIGHT © 2000 CANON INC.

E740

Main cause: The LAN card is faulty. The main controller PCB is faulty.

Mode of Detection:

- 0001 An error is detected on the LAN card at power-on (with the card inserted).
- 0002 A MAC address is found to be faulty.
- 0003 The LAN card register cannot be read.

E741

Main Cause: The PCI bus connection is not proper. The main controller PCB is faulty.

Mode of Detection:

- 0000 An error has occurred in the PCI bus.

E742

Main Cause: The RIP1 board (accessory) is faulty. The main controller PCB is faulty.

Mode of Detection:

- 0000 An error has been detected by self diagnosis of the RIPI board.

E743

Main cause: The connector has poor contact. The main controller PCB is faulty.

Mode of Detection:

- 0000 The reader controller PCB has detected an error in the communication between the main controller PCB and the reader controller PCB.

E804

Main Cause: The wiring is faulty (short circuit, open circuit). The DC power supply fan (FM6) is faulty. The DC controller PCB is faulty.

Mode of Detection:

- 0000 While the DC power supply fan is being driven, the clock signal (FM6CLK) does not arrive for 5 secs or more.

COPYRIGHT © 2000 CANON INC.

E805

Main Cause	The wiring is faulty (short circuit, open circuit). The feed fan (FM1) is faulty. The heat discharge fan (FM3) is faulty. The DC controller PCB is faulty.
Mode of Detection	0001 While the heat discharge fan is being driven, the clock signal (FM3CLK) does not arrive for 5 secs or more. 0002 While the feed fan is being driven, the clock signal (FM1CLK) does not arrive for 5 secs or more.

E824

Main Cause	The wiring is faulty (short circuit, open circuit). The primary charging assembly cooling fan (FM2) is faulty. The DC controller PCB is faulty.
Mode of Detection	0000 While the primary charging assembly cooling fan is being driven, the clock signal (FM2CLK) does not arrive for 5 secs or more.

COPYRIGHT © 2000 CANON INC.

1.2 Self Diagnosis of the ADF

When the machine's self diagnosis mechanism has turned on, the condition can be reset by turning off and then on the host machine's power switch.

If the machine must remain out of order, prints may still be made by disconnecting the machine's lattice connector, and placing an original on the host machine's copyboard glass.

E412	
Main Cause	The cooling fan (FM1) is faulty. The ADF controller PCB is faulty.
Mode of Detection	0001 While the cooling fan is being driven, the lock signal (FMLCK) arrives for 100 msec or more.
E420	
Main Cause	The EEPROM is faulty. The ADF controller PCB is faulty.
Mode of Detection	0001 When the host machine's power switch is turned on, the backup data of the EEPROM cannot be read or the data, if read, has an error.
E421	
Main Cause	The EEPROM is faulty. The ADF controller PCB is faulty.
Mode of Detection	0001 Backup data cannot be written to the EEPROM or the data, if written, has an error.
E422	
Main Cause	The IPC communication has an error. The communication line has an open circuit. The ADF controller PCB is faulty.
Mode of Detection	0001 While the machine is in standby, the communication with the host machine has been interrupted for 5 secs or more. or, while the machine is in operation, the communication with the host machine has been interrupted for 0.5 sec or more.

COPYRIGHT © 2000 CANON INC.

1.3 Self Diagnosis of the Finisher

E500	
Main Cause	The finisher controller PCB is faulty. The DC controller PCB is faulty.
Mode of Detection	0001 The communication between the host machine and the finisher has been interrupted; this error is detected by the host machine.
E503	
Main Cause	The saddle stitcher controller PCB is faulty. The finisher controller PCB is faulty.
Mode of Detection	0002 The communication between the saddle stitcher controller PCB and the finisher controller PCB has been interrupted.
E504	
Main Cause	The height sensor (PS1) is faulty. The finisher controller PCB is faulty.
Mode of Detection	0001 Communication between the height sensor and the finisher controller PCB is not possible, or communication data has an error. 0002 Communication between the height sensor and the finisher controller PCB is not possible for a specific period of time. 0003 At time of power-on, the connector of the height sensor is found to be disconnected. 0004 When the height sensor is being adjusted using the DIP switch, an error occurred during the adjustment.
E505	
Main Cause	The EEPROM is faulty. The finisher controller PCB is faulty. The puncher driver PCB is faulty.
Mode of Detection	0001 When the power switch is turned on, the check sum of the EEPROM on the finisher controller PCB is found to have an error. 0002 When the power switch is turned on, the check sum of the EEPROM on the puncher driver PCB is found to have an error.

COPYRIGHT © 2000 CANON INC.

E512

Main Cause: The delivery motor clock sensor (PI10) is faulty. The delivery motor (M2) is faulty. The finisher controller PCB is faulty.

Mode of Detection:

- 0001 When operation starts, as many clocks as needed do not arrive from the delivery motor clock sensor.
- 0002 No clock pulse arrives while paper is being moved over a distance of 200 mm.

E530

Main Cause: The alignment plate home position sensor (PI6) is faulty. The alignment motor (M3) is faulty. The finisher controller PCB is faulty.

Mode of Detection:

- 0001 The alignment plate does not leave home position when the alignment motor has been driven for 2 secs.
- 0002 The alignment plate does not return to home position when the alignment motor has been driven for 2 secs.

E531

Main Cause: The stapler home position detecting switch (MS7) is faulty. The stapler motor (M6) is faulty. The finisher controller PCB is faulty.

Mode of Detection:

- 0001 The stapler does not leave home position when the stapler motor has been driven for 0.5 sec.
- 0002 The stapler does not return to home position when the stapler motor has been driven for 0.5 sec.

E532

Main Cause: The stapler shift home position sensor (PI7) is faulty. The stapler shift motor (M4) is faulty. The finisher controller PCB is faulty.

Mode of Detection:

- 0001 The stapler unit does not leave home position when the stapler shift motor has been driven for 4 secs.
- 0002 The stapler unit does not return to home position when the stapler shift motor has been driven for 4 secs.

COPYRIGHT © 2000 CANON INC.

E535

Main Cause

The swing motor clock sensor (PI20) is faulty. The swing guide open sensor (PI18) is faulty. The safety area switch (MS3) is faulty. The swing guide closed detecting switch 2 (MS6) is faulty. The swing motor (M7) is faulty. The finisher controller PCB is faulty.

Mode of Detection

- 0001 The swing guide closed detecting switch 2 does not turn on when the swing motor has been rotated CCW for 1 sec.
- 0002 The swing guide open sensor does not turn on when the swing motor has been rotated CW for 1 sec.
- 0003 When the tray lift motor is in operation, the swing guide closed detecting switch 2 is found to be off while the tray 1/2 is at OFF position of the safety area switch.
- 0004 No clock arrives for 200 msecs while the machine is in swing operation.

E540

Main Cause

The tray home position sensor (PI8) is faulty. The tray lifter motor clock sensor 1/2 (PI9/PI19) is faulty. The tray upper limit detecting switch (MS5) is faulty. The tray lifter motor (M5) is faulty. The finisher controller PCB is faulty.

- 0001 The ascent does not end in 15 secs when the tray lift motor is driven; or, the tray home position cannot be detected when the tray lift motor has been driven for 15 secs.
- 0002 While the tray is moving up, the tray upper limit detection switch is found to be on.
- 0003 When the tray lift motor is driven, clock pulses do not arrive from the clock sensor 1/2 for 200 msecs.

E584

Main Cause

The shutter open sensor (PI5) is faulty. The safety area detecting switch (MS3) is faulty. The shutter closed detecting switch (MS4) is faulty. The No. 2 feed motor (M8) is faulty. The finisher controller PCB is faulty.

Mode of Detection

- 0001 The shutter closed detecting switch does not turn on when the No. 2 feed motor has been rotated CCW for 1 sec or more.
- 0002 The shutter open sensor does not turn on when the No. 2 feed motor has been rotated CCW for 1 sec.
- 0003 While the tray lift motor is in operation, the shutter closed detecting switch is found to be off when the tray 1/2 is at OFF position of the safety area detecting switch.

COPYRIGHT © 2000 CANON INC.

E590

Main Cause

The punch home position sensor (PI3P) is faulty. The punch motor (M1P) is faulty. The punch driver PCB is faulty.

Mode of Detection

0001 The puncher does not leave home position when the punch motor has been driven for 200 msecs.

0002 The puncher does not return to home position when the punch motor has been driven for 200 msecs.

E593

Main Cause

The horizontal registration home position sensor (PI1P) is faulty. The horizontal registration motor (M1P) is faulty. The punch driver PCB is faulty.

Mode of Detection

0001 The puncher does not leave home position when the horizontal registration motor has been driven for 4 secs.

0002 The puncher does not return to home position when the horizontal registration motor has been driven for 4 secs.

COPYRIGHT © 2000 CANON INC.

1.4 Self Diagnosis of the Saddle Stitcher

E5F0

Main Cause

The paper positioning plate home position sensor (PI7S) is faulty. The paper positioning plate motor (M4S) is faulty. The saddle stitcher controller PCB is faulty.

Mode of Detection

- 0001 The paper positioning plate home position sensor does not turn on when the paper positioning plate motor has been driven for about 1.3 secs.
- 0002 The paper positioning plate home position sensor does not turn off 1 sec after the paper positioning plate motor has been driven for 1 sec.

E5F1

Main Cause

The folding motor clock sensor (PI4S) is faulty. The paper folding home position sensor (PI21S) is faulty. The folding motor (M2S) is faulty. The saddle stitcher controller PCB is faulty.

Mode of Detection

- 0001 The number of detection pulses of the folding motor clock sensor drops below a specific value.
- 0002 The state of the paper folding home position sensor does not change when the folding motor has been driven for 3 secs.

E5F2

Main Cause

The guide home position sensor (PI13S) is faulty. The guide motor (M3S) is faulty. The saddle stitcher controller PCB is faulty.

Mode of Detection

- 0001 The guide home position sensor does not turn on when the guide motor has been driven for about 0.5 sec.
- 0002 The guide home position sensor does not turn off when the guide motor has been driven for 1 sec.

COPYRIGHT © 2000 CANON INC.

E5F3

Main Cause: The alignment home position sensor (PI5S) is faulty. The alignment motor (M5S) is faulty. The saddle stitcher controller PCB is faulty.

Mode of Detection:

- 0001 The alignment plate home position sensor does not turn on when the alignment motor has been driven for 0.5 sec (initially, driven for about 1.7 sec).
- 0002 The alignment plate home position sensor does not turn off when the alignment motor has been driven for 1 sec.

E5F4

Main Cause: The stitch home position sensor (rear, MS5S) is faulty. The stitch motor (rear, M6S) is faulty. The saddle stitcher controller PCB is faulty.

Mode of Detection:

- 0001 The stitcher home position sensor (rear) does not turn off when the stitch motor (rear) has been rotated CW for 0.5 sec or more.
- 0002 The stitch home position sensor (rear) does not turn on when the stitch motor (rear) has been rotated CCW for 0.5 sec or more.

E5F5

Main Cause: The stitch home position senor (front, MS7S) is faulty. The stitch motor (front, M7S) is faulty. The saddle stitcher controller PCB is faulty.

Mode of Detection:

- 0001 The stitch home position sensor (front) does not turn off when the stitch motor (front) has been rotated CW for 0.5 sec or more.
- 0002 The stitch home position sensor (front) does not turn on when the stitch motor (front) has been rotated CCW for 0.5 sec or more.

COPYRIGHT © 2000 CANON INC.

E5F6

Main Cause

The paper push-on plate motor clock sensor (PI1S) is faulty. The paper push-on plate leading edge position sensor (PI15S) is faulty. The paper push-on plate home position sensor (PI14S) is faulty. The paper push-on plate motor (M8S) is faulty. The saddle stitcher controller PCB is faulty.

Mode of Detection

- 0001 The paper push-on plate home position sensor does not turn on when the paper push-on plate motor has been driven for 0.3 sec or more.
- 0002 The paper push-on plate home position sensor does not turn off when the paper push-on plate motor has been driven for 0.3 sec or more.
- 0003 The paper push-on plate leading edge position sensor does not turn off when the paper push-on plate motor has been driven for 0.3 sec or more.
- 0004 The number of detection pulses of the paper push-on plate motor clock sensor drops below a specific value.
- 0005 The paper push-on plate leading edge sensor does not turn on when the paper push-on plate motor has been driven for 0.3 sec or more.

E5F8

Main Cause

The guide home position sensor (PI13S) is faulty. The paper push-on plate home position sensor (PI14S) is faulty. The paper push-on plate leading edge position sensor (PI15S) is faulty. The saddle stitcher controller PCB is faulty.

Mode of Detection

- 0001 The connector of the guide home position sensor is found to be disconnected.
- 0002 The connector of the paper home positioning plate home position sensor is found to be disconnected.
- 0003 The connector of the paper push-on plate leading edge position sensor is found to be discontented.

COPYRIGHT © 2000 CANON INC.

E5F9

Main Cause

The inlet door switch (MS1S) is faulty. The front door switch (MS2S) is faulty. The delivery door switch (MS3S) is faulty. The saddle stitch controller PCB is faulty.

Mode of Detection

0001 When the inlet cover, front cover, and the delivery cover are found to be closed, the inlet door switch detects an open condition for 1 sec or more from the start of the initial rotation of the host machine or the start of printing.

0002 When the inlet cover, front cover, and delivery cover are found to be closed, the front door switch detects an open condition for 1 sec or more after the start of the initial rotation of the host machine or the start of printing.

0003 When the inlet cover, front cover, and delivery cover are found to be closed, the delivery door switch detects an open condition for 1 sec or more from the start of the initial rotation of the host machine or the start of printing.

COPYRIGHT © 2000 CANON INC.

APPENDIX

COPYRIGHT © 2000 CANON INC.

A. GENERAL TIMING CHART

General Timing Chart I

- A4, 2 Sheets, Single-Sided, Direct; Right Deck (face-down delivery)

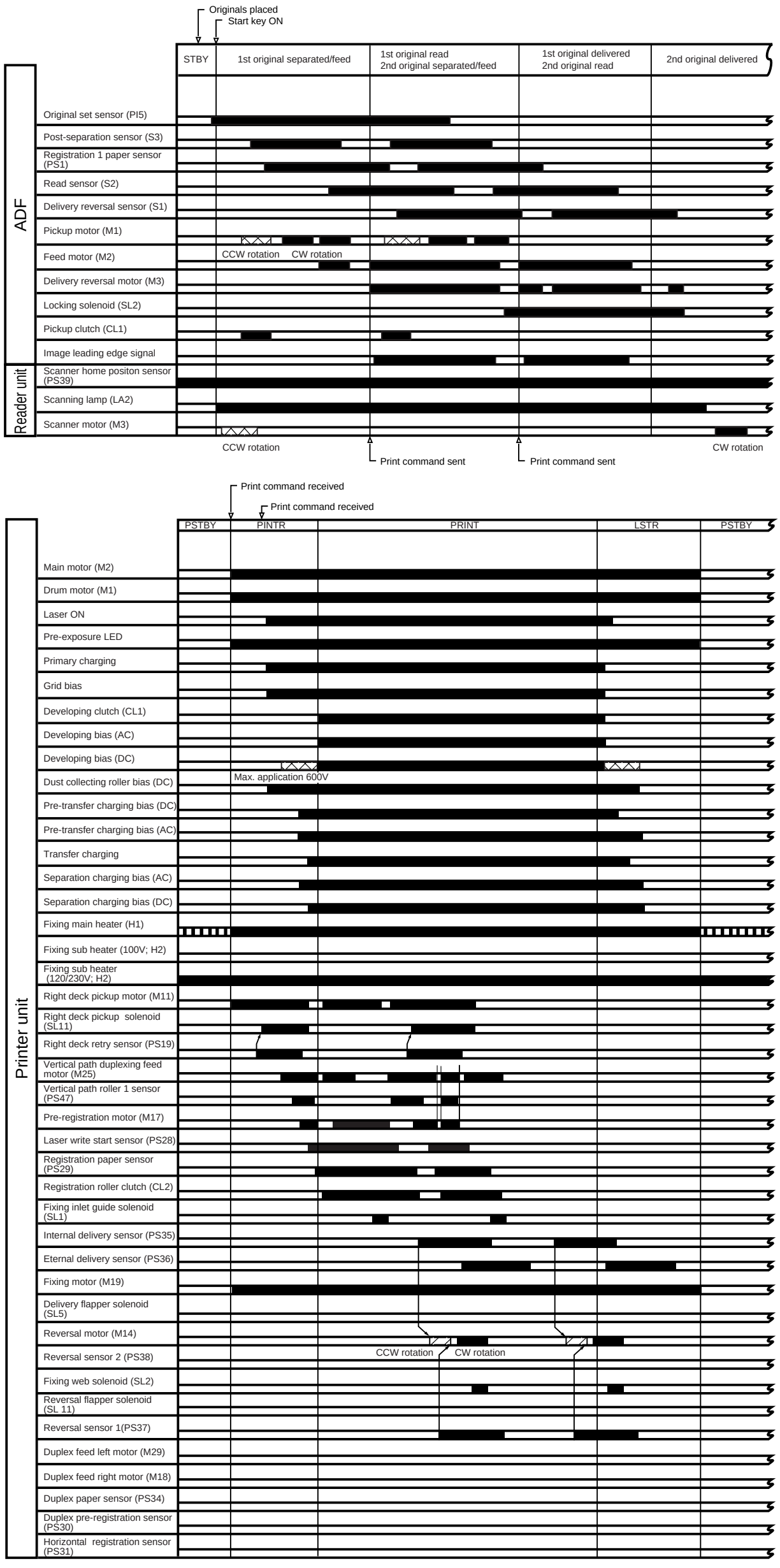

COPYRIGHT© 2000 CANON INC.

General Timing Chart II

· A4, 1 Sheet, Direct, Double-Sided; Right Deck

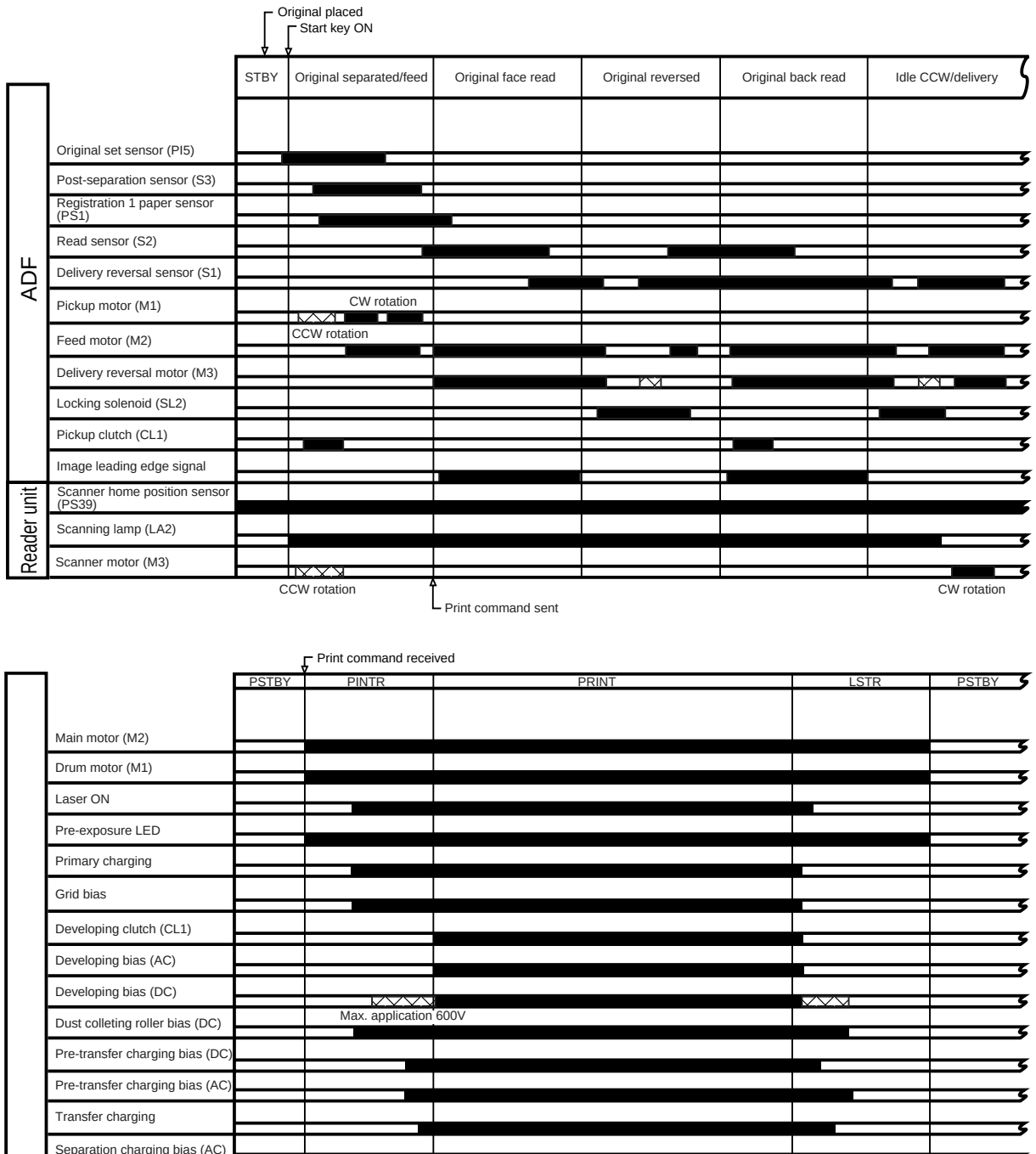

COPYRIGHT© 2000 CANON INC.

B. LIST OF SIGNALS/ABBREVIATIONS

The following is a list of the signals and abbreviations used in this chapter and the circuit diagrams.



The abbreviations in parentheses are electrical signals, but are analog signals, which cannot be expressed in terms of '1' or '0'. Others are digital signals, which may be expressed in terms of '1' or '0'.

ADF_OPEN	ADF COVER OPEN/CLOSED DETECTION signal
C3LMD	CASSETTE3 LIFTER MOTOR DRIVE command
C3LTP	CASSETTE3 LIFTER POSITION DETECTION signal
C3OP	CASSETTE3 OPEN/CLOSED DETECTION signal
C3PD	CASSETTE3 PAPER DETECTION signal
C3PL0	CASSETTE3 LENGTH DETECTION signal
C3PL1	CASSETTE3 LENGTH DETECTION signal
C3PLV	CASSETTE3 PAPER LEVEL DETECTION signal
C3PUSD*	CASSETTE3 PICK-UP SOLENOID DRIVE command
C3PWD	CASSETTE3 PAPER WIDTH DETECTION
C3RTD	CASSETTE3 RETRY DETECTION signal
C4LMD	CASSETTE4 LIFTER MOTOR DRIVE command
C4LTP	CASSETTE4 LIFTER POSITION DETECTION signal
C4OP	CASSETTE4 OPEN/CLOSED DETECTION signal
C4PD	CASSETTE4 PAPER DETECTION signal
C4PL0	CASSETTE4 LENGTH DETECTION signal
C4PL1	CASSETTE4 LENGTH DETECTION signal
C4PLV	CASSETTE4 PAPER LEVEL DETECTION signal
C4PUSD*	CASSETTE4 PICK-UP SOLENOID DRIVE command
C4PWD	CASSETTE4 PAPER WIDTH DETECTION
C4RTD	CASSETTE4 RETRY DETECTION signal
CBOP	FIXING WEB LENGTH DETECTION signal
CJAM	CLAW JAM DETECTION signal
D_SENS3*	DOCUMENT SIZE DETECTION signal
DEV-AC-REMOTE	DEVELOPING DC BIAS REMOTE signal
DEV-DC-CNT	DEVELOPING DC BIAS CURRENT CONTROL signal
DEVCD*	DEVELOPING CLUTCH DRIVE command
DMFG	DRUM MOTOR CLOCK signal

COPYRIGHT © 2000 CANON INC.

DMON	DRUM MOTOR DRIVE command
DPDS	DUPLEXING PAPER DETECTION signal
DRGFPD	DUPLEXING PRE-REGISTRATION PAPER DETECTION signal
DRUM HT ON	DRUM HEATER DRIVE CONTROL signal
DSJAM	DERIVERY JAM DETECTION signal
DSRGPD	DUPLEXING SIDE REGISTRATION PAPER DETECTION signal
DTEP	DEVELOPER TONER signal
EDS	EXTERNAL DELIVERY signal
FCBSD*	FIXING WEB SOLENOID DRIVE command
FDOD	FRONT DOOR OPEN/CLOSE DETECTION signal
FFUS*	FIXING FEED UNIT LOCKED DETECTION signal
FM1CLK	FEEDING FAN CLOCK signal
FM1ON	FEEDING FAN DRIVE command
FM2CLK	PRIMARY CHARGING COOLING FAN CLOCK signal
FM2ON	PRIMARY CHARGING COOLING FAN DRIVE command
FM3CLK	DERIVERY FAN CLOCK signal
FM3ON	DELIVERY FAN DRIVE command
FM4CLK	CONTROLLER COOLING FAN CLOCK signal
FM4ON	CONTROLLER COOLING FAN DRIVE command
FM5CLK	DE-CURLING FAN CLOCK signal
FM5ON	DE-CURLING FAN DRIVE command
FM6CLK	DC POWER SUPPLY FAN CLOCK signal
FM6ON	DC POWER SUPPLY FAN DRIVE command
FM7CLK	HARD DISK FAN CLOCK signal
FM7ON	HARD DISK FAN DRIVE command
FM8CLK	DUPLEXING FAN CLOCK signal
FM8ON	DUPLEXING FAN DRIVE command
HPSENS	SCANNER HOME POSITION DETECTION signal
HV-CR-REMOTE	DUST-COLLECTING ROLLER BIAS REMOTE signal
IDS	INTERNAL DELIVERY signal
INV_ERR	INVERTER ERROR signal
L-RDY	LASER INTENSITY READY signal
LAMP_ON	SCANNING LAMP DRIVE command
LD(+)	LASER DRIVE signal
LD(-)	LASER DRIVE signal
LD-DT	LASER INTENSITY REFERENCE signal

COPYRIGHT © 2000 CANON INC.

LD-EN	LASER ENABLE signal
LDCLD*	LEFT DECK PULL-OFF CLUTCH DRIVE command
LDEL	LEFT DECK LIMIT DETECTION signal
LDEOP	LEFT DECK OPEN/CLOSED DETECTION signal
LDLM	LEFT DECK LIFTER MOTOR DRIVE command
LDLTP	LEFT DECK LIFTER POSITION DETECTION signal
LDPD	LEFT DECK PAPER DETECTION signal
LDPD1	LEFT DECK PAPER LEVEL DETECTION signal1
LDPD2	LEFT DECK PAPER LEVEL DETECTION signal2
LDPFS	LEFT DECK FEED PAPER DETECTION signal
LDPUSD*	LEFT DECK PICK-UP SORENOID DRIVE command
LDRT	LEFT DECK RETRY DETECTION signal
LMON	LASER SCANNER MOTOR DRIVE command
LMRDY	LASER SCANNER MOTOR READY signal
LMSPSEL	LASER SCANNER MOTOR SPEED SELECT signal
LODOP	RIGHT LOWER COVER OPEN/CLOSED DETECTION signal
LSH	SAMPLE LASER ACTIVATION signal
LWRPD	LASER WRITE START DETECTION signal
M10ON	HOPPER MOTOR (TONER SUPPLY) DRIVE command
M11_A	RIGHT DECK PICK-UP MOTOR (A) DRIVE command
M11_A*	RIGHT DECK PICK-UP MOTOR (A*) DRIVE command
M11_B	RIGHT DECK PICK-UP MOTOR (B) DRIVE command
M11_B*	RIGHT DECK PICK-UP MOTOR (B*) DRIVE command
M12_A	CASSETTE3/4 PICK-UP MOTOR (A) DRIVE command
M12_A*	CASSETTE3/4 PICK-UP MOTOR (A*) DRIVE command
M12_B	CASSETTE3/4 PICK-UP MOTOR (B) DRIVE command
M12_B*	CASSETTE3/4 PICK-UP MOTOR (B*) DRIVE command
M13_A	DERIVERY MOTOR (A) DRIVE command
M13_A*	DERIVERY MOTOR (A*) DRIVE command
M13_B	DERIVERY MOTOR (B) DRIVE command
M13_B*	DERIVERY MOTOR (B*) DRIVE command
M14_A	REVERSAL MOTOR (A) DRIVE command
M14_A*	REVERSAL MOTOR (A*) DRIVE command
M14_B	REVERSAL MOTOR (B) DRIVE command
M14_B*	REVERSAL MOTOR (B*) DRIVE command
M16_A	DUPLEXING HORIZONTAL REGISTRATION MOTOR (A) DRIVE command

COPYRIGHT © 2000 CANON INC.

M16_A*	DUPLEXING HORIZONTAL REGISTRATION MOTOR (A*) DRIVE command
M16_B	DUPLEXING HORIZONTAL REGISTRATION MOTOR (B) DRIVE command
M16_B*	DUPLEXING HORIZONTAL REGISTRATION MOTOR (B*) DRIVE command
M17_A	PRE-REGISTRATION MOTOR (A*) DRIVE command
M17_A*	PRE-REGISTRATION MOTOR (A) DRIVE command
M17_B	PRE-REGISTRATION MOTOR (B*) DRIVE command
M17_B*	PRE-REGISTRATION MOTOR (B) DRIVE command
M18_A*	DUPLEXING FEEDING RIGHT MOTOR (A*) DRIVE command
M18_A*	DUPLEXING FEEDING RIGHT MOTOR (A) DRIVE command
M18_B	DUPLEXING FEEDING RIGHT MOTOR (B) DRIVE command
M18_B*	DUPLEXING FEEDING RIGHT MOTOR (B*) DRIVE command
M19LD	FIXING MOTOR LOCK DETECTION signal
M19ON	FIXING MOTOR DRIVE command
M24_A	LEFT DECK PICK-UP MOTOR (A) DRIVE command
M24_A*	LEFT DECK PICK-UP MOTOR (A*) DRIVE command
M24_B	LEFT DECK PICK-UP MOTOR (B) DRIVE command
M24_B*	LEFT DECK PICK-UP MOTOR (B*) DRIVE command
M25_A	VERTICAL PATH DUPLEXING FEEDING MOTOR (A) DRIVE command
M25_A*	VERTICAL PATH DUPLEXING FEEDING MOTOR (A*) DRIVE command
M25_B	VERTICAL PATH DUPLEXING FEEDING MOTOR (B) DRIVE command
M25_B*	VERTICAL PATH DUPLEXING FEEDING MOTOR (B*) DRIVE command
M26_A	VERTICAL PATH UPPER MOTOR (A) DRIVE command
M26_A*	VERTICAL PATH UPPER MOTOR (A*) DRIVE command
M26_B	VERTICAL PATH UPPER MOTOR (B) DRIVE command
M26_B*	VERTICAL PATH UPPER MOTOR (B*) DRIVE command
M27_A	VERTICAL PATH LOWER MOTOR (A) DRIVE command
M27_A*	VERTICAL PATH LOWER MOTOR (A*) DRIVE command
M27_B	VERTICAL PATH LOWER MOTOR (B) DRIVE command
M27_B*	VERTICAL PATH LOWER MOTOR (B*) DRIVE command
M29_A	DUPLEXING FEEDING LEFT MOTOR (A) DRIVE command
M29_A*	DUPLEXING FEEDING LEFT MOTOR (A*) DRIVE command
M29_B	DUPLEXING FEEDING LEFT MOTOR (B) DRIVE command
M29_B*	DUPLEXING FEEDING LEFT MOTOR (B*) DRIVE command
M3A	SCANNER MOTOR (A) DRIVE command
M3A*	SCANNER MOTOR (A*) DRIVE command
M3B	SCANNER MOTOR (B) DRIVE command

COPYRIGHT © 2000 CANON INC.

M3B*	SCANNER MOTOR (B*) DRIVE command
M9ON	HOPPER MOTOR (TONER STIRRING) DRIVE command
MFDS	MANUAL FEED TRAY OPEN/CLOSED DETECTION signal
MFLSD*	MULTI FEED RELEASING SORENOID DRIVE command
MFPCD*	MULTI FEED ROLLER CLUTCH DRIVE command
MFPD	MANUAL FEED PAPER WIDTH DETECTION
MFS	MULTIFEEDER PAPER DETECTION signal
MMFG	MAIN MOTOR DRIVE CLOCK signal
MMON	MAIN MOTOR DRIVE command
PCLM1	PRIMARY CHARGING WIRE CLEANING MOTOR1 DRIVE command
PCLM2	PRIMARY CHARGING WIRE CLEANING MOTOR2 DRIVE command
PEXP	PRE-EXPOSURE LED DRIVE command
POT	PHOTOSENSITIVE DRUM SURFACE POTENTIAL signal
POTON	PHOTOSENSITIVE DRUM SURFACE POTENTIAL SENSOR POWER ON command
PR/TR-REMOTE	HIGH-VOLTAGE REMOTE signal
PR/TR-REMOTE	HIGH-VOLTAGE REMOTE signal
PR-CNT	PRIMARY CORONA CURRENT CONTROL signal
PR-LEAK-DETECT	PRIMARY CHARGING LEAKAGE DETECTION signal
PT/SP-CNT	PRE-TRANSFER CHARGING CONTROL signal
PT/SP-LEAK-DETECT	PRE-TRANSFER/SEPARATION CHARGING LEAKAGE DETECTION signal
PT/SP-REMOTE	PRE-TRANSFER/SEPARATION CHARGING REMOTE signal
PTRCLM1	PRE-TRNANSFER CHARGING WIRE CLEANING MOTOR1 DRIVE command
PTRCLM2	PRE-TRNANSFER CHARGING WIRE CLEANING MOTOR2 DRIVE command
RDEL	RIGHT DECK LIMIT DETECTION signal
RDEOP	RIGHT DECK OPEN/CLOSED DETECTION signal
RDLM	RIGHT DECK LIFTER MOTOR DRIVE command
RDLTP	RIGHT DECK LIFTER POSITION DETECTION signal
RDPD	RIGHT DECK PAPER DETECTION signal
RDPD1	RIGHT DECK PAPER LEVEL DETECTION signal1
RDPD2	RIGHT DECK PAPER LEVEL DETECTION signal2
RDPFS	RIGHT DECK FEED PAPER DETECTION signal
RDPUSD*	RIGHT DECK PICK-UP SORENOID DRIVE command
RDRT	RIGHT DECK RETRY DETECTION signal
RGCD*	REGISTRATION ROLLER CLUTCH DRIVE command
RGPD	REGISTRATION PAPER DETECTION signal
RVFSD1*	DELIVERY FLAPPER SORENOID DRIVE command

COPYRIGHT © 2000 CANON INC.

RVFSD2*	REVERSING FLAPPER SORENOID DRIVE command
RVS1	REVERSING signal1
RVS2	REVERSING signal2
SL1P*	FIXING ASSEMBLY INLET GUIDE SOLENOID DRIVE command
SL1R*	FIXING ASSEMBLY INLET GUIDE SOLENOID DRIVE command
SP-CNT	SEPARATION CHARGING CURRENT CONTROL signal
TEP	HOPPER TONER signal
TH1	FIXING MAIN THERMISTOR signal
TH2	FIXING SUB THERMISTOR signal
THHUM1	MACHINE INSIDE HUMIDITY signal
TR-CNT	TRANSFER CHARGING CURRENT CONTROL signal
TR-LEAK-DETECT	TRANSFER CHARGING LEAKAGE DETECTION signal
TSCLM1	TRANSFER/SEPARATION CHARGING WIRE CLEANING MOTOR1 DRIVE command
TSCLM2	TRANSFER/SEPARATION CHARGING WIRE CLEANING MOTOR2 DRIVE command
VP1PD	VERTICAL PATH 1 PAPER DETECTION signal
VP2PD	VERTICAL PATH 2 PAPER DETECTION signal
VP3PD	VERTICAL PATH 3 PAPER DETECTION signal
VP4PD	VERTICAL PATH 4 PAPER DETECTION signal
WTFL	WASTE TONER FEEDING SCREW LOCKED DETECTION signal

COPYRIGHT © 2000 CANON INC.

Reader controller PCB
PCB12
Inverter PCB
PCB18
Fuse PCB
Scanner motor
Standard 100V model only
Mirror heater
Lamp heater
Original size detection 3
Scanning lamp (Xenon tube)
Scanner home position sensor
Copyboard cover sensor
To ADF
To ADF
CCD/AP PCB
PCB13
Control panel PCB
PCB32
Remote Diagnostic Device II (accessory)
Coin vendor (accessory)
Control Card 1V (accessory)
Hard disk
Main controller PCB
PCB24
Relay PCB
PCB22
Serial number PCB
PCB20
BD PCB
PCB14
Laser scanner motor
Laser driver PCB
PCB11
Cassette 4 pickup solenoid
Cassette 3 pickup solenoid
Vertical path 4 paper sensor
Vertical path 3 paper sensor
Cassette 4 open/closed sensor
Cassette 3 open/closed sensor
Cassette 4 re-try sensor
Cassette 4 paper sensor
Cassette 4 lifter sensor
Cassette 3 re-try sensor
Cassette 3 paper sensor
Cassette 3 lifter sensor
Right deck feeding paper sensor
Right deck re-try sensor
Right deck limit sensor
Right deck paper sensor
Right deck open/ closed sensor
Right deck lifter sensor
Left deck open/ closed sensor
Left deck re-try sensor
Left deck paper sensor
Left deck limit sensor
Left deck pull-off clutch
Left deck level sensor (lower)
Right deck level sensor (lower)
Left deck level sensor (upper)
Right deck level sensor (upper)
DC Controller PCB
PCB1
Manual feed cover open/ closed detection
Front door switch
HDD fan
Anti-rush current PCB
PCB21
Cassette 4 feed detection
Cassette 3 feed detection
Laser write start sensor
Right lower cover open/ closed sensor
Environment sensor
Cassette 4 lifter motor
Cassette 3 lifter motor
Vertical path 1 paper sensor
Vertical path 2 paper sensor
Shift tray PCB
PCB31
Keypad PCB D
Keypad PCB A
Control panel CPU PCB
PCB37
Keypad PCB B
Keypad PCB C
Touch panel
LCD contrast adjustment PCB
Feeding fan
Cassette 4 length detection (100V model only)
Cassette 4 paper width detection (120V model only)
Cassette 3 length detection
Cassette 3 paper width detection
Heat discharging fan
Left deck pickup solenoid
HVT PCB
PCB5
HVT transformer
Capacitor PCB
PCB2
Environment switch
Main power switch
Relay PCB
PCB22
Fixing main heater
Fixing sub heater
AC driver PCB
PCB3
Accessory power supply PCB
PCB
Power cord base
For FINISHER
DC power supply PCB
PCB7
Cassette heater switch
Not found in 120V model
To paper deck
Drum heater control PCB
PCB7
Drum heater
Paper deck heater (accessory)
Cassette heater
Not found in 120V model
Developing assembly toner sensor
Primary charging cooling fan
Potential control PCB
PCB
Hopper supply motor
Hopper toner sensor
Hopper stirring motor
Manual feed tray open/ closed sensor
Pre-transfer charging wire cleaning motor
Pre-exposure LED
Primary charging wire cleaning motor
Potential sensor
AP KIT
Motor driver PCB
PCB4
Right deck pickup solenoid
Right deck lifter motor
Left deck lifter motor
Right deck pickup motor
Vertical path upper motor
Pre-registration motor
Vertical path duplex/ feeding motor
Cassette 3/4 pickup motor
Left deck pickup motor
Vertical path lower motor
Fixing drawer connector
Duplex driver PCB
PCB9
Duplex feed right motor
Reversal motor
Reversal sensor 1
Duplex feeding left motor
Duplex feeding fan
Fixing/feeding relay PCB
PCB23
Registration roller clutch
Registration paper sensor
Transfer/ separation/ charging wire cleaning motor
Fixing assembly inlet guide drive solenoid
Fixing/ feeding lock sensor
Reversal flapper solenoid
Delivery assembly jam sensor
Fixing web solenoid
Fixing web length sensor
Fixing main thermistor
Fixing sub thermistor
De-curling fan
Claw jam sensor
Internal delivery sensor
Fixing motor
Duplex transfer registration sensor
Duplex registration motor
Left deck feeding paper sensor
Reversal sensor
Duplex flapper solenoid
Duplex paper exit sensor
Duplex pre-registration sensor
Duplex re-feed sensor
Duplex re-feed motor
Duplex re-feed clutch
Duplex paper width sensor
Duplex paper length sensor
Manual feed pickup clutch
Manual feed paper width detection
Developing clutch
Manual feed release solenoid
Cooling fan
Fixing/feeding relay PCB
PCB23
Fixing drawer connector
Delivery motor
FUSER/FEED UNIT
TM702
DUPLEX/FEED UNIT
TM703
Duplex feed right motor
Reversal motor
Reversal sensor 1
Duplex feeding left motor
Duplex feeding fan
Fixing motor
Claw jam sensor
Internal delivery sensor
Fixing web solenoid
Fixing main thermistor
Fixing sub thermistor
De-curling fan
Fixing web length sensor
Delivery assembly jam sensor
Reversal flapper solenoid
Fixing assembly inlet guide drive solenoid
Fixing/ feeding lock sensor
Registration roller clutch
Registration paper sensor
Transfer/ separation/ charging wire cleaning motor

COPYRIGHT© 2000 CANON INC.

D. PAPER DECK -G1 GENERAL CIRCUIT DIAGRAM

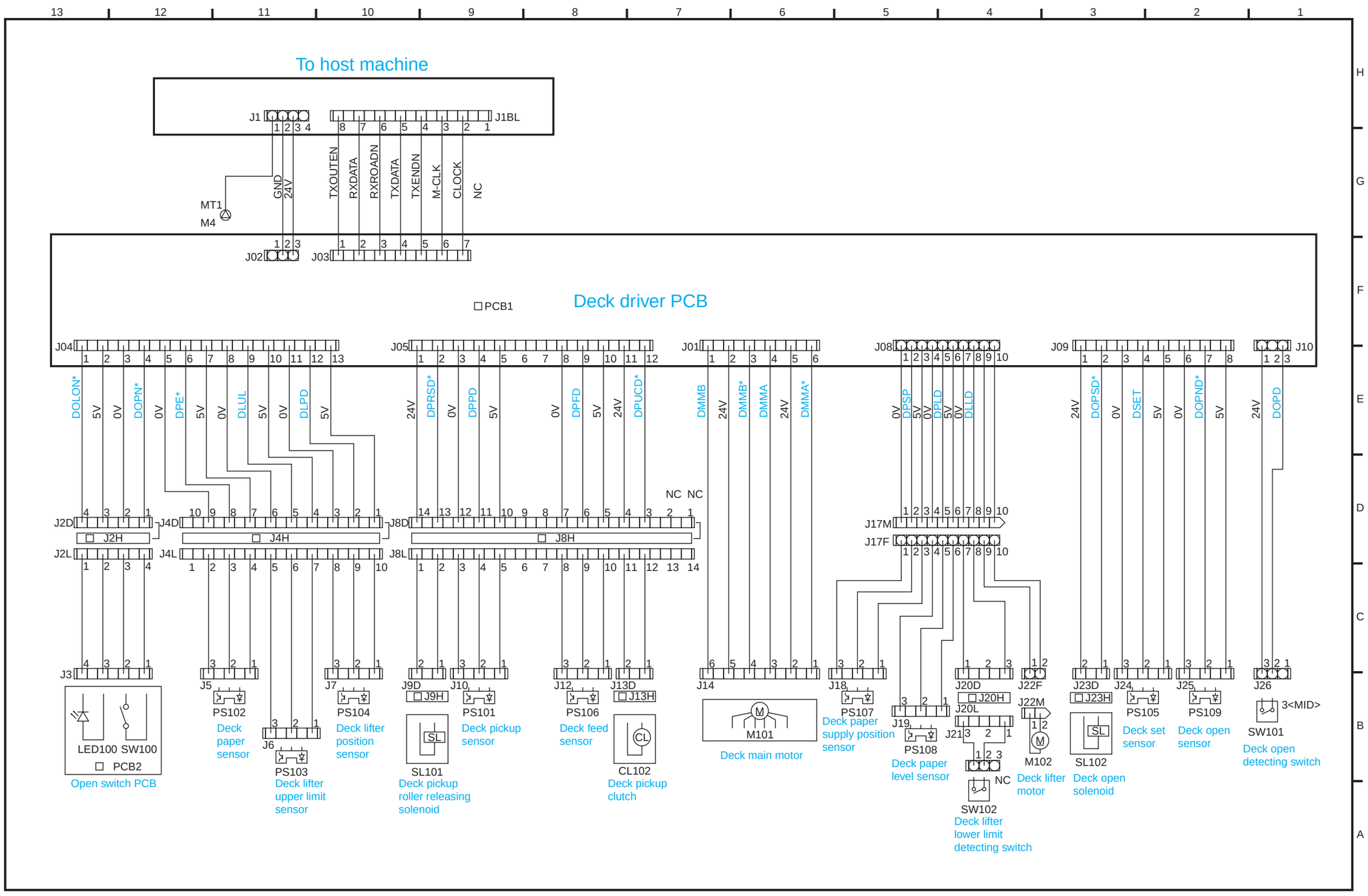

COPYRIGHT © 2000 CANON INC.

E. SHIFT TRAY GENERAL CIRCUIT DIAGRAM

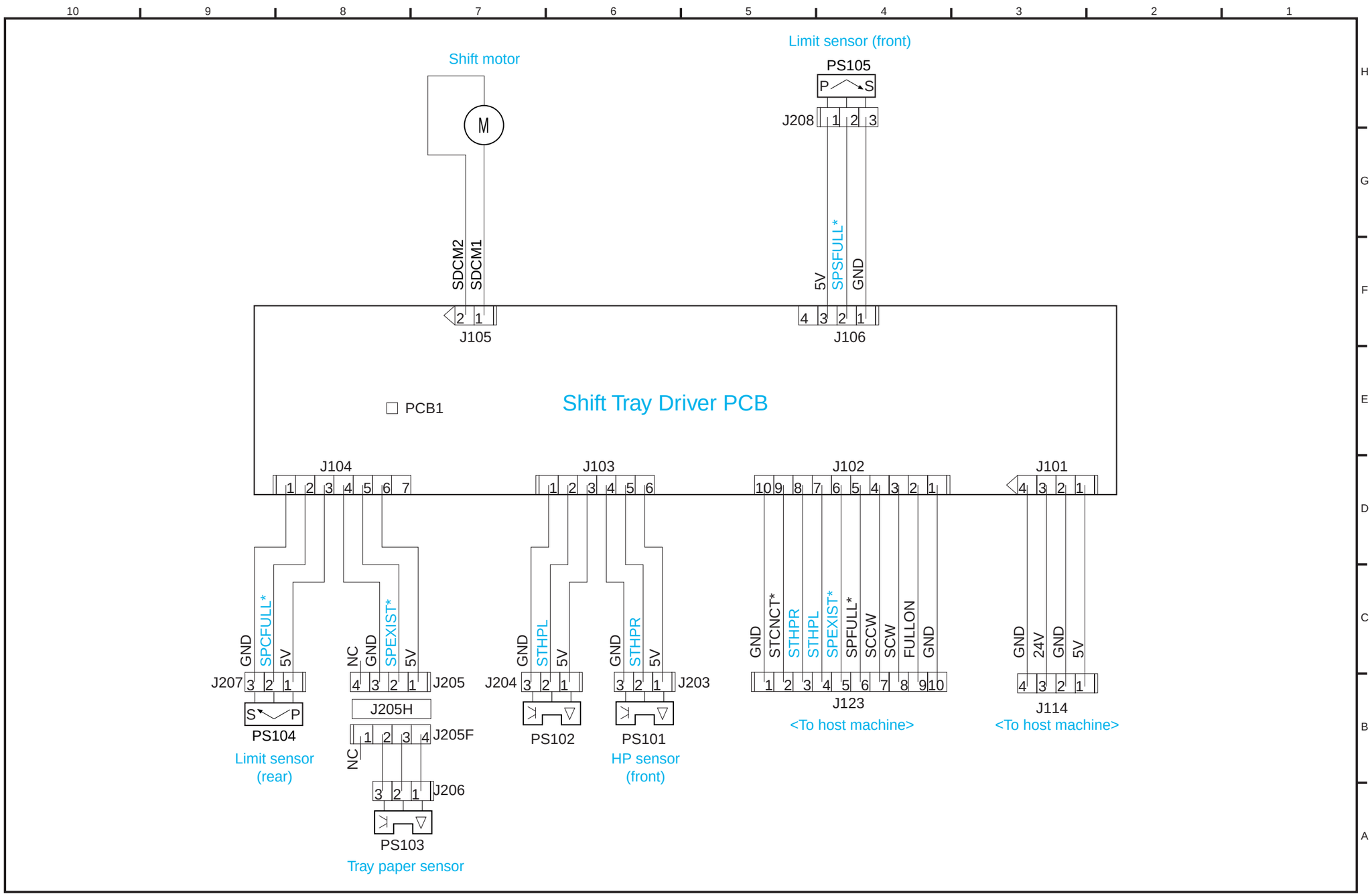

COPYRIGHT © 2000 CANON INC.

F. List of Special Tools

The following special tools will be needed in addition to the standard tools set:

No.	Name	Toll No.	Shape	Rank	Remarks
1	Digital multimeter	FY9-2002	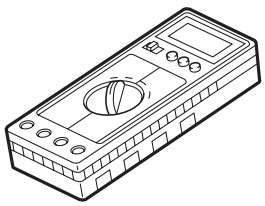	A	Used when making electrical checks.
2	Door switch	TKN-0093	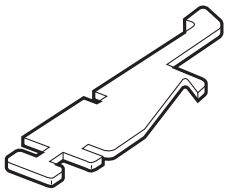	A	
3	Mirror positioning tool (front, rear)	FY9-3009	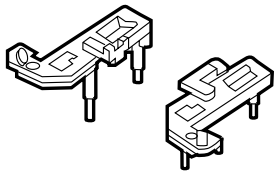	B	Used when positioning the No. 1/No. 2 mirror.
4	NA-3 Test Sheet	FY9-9196	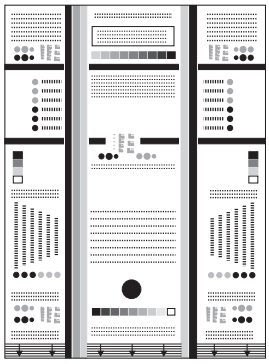	A	Used when adjusting/ checking images.
5	Potential sensor electrode	FY9-3012	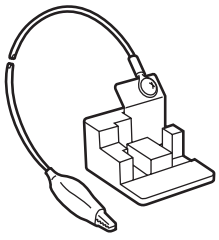	B	Used to make zero-level checks on potential sensors.

No.	Name	Toll No.	Shape	Rank	Remarks
6	Environment sensor checking sensor	FY9-3014	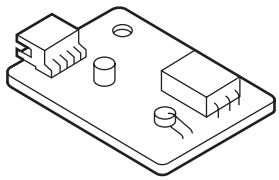	B	Used to check the environment sensor.
7	Tester extension pin	FY9-3038	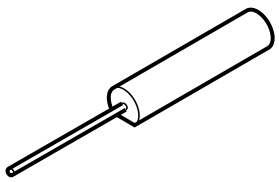	A	Used when making electrical checks.
8	Tester extension pin (L-shaped)	FY9-3039	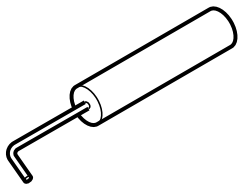	A	Used when making electrical checks.

Rank:

A: each service person is expected to carry one.
B: each group of five persons is expected to carry one.
C: each workshop is expected to carry one.

COPYRIGHT © 2000 CANON INC.

G. List of Solvents/Oils

No.	Name	Uses	Composition	Remarks
1	Alcohol	Cleaning: e.g., glass, plastic, rubber parts; external covers.	Fluorescent family hydrocarbon, alcohol, surface activating agent, water	• Do not bring near fire. • Procure locally. • Substitute: IPA (isopropyl alcohol)
2	Solvent	Cleaning: metal part; oil, toner.	Fluorescent family hydrocarbon, chlorine family hydrocarbon, alcohol.	• Do not bring near fire. • Procure locally.
3	Heat resisting grease	Lubrication: fixing drive parts	Mineral family lithium soap, molybdenum disulfide,	Tool No.: CK-0427 (500g/can)
4	Lubricant		Mineral oil (paraffin family)	Tool No.: CK-0524 (100cc)
5	Lubricant	Lubrication: drive parts, friction parts	Silicone oil	Tool No.: CK-0551 (20g)
6	Drum cleaning powder	Cleaning: photosensitive drum	Cerium oxide	Tool No.: CK-0429
7	Lubricant	Lubrication: scanner rail	Silicone oil	Tool No.: FY9-6011 (50cc)
8	Conducting grease	Lubrication: drum heater contact	Ether, polytetra fluoethylene	Tool No.: FY9-6008 (10 g)

COPYRIGHT © 2000 CANON INC.

Prepared by
Office Imaging Products Technical Support Division
Office Imaging Products Quality Assurance Center
CANON INC.
Printed in Japan

REVISION 0 (JULY 2000) (18723/22109)

5-1, Hakusan 7-chome, Toride-shi, Ibaraki 302-8501 Japan

COPYRIGHT© 2000 CANON INC.



This publication is printed on
100% reprocessed paper.

Canon

PRINTED IN JAPAN (IMPRIME AU JAPON) 0800M1.05-1