Chapter 11 Wiring/Circuit Diagrams

1312/1312F Wiring Diagram for 120V 11-1
1312/1312F Wiring Diagram for 220V to 240V 11-2
UNIT PSU (1/3) for 120V 11-3
UNIT PSU MAIN REGULATOR (2/3) for 120V 11-4
UNIT PSU LAMP REGULATOR (3/3) for 120V 11-5
UNIT PSU (1/3) for 220V to 240V 11-6
UNIT PSU MAIN REGULATOR (2/3)
for 220V to 240V 11-7
UNIT PSU LAMP REGULATOR (3/3)
for 220V to 240V 11-8
UNIT FUSE 11-9
UNIT MAIN (1/9) 11-10
UNIT MAIN CONTROL (2/9) 11-11
UNIT MAIN OPERATION I/F (3/9) 11-12
UNIT MAIN FUSER I/F (4/9) 11-13
UNIT MAIN POWER SUPPLY I/F (5/9) 11-14
UNIT MAIN CLUTCH I/F (6/9) 11-15
UNIT MAIN LOWER CASSETTE I/F (7/9) 11-16
UNIT MAIN STEPPING MOTOR I/F (8/9) 11-17
UNIT MAIN EXTIO I/F (9/9) 11-18
UNIT OPERATION (1/2) 11-19
UNIT OPERATION (2/2) 11-20
UNIT HV (1/4) 11-21
UNIT HV HIGH VOLTAGE (2/4) 11-22
UNIT HV STEPPING MOTOR (3/4) 11-23
UNIT HV TONER MOTOR (4/4) 11-24
UNIT ERASE 11-25
UNIT SIDE ERASE 11-26
PF-105/105H Wiring Diagram 11-27
UNIT CASSETTE FEEDER 11-28

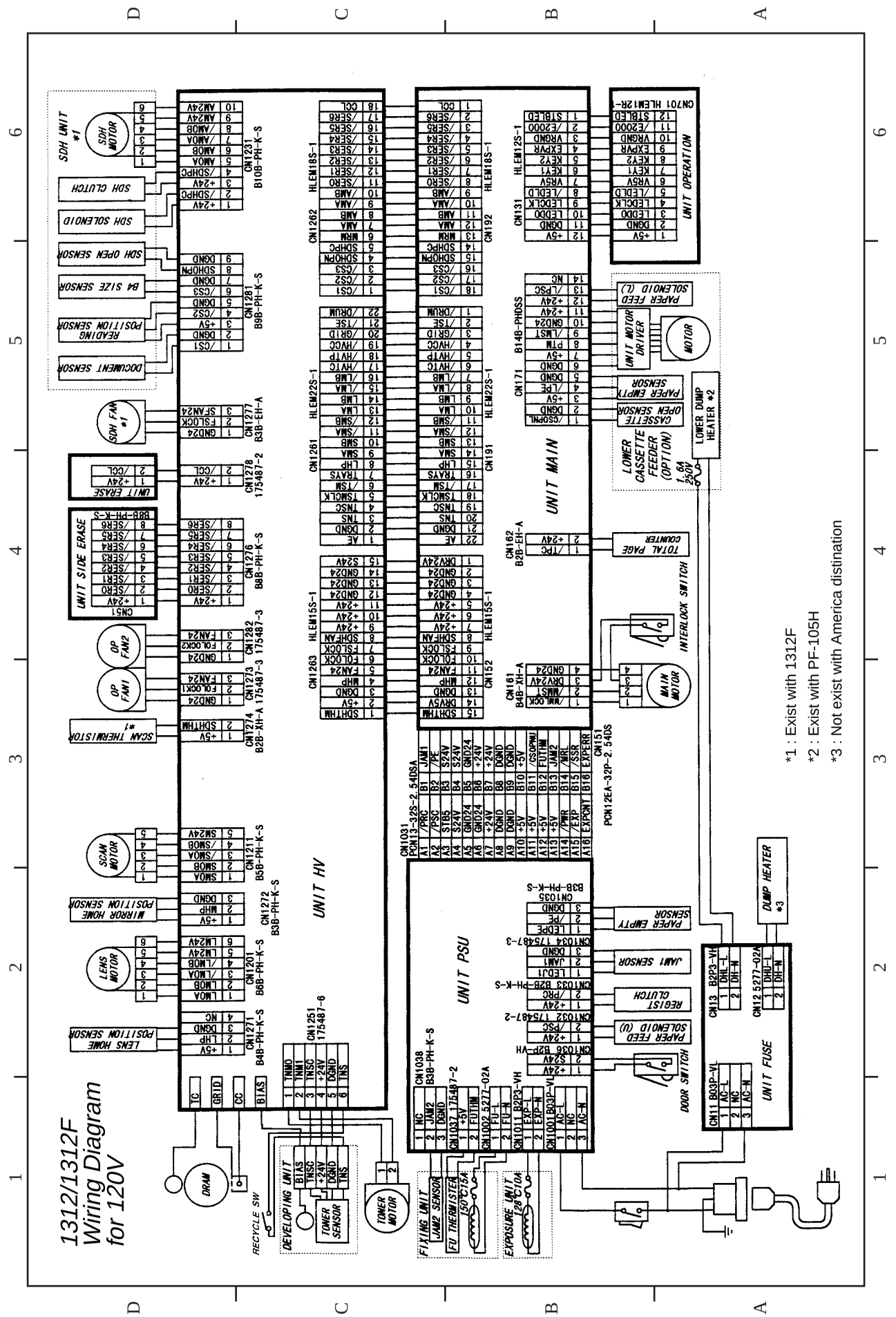

MODEL	MANUAL	REVISED EDITION	DATA	PAGE	METHOD
Konica 1312	SERVICE HANDBOOK	1	May.1999	11-1	REPLACEMENT

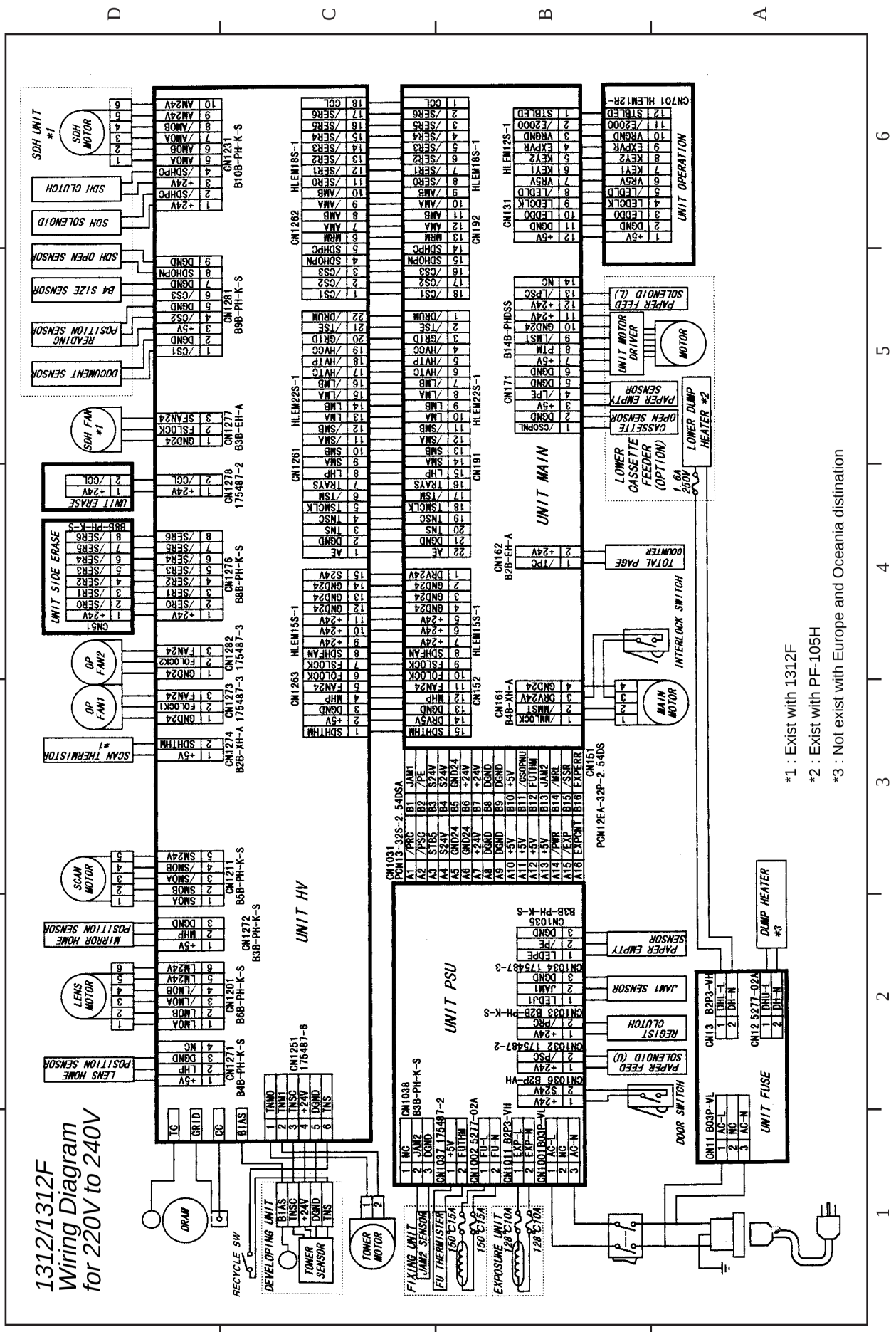
1312/1312F
Wiring Diagram
for 220V to 240V
UNIT HV
UNIT PSU
UNIT MAIN
UNIT OPERATION
UNIT FUSE
UNIT SIDE ERASE
SDH UNIT *1
SDH MOTOR
SDH CLUTCH
SDH SOLENOID
SDH OPEN SENSOR
B4 SIZE SENSOR
POSITION SENSOR
DOCUMENT SENSOR
SDH FAN *1
UNIT ERASE
SCAN THERMISTOR *1
OP FAN2
OP FAN1
SCAN MOTOR
MIRROR HOME SENSOR
LENS MOTOR
LENS HOME SENSOR
DRAM
RECYCLE SW
DEVELOPING UNIT
TONER SENSOR
TONER MOTOR
FIXING UNIT
JAM2 SENSOR
FU THERMISTER
150°C/15A
150°C/15A
EXPOSURE UNIT
200°C/10A
120°C/10A
LOWER CASSETTE FEEDER (OPTION)
PAPER FEED SOLENOID (L)
UNIT MOTOR DRIVER
MOTOR
CASSETTE OPEN SENSOR
PAPER EMPTY SENSOR
LOWER DUMP HEATER *2
1.6A 250V
TOTAL PAGE COUNTER
INTERLOCK SWITCH
MAIN MOTOR
PAPER EMPTY SENSOR
JAM1 SENSOR
REGIST CLUTCH
PAPER FEED SOLENOID (U)
DOOR SWITCH
DUMP HEATER *3
*1 : Exist with 1312F
*2 : Exist with PF-105H
*3 : Not exist with Europe and Oceania distination

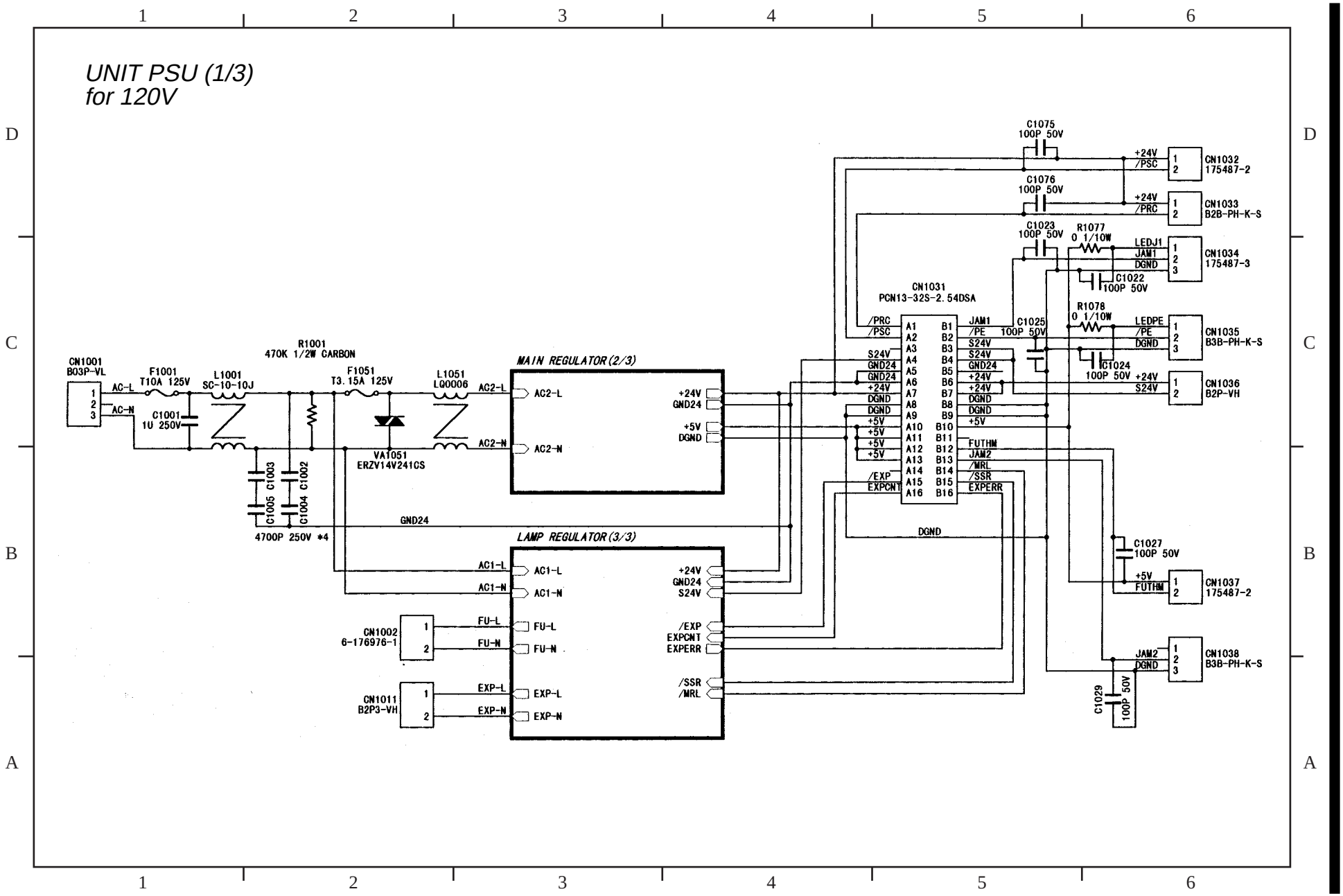
UNIT PSU (1/3)
for 120V
CN1001
B03P-VL
AC-L
AC-N
F1001
T10A 125V
C1001
1U 250V
L1001
SC-10-10J
R1001
470K 1/2W CARBON
F1051
T3.15A 125V
VA1051
ERZV14V241CS
L1051
LQ0006
C1003
C1005
C1002
C1004
4700P 250V *4
GND24
AC2-L
AC2-N
MAIN REGULATOR(2/3)
+24V
GND24
+5V
DGND
LAMP REGULATOR(3/3)
AC1-L
AC1-N
S24V
FU-L
FU-N
EXP-L
EXP-N
/EXP
EXPCNT
EXPERR
/SSR
/MRL
CN1002
6-176976-1
CN1011
B2P3-VH
CN1031
PCN13-32S-2.54DSA
/PRC
/PSC
JAM1
/PE
FUTHM
JAM2
/EXP
EXPCNT
EXPERR
/SSR
/MRL
C1075
100P 50V
C1076
100P 50V
C1023
100P 50V
R1077
0 1/10W
C1022
100P 50V
R1078
0 1/10W
C1025
100P 50V
C1024
100P 50V
C1027
100P 50V
C1029
100P 50V
CN1032
175487-2
CN1033
B2B-PH-K-S
CN1034
175487-3
CN1035
B3B-PH-K-S
CN1036
B2P-VH
CN1037
175487-2
CN1038
B3B-PH-K-S
LEDJ1
LEDPE

UNIT PSU
MAIN REGULATOR (2/3)
for 120V

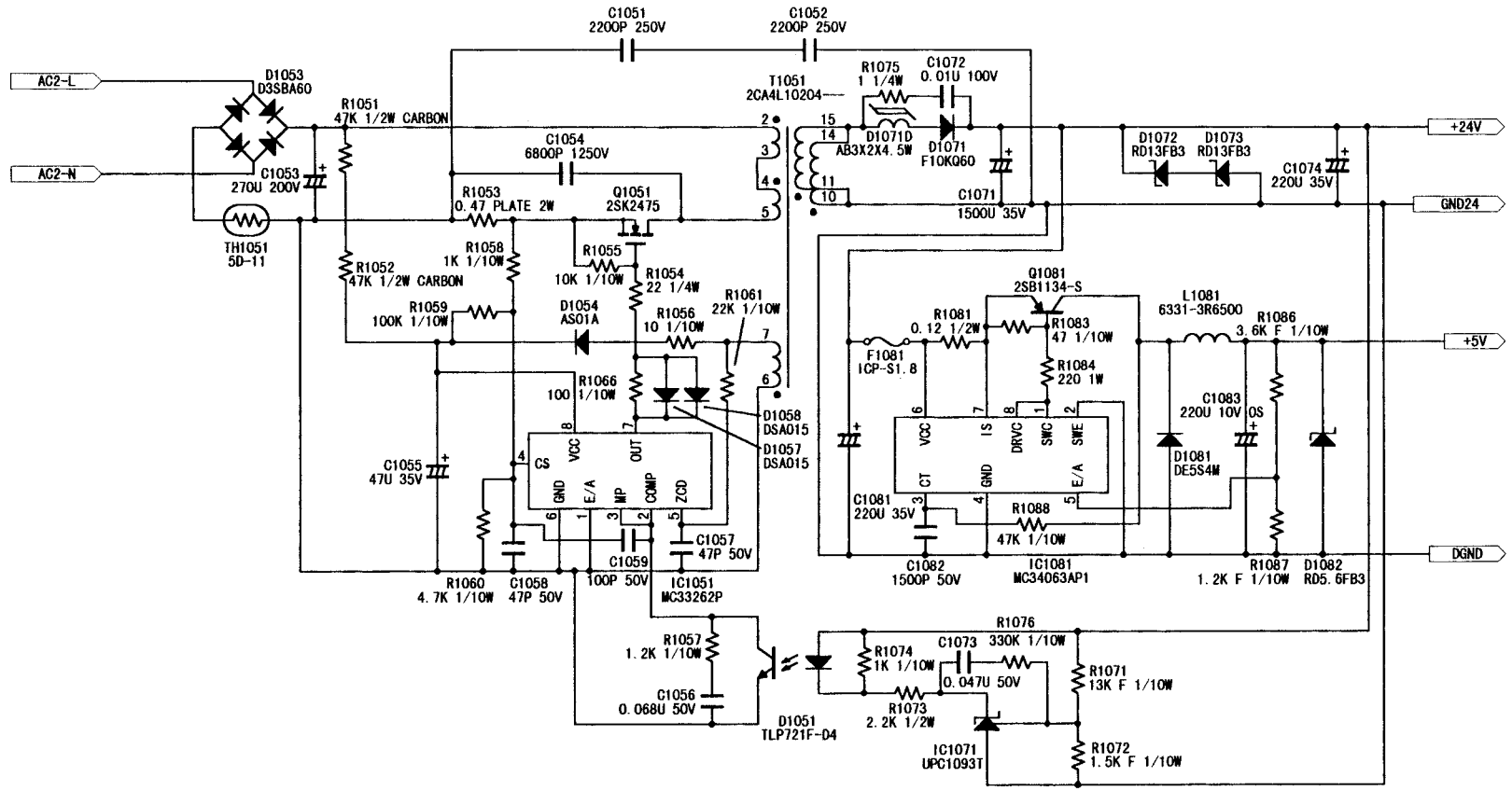

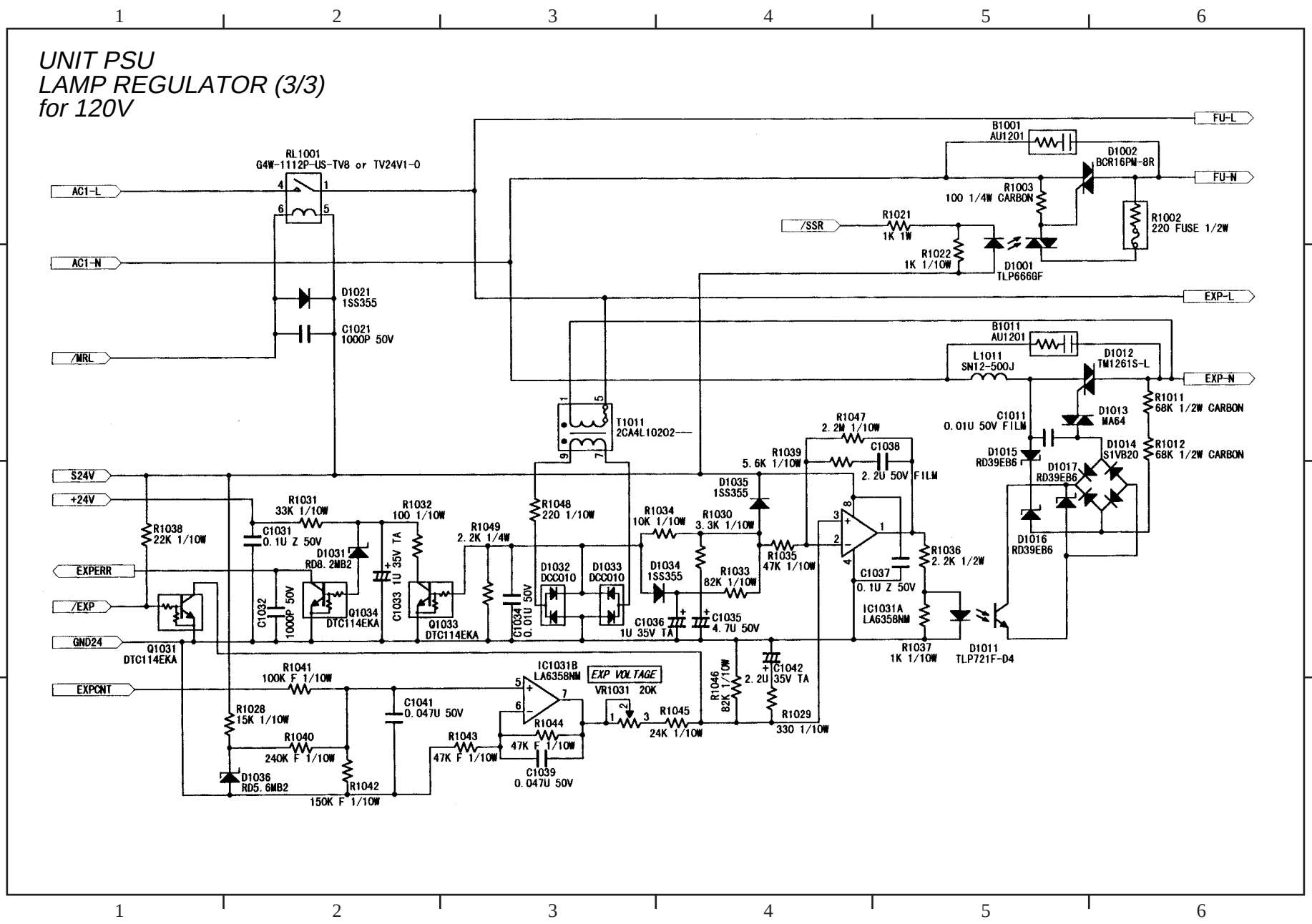
UNIT PSU
LAMP REGULATOR (3/3)
for 120V
RL1001
G4W-1112P-US-TV8 or TV24V1-0
AC1-L
AC1-N
/MRL
D1021
1SS355
C1021
1000P 50V
T1011
2CA4L10202---
S24V
+24V
EXPERR
/EXP
GND24
EXPCNT
R1038
22K 1/10W
R1031
33K 1/10W
C1031
0.1U Z 50V
D1031
RD8.2MB2
R1032
100 1/10W
C1033 1U 35V TA
R1049
2.2K 1/4W
R1048
220 1/10W
C1032
1000P 50V
Q1034
DTC114EKA
Q1033
DTC114EKA
C1034
0.01U 50V
D1032
DCC010
D1033
DCC010
Q1031
DTC114EKA
R1041
100K F 1/10W
R1028
15K 1/10W
R1040
240K F 1/10W
D1036
RD5.6MB2
R1042
150K F 1/10W
C1041
0.047U 50V
R1043
47K F 1/10W
IC1031B
LA6358NM
R1044
47K F 1/10W
C1039
0.047U 50V
EXP VOLTAGE
VR1031 20K
R1045
24K 1/10W
R1046
82K 1/10W
C1042
2.2U 35V TA
R1029
330 1/10W
R1034
10K 1/10W
R1030
3.3K 1/10W
D1034
1SS355
R1033
82K 1/10W
C1036
1U 35V TA
C1035
4.7U 50V
D1035
1SS355
R1039
5.6K 1/10W
R1047
2.2M 1/10W
C1038
2.2U 50V FILM
R1035
47K 1/10W
IC1031A
LA6358NM
C1037
0.1U Z 50V
R1036
2.2K 1/2W
R1037
1K 1/10W
D1011
TLP721F-D4
B1001
AU1201
D1002
BCR16PM-8R
R1003
100 1/4W CARBON
R1002
220 FUSE 1/2W
/SSR
R1021
1K 1W
R1022
1K 1/10W
D1001
TLP666GF
FU-L
FU-N
EXP-L
EXP-N
B1011
AU1201
L1011
SN12-500J
D1012
TM1261S-L
C1011
0.01U 50V FILM
D1013
MA64
D1014
S1VB20
D1015
RD39EB6
D1016
RD39EB6
D1017
RD39EB6
R1011
68K 1/2W CARBON
R1012
68K 1/2W CARBON

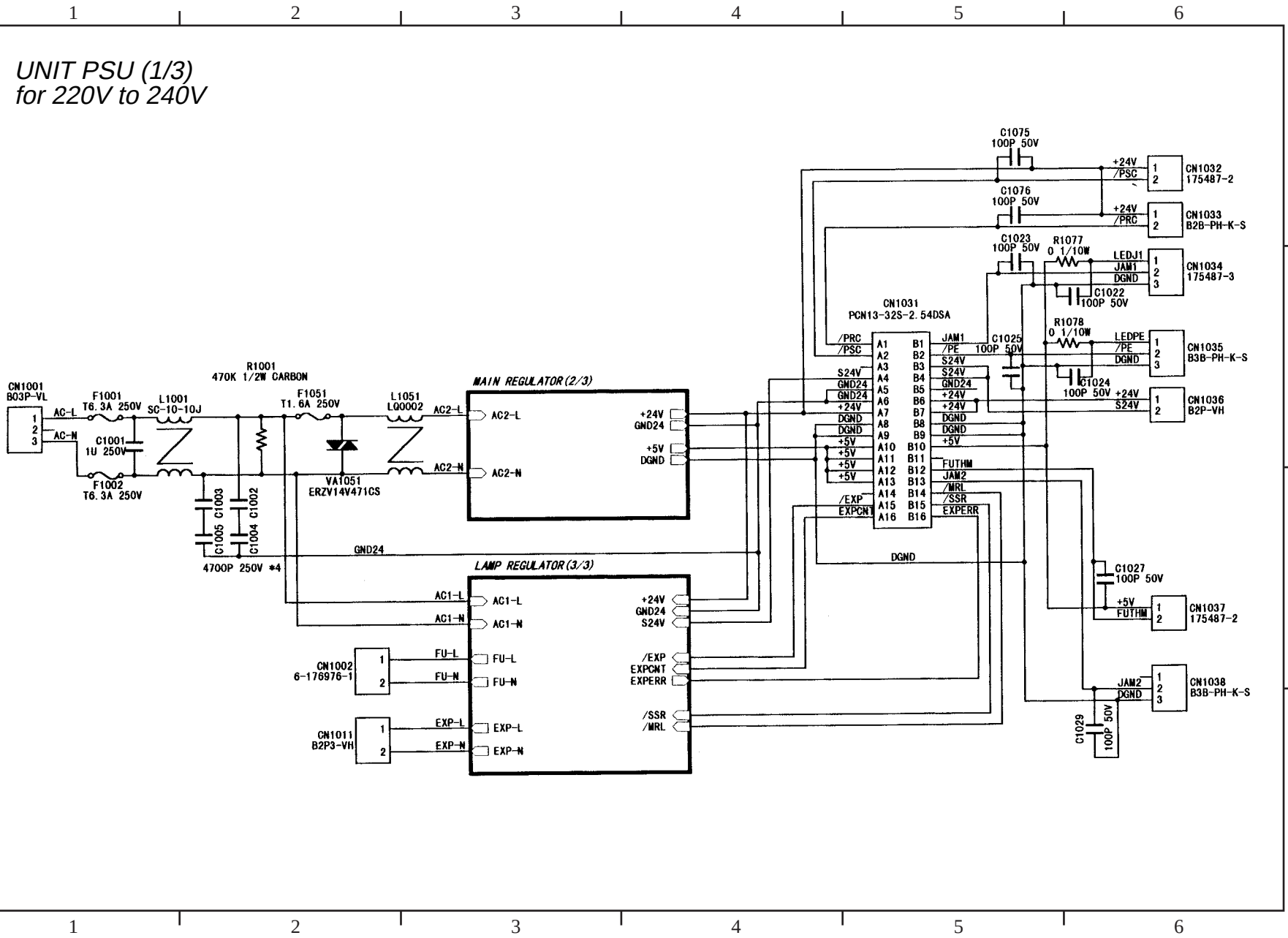
UNIT PSU (1/3)
for 220V to 240V
CN1001
B03P-VL
AC-L
AC-N
F1001
T6.3A 250V
F1002
T6.3A 250V
L1001
SC-10-10J
C1001
1U 250V
R1001
470K 1/2W CARBON
F1051
T1.6A 250V
VA1051
ERZV14V471CS
L1051
LQ0002
C1003
C1005
C1002
C1004
4700P 250V *4
MAIN REGULATOR(2/3)
AC2-L
AC2-N
+24V
GND24
+5V
DGND
LAMP REGULATOR(3/3)
AC1-L
AC1-N
S24V
FU-L
FU-N
EXP-L
EXP-N
/EXP
EXPCNT
EXPERR
/SSR
/MRL
CN1002
6-176976-1
CN1011
B2P3-VH
CN1031
PCN13-32S-2.54DSA
/PRC
/PSC
GND24
+24V
DGND
+5V
JAM1
/PE
FUTHM
JAM2
EXPERR
C1075
100P 50V
C1076
100P 50V
C1023
100P 50V
C1022
100P 50V
C1025
100P 50V
C1024
100P 50V
C1027
100P 50V
C1029
100P 50V
R1077
0 1/10W
R1078
0 1/10W
LEDJ1
LEDPE
CN1032
175487-2
CN1033
B2B-PH-K-S
CN1034
175487-3
CN1035
B3B-PH-K-S
CN1036
B2P-VH
CN1037
175487-2
CN1038
B3B-PH-K-S

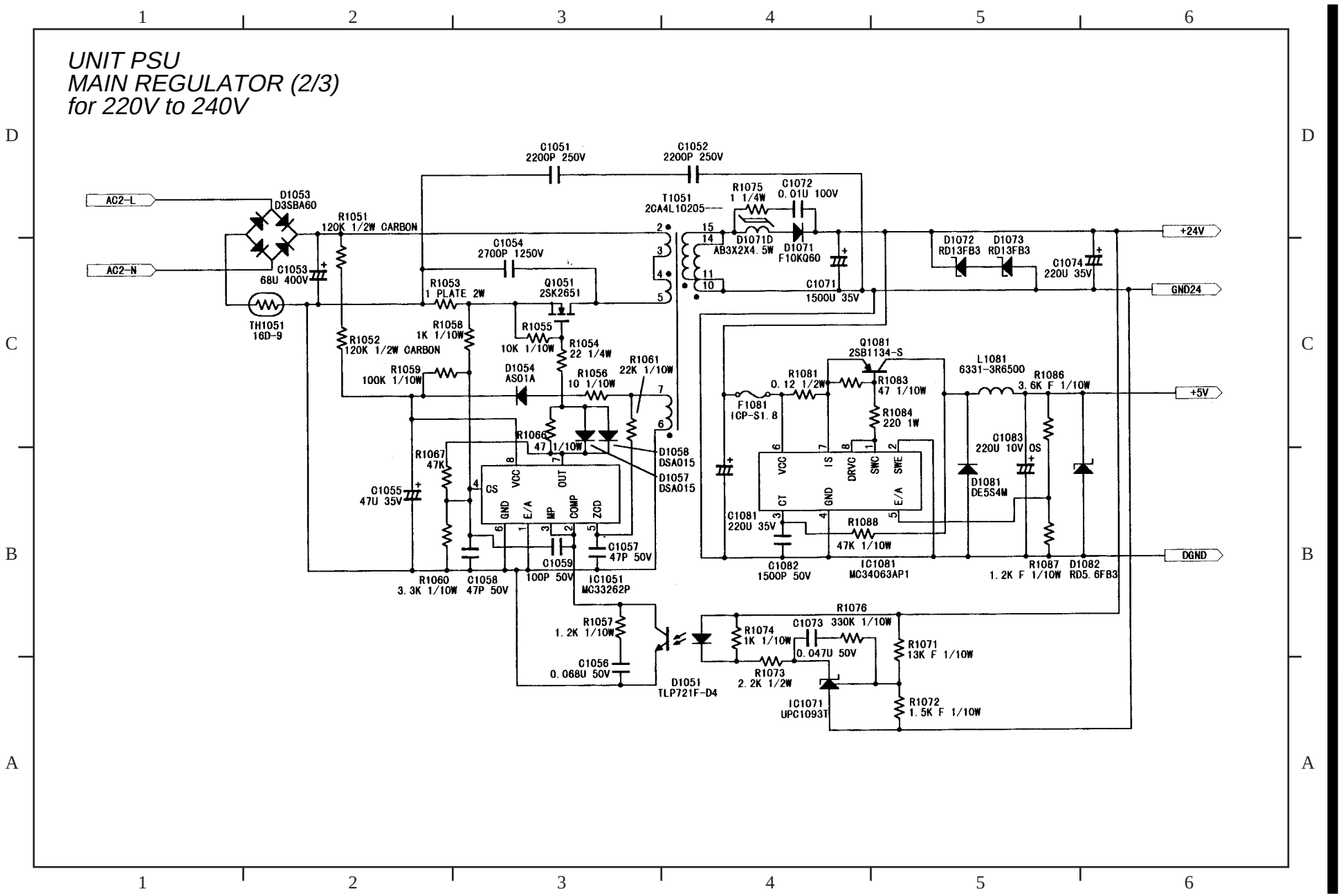
UNIT PSU
MAIN REGULATOR (2/3)
for 220V to 240V
AC2-L
AC2-N
D1053 D3SBA60
R1051 120K 1/2W CARBON
C1053 68U 400V
TH1051 16D-9
C1051 2200P 250V
C1052 2200P 250V
C1054 2700P 1250V
R1053 1 PLATE 2W
Q1051 2SK2651
R1052 120K 1/2W CARBON
R1058 1K 1/10W
R1055 10K 1/10W
R1054 22 1/4W
R1059 100K 1/10W
D1054 AS01A
R1056 10 1/10W
R1061 22K 1/10W
R1066 47 1/10W
D1058 DSA015
D1057 DSA015
R1067 47K
C1055 47U 35V
C1059 100P 50V
C1057 47P 50V
R1060 3.3K 1/10W
C1058 47P 50V
IC1051 MC33262P
R1057 1.2K 1/10W
C1056 0.068U 50V
D1051 TLP721F-D4
T1051 2CA4L10205----
R1075 1 1/4W
C1072 0.01U 100V
D1071D AB3X2X4.5W
D1071 F10KQ60
C1071 1500U 35V
D1072 RD13FB3
D1073 RD13FB3
C1074 220U 35V
+24V
GND24
Q1081 2SB1134-S
R1081 0.12 1/2W
F1081 ICP-S1.8
R1083 47 1/10W
R1084 220 1W
L1081 6331-3R6500
R1086 3.6K F 1/10W
C1083 220U 10V OS
D1081 DE5S4M
+5V
C1081 220U 35V
R1088 47K 1/10W
C1082 1500P 50V
IC1081 MC34063AP1
R1087 1.2K F 1/10W
D1082 RD5.6FB3
DGND
R1076
C1073 330K 1/10W
R1074 1K 1/10W
0.047U 50V
R1071 13K F 1/10W
R1073 2.2K 1/2W
IC1071 UPC1093T
R1072 1.5K F 1/10W

UNIT PSU
LAMP REGULATOR (3/3)
for 220V to 240V

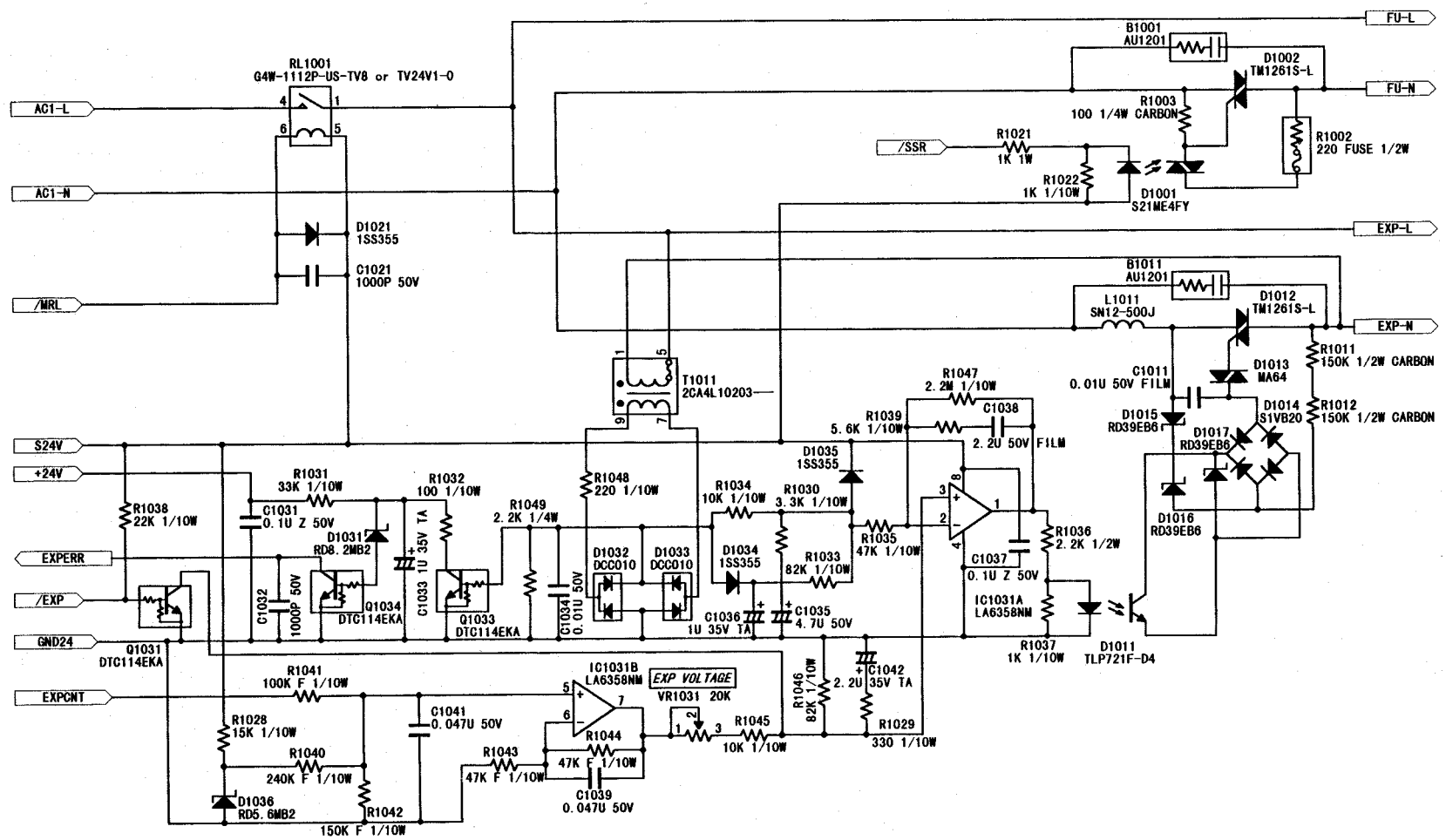

UNIT FUSE

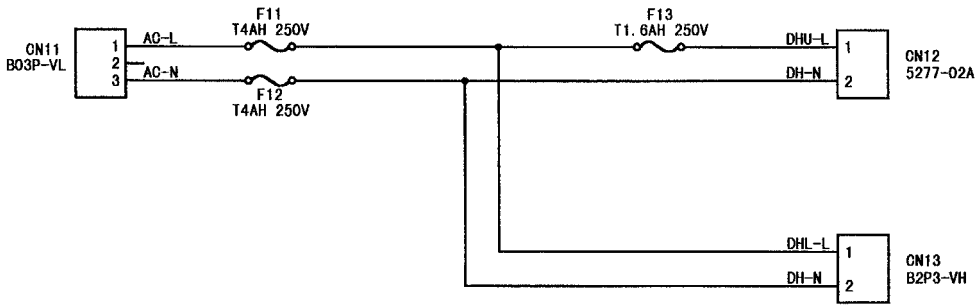
CN11
B03P-VL
1
2
3
AC-L
AC-N
F11
T4AH 250V
F12
T4AH 250V
F13
T1.6AH 250V
DHU-L
DH-N
1
2
CN12
5277-02A
DHL-L
DH-N
1
2
CN13
B2P3-VH

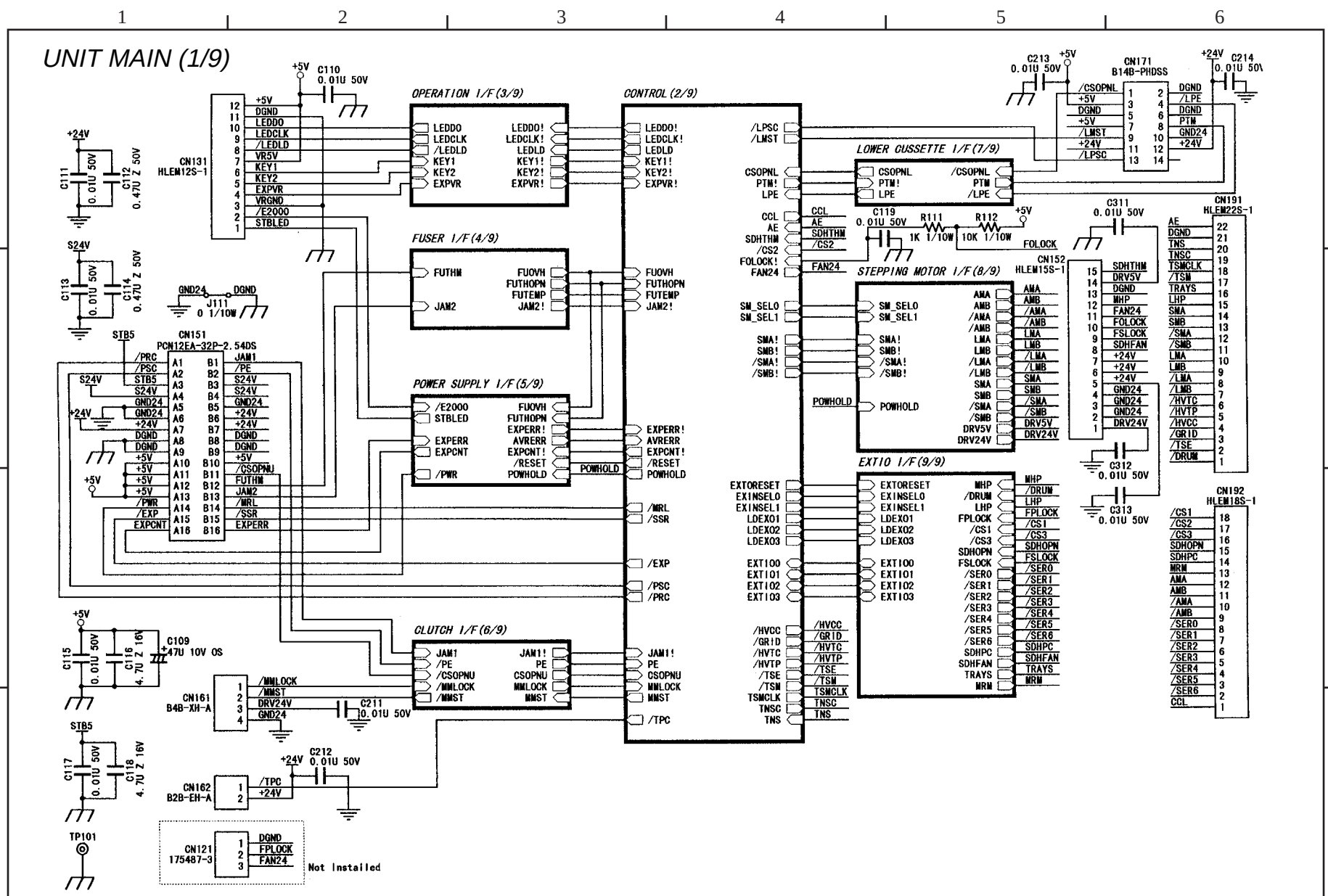
UNIT MAIN (1/9)
OPERATION I/F (3/9)
CONTROL (2/9)
FUSER I/F (4/9)
POWER SUPPLY I/F (5/9)
CLUTCH I/F (6/9)
LOWER CUSSETTE I/F (7/9)
STEPPING MOTOR I/F (8/9)
EXTIO I/F (9/9)
CN131 HLEM12S-1
CN151 PCN12EA-32P-2.54DS
CN161 B4B-XH-A
CN162 B2B-EH-A
CN121 175487-3
CN171 B14B-PHDSS
CN152 HLEM15S-1
CN191 HLEM22S-1
CN192 HLEM18S-1
Not Installed

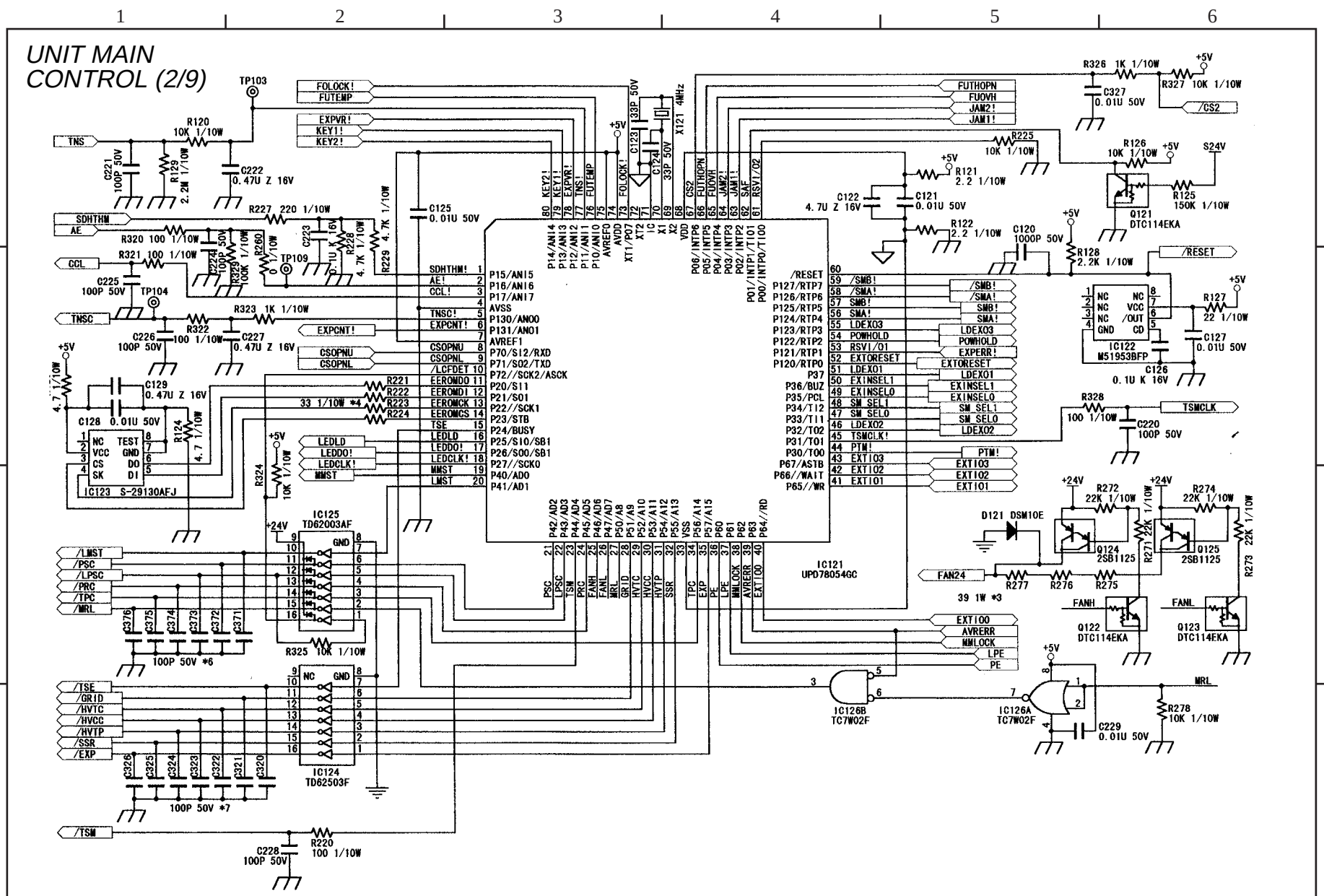
UNIT MAIN
CONTROL (2/9)
IC121
UPD78054GC
IC123 S-29130AFJ
IC125
TD62003AF
IC124
TD62503F
IC122
M51953BFP
IC126A
TC7W02F
IC126B
TC7W02F
Q121
DTC114EKA
Q122
DTC114EKA
Q123
DTC114EKA
Q124
2SB1125
Q125
2SB1125
D121 DSM10E
X121 4MHz
TP103
TP104
TP109
FOLOCK!
FUTEMP
EXPVR!
KEY1!
KEY2!
TNS
SDHTHM
AE
CCL
TNSC
EXPCNT!
CSOPNU
CSOPNL
LEDLD
LEDDO!
LEDCLK!
MMST
LMST
/LMST
/PSC
/LPSC
/PRC
/TPC
/MRL
/TSE
/GRID
/HVTC
/HVCC
/HVTP
/SSR
/EXP
/TSM
FUTHOPN
FUOVH
JAM2!
JAM1!
/CS2
/RESET
TSMCLK
PTM!
EXTIO3
EXTIO2
EXTIO1
EXTIO0
AVRERR
MMLOCK
LPE
PE
FAN24
FANH
FANL
MRL
S24V
+5V
+24V
33 1/10W *4
39 1W *3
100P 50V *6
100P 50V *7

UNIT MAIN
OPERATION I/F (3/9)

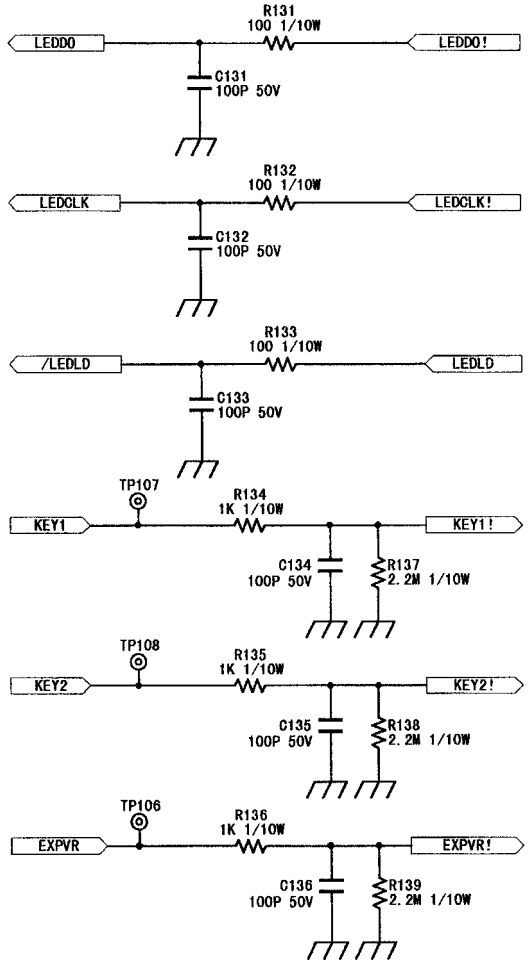

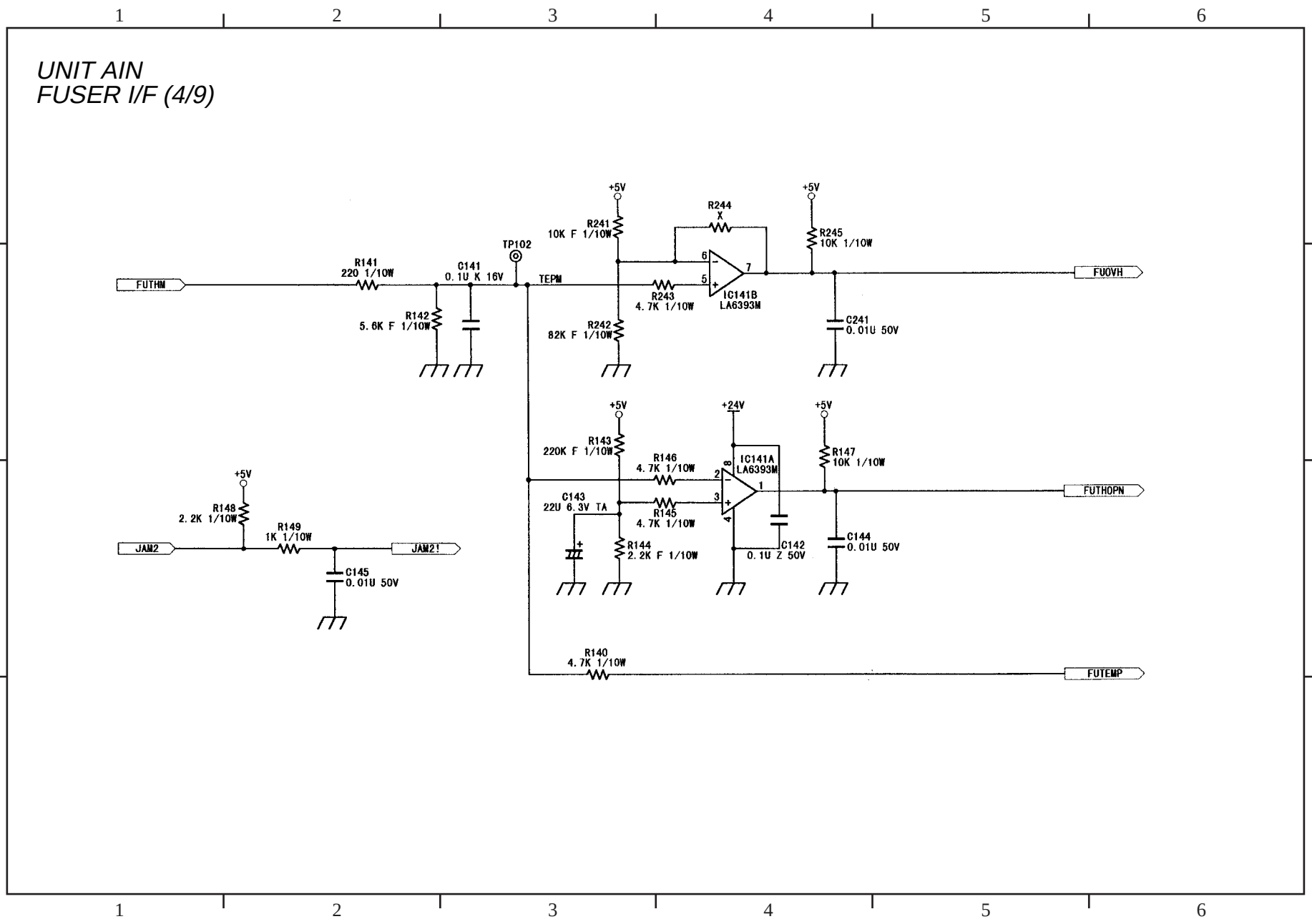
UNIT AIN
FUSER I/F (4/9)
1
2
3
4
5
6
A
B
C
D
FUTHM
R141
220 1/10W
C141
0.1U K 16V
TP102
TEPM
R142
5.6K F 1/10W
+5V
R241
10K F 1/10W
R242
82K F 1/10W
R244
X
R243
4.7K 1/10W
IC141B
LA6393M
+5V
R245
10K 1/10W
FUOVH
C241
0.01U 50V
+5V
R143
220K F 1/10W
R146
4.7K 1/10W
C143
22U 6.3V TA
R145
4.7K 1/10W
R144
2.2K F 1/10W
+24V
IC141A
LA6393M
+5V
R147
10K 1/10W
FUTHOPN
C142
0.1U Z 50V
C144
0.01U 50V
+5V
R148
2.2K 1/10W
R149
1K 1/10W
JAM2
JAM2!
C145
0.01U 50V
R140
4.7K 1/10W
FUTEMP

UNIT MAIN
POWER SUPPLY I/F (5/9)

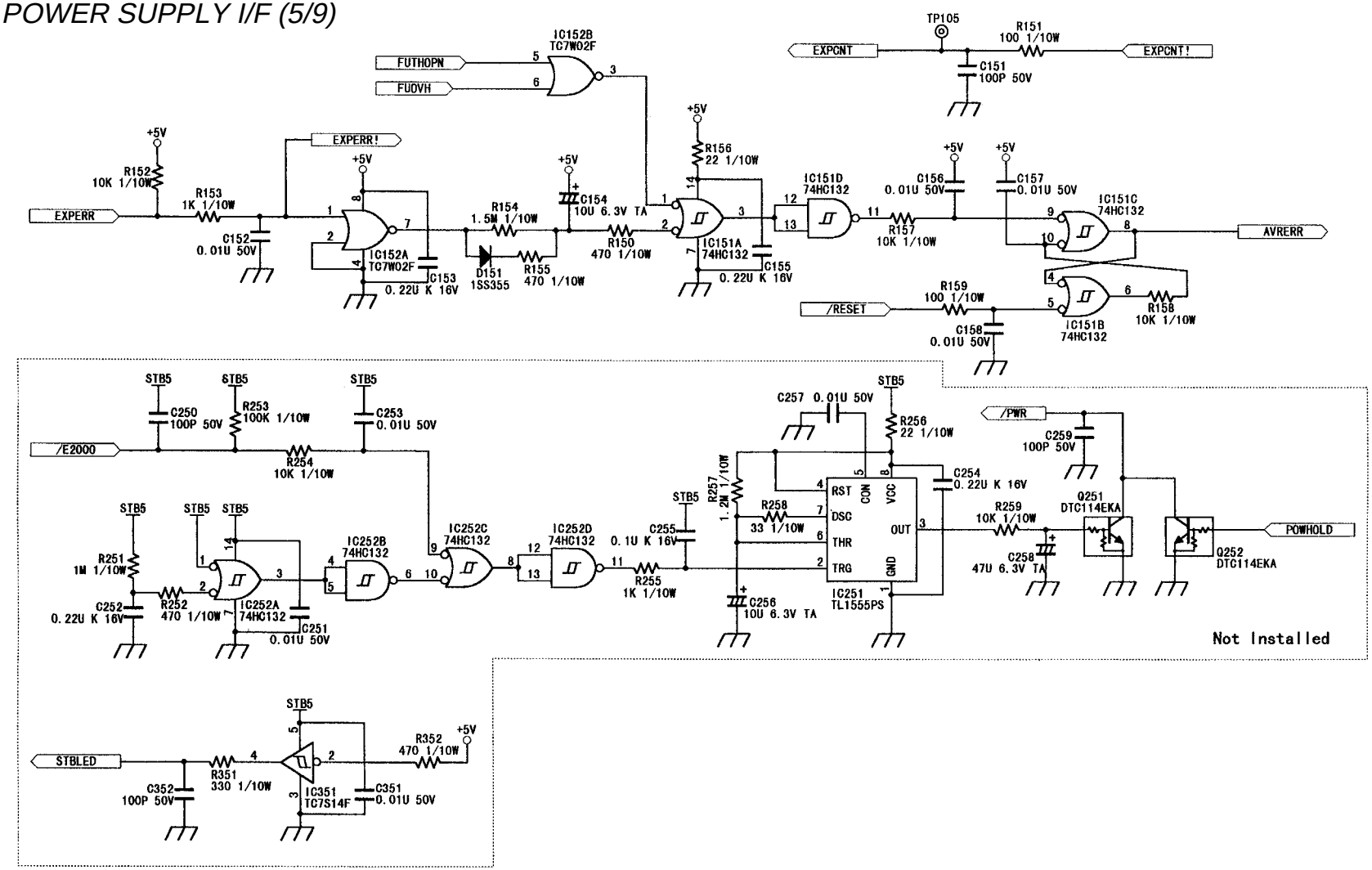

UNIT MAIN
CLUTCH I/F (6/9)

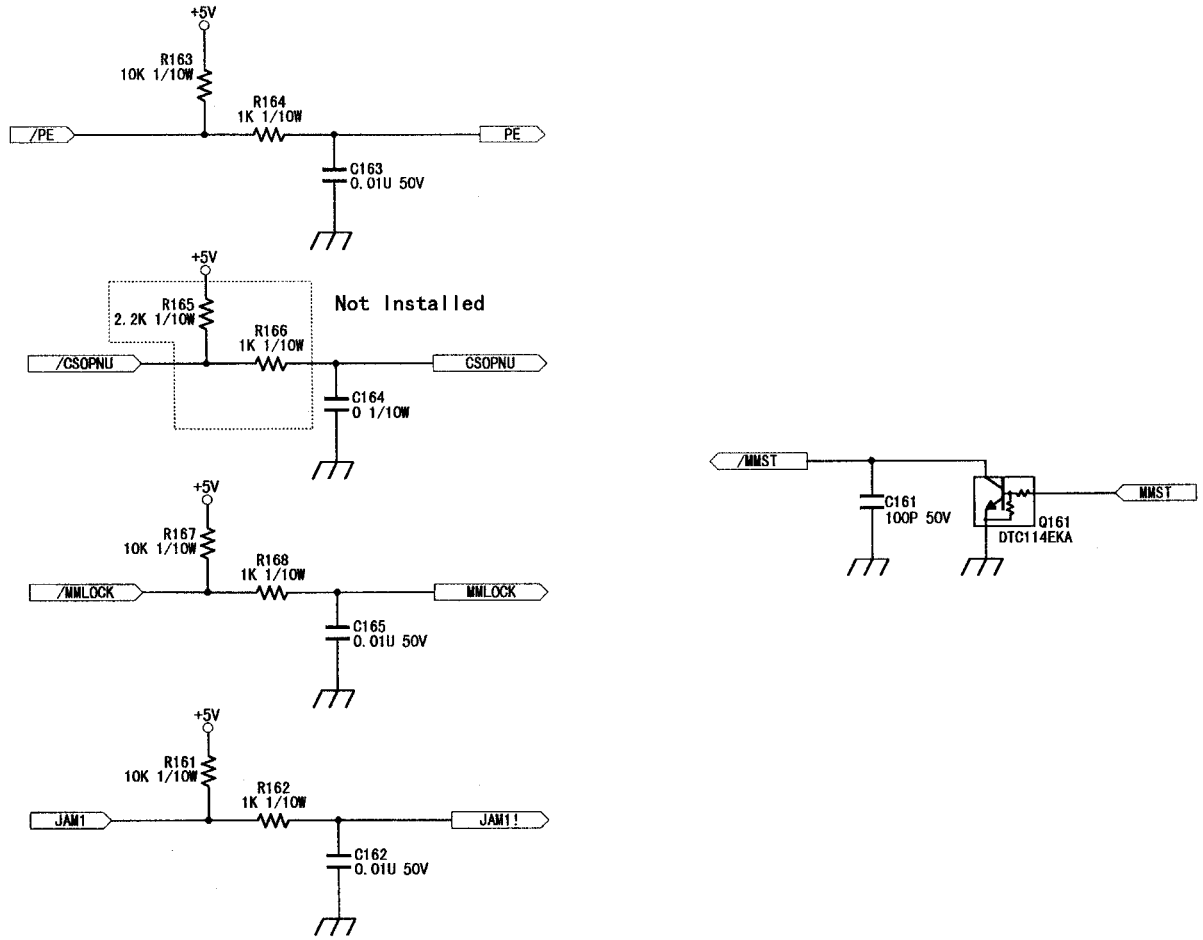

UNIT MAIN
LOWER CASSETTE I/F (7/9)

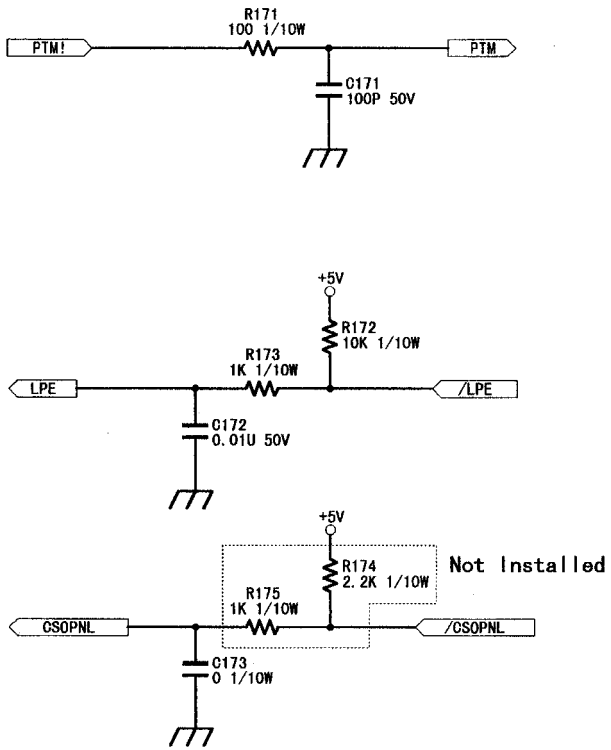

UNIT MAIN
STEPPING MOTOR I/F (8/9)

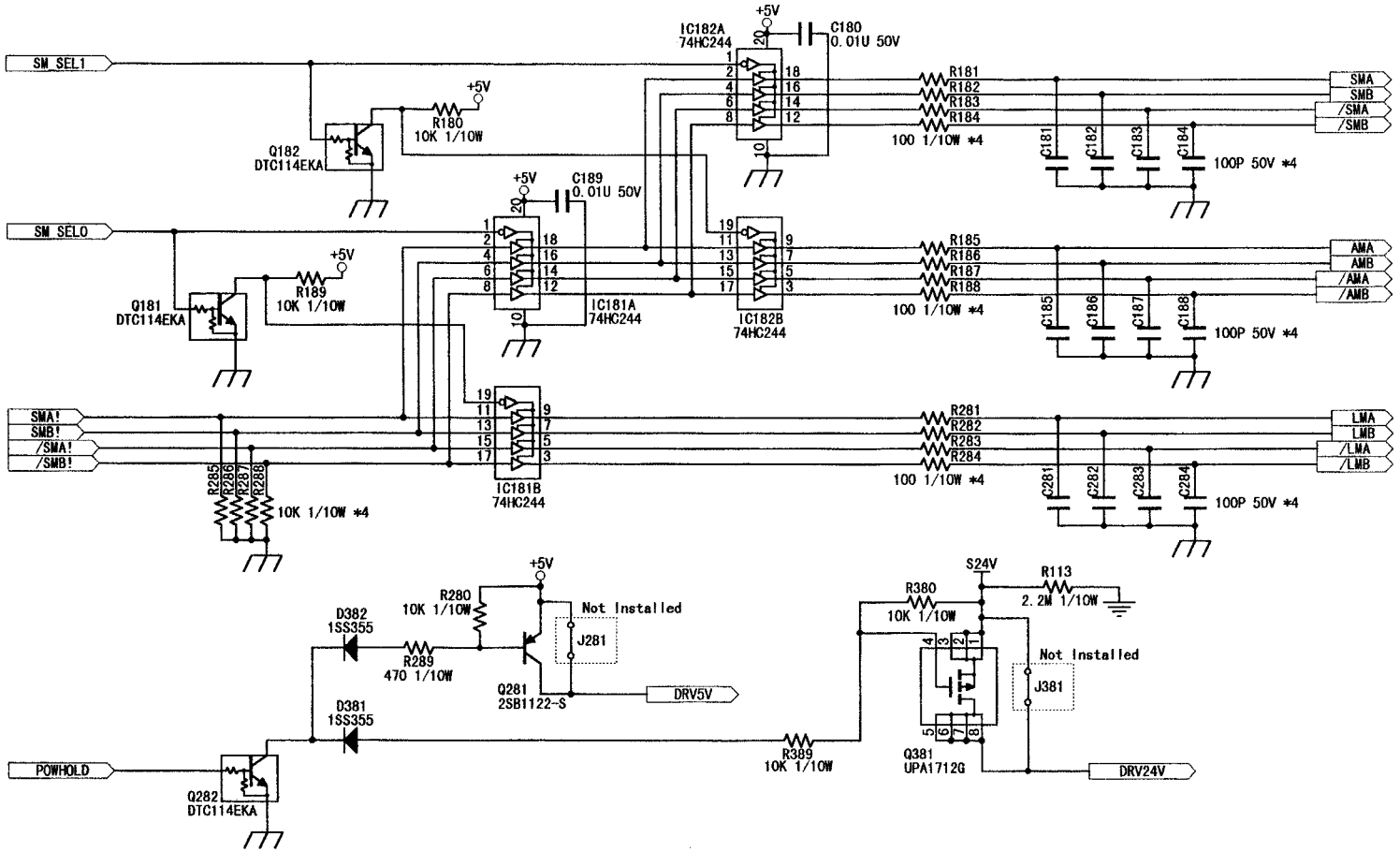

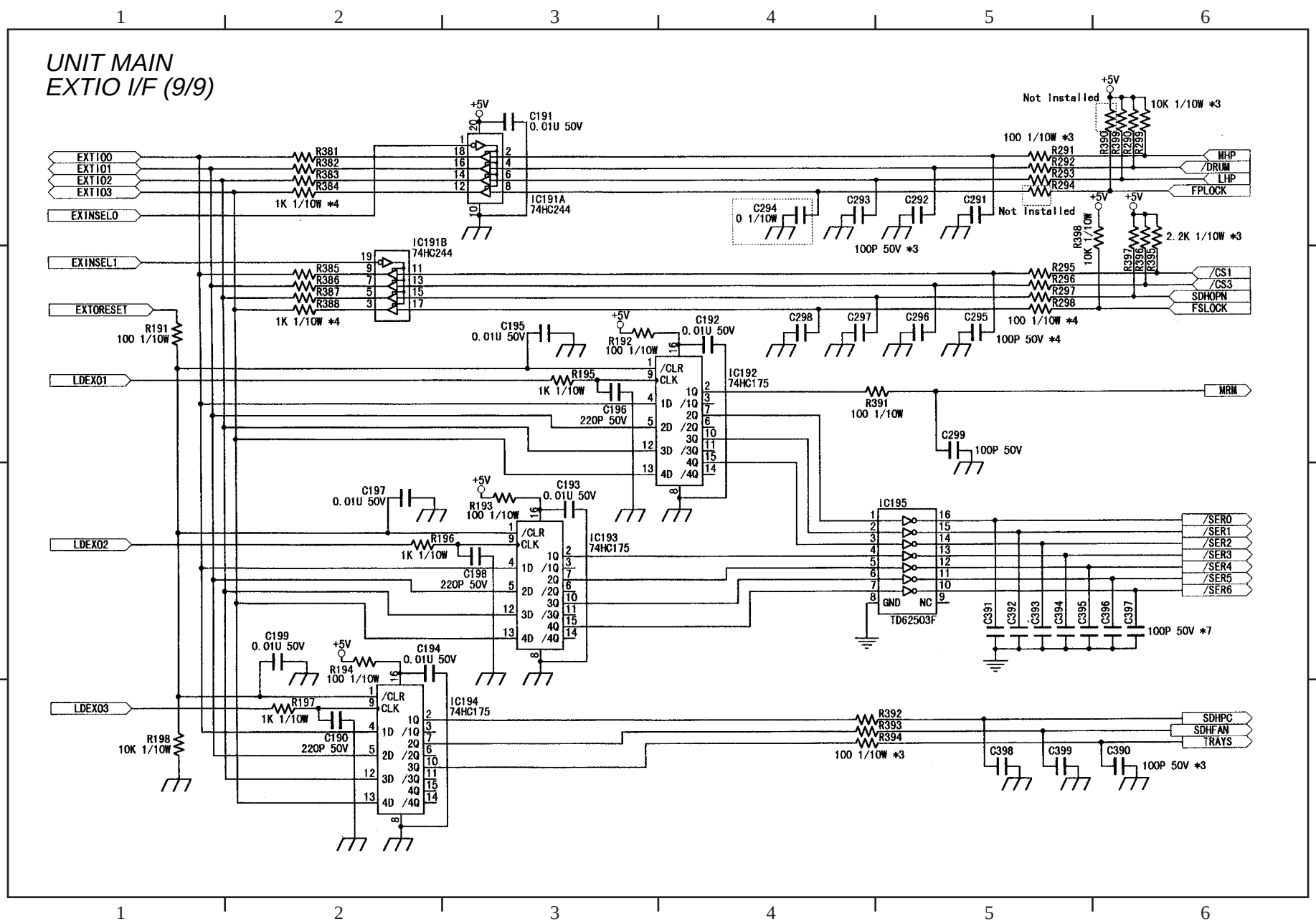
UNIT MAIN
EXTIO I/F (9/9)
EXTI00
EXTI01
EXTI02
EXTI03
EXINSEL0
EXINSEL1
EXTORESET
LDEX01
LDEX02
LDEX03
R381
R382
R383
R384
1K 1/10W *4
IC191A
74HC244
IC191B
74HC244
R385
R386
R387
R388
1K 1/10W *4
R191
100 1/10W
R198
10K 1/10W
C191
0.01U 50V
C195
0.01U 50V
C197
0.01U 50V
C199
0.01U 50V
C196
220P 50V
C198
220P 50V
C190
220P 50V
R192
R193
R194
R195
R196
R197
100 1/10W
1K 1/10W
IC192
74HC175
IC193
74HC175
IC194
74HC175
/CLR
CLK
1D /1Q
2D /2Q
3D /3Q
4D /4Q
C192
0.01U 50V
C193
0.01U 50V
C194
0.01U 50V
C294
0 1/10W
C293
C292
C291
100P 50V *3
Not Installed
R291
R292
R293
R294
100 1/10W *3
Not Installed
10K 1/10W *3
R390
R399
R290
R295
MHP
/DRUM
LHP
FPLOCK
R398
10K 1/10W
2.2K 1/10W *3
R397
R396
R395
R295
R296
R297
R298
100 1/10W *4
C298
C297
C296
C295
100P 50V *4
/CS1
/CS3
SDHOPN
FSLOCK
R391
100 1/10W
C299
100P 50V
MRM
IC195
TD62503F
GND
NC
/SER0
/SER1
/SER2
/SER3
/SER4
/SER5
/SER6
C391
C392
C393
C394
C395
C396
C397
100P 50V *7
R392
R393
R394
100 1/10W *3
C398
C399
C390
100P 50V *3
SDHPC
SDHFAN
TRAYS

UNIT OPERATION (1/2)

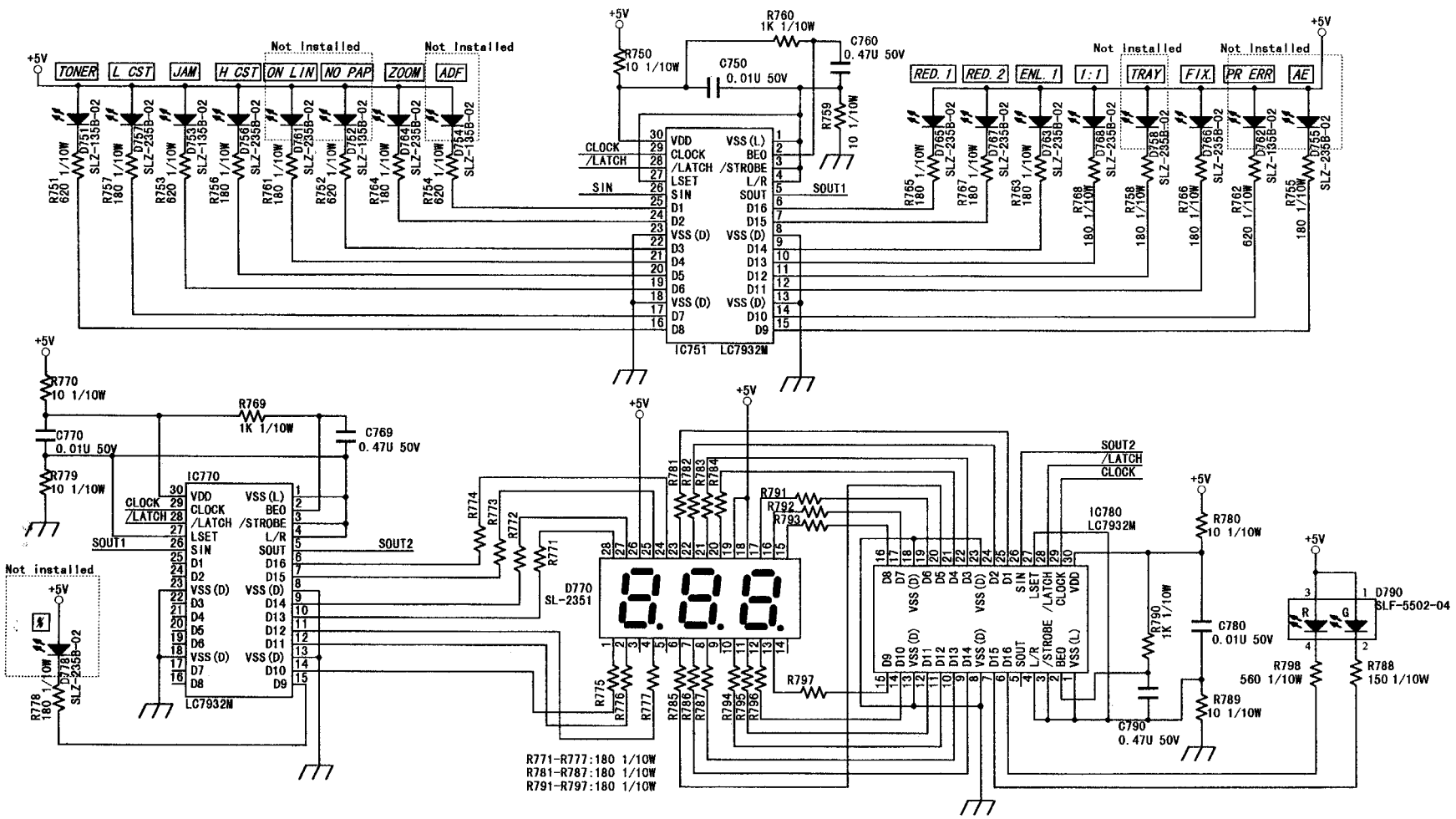

UNIT OPERATION (2/2)

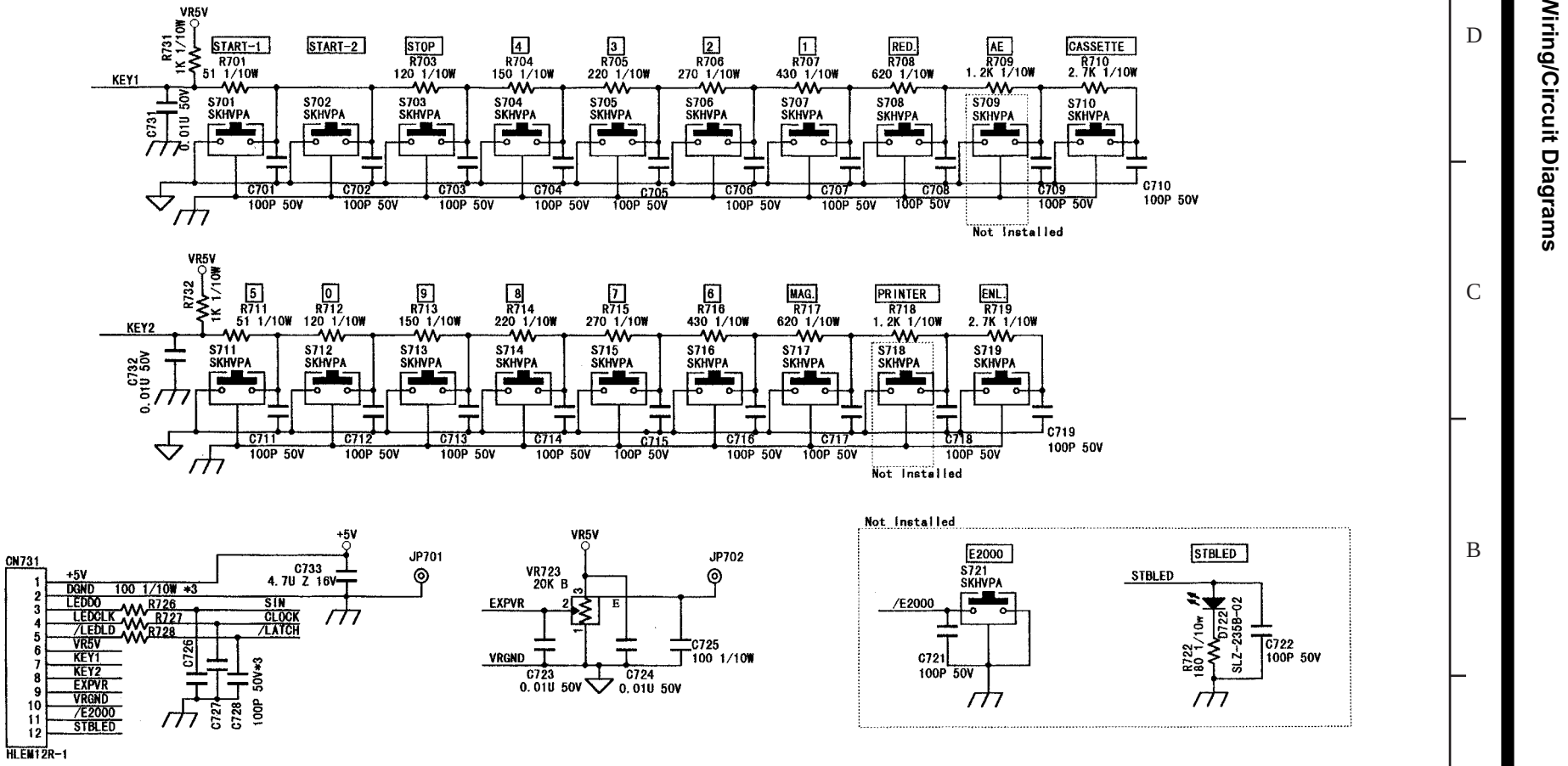

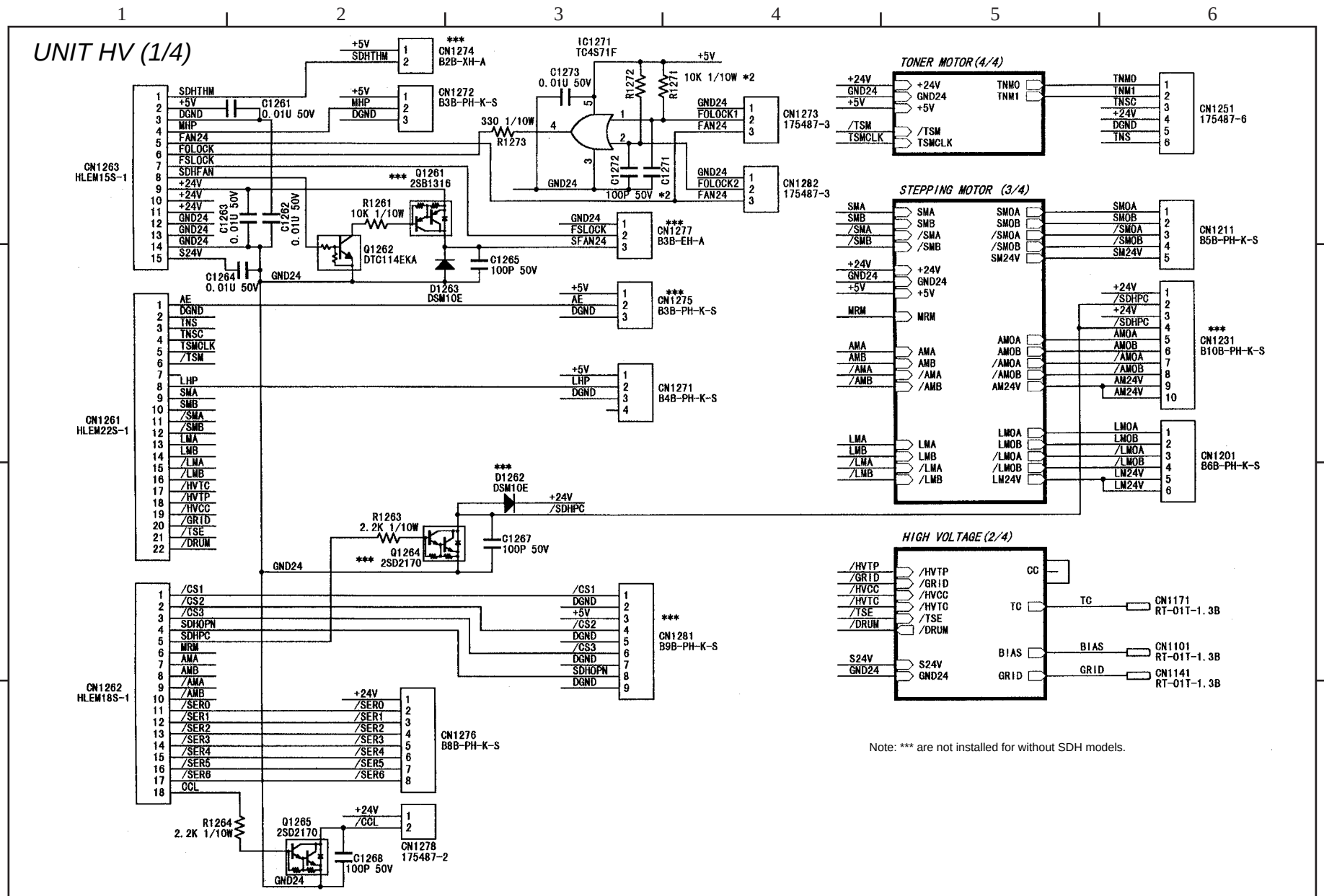
UNIT HV (1/4)
CN1263 HLEM15S-1
CN1261 HLEM22S-1
CN1262 HLEM18S-1
CN1274 B2B-XH-A
CN1272 B3B-PH-K-S
CN1273 175487-3
CN1282 175487-3
CN1277 B3B-EH-A
CN1275 B3B-PH-K-S
CN1271 B4B-PH-K-S
CN1281 B9B-PH-K-S
CN1276 B8B-PH-K-S
CN1278 175487-2
IC1271 TC4S71F
Q1261 2SB1316
Q1262 DTC114EKA
Q1264 2SD2170
Q1265 2SD2170
D1262 DSM10E
D1263 DSM10E
TONER MOTOR(4/4)
CN1251 175487-6
STEPPING MOTOR (3/4)
CN1211 B5B-PH-K-S
CN1231 B10B-PH-K-S
CN1201 B6B-PH-K-S
HIGH VOLTAGE(2/4)
CN1171 RT-01T-1.3B
CN1101 RT-01T-1.3B
CN1141 RT-01T-1.3B
Note: *** are not installed for without SDH models.

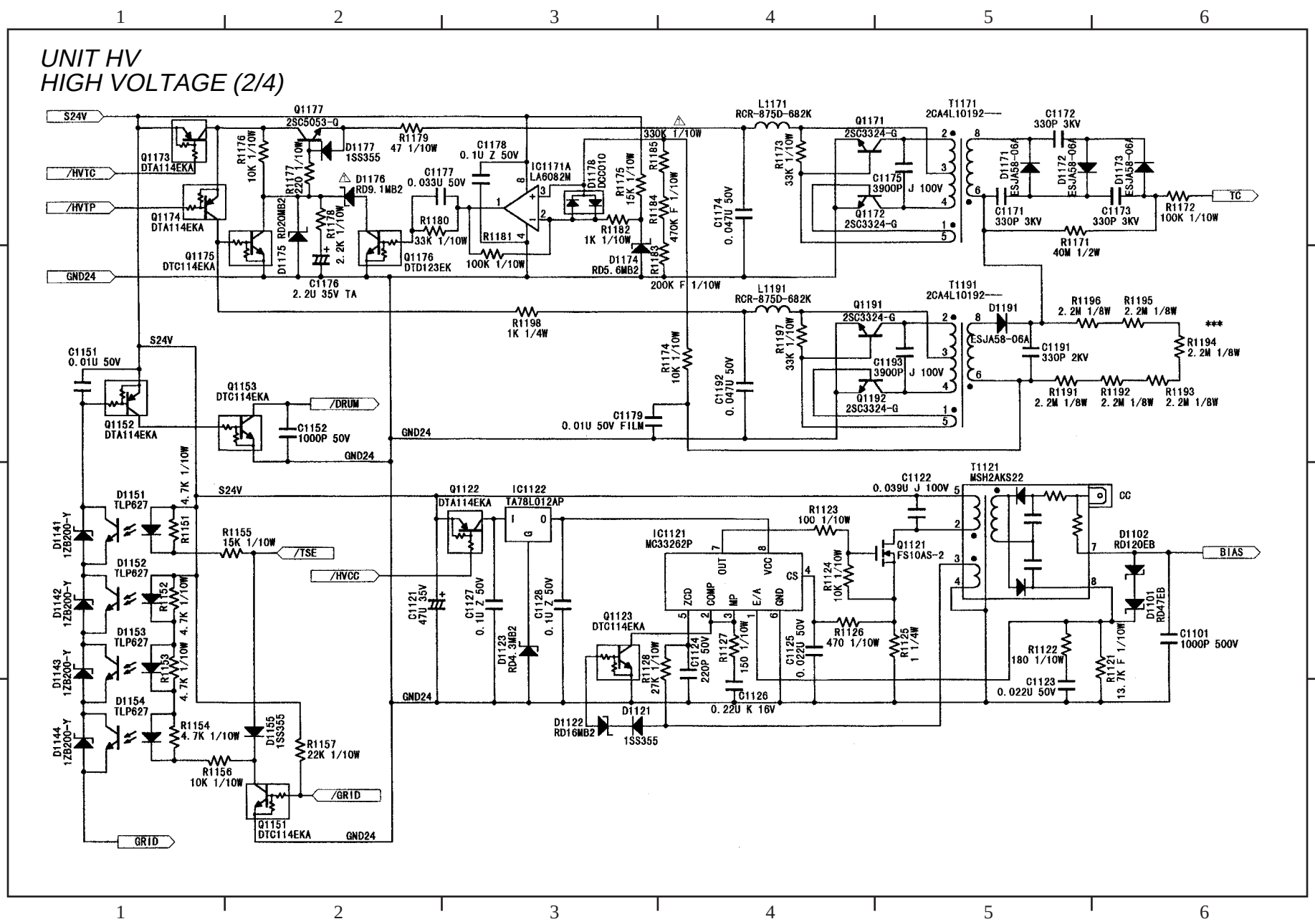
UNIT HV
HIGH VOLTAGE (2/4)
S24V
/HVTC
/HVTP
GND24
Q1177 2SC5053-Q
R1179 47 1/10W
Q1173 DTA114EKA
Q1174 DTA114EKA
Q1175 DTC114EKA
Q1176 DTD123EK
D1175 RD20MB2
D1176 RD9.1MB2
D1177 1SS355
R1176 10K 1/10W
R1177 220 1/10W
R1178 2.2K 1/10W
C1176 2.2U 35V TA
C1177 0.033U 50V
C1178 0.1U Z 50V
R1180 33K 1/10W
R1181 100K 1/10W
IC1171A LA6082M
D1178 DCG010
R1182 1K 1/10W
D1174 RD5.6MB2
R1183 200K F 1/10W
R1184 470K F 1/10W
R1185 330K 1/10W
R1175 15K 1/10W
C1174 0.047U 50V
L1171 RCR-875D-682K
T1171 2CA4L10192---
Q1171 2SC3324-G
Q1172 2SC3324-G
C1175 3900P J 100V
R1173 33K 1/10W
C1172 330P 3KV
C1171 330P 3KV
C1173 330P 3KV
D1171 ESJA58-06A
D1172 ESJA58-06A
D1173 ESJA58-06A
R1172 100K 1/10W
R1171 40M 1/2W
TC
R1198 1K 1/4W
L1191 RCR-875D-682K
T1191 2CA4L10192---
Q1191 2SC3324-G
Q1192 2SC3324-G
C1193 3900P J 100V
R1197 33K 1/10W
C1192 0.047U 50V
R1174 10K 1/10W
C1179 0.01U 50V FILM
D1191 ESJA58-06A
C1191 330P 2KV
R1196 2.2M 1/8W
R1195 2.2M 1/8W
R1194 2.2M 1/8W
R1191 2.2M 1/8W
R1192 2.2M 1/8W
R1193 2.2M 1/8W
***
C1151 0.01U 50V
Q1152 DTA114EKA
Q1153 DTC114EKA
/DRUM
C1152 1000P 50V
Q1122 DTA114EKA
IC1122 TA78L012AP
C1121 47U 35V
C1127 0.1U Z 50V
C1128 0.1U Z 50V
D1123 RD4.3MB2
R1155 15K 1/10W
/TSE
/HVCC
IC1121 MC33262P
OUT
VCC
CS
ZCD
COMP
MP
E/A
GND
R1123 100 1/10W
R1124 10K 1/10W
R1126 470 1/10W
R1125 1 1/4W
C1125 0.022U 50V
C1124 220P 50V
R1127 150 1/10W
R1128 27K 1/10W
C1126 0.22U K 16V
Q1123 DTC114EKA
D1122 RD16MB2
D1121 1SS355
Q1121 FS10AS-2
C1122 0.039U J 100V
T1121 MSH2AKS22
CC
D1102 RD120EB
D1101 RD47EB
C1101 1000P 500V
R1122 180 1/10W
C1123 0.022U 50V
R1121 13.7K F 1/10W
BIAS
D1151 TLP627
D1152 TLP627
D1153 TLP627
D1154 TLP627
D1141 1ZB200-Y
D1142 1ZB200-Y
D1143 1ZB200-Y
D1144 1ZB200-Y
R1151 4.7K 1/10W
R1152 4.7K 1/10W
R1153 4.7K 1/10W
R1154 4.7K 1/10W
R1156 10K 1/10W
D1155 1SS355
R1157 22K 1/10W
Q1151 DTC114EKA
/GRID
GRID

UNIT HV
STEPPING MOTOR (3/4)

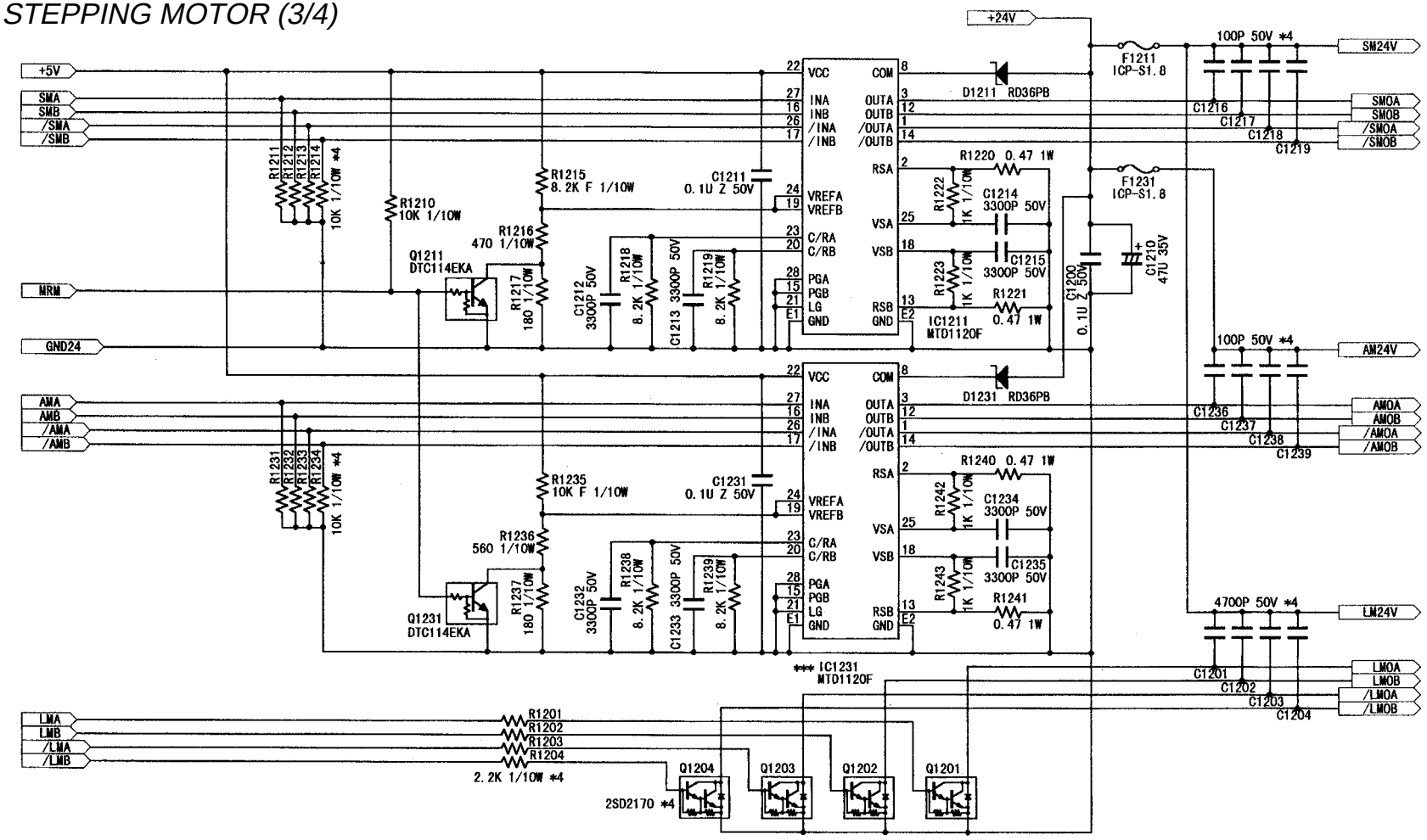

Note: *** are not installed for without SDH models.

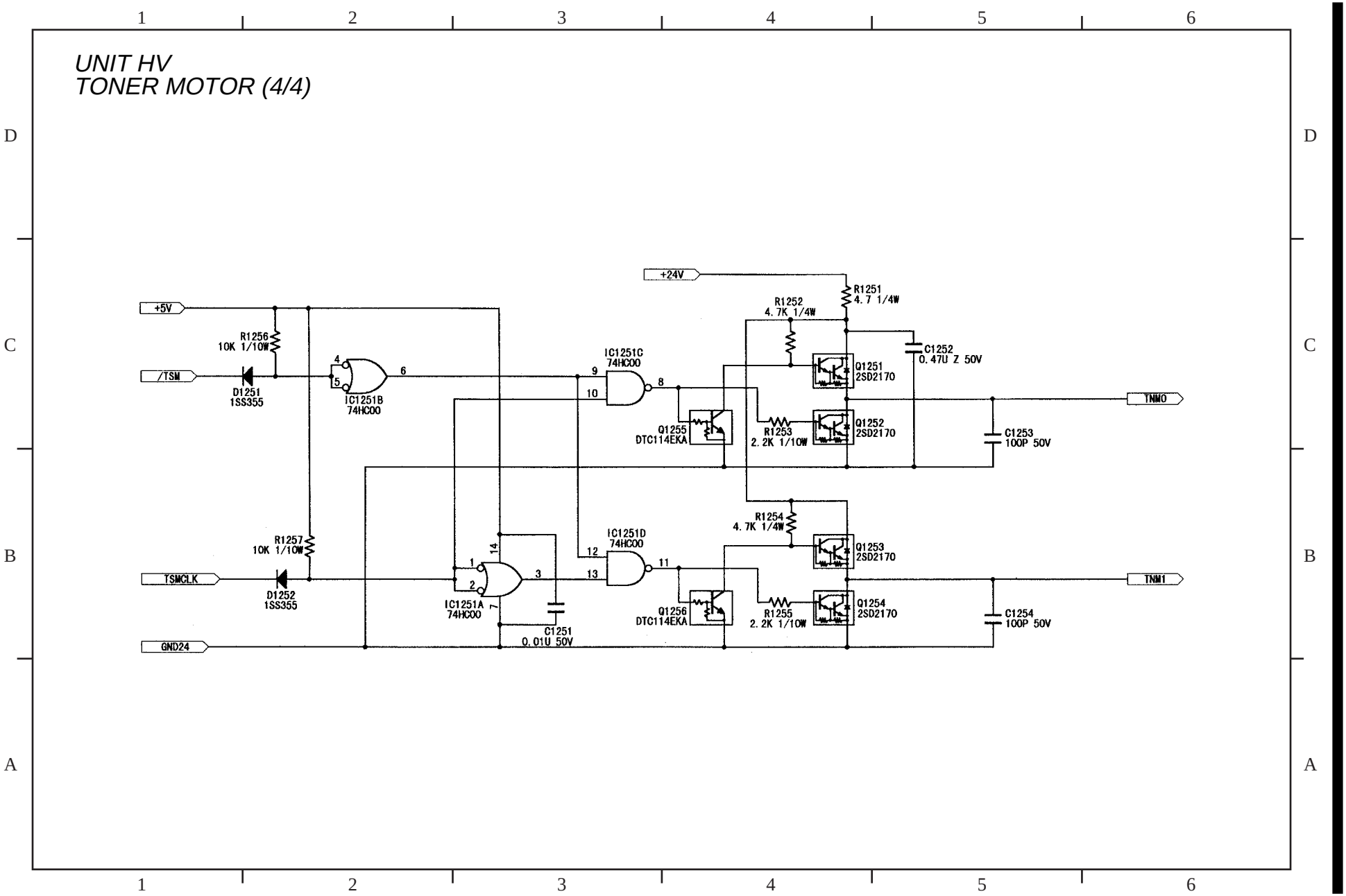
UNIT HV
TONER MOTOR (4/4)
1
2
3
4
5
6
D
C
B
A
+5V
/TSM
TSMCLK
GND24
+24V
R1256
10K 1/10W
D1251
1SS355
IC1251B
74HC00
IC1251C
74HC00
R1257
10K 1/10W
D1252
1SS355
IC1251A
74HC00
IC1251D
74HC00
C1251
0.01U 50V
R1252
4.7K 1/4W
R1251
4.7 1/4W
C1252
0.47U Z 50V
Q1251
2SD2170
Q1255
DTC114EKA
R1253
2.2K 1/10W
Q1252
2SD2170
C1253
100P 50V
TNM0
R1254
4.7K 1/4W
Q1253
2SD2170
Q1256
DTC114EKA
R1255
2.2K 1/10W
Q1254
2SD2170
C1254
100P 50V
TNM1

UNIT ERASE

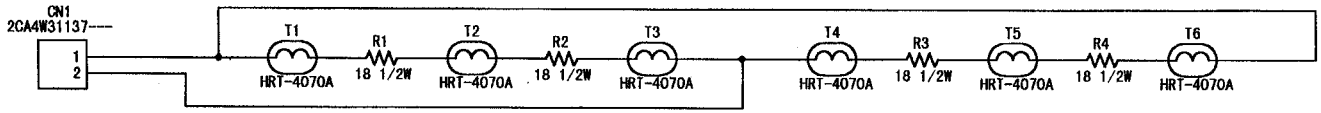
CN1
2CA4W31137----
1
2
T1
HRT-4070A
R1
18 1/2W
T2
HRT-4070A
R2
18 1/2W
T3
HRT-4070A
T4
HRT-4070A
R3
18 1/2W
T5
HRT-4070A
R4
18 1/2W
T6
HRT-4070A

UNIT SIDE ERASE

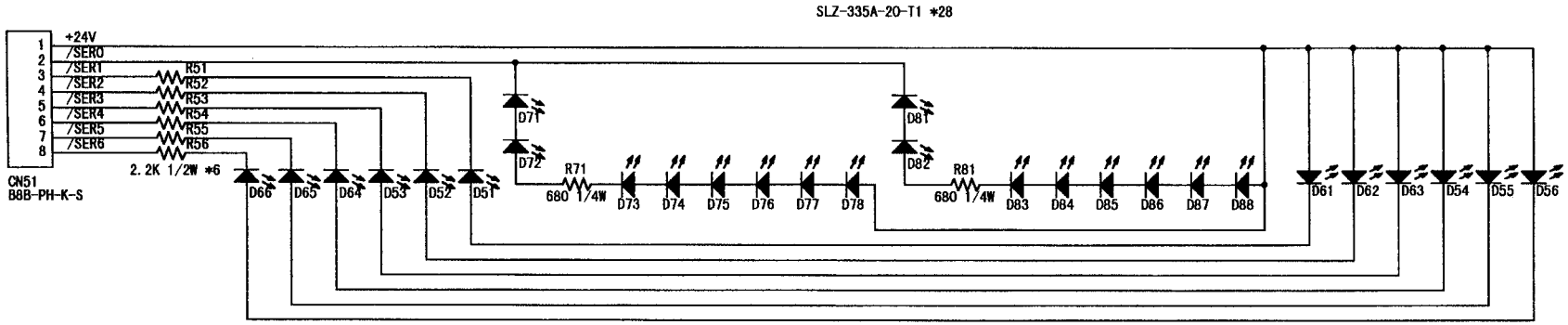

PF-105/105H
Connection Diagram

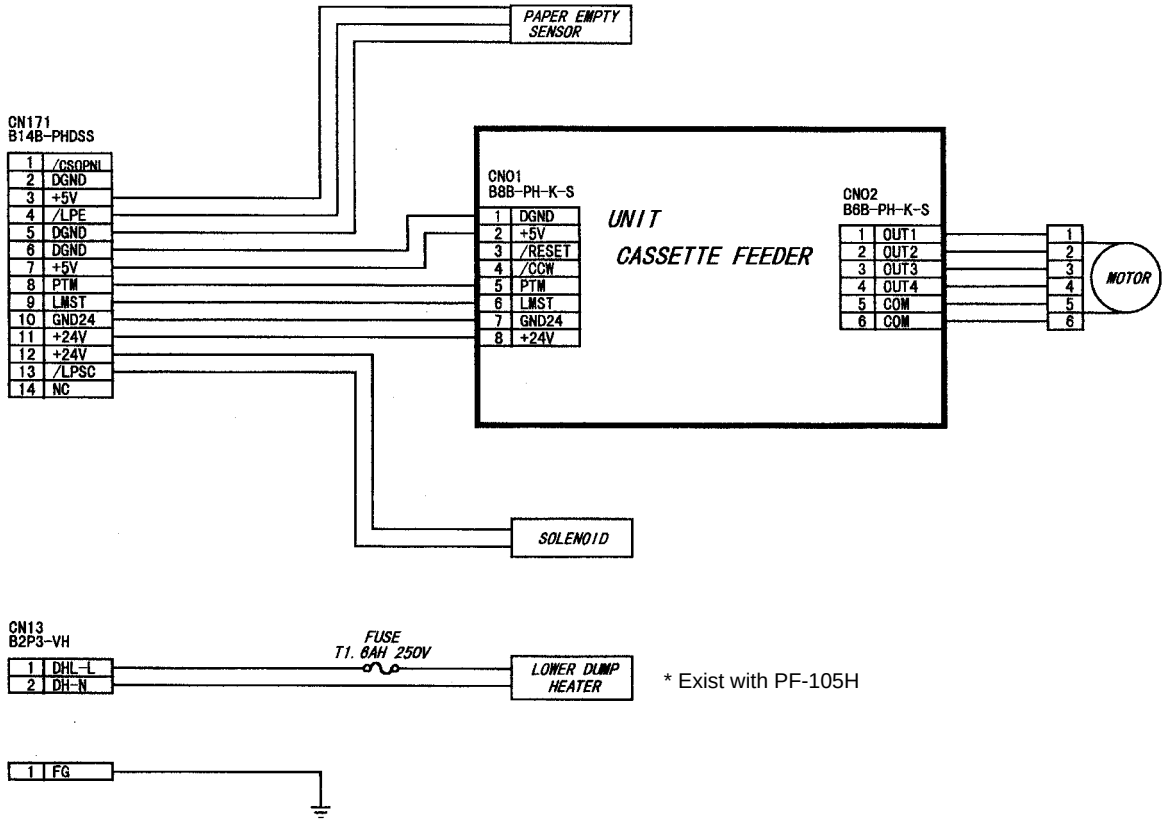

* Exist with PF-105H

UNIT CASSETTE FEEDER

