1

OUTLINE

OUTLINE OF SYSTEM

The 7020 copier supports the options shown below.

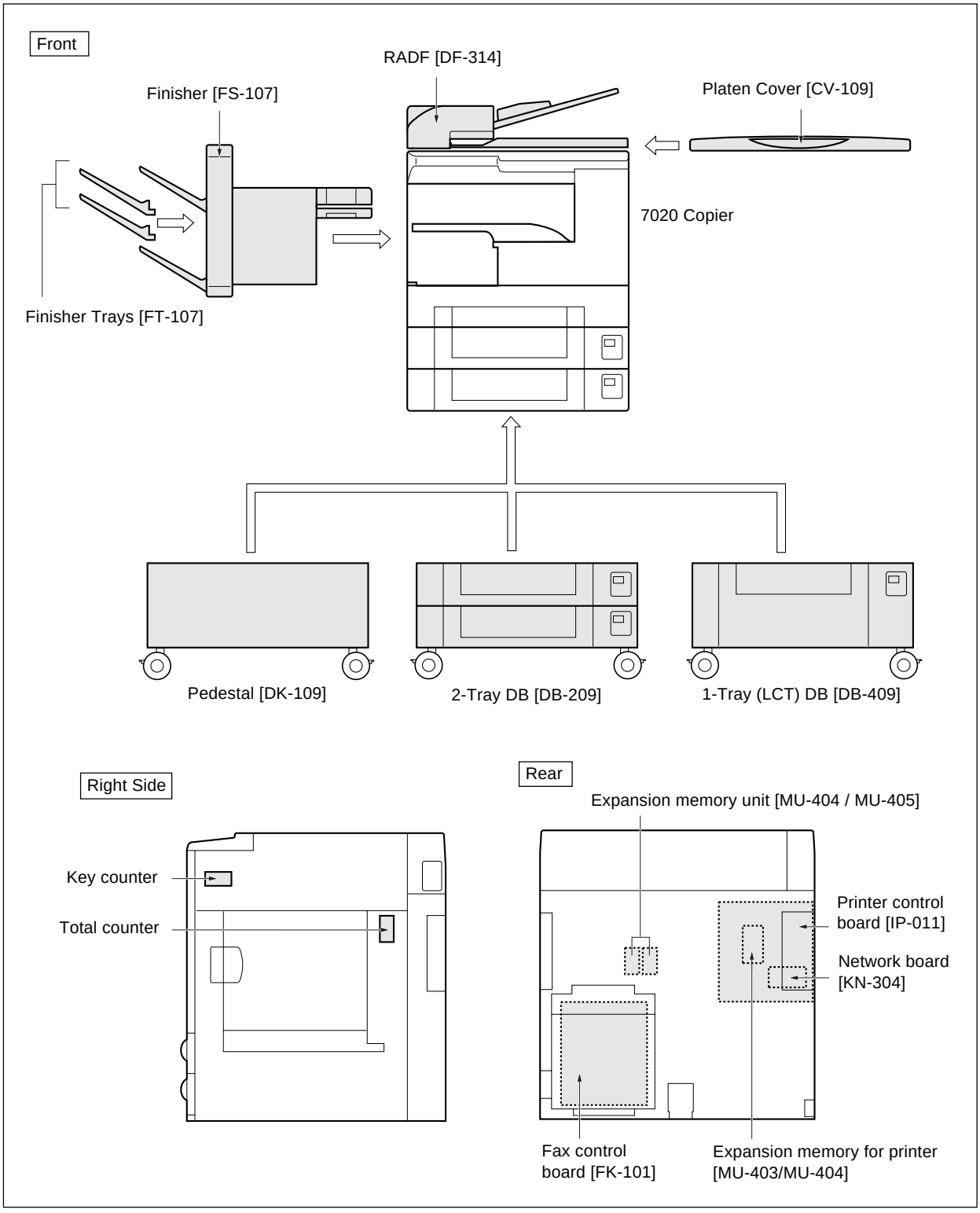

7020 PRODUCT SPECIFICATIONS

1. Type

Type: Semi-console type

Copying method: Indirect electrostatic method

Original table method:
Fixed

Original alignment: Left rear standard

Photosensitive material:
OPC

Sensitizing method:
Laser writing

Paper feed trays: Two trays
(500 sheets per tray; 80g/m^2)
Multisheet by-pass tray
(50 sheets; 80g/m^2)
DB-209 (Two trays; 500 sheets/tray; 80g/m^2)*
DB-409 (One tray; 1500 sheets; 80g/m^2)*
*Option

2. Functions

Originals: Sheets; book; solid object

Original size: A3 max.

Copy sizes: A3 to A5, 11x17~5.5x8.5

Tray 1: B4, A4, A4R, B5 (Only for Europe), B5R (Only for U.S.A.), A5R, 8.5x14, 8.5x11, 8.5x11R, 5.5x8.5

Tray 2: A3, B4 (Only for Europe), A4, A4R, B5 (Only for U.S.A.), B5R, A5R, 11x17, 8.5x14 (Only for U.S.A.), 8.5x11, 8.5x11R, 5.5x8.5 (Only for U.S.A.)

ADU usable paper size:
A3, B4, A4, A4R, B5, B5R, A5R, 8.5x11, 8.5x11R

Magnification:

Fixed magnifications:
x1.00, x1.41, x1.22, x1.15, x0.86, x0.82, x0.71

Special ratio: Three kinds.

Zoom magnifications:
x0.25 to x4.00 (1% steps)

Vertical magnifications:
x0.25 to x4.00 (1% steps)

Horizontal magnifications:
x0.25 to x4.00 (1% steps)

Warm-up time: Within 30 seconds (at 20˚C, at rated voltage)*1

First copy out time: Approx. 5 seconds

Continuous copy speed (life size copies/min):

Size	CPM
A4 / 8.5x11	20

Continuous copy count:
1 to 999

Copy density selections: manual, AE
Arbitrary density (2 modes)

Resolution: 600 dpi x 600 dpi

E-RDH memory: Standard 32 MB
Maximum 288 MB

Special functions: Intersheet; job memory; OHP (blank sheet interleave / copy interleave / OHP only); shift / reduction shift; frame erasure / fold erasure; original image quality (character, photo, pencil); book copy; B/W reverse; original auto layout; original-related settings (mixed, Z-fold, nonstandard, image head correction); non image area erase; 2-in-1, 4-in-1, 8-in-1; rotation sort; repeat; memory copy; booklets; page insertion; density monitor; chapter division; confirmation copy; density shift; copy reservation; stamping (stamp/watermark); application button customization; weekly timer; KRDS

3. Applicable copy paper

Plain paper: 60 to 90 g/m^2 high-quality paper

Special paper (bypass feed only): Label paper
OHP film
Blueprint-master paper
Recycled paper
50 to 59 g/m^2 high-quality paper
91 to 130 g/m^2 high-quality paper

*1 Warm-up time differs depending on the Power Source (Voltage).

CENTER CROSS-SECTIONAL VIEW

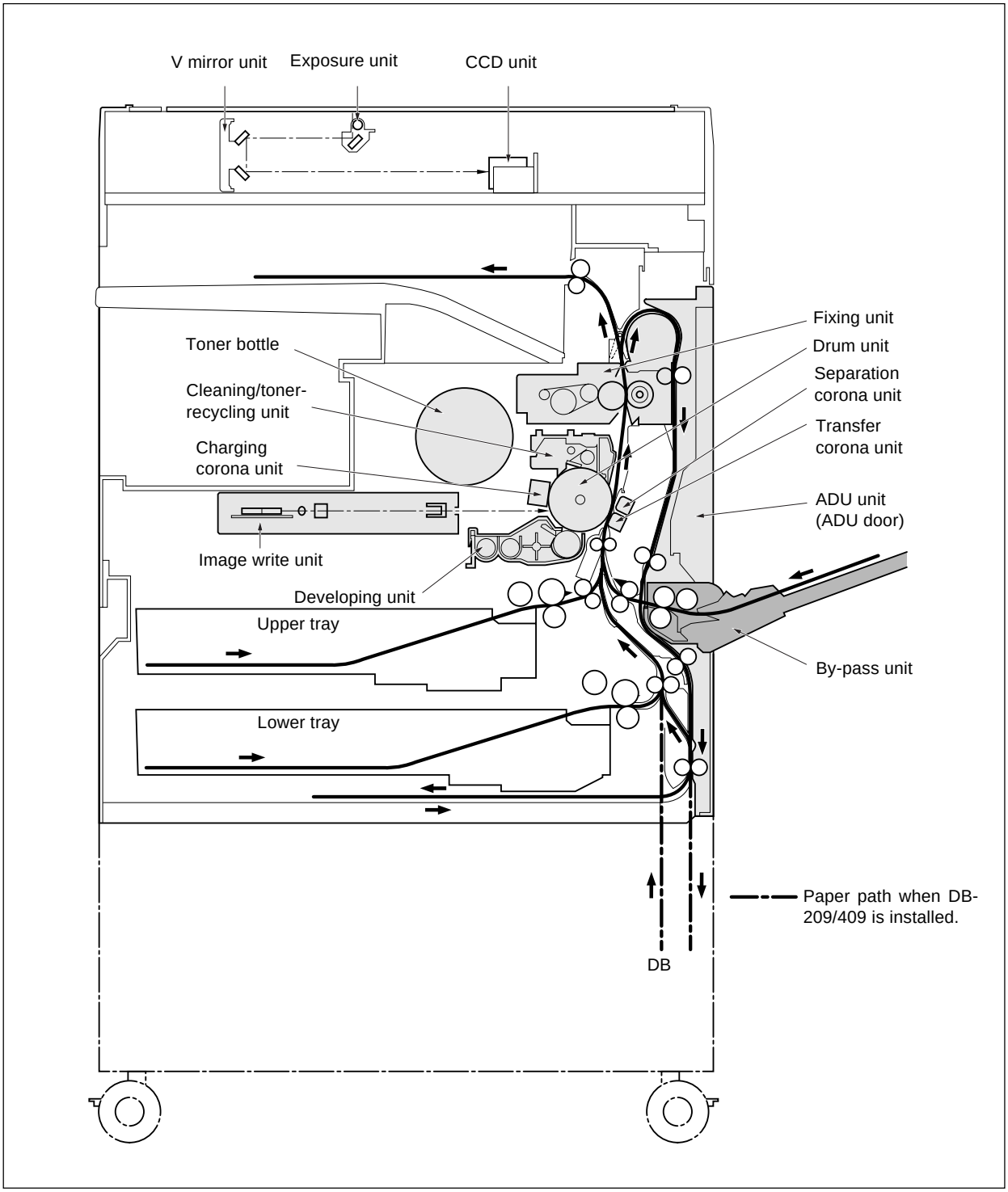

DRIVE SYSTEM DIAGRAM

[1] Main drive

< Fixing/Cleaning drive>

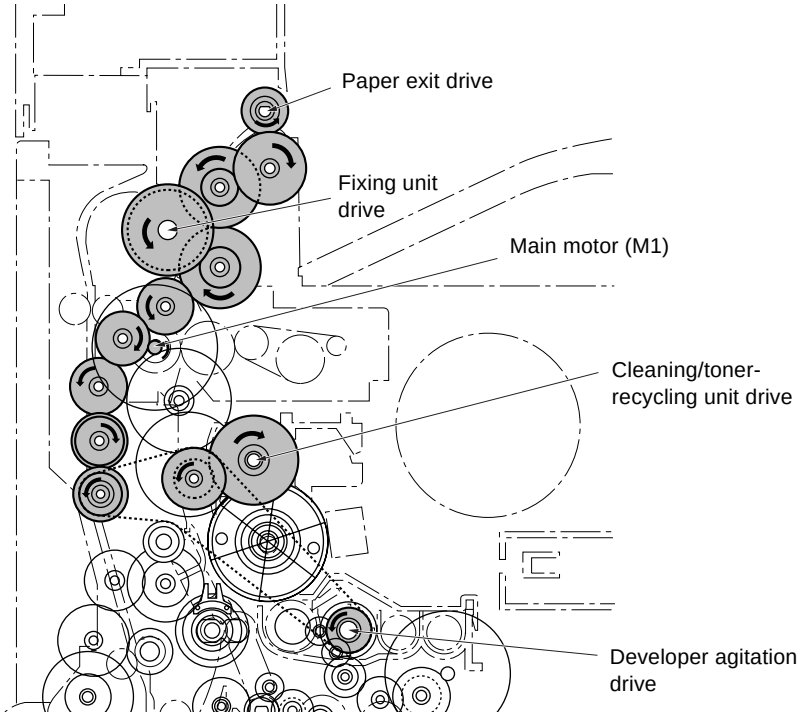

<Drum Drive>

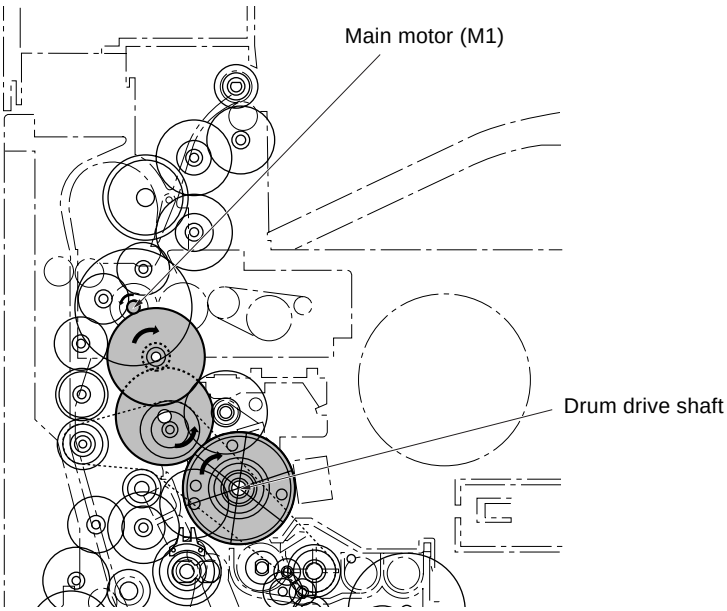

[2] Developing drive

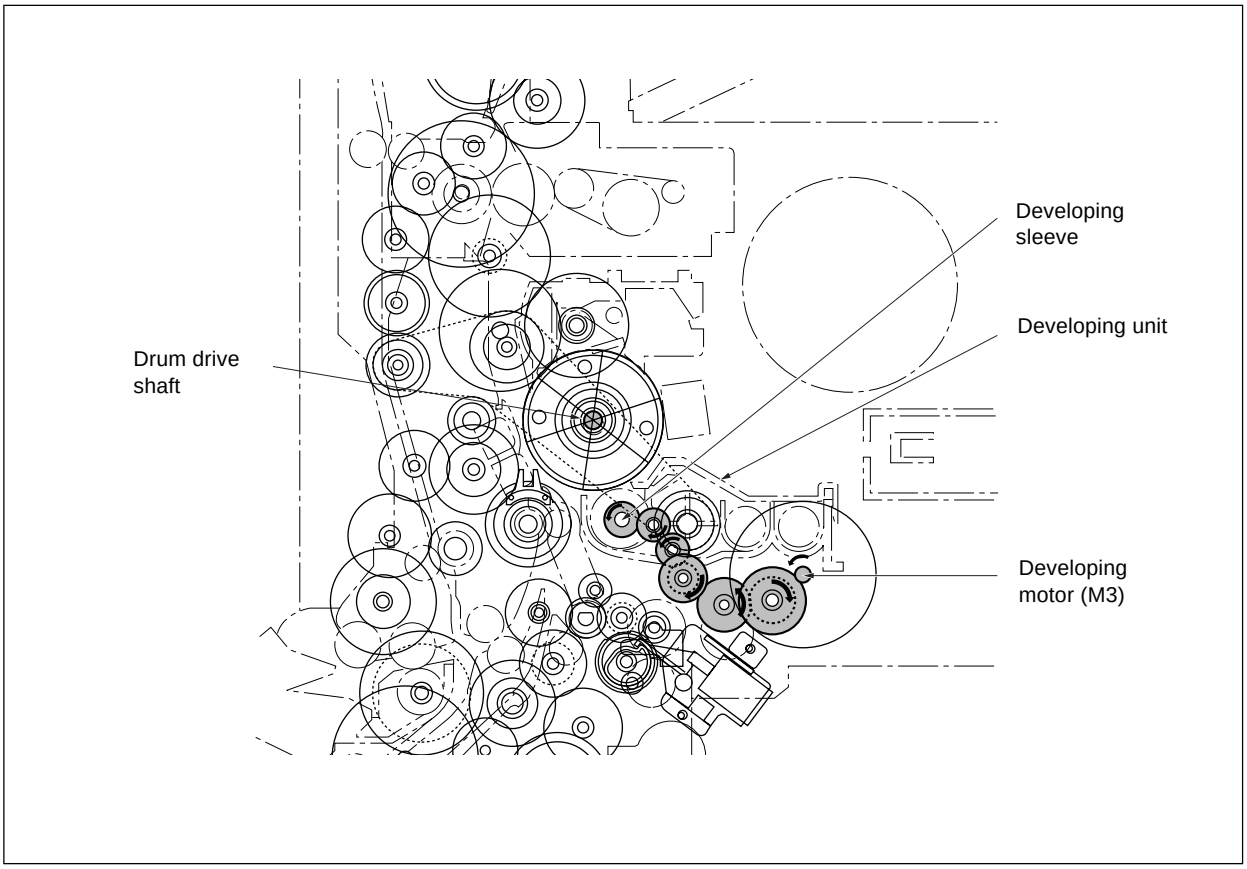

[3] Paper feed drive

<Drive from paper feed motor to loop clutch>

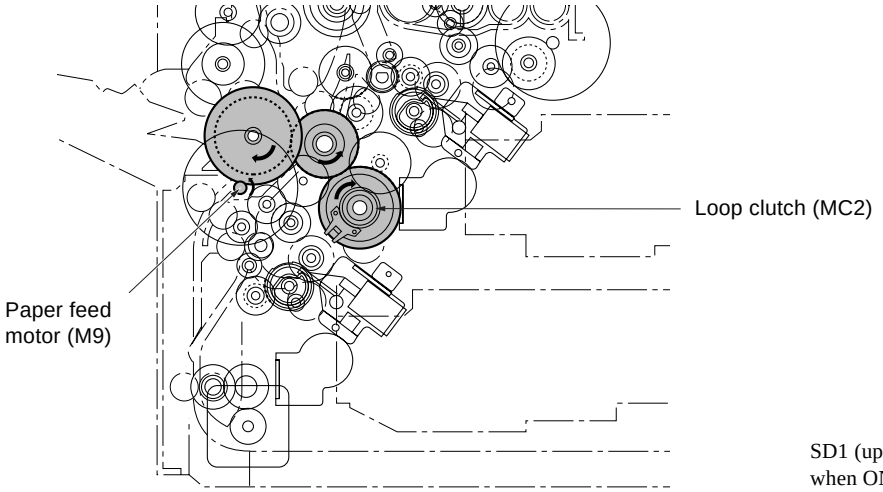

<Drive from loop clutch>
<a. Upper tray drive>

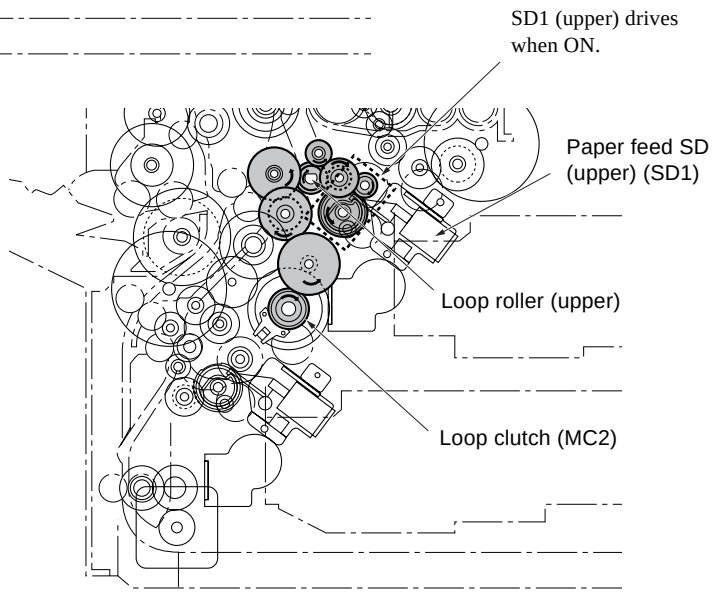

<b. Lower tray drive>

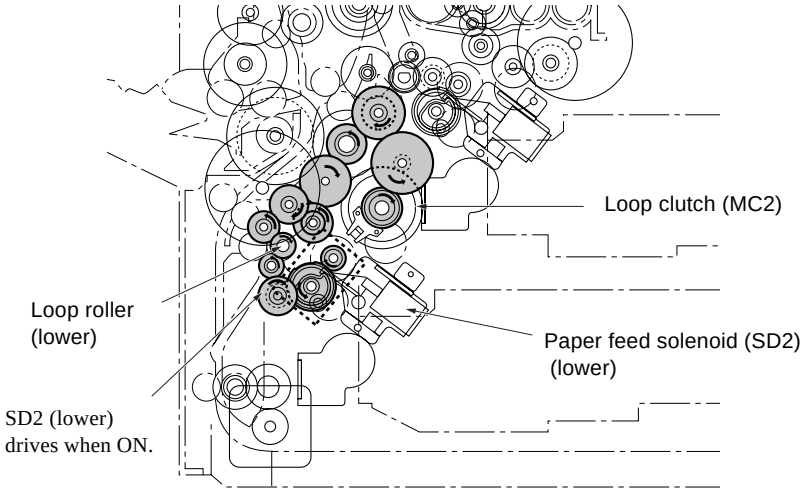

<c. By-pass feed drive>

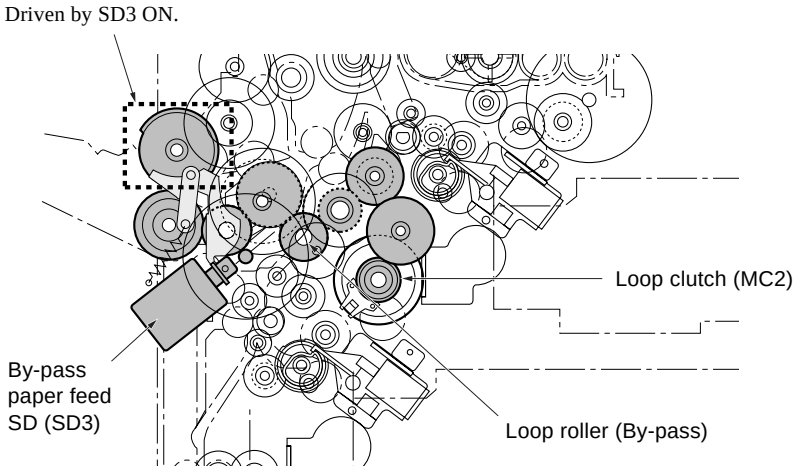

<Registration clutch drive>

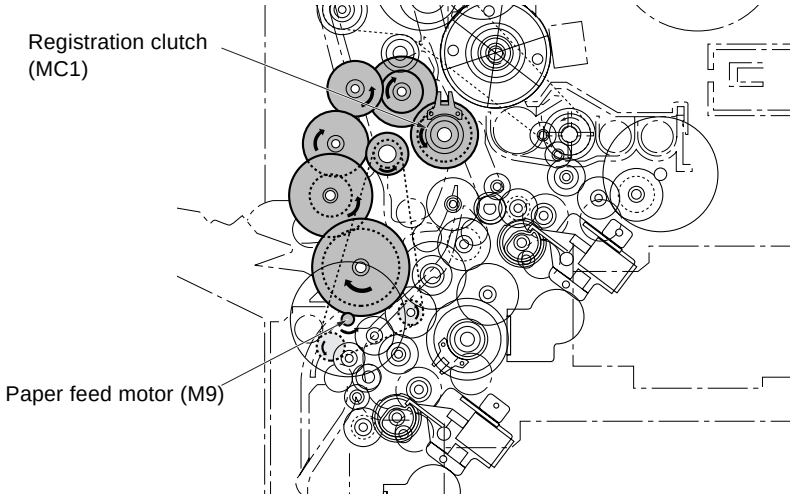

[4] ADU drive

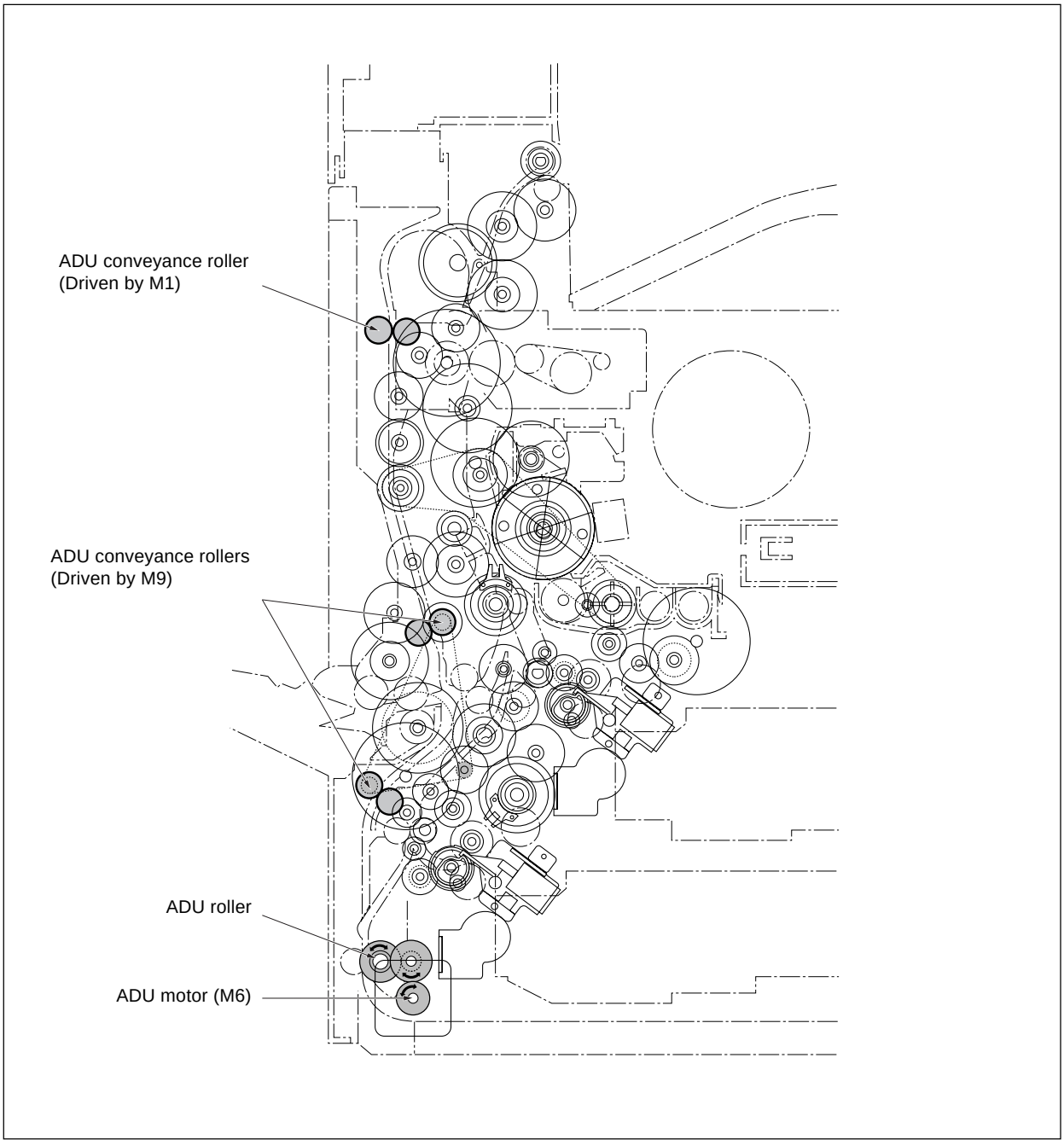
ADU conveyance roller
(Driven by M1)
ADU conveyance rollers
(Driven by M9)
ADU roller
ADU motor (M6)

[5] Reading drive

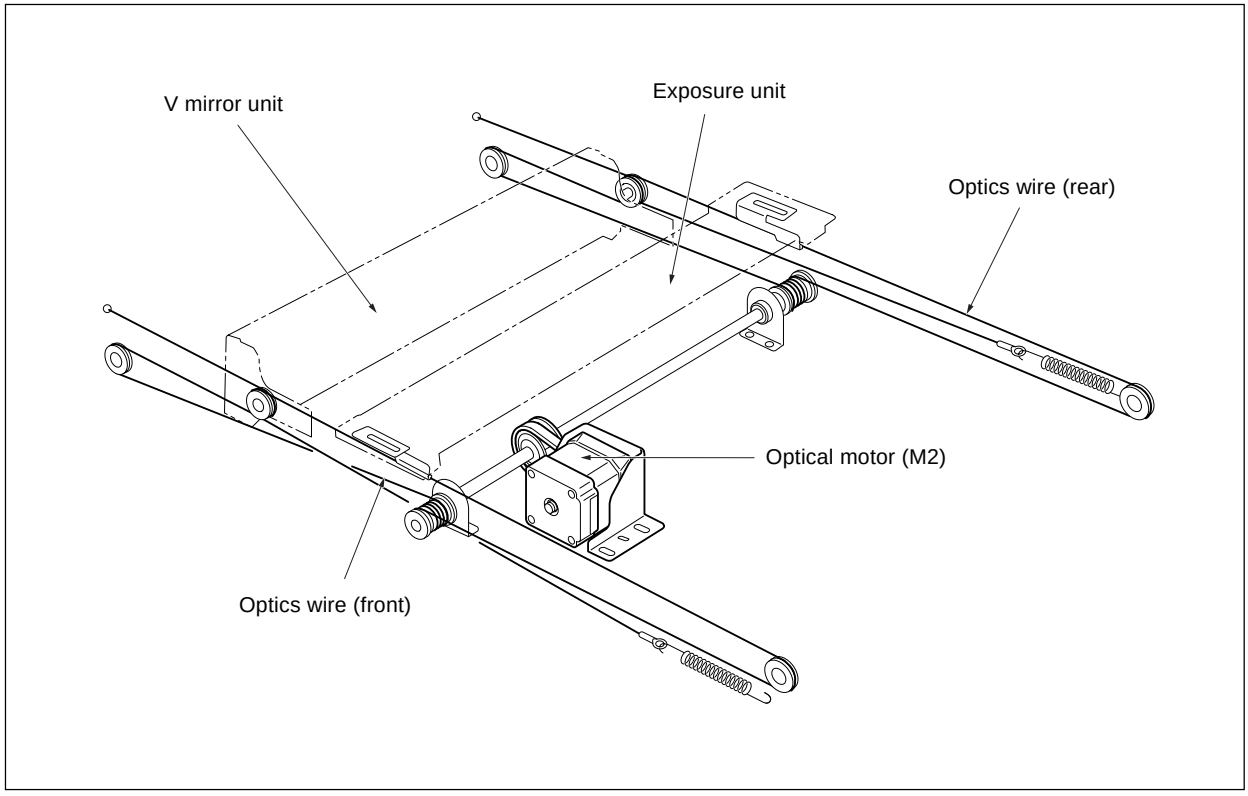

[6] Toner supply drive

