2

UNIT EXPLANATION

EXTERNAL SECTION

[1] Composition

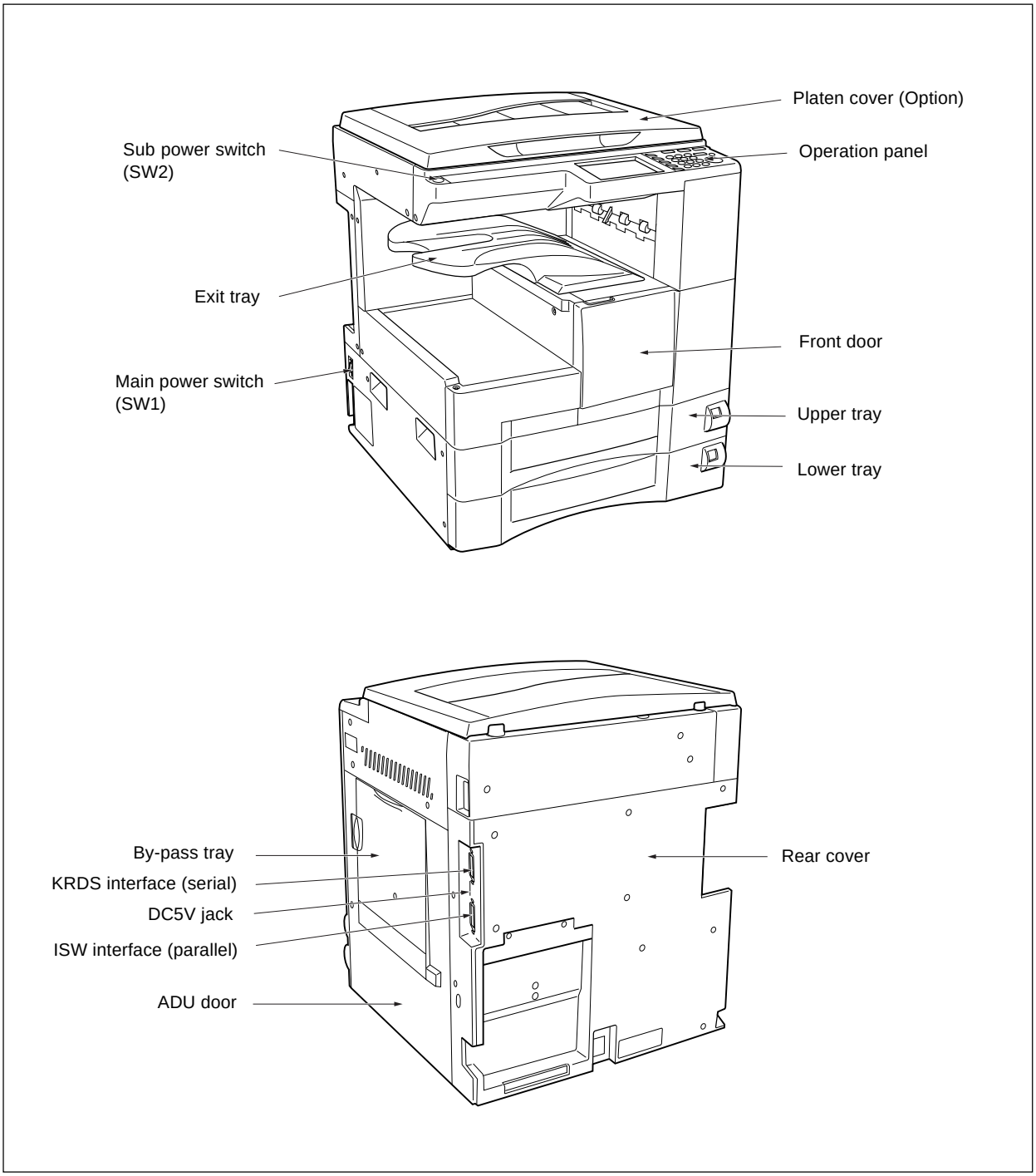

DRIVE SECTION

[1] Composition

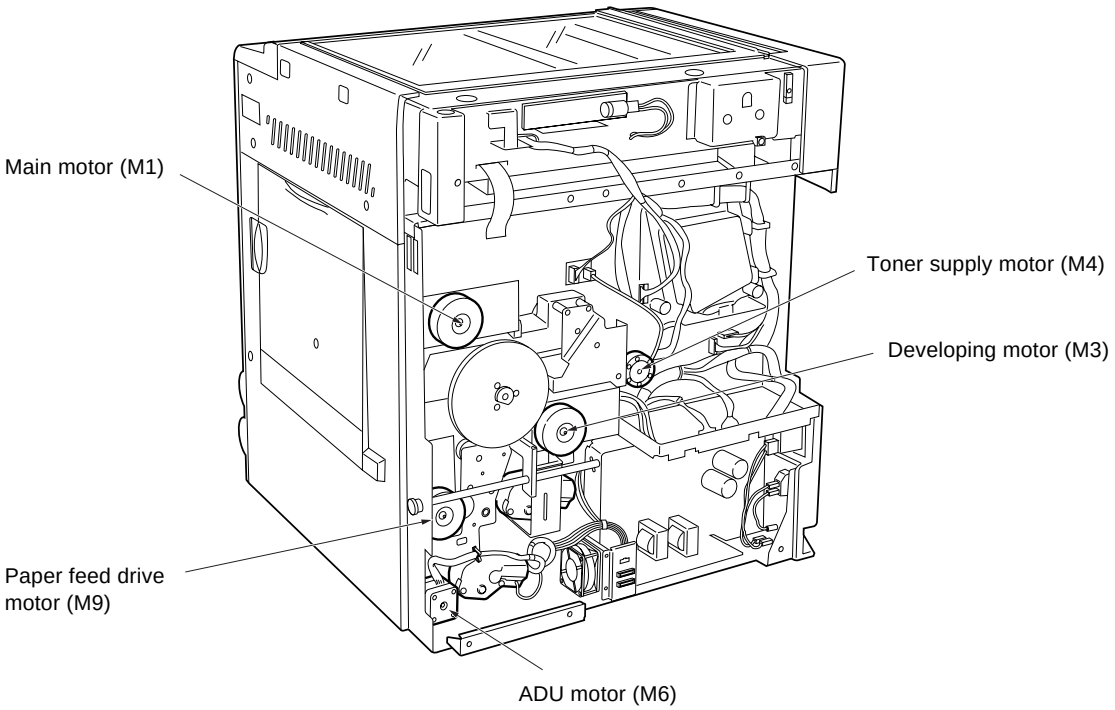

[2] Mechanisms

Mechanisms	Method
Drum, Conveyance, Developer agitation, Fixing, and exit drive, ADU conveyance drive	Gear drive (M1)
Developing sleeve drive	Gear drive (M3)
Paper feed drive, ADU conveyance drive	Gear drive (M9)
Toner supply drive	Gear drive (M4)
ADU drive	Gear drive (M6)

[3] M1 (main motor) control

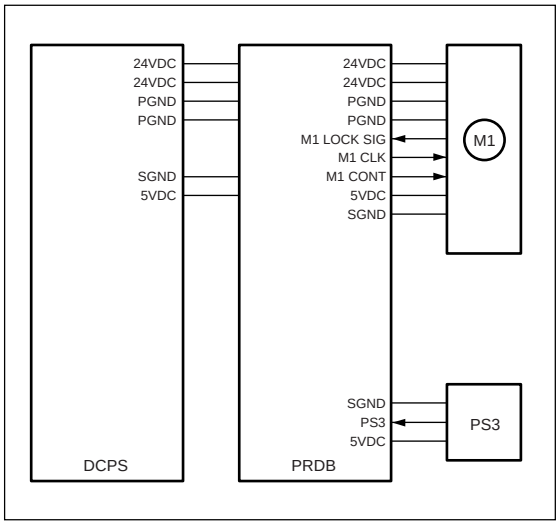

M1 (main motor) is controlled by the PRDB (printer drive board).

1. Operation

M1 is a brushless motor running on 24VDC, and drives the following: 2nd paper feed, fixing, drum, toner conveyance screw, toner recycle screw, and part of developing agitation screw ADU conveyance.

M1 includes an internal speed PS, and utilizes PLL control to maintain constant speed. Rotational speed is controlled by a reference clock signal output by PRDB.

M1 comes ON when the START button is pressed, and goes OFF at a predetermined time interval after PS3 (exit sensor) goes OFF for the final copy.

At warm-up start, M1 comes ON. only during initial drum charging.

2. Signals

a. Input signals

(1) M1 LOCK SIG (M1 → PRDB)

A monitoring signal for the rotation of M1.

Goes [L] when M1 rotation reaches the rated speed.

[H]: Stopped, or rotating at other than rated speed.

[L]: Rotating at rated speed. (PLL: stable)

(2) PS3 (PS3 → PRDB)

Paper exit passage detect signal.

[H] when paper is detected.

b. Output signals

(1) M1 CONT (PRDB → M1)

M1 drive control signal.

[L]: M1 ON

[H]: M1 OFF

(2) M1 CLK (PRDB → M1)

Reference clock for M1 rotation control.

READ SECTION

[1] Composition

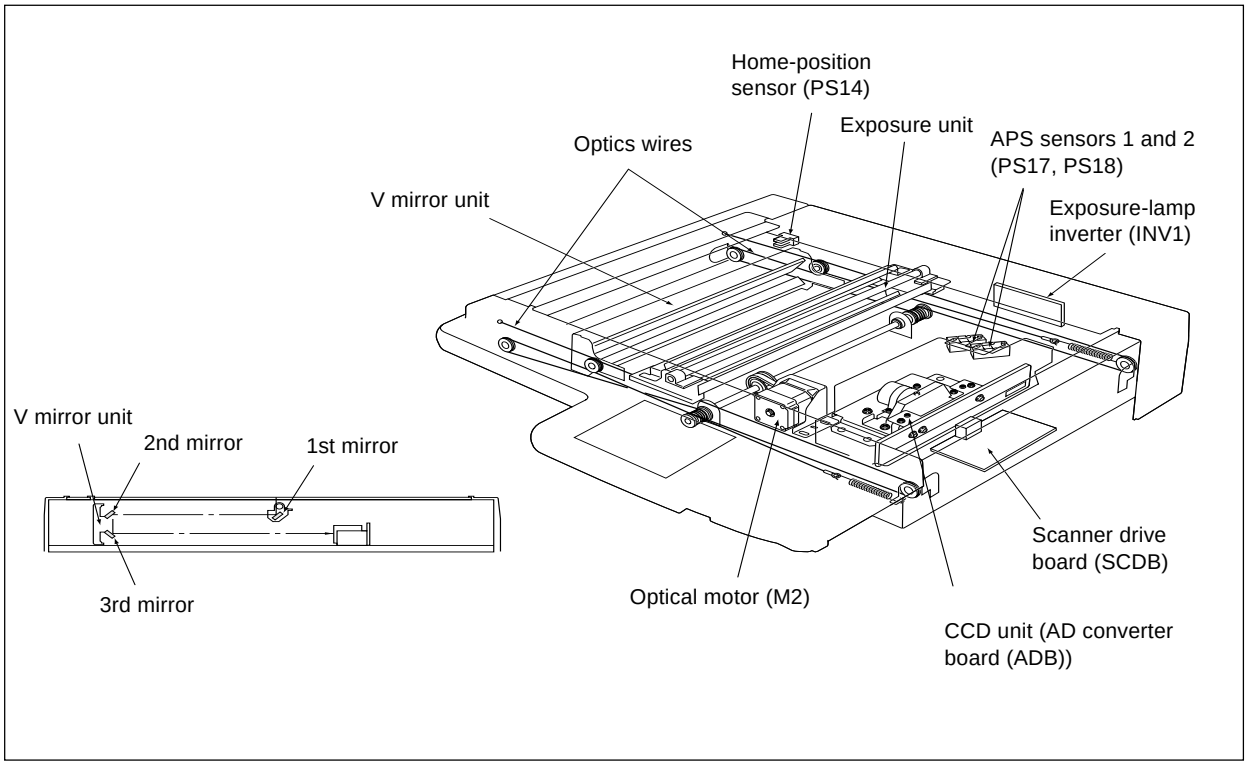

[2] Mechanisms

Mechanism	Method
Light source	Xenon lamp
Exposure	Light source slit exposure
Scanning *	Platen original scanning: Movement of 1st, 2nd, and 3rd mirrors. RADF original scanning: Original is moved with light source held stationary.
Lamp power supply	Lamp cord

* Platen and RADF scans operate as follows.

a. Platen original: The original is placed on the platen glass, and reading is accomplished by movement of the exposure unit and V mirror unit.

b. RADF original: The exposure unit and V mirror unit are shifted under slit glass, and the original is scanned as it passes over the exposure unit.

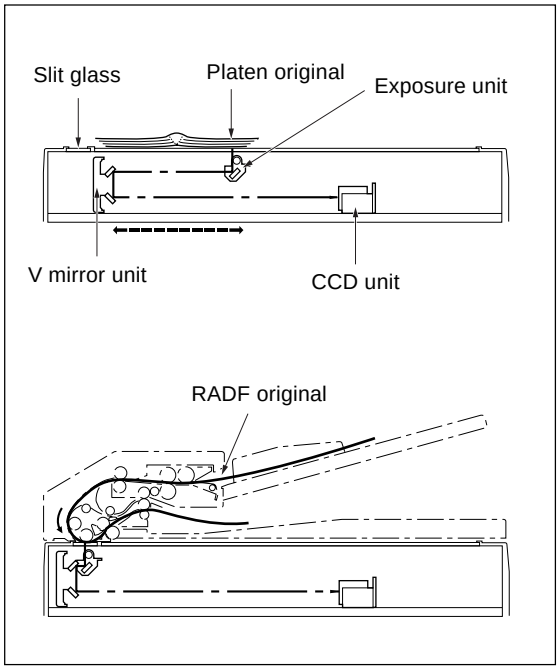

[3] M2 (optical motor) control

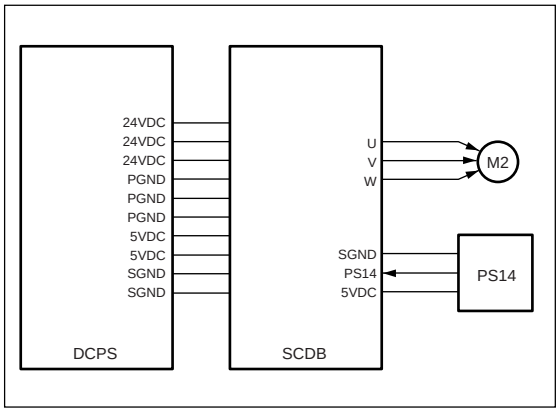

M2 (optical motor) is controlled by the SCDB (scanner drive board). A related signal is provided by PS14 (optics home position PS).

1. Operation

a. Operation of M2

M2 is a 3 phase stepping motor running on 24VDC. This motor drives the exposure unit so as to implement scanning. Forward rotation, reverse rotation, and rotation speed are switched as necessary to carry out each scan cycle.

The exposure unit's home position is detected by PS14. M2 operation (drive time span and drive direction) is controlled by time count after PS14 ON or PS14 OFF.

b. Exposure unit’s scan speed

Scan Speed

Magnification	Scan Speed
Forward	140mm/sec (1:1 magnification)
Reverse	241mm/sec (max)

c. Initial operation when power is turned ON

When SW2 (power switch board) comes ON, the exposure unit starts a home position search. The search procedure differs according to whether PS14 is ON or OFF. Upon completing the search, the exposure unit stands by at the platen mode's APS reading position.

(1) When PS14 is turned ON

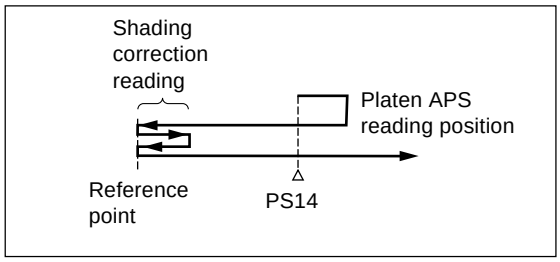

(2) When PS14 is goes OFF

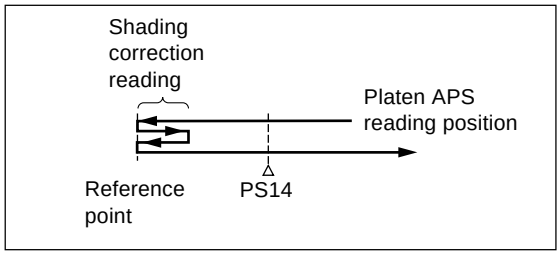

d. Shading correction reading

Shading correction read out is implemented using the white reference plate attached beneath the glass stopper plate. Shading correction is executed when SW2 comes ON.

e. Exposure scanning modes

Two modes are implemented: platen mode and DF mode.

In platen mode, the exposure unit moves as necessary to scan the original. In DF mode, the RADF side moves the original while the exposure unit stays fixed in a specified position (the DF reading position).

f. Operation in DF mode

The DF reading position is to the exit side of PS14. The exposure unit moves from its standby position (the platen APS reading position) to the DF reading position.

It then returns to the platen APS reading position after completing the original scan and again enters standby.

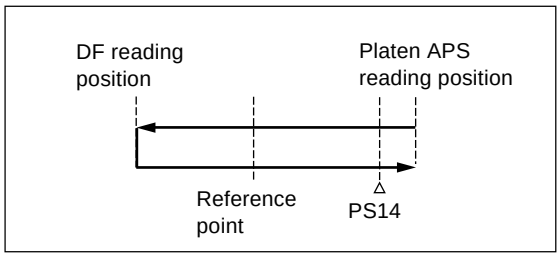

g. Operation in platen mode

In this mode, the scan sequence depends on the copy density selection (either AE or manual).

After completing the scan it returns to the platen APS reading position.

(1) AE mode

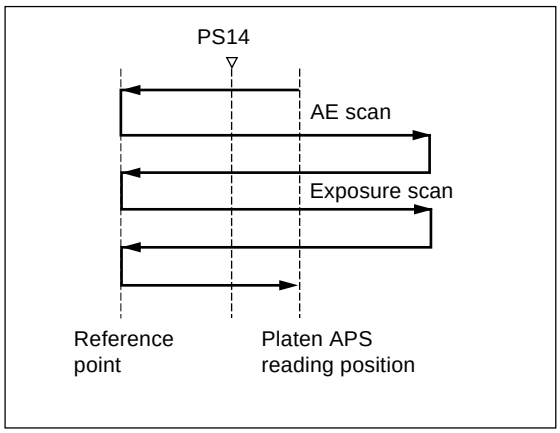

(2) Manual copy mode

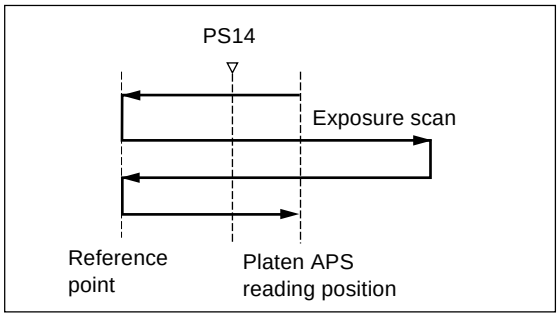

(3) Book copy (AE) mode

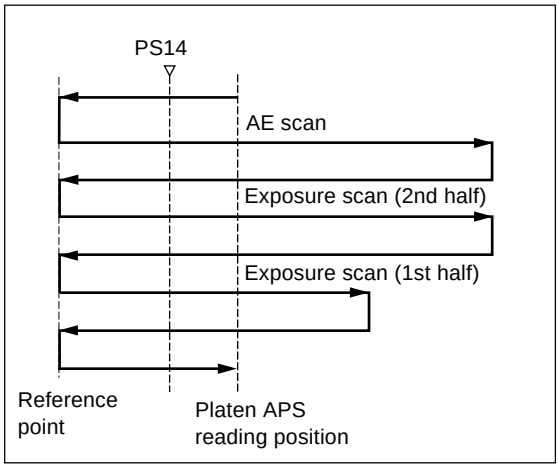

(4) Book copy (Manual) mode

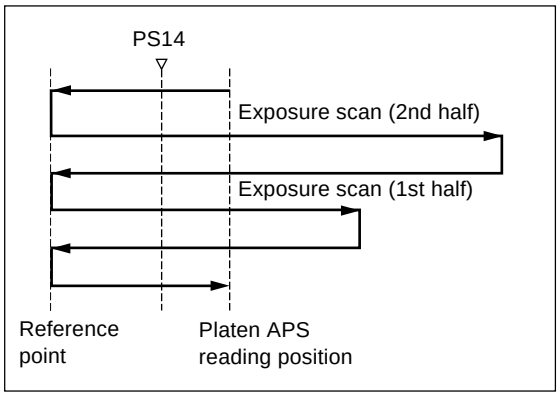

2. Signals

a. Input signal

(1) PS14 (PS14 → SCDB)

Exposure unit's home position detect signal.

[L]: Exposure unit is in home position.

[H]: Exposure unit out of home position.

b. Output signals

(1) M2 U, V, W (SCDB → M2)

M2 (Optical motor) ON/OFF drive signals.

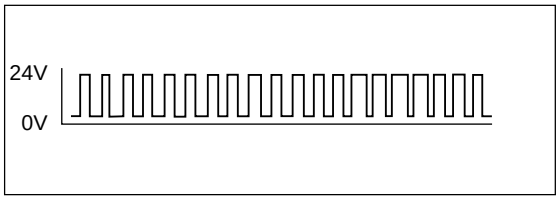

[4] Exposure control

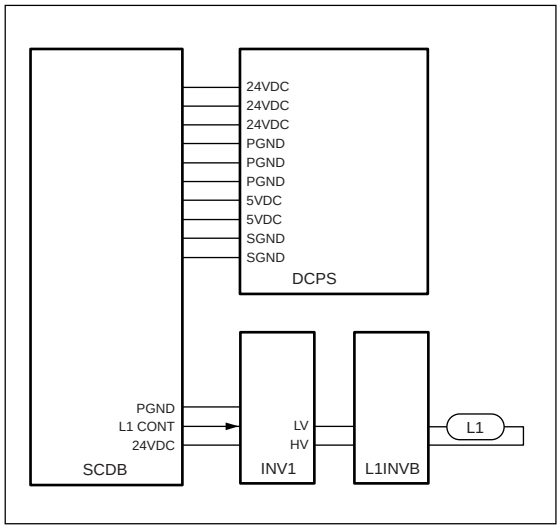

Power for L1 (exposure lamp) is supplied by INV1 (exposure lamp inverter). This action is controlled by the SCDB (scanner drive board).

1. Operation

L1 is a xenon lamp, and is driven by an inverter circuit. Since the xenon lamp provides a stable light intensity with low heat generation, it does not require light intensity control circuit or overheat protection circuit.

2. Signals

a. Output signal

(1) L1 CONT (SCDB → INV1)

L1 ON/OFF control signal.

[L]: L1 ON

[H]: L1 OFF

[5] Original reading control

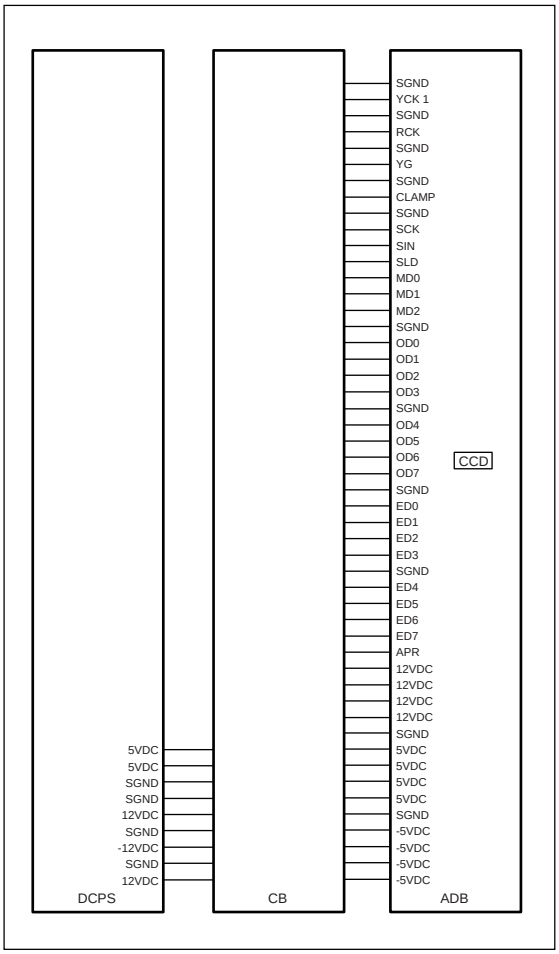

Original reading is carried out by the CCD sensor on the ADB (A/D conversion board).

1. Operation

The light from the exposure lamp reflects back from the original, passes through a lens, and hits the CCD sensor. The CCD sensor generates an analog electrical signal corresponding to the light intensity. The ADB (A/D conversion board) then converts this signal into a digital signal.

a. Original reading

The reading timing is as follows.

(1) Platen mode

Reading starts at a predetermined time interval after the START button is pressed and when the exposure unit has moved 6mm in the paper feed direction after PS14 (optics home position) goes OFF.

(2) DF mode

Reading begins at a predetermined time interval after the leading edge of the original causes PS311 (original registration PS) to come ON.

[6] APS control

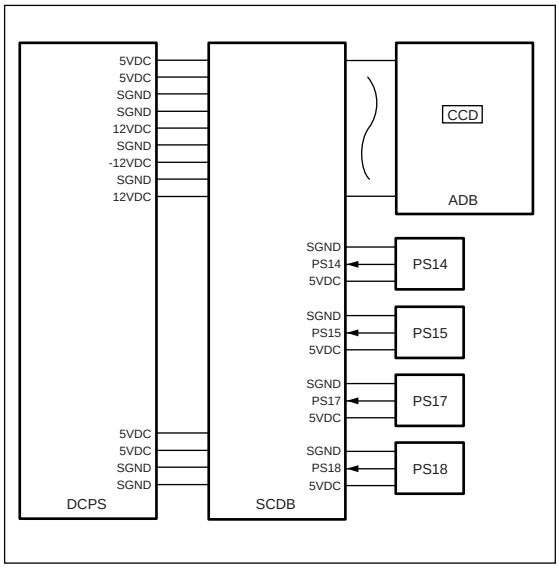

APS detection is carried out at opening or closing of the RADF cover or original cover, and is controlled by the SCDB (scanner drive board) based on signals from the APS sensors and CCD sensor. Related signals are provided by PS14 (optics home position PS), PS15 (APS timing PS) and by PS304 (DF open/close PS) on the RADF.

1. Operation

a. APS detect operation

APS detection operation differs according to whether operation is in platen mode or DF mode.

(1) Platen mode

Size is detected by the combination of the ON/OFF action of PS17 (APS sensor 1) and PS18 (APS sensor 2) and the detect signal from the CCD sensor on the ADB (A/D conversion board).

PS17 and PS18 detect the original size in the sub scanning direction, while the CCD sensor detects the size in the main scanning direction.

L1 is ON during APS detection, so that the illumination level (light or dark level) in the main scanning differs according to whether the original is present or absent. To detect line width (main scanning width), the CCD sensor detects the difference from sky shot black level to paper edge white level at each side. If the RADF is installed, original size detection in the main scanning is reexecuted when PS304 (DF open/close PS) comes ON, so as to confirm the original size.

The two APS sensors (PS17 and PS18) each consist of a photosensor and a LED. If the original is present at the sensor position, the light generated by the LED reflects from the original and is detected by the photosensor.

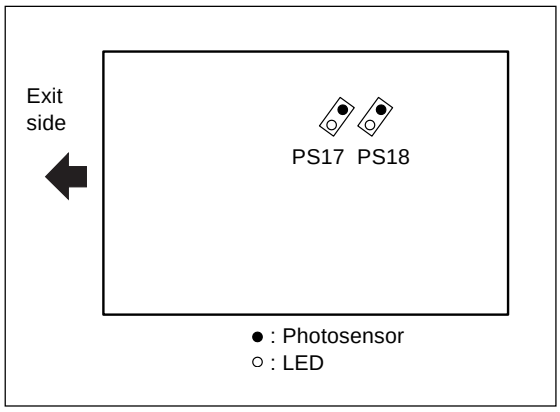

(2) DF mode

Original size detection is carried out by ON/OFF action of PS306 (original size detect PS 1), and PS307 (original size detect PS 2), and by the resistance level of VR301 (original size detect VR) located in the RADF paper feed tray.

The following table shows the relation between the PS sensors and detected original sizes.

Sensor Original Size	PS17 PS306	PS18 PS307
A3	Original detected (ON)	Original detected (ON)
B4	Original detected (ON)	Original detected (ON)
A4R	Original detected (ON)	Original not detected (OFF)
B5R	Original not detected (OFF)	Original not detected (OFF)
A4	Original not detected (OFF)	Original not detected (OFF)
B5	Original not detected (OFF)	Original not detected (OFF)

b. APS detection timing

APS detection timing differs according to whether operation is in platen mode or DF mode.

(1) Platen mode

Detection is carried out when PS15 (APS timing PS) comes ON.

- If the RADF is installed, detection is carried out again when PS304 (DF open/close PS) comes ON.
- If the platen cover or RADF is open, detection is carried out when the START button comes ON.

(2) DF mode

If DF mode has been selected or if an original is set in the RADF paper feed tray, detection is carried out using PS306 (original size detect PS 1), PS307 (original size detect PS 2), and VR301 (original size detect VR).

2. Signals

a. Input signals

(1) PS15 (PS15 → SCDB)

RADF cover or platen cover open/close detect signal.

[L]: ON (Execute APS)

[H]: OFF (Cancel APS)

(2) PS17 (PS17 → SCDB)

Original size detect signal.

[L]: Original detected.

[H]: Original not detected.

(3) PS18 (PS18 → SCDB)

Original size detect signal.

[L]: Original detected.

[H]: Original not detected.

[7] AE control

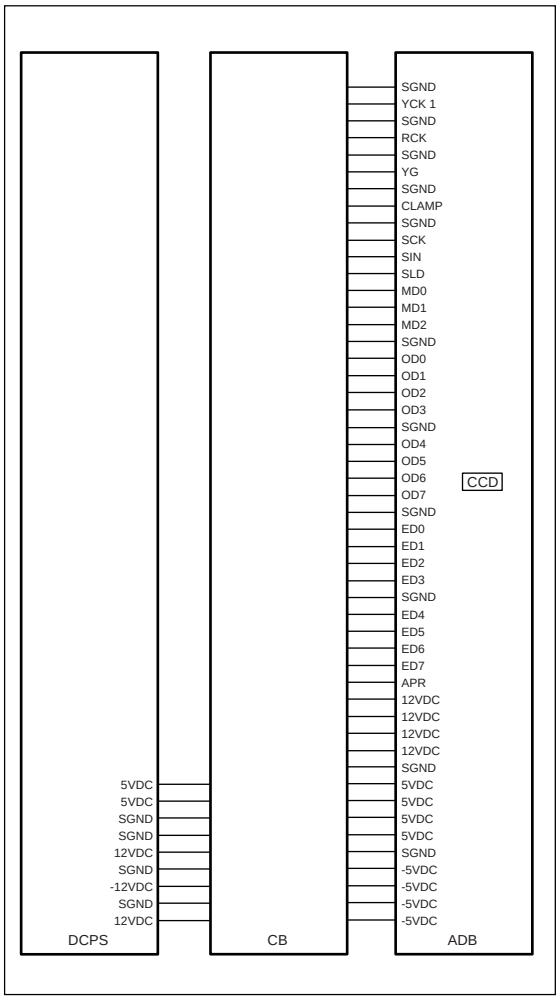

During AE scan, the CCD sensor on the ADB (A/D conversion board) reads the density level of the original. The CPU on the CB (overall control board) processes the data and, based on the results, selects the gamma correction curve that will best reproduce the original.

1. Operation

a. AE detect operation

(1) Platen copy

AE scanning is carried out when the START button is pressed. The operation measures density over the range described below.

<AE sampling range>

1) If the platen cover or RADF cover is open, sampling is carried out to the boundaries of the non image area erase or within the area detected by APS.
2) If the platen cover or RADF cover is closed, scanning is carried out over the range from the center to 20mm away from each edge of the original, as detected by APS.

- If APS is unable to detect the size, sampling is carried out up to 20mm short of the minimum supported original size in each direction.

(2) DF mode (1-1)

Pressing the START button causes the original to feed. The leading area of the original is read, and density is measured based on the read data. The sampling range is as follows.

<AE sampling range>

1) In the main scanning direction

   Sampling is carried out to the boundaries of the non image area erase or within the area detected by APS.

- Sampling is carried out over the range from the center to 20mm away from each edge of the original, as detected by APS.
- If APS is unable to detect the size, scanning is carried out up to 20mm short of the minimum suppoted original size in each direction.

2) In the sub scanning direction

   Sampling starts 1.5mm from the leading edge and ends 2.9mm from the leading edge.

WRITE UNIT

[1] Composition

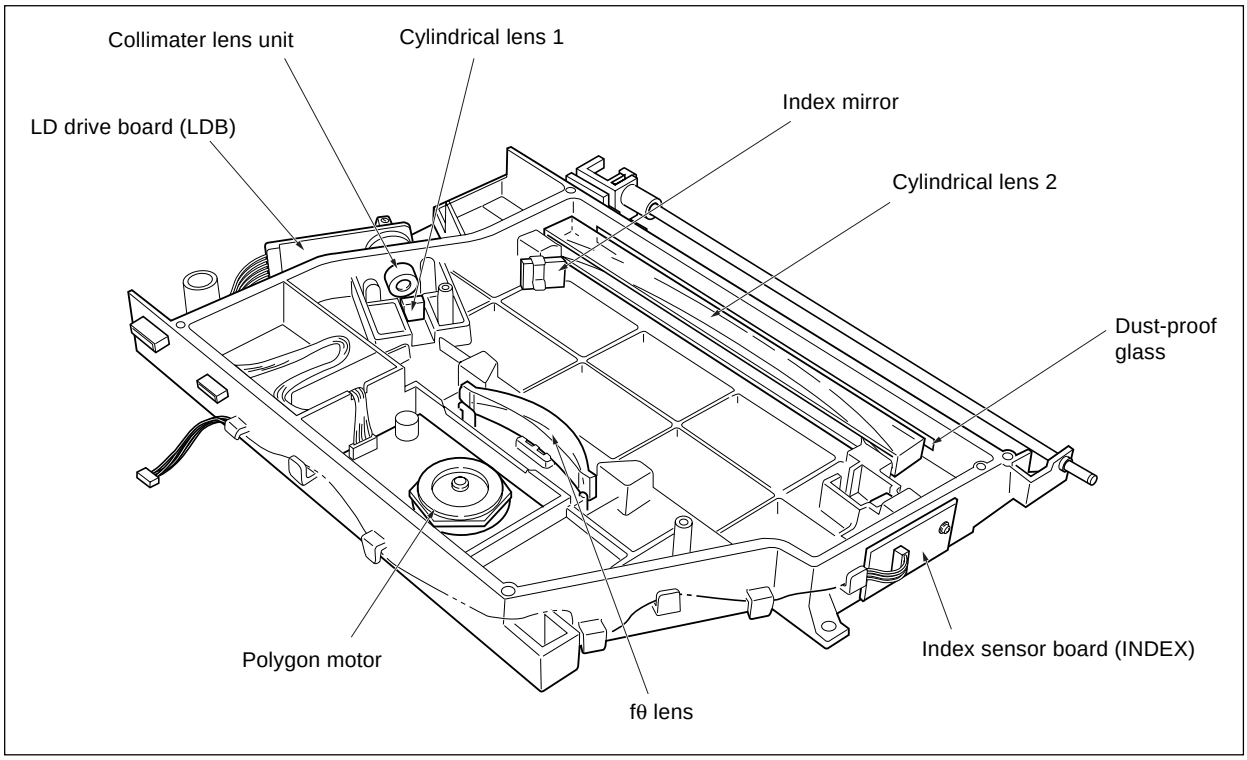

[2] Mechanisms

Mechanism	Method
Scan *	Polygon mirror Rotational speed: 33070.8 rpm
Light source	Laser diode • Output: Max. 5mW • Wavelength: 780nm
Positioning	Index sensor

* : Path of laser light

The light output from semiconductor laser is radiated onto the opc drum via the collimater lens, cylindrical lens 1, polygon mirror, fθ lens, cylindrical lens 2.

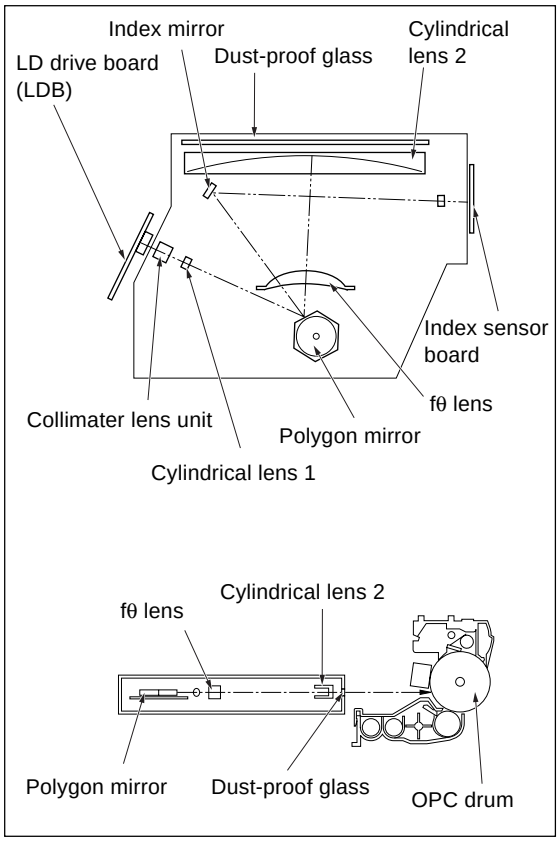

[3] M5 (polygon motor) control

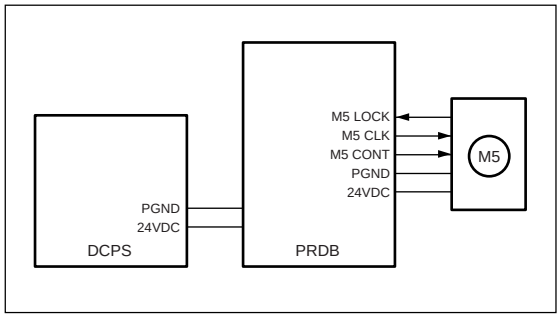

M5 (polygon motor) is controlled by the PRDB (printer drive board).

1. Operation

a. M5 is a brushless motor running on 24V DC power. The motor turns the polygon mirror, causing the laser beam from the LDB (LD drive board) to scan along the drum shaft direction. M5 includes an internal speed sensor, and utilizes PLL control to maintain a constant speed.

b. M5 rotation speed is as follows.

Machine State	Rotation Speed
Copying	33070.8 rpm
Idling	Any of the following three speeds can be selected by using "25" mode. • 33070.8 rpm • 16000 rpm* • Stop*

* If one of these speeds has been selected, M5 rotation speed will change at a specified time upon completion of warm up or completion of copy processing. You can select this time period, using "25" mode, to any of the following: 15 sec, 30 sec. 60 sec, 120 sec.

2. Signals

a. Input signal

(1) M5 LOCK (M5 → PRDB)

M5 status detect signal.

[L] when M5 rotation reaches the rated speed.

b. Output signals

(1) M5 CONT (PRDB → M5)

M5 drive control signal.

[L]: M5 ON

[H]: M5 OFF

(2) M5 CLK (PRDB → M5)

Reference clock for M5 rotation control.

[4] Image write control

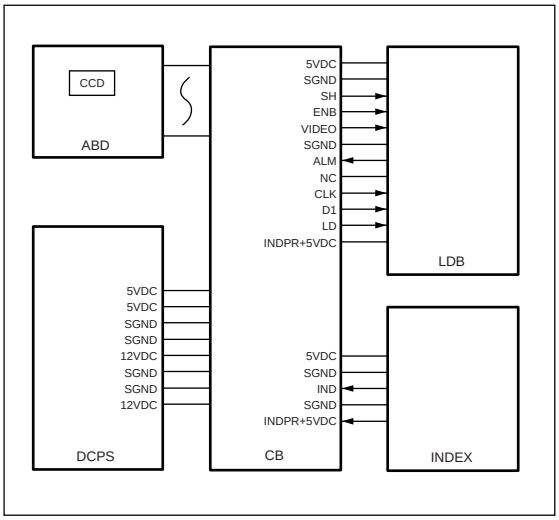

The CCD sensor outputs analog image data. The ADB (A/D conversion board) converts this data to digital form. The CB (overall control board) processes this data within memory, generating a laser recording signal. This signal is transmitted, by means of a CB control signal, to the LDB (LD drive board), and is output as an optical signal by the LDB's laser emitting element. The write start position for the laser recording signal is detected by the index sensor on the index sensor board.

1. Operation

a. Image processing

The CB carries out the following processing.

(1) AOC (automatic offset correction)

Reading is taken with SW2 (sub power switch) ON and L1 (exposure lamp) OFF, and the analog offset voltage for CCD sensor output is automatically adjusted such that this level becomes the lower limit for the A/D converter.

(2) AGC (automatic gain correction)

When SW2 comes ON, the level from the white reference board is read by turning ON the L1 (exposure lamp), and the analog amplification for the CCD sensor output is automatically adjusted such that this level becomes the upper limit for the A/D converter.

(3) Shading correction

<Execution timing>

White correction / Black correct

• At SW2 (sub power switch) ON

(4) Brightness/density conversion

(5) AE processing

(6) Text/dot pattern judgment

(7) Filtering

(8) Magnification change processing

(9) Error diffusion processing

(10) Data compression processing

(11) Write density correction

b. Write

CB transmits image data one pixel by one pixel to the LDB. The LDB emits the laser onto the drum in certain time for each pixel determined by the image data received from the CB.

(1) MPC (Maximum Power Control)

The CB informs LDB of the maximum laser output value. The LDB keeps and uses this value in APC (automatic power control) to maintain the laser intensity.

<MPC Timing>

When SW2 (sub power switch) is turned ON.

(2) APC (Automatic Power Control)

After the CB has set the MPC, it outputs an APC start command to the LDB in accordance with the following timing.

<APC Timing>

At detection of M5 (polygon motor) PLL lock. Thereafter, LDB automatically monitors the laser drive current for each line, and controls the laser such that the light intensity is always at MPC.

(3) Write timing

The index board's IND signal determines the start time for laser writing of each scan in the drum shaft direction.

2. Signals

a. Input signals

(1) IND (INDEX → CB)

Index signal for write system.

(2) INDPR + 5VDC (INDEX → CB)

Index board detect signal.

[H]: Not present

[L]: Present

(3) ALM (LDB → CB)

Indicates abnormality in laser drive current (APC operation).

[H]: Normal

[L]: Abnormal

(4) LPR (LDB → CB)

LDB connection monitoring signal.

b. Output signals

(1) VIDEO (CB → LDB)

Image signal for laser.

(2) CLK (CB → LDB)

Clock signal used for transfer of MPC data.

(3) DI (CB → LDB)

MPC data signal.

(4) LD (CB → LDB)

MPC data memorize command signal.

(5) SH (CB → LDB)

APC sampling signal (for one line).

(6) ENB (CB → LDB)

ON/OFF control signal for laser APC function. If OFF, laser output is stopped.

DRUM UNIT

[1] Composition

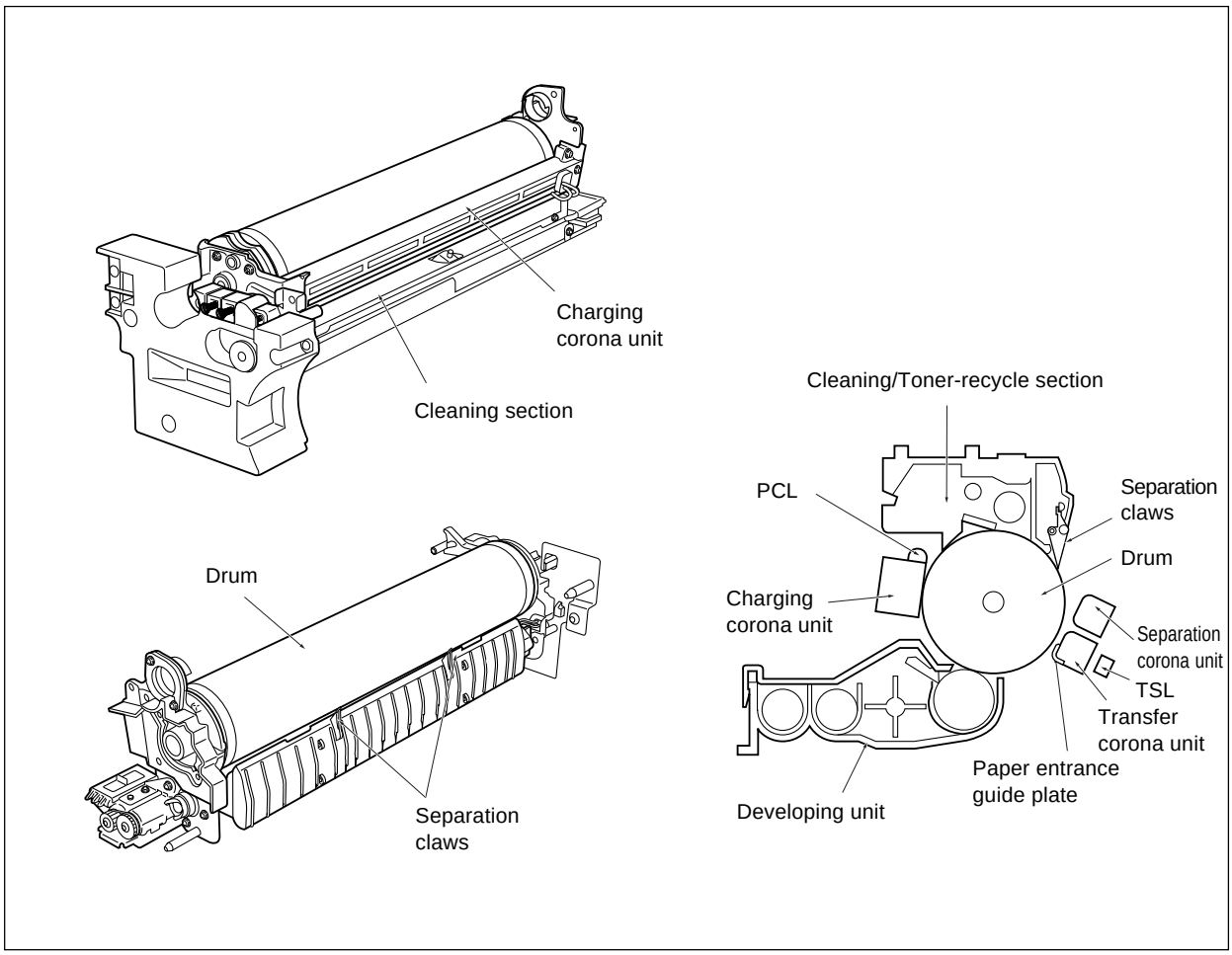

[2] Mechanisms

Mechanism	Method
Pedestal hold	Fixed rail
PCL	LED
Auxiliary separation *	Separation claws

The drum unit is a single unit consisting of the drum, the charging corona unit, the cleaning, toner recycle section, and the PCL.

* : Operation of the separation claws

When SD7 (separation claw SD) is activated, the rod connected to it moves such that the cutouts on the rod allow the claws to fall into contact with the drum under their own weight. The contact of the claws aids in paper separation.

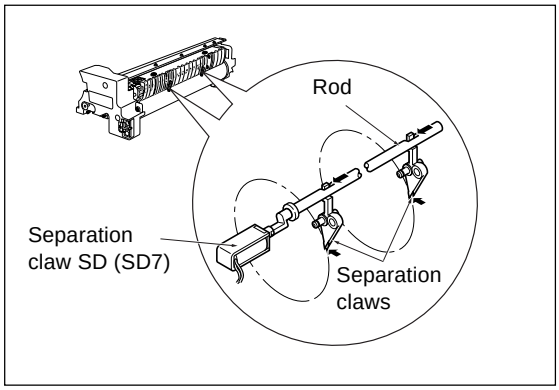

[3] PCL/TSL control

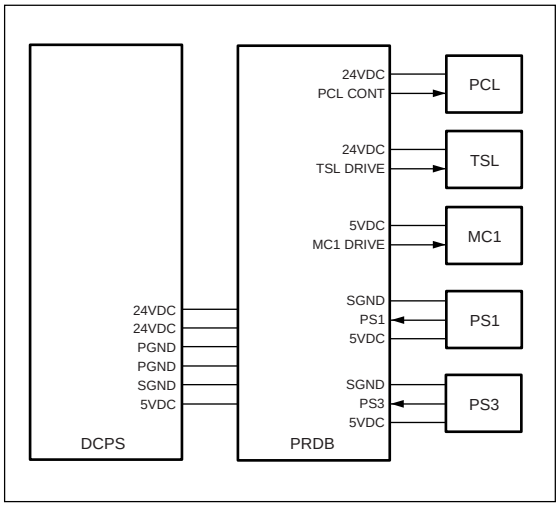

The PCL (pre-charging lamp) and TSL (transfer synchronization lamp) are LED type lamps, and are controlled by the PRDB.

1. Operation

PCL lights up when the START button is pressed, and goes OFF at a predetermined time interval after PS3 (paper exit PS) goes OFF on exit of the final copy. TSL comes ON at a predetermined time interval after MC1 (registration clutch) comes ON, and goes OFF at a predetermined time interval after PS1 (registration PS) goes OFF.

2. Signals

a. Input signal

(1) PS1 (PS1 → PRDB)

Detection of paper at paper feed temporary stop position.

[L] when paper is detected.

b. Output signals

(1) PCL DRIVE (PRDB → PCL)

PCL ON/OFF control signal.

[L]: PCL ON

[H]: PCL OFF

(2) TSL DRIVE (PRDB → TSL)

TSL ON/OFF control signal.

[L]: TSL ON

[H]: TSL OFF

[4] Separation claws control

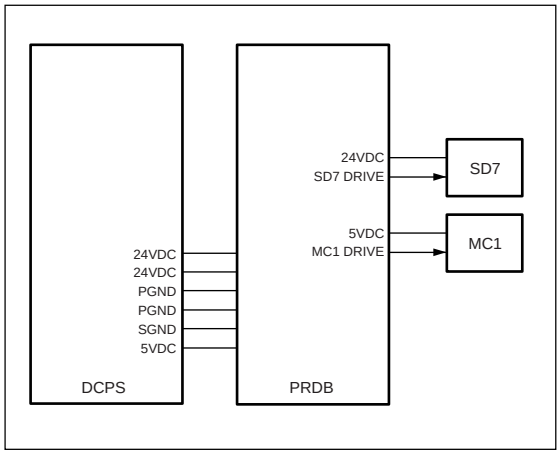

The separation claws are driven by SD7 (separation claw SD), which is controlled by the PRDB (printer drive board).

1. Operation

SD7 comes ON at a predetermined interval after MC1 (registration clutch) comes ON, causing the separation claws to make contact with the drum so as to assist in separating the paper from the drum.

2. Signals

a. Output signal

(1) SD7 DRIVE (PRDB → SD7)

SD7 drive control signal.

[L]: SD7 ON

[H]: SD7 OFF

[5] Paper entrance guide plate control

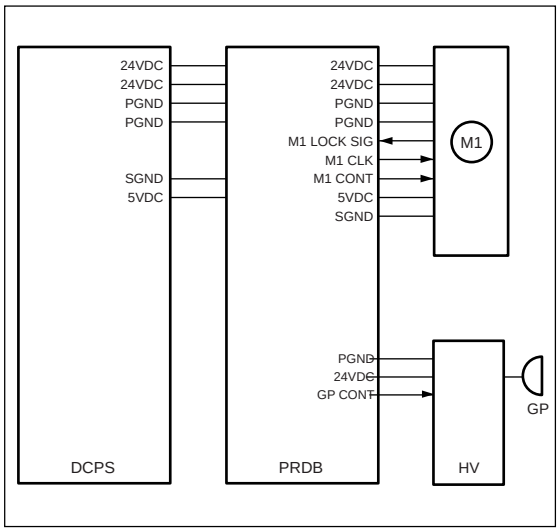

A fixed voltage is applied to the paper entrance guide plate so as to prevent toner from sticking to the plate.

1. Operation

a. ON/OFF timing

ON/OFF in sync with M1 (main motor).

b. Applied voltage

–500V DC (constant voltage)

2. Signals

a. Output signal

(1) GP CONT (PRDB → HV)

Controls application of fixed voltage to the paper entrance guide plate.

[L]: Voltage applied

[H]: No voltage

CORONA UNIT

[1] Composition

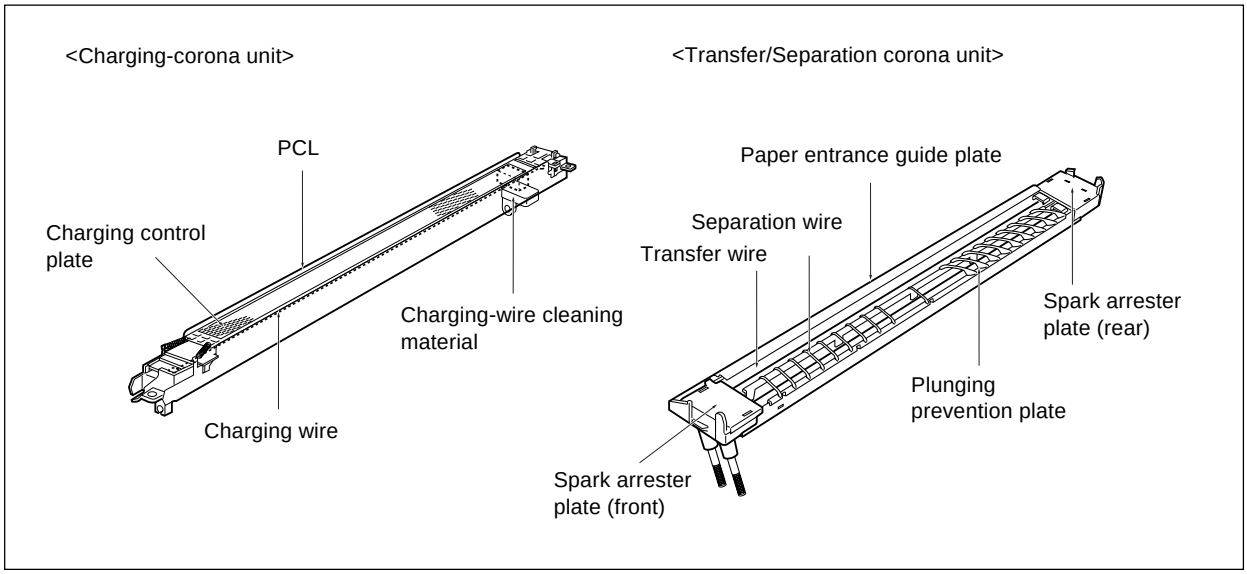

[2] Mechanisms

Mechanism	Method
Charging	Scorotron (DC negative corona discharge) Discharge wire: Tungsten, ϕ0.06mm (gold-plated skin path) Grid control: Stainless-steel plate with manual wire cleaning feature
Transfer	DC positive corona discharge Discharge wire: Oxide-coated tungsten, ϕ0.06mm with manual wire cleaning feature
Separation	AC/DC corona discharge Discharge wire: Oxide-coated tungsten, ϕ0.06mm with manual wire cleaning feature

Power supply to the Transfer/Separation corona unit

⚠Caution: Do not carry out copying with the ADU door open by forcibly setting the interlock ON, as doing so will generate high-voltage output at the contacts (springs) on the main-body board.

Closing of the ADU door establishes the connection to the power supply.

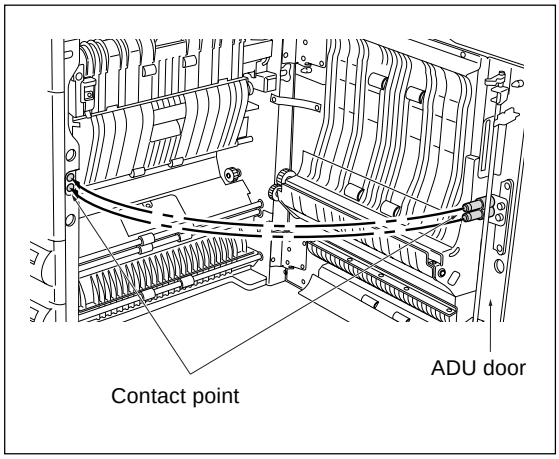

[3] Charging control

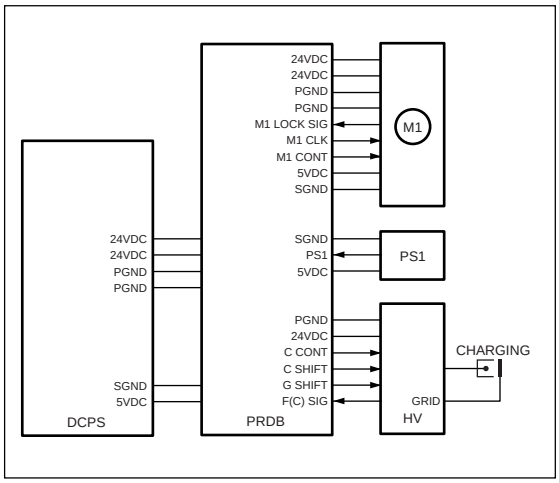

The HV (high voltage unit) carries out charging by outputting a high voltage onto the charging wire.

The HV is controlled by analog control signals output from the PRDB (printer drive board).

1. Operation

The HV comes ON together with M1 (main motor), and goes OFF at a predetermined time interval after transfer output for the final sheet goes OFF.

a. Charging

An inverter boosts the 24VDC power from the DCPS, generating a high negative DC voltage that is discharged from the charging wire.

b. Grid voltage

The HV applies grid voltage to the charging control plate.

2. Signal

a. Input signal

(1) F (C) SIG (HV → PRDB)

[L] if charge output has been forcibly switched OFF owing to detection of spark or occurrence of output short.

b. Output signals

(1) C CONT (PRDB → HV)

Charge voltage and grid voltage ON/OFF control signal.

[L]: Charge and grid voltages ON

[H]: Charge and grid voltages OFF

(2) C SHIFT (PRDB → HV)

Analog signal from PRDB; controls the output level of the charging corona unit.

C SHIFT output range	4 to 10V
Charging output range	–100 to –650µA

(3) G SHIFT (PRDB → HV)

Analog signal from PRDB; controls the output level of the grid voltage.

G SHIFT output range	4 to 10V
Grid voltage output range	–450 to –950V

[4] Transfer/Separation control

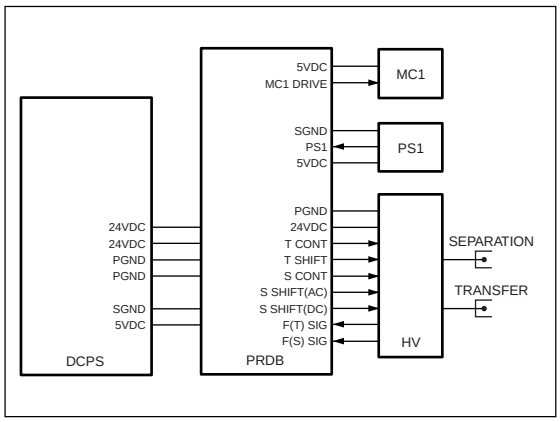

The transfer/separation corona units are controlled by the PRDB (printer drive board) and the HV (high voltage unit).

1. Operation

Transfer and separation come ON at predetermined intervals after M1 (main motor) comes ON, and go OFF at predetermined intervals after PS1 (registration PS) goes OFF.

a. Transfer

Constant current is applied so as to produce a high voltage DC discharge.

b. Separation

Constant voltage is applied to produce a high voltage AC discharge, and constant current is applied to produce high voltage DC discharge.

2. Signals

a. Input signals

(1) F (T) SIG (HV → PRDB)

[L] if transfer output has been forcibly switched OFF owing to detection of spark or occurrence of output short.

(2) F (S) SIG (HV → PRDB)

[L] if separation output has been forcibly switched OFF owing to detection of spark or occurrence of output short.

b. Output signals

(1) T CONT (PRDB → HV)

Transfer corona unit ON/OFF control signal.

[L]: Transfer corona unit ON

(2) T SHIFT (PRDB → HV)

Transfer corona unit output control signal.

Analog signal from PRDB; controls the output level of the transfer corona unit.

T SHIFT output range	4 to 10V
Transfer output range	0 to 350μA

(3) S CONT (PRDB → HV)

Separation corona unit ON/OFF control signal.

[L]: Separation corona unit ON

(4) S SHIFT (AC) (PRDB → HV)

Separation corona unit output control signal.

Analog signal from PRDB; controls the level of the AC component of the separation corona unit.

S SHIFT (AC) output range	3 to 10V
Separation AC output range	1.5 to 5.0kV

(5) S SHIFT (DC) (PRDB → HV)

Separation corona unit output control signal.

Analog signal from PRDB; controls the level of the DC component of the separation corona unit.

S SHIFT (DC) output range	4 to 10V
Separation DC output range	0 to –300μA

DEVELOPING UNIT

[1] Composition

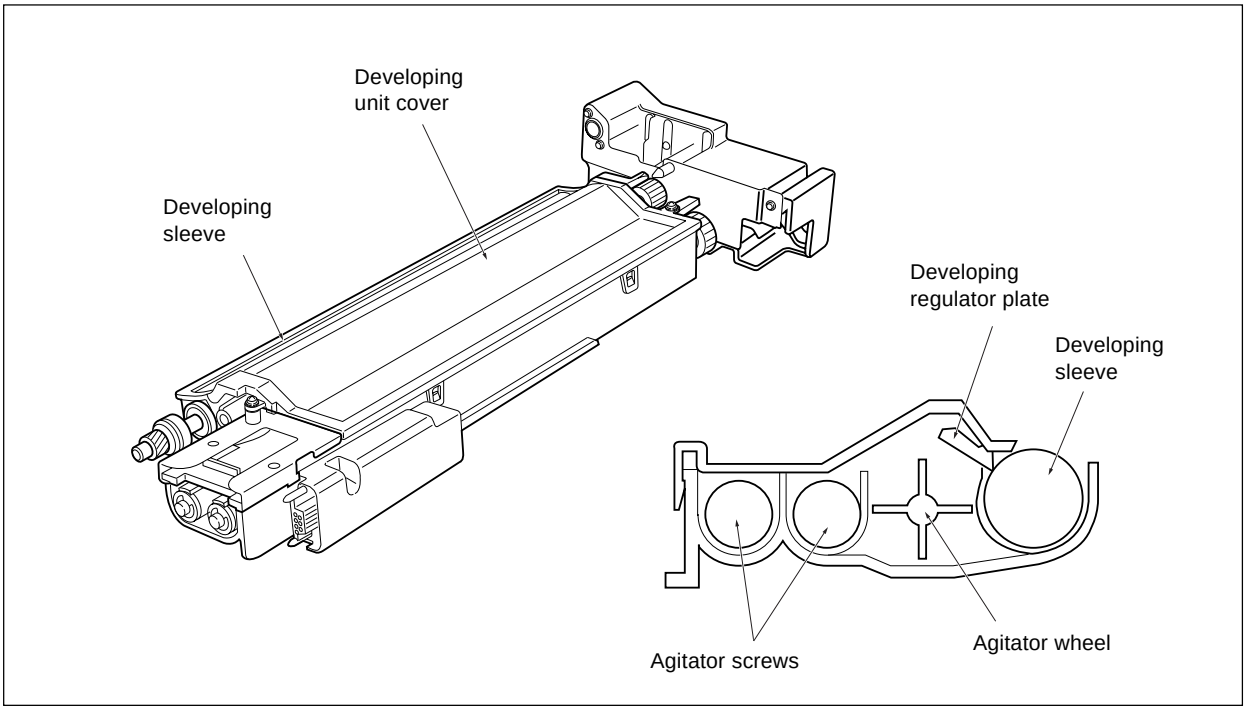

[2] Mechanisms

Mechanism	Method
Developing	2-component developing
Developing bias	DC bias
Developer agitation	Main and supplemental agitation

Developing unit drive

The developing unit is driven by two different motors. The developing motor (M3) drives the developing sleeve, while the main motor (M1) drives the agitator section.

[3] M3 (developing motor) control

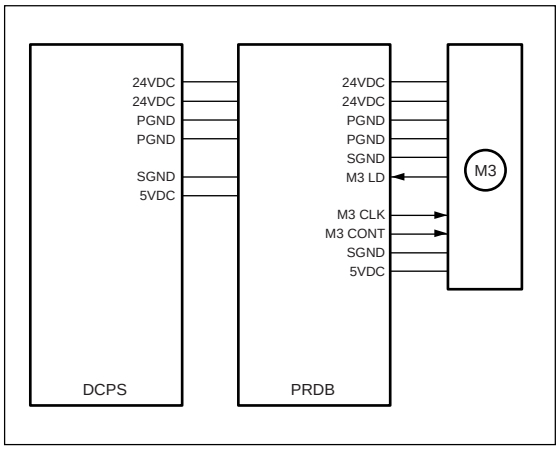

M3 (developing motor) is controlled by the PRDB (printer drive board).

1. Operation

M3 runs on 24V DC power, and drives the developing sleeve. M1 drives the agitator wheel and agitator screws. (For information about M1, refer to "M1 (Main motor) control.") M3 includes an internal speed sensor, and utilizes PLL control to maintain a constant speed, using a reference clock signal output by PRDB.

M3 goes ON and OFF in sync with M1.

2. Signals

a. Input signal

(1) M3 LD (M3 → PRDB)

M3 status detect signal.

Goes [L] when M3 rotation reaches the rated speed.

[H]: Stopped, or rotating at other than rated speed.

[L]: Rotating at rated speed. (PLL: stable)

b. Output signals

(1) M3 CONT (PRDB → M3)

M3 drive control signal.

[L]: M3 ON

[H]: M3 OFF

(2) M3 CLK (PRDB → M3)

Reference clock for M3 rotation control.

[4] Developing bias control

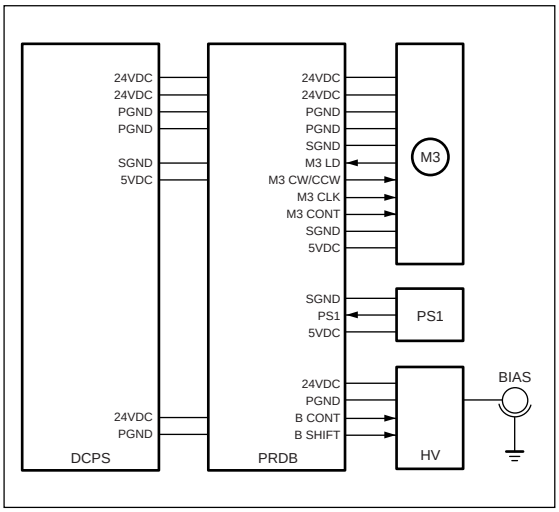

Developing bias is controlled by the PRDB (printer drive board) and the HV (high voltage unit).

1. Operation

Application of developing bias to the developing sleeve starts a predetermined time interval after M3 (developing motor) comes ON, and ends a predetermined time interval after charging goes OFF.

2. Signals

a. Output signals

(1) B CONT (PRDB → HV)

Developing bias ON/OFF control signal.

[L] sets developing bias ON and outputs high voltage.

(2) B SHIFT (PRDB → HV)

Developing bias level control signal.

Analog signal from PRDB; controls the developing bias output level.

B SHIFT output range	2 to 8V
Bias-Voltage output range	–350 to –830V

[5] Toner density control

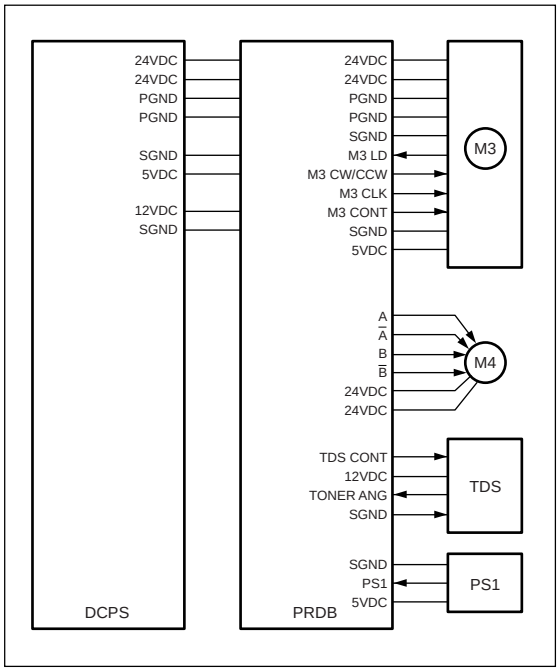

Toner density is controlled by the TDS (toner density sensor), M4 (toner supply motor) and the PRDB (printer driver board).

1. Operation

a. Toner density control

The TDS uses L detection to detect the toner density in the developing unit, and outputs to the PRDB an analog signal corresponding to the detected density.

The PRDB determines whether toner supply is necessary by comparing the detected value against the developer's initial density.

b. Supply of toner to the developing unit

M4 is a stepping motor running on 24VDC. M4 drive time is controlled by the PRDB.

(1) When the power switched ON

Following power on, M1 (main motor) turns the agitator screws, and after a predetermined time interval the TDS reads the toner density. The PRDB compares the density detected by TDS with the developer's initial density. If the detected density is low, M4 comes on and supplies toner until the initial density level is restored.

(2) During a copy operation

The following table shows the relation between TDS output voltage and toner supply time.

TDS output voltage	Supply time
≤ 2.00V	0 sec.
2.01 to 2.05V	0.24 sec.
2.06 to 2.09V	0.48 sec.
2.10 to 2.13V	0.72 sec.
2.14 to 2.17V	0.96 sec.
2.18 to 2.21V	1.20 sec.
≥ 2.22V	1.80 sec.

2. Signals

a. Input signal

(1) TONER ANG (TDS → PRDB)

Outputs an analog voltage corresponding to the toner density.

b. Output signals

(1) TDS CONT (PRDB → TDS)

TDS output voltage adjustment signal.

Output range: 3 to 8 V

(2) M4 OUT A, OUT $\bar{A}$, OUT B, OUT $\bar{B}$ (PRDB → M4)

M4 ON/OFF control signals.

TONER SUPPLY UNIT

[1] Composition

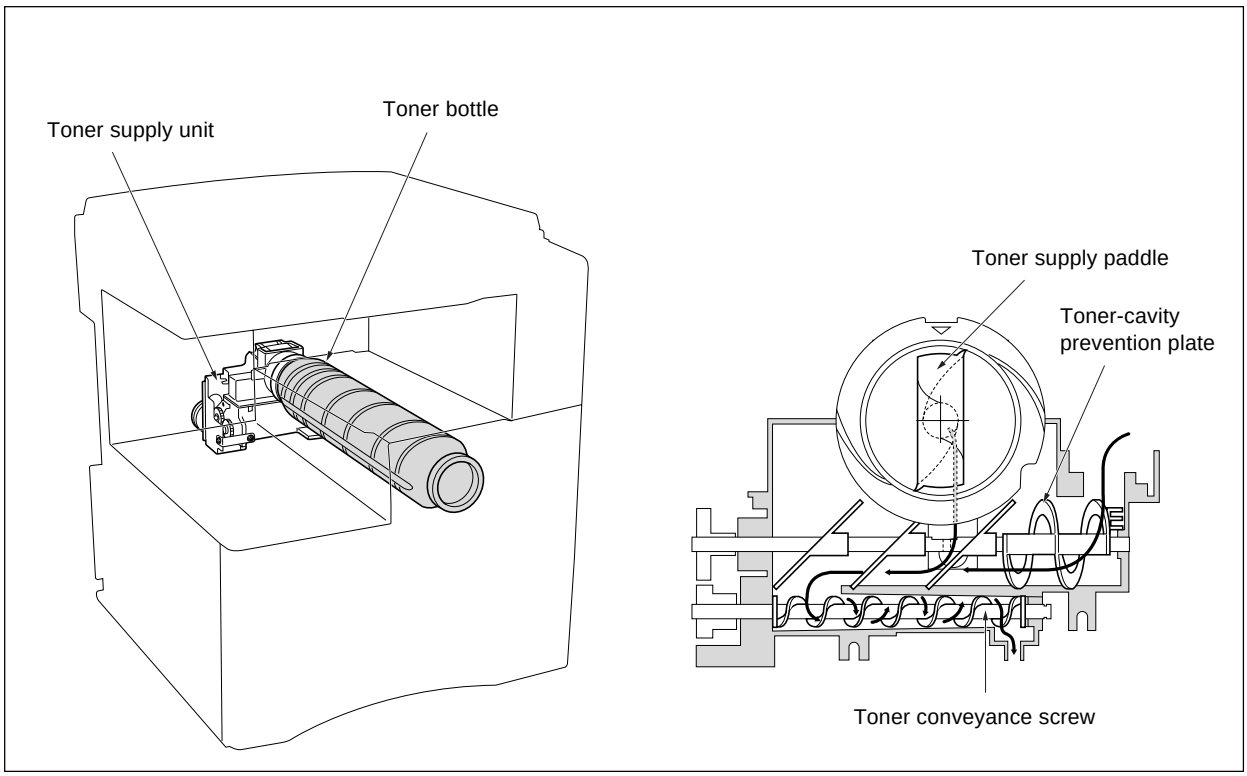

[2] Mechanisms

Mechanism	Method
Toner supply	Screw conveyance
Toner level detection	Piezoelectric method: Approx. 30g
Toner agitation *1	Toner agitator plate + screw
Toner bottle *2	Rotation cartridge
Toner leak prevention	Toner supply shutter

***1: Toner agitation**

The toner agitator plate is powered by the toner supply motor (M4) via gears.

***2: Toner bottle**

The toner bottle rotates while the toner bottle SD (SD6) is ON. This rotation is driven by the toner supply motor (M4). Rotation causes the toner to move toward the bottle outlet along the spiral groove cut into the bottle surface, and causes the toner supply paddle, located at the outlet, to push the exiting toner towards the toner supply unit's agitation/conveyance section.

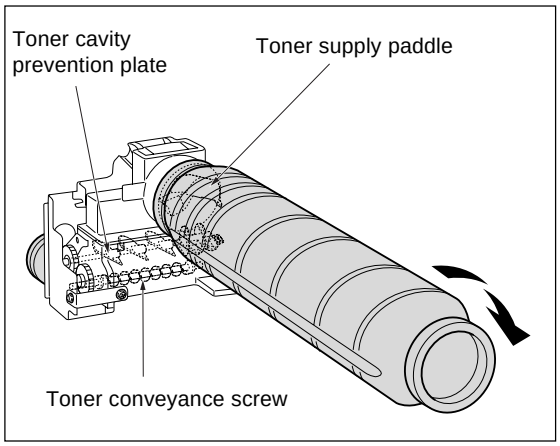

[3] Toner level detection control

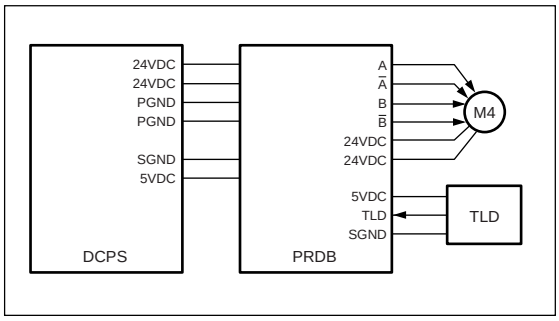

Control of toner level detection is carried out by the TLD (toner level detecter) and the PRDB (printer control board).

1. Operation

a. Toner level detection

The TLD uses a piezo element. When TLD detects that toner in the cartridge has run low, it outputs a toner supply signal to the PRDB, generating a message on the LCD (display board).

b. Detection timing

Detection is carried out at the following times.

- During copying

c. Toner supply operation to toner supply unit

When TLD detects that toner is out, SD6 (toner-bottle SD) comes ON and engages the gear. When M4 (toner supply motor) comes ON, the bottle turns, sending new toner to the toner supply unit.

2. Signals

a. Input signal

(1) TLD (TLD → PRDB)

Goes [L] when the quantity of toner in the toner cartridge runs low. If [L] state continues for a predetermined period, a corresponding message is displayed in the LCD.

[4] Toner bottle detection control

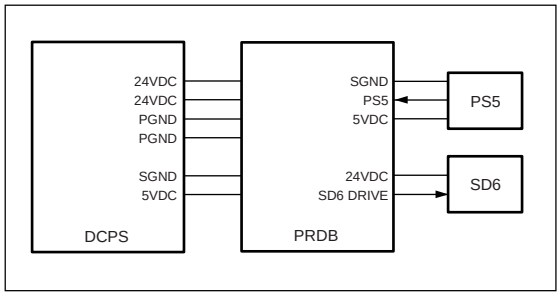

PS5 (toner bottle PS) detects the presence or absence of the toner bottle.

1. Operation

PS5 detects mounting of the toner bottle, and the machine enters copy standby.

2. Signals

a. Input signal

(1) PS5 (PS5 → PRDB)

Toner bottle detect signal.

[H]: Toner bottle is present.

[L]: Toner bottle not present.

CLEANING/TONER RECYCLE UNIT

[1] Composition

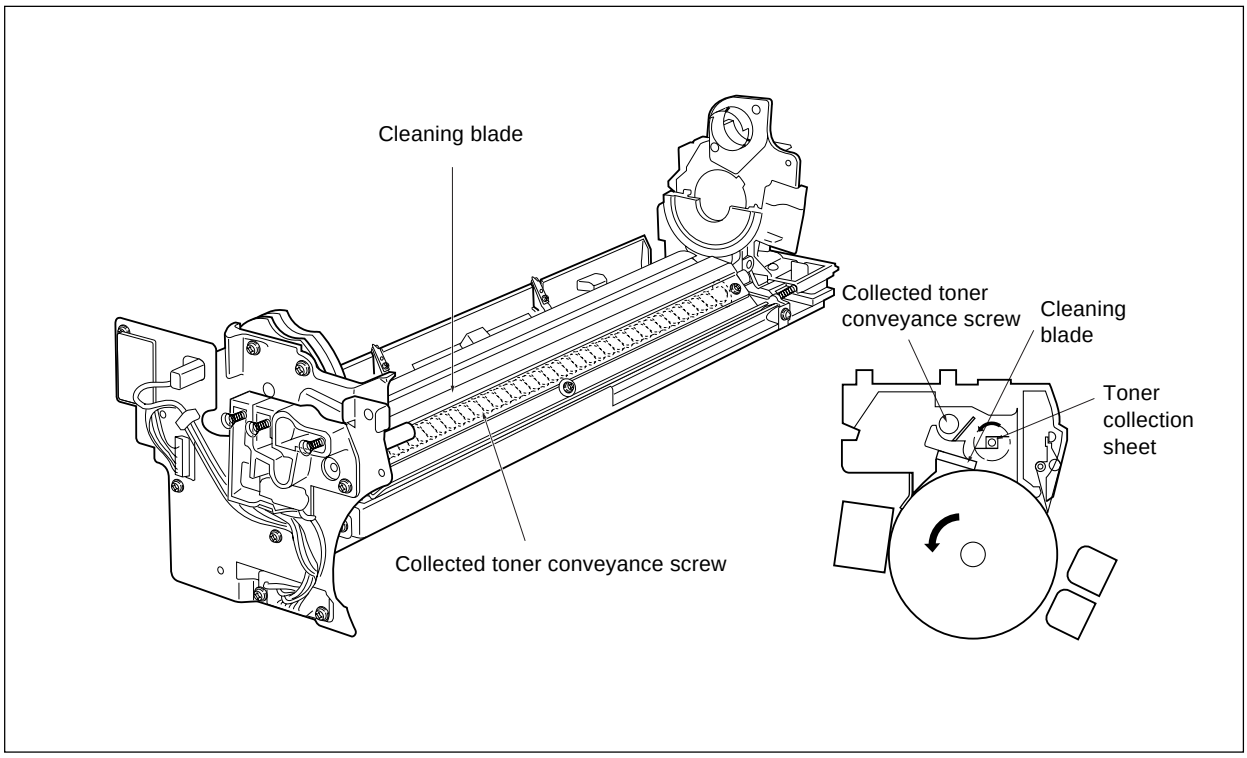

[2] Mechanisms

Mechanism	Method
Drum cleaning	Cleaning blade (spring load type)
Toner recycle*	Toner conveyance by screw
Toner collection	Toner collection sheet

***Toner recycle**

Toner collected by the cleaning blade is conveyed to the collected toner exit (and returned to the toner supply unit) by the action of the collected toner conveyance screw.

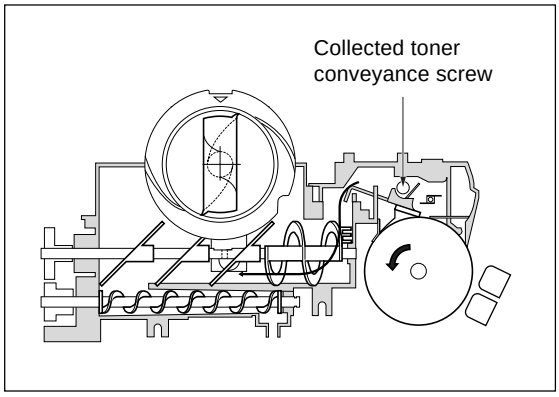

PAPER FEED UNIT

[1] Composition

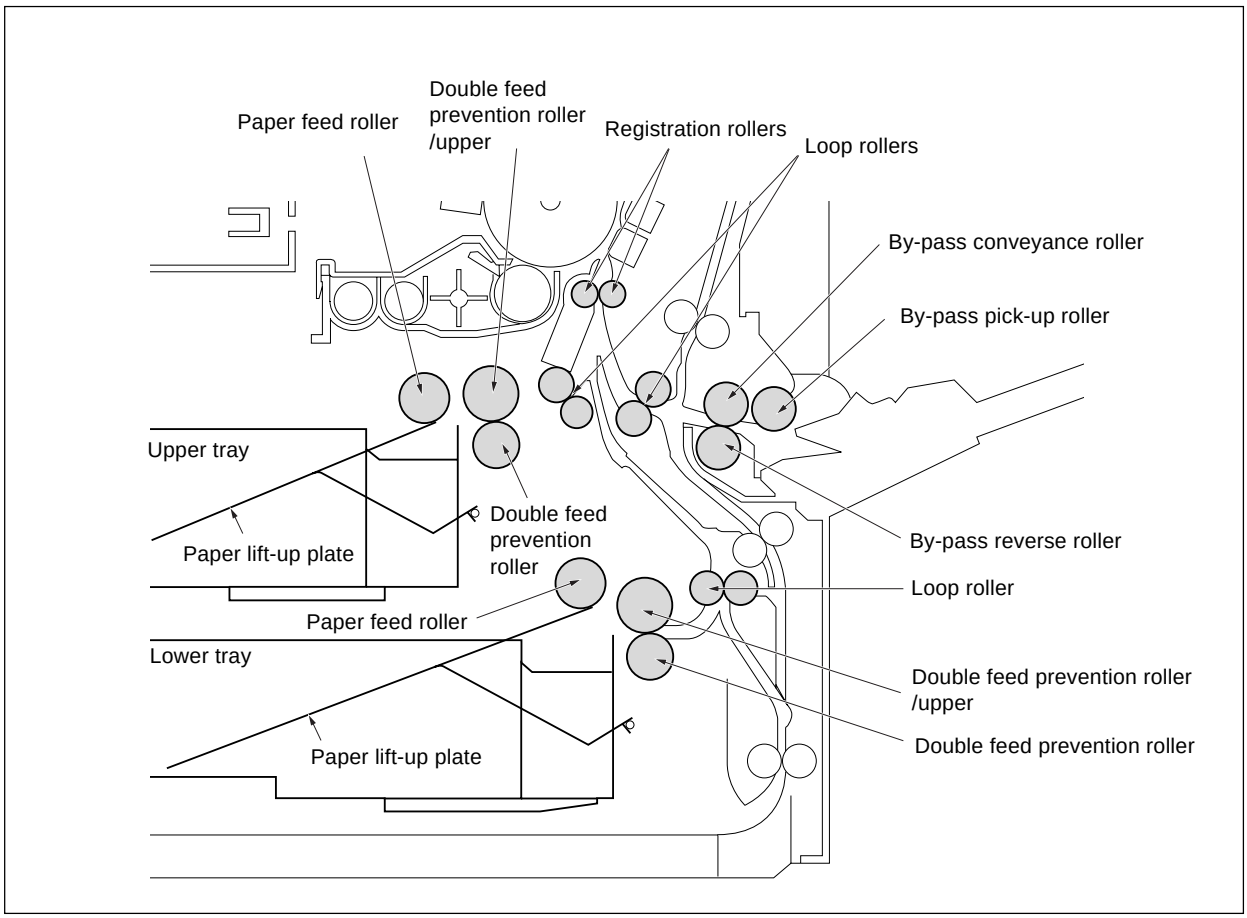

[2] Mechanisms

Mechanism	Method
Paper stacking	Two trays
Paper lift-up	Paper lift-up plate
Double feed prevention	Torque limiter
Tray loading	Front loading
First paper feed	Paper feed SD Paper feed roller Loop clutch Loop roller
Second paper feed	Registration clutch Registration rollers
By-pass feed	By-pass feed SD By-pass conveyance rollers
Paper size detection	Paper size display unit

[3] Paper feed control

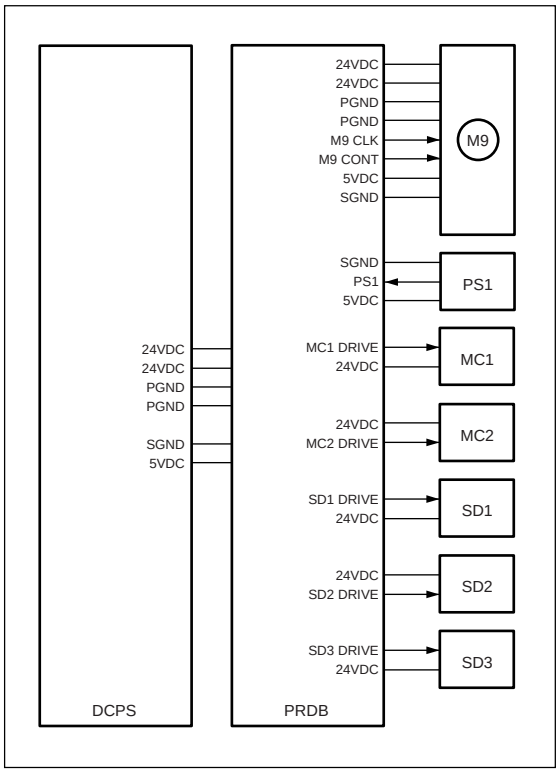

M9 (paper feed motor) drive power is transmitted to the various rollers by means of SD1 (first paper feed SD (upper tray)), SD2 (first paper feed SD (lower tray)), and SD3 (by-pass SD). When M9 first comes ON, no rollers are in contact with paper; accordingly, SD1, SD2, or SD3 operate to raise or lower the feed rollers or by-pass plate so as to make contact with paper and initiate feeding.

When SD1 (first paper feed SD) comes ON, MC2 (loop clutch) also comes ON at the same time, conveying the paper up to the registration rollers. PS1 (registration PS) detects the leading edge of the paper, MC2 goes OFF, and the paper is formed into a loop. When the drum charge stabilizes, MC1 (registration) and MC2 both come ON to drive the second paper feed.

Paper feed operations are controlled by the PRDB (printer drive board).

1. Operation

a. Timing for first paper feed (by-pass)

(1) Start for first sheet

At a predetermined time interval after START button ON.

(2) Start for second sheet

At a predetermined time interval after first sheet SD3 ON.

(3) OFF timing

At a predetermined time interval after SD3 ON.

b. Timing for first paper feed (upper tray)

(1) Start for first sheet

At a predetermined time interval after START button ON.

(2) Start for second sheet

At a predetermined time interval after first sheet SD1 ON.

(3) OFF timing

At a predetermined time interval after SD1 ON.

c. Timing for first paper feed (lower tray)

(1) Start for first sheet

At a predetermined time interval after START button ON.

(2) Start for second sheet

At a predetermined time interval after first sheet SD2 ON.

(3) OFF timing

At a predetermined time interval after SD2 ON.

d. Control for second paper feed (MC1)

(1) ON timing

At a predetermined time interval after PS1 ON.

(2) OFF timing

At a predetermined time interval after PS1 OFF.

e. Control of paper feed loop formation (MC2)

(1) ON timing

At the same time as SD1 ON, SD2 ON or SD3 ON.

(2) OFF timing

At a predetermined time interval after PS1 ON.

2. Signals

a. Output signals

(1) M9 CONT (PRDB → M9)

M9 drive control signal.

[L]: M9 ON

[H]: M9 OFF

(2) M9 CLK (PRDB → M9)

Reference clock for M9 rotation control.

(3) SD1 DRIVE (PRDB → SD1)

[L]: SD1 ON

[H]: SD1 OFF

(4) SD2 DRIVE (PRDB → SD2)

[L]: SD2 ON

[H]: SD2 OFF

(5) SD3 DRIVE (PRDB → SD3)

[L]: SD3 ON

[H]: SD3 OFF

(6) MC1 DRIVE (PRDB → MC1)

MC1 drive control signal.

[L]: MC1 ON

[H]: MC1 OFF

(7) MC2 DRIVE (PRDB → MC2)

MC2 drive control signal.

[L]: MC2 ON

[H]: MC2 OFF

[4] Paper up down control

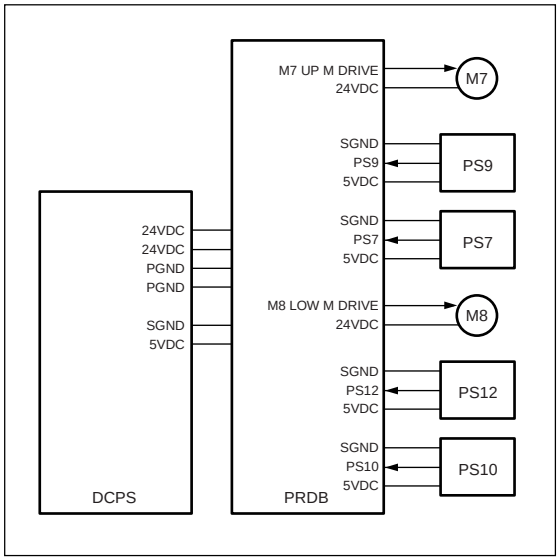

When a tray is set into the machine, its presence is detected by PS9 (tray detect PS (upper)) or PS12 (tray detect PS (lower)), which in turn causes M7 (tray motor (upper)) or M8 (tray motor (lower)) to come ON for a fixed interval so as to raise the tray's bottom plate. Signals related to this operation are PS7 (upper limit detect PS (upper)) and PS10 (upper limit detect PS (lower))

1. Operation

a. ON timing

PS9 ON causes M7 ON. PS12 ON causes M8 ON.

b. OFF timing

PS7 ON causes M7 OFF. PS10 ON causes M8 OFF.

2. Signals

a. Input signals

(1) PS9 (PS9 → PRDB)

Upper tray detect signal.

[L]: tray is present;

[H]: tray is not present.

Detection of the tray causes M7 to raise the paper in the upper tray.

(2) PS12 (PS12 → PRDB)

Lower tray detect signal.

[L]: tray is present;

[H]: tray is not present.

Detection of tray causes M8 to raise the paper in the lower tray.

(3) PS7 (PS7 → PRDB)

Upper limit detect signal for upper tray.

Goes [H] when paper in the upper tray has been raised to the upper limit, causing M7 to go OFF.

(4) PS10 (PS10 → PRDB)

Upper limit detect signal for lower tray.

Goes [H] when paper in the lower tray has been raised to the upper limit, causing M8 to go OFF.

b. Output signals

(1) M7 DRIVE (PRDB → M7)

M7 drive control signal.

[L]: M7 ON

[H]: M7 OFF

(2) M8 DRIVE (PRDB → M8)

M8 drive control signal.

[L]: M8 ON

[H]: M8 OFF

[5] Paper size detection control

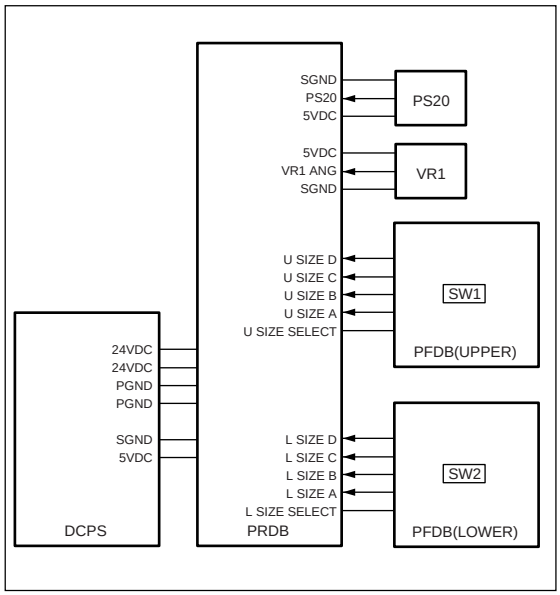

Tray paper size is detected by the PRDB (printer driver board) based on detection signals issued from the PFDBs (paper feed detection boards). Detection of paper size in the by-pass tray is carried out by PS20 (by-pass tray paper size detect PS) and VR1 (by-pass tray paper size VR).

1. Operation

a. Paper size detection for upper and lower trays

Paper size for the upper tray is set by SW1 on PFDB (UPPER), and paper size for the lower tray is set by SW2 on PFDB (LOWER). The PRDB detects the switch signals output in accordance with position of each of these switches. The following table shows the relation between switch signals and paper size.

For U.S.A.

Paper size		Switching			
Tray1	Tray2	SIZE A	SIZE B	SIZE C	SIZE D
8.5 x 14	11 x 17				
B5R	A5R	○			
B4	A4		○		
A5R	A4R	○	○		
A4	A3			○	
A4R	F4	○		○	
F4	5.5 x 8.5		○	○	
5.5 x 8.5	8.5 x 11	○	○	○	
8.5 x 11	8.5 x 11R				○
8.5 x 11R	8.5 x 14	○			○

For Europe

Paper size		Switching			
Tray1	Tray2	SIZE A	SIZE B	SIZE C	SIZE D
8.5 x 14	11 x 17				
B5	B5	○			
B4	B4		○		
A5R	A5R	○	○		
A4	A4			○	
A4R	A4R	○		○	
F4	A3		○	○	
5.5 x 8.5	F4	○	○	○	
8.5 x 11	8.5 x 11				○
8.5 x 11R	8.5 x 11R	○			○

b. Paper size detection for by-pass tray

Paper length in the by-pass tray is detected by PS20 ON/OFF. Paper width in the by-pass tray is detected by VR1, whose resistance value changes in accordance with the tray's guide position.

2. Signals

a. Input signals

(1) PS20 (PS20 → PRDB)

Paper length detection signal for by-pass tray.

[L]: B4 size or more

[H]:A4R size or less

(2) VR1 ANG (VR1→ PRDB)

Paper width detection signal for by-pass tray.

(3) U SIZE A, B, C, D (PFDB (UPPER) → PRDB)

Paper size ON/OFF detect signals for upper tray.

(4) L SIZE A, B, C, D (PFDB (LOWER) → PRDB)

Paper size ON/OFF detect signals for lower tray.

[6] No paper detection control

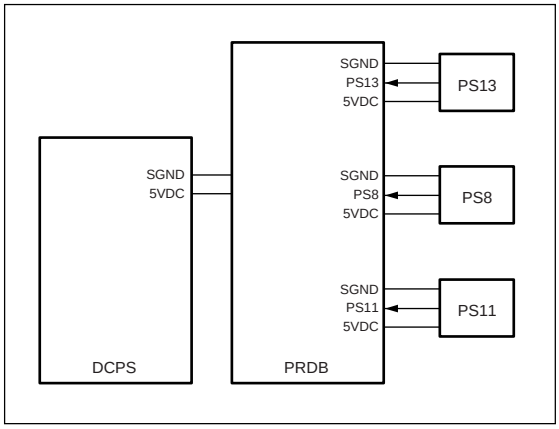

No paper detection is carried out by PS8 (no paper detect PS (upper)), PS11 (no paper detect PS (lower)), and PS13 (by-pass no paper detect). Detection is controlled by the PRDB (printer drive board).

1. Operation

a. No paper detection control

When the upper, lower, or by-pass tray runs out of paper, the corresponding PS comes ON (PS8, PS11, or PS13), causing the LCD (display board) to display a paper out message.

2. Signals

a. Input signals

(1) PS8 (PS8 → PRDB)

No paper detection signal for upper tray.

[H]: Paper is present.

[L:]: No paper

(2) PS11 (PS11 → PRDB)

No paper detection signal for lower tray.

[H]: Paper is present.

[L:]: No paper

(3) PS13 (PS13 → PRDB)

No paper detection signal for by-pass tray.

[H]: Paper is present.

[L:]: No paper

[7] Control of paper-level detection

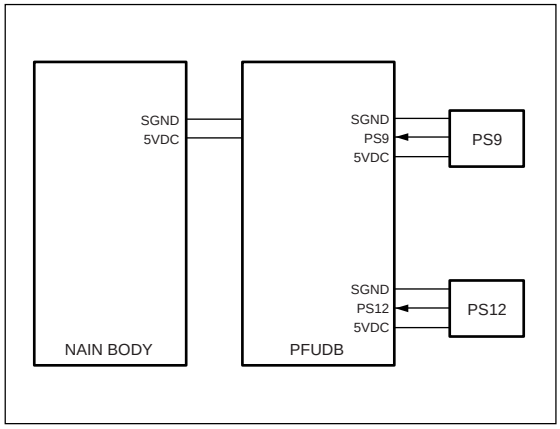

After the trays have been set in the machine, paper level is detected by PS9 (tray detect sensor (upper)) and PS12 (tray detect sensor (lower)).

As the paper level in tray runs low, the actuator at the rear part of the tray gradually rotates as illustrated below. The level is detected by the number of times the sensor goes ON/OFF (the number of slits detected).

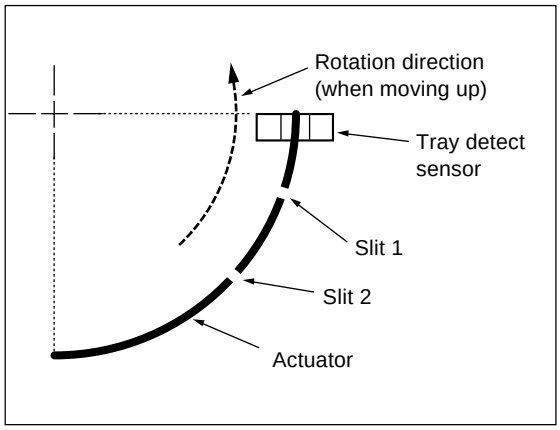

Operation

a. Detection of paper level in tray

The following shows the relation between the paper level and the number of slit detections by the sensor (PS9 or PS12).

0 slits : Full

1 slit : Medium

2 slits : Low

FIXING UNIT

[1] Composition

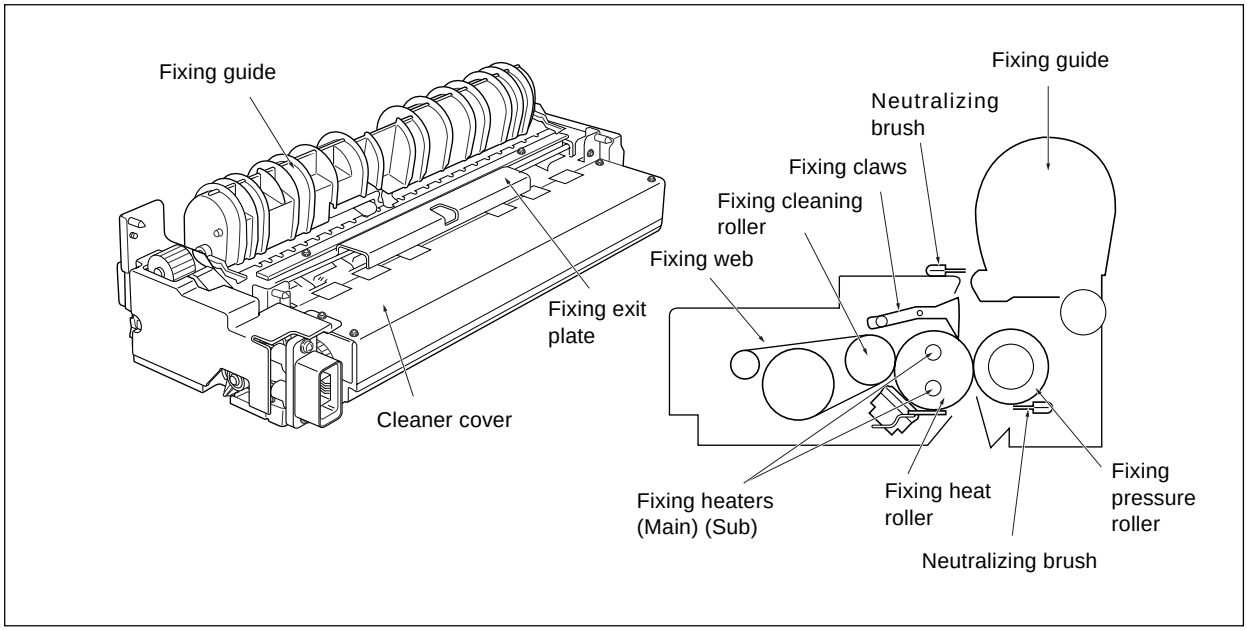

[2] Mechanisms

Mechanism	Method
Fixing	Pressure + heat roller
Heat source	Heater lamps (2 lamps)
Cleaning	Fixing web Fixing cleaning roller
Heat roller	Aluminum + PFA coating
Pressure roller	Silicone rubber + PFA tube
Separation	Fixing claws (6 claws)
Temperature detection	Heat roller contact thermistor
Overheating prevention	Heat roller Contact thermostat
Neutralizing	Neutralizing brush (paper path, fixing pressure roller)

Fixing roller presure/release

The pressure on the fixing roller is released by opening of the fixing guide.

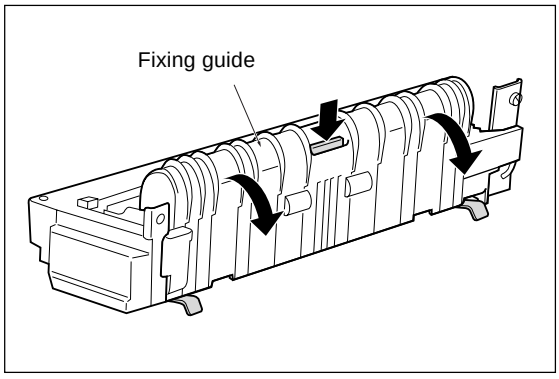

[3] Fixing temperature control

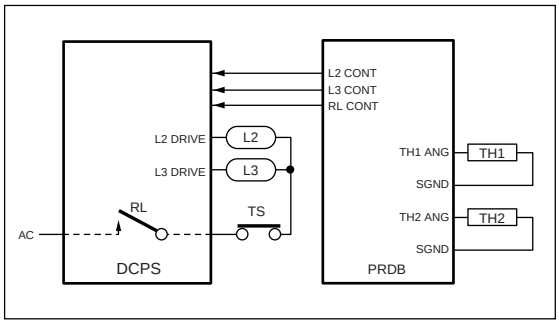

The fixing heat roller is heated by lamps L2 (fixing heater lamp 1) and L3 (fixing heater lamp 2). The PRDB (printer drive board) detects the temperature on the roller by means of TH1 and TH2 (fixing temperature sensor 1 and 2), and controls L2 and L3 accordingly via the DCPS (DC power source).

1. Operation

a. Temperature control

(1) Warm-up

The PRDB turns on the fixing heater lamp circuit within the DCPS immediately when power comes on, and holds L2 and L3 on until the fixing heat roller reaches the specified temperature. L2 and L3 have different light (heat) distribution characteristics (see illustration below), and control temperature through TH1 and TH2.

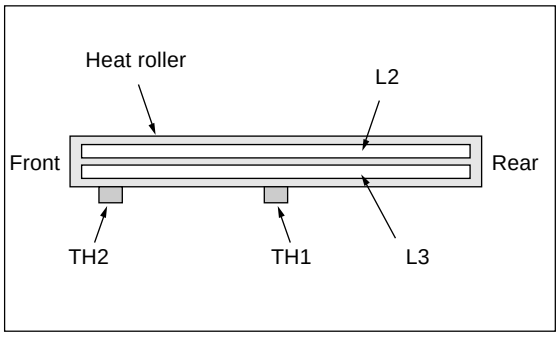

L2 light distribution characteristics

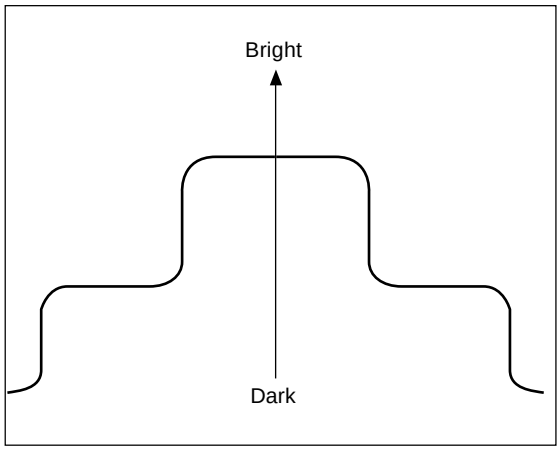

L3 light distribution characteristics

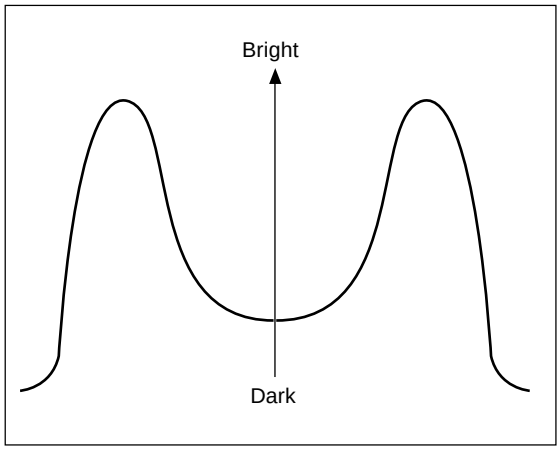

Once warm-up has completed, the PRDB switches L2 and L3 ON and OFF as necessary to maintain the set temperature.

(Set Temperature)

180˚C

(Warm up time)

Within 30 seconds (from room temperature of 20˚C).

(2) Idling

L2 and L3 go ON/OFF repeatedly so as to maintain the temperature between 191˚C and 187˚C (U.S.A.)/ 202˚C and 187˚C (Europe).

(3) Copying

(When feeding from any trays other than the by-pass tray)

Temperature control during copying differs according to the paper size. If the selected size is small (B5R, B6R, A5R, or 5.5x8.5R), then although L2 and L3 both go ON/OFF repeatedly control is for the most part implemented by L2 only (so as to prevent overheating at the ends of the fixing roller). Other than small sizes, these lamps go ON/OFF so as to hold temperature at about 194°C.

(When feeding from the by-pass tray)

The temperature is held approximately 10°C higher than the temperature indicated above. Where OHP has been selected using the application function, control is the same as for normal copying.

(Doble sided copying)

Temperature is held about 5°C lower that the temperature used when feeding from any tray other than the by-pass tray.

(4) Low-power mode

L2 and L3 go ON/OFF repeatedly so as to maintain the temperature at about 110°C.

The temperature for low power mode can by 25 mode DIPSW.

b. Protection against abnormality

A thermostat (TS) in contact with the fixing heat roller protects against overheating of the roller. The operating temperature of TS is shown below.

TS: Approximately 220˚C

2. Signals

a. Input signals

(1) TH1 ANG (TH1 → PRDB)

TH1 output signal.

Outputs a voltage that varies according to the surface temperature at the center of the fixing heat roller. This signal is used both for normal temperature control and for detection of heating error (overheating, etc.).

(2) TH2 ANG (TH2 → PRDB)

TH2 output signal.

Outputs a voltage that varies according to the surface temperature at the ends of the fixing heat roller. This signal is used both for normal temperature control and for detecting of heating error (overheating, etc.).

b. Output signals

(1) L2 DRIVE (DCPS → L2)

AC (N) power line for L2.

Sets AC power on and off in accordance with the L2 CONT signal.

(2) L3 DRIVE (DCPS → L3)

AC (N) power line for L3.

Sets AC power on and off in accordance with the L3 CONT signal.

(3) L2 CONT (PRDB → DCPS)

L2 ON/OFF control signal.

[L]: L2 ON

[H]: L2 OFF

(4) L3 CONT (PRDB → DCPS)

L3 ON/OFF control signal.

[L]: L3 ON

[H]: L3 OFF

[4] SD4 (cleaning web SD) control

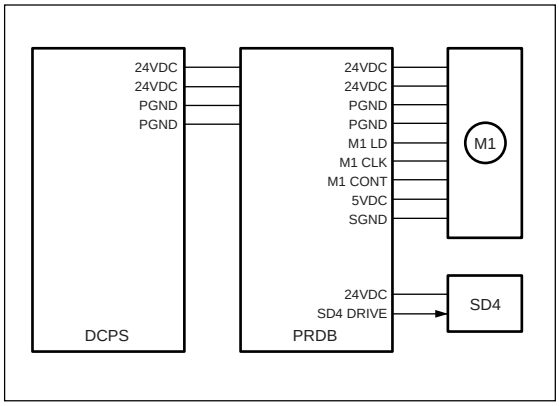

SD4 (cleaning web SD) is controlled by the PRDB (printer drive board).

1. Operation

SD4 (cleaning web SD) is set ON by PS2 (fixing exit PS), stays ON for 100msec, and then goes OFF. However, that SD4 does not come at all for certain copy counts.

2. Signals

a. Output signal

(1) SD4 DRIVE (PRDB → SD4)

[L]: SD4 ON

[H]: SD4 OFF

ADU/PAPER EXIT SECTION

[1] Composition

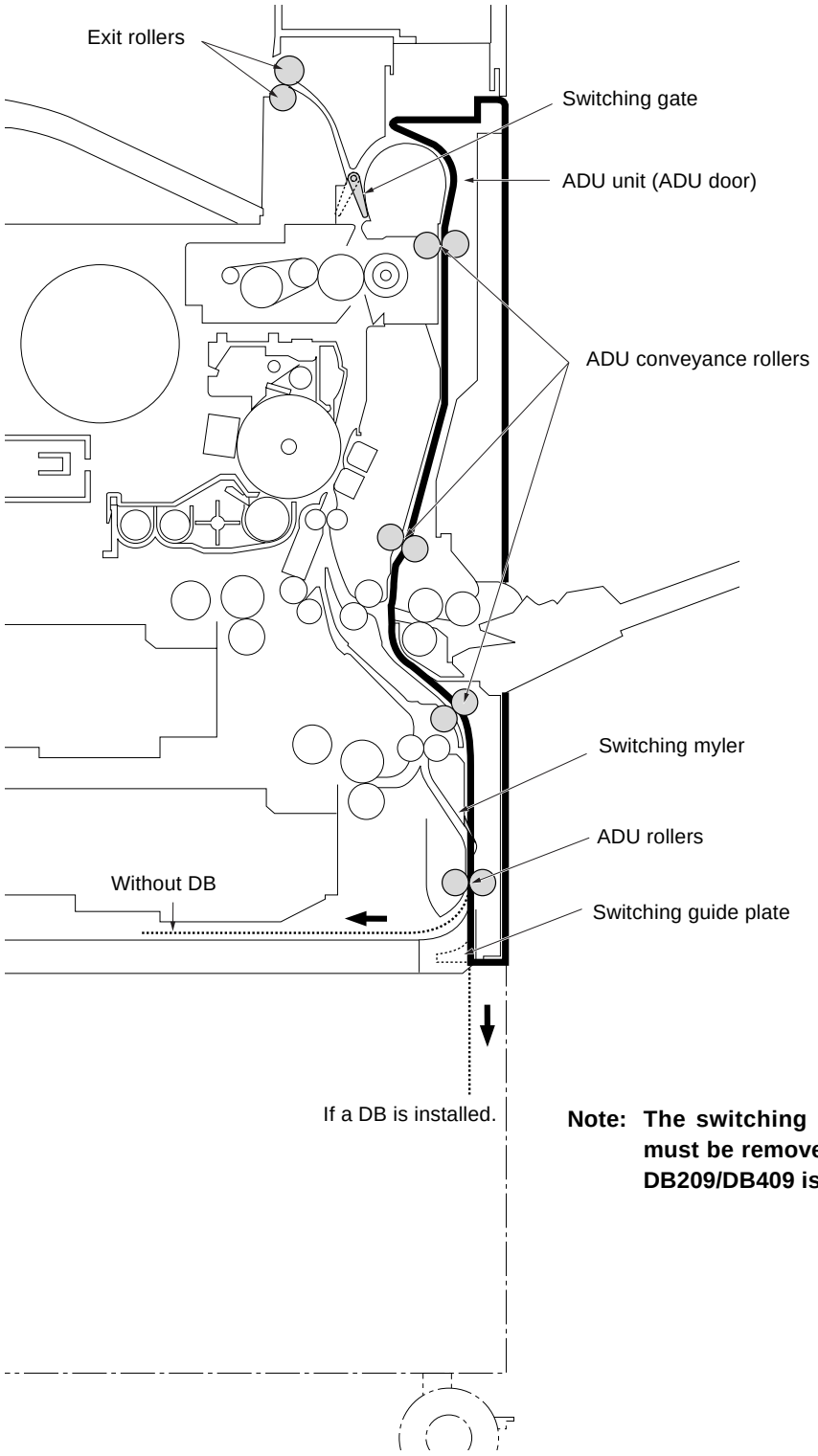

Note: The switching guide plate must be removed when the DB209/DB409 is installed.

[2] Mechanisms

Mechanisms	Method
Paper path switching (*1)	Switching guide, Switching myler
Paper conveyance	Roller conveyance

*1:Switching of the paper path

The switching guide directs the paper that exits from the fixing unit to either to the exit area or to the ADU unit.

- Switching operation

For double sided copies, the switching guide directs the paper to the rear side of the ADU door. The trailing edge of the sheet reaches the point just in front of the ADU rollers, at which point the switching mylar returns the sheet to the feed path, the ADU rollers reverse direction, and the sheet is conveyed back to the drum unit.

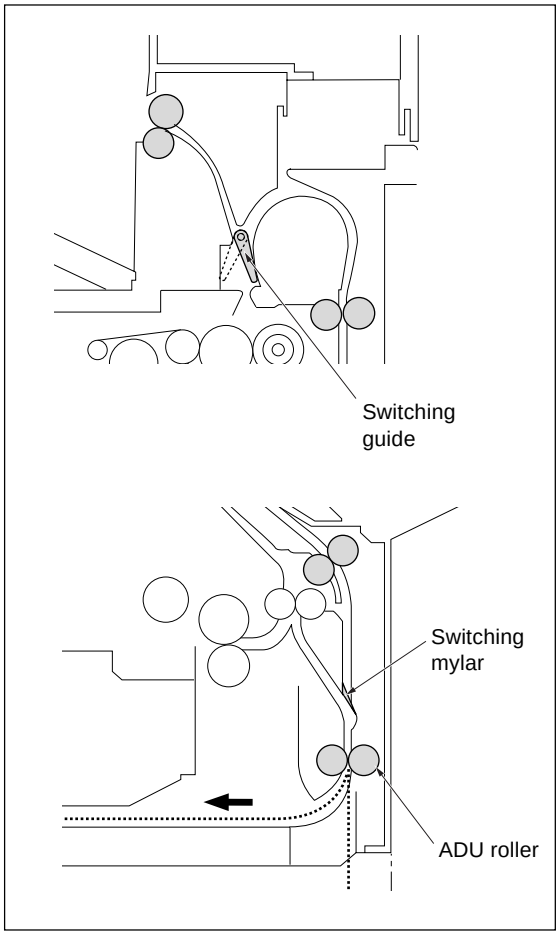

[3] Paper exit/ADU conveyance switching control

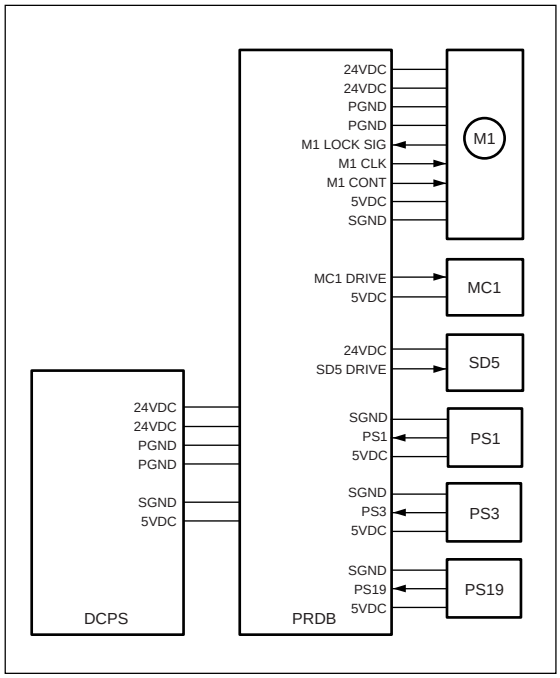

The paper exit unit's SD5 (ADU gate SD) switches the conveyance path toward either the exit or the ADU unit.

Paper conveyance is driven by M1 (main motor). M1 and SD5 are controlled by the PRDB (printer drive board). Related signals are MC1 (registration clutch), PS19 (exit limit detect PS), PS2 (fixing exit PS) and PS3 (paper exit PS).

1. Operation

a. Control of paper exit/ADU conveyance switching

In single sided copy mode, SD5 remains OFF and paper exits straight to the exit unit. In double sided copy mode, SD5 comes ON during copying of the front side, so that the paper is conveyed into the ADU unit. The ADU unit inverts the paper so that the back side of the paper is copied. When PS2 goes OFF by the last paper, SD5 goes OFF, so that paper is directed to the exit.

2. Signals

a. Input signal

(1) PS19 (PS19 → PRDB)

Paper exit limit detect signal.

Goes [H] when the exit section is full, causing display of message indicating that paper should be removed. It is selectable to stop the machine when PS19 is ON according to a setting in 25 mode.

b. Output signal

(1) SD5 DRIVE (PRDB → HV)

SD5 drive control signal.

[L]: SD5 ON (Convey to ADU)

[H]: SD5 OFF (Straight to exit only)

[4] ADU conveyance control

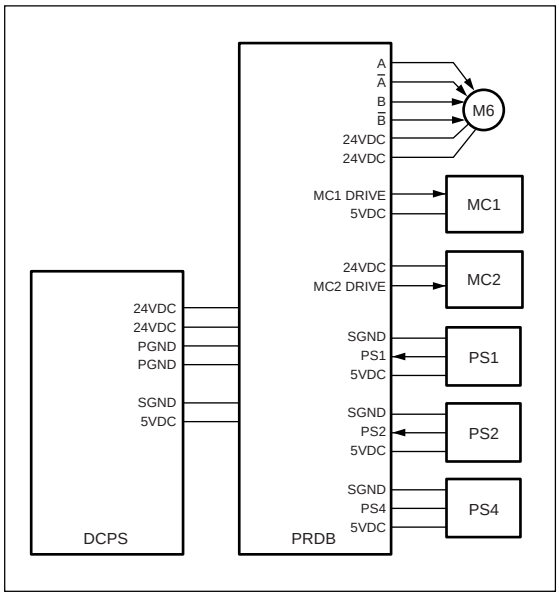

M6 (ADU motor), a 24V DC step motor, drives the ADU rollers that drive the conveyance. When paper directed to the ADU side by SD5 reaches PS4 (ADU PS), M6 operates as necessary (forward, stop, reverse) to direct the paper to the drum unit so that copy can be made to the back side. M6 and PS4 are controlled by the PRDB (printer drive board). Related signals are MC1 (registration clutch), MC2 (loop clutch), PS1 (registration PS) and PS2 (fixing exit PS).

1. Operation

a. Feed control

M6 comes ON when paper reaches PS4, so that the paper is conveyed further by the action of the ADU rollers. M6 goes OFF when PS4 detects the trailing edge of the paper, and at a predetermined time interval thereafter M6 comes back ON in reverse so as to convey the paper in the opposite direction. The reversed paper passes through the switching mylar and is conveyed to the registration area, where the loop rollers move it on to the drum.

2. Signals

a. Input signals

(1) PS4 (PS4 → PRDB)

Detects paper passage through ADU roller area.

Goes [H] when paper is detected.

(2) PS2 (PS2 → PRDB)

Detects paper passage through fixing unit's exit.

Goes [H] when paper is detected.

b. Output signal

(1) M6 OUT A, OUT $\overline{A}$, OUT B, OUT $\overline{B}$

(PRDB → M6)

M6 drive control signals.

OTHER CONTROLS

[1] Parts energized when the main power switch is OFF

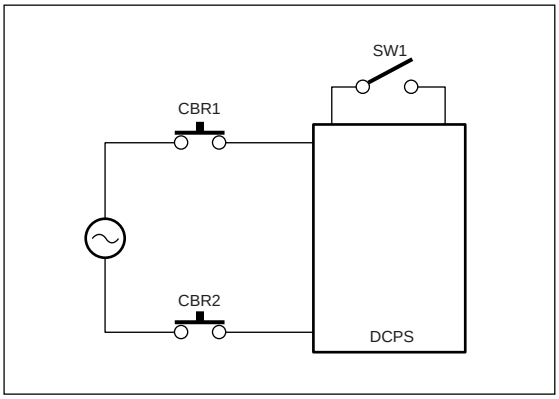

The following components are powered regardless of whether the SW1 (main power switch) is ON or OFF, provided that the power cord remains plugged in.

a. CBR1 and CBR2 (circuit breakers)

The circuit breakers serve to protect against damage from short circuit. If current exceeds 8A, the circuit breaker(s) will go OFF, cutting the power to the system.

[2] Components operated by power switches SW1 and SW2

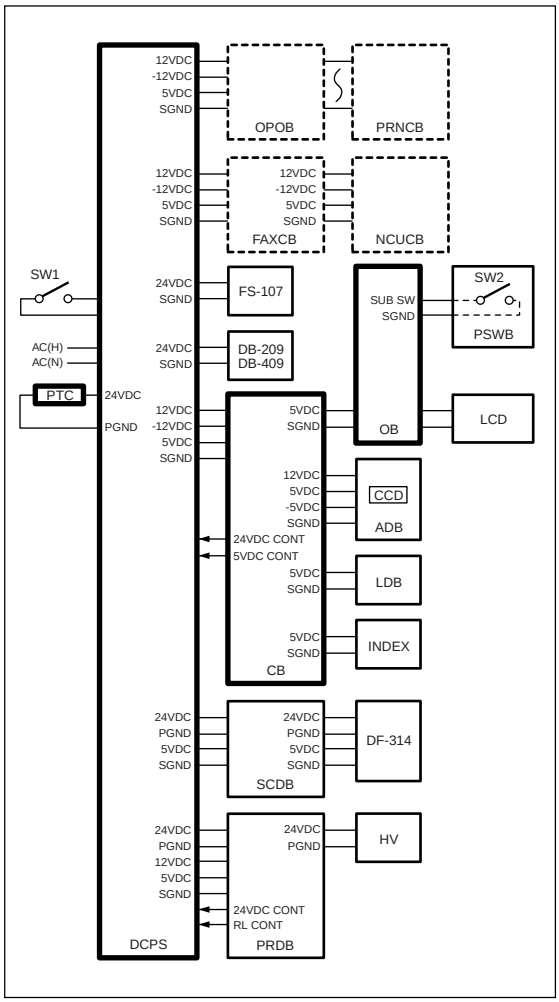

1. Operation

a. Components operated by SW1 (main power switch)

- DCPS (DC power supply)
- CB (overall control board)
- OB (operation board)
- PTC (PTC heater)

Setting SW1 ON supplies power to the DCPS, which in turn supplies +12VDC, –12VDC, and +5VDC to some of the circuits on the CB. The CB supplies +5VDC to the OB.

If printer and/or fax options are installed, +12VDC, –12VDC, and +5VDC are also supplied to these options.

Supply of 24VDC to PTC is set by 25 mode DIPSW.

b. Components operated by SW2 (sub power switch)

- All others

SW2 (sub power switch) is located on the PSWB (power switch board). At SW2 ON, the CB sends a control signal to the DCPS, causing the DCPS to supply +12VDC, 12VDC, and +5VDC to all CB circuits and to the PRDB. The PRDB then sends to the DCPS a control signal that causes the DCPS to generate 24VDC. This 24VDC power is supplied to all drive boards and options.

2. Signals

a. Input signal

(1) SUB SW (PSWB → OB)

Goes [L] when SW2 is turned ON.

b. Output signal

(1) RL CONT (PRDB → DCPS)

Control signal for RL1 on the DCPS.

In the event of abnormality, this signal goes [H] so that RL1 goes OFF.

[3] Cooling fan control

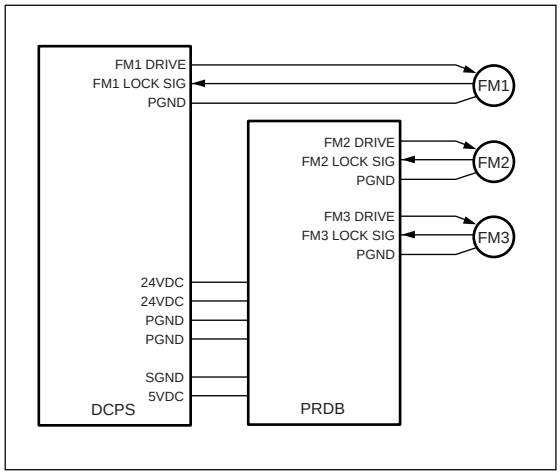

FM1 (DCPS cooling fan) is driven by the DCPS (DC power supply unit). FM2 (fixing cooling fan) and FM3 (optics unit cooling fan) are driven by the PRDB (printer drive board).

1. Operation

All cooling fans use 24V DC motors.

a. FM1

FM1 runs only during copy operation.

b. FM2

FM2 comes ON at start of copying if paper size is B5R, B6R, A5R, or 5.5x8.5R. FM2 goes OFF 60 seconds after PS3 (paper exit PS) detects the trailing edge of the final paper.

c. FM3

FM3 comes on only during copying. FM3 goes OFF 60 seconds after PS3 detects the trailing edge of the final paper.

2. Signals

a. Input signals

(1) FM1 LOCK SIG (FM1 → DCPS)

FM1 status detect signal.

[L]: Running normally.

[H]: Stopped, or running abnormally.

(2) FM2 LOCK SIG (FM2 → DCPS)

FM2 status detect signal.

[L]: Running normally.

[H]: Stopped, or running abnormally.

(3) FM3 LOCK SIG (FM3 → DCPS)

FM3 status detect signal.

[L]: Running normally.

[H]: Stopped, or running abnormally.

b. Output signals

(1) FM1 DRIVE (DCPS → FM1)

FM1 drive control signal.

[H]: FM1 ON

[L]: FM1 OFF

(2) FM2 DRIVE (PRDB → FM2)

FM2 drive control signal.

[H]: FM2 ON

[L]: FM2 OFF

(3) FM3 DRIVE (PRDB → FM3)

FM3 drive control signal.

[H]: FM3 ON

[L]: FM3 OFF

[4] Operation unit control

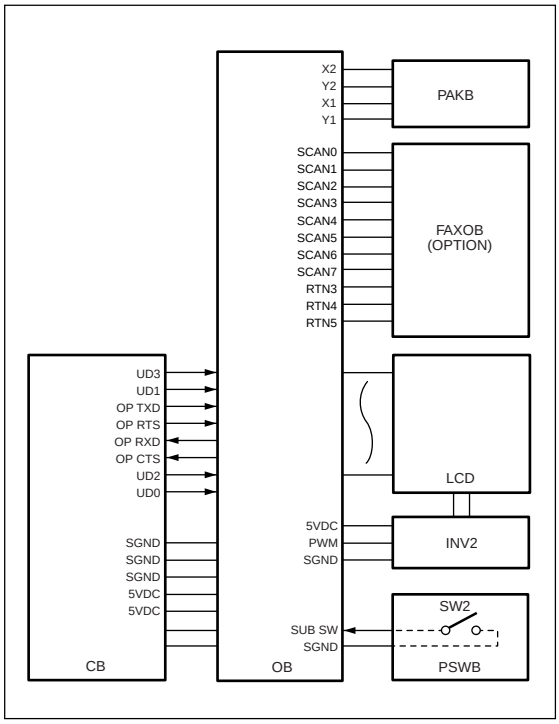

The operation unit consists of the OB (operation board), LCD (display board), PAKB (panel key board), INV2 (display inverter), and PSWB (power switch board). The LCD includes a backlight (driven by INV2) as well as touch switches that are linked to the display content.

The operation unit is driven by the OB based on serial data output by the CB (overall control board).

1. Operation

a. LED ON/OFF control

The LEDs installed on the OB are driven ON/OFF by the OB's internal CPU in accordance with serial data received from the CB (overall control board).

b. LCD display control

(1) LCD display operation

The LCD generates various displays in accordance with 4 bit parallel data transmitted from the CB through the OB.

(2) Backlight ON operation

The backlight (cold cathode tube) is included to make the display easier to read. The backlight is driven by the INV2, which is controlled by the OB.

(3) Touch switch control

The LCD includes touch switches that allow the user to make selection by pressing directly on the screen. These switches are controlled by the OB.

c. PSWB (power switch board) control

Switching ON of SW2 on the PSWB (power switch board) while SW1 (main power switch) is ON causes power to be supplied to all loads. Note that this switching operates only if SW1 is already ON.

2. Signals

a. Input signals

(1) OP RXD (OB → CB)

Serial data informing CB of the OB operating status.

(2) OP CTS (OB → CB)

Indicates that data transmission from the OB to CB is in progress.

While this signal is [H], the CB will not transmit OP TXD.

b. Output signals

(1) OP TXD (CB → OB)

Serial data informing OB of the machine operating status.

(2) OP RTS (OB → CB)

Indicates that data transmission from the CB to OB is in progress.

While this signal is [H], the OB will not transmit OP RXD.

[5] Counter control

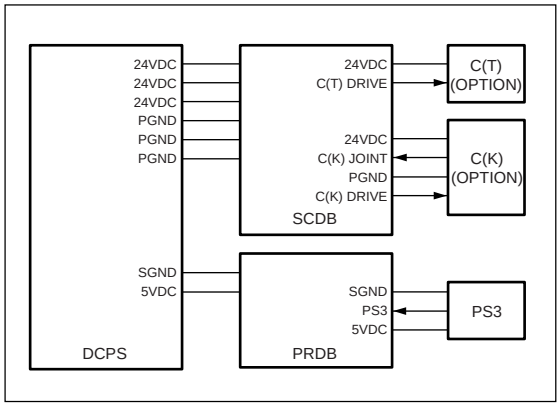

This machine supports the following two optional counters.

C(T): Total Counter

C(K): Key Counter

This counters are controlled by the SCDB (scanner drive board).

1. Operation

This machine counts copies using the following two software counters.

(1) Paper feed counter

This counter increments when 1st paper feed for the next copy comes ON.

(2) Paper exit counter

This counter increments when PS3 (paper exit PS) goes ON → OFF.

Counter value shown on OB

Normal Operation	Jam
Indicator shows count from the paper feed counter.	Indicator shows count from the paper exit counter.

2. Signals

a. Input signal

(1) C(K) JOINT (C(K) → SCDB)

Indicates the C(K) connection state.

[H]: Counter not connected.

[L]: Counter present.

b. Output signals

(1) C(T) DRIVE (SCDB → C(T))

C(T) drive signal.

C(T) increments at [L] → [H].

(2) C(K) DRIVE (SCDB → C(K))

C(K) drive signal.

C(K) increments at [L] → [H].

[6] Option control

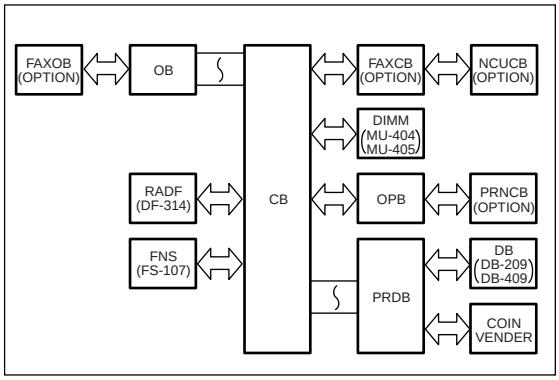

Options are controlled by the CB (overall control board), the PRDB (printer drive board) and the OB (operation board).

1. Operation

The RADF, FNS, FAXCB and PRNCB each include their own internal CPU. Control is implemented by communication between these CPUs and the CB on the main body. The DB does not include a CPU, and is driven by the CB via the PRDB. (For information about operation of options, refer to options service handbook and the printer and fax service handbooks.)

<Operation of copy vender signals>

Connector No.	Pin No.	Signal Name	Contents	Output Timing	Signal Type
35	1	DC24V	Key counter power	Always	24V, 300mA
	2	C(K)SIG	Key counter connection check	—	—
	3	C(K)GND	Signal ground	—	—
	4	C(K)DRIVE	Key counter increment	Goes (L) 100ms after output of paper	—
	5	P.GND	Power ground	—	—
36	1	Vender Copy	Copy-in-progress signal	Output starts at START button ON, and ends at paper exit completion.	Open collector 5V, 200mA
	2	Vender FEED	Paper feed signal	Goes (L) for 100ms in sync with paper feed from 7020 tray or from DB.	Open collector 5V, 200mA
	3	Paper size 0 to 3	Paper size signal	Only while copying is in progress.	Open collector 5V, 200mA
	4				
	5				
	6				
	7	Vender duplex	Double sided copy select	Output starting at selection of duplex mode	Open collector 5V, 200mA
	8	N.C.	Preparatory terminal	—	—
	9	N.C.	Preparatory terminal	—	—
	10	P.GND	Power ground	—	—