3

DISASSEMBLY/ASSEMBLY

This section explains how to disassemble and reassemble the machine. When disassembling and reassembling the machine, follow the precautions given below.

1. Be sure the power cord has been unplugged from the wall outlet.
2. The disassembled parts must be reassembled following the disassembly procedure in reverse unless otherwise specified.
3. Care should be taken not to lose small parts. Care should also be taken not to install small parts in wrong places.
4. Do not operate the machine before installing all the disassembled parts completely.
5. Removal of some screws is prohibited in this section. Never loosen them.

EXTERNAL SECTION

[1] Replacing the ozone filter

⚠**Caution: Be sure that the power cord has been unplugged from the outlet.**

a. Procedure

(1) Remove the five set screws, and remove the read right cover.

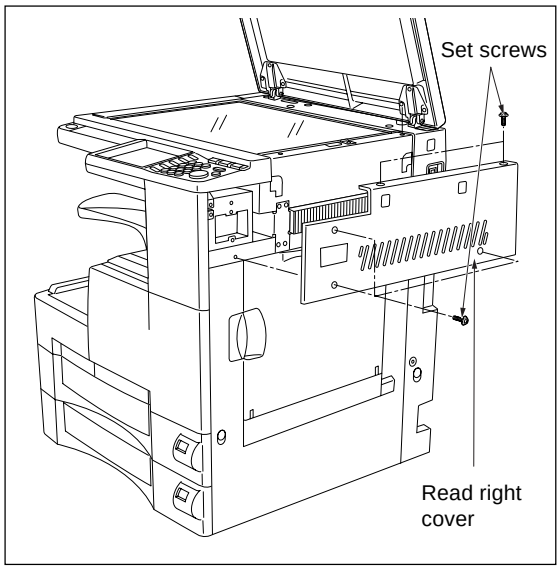

(2) Remove the ozone filter.

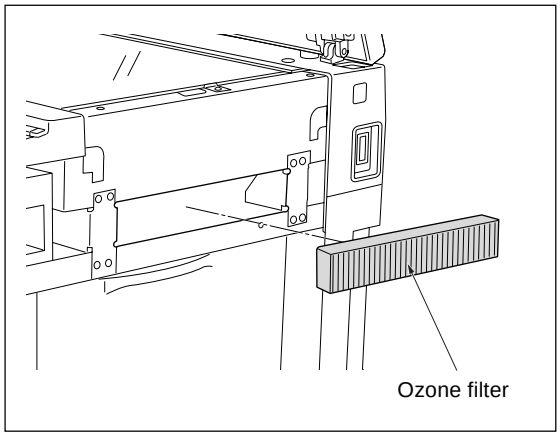

(3) Reinstall the above parts following the removal steps in reverse.

DRIVE SECTION

[1] Removing and Reinstalling the motor units (main, paper feed, developing)

⚠**Caution: Be sure that the power cord has been unplugged from the outlet.**

⚠**Caution: Be sure to remove the drum unit from the main body before removing or reinstalling the main motor unit. If the drum unit is in place at this time, the drum will rotate when you install or remove the drum rotating plate, resulting in possible damage to the cleaning blade.**

a. Procedure

(1) Remove the developing unit and drum unit from the main body.

(2) Remove the 2 set screws, and remove the cord cover A. Then remove the cord cover B.

(3) Remove the 9 set screws, and remove the rear cover.

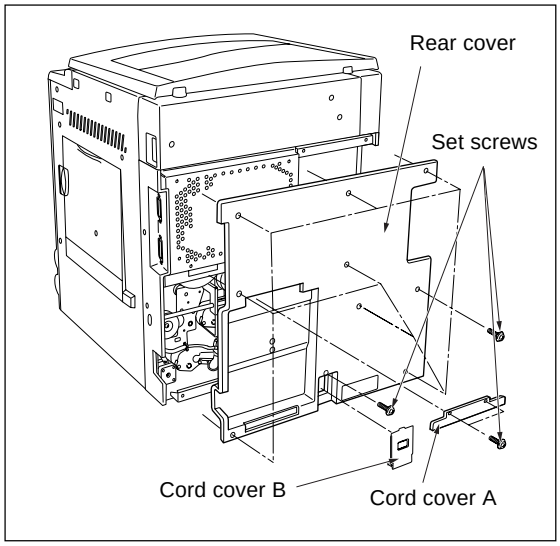

(4) Remove the 2 set screws holding the left and right rear covers in place (2 screws each), and remove the covers.

(5) Remove the 3 set screws, and remove the wire-bundle guide plate.

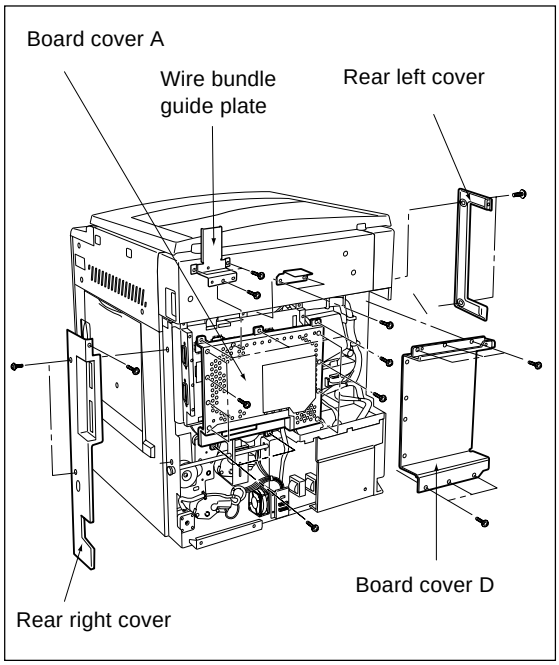

(6) Remove the 16 set screws, and remove the board cover D.

(7) Remove the 13 set screws, and remove the board cover A.

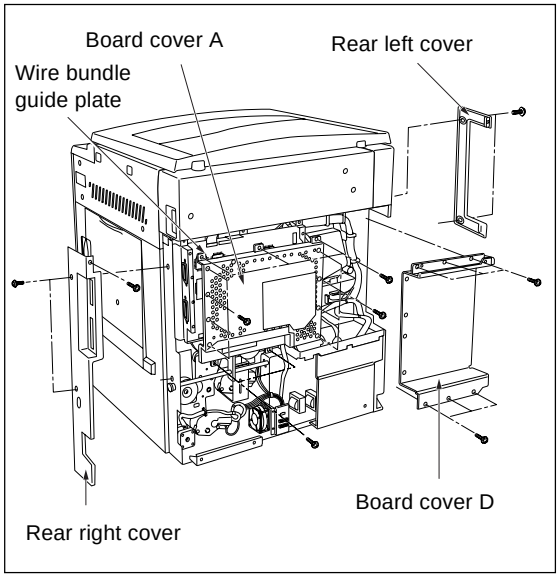

(8) Remove the various wiring connectors from the overall control board.

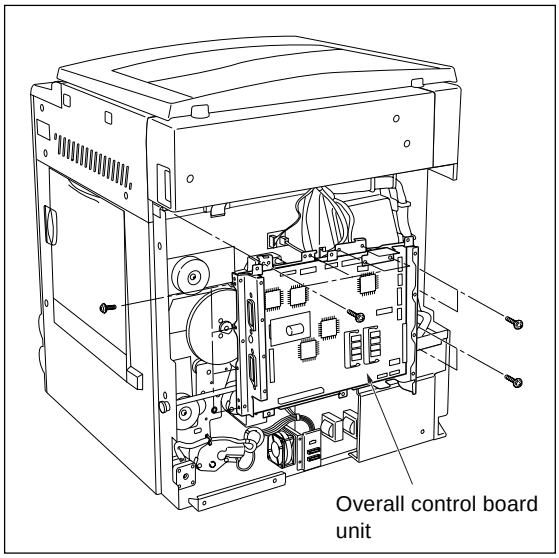

(9) Remove the 12 set screws, and remove the overall control board unit.

(10) Disconnect the connectors from each motor unit.

(11) Remove the 4 set screws, then remove each motor unit.

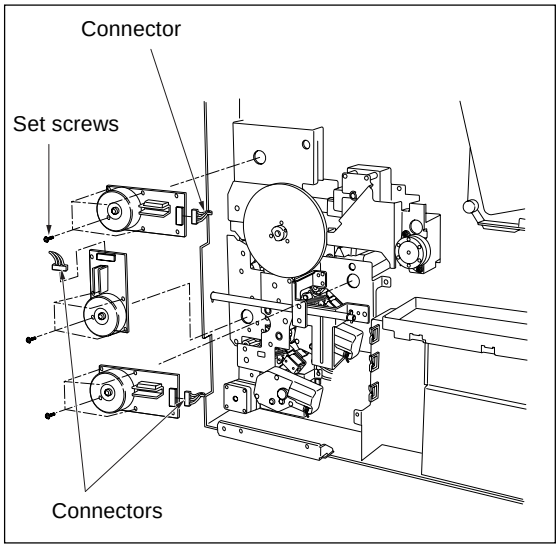

(12) Reinstall in the opposite sequence to removal.

Caution: Be careful to avoid damaging the cable ribbon connected to the overall control board.

[2] Replacing the registration clutch

⚠Caution: Be sure that the power cord has been unplugged from the outlet.

⚠Caution: Be sure to remove the drum unit from the main body before carry out the following procedure. If the drum unit is in place at this time, the drum will rotate when you install or remove the drum rotating plate, resulting in possible damage to the cleaning blade.

a. Procedure

(1) Remove the rear panel and the system control board unit.

(2) Remove the 3 set screws, and remove the drum rotating plate.

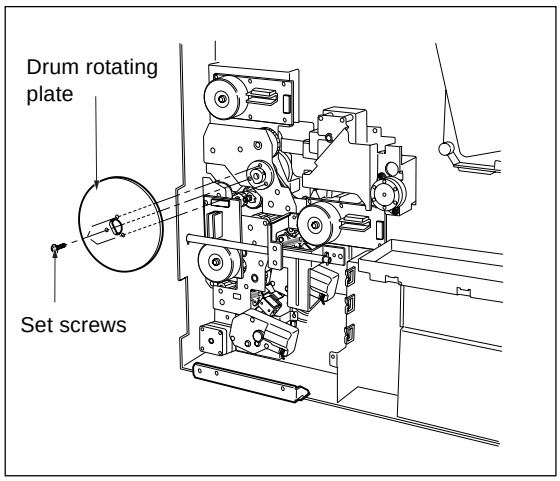

(3) Remove the clutch connector.

(4) Remove the E-ring. Pull the registration clutch toward you and rotate it to remove.

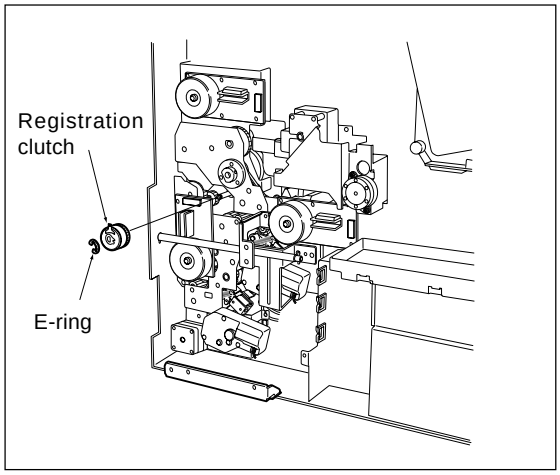

(5) Reinstall in the opposite sequence to removal.

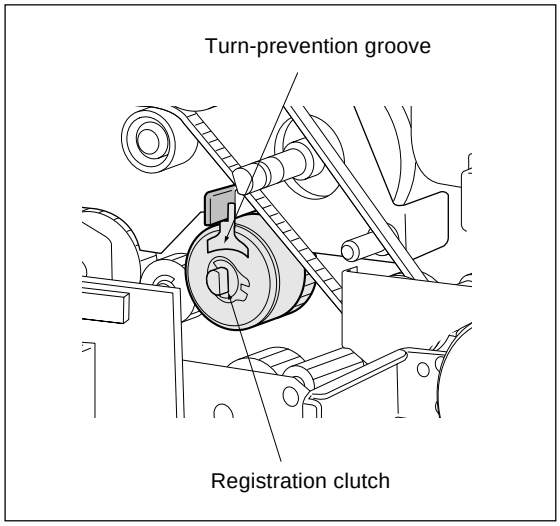

Caution: When installing the registration clutch, be sure that the clutch's turn-prevention groove is installed correctly.

[3] Replacing the loop clutch

⚠**Caution: Be sure that the power cord has been unplugged from the outlet.**

a. Procedure

(1) Remove the rear panel and the system control board unit.

(2) Remove the wire bundle from the clamp on the conveyance drive panel.

(3) Remove the 2 E-rings and 3 set screws, and remove the conveyance drive panel. (Do not remove the rotation prevention screws on the clutch.

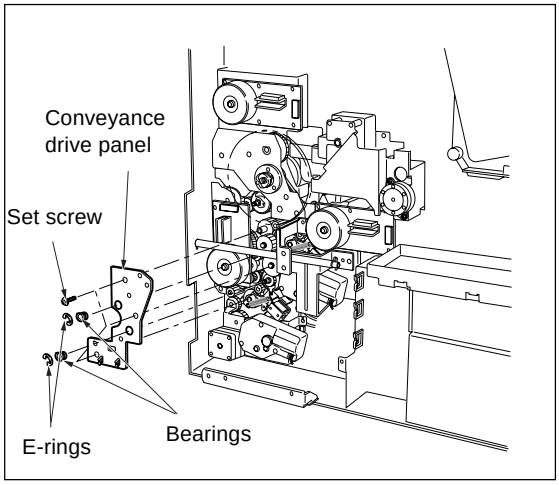

(4) Remove the E-ring and gear, then remove the gear at the front, and then remove the clutch.

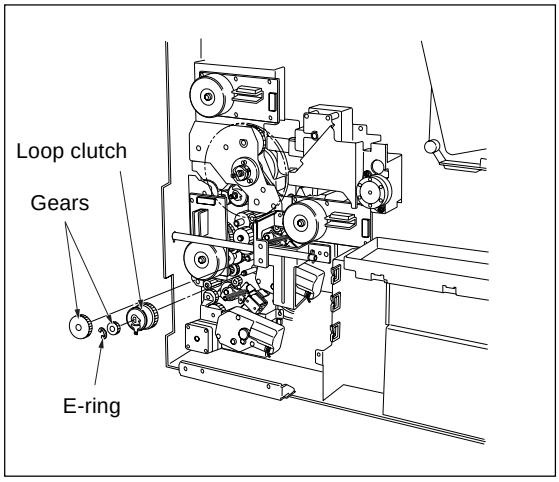

(5) Reinstall in the opposite sequence to removal.

READ SECTION

[1] Screws that must not be removed

⚠Caution: The paint-locked screws must not be removed. Be sure that you do not remove these screws.

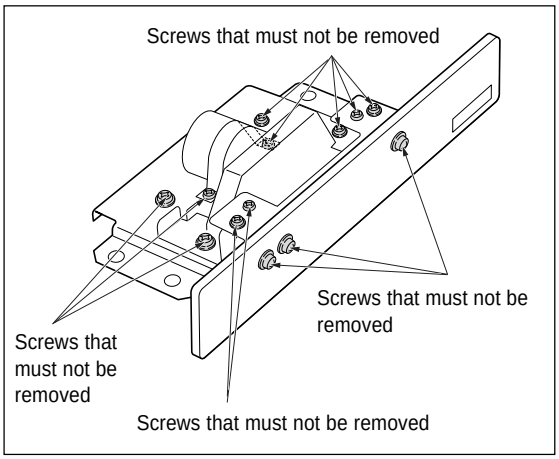

[2] Removing the original glass

⚠Caution: The white color reference plate on the rear of the original glass must be kept clean. If dirt gets on the board, clean the board using a clean cloth.

a. Procedure

(1) Remove the platen cover or the RADF.

(2) Remove the 5 set screws, and remove the read right cover.

(3) Loosen the set screw and slide the glass holding plate toward the outer exterior.

(4) Raise the original glass and slide it off.

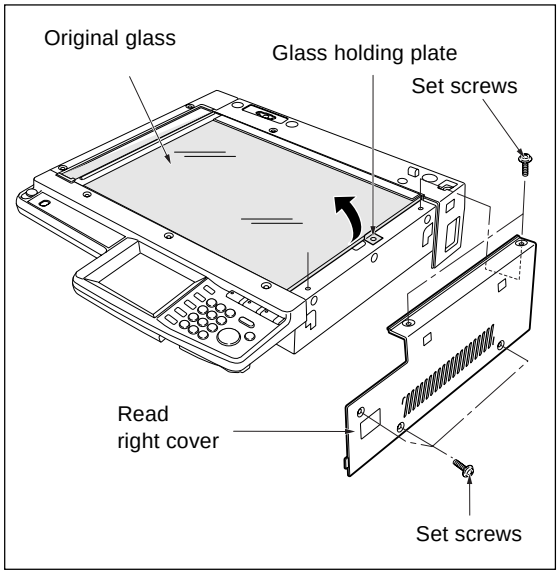

(5) Reinstall in the opposite sequence to removal.

Caution: Be sure that the original glass is pushed flush left against the glass holding plate when fastening into place.

[3] Removing and Reinstalling the CCD unit

⚠**Caution: Be sure that the power cord has been unplugged from the outlet.**

⚠**Caution: Be sure to perform image adjustment after installing the CCD unit. (Refer to the "Adjustment" section.)**

a. Procedure

(1) Remove the original glass.

(2) Remove the 2 set screws, and remove the photo-sensor.

(3) Remove the 8 set screws, and remove the lens shield cover.

(4) Remove the 3 set screws, and remove the cable ribbon cover.

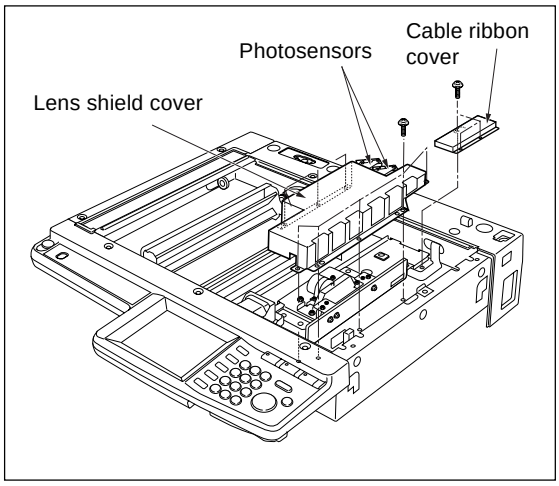

(5) Remove the cable ribbon from the CCD unit board.

(6) Remove the 2 set screws, and remove the CCD unit.

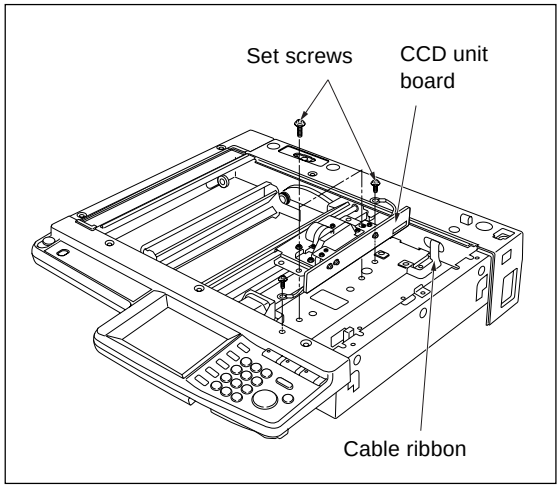

(7) Reinstall in the opposite sequence to removal.

Caution: Be careful to avoid damage to the cable ribbon when removing it. When reinstalling it, be sure that it is securely in place.

[4] Replacing the exposure lamp

⚠**Caution: Be sure that the power cord has been unplugged from the outlet.**

Do not touch the exposure lamp's lamp area with bare hands.

Caution: Be sure to clean original glass before reinstalling it.

a. Procedure

(1) Remove the read right cover and the original glass.

(2) Remove the operation panel, the read left cover, and the read rear cover.

(3) Remove the 2 set screws, and remove the read front cover.

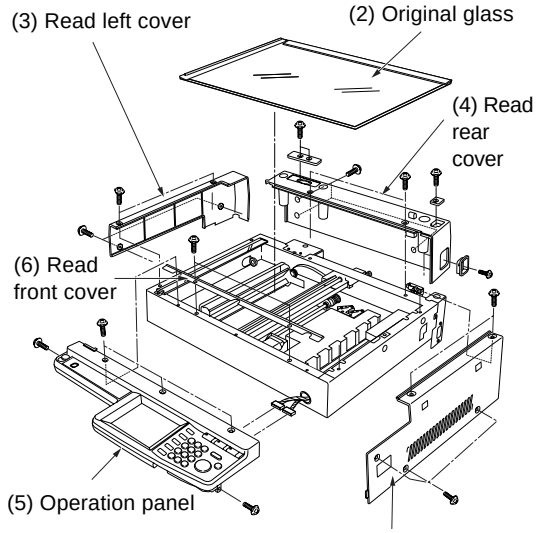

* Remove above parts in order of numbers.

(4) Shift the exposure unit to the cutout location at the center of the main body frame.

(5) Remove the 2 set screws (through the holes in the frame), and remove the auxiliary reflecting mirror.

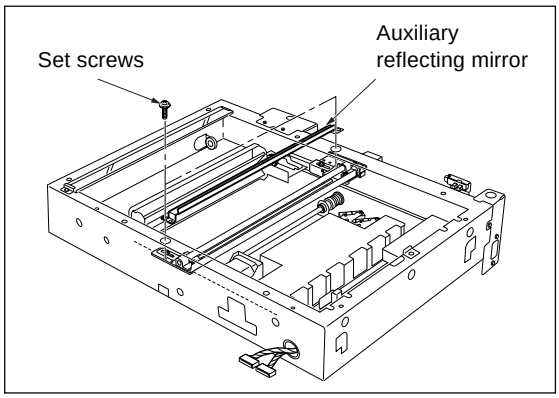

(6) Remove the 1 connector and 2 set screws. Tilt and remove the exposure lamp.

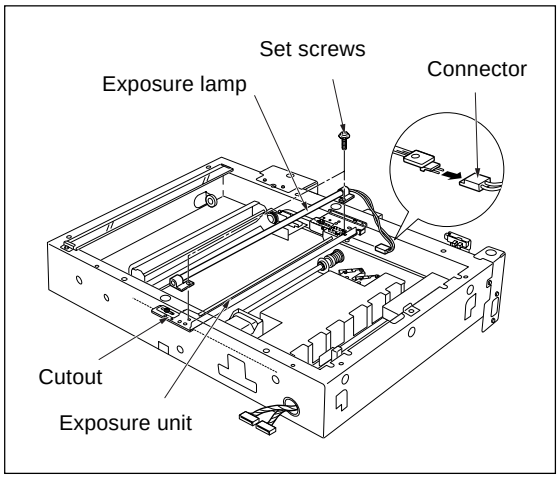

(7) Reinstall in the opposite sequence to removal.

Caution: Be careful when reinstalling the original glass. To install: push the glass against the left rear of the readout rear exterior, then hold the readout front cover against with glass hold plate.
And further, hold the glass plate, while pressing the cut portion of the read left cover.

[5] Removing and Reinstalling the exposure unit

⚠**Caution: Be sure that the power cord has been unplugged from the outlet.**

Caution: Be sure to the use optics positioning jig when reinstalling the exposure unit.

Be sure to clean the original glass before reinstalling it (to prevent degradation of image quality).

a. Removal procedure

(1) Remove the read right cover and the original glass.

(2) Remove the operation panel, read left cover, and read rear cover.

(3) Remove the 2 set screws, and remove the read front cover.

(4) Shift the exposure unit to the cutout location at the center of the main body frame.

(5) The exposure unit is fixed in place by set screws fastened to the front and rear exposure unit mount fittings (1 screw in each fitting). Remove the 2 screws.

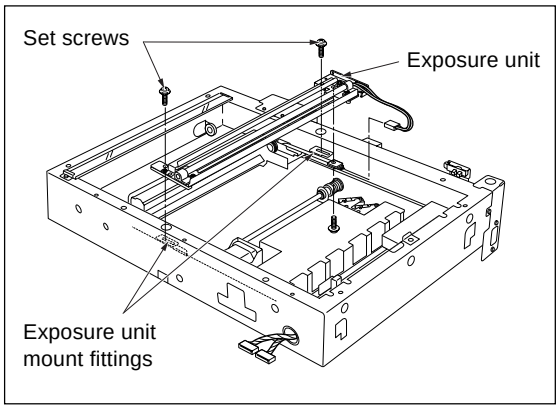

(6) Tilt and slide the exposure unit to remove it from the frame.

(7) Disconnect the exposure lamp connector.

b. Installation procedure

(1) Fit the exposure unit into the main body.

(2) Insert the front exposure unit mount fitting and rear exposure unit mount fitting into the corresponding slits in the exposure unit.

(3) Shift the V mirror unit to the exit side. Through the front, insert the two optics positioning jigs so that they are at the installation location for the exposure unit. Pass the jig through the V mirror unit to fasten it in place.

Position the exposure unit by pushing it against the frame on the right side of the unit.

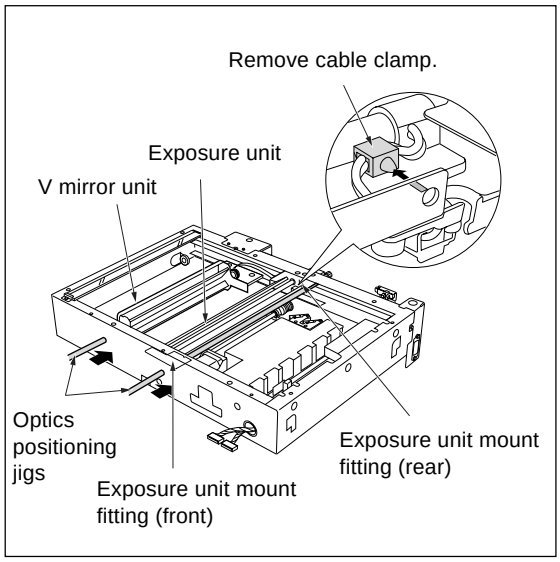

(4) Fasten the front and rear exposure unit mount fittings into place (1 screw in each fitting).

(5) Remove the optics positioning jigs.

(6) Finish installation by reversing the sequence of the removal procedure.

[6] Removing and Reinstalling the optics drive motor

a. Procedure

(1) Remove the original glass.

(2) Remove the 3 set screws, and remove the optical motor.

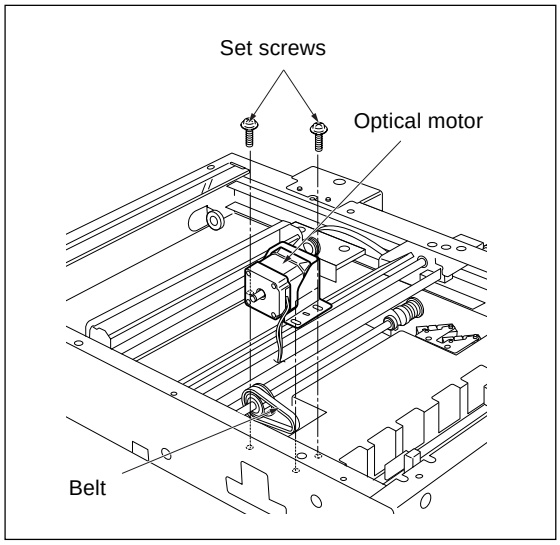

(3) When reinstalling, apply light tension to the belt while fastening the motor into place.

[7] Removing the optics wire

Caution: When removing or reinstalling optics wires, be sure to the use optics positioning jig.

Be sure to perform image adjustment after replacing or reinstalling the wire. (For details, refer to “Adjustment section”.)

a. Procedure

(1) Unfasten and remove all externals from the read unit.

(2) Shift the V mirror unit to the left side. Through the front, insert the optics positioning jig so that it is at the V mirror attachment location. Pass the jig through the V mirror unit to fasten the it in place.

(3) Remove the exposure unit.

(4) Detach the springs from the ends of the front and rear optics wires (1 spring on each wire), and remove the wires.

(5) Remove the set screws holding the two drive pulley bearings in place (two screws on each pulley), and remove the bearings.

(6) Remove the front and rear optics wires from the drive pulleys.

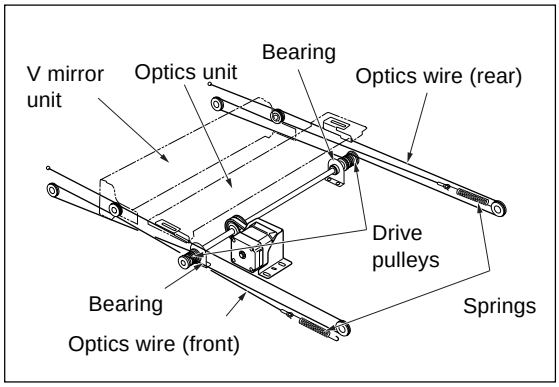

[8] Installing the optics wire

Caution 1: When winding wire around pulleys, be sure that the winds are close. Be careful to avoid overlap.

Caution 2: When changing the wire, be sure to use the optics positioning jigs.

Caution 3: Be sure to perform image adjustment after installing the CCD unit. (Refer to the "Adjustment" section.)

a. Procedure

(1) Fit the metal ball (midway along each optics wire) into the mount opening on the drive pulley. Starting from this position, wind 6 times around the outside and 5 times around the inside.

- After winding the wires, fasten them in place (with tape, etc.) so that they cannot come off.
- Use the "F" exposure unit mount fitting (the fitting with the "F" printed on it) at the front, and use the "R" fitting at the rear.
- The end with the metal ball at the tip winds around the inside of the pulley shaft.
- Wind so that the two ends of the wire come off the top of the pulley.

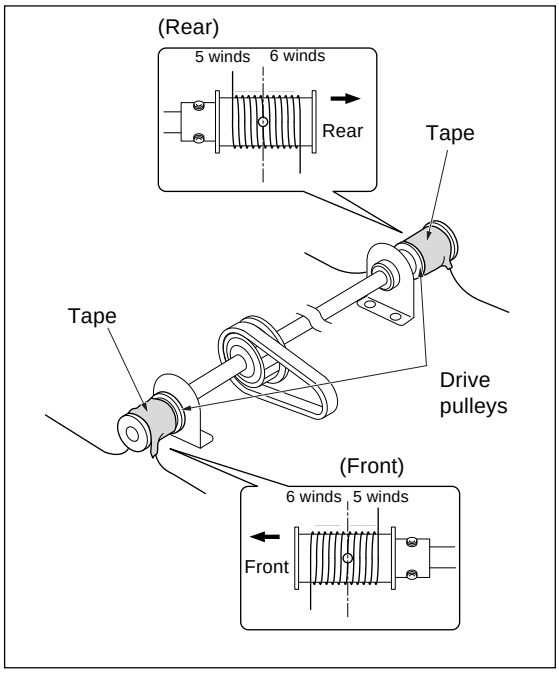

(2) On the metal ball side, pass the optics wire so that it passes under the V mirror unit, through the left side pulley, and through the inside pulley on the V mirror unit. Hook the end of the wire onto the cutout on the frame.

(3) On the round-end side, pass the wire so that it passes through the right side pulley, passes over the pulley on the outside of the V mirror unit, and passes under the V mirror unit. Fasten the end to the right side frame with a the spring.

(4) Fasten the drive pulley bearings into place with the attachment screws (2 screws each).

(5) Using the optics positioning jigs to install the exposure unit.

(6) Remove the jigs.

(7) Slide the exposure unit two or three times to make sure that it works correctly.

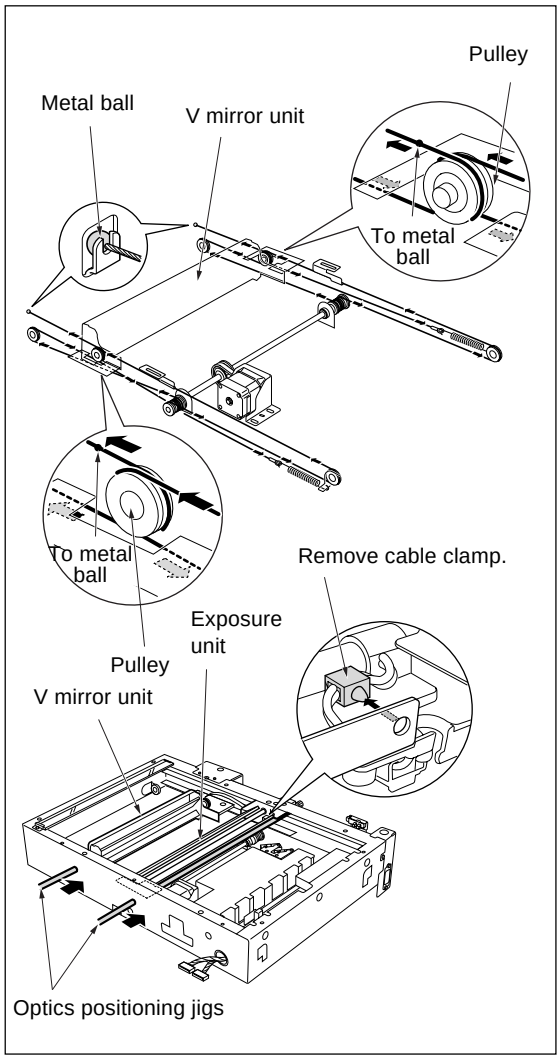

WRITE UNIT

[1] Removing and Reinstalling the write unit

⚠**Warning:**

(1) Never supply power while the write unit is out of its proper installed position.

(2) Do not open the cover of the write unit while power is being supplied. Shining of the laser beam on the eye may cause blindness.

(3) After turning the main power switch OFF, wait at least two minutes before removing the write unit.

⚠**Caution: Be sure that the power cord has been unplugged from the outlet.**

Caution: When removing the write unit, take care to avoid touching with the write mirror and the dust proof glass. (Touching these areas may leave scratches and smudges.)

a. Procedure

(1) Open the front door and remove the drum unit and the developing unit.

(2) Remove the exit tray, open the ADU door, and remove the front door and the main body front cover. Remove the side rear cover, the main-body upper cover, and the main-body auxiliary cover.

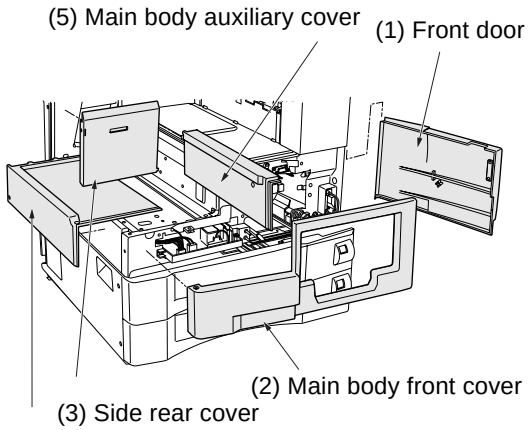

*Remove above parts in order of numbers.

(3) Remove the write cleaning knob from the dust proof glass cleaning rod and then puch the rod to inside of main body.

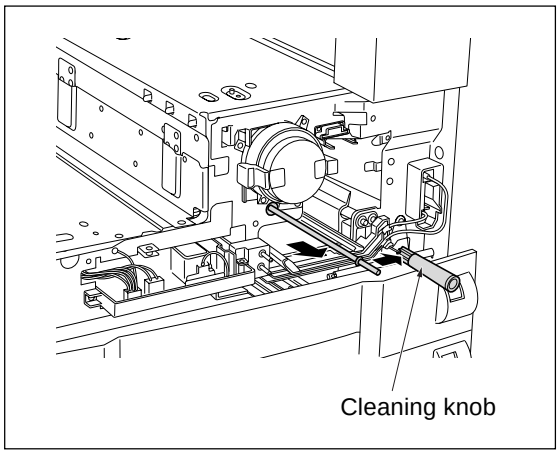

(4) Remove the 11 set screws, and remove the write cover.

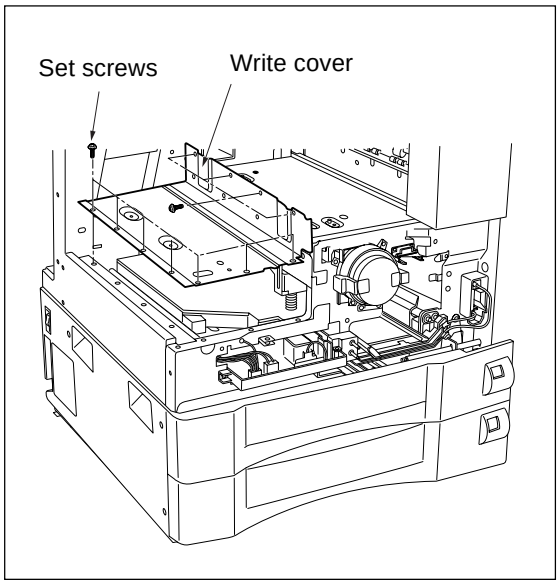

(5) Remove the two write unit mount pieces (each is held in place by set screw).

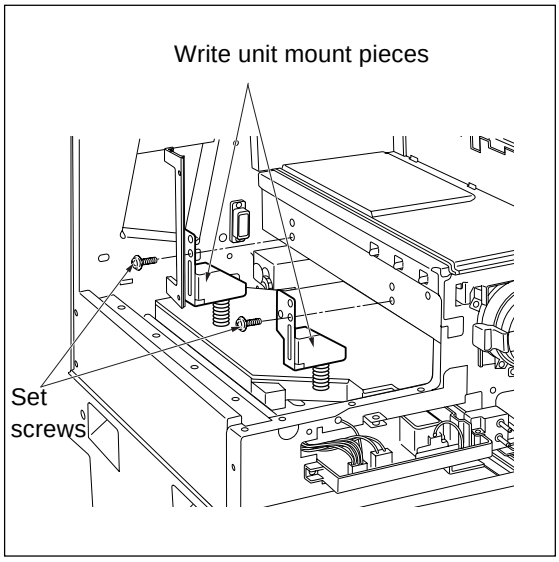

(6) Disconnect the 3 connectors.

(7) Remove the 3 set screws, and remove the write unit by pulling it to the left.

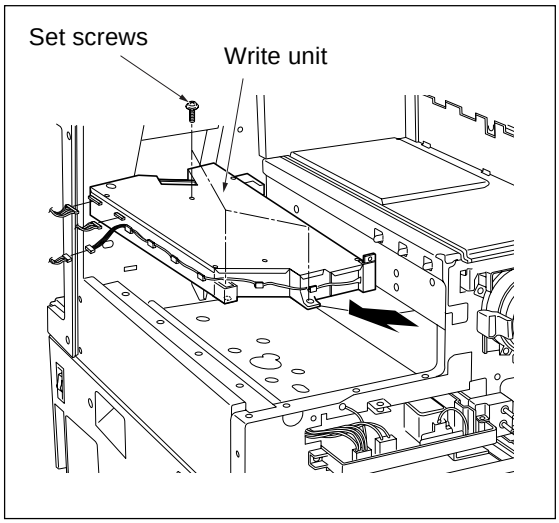

(8) Reinstall in the opposite sequence to removal.

DRUM UNIT

[1] Removing and Reinstalling the drum unit

⚠**Caution: Be sure that the power cord has been unplugged from the outlet.**

Caution 1: After removing the drum unit, close the drum cover and store the unit in a dark place.

Caution 2: During removal and reinstallation work, never rotate the drum in the wrong direction (in the direction opposite to the direction it moves during normal copying). Rotating the drum in the reverse direction may cause scratches to the cleaning blade.

a. Procedure

(1) Open the front door, loosen the set screw, and gently pull the developing unit out toward you.

(2) Open the ADU door, and open the conveyance unit.

(3) Loosen the set screw, and gently pull the drum unit out toward you until it stops. Then tilt it slightly and remove it.

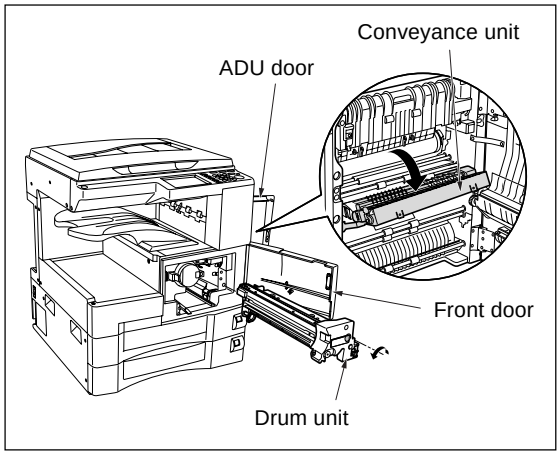

(4) Reinstall in the opposite sequence to removal.

[2] Removing and Reinstalling the drum

Caution 1: Take care to avoid scratching the drum's light sensitive areas and the cleaning blade. Do not touch these areas with bare hands.

Caution 2: When removing or installing, never allow the drum to bump against the plate-metal part of the cleaning blade.

Caution 3: If you are going to leave the drum outside of the drum unit, be sure to close the drum cover and place in a dark location.

Caution 4: Before installing the drum and cleaning blade (regardless of whether new or used), be sure to coat these with setting powder. Apply the powder around the entire drum, and on both sides of the blade.

Caution 5: If you have coated setting powder onto the drum: Before installing the drum unit back into the main body, use an alcohol-soaked cloth to remove stray powder from the sensor surface on the toner control sensor board. This is necessary to ensure that accurate toner density readings are obtained.

Caution 6: Be sure that the drum is oriented correctly before installing it. The convex end (bulging end) should be facing the rear.

Caution 7: If you are installing a new drum, remember to reset the drum counter. (Use mode 36, counter clear).

a. Removing procedure

(1) Remove the drum unit from the main body.

(2) Set the unit so the drum is to the top.

(3) Remove the 2 set screws and remove the charging corona unit.

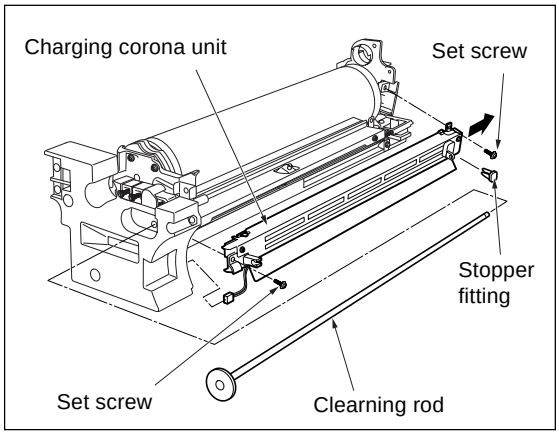

(4) Remove the stopper ring, and pull out the drum shaft.

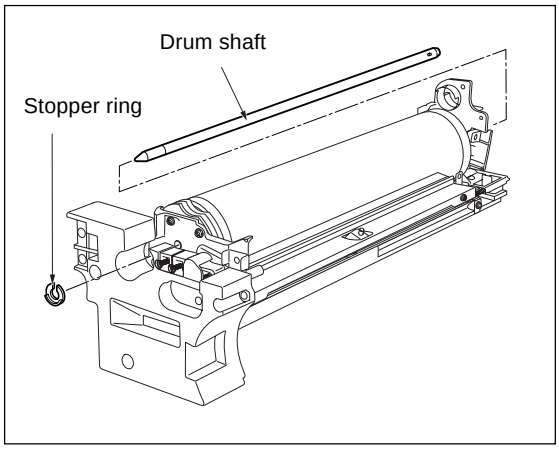

(5) Remove the 2 set screws holding the drum bearing in place, and remove the bearing.

(6) Remove the 2 semicircular seal blocks (one on each end of the drum).

(7) To remove the drum, push it back toward the rear and lift it up and out from the front.

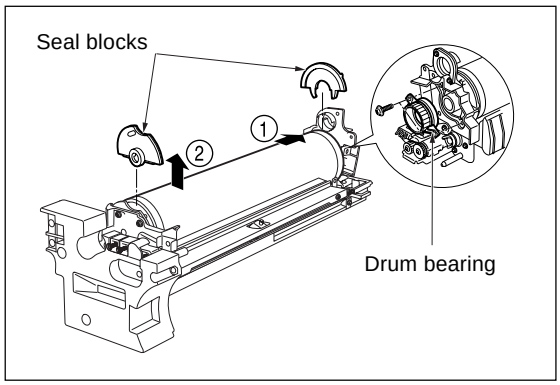

b. Installing procedure

Caution: Be sure that the toner collection sheet makes contact with the entire span of the drum, with no gaps.

(1) Coat the entire surface of the drum with setting powder.

(2) Fit the convex end of the drum into the rear side of the unit, then set the drum down into the unit. Reattach the two seal blocks (one at each end of the drum).

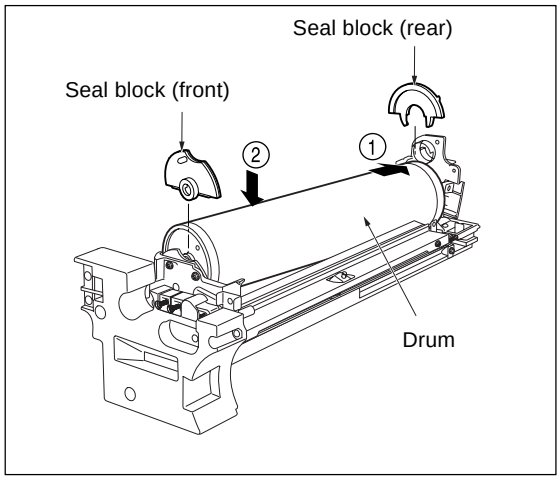

(3) Reattach the drum bearing. Fasten it into place with the 2 set screws.

(4) Insert the drum shaft and reattach the stopper.

(5) Using the jig included on the drum unit cover, rotate the drum clockwise and confirm that there are no gaps in the setting powder coat, and that the toner collection sheet and cleaning blade are smooth, etc.

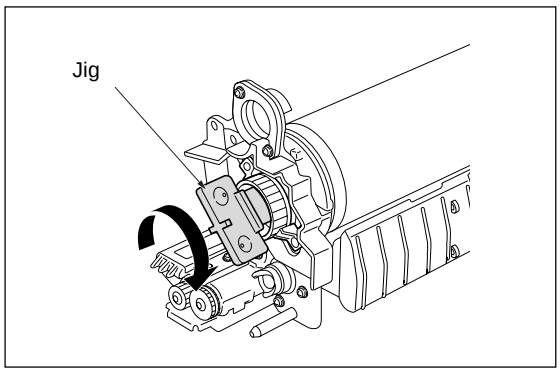

(6) Install the charging corona unit. Fasten it into place with 2 set screws.

[3] Removing and Reinstalling the separation claw

Caution 1: While removing or installing the claw, be careful to avoid damage to the drum.

Caution 2: When installing the claw, be sure that it is correctly oriented and positioned.

Caution 3: Do not touch the cleaning blade or the drum's light sensitive areas with bare hands.

a. Procedure

(1) Remove the drum unit from the main body.

(2) Remove the drum from the drum unit.

(3) Disconnect the relay connector.

(4) Remove the separation rock spring.

(5) Remove the 2 positioning screws and the 2 collars, and then remove the separation claw unit.

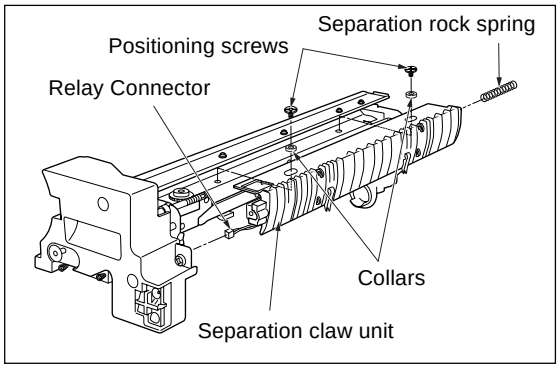

(6) Press down on the separation fulcrum shaft and remove the 2 separation claws.

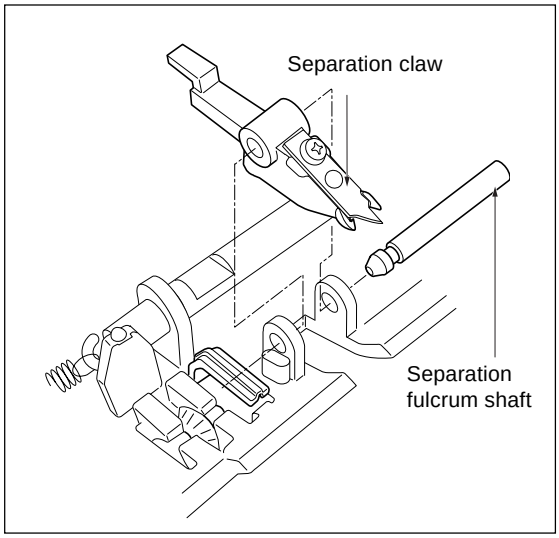

(7) Reinstall in the opposite sequence to removal.

CORONA UNIT SECTION

[1] Removing and Reinstalling the charging corona unit

⚠**Caution: Be sure that the power cord has been unplugged from the outlet.**

a. Procedure

(1) Remove the drum unit from the main body.

(2) Remove the cleaning rod's shaft stopper fitting, and pull out the cleaning rod.

(3) Disconnect the connector from the drum unit.

(4) Remove the 2 set screws, and remove the charging corona unit by pulling it out from the rear.

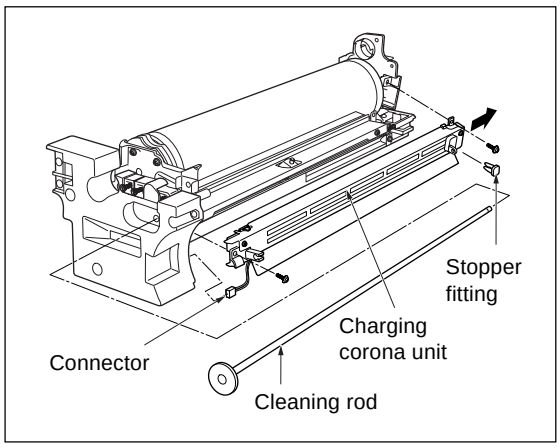

(5) Reinstall in the opposite sequence to removal.

[2] Removing and Reinstalling the charge control plate

⚠**Caution: When reinstalling, be sure to set the charge control plate so that the spring held end is toward the front of the charging corona unit.**

a. Procedure

(1) Remove the drum unit from the main body.

(2) Remove the charging corona unit. Move the charging cleaning block to its home position (at the right side).

(3) Remove the 2 charge control springs, and remove the charge control plate.

(4) To clean, use: Tap lightly with a cloth soaked in drum cleaner, then use a blower brush to remove remaining debris.

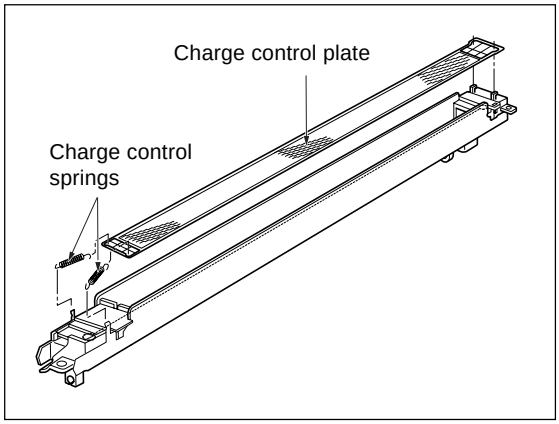

(5) Reinstall in the opposite sequence to removal.

[3] Replacing the charging wire

a. Procedure

(1) Remove the drum unit from the main body.

(2) Remove the charging corona unit. Move the charging cleaning block to its home position (at the right side).

(3) Remove the charge control plate.

(4) Remove the 2 charging covers (charging rear cover, and charging front cover).

(5) Remove the spring, and remove the charging wire.

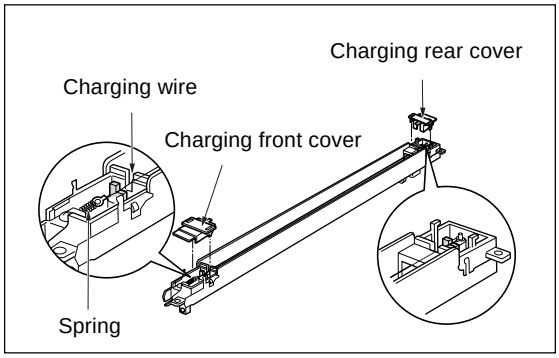

(6) To install the replacement wire: first fasten the rear end of the wire to the unit, then pass the wire through the charging cleaning block and fix it in place with the spring. Then complete the installation by reversing the steps above.

[4] Removing and Reinstalling the transfer and separation corona unit

⚠**Caution: Be sure that the power cord has been unplugged from the outlet.**

a. Procedure

(1) Open the ADU door.

(2) Pull the conveyance unit toward you to open.

(3) The transfer/separation corona unit is held in place by two catches, one at each end. Press in on these catches and remove the unit.

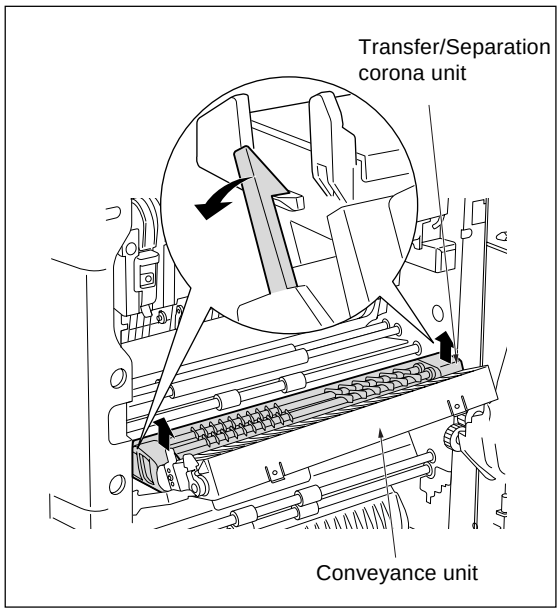

(4) Reinstall in the opposite sequence to removal.

Caution: When installing the Transfer/Separation corona unit, be sure that the cleaning material is in home position at the right side.

[5] Replacing the transfer and separation wires

Caution: Do not remove the transfer entrance guide plate.

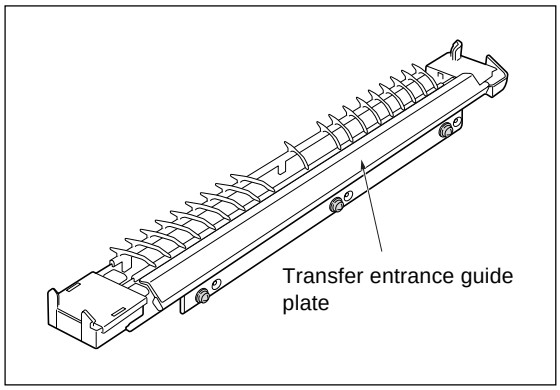

a. Procedure

(1) Remove the transfer and separation corona unit from the main body.

(2) Use a tweezers to remove the hook from the transfer and separation corona unit. Then remove the plunging prevention plate.

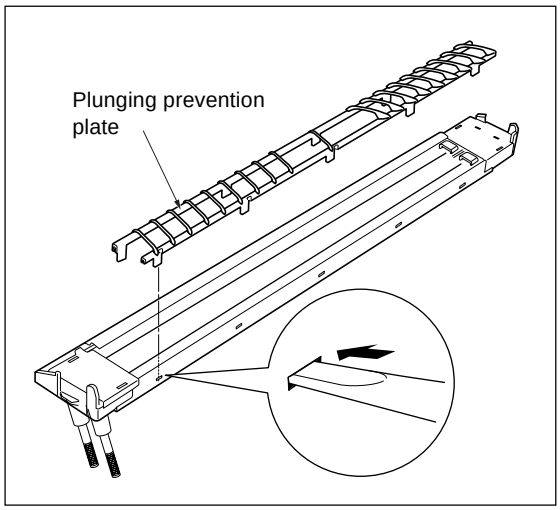

(3) Remove the front and rear spark arrestor plates.

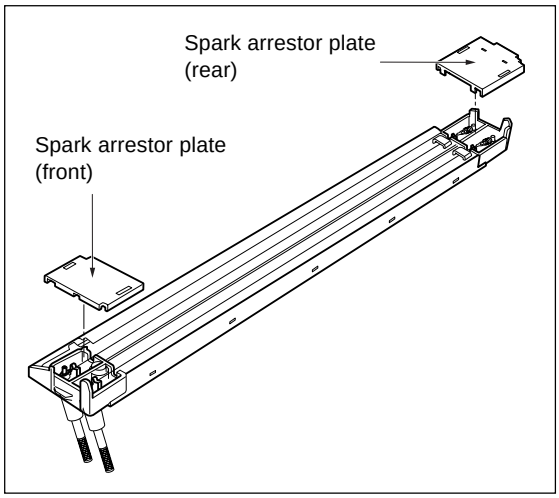

(4) Move the cleaning block to home position, and remove the top covers from the cleaning block.

(5) Remove the spring from each wire, and remove the wires.

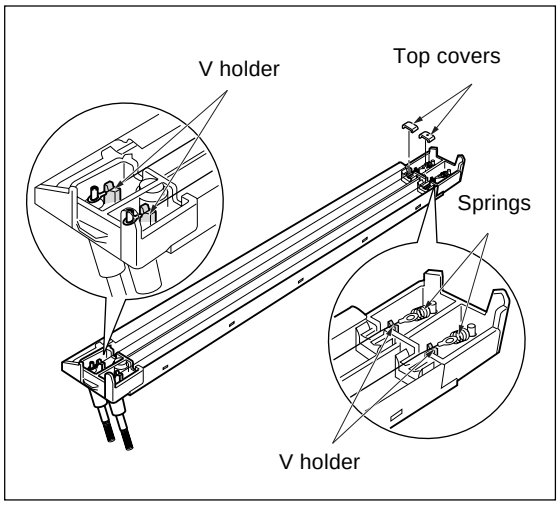

(6) Reinstall in the opposite sequence to removal.

Caution: When installing the wire, be sure that the cleaning block is in home position at the right side. Stretch the wire so that it fits into the V holders.

DEVELOPING UNIT

[1] Screws that must not be removed

Caution: The 2 set screws holding the developing unit height regulating plate in place must not be removed or adjusted in the field. Please do not interfere with these screws.

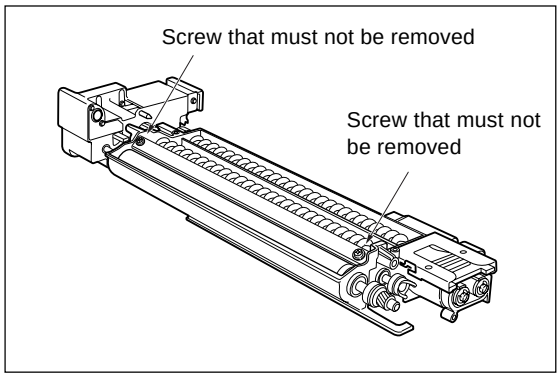

[2] Removing and Reinstalling the developing unit

a. Procedure

(1) Remove the set screw fastening the developing unit in place.

(2) Pull the developing unit outward to remove.

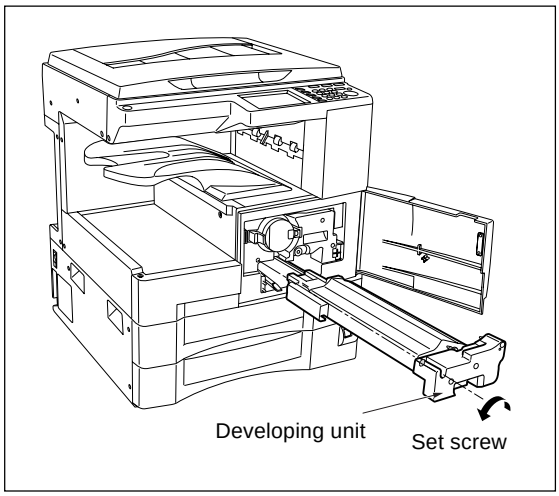

(3) To reinstall: Fit the rails on the bottom of the developing unit onto the grooves on the main body, and slide the unit into place. Then fasten into place with the attachment screw.

[3] Replacing the developer

Caution 1: When carrying out replacement, take care to prevent dirt and debris from entering the system.

Caution 2: After installing new developer, do not turn the developer-input gear or agitator input gear in the clockwise (reverse) direction.

Caution 3: After installing new developer, be sure to complete L detection adjustment before making any copies.

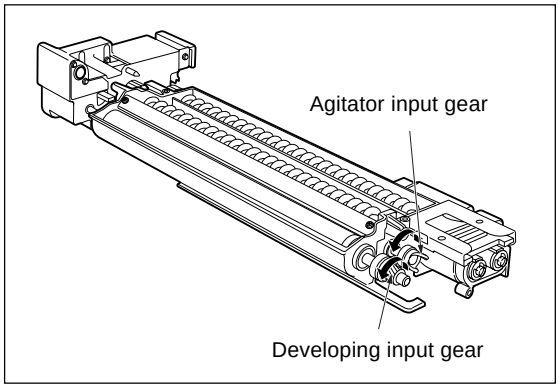

a. Procedure

(1) Remove the developing unit from the main body.

(2) Remove the 2 set screws holding the developing cover in place.

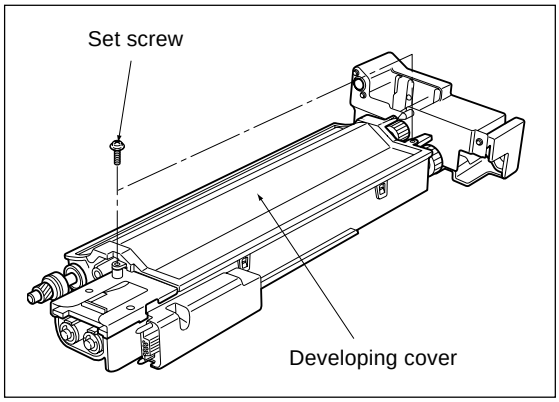

(3) Release the hooks. Lift the developing cover, and remove it.

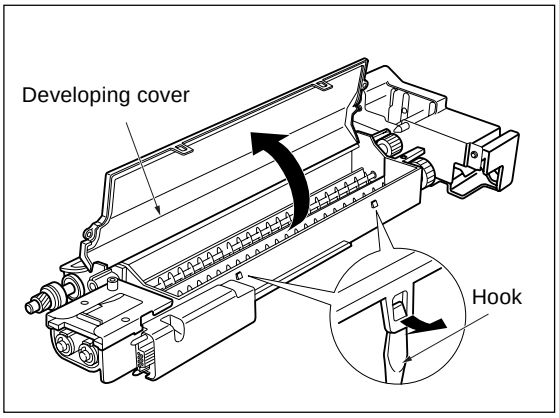

(4) Tilt the developing unit so that the agitator screws are toward the bottom, and rotate the agitator input gear counterclockwise as necessary to discharge all developer from within the developing unit and from the developing sleeve.

(5) Wipe away any toner remaining on the developing regulator plate.

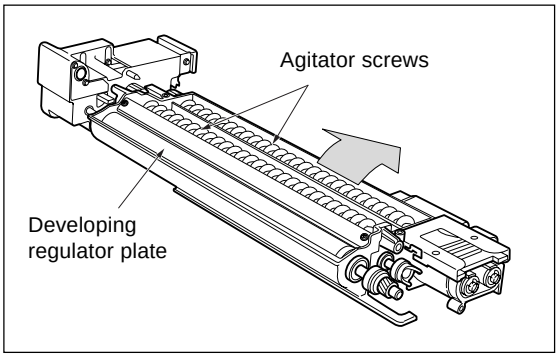

(6) Pour new developer evenly over the agitator screws.

(7) Rotate the agitator input gear 1 counterclockwise so that the developer moves into the inside of the developing unit.

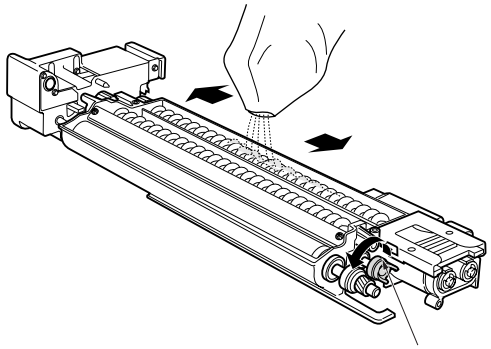

(8) Repeat steps (6) and (7) as necessary to load all of the developer.

(9) Rotate the developing input gear counterclockwise and check the bristle height along the entire surface of the developing sleeve.

(10) Reinstall the developing cover, and fasten it in place with the 2 set screws. Be careful to keep the cover clear of the scatter prevention sheet.

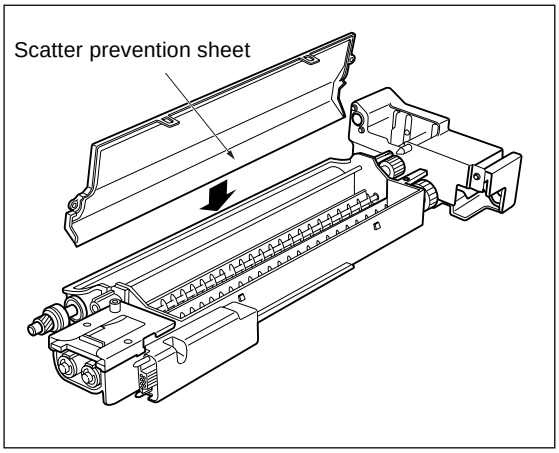

TONER SUPPLY UNIT

[1] Removing and Reinstalling the toner bottle

a. Procedure

(1) Open the front cover, and then open the toner-supply cover.

(2) Pull the toner bottle slightly out, and turn it clockwise so that the upper part of the cartridge aligns with the cutout.

(3) Pull the toner bottle all the way out.

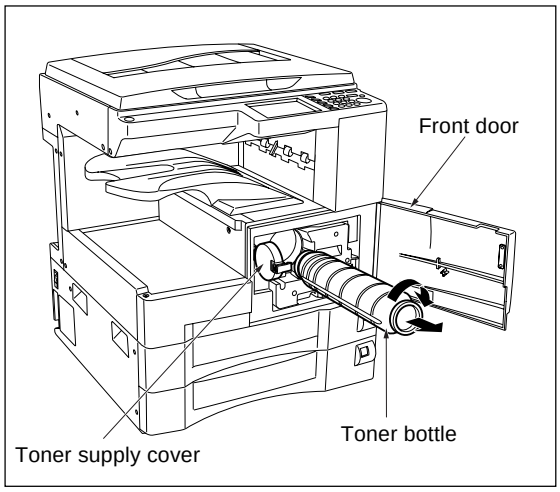

(4) Reinstall in the opposite sequence to removal.

[2] Removing and Reinstalling the toner supply unit

a. Procedure

(1) Remove the toner bottle.

(2) Remove the rear cover.

(3) Remove the overall control board unit.

Caution: Note that there are numerous connectors connected to the overall control board. You can either disconnect the connectors, or keep the board close to its present location.

(4) Remove the 3 set screws, and remove the drum rotating plate.

(5) Remove the 3 connectors.

(6) Remove the 4 set screws, and remove the toner-supply unit by pulling it toward you.

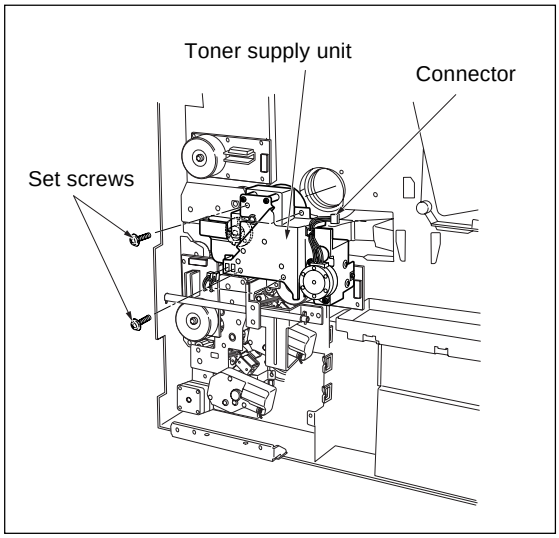

(7) Reinstall in the opposite sequence to removal.

CLEANING/TONER RECYCLE UNIT

[1] Removing and Reinstalling the cleaning blade

⚠**Caution: Be sure that the power cord has been unplugged from the outlet.**

Caution 1: Be careful of the cleaning blade edge. Do not touch the edge with bare hands, and take care to avoid scratching it.

Caution 2: Before installing the drum and cleaning blade (regardless of whether new or used), be sure to coat these with setting powder. Apply the powder around the entire drum, and on both sides of the blade.

Caution 3: If you have coated setting powder onto the drum: Before installing the drum unit rear into the main body, use an drum cleaner cloth to remove stray powder from the sensor surface on the toner control sensor board. This is necessary to ensure that accurate toner density readings are obtained.

a. Procedure

(1) Remove the drum unit from the main body.

(2) Remove the charging corona unit.

(3) Remove the drum from the drum unit.

(4) Remove the 2 set screws, and remove the fitting (suppressor piece) holding the cleaning blade in place.

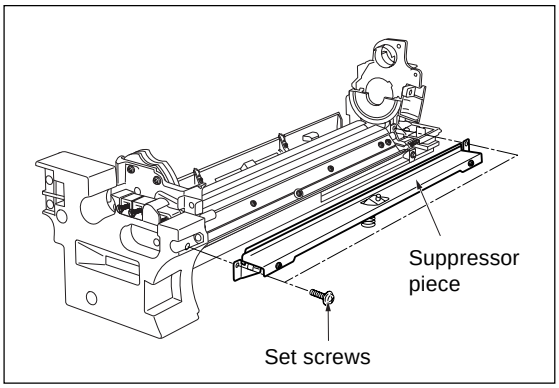

(5) Remove the cleaning blade.

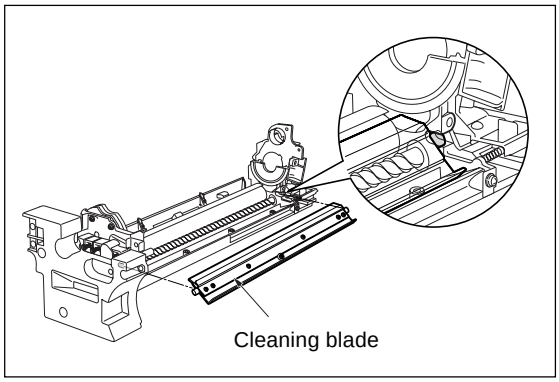

(6) Reinstall in the opposite sequence to removal.

Caution: When installing the cleaning blade, install so that the unit's transparent sheet is oriented as shown in the diagram.

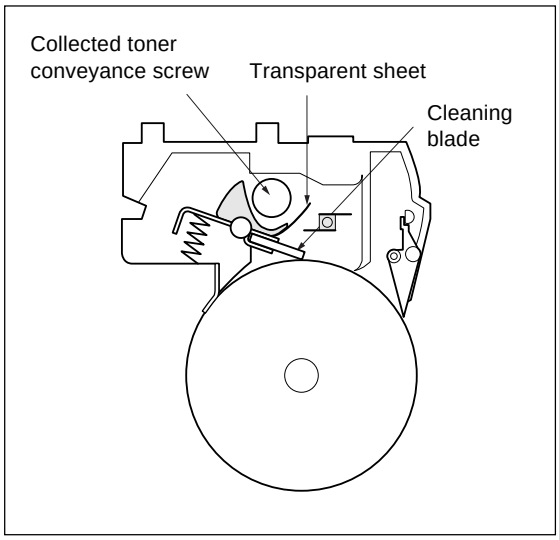

PAPER FEED UNIT

[1] Replacing the by-pass pickup roller/by-pass conveyance roller

a. Procedure

(1) Open the by-pass tray.

(2) Remove the 3 set screws and remove the plate.

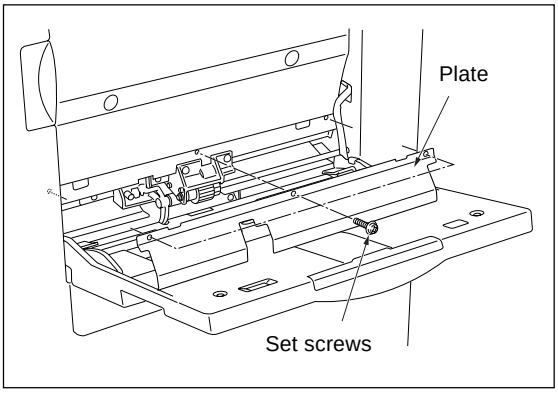

(3) Remove the 2 set screws and the connector, then remove the by-pass sensor.

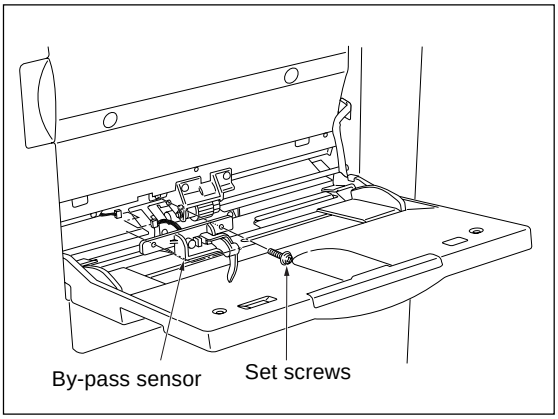

(4) Remove the stopper ring and the bearing.

(5) Remove the 2 set screws, and slide the by-pass paper feed unit left to remove it from the by-pass drive shaft, so that the by-pass pickup roller comes off.

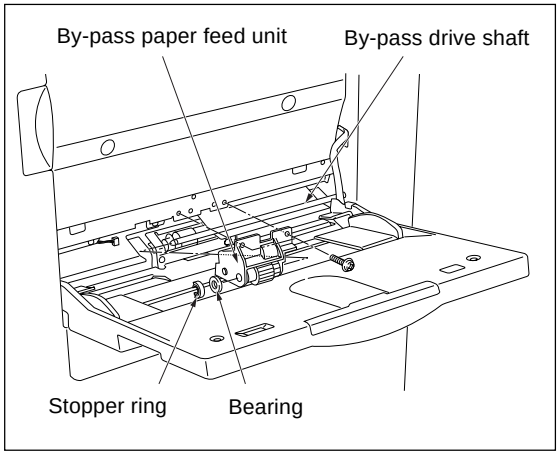

(6) Remove the 2 stopper rings.

(7) Pull out the by-pass conveyance shaft, and remove the by-pass conveyance roller.

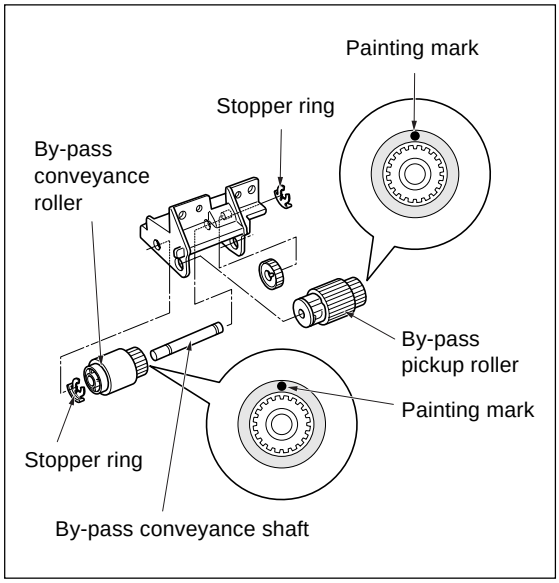

(8) Reinstall in the opposite sequence to removal.

Caution: When reinstalling rollers, pay attention to their orientation.

[2] Replacing the by-pass reversal roller

a. Procedure

(1) Remove the by-pass feed roller unit.

(2) Remove the 2 set screws, and remove the unit.

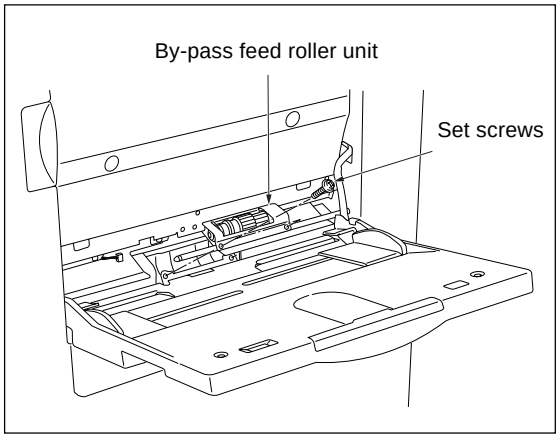

(3) Remove the 2 stopper rings, and pull out the shaft.

(4) Remove the by-pass reversal roller.

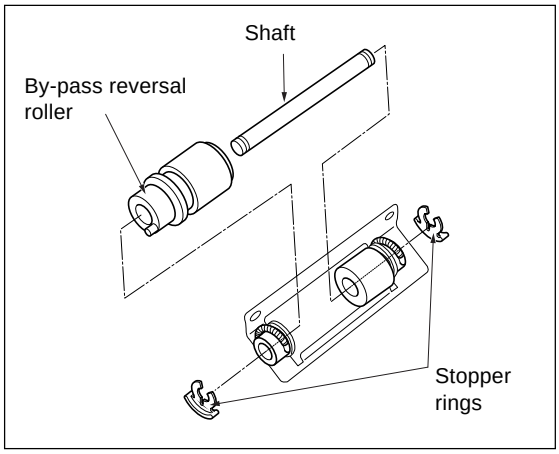

(5) Reinstall in the opposite sequence to removal.

[3] Replacing the feed rubber and the double feed prevention upper rubber (upper tray)

a. Procedure

(1) Open the ADU door, and then open the conveyance unit.

(2) Remove the developing unit and the drum unit.

(3) Slide the upper tray out. Remove the 2 set screws holding the tray in place, and take the tray off.

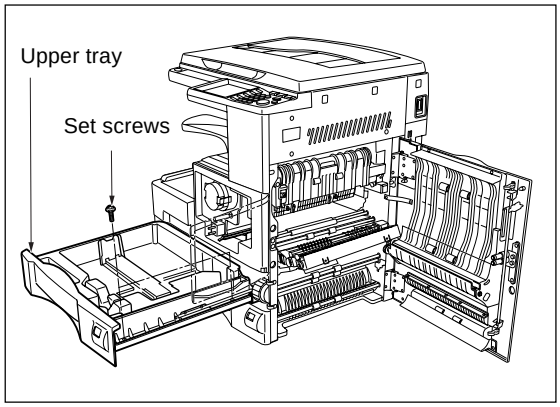

(4) Remove the feed roller cover.

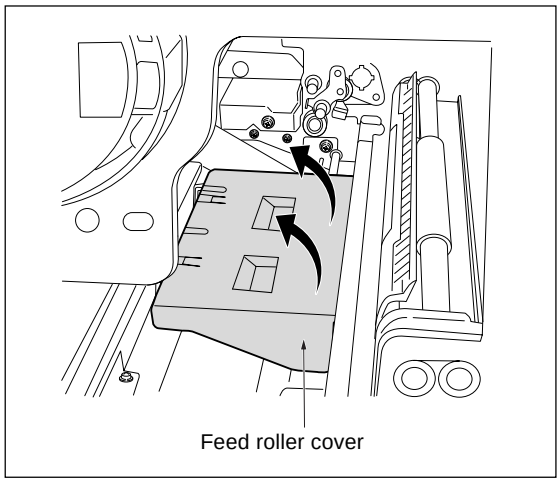

(5) Remove the 2 stopper rings, and remove the bearings from the plate.

(6) Lift the left shaft and remove the feed roller unit.

(7) Pull out the feed shaft, and remove the double-feed-prevention upper roller.

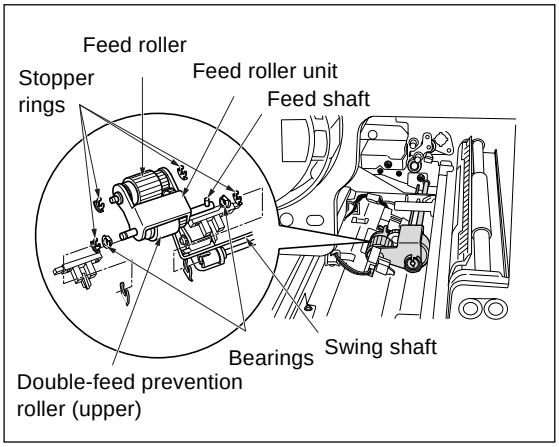

(8) Remove the stopper ring, pull the guide shaft out of the feed roller unit, and remove the feed roller.

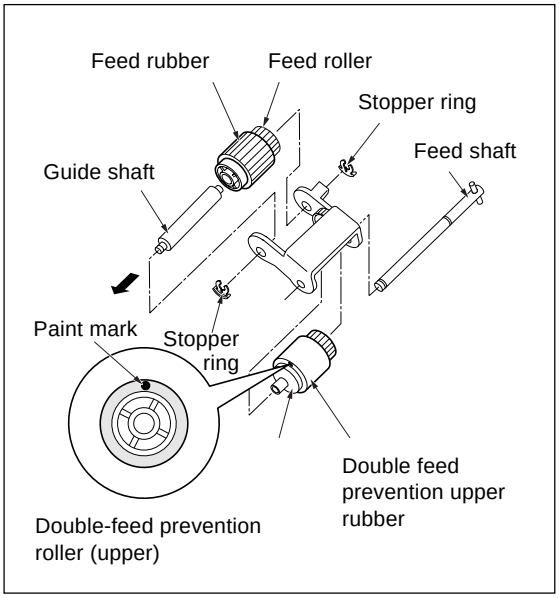

(9) Remove the feed rubber from the feed roller.

(10) Remove the double-feed-prevention upper rubber from the double-feed prevention roller (upper).

(11) Reinstall in the opposite sequence to removal.

Caution: Be sure to install the roller rubbers in the correct direction.

Install so that the swing shaft goes to the inside of the feed roller unit.

[4] Replacing the double feed prevention lower rubber (upper tray)

a. Procedure

(1) Open the ADU door, and then open the conveyance unit.

(2) Remove the developing unit and the drum unit.

(3) Slide the upper tray out. Remove the 2 set screws holding the tray in place, and take the tray off.

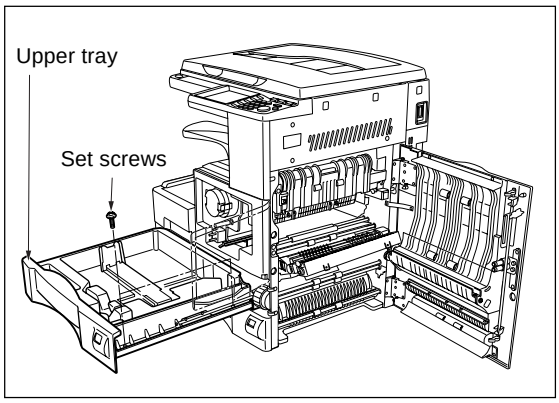

(4) Remove the set screw, and remove the plate. Then remove the set screw fastening the double feed prevention roller unit in place.

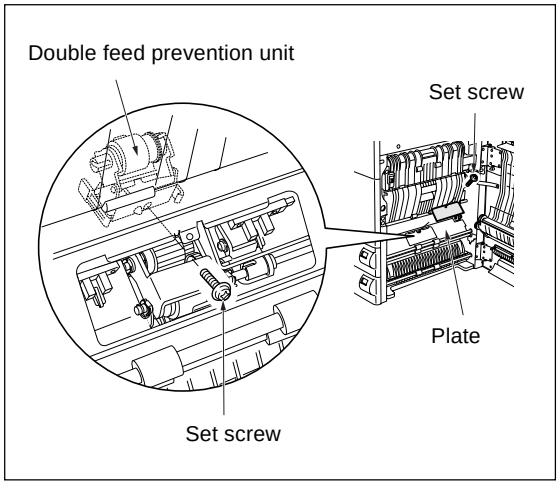

(5) From the inside of the main body, press on the two ends of the roller unit and remove it.

(6) While pressing on the lever on the lever click shaft, pull out the shaft and then remove the double feed prevention roller.

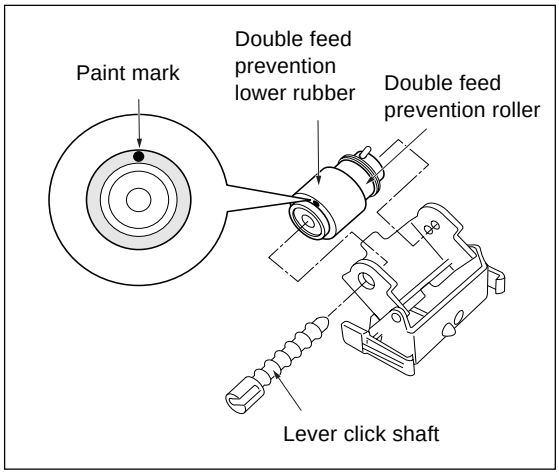

(7) Remove the double feed prevention lower rubber from the roller.

(8) Reinstall in the opposite sequence to removal.

Caution: Be sure to install the roller rubbers in the correct orientation.

When installing the double-feed prevention unit into the main body, align the unit with the center of the marking stamped on the main-body plate.

[5] Replacing the feed rubber and double feed prevention upper rubber (lower tray)

a. Procedure

(1) Open the ADU door, and then open the conveyance unit.

(2) Remove the developing unit and the drum unit.

(3) Slide the lower tray out. Remove the 2 set screws holding the tray in place, and take the tray off.

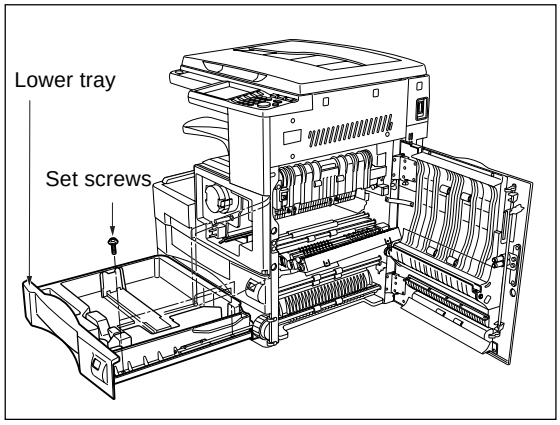

(4) Remove the set screw, and remove the plate.

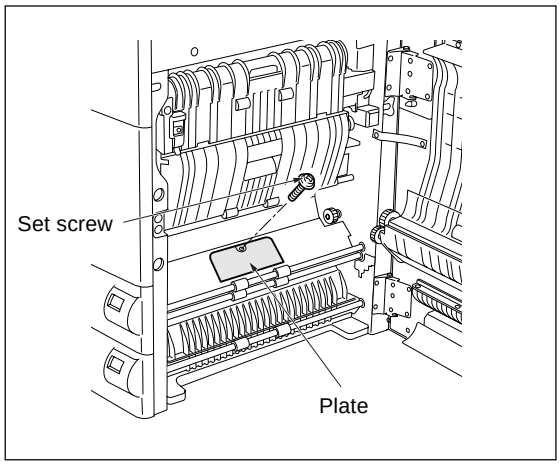

(5) Remove the 2 stopper rings, and remove the bearings from the plate.

(6) Lift the left shaft and remove the feed roller unit.

(7) Pull out the feed shaft and remove the double-feed prevention roller (upper).

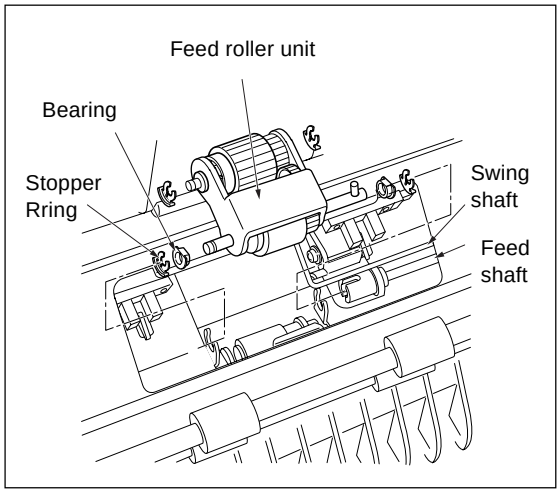

(8) Remove the 1 stopper ring, pull the guide shaft out of the feed roller unit, and remove the feed roller.

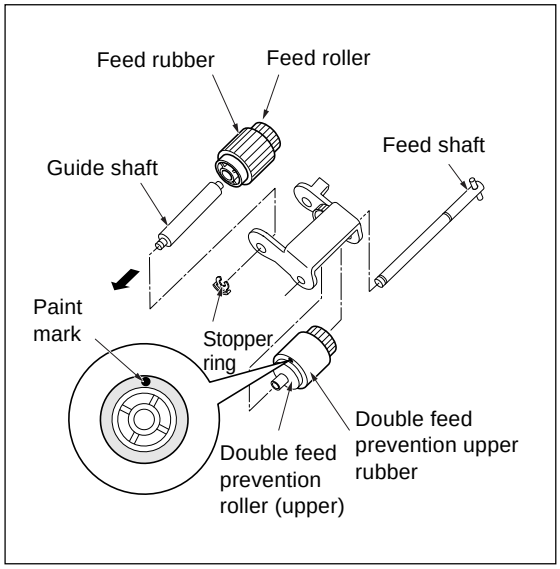

(9) Remove the feed rubber from the feed roller.

(10) Remove the double-feed-prevention upper rubber from the double-feed prevention roller (upper).

(11) Reinstall in the opposite sequence to removal.

Caution: Be sure to install the roller rubbers in the correct direction.

Install so that the swing shaft goes to the inside of the feed roller unit.

[6] Replacing the double feed prevention lower rubber (lower tray)

a. Procedure

(1) Open the ADU door, and then open the conveyance unit.

(2) Remove the developing unit and the drum unit.

(3) Slide the lower tray out. Remove the 2 set screws holding the tray in place, and take the tray off.

(4) Open the guide plate, and remove the set screw fastening the double feed prevention roller unit in place.

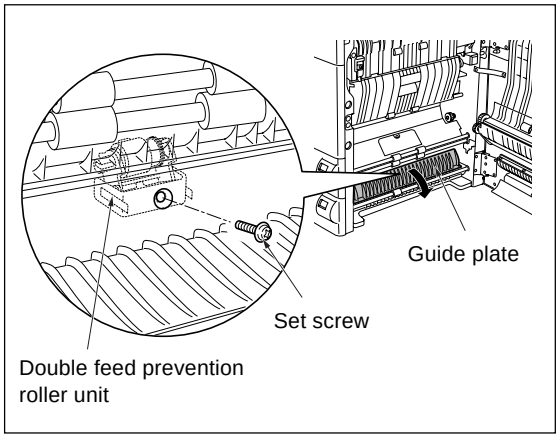

(5) From the inside of the main body, press on the two ends of the roller unit and remove it.

(6) While pressing on the lever on the lever click shaft, pull out the shaft and then remove the double feed prevention roller.

(7) Remove the double feed prevention lower rubber from the roller.

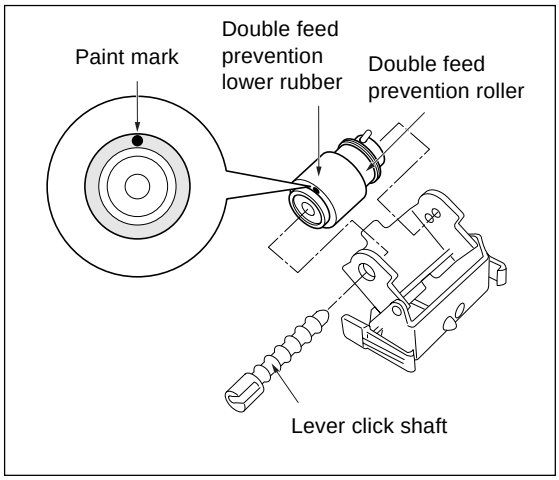

(8) Reinstall in the opposite sequence to removal.

[7] Replacing the registration rollers 1 and 2

a. Procedure

(1) Open the ADU door, and then open the conveyance unit.

(2) Remove the developing unit and the drum unit.

(3) Slide the upper tray out. Remove the 2 set screws holding the tray in place, and take the tray off.

(4) Slide the lower tray out. Remove the 2 set screws holding the tray in place, and take the tray off.

(5) Remove the registration clutch.

(6) Remove the all external cover from the front.

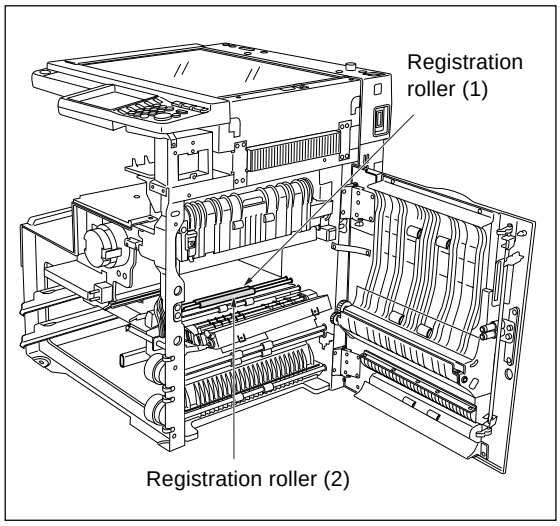

(7) Stretch the 2 registration springs (front and rear) upward and remove them from the flanges on the registration bearings.

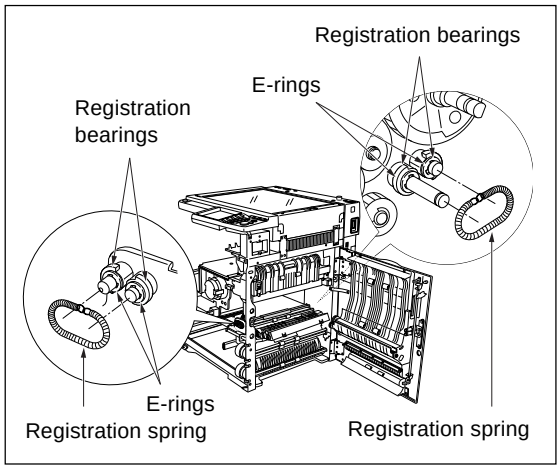

(8) Remove the E-ring and registration bearing at each end of each shaft (4 E-rings and 4 bearings in total).

Caution: Be careful to avoid dropping E-rings and bearings into the main unit.

(9) Remove the registration rollers from the interior of the main body.

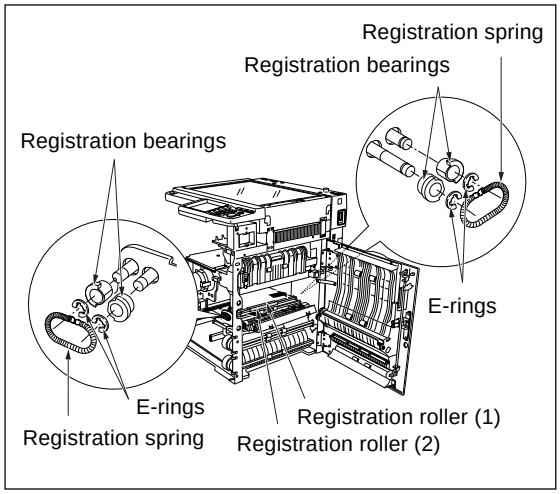

(10) Reinstall in the opposite sequence to removal.

Caution: Install each registration bearing so that the flat part is flush on the inside.

Leave the registration springs hooked (do not unhook them) when removing and reinstalling them. Install the springs so that the hook part is located at the top between the two shafts.

FIXING UNIT

[1] Removing and Reinstalling the fixing unit

⚠**Caution: Be sure that the power cord has been unplugged from the outlet.**

The fixing unit remains extremely hot immediately after power is switched OFF. To avoid injury from burns, do not begin work until the fixing unit has cooled down sufficiently.

⚠**Caution: When installing the fixing unit, be sure to firmly tighten the unit's 2 set screws.**

a. Procedure

(1) Open the ADU door and the conveyance unit, and loosen the 2 set screws holding the fixing unit in place.

(2) Pull the fixing unit out toward you and remove it.

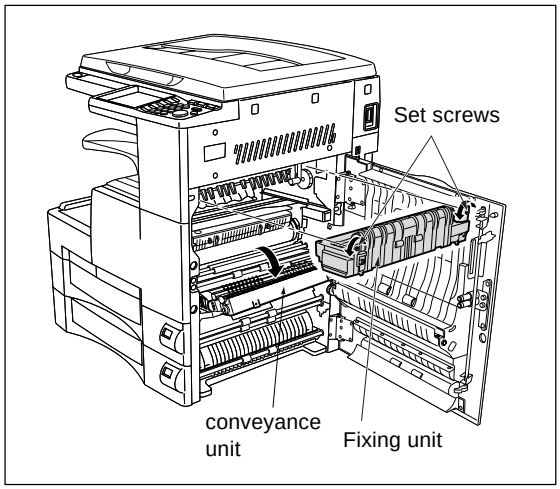

(3) Reinstall in the opposite sequence to removal.

[2] Replacing the fixing heater lamps (main lamp and sub lamp)

⚠**Caution: Do not touch the lamp area with bare hands.**

Caution 1: When installing, be sure that manufacturer's mark is mounted on the front side.

Caution 2: Do not allow the heater lamps to make contact with the inside of the roller.

Caution 3: Install so that the main lamp is at the top, and the sub lamp is at the bottom.

Heater cords are color-coded as follows.

Color Positions / Lamp	JAPAN		U.S.A.		EUROPE OTHERS	
	Front	Rear	Front	Rear	Front	Rear
Main	White	White	Red	Red	Blue	Blue
Sub	White	Black	Red	Black	Blue	Black

Caution 4: When installing the faston terminal on the drive gear side, be sure that the installation position is correct.

a. Procedure

(1) Remove the fixing unit from the main body.

(2) Remove the set screws, and remove the two covers (fixing front cover, and fixing rear cover).

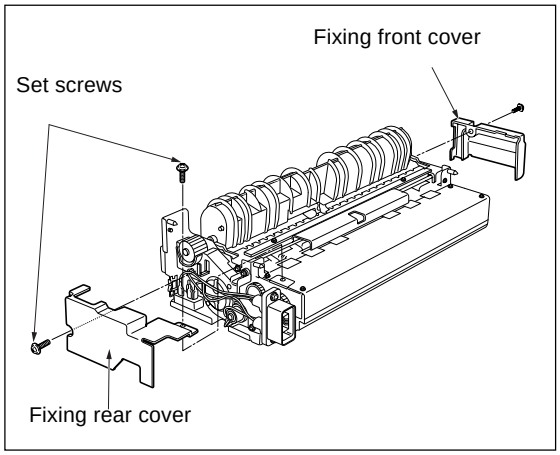

(3) Detach the faston terminal at the rear of each lamp.

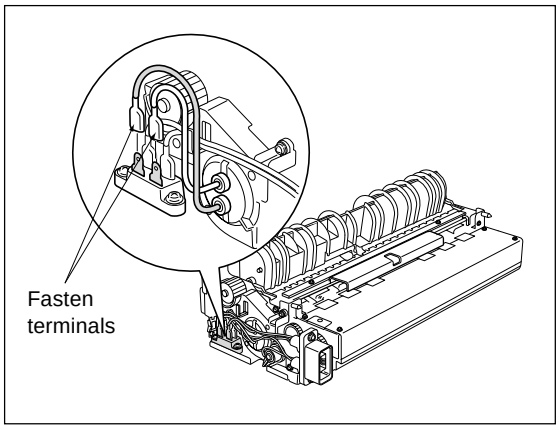

(4) Remove the 2 set screws, and remove the lamp support piece (front).

(5) Detach the faston terminal at the front of each lamp.

(6) Keeping all cord faston terminal wiring straight, pull each fixing heater lamp toward you to remove.

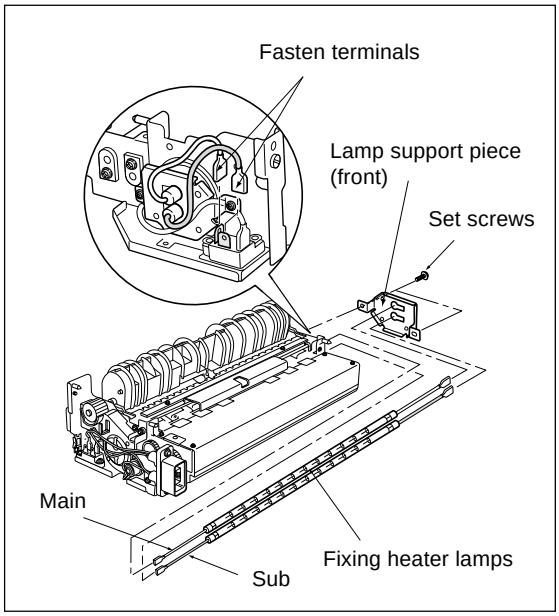

(7) Reinstall in the opposite sequence to removal.

[3] Removing and Reinstalling the fixing claw

Caution 1: When installing the fixing claw, be sure that it is oriented correctly.

Caution 2: Be sure that the claw is securely attached to the claw spring.

a. Procedure

(1) Remove the fixing unit from the main body.

(2) Remove the 2 set screws, and remove the fixing exit plate.

(3) Remove the 4 set screws, and remove the cleaner cover.

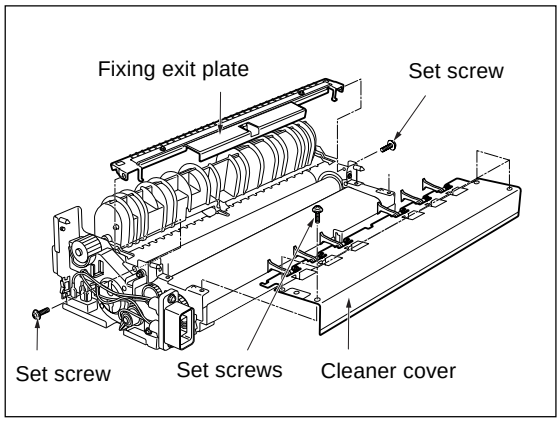

(4) Unhook the spring, and remove the fixing claw.

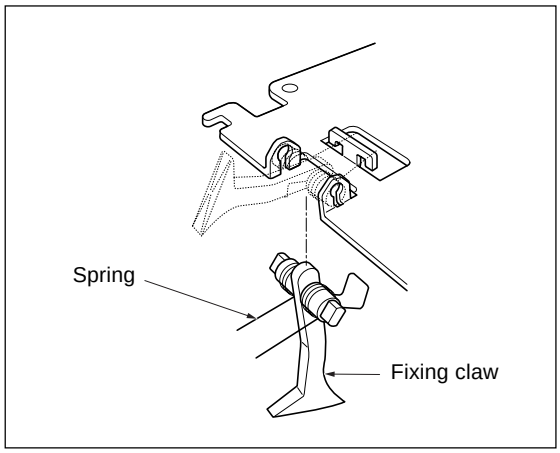

(5) Reinstall in the opposite sequence to removal.

[4] Replacing the fixing web/Fixing cleaning roller

a. Procedure

(1) Remove the fixing unit from the main body.

(2) Remove the fixing claw unit.

(3) Detach the connectors, remove the set screw at the bottom and the 2 set screws on the cleaning unit, and then remove the cleaning unit by pulling it out from the fixing unit.

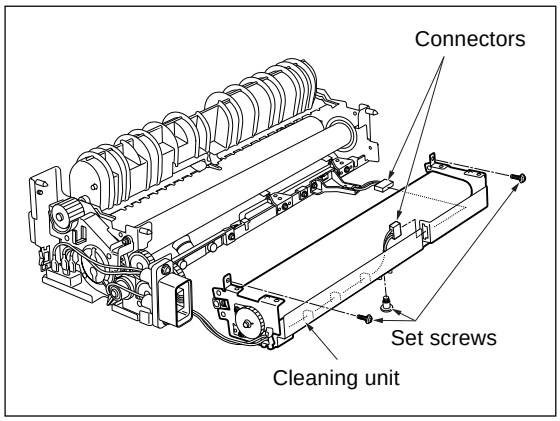

(4) Remove the 3 set screws and remove the 3 fixing-web bearings. Remove the web together with the entire shaft.

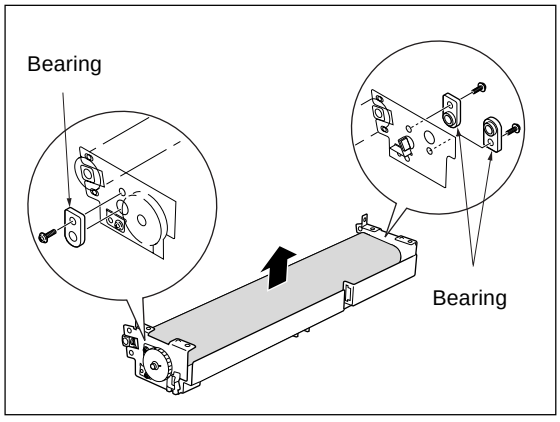

(5) Detach the springs from the bearings for the fixing cleaning roller, and remove the E-ring from the shaft. Move the shaft and take off the bearings. You can then remove the fixing cleaning roller.

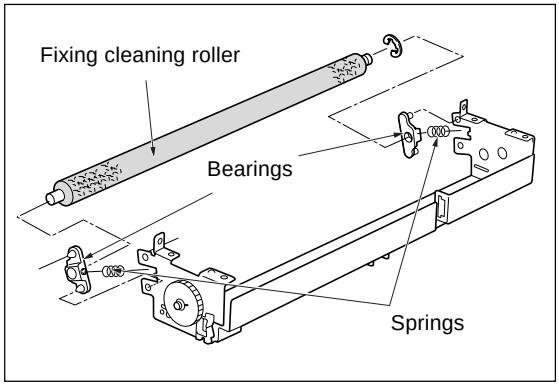

(6) Reinstall in the opposite sequence to removal.

[5] Removing and Reinstalling the fixing heat roller/fixing pressure roller

a. Procedure

(1) Remove the fixing unit from the main body.

(2) Remove the fixing claw unit.

(3) Remove the fixing cleaning unit.

(4) Remove the two fixing heater lamps

(5) Remove the 2 set screws and 2 collars for the connector that was connected to the faston terminal. Remove the connector.

(6) Remove the 2 set screws, and remove the lamp support piece.

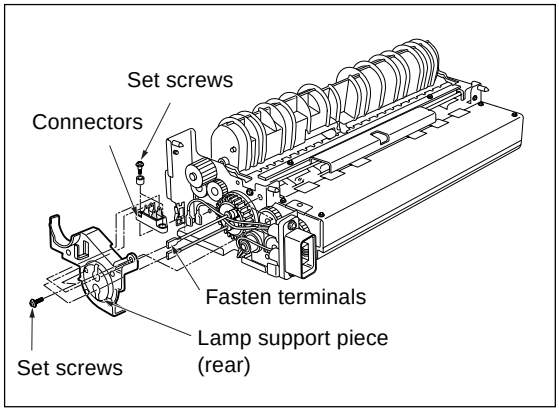

(7) Open the fixing guide to release the pressure.

(8) Remove the ring at the rear of the heat roller, and then remove the gear and heat insulating sleeve A, B.

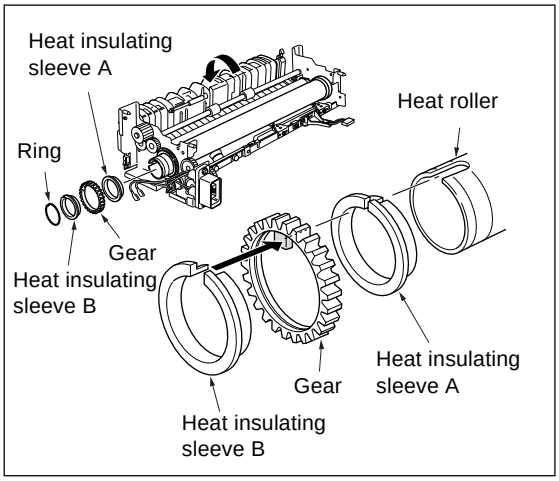

(9) Remove another ring, then remove the heat insulating sleeve A (the sleeve toward the front). Then remove the heat roller.

(10) Remove the 2 fixing bearings (one at the front, one at the rear) from the unit.

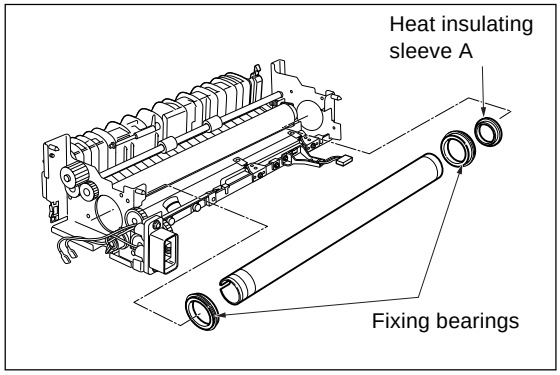

(11) Remove the pressure roller.

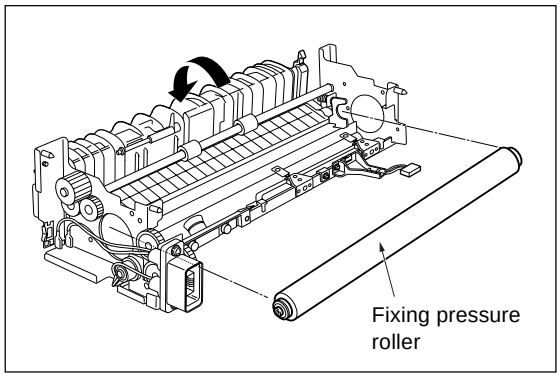

(12) Reinstall in the opposite sequence to removal.

Caution: Be sure that heat insulating sleeves A and B are oriented and positioned correctly.

[6] Removing and Reinstalling the fixing temperature sensors

⚠**Caution:** **After installing the fixing temperature sensors:**

Make sure that the wire bundles are not in contact with the fixing heat roller.

Make sure that the sensors themselves (the sensor areas) are in contact with the fixing heat roller.

a. Procedure

(1) Remove the fixing unit from the main body.
(2) Remove the fixing claw unit.
(3) Remove the fixing cleaning unit.
(4) Remove the 2 set screws, and remove the fixing temperature sensors.

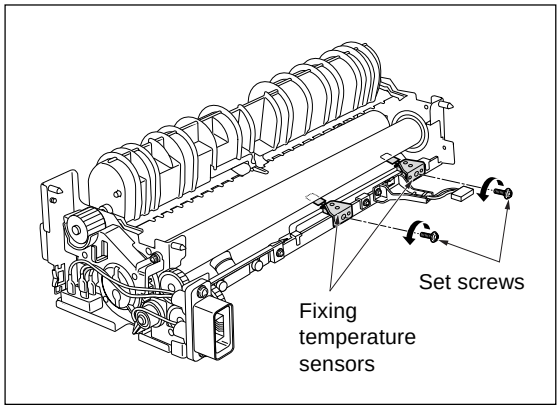

(6) Reinstall in the opposite sequence to removal.

Caution: When installing the sensors, attach the longer wire bundle to the center of the unit. Make sure that the sensors are in contact with the heat roller.

[7] Removing and Reinstalling the thermostat

⚠**Caution:** **After installing the thermostat:**

Make sure that the wire bundle is not in contact with the fixing heat roller.

Make sure that the thermostat itself is in contact with the fixing heat roller.

a. Procedure

(1) Remove the fixing unit from the main body.
(2) Remove the fixing claw unit.
(3) Remove the fixing cleaning unit.
(4) Remove the heat roller.
(5) Detach the thermostat connector.
(6) Remove the 2 set screws, and remove the thermostat.

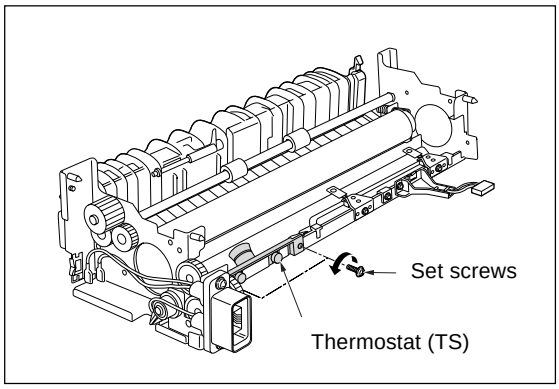

(7) Reinstall in the opposite sequence to removal.

Caution: When installing the thermostat, install so that the base plate fits between the unit's sheet metal.
Make sure that the thermostat is in contact with the heat roller.

ADU/PAPER EXIT SECTION

[1] Removing and Reinstalling the exit sensor unit

a. Procedure

(1) Remove the read right cover.

(2) Remove the 2 set screws, and remove the right side cover (upper).

(3) Remove the 2 set screws, and remove the cover.

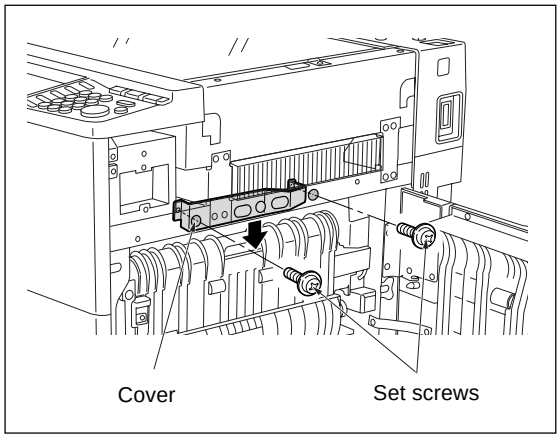

(4) Remove the 2 set screws (by inserting the screwdriver through the holes in the sheet metal). Detach the connector at the side of the sheet metal, and remove the exit sensor unit/1.

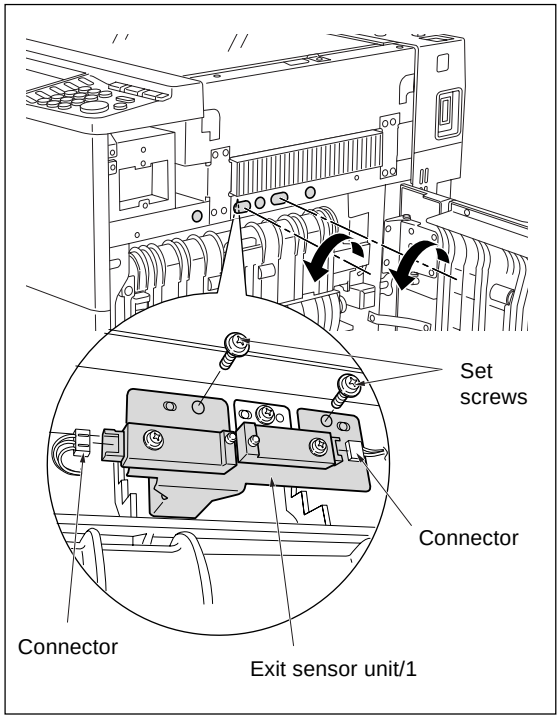

(5) Remove the set screw (again, by inserting the screwdriver through the hole), and remove the exit limit detection actuator.

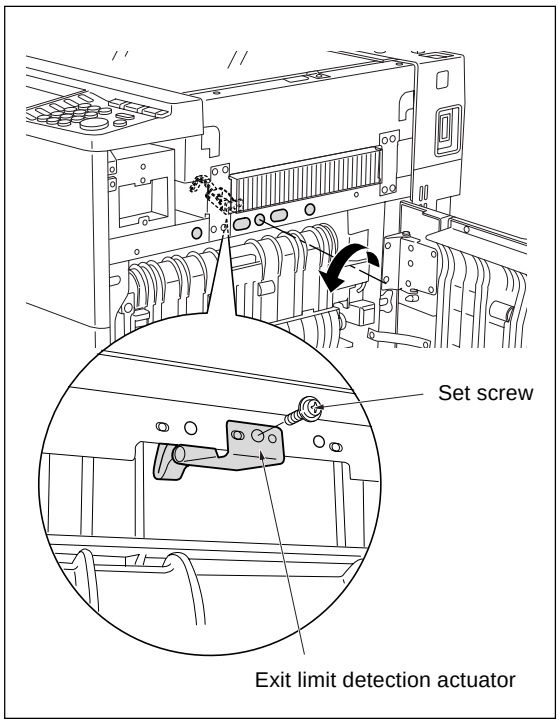

(6) Reinstall in the opposite sequence to removal.