1

ADJUSTMENT

HOW TO USE THE ADJUSTMENT SECTION

[1] Construction

This section details adjusting items and procedures. Use this section for making adjustments and as a checklist before implementing corrective measures in the field.

1. Does the power supply meet the requirements?
2. Is the power supply properly grounded?
3. Is the machine sharing its power source with another high current consumption machine that draws large currents intermittently? (e.g. an elevator, air conditioner, or other source of electrical consumption)
4. Is the installation environment suitable?
   a. The machine must be installed in a well-ventilated place free from high temperature, high humidity and direct sunlight.
   b. The machine must be installed on a level floor.
5. Does the cause of a defective image lie in the original itself?
6. Is the density adjusting control at the proper position?
7. Are the original glass and RADF platen guide clean?
8. Is the correct paper being used for the copy?
9. Are the copying materials and parts replaced when they reach the end of their usable life? (developer, drum, cleaning blade, etc.)
10. Is there toner in the toner cartridge?

The following items should also be observed when repairing the machine.

1. Only one side of the AC power line is disconnected when the main power of this machine is turned off. Always unplug the machine before beginning work. If absolutely necessary to work with the power on, exercise care to avoid being caught in the scanning rear of the exposure unit.
2. Special care should be taken when handling the fixing unit since it operates at extremely high temperatures.
3. The developing unit is surrounded by a strong magnetic field. Keep watches and metering equipment away from it.
4. Avoid scarring the drum with tools or similar objects.
5. Do not touch IC pins with your bare hands.

ADJUSTMENTS WHEN REPLACING PARTS

Adjustments (including checks) and settings are not only required when a defective copy image occurs, but also after replacing or reinstalling certain parts.

[How to use the tables]

The following items are used in the tables throughout this section.

1. Mode

Indicates the adjustment mode.

["25"] : 25 mode

["36"] : 36 mode

["47"] : 47 mode

2. Codes

Indicates the applicable code and/or Copy Quantity Setting button for each mode.

3. Conditions

New: Indicates adjustment (including check) is required when replacing a new part.

Reset: Indicates adjustment (including check) is required when a part has been re-installed.

4. Symbols used in the tables

① ② ····· : Indicates there is a priority sequence for adjustments (including checks) and settings.

◯ (Empty circle) : Indicates adjustments (including checks) and settings that can be carried out independently.

LIST OF ADJUSTMENT ITEMS

<List of adjustment items for 7020>

	Adjustment setting items	PM counter reset	PM cycle set	L detection adjustment	Vertical magnification adjustment (printer, platen)	Vertical magnification adjustment (RADF)	Horizontal magnification adjustment (platen)	Restart timing adjustment (copier system)	Restart timing adjustment (RADF)	Paper feed loop amount adjustment	Leading edge original erasure adjustment	Centering adjustment	Image read point adjustment	RADF scanning density adjustment	Sensor-related counter clearing	Fixing-related counter clearing	Electrical RDH memory check
Part name	Mode	25	25	36	36	36	36	36	36	36	36	36	36	36	36	36	47
	Code	2-1	2-2	1	2-1	2-1	2-1	2-2	2-2	2-3	2-4	2-5	2-6	6-2	8-1	8-2	198
Drum	New	◯													◯		
Developer	New	◯		◯*2													
Fixing unit-related parts	New	◯														◯	
Writing unit	New/Re				①	②	③	④	⑤		⑥	⑦					
Parameter memory substrate	New		◯	*1	①	②	③	④	⑤	⑥	⑦	⑧	⑨	◯			
Paper feeding-related rubber rollers	New				①	②		③									
RADF	New/Re				①	②			③	④	⑤	⑥		⑦			
RADF slit glass	New													◯			
Electronic RDH	New/Re													◯			◯

- "New" means replace with a new part and "Re" means to reinstall the part.
- The circles will appear above a number when there is an adjustment priority.

*1: When the parameter memory board is replaced, remember to replaced the developer before conducting the L deection adjustment.

*2: After replacing the developer, be sure that you do not make any copies until you have first carried out L detection adjustment.

MODE CHANGE MENU

Each adjustment mode is selected by conducting special operations:

[1] Setting method

The following modes can be selected on the screen without turning OFF/ON the power supply:

1. Normal mode
2. Adjustment mode (36 mode)
3. Memory setting mode (25 mode)
4. Key ope mode (Key operator mode)
5. I/O check mode (47 mode)
6. Exit

Step	Operation procedure
1	Turn on the main and sub power switches.
2	Keep pressing the ∗ button until the message “Please enter service password.” appears.
3	Input 9272 as the password and press the [Start] key. (The password is fixed and cannot be changed.)
4	**[Mode Select Menu Screen]** Press the key of the mode to be selected on the screen. To return to the Mode Change Menu Screen, keep pressing the ∗ button until the screen appears.
5	When the adjustment ends, press [1. Normal Mode] key and the basic screen will appear.

CHECK OF COUNT VALUE WITH P FUNCTION

The P function enables to display of the following parameters by using the * button:

Total count
Total count start date
PM count/PM count limit
PM count start date
Fax send paper count*
Fax receive paper count*
Printer count*
Scanner count*
Drum count
Developing count
Fixing unit count

*: These values are displayed when the option is mounted.

[1] How to use P function

1. Turn on the SW1 (main power) and SW2(sub power) to display the basic screen.
2. Press the * button.
3. The P mode Screen will appear and each count value is displayed.
4. To display the count values on the next screen, press the [↓] key on the screen. To return to the previous screen, press the [↑] key.
5. To output the count value list, press the [PRINT] key.
6. Press the [OK] key or the stop/clear button to return to the basic screen.

25 MODE

<List of adjustment items for 25 mode>

Adjustment item menu			Remarks
1. Software SW			Refer to “List of software DIP SW”.
2. PM COUNT/CYCLE	1. PM COUNT reset		
	2. PM CYCLE set		
3. Collecting data	1. Count data	Data Collection 1 (by each size) (RADF paper passage count)	
		Data Collection 2 (JAM occurrence count by each point)	
		Data Collection 3 (copy count by each mode)	
		Data Collection 4 (SC occurrence count : F code)	
	2. Date count data		
4. Parts counter	1. Count of parts (Fixed)		39 items
	2. Count of parts (Named)		30 items
5. Password setting	1. Key operator password set		4 digits
	2. E.K.C. master key code set		8 digits
	3. Weekly timer master key set		4 digits
6. Service TEL No.			Telephone & Fax. No. of service center setting.
7. Serial number			Indicates serial No. of main and each optional unit.
8. ROM version			Indicates each ROM version.
9. KRDS setting	1. Calling time set 2. Host password set 3. KRDS TEL No. Setting 4. KRDS software SW set 5. KRDS Setup calling		
10. ISW			Refer to the chapter “ISW“.
11. Root counter			Displays the root counter (total counter).

[1] Setting method

A special operating mode called “25 Mode” has been provided with this machine. This mode enables rewriting of the non-volatile storage and specify other various settings.

1. Turn OFF the SW2 (sub power) when the SW1 (main power) remains ON.
2. Turn the SW2 (sub power) ON while pressing 2 and 5 of the copy quantity setting buttons. The 25 mode menu screen will appear.

In the 25 mode normal copy operation becomes unavailable.

[25 MODE MENU SCREEN]

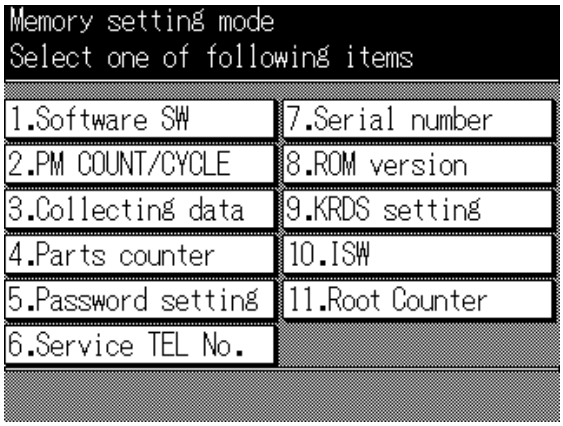

3. Press the desired item key on the LCD screen.
   Each setting screen will appear.
4. Enter data in each selected screen.
5. Press the [Return] key to check the data that has been entered.
6. Turn the SW2 (sub power) off to cancel the 25 mode.
7. New data will be effective after restarting.

[2] Setting software DIP SW

1. Setting method

This setting specifies the software DIP switch on the software SW setting screen. (*1)

Caution 1: The bit of the DIP switch is written in the non-volatile RAM every time it is changed.

Caution 2: The numbers shown in the message area are defined as follows:

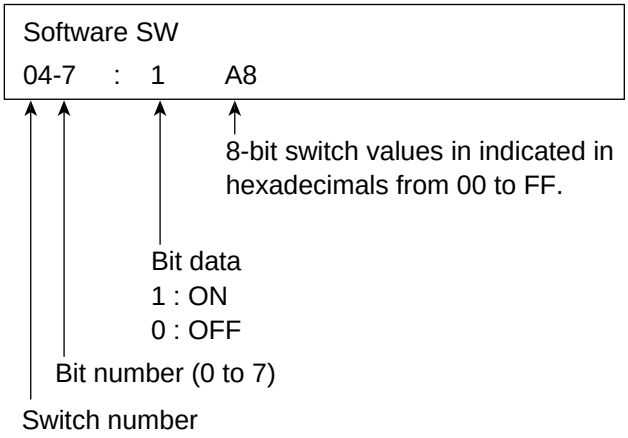

2. Setting procedures

Step	Operation procedure
1	Enter the 25 Mode.
2	**[25 mode menu screen]** Press the [1. Software SW] key.
3	**[Software SW setting screen]** Select DIP switch number. Use the left [▲] , [▼] key.
4	Select bit number of the DIP switch. Use the center [▲] , [▼] key.
5	Select ON (=1) or OFF (=0) of the DIP switch. Use [ON] or [OFF] key. [ON] : Set bit. [OFF] : Clear bit.
6	Press the [Return] key to return to the 25 mode menu screen.

For each switch function, refer to “List of Software DIP switches”.

<List of software DIP switches>

DIP SW No.	BIT	Functions	0	1	Default values		
					Japan	U.S.A.	Europe
DIP-SW1	0	Operation when key counter is removed (when using as a copier)	Ignore	Instantaneous stop Jam	0	1	1
	1	A3 (11 x 17) counting method	Count as 1	Count as 2	0	0	0
	2				0	0	0
	3	Selection of maximum number of copies that can be stapled by FS-107.	*1		0	0	0
	4				0	0	0
	5				0	0	0
	6				0	0	0
	7	FS107 limit on number of stapled sets	None	Temporary stop after 25 sets of copy *2	0	0	0
DIP-SW2	0	Toner replenish stop timing *3	Decide with DIP SW 3-2	Stop after paper exdit	0	0	0
	1				0	0	0
	2				1	1	1
	3				1	1	1
	4				0	0	0
	5	1-shot message display at automatic staple mode clearing *4	Yes	No	0	0	0
	6				0	0	0
	7	Prohibition of non-image area erases, repeat (auto) and original position correction	No	Yes	0	0	0
DIP-SW3	0	Use of Latin specification F4	No	Yes	0	0	0
	1	F34/F35/F36 latch *5	No	Yes	0	0	0
	2	Toner replenish stop timing 2 *3	When copying ends	Interval between copy set	0	0	0
	3	Return to EKC screen after copying reservation *6	No	Yes	0	0	0
	4				0	0	0
	5	By-pass feed non-standard size selection *7	Size detection effective	Non-standard handling	0	0	0
	6				0	0	0
	7				0	0	0
DIP-SW4	0	Toner level detection (”Supply toner” indication)	*3		0	0	0
	1				0	0	0
	2	Number of copies allowed before machine stops after “Supply Toner” indication.	*3		1	1	1
	3				1	1	1
	4	Non-display of advance/delete buttons for job list *8	0 : Display	1 : Do not display	0	0	0
	5	Job stop or nonstop at no toner *3	0 : Does not stop	1 : Stops	1	1	1
	6	Impossibility of coping reservation to coin vender	0 : Can reserve copying	1 : Cannot reverse copying	0	0	0
	7				0	0	0
DIP-SW5	0	Destination switchover	*9		0	1	0
	1				0	0	1
	2				0	0	0
	3				0	0	0
	4	Detecting method of 8.5 x 11 size on RADF	The size is detects as 8.5 x 11 even if the original reaches to RADF's PS307 (original detect PS 2).	If original reaches to RADF's PS307 (original detect PS 2), the size is detected as 8.5 x 14.	0	0	0
	5				0	0	0
	6				0	0	0
	7				0	0	0
DIP-SW6	0	Prevention of faulty image at high temperature and high humidity. (When the machine is not turned on for a long period.)	Yes	No	0	0	0
	1	K size selection switch for Taiwan destination	AB series sizes	K size	0	0	0
	2				0	0	0
	3				0	0	0
	4	Polygon motor low-speed rotation timing	*10		0	0	0
	5				0	0	0
	6	Polygon motor pre-rotation selection	*11		0	0	0
	7				0	0	0

DIP SW No.	BIT	Functions	0	1	Default values		
					Japan	U.S.A.	Europe
DIP-SW7	0	Transfer paper priority in image area *12	Area erasure outside manuscript	Images on whole page in the platen mode only	1	1	1
	1	Automatic restart after feeding paper *13	Does not restart	Restarts	0	0	0
	2	8.5x11APS (Japan, Europe), A4APS (U.S.A.) *14	Yes	No	0	0	0
	3	Nonstandard-size notification for platen APS B6 (Japan) / A5 (Europe) / 5.5 x 8.5 (U.S.A.) *15	No	Yes	0	0	0
	4	Nonstandard-size notification for platen APS A4 (Japan, Europe) / 8.5x11 (U.S.A.) *15	No	Yes	0	0	0
	5	Password request for 25/36/47 mode *16	No	Yes	0	0	0
	6	Selection of A series size (European version)	No	Yes	0	0	0
	7				1	0	0
DIP-SW8	0	Selection of automatic erasure outside manuscript	Rectangular erasure	For aslant manuscript	1	0	0
	1	Changing of key operator fixed magnification setting	Permit	Prohibit	1	0	0
	2	Disabling copying when PM count reached *17	Permit	Prohibit	0	0	0
	3	Adjusting of LCD contrast to help screen	No	Yes	0	0	0
	4	Priority tray when APS is released	*18		0	0	0
	5				0	0	0
	6				0	0	0
	7	Data collection (25 Mode) *19	No	Yes	0	0	0
DIP-SW9	0	Selection of copy quantity limit	*20		0	0	0
	1				0	0	0
	2				0	0	0
	3				0	0	0
	4				0	0	0
	5				0	0	0
	6				0	0	0
	7				0	0	0
DIP-SW10	0	Summer time setting for weekly timer	Set time = Set value x 10 minutes		0	0	0
	1		*21		1	1	1
	2				1	1	1
	3				0	0	0
	4	Selection of magnification mode when APS function is cancelled.	Automatic	Life size	0	0	0
	5	Selection of setting screen message.	Guide display	Display of machine state	0	0	0
	6	Displaying of icon to line 3	No	Yes	1	0	0
	7	Displaying of JAM code	No	Yes	0	0	0
DIP-SW11	0				1	0	0
	1				1	0	0
	2				1	0	0
	3				1	0	0
	4				0	0	0
	5				1	0	0
	6	Tray icon display	No	Yes	1	0	0
	7				0	0	0
DIP-SW12	0				0	0	0
	1				0	0	0
	2				0	0	0
	3	Setting of PM count at which copying is	*17		0	0	0
	4	inhibited			0	0	0
	5				0	0	0
	6	KRDS connection recognition	Not recognize	Recognize	0	0	0
	7	F/E screen switchover (except for F34, F35 and F36) *22	No	Yes	0	0	0

DIP SW No.	BIT	Functions	0	1	Default values		
					Japan	U.S.A.	Europe
DIP-SW13	0				0	0	0
	1				0	0	0
	2				0	0	0
	3				0	0	0
	4				0	0	0
	5				0	0	0
	6	Automatic erasure threshold outside original	*24		0	0	0
	7				0	0	0
DIP-SW14	0	Operation when stapling is not possible	*25		0	1	0
	1	Other than B6R, A5R, 5.5×8.5 nonstandard			0	1	0
	2				0	1	0
	3				0	1	0
	4	Operation when 2 position stapling is not	*26		0	0	0
	5	available			0	0	0
	6	Operation when one position stapling is not	*27		0	0	0
	7	available			0	0	0
DIP-SW15	0				0	0	0
	1				0	0	0
	2				0	0	0
	3				0	0	0
	4				0	0	0
	5				0	0	0
	6	Full stack stop when FNS not installed *28	No	Yes	0	0	0
	7				0	0	0
DIP-SW16	0	Fixing temperature at low power mode	*29		0	0	0
	1				1	1	1
	2	Operation of PTC	Always ON	PTC OFF if OFF mode, if SW2 (sub power) is OFF, or if system is OFF due to WT or auto shutoff.	0	0	0
	3				0	0	0
	4	Indication to prepare toner bottle	No	Yes	0	1	1
	5	Countermeasure for internal overheat	Stop job	Stop job, and turn fixing heater OFF	0	0	0
	6	MPC correction control	*30		0	0	0
	7				0	0	0
DIP-SW17	0	F4 size setting	*31		0	0	0
	1				0	0	0
	2				0	0	0
	3				0	0	0
	4				1	1	1
	5				0	0	0
	6				1	1	1
	7				0	0	0
DIP-SW18	0	Unit isolation (1) *32	Tray 1 (upper part of main body) can be used	Tray 1 (upper part of main body) is isolated	0	0	0
	1		Tray 2 (lower part of main body) can be used	Tray 2 (lower part of main body) is isolated	0	0	0
	2				0	0	0
	3				0	0	0
	4		Tray 3 (DB upper) can be used	Tray 3 (DB upper) is isolated	0	0	0
	5		Tray 4 (DB lower) can be used	Tray 4 (DB lower) is isolated	0	0	0
	6				0	0	0
	7		DB can be used	DB is isolated	0	0	0

DIP SW No.	BIT	Functions	0	1	Default values		
					Japan	U.S.A.	Europe
DIP-SW19	0	Unit isolation (2) *31	Printer board can be used	Printer board is isolated	0	0	0
	1		Fax board can be used	Fax board is isolated	0	0	0
	2				0	0	0
	3				0	0	0
	4				0	0	0
	5		Scanner can be used	Scanner is isolated	0	0	0
	6				0	0	0
	7		RADF can be used	RADF is isolated	0	0	0
DIP-SW20	0	Unit isolation (3) *31			0	0	0
	1				0	0	0
	2				0	0	0
	3				0	0	0
	4		FNS can be used	FNS offset mode cannot be used	0	0	0
	5				0	0	0
	6				0	0	0
	7				0	0	0
DIP-SW21	0	Platen size recognition selector switch 1 for Latin America (U.S.A. only)	8.5 x 11	A4	0	0	0
	1	Platen size recognition selector switch 2 for Latin America (U.S.A. only)	8.5 x 11R	A4R	0	0	0
	2	Platen size recognition selector switch 3 for Latin America (U.S.A. only)	8.5 x 14	F4	0	0	0
	3	Notice of nonstandard small platen size *15	Notice of noticed size	Notice as nonstandard size	0	0	0
	4	Job suspension/end at pulling out key counter	If DIP SW1-0:0: Stop paper feed and terminate If DIP SW1-0:1 Immediate-stop jam	If DIP SW1-0:0: Stop paper feed and terminate If DIP SW1-0:1 Immediate-stop jam	0	0	0
	5	Notice of small size of platen mode (8.5x11/A4 or smaller) *15	Notice size detected by APS.	Notice size as A4 (Japan, Europe) or 8.5x11 (U.S.A.)	0	0	0
	6	Total-counter/key-counter increment operation	Normal operation	For copying: Increment both the total counter and the key counter. For printer/fax device: Increment the total counter only.	0	0	0
	7				0	0	0
DIP-SW22	0	Sub power supply is turned ON when main power is ON *32	No	Yes (WUT increase)	0	0	0
	1	Nonstandard size becomes effective at automatic platen start	No	Yes (only by-pass tray)	0	0	0
	2				0	0	0
	3				0	0	0
	4				0	0	0
	5				0	0	0
	6				0	0	0
	7				0	0	0

DIP SW No.	BIT	Functions	0	1	Default values		
					Japan	U.S.A.	Europe
DIP-SW23	0	Automatic tray changeover when FNS tray is full	No automatic changeover to Tray 1	Automatic changeover to Tray 1	1	1	1
	1		No automatic changeover to optional Tray 1	Automatic changeover to optional Tray 1	1	1	1
	2		No automatic changeover to optional Tray 2	Automatic changeover to optional Tray 2	1	1	1
	3		No automatic changeover to Tray 2	Automatic changeover to Tray 2	1	1	1
	4	100 sheets are discharged when FNS is not stable, and tray is detected full	No	Yes	0	0	0
	5	100 sheets are discharged when FNS is stable, and tray is detected full	No	Yes	1	1	1
	6				0	0	0
	7	Fixing web count-over stop	Not stop	Stops	0	0	0
DIP-SW24	0				0	0	0
	1				0	0	0
	2				0	0	0
	3				0	0	0
	4				0	0	0
	5				0	0	0
	6				0	0	0
	7	Job start and changeover without print process stop	Process stop	Without process stop	0	0	0

*1 : FS107 stapling upper limit

Mode	1-3	1-4
50 sheets	0	0
45 sheets	0	1
40 sheets	1	0
35 sheets	1	1

The following dipswitch settings are related:

- DIPSW 2 – 5

  1-shot message display at automatic staple mode clearing.

*2 : FS107 limit on number of stapled sets

If this bit is set to "1", then if the user specifies more than 25 stapled sets the copier automatically stops after reaching the 25th set, and displays a message instructing the user to remove the paper and press the START button.

*3 : Toner-replenish stop timing

When the TLD (toner level detector) detects that the toner-out condition has persisted for a fixed length of time, the copier waits an additional number of copies (as specified by DIPSW4 – 0, 4 – 1) and then displays a message instructing the user to load new toner.

- Toner-level detect (message requesting new toner)

Mode	4-0	4-1
After 0 effective copies	0	0
After 100 effective copies	0	1
After 200 effective copies	1	0
After 500 effective copies	1	1

Following the message display, the copier allows printing of an additional number of copies as set by DIPSW4 – 2, 4 – 3, and will then disable copying.

- Number of copies to copy-disable (following message for new toner)

Mode	4-2	4-3
After almost 100 copies	0	0
After almost 400 copies	0	1
After almost 700 copies	1	0
After almost 1000 copies	1	1

However, that the copier will stop only if DIPSW4 – 5 ("Job stop or nonstop at no toner ") is set to "1".

- The toner-low/toner-out condition is cleared by insertion of a new toner bottle (toner-bottle detect sensor OFF/ON).
- The toner-out stop conditions vary according to the settings of DIPSW3 – 2 and DIPSW2 – 0.

*4 : 1-shot message display at automatic staple mode clearing

If 1-shot display is enabled: If the copy limit is exceed during staple-mode operation, a message indicating this appears on the display, and copying continues in sort mode.

Note that this setting is related to the “1-SHOT DISPLAY TIME” setting available under key-operator mode. For information about memory switches, refer to the Instruction Manual.

*5 : F34/F35/F36 latch

In the event of a fixing-related error, the setting changes to "1" so that power OFF/ON will not clear the error condition. After correcting (repairing) the problem, reset this to "0" to re-enable copying.

*6 : Return to EKC screen after copying reservation

If EKC setup is enabled, then if this bit is set to "1" (return to screen) the copier will immediately display the EKC password-request screen following exit of the final sheet for the reserved jobs. If copying is not reserved, the copier will wait 1 minute following job completion before displaying the EKC password-request screen.

*7 : By-pass feed nonstandard size selection

This setting determines whether the system detects the size of the paper in the by-pass tray. If the setting is "1" (handle as nonstandard), the size is not detected and copying is based on the maximum paper size.

*8 : Non-display of advance/delete buttons for job list

Under default conditions, the job list screen allows for deletion or priority changing of jobs that have been stoved in ERDH memory.

If this bit is set to "1"(non-display), however, the advance and delete buttons will not appear on the display so that it will not be possible to delete or reorder the reserved jobs.

*9 : Destination switch

Mode	5-0	5-1
Japan	0	0
U.S.A.	1	0
Europe	0	1
Taiwan	1	1

*10 : Polygon motor low-speed rotation timing

Use these bits to change the start timing of pre-rotation following copy completion.

Mode	6-4	6-5
15 seconds	0	0
30 seconds	0	1
60 seconds	1	0
120 seconds	1	1

*11 : Polygon motor pre-rotation selection

Use these bits to set the speed of polygon-motor rotation during idling state.

Mode	6-6	6-7
No pre-rotation (33,070 rpm)	0	0
Pre-rotation (16,000 rpm)	0	1
Stopped	1	0

*12 : Copy-sheet size priority in image area

This setting determines how the copier handles platen copying when the original size differs from the copy-sheet size when the AMS setting is cleared. If this bit is set to "1" (whole-page image in platen mode only), then the copier will not erase the area outside of the original (so that area outside of the APS-detected size is also copied).

If this bit is set to "0", then the copier does erase the area outside of the original.

Note that in RADF copying, the copier will always erase the area outside of the original regardless of this setting.

Related settings are DIPSW8 – 0 (Selection of automatic erasure outside original), key-operator-mode and memory switch 4. For information about memory switches, refer to the Instruction Manual.

*13 : Automatic restart after paper feed

This setting determines how copying is restarted if the tray becomes empty while copying is in progress. Under the default setting, the user (after adding paper and setting the tray back in place) must press the START button to resume copying. If this bit is set to "1", however, copying restarts automatically when the tray is set back in place.

*14 : 8.5x11 APS (Japan, Europe), A4 APS (U.S.A.)

If this bit is to "1" (No), the copier will forcibly copy as A4 in Japan/Europe if it detects an original size of 8.5x11, and will forcibly copy as 8.5x11 in U.S.A. if it detects an original size of A4). Under the default setting, APS operates for both A4 and 8.5x11.

*15 : Settings related to nonstandard original sizes

- DIPSW21 – 5 "Notify of small size of platen mode"

  This setting determines how the copier operates if it detects that size of the original is smaller than A4 (Japan/Europe) or 8.5x11 (U.S.A.). If this bit is set to "0", then according to the setting of DIPSW21 – 3 "Notify of nonstandard small size of platen mode" the copier will either execute copy as nonstandard size or will notify of the APS detected size. If this bit is set to "1", then all originals are reported as size A4/8.5x11.

- DIPSW21 – 3 "Notify of nonstandard small size of platen mode"

  This setting is effective only if DIPSW21 – 5 is set to '0'. If this bit is set to "1", the copier will notify that size is nonstandard if an original smaller than A4 (Japan/Europe) or 8.5x11 (U.S.A.) is set on the original glass.

- DIPSW7 – 4 "Nonstandard-size notification for platen APS B6 (Japan) / A5 (Europe) / 5.5x8.5 (U.S.A.)"

  This setting is effective only if DIPSW21 – 5, DIPSW21 – 3, and DIPSW7 – 3 are all set to "0".

  This setting determines how the copier notice the original size when the platen APS detects that the size is B6 (Japan), A5 (Europe), or 5.5x8.5 (U.S.A.). If this bit is set to "1", the copier notice the minimum size.

  If the bit is set to "0", the copier reports that the size is nonstandard.

- DIPSW7 – 3 "Nonstandard-size notification for platen APS A4 (Japan, Europe) / 8.5x11 (U.S.A.)"

  This setting is effective only if DIPSW21 – 5, DIPSW21 – 3, and DIPSW7 – 4 are all set to "0".

This setting determines how the copier notice the original size for a platen copy when the size is detected as being nonstandard. If this bit is set to "1", the copier notice the size as A4 (Japan, Europe) or 8.5x11 (U.S.A.). If the bit is set to "0", the copier notice that the size is nonstandard.

- If DIPSW7 – 4 and 7 – 3 are both "1", operation is according to 7 – 3 (A4/8.5x11).

*16 : DIPSW8 – 0 "Selection of automatic erasure outside original"

If this bit is set to "1" "Handling of slanted originals", the copier will automatically erase area outside of the original that have been placed a skew on the platen. If this bit is set to "0" "Rectangular erasure", erasure will always be in alignment with the copy paper.

(Example)

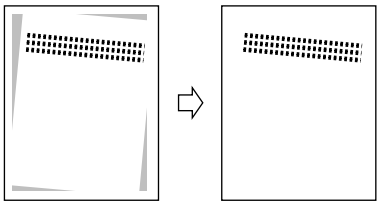

BIT:0 BIT:1

*17 : Request password for 25, 36, 47 mode

If this bit is set to "1" ("Yes"), the copier will display a password-request screen before entering service mode. The password is "9272".

*18 : Disable of copying when PM count is reached

DIPSW12 – 3, 12 – 4, and 12 – 5 (Setting of PM count at which copying is disabled) sets the number of copies at which copying is disabled. Note that copying will be disabled only if DIPSW8 – 2 (Disable copying when PM count is reached) is set to "1".

Mode	12-3	12-4	12-5
1000 copies	0	0	0
2000 copies	0	0	1
3000 copies	0	1	0
4000 copies	0	1	1
5000 copies	1	0	0

*19 : Priority tray when APS is released

- This setting sets the tray selection used when APS is set OFF from key-operator mode.

Priority tray when APS is released

Mode	8-4	8-5	8-6
No priority	0	0	0
Main-body upper tray	0	0	1
Main-body lower tray	0	1	0
DB upper tray	0	1	1
DB lower tray	1	0	0

*20 : Data collection (Mode 25)

If this bit is set to "1" (Yes), then all 25-mode collected data 1 to 4 can be checked. If the setting is "0", then only collected data 1 is available for checking.

*21 : Copy quantity limit

Mode	9-0	9-1	9-2	9-3
No limit	0	0	0	0
1 sheet	0	0	0	1
3 sheets	0	0	1	0
5 sheets	0	0	1	1
9 sheets	0	1	0	0
10 sheets	0	1	0	1
20 sheets	0	1	1	0
30 sheets	0	1	1	1
50 sheets	1	0	0	0
99 sheets	1	0	0	1

*22 : Summer time setting for WT (weekly timer)

Mode	10-0	10-1	10-2	10-3
0 minute	0	0	0	0
30 minutes	1	1	0	0
60 minutes	0	1	1	0
90 minutes	1	0	0	1
120 minutes	0	0	1	1
150 minutes	1	1	1	1

*23 : F/E screen switch (except for F34, F35, F36)

If "1" (No), the display will show error codes for fixing errors, but in all other cases will simply show a message instructing the user to turn power OFF/ON. If set to "0", all errors will be indicated by error codes.

*24 : Threshold for automatic erasure of area outside original

Accurate detection of the outer boundary of the original may become difficult if the original is light in density or if extraneous light (sunlight, room fluorescent light, etc.) has penetrated the copier. Setting the threshold to lower values facilitates detection for light-density originals but increases the risk of incorrect detection due to extraneous light.

Mode	13-6	13-7
Threshold thr 80h	0	0
Threshold thr 60h	0	1
Threshold thr 50h	1	0
Threshold thr 50h	1	1

*25 : Operation if stapling is not possible

Sizes other than B6R, A5R, 5.5x8.5R, nonstandard

Mode	14-0	14-1
Auto cancel	0	0
Auto switching to 1-position stapling	1	0
Inhibit	0	1
Forced 2-position stapling mode operation	1	1

*26 : Operation when one position stapling is not available

Mode	14-4	14-5
Auto cancel	0	0
Auto cancel	1	0
inhibit	0	1
Forced 1-position stapling mode operation	1	1

*27 : Operation when 2 position stapling is not available

Mode	14-6	14-7
Auto cancel	0	0
Auto cancel	1	0
Inhibit	0	1
Forced 2-position stapling mode operation	1	1

*28 : Full stack stop when FNS not installed

If "1", then a copier will automatically stop copy operation a predetermined number of copies after PS20 (exit limit detect PS) turns ON, and will display a message requesting the user to remove paper. After removing the paper, the user can restart copying by pressing the START button.

*29 : Fixing temperature at low power

Mode	16-0	16-1
160˚C	0	0
110˚C	1	0
85˚C	0	1
85˚C	1	1

*30 : MPC correction control

These switches determine whether MPC correction is carried out when sub power turns on.

MPC (laser maximum power correction) is designed to optimize copy density (mainly to prevent excess density), and is generally carried out every 20 copies.

In the copier is left off for a protracted period of time, toner may begin to lose its charge, resulting in excess density when copying restarts. To prevent this problem, the default setting causes the copier to automatically execute MPC when power turns ON (from OFF mode or from main power OFF) if the following two conditions hold: (1) the copier has been off for a prolonged period (at least 8 hours), and (2) the ambient humidity is 60% or higher.

If you set the switches to "01", then the copier will execute MPC at power ON if either of the above two conditions hold. If the switches are set to "10", then MPC will always be carried out at power ON.

If "1", "1" is set to DIPSW16 – 6 and DIPSW16 – 7, then MPC will never be carried out at power ON.

Mode	16-6	16-7
Humidity over 60% and First in the morning	0	0
Humidity over 60% or First in the morning	1	0
Always	0	1
No control	1	1

*31 : F4 size setting

Mode	12-3	12-4	12-5
8.5 x 13	0	0	0
8.25 x 13	1	0	0
8.125 x 13	0	1	0
8 x 13	1	1	0
8.5 x 13.5	0	0	1

*32 : Unit isolation

If a unit is malfunctioning and causing a problem, set the corresponding bit to isolate the unit from the system (software isolation). Copier operation can then continue without problem until the unit can be repaired, etc.

*33 : SW2 (sub switch) turns ON with SW1 (main switch)

Setting this bit to "1" will increase the warm-up time.

Reason:

The CB (overall control board) houses both an engine-control CPU and a system-control CPU. Switching ON of the main power does not start the engine CPU, but does start the power supply to the system CPU. The system CPU is initialized, and then the OS is initialized, and then memory and other hardware checks are performed. This initialization sequence takes about 6 seconds (until the fax, printer/scanner, and copy LEDs have gone ON/OFF). Normaly, pressing the SW2 during this time will not cause the engine to start.

[3] PM count setting

This function resets the PM count and sets the PM cycle.

Care should be taken to reset the PM count properly.

PM count / cycle menu

1. PM count resetting
2. PM cycle setting

1. PM count reset

Select whether to reset the count in the PM count reset screen.

Step	Operation procedure
1	Enter the 25 Mode.
2	**[25 mode menu screen]** Press the [2. PM COUNT/CYCLE] key.
3	**[PM Count/Cycle Menu Screen]** Press the [1. PM count reset] key.
4	**[PM Count Reset Screen]** Press the [YES] key to reset the PM count. Press the [NO] or [RETURN] key, then the PM count is not reset and returns to the PM count/ cycle setting menu screen.

2. Entering PM count start date

When resetting the PM count, it is necessary to input the start date, and the screen below will appear automatically.

Step	Operation procedure
1	**[PM Count Starting Date Input Screen]** Enter a PM count start date from the numeric keys.
2	Press the [SET] key to enter the data that has been entered.
3	Press the [RETURN] key to return to the PM count/cycle menu screen.

Note: When pressing the [RETURN] key without pressing the [SET] key, the PM count start date is not changed. It is necessary to reset the count again for inputting the count.

3. Setting of PM cycle

Set PM Cycle as follows:

Step	Operation procedure
1	Enter the 25 mode.
2	**[25 mode menu screen]** Press the [2. PM COUNT/CYCLE] key.
3	**[PM Count/Cycle menu screen]** Press the [2. PM CYCLE Set] key.
4	**[PM Cycle set screen]** Enter PM cycle from the numeric keys. Enter upper 3-digit (hundred thousand, ten thousand, thousand) only.
5	Press the [SET] key to enter a PM cycle that has been entered.
6	Press the [RETURN] key to return to the PM count/cycle setting menu screen.

[4] Data collection

This function enables viewing of the various data recorded in the machine.

Also, it is possible for the collected data to be checked by KRDS and management listing.

Data collection menu

1. Count data collection
2. Area data collection start

Data collection list

Classification	Contents	Pre-peration
Data collection 1	Count number of copies by each size	– (Note 1)
	Count RADF original feed quantities	
Data collection 2	Count number of JAM occurrence by each point	• Enter the 25 mode ↓ • Select [1. Software SW] ↓ • Set the address to 8-7:1 (Note 2)
Data collection 3	Count number of copies by each mode	
Data collection 4	Count number of SC occurrence	

Note 1: Only data collection 1 can be checked in default.

Note 2 : For the setting method, see "[2] Setting software DIP SW" in 25 mode.

1. Procedures for checking collected data

Step	Operation procedure
1	Enter the 25 mode.
2	**[25 mode menu screen]** Press the [3. Collecting data] key.
3	**[Data collection menu screen]** Press the [1. Count data] key.
4	**[Data collection screen]** Change the data number with the [▲] or [▼] key.
5	Pressing [NEXT] or [FRONT] key enables display of next data collection screen. (Note 3) 
6	Press the [RETURN] key to return to the data collection menu screen.

(1) The data is displayed at the line 2 in the message display area as “Data number (No.): Count value (000000)”.

(2) The data number can be changed by pressing the [▲] or [▼] key.

(3) Press and hold the [▲] or [▼] key to display the next items continuously.

Note 3 : In order to confirm collected data 2 to 4, set DIP SW 8-7 to “1” beforehand.

2. Data collection details

(1) Data collection 1

a. Count number of copies by each size

Type	Size No.	Paper size for destination		
		Japan	Europe	U.S.A.
Count number of copies by each size	1	A4 + A4R	A4 + A4R	8.5 x 11 +8.5 x 11R
	2	B5 + B5R	B5 + B5R	5.5 x 8.5 +5.5 x 8.5R
	3	A5 + A5R	A5 + A5R	-
	4	8.5 x 11 +8.5 x 11R	-	-
	5	AB series	AB series	Inch series
		Special	Special	Special
	6	A3R	A3R	11 x 17R
	7	A4R	A4R	8.5 x 14R
	8	A5R	A5R	8.5 x 11R
	9	B4R	B4R	5.5 x 8.5R
	10	B5R	B5R	-
	11	B6R	F4R	-
	12	Postcard	-	-
	13	-	-	-
	14	8.5 x 11R	-	-
	15	-	-	-

Maximum count number : 99,999,999

b. Count RADF original feed quantities

Type	Size No.	Feed mode
Count RADF original feed quantities	16	ADF mode original feed counter
	17	RADF mode original feed counter
	18	ADF mixed original mode original feed counter
	19	RADF mixed original mode original feed counter

Maximum count number : 99,999,999

(2) Data collection 2

<Jam occurrence count by factor>

No.	Jam	Point
1	10-0	By-pass
2	11-0	Upper tray (main body)
3	12-0	Lower tray (main body)
4	13-0	DB upper tray
5	14-0	DB lower tray
6	16-0	Paper feed jam
7	-	-
8	-	-
9	-	-
10	30-0	Conveyance jam
11	31-0	Conveyance jam
12	-	-
13	-	-
14	32-0	Conveyance jam
15	32-2	Conveyance jam
16	33-0	Conveyance jam
17	-	-
18	-	-
19	-	-
20	97-1	ADU conveyance jam
21	97-2	ADU conveyance jam
22	92-0	ADU conveyance jam
23	-	-
24	-	-
25	61-0	DF-314
26	61-1	DF-314
27	62-0	DF-314
28	62-1	DF-314
29	62-2	DF-314
30	62-3	DF-314
31	62-4	DF-314
32	62-5	DF-314
33	63-0	DF-314
34	63-1	DF-314
35	63-2	DF-314
36	63-3	DF-314
37	63-4	DF-314

No.	Jam	Classification
38	63-5	DF-314
39	63-6	DF-314
40	63-7	DF-314
41	-	-
42	-	-
43	72-16	FS-107
44	72-17	FS-107
45	72-19	FS-107
46	72-21	FS-107
47	72-23	FS-107
48	-	-
49	-	-

Maximum count number : 999,999

(3) Data collection

<Count number of copies by each mode>

No.	Contents
1	Platen single side → single side
2	-
3	RADF double side → single side
4	RADF double side → double side
5	RADF single side → single side
6	RADF single side → double side
7	Finisher (Staple mode)
8	Finisher (Sort mode)
9	Finisher (Group mode)
10	Finisher (No. of stapling)
11	Life size mode
12	Fixed ratio (E3: 1.41/2.00)
13	Fixed ratio (E2: 1.22/1.55)
14	Fixed ratio (E1: 1.15/1.29)
15	Fixed ratio (R1: 0.86/0.77)
16	Fixed ratio (R2: 0.82/0.65)
17	Fixed ratio (R3: 0.71/0.50)
18	Arbitrary magnification
19	Zoom
20	2.00 magnification
21	0.45 magnification
22	AMS mode
23	APS mode
24	AE mode
25	Interrupt mode
26	By-pass feed mode
27	Book copy mode
28	Frame erase mode
29	Fold erase mode
30	Life size image shift mode
31	Reduction image shift mode
32	-
33	-
34	No. of paper feed quantities at inter sheet mode
35	-
36	No. of paper feed quantities at OHP mode
37	No. of paper feed quantities at mixed original mode
38	Access number of the JOB memory call mode (Number of pressing the ∗ button)

No.	Contents
39	Preheat mode
40	Copy quantity is set to 1.
41	Copy quantity is set between 2 and 5.
42	Copy quantity is set between 6 and 10.
43	Copy quantity is set to 11 or above.
44	Intersheet
45	-
46	Photo mode
47	-
48	Verti./Horiz. zoom mode
49	Book memory mode
50	Single step mode
51	Text/Photo mode
52	Text mode
53	Arbitrary density mode
54	No. of paper feed quantities at OHP mode 2
55	-
56	-
57	Image insert mode
58	Chapter management mode
59	Combination mode
60	Repeat mode
61	Reverse image mode
62	Non-image area erase mode
63	Increase contrast mode
64	Auto layout copy
65	-
66	-
67	Copy quantity of paper feed from tray 1
68	Copy quantity of paper feed from tray 2
69	Copy quantity of paper feed from tray 3
70	Copy quantity of paper feed from tray 4
71	-
72	-
73	Finisher, Number of stapling (front)
74	Finisher, Number of stapling (rear)
75	Booklet mode copying count
76	OHP mode (without doubled sheet) copying count
77	Z-fold mode copying count
78	Mixed mode copying count
79	Stamp mode copying count
80	Top/bottom correction mode copying count

Maximum count : 99,999,999

(4) Data collection 4

Count number of SC occurrence (F Code)

No.	Error code (decimal number)		Classification
	Main code	Sub code	
1	10-1		Communication abnormality
2	10-2		
3	10-9		
4	18-1		Paper feed lifting abnormality
5	18-2		
6	18-3		
7	18-4		
8	26-1		High-voltage power source abnormality
9	28-1		
10	28-2		
11	28-3		
12	34-1		Fixing high-temperature abnormality
13	34-2		
14	35-1		Fixing low-temperature abnormality
15	35-2		
16	35-3		
17	35-4		
18	35-5		
19	35-6		
20	35-7		
21	35-8		
22	35-9		
23	35-10		
24	36-1		Broken fixing sensor
25	36-2		
26	36-3		
27	37-1		Fixing web abnormality
28	40-1		Scanning system abnormality
29	40-9		
30	41-1		
31	46-1		Image processing system
32	46-8		
33	46-10		
34	46-11		
35	49-2		
36	49-4		
37	49-6		
38	51-4		Motor speed abnormality
39	51-5		

No.	Error code (decimal number)		Classification
	Main code	Sub code	
40	51-6		Motor speed abnormality
41	52-1		Fan lock abnormality
42	52-2		
43	56-1		Image control communication abnormality
44	56-2		
45	56-3		
46	56-4		
47	56-5		
48	56-6		Operation control section system error
49	56-7		
50	56-8		
51	56-9		
52	56-10		
53	56-11		Main body identification error
54	60-1		RADF abnormality
55	60-9		
56	60-11		
57	67-3		
58	70-1		Finisher abnormality
59	70-9		
60	70-11		
61	77-2		
62	77-3		
63	77-5		
64	77-6		
65	77-11		
66	77-16		
67	80-1		Non-volatile memory abnormality
68	80-2		
69	80-3		
70	80-4		
71	80-5		
72	81-1		Flash ROM abnormality
73	81-2		
74	81-3		
75	88-1		Image processing system
76	89-1		Overrall control board communication error
77	89-2		
78	89-3		
79	89-4		
80	89-5		

No.	Error code (decimal number)		Classification
	Main code	Sub code	
81	89-6		Overrall control board communication error
82	87-00		Print controller error
83	52-5		Fan lock error
84	86-02		Fax board error
85	86-03		
86	86-04		
87	86-06		Fax error (overrall control board side)
88	86-88		
89	86-89		
90	86-90		
91	86-91		
92	86-10		Fax error (Fax board side)
93	86-20		
94	22-1		Machine internal temperature
95	23-1		Drum periphery
96	26-2		High voltage power supply
97	26-3		
98	28-4		
99	43-1		Scanning system error
100	52-3		Fan lock error

Maximum count : 9,999

3. Starting periodic date collection

Reset the periodic data from the setting periodic collection start date. Make a date that this operation is performed as a new periodic collection start date. The periodic data can be checked with the KRDS and management list.

Step	Operation procedure
1	Enter the 25 mode.
2	**[25 mode menu screen]** Press the [3. Collecting data] key.
3	**[Data collection menu screen]** Press the [2. Date count data] key.
4	**[Starting periodic data collection screen]** Press the [YES] key to start the periodic data collection. Press the [NO] or [RETURN] key, then data collection start date is not reset and returns to the data colleciton menu screen.

[5] Copy count for each part to be replaced

Perform the copy count display, count clear, limit value setting and arbitrarily parts to be replaced setting to the data of the parts to be replaced (fixed/arbitrarily).

Each count value can be check with the management list of 36 Mode and the KRDS.

Parts counter menu

1. Copy Count for each fixed replacement part
2. Copy Count for each arbitrarily replacement part

1. Copy count display and count reset by parts to be replaced (fixed)

Set the parts name of the fixed parts to be replaced (fixed), parts No. and copy count display, and count reset.

Step	Operation procedure
1	Enter the 25 mode.
2	**[25 mode menu screen]** Press the [4. Parts counter] key.
3	**[Parts counter menu screen]** Press the [1. Count of parts (Fixed)] key.
4	**[Copy count screen by parts to be replaced (fixed)]** Press [▲] , [▼] keys to select the data.
5	Press the [Count reset] key.
6	**[Count reset screen by parts to be replaced (fixed)]** Press the [YES] key to clear the copy count. Press the [NO] or [RETURN] key, then the copy count is not reset and returns to the copy count screen by parts to be replaced.

<List of parts to be replaced (fixed)>

No.	Unit	Parts name
1	Drum unit	Drum
2	(including charging	Cleaning blade assembly
3	corona unit)	Drum unit
4	Transfer separation corona unit	Transfer separation corona unit
5	Developing unit	Developer
6		Developing unit
7	Main body	Ozone filter
8	Main body paper	(Tray: 1) Feed rubber
9	feed unit	(Tray: 1) Double feed prevention rubber/Upper
10		(Tray: 1) Double feed prevention rubber/Lower
11		(Tray: 2) Feed rubber
12		(Tray: 2) Double feed prevention rubber/Upper
13		(Tray: 2) Double feed prevention rubber/Lower
14	DB (LCT or tray 3) paper feed unit	(Tray: 3 or LCT) Feed rubber
15		(Tray: 3 or LCT) Double feed prevention rubber/Upper
16		(Tray: 3 or LCT) Double feed prevention rubber/Lower
17	DB Tray 4 paper feed unit	(Tray: 4) Feed rubber
18		(Tray: 4) Double feed prevention rubber/Upper
19		(Tray: 4) Double feed prevention rubber/Lower
20	By-pass feed unit	By-pass feed reverse roller
21		By-pass feed pick up roller
22		By-pass feed conveyance roller
23	Fixing unit	Fixing heat roller
24		Fixing pressure roller
25		Fixing web
26		Heat insulating sleeve/A
27		Heat insulating sleeve/B
28		Fixing cleaning roller
29		Cleaner assembly
30		Fixing claw
31		Fixing roller holder/Upper
32		Fixing roller holder/Lower
33		Fixing sensor
34		Fuse mounting plate assembly
35		Fixing heater lamp 1
36		Fixing heater lamp 2
37	DF-314	Paper feed roller (A)
38		Double feed prevention roller (A assembly)
39	FS-107	Paper exit roller (A)

2. Copy count display and count reset by parts to be replaced (Named; arbitrarily)

Set the limit value for the parts to be replaced, parts No., parts name setting, copy count display and count reset.

Step	Operation procedure
1	Enter the 25 Mode.
2	**[25 mode menu screen]** Press the [4. Parts counter] key.
3	**[Parts counter menu screen]** Press the [2. Count of parts (Named)] key.
4	**[Copy count screen by parts to be replaced (named)]** Press the [▲] or [▼] key to select the data to be set or changed.
5	The following items can be set below: [COUNT RESET] : To clear the copy count. [LIMIT SET] : To enter the limit value (6-digit). [P/N SET] : To enter the parts number (9-digit). [Parts name] : To enter the parts name.
6	Press the [RETURN] key, then return to copy count screen by parts to be replaced.

<List of parts to be replaced (arbitrarily)>

No.	Count timing
1	When copy count (at the paper exit is completed)
2	When copy count (at the paper exit is completed)
3	When copy count (at the paper exit is completed)
4	When copy count (at the paper exit is completed)
5	When copy count (at the paper exit is completed)
6	When copy count (at the paper exit is completed)
7	When copy count (at the paper exit is completed)
8	When copy count (at the paper exit is completed)
9	When copy count (at the paper exit is completed)
10	When copy count (at the paper exit is completed)
11	When copy count (at the paper exit is completed)
12	When copy count (at the paper exit is completed)
13	When copy count (at the paper exit is completed)
14	When copy count (at the paper exit is completed)
15	When copy count (at the paper exit is completed)
16	When copy count (at the paper exit is completed)
17	When copy count (at the paper exit is completed)
18	When copy count (at the paper exit is completed)
19	When copy count (at the paper exit is completed)
20	When copy count (at the paper exit is completed)
21	When paper is fed from by-pass tray
22	When paper is fed from tray 1
23	When paper is fed from tray 2
24	When paper is fed from tray 3
25	When paper is fed from tray 4
26	When paper is fed from ADU
27	When paper is exited from main body
28	When original is fed into RADF
29	When original is fed into RADF
30	When original is fed into RADF

(1) Count resetting method

Step	Operation procedure
1	Enter the 25 mode.
2	**[25 mode menu screen]** Press the [4. Parts counter] key.
3	**[Parts counter menu screen]** Press the [2. Count of parts (Named)] key.
4	**[Copy count screen by parts to be replaced (named)]** Press the [▲] or [▼] to select the data.
5	Press the [COUNT RESET] key.
6	**[Count reset screen by parts to be replaced (named)]** Press the [YES] key to clear the copy count that has been selected. Press the [NO] or [RETURN] key, then the copy count is not reset and returns to the copy count screen by parts to be replaced (named).

(2) Count limit setting method

Enter the new limit value from the numeric keys on the screen.

Step	Operation procedure
1	Enter the 25 mode.
2	**[25 mode menu screen]** Press the [4. Parts counter] key.
3	**[Parts counter menu screen]** Press the [2. Count of parts (Named)] key.
4	**[Copy count screen by parts to be replaced (named)]** Press the [▲] or [▼] to select the data to be set or changed.
5	Press the [LIMIT SET] key.
6	**[Copy count limit setting screen by parts to be replaced (named)]** Enter new value using the numeric keys.
7	Press the [SET] key to enter the limit value that has been entered.
8	Press the [RETURN] key to return to the copy count screen by parts to be replaced (named).

Note: When pressing the [RETURN] key without pressing the [SET] key, the setting is complete without changing a new limit value and returns to the copy count screen by parts to be replaced (Named).

Reference: The right side of the limit value will be marked as * if the copy count exceeds its limit value.

(3) Parts No. setting

Enter the new parts No. (8-digit) from the numeric keys and alphabet keys on the screen.

Step	Operation procedure
1	Enter the 25 mode.
2	**[25 mode menu screen]** Press the [4. Parts counter] key.
3	**[Parts counter menu screen]** Press the [2. Count of parts (Named)] key.
4	**[Copy count screen by parts to be replaced (named)]** Press the [▲] or [▼] to select the data to be set or changed.
5	Press the [P/N SET] key.
6	**[Part No. setting screen by parts to be replaced (named)]** Enter new parts No. using the numeric and alphabet keys.
7	Press the [SET] key to enter the parts No. that has been entered.
8	Press the [RETURN] key to return to the copy count screen by parts to be replaced (Named).

Note: When pressing the [RETURN] key without pressing the [SET] key, the setting is complete without changing a new parts No. and returns to the copy count screen by parts to be replaced (Named).

(4) Parts name setting

Enter the new parts name from the keys on the screen.

There are three screen in the input screen and are changed with the [▼] or [▲] key:

- Alphabet (a capital letter), numeric number
- Alphabet (a small letter), numeric number
- Symbol, numeric number

Step	Operation procedure
1	Enter the 25 mode.
2	**[25 mode menu screen]** Press the [4. Parts counter] key.
3	**[Parts counter menu screen]** Press the [2. Count of parts (Named)] key.
4	**[Copy count screen by parts to be replaced (named)]** Press the [▲] or [▼] to select the data to be set or changed.
5	Press the [P/N SET] key.
6	**[Parts name setting screen by parts to be replaced (named)]** Enter new parts name using the keys on the screen.
7	Press the [OK] key to enter the parts name that has been entered.
8	Press the [CANCEL] key to return to the copy count screen by parts to be replaced (Named).

Note: When pressing the [CANCEL] key without pressing the [OK] key, the setting is completed without setting a parts name and returns to the copy count screen by parts to be replaced (Named).

[6] Password setting

This function sets the password to enter each mode.

In the 25 mode menu screen, select the [6. Password setting], then the password setting menu screen will appear.

Select the password to be adjusted/entered in this screen.

Password setting menu

1. Key operator password set
2. E.K.C. master key code set
3. Weekly timer master key set

1. Setting key operator password

This function sets the password to enter the key operator mode.

Step	Operation procedure
1	Enter the 25 mode.
2	**[25 mode menu screen]** Press the [5. Password setting] key.
3	**[Password setting menu screen]** Press the [1. Key operator password det] key.
4	**[Key Operator Password Setting Screen]** Enter 4-digit new password from the numeric keys.
5	Press the [SET] key to set the password that has been entered.
6	Press the [RETURN] key to return to the password setting menu screen.

Note: When pressing the [RETURN] key without pressing the [SET] key, the setting is complete. However the new password will not be entered and the password setting menu screen will return.

Reference: When setting a password to “0000”, the key operator mode can be used without a password.

2. Setting of EKC master key code

This function sets the EKC master key code.

Step	Operation procedure
1	Enter the 25 mode.
2	**[25 mode menu screen]** Press the [5. Password setting] key.
3	**[Password setting menu screen]** Press the [2. E.K.C. master key code set] key.
4	**[EKC master key code setting screen]** Enter 8-digit new EKC master key code using the numeric keys.
5	Press the [SET] key to enter the EKC master key code that has been entered.
6	Press the [RETURN] key to return to the password setting menu screen.

Note: When pressing the [RETURN] key without pressing the [SET] key, the setting is complete without changing a new EKC master key code and returns to the password setting menu screen.

Reference: When "00000000" is set as the password, the EKC setting menu screen will be displayed instead of the password entry screen.

3. Setting the weekly timer master key

This function sets the weekly timer master key required for entering the various weekly timer set mode.

Step	Operation procedure
1	Enter the 25 mode.
2	**[25 mode menu screen]** Press the [5. Password setting] key.
3	**[Password setting menu screen]** Press the [3. Weekly timer master key set] key.
4	**[Weekly timer master key setting screen]** Enter 4-digit new weekly timer master key using the numeric keys.
5	Press the [SET] key to enter the weekly timer master key that has been entered.
6	Press the [RETURN] key to return to the password setting menu screen.

Note: When pressing the [RETURN] key without pressing the [SET] key, the setting is complete without changing a new weekly timer master key and returns to the password setting screen.

Reference: When setting the master key to "0000", the weekly timer mode can be used without a password.

[7] Setting phone number of the service center

This function displays the phone and fax numbers of the service center which is indicated on the screen if a service call is required.

This function is not related to KRDS functions. It is designed only for indicating the data on the screen.

1. Setting phone and fax number of the service center

Select [6. Service TEL No.] in the 25 mode screen.

Service center number setting screen will appear.

Step	Operation procedure
1	Enter the 25 mode.
2	**[25 mode menu screen]** Press the [6. Service TEL No.] key.
3	**[Service center number setting screen]** Press the [TEL] key to set the phone number and the [FAX] key to set the [FAX] number, and input the number (Max. 16 digits) using the numeric keys on the screen.
4	When input has been mistaken, rewrite it after moving the cursor with [<<] or [>>] key, or delete all with the Stop/clear button to input again.
5	Press the [SET] key to enter the number that has been entered.
6	Press the [RETURN] key to return to the 25 mode menu screen.

Note: When pressing the [RETURN] key without pressing the [SET] key, the setting is complete. However the new phone number will not be entered and the 25 mode menu screen will return.

[8] Setting the serial number

This function is used to display, set and change the serial number of the main body and optional units.

The serial numbers can be read from KRDS.

1. Serial number display procedure

Select [7. Serial number] in the 25 mode screen. The serial number setting screen will appear.

The item name and serial number are displayed on the serial number setting menu screen. Each serial number is displayed at the right side of each unit.

Press the [DESTINATION] key to select the machine destination.

Press the [RETURN] key to end setting and return to the 25 mode menu screen.

2. Setting and changing serial number

On the serial number setting screen, select the desired item, then each serial number setting screen will appear.

Step	Operation procedure
1	Enter the 25 mode.
2	**[25 mode menu screen]** Press the [7. Serial number] key.
3	**[Serial number setting menu screen]** Press the key corresponding to the desired item on the screen.
4	**[Serial number setting screen]** Enter the 9-digit serial number from the alphabet and numeric keys on the screen and then press the [SET] key to enter the number that has been entered.
5	Press the [RETURN] key to return to the serial number setting menu screen.
6	When changing the serial number of other item, repeat steps 3 to 5.
7	Press the [RETURN] key to return to the 25 mode menu screen.

Note: When pressing the [RETURN] key without pressing the [SET] key, the setting is complete. However the new serial number will not be entered and the serial number setting menu screen will return.

3. Changing the destination setting for FAX

To change the destination setting, press the "Destination" key on the serial-number setup menu. The procedure is as follows.

Step	Operation procedure
1	Enter the 25 mode.
2	**[25 mode menu screen]** Press the [7. Serial No.] key.
3	**[Serial number setting screen]** Press the [Destination] key.
4	**[Destination setting screen]** Use the [▲] or [▼] key to select the destination.
5	Press the [OK] key to register the setting and to return to the serial number setting screen.

Note: If you press [CANCEL] key without first pressing [OK] key, the copier will retain the previous destination setting and return you to the serial number setting screen.

<Destination codes>

Code	Destination	Code	Destination
JP	Japan	FI	Finland
CA	Canada	SE	Sweden
US	U.S.A	NO	Norway
CN	China	AT	Austria
SA	Saudi Arabia	BE	Belgium
TW	Taiwan	NL	Netherlands
ZA	South Africa	CH	Switzerland
PL	Poland	FR	France
PT	Portugal	GB	Great Britain
ES	Spain	DE	German
IT	Italy	NZ	New Zealand
DK	Denmark	AU	Australia
IE	Ireland	EU	Europe

[9] Displaying the ROM version

Display ROM version mounted to the machine.

1. ROM version viewing method

In the 25 mode menu screen, select [8. ROM version], then the ROM version display screen will appear.

The item name and ROM version are displayed on the ROM version display screen. Each serial number is displayed at the right side of each item.

When there is no option not installed, the applicable position is a blank.

ROM version display

1. System control
2. Image control
3. Panel
4. Optical control
5. RADF
6. Finisher

When the optional fax and printer are installed, their ROM versions will also be displayed.

Press the [RETURN] key to end this screen and return to the 25 mode screen.

[10] Outline

If a FAX board is installed in this machine, it is not necessary to connect a modem for KRDS. If a FAX board is not installed, please connect a data modem for KRDS.

[11] Specifications

1. Type: Overall control board built-in type.
2. KRDS (Overall control board) Interface between modem
   : RS-232C Compatible
   : Baud Rate: Max : 115.2 kbps
   Default : 38.4 kbps
3. Basic Functions
   Auto trouble notification
   Operation count auto acquisition
   Remote control (machine adjustment data, rewriting of the counter limit, etc.)
   Notification of frequent JAM occurrence
   Replenish toner notification
   Repair and other call buttons
4. FAX-KRDS*
   Communications Speed : Max. 14.4 kbps (V.17)
   Modulation Method : (V.17, V.29, V.27ter, V.27 fallback mode, V.34)
   * This specification is valid for KRDS host application version 5.0 or higher versions.

[12] KRDS setting

This function selects whether to use KRDS.

KRDS allows the copy machine to call up the host computer periodically and also when there is an abnormality. Also data in the copier can be changed from the host computer.

KRDS can execute the above functions for the following data:

a. Data on the copier's status such as total and PM count.
b. Data on the frequency of the partial copier such as RADF paper feed count.
c. Data on the copier's error status such as SC (F) /JAM occurrence point and count.
d. Data on the various adjustments

To use KRDS, set up as follows:

1. Initialize KRDS memory.
2. Set the type of modem and line.
   (If FAX-KRDS is used, this setting is unnecessary.)
3. Enter host password.
4. Set phone number.

KRDS setting menu

1. Calling time set
2. Host password set
3. KRDS TEL No. setting
4. KRDS software SW set
5. KRDS setup calling

[13] KRDS set up

1. KRDS set up item

KRDS set up procedure

Step	Operation procedure
1	In case of a modem using, turn off the modem and connect to the copier using a modem cable (RS-232C, 25P-25P straight cable) and wall jack using a modular cable to the modem. If the FAX KRDS is used, connect the FAX board to the wall jack using the modular cable.
2	Setting the KRDS connection recognition (25 mode → [1. Software SW]) Set copier software DIPSW 12-6 (KRDS connection recognition) to "1".
3	Initialize KRDS memory. (47 mode → [1] [5] [P] [9] [8] [P] → Start button ON)
4	Set KRDS software SW. (25 mode → [9. KRDS setting] → [4. KRDS software SW set] (Select type of modem and dial mode)) Select the type of modem from the bit pattern 0 to 6 of the KRDS software SW No.1 and dial mode from the bit pattern 7.
5	Host password setting. (25 mode → [9. KRDS setting] → [2. Host password set]) (Refer to *1 and *2)
6	KRDS phone number setting. (25 mode → [9. KRDS setting] → [3. KRDS TEL No. setting]) (Refer to *3)
7	Turn off the SW1 (main power) and SW2 (sub power) of the copier.
8	Turn on the power switch of the modem.
9	Turn on the SW1 (main power) of the copier.
10	Check the set up flag setting condition. (25 mode → [9. KRDS setting] → [4. KRDS software SW set] → check that the data on the switch No.33 and bit No.0 indicates "0" (not yet).)
11	Check the KRDS communication mode. (25 mode → [9] KRDS Setting → [4] KRDS software SW setting → Check the data in bit No. 2 of switch No. 38.) It should be set on "1" if communications are via FAX-KRDS, and on "0" if communications are via a modem. If the setting is different, change the setting.
12	Preform KRDS set up calling. (25 mode → [9. KRDS setting] → [5. KRDS Setup calling])
13	Press the [START] key to start set up.
14	Check the finishing of set up. (25 mode → [9. KRDS setting] → [4. KRDS software SW set] → Completes if the data on the switch No.33 and bit No.0 indicates "1" (finished).)
15	Turn off the SW1 (main power) and SW2 (sub power) of the copier.

*1: Host password must be 5-digit.

*2: Host password 1 must be specified.

*3: For both the copier and the host side, copier phone number and host phone number 1 must be specified.

*4: Refer to the manual of the modem about specifications for connecting with the modular cable.

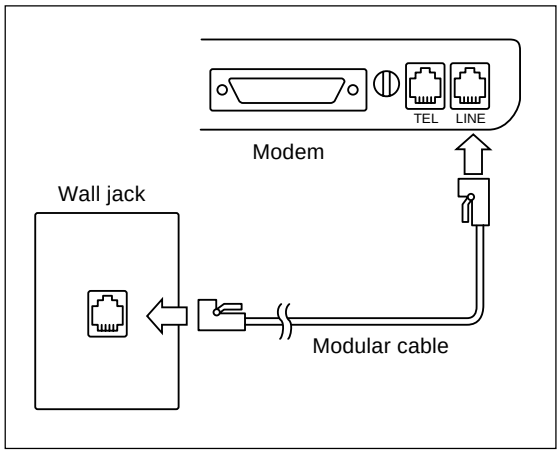

Note: In the case of FAX KRDS, connect to the LINE terminal on the FAX board.

2. Setting the KRDS connection recognition

(1) Plug the power cord of the copier to the outlet. (When the SW1 (main power) and SW2 (sub power) of the copier remain off.)

(2) Turn on the SW1 (main power) when the SW2 (sub power) remains off.

(3) Turn on the SW2 (sub power) while pressing [2] and [5] of the copy quantity setting buttons simultaneously.

(4) Select the [1. Software SW] key on the 25 mode menu screen.

(5) Select the bit No.6 of the switch No.12, and then press the [ON] key.

ON: KRDS recognize

OFF: KRDS not recognized

Note: If the copier software DIPSW 12-6 (KRDS recognition) is not selected to "1", the menu of the KRDS can not be selected.

3. Initializing KRDS memory

(1) Turn off the SW2 (sub power) when the SW1 (main power) remains on.

(2) Turn on the SW2 (sub power) while holding down [4] and [7] of the copy quantity setting buttons simultaneously.

(3) Press the start print button after pressing the copy quantity setting button [1], [5] and [P] button, then [9], [8], finally [P] button again.

```
I/O check mode
< 15 - 98 >          IN: – – OUT: NOW
```

(4) "NOW" indication will be changed to "FIN" on the message display.

(5) Turn off the SW2 (sub power).

4. Setting KRDS software SW

This function allows adjustment of the KRDS software switches.

Note: Adjust the software switch while checking the switch and bit number since the memory is rewritten every time the bit data (1 or 0) is changed.

Any bit data that has been incorrectly changed must be returned to the original data.

Step	Operation procedure
1	Enter the 25 mode.
2	**[25 mode menu screen]** Press the [9. KRDS setting] key.
3	**[KRDS setting menu screen]** Press the [4. KRDS software SW set] key.
4	**[KRDS software SW set screen]** Use the [▲] or [▼] keys to set the switch number. (Refer to *1)
5	Use the [▲] or [▼] keys to set the bit number. (Refer to *1)
6	Press the [ON] of [OFF] key to set the bit data.
7	Press the [RETURN] key to end the setting.

*1:

- The bit of the switch is written in the non-volatile RAM every time it is changed.
- The numbers shown in the message area are defined as follows:

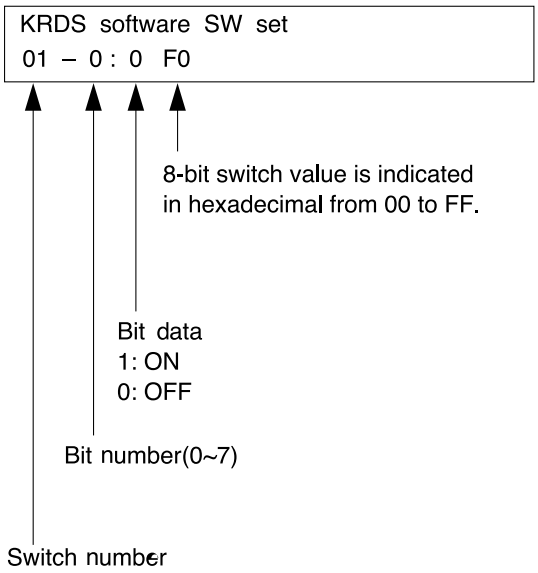

For each switch function, refer to “List of KRDS Software DIP SW”.

5. Setting type of modem and line

(1) Using the switch No. 01, enter the modem and line data into the bits 0 to 7, referring to the following table.

<If telephone line type is “Pulse”>

Modem intialization command \ Bit No.	7	6	5	4	3	2	1	0	*
AT&FE0Q0V1X0S0=1&S0	0	0	0	0	0	0	0	1	01
AT&FE0Q0V1X0S0=1&S0&D2&C1	0	0	0	0	0	0	1	0	02
AT&FE0Q0V1X0S0=1&S0%E0	0	0	0	0	0	0	1	1	03
AT&FE0Q0V1X0S0=1&S0&D2	0	0	0	0	0	1	0	0	04
AT&FE0Q0V1X0S0=1&S0&M5	0	0	0	0	0	1	0	1	05
AT&FE0Q0V1X0S0=1	0	0	0	0	0	1	1	0	06
AT&FE0Q0V1X0S0=1&S0\N5	0	0	0	0	0	1	1	1	07

<If telephone line type is “Tone”>

Modem intialization command \ Bit No.	7	6	5	4	3	2	1	0	*
AT&FE0Q0V1X0S0=1&S0	1	0	0	0	0	0	0	1	81
AT&FE0Q0V1X0S0=1&S0&D2&C1	1	0	0	0	0	0	1	0	82
AT&FE0Q0V1X0S0=1&S0%E0	1	0	0	0	0	0	1	1	83
AT&FE0Q0V1X0S0=1&S0&D2	1	0	0	0	0	1	0	0	84
AT&FE0Q0V1X0S0=1&S0&M5	1	0	0	0	0	1	0	1	85
AT&FE0Q0V1X0S0=1	1	0	0	0	0	1	1	0	86
AT&FE0Q0V1X0S0=1&S0\N5	1	0	0	0	0	1	1	1	87

Example:

If the initialization command for the modem you are using is AT&FE0Q0V1X0S0=1&S0 and you have a pulse-dial telephone line, enter the data for bits 7 to 0 as 00000001:

In hexadecimal <∗>, the value is expressed as 01. Be sure to verify with the above charts whether or not the hexadecimal <∗> output corresponds with the model being used.

Reference:

This machine has a telephone (modem) line type automatic recognition setting function.

KRDS Software DIP SW:

Switch No.38 and bit No.0

Data 0: off (manual setting)

1: on (line type automatic recognition) (default)

As a result, if this switch is at “1”, Bit No. 7 of Switch No. 1 can be either “0” or “1”.

(2) List of KRDS Software DIP SW

: Default value

No. byte	No. bit	Function	MSB 7	6	5	4	3	2	1	LSB 0	Description	Default value (Hexadecimal)
1	0-6	Select modem		0	0	0	0	0	0	0	No setting (No data is sent to modem.)	81
				0	0	0	0	0	0	1	AT&FE0Q0V1X0S0=1&S0	(*)
				0	0	0	0	0	1	0	AT&FE0Q0V1X0S0=1&S0&D2&C1	
				0	0	0	0	0	1	1	AT&FE0Q0V1X0S0=1&S0%E0	
				0	0	0	0	0	0	0	AT&FE0Q0V1X0S0=1&S0&D2	
				0	0	0	0	0	0	1	AT&FE0Q0V1X0S0=1&S0&M5	
				0	0	0	0	1	1	0	AT&FE0Q0V1X0S0=1	
				0	0	0	0	1	1	1	AT&FE0Q0V1X0S0=1&S0\N5	
				1	1	1	1	1	1	1	Manual setting (3 to 24 byte data is sent to modem.)	
	7	Dial mode	0								Pulse dial	
			1								Tone dial	
2	0	Data character length										81
										1	8 bit (fixed)	(*)
	1-2	Parity and stop bit						0	0		No parity, stop bit 1 (fixed)	
											Even number of parity, stop bit 1	
											Odd number of parity, stop bit 1	
											No parity, stop bit 2	
	3	Reserve					Don't care					
	4-7	Baud rate	0	0	1	1					1200 bps	
			0	1	0	0					2400 bps	
			0	1	0	1					4800 bps	
			0	1	1	0					9600 bps	
			0	1	1	1					19200 bps	
			1	0	0	0					38400 bps	
			1	0	0	1					57600 bps	
			1	0	1	0					115200 bps	
3	0	Local echo									No setting	57
										1	E0: Exist	(*)
	1	Result code							0		No setting	
									1		Q0: Exist	
	2	Result code form						0			No setting	
		(displayed result)						1			V1: Word	
	3	Set DCD signal operation					0				No setting	
		(carrier detect)					1				&C1: ON only when the carrier is detected.	
	4-5	Set DSR signal operation			0	0					No setting	
					0	1					&S0: Keep ON	
					1	0					&S1: ON during online	
					1	1					&S2	

Note: In FAX-KRDS, items with the ∗ mark are disregarded (invalid).

No. byte	No. bit	Function	MSB 7	6	5	4	3	2	1	LSB 0	Description	Default value (Hexadecimal)
3	6	Check DSR signal		0							off	57
				1							on	(*)
	7	Check DCD signal	0								off (fixed)	
			1								on	
4	0-1	Set DTR signal operation							0	0	No setting	10
									0	1	&D0	(*)
									1	0	&D1	
									1	1	&D2	
	2-3	Speaker control					0	0			No setting	
							0	1			M0: Keep off	
							1	0			M1: ON until communication starts	
							1	1			M2	
	4-6	Display speed when connection is completed and dial/busy tone is detected.		0	0	0					No setting	
				0	0	1					X0: No indication of communication speed	
				0	1	0					X1: Indication of communication speed	
				0	1	1					X2: Indication of communication speed; Detect dial tone	
				1	0	0					X3: Indication of communication speed; Detect busy tone	
				1	0	1					X4: Indication of communication speed; Detect dial and busy tone	
				1	1	0					non	
				1	1	1					non	
	7	Reset modem (This is set prior to shipping.)	0								No setting	
			1								&F: This is set prior to shipping.	
5	0-7	Arbitrary command registration area 1 (ASCII data)									Send ASCII data specified in this area to modem	00
6	0-7											(*)
7	0-7											
8	0-7	Arbitrary command registration area 2 (ASCII data)										
9	0-7											
10	0-7											
11	0-7	Arbitrary command registration area 3 (ASCII data)										
12	0-7											
13	0-7											
14	0-7	Arbitrary command registration area 4										
15	0-7											
16	0-7	Command free setting										
17	0	Set S register (bit 0 - 7)								0	No setting	01
		S0: Automatic receive ring count								1	S0=: Effective data	(*)
	1	S6: Wait time from off hook to dial start							0		No setting	
									1		S6=: Effective data	
	2	S7: Off hook limit timer						0			No setting	
								1			S7=: Effective data	

No. byte	No. bit	Function	MSB 7	6	5	4	3	2	1	LSB 0	Description	Default value (Hexadecimal)
17	3	S8: Dial stop time (sec.)					0				No setting	01
							1				S8=: Effective data	(*)
	4	S9: Carrier recognize time				0					No setting	
						1					S9=: Effective data	
	5	S10: Allowable carrier			0						No setting	
		stop time			1						S10=: Effective data	
	6	S11		0							No setting	
				1							S11=: Effective data	
	7	Reserve	Don't care									
18		S0 data (No. of times data was received automatically)	00 - FFH								01H (1)	01 (*)
19		S6 data (Wait time until dialing starts.)	00 - FFH								03H (3)	03 (*)
20		S7 data (Wait time until carrier detect)	00 - FFH								1EH (30)	1E (*)
21		S8 data (Pause time)	00 - FFH								03H (3)	03 (*)
22		S9 data (Carrier detection time)	00 - FFH								06H (6)	06 (*)
23		S10 data (Carrier dis-connection detection time)	00 - FFH								0EH (14)	0E (*)
24		S11 data	00 - FFH								5FH(95)	5F (*)
25		Timer 1 (Ring reception→ Connect reception)	00 - FFH								20H (32) x 1sec	20 (*)
26		Timer 2 (Dial call end → Connect reception)	00 - FFH								40H (64) x 1sec	40 (*)
27		Timer 3	00 - FFH								0AH (10) x 100ms	0A (*)
28		Timer 4 (Line Connect → Send Start-up message request)	00 - FFH								20H (32) x 100ms	20 (*)
29		Timer 5 (Opposite Party Signal answer wait time)	00 - FFH								1EH (30) x 1sec	1E (*)
30		Retry data; Timer 6 (Initialization OK →Dial call)	00 - FFH								FFH (255) x 5ms	FF (*)
31	0	Call when SC error occurs								0	disable	99
										1	enable	
	1	Call specify date							0		disable	
									1		enable	
	2	Call parts replace date						0			disable	
								1			enable	
	3	Call drum replace date					0				disable	
							1				enable	
	4	Call regular service date				0					disable	
						1					enable	
	5				Don't care							

No. byte	No. bit	Function	MSB 7	6	5	4	3	2	1	LSB 0	Description	Default value (Hexadecimal)
31	6	Call regular transmit date		0							disable	99
				1							enable	
	7	Select regular transmit	0								time	
		(Time and count)	1								counter	
32	0	Call when optional configu-								0	disable	00
		ration is changed								1	enable	
	1	Report of toner							0		disable	
		replenishment							1		enable	
	2	Report of JAM occur						0			disable	
		frequently						1			enable	
	3-7	Reserve	Don't care									
33	0	Set up flag	Don't care									0A
										0	not yet	
										1	finished	
	1-2	Radial interval						0	0		1 min.	
								0	1		3 min.	
								1	0		5 min.	
								1	1		7 min.	
	3-4	Radial count				0	0				0	
						0	1				5	
						1	0				10	
						1	1				No limit	
	5-6	Reserve		Don't care								(*)
	7	Line feed control	0								CR/LF: LF exist	(*)
		(when initializing modem)	1								CR: No LF	(*)
34	0-1	Call JAM date (main body)							0	0	Copy quantity: level 1	55
		Valid copy quantity							0	1	Copy quantity: level 2	
									1	0	Copy quantity: level 3	
									1	1	Copy quantity: level 4	
	2-3	Call ADF JAM date					0	0			Original feed quantity: level 1	
		Valid original feed quantity					0	1			Original feed quantity: level 2	
							1	0			Original feed quantity: level 3	
							1	1			Original feed quantity: level 4	
	4-5	Call JAM date			0	0					MCBJ: level 1	
		MCBJ setting			0	1					MCBJ: level 2	
					1	0					MCBJ: level 3	
					1	1					MCBJ: level 4	
	6-7	Call JAM date	0	0							MOBJ: level 1	
		MOBJ setting	0	1							MOBJ: level 2	
			1	0							MOBJ: level 3	
			1	1							MOBJ: level 4	
35		Reserve										00
36		Reserve										
37		Reserve										

No. byte	No. bit	Function	MSB 7	6	5	4	3	2	1	LSB 0	Description	Default value (Hexadecimal)
38	0	Line type automatic recognition								0	off	88
										1	on	
	1	MSAD connection							0		not connect	(*)
									1		connect	
	2	KRDS communication mode (Note 1)						0			DATA (Using a modem)	
								1			FAX	
	3-5	Reserve			Don't care							
	6	PM limit data length		0							Upper 2-digit fixed (for host)	
				1							All 6-digit (for host)	
	7	Regular transmit communication Sequence control	0								Call back communication	
			1								No call back communication	
39	0-1	Reserve							Don't care			00
	2	RS-232 line error K01_XX (Note 2)						0			copy enable	
								1			copy disable	
	3	Modem AT command error K02_XX (Note 2)					0				copy enable	
							1				copy disable	
	4	Reserve				Don't care						
	5	Force copy stop (at host side) (Note 3)			0						disable	
					1						enable	
	6-7	Reserve	Don't care									
40	0	Force copy stop (Note 3) (at terminal equipment side)								0	disable	00
										1	enable	
	1	Jam history data clear							0		disable	
									1		enable	
	2-5	Reserve		Don't care								
	6	User data access setting (local) (Note 4)		0							Prohibition	
				1							Permission	
	7	Resarve	0									

Note 1: KRDS Communications Mode (38 Byte, 2 bit) : This bit is set on "1" when the FAX board is connected and when the KRDS memory initialization operation is performed.

Note 2: For details of errors, refer to [19] Error code table.

Note 3: Copy Forced Stop: If DIP SWs 39-5 and 40-0 are both set to 1, then it becomes impossible to copy.

Note 4: There are three types of user data, speed dial data, programmed dial data and group dial data. Normally, due to maintenance of the confidentiality of user data, access to these data by service personnel is, as a rule, prohibited. If for any reason, access is necessary using KRDS, this switch can be changed to '1', then access will be enabled. In this case, change the settings after obtaining the agreement of the customer.

6. Setting host password

This function sets the host password.

(1) Screen selection

Select the [9. KRDS setting] key in the 25 mode menu screen to display the KRDS setting menu screen as an initial screen.

Then select the [2. Host password set] key to display the host password setting screen.

(2) Setting method

a. Three patterns can be used to set KRDS host password. The entry screen, screen contents and setting method for each pattern are all the same. Each message, however, is different.

(There are only 2 patterns for a usable password.)

b. Press the [NEXT] or [BACK] key to 2change the screen.

c. Enter the host password, 5-digit number or alphabet, with the numeric keys on the screen and press the [SET] key.

d. The firstly entered number or alphabet will be shifted to the left end.

e. After inputting the password, it the [NEXT], [BACK] or [RETURN] key is pressed before pressing the key, the data that has been entered is canceled.

f. Press the [SET] key, and then press the [RETURN] key to set the entered password. The screen will return to the KRDS setting menu screen.

* As the host password is set to “00000” in factory setting, ensure to change it to the password which was set by the KRDS host application for communication.
Confirm the password of host side with KRDS host application administrator.

* Note that the host password setting (Host 1) must be performed.

* See the [14] Calling time set menu mode (Arbitrary) concerning “Host 2” settings.

* Do not care “Host 3.”

Step	Operation procedure
1	Enter the 25 mode.
2	**[25 mode menu screen]** Press the [9. KRDS setting] key.
3	**[KRDS setting menu screen]** Press the [2. Host password set] key.
4	**[Host password setting screen]** Enter password consisting of number and alphabet.
5	Press the [NEXT] or [BACK] key to change the screen, then enter password (up to 2 patterns).
6	Press the [SET] key.
7	Press the [RETURN] key to end the setting.

7. Setting the KRDS telephone number

This function sets copier for KRDS and host telephone number.

(1) Screen selection

Select the [9. KRDS setting] key in the 25 mode menu screen to display the KRDS setting menu screen as an initial screen.

Then select the [3. KRDS TEL No. Setting] key to display the KRDS TEL NO setting screen.

(2) Setting method

a. Three patterns can be used to set KRDS phone number. The entry screen, screen contents and setting method for each pattern are all the same. Each screen, however, is different.

b. Press the [NEXT] or [BACK] key to change the screen.

c. Enter the telephone number, 15-digit or less number, with the numeric keys on the screen and press the [SET] key.

d. The entered number is displayed in the cursor section displayed in the line 2 of the message display area. The cursor shifts from left to right according to the entered.

If more than 15 digit is entered, the number of the 15 digit is rewritten.

e. To reenter the telephone number, press the Stop/ clear button to clear the data then enter the correct number.

f. If you wish to change the number of an arbitrary position, press the [<<] or [>>] key to move the cursor to the desired position and reenter.

g. No data has been set for the second row of the message area prior to shipping.

h. The keys except the numeric keys are defined as follows:

[,] Pause:

Wait temporarily for self-dial feed. (2-3 sec.)

[W] Wait:

Wait for dial tone such as asynchronous, etc. (excluding sound guidance).

[T] Tone Dial:

Indicate tone dial after this symbol

[P] Pulse Dial:

Indicate pulse dial after this symbol

[-] Symbol to divide numbers:

(This symbol is ignored when dialing.)

[.], [#], [✻]:

Use these keys as required such extension number.

i. After inputting the password, it the [NEXT], [BACK] or [RETURN] key is pressed before pressing the [SET] key, the data that has been entered is canceled.

j. Press the [SET] key, and then press the [BACK] key to set the entered number. The screen will return to the KRDS setting menu screen.

* • Note that the telephone number setting (copier) and telephone number setting (Host1) must be performed.

• Refer to [14] Calling time set menu mode (Arbitrary) for the (Host 2).

• Do not care "Host 3."

Step	Operation procedure
1	Enter the 25 mode.
2	**[25 mode menu screen]** Press the [9. KRDS setting] key.
3	**[KRDS setting menu screen]** Press the [3. KRDS TEL No. setting] key.
4	**[KRDS TEL No. setting screen]** Enter telephone number (15-digit or less) consisting of number and alphabet with numeric keys.
5	Press the [NEXT] or [BACK] key to change the screen, then telephone number (up to 3 patterns).
6	Press the [SET] key.
7	Press the [RETURN] key to end the setting.

8. Calling KRDS set up

<Auto set up>

In the host call setting, call the designated host computer in the set date and time, and transmit each data of the copier. Refer to the separate KRDS Host Application Manual for details of the data being handled.

(1) Screen selection

Select the [9. KRDS setting] in the 25 mode menu screen to display the KRDS setting menu screen.

Then select the [4. KRDS software SW set] to display the KRDS software SW set screen.

Check that the software DIP SW 33-0 is set to “0”. After checking, press the [RETURN] key to return to the KRDS setting menu screen.

On the KRDS setting menu screen, select the [5. KRDS Setup calling] to display the calling host for setup screen.

Note: If the KRDS software DIPSW 33-0 (Set up flag) is not selected to “0” (not yet). The KRDS setup calling screen can not be selected.

(2) Setting method

a. Press the [Start] key in the screen.

(a) Communication message

Calling the host for setup Communicating

Note: Do not turn OFF the power during communication.

(b) Completion message

Calling the host for setup Communication completed

b. Turn off the power if no completion message is displayed in ten minutes.

Check that the host computer starting up correct, host phone number, cable connection, etc. then open to calling the host for setup screen again to press the [Start] key.

c. Turn off the power to end the operation.

Step	Operation procedure
1	Enter the 25 mode.
2	**[25 mode menu screen]** Press the [9. KRDS setting] key.
3	**[KRDS setting menu screen]** Press the [4. KRDS software SW set] key.
4	**[KRDS software SW set screen]** Use the [▲] , [▼] key to select the switch number to “33” and bit number “0”.
5	Check that bit data indicates “0”. If not, set to “0” to press the [OFF] key.
6	Press the [RETURN] key to return to the KRDS setting menu screen.
7	**[KRDS setting menu screen]** Press the [5. KRDS Setup calling] key.
8	**[Calling the host for setup screen]** Press the [Start] key. Check the message on the screen.
9	Turn off the power to end the operation.

- How to confirm the completion of setup

  Confirm the data at bit No. 0 of address 33 in reference to "4. Setting KRDS software DIP SW."

  If "0", setup is not completed.
  If "1", setup is completed.

<Manual set up>

This copier machine can be set up manually, other than the automatical setup as explained above. (The setup is effective when both the copier and the host have completed the setup action.)

- Operation for the copier machine

  1. Switch on the power of modem.
  2. Set the address No. 33 as referring to "4. Setting KRDS software DIP SW."
  3. Change the data of bit No. 0 from 0 to 1.
     0: Set up not completed
     1: Set up completed
  4. Establish the changed data by pressing the copy button.
  5. Switch off the power of main body.

- Operation for the host computer

  For the operation of the host compouter, refer to the KRDS Host Application Administrator's Manual.

[14] Calling time set menu mode (Arbitrary)

Select the [9. KRDS setting] key in the 25 mode menu screen to display the KRDS setting menu screen as an initial screen.

Then select the [1. Calling time set] key to display the calling time set menu screen.

Calling time set menu

1. Calling mode-1
2. Calling mode-2
3. Calling mode-3

Press the [RETURN] key to exit the calling time set menu screen and return to the KRDS setting screen.

∗ This host calling setting calls everything to the “Host 2”.
Therefore, it is necessary first to set the “Host 2” telephone No. and host password.

1. Setting calling time setting mode

This function sets designated date calling.

(1) Screen selection

Select the [1. Calling mode-1] (Setting designated date calling setting) in the calling time set menu screen to display the calling mode-1 (designated date calling) setting screen.

Press the [RETURN] key to exit the calling mode-1 (designed date calling) setting screen and return to the calling time set menu screen.

(2) Entering method

a. Enter year, month, day and time using the numeric keys.
b. The cursor that indicates entering position will be appeared in the message indication area at line 2.
c. Using the [<<], [>>] key and move the cursor to desired position.
d. If reenter the entered data, press the Stop/clear button to clear the entered data then enter the data again.
e. Enter year, month, day and time using the numeric keys, then press the [SET] key.
f. Enter year, month, day and time as follows.
   - The year is entered by inputting 4-digit in the Christian era.
   - The month and day are entered by inputting 2-digit number. (Example: 1 is entered as 01.)
   - The time is entered using 24 hour clock.
     (Example: 1:00p.m. is entered as 13.)
   - The minute is entered by inputting 2-digit number. (Example: 1 is entered as 01.)
   - Example:
     at 1:00 p.m. of January 15, 1998 →
     1998/01/15 13:00
g. Press the [SET] key every time data for one item is entered and check the entered data.
h. The screen will return to the calling time setting menu screen if the [RETURN] key is pressed without pressing the [SET] key. In this case, no entered data will be changed.

i. Press the [SET] key, and then the [RETURN] key to end setting. The screen will return to the calling time set menu screen.

Step	Operation procedure
1	Enter the 25 mode.
2	**[25 mode menu screen]** Press the [9. KRDS setting] key.
3	**[KRDS setting menu screen]** Press the [1. Calling time set] key.
4	**[Calling time set menu screen]** Use the [1. Calling mode-1] (Setting designated date calling setting).
5	**[Calling mode-1 (Designed date calling) setting screen]** Enter year, month and day using the numeric key on the screen, then press the [<<], [>>] key to move the cursor to entering position of time.
6	Enter time and minute using the numeric keys on the screen, then press the [SET] key.
7	Press the [RETURN] to end the setting.

2. Setting regular date & time calling

The copier will call the host at the regular time specified.

(1) Screen selection

Select the [2. Calling mode-2] (regular data & time calling setting) in the calling time set menu screen to display the calling mode-2 (regular data & time calling) setting screen.

Press the [RETURN] key to exit the calling mode-2 (regular data & time calling) setting screen and return to the calling time set menu screen.

(2) Mode selecting method

a. Select and press the desired mode in the [monthly], [weekly], [dayly] keys.

There are three mode type (month, week, day) that can be set.

b. The current selected mode is high lighted according to the mode key.

At this time, the setting contents will be appeared in the message indication area at line 2.

(3) Mode setting method

Perform the operation in each mode as follows:

a. Monthly mode

(a) Using the numeric keys, enter the day, hour and minute.

(b) Press the [SET] key to enter the input data.

b. If you wish to change the number of an arbitrary position, press the [<<] or [>>] key to move the cursor to the desired position and reenter.

c. If reenter the entered data, press the Stop/clear button to clear the entered data then enter the data again.

d. Weekly mode

(a) Using the numeric keys, enter the day of the week, hour and minute.

(b) The day of the week is entered using the numeric keys according to the following definitions.

1: Monday 2: Tuesday 3: Wednesday

4: Thursday 5: Friday 6: Saturday

7: Sunday

(c) Press the [SET] key to enter the input data.

e. Daily mode

(a) Using the numeric keys, enter the hour and minute.

(b) Press the [SET] key to enter the input data.

f. Common operation

(a) The screen will return to the calling time set menu screen if the [RETURN] key is pressed without pressing the [SET] key. In this case, no entered data will be changed.

(b) Press the [SET] key, and then the [RETURN] key to end setting. The screen will return to calling time set menu screen.

(c) Enter the number with the numeric keys as follows:

- The month and day are entered by inputting 2-digit number. (Example: 1 is entered as 01.)
- The time is entered using 24 hour clock.

  (Example: 1:00p.m. is entered as 13.)
- The time is entered using 24 hour clock. (Example: 1:00p.m. is entered as 13.)
- Example:

  Monthly mode: 10 17:10

  Weekly mode: day 17:10

  Daily mode: 17:10

Step	Operation procedure
1	Enter the 25 mode.
2	**[25 mode menu screen]** Press the [9. KRDS setting] key.
3	**[KRDS setting menu screen]** Press the [1. Calling time set] key.
4	**[Calling time set menu screen]** Use the [2. Calling mode-2] (regular time calling setting).
5	**[Calling mode-2 (regular time calling) setting screen]** Press the any key in [monthly], [weekly], [dayly] keys.
6	Using the numeric keys on the screen, enter the day, hour and minute. (Item that can be input differs from depend on the mode.)
7	Press the [SET] key.
8	Press the [RETURN] to end the setting.

3. Setting regular count calling

The copier will call the host at the regular count specified.

(1) Screen selection

Select the [3. Calling mode-3] (regular count) in the calling time set menu screen to display the Calling mode-3 (regular count call) setting screen.

Press the [RETURN] key to exit the Calling mode-3 (Regular count call) setting screen and return to the calling time set menu screen.

(2) Setting method

a. Using the numeric keys on the screen, enter 6-digit number, regular count value, then press the [SET] key.

b. To reenter the entered data, press the Stop/clear button to clear the entered data then enter the data again.

c. The entered numerical value is entered from the number of 4 digit. The number is displayed while shifting from right to left.

d. The screen will return to the calling time set menu screen if the [RETURN] key is pressed without pressing the [SET] key. In this case, no entered data will be changed.

e. Press the [SET] key then the [RETURN] key to end the setting. The screen will return to the calling time set menu screen.

Step	Operation procedure
1	Enter the 25 mode.
2	**[25 mode menu screen]** Press the [9. KRDS setting] key.
3	**[KRDS setting menu screen]** Press the [1. Calling time set] key.
4	**[Calling time set menu screen]** Use the [3. Calling mode-3] (regular count).
5	**[Calling mode-3 (regular count call) setting screen]** Using the numeric keys on the screen, enter number, regular count value, then press the [SET] key.
6	Press the [RETURN] to end the setting.

[15] KRDS host call

If the machine is connected to a KRDS, it can call the host at the service center.

a. Select the [JAM history] (JAM-related trouble call), [SC history] (SC-related trouble call), [No TONER], [No PAPER], [COPY QUALITY] (Copy quality-related trouble call) or [OTHER REASON] (Other call), depending upon the particular circumstances.

KRDS host menu

1. JAM history
2. SC history
3. NO TONER
4. NO PAPER
5. COPY QUALITY
6. OTHER REASON

b. When the [Start] key is pressed, the machine starts calling the host.

Caution: Do not turn OFF the power during communication.

[16] FAX KRDS auto on function

If the FAX board is installed, the FAX-KRDS mode automatically becomes effective when the main power is turned ON.

(Mode 25 → Software DIP SW12–6:1 (continuous)

KRDS software DIP SW 38-2: Set on 1 (FAX).)

Even if the FAX board is installed, if the FAX KRDS function is not used, (if a modem is used), the above FAX KRDS auto on function is deactivated by changing the settings below.

However, in [8] “Setting the Serial number” in 25 Mode, if the “Destination” setting is DE: German, FAX KRDS mode does not become valid even if the FAX board is installed.

Step	Operation procedure
1	Enter the key operator mode.
2	**[Key operator mode menu screen]** Press the FAX setting key and display the FAX setting menu.
3	**[FAX setting menu screen]** Press the special setting key and display the password input screen.
4	Input the password [9] [2] [7] [2], then press the [OK] key.
5	**[FAX setting menu screen]** Press the nonvolatile parameters key.
6	**[Nonvolatile parameter setting screen]** Press the function parameters setting key.
7	Turn address 0E0138: bit 0 (Auto On/Off function for FAX KRDS) OFF. Refer to FK-101 service Handbook for more detail.

[17] A point to notice for operation

Be sure to turn ON the main power of the 7020 main body if the modem power is turned OFF and ON with the main power OFF.
Reason: To initialize the modem.
(When the KRDS circuit is powered, it automatically initialized the modem following the modem power ON and OFF operations.
When the main power of the 7020 main body is OFF, however, the KRDS circuit is not powered and does not initialize the modem after the modem power ON and OFF operations.
Some types of modem cannot start communication with KRDS unless they are initialized by the KRDS.)

[18] ASCII code table

ASCII is 1 byte code specified by ANSI.

It enables indication of control code, alphabet and number.

character	binary	hexa-decimal	character	binary	hexa-decimal	character	binary	hexa-decimal	character	binary	hexa-decimal
	0000 0000	0		0010 0000	20	@	0100 0000	40	‘	0110 0000	60
SH	0000 0001	1	!	0010 0001	21	A	0100 0001	41	a	0110 0001	61
SX	0000 0010	2	"	0010 0010	22	B	0100 0010	42	b	0110 0010	62
EX	0000 0011	3	#	0010 0011	23	C	0100 0011	43	c	0110 0011	63
ET	0000 0100	4	$	0010 0100	24	D	0100 0100	44	d	0110 0100	64
EQ	0000 0101	5	%	0010 0101	25	E	0100 0101	45	e	0110 0101	65
AK	0000 0110	6	&	0010 0110	26	F	0100 0110	46	f	0110 0110	66
BL	0000 0111	7	'	0010 0111	27	G	0100 0111	47	g	0110 0111	67
BS	0000 1000	8	(	0010 1000	28	H	0100 1000	48	h	0110 1000	68
HT	0000 1001	9	)	0010 1001	29	I	0100 1001	49	i	0110 1001	69
LF	0000 1010	A	*	0010 1010	2A	J	0100 1010	4A	j	0110 1010	6A
HM	0000 1011	B	+	0010 1011	2B	K	0100 1011	4B	k	0110 1011	6B
CL	0000 1100	C	,	0010 1100	2C	L	0100 1100	4C	l	0110 1100	6C
CR	0000 1101	D	-	0010 1101	2D	M	0100 1101	4D	m	0110 1101	6D
S0	0000 1110	E	.	0010 1110	2E	N	0100 1110	4E	n	0110 1110	6E
S1	0000 1111	F	/	0010 1111	2F	O	0100 1111	4F	o	0110 1111	6F
DE	0001 0000	10	0	0011 0000	30	O	0101 0000	50	p	0111 0000	70
D1	0001 0001	11	1	0011 0001	31	Q	0101 0001	51	q	0111 0001	71
D2	0001 0010	12	2	0011 0010	32	R	0101 0010	52	r	0111 0010	72
D3	0001 0011	13	3	0011 0011	33	S	0101 0011	53	s	0111 0011	73
D4	0001 0100	14	4	0011 0100	34	T	0101 0100	54	t	0111 0100	74
NK	0001 0101	15	5	0011 0101	35	U	0101 0101	55	u	0111 0101	75
SN	0001 0110	16	6	0011 0110	36	V	0101 0110	56	v	0111 0110	76
EB	0001 0111	17	7	0011 0111	37	W	0101 0111	57	w	0111 0111	77
CN	0001 1000	18	8	0011 1000	38	X	0101 1000	58	x	0111 1000	78
EM	0001 1001	19	9	0011 1001	39	Y	0101 1001	59	y	0111 1001	79
SB	0001 1010	1A	:	0011 1010	3A	Z	0101 1010	5A	z	0111 1010	7A
EC	0001 1011	1B	;	0011 1011	3B	[	0101 1011	5B	{	0111 1011	7B
→	0001 1100	1C	<	0011 1100	3C	¥	0101 1100	5C	¦	0111 1100	7C
←	0001 1101	1D	=	0011 1101	3D	]	0101 1101	5D	}	0111 1101	7D
↑	0001 1110	1E	>	0011 1110	3E	^	0101 1110	5E	~	0111 1110	7E
↓	0001 1111	1F	?	0011 1111	3F	_	0101 1111	5F		0111 1111	7F

[19] Error code table

Error code	Contents	Countermeasure
K00_00	Connection NG.	Redial, repeat reception standby.
K00_01	No response from other party. (No detection of start text from host after establishing connection.)	Redial, repeat reception standby.
K00_02	Because copying is taking place, it is impossible to write to the non-volatile RAM and the line is cut.	Temporarily stop copying.
K00_03	Password does not match.	Check password.
K00_04	Serial number does not match.	Check serial number.
K00_05	Syntactical error.	Redial, repeat reception standby.
K00_06	Write-in indication on an item for which write-in is impossible.	Re-operation on host side.
K00_07	Unread item error.	Re-operation on host side.
K00_08	Signal reception time-out after detection other party response.	Redial, repeat reception standby.
K00_09	Serial number registration completed.	Check serial number.
K00_10	Communications error due to generation of carrier OFF.	Redial, repeat reception standby.
K00_11	Dial tone is not detected within 5 seconds after setting of x2 and x4 commands.	Check connection of telephone line.
K00_12	Busy signal detected.	Redial.
K00_13	No tone detected for 5 seconds after input of @ command.	Redial, repeat reception standby.
K01_00	DTR went to OFF or in OFF state.	Check modem power source. Check RS-232C cable connection.
K01_01	Cannot open RS-232C.	Turn power on copier OFF and ON.
K01_02	Cannot close RS-232C.	Turn power on copier OFF and ON.
K01_03	Response time-out from RS-232C task.	Check modem power source. Check RS-232C cable connection.
K02_00	AT command error.	Turn power on copier OFF and ON. Possibility of modem malfunction or software bug.
K02_01	Initializing NG (MODEM). Example: Modem initializing command no good.	Check modem power source. Check RS-232C cable connection.

[20] ISW setting

Refer to the chapter “ISW.”

[21] Root counter display

The total counter can be checked in 25 mode on the root counter display.

Step	Operation procedure
1	Enter the 25 mode.
2	**[25 mode menu screen]** Press the [11. Root counter].
3	**[Root counter display screen]** Values of the root counter (total counter) are displayed.
4	Press the [RETURN] key to return to the 25 mode screen.

36 MODE

<List of adjustment items for 36 mode>

No.	Menu	No.	Sub menu	Circular menu	Summary of operation
1	High voltage adjustment		None	Charging voltage adjustment	Adjustment in the field is inhibited.
				Transfer current adjustment	
				Separation (AC) voltage adjustment	
				Separation (DC) current adjustment	
				Charging grid voltage adjustment	
				Developing bias adjustment	
				L detection adjustment	Make an L detection adjustment for toner supply and register the result in the nonvolatile memory. Display the L detection adjustment value as the result when it is completed. Reset the developing counter.
				Automatic toner supply	Adjustment in the field is inhibited.
2	Timing adjustment	1	Vertical/Horizontal magnification adjustment	Printer vertical magnification (drum clock) adjustment	After making an adjustment, print the SGU pattern (No.16).
				Platen vertical magnification (drum clock) adjustment	After making an adjustment, make a copy.
				Platen horizontal magnification (drum clock) adjustment	
				RADF (50% single side) vertical magnification (drum clock) adjustment	The same as 36 mode 9 RADF Adjustment.
				RADF (100% single side) vertical magnification (drum clock) adjustment	
				RADF (200% single side) vertical magnification (drum clock) adjustment	
				RADF (400% single side) vertical magnification (drum clock) adjustment	
				RADF (50% double side) vertical magnification (drum clock) adjustment	
				RADF (100% double side) vertical magnification (drum clock) adjustment	
				RADF (200% double side) vertical magnification (drum clock) adjustment	
				RADF (400% double side) vertical magnification (drum clock) adjustment	
		2	Restart timing adjustment	Restart timing adjustment (All)	After making an adjustment, print the SGU pattern (No.16).
				Restart timing adjustment (Main body upper tray)	
				Restart timing adjustment (Main body lower tray)	
				Restart timing adjustment (DB upper tray)	
				Restart timing adjustment (DB lower tray)	
				Restart timing adjustment (By-pass)	
				Restart timing adjustment (ADU)	

No.	Menu	No.	Sub menu	Circular menu	Summary of operation
2	Timing adjustment	2	Restart timing adjustment	Restart timing adjustment (RADF single side)	The same as 36 mode 9 RADF Adjustment.
				Restart timing adjustment (RADF double side (first side))	
				Restart timing adjustment (RADF double side (second side))	
		3	Paper feed loop adjustment	Paper feed loop amount adjustment (All)	After making an adjustment, print the SGU pattern (No.16).
				Paper feed loop amount adjustment (Main body upper tray)	
				Paper feed loop amount adjustment (Main body lower tray, small size)	
				Paper feed loop amount adjustment (Main body lower tray, large size)	
				Paper feed loop amount adjustment (DB upper tray, small size)	
				Paper feed loop amount adjustment (DB upper tray, large size)	
				Paper feed loop amount adjustment (DB lower tray, small size)	
				Paper feed loop amount adjustment (DB lower tray, large size)	
				Paper feed loop amount adjustment (By-pass, plain paper)	
				Paper feed loop amount adjustment (By-pass, thick paper)	
				Paper feed loop amount adjustment (By-pass, post card)	
				Paper feed loop amount adjustment (ADU)	
				Paper feed loop amount adjustment (RADF single side)	The same as 36 mode 9 RADF Adjustment.
		4	Leading edge original erasure adjustment	None	After making an adjustment, make a copy.
		5	Centering adjustment	Centering adjustment (All)	After making an adjustment , print the SGU pattern (No.16).
				Centering adjustment (Main body upper tray, common)	
				Centering adjustment (Main body upper tray, small size)	
				Centering adjustment (Main body upper tray, large size)	
				Centering adjustment (Main body lower tray, common)	
				Centering adjustment (Main body lower tray, small size)	
				Centering adjustment (Main body lower tray, large size)	
				Centering adjustment (DB upper tray, common)	
				Centering adjustment (DB upper tray, small size)	
				Centering adjustment (DB upper tray, large size)	
				Centering adjustment (DB lower tray, common)	
				Centering adjustment (DB lower tray, small size)	
				Centering adjustment (DB lower tray, large size)	

No.	Menu	No.	Sub menu	Circular menu	Summary of operation
2	Timing adjustment	5	Centering adjustment	Centering adjustment (ADU, common)	Print the SGU patters (No.16) after making an adjustment.
				Centering adjustment (ADU, small size)	
				Centering adjustment (ADU, large size)	
				Centering adjustment (By-pass, common)	
				Centering adjustment (By-pass, small size)	
				Centering adjustment (By-pass, large size)	
				Centering adjustment (Platen)	
				Centering adjustment (RADF single side)	The same as 36 mode 9 RADF Adjustment.
				Centering adjustment (RADF double side (first side))	
				Centering adjustment (RADF double side (second side))	
		6	Image read point adjustment	Origin adjustment	After making an adjustment, make a copy.
		7	Restoring standard data	Vertical/Horizontal magnification adjustment	Reset the adjustment data in the same condition as they were when the machine left the factory.
				Restart timing adjustment	
				Paper feed loop amount adjustment	
				Leading edge original erasure adjustment	
				Centering adjustment	
				Image read point adjustment	
3	Running mode	1	Intermittent copy mode	None	After making a selection, carry out operation.
		2	No paper intermittent copy mode		
		3	No paper mode		
		4	No paper endless mode		
		5	Running mode		
4	Test pattern print		None	None	Print the SGU pattern according to the specification No.
5	Density adjustment		Test pattern density adjustment	None	After making an adjustment, print the specified SGU pattern.
6	Copy quality adjustment	1	RADF scanner density adjustment	None	Make a density adjustment by letting the machine read white chart.

No.	Menu	No.	Sub menu	Circular menu	Summary of operation
7	List print	1	Test pattern	None	Grid pattern with 2 dots in width of line and 500 dots at intervals of lines.
		2	Font pattern	None	Built-in font pattern (Those for Japan include kanji characters.)
		3	Memory dump list	None	Print dump of data stored from the specified address in Hex and ASCII formats.
		4	Machine management list	None	Print the condition of the machine, counter data information, and jam history.
		5	Adjustment list	None	Print only 25/36 mode adjustment value from the machine management list.
8	Counter clear	1	Drum unit related counter	None	Clear drum counter.
		2	Fixing unit related counter	None	Clear fixing web counter
9	RADF adjustment	1	Vertica/Horizontal magnification adjustment	Vertical magnification adjustment drum clock of RADF (50% single side)	After making an adjustment, make a copy.
				Vertical magnification adjustment drum clock of RADF (100% single side)	
				Vertical magnification adjustment drum clock of RADF (200% single side)	
				Vertical magnification adjustment drum clock of RADF (400% single side)	
				Vertical magnification adjustment drum clock of RADF (50% double side)	
				Vertical magnification adjustment drum clock of RADF (100% double side)	
				Vertical magnification adjustment drum clock of RADF (200% double side)	
				Vertical magnification adjustment drum clock of RADF (400% double side)	
		2	Restart timing adjustment	RADF (single side)	After making an adjustment, make a copy.
				RADF (double side (first side))	
				RADF (double side (second side))	
		3	Paper loop adjustment	None	After making an adjustment, make a copy.
		4	Centering adjustment	RADF (single side)	After making an adjustment, make a copy.
				RADF (double side (first side))	
				RADF (double side (second side))	
		5	RADF scanner density adjustment	None	Make an adjustment of density by letting the machine read white chart.
10	FNS adjustment			FNS alignment plate adjustment (back)	After making an adjustment, make a copy.
				FNS alignment plate adjustment (front)	

[1] Setting method

A special operating mode called “36 Mode” has been provided with this machine. This mode enables adjustment of the various parts.

1. Turn the SW2 (sub power) OFF when the SW1 (main power) remains ON.
2. Turn the SW2 (sub power) ON while pressing 3 and 6 of the copy quantity setting buttons.

   36 mode menu screen will appear on the LCD. At this time, normal copy operation is not possible.

[36 mode menu screen]

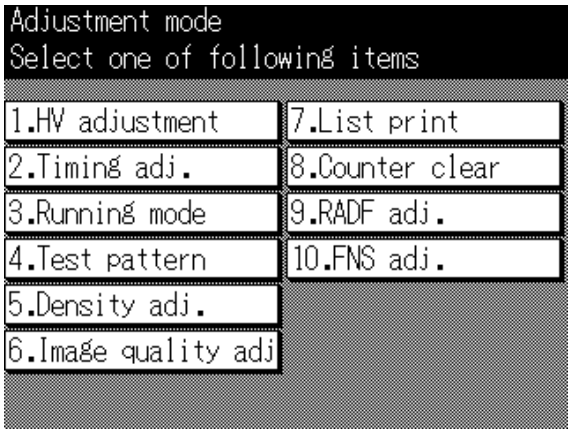

3. Press the desired item key on the LCD screen. Each setting screen will appear.
4. Enter data in each setting screen.
5. Press the [RETURN] key to check the data that have been entered.
6. Turn the SW2 (sub power) OFF to cancel the 36 mode.
7. New data will be effective after re-starting.

Note: If RADF and FNS are not installed, the [9. RADF adj.] and [10. FNS adj.] keys are netted and neither key can be selected.

[2] High voltage adjustment

1. Charging voltage value adjustment

Charging voltage value adjustment is inhibited in the field.

2. Transfer current adjustment

Transfer current adjustment is inhibited in the field.

3. Separation (AC) voltage adjustment

Separation (AC) voltage adjustment is inhibited in the field.

4. Separation (DC) voltage value adjustment

Separation (DC) voltage value adjustment is inhibited in the field.

5. Charging grid voltage adjustment

Charging grid voltage adjustment is inhibited in the field.

6. Developing bias adjustment

Developing bias adjustment is inhibited in the field.

7. L detection adjustment

This adjustment be made immediately after replacement of the developer (before any copies are made with the new developer). Developing counter is automatically reset.

Step	Operation procedure
1	Enter the 36 mode.
2	**[36 mode menu screen]** Press the [1. HV adjustment] key.
3	**[High voltage adjustment screen]** Press the [NEXT] key until the “L detection adj.” appears in the message display area.
4	**[High voltage adjustment --- L detection adjustment screen]** Press the [START] key, then confirm that [OK] is displayed at [RESULT] and the L detection data value.
5	To make another adjustment, press the [NEXT] or [BACK] to select the desired adjustment.
6	Press the [RETURN] to return to the 36 mode menu screen.

9. Toner automatic supply

Normally, this adjustment takes place automatically in the machine. Because of this, adjustment is inhibited in the field.

[3] Timing adjustment

This function adjusts each timing.
When timing adjustment is performed, use A3 or 11 x 17 size paper.

Timing adjustment menu

1. Vertical/horizontal magnification adjustment
2. Restart timing adjustment
3. Paper feed loop amount adjustment
4. Leading edge original erasure amount adjustment
5. Centering adjustment
6. Image read point adjustment
7. Restoring standard data

(1) Select [2. Timing adj.] in the 36 mode menu screen. The timing adjustment menu screen will appear.

(2) Press the item key to be adjusted. The selected setting screen will appear.

1. Vertical/Horizontal magnification adjustment

Adjust the vertical/horizontal magnification at the zoom mode.

(1) Select the [2. Timing adj.] in the 36 mode menu screen, then the timing adjustment menu screen will appear. Select the [1. Drum clock adj.] on this screen, then the Drum clock adjustment (vertical/ horizontal magnification adjustment) screen will appear.

This adjustment has the following items. These can be selected by pressing the [NEXT] or [BACK] key:

- Vertical magnification drum clock adjustment --- Printer
- Vertical magnification drum clock adjustment --- Platen
- Horizontal magnification drum clock adjustment --- Platen
- Vertical magnification drum clock adjustment --- RADF (50% single side)
- Vertical magnification adjustment --- RADF (100% single side)
- Vertical magnification adjustment --- RADF (200% single side)
- Vertical magnification adjustment --- RADF (400% single side)
- Vertical magnification adjustment --- RADF (50% double side)
- Vertical magnification adjustment --- RADF (100% double side)
- Vertical magnification adjustment --- RADF (200% double side)
- Vertical magnification adjustment --- RADF (400% double side)

If the RADF is not installed, the RADF adjustment item will not appear.

(2) Enter data from the numeric keys on the screen, then press the [SET] key to enter the data that have been entered.

(3) Press the [COPY] key to return to the basic screen, then make a test copy.

(4) Press the # button while pressing the ∗ button to return to the Vertical/Horizontal magnification adjustment screen.

(5) If the output (test copy image) is different from the standard value, enter setting value using the numeric keys and make a test copy.

If the output (test copy image) is within the standard value, adjust the next adjustment item.

a. Printer system vertical magnification adjustment

Step	Operation procedure
1	Enter the 36 mode.
2	**[36 mode menu screen]** Press the [2. Timing adj.] key.
3	**[Timing adjustment menu screen]** Press the [1. Drum clock adj.] key.
4	**[Magnification adjustment screen]** Press the [NEXT] key until “Printer” appears in the message display area.
5	Press the [COPY] key.
6	**[Basic screen]** Select A3 or 11 x 17 size paper, then press the Start print button to print the SGU pattern.
7	Measure the vertical magnification of the output paper. Standard value: 0.5 % max (life size) Within ±1 mm with respect to 206 mm
8	Press the # button while pressing the ∗ button to return to the vertical/horizontal magnification (drum clock) adjustment screen.
9	**[Vertical/horizontal magnification (drum clock) adjustment screen]** If the vertical magnification is different from the standard value, enter a value from the numeric keys, then press the [SET] key to store the adjustment value. Input range: -50 (reduction) ~ +50 (enlargement) 1 step = 0.1 %
10	Repeat steps 5 to 9 until the vertical magnification becomes the standard value.
11	To adjust another adjustment item, press the [NEXT] or [BACK] key to select the desired adjustment.
12	Press the [RETURN] key to return to the timing adjustment menu screen.

Standard value: 0.5 % max. (life size)
Within ±1.0 mm with respect to 206 mm

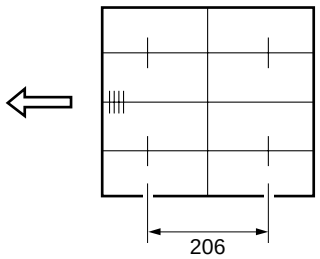

b. Platen vertical magnification adjustment

Step	Operation procedure
1	Enter the 36 mode.
2	**[36 mode menu screen]** Press the [2. Timing adj.] key.
3	**[Timing adjustment menu screen]** Press the [1. Drum clock adj.] key.
4	**[Vertical/Horizontal magnification (drum clock) adjustment screen]** Press the [NEXT] key until "Drum clock adj. (platen)" appears in the message display area.
5	Press the [COPY] key.
6	**[Basic screen]** Set the new pyramid chart on the original glass and select A3 or 11 x 17 size paper. Then press the Start print button to make a copy.
7	Measure the vertical magnification of the output paper. Standard value: 0.5 % max (life size) Within ±1 mm with respect to 200 mm
8	Press the # button while pressing the ∗ button to return to the vertical/horizontal magnification adjustment screen.
9	**[Vertical/Horizontal magnification (drum clock) adjustment screen]** If the vertical magnification is different from the standard value, enter a value from the numeric keys, then press the [SET] key to store the adjustment value. Input range: -20 (reduction) ~ +20 (enlargement) 1 step = 0.05 %
10	Repeat steps 5 to 9 until the vertical magnification becomes the standard value.
11	To adjust another adjustment item, press the [NEXT] or [BACK] key to select the desired adjustment.
12	Press the [RETURN] key to return to the timing adjustment menu screen.

Standard value: 0.5 % max. (life size)
Within ±1.0 mm with respect to 200 mm

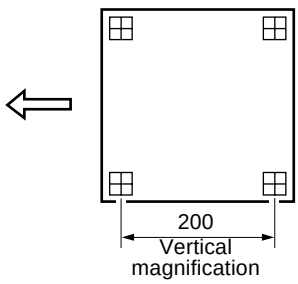

c. Platen horizontal magnification adjustment

Step	Operation procedure
1	Enter the 36 mode.
2	**[36 mode menu screen]** Press the [2. Timing adj.] key.
3	**[Timing adjustment menu screen]** Press the [1. Drum clock adj.] key.
4	**[Vertical/Horizontal magnification (drum clock) adjustment screen]** Press the [NEXT] key until "Horizontal adj. (platen)" appears in the message display area.
5	Press the [COPY] key.
6	**[Basic screen]** Set the new pyramid chart on the original glass and select A3 or 11 x 17 size paper. Then press the Start print button to make a copy.
7	Measure the vertical magnification of the output paper. Standard value: 0.5 % max (life size) Within ± 1 mm with respect to 200 mm
8	Press the # button while pressing the ∗ button to return to the vertical/horizontal magnification (drum clock) adjustment screen.
9	**[Vertical/Horizontal magnification (drum clock) adjustment screen]** If the vertical magnification is different from the standard value, enter a value from the numeric keys, then press the [SET] key to store the adjustment value. Input range: -10 (reduction) ~ +10 (enlargement) 1 step = 0.1 %
10	Repeat steps 5 to 9 until the horizontal magnification becomes the standard value.
11	To adjust another adjustment item, press the [NEXT] or [BACK] key to select the desired adjustment.
12	Press the [RETURN] key to return to the timing adjustment menu screen.

Standard value: 0.5 % max. (life size)
Within ±1.0 mm with respect to 200 mm

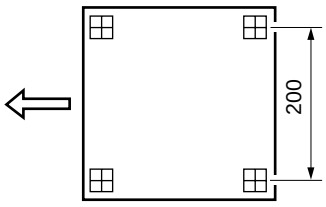

Caution: The result of the platen horizontal magnification will be reflected all the images read by scanner (RADF, platen).

d. RADF vertical magnification adjustment

Step	Operation procedure
1	Enter the 36 mode.
2	**[36 mode menu screen]** Press the [2. Timing adj.] key.
3	**[Timing adjustment menu screen]** Press the [1. Drum clock adj.] key.
4	**[Vertical/Horizontal magnification (drum clock) adjustment screen]** Press the [NEXT] key until "RADF/100%" appears in the message display area.
5	Press the [COPY] key.
6	**[Basic screen]** Set the ADF adjustment chart on the RADF and select A3 or 11 x 17 size paper. Then press the Start print button to make a copy.
7	Measure the vertical magnification of the output paper. Standard value: 0.5 % max (life size) Within ± 1.0 mm with respect to 200 mm
8	Press the # button while pressing the ∗ button to return to the vertical/horizontal magnification (drum clock) adjustment screen.
9	**[Vertical/Horizontal magnification (drum clock) adjustment screen]** If the vertical magnification is different from the standard value, enter a value from the numeric keys, then press the [SET] key to store the adjustment value. Input range: -20 (reduction) ~ +20 (enlargement) 1 step = 0.1 %
10	Repeat steps 5 to 9 until the vertical magnification becomes the standard value.
11	To adjust another adjustment item, press the [NEXT] or [BACK] key to select the desired adjustment.
12	Press the [RETURN] key to return to the timing adjustment menu screen.

Standard value: 0.5 % max. (life size)

Within ±1 mm with respect to 200 mm

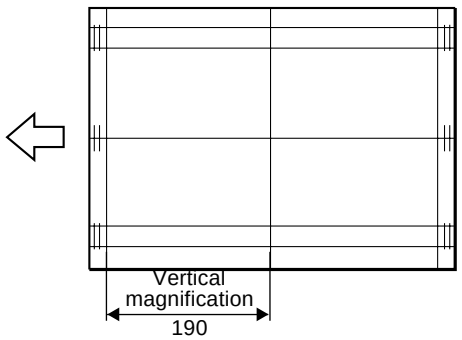

1. Restart timing adjustment

To adjust the restart timing.

Select the [2. Timing adj.] in the 36 mode menu screen, then the timing adjustment menu screen will appear.

Select the [2. Restart timing] on this screen, then the restart timing adjustment screen will appear.

This adjustment has the following kinds of items. These can be selected by pressing the [NEXT] or [BACK] key:

- Restart timing adjustment --- All
- Restart timing adjustment --- Main body upper tray
- Restart timing adjustment --- Main body lower tray
- Restart timing adjustment --- DB upper tray
- Restart timing adjustment --- DB lower tray
- Restart timing adjustment --- By-pass
- Restart timing adjustment --- ADU
- Restart timing adjustment --- RADF (single side)
- Restart timing adjustment --- RADF (double side (first side))
- Restart timing adjustment --- RADF (double side (second side))

a. Engine restart timing adjustment

Step	Operation procedure
1	Enter the 36 mode.
2	**[36 mode menu screen]** Press the [2. Timing adj.] key.
3	**[Timing adjustment menu screen]** Press the [2. Restart timing] key.
4	**[Restart timing adjustment screen]** Press the [NEXT] key until the desired adjustment item appears in the message display area.
5	Press the [COPY] key.
6	**[Basic screen]** Select A3 or 11 x 17 size paper and press the Start print button to print the SGU pattern.
7	Check the restart (leading edge) timing of the output paper. Standard value: Within ± 2.0 mm
8	Press the # button while pressing the ∗ button to return to the restart timing adjustment screen.
9	**[Restart timing adjustment screen]** If the restart timing is different from the standard value, enter a value from the numeric keys, then press the [SET] key to store the adjustment value. Input range: -127 (slower) ~ +127 (faster) 1 step = 0.1mm
10	Repeat steps 5 to 9 until the restart timing becomes the standard value.
11	To adjust another adjustment item, press the [NEXT] or [BACK] key to select the desired adjustment.
12	Press the [RETURN] key to return to the timing adjustment menu screen.

b. RADF restart timing adjustment

Step	Operation procedure
1	Enter the 36 mode.
2	**[36 mode menu screen]** Press the [2. Timing adj.] key.
3	**[Timing adjustment menu screen]** Press the [2. Restart timing] key.
4	**[Restart timing adjustment screen]** Press the [NEXT] key until the desired RADF adjustment item appears in the message display area.
5	Press the [COPY] key.
6	**[Basic screen]** Set the ADF adjustment chart on the RADF and select A3 or 11 x 17 size paper. Then press the Start print button to make a copy. ∗ Adjustment the “RADF double side (second side)”, then make a test copy in double side - single side mode and check the restart timing of 2nd output paper.
7	Check the restart (leading edge) timing of the output paper. Standard value: Within ± 3.0 mm (life size)
8	Press the # button while pressing the ∗ button to return to the restart timing adjustment screen.
9	**[Restart timing adjustment screen]** If the restart timing is different from the standard value, enter a value from the numeric keys, then press the [SET] key to store the adjustment value. Input range: -50 (slow) ~ +50 (fast) 1 step = 0.1mm
10	Repeat steps 5 to 9 until the restart timing becomes the standard value.
11	To adjust another adjustment item, press the [NEXT] or [BACK] key to select the desired adjustment.
12	Press the [RETURN] key to return to the timing adjustment menu screen.

3. Paper feed loop amount adjustment

Adjust the loop amount for each tray.

Select the [2. Timing adj.] in the 36 mode menu screen, then the timing adjustment menu screen will appear.

Select the [3. Paper loop adj.] on this screen, then the paper feed loop amount adjustment screen will appear.

This adjustment has the following kinds of items. These can be selected by pressing the [NEXT] or [BACK] key.

- Paper feed loop adjustment (All)
- Paper feed loop adjustment (Main body upper tray)
- Paper feed loop adjustment (Main body lower tray (small size)) (Note 1)
- Paper feed loop adjustment (Main body lower tray (large size)) (Note 2)
- Paper feed loop adjustment (DB upper tray (small size)) (Note 1)
- Paper feed loop adjustment (DB upper tray (large size)) (Note 2)
- Paper feed loop adjustment (DB lower tray (small size)) (Note 1)
- Paper feed loop adjustment (DB lower tray (large size)) (Note 2)
- Paper feed loop adjustment (Bypass (plain paper))
- Paper feed loop adjustment (Bypass (thick paper))
- Paper feed loop adjustment (Bypass (post card))
- Paper feed loop adjustment (ADU)
- Paper feed loop adjustment (RADF) (single side)

Note 1: Except for F4R, A3, B4, 8.5 x 14, 11 x 17

Note 2: F4R, A3, B4, 8.5 x 14, 11 x 17

a. Paper feed loop adjustment for engine

Step	Operation procedure
1	Enter the 36 mode.
2	**[36 mode menu screen]** Press the [2. Timing adj.] key.
3	**[Timing adjustment menu screen]** Press the [3. Paper loop adj.] key.
4	**[Paper feed loop amount adjustment screen]** Press the [NEXT] key until the desired adjustment item appears in the message display area.
5	Press the [COPY] key.
6	**[Basic screen]** Select A3 or 11 x 17 size paper, then press the Start print button to print the SGU pattern.
7	Check the paper feed loop amount.
8	Press the # button while pressing the ∗ button to return to the paper feed loop amount adjustment screen.
9	**[Paper feed loop amount adjustment screen]** If the paper feed loop amount is not correct, enter a value from the numeric keys, then press the [SET] key to store the adjustment value. Input range: –127 (small) ~ 00 (standard) ~ +127 (large) 1 step = 0.14mm
10	Repeat steps 5 to 9 until the paper feed loop amount becomes appropriate.
11	To adjust another adjustment item, press the [NEXT] or [BACK] key to select the desired adjustment.
12	Press the [RETURN] key to return to the timing adjustment menu screen.

b. Paper feed loop adjustment for RADF

Step	Operation procedure
1	Enter the 36 mode.
2	**[36 mode menu screen]** Press the [2. Timing adj.] key.
3	**[Timing adjustment menu screen]** Press the [3. Paper loop adj.] key.
4	**[Paper feed loop amount adjustment screen]** Press the [NEXT] key until RADF appears in the message display area.
5	Press the [COPY] key.
6	**[Basic screen]** Set the ADF adjustment chart on the RADF and select A3 or 11 x 17 size paper, then press the Start print button to make a test copy.
7	Check the paper feed loop amount.
8	Press the # button while pressing the ∗ button to return to the paper feed loop amount adjustment screen.
9	**[Paper feed loop amount adjustment screen]** If the paper feed loop amount is not correct, enter a value from the numeric keys, then press the [SET] key to store the adjustment value. Input range: -10 (small) ~ 00 (standard) ~ +10 (large) 1 step = 0.5mm
10	Repeat steps 5 to 9 until the paper feed loop amount is appropriate.
11	To adjust another adjustment item, press the [NEXT] or [BACK] key to select the desired adjustment.
12	Press the [RETURN] key to return to the timing adjustment menu screen.

4. Leading edge original erasure adjustment

Adjust the leading edge original erasure (leading edge blank cut) amount.

Select the [2. Timing adj.] in the 36 mode menu screen, then the timing adjustment menu screen will appear.

Select the [4. Lead edge timing] on this screen, then the leading edge original erasure amount adjustment screen will appear.

Step	Operation procedure
1	Enter the 36 mode.
2	**[36 mode menu screen]** Press the [2. Timing adj.] key.
3	**[Timing adjustment menu screen]** Press the [4. Leading edge timing] key.
4	**[Leading edge original erasure adjustment screen]** Press the [COPY] key.
5	**[Basic screen]** Set the new pyramid chart on the original glass and select A3 or 11 x 17 size paper, then press the Start print button to make a test copy.
6	Measure the leading edge original erasure amount of the output paper. Standard value: Within 3.0 mm
7	Press the # button while pressing the ∗ button to return to the leading edge original erasure amount adjustment screen.
8	**[Leading edge original erasure adjustment screen]** If the leading edge original erasure amount is not correct, enter a value from the numeric keys, then press the [SET] key to store the adjustment value. Input range: -20 (small) ~ +20 (large) 1 step = 0.1mm
9	Repeat steps 4 to 8 until the leading edge original erasure amount becomes the standard value.
10	Press the [RETURN] key to return to the timing adjustment menu screen.

5. Centering adjustment

Adjust the miscentering for paper feed direction.

Select the [2. Timing adj.] in the 36 mode menu screen, then the timing adjustment menu screen will appear.

Select the [5. Centering adj.] on this screen, then the centering adjustment screen will appear.

This adjustment has the following kinds of items. These can be selected by pressing the [NEXT] or [BACK] key.

- Centering adjustment (All)
- Centering adjustment (Main body upper tray, common)
- Centering adjustment (Main body upper tray, small size)
- Centering adjustment (Main body upper tray, large size)
- Centering adjustment (Main body lower tray, common)
- Centering adjustment (Main body lower tray, small size)
- Centering adjustment (Main body lower tray, large size)
- Centering adjustment (DB upper tray, common)
- Centering adjustment (DB upper tray, small size)
- Centering adjustment (DB upper tray, large size)
- Centering adjustment (DB lower tray, common)
- Centering adjustment (DB lower tray, small size)
- Centering adjustment (DB lower tray, large size)
- Centering adjustment (ADU, common)
- Centering adjustment (ADU, small size)
- Centering adjustment (ADU, large size)
- Centering adjustment (By-pass, common)
- Centering adjustment (By-pass, small size)
- Centering adjustment (By-pass, large size)
- Centering adjustment (Platen)
- Centering adjustment (RADF single side)
- Centering adjustment (RADF double side (first side))
- Centering adjustment (RADF double side (second side))

Note 1: ADU centering adjustment can be taking place for each paper size.

Large size: A3, B4, 8.5 x 14, 11 x 17

Small size: A4R, B5R, 8 x 11R

Note 2: ADU centering adjustment for each paper is the offset adjustment from the ADU (common).

a. Each tray centering adjustment

Step	Operation procedure
1	Enter the 36 mode.
2	**[36 mode menu screen]** Press the [2. Timing adj.] key.
3	**[Timing adjustment menu screen]** Press the [5. Centering adj.] key.
4	**[Centering adjustment screen]** Press the [NEXT] key until the desired tray appears in the message display area.
5	Press the [COPY] key.
6	**[Basic screen]** Set A3 or 11 x 17 size paper in the tray to be adjusted and select this tray. Then press the [START] button to print the SGU pattern .
7	Fold the output (SGU pattern) at the center in the paper feed direction, and check that the left and right lines overlap completely. Standard value: Within ±2 mm
8	Press the # button while pressing the * button to return to the centering adjustment screen.
9	**[Centering adjustment screen]** If the miscentering is more than standard value, enter a value from the numeric keys, then press the [SET] key to store the adjustment value. Input range: -53 (inward direction of the center line) ~ +53 (rear direction of the center line) 1 step = 0.09mm
10	Repeat steps 5 to 9 until the miscentering is within standard value. (Note 1)
11	To adjust another adjustment item, press the [NEXT] or [BACK] key to select the desired adjustment.
12	Press the [RETURN] key to return to the timing adjustment menu screen.

Note 1: If the adjustment by data does not correct the miscentering to fall into the specified range, adjust the tray as follows:

b. ADU centering adjustment

Step	Operation procedure
1	Enter the 36 mode.
2	**[36 mode menu screen]** Press the [2. Timing adj.] key.
3	**[Timing adjustment menu screen]** Press the [5. Centering adj.] key.
4	**[Centering adjustment screen]** Press the [NEXT] key until "ADU" appears in the message display area.
5	Press the [COPY] key.
6	**[Basic screen]** Select copy mode to single side - double side mode, then press the Start print button to print the SGU pattern.
7	Fold the output (SGU pattern) at the center in the paper feed direction, and check that the left and right lines overlap completely. Standard value: First side: Within ±3 mm Second side: Within ±3 mm
8	Press the # button while pressing the ∗ button to return to the centering adjustment screen.
9	**[Centering adjustment screen]** If the miscentering is more than standard value, enter a value from the numeric keys, then press the [SET] key to store the adjustment value. Input range: -53 (inward direction of the center line) ~ +53 (rear direction of the center line) 1 step = 0.09mm
10	Repeat steps 5 to 9 until the miscentering is within standard value for each paper size. (Note 1)
11	To adjust another adjustment item, press the [NEXT] or [BACK] key to select the desired adjustment.
12	Press the [RETURN] key to return to the timing adjustment menu screen.

Standard value: Within 3.0 mm (life size)

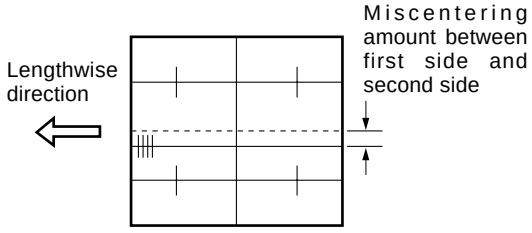

c. Platen centering adjustment

Step	Operation procedure
1	Enter the 36 mode.
2	**[36 mode menu screen]** Press the [2. Timing adj.] key.
3	**[Timing adjustment menu screen]** Press the [5. Centering adj.] key.
4	**[Centering adjustment screen]** Press the [NEXT] key until "Platen" appears in the message display area.
5	Press the [COPY] key.
6	**[Basic screen]** Set the new pyramid chart on the original glass and select A3 or 11 x 17 size paper, then press the Start print button to make a test copy.
7	Check the miscentering by comparing the original with the copy. Standard value: Within ±2 mm
8	Press the # button while pressing the ∗ button to return to the centering adjustment screen.
9	**[Centering adjustment screen]** If the miscentering is more than standard value, enter a value from the numeric keys, then press the [SET] key to store the adjustment value. Input range: -74 (inward direction of the center line) ~ +74 (rear direction of the center line) 1 step = 0.06mm
10	Repeat steps 5 to 9 until the miscentering is within standard value. (Note 1)
11	To adjust another adjustment item, press the [NEXT] or [BACK] key to select the desired adjustment.
12	Press the [RETURN] key to return to the timing adjustment menu screen.

d. RADF centering adjustment

Step	Operation procedure
1	Enter the 36 mode.
2	**[36 mode menu screen]** Press the [2. Timing adj.] key.
3	**[Timing adjustment menu screen]** Press the [5. Centering adj.] key.
4	**[Centering adjustment screen]** Press the [NEXT] key until "RADF" appears in the message display area.
5	Press the [COPY] key.
6	**[Basic screen]** Set the ADF adjustment chart on the RADF and select A3 or 11 x 17 size paper, then press the Start print button to make a copy. ∗ Adjust the "RADF (double side (second side)) ", then make a test copy in double side - single side mode and check the loop amount of 2nd outputted paper.
7	Check the miscentering by comparing the original with the copy. Standard value: Within ±3 mm
8	Press the # button while pressing the ∗ button to return to the centering adjustment screen.
9	**[Centering adjustment screen]** If the miscentering is more than standard value, enter a value from the numeric keys, then press the [SET] key to store the adjustment value. Input range: -74 (inward direction of the center line) to +74 (rear direction of the center line) 1 step = 0.04mm
10	Repeat steps 5 to 9 until the miscentering is within standard value for each adjustment.
11	To adjust another adjustment item, press the [NEXT] or [BACK] key to select the desired adjustment.
12	Press the [RETURN] key to return to the timing adjustment menu screen.

6. Image read point adjustment

Adjust the image read point.

Select the [2. Timing adj.] in the 36 mode menu screen, then the timing adjustment screen will appear.

Select the [6. Read point adj.] on this screen, then the centering adjustment screen will appear.

Step	Operation procedure
1	Enter the 36 mode.
2	**[36 mode menu screen]** Press the [2. Timing adj.] key.
3	**[Timing adjustment menu screen]** Press the [6. Read point adj.] key.
4	**[Image read point adjustment screen]** Press the [COPY] key.
5	**[Basic screen]** Set the new pyramid chart on the original glass and select A3 or 11 x 17 size paper, then press the Start print button to make a test copy.
6	Make a comparison between original image and test copy image. Then check the image read point. Standard value: 1.0 mm
7	Press the # button while pressing the ∗ button to return to the image read point adjustment screen.
8	**[Image read point adjustment screen]** If the image read point is different from the standard value, enter a value from the numeric keys, then press the [SET] key to store the adjustment value. Input range: -20 (small) to +20 (large) 1 step = 0.1mm
9	Repeat steps 5 to 9 until the image read point is within standard value.
10	Press the [RETURN] key to return to the timing adjustment menu screen.

7. Resetting standard data

Reset the adjusted set values of timing adjustment to the standard values (factory set data).

Select the [2. Timing adj.] in the 36 mode menu screen, then the timing adjustment menu screen will appear.

Select the [7. Factory default] on this screen, then the resetting standard data screen will appear.

This adjustment can reset the following item adjusted set values to the standard values (factory default data). These can be selected by pressing the [NEXT] or [BACK] key.

- Factory default --- magnification drum clock adjustment
- Factory default --- Restart timing adjustment
- Factory default --- Paper feed loop amount adjustment
- Factory default --- Leading edge original erasure adjustment
- Factory default --- Centering adjustment
- Factory default --- Original read point adjustment

Step	Operation procedure
1	Enter the 36 mode.
2	**[36 mode menu screen]** Press the [2. Timing adj.] key.
3	**[Timing adjustment menu screen]** Press the [7. Factory default] key.
4	**[Resetting standard data screen]** Press the [NEXT] key until the desired item appears in the message display area.
5	Press the [YES] key to reset the set values to the standard values that have been selected. Press the [NO] or [RETURN] key, then the set values are not reset and return to timing adjustment menu screen.
6	To reset another adjustment item, repeat steps 4 to 5.
7	Press the [RETURN] key to return to the timing adjustment menu screen.

[4] Running test mode

Select the [3. Running mode] in the 36 mode menu screen, then the running test mode menu sreen will appear.

The following items can be selected:

1. Running mode 1 (Intermittent copy mode)

Running mode 1 is an intermittent copy mode. In this mode, after the set number of copy operations has been completed, the machine goes into the copy ready status, waits 0.5 sec., then starts the same operation again.

2. Running mode 2 (Paperless intermittent copy mode)

Running mode 2 is a paperless intermittent copy mode. It makes copies at roughly the same timing as for a normal copy, without performing paper detection or jam detection. Also, like running mode 1, after the set number of copy operations has been completed, the machine goes into the copy ready status, waits 0.5 sec., then starts the same operation again.

3. Running mode 3 (Paperless mode)

Running mode 3 is a paperless mode. It makes copies at roughly the same timing as for a normal copy, without performing paper detection or jam dection.

4. Running mode 4 (Paperless/endless mode)

Running mode 4 is a paperless/endless mode. It automatically sets the copy quantity to infinity. Also, like running mode 3, it makes copies at roughly the same timing as for a normal copy, without performing paper detection or jam detection.

5. Running mode 5

Running mode 5 is process running mode. It consists of running mode 4 plus an operation consisting of an optics each-time scan and an automatic paper feed tray change.

Step	Operation procedure
1	Enter the 36 mode.
2	**[36 mode menu screen]** Press the [3. Running mode] key.
3	**[Running test mode menu screen]** Press the key according to the desired running mode. (Mode 1 to Mode 5)
4	**[Basic screen]** Press the Start print button.
5	After checking the copy operation, press the Stop/Clear button to stop copy operation.
6	Press the # button while pressing the ∗ button to return to the running mode menu screen.
7	To perform another running test mode, repeat steps 3 to 6.
8	Press the [RETURN] key to return to 36 mode menu screen.

[5] Test pattern output

Carry out the test at the time of continuous copy operation.

Select the [4. Test pattern] in the 36 mode menu screen, then the test pattern output screen will appear.

Note: Do not operate pattern numbers that are not particularly specified.

No.1	Overall halftone
No.2 No.49	Gray scale pattern
No.11	Writing system check
No.16	Linearity evaluation pattern

Step	Operation procedure
1	Enter the 36 mode.
2	**[36 mode menu screen]** Press the [4. Test pattern] key.
3	**[Test pattern output screen]** Enter a pattern number to be output from numeric key.
4	Press the [SET] key. Press the [COPY] key.
5	**[Basic screen]** Press the Start print button to output a test pattern.
6	Press the # button while pressing the ∗ button to return to the test pattern output screen.
7	To output a different test pattern, repeat steps 3 to 6.
8	Press the [RETURN] key to return to the timing adjustment menu screen.

No. 1	Overall halftone

[Check Items]

- When the density is set to 70 (halftone)
  If white stripes, black stripes, or uneven density can be seen, locate abnormality in either scanner system or printer system.
- When the density is set to 0 (white)
  If the test pattern is fogged, locate abnormality in either scanner system or printer system.
- When the density is set to 255 (black)
  If the density is light, locate abnormality in either scanner system or printer system.

* For information about setting the density, refer to “[6] Test pattern density adjustment” below.

Test Pattern

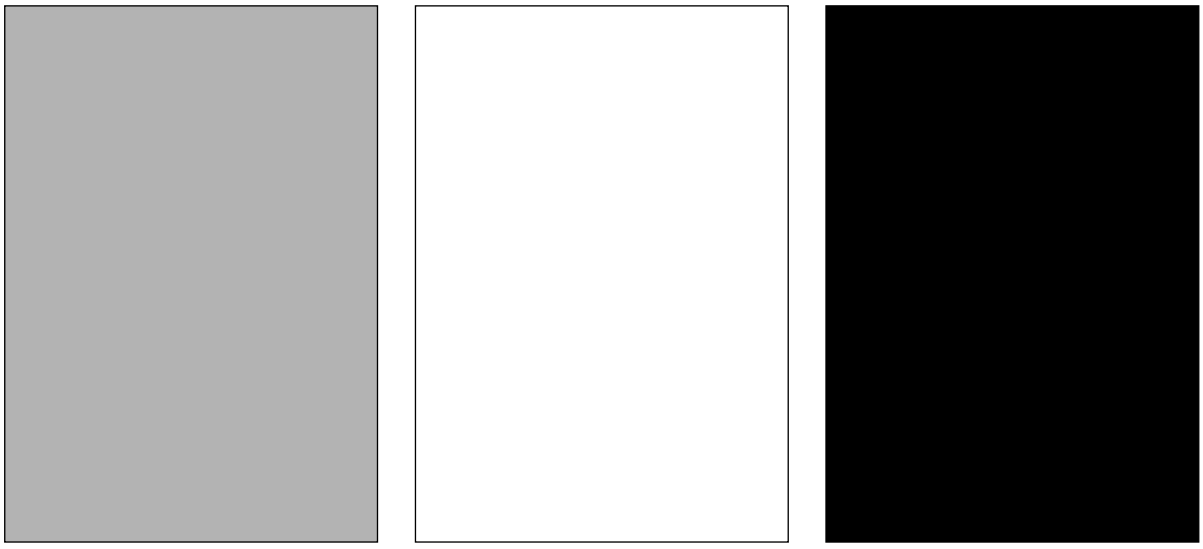

No. 11	Beam misalignment check

[Check Items]

Check the writing system abnormality (condition of resolution, reproducibility of independence point and so on).

Test Pattern

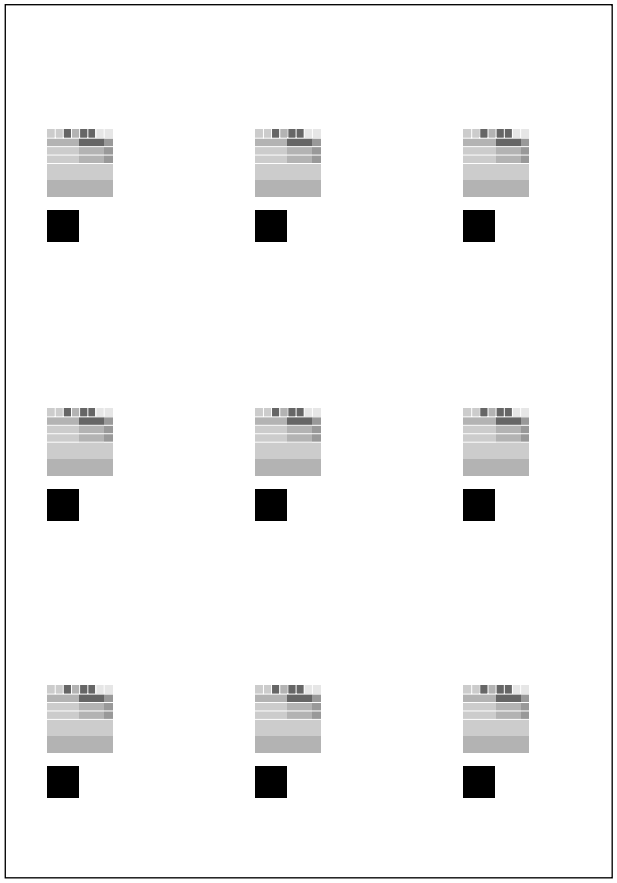

No. 16	Linearity evaluation pattern

[Check Items]

Judge from this test pattern which of the scanner system and the printer system is abnormal. Items that can be checked include horizontal magnification, vartical magnification, tilt image, and leading edge timing of the printer system. If the copy image is defective despite no abnormality being visible on the test pattern, the scanner system is defective.

Test Pattern

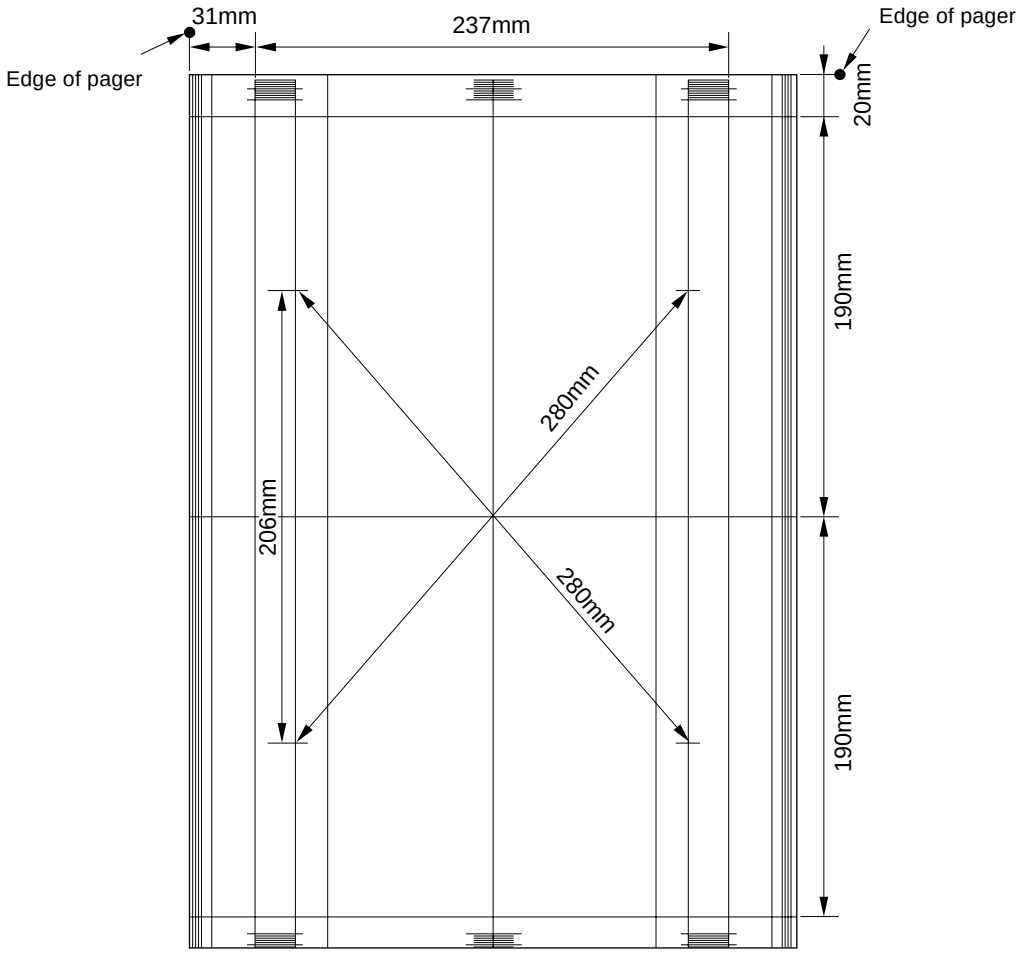

[6] Test pattern density adjustment

Density of respective patterns is adjusted in the following procedure.

Select the [5. Density Adj.] in the 36 mode menu screen, then the print density adjustment menu screen will appear.

Density adjustment menu

1. Test pattern density adjustment

1. Test pattern density adjustment

Adjustment of the density of the test pattern.

Select the [5. Density Adj.] in the 36 mode menu screen, then the print density adjustment menu screen will appear.

Select the [1. Print density adj. (1)] in the print density adjustment menu screen, then the print density adjustment screen will appear.

Step	Operation procedure
1	Enter the 36 mode.
2	**[36 mode menu screen]** Press the [5. Density adj.] key.
3	**[Print density adjustment menu screen]** Press the [1. Print density adj. (1)] Key.
4	**[Print density adjustment screen]** Press the key according to the desired test pattern to be adjusted. (No.01, No.06, No.12 and No.17)
5	Enter a desired density by a numeric value from the numeric keys, then press the [SET] key. Input range : 000 (light) to +255 (dark).
6	Press the [COPY] key.
7	**[Basic screen]** Press the start print button to output a test pattern.
8	Check the density of the output test pattern.
9	Press the # button while pressing the ∗ button to return to the print density adjustment screen.
10	To adjust another test pattern, repeat steps 4 to 9.
11	Press the [RETURN] key to return to point density adjustment menu screen.

[7] Image quality adjustment

This function adjusts the image quality adjustment.

(1) Select the [6. Image quality adj.] in the 36 mode menu screen, then the image quality adjustment screen will appear.

Image quality adjustment menu

1. RADF scan density adj.

(2) Press the key according to the item to be adjusted. The selected adjustment screen will appear.

(3) Press the [START] key on each screen.

(4) To end the adjustment, press the [RETURN] key to the Image quality adjustment menu screen.

1. RADF Scanning density adjustment

When the slit glass is replaced, adjust the density when reading the original with the RADF.

Note 1: The mechanical adjustment, optical adjustment and electrical adjustment of the scanner are completed.

Note 2: Make sure that the slit glass is cleaned.

Note 3: Make sure that the white chart is not dirty or folded.

Step	Operation procedure
1	Enter the 36 mode.
2	**[36 mode menu screen]** Press the [6. Image quality adj.] key.
3	**[Print density adjustment menu screen]** Press the [2. RADF Scan density adj.] key.
4	**[RADF Scanning density adjustment screen]** Set the white chart on the RADF (Note 1).
5	Press the [START] key.
6	Check that "Completed" appears in the message display area.
7	If "ERROR" appears in the message display area, then repeat steps 4 and 5 (Note 2).
8	Press the [RETURN] key to return to the Print density adjustment menu screen.

Note 1: Be sure to set the white chart orientation to the orientation of A4. It will not be adjusted correctly in the orientation of A4R.

Note 2: If “ERROR” is displayed repeatedly, there is a possibility of a defect in the adjustment of the scanner machine, optics, or electric-related parts.

[8] List print

Select the [7. List Print] from the 36 Mode Menu Screen to display the List Print Menu Screen.

You can select following menu options from this screen.

1. Test pattern.
2. Font pattern.
3. Memory dump list.
4. Management list.
5. Adjustment list.

Note: Don't try to touch a mode not mentioned.

1. Test pattern

This option is used to output a grid pattern consisted of line width of 2 dots and line-to-line space of 500 dots. From this pattern, you can check the write system for normal performance.

2. Font pattern

This option outputs the font list built in the engine.

3. Memory dump list

This option is used to dump out data (in hex and ASCII format) after the address specified in ERDH memory (this list is referenced for troubleshooting).

4. Management list

This option outputs the machine status, counter information and history of jam.

5. Adjustment list

This option outputs a list of current adjusting values in the 25/36 mode.

Step	Operation procedure
1	Enter the 36 mode.
2	**[36 mode menu screen]** Press the [7. List print] key.
3	**[List print menu screen]** Press the key corresponding to the desired menu option.
4	**[List print screen]** When outputting the memory dump list, specify the start and end addresses (Note 1).
5	Press the [Copy] key.
6	**[Basic screen]** Press the [START] button to output the list.
7	Press the # button while depressing the ∗ button to return to the List Print Screen.
8	When outputting another list, repeat above steps 3 to 7.
9	Press the [RETURN] key to return to the 36 Mode Menu Screen.

Note 1: The memory dump list is dump output in both the hex and ASCII format.

[9] Counter clear

The counter must be cleared whenever the drum or fixing unit is replaced.

Select the "8. Counter Clear" from the 36 Mode Menu Screen to display the Counter Clear Screen.

Following menu options are available from this screen.

1. Drum relevant counter (drum counter).
2. Fixing counter (fixing web counter).

Step	Operation procedure
1	Enter the 36 mode.
2	**[36 mode menu screen]** Press the [8. Counter clear] key.
3	**[Counter clear screen]** Press the key corresponding to the item to be cleared.
4	Message in the message display area will confirm if you really want to clear the item. Press the [YES] key. When the item is cleared, the Counter Clear Screen will be restored.
5	When clearing another counter, repeat above steps 3 and 4.
6	Press the [RETURN] key to return to the 36 Mode Menu Screen.

[10] Adjustment of RADF

Adjustments of RADF are performed in the following procedures. For the adjustment, A3 or 11 x 17 copy paper should be used.

(1) Select the [9. RADF adj.] from the 36 Mode Menu Screen to display the RADF adjustment menu.

RADF adjustment menu

1. Vertical/horizontal magnification (Drum clock) adjustment.
2. Restart timing adjustment.
3. Paper feed loop amount adjustment.
4. Centering adjustment.
5. RADF scanning density adjustment.

(2) Press the key corresponding to the desired item. The screen corresponding to the selected item will appear.

(3) Using the [Next] and [BACK] keys, select the item to be adjusted. The selected item will be indicated in the message display area on the screen.

(4) Enter a desired value from the numeric keys on the screen, then press the [SET] key to validate your entry.

(5) Turn on the Basic Screen by pressing the [COPY] key, then make a test copy from the Basic Screen.

(6) Press the # button while depressing the ∗ button to return to the desired adjustment screen.

(7) If the output does not conform to the standard, enter a desired value again from the numeric keys, then make a test copy. When the output satisfies the standard, proceed to adjustment of the next item.

(8) When the adjustment is complete, press the [RETURN] key to return to the Timing Adjustment Screen.

1. Adjustment of horizontal/vertical magnification (Drum clock)

(1) Select the [9. RADF adj.] from the 36 Mode Menu Screen to display the RADF Adjustment Menu. Select [1. Drum clock adj.] from this screen and the Magnification Screen will appear.

Using the [NEXT] and [BACK] will allow you to select the following items.

- RADF horizontal/vertical magnification adjustment (50%, single side).
- RADF horizontal/vertical magnification adjustment (100%, single side).
- RADF horizontal/vertical magnification adjustment (200%, single side).
- RADF horizontal/vertical magnification adjustment (400%, single side).
- RADF horizontal/vertical magnification adjustment (50%, double side).
- RADF horizontal/vertical magnification adjustment (100%, double side).
- RADF horizontal/vertical magnification adjustment (200%, double side).
- RADF horizontal/vertical magnification adjustment (400%, double side).

(2) Enter a desired value from the numeric keys on the screen, then press the [SET] key to validate your entry.

(3) Turn on the Basic Screen by pressing the [COPY] key, then make a test copy from the Basic Screen.

(4) Press the # button while depressing the ∗ button to return to the Magnification Adjustment Screen.

(5) If the output does not conform to the standard, enter a desired value again from the numeric keys, then make a test copy.

When the output satisfies the standard, proceed to adjustment of the next item.

Step	Operation procedure
1	Enter the 36 mode.
2	**[36 mode menu screen]** Press the [9. RADF adj.] key.
3	**[RADF adjustment menu screen]** Press the [1. Drum clock adj.] key.
4	**[Magnification adjustment screen]** Press the [NEXT] key until the desired adjustment item appears.
5	Press the [COPY] key.
6	**[Basic screen]** Set the ADF adjustment chart on RADF, then select an A3 or 11 x 17 copy paper. Then press the start button to make a copy.
7	Measure vertical magnification of the output. Standard value: ±0.5% maximum (with 1.0 magnification). ±1.0 mm maximum per 200 mm.
8	Press the # button while depressing the ∗ button to return to the Magnification Adjustment Screen.
9	**[Magnification adjustment screen]** If the vertical magnification does not comply with the standard value, enter the value from the numeric keys, then press the [SET] key to validate your entry. Input range: –20 (reduce the magnification) to +20 (increase the magnification) 1 step = 0.1
10	Repeat above steps 5 to 9 until the vertical magnification meets the standard value.
11	You can proceed to adjustment of another item using the [NEXT] and [BACK] keys.
12	Press the [RETURN] key to return to the RADF Adjustment Menu Screen.

Standard value: ±0.5% maximum (in 1.0 magnification)
±1 mm maximum per 200 mm

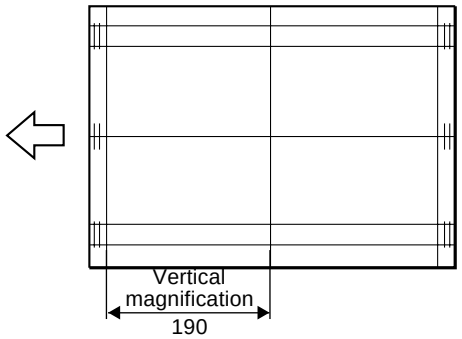

2. Adjustment of restart timing

Use the following procedure to adjust the RADF restart timing.

At the 36 mode menu screen, select [9. RADF adj.] to open the RADF adjustment menu. At the RADF adjustment menu, select [2. Restart timing]. This moves you to the screen you use to adjust the restart timing.

You can use the [NEXT] and [BACK] buttons to select the following adjustments.

- RADF (single side)
- RADF (double side (first side))
- RADF (double side (second side))

Step	Operation procedure
1	Enter the 36 mode.
2	**[36 mode menu screen]** Press the [9. RADF adj.] key.
3	**[RADF adjustment menu screen]** Press the [2. Restart Timing] key.
4	**[Re-start timing adjustment screen]** Press the [NEXT] key until the desired adjustment item appears.
5	Press the [COPY] key.
6	**[Basic screen]** Set the ADF adjustment chart on RADF, then select an A3 or 11 x 17 copy paper. Then press the start button to make a copy. ∗ When RADF (double side (second side)) is selected, make copies from double side - single side mode, and use the second copy for the adjustment.
7	Check the output for the restart timing. Standard value: ±3.0 mm maximum (Life size).
8	Press the # button while depressing the ∗ button to return to the Restart Timing Adjustment Screen.
9	**[Restart timing adjustment screen]** When the restart timing does not comply with the standard value, enter the value from the numeric keys, then press the [SET] key to validate it. Input range: –50 (delays the timing) to +50 (advances the timing) 1 step = 0.1 mm
10	Repeat above steps 5 to 9 until the re-start timing meets the standard value.
11	You can select another item for the adjustment from the [NEXT] and [BACK] keys.
12	Press the [RETURN] key to return to the RADF Adjustment Menu Screen.

3. Paper feed loop adjustment

Adjustment of the RADF loop volume is done in the following procedures.

Select the [9. RADF adj.] from the 36 Mode Menu Screen to display the RADF Adjustment Menu Screen. Select the [3. Paper loop adj.] from this screen to display the Paper Feed Loop Adjustment Screen.

Using the [NEXT] and [BACK] keys, you can select the following item from this screen.

- RADF (single side)

Step	Operation procedure
1	Enter the 36 mode.
2	**[36 mode menu screen]** Press the [9. RADF adj.] key.
3	**[RADF adjustment menu screen]** Press the [3. Paper Loop adj.] key.
4	**[Paper feed loop adjustment screen]** Press the [NEXT] key until the desired item appears in the message display area.
5	Press the [COPY] key.
6	**[Basic screen]** Set the ADF adjustment chart on RADF, then select an A3 or 11 x 17 copy paper. Then press the start button to make a copy.
7	Check paper feed loop volume of the output.
8	Press the # button while depressing the ∗ button to return to the Paper Feed Loop Volume Adjustment Screen.
9	**[Paper feed loop volume adjustment screen]** If the paper feed loop volume is inappropriate, enter a desired value from the numeric keys, then press the [SET] key to validate it. Input range: –10 (decrease) through 00 (standard) up to +10 (increase) 1 step = 0.5 mm
10	Repeat above steps 5 to 9 until an appropriate paper feed loop volume is obtained.
11	You can proceed to adjustment of another item from the [NEXT] and [BACK] keys.
12	Press the [RETURN] key to return to the RADF Adjustment Menu Screen.

4. Centering adjustment

Adjustment of skew of images on RADF in feed direction is done in the following procedures.

Select the [9. RADF adj.] from the 36 Mode Menu Screen to display the Timing Adjustment Menu Screen. Select the [5. Centering adj.] from this screen to display the Centering Adjustment Screen.

You can select the following adjustment from the [NEXT] and [BACK] keys.

- RADF Centering adjustment (single side).
- RADF Centering adjustment (double side (first side)).
- RADF Centering adjustment (double side (second side)).

Step	Operation procedure
1	Enter the 36 mode.
2	**[36 mode menu screen]** Press the [9. RADF adj.] key.
3	**[RADF adjustment menu screen]** Press the [5. Centering adj.] key.
4	**[Centering adjustment screen]** Press the [NEXT] key until the desired item appears in the message display area.
5	Press the [COPY] key.
6	**[Basic screen]** Set the ADF adjustment chart on RADF, then select A3 or 11 x 17 for the copy paper. Then, press the start button to make copies. ∗ When the RADF (double side (second side)) is selected, make copies from double side - single side mode, and use the second for the adjustment.
7	Compare skew of the copy against that of the original. Standard value: ±3 mm maximum.
8	Press the # button while depressing the ∗ button to return to the Centering Adjustment Screen.
9	**[Centering adjustment screen]** If the skew volume does not conform to the standard value, enter a desired value from the numeric keys, then press the [SET] key to validate it. Input range: –74 (in the front side direction of the center line) through 00 (in the back side direction of the center line) up to +74 (increase) 1 step = 0.04 mm
10	Repeat above steps 5 to 9 until the skew meets the standard value.
11	You can proceed to adjustment of another item from the [NEXT] and [BACK] keys.
12	Press the [RETURN] key to return to the RADF Adjustment Menu Screen.

5. RADF scanning density adjustment

Whenever the slit glass on RADF is replaced, its density in reading an original must be adjusted in the following manner.

Note 1: Before starting this operation, every adjustment must be completed for the scanner's mechanical, optical and electric system.

Note 2: Make sure that the slit glass must be cleaned.

Note 3: Make sure that the white chart is not stained or folded.

Step	Operation procedure
1	Enter the 36 mode.
2	**[36 mode menu screen]** Press the [9. RADF adj.] key.
3	**[RADF adjustment menu screen]** Press the [2. RADF Scan density adj.] key.
4	**[RADF scanner density adjustment screen]** Set the white chart on RADF (Note 1).
5	Press the [START] key.
6	Make sure that the message “Completed” is indicated in the message display area.
7	If the message “Error” appears in the message display area, repeat above steps 4 and 5 (Note 2).
8	Press the [RETURN] key to return to the RADF Adjustment Menu Screen.

Note 1: Be sure to set the white chart in A4 direction. If it is set in A4R direction, appropriate adjustment is not available.

Note 2: If the message "Error" recurs, you may suspect inappropriate adjustment done in the scanner's mechanical, optical or electric system, or failure on parts used in these systems.

[11] FNS adjustment

Positional adjustment of the finisher alignment plate is done in the following procedures. This adjustment is required when papers discharged from the finisher are irregular in size.

1. FNS alignment plate adjustment (back side)
2. FNS alignment plate adjustment (front side)

Adjustment is done for each of the following paper sizes.

- 11 x 17 (8.5 x 11)
- A3 (A4)
- B4 (B5)
- 8.5 x 14 (8.5 x 11R, 5.5 x 8.5R)
- A4R (A5)
- B5R
- 5.5 x 8.5R
- A5R
- F4
- 8K
- 16K
- 16KR

Step	Operation procedure
1	Enter the 36 mode.
2	**[36 mode menu screen]** Press the [10. FNS adj.] key.
3	**[FNS adjustment menu screen]** Press the key corresponding to the matching plate to be adjusted.
4	**[FNS matching plate position adjustment screen]** Press the [SET] key until the target paper size of the adjustment is displayed at top of the numeric keys.
5	Enter desired value from the numeric keys on the screen, then press the [SET] key to validate your entry.
6	Press the [COPY] key to display the Basic Screen, then make test copies from this screen.
7	Press the # button while depressing the ∗ button to return to the FNS Adjustment Screen.
8	**[FNS adjustment screen]** When the output does not conform to the standard value, enter an adjusting value from the numeric keys, then press the [SET] key to validate your entry. Input range: –10 to +10 1 step = 0.2 mm
9	When proceeding to adjustment of another paper size, select it from the [NEXT] and [BACK] keys, then implement necessary adjustment repeating above steps 4 to 7. When the adjustment is complete, press the
10	[RETURN] key to return to the FNS Adjustment Menu Screen.

Management list

P.1

[Description Items]

- Serial number setup.
- ROM version indication.
  Version of flash ROMs.
- Copy count (data collection 1).
  Total count and count during the specified period by mode.
- Counter check.
- Copy count by paper size (data collection 2).
  Total count and count during the specified period by paper size.

Management list

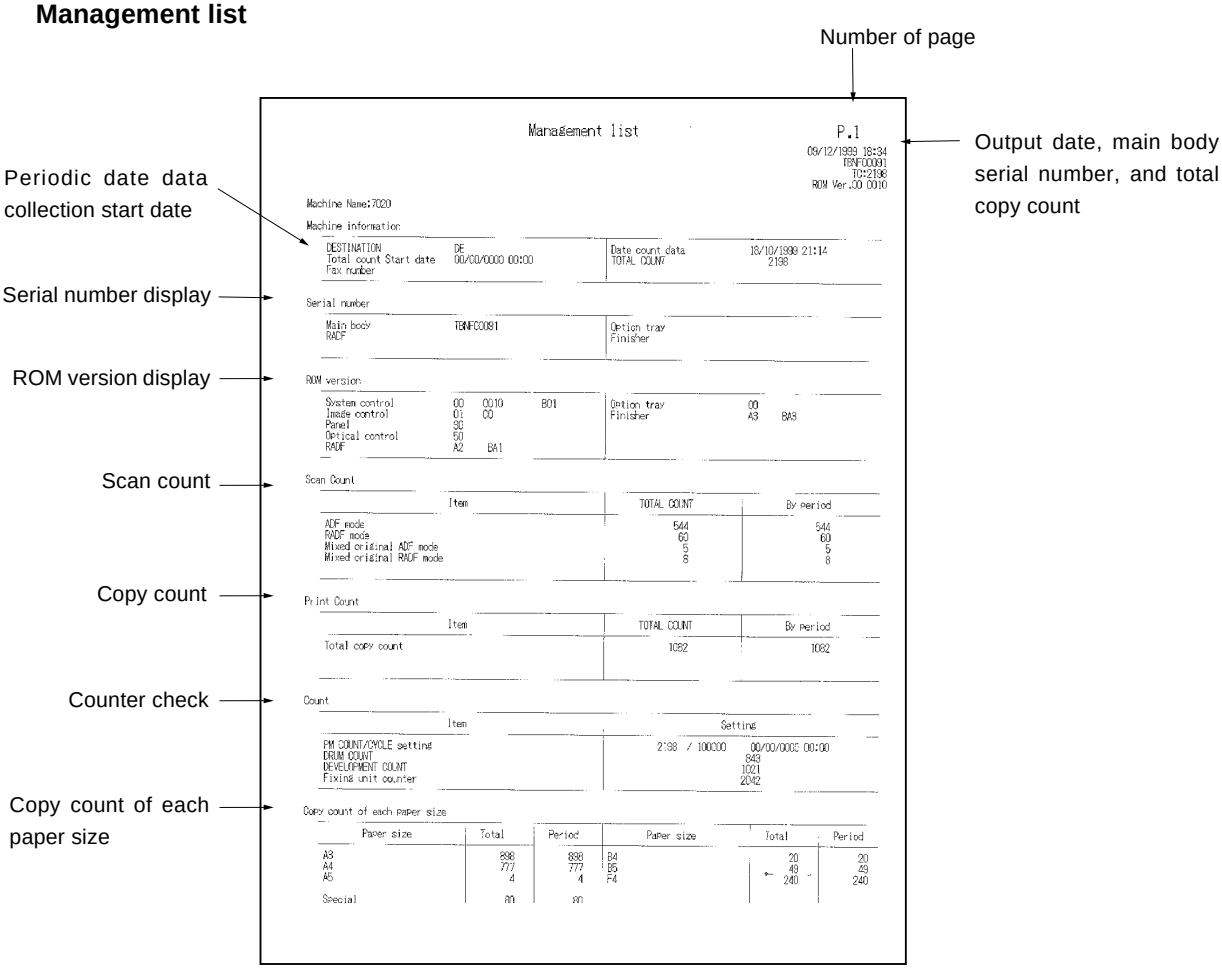

Management list

P.2

[Description Items]

- F code count (data collection 4).
  Total count and count during the specified periods.
- JAM code count (data collection 2).
  Total count and count during the specified period.

Management list

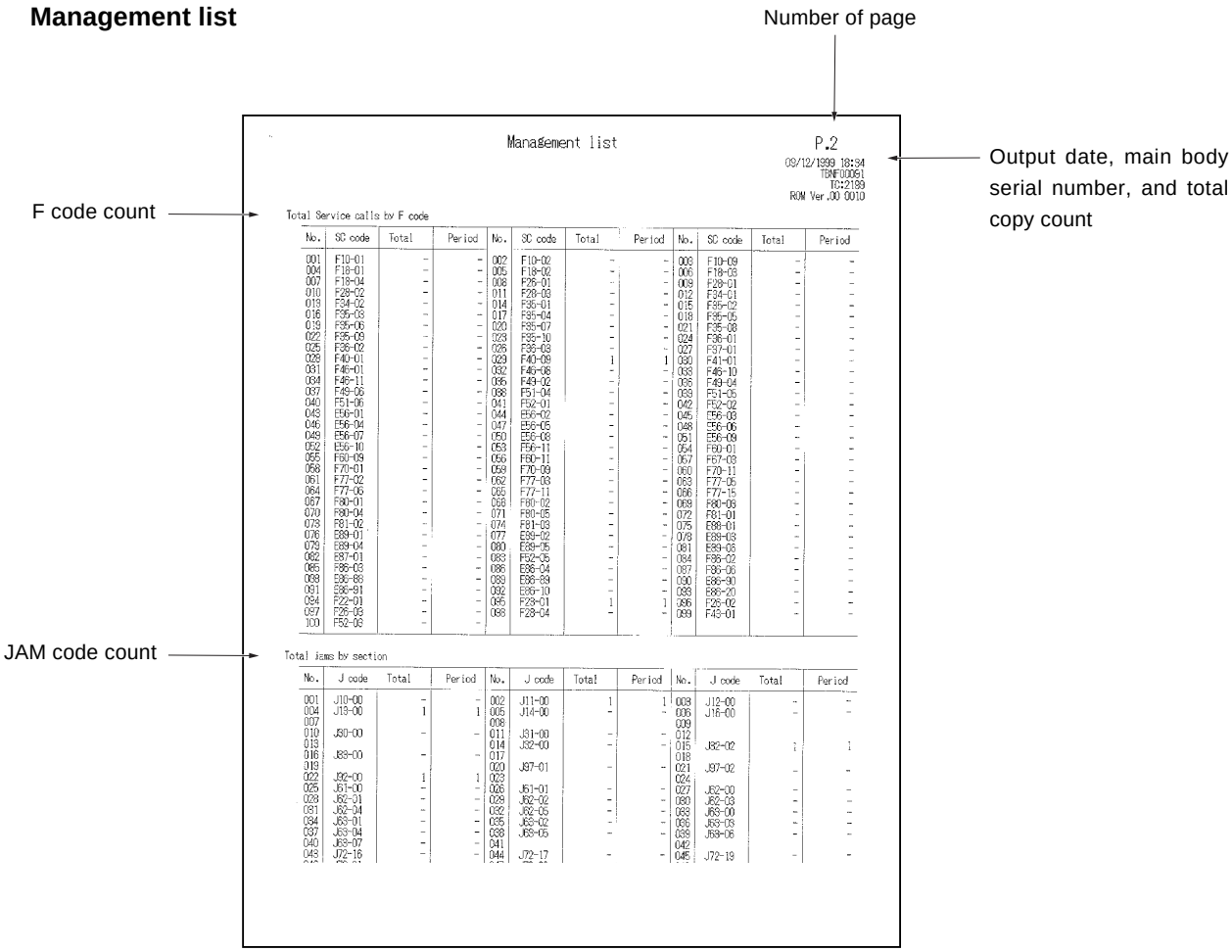

Management list

P.3

[Description Items]

- Latest SC (F/E code) history.

  List information about the last 50 service calls (F/E codes). For each call, indicates the following: date and time of occurrence, error code, total copy count, and ROM version.

Management list

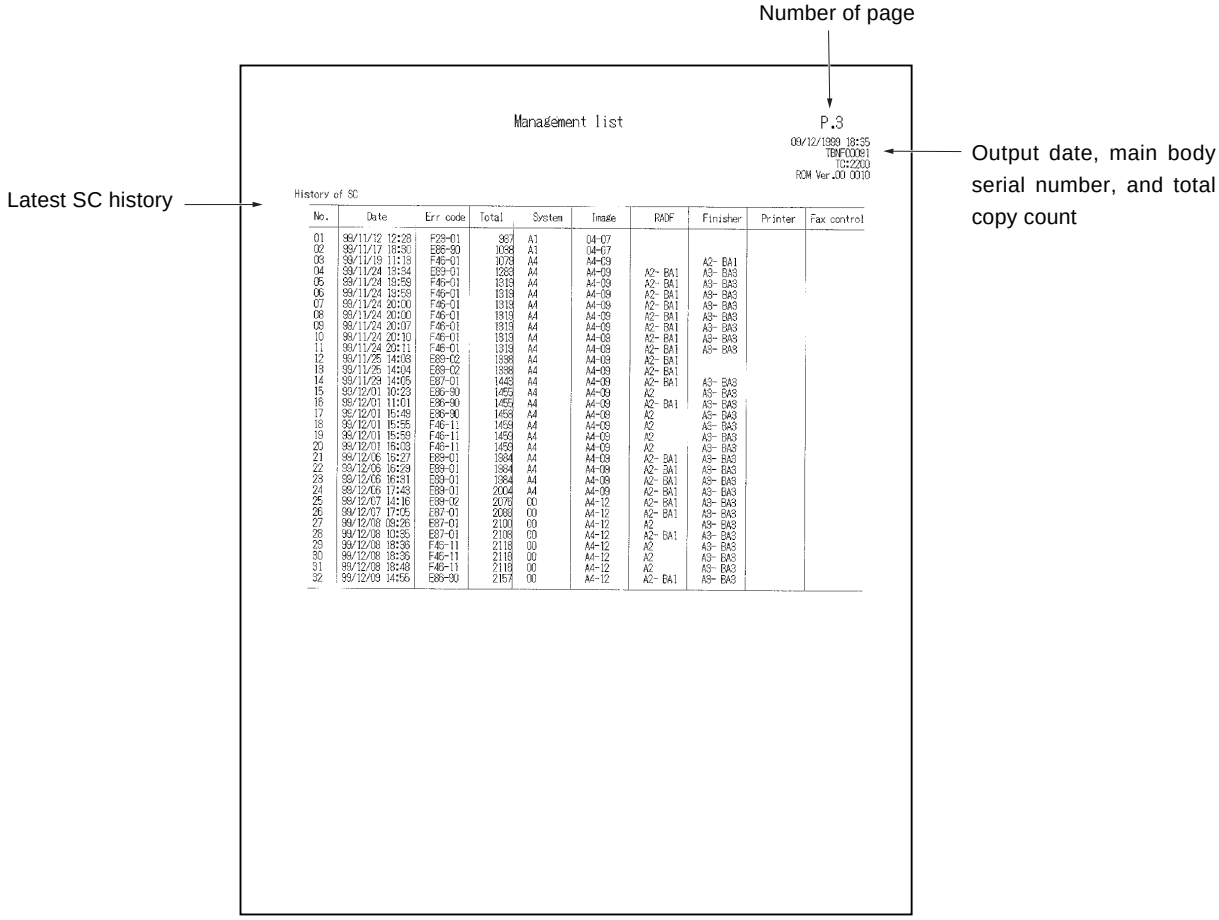

No.	Date	Err code	Total	System	Image	RADF	Finisher	Printer	Fax control
01	98/11/12 12:28	F29-01	967	A1	04-07				
02	98/11/17 18:50	E86-90	1038	A1	04-07				
03	98/11/19 11:15	F46-01	1078	A4	A4-09		A2- BA1		
04	98/11/24 19:54	E89-01	1283	A4	A4-09	A2- BA1	A3- BA3		
05	98/11/24 19:59	F46-01	1313	A4	A4-09	A2- BA1	A3- BA3		
06	98/11/24 19:59	F46-01	1318	A4	A4-09	A2- BA1	A3- BA3		
07	98/11/24 20:00	F46-01	1313	A4	A4-09	A2- BA1	A3- BA3		
08	98/11/24 20:00	F46-01	1313	A4	A4-09	A2- BA1	A3- BA3		
09	98/11/24 20:07	F46-01	1313	A4	A4-09	A2- BA1	A3- BA3		
10	98/11/24 20:10	F46-01	1313	A4	A4-09	A2- BA1	A3- BA3		
11	98/11/24 20:11	F46-01	1313	A4	A4-09	A2- BA1	A3- BA3		
12	98/11/25 14:03	E89-02	1898	A4	A4-09	A2- BA1			
13	98/11/25 14:04	E89-02	1898	A4	A4-09	A2- BA1			
14	98/11/29 14:05	E87-01	1443	A4	A4-09	A2- BA1	A3- BA3		
15	98/12/01 10:23	E86-90	1459	A4	A4-09	A2	A3- BA3		
16	98/12/01 11:01	E86-90	1459	A4	A4-09	A2- BA1	A3- BA3		
17	98/12/01 15:49	E86-90	1459	A4	A4-09	A2	A3- BA3		
18	98/12/01 15:55	F46-11	1459	A4	A4-09	A2	A3- BA3		
19	98/12/01 15:59	F46-11	1459	A4	A4-09	A2	A3- BA3		
20	98/12/01 16:03	F46-11	1459	A4	A4-09	A2	A3- BA3		
21	98/12/06 16:27	E89-01	1984	A4	A4-09	A2- BA1	A3- BA3		
22	98/12/06 16:29	E89-01	1984	A4	A4-09	A2- BA1	A3- BA3		
23	98/12/06 16:31	E89-01	1984	A4	A4-09	A2- BA1	A3- BA3		
24	98/12/06 17:43	E89-01	2004	A4	A4-09	A2- BA1	A3- BA3		
25	98/12/07 14:16	E89-02	2078	00	A4-12	A2- BA1	A3- BA3		
26	98/12/07 17:05	E87-01	2088	00	A4-12	A2- BA1	A3- BA3		
27	98/12/08 09:26	E87-01	2100	00	A4-12	A2	A3- BA3		
28	98/12/08 10:35	E87-01	2106	00	A4-12	A2- BA1	A3- BA3		
29	98/12/08 18:36	F46-11	2118	00	A4-12	A2	A3- BA3		
30	98/12/08 18:36	F46-11	2118	00	A4-12	A2	A3- BA3		
31	98/12/08 18:48	F46-11	2118	00	A4-12	A2	A3- BA3		
32	98/12/09 14:56	E86-90	2157	00	A4-12	A2- BA1	A3- BA3		

Management list

P.4

[Description Items]

- Latest JAM history.

  The list 100 jams are listed with the information on the date occurred, respective JAM codes, total copy count, and tray and paper sizes.

Management list

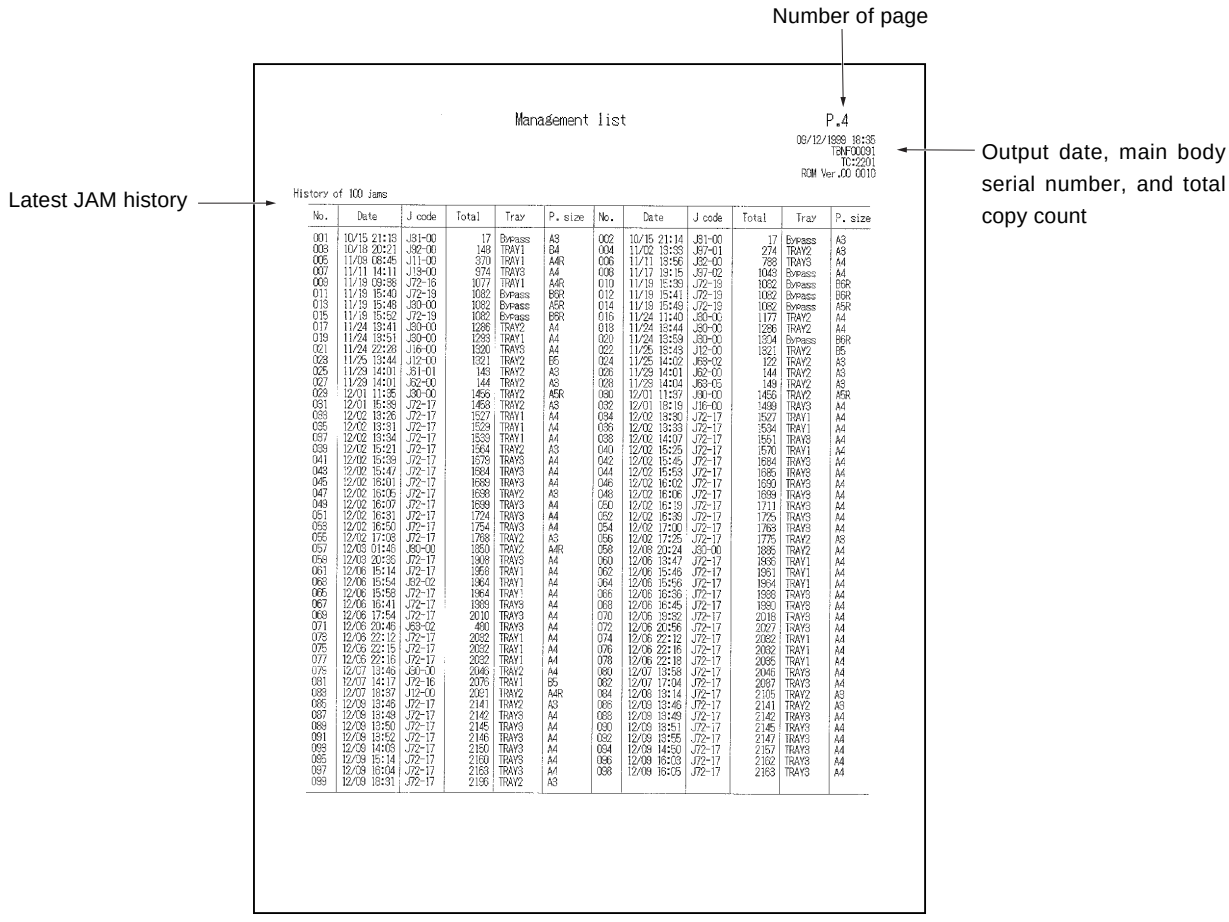

No.	Date	J code	Total	Tray	P. size	No.	Date	J code	Total	Tray	P. size
001	10/15 21:13	J81-00	17	Bypass	A3	002	10/15 21:14	J81-00	17	Bypass	A3
003	10/18 20:21	J92-00	148	TRAY1	B4	004	11/02 13:33	J67-01	274	TRAY2	A3
005	11/09 08:45	J11-00	370	TRAY1	A4R	006	11/11 13:56	J82-03	768	TRAY3	A4
007	11/11 14:11	J13-00	974	TRAY3	A4	008	11/17 13:15	J67-02	1043	Bypass	A4
009	11/19 09:36	J72-16	1077	TRAY1	A4R	010	11/19 15:39	J72-19	1062	Bypass	B6R
011	11/19 15:40	J72-19	1082	Bypass	B6R	012	11/19 15:41	J72-19	1082	Bypass	B6R
013	11/19 15:46	J80-00	1082	Bypass	A5R	014	11/19 15:49	J72-19	1082	Bypass	A5R
015	11/19 15:52	J72-19	1082	Bypass	B6R	016	11/24 11:40	J80-00	1177	TRAY2	A4
017	11/24 13:41	J80-00	1286	TRAY2	A4	018	11/24 13:44	J80-00	1286	TRAY2	A4
019	11/24 13:51	J80-00	1293	TRAY1	A4	020	11/24 13:59	J80-00	1304	Bypass	B6R
021	11/24 22:28	J16-00	1320	TRAY3	A4	022	11/25 13:43	J12-00	1321	TRAY2	B5
023	11/25 13:44	J12-00	1321	TRAY2	B5	024	11/25 14:02	J68-02	122	TRAY2	A3
025	11/29 14:01	J61-01	143	TRAY2	A3	026	11/29 14:01	J62-00	144	TRAY2	A3
027	11/29 14:01	J62-00	144	TRAY2	A3	028	11/29 14:04	J63-05	149	TRAY2	A3
029	12/01 11:35	J90-00	1456	TRAY2	A5R	030	12/01 11:37	J80-00	1456	TRAY2	A5R
031	12/01 15:39	J72-17	1458	TRAY2	A3	032	12/01 18:19	J16-00	1499	TRAY3	A4
033	12/02 13:26	J72-17	1527	TRAY1	A4	034	12/02 13:30	J72-17	1527	TRAY1	A4
035	12/02 13:31	J72-17	1529	TRAY1	A4	036	12/02 13:33	J72-17	1534	TRAY1	A4
037	12/02 13:34	J72-17	1539	TRAY1	A4	038	12/02 14:07	J72-17	1561	TRAY3	A4
039	12/02 15:21	J72-17	1564	TRAY2	A3	040	12/02 15:25	J72-17	1570	TRAY1	A4
041	12/02 15:39	J72-17	1578	TRAY3	A4	042	12/02 15:45	J72-17	1584	TRAY3	A4
043	12/02 15:47	J72-17	1584	TRAY3	A4	044	12/02 15:53	J72-17	1685	TRAY3	A4
045	12/02 16:01	J72-17	1593	TRAY3	A4	046	12/02 16:02	J72-17	1690	TRAY3	A4
047	12/02 16:05	J72-17	1698	TRAY2	A3	048	12/02 16:06	J72-17	1699	TRAY3	A4
049	12/02 16:07	J72-17	1699	TRAY3	A4	050	12/02 16:19	J72-17	1711	TRAY3	A4
051	12/02 16:31	J72-17	1724	TRAY3	A4	052	12/02 16:38	J72-17	1725	TRAY3	A4
053	12/02 16:50	J72-17	1754	TRAY3	A4	054	12/02 17:00	J72-17	1768	TRAY3	A4
055	12/02 17:06	J72-17	1768	TRAY2	A3	056	12/02 17:25	J72-17	1775	TRAY2	A3
057	12/03 01:45	J80-00	1850	TRAY2	A4R	058	12/03 20:24	J80-00	1885	TRAY2	A4
059	12/03 20:38	J72-17	1908	TRAY3	A4	060	12/06 13:47	J72-17	1936	TRAY1	A4
061	12/06 15:14	J72-17	1958	TRAY1	A4	062	12/06 15:46	J72-17	1961	TRAY1	A4
063	12/06 15:54	J62-02	1960	TRAY1	A4	064	12/06 15:56	J72-17	1964	TRAY1	A4
065	12/06 15:58	J72-17	1964	TRAY1	A4	066	12/06 16:36	J72-17	1986	TRAY3	A4
067	12/06 16:41	J72-17	1989	TRAY3	A4	068	12/06 16:45	J72-17	1990	TRAY3	A4
069	12/06 17:54	J72-17	2010	TRAY3	A4	070	12/06 19:32	J72-17	2016	TRAY3	A4
071	12/06 20:46	J63-02	490	TRAY3	A4	072	12/06 20:56	J72-17	2027	TRAY3	A4
073	12/06 22:12	J72-17	2032	TRAY1	A4	074	12/06 22:12	J72-17	2032	TRAY1	A4
075	12/06 22:15	J72-17	2032	TRAY1	A4	076	12/06 22:16	J72-17	2032	TRAY1	A4
077	12/06 22:16	J72-17	2032	TRAY1	A4	078	12/06 22:18	J72-17	2035	TRAY1	A4
079	12/07 13:46	J90-00	2046	TRAY2	A4	080	12/07 13:58	J72-17	2046	TRAY3	A4
081	12/07 14:17	J72-16	2076	TRAY1	B5	082	12/07 17:04	J72-17	2097	TRAY3	A4
083	12/07 18:37	J72-00	2081	TRAY2	A4R	084	12/08 13:14	J72-17	2105	TRAY2	A3
085	12/08 13:46	J72-17	2141	TRAY2	A3	086	12/08 13:46	J72-17	2141	TRAY2	A3
087	12/08 13:49	J72-17	2142	TRAY3	A4	088	12/08 13:49	J72-17	2142	TRAY3	A4
089	12/08 13:50	J72-17	2145	TRAY3	A4	090	12/08 13:51	J72-17	2145	TRAY3	A4
091	12/08 13:52	J72-17	2146	TRAY3	A4	092	12/08 13:55	J72-17	2147	TRAY3	A4
093	12/08 14:03	J72-17	2150	TRAY3	A4	094	12/08 14:50	J72-17	2157	TRAY3	A4
095	12/09 15:14	J72-17	2160	TRAY3	A4	096	12/09 16:03	J72-17	2162	TRAY3	A4
097	12/09 16:04	J72-17	2163	TRAY3	A4	098	12/09 16:05	J72-17	2163	TRAY3	A4
099	12/09 18:31	J72-17	2196	TRAY2	A3						

Management list	P.5

[Description Items]

- Copy count by arbitrarily replacement parts.
  Part name, part number, copy count and limit count of each parts.

Management list

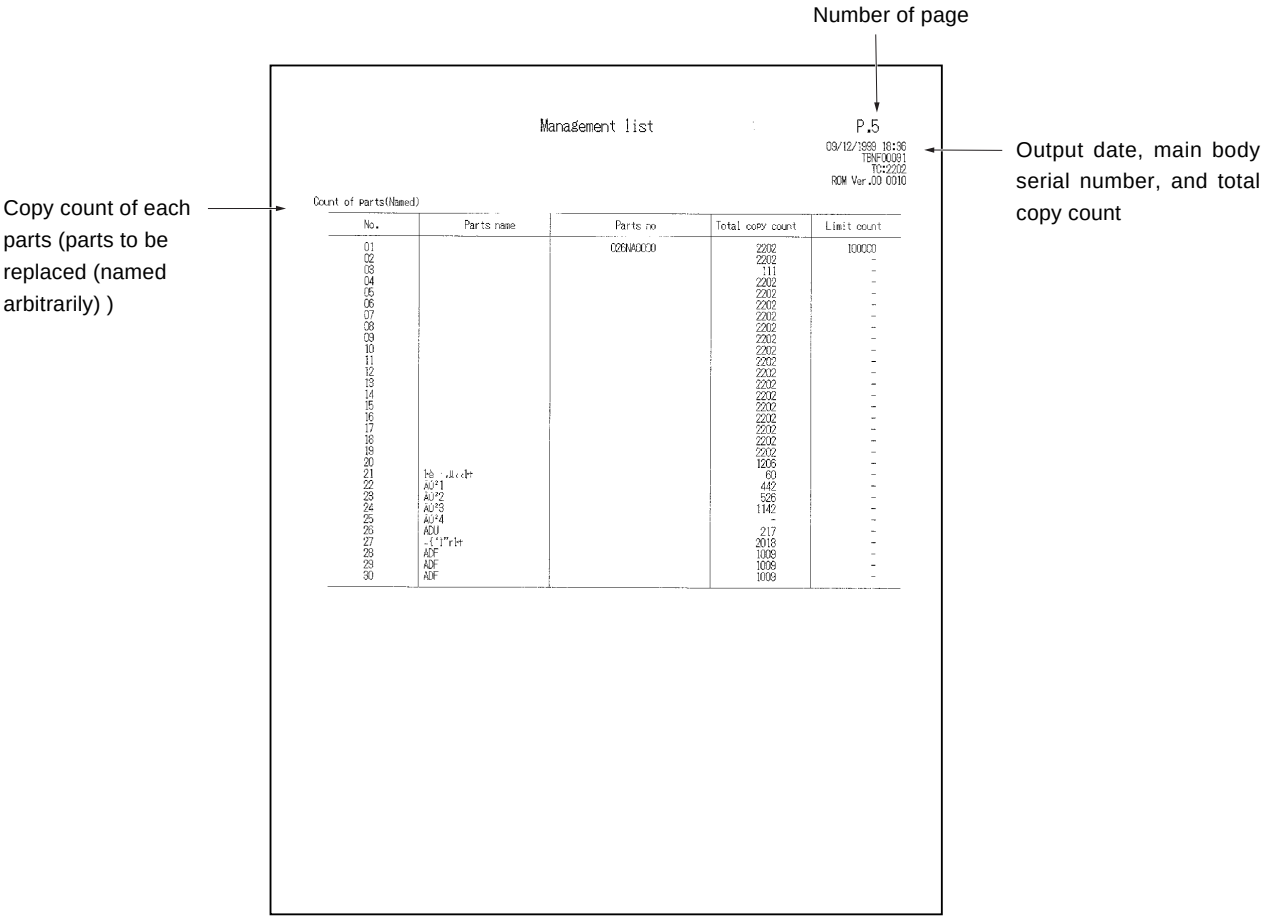

Management list	P.6

[Description Items]

- Copy count by fixed replacement part.
  Part name, part number, copy count and limit count of each unit.

Management list

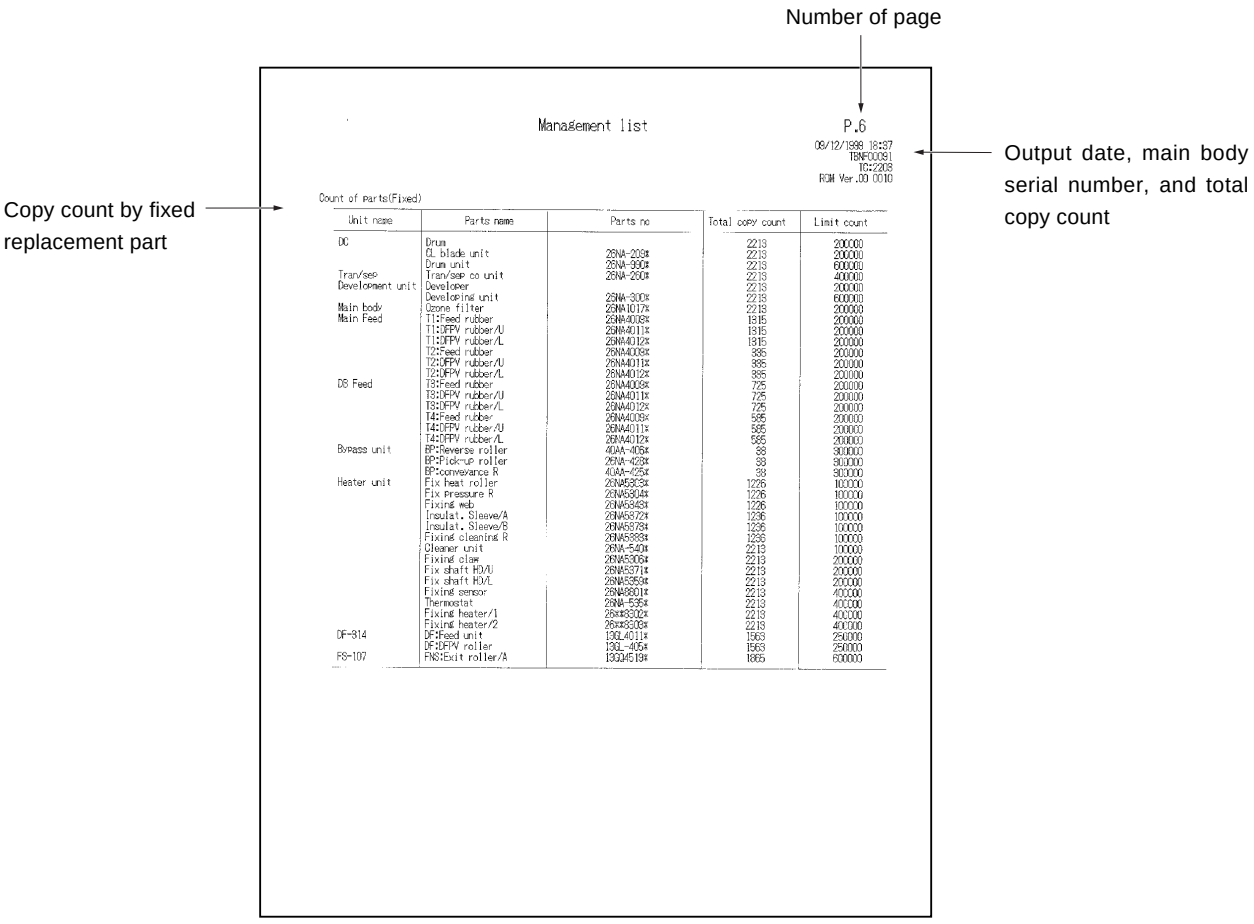

Management list	P.7

[Description Items]

- Count by the copy mode (data collection 3).

Management list

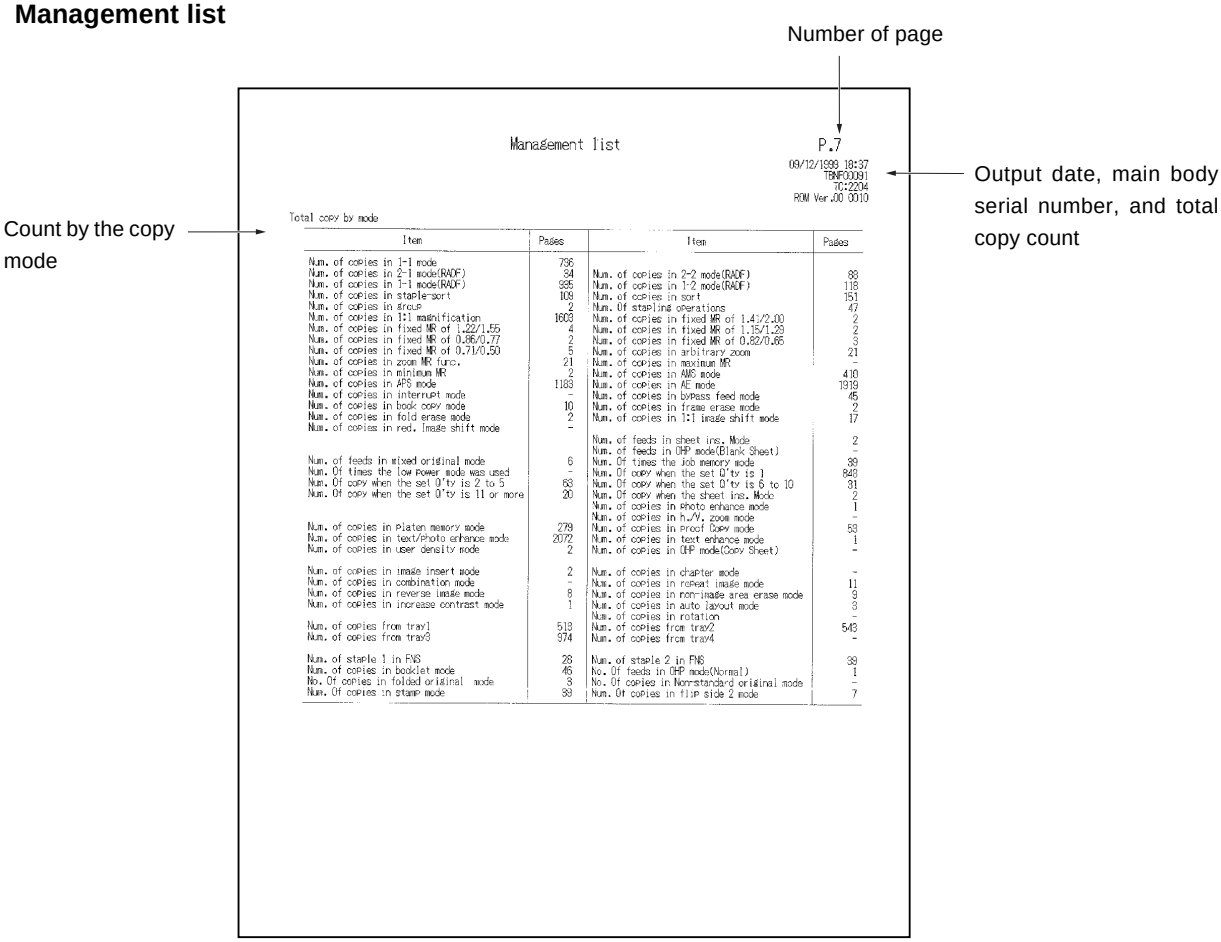

Item	Pages	Item	Pages
Num. of copies in 1-1 mode	796		
Num. of copies in 2-1 mode(RADF)	54	Num. of copies in 2-2 mode(RADF)	88
Num. of copies in 1-1 mode(RADF)	935	Num. of copies in 1-2 mode(RADF)	118
Num. of copies in staple-sort	109	Num. of copies in sort	151
Num. of copies in group	2	Num. Of stapling operations	47
Num. of copies in 1:1 magnification	1603	Num. of copies in fixed MR of 1.41/2.00	2
Num. of copies in fixed MR of 1.22/1.55	4	Num. of copies in fixed MR of 1.15/1.29	2
Num. of copies in fixed MR of 0.86/0.77	2	Num. of copies in fixed MR of 0.82/0.65	3
Num. of copies in fixed MR of 0.71/0.50	5	Num. of copies in arbitrary zoom	21
Num. of copies in zoom MR func.	21	Num. of copies in maximum MR	-
Num. of copies in minimum MR	2	Num. of copies in AMS mode	410
Num. of copies in APS mode	1183	Num. of copies in AE mode	1919
Num. of copies in interrupt mode	-	Num. of copies in bypass feed mode	45
Num. of copies in book copy mode	10	Num. of copies in frame erase mode	2
Num. of copies in fold erase mode	2	Num. of copies in 1:1 image shift mode	17
Num. of copies in red. image shift mode	-		
		Num. of feeds in sheet ins. Mode	2
		Num. of feeds in OHP mode(Blank Sheet)	-
Num. of feeds in mixed original mode	6	Num. Of times the job memory mode	39
Num. Of times the low Power mode was used	-	Num. Of copy when the set Q'ty is 1	849
Num. Of copy when the set Q'ty is 2 to 5	63	Num. Of copy when the set Q'ty is 6 to 10	81
Num. Of copy when the set Q'ty is 11 or more	20	Num. Of copy when the sheet ins. Mode	2
		Num. of copies in photo enhance mode	1
		Num. of copies in h./V. zoom mode	-
Num. of copies in Platen memory mode	279	Num. of copies in Proof Copy mode	53
Num. of copies in text/photo enhance mode	2072	Num. of copies in text enhance mode	1
Num. of copies in user density mode	2	Num. of copies in OHP mode(Copy Sheet)	-
Num. of copies in image insert mode	2	Num. of copies in chapter mode	-
Num. of copies in combination mode	-	Num. of copies in repeat image mode	11
Num. of copies in reverse image mode	8	Num. of copies in non-image area erase mode	9
Num. of copies in increase contrast mode	1	Num. of copies in auto layout mode	3
		Num. of copies in rotation	-
Num. of copies from tray1	518	Num. of copies from tray2	548
Num. of copies from tray3	974	Num. of copies from tray4	-
Num. of staple 1 in FNS	28	Num. of staple 2 in FNS	39
Num. of copies in booklet mode	46	No. Of feeds in OHP mode(Normal)	1
No. Of copies in folded original mode	3	No. Of copies in Non-standard original mode	-
Num. Of copies in stamp mode	88	Num. Of copies in flip side 2 mode	7

Management list	P.8

[Description Items]

- Adjusting values (36 mode).
  Default values and setting values of the High voltage adjustment, vertical/horizontal magnification adjustment, restart adjustment, paper feed loop amount adjustment, leading edge original erasure adjustment, centering adjustment and image read point adjustment.

* Adjustment list Page1

Management list

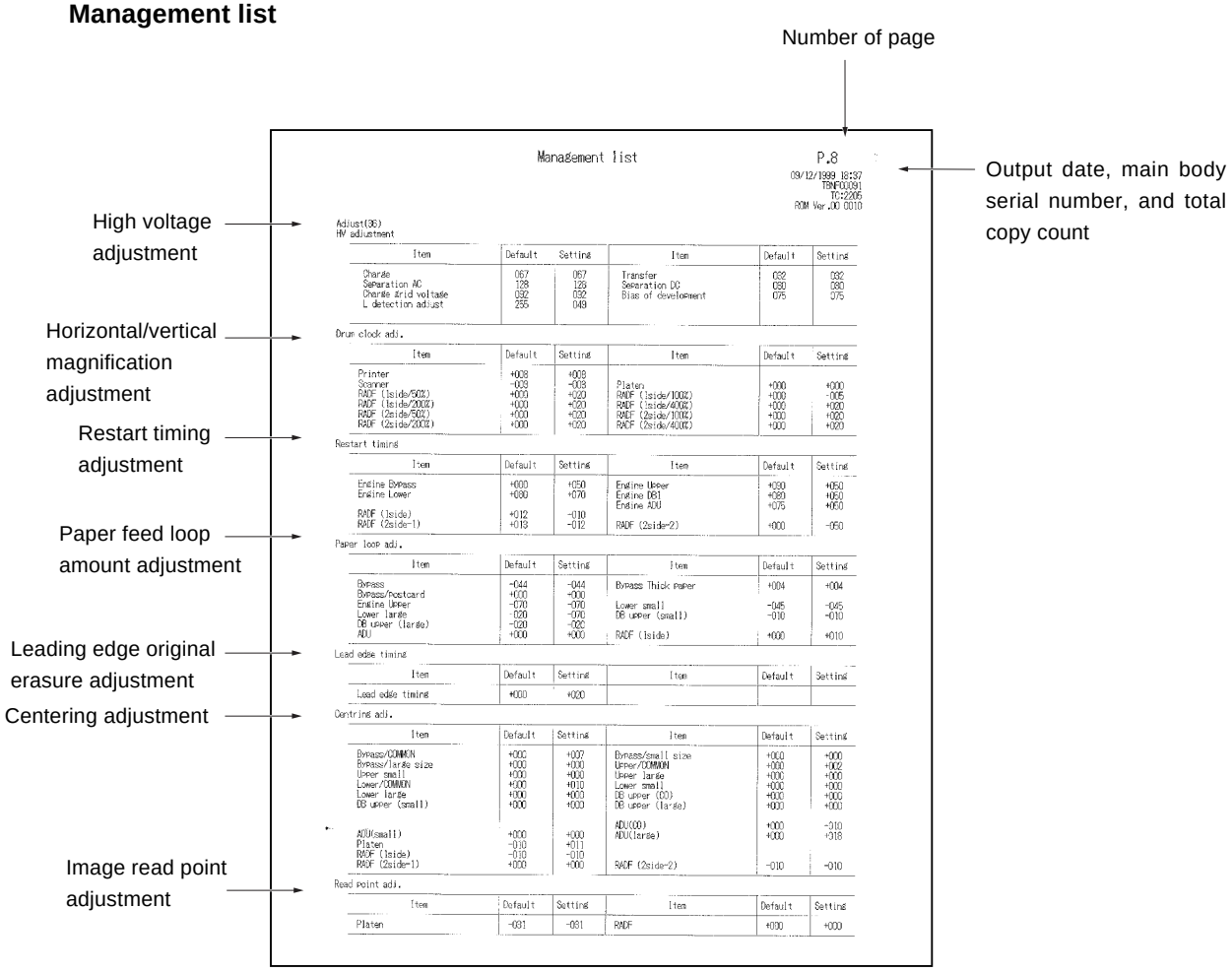

Management list	P.9

[Description Items]

- FNS alignment plate adjustment (back side)
- FNS alignment plate adjustment (front side)

* Adjustment list page 2.

Management list

Number of page

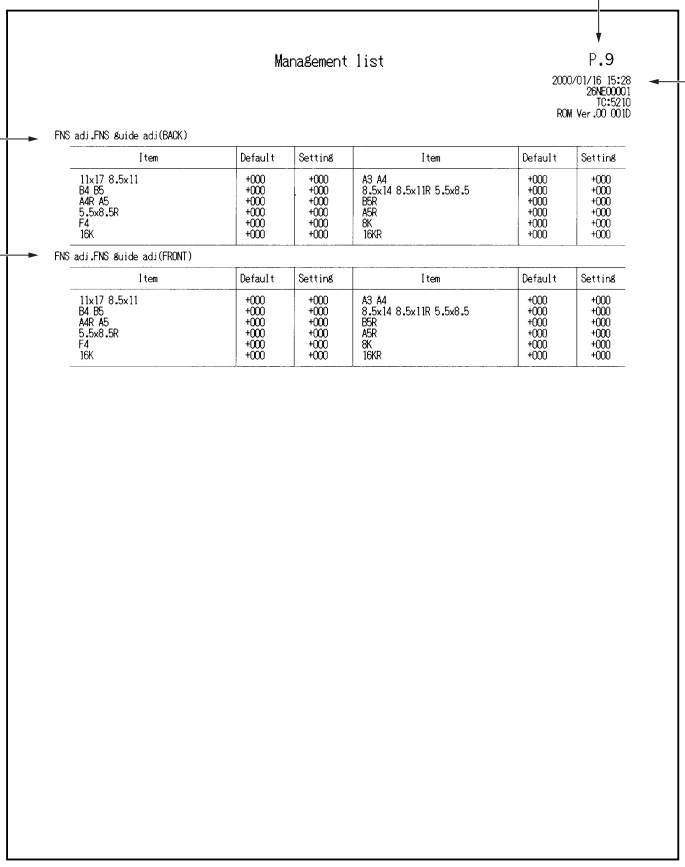

Management list

P.9

2000/01/16 15:28
2GNE00001
TC:5210
ROM Ver.00 001D

FNS adj.FNS guide adj(BACK)

Item	Default	Setting	Item	Default	Setting
11x17 8.5x11	+000	+000	A3 A4	+000	+000
B4 B5	+000	+000	8.5x14 8.5x11R 5.5x8.5	+000	+000
A4R A5	+000	+000	B5R	+000	+000
5.5x8.5R	+000	+000	A5R	+000	+000
F4	+000	+000	8K	+000	+000
16K	+000	+000	16KR	+000	+000

FNS adj.FNS guide adj(FRONT)

Item	Default	Setting	Item	Default	Setting
11x17 8.5x11	+000	+000	A3 A4	+000	+000
B4 B5	+000	+000	8.5x14 8.5x11R 5.5x8.5	+000	+000
A4R A5	+000	+000	B5R	+000	+000
5.5x8.5R	+000	+000	A5R	+000	+000
F4	+000	+000	8K	+000	+000
16K	+000	+000	16KR	+000	+000

Output date, main body serial number, and total copy count

FNS alignment plate adjustment (back side)

FNS alignment plate adjustment (front side)

Management list

P.10

[Description Items]

- Adjusting values. (25 mode)
  Values to be selected for respective adjustment items.
- 25 mode software DIP SW setting.
  Default values and current setting value of each DIP SW.

* Adjustment list page 3.

Management list

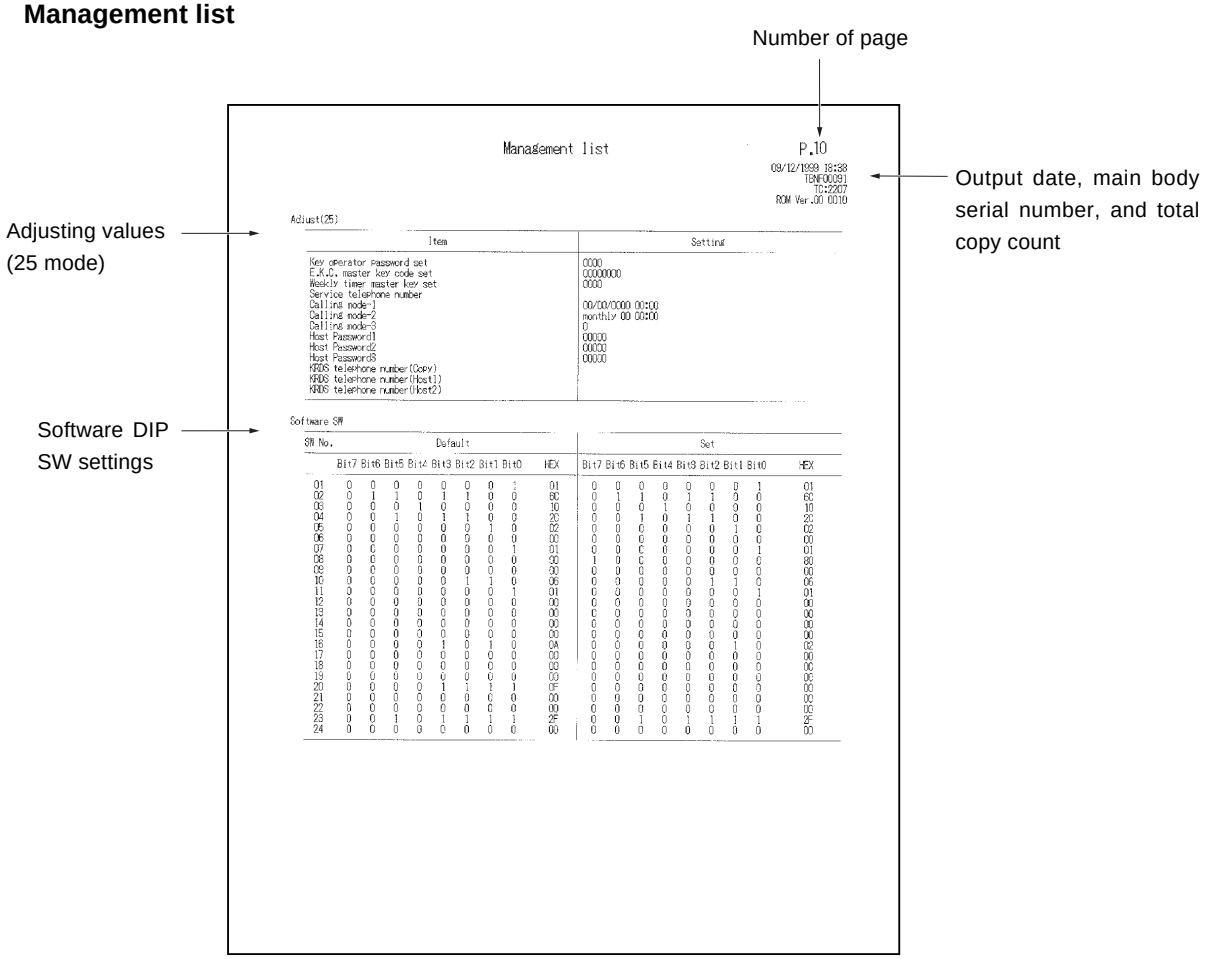

Management list

P.11

[Description Items]

- KRDS software DIP SW setting.
  Default values and current setting value of each DIP SW.

* Adjustment list page 4.

Management list

Number of page

KRDS software DIP SW setting

Output date, main body serial number, and total copy count

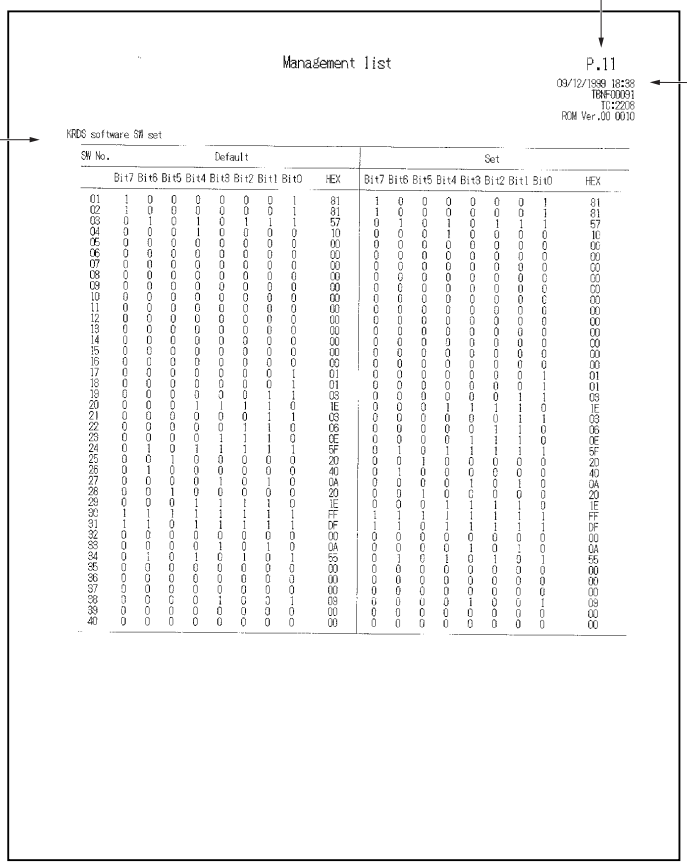
Management list

P.11

09/12/1999 18:38
TRNF-00091
TC=2038
ROM Ver.00 0010

KRDS software SW set

SW No.	Default									Set								
	Bit7	Bit6	Bit5	Bit4	Bit3	Bit2	Bit1	Bit0	HEX	Bit7	Bit6	Bit5	Bit4	Bit3	Bit2	Bit1	Bit0	HEX
01	1	0	0	0	0	0	0	1	81	1	0	0	0	0	0	0	1	81
02	1	0	0	0	0	0	0	1	81	1	0	0	0	0	0	0	1	81
03	0	1	0	1	0	1	1	1	57	0	1	0	1	0	1	1	1	57
04	0	0	0	1	0	0	0	0	10	0	0	0	1	0	0	0	0	10
05	0	0	0	0	0	0	0	0	00	0	0	0	0	0	0	0	0	00
06	0	0	0	0	0	0	0	0	00	0	0	0	0	0	0	0	0	00
07	0	0	0	0	0	0	0	0	00	0	0	0	0	0	0	0	0	00
08	0	0	0	0	0	0	0	0	00	0	0	0	0	0	0	0	0	00
09	0	0	0	0	0	0	0	0	00	0	0	0	0	0	0	0	0	00
10	0	0	0	0	0	0	0	0	00	0	0	0	0	0	0	0	0	00
11	0	0	0	0	0	0	0	0	00	0	0	0	0	0	0	0	0	00
12	0	0	0	0	0	0	0	0	00	0	0	0	0	0	0	0	0	00
13	0	0	0	0	0	0	0	0	00	0	0	0	0	0	0	0	0	00
14	0	0	0	0	0	0	0	0	00	0	0	0	0	0	0	0	0	00
15	0	0	0	0	0	0	0	0	00	0	0	0	0	0	0	0	0	00
16	0	0	0	0	0	0	0	0	00	0	0	0	0	0	0	0	0	00
17	0	0	0	0	0	0	0	1	01	0	0	0	0	0	0	0	1	01
18	0	0	0	0	0	0	0	1	01	0	0	0	0	0	0	0	1	01
19	0	0	0	0	0	0	1	1	03	0	0	0	0	0	0	1	1	03
20	0	0	0	1	1	1	1	0	1E	0	0	0	1	1	1	1	0	1E
21	0	0	0	0	0	0	1	1	03	0	0	0	0	0	0	1	1	03
22	0	0	0	0	0	0	1	0	06	0	0	0	0	0	1	1	0	06
23	0	0	0	0	1	1	1	0	0E	0	0	0	0	1	1	1	0	0E
24	0	1	0	1	1	1	1	1	5F	0	1	0	1	1	1	1	1	5F
25	0	0	1	0	0	0	0	0	20	0	0	1	0	0	0	0	0	20
26	0	1	0	0	0	0	0	0	40	0	1	0	0	0	0	0	0	40
27	0	0	0	0	1	0	1	0	0A	0	0	0	0	1	0	1	0	0A
28	0	0	1	0	0	0	0	0	20	0	0	1	0	0	0	0	0	20
29	0	0	0	1	1	1	1	0	1E	0	0	0	1	1	1	1	0	1E
30	1	1	1	1	1	1	1	1	FF	1	1	1	1	1	1	1	1	FF
31	1	1	0	1	1	1	1	1	DF	1	1	0	1	1	1	1	1	DF
32	0	0	0	0	0	0	0	0	00	0	0	0	0	0	0	0	0	00
33	0	0	0	0	1	0	1	0	0A	0	0	0	0	1	0	1	0	0A
34	0	1	0	1	0	1	0	1	55	0	1	0	1	0	1	0	1	55
35	0	0	0	0	0	0	0	0	00	0	0	0	0	0	0	0	0	00
36	0	0	0	0	0	0	0	0	00	0	0	0	0	0	0	0	0	00
37	0	0	0	0	0	0	0	0	00	0	0	0	0	0	0	0	0	00
38	0	0	0	0	0	1	0	1	09	0	0	0	0	0	1	0	1	09
39	0	0	0	0	0	0	0	0	00	0	0	0	0	0	0	0	0	00
40	0	0	0	0	0	0	0	0	00	0	0	0	0	0	0	0	0	00

47 MODE

[1] 47 mode setting method

1. 47 Mode

This mode provides self-diagnostic functions (input/output check function) to check and adjustment the various signals and loads.

Also, 47 mode has a multi mode — it is possible to check the multiple input/output using one input/output check code.

2. Operation method (to start 47 mode)

(1) 47 Mode startup

a. Turn the SW2 (sub power) OFF when the SW1 (main power) remain ON.

b. Turn the SW2 (sub power) ON while holding down 4 and 7 of the numeric keys. The 47 Mode Menu Screen will appear.

This is the 47 mode in which the normal copy operation becomes disabled.

[47 mode menu screen]



[47 mode message display area]

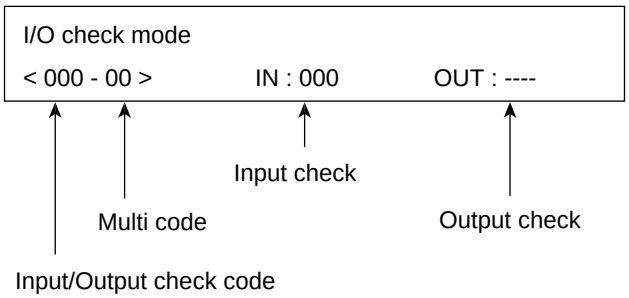

(2) Input check method

a. Using the numeric keys, enter the code input for the desired signal (sensor, etc.) to check.

b. When using the multi mode, press the ∗ button and enter the multi code according to the desired input check item (signal) with the numeric keys.

Step	Operation procedure
1	Enter the 47 mode.
2	**[47 mode menu screen]** Using the numeric keys, enter the input check code (Note 1).
3	When using the multi mode, press the ∗ button.
4	Using the numeric keys, enter the multi code (Note 1).
5	Input check result will appear in the input check result display area.
6	To check other signal input check, repeat steps 2 to 5.

Note 1: Refer to "[5] Input check list".

(3) Output check method

a. Using the numeric keys, enter the output check code for the desired output load to check.

b. When using the multi mode, press the ∗ button and enter the multi code according to the desired output check item (load).

c. Press the [START] button to perform the output check.

d. To end the output check, press the [STOP/CLEAR] button.

Step	Operation procedure
1	Enter the 47 mode.
2	**[47 mode menu screen]** Using the numeric keys, enter the output check code (Note 2).
3	When using the multi mode, press the ∗ button (Note 2).
4	Using the numeric keys, enter the multi code (Note 2).
5	Press the [START] button to perform the output check.
6	To end the output check, press the [STOP/CLEAR] button.
7	To make another output check, repeat steps 2 to 6.

Note 2: Refer to “[6] Output check list”.

(4) Exiting the 47 mode

The end the 47 mode, turn the SW2 (sub power) OFF.

[2] Initial setting in the field

Each adjustment data is totally returned to the data value when the machine is dilivered from the factory.

Step	Operation procedure
1	Enter the 47 mode.
2	**[47 mode menu screen]** Press "93" by means of the numeric keys. Check that "093-00" appears in the message display area.
3	Press the [START] button. Settings (adjustment) data is returned to the data value when the machine is delivered from the factory.
4	To end the setting, press the [STOP/CLEAR] button.
5	To end the 47 mode, turn the SW2 (sub power) OFF.

[3] RADF original size detection adjustment

This adjustment is done when RADF fails to correctly detect size of an original.

Step	Operation procedure
1	Enter the 47 mode.
2	**[47 mode menu screen]** Press [69] by means of the numeric keys. Check that "069-00" appears in the message display area.
3	Set an original of A5R on RADF, then press the [START] button.
4	Press the [STOP/CLEAR] button to end the operation.
5	Press the ∗ button.
6	Enter [1] from the the numeric keys. Make sure that "069-01" is indicated in the message display area.
7	Set an A3 size original on RADF, then press the [START] button.
8	To end the adjustment, press the [STOP/CLEAR] button.
9	To end the 47 mode, turn the SW2 (sub power) OFF.

[4] Electronic RDH memory check

Perform this adjustment when memory is expanded.

Step	Operation procedure
1	Enter the 47 mode.
2	**[47 mode screen]** Press [197] by means of the numeric keys. Check that "197-00" appears in the message display area.
3	Press the [START] button.
4	The "OUT:" entry in the message display area indicates the total size of the electronic-RDH memory (inclusive of the 32MB provided as standard). • 32MB (standard) : 0032 • 32MB + 64MB : 0096 • 32MB + 64MB + 64MB : 0160 • 32MB + 128MB : 0160 • 32MB + 128MB + 128MB : 0288
5	Press the [STOP/CLEAR] button.
6	**[47 mode screen]** Enter a value of [198] using the numeric keys. Be sure that "198-00" appears in the message display area.
7	Press the [START] button. The system begins executing a memory check.
8	The "OUT:" entry in the message area displays "NOW": while checking is in progress, then displays "OK" if all memory is operating correctly.
9	To end the check, press the [STOP/CLEAR] button.
10	To end the 47 mode, turn the SW2 (sub power) OFF.

[5] Input check list

Classification	Name	Code	Multi code	Symbol	Display	
					OFF	ON
Analog signal	Drum temperature signal	00			0 to 255	
	Toner control data 0	01			0 to 255	
	Toner control data 1	02			0 to 255	
	Fixing temperature sensor 0	03		TH1	0 to 255	
	Fixing temperature sensor 1	04		TH2	0 to 255	
	L detection signal	05		TDS	0 to 255	
	Humidity sensor signal	06		HUM1	0 to 255	
Paper feed	No paper detection signal	10	1: Main body upper tray	PS8	No paper	Paper
			2: Main body lower tray	PS11		
			3: DB upper tray	PS103		
			4: DB lower tray	PS108		
			5: By-pass	PS13		
	Tray upper limit detection signal	12	1: Main body upper tray	PS7	Upper limit not reached	Upper limit
			2: Main body lower tray	PS10		
			3: DB upper tray	PS102		
			4: DB lower tray	PS107		
	Tray detection	13	1: Main body upper tray	PS12	Tray is not provided	Tray is provided
			2: Main body lower tray	PS9		
			3: DB upper tray	PS101		
			4: DB lower tray	PS106		
	Paper size signal	16	1: Main body upper tray	PFDB (upper)	0 to 9 (Note 1)	
			2: Main body lower tray	PFDB (lower)		
			3: DB upper tray	SDB1		
			4: DB lower tray	SDB2		

Note 1:

For U.S.A.

Tray \ Display	1	2	3	4	5	6	7	8	9	0
1	B5R	B4	A5R	A4	A4R	F4	5.5 x 8.5	8.5 x 11	8.5 x 11R	8.5 x 14
2, 3, 4	A5R	A4	A4R	A3	F4	5.5 x 8.5	8.5 x 11	8.5 x 11R	8.5 x 14	11 x 17

For Europe

Tray \ Display	1	2	3	4	5	6	7	8	9	0
1	B5	B4	A5R	A4	A4R	F4	5.5 x 8.5	8.5 x 11	8.5 x 11R	8.5 x 14
2, 3, 4	B5	B4	A5R	A4	A4R	A3	F4	8.5 x 11	8.5 x 11R	11 x 17

Common

Tray \ Display	1	2	3	4	5	6	7	8	9	0
LCT (3)	A4	A4R	8.5 x 11	8.5 x 11R	B5R	B5	A4	A4R	8.5 x 11	8.5 x 11R

Classification	Name	Code	Multi code	Symbol	Display	
					OFF	ON
Paper feed/conveyance	Paper feed sensor signal	20	1: Registration sensor	PS1	No paper	Paper
			3: Jam detect sensor (DB upper tray)	PS104	No paper	Paper
			4: Jam detect sensor (DB lower tray)	PS105	No paper	Paper
	Paper exit sensor signal	22	1: Fixing exit sensor	PS2	No paper	Paper
			2: Paper exit sensor	PS3	No paper	Paper
	Interlock	23	1: Right side door	SW3	Close	Open
Optics	Optics sensor signal	40	1: Optics home position PS	PS14	In home position	Not in home position
			2: APS timing PS	PS15	Close	Open
			3: APS sensor 1	PS17	No original	Original is provided
			4: APS sensor 2	PS18	No original	Original is provided
Intrinsic functions	Check of serial communications	50	1: RADF control board	DFCB		
			2: Finisher control board	FSCB		
			3: Scanner drive board	SCDB		
			4: Printer drive board	PRDB		
	Toner supply periphery	57	1: Toner level detector signal	TLD	No toner	Toner is provided
			2: Toner bottle sensor signal	PS5	No bottle	Bottle is provided
RADF	RADF input	60	00: No original detect PS	PS301	No paper	Paper is provided
			01: RADF open/close detect PS	PS304	Closed	Open
			02: Cover open/close detect PS	PS305	Closed	Open
			03: Original resistration PS	PS311	No paper	Paper is provided
			04: Original feed PS	PS312	No paper	Paper is provided
			05: Original exit PS	PS303	No paper	Paper is provided
			06: Original detect PS 1	PS306	No paper	Paper is provided
			07: Original detect PS 2	PS307	No paper	Paper is provided
			09: Size detect VR	VR301	0 to 255	
FNS	FNS input	70	1: Pressure sensor (level)			
			2: Paper exit detect PS	PS703	Paper is provided	No paper
			3: Paper pressure sensor (H.P.)	PS701	Pressure applied	No pressure
			4: Tray full stack detect PS	PS704	Full	Normal
			6: Paper entrance detect PS	PS702	Paper is provided	No paper
			7: Stapler HP detect PS	PS712	H.P.	Not in H.P.
			8: No staple detect PS	PS713	Staples are provided	No staples
			9: Stapler ready detect PS	PS714	Ready	Not ready
			10: Shutter PS	PS705	Open	Close
			11: Tray upper limit detect PS	PS711	Upper limit	Not at upper limit
			12: Tray lower limit detect PS	PS706	Lower limit	Not at lower limit
			13: No paper detect PS	PS707	Paper is provided	No paper
			14: Stapler unit HP detect PS	PS708	H.P.	Not in H.P.
			15: Alignment plate detect PS (rear)	PS709	H.P.	Not in H.P.
			16: Alignment plate detect PS (front)	PS710	H.P.	Not in H.P.
ADU	ADU PS	80		PS4	No paper	Paper is provided

[6] Output check list

Classifi-cation	Name	Code	Multi code	Symbol	Remarks
Analog signal	Exposure lamp	00		L1	
	Toner supply motor, developing sleeve, main motor, botl SD	01		M1, M3 M4, SD5	
	Charging	02		HV	
	Transfer	03		HV	
	Separation (AC)	04		HV	
	Transfer + Separation (AC + DC)	05		HV	
	Separation (DC)	06		HV	
	Grid	07		HV	
	Dmax/γ LED	08		HV	
	Guide plate	10		HV	
	Bias	11		HV	
Counter clear	Service counter clear	15	1: Service counter clear (Clears service related counter values.)		
			2: Reuse counter clear (for development)		
			10: EKC data block clear		
			11: Job memory data block clear		
			12: Arbitrary replacement parts data block clear		
			13: Coded dialing data block clear (for fax)		
			14: One touch data block clear (for fax)		
			15: Group data block clear (for fax)		
			98: Initialize KRDS non volatile area		
Paper feed	Dmax level adjustment	18			
	1st paper feed SD	20	1: Main body upper tray	SD1	
			2: Main body lower tray	SD2	
			3: By-pass	SD3	
			4: DB upper tray	SD101	
			5: DB lower tray	SD102	
	Paper feed motor	21	1: Paper feed motor	M9	
			2: DB drive motor	M100	
	Tray lift up motor	23	1: Main body upper tray	M7	
			2: Main body lower tray	M8	
			3: DB upper tray	M101	
			4: DB lower tray	M102	
	Registration clutch	25		MC1	
	Loop clutch	26		MC2	
	Tray select (paper size signal)	27	1: Main body upper tray		
			2: Main body lower tray		
			3: DB upper tray		
			4: DB lower tray		
	By-pass size adjustment	28		VR1	
	Separation claw SD	29		SD7	

Classification	Name	Code	Multi code	Symbol	Remarks
Optics system	Optical motor	31		M2	After HP search, execute A3 size scanning at life size.
	Polygon motor	32	1: 600dpi	M5	
			2: Prerotation		
	Shading correction operation	34		M2, L1	
	Laser PWM	36	0 to 255	LD	
	Conpel to laser ON	37		LD, M5	
	Platen still APS operation	39		L1	
Main body	Main motor	41		M1	
	Fan motor	42	1: Optical unit fixing cooling fan	FM3	
			2: Suction fan	FM4	
			4: DCPS cooling fan	FM1	
			6: Fixing cooling fan motor	FM2	
	Total counter	43		T(C)	1 count
	Fixing heater	45	1: Main heater lamp 1	L2	
			2: Sub heater lamp 2	L3	
Operation panel	All LED ON	48		OB	
	Operation panel check	49		OB, LCD	Check LCD, keys, and buzzer
Intrinsic functions	Developing motor	50		M3	
	PCL	51		PCL	
	TSL	52		TSL	
	Cleaning web solenoid	53		SD4	
	Toner auto supply	54		M4, M1	
	Toner supply motor	55		M4	
	Toner bottle SD	56		SD6	
	Toner level power	57		TLD	
	Toner bottle rotation	58		SD6, M4	Toner supply M and bottle SD both ON to rotate bottle half turn; then stop.
	24V power source remote	59	1: For scanner		
			2: For printer		
RADF	Load output	60	0: Original feed motor CW	M301	
			1: Original feed motor CCW	M301	
			2: Original reversal motor CW	M303	
			3: Original reversal motor CCW	M303	
			4: Original conveyance motor CCW 50%	M302	
			5: Original conveyance motor CCW 100%	M302	
			6: Original conveyance motor CCW 400%	M302	
			7: Rollar pressure SD	SD302	
			8: Exit SD	SD303	
	Others	69	0: Original size adjustment (small size)	VR301	
			1: Original size adjustment (large size)	VR301	

Classifi-cation	Name	Code	Multi code	Symbol	Remarks
FNS	Each load on FNS	70	01: Paper conveyance motor	M701	
			03: Alignment motor shift position move (A4 position, close)	M704, 703	
			05: Tray up/down motor up	M706	
			06: Tray up/ down motor down	M706	
			07: Tray up/down motor fewer quantity up move in the staple mode	M706	
			08: Alignment plate H.P search	M704, 703	
			11: Motor pressure operation	M707	
			12: Motor release operation	M707	
			14: Stapler unit in stapling operation	M708	
			17: Stapler shift motor H.P search	M705	
			18: Stapler motor at rearside A4 1-position stapling position	M705	
			33: Alignment motor at open A4 position	M704, 703	
			34: Alignment motor at close A4 position	M704, 703	
			35: Alignment motor in oscillation operation	M704, 703	
			42: Exit motor in exit direction rotation	M702	
			46: Tray up/down motor in tray scan operation	M706	
			47: Tray up/down motor changeover to tray 1	M706	
			48: Tray up/down motor changeover to optional tray 1	M706	
			49: Tray up/down motor changeover to optional tray 2	M706	
			50: Tray up/down motor changeover to tray 2	M706	
			51: Stapler shift motor H.P search	M705	
			52: Stapler move motor at front side A4 1-position stapling position	M705	
			53: Exit motor in rewind direction rotation	M702	
			54: Cooling fan motor rotation	M709	
			99: Running mode		
ADU	ADU motor	80	1: 140 mm/sec forward rotation	M6	
			2: 350 mm/sec forward rotation		
			3: 210 mm/sec reverse rotation		
			4: 350 mm/sec reverse rotation		
	ADU gate SD	83		SD5	

Classification	Name	Code	Multi code	Symbol	Remarks
Others	PM counter clear	90			
	Process counter clear/ Drum counter clear	91	0: Process counter clear		
			1: Drum counter clear		
	Initial settings (Restore factory defaults)	93			1. Initialize file for default settings (values saved by 47-096). 2. Set initial vertical magnification adjustment (for RADF). 3. Set initial restart timing adjustment (for RADF). 4. Set initial original feed loop adjustment (for RADF).
	Display 36 mode adjustment values and factory data	94			
	Automatic adjustment of L detection reference value	95			Initialize developing counter.
	Process delivery completing setting	96			1. Read current date. • Set shipping date • Set periodic collection start date 2. Enable incrementing of mechanical counter (In 25 mode, reset DIPSW21 – 6 to "0".) 3. Set to suppress display of jam codes. (In 25 mode, reset DIPSW10 – 7 to "0".) 4. Return test pattern density to initial value (255). 5. Return solid pattern density to initial value (255). 6. Save settings into factory settings file. 7. Initialize fax-related nonvolatile memory (121).
	Light distribution check	97			
	Messages display	101			For message checking.

Classification	Name	Code	Multi code	Symbol	Remarks
Others	Initialize fax-related nonvolatile memory 1	121	oo: 1. Initialize data • Fax job-function settings • System image-processing data • Fax communication function settings • Fax communication ability settings • Fax communication HP settings • Fax list/report settings • Initialize the Abbr data • Group/one-touch data • Communication journal • File system • F-code, relay data 2. Save backup data • Fax job-function settings • System image-processing data • Fax communication function settings • Fax communication ability settings • Fax communication HP settings • Fax list/report settings 3. Register Abbr entries 01 to 30 as destination numbers for programs 01 to 30.		
	Initialize fax-related nonvolatile memory 2		05: 1. Initialize fax-related nonvolatile memory (121). 2. Register 200 Abbr entries.		
	Display total ERDH memory size	197			
	ERDH memory check	198			
	Check of overall control board (For assembly line)	999			

OTHER ADJUSTMENTS

⚠ **Caution: Be sure that the power cord has been unplugged from the socket.**

[1] RADF mounting position adjustment

Adjust the DF-314 mounting position in the following procedures.

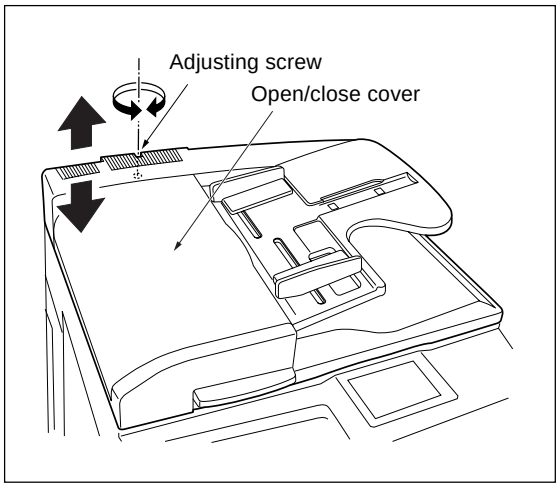

(1) Close the DF-314.

(2) Open the open/close cover, then turn the ADF height adjustment screw until the ADF height adjust pointer comes to center of the scale divisions.

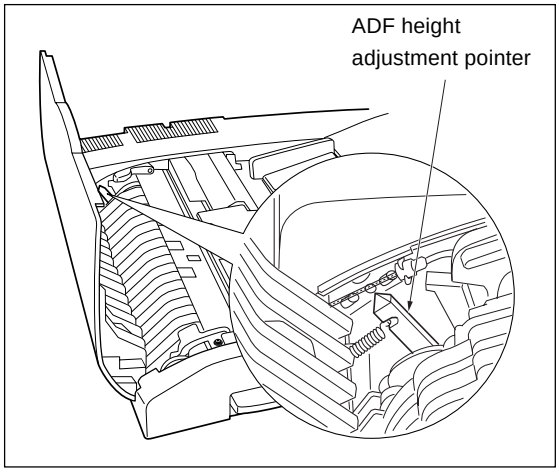

[2] RADF distortion adjustment

Adjust the amount of distortion of a copy in the following procedures.

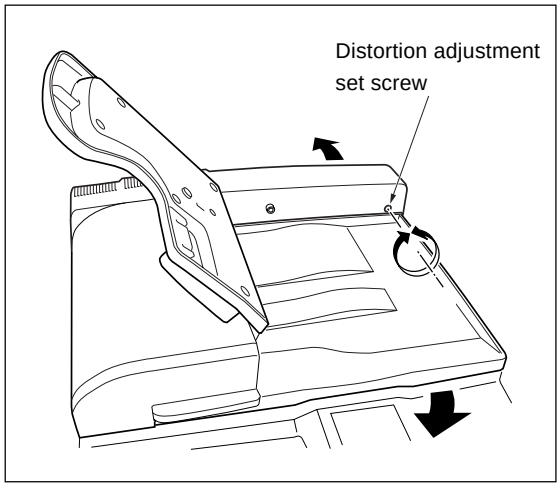

(1) Set a A3 paper on the tray of the 7020 main body.

(2) Set the ADF adjustment chart on the DF-314, then make a copy.

(3) Check the amount of distortion in the copy.

Standard value: ±0.3% less.

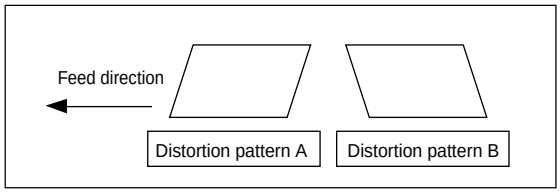

(4) When the distortion is larger than the tolerance, adjust it using the distortion adjustment set screw.

Distortion pattern A:

Turn the distortion set screw clockwise.

Distortion pattern B:

Turn the distortion adjustment set screw counterclockwise.

(5) Repeat above steps 2 to 4 until the standard value for distortion is met.

[3] RADF skew adjustment

When originals are fed being skewed, adjust the registration pully bracket.

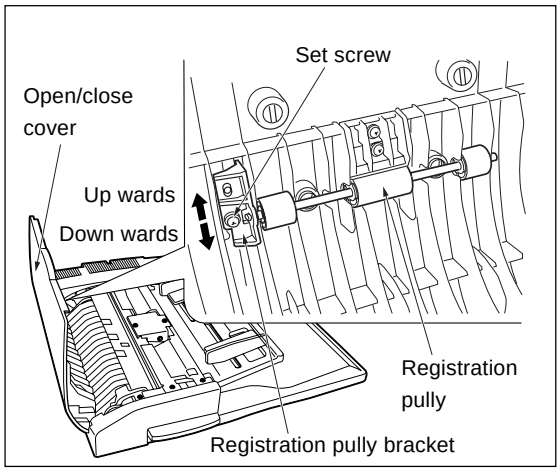

(1) Turn on the 1 → 1 mode, then set the ADF adjustment chart on the DF-314 and make a copy.

(2) Check pattern of the skewed original feed.

Standard value: ±0.5% less.

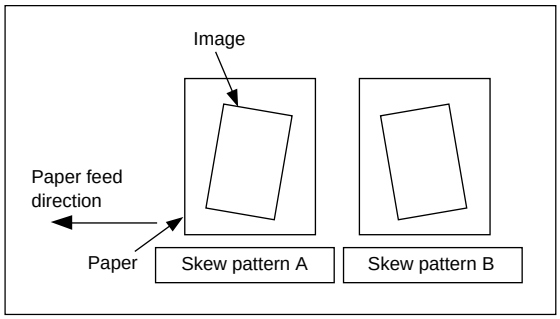

(3) When the standard value for skew is not fit, open the open/close cover, then adjust position of the registration pully bracket.

Skew pattern A:

Move the registration pully bracket down.

Skew pattern B:

Move the registration pully bracket up.

(4) Repeat above steps 1 to 3 until the standard value for the skewed original is within standard value.

[4] DB-409 paper-incline adjustment

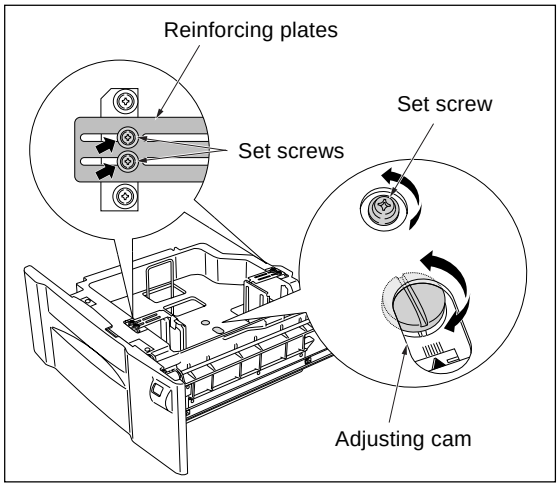

Make a copy of the test chart, then perform necessary adjustment until the standard value for the paper centering is fit.

(1) Loosen a set screw on the paper centering adjustment plate situated at bottom of the tray. And also loosen the two set screws on the reinforcing plates (front/back) situated at top of the tray.

(2) Move the adjustment plate back and forth by turning to the adjusting cam until the paper centering is within standard value.

(3) When the adjustment is complete, tighten the set screws provided for the paper centering adjusting plate and reinforcing plates.

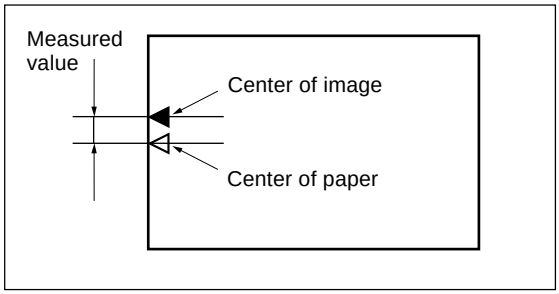

[5] DB-409 tray tilt adjustment

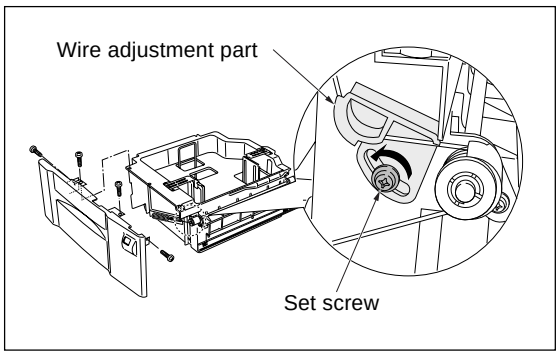

Normal paper feed can't be expected if the tray is tilted. In such case, adjust the tray and paper feed roller shaft so that they may be parallel in each other. Whenever the wire is replaced, this adjustment must be implemented.

(1) Remove the front cover of the tray.

(2) Loosen a set screw of the wire adjustment part situated in front side of the tray.

(3) Move the wire adjustment part until the distance from top of the side plate to the tray top face is equal in both the front and back sides.

(4) When the adjustment is complete, tighten the set screw for the wire adjustment part.

