4

DIAGRAMS

7020 ELECTRICAL PARTS LAYOUT DRAWING

[1] Switches and sensors

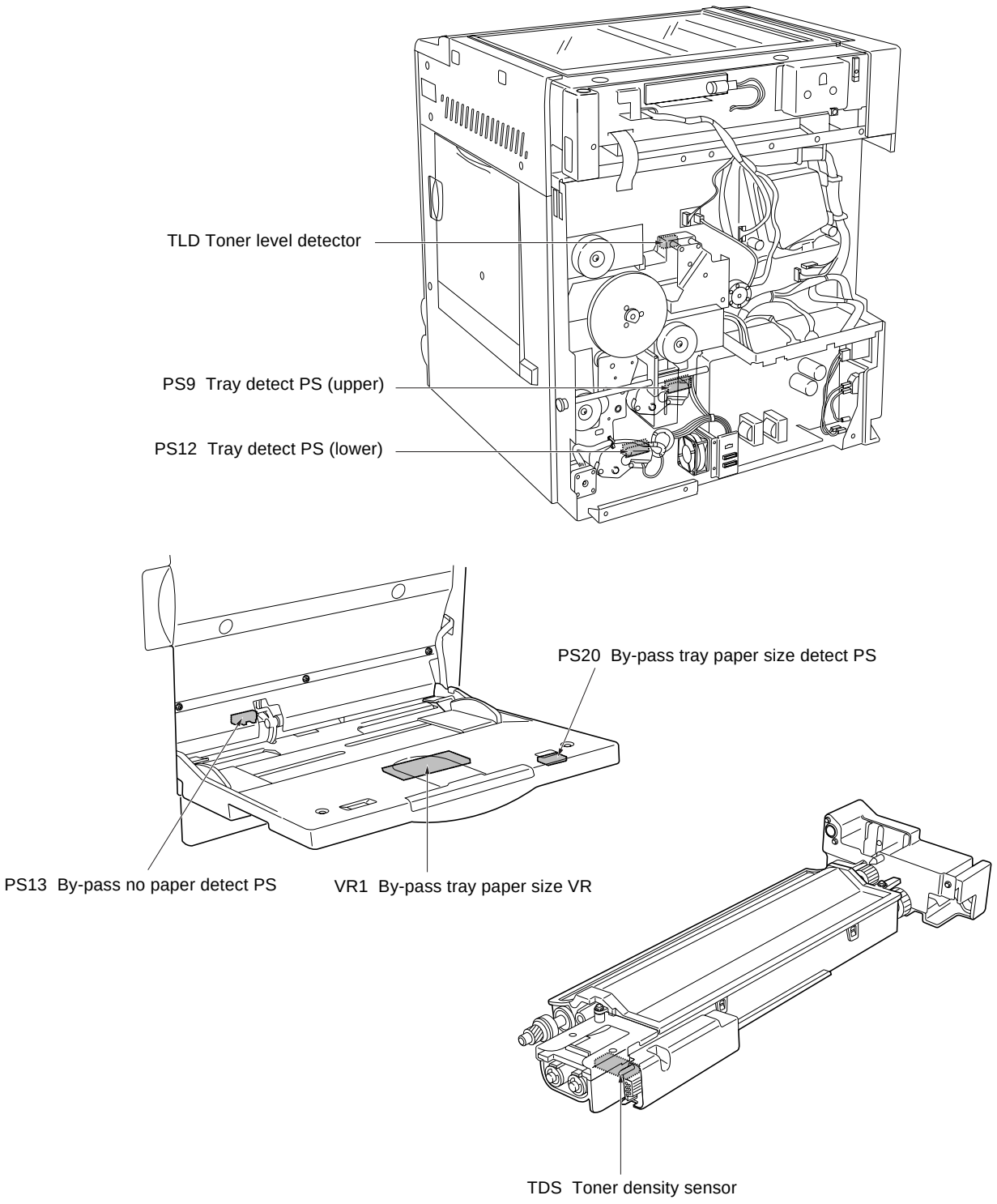

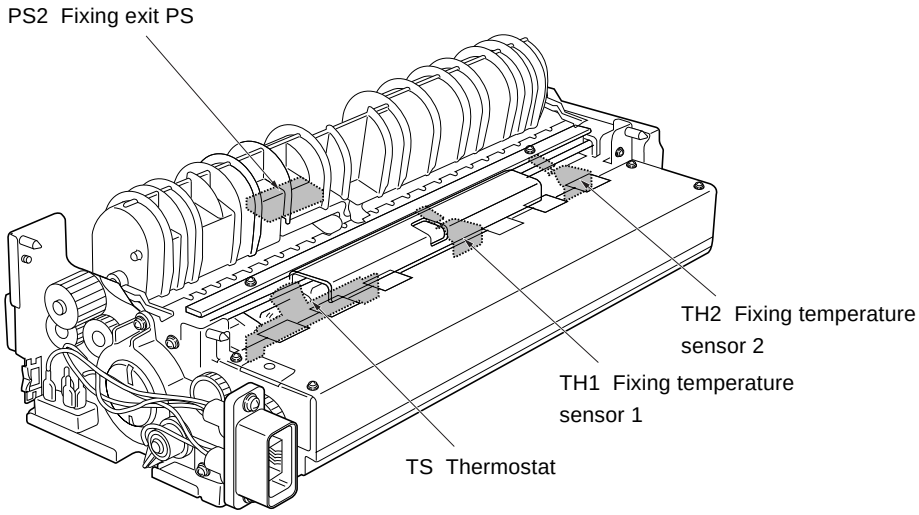
PS2 Fixing exit PS
TH2 Fixing temperature sensor 2
TH1 Fixing temperature sensor 1
TS Thermostat

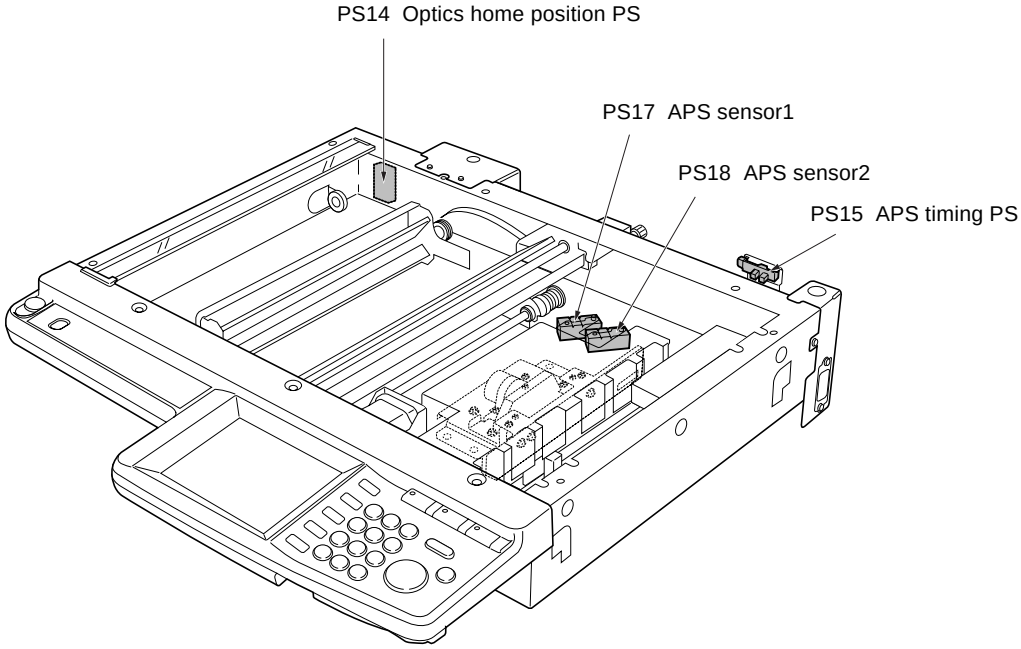
PS14 Optics home position PS
PS17 APS sensor1
PS18 APS sensor2
PS15 APS timing PS

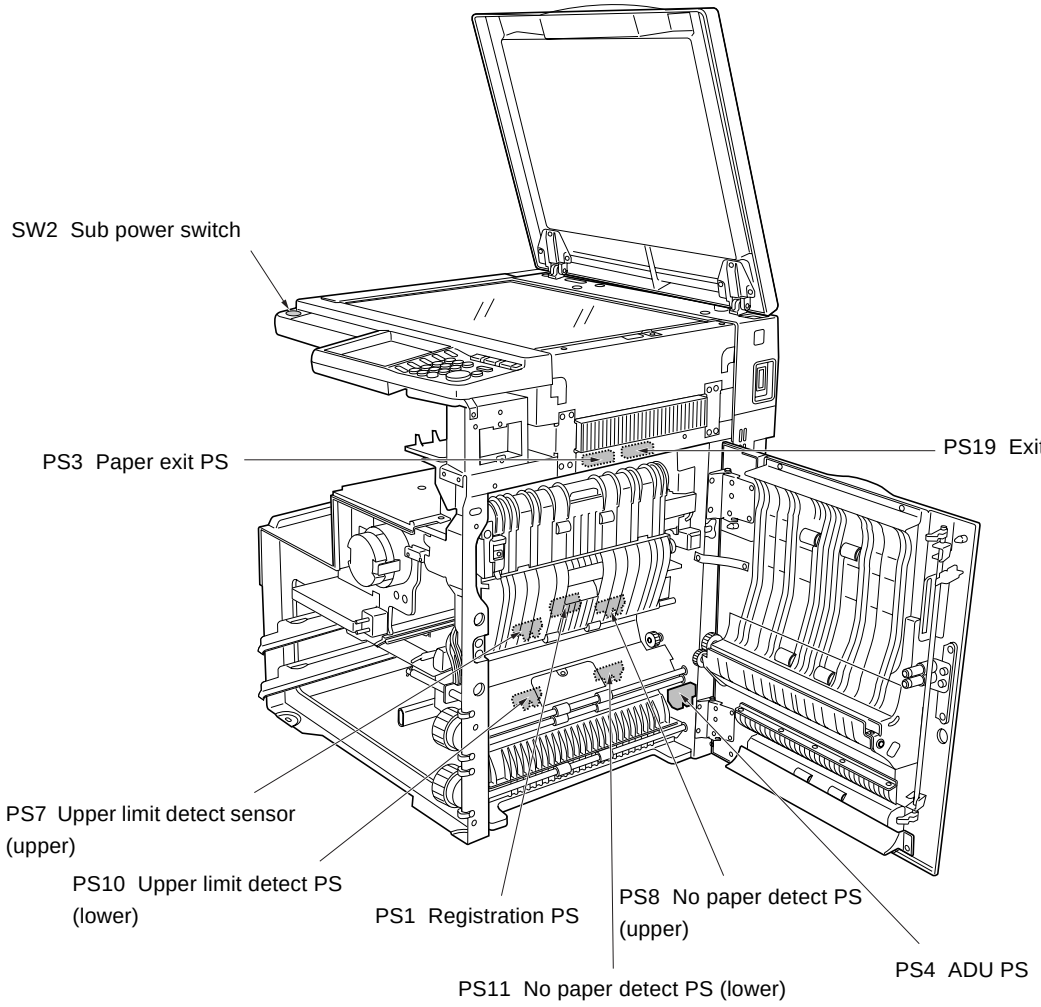
SW2 Sub power switch
PS3 Paper exit PS
PS19 Exit limit detect PS
PS7 Upper limit detect sensor (upper)
PS10 Upper limit detect PS (lower)
PS1 Registration PS
PS8 No paper detect PS (upper)
PS11 No paper detect PS (lower)
PS4 ADU PS

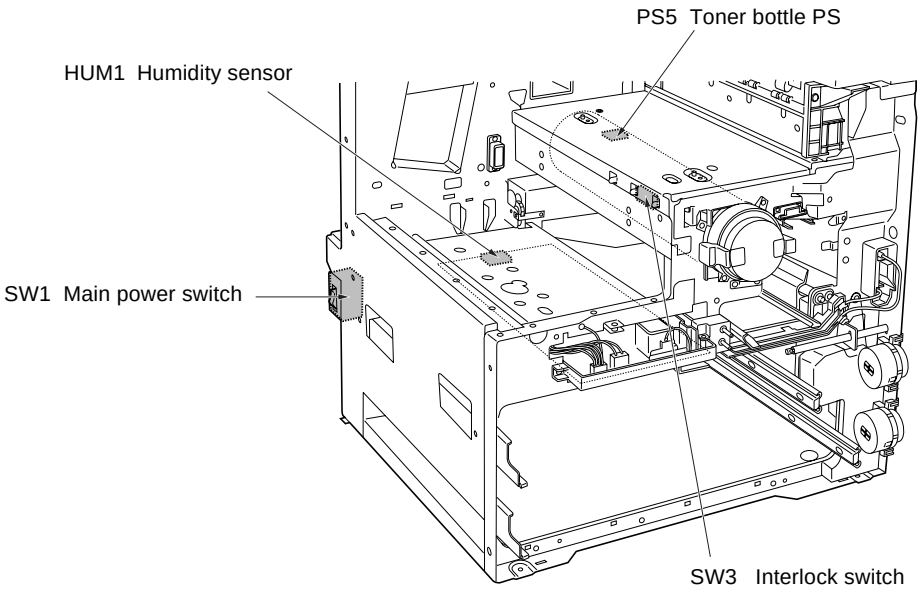
PS5 Toner bottle PS
HUM1 Humidity sensor
SW1 Main power switch
SW3 Interlock switch

[2] Loads

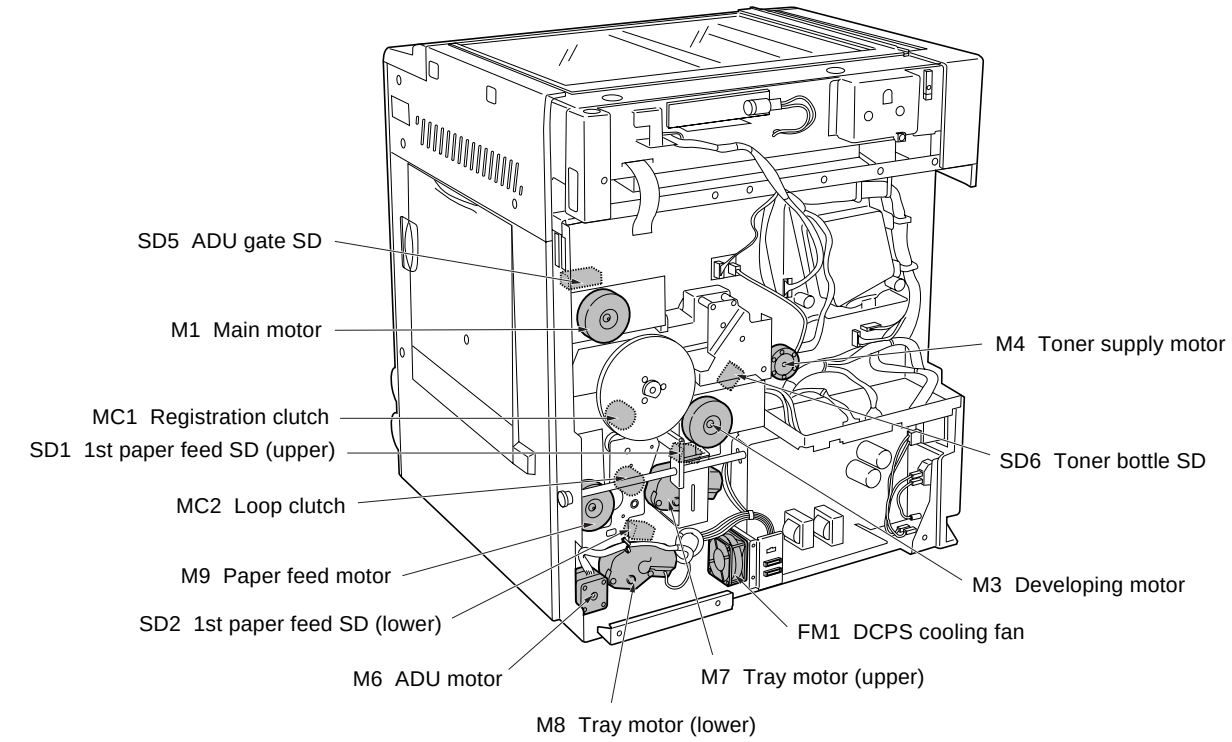
SD5 ADU gate SD
M1 Main motor
MC1 Registration clutch
SD1 1st paper feed SD (upper)
MC2 Loop clutch
M9 Paper feed motor
SD2 1st paper feed SD (lower)
M6 ADU motor
M8 Tray motor (lower)
M7 Tray motor (upper)
FM1 DCPS cooling fan
M3 Developing motor
SD6 Toner bottle SD
M4 Toner supply motor

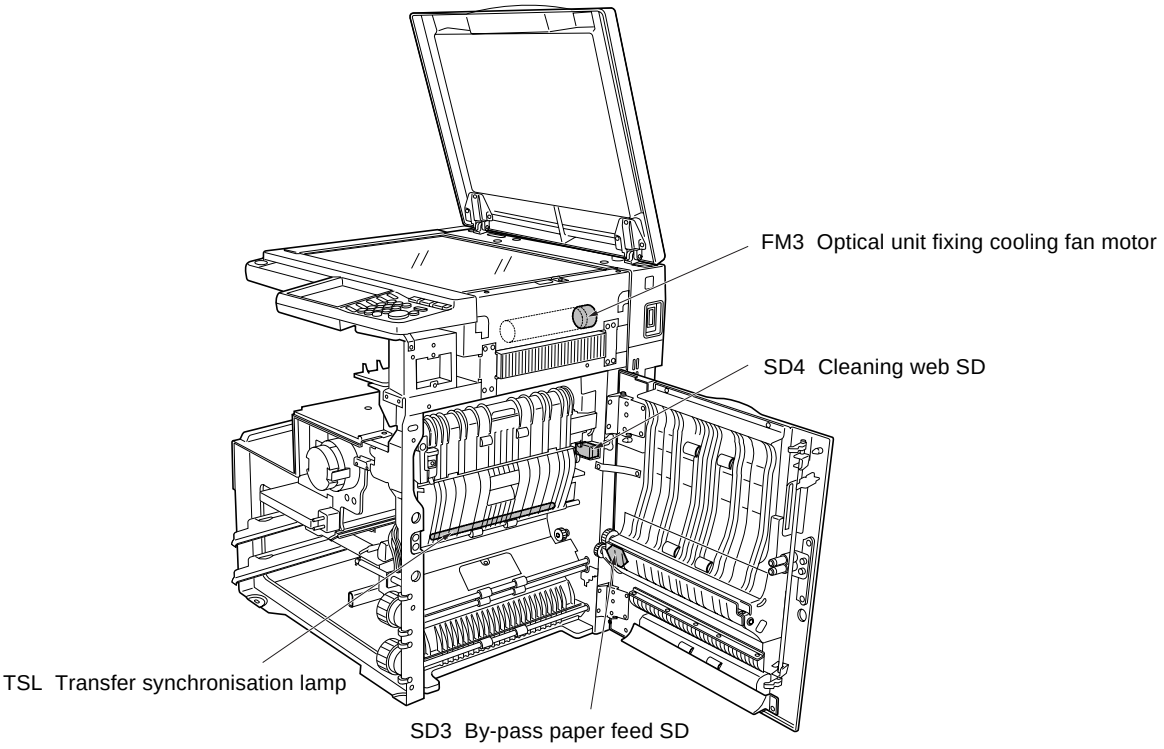
FM3 Optical unit fixing cooling fan motor
SD4 Cleaning web SD
TSL Transfer synchronisation lamp
SD3 By-pass paper feed SD

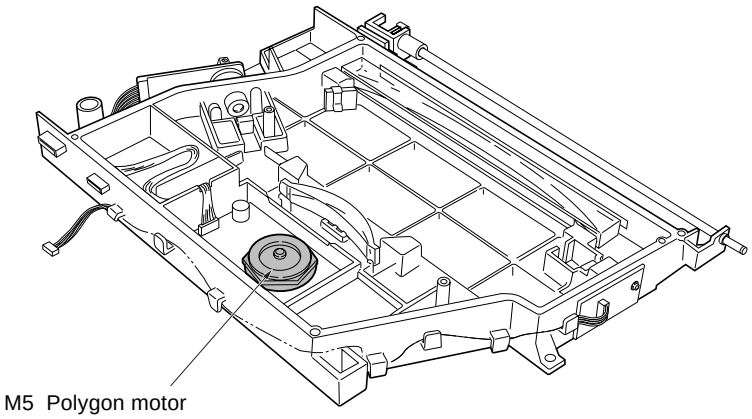
M5 Polygon motor

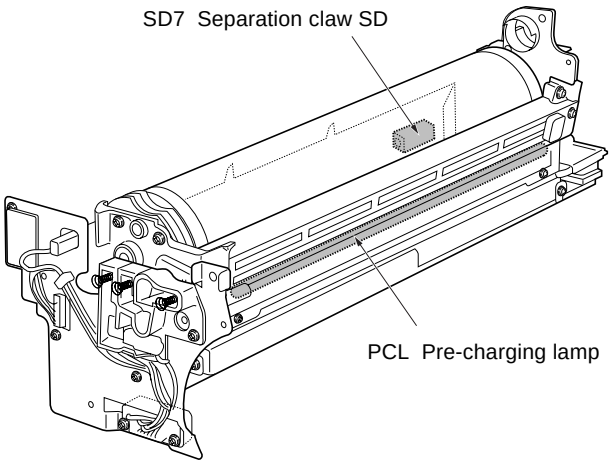
SD7 Separation claw SD
PCL Pre-charging lamp

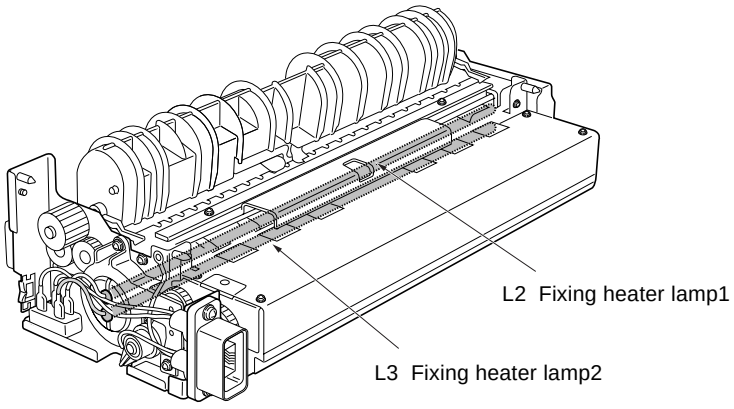
L2 Fixing heater lamp1
L3 Fixing heater lamp2

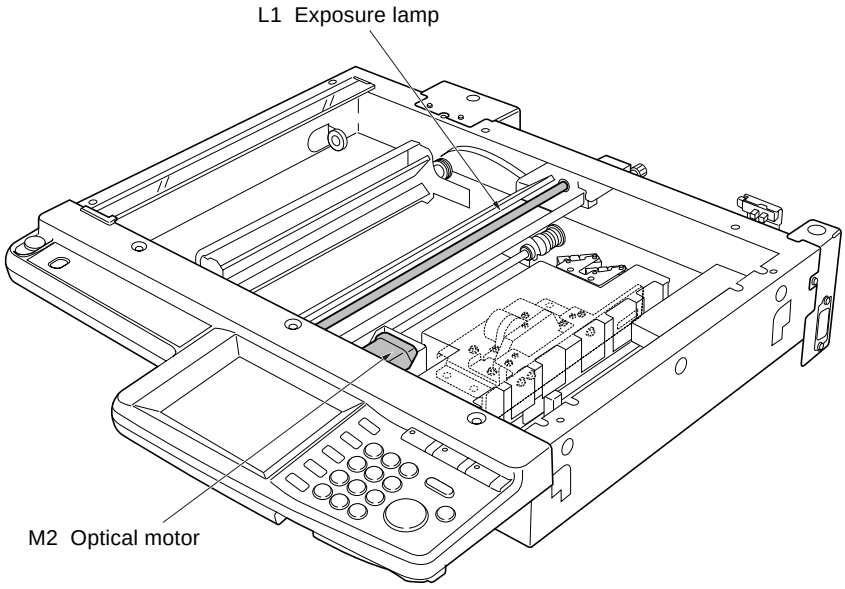
L1 Exposure lamp
M2 Optical motor

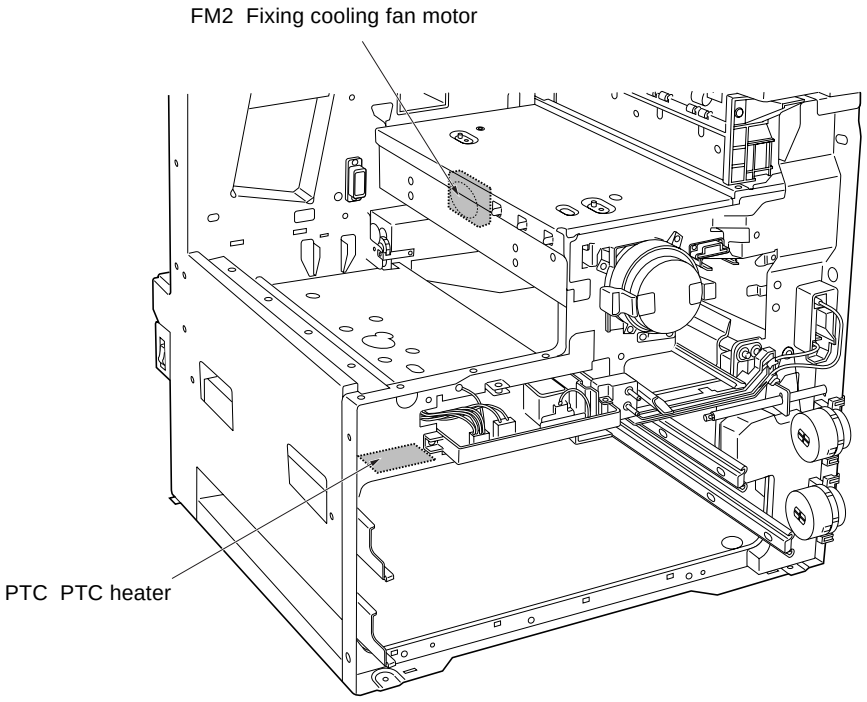
FM2 Fixing cooling fan motor
PTC PTC heater

[3] PCBs and others

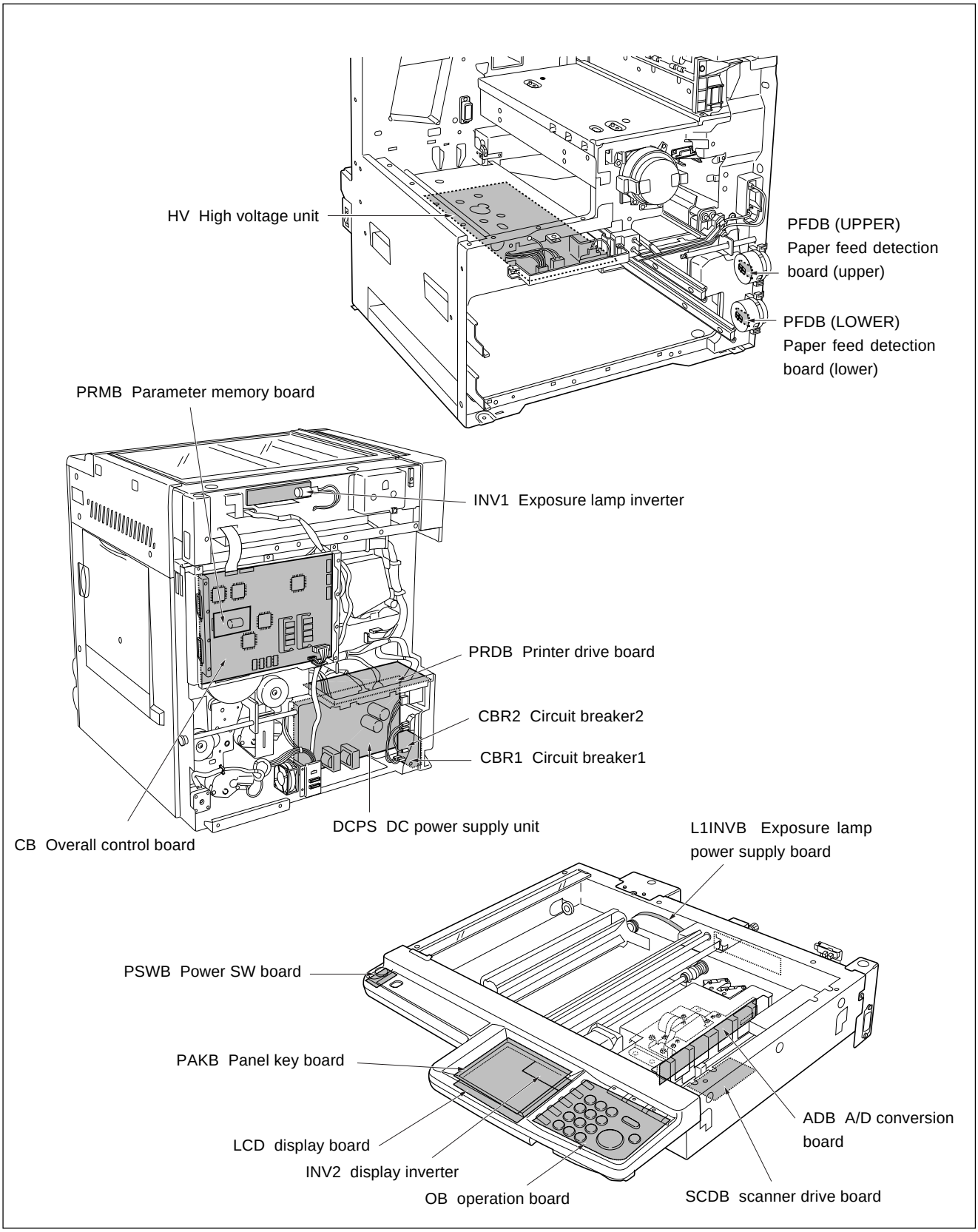

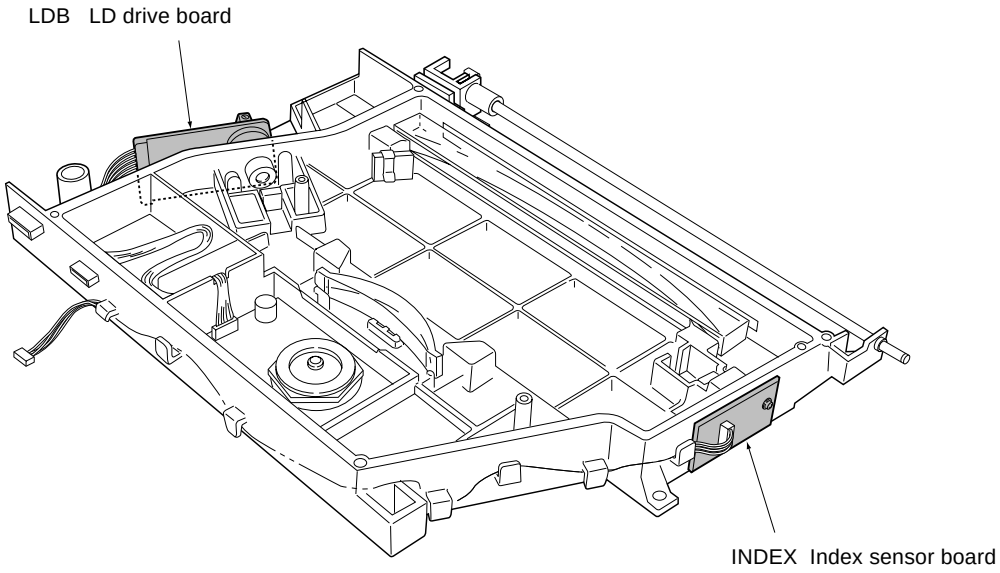
LDB LD drive board
INDEX Index sensor board

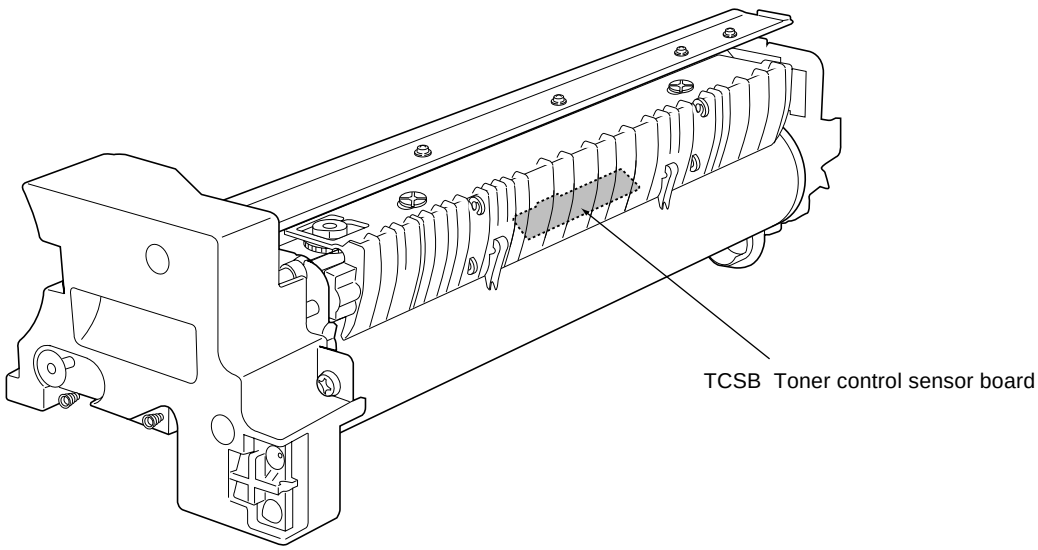
TCSB Toner control sensor board

DF-314 ELECTRICAL PARTS LAYOUT DRAWING

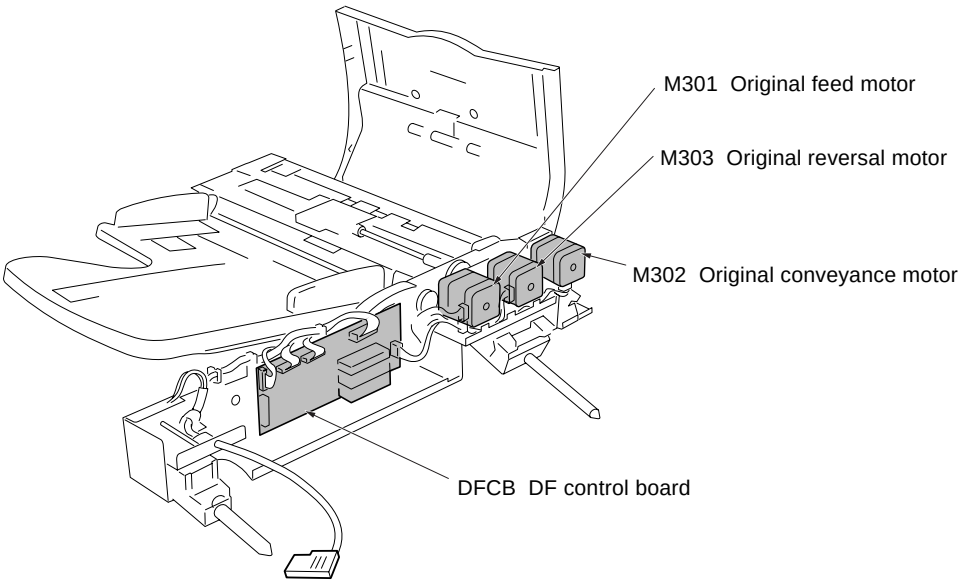

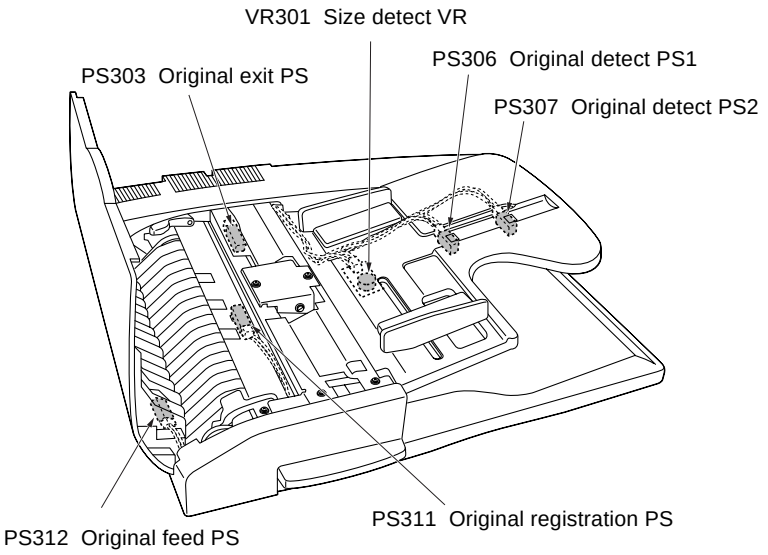

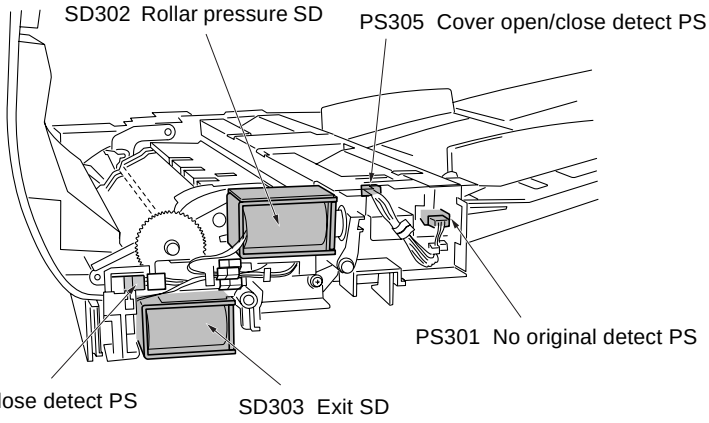

FS-107 ELECTRICAL PARTS LAYOUT DRAWING

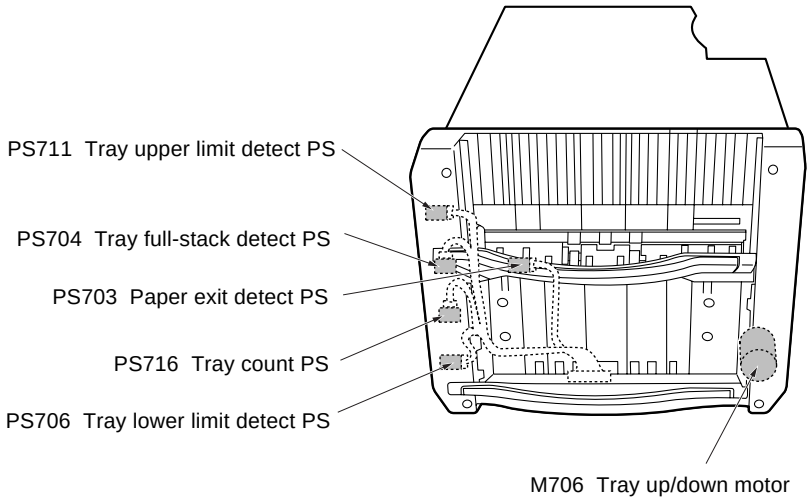

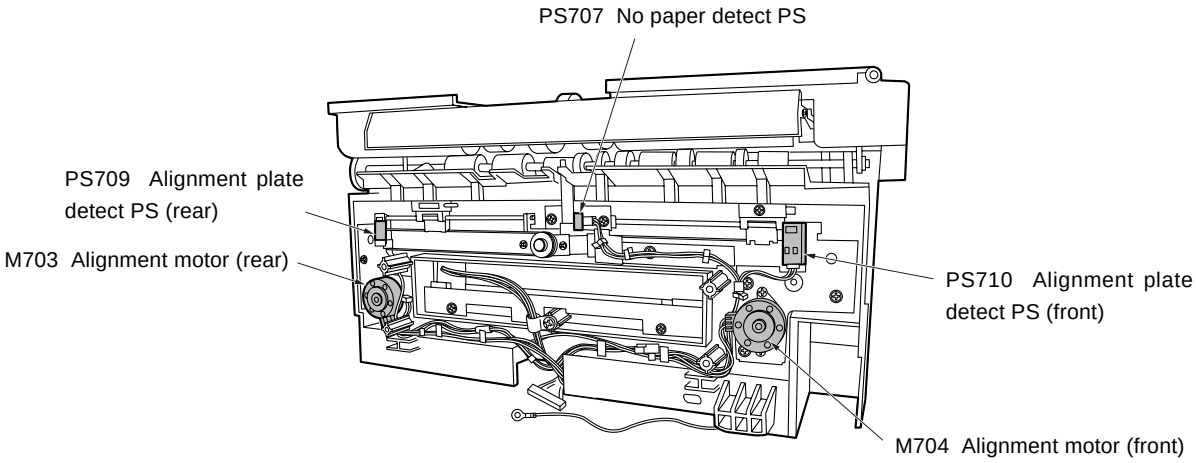

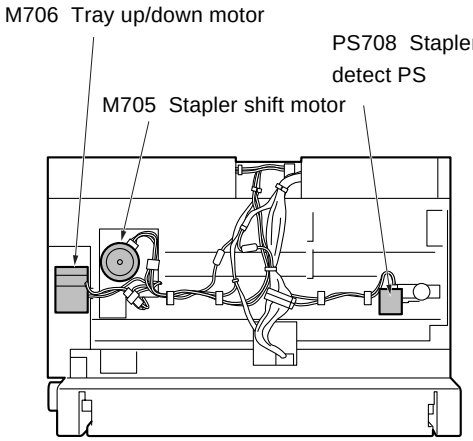

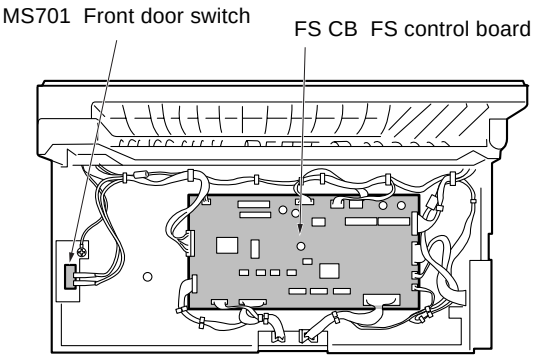

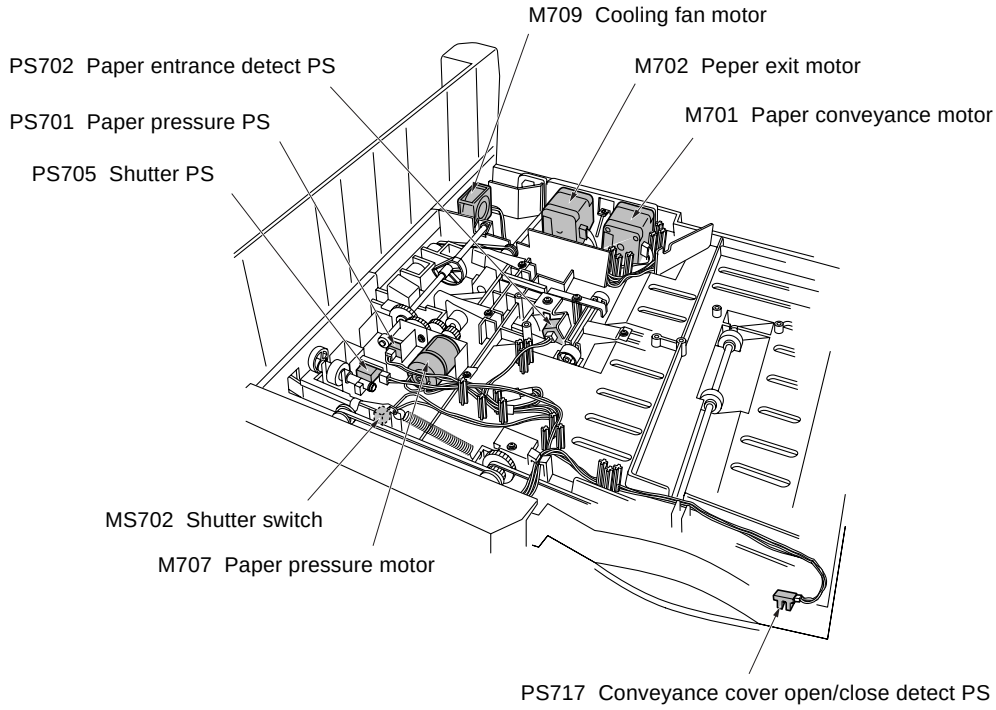
M709 Cooling fan motor
PS702 Paper entrance detect PS
M702 Peper exit motor
PS701 Paper pressure PS
M701 Paper conveyance motor
PS705 Shutter PS
MS702 Shutter switch
M707 Paper pressure motor
PS717 Conveyance cover open/close detect PS

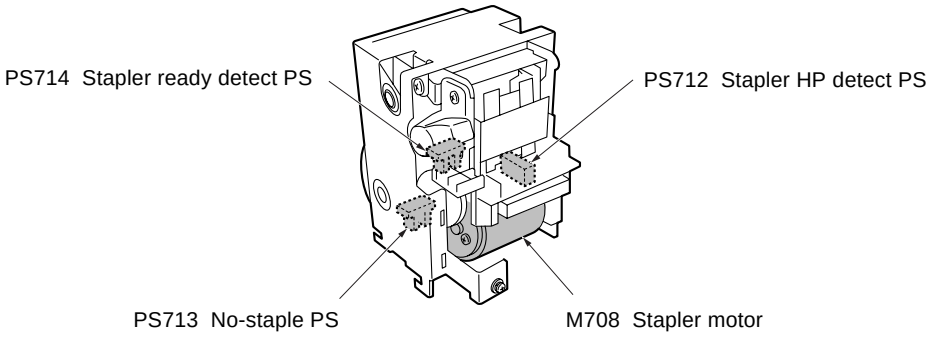
PS714 Stapler ready detect PS
PS712 Stapler HP detect PS
PS713 No-staple PS
M708 Stapler motor

DB-209 ELECTRICAL PARTS LAYOUT DRAWING

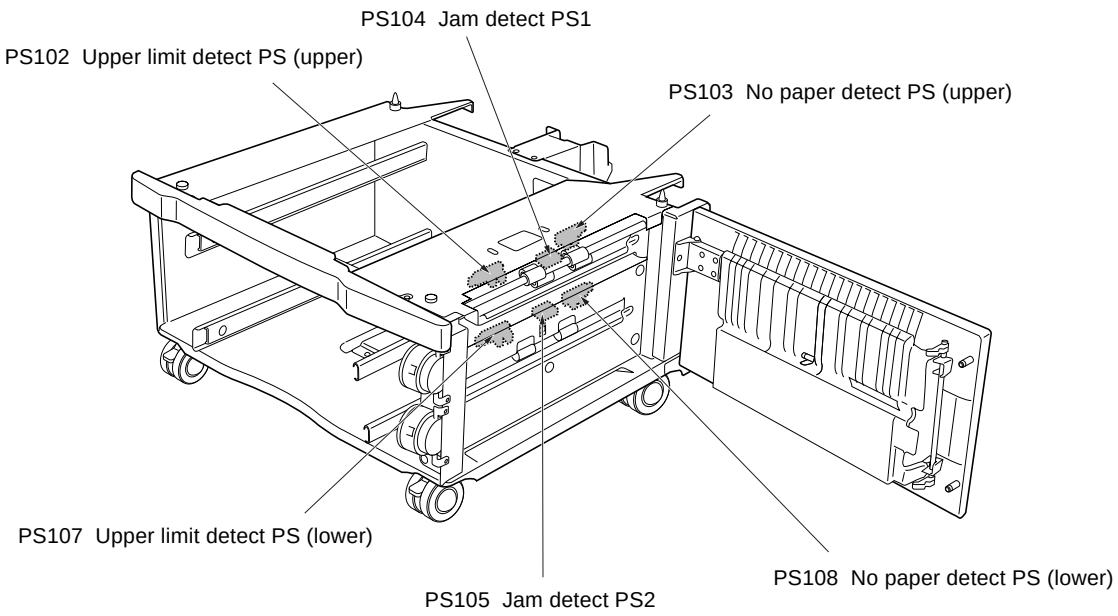

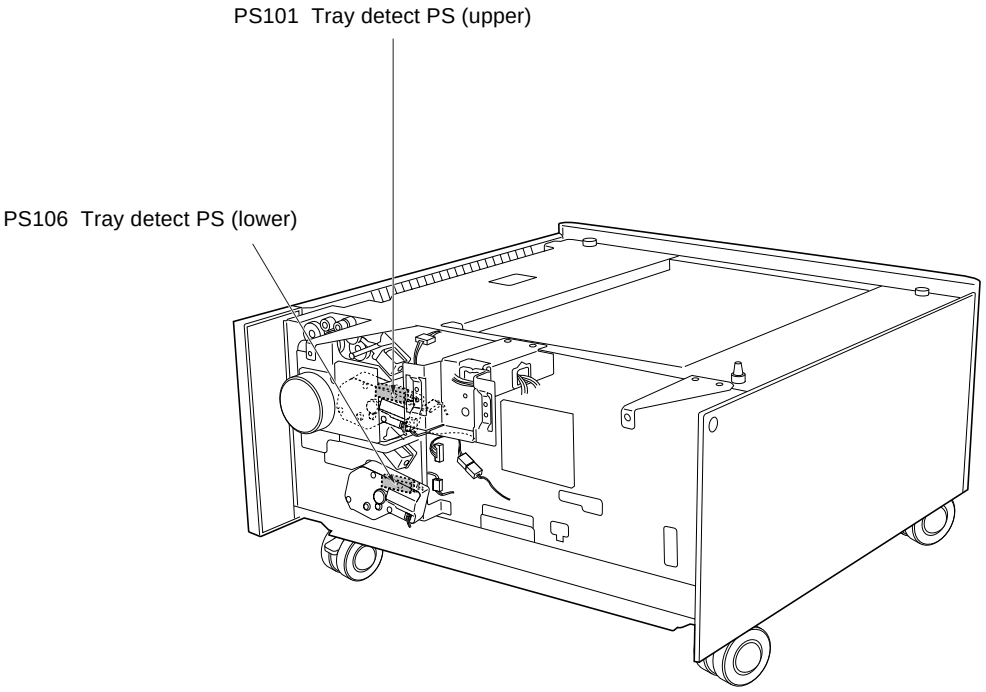

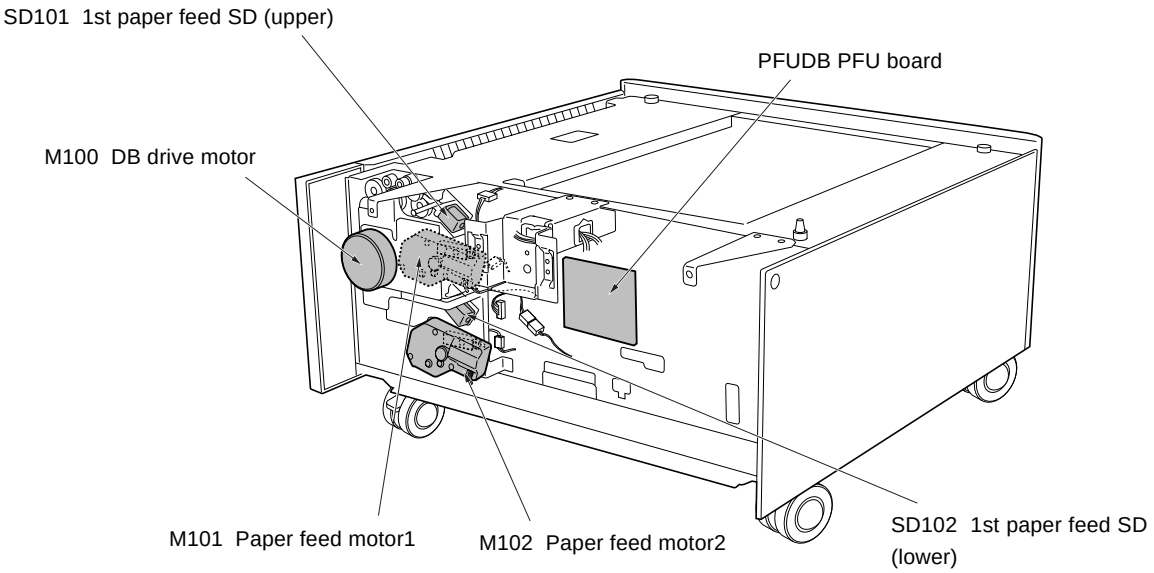
SD101 1st paper feed SD (upper)
PFUDB PFU board
M100 DB drive motor
M101 Paper feed motor1
M102 Paper feed motor2
SD102 1st paper feed SD (lower)

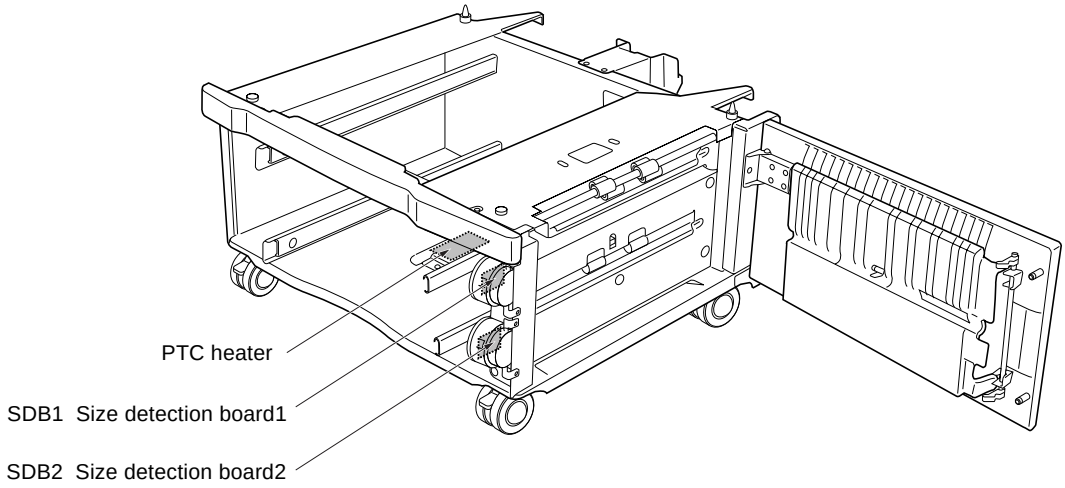
PTC heater
SDB1 Size detection board1
SDB2 Size detection board2

DB-409 ELECTRICAL PARTS LAYOUT DRAWING

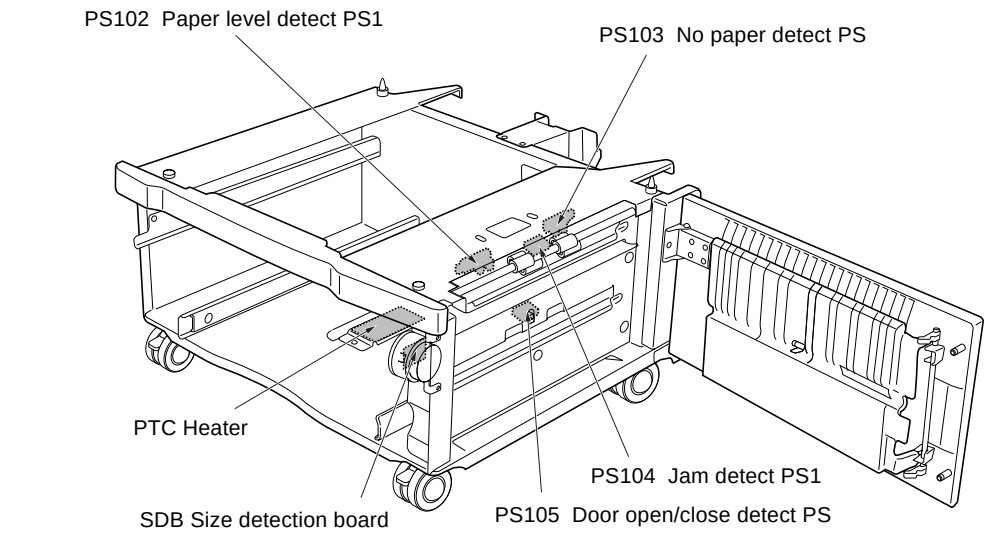

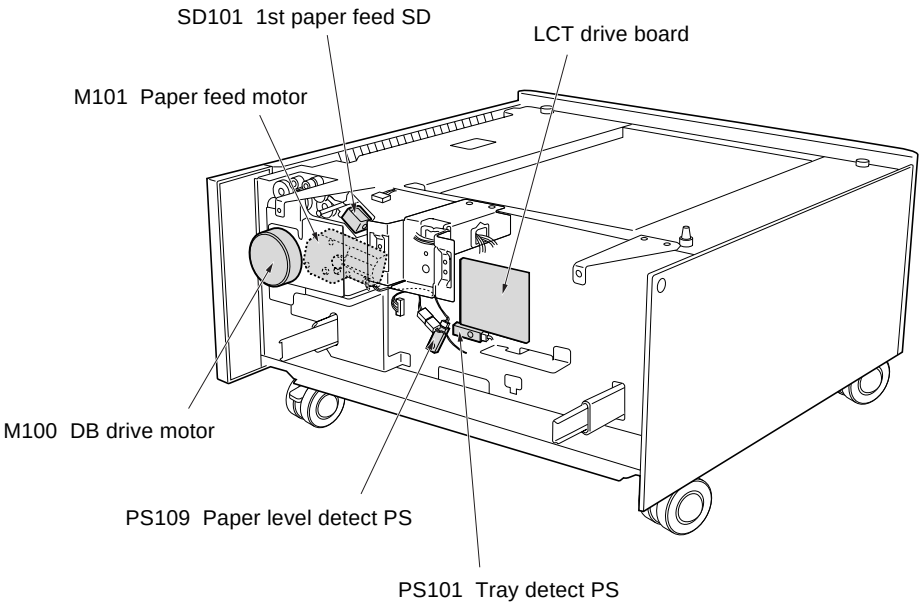

7020 CONNECTOR LAYOUT DRAWING

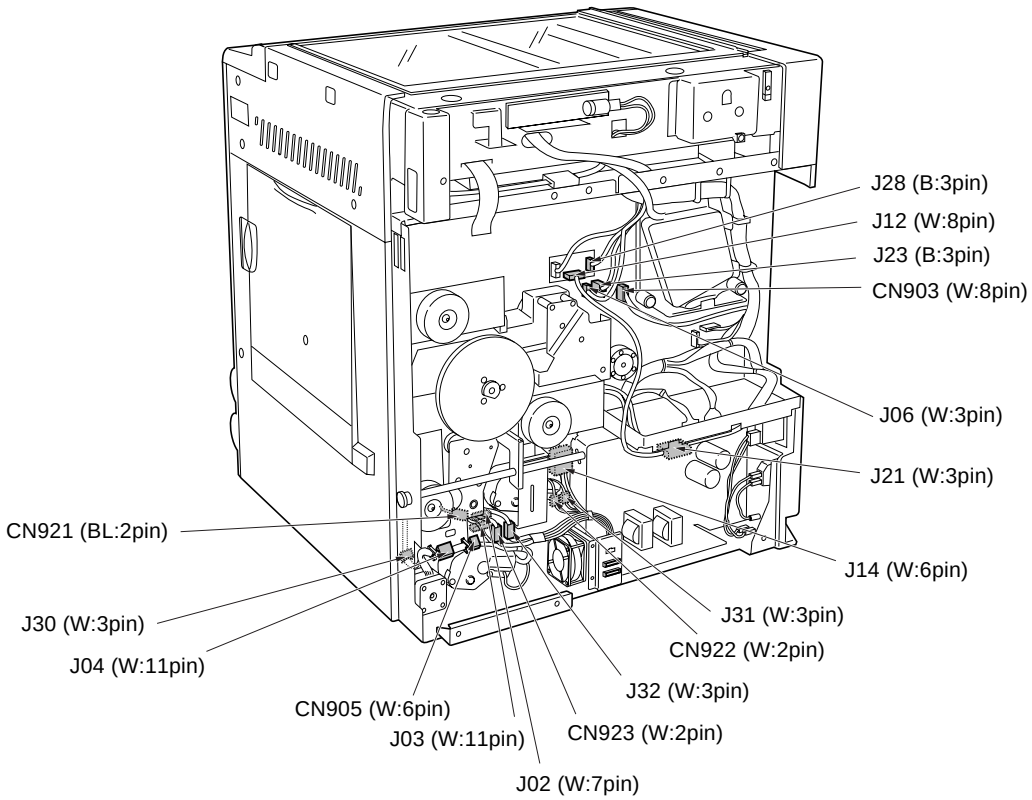

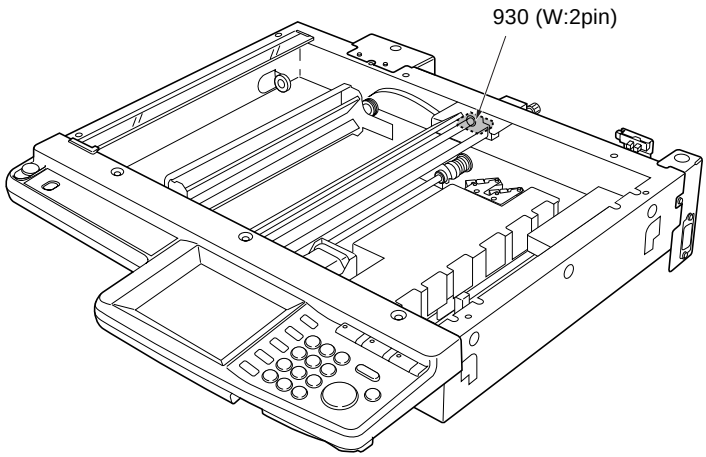

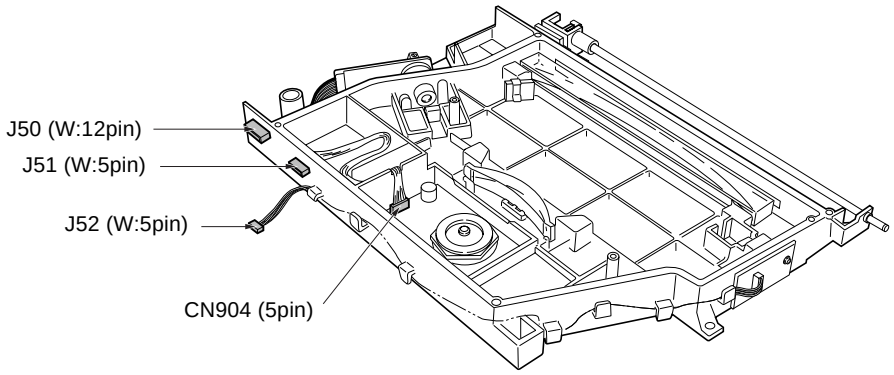
J50 (W:12pin)
J51 (W:5pin)
J52 (W:5pin)
CN904 (5pin)

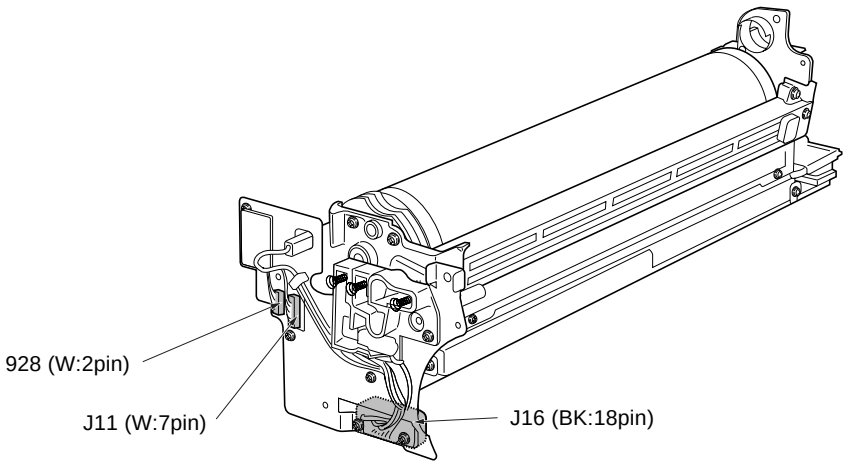
928 (W:2pin)
J11 (W:7pin)
J16 (BK:18pin)

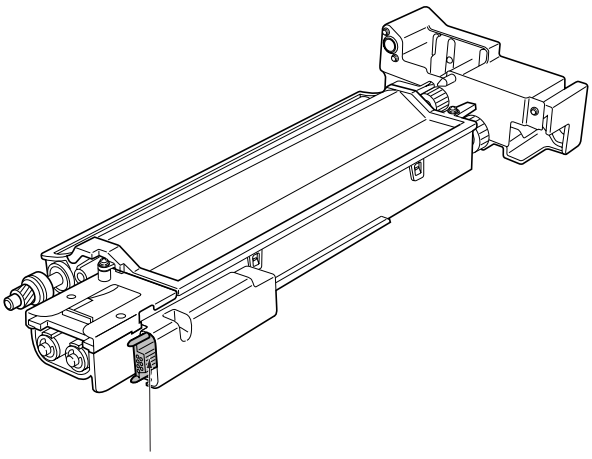
J17 (BK:10pin)

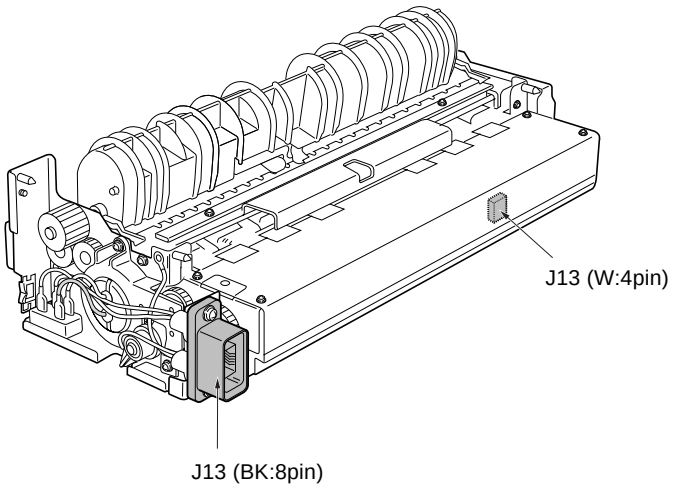
J13 (W:4pin)
J13 (BK:8pin)

Overall control board

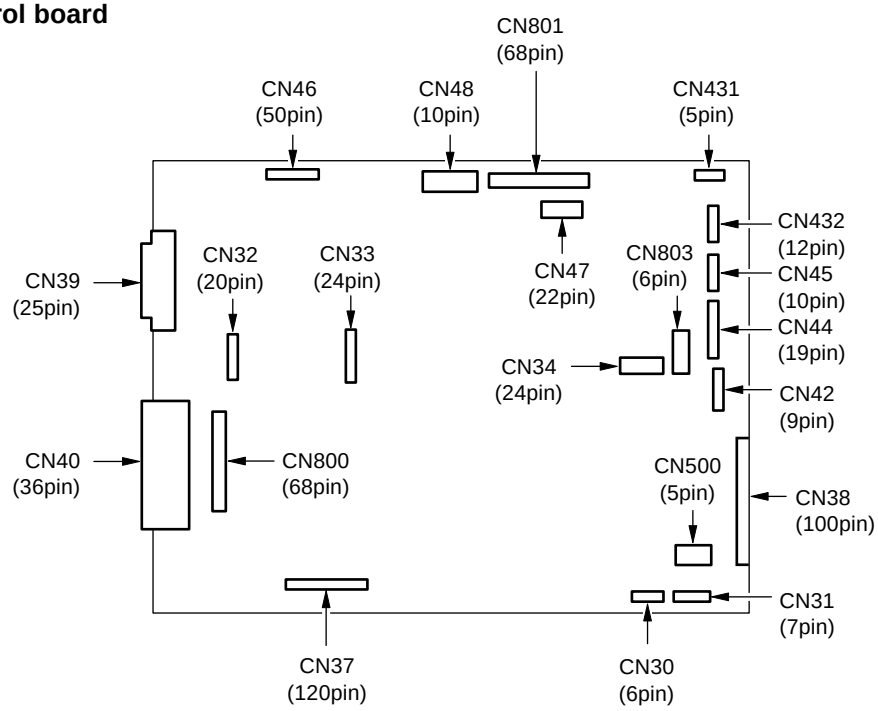

High voltage unit

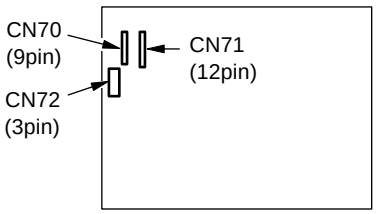

Printer drive board

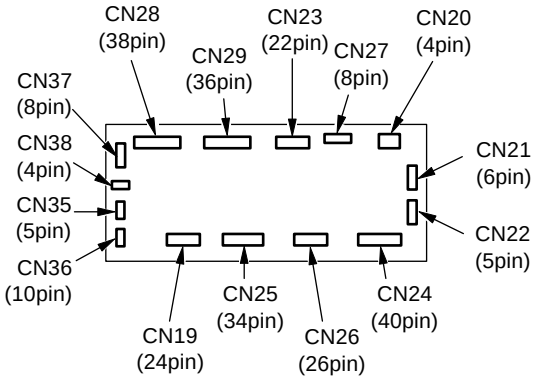

DC power supply unit

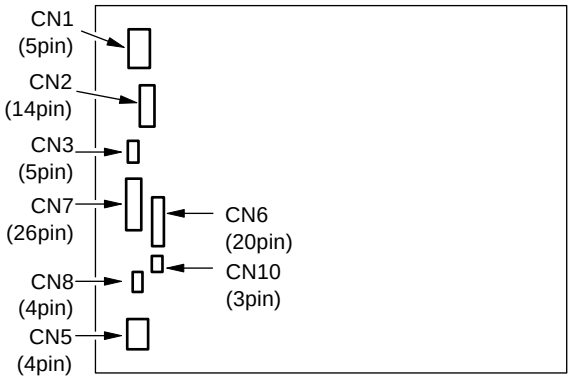

A/D conversion board

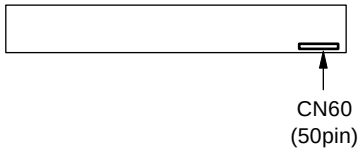

Scanner drive board

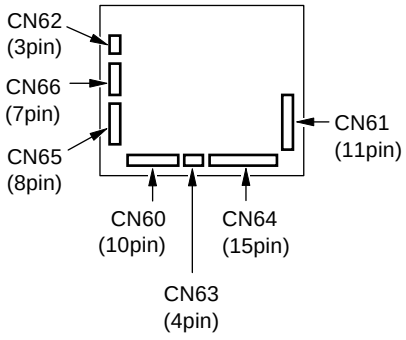

Operation board

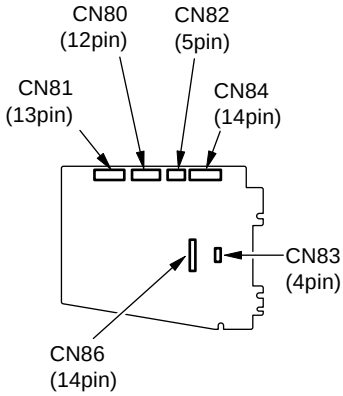

LD drive board

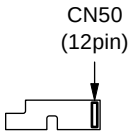

Index senser board

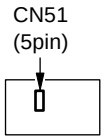

Toner control sensor board

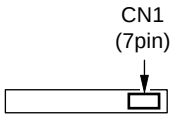

Power SW board

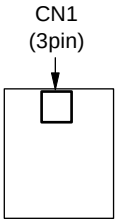

Paper feed detection board (upper, lower)

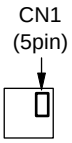

Parameter memory board

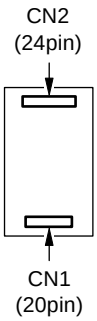

Exposure lamp power supply board

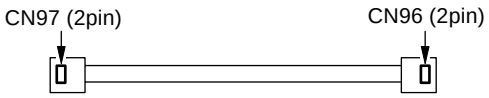

Display inverter



Exposure lamp inverter

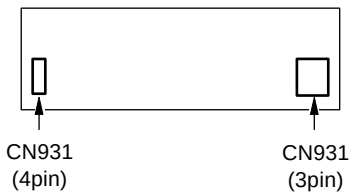

DF-314 CONNECTOR LAYOUT DRAWING

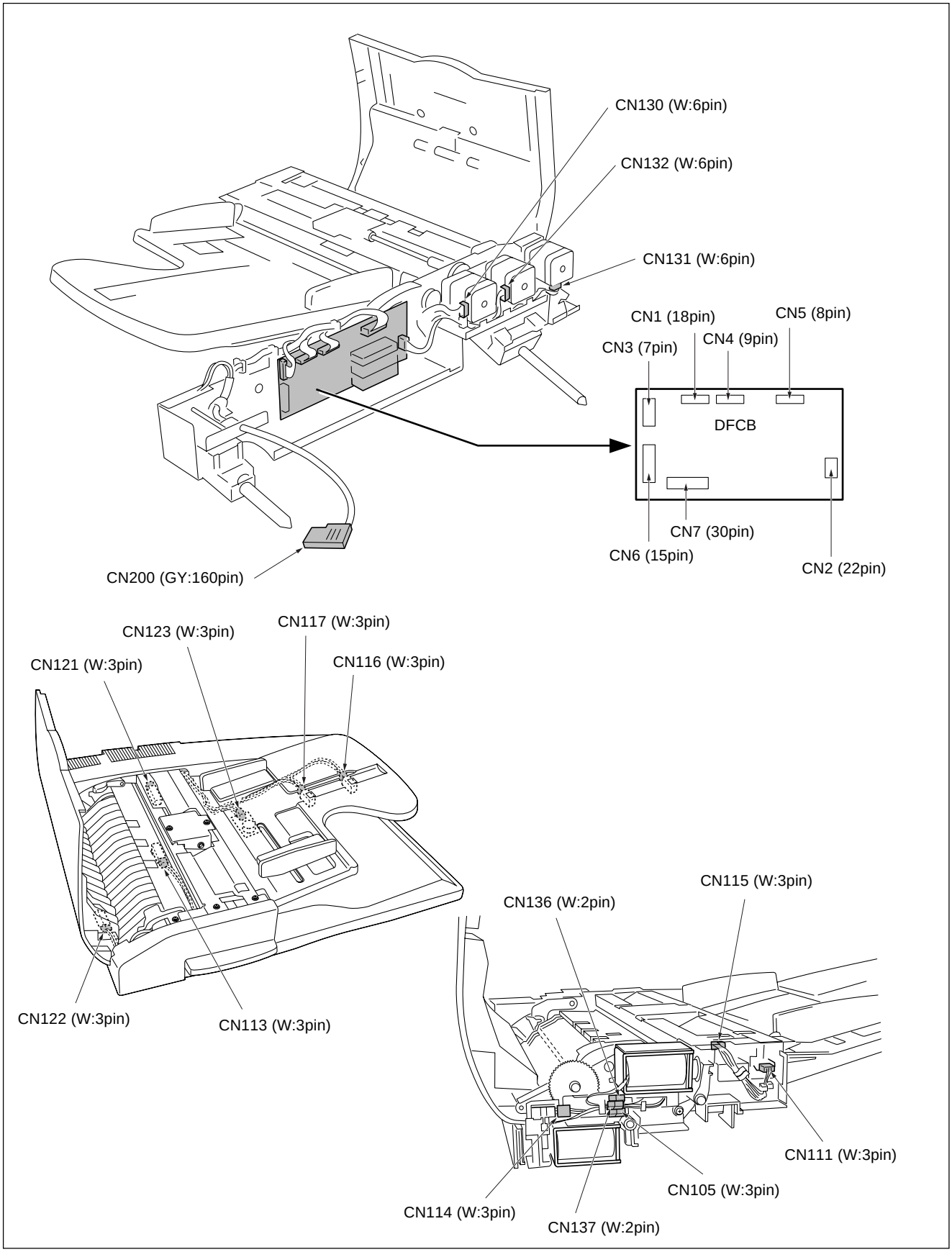

FS-107 CONNECTOR LAYOUT DRAWING

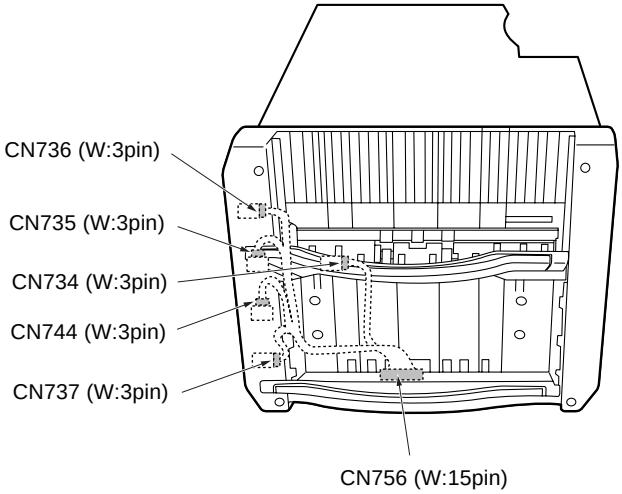

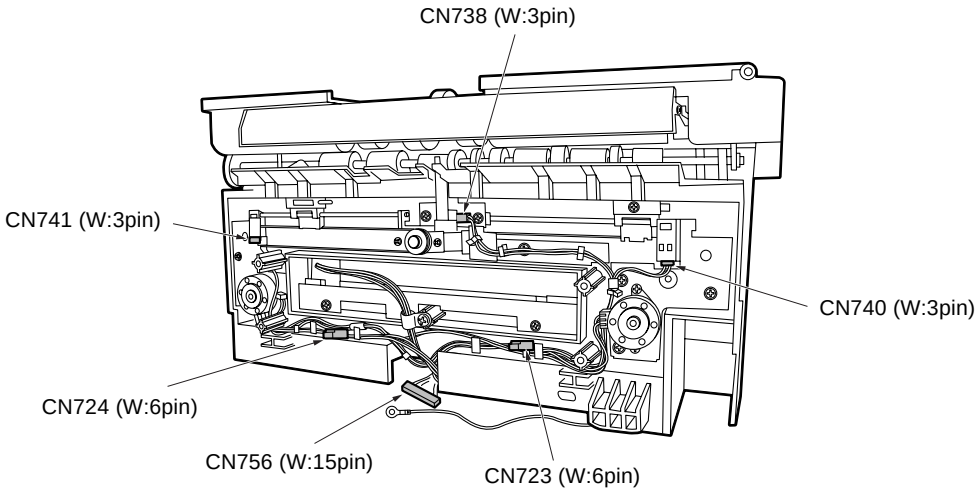

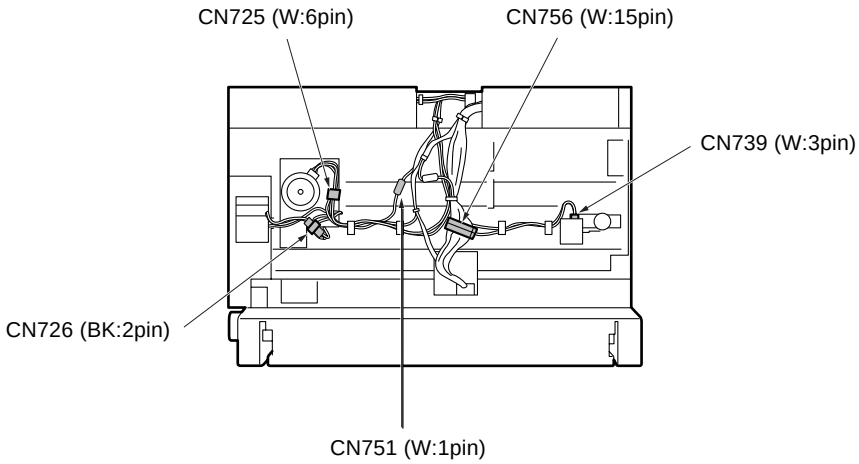

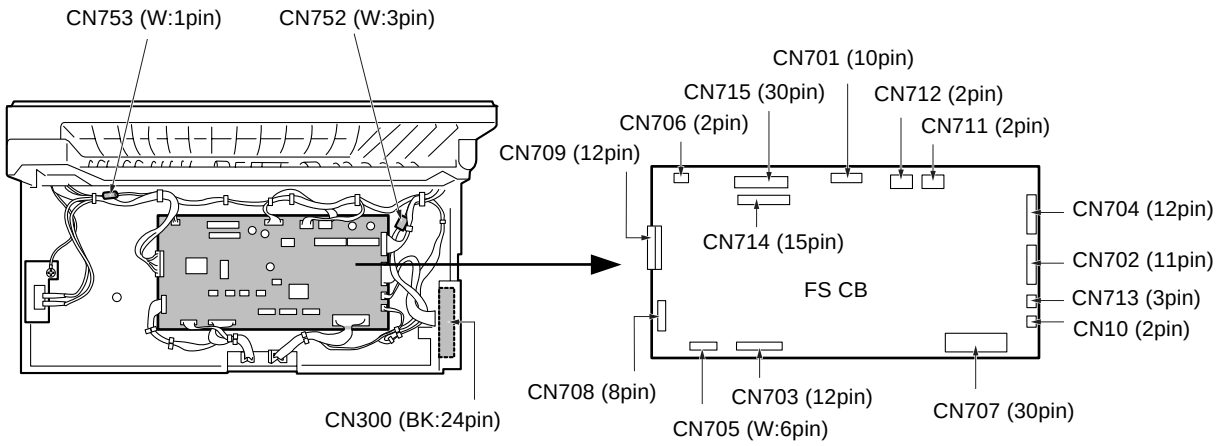
CN753 (W:1pin)
CN752 (W:3pin)
CN701 (10pin)
CN715 (30pin)
CN712 (2pin)
CN706 (2pin)
CN711 (2pin)
CN709 (12pin)
CN704 (12pin)
CN714 (15pin)
CN702 (11pin)
FS CB
CN713 (3pin)
CN10 (2pin)
CN708 (8pin)
CN703 (12pin)
CN707 (30pin)
CN705 (W:6pin)
CN300 (BK:24pin)

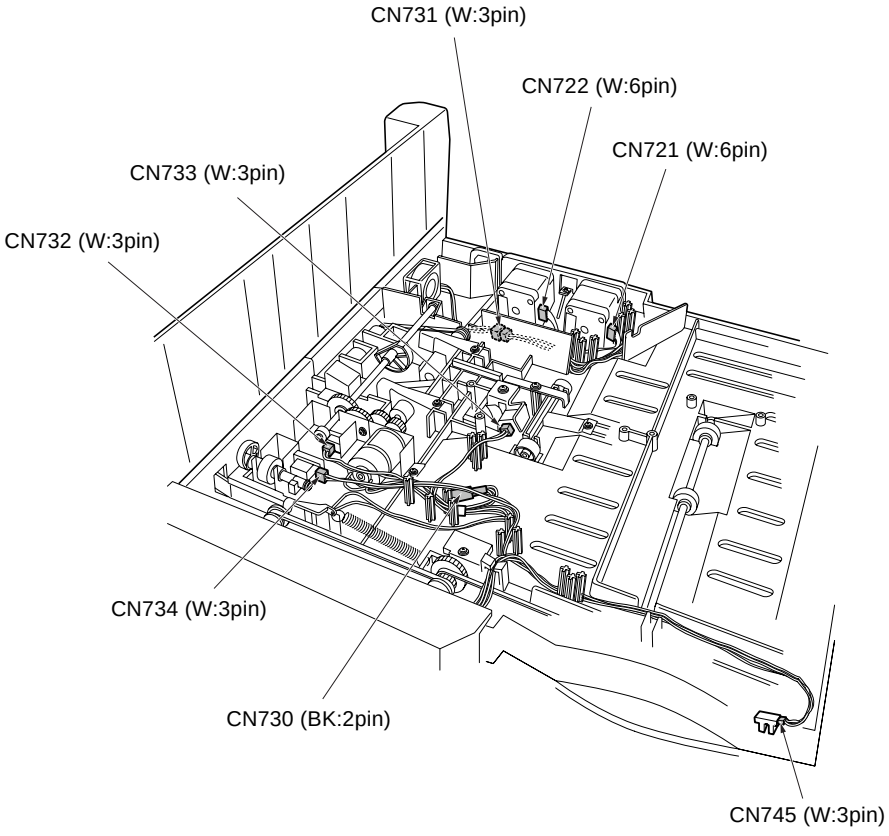
CN731 (W:3pin)
CN722 (W:6pin)
CN721 (W:6pin)
CN733 (W:3pin)
CN732 (W:3pin)
CN734 (W:3pin)
CN730 (BK:2pin)
CN745 (W:3pin)

DB-209 CONNECTOR LAYOUT DRAWING

LCT drive board

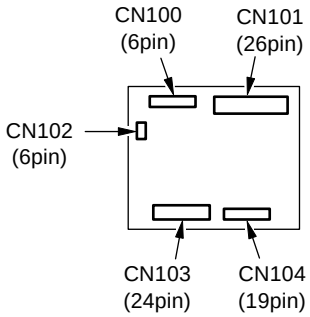

Size detection board1

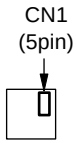

Size detection board2

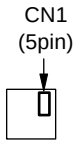

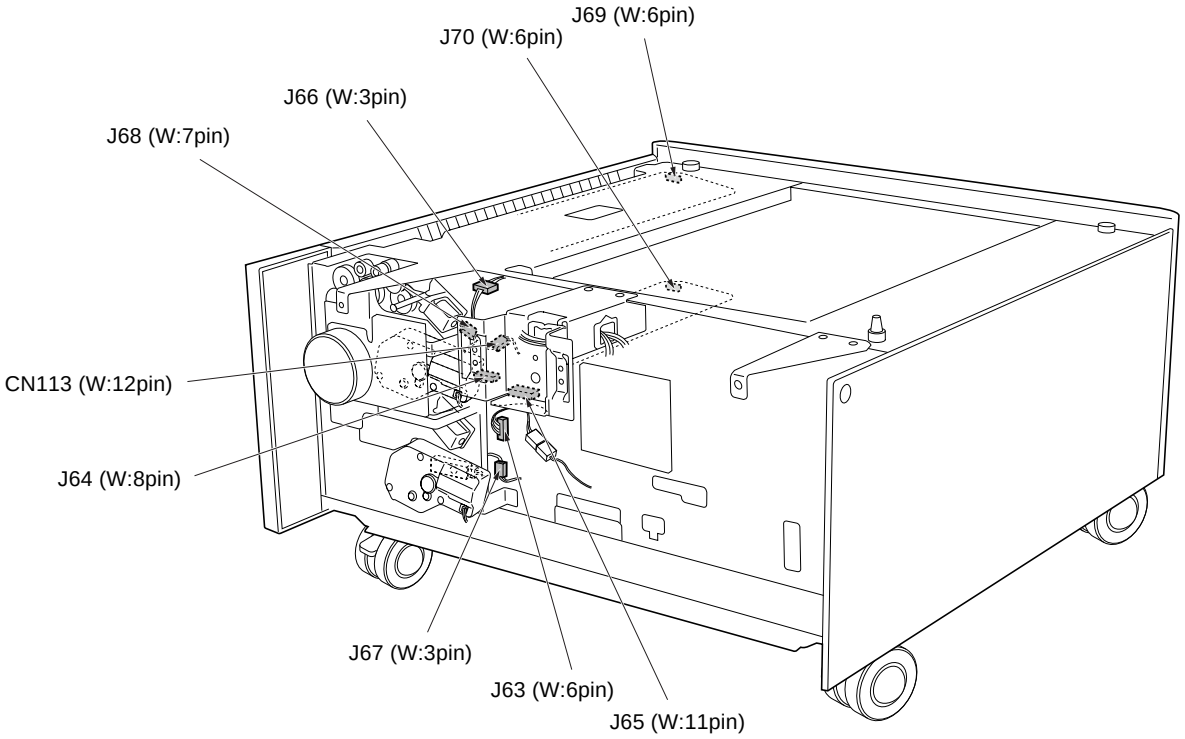

DB-409 CONNECTOR LAYOUT DRAWING

LCT drive board

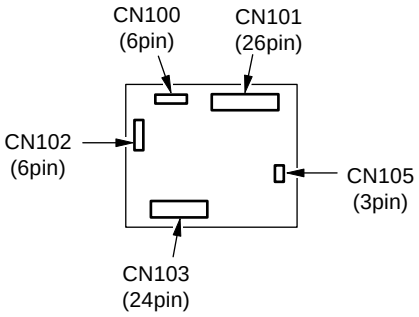

Size detection boad

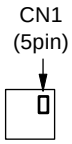

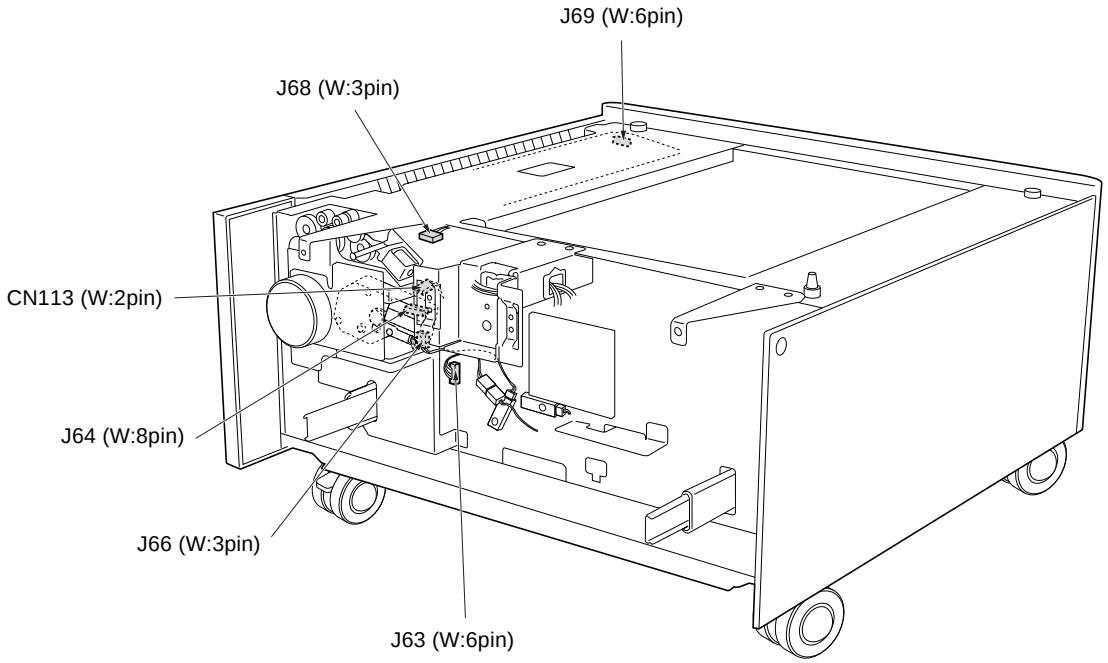

LIST OF JAM CODES

During operation

Classification	Code	Causes	Resulting operation	Correction
By-pass	J10	PS1 (registration) failed to turn ON within a predetermined time after start of by-pass feed (after SD3 (by-pass) ON).	If copying is in progress at time of jam, the copier completes ejection and then stops.	Take out the paper from the bypass tray, and remove any jammed paper.
Upper tray	J11	PS1 (registration) failed to turn ON within a predetermined time after start of upper-tray feed (after SD1 (first paper-feed (upper)) ON).		Open the ADU door, remove any jammed paper, and close the door. Pull out the tray, and remove any jammed paper.
Lower tray	J12	PS1 (registration) failed to turn ON within a predetermined time after start of upper-tray feed (after SD2 (first paper-feed (lower)) ON).		
DB tray	J13	PS104 (jam detect sensor PS1) failed to turn ON within a predetermined time after start of feed from DB upper tray (after SD101 (first paper-feed (upper)) ON).		Open the DB conveyance door, remove any jammed paper, and close the door. Pull out the tray, and remove any jammed paper.
	J14	PS104 (jam detect sensor PS1) failed to turn ON within a predetermined time after start of feed from DB lower tray.		
	J16	PS1 (registration) failed to turn ON within a predetermined time after paper passed PS104 (jam detect sensor PS1). • DB upper tray feed • DB lower tray feed		Open the ADU door and/or DB conveyance door, remove any jammed paper, and close the door.
Conveyance	J30	PS1 (registration) failed to turn OFF within a predetermined time after MC1 (registration) ON.	The main body stops immediately.	Open the ADU door, remove any jammed paper, and close the door.
	J31	PS2 (fixing exit) failed to turn OFF within a predetermined time after MC1 (registration) ON.		
Fixing/exit	J32-0	PS3 (paper exit) failed to turn ON within a predetermined time after PS2 (fixing exit) ON. (At the single side copy mode)	The main body stops immediately.	Open the ADU door, remove any jammed paper, and close the door.
	J32-2	PS2 (fixing exit) failed to turn OFF within a predetermined time after turning ON.		
	J33	PS3 (paper exit) failed to turn OFF within a predetermined time after turning ON.		
ADU conveyance	J92	PS1 (registration) failed to turn ON within a predetermined time after start of ADU reversal.	The main body stops immediately.	Open the ADU door, remove any jammed paper, and close the door.
	J97-1	PS4 (ADU) failed to turn ON within a predetermined time after PS2 (fixing exit) ON.		
	J97-2	PS4 (ADU) failed to turn OFF within a predetermined time after turning ON.		
FS-107	J72-16	PS702 (paper entrance detect) failed to turn ON within a predetermined time after PS3 (paper exit) ON.	The FS-107 and main body stop immediately.	Open the finisher front door, and conveyance cover remove any jammed paper, and close the door.
	J72-17	PS703 (paper exit detect sensor) failed to turn ON within a predetermined time after PS702 (paper entrance detect) ON. (Straight, shift mode)		
	J72-19	PS702 (paper entrance detect) failed to turn OFF within a predetermined time after turning ON. (Staple mode)		

Classification	Code	Causes	Resulting operation	Correction
FS-107	J72-21	PS703 (paper exit detect PS) failed to turn OFF within a predetermined time after turning ON. (Straight, shift mode)	The FS-107 and main body stop immediately.	Open the finisher front door, and conveyance cover remove any jammed paper, and close the door.
	J72-23	PS703 (paper exit detect PS) failed to turn OFF within a predetermined time after turning ON. (Straight mode)		
	J72-81	Staple jam: M708 (stapler motor) failed to turn OFF within a predetermined time after turning ON. (Forward operation not completed.) (Staple mode)		Remove the jammed staple.
DF-314	J61-0	PS305 (cover open/close detect) turned ON. (The paper feed cover is opened.)	The DF-314 stops immediately.	Open the RADF, remove any jammed paper, and then close. Remove any jammed paper from the main body's conveyance section.
	J61-1	PS304 (DF open/close) turned ON.		
	J62-0	Original did not feed.		
	J62-1	PS311 (original registration) failed to turn OFF within a predetermined time after turning ON. (Original is jammed in the PS311 area.)		
	J62-2	PS312 (original feed) failed to turn ON within a predetermined time after start of refeed for single sided original.		
	J62-3	PS312 (original feed) failed to turn ON within a predetermined time after start of reverse exit for double sided original.		
	J62-4	PS312 (original feed) failed to turn OFF within a predetermined time after start of first side scan of double sided original.		
	J62-5	PS312 (original feed) failed to turn OFF within a predetermined time after start of second side scan of double sided original.		
	J63-0	PS303 (original exit) failed to turn ON at time of exit of single sided original.		
	J63-1	PS303 (original exit) failed to turn ON at time of exit of double sided original.		
	J63-2	PS303 (original exit) failed to turn OFF within a predetermind time after turning ON at time of exit of single sided original.		
	J63-3	PS303 (original exit) failed to turn OFF within a predetermind time after turning ON at time of exit of double sided original.		
	J63-4	PS311 (original registration) failed to turn OFF within a predetermined time after start of refeed of single sided original.		
	J63-5	PS311 (original registration) failed to turn OFF within a predetermined time after start of reverse feed.		
Others	J20-2	The ADU door is opened during copying.	The FS-107 and main body stop immediately	Open the ADU door, remove any jammed paper, and close the door.
	J20-3	The FNS is removed during copying.		
	J20-4	Emergency stop signal is sent from system during copying.		
	J20-5	The FNS conveyance cover is opend during copying.		
	J20-6	The FNS front door is opend during copying.		
	J50-1	Failed to receive print request from system within a predetermined time after PS1 (registration) ON.		
	J50-2	"Valid" signal failed to turn ON within a predetermined time after start of printing.		
	J50-3	MC1 (registration) failed to turn ON within a predetermined time after start of printing.		

When idling

Classification	Code	Causes	Correction
Paper feed	J81	PS1 (registration) ON during idling state.	Open the ADU door, remove jammed paper, and close the door.
	J82	PS105 ON during idling state.	Open the DB feed door, remove jammed paper, and close the door. If paper is jammed in the main body: open the ADU door, remove the jammed paper, and close the door.
Exit	J90	PS2 (fixing exit) ON during idling state.	Open the ADU door, remove jammed paper, and close the door.
	J91	PS3 (paper exit) ON during idling state.	
ADU	J100	PS4 (ADU) ON during idling state.	Open the ADU door, remove jammed paper, and close the door.
FS-107	J72-1	PS702 (paper entrance detect) ON during idling state.	Open the finisher door, remove jammed paper, and close the door.
	J72-2	PS707 (no paper detect) ON during idling state.	
DF-314	J65-1	PS311 (original registration) ON during idling state.	Open the RADF, remove jammed paper, and then close.
	J65-2	PS312 (original feed) ON during idling state.	
	J65-3	PS311 (original registration), PS312 (original feed) ON during idling state.	
	J65-8	PS303 (original exit) ON during idling state.	
	J65-9	PS311 (original registration), PS303 (original exit) ON during idling state.	
	J65-10	PS312 (original feed), PS303 (original exit) ON during idling state.	
	J65-11	PS311 (original registration), PS312 (original feed), PS303 (original exit) ON during idling state.	

LIST OF WARNING (ERROR) CODES

Classification	Warning code	Causes	Resulting operation	Correction	Estimated abnormal parts
Communication abnormalities	F10-1	Failure in serial communication between the PRDB (printer drive board) and CB (overall control board).	If copying is in progress, the main body stops immediately, and the main relay and 24V power turn OFF.	Switch SW2 (sub power switch) OFF and then back ON.	PRDB (printer drive board), CB (overall control board)
	F10-2	Two consecutive failures to respond to PRDB (printer drive board) A/D conversion request.			PRDB (printer drive board)
	F10-9	Communication error at PRDB (printer drive board) SRGA (serial gate array) error. (Error in protocol for receive control signals SREC, SACK.)			PRDB (printer drive board), CB (overall control board)
Feed-tray and drum-area abnormalities	F18-1	Error in main body upper tray PS7 (tray upper limit detect (upper)) failed to turn ON within 26 seconds after M7 (tray motor (upper)) ON.			PRDB (printer drive board), M7 (tray motor (upper)), PS7 (tray upper limit detect (upper))
	F18-2	Error in main body lower tray PS10 (tray upper limit detect (lower)) failed to turn ON within 26 seconds after M8 (tray motor (lower)) ON.			PRDB (printer drive board), M8 (tray motor (lower)), PS10 (tray upper limit detect (lower))
	F18-3	Error in DB upper tray PS102 (upper limit detect (upper)) failed to turn ON within 26 seconds after M101 ON.			PFU DB (PFU drive board) or LCT DB (LCT drive board), M101, PS102 (upper limit detect (upper))
	F18-4	Error in DB lower tray PS107 (upper limit detect (lower)) failed to turn ON within 26 seconds after M102 ON.			PFU DB (PFU drive board), M102, PS107 (upper limit detect (lower))
	F22-1	Internal overheating The temperature at the outside of the drum reached or exceeded 47˚C.			TCSB (toner-control sensor board)
	F23-1	PCL connector detached With 24V ON and PCL OFF, the PCL EM signal (pcl_em) was detected as "H" (software logic).		Switch SW2 (sub power switch) OFF, connect the PCL connector, and then set SW2 ON.	PCL connector, PRDB (printer drive board)

Classification	Warning code	Causes	Resulting operation	Correction	Estimated abnormal parts
High voltage unit abnormalities	F26-1	L detection data error If L detection power exceeds 26V prior to toner out detection by the TLD (toner level detect), the automatic toner supply feature should restore the toner density. This error occurs if this feature fails to restore the density.	If copying is in progress, the main body stops immediately, and the main relay and 24V power turn OFF.	Set SW2 (sub power switch) OFF and then back ON.	TDS (toner density sensor), TLD (toner level detect sensor), PRDB (printer drive board)
	F26-2	Abnormal output from TDS (toner density sensor) Maximum TDS output voltage failed to exceed 1.0V.			TDS (toner density sensor), PRDB (printer drive board)
	F26-3	Abnormal output from TDS (toner density sensor) TDS output ripple voltage failed to reach 0.5V			TDS (toner density sensor), PRDB (printer drive board)
	F28-1	Charging error EM detect signal (charge_em1) was read 3 times at 100msec intervals.			Charging corona unit, HV (high voltage unit), PRDB (printer drive board)
	F28-2	Abnormal transfer spark (trans_em) detected 3 times at 20msec intervals, 5 times in succession for the same job.			Transfer corona unit, HV (high voltage unit), PRDB (printer drive board)
	F28-3	Abnormal separation spark (separate_em) detected 3 times at 20msec intervals, 5 times in succession for the same job.			Separation corona unit, HV (high voltage unit), PRDB (printer drive board)
	F28-4	Carrier adhesion error Output from the patch detect sensor is checked during initial charging, and this error is generated if the density indicates carrier adhesion.			HV (high voltage unit), PRDB (printer drive board), TCSB (toner control sensor board)
Fixing high temperature abnormalities	F34-1	TH1 (fixing temperature sensor 1) detected abnormally high temperature. Temperature detected by TH1 remained at or above 230˚C for 1.5 seconds.	Main relay turns OFF and acceptance of all keys is disabled.	Set SW2 (sub power switch) OFF and then back ON after set to "0" the bit 1 in DIP SW3 in 25 mode. (If you switch power back on without releasing the latch, the error will recur.)	TH1 (fixing temperature sensor 1), TH2 (fixing temperature sensor 2), L2 (fixing heater lamp 1), L3 (fixing heater lamp 2), PRDB (printer drive board), DCPS (DC power supply)
	F34-2	TH2 (fixing temperature sensor 2) detected abnormally high temperature. Temperature detected by TH2 remained at or above 230˚C for 1.5 seconds.			

Classification	Warning code	Causes	Resulting operation	Correction	Estimated abnormal parts
Fixing low temperature abnormalities	F35-1	Fixing main sensor detected abnormally low temperature. Occurs if main motor remains energized for longer than 10 seconds during idling state.	Main relay turns OFF and acceptance of all keys is disabled.	Set SW2 (sub power switch) OFF and then back ON, after set to "0" the bit 1 in DIP SW3 in 25 mode. (If you switch power back on without releasing the latch, the error will recur.)	TH1 (fixing temperature sensor 1), TH2 (fixing temperature sensor 2), L2 (fixing heater lamp 1), L3 (fixing heater lamp 2), PRDB (printer drive board), DCPS (DC power supply)
	F35-2	TH1 (fixing temperature sensor 1) detected abnormally low temperature. During idling or copying, TH1 detected that temperature remained at or below 165˚C for 10 seconds.			
	F35-3	TH1 (fixing temperature sensor 1) detected abnormally low temperature (during warmup) If TH1 detects that temperature is below 170˚C at the time that L2 (fixing heater lamp 1) is started, it records the temperature reading and compares this with the temperature reading obtained 10 seconds later. This error occurs if the difference between these temperature readings is less than a predetermined level. If TH1 detects that temperature is at or above 170˚C at the time that L2 starts, this error occurs if TH1 fails to detect warm-up completion temperature within 10 seconds thereafter.			
	F35-4	TH2 (fixing temperature sensor 2) detected abnormally low temperature. Occurs if L3 (fixing heater lamp 2) remains energized for longer than 10 seconds during idling state.			
	F35-5	TH2 (fixing temperature sensor 2) detected abnormally low temperature. During idling or copying, TH2 detected that temperature remained at or below 165˚C for 10 seconds.			

Classification	Warning code	Causes	Resulting operation	Correction	Estimated abnormal parts
Fixing low temperature abnormalities	F35-6	TH2 (fixing temperature sensor 2) detected abnormally low temperature. At warm-up, if TH2 detects that temperature is less than 170˚C at the time when L3 (fixing heater lamp 2) is first energized, it stores the temperature reading, then compares it with the temperature reading obtained 10 seconds later. This error occurs if the difference between the two reads is less than a predetermined value. If TH2 detects that temperature is 170˚C or higher at the time when power is first supplied to L3, this error occurs if the TH2 fails to detect warm-up completion temperature within 10 seconds.	Main relay turns OFF and acceptance of all keys is disabled.	Set SW2 (sub power switch) OFF and then back ON. Set to "0" the bit 1 in DIP SW3 in 25 mode. (If you switch power back on without releasing the latch, the error will recur.)	TH1 (fixing temp detector 1), TH2 (fixing temp detector 2), L2 (fixing heater lamp 1), L3 (fixing heater lamp 2), PRDB (printer drive board), DCPS (DC power supply)
	F35-7	Fixing heat roller wrapping jam failure This error occurs during print state if the temperature detected by TH1 (fixing temperature sensor 1) is more than 10 data readings above the temperature data reading obtained 1 second earlier (i.e., temperature is low), and this condition continues for 0.2 seconds.			
	F35-8	Fixing heat roller wrapping jam failure This error occurs during print state if the temperature detected by TH2 (fixing temperature sensor 2) is more than 10 data readings above the temperature data reading obtained 1 second earlier (i.e., temperature is low), and this condition continues for 0.2 seconds.			

Classification	Warning code	Causes	Resulting operation	Correction	Estimated abnormal parts
Fixing low temperature abnormalities	F35-9	TH1 (fixing temperature sensor 1) bad contact This error occurs during warm-up if TH1 fails to make its first detection of "Ready" temperature within 11 seconds after TH2 (fixing temperature sensor 2) first makes this detection.	Main relay turns OFF and acceptance of all keys is disabled.	Set SW2 (sub power switch) OFF and then back ON. Set to "0" the bit 1 in DIP SW3 in 25 mode. (If you switch power back on without releasing the latch, the error will recur.)	TH1 (fixing temperature sensor 1), TH2 (fixing temperature sensor 2), L2 (fixing heater lamp 1), L3 (fixing heater lamp 2), PRDB (printer drive board), DCPS (DC power supply)
	F35-10	TH2 (fixing temperature sensor 2) bad contact This error occurs during warm-up if TH2 fails to make its first detection of "Ready" temperature within 11 seconds after TH1 (fixing temperature sensor 1) first makes this detection.			
Broken fixing sensor (open circuit)	F36-1	TH1 (fixing temperature sensor 1) high temperature error This error occurs if TH1 high temperature error signal is detected continuously for at least 1 second.			
	F36-2	TH2 (fixing temperature sensor 1) high temperature error This error occurs if TH2 high temp error signal is detected continuously for at least 5 seconds.			
	F36-3	TH1 (fixing temperature sensor 1) open error Occurs if TH1 open signal is detected.			

Classification	Warning code	Causes	Resulting operation	Correction	Estimated abnormal parts
Fixing cleaner abnormalities	F37-1	This is a warning to replace the fixing cleaner web. The warning occurs when the web has turned ON 50,000 times.	Main relay turns OFF and acceptance of all keys is disabled.	Replace the cleaning web, then enter 36 mode and reset the fixing related counter.	Cleaning web
Scanner abnormalities	F40-1	Communication error at optics CPU SRGA error (bad parity, overrun, or framing error in received data) or by transmission timeout [100ms].	If copying is in progress, the main body stops immediately, and the main relay and 24V power turn OFF.	Switch SW2 (sub power switch) OFF/ON.	SCDB (optics drive board)
	F40-9	Communication error at optics CPU SRGA error (protocol error in receive control signal [SREQ, SACK]).			
	F41-1	M2 (optics drive motor) drive error Occurs at exposure unit initial search or at exposure unit return scan if PS14 (optics home-position sensor) fails to turn ON within a predetermined time.			M2 (optics drive motor), SCDB (optics drive board)
	F43-1	L1 (exposure lamp) error Occurs if L1 error signal is detected continuously for 500msec (excluding first 500msec after L1 ON).			L1 (exposure lamp)
Image processing abnormalities	F46-1	Laser-driver error Caused by overcurrent in laser output.			Laser diode, LDB (laser drive board), CB (overall control board)
	F46-8	Laser index error Occurs if index period is different from expected value.			INDEX (index sensor board), M5 (polygon motor), optics circuitry, CB (overall control board)
	F46-10	AOC error AOC counter overflow			ADB (A/D conversion board), L1 (exposure lamp), INV1 (exposure lamp inverter), exposure unit stop position, CB (overall control board)

Classification	Warning code	Causes	Resulting operation	Correction	Estimated abnormal parts
Image processing abnormalities	F46-11	AGC error AGC counter overflow	If copying is in progress, the main body stops immediately, and the main relay and 24V power turn OFF.	Switch SW2 (sub power switch) OFF/ON.	ADB (A/D conversion board), L1 (exposure lamp), INV1 (exposure lamp inverter), exposure unit stop position, CB (overall control board)
	F49-2	LDB (laser drive board) connection error			LDB (laser drive board), CB (overall control board)
	F49-4	INDEX (index sensor board) connection error			INDEX (index sensor board), CB (overall control board)
	F49-6	ADB (A/D conversion board) connection error			CCD on the ADB (A/D conversion board), CB (overall control board), flex wire bundle
Motor speed abnormalities	F51-4	M3 (developing motor) speed error EM detect signal (developing_motor_em) detected 5 times at 100msec intervals.			M3 (developing motor), PRDB (printer drive board)
	F51-5	M1 (main motor) speed error EM detect signal (drum_motor_em) detected 5 times at 100msec intervals.			M1 (main motor), PRDB (printer drive board)
	F51-6	M5 (polygon motor) speed error M5 was not locked 5 sec. after starting to run.			M5 (polygon motor), PRDB (printer drive board)
Fan lock abnormalities	F52-1	FM3 (optical unit fixing cooling fan) error EM detect signal detected 5 times at 100msec intervals.			FM3 (optical unit fixing cooling fan), PRDB (printer drive board)
	F52-2	FM2 (fixing cooling fan) error EM detect signal detected 5 times at 100msec intervals. (Clear if detection counter is not EM).			FM2 (fixing cooling fan), PRDB (printer drive board)
	F52-3	FM1 (DCPS cooling fan) error EM detect signal detected 5 times at 100msec intervals. (Clear if detection counter is not EM).			FM1 (DCPS cooling fan), PRDB (printer drive board)

Classification	Warning code	Causes	Resulting operation	Correction	Estimated abnormal parts
Image control communication abnormalities	F56-1	Communication error between system-control and engine-control sections of the CB (overall control board). Occurs if CB fails to responds when SW2 (sub power switch) turns ON. (10sec.)	If copying is in progress, the main body stops immediately, and the main relay and 24V power turn OFF.	Switch SW2 (sub power switch) OFF/ON. (CB reset)	CB (overall control board) engine section
	F56-2	Communication error between system-control and engine-control sections of the CB (overall control board). Process READY signal not detected for 30sec. during standby.			CB (overall control board) engine section
	F56-3	Communication error between system-control and engine-control sections of the CB (overall control board). Scanner READY signal is not detected for 30sec. during standby.			CB (overall control board) engine section
	F56-4	Communication error between system-control and engine-control sections of the CB (overall control board). Finisher READY signal is not detected for 30sec. during standby.			CB (overall control board) engine section, FSCB
	F56-5	Communication error between system-control and engine-control sections of the CB (overall control board). Platen-original size notification timeout (5sec.).			CB (overall control board) engine section
Operations unit control abnormalities	F56-6	Operation status error Memory access error at copy insertion.			CB (overall control board)
	F56-7	Control error at panel manager			
	F56-8	Operation drawing error Screen-data drawing mismatch			
	F56-9	Operation drawing error Drawing-component data error			
	F56-10	(Error code reserved for operations)			
Main body abnormalities	F56-11	Main-body identification error Detected overall control board (ROM) for different machine.		Switch SW2 (sub power switch) OFF/ON, then overwrite the overall control ROM (ISW).	CB (overall control board)

Classification	Warning code	Causes	Resulting operation	Correction	Estimated abnormal parts
DF-314	F60-1	RADF communication error 1. Caused by SRGA error detection (bad parity, overrun, or framing error in received data) or by transmission timeout [100ms]). 2. Caused by SRGA error detection (protocol error in receive control signal [SREQ, SACK]).	If copying is in progress, the main body stops immediately, and the main relay and 24V power turn OFF.	Switch SW2 (sub power switch) OFF/ON.	DFCB (RADF control board), CB (overall control board)
	F60-11	RADF flash-ROM error Detected checksum error in RADF flash ROM.		Switch SW2 (sub power switch) OFF/ON, then overwrite the RADF ROM (ISW).	DFCB (RADF control board)
	F67-3	Error in RADF nonvolatile memory Error in reading or writing the nonvolatile memory.		Switch SW2 (sub power switch) OFF/ON.	DFCB (RADF control board), CB (overall control board)
FS-107	F70-1	FNS communication error 1. Caused by SRGA error detection (bad parity, overrun, or framing error in received data) or by transmission timeout [100ms]). 2. Caused by SRGA error detection (protocol error in receive control signal [SREQ, SACK]).		Switch SW2 (sub power switch) OFF/ON.	CB (overall control board), FSCB (FS control board)
	F70-11	FNS flash-ROM error Detected checksum error in FNS flash ROM.		Switch SW2 (sub power switch) OFF/ON, then overwrite the FNS ROM (ISW).	FSCB (FS control board)
	F77-2	M706 (tray up/down motor) drive error 1. Following removal of paper, tray failed to reach PS711 (tray upper limit detect) or PS706 (tray lower limit detect) within 10 sec. after start of tray up. 2. During copying, tray failed to reach PS711 (tray upper limit detect) or PS706 (tray lower limit detect) within 10 sec. after start of tray up. 3. PS703 (paper exit detect PS failed to turn ON after 3 paper-surface detection operations.		Switch SW2 (sub power switch) OFF/ON.	M706 (tray up/down motor), FSCB (FS control board), PS711 (tray upper limit detect), PS706 (tray lower limit detect)

Classification	Warning code	Causes	Resulting operation	Correction	Estimated abnormal parts
FS-107	F77-3	M704 (alignment motor (front)) drive error 1. Failed to reach HP within 1 second after start of alignment-plate HP search. 2. PS710 (alignment-plate HP detect (front)) failed to turn OFF within 2 seconds after start of alignment-plate size position shift.	If copying is in progress, the main body stops immediately, and the main relay and 24V power turn OFF.	Switch SW2 (sub power switch) OFF/ON.	M704 (alignment motor (front)), PS710 (alignment-plate HP detect (front)), FSCB (FS control board)
	F77-5	M707 (paper-pressure motor) drive error M707 failed to complete 1 rotation within 500msec after starting to run.			M707 (paper-pressure motor), FSCB (FS control board)
	F77-6	M705 (stapler shift motor) drive error Stapler unit failed to reach or clear PS708 (stapler-unit HP detect) within 10 seconds after starting movement.			FSCB (FS control board), M705 (stapler shift motor), PS708 (stapler-unit HP detect)
	F77-17	Stapler reversal error Stapler failed to read PS712 (stapler HP detect) within 500msec after start of M708 (stapler motor) reverse drive.			FSCB (FS control board), M708 (stapler motor)
	F77-22	M703 (alignment motor (rear)) drive error 1. Failed to reach HP within 1 second after start of alignment-plate HP search. 2. PS709 (alignment-plate HP detect (rear)) failed to turn OFF within 2 seconds after start of alignment-plate size position shift.			M703 (alignment motor (rear)), PS709 (alignment-plate HP detect (rear)), FSCB (FS control board)
	F77-23	M709 (cooling fan motor) drive error Lock condition (lasting more than 10 seconds) was detected any time from 10 seconds after operation start to 1 minute following operation stop.			M709 (cooling fan motor) FSCB (FS control board)
Nonvolatile memory	F80-1	Error in main body's nonvolatile memory Detected abnormal function parameter.		Switch SW2 (sub power switch) OFF/ON. (CB reset)	PRMB (Parameter memory board) on the CB (overall control board)
	F80-2	Error in main body's nonvolatile memory Detected error in stored factory data.			
	F80-3	Error in main body's nonvolatile memory Detected abnormal function parameter, error in stored factory data.			
	F80-4	Error in main body's nonvolatile memory Unable to access function parameter.			
	F80-5	Error in main body's nonvolatile memory Unable to access stored factory data.			

Classification	Warning code	Causes	Resulting operation	Correction	Estimated abnormal parts
Flash ROM	F81-1	Error in image-control flash ROM Detected checksum error in CB's image-control ROM.	If copying is in progress, the main body stops immediately, and the main relay and 24V power turn OFF.	Switch SW2 (sub power switch) OFF/ON, then overwrite the image-processing flash ROM.	CB (overall control board)
	F81-2	Software error Overall control and image control have non-matching software device types.		Switch SW2 (sub power switch) OFF/ON, then overwrite the flash ROM.	CB (overall control board)
	F81-3	OEM compatibility error		Switch SW2 (sub power switch) OFF/ON, then overwrite the flash ROM.	CB (overall control board)
Printer board	F87-1	Printer controller not identified. Printer controller did not respond. (But copier and fax can be used.)		Switch SW1 (main power switch) OFF/ON.	Optional printer controller
	F87-2	Printer-controller error Error F87-1 occurred 3 times in succession.		Switch SW2 (sub power switch) OFF/ON. (CB reset)	Optional printer controller
Image processing	F88-1	Image error Error detected in image processing at overall control side.		Switch SW2 (sub power switch) OFF/ON. (CB reset)	CB (overall control board) engine section
CB (overall control board) communication abnormalities	F89-1	Copy sequence error Error in job object pointer. (Could not get page-control object for some reason.)			
	F89-2	Copy sequence error Error in memory copy sequence. (Cause unknown)			
	F89-3	Copy sequence error Error in through copy sequence (FCOT). (Cause unknown)			
	F89-4	Copy sequence error Memory scanner did not complete stop. (Notification of stop completion not received from engine.)			
	F89-5	Copy sequence error Memory printer did not complete stop. (Notification of stop completion not received from engine.)			
	F89-6	Sub power OFF processing wait timeout			

About cutoff of abnormal units

The following table shows how defective units are cut off (by software) in accordance with the error type.

Error code	Error	Unit to be cut off	Remarks
18-1	Error in main body upper tray	Main body upper tray	Tray can not be selected.
18-2	Error in main body lower tray	Main body lower tray	Tray can not be selected.
18-3	Error in DB upper tray	DB upper tray	Tray can not be selected.
18-4	Error in DB lower tray	DB lower tray	Tray can not be selected.
60-1, -11, 67-3	RADF error	RADF	RADF can not be used.
70-1, -11, 77-1, -23	FNS error	FNS	FNS can not be used; FNS must be removed.
77-2	Error in FNS tray up/down drive	FNS	FNS can not be used; FNS must be removed.
77-3, -22, -5	Error in FNS alignment-plate, pressure motor	FNS alignment unit	Only straight exit remains available.
77-6, -17	FNS stapler error	FNS alignment unit	Only straight exit remains available.
86-2, -3	Fax-board error	Fax	Copying and printing remain enabled.
87-1, -2	Printer-board error	Printer	Copying and faxing remain enabled.

Cutoff Method

Upon the occurrence of any of the error codes shown above, the defective unit will be cut off from the system (by software) when you press the [AUTO RESET] key and then switching SW2 (sub power) OFF/ON. Other functions will remain available. Note that if you don't clear the problem in the defective unit, the error will be detected again (and the error code displayed again) the next time you turn SW2 OFF/ON. (This cutoff feature is effective one time only.)

7020 TIME CHART (A4, LIFE SIZE, 2 COPIES, FEED FROM TRAY 1)

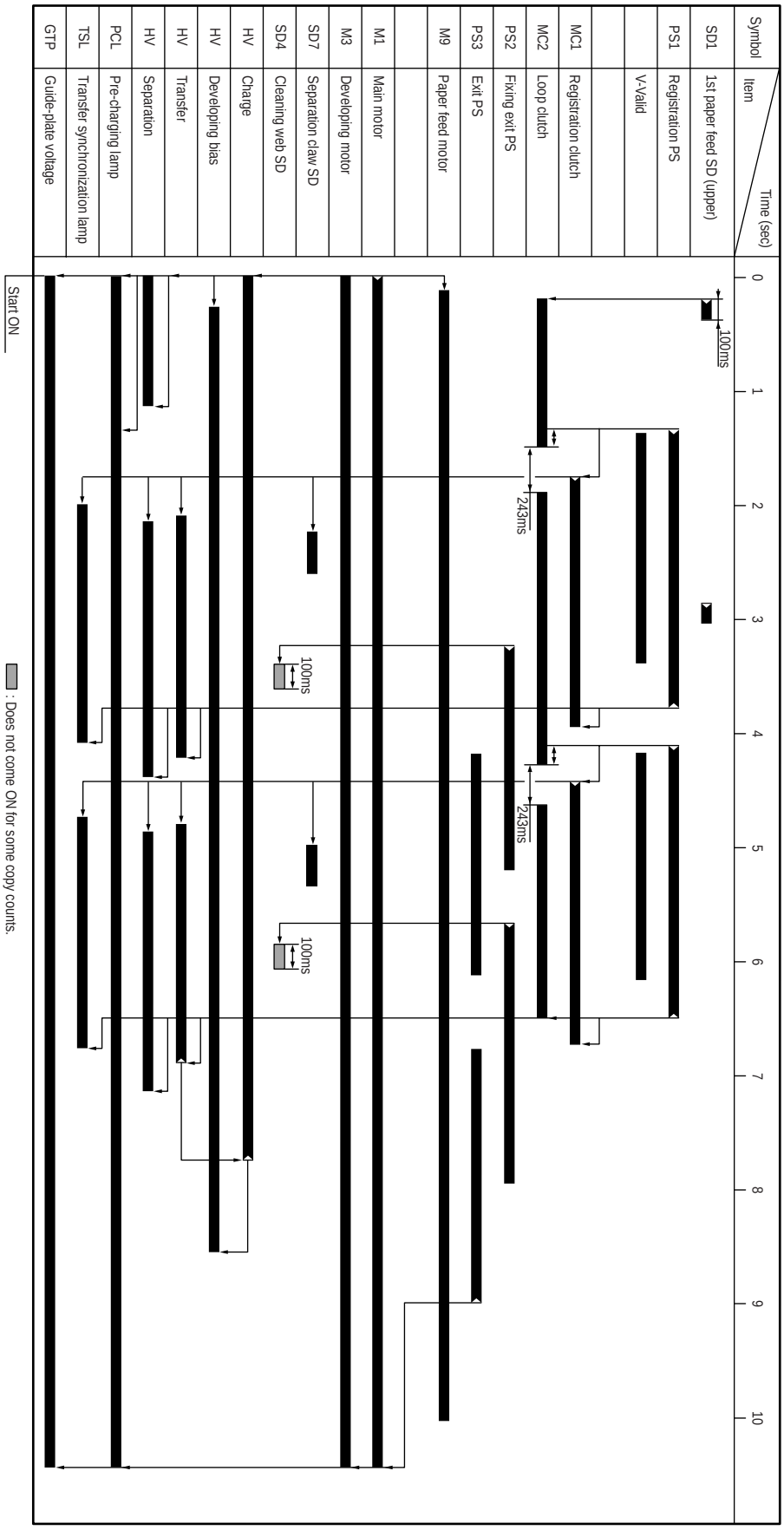

7020ADU TIME CHART (A4, LIFE SIZE, 3COPIES, FEED FROM TRAY 1)

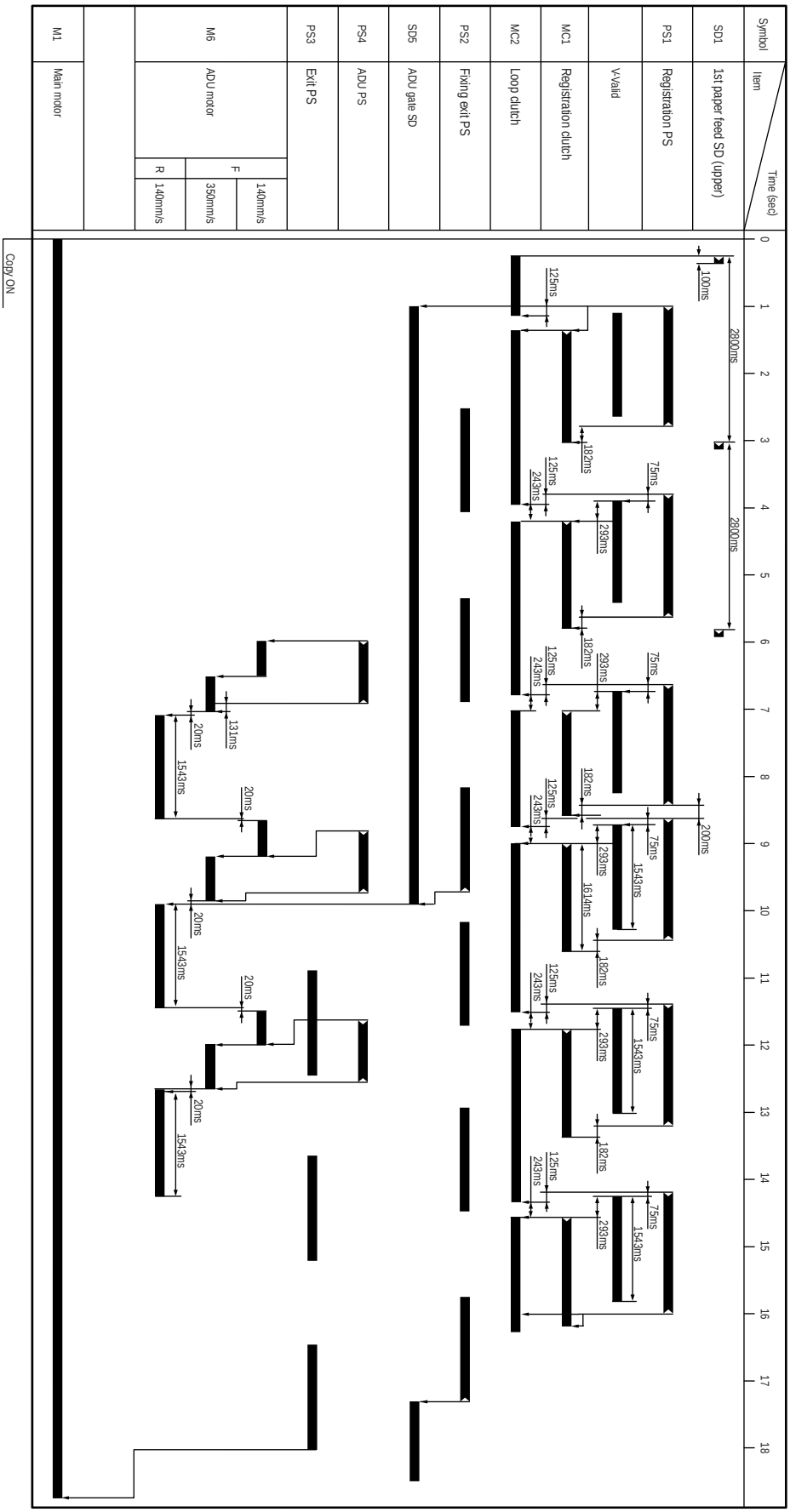

DF-314 TIME CHART (A4, SINGLE SIDE ORIGINAL, 3 SHEETS)

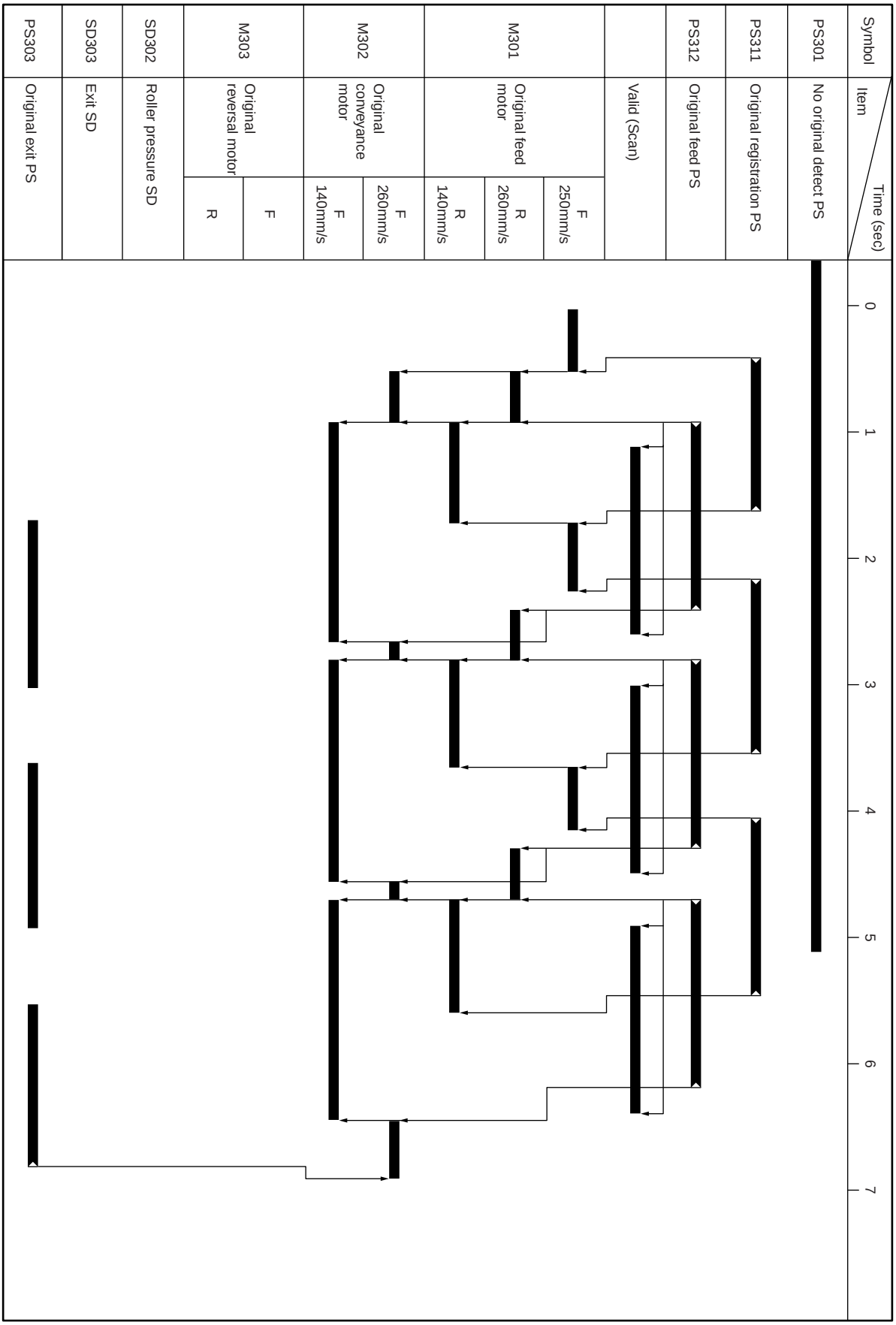

DF-314 TIME CHART (A4, DOUBLE SIDE ORIGINALS, 2 SHEETS)

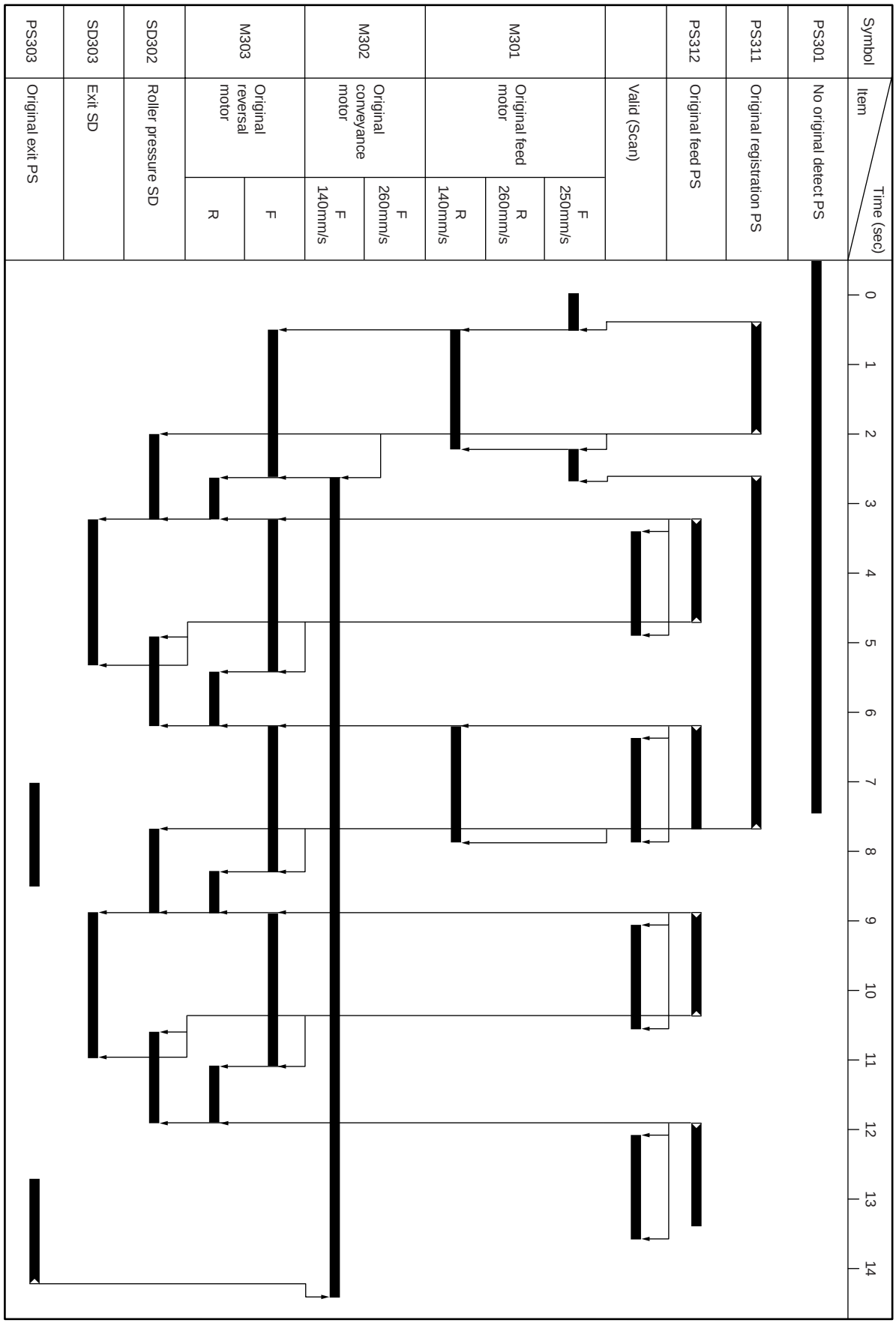

FS-107 TIME CHART (A4, SORT MODE, 2 SHEETS/SET, 2 SETS)

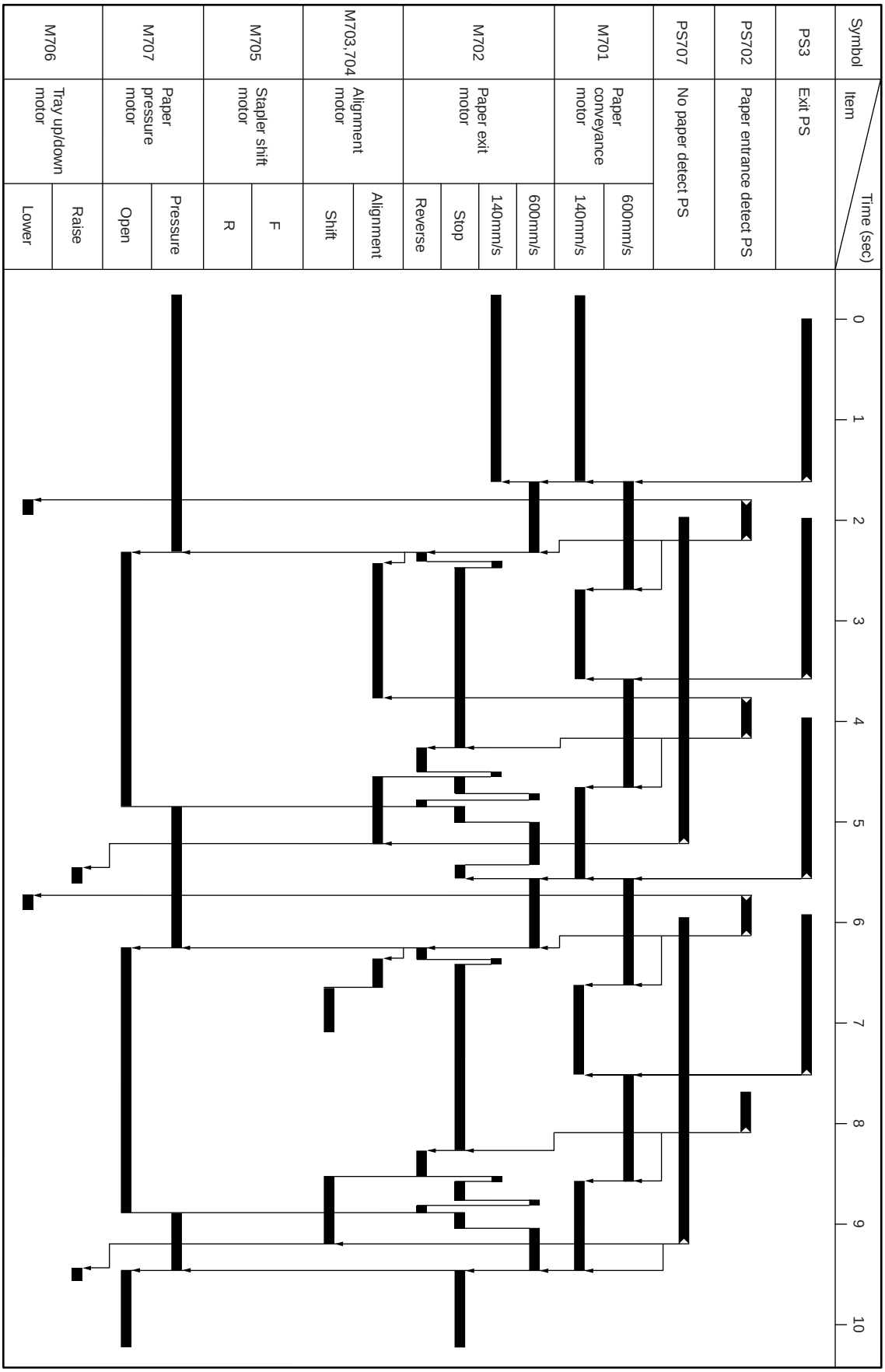

FS-107 TIME CHART (A4, STAPLE MODE, 2 SEETS, 1 POSITION)

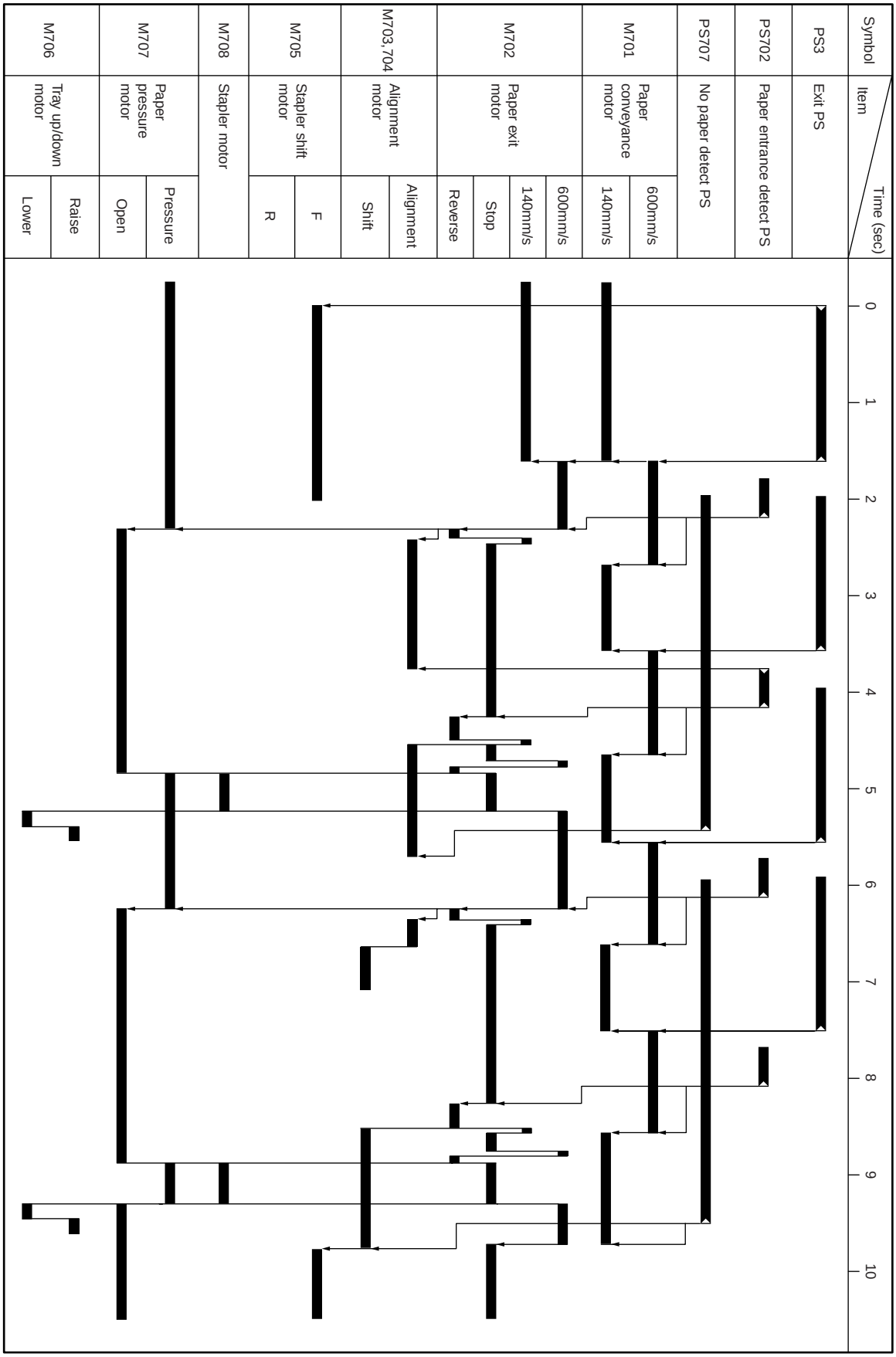

DB-209/DB409 TIME CHART (A4, LIFE SIZE, 3 COPIES, FEED FROM TRAY 1)

