SAFETY AND IMPORTANT WARNING ITEMS

Read carefully the Safety and Important Warning Items described below to understand them before doing service work.

IMPORTANT NOTICE

Because of possible hazards to an inexperienced person servicing this copier, as well as the risk of damage to the copier, Konica Corporation, strongly recommends that all servicing be performed only by Konica-trained service technicians.

Changes may have been made to this copier to improve its performance after this Service Handbook was printed. Accordingly, Konica Corporation, makes no representations or warranties, either expressed or implied, that the information contained in this Service Handbook is complete or accurate. It is understood that the user of this Service Handbook must assume all risks or personal injury and/or damage to the copier while servicing the copier for which this Service Handbook is intended.
Therefore, this Service Handbook must be read carefully before doing service work both in the course of the technical training and even after that, for keeping the correct maintenance and control of the copier. Keep the Service Handbook also for the future service. When it is impossible to read the description about safety and warning (due to contamination or tear), the relevant page should be replaced.

DESCRIPTION ITEMS FOR DANGER, WARNING AND CAUTION

In this Service Handbook, each of three expressions, "⚠ DANGER", "⚠ WARNING" and "⚠ CAUTION" is defined as follows together with a symbol mark to be used in a limited meaning. When servicing, the relevant works (disassembling, assembling, adjustment, repair and maintenance) need to be conducted with utmost care.

⚠ **DANGER:**	**Actions having a high possibility of suffering death or serious wound**
⚠ **WARNING:**	**Actions having a possibility of suffering death or serious wound**
⚠ **CAUTION:**	**Actions having a possibility of suffering a slight wound, medium trouble and material damage**

SAFETY WARNINGS

[1] MODIFICATIONS NOT AUTHORIZED BY Konica

Konica copiers are renowned for their high reliability. This reliability is achieved through high-quality design and a solid service network.

Photocopier design is a highly complicated and delicate process where numerous mechanical, physical, and electrical aspects have to be taken into consideration, with the aim of arriving at proper tolerances and safety factors. For this reason, unauthorized modifications involve a high risk of degrading performance and safety. Such modifications are therefore strictly prohibited. The points listed below are not exhaustive, but they illustrate the reasoning behind this policy.

⚠ **PROHIBITED ACTIONS :**

(1) Using extension cables or a different power cord than specified by Konica.
(2) Using other fuses than specified by Konica. Safety will not be assured, leading to a risk of fire and injury.
(3) Disabling fuses or bridging fuse terminals with wire, metal clips, solder or similar. (This applies also to thermal fuses.)
(4) Removing air filters (except for replacement).
(5) Disabling relay functions (such as wedging paper between relay contacts, etc.).
(6) Disabling safety functions (interlocks, safety circuits, etc.). Safety will not be assured, leading to a risk of fire and injury.
(7) Performing actions to copier not described in the instruction manual or the service handbook.
(8) Using parts other than specified by Konica.

[2] CHECKPOINTS WHEN PERFORMING ON-SITE SERVICE

Konica copiers are extensively tested before shipping, to ensure that all applicable safety standards are met, in order to protect the customer and customer engineer from the risk of injury. However, in daily use, any electrical equipment may be subject to parts wear and eventual failure. In order to maintain safety and reliability, the customer engineer must perform regular safety checks.

1. Advance Preparation for Safety Checks

⚠ **CAUTION:**

(1) Wear clothing that facilitates work and is designed for safety.
(2) Carry out all procedures carefully to prevent injury.
(3) Be sure to disconnect the power cord of the copier and all optional equipment from the AC outlet.
Simply turning off the power switch is not sufficient, because paper feed units or other electrical equipment may be powered also when the power switch is turned off.
(4) Proceed with special care when performing operation checks or adjustment while the unit is powered. When carrying out operation checks or adjustment while external covers are removed, the risk of electrical shock exists when touching parts which carry high voltage or electrical charge. The risk of injury exists when touching moving parts such as gears or chains.

2. Safety Checkpoints

The following list is not exhaustive, but it includes actions which must be carried out at every on-site service.

⚠ CAUTION:

(1) Check external covers and the frame for sharp edges, burrs, or nicks.
(2) Check external covers and hinges for loosening or damage.
(3) Check wiring for squeezing or damage.
(4) Check power cord for insulation problems (conductor must not be exposed).
(5) Check power cord and cable ties etc. for loosening from frame.

⚠ WARNING:

(1) Verify that the copier is properly grounded. If a problem is detected, establish a proper ground connection.
(2) Connecting the ground lead to an improper point such as listed below results in a risk of explosion and electric shock.
Unsuitable ground points:
a. Gas pipe
b. Lightning rod
c. Telephone line ground
d. Plastic water pipe or water pipe or faucet that has not been approved by authorities for grounding use

3. Precautions for on-site service

⚠ CAUTION:

(1) Before performing safety check work, read all relevant documentation (service handbook, technical notices, etc.) and proceed according to the prescribed procedure, using only the prescribed tools. Do not carry out any adjustments not described in the documentation.
(2) If the power cord is damaged, replace it only with the specified power cord. If the power cord insulation has been damaged and there are exposed sections, short-circuits and overheating may occur, leading to a serious fire risk.
(3) Do not route the power cord so that it can be stepped on or pinched. Otherwise overheating may occur, leading to a serious fire risk.
(4) When disconnecting any cables, always grasp the connector and not the cable (especially in the case of AC and high-voltage leads).
(5) Carefully remove all toner remnants from electrical parts, electrodes, etc.
(6) Make sure that wiring cannot come into contact with sharp edges, burrs, or other pointed parts.
(7) Double-check to make sure that all screws, components, wiring, connectors, etc. that were removed for safety check maintenance have been reinstalled in the original location. (Pay special attention to forgotten connectors, pinched cables, forgotten screws, etc.)
(8) When installation and preventive maintenance, verify that the power cord has been securely plugged into the AC outlet. Contact problems may lead to increased resistance, overheating, and the risk of fire.

⚠ WARNING:

(1) Before disassembling or adjusting the optical unit or any parts that use a laser, make sure that the power cord has been disconnected.
(2) Do not remove the main cover of the write unit. Direct exposure of the eye to laser beams may lead to blindness.
(3) Do not turn the copier on while the write unit is not installed in its normal position.

(4) Danger of explosion if battery is incorrectly replaced, replace only with the same or equivalent recommended by the manufacturer. Discard used batteries according to the manufacture's instructions.

⚠ VORSICHT:
Expiosionsgefahr dei unsachegemäßem Austausch der Battetie. Ersatz nur durch denselben oder einen vom. Hersteller empfohlenen gleichwertigen Typ. Entsorgung gebrauchter Batterien nach Angaben des Herstellers.

[3] HANDLING OF MATERIALS FOR SERVICING

⚠ CAUTION: Drum cleaner (alcohol-based) and roller cleaner (acetone-based) are highly flammable and must be handled with care. When using these materials for cleaning of copier parts, observe the following precautions.

(1) Disconnect the power cord from the AC outlet.

(2) Use only a small amount of cleaner at a time and take care not to spill any liquid. If this happens, immediately wipe it off.

(3) Perform cleaning only in an environment where sufficient ventilation is assured. Breathing large quantities of organic solvents can lead to discomfort.

(4) Do not replace the cover or turn the unit on before any solvent remnants on the cleaned parts have fully evaporated.

⚠ CAUTION: Toner and developer are not harmful substances, but care must be taken not to breathe excessive amounts or let the substances come into contact with eyes etc. If the substances get in the eye, rinse it with plenty of water immediately. When symptoms are noticeable, consult a physician.

[4] MEASURES TO TAKE IN CASE OF AN ACCIDENT

(1) If an accident has occurred, the distributor who has been notified first must immediately take emergency measures to provide relief to affected persons and to prevent further damage.

(2) If a report of a serious accident has been received from a customer, an on-site evaluation must be carried out quickly and Konica Corporation must be notified.

(3) To determine the cause of the accident, conditions and materials must be recorded through direct on-site checks, in accordance with instructions issued by Konica Corporation.

(4) For reports and measures concerning accidents, consult your superior, and follow the regulations set in "Standards for the Control Program for Measures Against Electrical Equipment Accidents".

[5] CONCLUSION

(1) Safety of users and customer engineers depends highly on accurate maintenance and administration. Therefore, safety can be maintained by the appropriate by the proper daily service work conducted by the customer engineer.

(2) When performing service, each copier on the site must be tested for safety. The customer engineer must verify the safety of parts and ensure appropriate management of the equipment.

SAFETY INFORMATION

IMPORTANT INFORMATION

The Center for Devices and Radiological Health (CDRH) of the U.S. Food and Drug Administration implemented regulations for laser products manufactured since August 1, 1976. Compliance is mandatory for products marketed in the United States.

This copier is certified as a "Class 1" laser product under the U.S.
Department of Health and Human Services (DHHS) Radiation Performance Standard according to the Radiation Control for Health and Safety Act of 1968. Since radiation emitted inside this copier is completely confined within protective housings and external covers, the laser beam cannot escape during any phase of normal user operation.

SAFETY CIRCUITS

This machine's electrical circuitry includes the safety circuits indicated below. These circuits are intended to ensure that abnormalities do not result in major accidents.

[1] Overall safety circuit
[2] Overheat prevention circuits for fixing heater lamps L2 and L3

To ensure safety, these circuits must remain operational even when servicing is in progress. Be sure to understand the importance of these circuits, and avoid any actions that would disable or impair these circuits. Operation of these circuits is explained below.

[1] Overall safety circuit protector

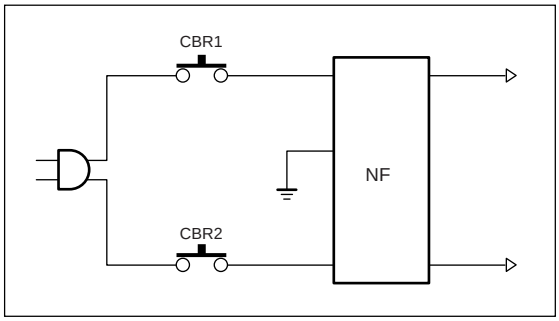

1. Protection function by circuit breakers (CBR1 and CBR2)

Circuit breakers CBR1 and CBR2 instantly break the connection to the AC line terminals in the event of excess current on the AC line (short circuit, etc.).

⚠ **CAUTION: CBR1/CBR2 protection must not be disabled under any circumstances.**

[2] Overheat protection circuits for fixing heater lamps L2 and L3

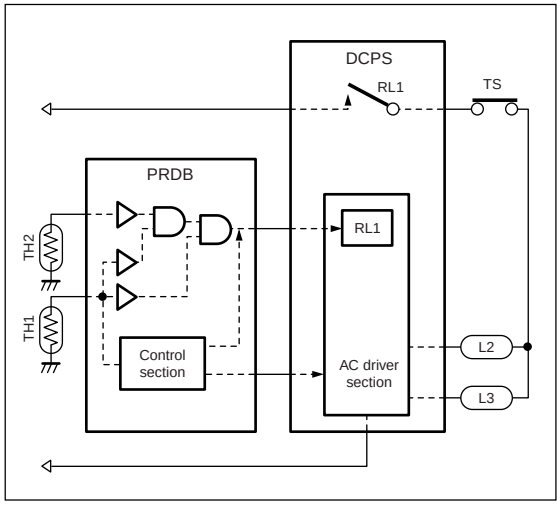

1. Protection function implemented by software

The CPU reads the voltages output by TH1 and TH2 (fixing temperature sensors 1 and 2). If either voltage is abnormal, the CPU switches off L2 (fixing heater lamp 1), L3 (fixing heater lamp 2), and RL1 (main relay).

⚠ **CAUTION: TH1 and TH2 are contact sensors, and must remain in contact with the roller (with no gap). Be sure that there is no foreign matter lodged between the sensor and the roller.**
RL1 functioning must not be disabled under any circumstances.

2. Protection function implemented by hardware

A comparator circuit compares the voltages output by TH1 and TH2 (fixing temperature sensors 1 and 2) against corresponding reference values ("abnormal judgment" values). If either voltage exceeds the reference value, the hardware switches off L2, L3, and RL1.

⚠ **CAUTION: Periodically check the contact surface on sensors TH1 and TH2 (the surface that makes contact with the roller). If the contact surface is abnormal, replace the sensor.**
Since TH1 and TH2 remain in contact with the roller, check to ensure that these sensors are installed in the correct orientation following occurrence of any abnormality.
RL1 functioning must not be disabled under any circumstances.

3. Protection function implemented by thermostat (TS)

TS goes OFF if the temperature of the upper fixing roller exceeds the specified value, directly shutting off the power supply to L2 and L3.

⚠ **CAUTION: Do not disable this function. Specifically, do not replace TS with any other electrical conductor.**
Do not change the distance between TS and the roller.

INDICATION OF WARNING ON THE MACHINE

The caution labels are attached to the machine areas, as shown below, where you are advised to pay special attention to avoid any dangerous situations or serious injury.

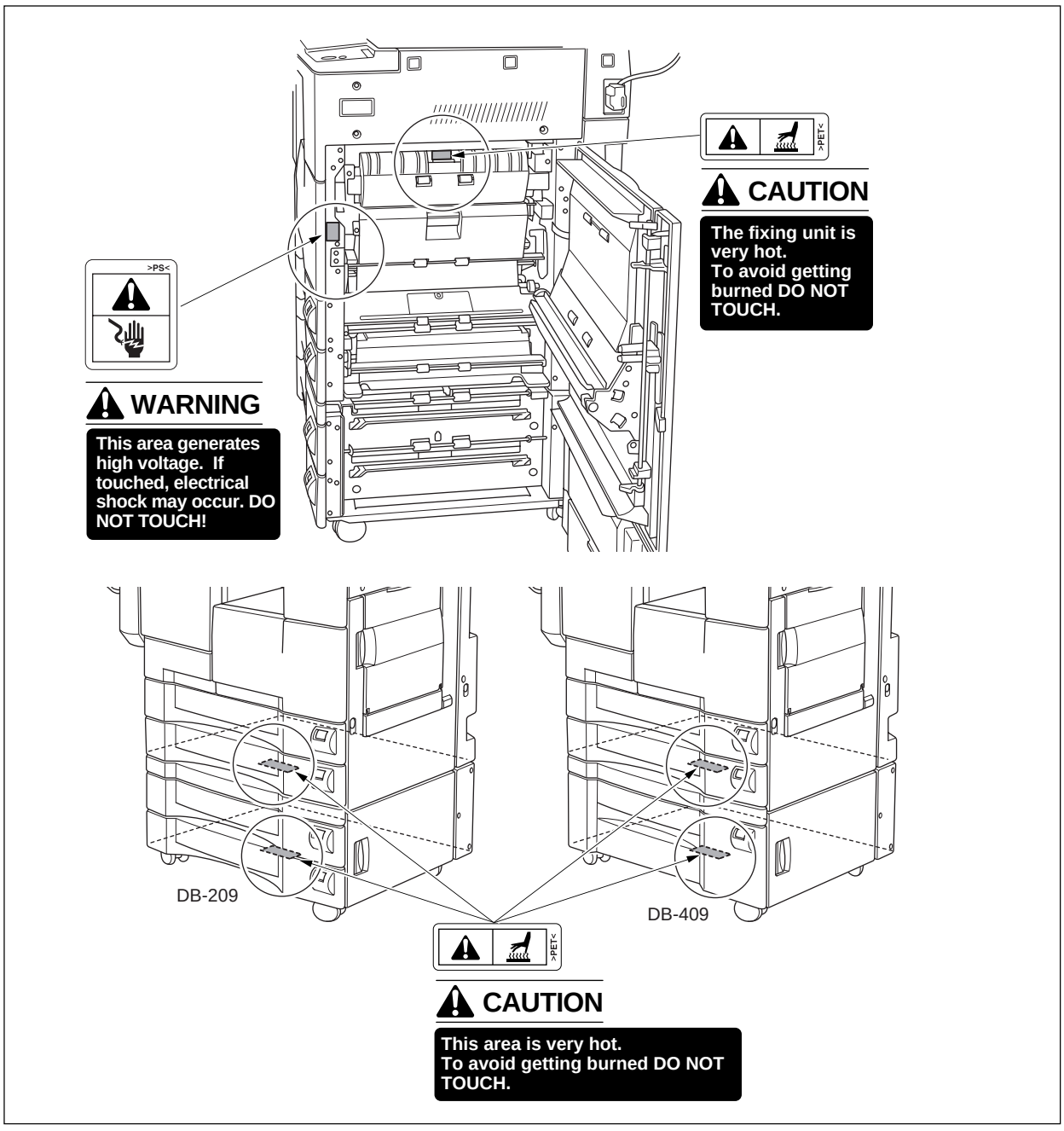

⚠ **CAUTION:**

You may be burned or injured if you touch any area that you are advised by any caution label to keep yourself away from.
Do not remove caution labels. If any caution label or caution indicator is soiled, clean the label.
If you cannot make it legible or if the caution label is removed, please contact your Service Centre.

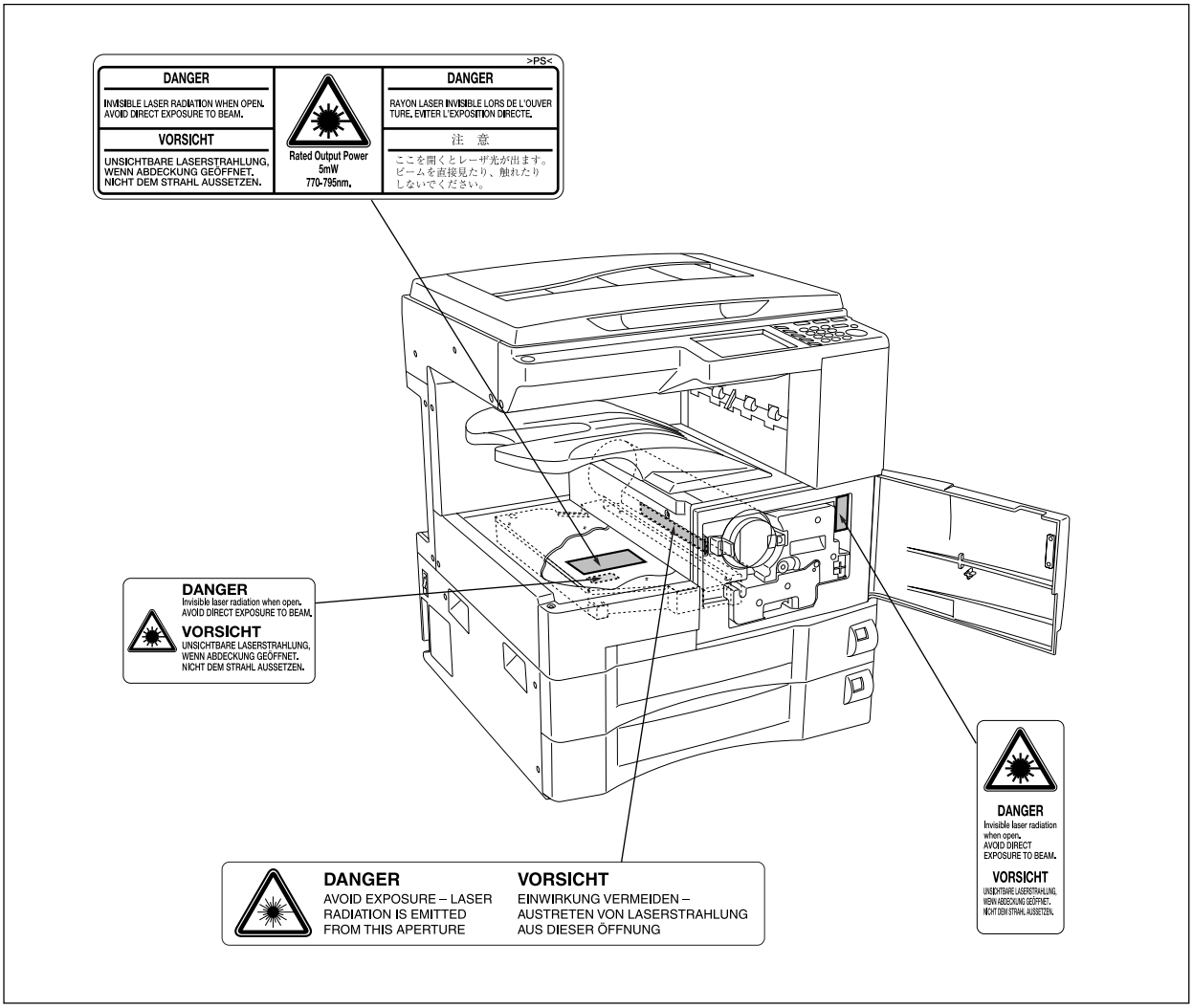

⚠ CAUTION:

You may be burned or injured if you touch any area that you are advised by any caution label to keep yourself away from.

Do not remove caution labels. If any caution label or caution indicator is soiled, clean the label.

If you cannot make it legible or if the caution label is removed, please contact your Service Centre.