Konica

DB-209

SERVICE HANDBOOK

2000.02
Ver. 1.0

KONICA CORPORATION
TECHNOLOGY SUPPORT CENTER
TOKYO JAPAN

CONTENTS

SAFETY AND IMPORTANT WARNING ITEMS .....
Refer to the 7020 service handbook on page C-1

1. OUTLINE

DB-209 PRODUCT SPECIFICATIONS 1-1
[1] Type 1-1
[2] Functions 1-1
[3] Machine data 1-1
[4] Maintenance 1-1
[5] Machine environment 1-1
CENTRE CROSS-SECTIONAL DRAWING 1-2
DRIVE SYSTEM DIAGRAM 1-3

2. UNIT EXPLANATION

PAPER FEED SECTION 2-1
[1] Composition 2-1
[2] Mechanisms 2-1
[3] Paper feed and no paper detection control 2-2
[4] Tray up and down control 2-4
[5] Paper size detection control 2-5
[6] Control of paper-level detection 2-6
[7] Jam detection control 2-6

3. DISASSEMBLY/ASSEMBLY

DISASSEMBLY/ASSEMBLY 3-1
[1] Removing and reinstalling paper feed tray 3-1
[2] Removing and reinstalling the paper feed unit 3-1
[3] Replacing the feed roller rubber and double feed prevention rubber/upper 3-2
[4] Repacing the double feed prevention rubber/lower 3-3

1

OUTLINE

DB-209 PRODUCT SPECIFICATIONS

[1] Type

Type: Tray paper feed
(Front loading)

[2] Functions

Paper size: A3, B4, A4, A4R, B5, B5R
A5R, 8.5 x 11, 8.5 x 11R,
8.5 x 14, 11 x 17

Paper type: 60g/m^2 to 90g/m^2 high quality paper

Maximum Paper capacity: 500 Sheets x 2 Trays
(80g/m^2)

[3] Machine data

Power: DC24V/5V (supplied from main body)

Power consumption: Max.30VA

Weight: Approx. 25.5kg

Machine Dimensions: Length 580mm
Depth 595mm
Height 304mm

[4] Maintenance

Maintenance: Same as main body

Machine Life: Same as main body

[5] Machine operation environment

Temperature: 10 to 30˚C

Humidity: 10 to 80%RH
(below condensation-forming conditions)

Caution: The contents of this Handbook may be revised for the purposes of improvement without notice.

CENTRE CROSS-SECTIONAL DRAWING

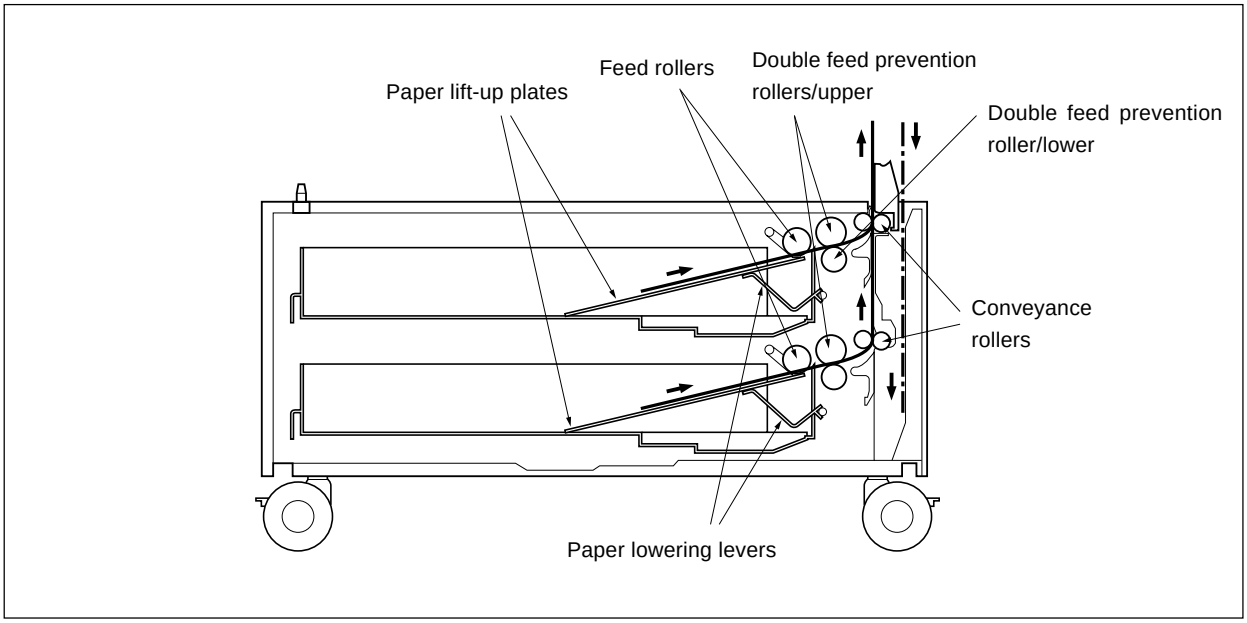

DRIVE SYSTEM DIAGRAM

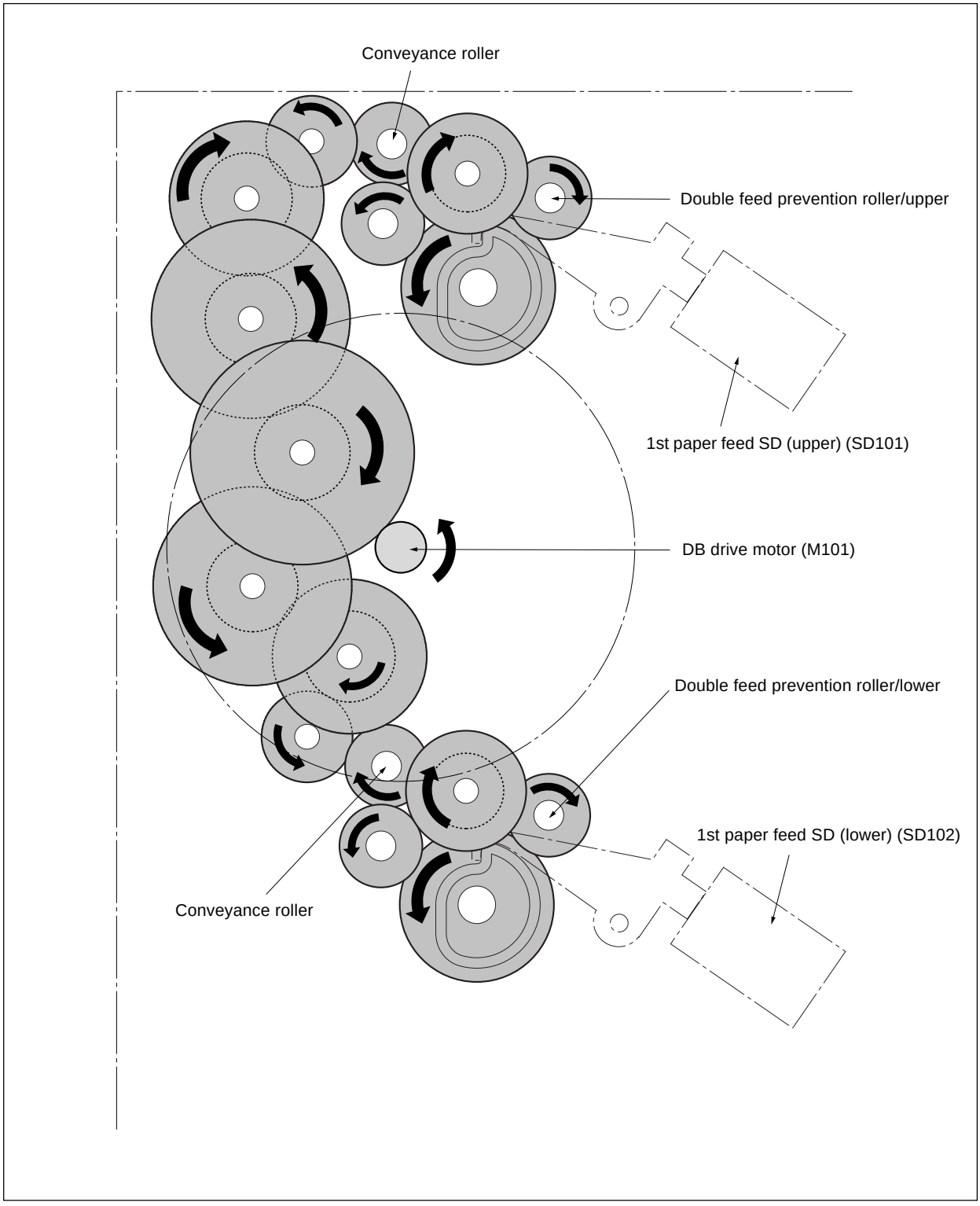

2

UNIT EXPLANATION

PAPER FEED UNIT

[1] Composition

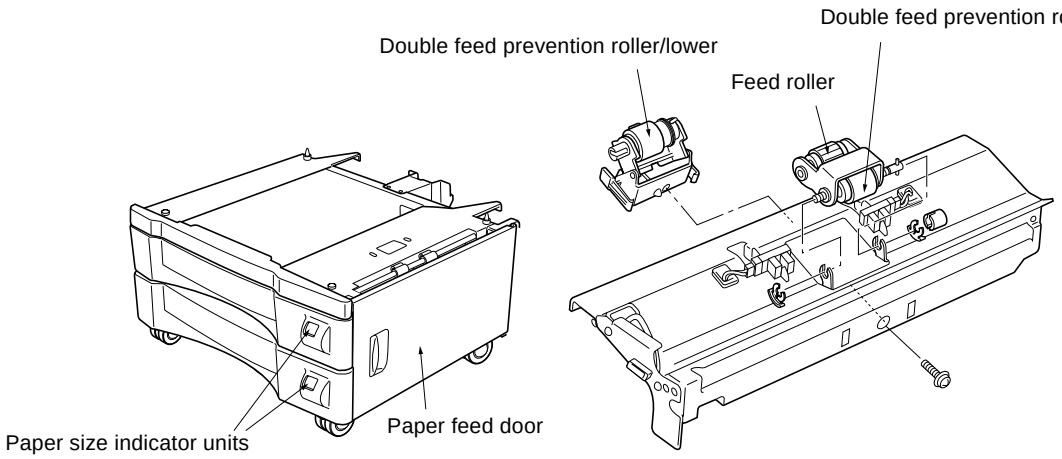

[2] Mechanisms

Mechanism	Method
Paper feed	Paper feed roller
Paper lifting	Paper lift-up plate
Double feed prevention	Torque limiter
Tray loading	Front loading
1st paper feed	Paper feed SD Feed roller
Jam processing	Release of pressure on double feed prevention roller
No paper detect	Photosensor
Paper size detect	Paper size indicator unit
Paper conveyance	Roller conveyance
Conveyance drive	Gears

[3] Paper feed and no paper detection control

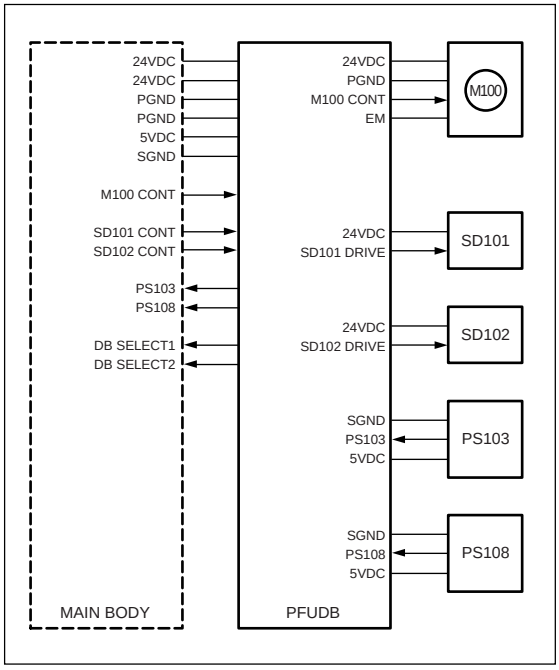

Paper feed is achieved by transmitting the drive of the M100 (DB drive motor) to the upper and lower paper feed rollers and to the feed rollers. When feed starts, SD101 (1st. paper feed SD (upper)) or SD102 (1st. paper feed SD (lower)) raises and lowers the feed roller and contacts the paper.

Drive of the M100, SD101 and SD102 is achieved by PFUDB (PFU drive board)and controlled by the main body.

No paper detection is achieved with PS103 (No paper detect PS (upper)) and PS108 (No paper detect PS (lower)) and controlled by the main body via the PFUDB.

1. Operation

a. Paper feed operation timing (upper tray)

(1) 1st. sheet start

A specified time after start-button is turned ON

(2) 2nd. sheet start

A specified time after 1st. sheet SD101 is turned ON

(3) OFF timing

A specified time after SD101 is turned ON

b. Paper feed operation timing (lower tray)

(1) 1st. sheet start

A specified time after start-button is turned ON

(2) 2nd. sheet start

A specified time after 1st. sheet SD102 is turned ON

(3) OFF timing

A specified time after SD102 is turned ON

c. No paper detection

If paper in the tray is used up, PS103 or PS 108 go [L] and the no paper detection of each tray is sent to the main body via the PFUDB.

2. Signals

a. Input signals

(1) PS103 (PS103 → PFUDB)

Upper tray paper/no paper detection signal

[H] :with paper

[L] : no paper

(2) PS108 (PS108 → PFUDB)

Lower tray paper/no paper detection signal

[H] :with paper

[L] : no paper

(3) M100 CONT (MAIN BODY → PFUDB)

M100 ON/OFF control signal from main body

(4) SD101 CONT (MAIN BODY → PFUDB)

SD101 ON/OFF control signal from main body

(5) SD102 CONT (MAIN BODY → PFUDB)

SD102 ON/OFF control signal from main body

b. Output signals

(1) M100 CONT (PFUDB → M100)

M100 drive control signal

[H] :M100 OFF

[L] :M100 ON

(2) M100 CLK (PFUDB → M100)

M100 revolution control board clock signal

(3) SD101 (PFUDB → SD101)

SD101 drive control signal

[H] :OFF

[L] : ON

(4) SD102 DRIVE (PFUDB → SD102)

SD102 drive control signal

[H] :OFF

[L] : ON

(5) PS103 (PFUDB → MAIN BODY)

Upper tray paper/no paper detection signal sent to main body

(6) PS108 (PFUDB → MAIN BODY)

Lower tray paper/no paper detection signal sent to main body

(7) DB SELECT (PFUDB → MAIN BODY)

DB Type identification signal sent to main body

	Signal	
DB	DB-SELECT 1	DB-SELECT 0
DB-209	H	L
DB-409	L	H
No contact	H	H
Uncertain	L	L

[4] Tray up and down control

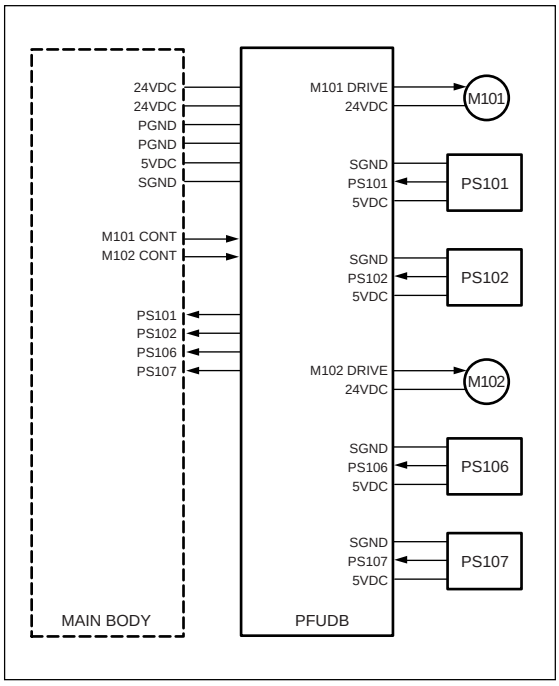

1. Operation

When the paper feed tray of each level is set, PS101 (Tray detect PS (upper)) and PS106 (Tray detect PS (lower)) detect the tray, M101 (Paper feed motor 1) and M102 (Paper feed motor 2) turn on and lift the base plate in the tray. When the tray is lifted, PS102 (Upper limit detect PS (upper)) and PS 107 (Upper limit detect PS (lower)) detect the paper upper limit and turn ON, M101 and M102 turn off and the raising of the tray is completed.

The down operation of the trays is performed mechanically.

2. Signals

a. Input signals

(1) PS101 (PS101 → PFUDB)

Upper tray detect signal
By turning ON with [L] showing, M101 raises the paper in the upper tray.

(2) PS106 (PS106 → PFUDB)

Lower tray detect signal
By turning on with [L] showing, M102 raises the paper in the lower tray.

(3) PS102 (PS102 → PFUDB)

Upper tray paper upper limit detect signal
When the upper tray paper is raised and arrives at the upper limit position, the signal becomes [H] and M101 is turned off.

(4) PS107 (PS107 → PFUDB)

Lower tray paper upper limit detect sensor
When the lower tray paper is raised and arrives at the upper limit position, the signal becomes [H] and M102 is turned off.

(5) M101 CONT (MAIN BODY → PFUDB)

M101 ON/OFF control signal from main body

(6) M102 CONT (MAIN BODY → PFUDB)

M102 ON/OFF control signal from main body

b. Output signals

(1) M101 DRIVE (PFUDB → M101)

M101 drive control signal
[L] : M101 ON
[H] :M101 OFF

(2) M102 DRIVE (PFUDB → M102)

M102 drive control signal
[L] : M102 ON
[H] :M102 OFF

(3) PS101 (PFUDB → MAIN BODY)

Upper tray detect signal sent to main body

(4) PS102 (PFUDB → MAIN BODY)

Upper tray paper upper limit detect signal sent to main body

(5) PS106 (PFUDB → MAIN BODY)

Lower tray detect signal sent to main body

(6) PS107 (PFUDB → MAIN BODY)

Lower tray paper upper limit detect signal sent to main body

[5] Paper size detection control

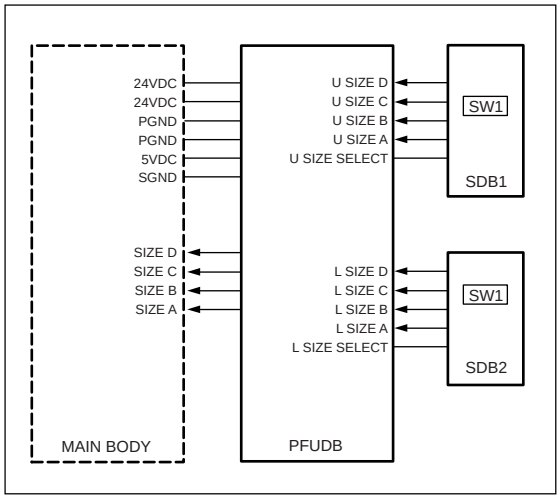

Tray paper size is detected in the main body by a signal sent from SDB1(size detection board1) and SDB2 (size detection board2) via the PFUDB (PFU drive board).

1. Operation

a. Tray paper size detection

Paper size for either tray is set by SW1 above SDB1 and SDB2 and the PFUDB detects the switch signal corresponding to the position of SW1.

The relation between switch signal and paper size is as follows.

For U.S.A.

Paper size (Label display order)	Switch signal			
	SIZE A	SIZE B	SIZE C	SIZE D
11 x 17				
A5R	○			
A4		○		
A4R	○	○		
A3			○	
F4	○		○	
5.5 x 8.5		○	○	
8.5 x 11	○	○	○	
8.5 x 11R				○
8.5 x 14	○			○

For Europe

Paper size (Label display order)	Switch signal			
	SIZE A	SIZE B	SIZE C	SIZE D
11 x 17				
B5	○			
B4		○		
A5R	○	○		
A4			○	
A4R	○		○	
A3		○	○	
F4	○	○	○	
11				○
11R	○			○

2. Signals

a. Input signals

(1) U SIZE A - D (SDB1 → PFUDB)

Upper tray paper size detect signal

(2) U SIZE A - D (SDB2 → PFUDB)

Lower tray paper size detect signal

b. Output signal

(1) SIZE A - D (PFUDB → MAIN BODY)

Paper size detection signal sent to main body

[6] Control of paper-level detection

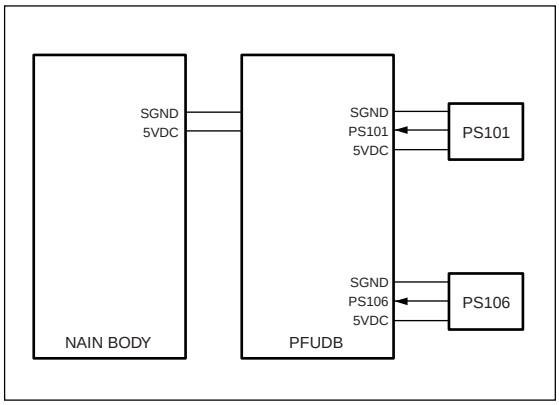

After the trays have been set in the machine, paper level is detected by PS101 (tray detect sensor PS (upper)) and PS106 (tray detect sensor PS (lower)).

As the paper level in tray runs low, the actuator at the rear part of the tray gradually rotates as illustrated below. The level is detected by the number of times the sensor goes ON/OFF (the number of slits detected).

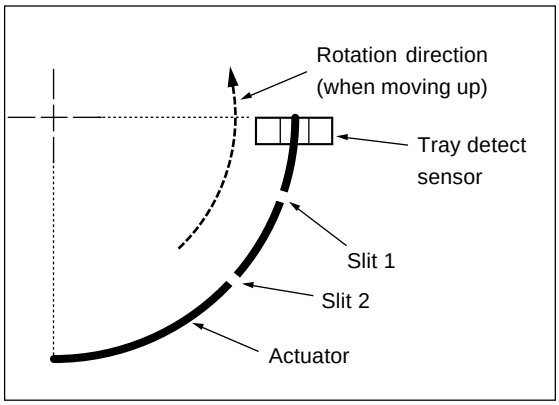

1. Operation

a. Detection of paper level in tray

The following shows the relation between the paper level and the number of slit detections by the sensor (PS101 or PS106).

0 slits : Full

1 slit : Medium

2 slits : Low

[7] Jam detection control

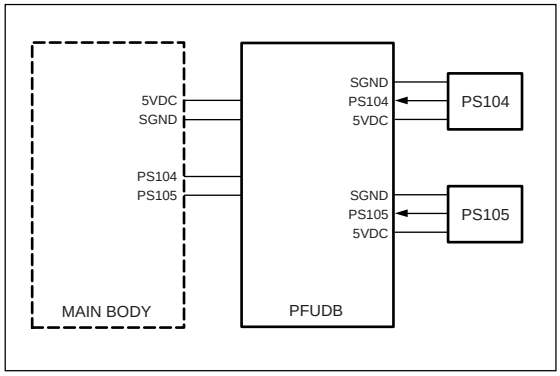

1. Operation

The ADU jam detect control is performed by the main body when it has judged the changes in the PS104 (jam detect PS1) and PS105 (Jam detect PS2) detection signals. If the ON detection signal of each sensor does not change after a specified time, it is judged that there is a paper jam.

2. Signals

a. Input signals

(1) PS104 (PS104 → PFUDB)

Turns on when [H] is showing, and notifies the main body of the presence or absence of paper in the upper part of the DB.

(2) PS105 (PS105→PFUDB)

Turns on when [H] is showing, and notifies the main body of the presence or absence of paper in the lower part of the DB.

b. Output signals

(1) PS104 (PFUDB→MAIN BODY)

PS104 detect signal sent to main body

(2) PS 105 (PFUDB→MAIN BODY)

PS105 detect signal sent to main body

3

DISASSEMBLY/ASSEMBLY

This section explains how to disassemble and reassemble the machine.
Observe the following precautions when performing disassembly and assembly work.

1. Be sure to unplug the power cord before working on the machine.
2. Perform all reassembly work by reversing the order in which the component was disassembled, unless otherwise specified.
3. Do not lose small parts (screws, etc.) or insert them in the wrong place.
4. Install all parts completely before operating the machine.
5. Do not loosen the screws indicated as disallowed for removal.

DISASSEMBLY/ASSEMBLY

⚠**Caution: Make sure the power plug is taken out of the socket.**

[1] Removing and reinstalling paper feed tray

(1) Pull out the paper feed tray and take out the 2 set screws on the right hand side.

(2) Remove the paper tray from the guide rails.

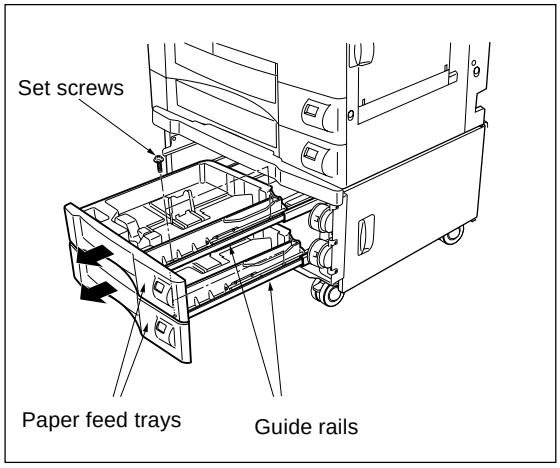

(3) Install by reversing the removal procedure.

[2] Removing and reinstalling the paper feed unit

(1) Remove the paper feed tray and the tray cover.

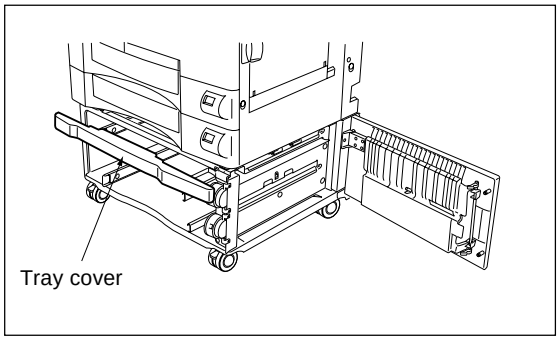

(2) Opening the paper feed door, take out the 3 set screws and remove the each paper size indicator units.

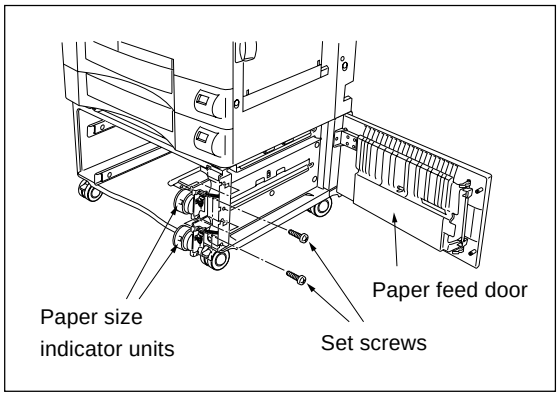

(3) Remove the 3 set screws and remove the cover.

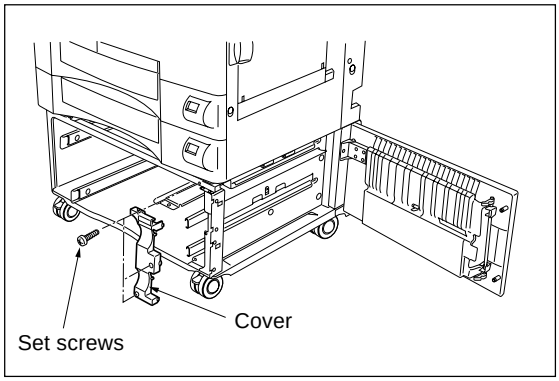

(4) Remove the paper feed unit connector.

(5) Remove the 2 screws indicated by the engraved arrows and remove by drawing the paper feed unit forward.

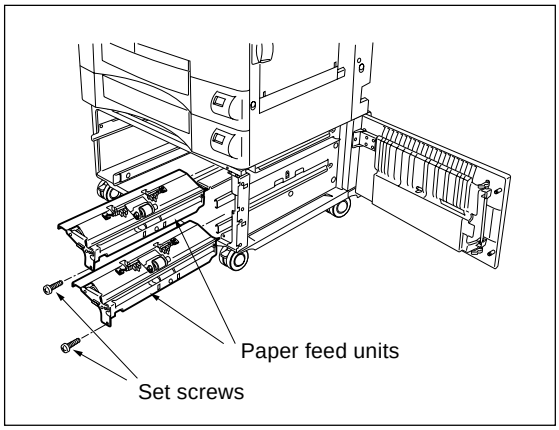

(6) Install by reversing the removal procedure.

Caution: Immediately after installing the paper feed unit, as the swing gear and the paper feed solenoid are not in the correct position, it sometimes happens that paper is not fed. For this reason, always make a copy to confirm that operation is normal.

[3] Replacing of the feed roller rubber and double feed prevention rubber/ upper

(1) Remove the paper feed unit.

(2) Remove the fixing rings and bearings.

(3) While withdrawing the paper feed shaft, remove the double feed prevention roller/upper from the paper feed roller unit.

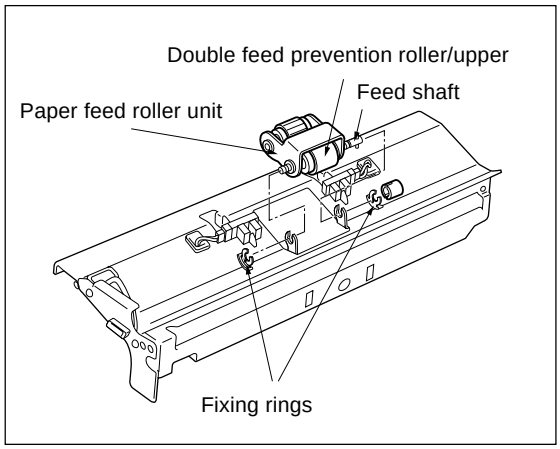

(4) Removing the fixing ring and remove the feed roller by withdrawing the guide shaft in the direction shown by the arrow.

(5) Remove the feed rubber from the feed roller.

(6) Remove the double feed prevention rubber/upper from the swivel roller.

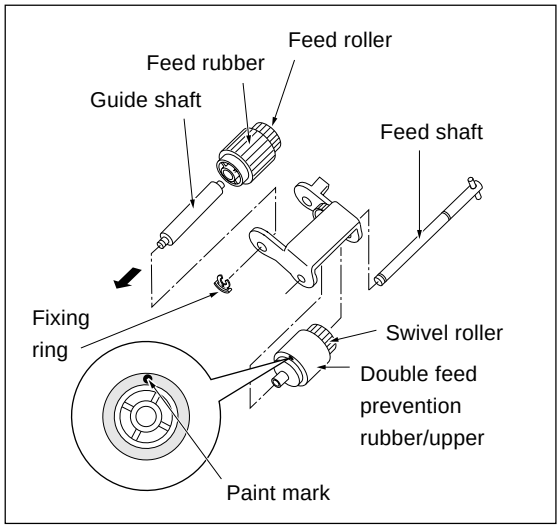

(7) Install by reversing the removal procedure.

Caution: Pay attention to the direction in which you install each roller rubber. Install so that the swing-gear shaft enters the paper feed roller unit.

[4] Replacing the double feed prevention rubber/lower

(1) Remove the paper feed unit.

(2) Remove the set screw.

(3) Pushing the knobs on either side of the double feed prevention unit, then remove by drawing it forward.

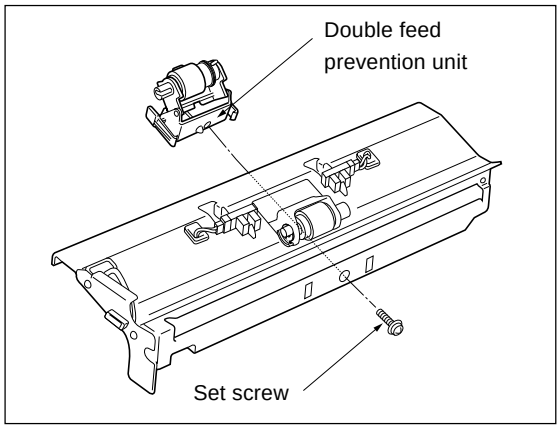

(4) While pushing the projection of the lever click shaft, withdraw it and remove the double feed prevention roller.

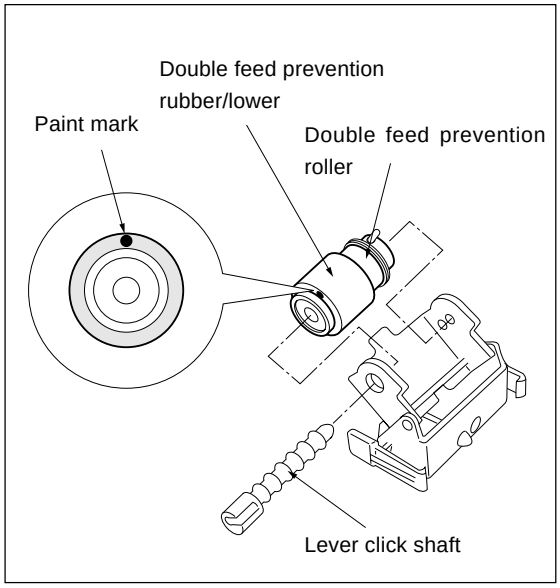

(5) Remove the double feed prevention rubber/lower from the double feed prevention roller.

(6) Install by reversing the removal procedure.

Caution : Pay attention to the direction in which you install each roller rubber.

When installing the double-feed prevention unit into the main body, be sure to align it with the center of the mark engraved on the main-body plate.