Konica

DB-409

SERVICE HANDBOOK

2000.02
Ver. 1.0

KONICA CORPORATION
TECHNOLOGY SUPPORT CENTER
TOKYO JAPAN

CONTENTS

SAFETY AND IMPORTANT WARNING ITEMS .....
Refer to the 7020 service handbook on page C-1

1. OUTLINE
DB-409 PRODUCT SPECIFICATIONS 1-1
[1] Type 1-1
[2] Functions 1-1
[3] Machine data 1-1
[4] Maintenance 1-1
[5] Machine environment 1-1
CENTRE CROSS-SECTIONAL DRAWING 1-2
DRIVE SYSTEM DIAGRAM 1-3

2. UNIT EXPLANATION
PAPER FEED SECTION 2-1
[1] Composition 2-1
[2] Mechanisms 2-1
[3] Paper feed and no paper detection control 2-2
[4] Tray up and down control 2-3
[5] Paper size detection control 2-4
[6] Control of paper-level detection 2-5

3. DISASSEMBLY/ASSEMBLY
DISASSEMBLY/ASSEMBLY 3-1
[1] Removing and reinstalling the paper feed tray 3-1
[2] Removing and reinstalling the paper feed unit 3-1
[3] Replacing the feed roller rubber and double feed prevention rubber/upper 3-2
[4] Replacing the double feed prevention rubber/lower 3-3
[5] Replacing the wire 3-4

1

OUTLINE

DB-409 PRODUCT SPECIFICATIONS

[1] Type

Type: Tray Paper Feed
(Front Loading)

[2] Functions

Paper size: A4, A4R, B5, B5R, 8.5 x 11, 8.5 x 11R

Paper type: 60g/m^2 - 90g/m^2 high quality paper

Maximum paper capacity: 1,500 Sheets
(80g/m^2)

[3] Machine data

Power: DC24V/5V (supplied from main body)

Power consumption: Max.30VA

Weight: Approx. 23.5kg.

Machine dimensions: Length 580mm
Depth 595mm
Height 304mm

[4] Maintenance

Maintenance: Same as main body

Machine life: Same as main body

[5] Machine environment

Temperature: 10 to 30˚C

Humidity: 10 to 80%RH
(below condensation-forming conditions)

Caution: The contents of this Handbook may be revised for the purposes of improvement without notice.

CENTRE CROSS-SECTIONAL DRAWING

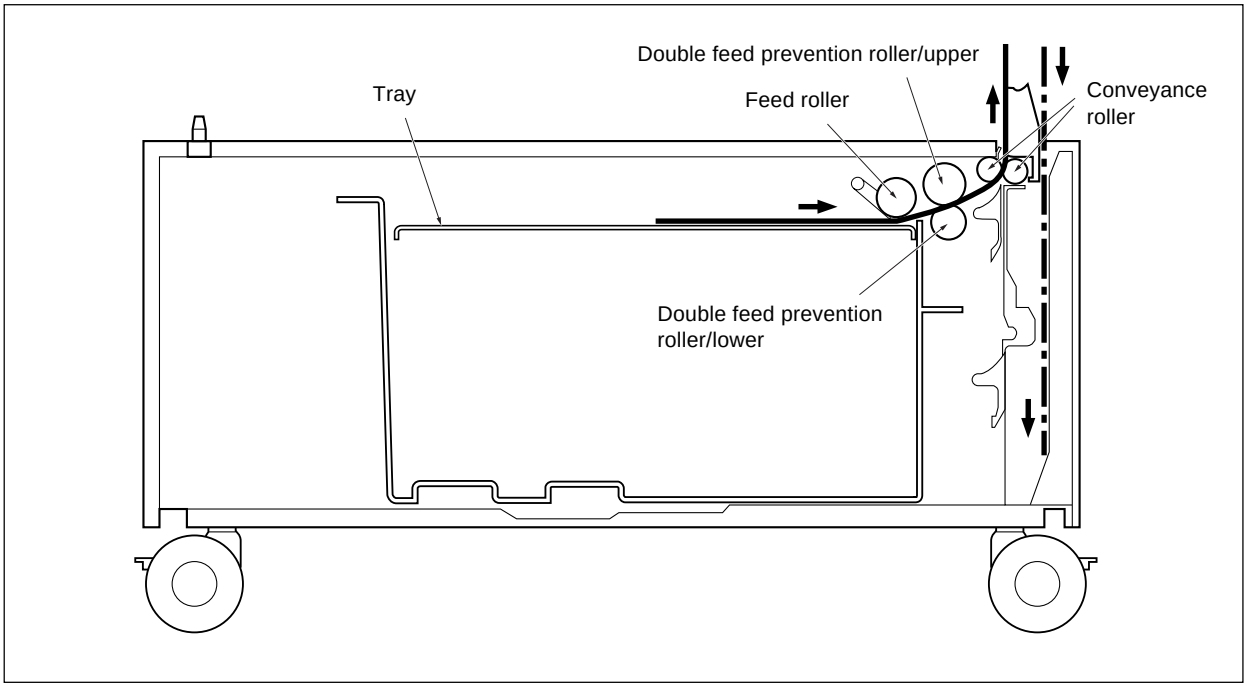

DRIVE SYSTEM DIAGRAM

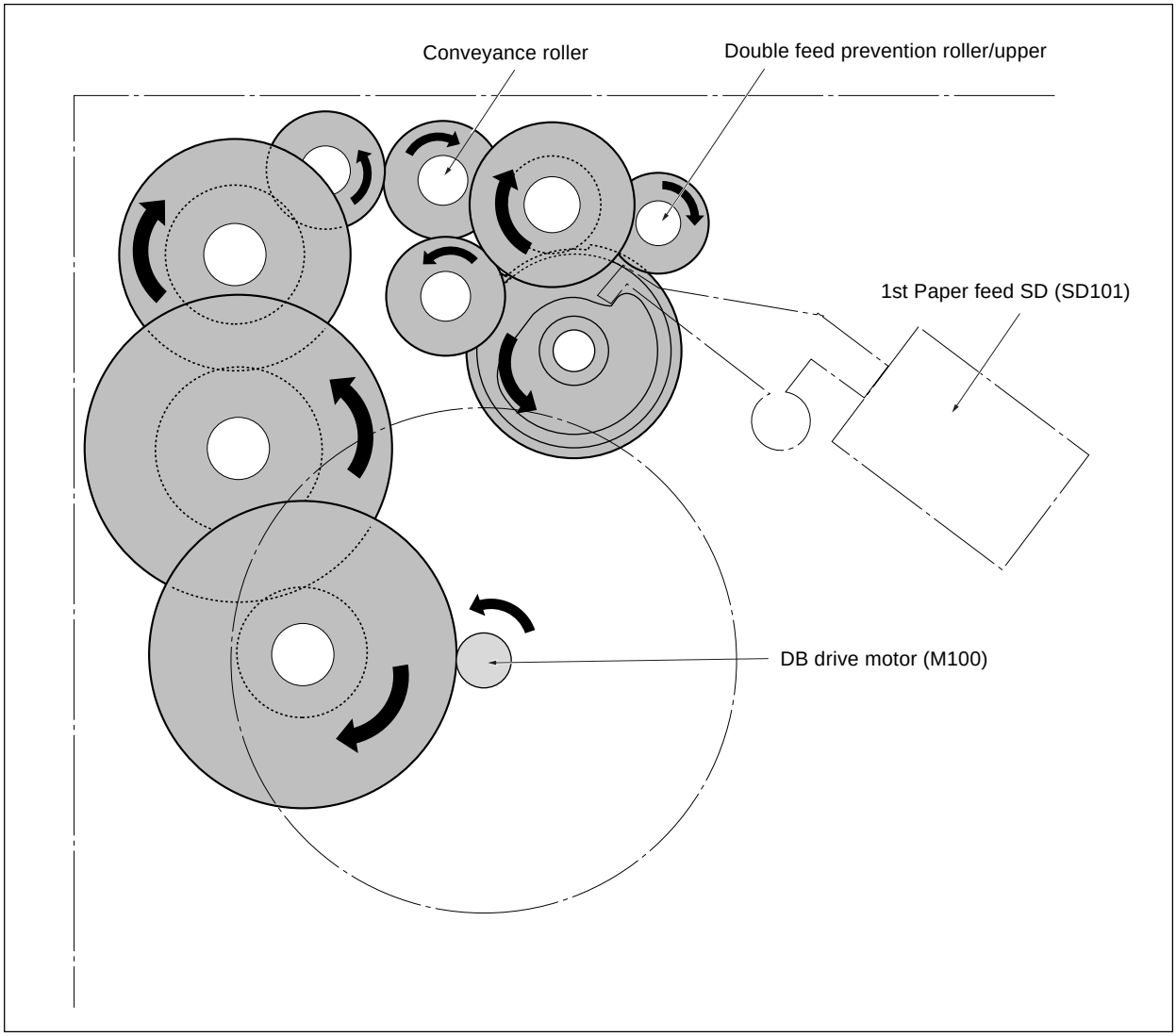

2

UNIT EXPLANATION

PAPER FEED SECTION

[1] Composition

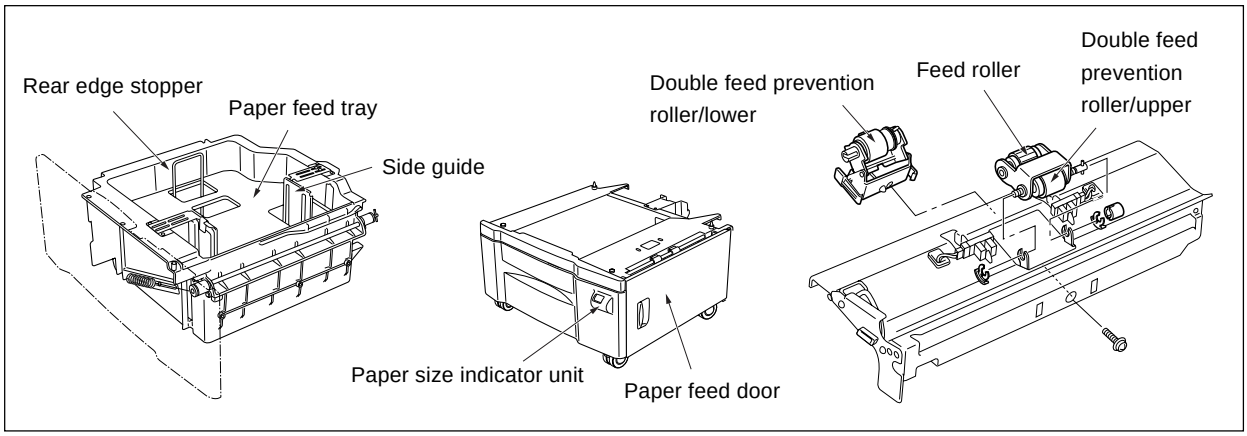

[2] Mechanisms

Mechanism	Method
Paper feed	Paper feed roller
Paper lifting *	Paper lift-up plate
Double feed prevention	Torque limiter
Tray loading	Front loading
1st paper feed	Paper feed SD Feed roller
Jam processing	Release of pressure on double feed prevention roller
No paper detect	Photosensor
Paper size detect	Paper size indicator unit
Paper conveyance	Roller conveyance
Conveyance drive	Gears

*** Paper lifting**

The paper tray (LCT) is suspended on 4 up/down drive wires (wires A, B, C, and D). When paper is supplied to the paper tray, the tray falls under the weight of the paper itself, but through the tension of the drive assist spring, balance with the weight of the paper is maintained.

When the paper tray is set, the up/down motor turns and the tray is lifted through the wires being caught by the drive pulleys.

When the paper tray is withdrawn from the suspension base, the coupling with the drive is disconnected, and the tray falls to the position in which the balance between the weight of the paper and the drive-assist spring is maintained.

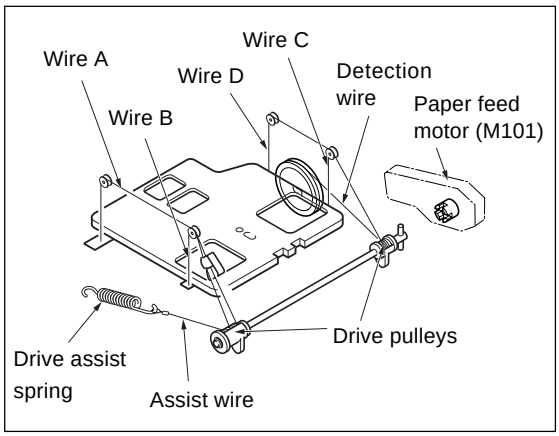

[3] Paper feed and no paper detection control

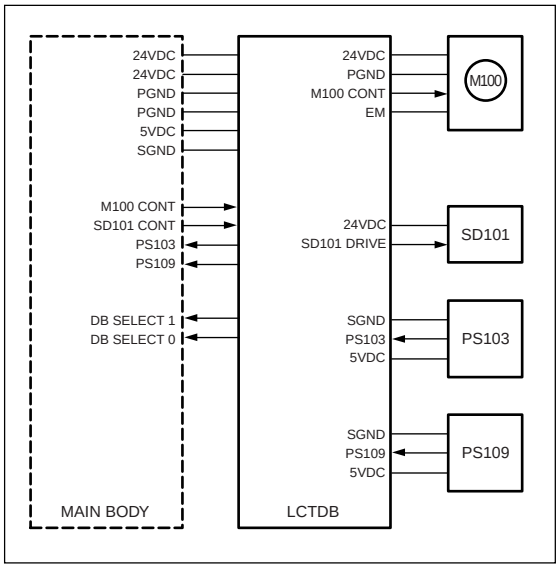

Paper feed is achieved by transmitting the drive of the M100 (DB drive motor) to the paper feed roller and to the feed roller. When feed starts, SD101 (1st. paper feed SD) raises and lowers the feed roller and contacts the paper.

Drive of the M100, SD101 is achieved by LCTDB (LCT drive board) and controlled by the main body.

No paper detection is achieved with PS103 (No paper detect PS) and controlled by the main body via the LCTDB.

A related signal is the PS109 (Paper level detect PS2) which sent the remaining paper level to the main body.

1. Operation

a. Paper feed operation timing

(1) 1st. sheet start

A specified time after start button is turned ON

(2) 2nd. sheet start

A specified time after 1st. sheet SD101 is turned ON

(3) OFF timing

A specified time after SD101 is turned ON

b. No paper detection

If paper in the tray is used up, PS103 goes [L] and no paper detection is sent to the main body via the LCTDB.

2. Signals

a. Input signals

(1) PS103 (PS103 → LCTDB)

Tray paper/no paper detection signal

[H]: with paper

[L] : no paper

(2) PS109 (PS109 → LCTDB)

Paper level in tray detection signal

Turns on with [L], sends main body that little paper is left.

(3) M100 CONT (MAIN BODY → LCTDB)

M100 ON/OFF control signal from main body

(4) SD101 CONT (MAIN BODY → LCTDB)

SD101 ON/OFF control signal from main body

b. Output signals

(1) M100 CONT (LCTDB → M100)

M100 drive control signal

[H]: M100 OFF

[L]: M100 ON

(2) M100 CLK (LCTDB → M100)

M100 rotation control board clock signal

(3) SD101 (LCTDB → SD101)

SD101 drive control signal

[H]: OFF

[I] : ON

(4) PS103 (LCTDB → MAIN BODY)

Paper/no paper detection signal sent to main body

(5) DB SELECT (LCTDB → MAIN BODY)

DB type identification signal sent to main body

	Signal	
DB	DB-SELECT 1	DB-SELECT 0
DB-209	H	L
DB-409	L	H
No contact	H	H
Uncertain	L	L

[4] Tray up and down control

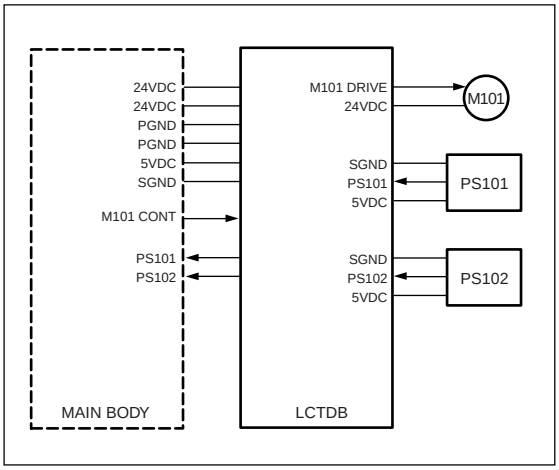

1. Operation

When the paper feed tray of each level is set, PS101 (Tray detect PS) detects the tray, M101 (Paper feed motor) turns ON and lifts the base plate in the tray. When the tray is lifted, PS102 (Paper level detect PS1) detects the paper upper limit and turns on, then M101 turns off and the raising of the tray is completed.

The down operation of the trays is performed mechanically.

2. Signals

a. Input signals

(1) PS101 (PS101 → LCTDB)

Tray detect signal

By turning with [L] showing, M101 raises the paper in the upper tray.

(2) PS102 (PS102 → LCTDB)

Upper tray paper upper limit detection signal

When the upper tray paper is lifted and arrives at the upper limit position, the signal becomes [H] and M101 is turned off.

(3) M101 CONT (MAIN BODY → LCTDB)

M101 ON/OFF control signal from main body

b. Output signals

(1) M101 DRIVE (LCTDB → M101)

M101 drive control signal

[L]: M101 ON

[H]: M101 OFF

(2) PS101 (LCTDB → MAIN BODY)

Tray detection signal sent to main body

(3) PS102 (LCTDB → MAIN BODY)

Paper upper limit detect signal sent to main body

[5] Paper size detection control

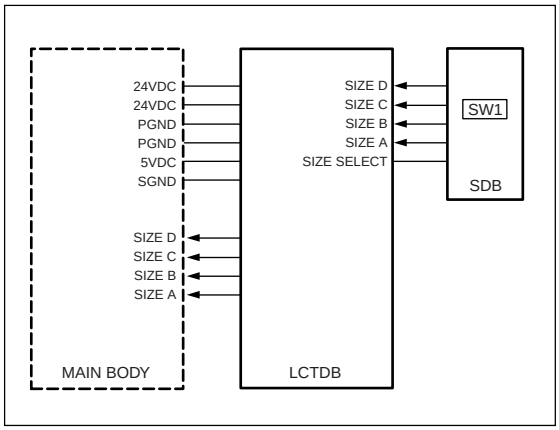

Tray paper size is detected in the main body by a signal sent from SDB (size detection board) via the LCTDB (LCT drive board).

1. Operation

a. Tray paper size detection

Paper size for either tray is set by SW1 above SDB and the LCTDB detects the switch signal corresponding to the position of SW1.

The relation between switch signal and paper size is as follows.

Paper size (Label display order)	Switch signal			
	SIZE A	SIZE B	SIZE C	SIZE D
8.5 x 11R				
A4	○			
A4R		○		
8.5 x 11	○	○		
8.5 x 11R			○	
B5R	○		○	
B5		○	○	
A4	○	○	○	
A4R				○
8.5 x 11	○			○

2. Signals

a. Input signal

(1) SIZE A - D (SDB → LCTDB)

Tray paper size detect signal

b. Output signal

(1) SIZE A - D (LCTDB → MAIN BODY)

Paper size detection signal sent to main body

[6] Control of paper-level detection

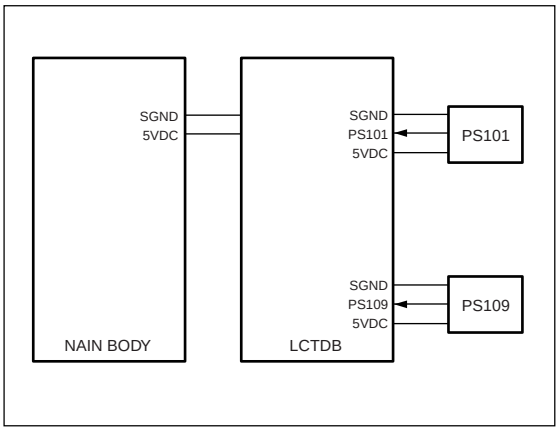

After the trays have been set in the machine, paper level is detected by PS101 (tray detect PS) and PS109 (paper level detect PS2).

As the paper level in tray runs low, the actuator at the rear part of the tray gradually rotates as illustrated below. The remaining paper level is detected based on the ON/OFF states of PS101 and PS109.

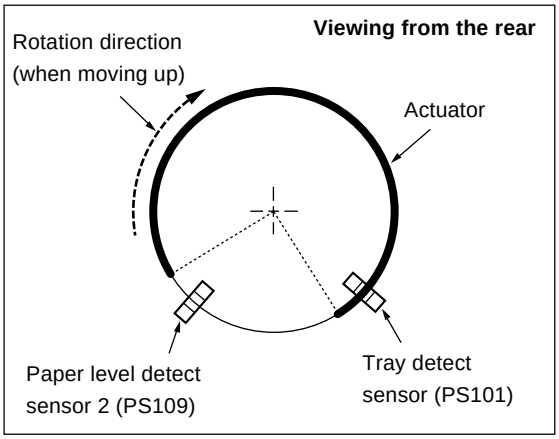

1. Operation

a. Detection of paper level in tray

The following shows the relation between the paper level and the number of slit detections by the sensor (PS101 or PS109).

Paper level	PS101	PS109
Full	○	
Medium	○	○
Low		○

3

DISASSEMBLY/ASSEMBLY

This section explains how to disassemble and reassemble the machine.
Observe the following precautions when performing disassembly and assembly work.

1. Be sure to unplug the power cord before working on the machine.
2. Perform all reassembly work by reversing the order in which the component was disassembled, unless otherwise specified.
3. Do not lose small parts (screws, etc.) or insert them in the wrong place.
4. Install all parts completely before operating the machine.
5. Do not loosen the screws indicated as disallowed for removal.

DISASSEMBLY/ASSEMBLY

⚠**Caution: Make sure the power plug is taken out of the socket.**

[1] Removing and reinstalling the paper feed tray

(1) Pull out the paper tray and take out the 4 set screws and remove the tray front cover.

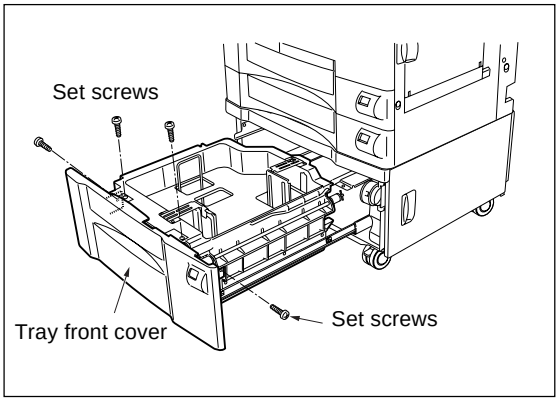

(2) Remove the 5 set screws from the guide rails and remove paper tray from guide rails.

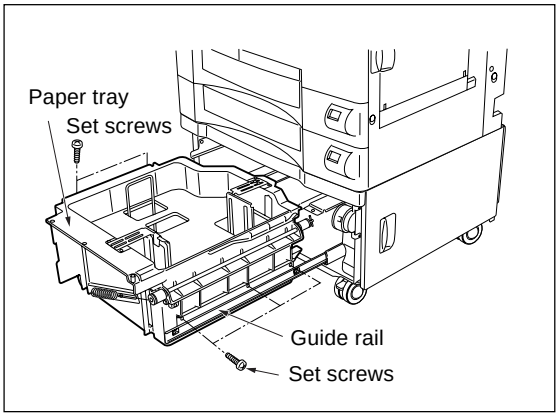

(3) Install by reversing the removal procedure.

[2] Removing and reinstalling the paper feed unit

(1) Remove the tray cover and the paper tray.

(2) Opening the paper feed door, take out the 3 set screws and remove the paper size indicator unit.

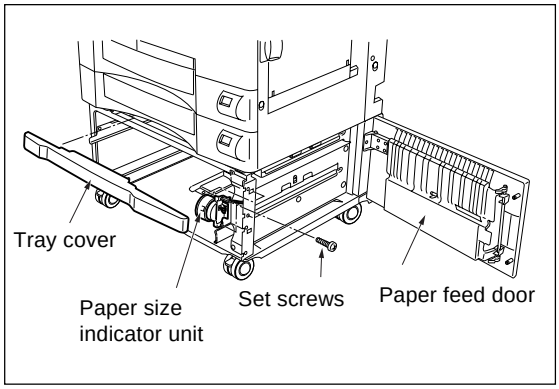

(3) Remove the 3 set screws and remove the cover.

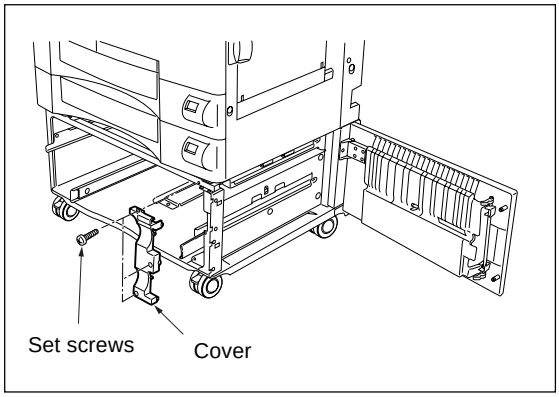

(4) Remove the paper feed unit connector.

(5) Remove the set screw indicated by the arrow marking, and remove the paper-feed unit by pulling it forward.

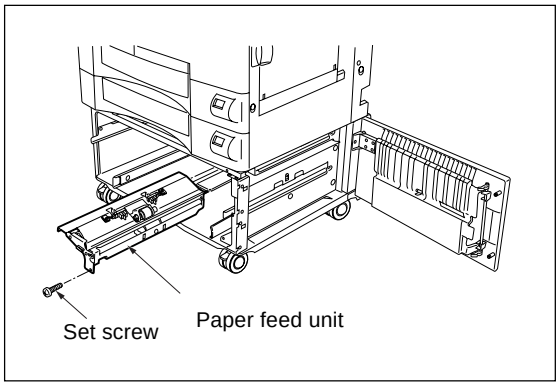

(6) Install by reversing the removal procedure.

Caution: Immediately after installing the paper feed unit, as the swing gear and the paper feed solenoid are not in the correct position, it sometimes happens that paper is not fed. For this reason, always make a copy to confirm that operation is normal.

[3] Replacing the feed roller rubber and double feed prevention rubber/ upper

(1) Remove the paper feed unit.

(2) Remove the fixing rings and bearings.

(3) While withdrawing the paper feed shaft, remove the double feed prevention roller/upper from the paper feed roller unit.

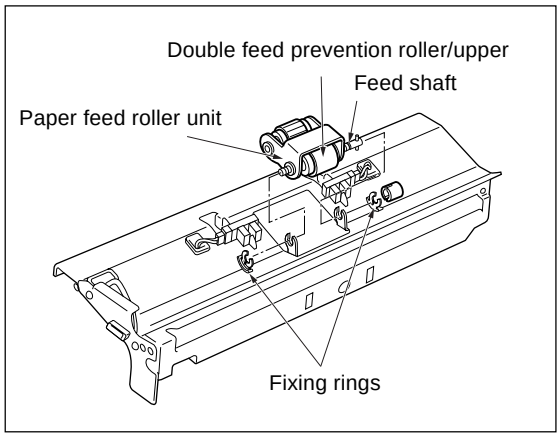

(4) Removing the fixing ring and remove the feed roller by withdrawing the guide shaft in the direction shown by the arrow.

(5) Remove the feed rubber form the feed roller.

(6) Remove the double feed prevention rubber/upper from the swivel roller.

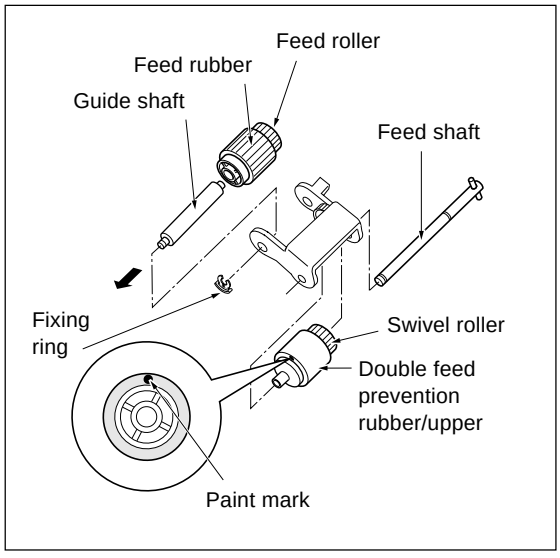

(7) Install by reversing the removal procedure.

Caution: Pay attention to the direction in which you install each roller rubber. Install so that the swing gear shaft enters the paper feed roller unit.

[4] Replacing the double feed prevention rubber/lower

(1) Remove the paper feed unit.

(2) Remove the set screw.

(3) Pushing the knobs on either side of the double feed prevention unit, then remove by drawing it forward.

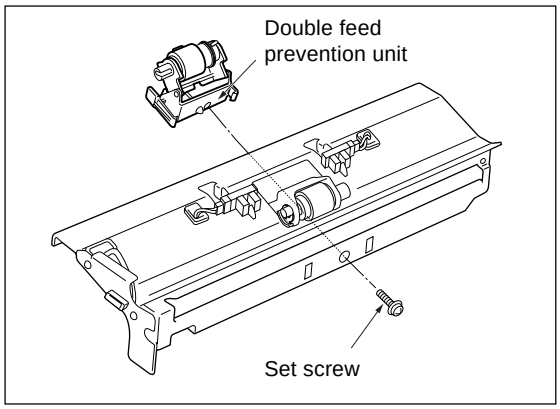

(4) While pushing the projection of the lever click shaft, withdraw it and remove the double feed prevention roller.

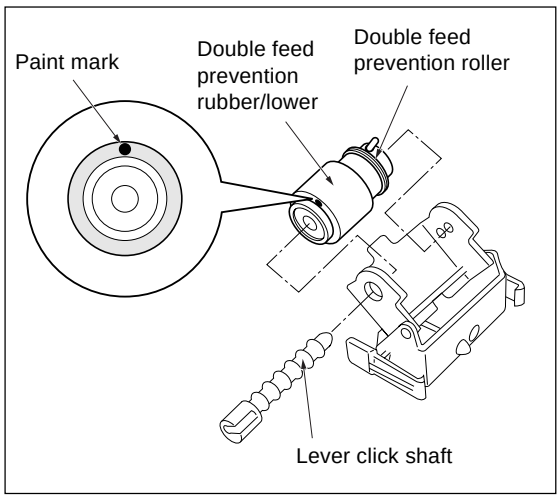

(5) Remove the double feed prevention rubber/lower from the double feed prevention roller.

(6) Install by reversing the removal procedure.

Caution: Pay attention to the direction in which you install each roller rubber.

When installing the double-feed prevention unit into the main body, align the unit with the center of the marking stamped on the main-body plate.

[5] Replacing the wires

Caution 1: After finishing wire replacement or rewiring, raise and lower the tray by hand to confirm that it rises and lowers smoothly.

Caution 2: Do not cross wires or run them one on top of another.

Caution 3: After installing wires, adjust the tray's tilt.

Wire lengths

Wire A:	518.6±0.4mm
Wire B:	293.6±0.4mm
Wire C:	317.5±0.4mm
Wire D:	423.0±0.4mm
Assist wire:	245.2±0.5mm
Detection wire:	394.8±0.4mm

<Removing the wires>

2. Remove assist wire from drive assist spring.

3. Rotating the drive assist reel counter clockwise, remove the detection wire from the reel.

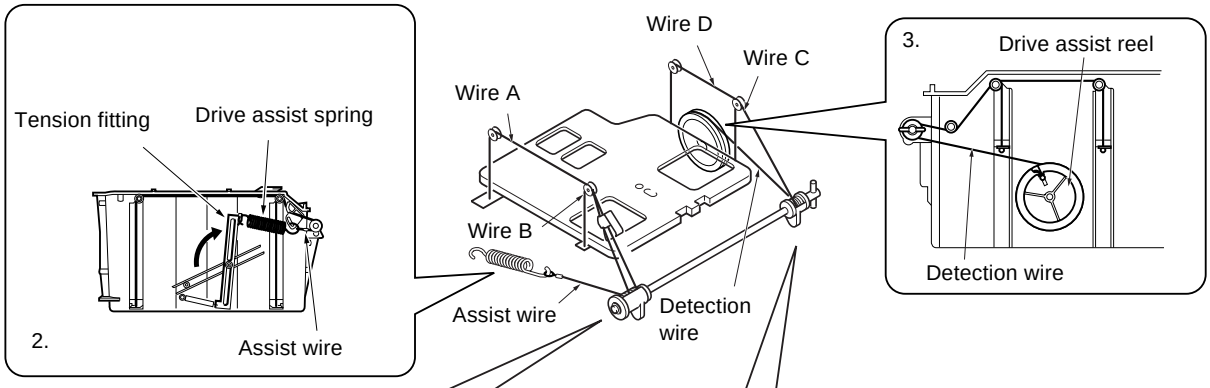

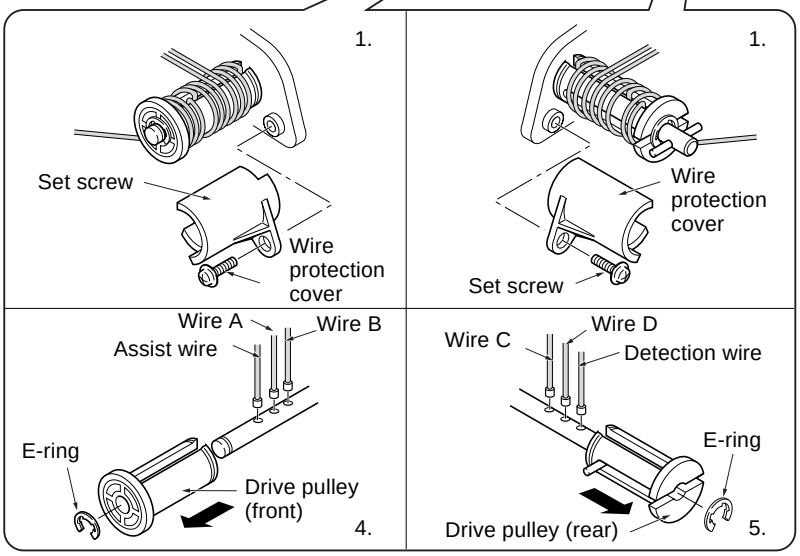

1. Remove front and rear wire protection covers.
4. Detaching the E-ring, remove the drive pulley (front).
5. Detaching the E-ring, slide the drive pulley (rear) forward.
6. Remove wire.

<Stringing wires>

7. Attach the assist wire to the drive assist spring. Turn the tension fitting to apply tension, and tighten the screw.

1. Pass wires A, B, C, and D through tray.
2. Pass wires A and B along pulley groove and pass over the adjustment material.
3. Pass wires C and D along pulley groove.

8. Raise the paper lift plate. With the wire tip pointing upward, wind wires C and D around the drive pulley 3 times. Then wind the detection wire 1 time around to the left (counterclockwise).

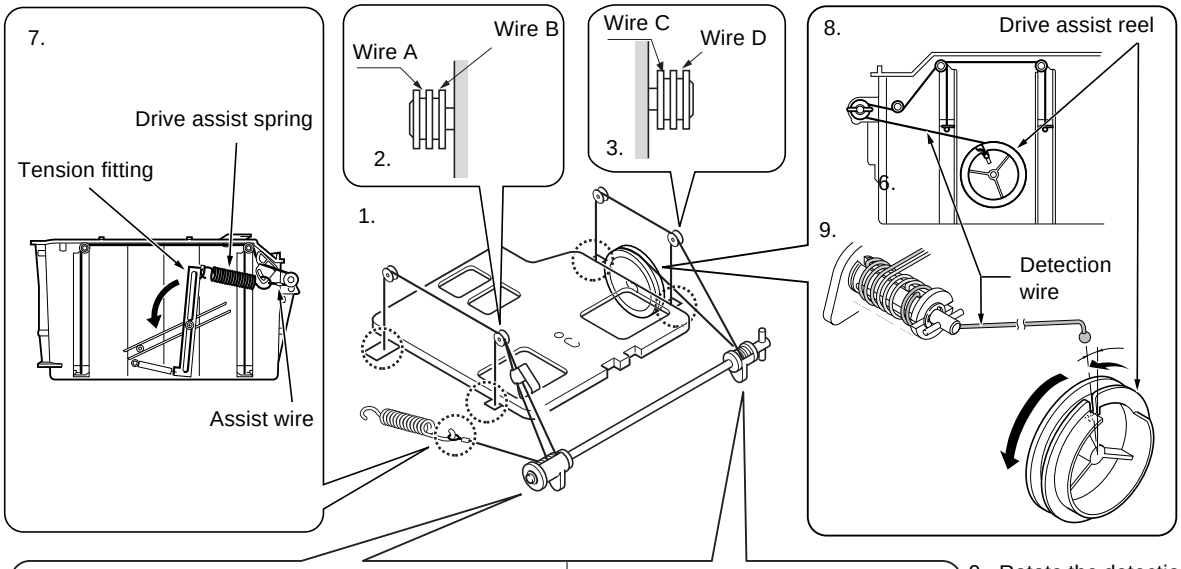

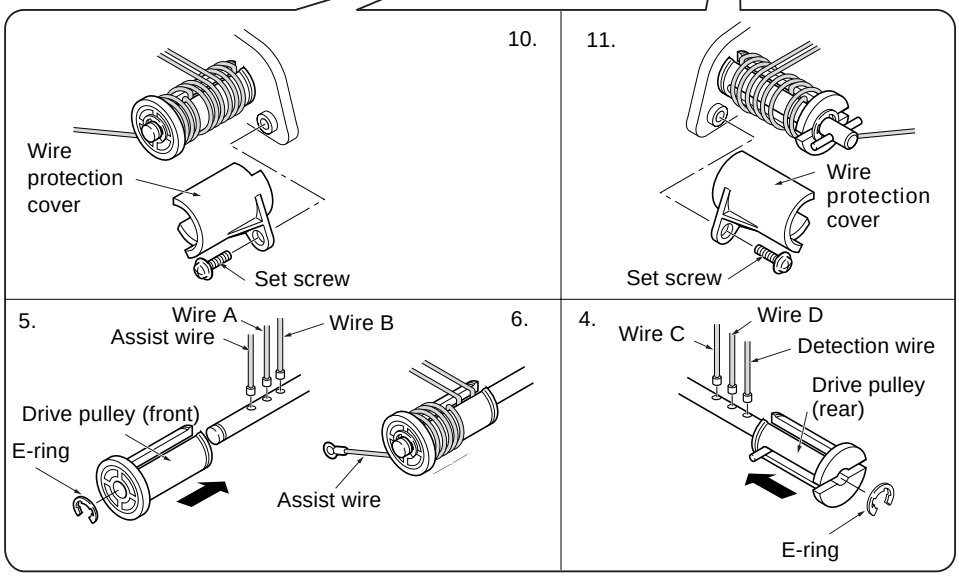

9. Rotate the detection wheel approximately 1 turn counterclockwise, so that the detection wire winds 1 time around the reel (starting from the top).

5. Having inserted assist wire and wires A and B into the drive spindle, push the drive pulley on and fasten the E-ring.
6. Wind the assist wire 5 times around the drive pulley in a rightward direction.

4. Having inserted detection wire and wires C and D into the drive spindle, push the drive pulley on and fasten with the E-ring.

10. Install the (front) wire protection cover.

11. Install the (rear) wire protection cover.