Konica

DF-314

SERVICE HANDBOOK

2000.02
Ver. 1.0

KONICA CORPORATION
TECHNOLOGY SUPPORT CENTER
TOKYO JAPAN

CONTENTS

SAFETY AND IMPORTANT WARNING ITEMS .....

Refer to the 7020 service handbook on page C-1

1. OUTLINE

DF-314 PRODUCT SPECIFICATIONS 1-1
[1] Type 1-1
[2] Functions 1-1
[3] Machine data 1-1
[4] Maintenance 1-1
[5] Machine environment 1-1
CENTRAL CROSS-SECTIONAL DIAGRAM 1-2
DRIVE SYSTEM DIAGRAM 1-3
ORIGINAL CONVEYANCE PROCESS 1-4
[1] Single-side original copy mode 1-4
[2] Double-side original copy mode 1-5
[3] Mixed original copy mode 1-5

2. UNIT EXPLANATION

EXTERNAL SECTION 2-1
[1] Composition 2-1
[2] Mechanisms 2-1
ORIGINAL FEED/REVERSAL/ORIGINAL EXIT SECTION 2-2
[1] Composition 2-2
[2] Mechanisms 2-2
[3] Original feed/conveyance/scan control ... 2-3
[4] Original exit/reversal and conveyance control 2-5
[5] Original size detection control 2-7

3. DISASSEMBLY/ASSEMBLY

DISASSEMBLY/ASSEMBLY 3-1
[1] Replacing feed roller/A 3-1
[2] Replacing the double-feed prevention roller/A assy 3-1

1

OUTLINE

DF-314 PRODUCT SPECIFICATIONS

[1] Type

type: Sheet-through Type reversible DF

[2] Functions

Originals Size: A3, B4, A4, A4R, B5, A5, A5R, B5R, B6R, 11x17, 8.5x14, 8x13, 8.5x11, 8.5x11R, 5.5x8.5, 5.5x8.5R

- Only single-side mode is available with B6R
- All sizes are detected automatically.
- Mixing of original size possible.

Original Type

Plain Original: 35g/m^2 - 130g/m^2 fine quality original

Special Original: Original feed and convey-ance ability may be inferior those of 35g/m^2 to 130g/m^2 fine quality original.

The following types of original cannot be used:

- OHP film
- Blueprint masters
- Offset masters
- Bonded original

Original Curling: 10mm maximum (35g/m^2 to 130g/m^2 high-quality paper)

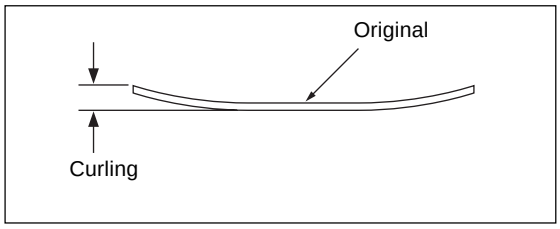

Maximum number of stacked originals:

50 sheets Maximum (80g/m^2)

Original scan speed (copies per minute)

Mode	Original size	Feed speed
Single sided Original → Single sided Copy	A4	30
Double sided Original → Double sided Copy	A4	18

Original Feed Layout:

Face-up placement, centre standard

Original image read Position:

At the slit glass section

[3] Machine data

Power Source: DC24V/5V (supplied from the main body)

Max. Power Consumption:

Max.100VA

Weight: Approximately 10.7kg

(including about 1.1kg for platen)

Machine Dimensions: Length 576mm

Depth 498mm

Height 100mm

[4] Maintenance

Maintenance: Same as the main unit

Machine Life: Same as the main unit

[5] Machine environment

Temperature: 10 to 30˚C

Humidity: 10 to 80%RH

(below condensation-forming conditions)

Caution: The contents of this Handbook may be re-vised for the purposes of improvement without notice.

CENTRAL CROSS-SECTIONAL DIAGRAM

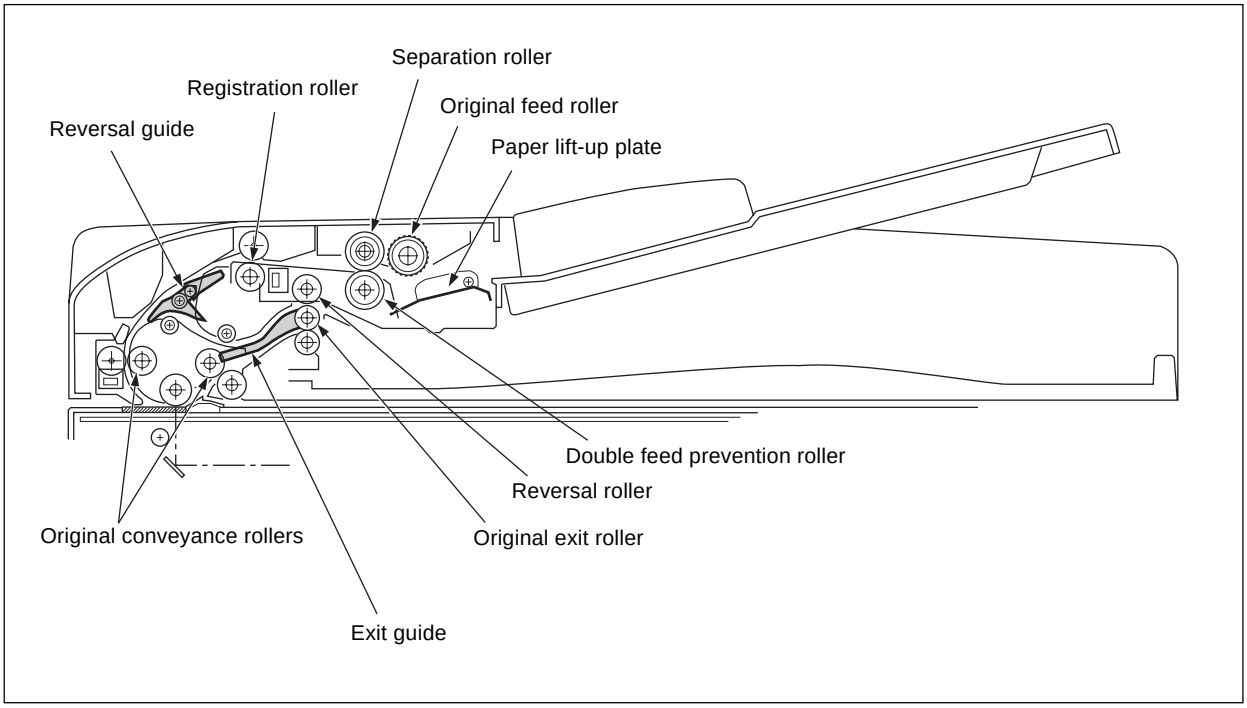

DRIVE SYSTEM DIAGRAM

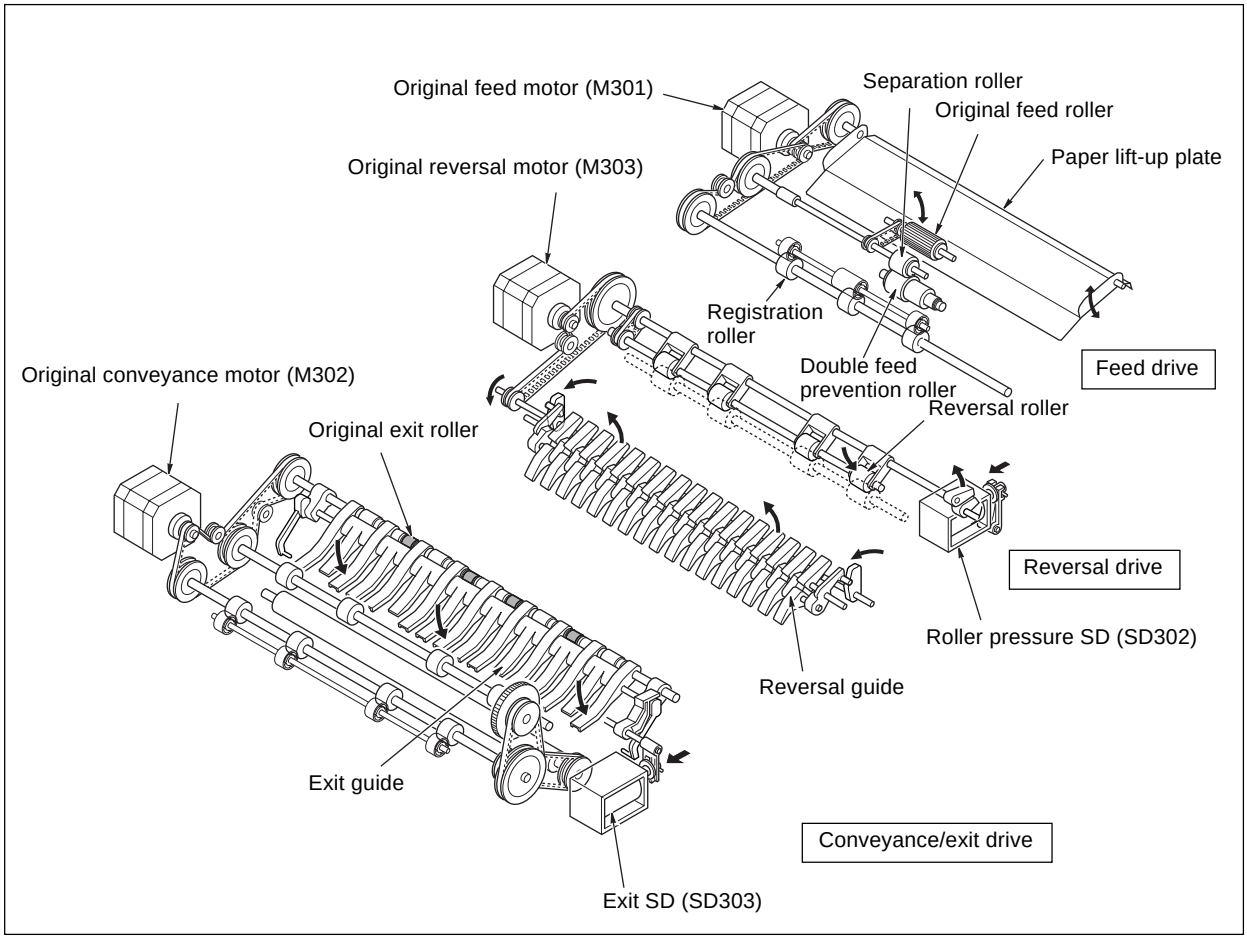

***Reversal and Exit Rollers**

A reversal roller pulley is attached to the original exit roller shaft. The reversal roller conveys the original through pressure being applied on the pulley by the roller pressure SD.

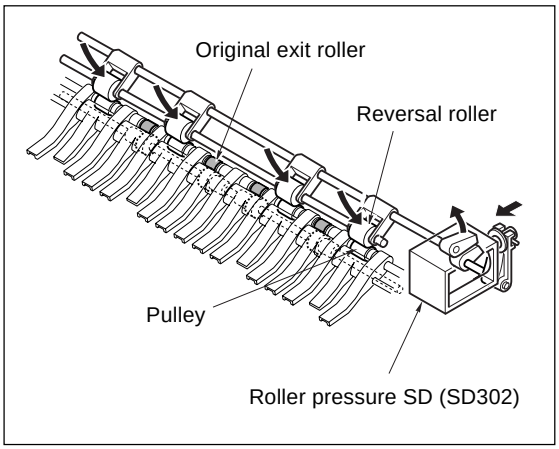

ORIGINAL CONVEYANCE PROCESS

As illustrated below, the DF-314 is made up of a original feed section, conveyance section, original exit section and reversal section.

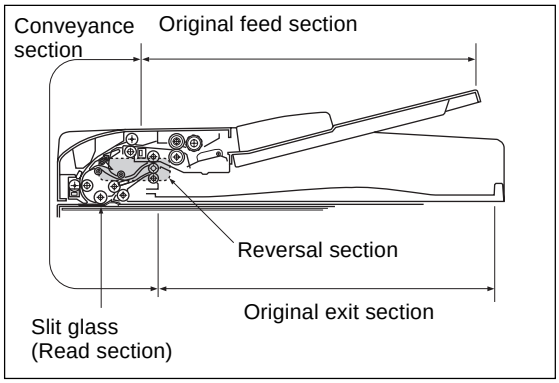

With the originals set face-up on the original feed tray, they are fed from the topmost original. Rather than being conveyed to an original glass surface, the originals that are fed in and read when they pass a slit glass placed in the conveyance path.

There are 3 modes in the DF-314 operation mode, single-side original copy mode, double-side original copy mode, and mixed original copy mode, and the conveyance path differs according to each mode.

[1] Single-side original copy mode

(Single-side→single-side copy, single-side→double-side copy)

The original that has been set in the paper feed tray is lifted by the paper lift-up plate so it comes into contact with the original feed roller. The original feed roller and the separation roller pre-feed to the position where P311 (original registration PS) turns on.

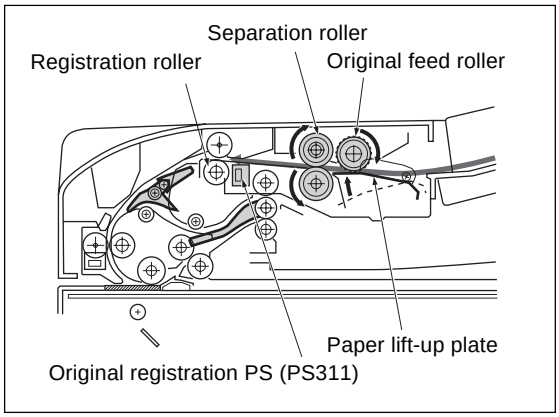

When PS311 turns ON, the original is re-fed by the registration roller and conveyed to the original conveyance roller. The original conveyance roller conveys the original to the position where PS312 (original feed PS) turns ON.

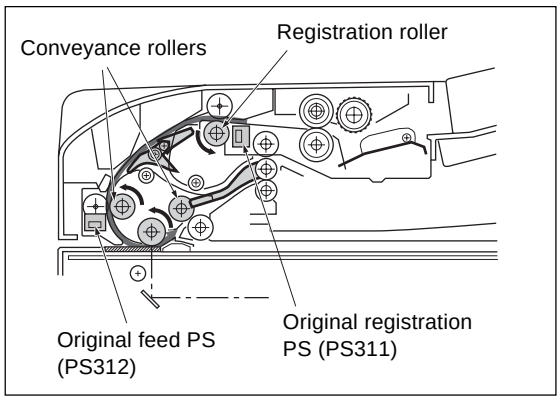

The conveyance roller turns, and scanning starts. If there is another original waiting, it is pre-fed at this point.

The scanning of the original is conveyed out when the original passes over the slit glass. The original which has been read is exited to the original exit tray by the original exit roller with the exit SD OFF (i.e. with the exit guide raised).

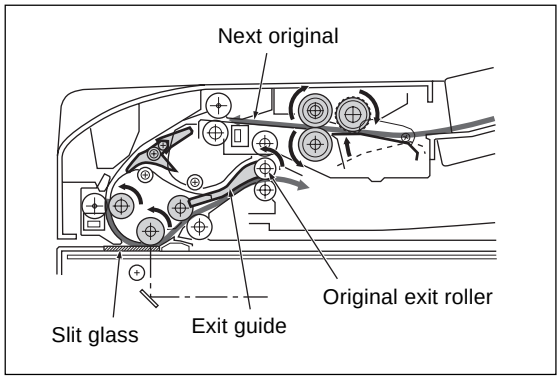

[2] Double-side original copy mode

(Double-side→single-side copy, double-side→ double-side copy)

The original set in the original feed tray is pre-fed to the position where PS311 (original registration PS) turns ON by the original feed roller and the separation roller. When PS311 turns ON, the reversal guide opens, the registration roller conveys the original to the reversal section, and the reversal roller conveys the original into the interior of the reversal section.

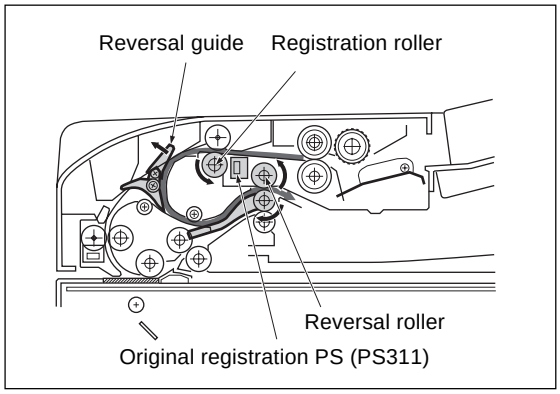

When PS311 detects the rear edge of the original and turns OFF, the original is conveyed as far as the stop position beyond reversal gate by the timer. As the original has been reversed at this point, the reversal roller is made to rotate in reverse and it conveys the original to the original conveyance roller. If there is another original waiting, it is pre-fed at this timing.

The original conveyance roller conveys the original to the position where PS312 turns ON and the reading of the original back side starts.

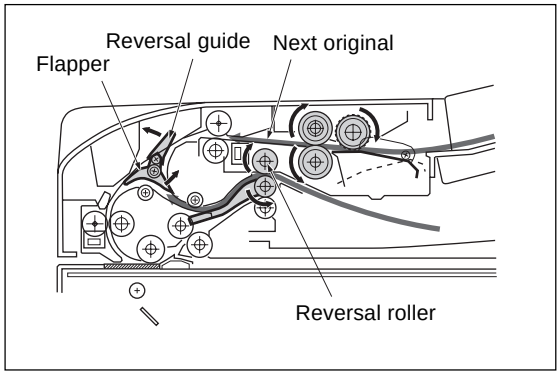

The exit SD comes ON (the exit guide is lowered) when scanning of the rear side of the original begins, and the original is again conveyed to the reversal roller. When PS312 detects the rear edge of the original and turns OFF, the original is conveyed as far as the stop position in front of the reversal gate by the timer. The original has been reversed once again by this point so is conveyed to the original conveyance roller. The original conveyance roller conveys the original and reading of the oliginal face side starts.

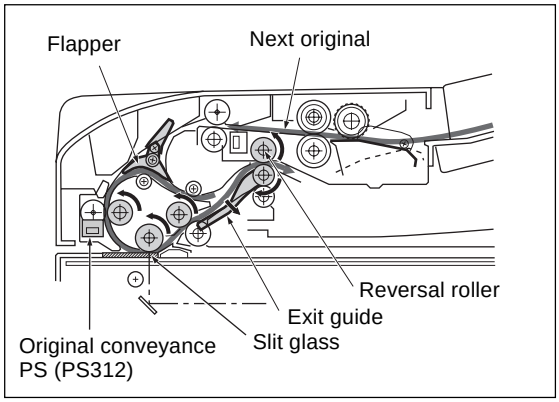

The original which has been read is exited to the original exit tray by the original exit roller with the exit SD OFF (i.e. with the paper exit guide raised). If there is another original, it is conveyed to the reversal section at this point.

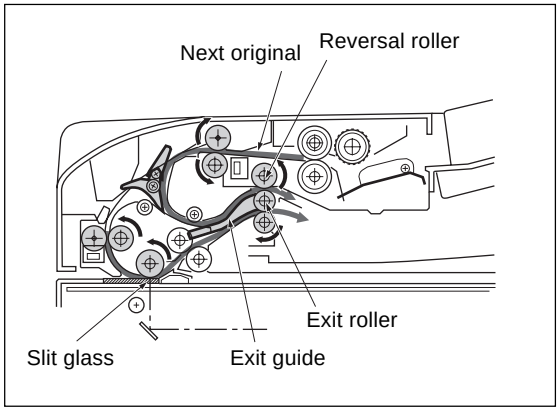

[3] Mixed original copy mode

The mixed original copy mode supports both same-series originals and different series originals, but as size detection is performed in PS311 ON time, size detection is performed before reading.

The original which has finished size-detection stops in the reversal position and thereafter the process is the same as in double-side copy mode.

Refer to "ORIGINAL FEED/REVERSAL/ORIGINAL EXIT SECTION [5] Original size detection control" for size detection operation.

2

UNIT EXPLANATION

EXTERNAL SECTION

[1] Composition

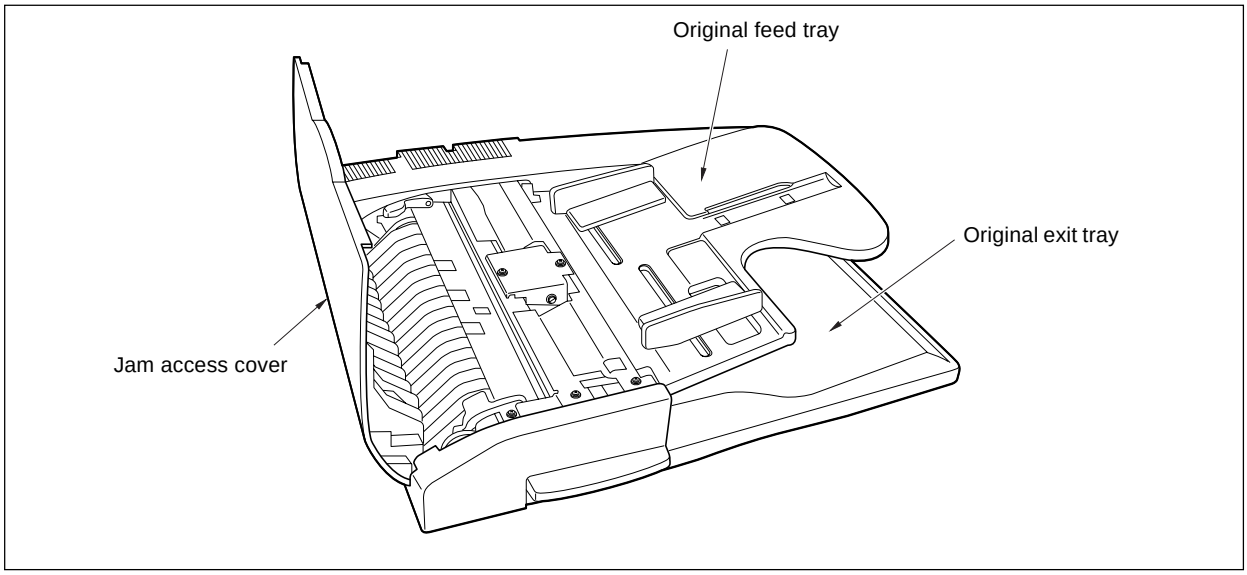

[2] Mechanisms

Mechanism	System
Jam release*	Jam access cover
	Reversal guide open/close lever
	RADF Main body open/close Knob
	Exit-guide open/close lever
	Platen separation lever

*** Jam removal**

If a jam occurs at the original feed, open the Jam access cover and turning the knob closer to you withdraw the sheet.

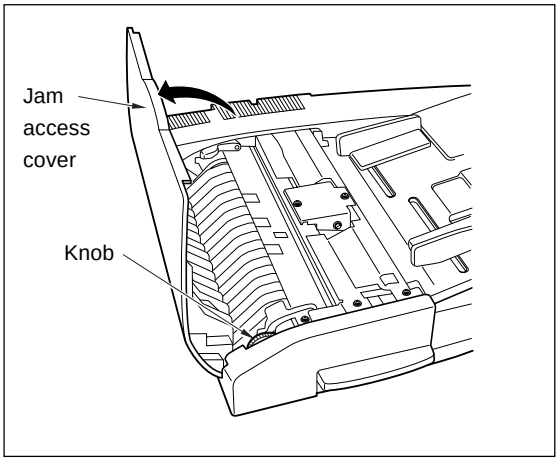

If a jam occurs in the reversal section, open the reversal guide with the reversal guide open/close lever and withdraw the sheet.

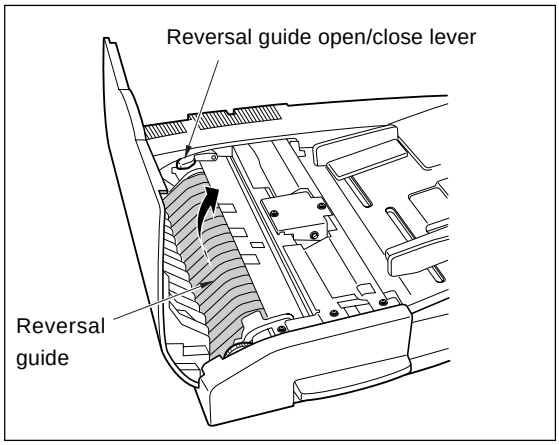

If a jam occurs in the conveyance section, open the exit tray (using the platen separation lever) and the exit guide (using the exit-guide open/close lever) and withdraw the sheet.

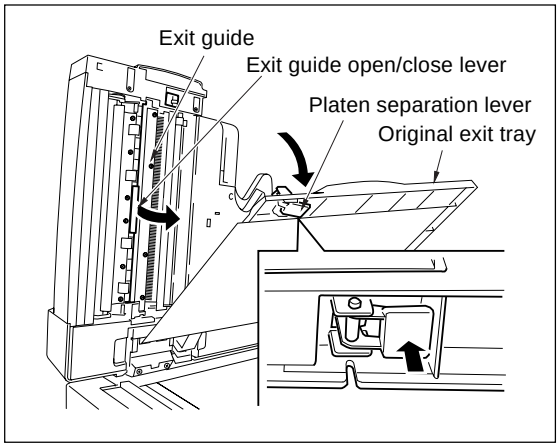

ORIGINAL FEED/REVERSAL/ORIGINAL EXIT SECTION

[1] Composition

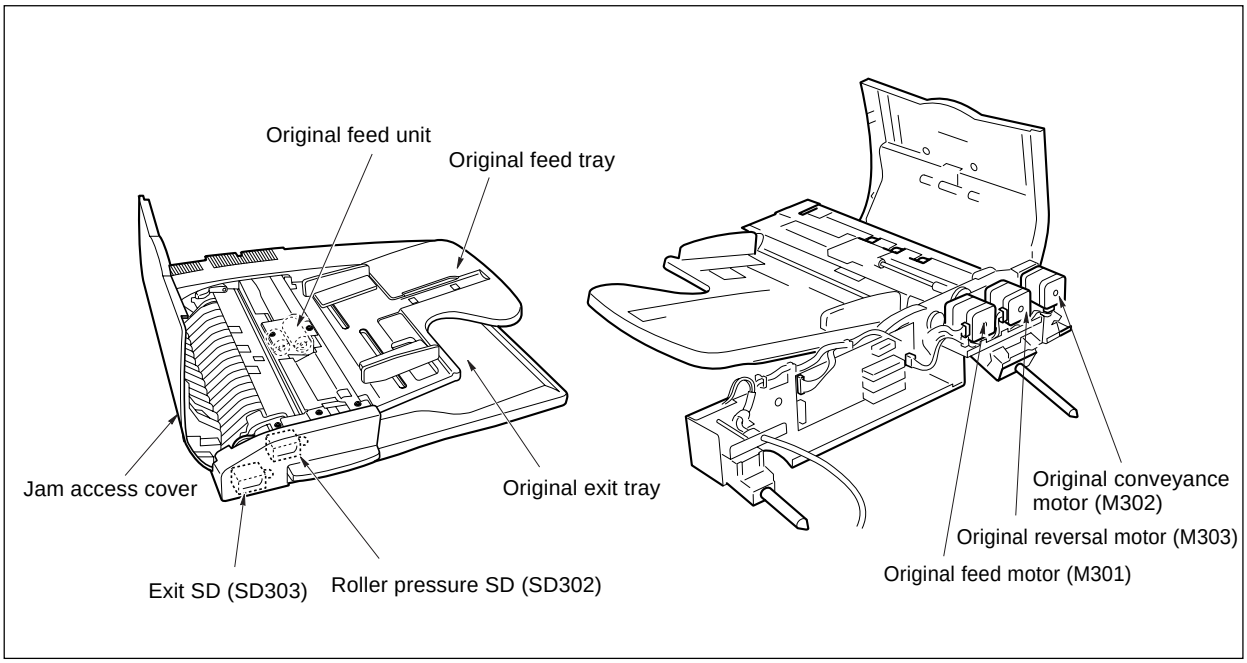

[2] Mechanisms

Mechanism	System
Original feed	Feed roller
Double feed prevention	Separation roller Double feed prevention Roller
Original conveyance	Original conveyance rollers
Original reverse and feed *1	Reversal guide
Original exit path section *2	Original exit guide

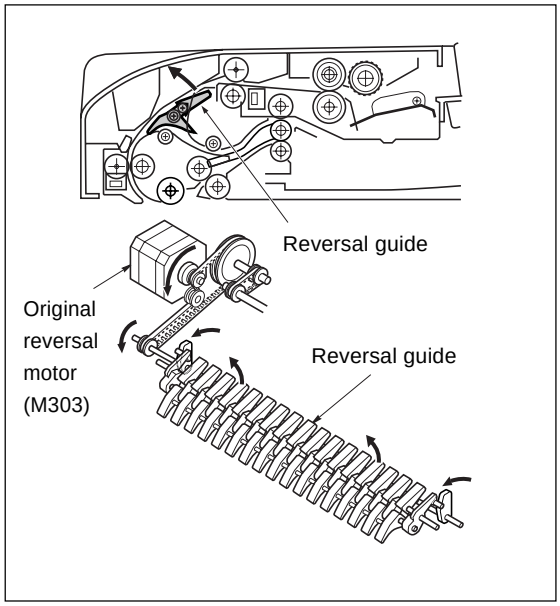

***1: Reversed original feed**

During double-side copying, in order to reverse the original the paper feed path is switched by the reversal guide, the paper is conveyed to the reverse mechanism and is reversed.

***2: Original exit path switching**

During double-side copying, the path is switched by the exit guide to either exit or, for the purpose of reading the original's, face side, sending the original to the reversal section.

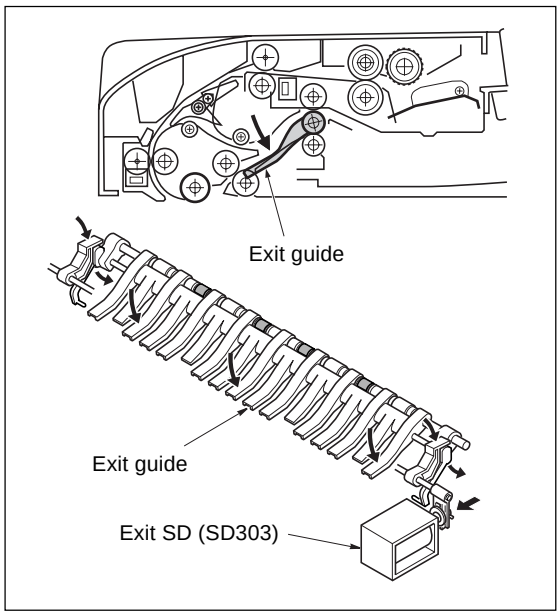

[3] Original feed/conveyance/scan control

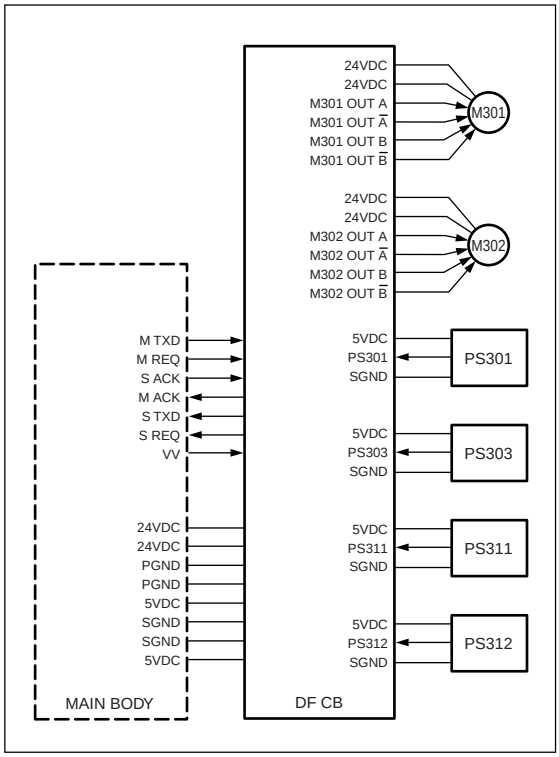

Original feed is achieved by the transmission of the M301(original feed motor) drive power to the original feed roller, separation roller and registration roller. Original conveyance is achieved by the transmission of the M302 (original conveyance motor) drive power to the original conveyance roller.

The M301 and M302 are controlled by the DFCB (RADF control board).

1. Operation

a. Original feed

Original feed is started by the transmission of the M301 drive power to the original feed roller, separation roller and paper lift-up plate.

b. 1st original pre-feed

When the copy button is pressed, the M301 starts original pre-feed, and when the conveyed original arrives at PS311, M301 stops temporarily after a specified time. M301 then rotates in reverse, turning the registration roller so that feeding starts again. The original passes PS311, so that PS311 turns OFF. A predetermined time interval after PS311 turns OFF, M301 also turns OFF.

c. 2nd original pre-feed

When there is still an original in the original feed tray, M301 starts after a specified time after PS311 has turned OFF, and starts the pre-feed from after the second sheet. The original is conveyed in the same way as in the 1st. original pre-feed.

d. Scanning operation (except last original)

When the original arrives at PS311, M302 starts after a specified time has elapsed and the original is conveyed to the read section.

Scanning of the original is achieved when the original passes over the surface of the slit glass of the main body optical section.

When the original arrives at PS312, scanning is started after a specified time has elapsed, and when PS312 turns OFF after the original has passed, scanning is stopped after the lapse of a fixed period of time.

e. Scanning operation (last original)

During the scanning operation, when PS301(no original detect PS) turns OFF, the original currently being scanned is judged to be the last original. When the last original has passed PS311, M301 turns OFF after the lapse of a fixed period of time, and when the original has passed PS303 (original exit PS), M302 turns OFF after a specified time.

2. Signals

a. Input signals

(1) PS301(PS301 → DF CB)

Original feed tray no-paper detection signal

[L] : Original

[H] : No original

(2) PS303(PS303 → DF CB)

Original exit section original detection signal

[L] : No original

[H] : Original

(3) PS311(PS311 → DF CB)

Original conveyance roller entrance original detection signal

[L] : No original

[H] : Original

(4) PS312(PS312 → DF CB)

Original detection signal from detector in front of scan position

[L] : No original

[H] : Original

(5) M TXD (MAIN BODY → DF CB)

Serial data line; informs RADF of the operating state of the main body's CB

(6) M REQ (MAIN BODY → DF CB)

Transmission request signal from main body to RADF

(7) S ACK (MAIN BODY → DF CB)

Transmission OK signal from main body to RADF

b. Output signals

(1) M301 OUT A, M301 OUT $\overline{A}$, M301 OUT B, M301 OUT $\overline{B}$ (DF CB → M301)

M301 drive control signal

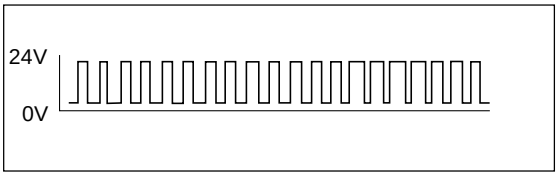

(2) M302 OUT A, M302 OUT $\overline{A}$, M302 OUT B, M302 OUT $\overline{B}$ (DF CB → M302)

M302 drive control signal

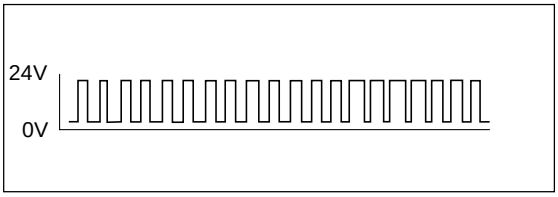

(3) M ACK (DF CB → MAIN BODY)

Transmission OK signal from RADF to main body

(4) S TXD (DF CB → MAIN BODY)

Serial data line; informs the main body's CB of the RADF operating state

(5) S REQ (DF CB → MAIN BODY)

Transmission request signal from RADF to main body.

[4] Original exit/reversal and conveyance control

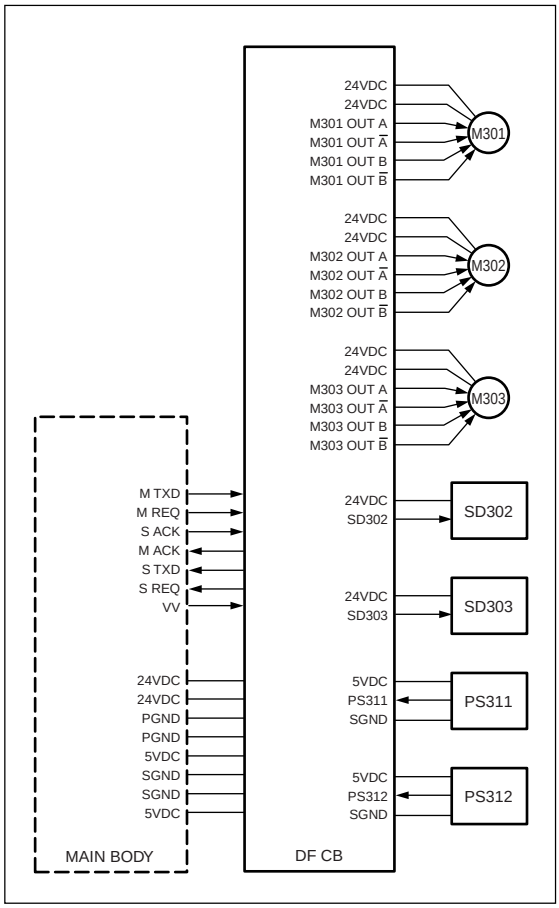

The exit guide used in exit path switching is driven by the SD303 (exit SD).

Reversal conveyance drive in double-side copy mode is performed by the M303 (original reversal motor). The reversal roller pressure/freeing used in reversal original feed is performed by the SD 302 (roller pressure SD).

M303, SD302 and SD303 are controlled by the DF CB (RADF control board).

1. Operation

a. Original exit operation

During single side copying and face side copying in double-side copying, the exit guide is raised because SD303 is OFF. For this reason, an original which has been read is conveyed to the exit section.

b. Reversal original exit operation

During back side copying in double side copying, the original is conveyed to the scanning section by reverse rotation of M303 and nomal rotation of M302. When PS312 turns ON, SD302 turns OFF, and reversal roller paper pressure conveys the freed original to the reversal section.

c. Reversal original feed operation

After PS312 has detected the rear edge of the original, SD302 turns ON after a specified time has elapsed and the reversal roller applies pressure (seizes, pinches) to the original. After that, M303 stops, but then immediately reverses and starts the original feed operation of the original face side scan.

d. Pre-feed operation of next original when reading back side of original

PS311 turns OFF once the first original has passed, and after a specified period of time has elapsed, starts the pre-feed operation for the 2nd. original. After the elapse of a specified time after the 2nd. original has arrived at PS311, M301 (original feed motor) stops.

e. Overlap control

When scanning of the back side of the first original sheet has been completed and the leading edge of the original fed from the reversal section reaches PS312, M301 turns ON and feeding of the second original starts. At this point SD302 turns OFF, and the first and second originals overlap and pass each other at the reversal section.

2. Signals

a. Output signals

(1) M301 OUT A, M301 OUT $\overline{A}$, M301 OUT B, M301 OUT $\overline{B}$ (DF CB $\rightarrow$ M301)

M301 drive control signal

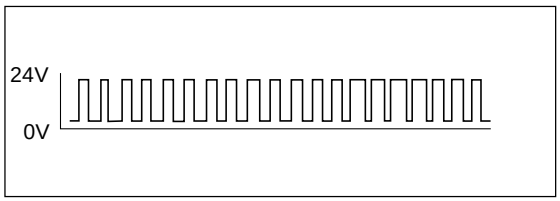

(2) SD302 (DF CB $\rightarrow$ SD302)

SD302 drive control signal

[L] : ON

[H] : OFF

(3) SD303 (DF CB $\rightarrow$ SD303)

SD303 drive control signal

[L] : ON

[H] : OFF

[5] Original size detection control

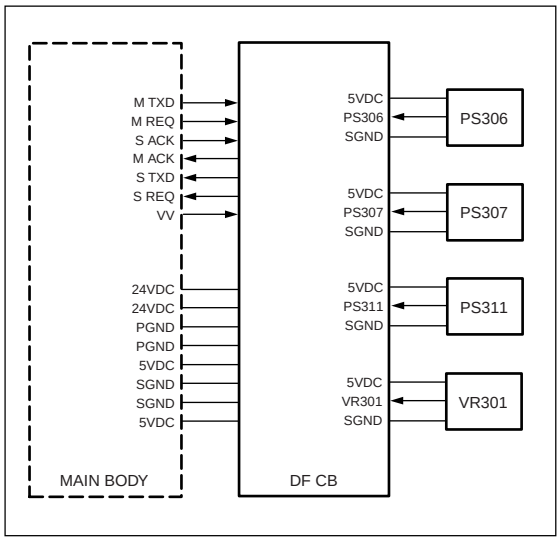

Size detection on an original set in the original feed tray is performed by PS306 (original size detect PS1), PS307 (original size detect PS2), and VR301 (size detect VR).

Note that the DF CB includes internal nonvolatile memory that stores timing data, size-detection reference values, and other such data.

1. Operation

a. Normal copy mode

The DF CB detects the original size when the signals described below combine.

(1) Drum axis direction size detection

VR301 resistance value changes in the position where the guide plate contacts VR301. The width of the original is detected by the resistance value.

(2) Size detection in original feed direction

The length of the original is detected by the ON/OFF states of PS306 and PS307.

b. Original size detection in mixed-original modes and Z-fold-original modes (1st sheet)

(1) Drum axis direction size detection

The width of the maximum sized original being mixed-loaded is detected by the position of the VR301 guide plate.

(2) Size detection in original feed direction

Original feed direction size is detected during PS311 ON time (the time taken by the original to pass PS311).

(3) Operation of size detection in original feed direction

When original re-feed is started by the registration roller, when a specified time has elapsed after PS311 turning ON, M303 (original reversal motor) turns ON and conveys the original to the reversal section.

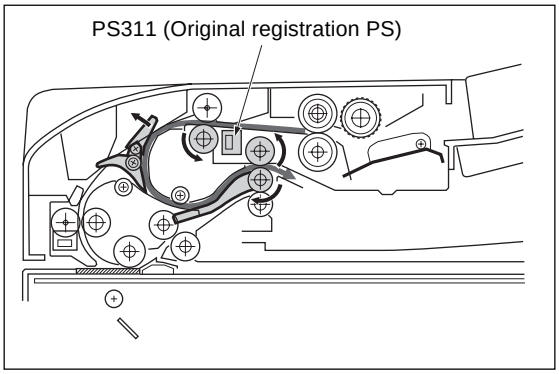

Conveyance to the scanning section is performed by M303 reverse rotation.

Conveyance or scanning thereafter for both single and double-sided originals is performed by the same operation as for double-side copy mode. However in single-side copying, the back side of the original passes the scanning section without being scanned and is conveyed to the reverse section.

Original size detection operation after the 2nd. original starts after the completion of the exit of the first original.

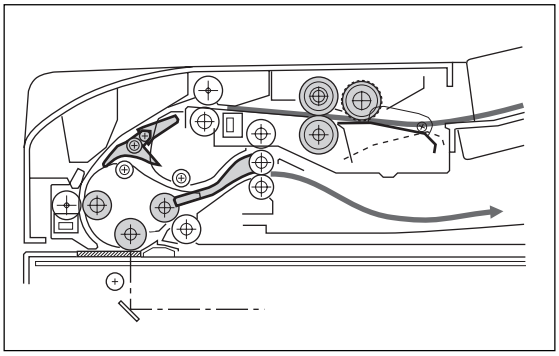

c. Allowed size combination

(△: same size, ○: same series, ◎: different series,
×: no mixed loading, —: not supported)

(1) AB series

	Standard originals (the maximum original size detected by the guide plate)							
Other originals	A3	A4	B4	B5	A4R	A5	B5R	A5R
A3	△	○	—	—	—	—	—	—
A4	○	△	—	—	—	—	—	—
B4	◎	◎	△	○	—	—	—	—
B5	◎	◎	○	△	—	—	—	—
A4R	◎	◎	◎	◎	△	○	—	—
A5	◎	◎	◎	◎	○	△	—	—
B5R	×	×	◎	◎	◎	◎	△	—
A5R	×	×	×	×	×	×	×	△

(2) Inch series

	Standard originals (the maximum original size detected by the guide plate)					
Other originals	11x17	8.5x11	8.5x14	8.5x11R	8.5x5.5	8.5x5.5R
11 x 17	△	○	—	—	—	—
8.5 x 11	○	△	—	—	—	—
8.5 x 14	◎	◎	△	○	○	—
8.5 x 11R	◎	◎	○	△	○	—
8.5 x 5.5	◎	◎	○	○	△	—
8.5 x 5.5R	×	×	×	×	×	△

2. Signals

a. Input signals

(1) PS306 (PS306 → DF CB)

Detection of original's length

[1] : Original

[2] : No original

(2) PS307 (PS307 → DF CB)

Detection of original's length

[1] : Original

[2] : No original

(3) VR301 (VR301 → DF CB)

Detection of original's width

3

DISASSEMBLY/ASSEMBLY

This section explains how to disassemble and reassemble the machine. Observe the following precautions when performing disassembly and assembly work.

1. Be sure the power cord has been unplugged from the wall outlet.
2. The disassembled parts must be reassembled following the disassembly procedure in reverse unless otherwise specified.
3. Care should be taken not to lose small parts. Care should also be taken not to install small parts in wrong places.
4. Do not operate the machine before installing all the disassembled parts completely.
5. Removal of some screws is prohibited in this section. Never loosen them.

DISASSEMBLY/ASSEMBLY

⚠**Caution: Make sure the power plug is taken out of the socket.**

[1] Replacing feed roller/A

(1) Open jam access cover.

(2) Take out the 2 fixed screws and lifting the feed unit lightly draw it forwards towards yourself and remove it.

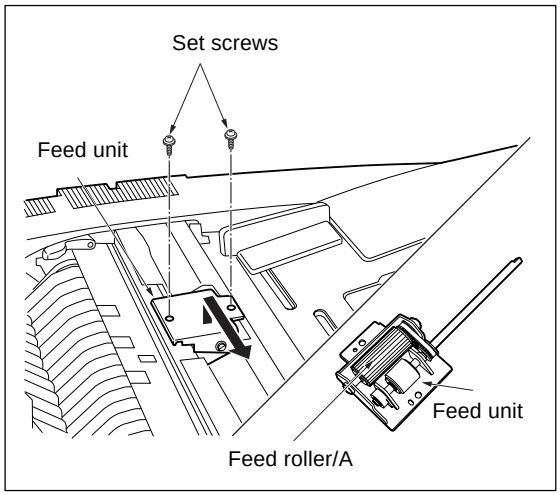

(3) Remove the E-rings on the ends of the paper-feed unit (one E-ring on each end), and remove the feed roller/A assy.

(4) Remove feed roller/A from the bearing of the feed roller/A assy.

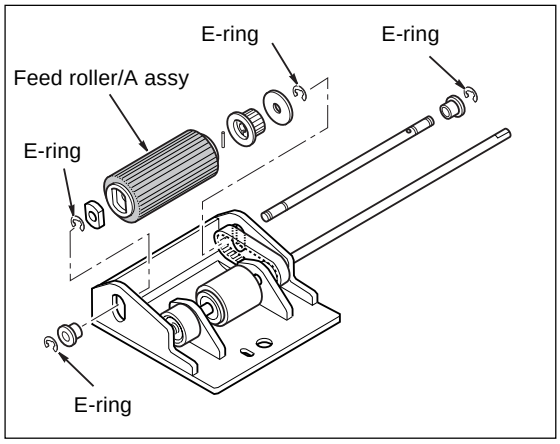

(5) Install by reversing the removal procedure.

Caution: When installing the feed unit, insert the unit in order to fit the D cut side on the drive shaft in the coupling.

[2] Replacing the double-feed prevention roller/A assy

(1) Open jam access cover.

(2) Remove feed unit.

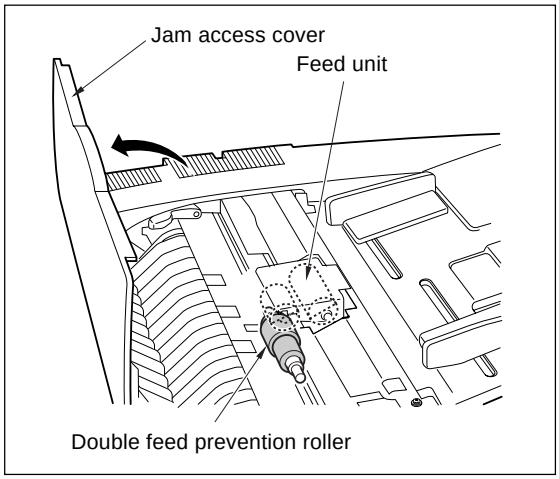

(6) Remove double feed prevention roller.

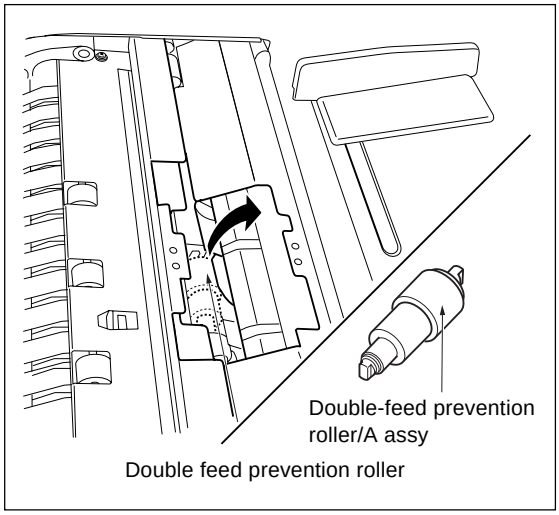

(4) Remove the E-ring from the double-feed prevention roller/A assy.

(5) Pull out the double-feed prevention roller/A assy.

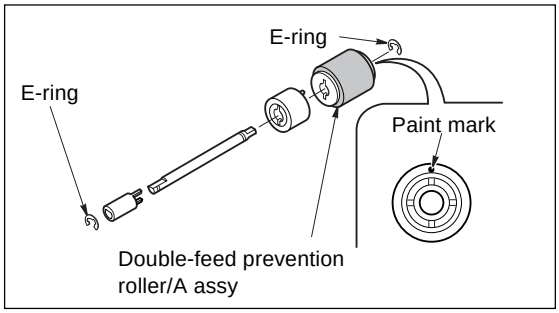

(6) Install by reversing the removal procedure.

Caution: When installing the double-feed prevention roller, make sure you install it in the correct direction.