Konica

FS-107

SERVICE HANDBOOK

2000.02
Ver. 1.0

KONICA CORPORATION
TECHNOLOGY SUPPORT CENTER
TOKYO JAPAN

CONTENTS

SAFETY AND IMPORTANT WARNING ITEMS .....

Refer to the 7020 service handbook on page C-1

1. OUTLINE

FS-107 PRODUCT SPECIFICATIONS 1-1
[1] Type 1-1
[2] Functions 1-1
[3] Stapler kit 1-2
[4] Machine data 1-2
[5] Maintenance 1-2
[6] Machine environment 1-2
CENTRAL CROSS SECTION 1-3
DRIVE SYSTEM DIAGRAM 1-4
[1] Paper conveyance drive 1-4
[2] Stapler unit drive 1-5
PAPER CONVEYANCE PATH 1-6
[1] Straight mode 1-6
[2] Offset mode/staple mode 1-7

2. UNIT EXPLANATION

EXTERNAL SECTION 2-1
[1] Composition 2-1
CONVEYANCE SECTION 2-2
[1] Composition 2-2
[2] Mechanisms 2-2
[3] Conveyance control 2-3
[4] Tray up/down control 2-5
PAPER EXIT/STAPLER UNIT 2-7
[1] Composition 2-7
[2] Mechanisms 2-7
[3] Paper alignment control 2-9
[4] Paper exit control 2-10
[5] Paper stack control 2-11
[6] Stapler control 2-12
[7] Staple control 2-13
OTHER KINDS OF CONTROL 2-15
[1] Movement with power on 2-15
[2] Opening and closing motion of the front door 2-15

3. DISASSEMBLY/ASSEMBLY

DISASSEMBLY/ASSEMBLY 3-1
[1] Removing and installing of the tray 3-1
[2] Replacing the paper exit roller/A 3-2
[3] Removing and installing of the up/down wire 3-3
[4] Replacing the stapler cartridge 3-5
[5] Removing and installing the stapler unit 3-5



OUTLINE

FS-107 PRODUCT SPECIFICATIONS

[1] Type

Type: Built-in type compact finisher (multiple trays type)

[2] Functions

Type of paper: Same as the main body

Modes: Straight mode

Offset mode (shift)

Staple mode

Paper size: A3, B4, A4, A4R, B5, B5R, A5, A5R, B6R, 11 x 17, 8.5 x 14R, 8. 5 x 11, 8.5 x 11R, 8.5 x 5.5, 8.5 x 5.5R, 8 x 13

Shift : A3, B4, A4, A4R, B5, B5R, A5, 11 x 17, 8.5 x 14, 8.5 x 11, 8.5 x 11R, 8.5 x 5.5R, 8 x 13

1 position staple: A3, B4, A4, A4R, B5, B5R, A5, 11 x 17, 8.5 x 14, 8.5 x 11, 8.5 x 11R, 8.5 x 5.5R, 8 x 13

2 position staple: A3, B4, A4, A4R, B5R, 11 x 17, 8.5 x 14, 8.5 x 11, 8.5 x 5.5R, 8 x 13

Maximum

Paper capacity: 2 trays: 100 +1000 = 1,100 sheets

3 trays: 100 + 100 + 600 = 800 sheets

4 trays: 100 x 4 = 400 sheets

Copy

Weights: 50 to 200g/m^2 papers

Stack capacity: (80g/m^2 high-quality paper)

With 2 standard trays

		Small size	Medium size	Large size	Special media
Tray 1	Non-staple	100 sheets	100 sheets	100 sheets	10 sheets
	Staple	10 sets	10 sets	10 sets	—
Tray 2	Non-staple	—	1000 sheets	300 sheets	50 sheets
	Staple	—	50 sets	20 sets	—

Note 1: The above figures apply only to if stacked paper is all of the same size.

Note 2: The number of stacked sheets in staple mode must not exceed the stack sheet capacity for non-staple mode.

Note 3: Small size: B6R, A5R, 8.5x5.5R

Medium size: Everything other than small size, large size, special media.

Large size: A3, B4, F4, 8.5x14, 11x17

Special media: Thin paper (60g/m^2 or less), thick paper (over 128g/m^2), blueprint masters, OHP, etc.

Note 4: Stacking quantities when 3 or 4 trays are installed are in conformance with the 2 trays figures given above.

Paper curling: Max. 10mm

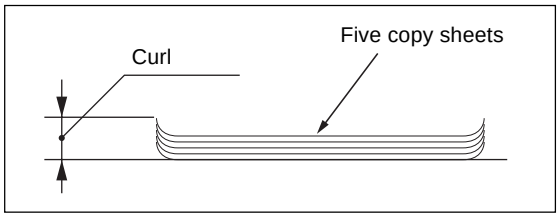

Amount of sort off-setting: 30mm

20mm (A5R, 8.5 x 5.5R)

[3] Stapler kit

Staple ability Maximum 50 sheets (with 80g/m^2 paper, paper thickness less than 5mm)

Stapler capacity: 5,000 staples/cartridge

Staple position: A = 8.6mm ± 3mm
B = 8.6mm ± 3mm
C = refer to following table
D = 8.6mm ± 3mm
E = 8.6mm ± 3mm

Paper Size	C (mm)
A3/A4	60±4
B4/B5	53±4
A4R/A5	90±4
B5R	80±4
A5R	63±4
F4 (8 x 13)	90±4
F4 (8.125 x 13)	91.5±4
F4 (8.25 x 13)	93±4
F4 (8.5 x 13)	95±4
11 x 17/8.5 x 11	52±4
8.5 x 14/8.5 x 11R	95±4
5.5 x 8.5	95±4
5.5 x 8.5R	60±4

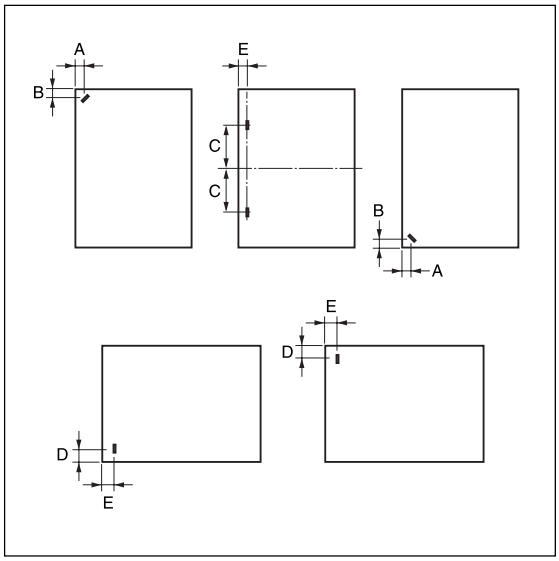

[4] Machine data

Power source: DC24V/5V (supplied from the main body)

Maximum power Consumption: Max.70VA

Weight: 13kg

External dimensions: Length 782mm
Depth 502mm
Height 392mm

[5] Maintenance

Maintenance: Same as the main unit

Machine life: Same as the main unit

[6] Machine environment

Temperature: 10 to 30˚C

Humidity: 10 to 80%RH
(below condensation-forming conditions)

Caution: The contents of this Handbook may be revised for the purposes of improvement without notice.

CENTRAL CROSS SECTION

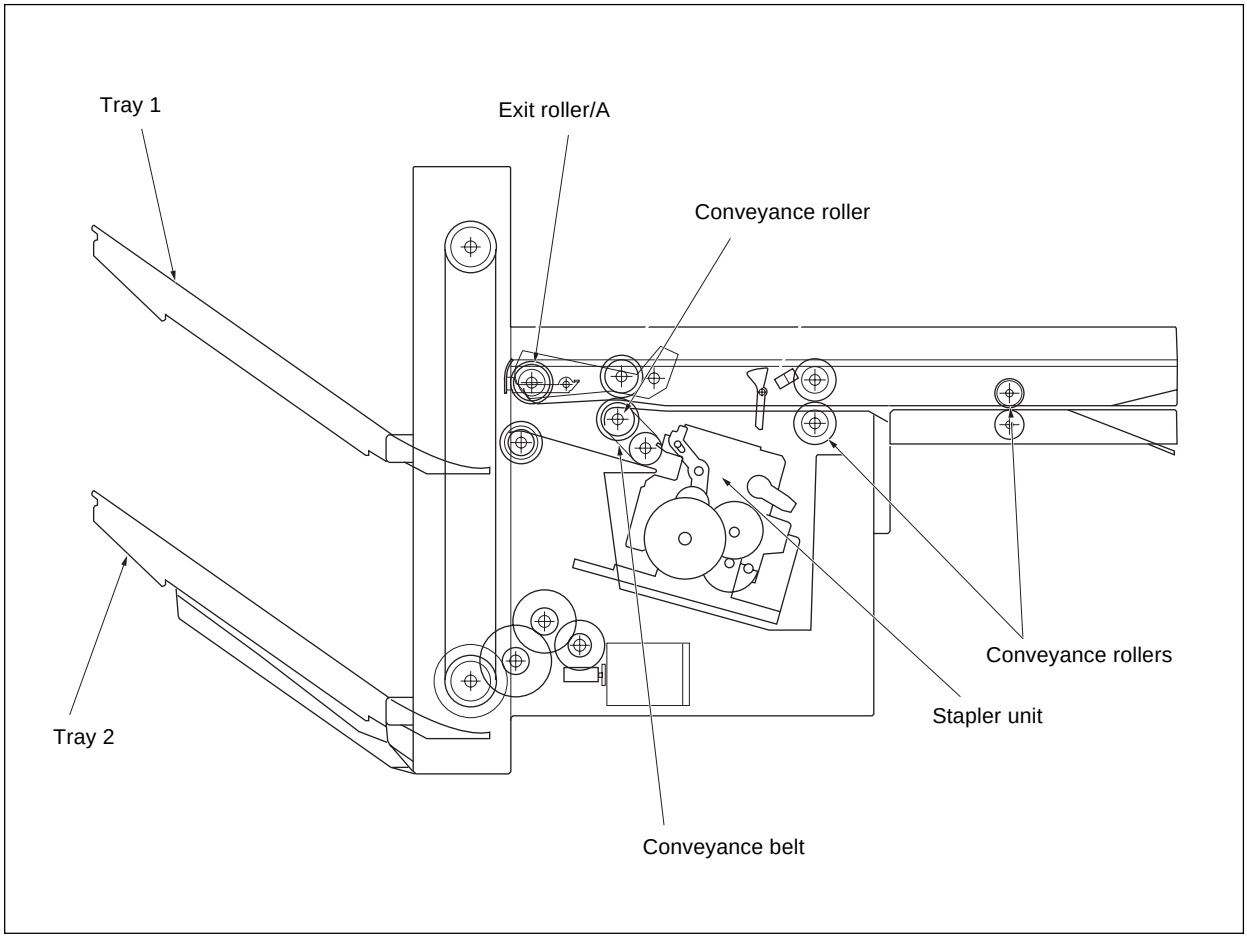

DRIVE SYSTEM DIAGRAM

[1] Paper conveyance drive

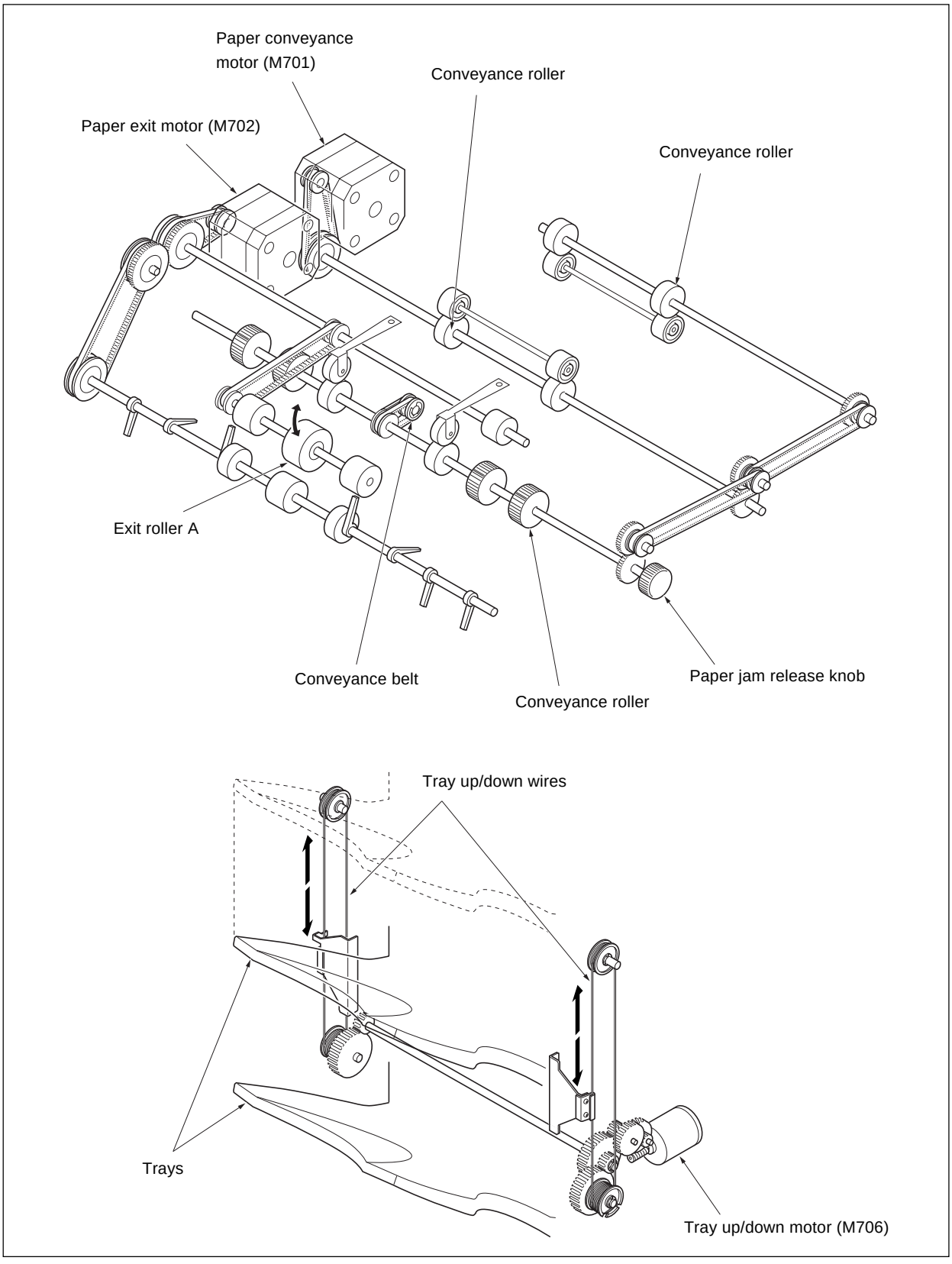

[2] Stapler unit drive

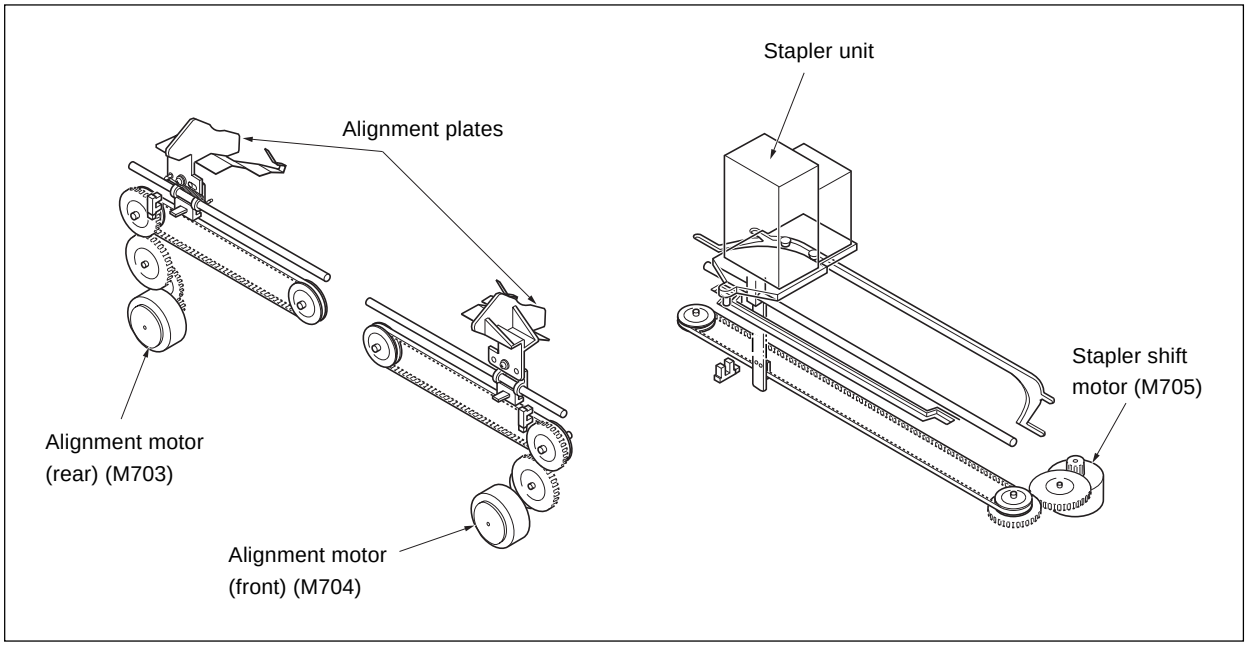

PAPER CONVEYANCE PATH

In the finisher, two different paper conveyance paths are used, changing by the mode selected.

[1] Straight mode

In this mode, paper conveyed to the finisher is exited straight into the tray. (For small paper sizes, however, exit is as described in [2] below even under straight mode.)

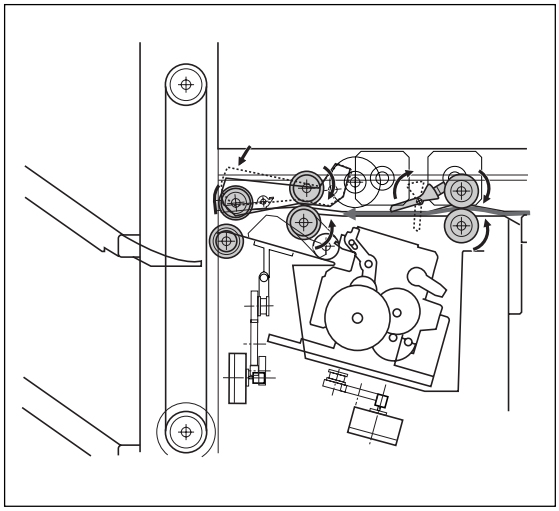

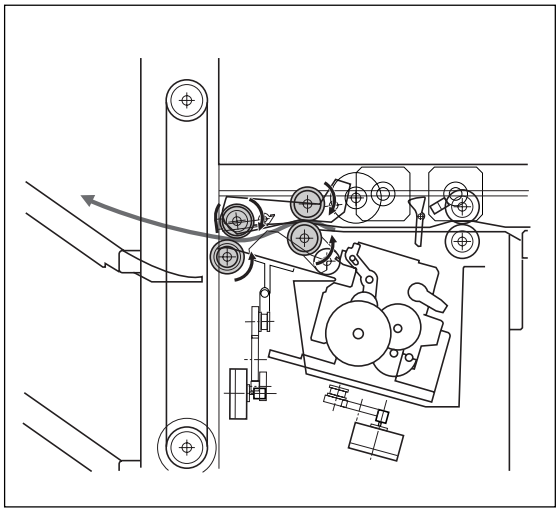

[2] Offset mode/staple mode

In the offset mode or staple mode, paper conveyed to the finisher is stacked once by the reverse rotation of the exit roller. In the offset mode, this stacked paper is offset by the paper alignment plates. In the staple mode, the paper is stapled. When the respective process is finished, the paper is exited to the tray by the exit roller.

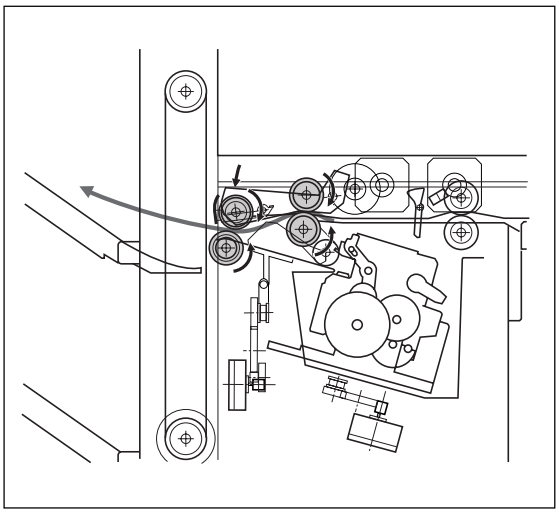

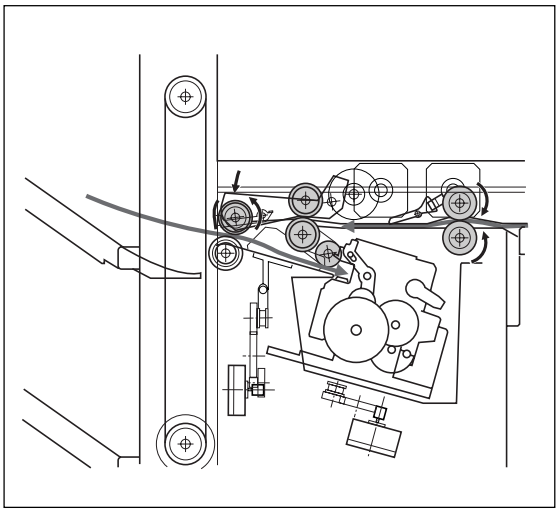

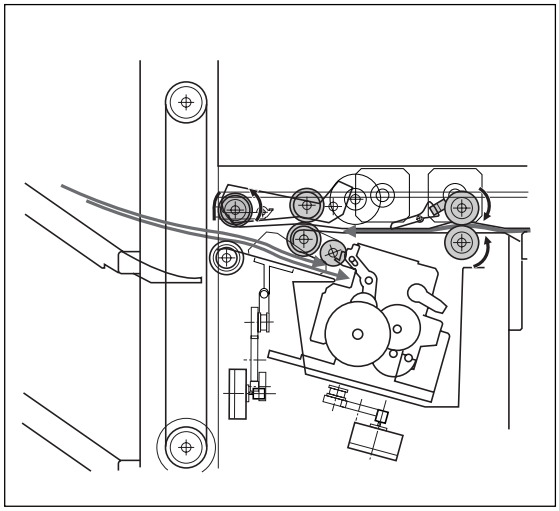

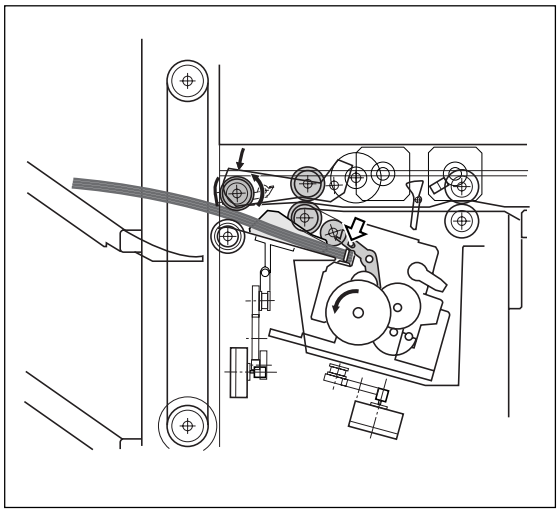

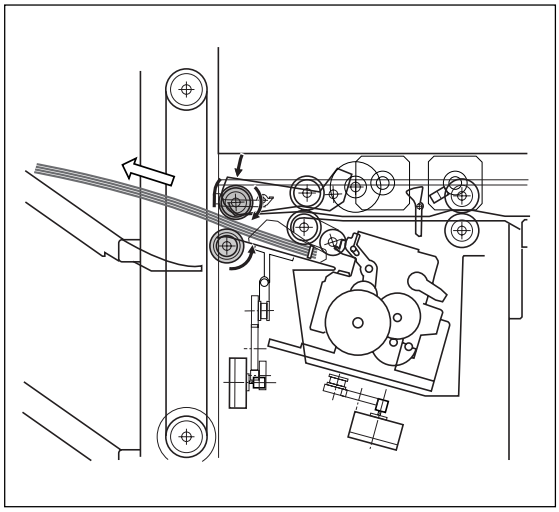

2

UNIT EXPLANATION

EXTERNAL SECTION

[1] Composition

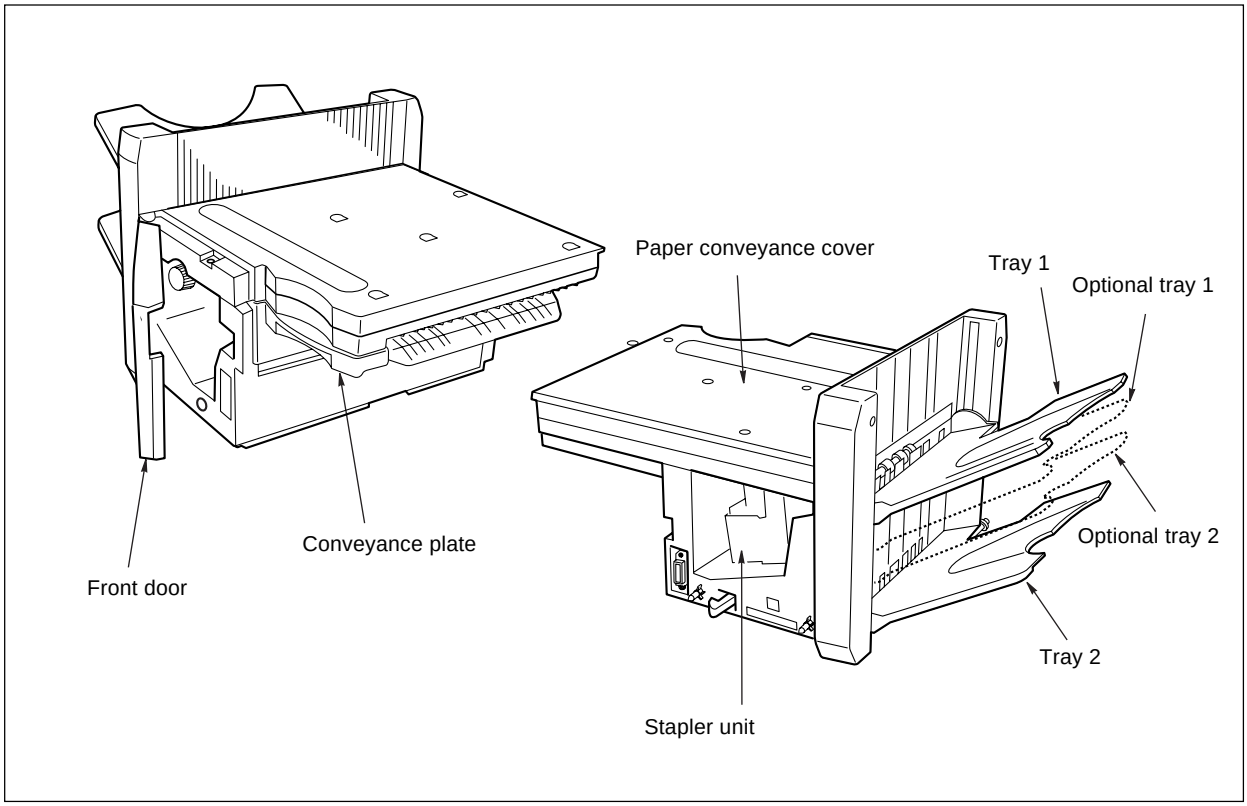

CONVEYANCE SECTION

[1] Composition

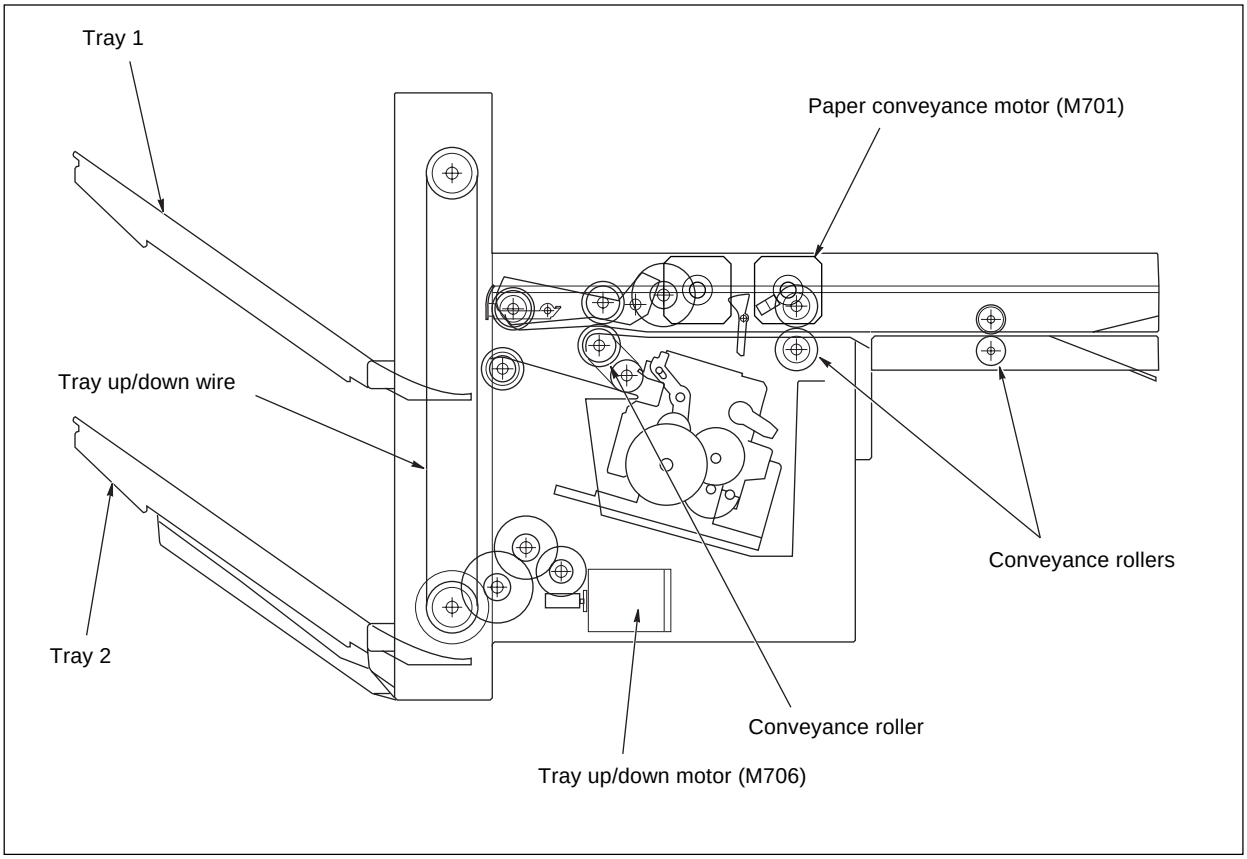

[2] Mechanisms

Mechanism	System
Paper Conveyance	Conveyance rollers
Tray Up/Down *1	Wire drive
Tray Up/Down Accident Prevention *2	Shutter

***1 Tray up/down**

The paper exit gate position is fixed; switching between trays is accomplished by changing the tray position up/down mechanism.

Tray up and down is done by the tray up/down motor (M706), which the tray up/down wires to drive the tray up or down.

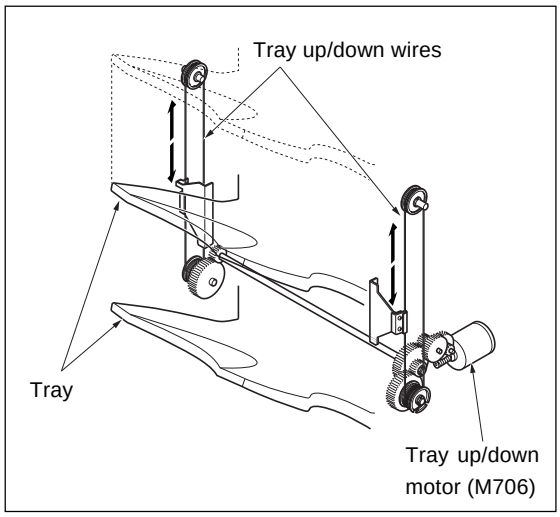

***2 Prevention of tray up/down accident**

To prevent the accident insertion of the hand into the paper exit gate during tray motion up or down, the paper exit gate is equipped with a shutter. The shutter is driven by the reverse motion of the paper pressure motor (M707), closing the paper exit gate when the tray is in motion.

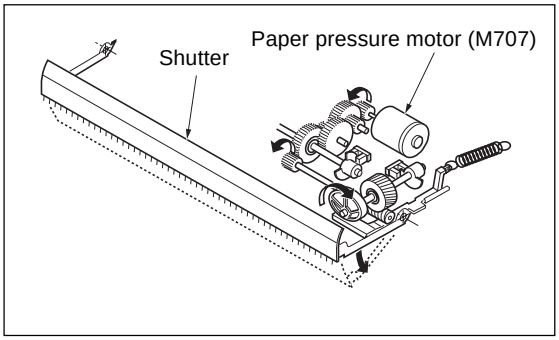

[3] Conveyance control

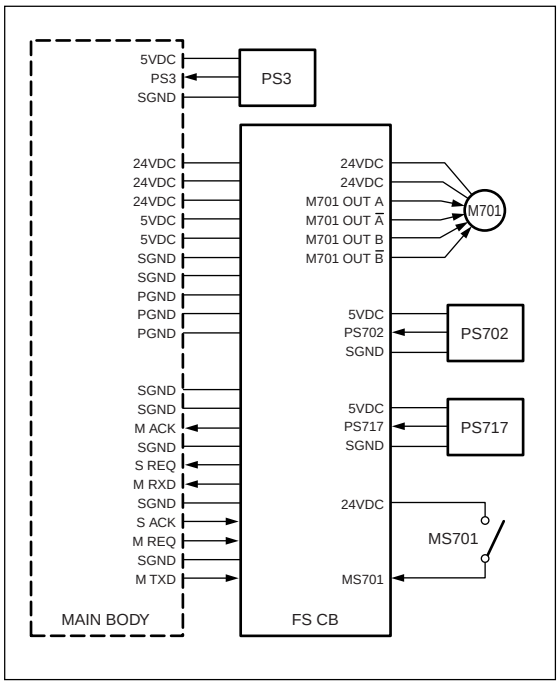

Conveyance is accomplished by the drive force of the M701 (paper conveyance motor), which is transmitted to the conveyance rollers. The M701 is linked with the main body, so that rotation is set to low or high speed according to the conveyance movement during copying.
The M701 is controlled by the FS CB (FS control board). Related signals are provided by the PS702 (paper entrance detect PS), PS717 (conveyance cover open/close detect PS) and the MS701 (front door switch) and PS3 (paper exit PS) of the main body.

1. Operation

As paper passes by the PS3 of the main body, the M701 conveys the paper at a low speed in relation with the paper exit velocity of the main body. When the end of the paper passes through the PS3, the M701 then conveys the paper at high speed. The M701 again changes to low speed after the specified period of time when the end of the paper passes through the PS702, ready to convey the next sheet of paper.

2. Signals

a. Input signals

(1) PS3 (PS3 → PRDB)

When the main body paper exit section detection signal detects paper, [H] is output.

(2) PS702 (PS702 → FS CB)

Conveyance section paper entrance detection signal

[L]: No paper is present

[H]: Paper is present

(3) PS717 (PS717 → FS CB)

Conveyance plate opening/closing detection signal

[L]: Conveyance plate open

[H]: Conveyance plate closed

(4) MS701 (MS701 → FS CB)

Power supply line for each load

When the finisher front door is closed, 24VDC is supplied to each load.

(5) S ACK (MAIN BODY → FS CB)

Transmission of OK signal from the main body to the finisher.

(6) M TXD (MAIN BODY → FS CB)

Serial data sign sending the movement condition of the main body to the finisher.

(7) M REQ (MAIN BODY → FS CB)

Transmission of request signal from the main body to the finisher.

b. Output signals

(1) M701 OUTA, M701 OUT$\overline{A}$, M701 OUTB, M701 OUT $\overline{B}$ (FS CB → M701)

M701 drive control signal

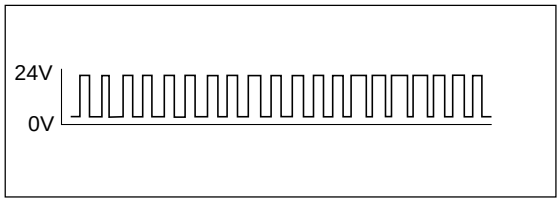

(2) M ACK (FS CB → MAIN BODY)

Transmission of OK signal from the finisher to the main body.

(3) S REQ (FS CB → MAIN BODY)

Transmission of request signal from the finisher to the main body.

(4) M RXD (FS CB → MAIN BODY)

Serial data sign sending the movement condition of the finisher to the main body CB.

[4] Tray up/down control

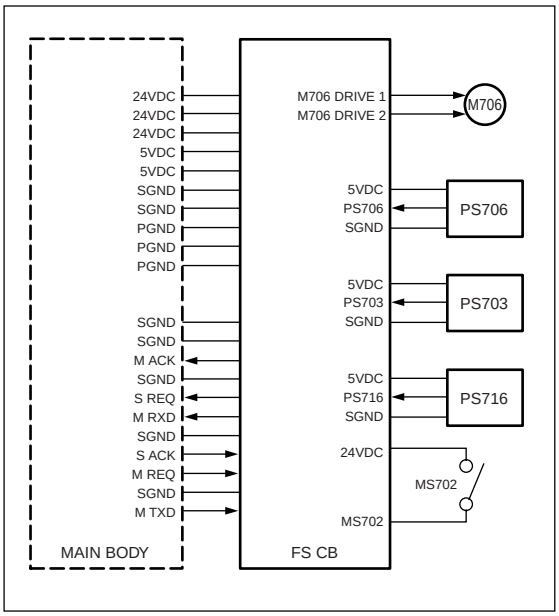

The paper exit position of the FS is fixed, the selected tray is elevated or lowered to the paper exit position. Control of the tray up/down is by the M706 (tray up/down motor) which drives wires which is connected to and moves the trays up and down.
The M706 is controlled by the FS CB (FS control board). Related signals are provided by the PS703 (paper exit detect PS), PS706 (tray lower limit detect PS), PS716 (tray count PS) and the MS702 (shutter switch).

1. Operations

a. Tray lower limit detection operation

With the sub power swich turnd ON, and the PS706 OFF, the M706 is reversed and the tray is lowered until the PS706 is turned ON.

b. Tray count operation

One, two, or no optional trays can be installed.
If PS716 is OFF following tray lower-limit detect operation, the copier determines that no optional trays are installed.
When PS716 is ON, optional tray 1 is in place; in this condition the M706 rotates normally, raising the tray one step up until PS716's detection position where motion is stopped. Whether PS716 is ON or OFF at this point determines whether optional tray 2 is in place or not.
Following tray counting, the tray that was selected in key-operator mode is set into exit position.

c. Tray movement operation

If the exit tray has been selected at the LCD, then when copying starts M706 turns ON and moves the selected tray so that it sets into the exit position.
The number of times PS703 switches ON and OFF sets the selected tray into the paper exit position.

d. Shutter switch operation

While the tray is in motion, the shutter, which prevents the fingers or foreign objects from entering the paper exit gate, is closed, with MS702 in the ON position supplying 24VDC to the various loads. While the tray is being raised or lowered the shutter is opened and MS702 is OFF, interrupting the flow of electricity and halting the motion of the FS.

2. Signals

a. Input signals

(1) PS706 (PS706 → FS CB)

Tray lower limit detection signal

[L]: Not at lower limit

[H]: Lower limit

(2) PS703 (PS703 → FS CB)

Paper exit detection signal

[L]: Top face

[H]: Not at top face

(3) PS716 (PS716 → FS CB)

Tray installation detection signal

[L]: No tray

[H]: Tray in position

(4) PS702 (PS702 → FS CB)

The power supply line for each load.

24VDC is supplied to each load when the shutter is closed.

b. Output signal

(1) M706 DRIVE 1, 2 (FS CD → M706)

M706 drive control signal

The drive direction of the M706 is controlled by two signals which change the direction of the electrical current.

PAPER EXIT/STAPLER UNIT

[1] Composition

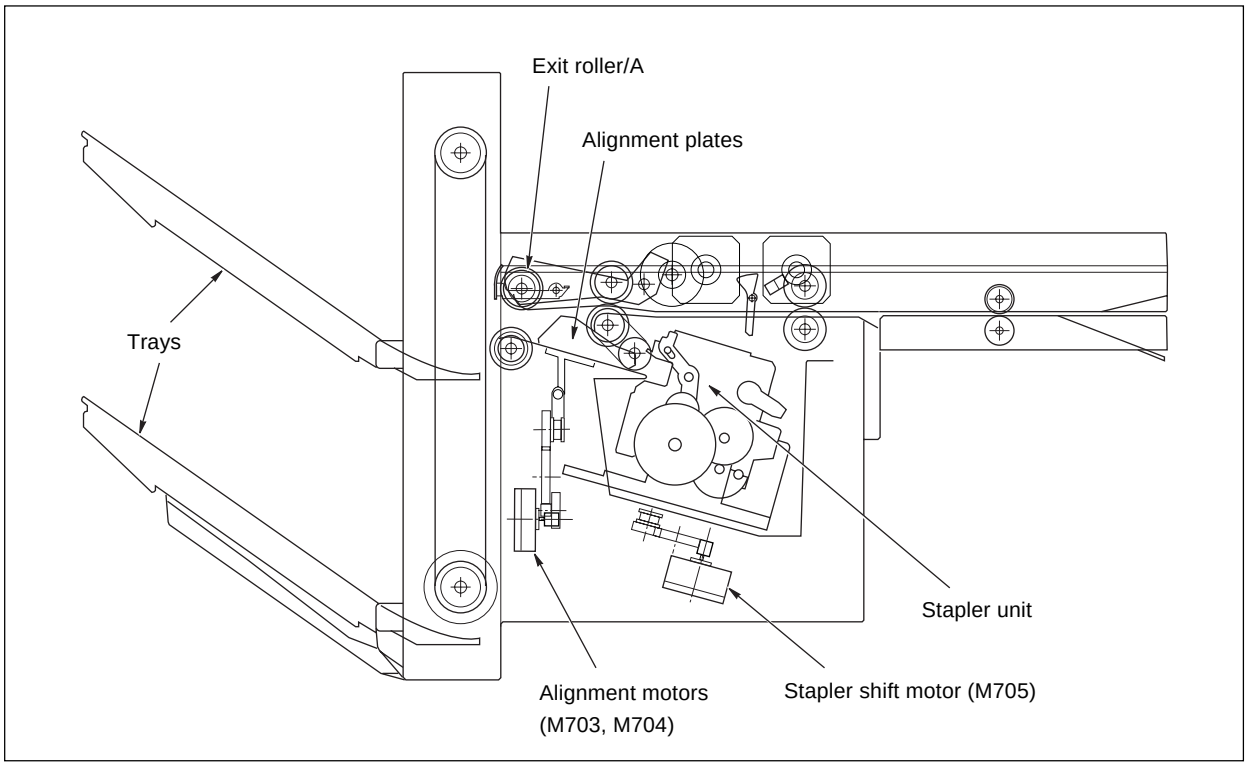

[2] Mechanisms

Mechanism	System
Paper Alignment *1	Separate plates for front and rear
Paper Exit *2	Exit roller/A
Paper Stacking *3	Exit roller/A Conveyance belt
Stapler Unit Shift *4	Stapler shift motor

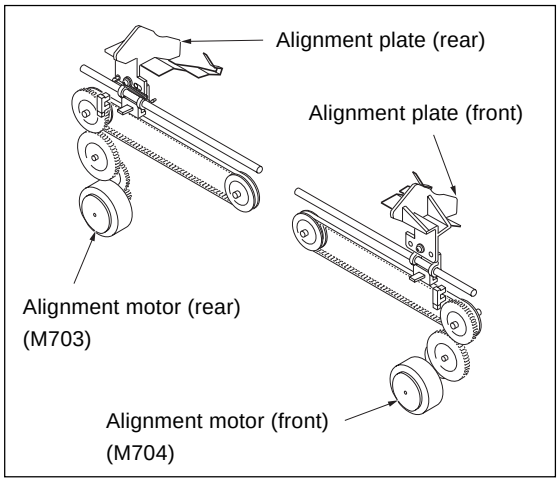

***1 Paper alignment**

Paper conveyed to the paper exit gate by the conveyance roller is stacked by reverse rotation of the paper exit roller/A. The stacked paper is aligned by the alignment plates. Independently-driven alignment plates are set on both the front and rear sides, allowing independent operation at the front and rear during shift mode. The alignment plates are driven by alignment motors M704 (front) and M703 (rear).

***2 Paper exit**

In the straight mode, paper conveyed to the paper exit gate by the conveyance rollers is conveyed to the tray through paper pressure being applied to paper exit roller/A by the paper pressure motor (M707) and the roller being made to run forward. (Does not apply to small paper sizes.)
In offset mode or staple mode, when the stacked paper is conveyed, paper pressure being applied to paper exit roller/A by the paper pressure motor (M707) and the roller being made to run forward, all the stacked paper is conveyed into the tray.

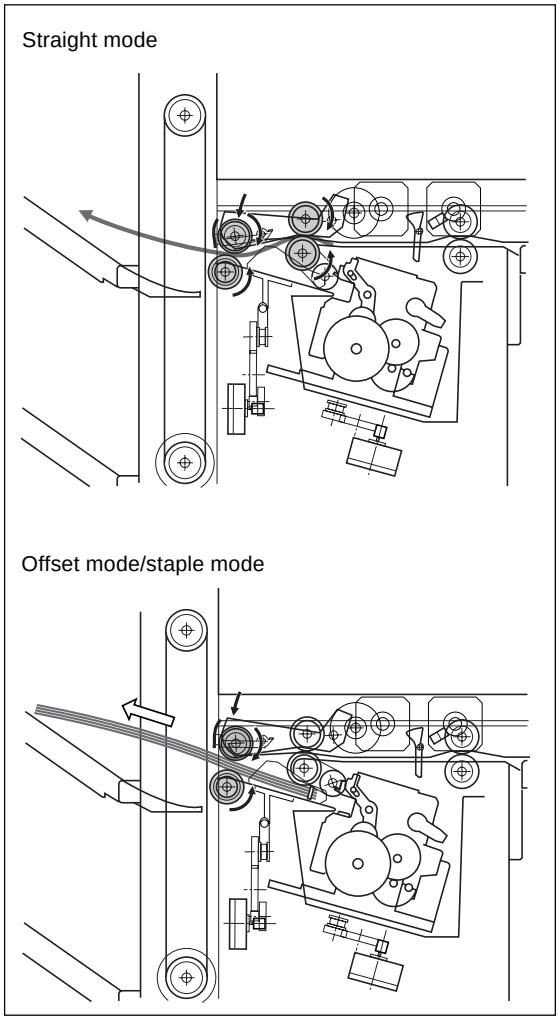

***3 Paper stack**

In the offset mode or staple mode, paper conveyed to the paper exit gate by the conveyance rollers is then conveyed to the stack position by paper exit roller/A running in reverse direction. The conveyed paper is sent to the stopper by the friction of the conveyance belt and stacked.

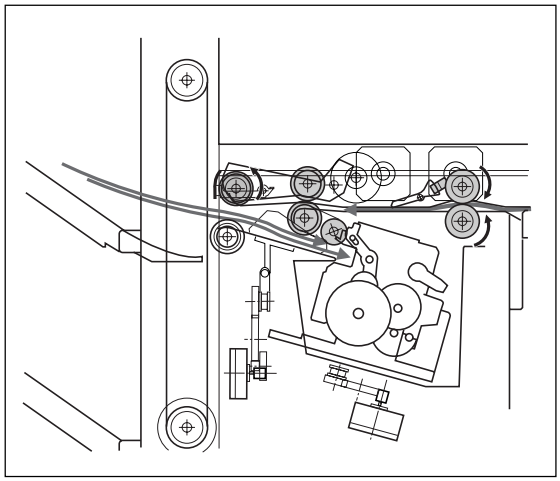

***4 Stapler unit shift**

The stapler unit is driven by the stapler shift motor; the stapler unit is fixed on the staple base and moved by a belt along a rail. Owing to the shape of the rail, when the stapler unit is moved to either the forward or rear positions, the unit rotates and it is possible to staple slantwise.When the stapler is set to staple in two locations, it moves to the first location, puts in the first staple, then moves to the second location to put in the second staple.

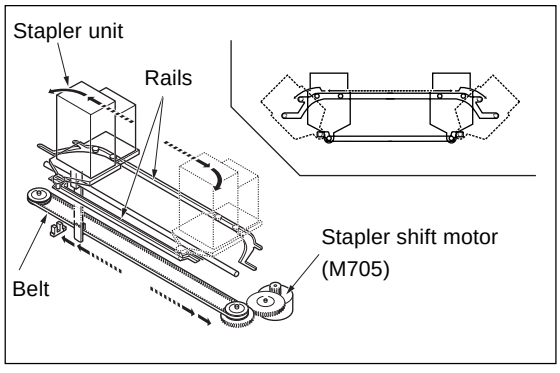

[3] Paper alignment control

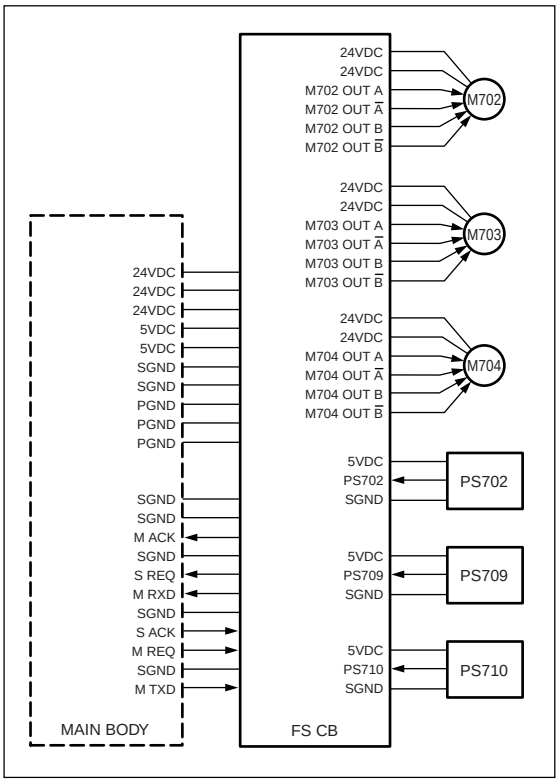

During sorting and stapling, paper exited by the conveyance section is sent to the alignment section by the M702 (paper exit motor) reverse direction, then aligned by the alignment plates driven by the M703 (alignment motor, (rear)) and the M704 (alignment motor, (front)).
The home position of the alignment plates is detected by the PS709 (alignment plate detect PS (rear)) and the PS710 (alignment plate detect PS (front)). The FS CB (FS control board) controls the M702, M703 and M704. The related signal are passed to the PS702 (paper entrance detect PS).

1. Operations

a. Normal alignment operation

The front and rear alignment plates work in symmetry to the front and rear based on the center of the alignment section, alternately aligning and releasing. To create this symmetrical movement the M703 and M704 always rotate in opposite directions.
Every five sheets of the conveyed paper are aligned and sent on to the paper exit section.
The timing of the M703 and M704 are set to the starting point by the ON/OFF of the PS702 (paper entrance detect PS).

b. Shift alignment operation

The first set of papers are sent to the paper exit section in the same way as with normal alignment operation.
The alignment operation from the second set on uses the M703 and M704 rotating in the same direction to shift the paper from the center to a slightly forward position before sending it on to the paper exit section.
The ON timing of the M703 and M704 is the same as the normal alignment operation.

c. Staple mode operation

In the staple mode, the M703 and M704 are released after the stapling action is completed.
The ON/OFF timing of the M703 and M704 is set as the M702 is turned from OFF to ON, and the PS702 is turned OFF after the specified period of time.

2. Signals

a. Input signals

(1) PS709 (PS709 → FS CB)

Detection signal of the home position of the alignment plate (rear)

[L]: Non-home position

[H]: Home position

(2) PS710 (PS710 → FS CB)

Detection signal of the home position of the alignment plate (front)

[L]: Non-home position

[H]: Home position

b. Output signals

(1) M702 OUT A, M702 OUT $\overline{A}$, M702 OUT B, M702 OUT $\overline{B}$ (FS CB → M702)

Drive control signal for M702

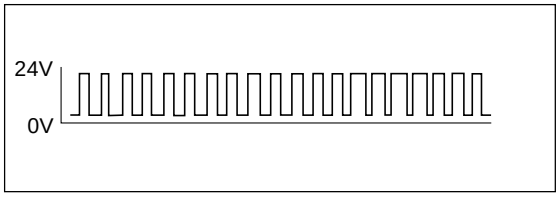

(2) M703 OUT A, M703 OUT $\overline{A}$, M703 OUT B, M703 OUT $\overline{B}$ (FS CB → M703)

Drive control signal for M703

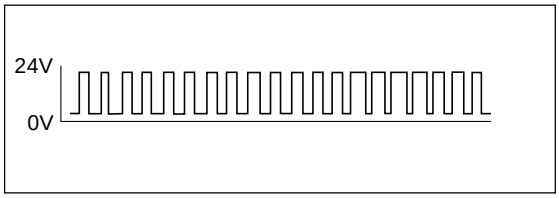

(3) M704 OUT A, M704 OUT $\overline{A}$, M704 OUT B, M704 OUT $\overline{B}$ (FS CB → M704)

Drive control signal for M704

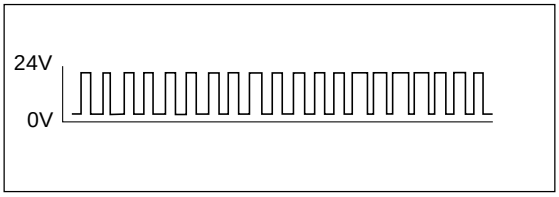

[4] Paper exit control

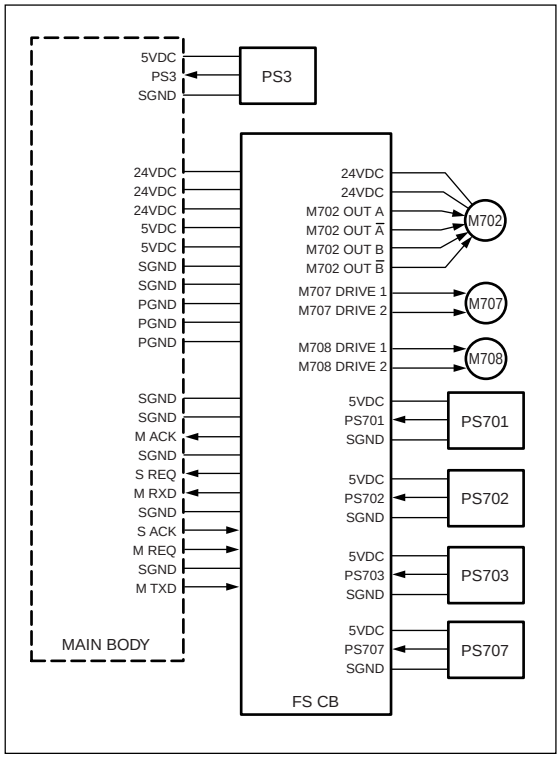

Papers that have already been aligned or stapled are exited by the paper exit roller.

A mechanical clutch is connected to M702 (paper exit motor). A mechanical clutch can convey the forward direction driving power to the exit roller with certain movement.

The M702 is responsible for speed control for connection with the mechanical clutch, for sending the alignment section at the reversal rotation, and also during the usual paper exit.

The M702 is controlled by the FS CB (FS control board).

The related signals are M707 (paper pressure motor), M708 (stapler motor), PS701 (paper pressure PS), PS702 (paper entrance detect PS), PS703 (paper exit detect PS), and PS707 (no paper detect PS).

1. Operation

During paper exit, both upper and lower exit rollers are compressed as a consequence of the operation performed by M707, and that condition is detected by the ON/OFF state of PS701.

a. Non-staple mode operation

The ON/OFF timing of M702 is such that it turns ON during the OFF of PS3, and turns OFF during the OFF of PS702.

After the paper exit tray goes up until PS703 turns ON, M706 moves the tray up and down in order to keep the ON state of PS703 during paper exit.

b. Staple mode operation

M702 turns ON a certain time after M708 finishes the stapling operation and turns OFF.

The subsequent operations are the same as for the non-staple operation.

2. Signals

a. Input signal

(1) PS701 (PS701 → FS CB)

Pressure detection signal of the exit paper compressing plate

[L]: Pressure

[H]: Release

b. Output signals

(1) M707 DRIVE 1,2 (FS CB → M707)

M707 drive control signal

The drive direction of the M707 is controlled by two signals which change the direction of the electrical current.

(2) M708 DRIVE 1,2 (FS CB → M708)

M708 drive control signal

The drive direction of the M708 is controlled by two signals which change the direction of the electrical current.

[5] Paper stack control

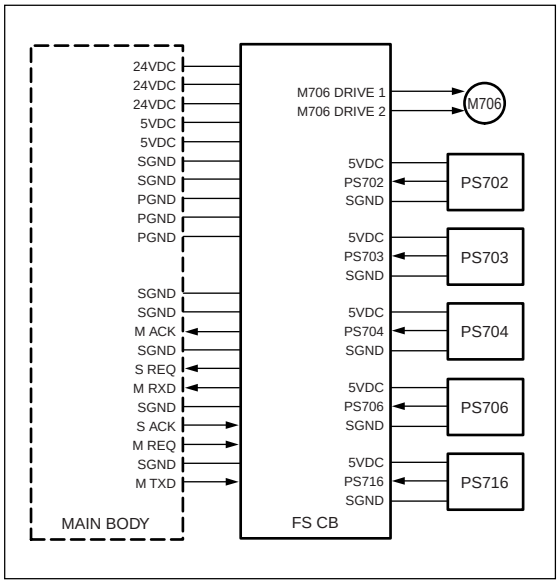

When the stack of the papers on the paper exit tray is full, a message is put up on the LCD.

During the automatic switching mode of the tray, a message is not put up on the LCD. The tray located 1 step below is brought to the paper exit position by a vertical movement of M706 (tray up/down motor).

The M706 is controlled by FS CB (FS control board).

The related signals are PS702 (paper entrance detect PS), PS703 (paper exit detect PS), PS704 (tray full-stack detect PS), PS706 (tray lower limit detect PS), and PS716 (tray count PS).

The automatic switching mode of the tray can be controlled using the 25 modes of the main unit.

1. Operation

a. Up/down operation

When the tip of the paper turns PS702 ON, the tray is driven down by a certain amount. After the rear of the paper turns PS702 OFF, M706 turns ON driving the tray up until PS703 is turned ON.

b. Full-stack detection operation

When a tray other than tray 1 is selected and PS703 is turned ON when PS704 is ON, the paper-full condition is detected. When tray 1 is selected and PS 703 is turned ON when PS706 is ON, the paper-full condition is detected.

c. Automatic tray switching operation

When tray 1, optional tray 1, and optional tray 2 are selected and the paper-full condition is detected, M706 drives the tray up so that PS703 is turned OFF and then ON again, and the immediately lower tray is set at the paper exit position.

When tray 2 is selected and the paper-full condition is detected, M706 drives the tray down until PS716 is turned ON, and then up until PS703 is turned ON, set tray 1 at the paper exit position.

2. Signal

a. Input signal

(1) PS704 (PS704 → FS CB)

Paper-full detection signal

Goes [H] when paper-full condition is detected.

[6] Stapler control

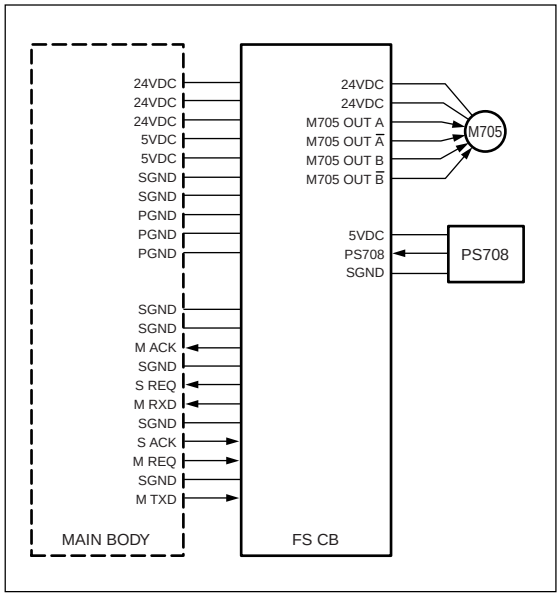

M705 (staple shift motor) performs staple displacement control by moving the stapler unit up to the stapler operation position.

The home position of the stapler unit is detected by PS708 (stapler unit HP detect PS).

M705 is controlled by FS CB (FS control board).

1. Operation

The stapler unit is usually at the home position of the finisher.

When receiving a command signal from the main unit, M705 moves the stapler unit to the stapling position according to paper size and starts the stapling operation.

After finishing the copy, M705 moves the stapler unit to its home position.

The M705 OFF timing is controlled by the number of driving steps after PS708 is turned OFF.

2. Signal

a. Input signal

(1) PS708 (PS708 → FS CB)

Detection signal of the home position of the stapler unit

[L]: Non-home position

[H]: Home Position

b. Output signal

(1) M705 OUT A, M705 OUT $\overline{A}$, M705 OUT B, M705 OUT $\overline{B}$ (FS CB → M705)

Drive control signal for M705

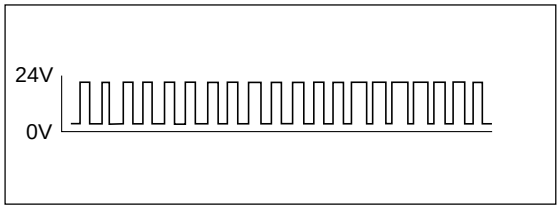

[7] Staple control

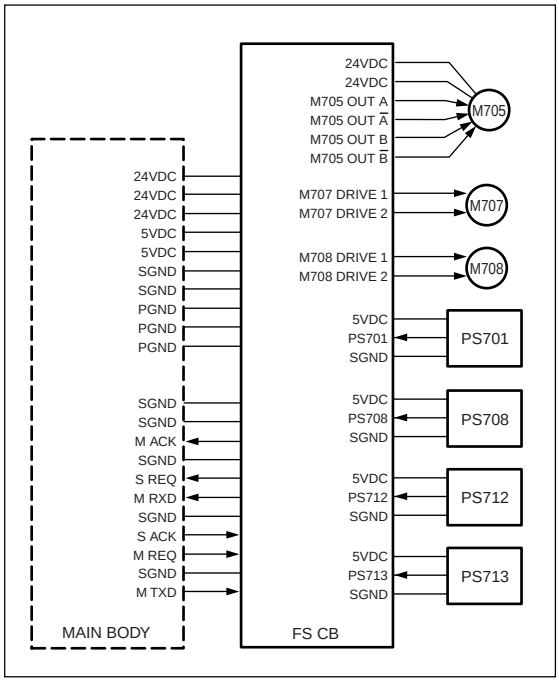

In staple mode, stapling is performed using the driving force of the M708 (stapler motor).

M708 is controlled by FS CB (FS control board).

The related signals are M705 (stapler shift motor), M707 (paper pressure motor), PS701 (paper pressure PS), PS708 (stapler unit HP detect PS), PS712 (stapler HP detect PS), PS713 (no-staple PS), and PS714 (stapler ready PS).

The maximum number of sheets that can be stapled, and the operation when stapling is not possible, can be chosen in the 25 mode of the main unit.

1. Operation

a. Stapler operation

After the aligning operation of the last paper, M707 is turned ON and compresses the paper using the exit rollers. Then, M708 is turned ON and stapling begins.

When PS701 is turned OFF, M707 is turned OFF, PS712 is turned ON, and M708 is turned OFF.

For continuous stapling, M705 is not turned ON, and the stapler unit waits for the next stapling at the same position.

In the case of 2 stapling positions, the first staple is executed and then M705 moves the stapler to the specified position for the second staple. M708 then turns ON and executes the second staple. At this moment, if continuous stapling has been selected, the stapler unit stops at the immediately previous stapling position. When the first stapling operation of the next paper is done, M705 moves the stapler unit for the second stapling operation.

After the copy is finished, the stapler unit returns to its home position.

b. No-staple detection control

The PS713 is equipped to detect the no-staple condition of the stapler unit. When the staple is not present, the LCD (display board) of the main unit shows a message indicating the no-staple condition.

c. Stapler Initial Operation

After replacing the stapler cartridge, M708 is driven until staples are detected in the PS714, performing up to a maximum of 16 blank stapling operations, then the staples are positioned just in front of the stapling position.

2. Signals

a. Input signals

(1) PS712 (PS712 → FS CB)

M708 home position detection signal

[L]: Home position

[H]: Non-home position

(2) PS713 (PS713 → FS CB)

No-staple detection signal of the stapler unit

[L]: With staple

[H]: No staple

(3) PS714 (PS714 → FS CB)

Detects whether staple is in position for stapling by stapler unit (whether staple is present at point just ahead of where it is actually driven from the stapler).

[L]: With staple

[H]: No staple

OTHER KINDS OF CONTROL

[1] Movement with power on

By turning ON the SW2 (sub power switch), the finisher performs the following initial operations.

1. M707 turns ON and the paper exit gate pressure is released.
2. PS708 (stapler unit HP detect PS) detects whether the stapler unit is on stand-by in home position.
3. M703 (alignment motor (rear)) and M704 (alignment motor (front)) turn ON and perform a home position search for the alignment plates (front and rear).
4. Performs a tray count operation.

[2] Opening and closing motion of the front door

1. In case PS707 is ON, it makes M702 go through a normal rotation and performs a paper exit operation.
2. M707 turns ON and the paper exit gate pressure is released.
3. PS708 (stapler unit HP detect PS) detects whether the stapler unit is on stand-by in home position.
4. M703 (alignment motor (rear)) and M704 (alignment motor (front)) turn on and perform a home position search for the alignment plates (front and rear).

3

DISASSEMBLY/ASSEMBLY

This section explains how to disassemble and reassemble the machine.
Observe the following precautions when performing disassembly and assembly work.

1. Be sure to unplug the power cord before working on the machine.
2. Perform all reassembly work by reversing the order in which the component was disassembled, unless otherwise specified.
3. Do not lose small parts (screws, etc.) or insert them in the wrong place.
4. Install all parts completely before operating the machine.
5. Do not loosen the screws indicated as disallowed for removal.

DISASSEMBLY/ASSEMBLY

⚠**Caution: Make sure the power plug is taken out of the socket.**

[1] Removing and installing of the tray

(1) Optional trays are attached, take out each 2 sets of set screws and remove the tray.

(2) Take out each 3 sets of set screws and remove the covers on front and rear.

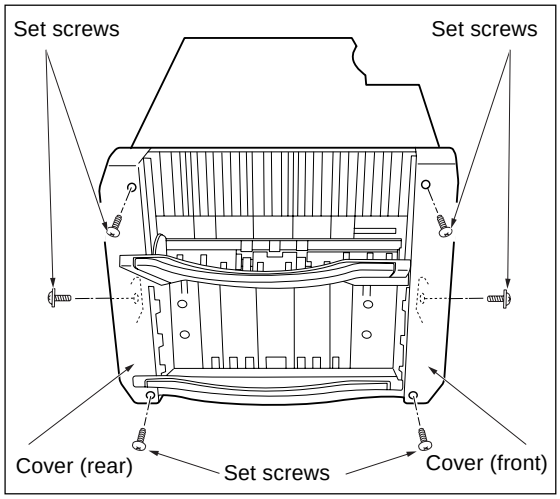

(3) Take out each 2 sets of set screws from the wire fittings on front and rear.

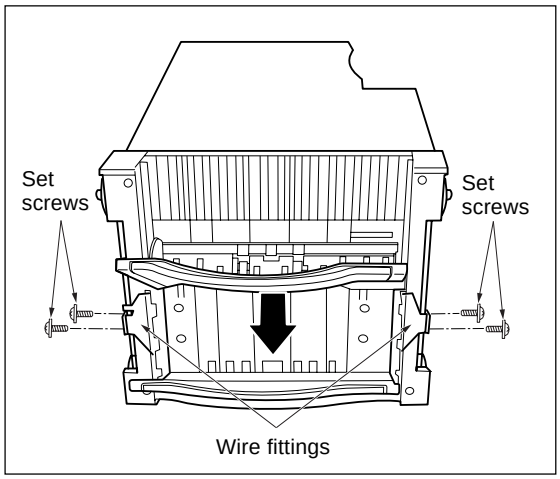

(4) Pull out the tray downward from the frame that it is installed.

Caution: Taking out the set screws from the fixed fittings will make the tray frame fall out.

(5) Install by reversing the removal procedure.

Caution: In case of fixing the tray frame to the fixed fittings, make sure the set screws are fastened so that the tray is horizontal.

[2] Replacing the paper exit roller/A

(1) Remove the finisher from the main body.

(2) Take off 5 lids and 6 set screws and remove the paper conveyance cover.

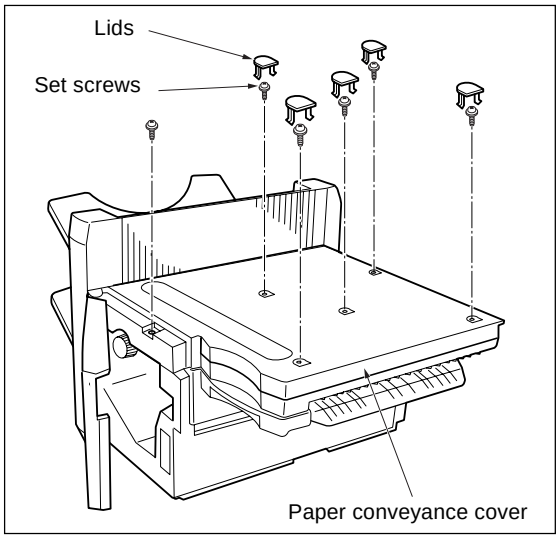

(3) Take out each of the single springs and set screws and remove the plate spring roller.

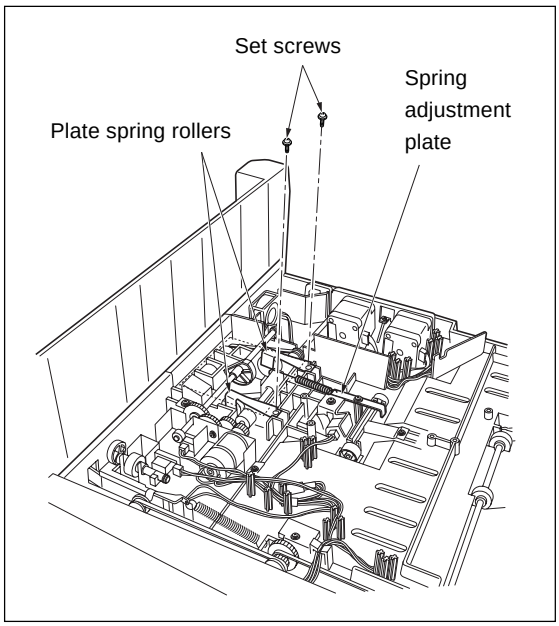

Caution: Do not remove the screws for the spring adjustment plate.

(4) Remove the E-ring and remove the cam shaft.

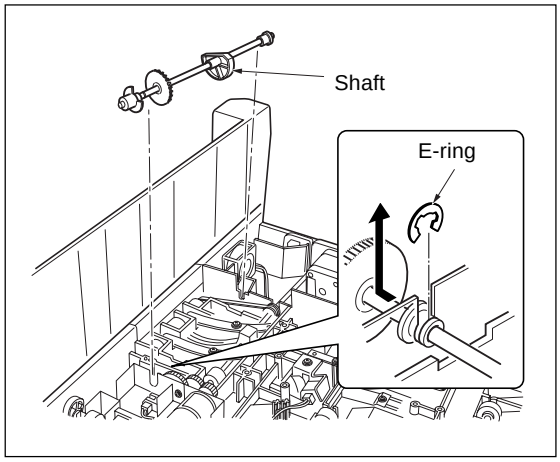

(5) Take out the 2 sets of set screws and remove the set of 2 plate springs.

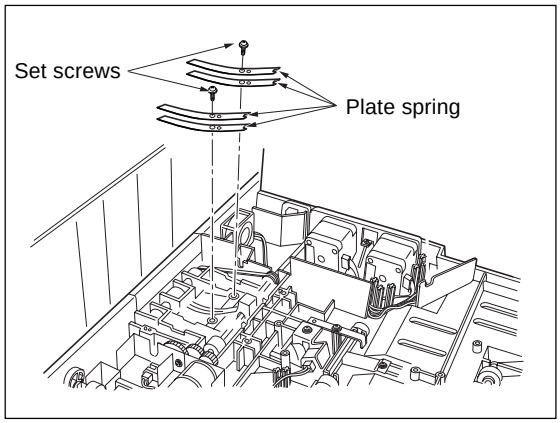

(6) Take out 1 set screw and remove the plate.

(7) Remove the E-ring that affixes the belt gear, slide the gear and remove the belt.

Caution: Be careful to not drop the pin inside the gear.

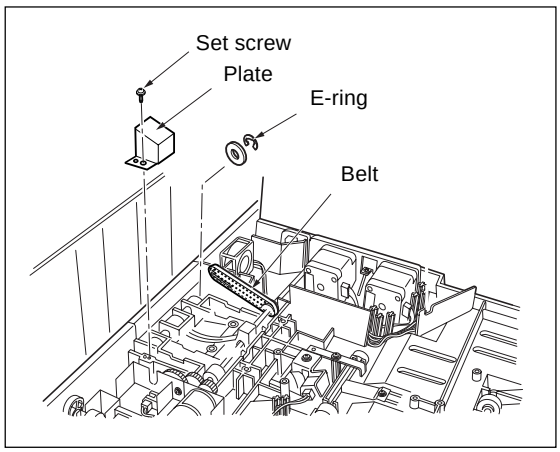

(8) Remove the 5 E-rings and pull out the shaft from the paper exit roller/A.

Caution: Be careful to not drop the pin inside the paper exit roller/A.

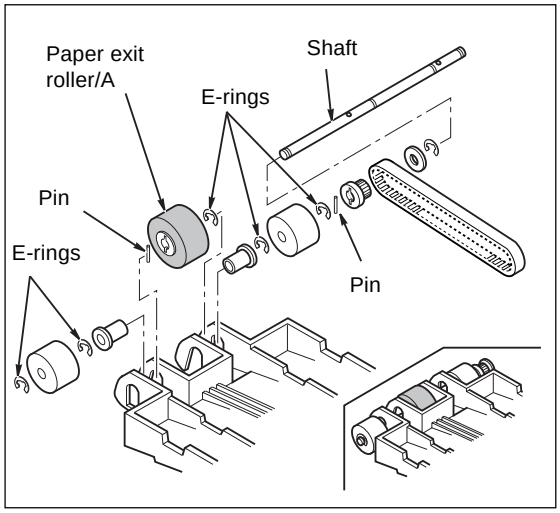

(9) Replace the paper exit roller/A.

(10) Install by reversing the removal procedure.

[3] Removing and installing of the up/down wire

(1) Take out the 3 sets of set screws and remove the front cover and rear cover.

(2) Take out the 2 sets of set screws from the wire fittings on front and on rear and remove the tray.

Caution: Perform the removing/installing of the front up/down wire before performing the removing/installing of the rear up/down wire.

(3) Loosen the 2 set screws and release the pulley tension plate (front) from its fixed position.

(4) Remove the E-ring of the lower pulley (front).

(5) Remove the lower pulley (front) and remove the up/down wire (front).

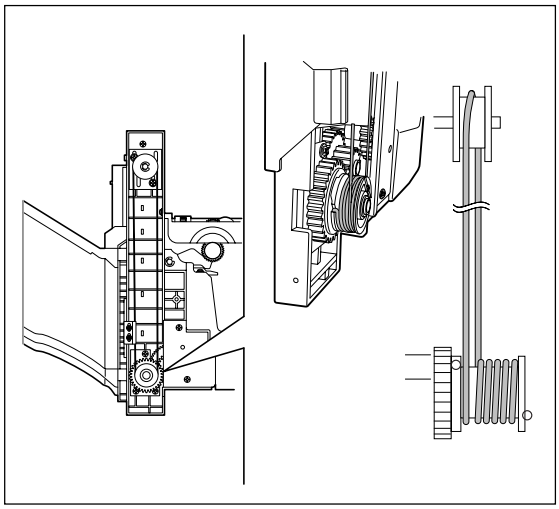

(6) Attach the metallic ball of the up/down wire on the inner surface of the lower pulley (front), and insert into the shaft. The metallic ball to be set is the one longer from the wire fitting.

Caution: In case of inserting the pulley into the shaft, match the pulley to the pin of the shaft.

(7) Wind the up/down wire once around the lower pulley (front) counter-clockwise, and string it to the upper pulley (front).

(8) Down the up/down wire strung to the upper pulley (front) to the lower pulley and wind it around 4 times counter-clockwise, and attach the metallic ball on the end to the side of the lower pulley (front).

(9) Attach the E-ring and affix the lower pulley (front).

(10) Fasten the 2 set screws while pulling up the pulley tension plate (front), applying 3kg tension.

Caution: Apply the required amount of tension at the time of affixing the pulley tension plate by using such devises as a tension gauge.

Required value: 3kg

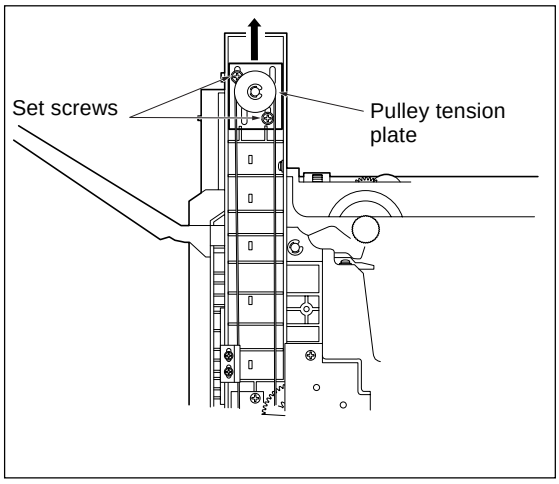

(11) Refer to procedures 3 to 6 and remove the up/down wire on the rear.

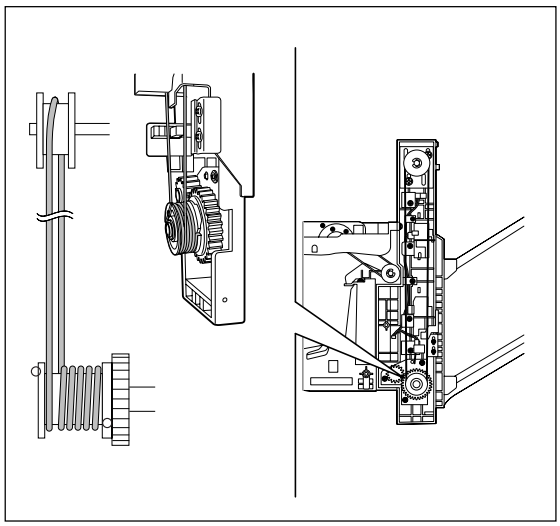

(12) Wind the up/down wire once around the lower pulley (rear) in the clockwise, and string it to the upper pulley (rear).

(13) Down the up/down wire strung to the upper pulley (rear) to the lower pulley and wind it around 4 times clockwise, and attach the metallic ball on the end to the side of the lower pulley (rear).

(14) Attach the E-ring and affix the lower pulley (rear).

(15) Fasten the 2 set screws while pulling up the pulley tension plate (rear), applying 3kg tension.

[4] Replacing the stapler cartridge

(1) Operate the stapler cartridge replacing from the operation panel. The stapler unit will move and position itself to the front.

(2) Turn the stapler cartridge replace knob on the stapler unit.

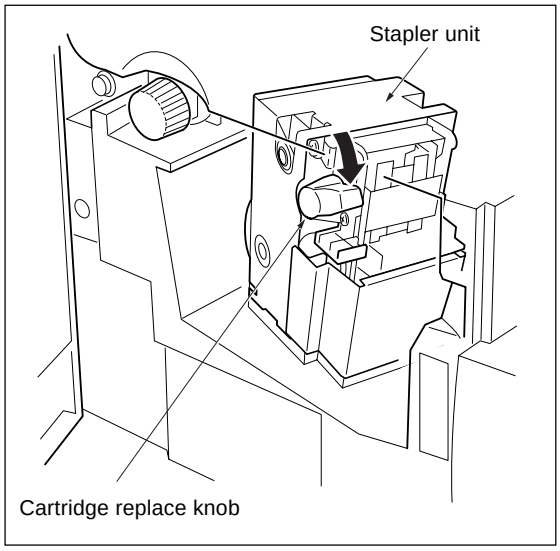

(3) Remove the old cartridge and push a new cartridge firmly in place.

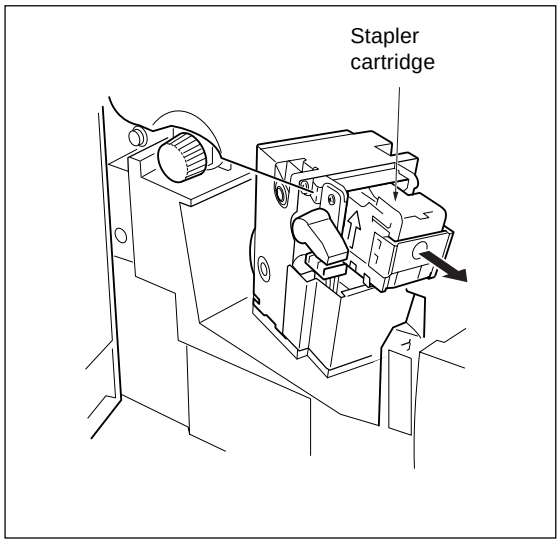

[5] Removing and installing the stapler unit

(1) Remove the finisher from the main unit.

(2) Take out the fixing plates of the plate affixing the stapler unit, from the rear of the finisher unit.

(3) Slide the plate and remove.

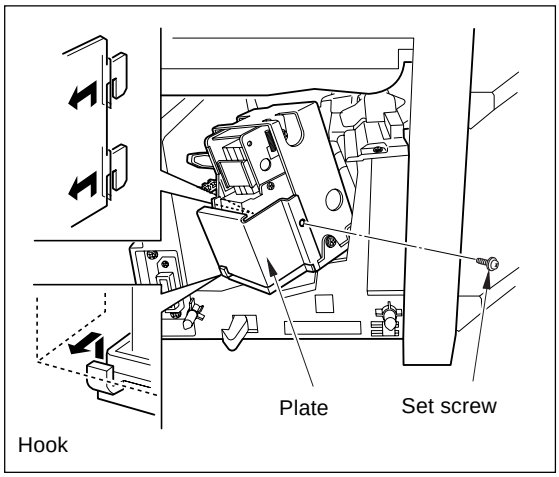

Caution: When reinstalling the plate, be sure to insert the plate into the insides of the hooks.

(4) Take out the connector and 1 grounding screw from the stapler unit.

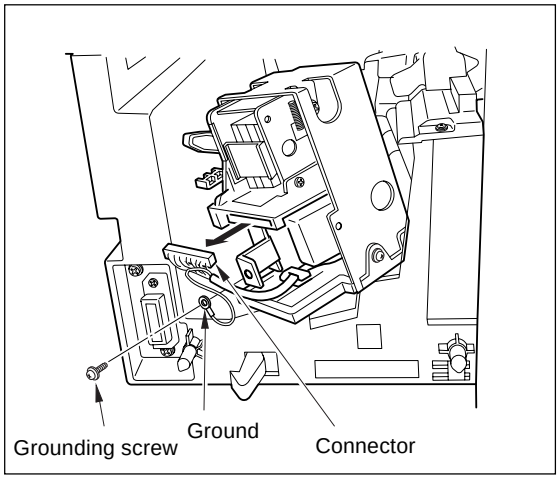

(5) Take out the set screw from the unit saddle, slide out and remove the stapler unit.

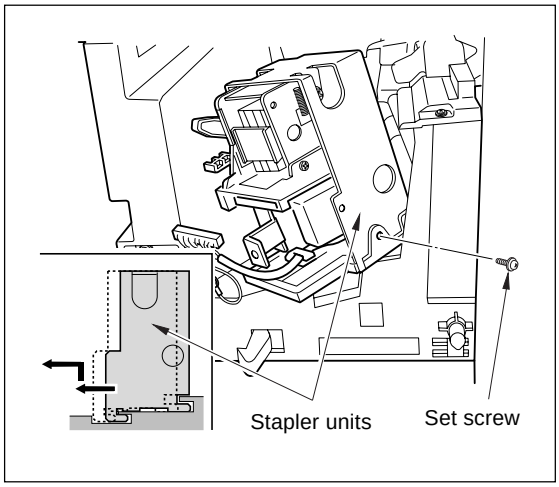

(6) Install by reversing the removal procedure.