Konica

7415

SERVICE HANDBOOK

KONICA CORPORATION
TECHNOLOGY SUPPORT CENTER
TOKYO JAPAN

INDEX (GENERAL)

GENERAL

MECHANICAL/ELECTRICAL

GENERAL

CONTENTS

SAFETY AND IMPORTANT WARNING ITEMS C-1
1. SAFETY INFORMATION G-1
2. SPECIFICATIONS G-6
3. PRECAUTIONS FOR INSTALLATION G-8
   3-1. Installation Site G-8
   3-2. Power Source G-8
   3-3. Grounding G-8
4. PRECAUTIONS FOR USE G-9
   4-1. To ensure that the copier is used in an optimum condition G-9
   4-2. Operating Environment G-9
   4-3. Power Requirements G-9
   4-4. Note G-9
5. HANDLING OF CONSUMABLES G-10
6. OTHER PRECAUTIONS G-11
7. SYSTEM OPTIONS G-12

SAFETY AND IMPORTANT WARNING ITEMS

Read carefully the Safety and Important Warning Items described below to understand them before doing service work.

IMPORTANT NOTICE

Because of possible hazards to an inexperienced person servicing this copier, as well as the risk of damage to the copier, Konica Corporation, strongly recommends that all servicing be performed only by Konica-trained service technicians.

Changes may have been made to this copier to improve its performance after this Service Handbook was printed. Accordingly, Konica Corporation, makes no representations or warranties, either expressed or implied, that the information contained in this Service Handbook is complete or accurate. It is understood that the user of this Service Handbook must assume all risks or personal injury and/or damage to the copier while servicing the copier for which this Service Handbook is intended.
Therefore, this Service Handbook must be read carefully before doing service work both in the course of the technical training and even after that, for keeping the correct maintenance and control of the copier. Keep the Service Handbook also for the future service. When it is impossible to read the description about safety and warning (due to contamination or tear), the relevant page should be replaced.

DESCRIPTION ITEMS FOR DANGER, WARNING AND CAUTION

In this Service Handbook, each of three expressions, "⚠DANGER", "⚠WARNING" and "⚠CAUTION" is defined as follows together with a symbol mark to be used in a limited meaning. When servicing, the relevant works (disassembling, assembling, adjustment, repair and maintenance) need to be conducted with utmost care.

⚠**DANGER:**	**Actions having a high possibility of suffering death or serious wound**
⚠**WARNING:**	**Actions having a possibility of suffering death or serious wound**
⚠**CAUTION:**	**Actions having a possibility of suffering a slight wound, medium trouble and material damage**

SAFETY WARNINGS

[1] MODIFICATIONS NOT AUTHORIZED BY Konica

Konica copiers are renowned for their high reliability. This reliability is achieved through high-quality design and a solid service network.

Photocopier design is a highly complicated and delicate process where numerous mechanical, physical, and electrical aspects have to be taken into consideration, with the aim of arriving at proper tolerances and safety factors. For this reason, unauthorized modifications involve a high risk of degrading performance and safety. Such modifications are therefore strictly prohibited. The points listed below are not exhaustive, but they illustrate the reasoning behind this policy.

⚠ PROHIBITED ACTIONS:

(1) Using extension cables or a different power cord than specified by Konica.
(2) Using other fuses than specified by Konica. Safety will not be assured, leading to a risk of fire and injury.
(3) Disabling fuses or bridging fuse terminals with wire, metal clips, solder or similar. (This applies also to thermal fuses.)
(4) Removing air filters (except for replacement).
(5) Disabling relay functions (such as wedging paper between relay contacts, etc.).
(6) Disabling safety functions (interlocks, safety circuits, etc.). Safety will not be assured, leading to a risk of fire and injury.
(7) Performing actions to copier not described in the instruction manual or the service handbook.
(8) Using parts other than specified by Konica.

[2] CHECKPOINTS WHEN PERFORMING ON-SITE SERVICE

Konica copiers are extensively tested before shipping, to ensure that all applicable safety standards are met, in order to protect the customer and customer engineer from the risk of injury. However, in daily use, any electrical equipment may be subject to parts wear and eventual failure. In order to maintain safety and reliability, the customer engineer must perform regular safety checks.

1. Advance Preparation for Safety Checks

⚠ CAUTION:

(1) Wear clothing that facilitates work and is designed for safety.
(2) Carry out all procedures carefully to prevent injury.
(3) Be sure to disconnect the power cord of the copier and all optional equipment from the AC outlet.
Simply turning off the power switch is not sufficient, because paper feed units or other electrical equipment may be powered also when the power switch is turned off.
(4) Proceed with special care when performing operation checks or adjustment while the unit is powered. When carrying out operation checks or adjustment while external covers are removed, the risk of electrical shock exists when touching parts which carry high voltage or electrical charge. The risk of injury exists when touching moving parts such as gears or chains.

2. Safety Checkpoints

The following list is not exhaustive, but it includes actions which must be carried out at every on-site service.

⚠CAUTION:

(1) Check external covers and the frame for sharp edges, burrs, or nicks.
(2) Check external covers and hinges for loosening or damage.
(3) Check wiring for squeezing or damage.
(4) Check power cord for insulation problems (conductor must not be exposed).
(5) Check power cord and cable ties etc. for loosening from frame.

⚠WARNING:

(1) Verify that the copier is properly grounded. If a problem is detected, establish a proper ground connection.
(2) Connecting the ground lead to an improper point such as listed below results in a risk of explosion and electric shock.
Unsuitable ground points:
a. Gas pipe
b. Lightning rod
c. Telephone line ground
d. Plastic water pipe or water pipe or faucet that has not been approved by authorities for grounding use

3. Precautions for on-site service

⚠CAUTION:

(1) Before performing safety check work, read all relevant documentation (service handbook, technical notices, etc.) and proceed according to the prescribed procedure, using only the prescribed tools. Do not carry out any adjustments not described in the documentation.
(2) If the power cord is damaged, replace it only with the specified power cord. If the power cord insulation has been damaged and there are exposed sections, short-circuits and overheating may occur, leading to a serious fire risk.
(3) Do not route the power cord so that it can be stepped on or pinched. Otherwise overheating may occur, leading to a serious fire risk.
(4) When disconnecting any cables, always grasp the connector and not the cable (especially in the case of AC and high-voltage leads).
(5) Carefully remove all toner remnants from electrical parts, electrodes, etc.
(6) Make sure that wiring cannot come into contact with sharp edges, burrs, or other pointed parts.
(7) Double-check to make sure that all screws, components, wiring, connectors, etc. that were removed for safety check maintenance have been reinstalled in the original location. (Pay special attention to forgotten connectors, pinched cables, forgotten screws, etc.)
(8) When installation and preventive maintenance, verify that the power cord has been securely plugged into the AC outlet. Contact problems may lead to increased resistance, overheating, and the risk of fire.

⚠WARNING:

(1) Before disassembling or adjusting the optical unit or any parts that use a laser, make sure that the power cord has been disconnected.
(2) Do not remove the main cover of the write unit. Direct exposure of the eye to laser beams may lead to blindness.
(3) Do not turn the copier on while the write unit is not installed in its normal position.
(4) Danger of explosion if battery is incorrectly replaced, replace only with the same or equivalent recommended by the manufacturer. Discard used batteries according to the manufacture's instructions.

⚠VORSICHT:
Expiosionsgefahr dei unsachegemäßem Austausch der Battetie. Ersatz nur durch denselben oder einen vom. Hersteller empfohlenen gleichwertigen Typ. Entsorgung gebrauchter Batterien nach Angaben des Herstellers.

[3] HANDLING OF MATERIALS FOR SERVICING

⚠CAUTION:
Drum cleaner (alcohol-based) and roller cleaner (acetone-based) are highly flammable and must be handled with care. When using these materials for cleaning of copier parts, observe the following precautions.

(1) Disconnect the power cord from the AC outlet.
(2) Use only a small amount of cleaner at a time and take care not to spill any liquid. If this happens, immediately wipe it off.
(3) Perform cleaning only in an environment where sufficient ventilation is assured. Breathing large quantities of organic solvents can lead to discomfort.
(4) Do not replace the cover or turn the unit on before any solvent remnants on the cleaned parts have fully evaporated.

⚠CAUTION:
Toner and developer are not harmful substances, but care must be taken not to breathe excessive amounts or let the substances come into contact with eyes etc. If the substances get in the eye, rinse it with plenty of water immediately. When symptoms are noticeable, consult a physician.

[4] MEASURES TO TAKE IN CASE OF AN ACCIDENT

(1) It an accident has occurred, the distributor who has been notified first must immediately take emergency measures to provide relief to affected persons and to prevent further damage.
(2) It a report of a serious accident has been received from a customer, an on-site evaluation must be carried out quickly and Konica Corporation must be notified.
(3) To determine the cause of the accident, conditions and materials must be recorded through direct on-site checks, in accordance with instructions issued by Konica Corporation.
(4) For reports and measures concerning accidents, consult your superior, and follow the regulations set in “Standards for the Control Program for Measures Against Electrical Equipment Accidents”.

[5] CONCLUSION

(1) Safety of users and customer engineers depends highly on accurate maintenance and administration. Therefore, safety can be maintained by the appropriate by the proper daily service work conducted by the customer engineer.
(2) When performing service, each copier on the site must be tested for safety. The customer engineer must verify the safety of parts and ensure appropriate management of the equipment.

1. SAFETY INFORMATION

Laser Safety

This is a digital machine which prints by means of a laser. There is no possibility of danger from the laser, provided the machine is operated according to the instructions in this manual.

Since radiation emitted by the laser is completely confined within protective housing, the laser beam cannot escape from the machine during any phase of user operation.

This machine is certified as a Class 1 product. This means the machine does not produce hazardous laser radiation.

CAUTION: The use of controls, adjustments or performance of procedures other than those specified in this manual may result in hazardous radiation exposure. Because of this, Minolta strongly recommends that you operate your copy machine only as described in this documentation.

Internal Laser Radiation

Maximum Average Radiation Power: 5.0 mW at laser aperture of the print head unit

Wavelength: 770-795 nm

This product employs a Class IIIb Laser Diode that emits an invisible laser beam.
The Laser Diode and Scanning Polygon Mirror are incorporated in the print head unit.
The print head unit is NOT A FIELD SERVICE ITEM.
Therefore, the print head unit should not be opened under any circumstances.

For United States

CDRH regulation
This copier is certified as a Class 1 Laser product under the Radiation Performance Standard according to the Food, Drug and Cosmetic Act of 1990. Compliance is mandatory for Laser products marketed in the United States and is reported to the Center for Devices and Radiological Health (CDRH) of the U.S. Food and Drug Administration of the U.S. Department of Health and Human Services (DHHS). This means that the device does not produce hazardous laser radiation.

The label shown on page G-3 indicates compliance with the CDRH regulations and must be attached to laser products marketed in the United States.

CAUTION: Use of controls, adjustments or performance of procedures other than those specified in this manual may result in hazardous radiation exposure.

This is a semiconductor laser. The maximum power of the laser diode is 5 mW and the wavelength is 770-795 nm.

Laser Safety Label

A laser safety label is attached to the outside of the copy machine as shown below.

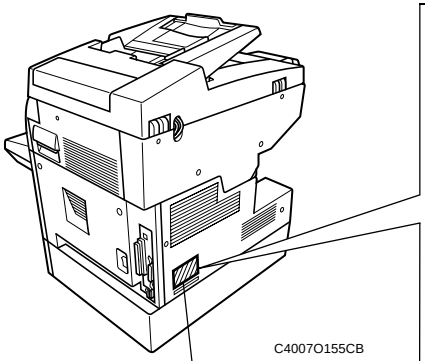

Laser safety label

For Europe

クラス 1 レーザ製品
CLASS 1 LASER PRODUCT
LASER KLASSE 1 PRODUKT

For United States 1166O252BA

KONICA CORPORATION
1-26-2, Shinjuku Nomura Building No.26-2,
Nishishinjuku 1-chome, Shinjuku-ku, Tokyo 163-0512, Japan
MANUFACTURED:
THIS PRODUCT COMPLIES WITH 21 CFR
CHAPTER I, SUBCHAPTER J.
1154-7411-01

C4007O167CA

The Manufacturer's Name Plate is affixed at the position illustrated above.
Please write down the Model Name and Serial No. of your copier here.

Model:
Serial No.:

Label inside copy machine

The following laser safety label will be attached inside the copy machine as shown below.

Please read the following for your own protection.

Caution

Opening the cover indicated by the Caution label may expose you to harmful laser radiation which could cause damage or loss of eyesight. Do not open the cover when the power is on.

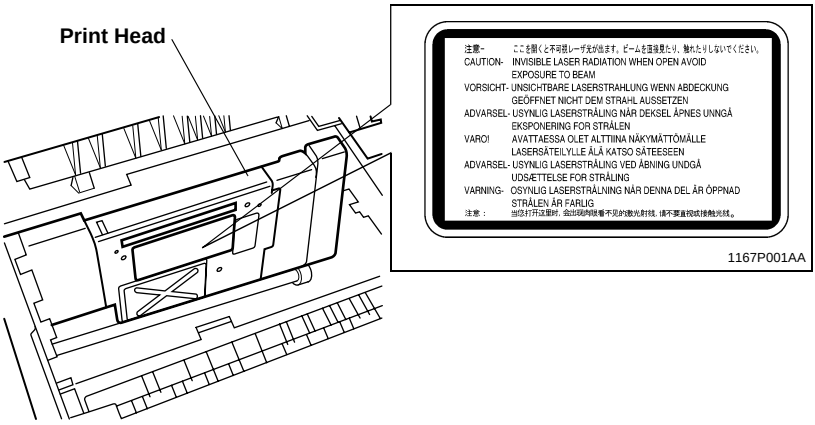

C4007O160CA

Caution Labels

The caution labels are attached to the machine areas, as shown, when you are advised to pay special attention to avoid any dangerous situations or serious injury.

For Europe

	⚠CAUTION	⚠ATTENTION	⚠VORSICHT	⚠PRECAUCION	⚠ATTENZIONE
	High temperature! Do not touch. Use care when clearing paper.	Température élevée! Risque de brûlure. Soyez prudent en retirant la feuille coincée.	Heiße Oberfläche! Brandverletzungsgefahr. Bei Beseitigung von Papierstaus vorsichtig vorgehen.	¡ Temperatura alta ! No tocar. Tener cuidado al remover el papel.	Alta temperatura! Non toccare. Agire con prudenza nel rimuovere la carta.

For United States

	⚠CAUTION	⚠ATTENTION	⚠PRECAUCION	⚠CUIDADO
	High temperature! Do not touch. Use care when clearing paper.	Température élevée! RIsque de brûlure. Soyez prudent en retirant la feuille coincée.	¡ Temperatura alta ! No tocar. Tener cuidado al remover el papel.	Alta temperatura! Não toque! Tenha cuidado ao remover o papel.

C4007O168CA

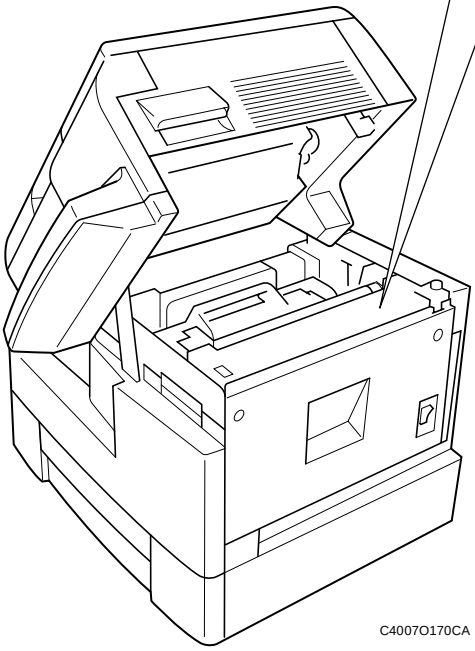

C4007O170CA

⚠ Caution

If you touch any place which you are advised by any caution label to keep yourself away from, you may be burned or injured. Do not remove caution label. If any caution label is soiled, please clean to make legible. If you cannot make them legible, or if the caution label is damaged please contact your Service Center.

ALL Areas

CAUTION

Danger of explosion if battery is incorrectly replaced.
Replace only with the same or equivalent type
recommended by the manufacturer.
Dispose of used batteries according
to the manufacturer's instructions.

ALL Areas

CAUTION

"Replace only with the same or equivalent type recommended by the manufacturer.
Dispose of used IC Package according to the manufacturer's instructions."

2. SPECIFICATIONS

TYPE	:	Desktop
ORIGINAL SCANNING SYSTEM	:	CCD Line Sensor
PHOTOCONDUCTOR	:	Organic Photoconductor
COPYING SYSTEM	:	Electrostatic Dry Powdered Image Transfer to Plain Paper
RESOLUTION	:	600 x 600dpi
PAPER FEEDING SYSTEM	:	2-Way system ─┬─ Paper Tray └─ Manual Bypass Tray
EXPOSURE SYSTEM	:	CCD Scanning
DEVELOPING SYSTEM	:	Fine Micro-Toning System
CHARGING SYSTEM	:	Rotating Charge Brush
IMAGE TRANSFER SYSTEM	:	Image Transfer Roller
PAPER SEPARATING SYSTEM	:	Paper Separator Finger
FUSING SYSTEM	:	Heat Roller
PAPER DISCHARGING SYSTEM	:	Charge Neutralizing Brush
MAXIMUM ORIGINAL SIZE	:	Metric-216 x 356 mm; Inch-8-1/2 x 14

COPY MEDIUM

		Paper Tray	Manual Bypass Tray
Medium	Plain Paper (60 to 90 g/m^2, 16 to24 lb)	❍	❍
	Translucent paper	–	❍
	Transparencies	–	❍
	Thick paper (90 to 163 g/m^2, 24 to 43-1/4 lb)	–	❍
	Recycled paper	❍	❍
Dimensions	Maximum (Width x Length)	210 x 297 mm 8-1/2 x 14	216 x 356 mm 8-1/2 x 14
	Minimum (Width x Length)	148 x 210 mm 5-1/2 x 8-1/2	128 x 182 mm 5 x 7-1/4

MULTIPLE COPIES	:	1 to 100
WARM-UP TIME	:	28 s or less with room temperature of 23 °C/73 °F and rated power voltage
FIRST COPY TIME	:	11.0 s or less (A4L / 8-1/2 x 11)

CONTINUOUS COPY SPEED (copies/min)

Zoom Ratio / Size	100%
A4L	15
8-1/2 x 11	15

ZOOM RATIOS

	Area / Mode	Metric	Inch
Fixed	Full Size	100 %	100 %
	Reduction	81 % 70 %	78 % 64 %
	Enlargement	115 % 141 %	129 % 154 %
Variable	50 % to 199 % (in 0.1 % increments)		

LENS : Through Lens
EXPOSURE LAMP : Cold-cathode discharge tube
FUSING TEMPERATURE : 210 °C / 410 °F

POWER/CURRENT CONSUMPTION (copier only)

Voltage	Exposure Lamp (Rating)	Fusing Heater Lamp (Rating)	Max. Power Consumption
115 V	12 V 5.4 W	120 V 650 W	680 W
120 V			715 W
127 V			770 W
220 V		220/240 V 650 W	670 W
240 V			750 W

POWER REQUIREMENTS : 115 V, 120 V, 127 V, 220-240 V; 50/60 Hz

ENVIRONMENTAL CONDITIONS

Temperature	10-30 °C (50-86 °F) with a fluctuation of up to 10 °C (18 °F) per hour.
Humidity	15-85 % (Relative Humidity) with a fluctuation of up to 20 % per hour.
Ambient Illumination	3,000 lx or less
Levelness	1° or less

COPIER DIMENSIONS : Width.....562 mm (22-1/4)
Depth.....530 mm (20-3/4)
Heigth.....442 mm (17-1/2)
COPIER WEIGHT : 28.1 kg (62 lb)

3. PRECAUTIONS FOR INSTALLATION

3-1. Installation Site

To ensure safety and utmost performance of the copier, the copier should NOT be used in a place:

- Where it will be subjected to extremely high or low temperature or humidity.
- Where it will be subjected to sudden fluctuations in either temperature or humidity.
- Which is exposed to direct sunlight.
- Which is in the direct air stream of an air conditioner, heater, or ventilator.
- Which has poor ventilation or is dusty.
- Which does not have a stable, level floor or where it will receive undue vibration.
- Which is near any kind of heating device.
- Which is near volatile flammables (thinner, gasoline, etc.).
- Where it may be splashed with water.
- Which puts the operator in the direct stream of exhaust from the copier.
- Where ammonia gas might be generated.

3-2. Power Source

- If any other electrical equipment is sourced from the same power outlet, make sure that the capacity of the outlet is not exceeded.
- Use a power source with little voltage fluctuation.
- Never connect by means of a multiple socket any other appliances or machines to the outlet being used for the copier.
- Ensure that the copier does not ride on the power cord or communication cable of other electrical equipment, and that it does not become wedged into or underneath the mechanism.
- Make the following checks at frequent intervals:

✻ Is the power plug abnormally hot?
✻ Are there any cracks or scrapes in the cord?
✻ Has the power plug been inserted fully into the outlet?
✻ Does something, including the copier itself, ride on the power cord?

Use an outlet with a capacity of 115/120/127 V or 220-240 V.

3-3. Grounding

- Always ground the copier to prevent receiving electrical shocks in the case of electrical leakage.
- Connect the ground wire to the ground terminal of the outlet or a grounding contact which complies with the local electrical standards.
- Never connect the ground wire to a gas pipe, the ground wire for a telephone, lightning arrester, or a water pipe for fear of fire and electrical shock.

4. PRECAUTIONS FOR USE

4-1. To ensure that the copier is used in an optimum condition

- Never place a heavy object on the copier or subject the copier to shocks.
- Insert the power plug all the way into the outlet.
- Do not attempt to remove any panel or cover which is secured while the copier is making copies.
- Do not turn OFF the copier while it is making copies.
- Provide good ventilation when making a large number of copies continuously.
- Never use flammable sprays near the copier.
- If the copier becomes inordinately hot or produces abnormal noise, turn it OFF and unplug it.
- Do not turn ON the power switch at the same time when you plug the power cord into the outlet.
- When unplugging the power cord, do not pull on the cord; hold the plug and pull it out.
- Do not bring any magnetized object near the copier.
- Do not place a vase or vessel containing water on the copier.
- Be sure to turn OFF the power switch at the end of the workday or upon power failure.
- Use care not to drop paper clips, staples, or other small pieces of metal into the copier.

4-2. Operating Environment

The operating environmental requirements of the copier are as follows.

- Temperature: 10 to 30 °C (50 to 86 °F)
- Humidity: 15 to 85 %
- Rate of temperature change: 10 °C (18 °F)/h
- Rate of humidity change: 10 %/h

4-3. Power Requirements

The power source voltage requirements are as follows.

- Voltage fluctuation: AC115/120/127/220-240
  ±10 % (copying performance assured)
  +10 %
  -15 % (paper feeding performance assured)
- Frequency fluctuation: 50/60 Hz ±0.3 %

4-4. Note

- It is prohibited to copy paper and hard currencies, government securities, and municipal bonds (even when they are stamped as “Sample”).
- For fear of infringement of copyright, it is also prohibited to copy copyrighted works, including books, music, works of art, maps, drawings, motion pictures, and photos except when the copy is to be used only personally.

5. HANDLING OF CONSUMABLES

Before using any consumables, always read the label on its container carefully.

- Paper can be easily damaged by dampness. To prevent absorption of moisture, store paper, which has been removed from its wrapper but not loaded in the drawer, in a sealed plastic bag in a cool, dark place.
- Keep consumables out of the reach of children.
- Do not touch the PC Drum with bare hands.
- The same sized paper is of two kinds, short grain and long grain. Short grain paper should only be fed through the copier crosswise, long grain paper should only be fed lengthwise.
- If your hands become soiled with toner, wash them with soap and water.
- Do not throw away any used consumables (PC Drum, starter, toner, etc.). They are to be collected.
- Do not burn, bury in the ground, or throw into the water any consumables (PC Drum, starter, toner, etc.).
- Do not store consumables in a place which:

✻ Is hot and humid.
✻ Is subject to direct sunlight.
✻ Has an open flame nearby.

6. OTHER PRECAUTIONS

Use the following precautions when performing service jobs for a copier that uses a laser.

- When a service job needs to be performed in the laser beam path, such as when working around the printerhead or PC Drum, be sure first to unplug the power cord of the copier from the outlet.
- If the job requires that the power cord be left plugged in, observe the following precautions.

1. Take off your watch, ring and any other reflective object and wear laser protective goggles.
2. Keep users away from the job site.
3. Do not bring a highly reflective tool into the laser beam path during the service job.

7. SYSTEM OPTIONS

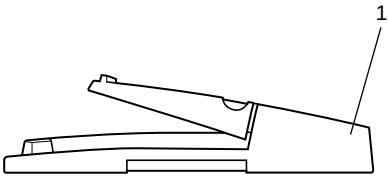

C4007O92CA

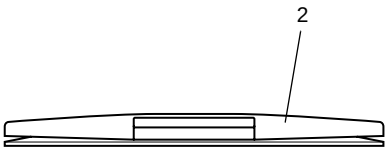

C4007O91CA

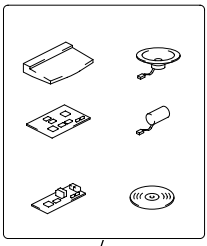

4007M032AA

6

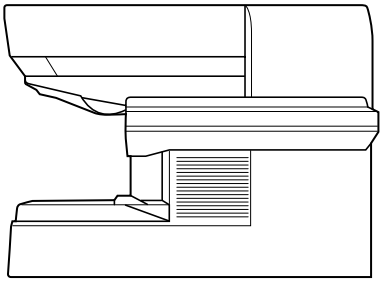

C4007O093CA

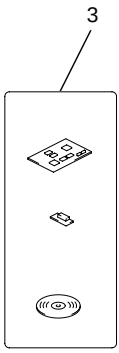

4007M037AA

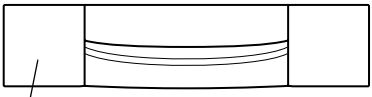

C4007O94CA

5

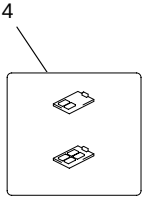

4007M035AB

1. Automatic Document Feeder DF-216
2. 7415 Platen Cover (Except Europe)
3. Printer Controller IP-412
4. MU-7415C1/MU-7415C2
5. Paper Feed Unit PF-120
6. Fax Unit FK-116

MECHANICAL/ ELECTRICAL

CONTENTS

1. CROSS SECTIONAL VIEW M-1
2. COPY PROCESS M-2
3. DRIVE SYSTEM M-4
4. SEQUENTIAL EXPLANATION M-5
5. PC DRUM SECTION M-6
   5-1. PC Drum Drive Mechanism M-6
   5-2. Grounding of the PC Drum M-7
6. PC DRUM CHARGING SECTION M-8
7. IMAGE READING SECTION M-9
   7-1. Exposure Components Section M-10
   7-2. Exposure Lamp Control M-11
   7-3. Image Processing Process M-12
   7-4. Scanner Movement Mechanism M-14
   7-5. Scanner Motor Drive Control M-15
8. PH SECTION M-16
   8-1. Laser Exposure Process M-17
   8-2. Laser Emission Area (HIA and VIA Signals) M-18
9. DEVELOPING UNIT SECTION M-19
   9-1. Developing Unit Drive Mechanism M-20
   9-2. Sleeve Roller M-20
   9-3. Developing Bias M-21
   9-4. Toner Empty Detection M-22
10. PAPER TAKE-UP/FEEDING SECTION M-23
   10-1.Paper Empty Detection Mechanism M-24
   10-2.Paper Lifting Mechanism M-25
   10-3.Paper Take-Up Mechanism M-26
   10-4.Paper Take-Up Control M-26
      (1) Paper Take-Up Retry Control M-27
11. PC DRUM CLEANING SECTION M-28
12. IMAGE TRANSFER SECTION M-29
13. FUSING UNIT SECTION M-30
   13-1.Fusing Unit Drive Mechanism M-31
   13-2.Fusing Rollers Pressure Mechanism M-32
   13-3.Fusing Temperature Control M-33
      (1) Fusing Temperature Control during continuous small-size paper feeding M-34
   13-4.Mechanism and Control of Fusing Roller Small-Amount Turning M-34
14. OTHER MECHANISMS M-35
   14-1.Memory Backup M-35
   14-2.Cooling Mechanism M-36
      (1) PH Section Cooling Mechanism M-36
      (2) Fusing Section Cooling Mechanism M-37

1. CROSS SECTIONAL VIEW

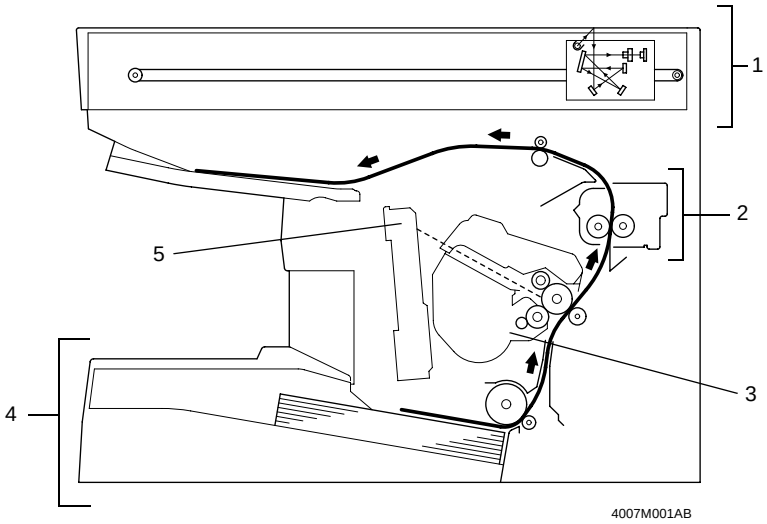

1. IR Section
2. Fusing Unit
3. Supply Unit
4. Paper Tray
5. PH Section

2. COPY PROCESS

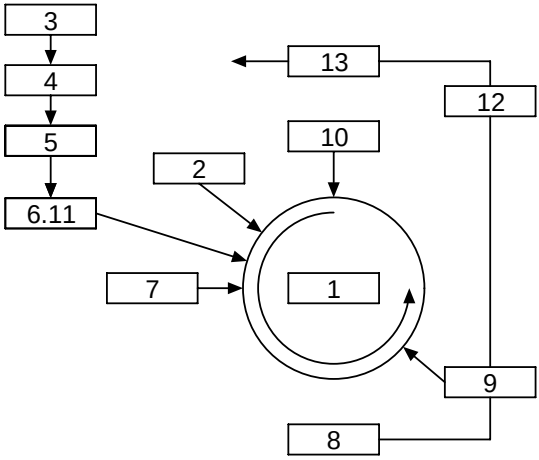

1. PC Drum
- Used as the medium on which a visible developed image of the original is formed.

2. Drum Charging
- A uniform negative DC charge is deposited across the entire surface of the PC Drum.

3. Photoelectric Conversion
- CCD converts the image data represented by light reflected off the original to a corresponding electrical signal which, in turn, is output to IR image-processing section.

4. IR Image-Processing
- The electrical signal is converted to an 8-bit digital image signal (A/D conversion) which, in turn, goes through appropriate correction before being output to the PH Section.

5. PH Image Processing
- After going through corrections, the digital image signal is converted to a corresponding electrical signal (D/A conversion) that controls the intensity of the light from the laser diode.

6. Laser Exposure
- The laser beam strikes the surface of the PC Drum, forming an electrostatic latent image.

7. Developing
- Toner adheres to the electrostatic latent image on the PC Drum surface, creating a visible image.
- A DC (-) bias voltage is applied to the Sleeve Roller to charge toner.

8. Paper Feeding
- Paper is fed from either the Paper Tray or Manual Bypass Tray.

9. Image Transfer
- A DC (+) bias voltage is applied to the Image Transfer Roller to transfer the visible toner image formed on the PC Drum surface to the paper.

10. Cleaning
- Residual toner on the surface of the PC Drum is scraped off.

11. PC Drum Erase
- A laser beam strikes the surface of the PC Drum to remove any residual charge from it.

12. Fusing
- The developed image is permanently fused to the paper by a combination of heat and pressure applied by the Fusing Roller and Fusing Backup Roller.

13. Exit
- The paper is fed out onto the Exit Tray.

3. DRIVE SYSTEM

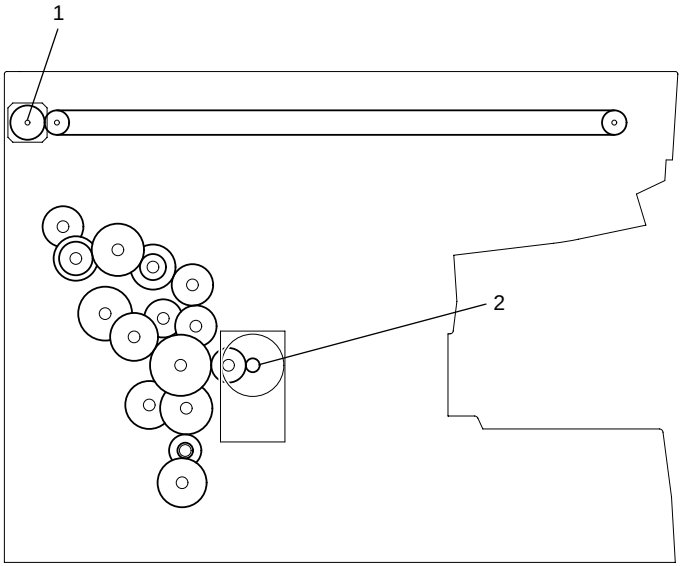

4007M003AA

1. Scanner Motor M6
2. Main Motor M1

4. SEQUENTIAL EXPLANATION

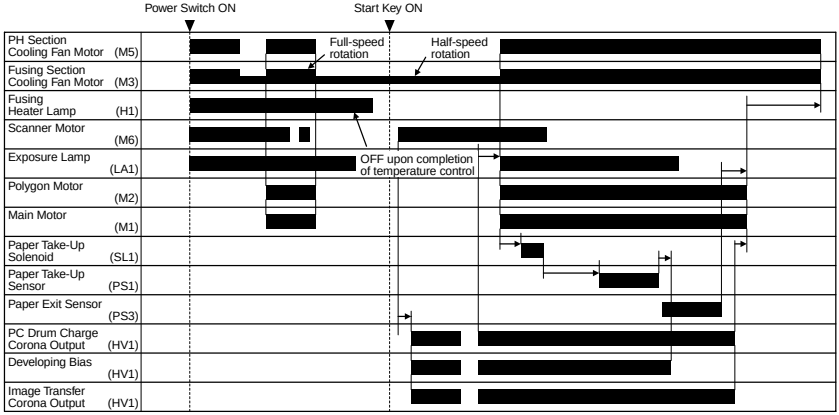

4007M029CA

5. PC DRUM SECTION

The PC Drum consists of layers of semiconductive materials placed on an aluminum alloy base, on which an electrostatic latent image is formed.

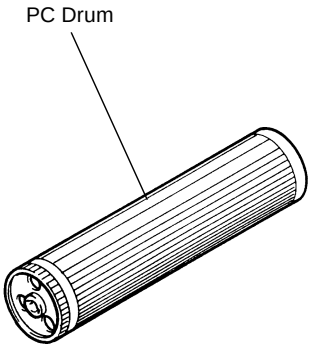

1139M006AA

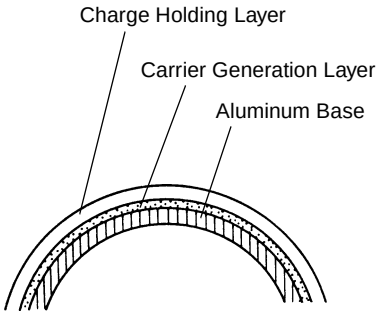

1139M007AA

5-1. PC Drum Drive Mechanism

The PC Drum is rotated by drive from a motor.

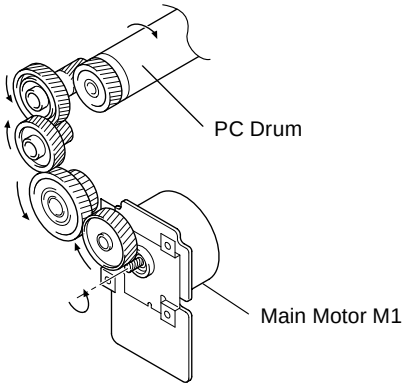

4007M004AC

	CONTROL SIGNAL	ON	OFF	WIRING DIAGRAM
M1	PWB-A PJ6A-3	L	H	8-F

5-2. Grounding of the PC Drum

The potential on the surface of the PC Drum exposed to the light is grounded to the frame.

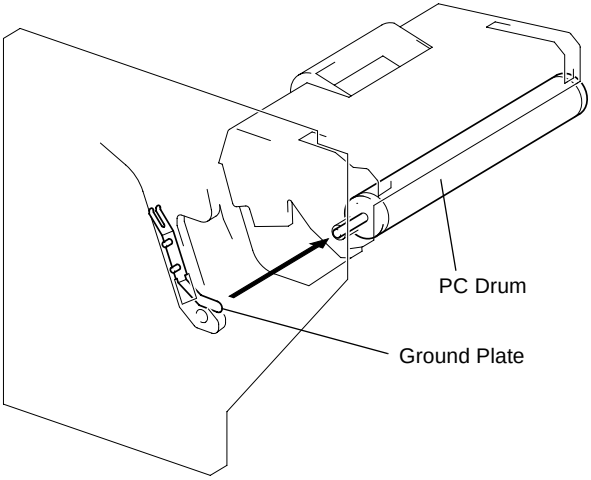

4007M005AC

6. PC DRUM CHARGING SECTION

- Both the Rotating Charge Brush and Precharge Film are used to negatively charge the surface of the PC Drum.
- The Rotating Charge Brush applies charge directly to the PC Drum, which ensures that the PC Drum is charged evenly and stably with a low voltage. It also helps reduce dramatically the amount of ozone produced in the copier as compared with corona discharge systems.
- Prior to charging by the Rotating Charge Brush, the Precharge Film will perform preliminary charging of both ends of the PC Drum to enhance drum charging efficiency.

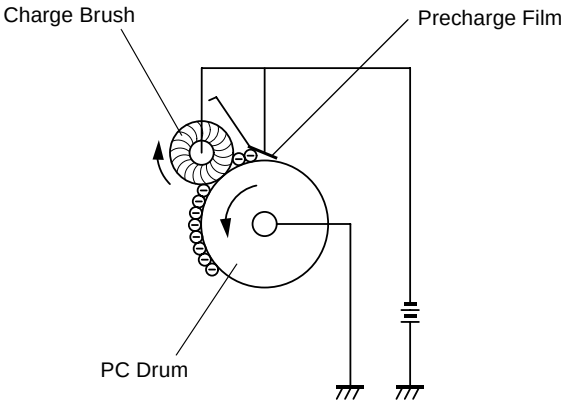

4007M015AB

	CONTROL SIGNAL	ON	OFF	WIRING DIAGRAM
HV PC Drum Charger	PWB-A PJ4A-8	L	H	1-F

7. IMAGE READING SECTION

CCD converts the light reflected off the original to a corresponding electrical signal which is, in turn, applied to the PH image processing section.

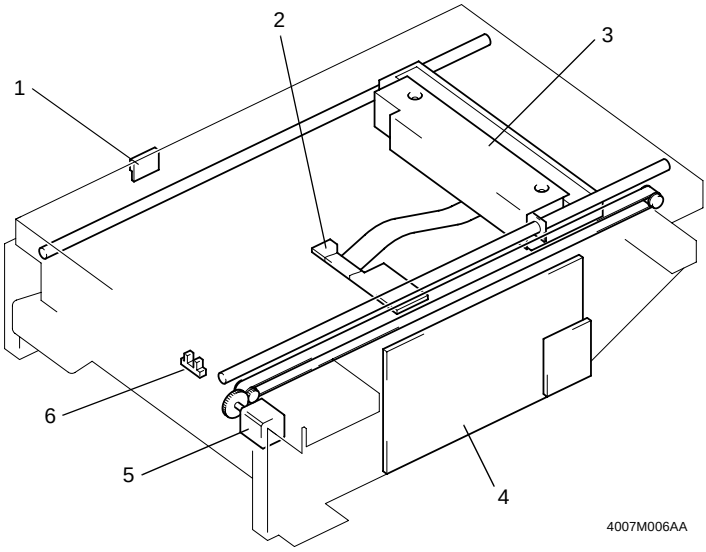

1. ADF Set Switch S3
2. Scanner Interface Board PWB-S
3. Scanner
4. Control Board PWB-I
5. Scanner Motor M6
6. Scanner Home Position Sensor PS5

7-1. Exposure Components Section

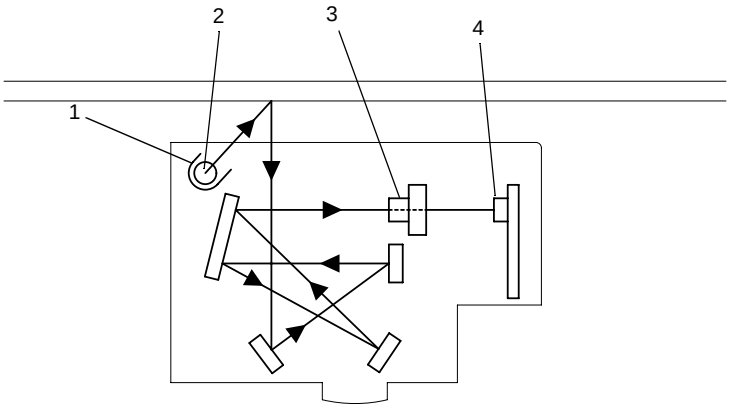

1. Reflector
2. Exposure Lamp LA1
3. Lens
4. CCD

7-2. Exposure Lamp Control

- The Exposure Lamp is turned ON or OFF by the Exposure Lamp Remote signal output from the Control Board.
- It is turned ON or OFF at different timings between when the Power Switch is turned ON and when the Start Key is pressed.Details;

<When Power Switch is turned ON>

1. The Exposure Lamp turns ON and the Scanner starts moving.
2. The Exposure Lamp turns ON and OFF three times to set the MAX and MIN output voltages for the CCD.
3. The Scanner stops at the shading position underneath the scale.
4. The Exposure Lamp power checking.
5. The Scanner scans the shading sheet before returning to its home position.
   At this time, it scans the white pattern and black pattern to determine the max. and min. output voltages for the CCD Sensor.
6. After a given period of time, the Exposure Lamp goes out. Then, the Scanner moves to, and stops at, the shading position.
   The time it takes the Exposure Lamp to turn OFF is determined by the setting of C8 of Tech. Rep. Choice, the default setting being 30 sec.

<When Start key is pressed>

1. The Scanner starts moving at the shading position.
2. The Exposure Lamp turns ON and OFF several times.
3. The Exposure Lamp power checking.
4. The Scanner moves to the home position and starts a scan motion to read the original.
5. The Scanner stops at its home position.

	CONTROL SIGNAL	ON	OFF	WIRING DIAGRAM
LA1	PWB-I JP8I-1	L	H	6-B

7-3. Image Processing Process

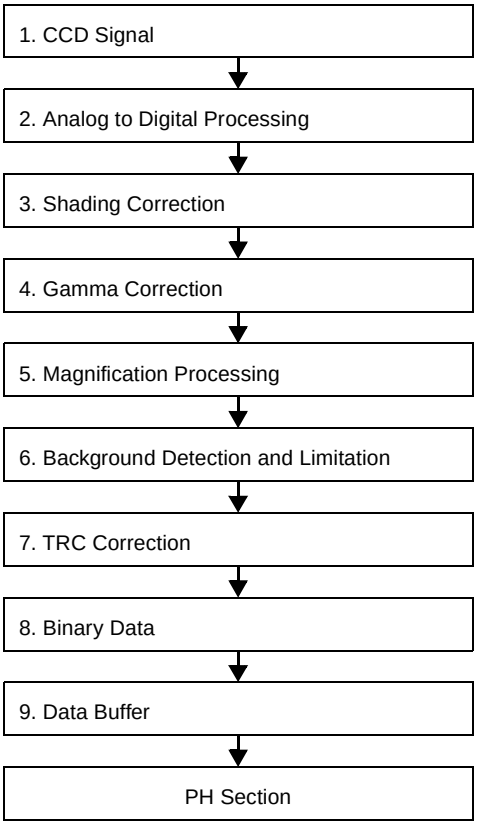

1. CCD Signal
- The Exposure Lamp illuminates the original and the light reflected off the original passes through the mirrors and lens to reach the CCD Sensor which, in turn, converts the optical data to a corresponding analog electrical signal.

2. Analog to Digital Processing
- This block with gain adjustment, converts the result to 8-bit digital image signals.

3. Shading Correction
- Corrects errors in the image data introduced by factors such as variations in sensitivity among CCD Sensor pixels, uneven Exposure Lamp light distribution, and uneven lens shading.

4. Gamma Correction
- Adjusts data so that the scan image's gradation characteristics will be proportional to gradation characteristics of the original.

5. Magnification Processing
- Processes the image data as necessary according to the zoom setting (Enlarge/Reduce) made on the control panel.

6. Background Detecting and Limitation
- Detects the background of original and adjusts the threshold of image processing.

7. TRC Correction
- Corrects the image data to match it with toner characteristics on the engine side.
- TRC: Toner Reproduce Curve

8. Binary Data
- Converts the 8-bit image gray data to corresponding binary data.

9. Data Buffer
- Transmits binary data to the PH.

7-4. Scanner Movement Mechanism

- The Scanner is driven by the Scanner Motor.
- The Scanner is detected at its home position by the Scanner Home Position Sensor.

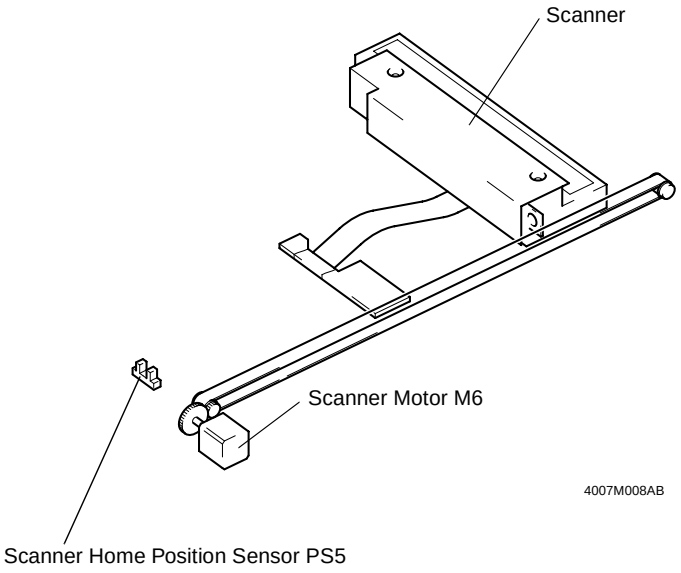

7-5. Scanner Motor Drive Control

- The speed at which the Scanner is moved is controlled by varying the period of the motor drive pulse that is timed with the reference clock.

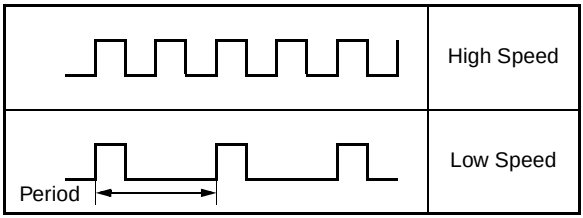

- The distance over which the Scanner travels is controlled by the number of motor drive pulses that corresponds to each paper size and zoom ratio.

	CONTROL SIGNAL	ON	OFF	WIRING DIAGRAM
M6	PWB-I JP9I-1~4	Pulse Output		4-D

8. PH SECTION

Image data sent from the IR section is corrected and, based on the corrected data, a laser light is projected onto the surface of the PC Drum to form a corresponding latent image.

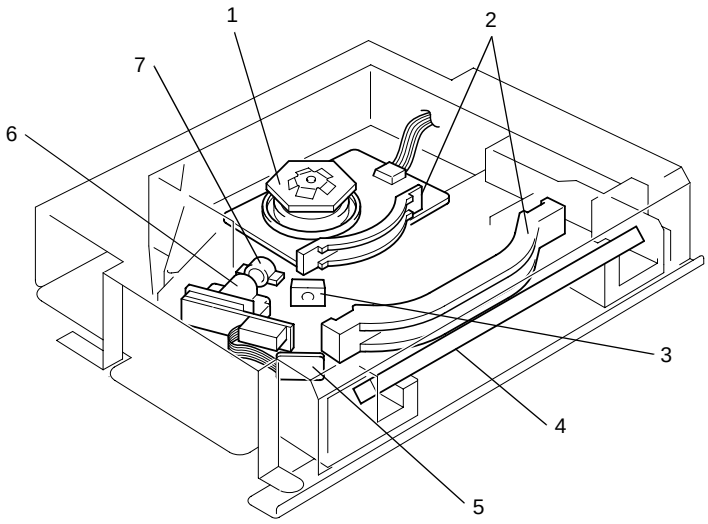

1. Polygon Motor
2. Lenses
3. SOS Lens
4. Return Mirror
5. SOS Sensor Board
6. LD Board
7. Cylindrical Lens

8-1. Laser Exposure Process

The Start key is pressed.

↓

The laser is forced ON.

↓

The laser beam is corrected and the laser output is adjusted to an optimum level.

↓

When the laser beam strikes the SOS Sensor, an SOS signal is generated.

↓

The SOS signal, together with the HSYNC signal (the image start position in the CD direction) and TOD signal (the image start position in the FD direction), determines the laser emission timing.

↓

A laser light is emitted in accordance with the VIDEO signal (image data).

↓

The laser light strikes the surface of the PC Drum to form an electrostatic latent image.

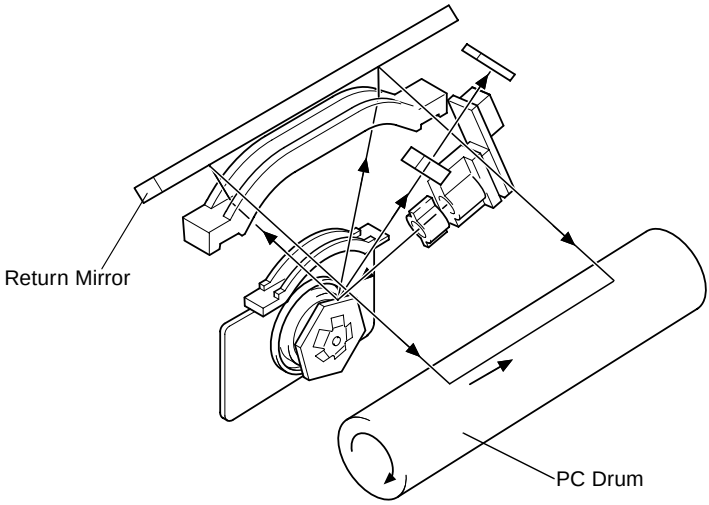

8-2. Laser Emission Area (HIA and VIA Signals)

- The laser radiation area is controlled in the CD and FD directions, respectively.
- The HSYNC signal (IR) determines the image start position in the CD direction.
- The Paper Take-Up Sensor and the TOD signal (engine) determine the image start position in the FD direction.
- The HSYNC signal and TOD signal are timed by the SOS signal.
- The image data (VIDEO signal) is output after the image start positions in the CD and FD directions have been determined. The Paper Take-Up Sensor controls the image end position in the FD direction.

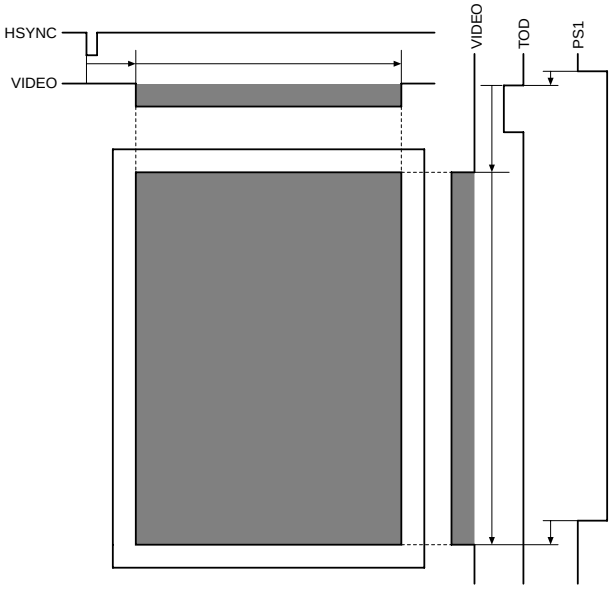

9. DEVELOPING UNIT SECTION

Toner is applied to the electrostatic latent image formed on the surface of the PC Drum, resulting in a visible, developed toner image.

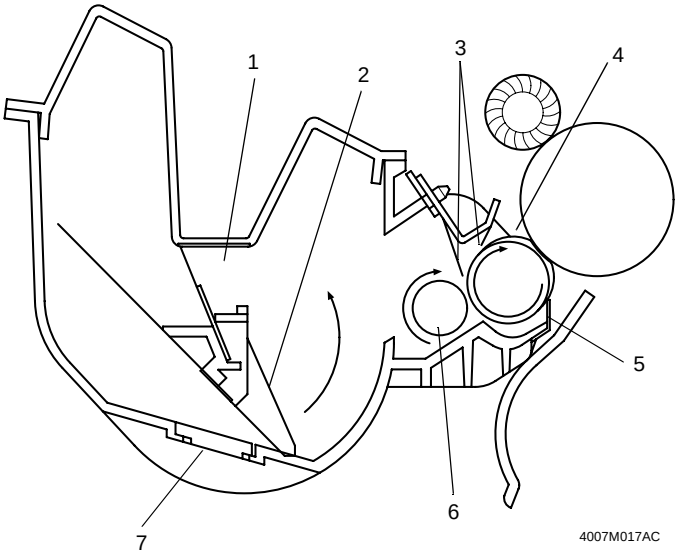

1. Reflecting Mirror
2. Toner Agitating Blade
3. Toner Regulator Blade
4. Sleeve Roller
5. Charge Neutralizing Sheet
6. Toner Supply Roller
7. LED Window

9-1. Developing Unit Drive Mechanism

The rollers and screws are driven through a gear train from the motor.

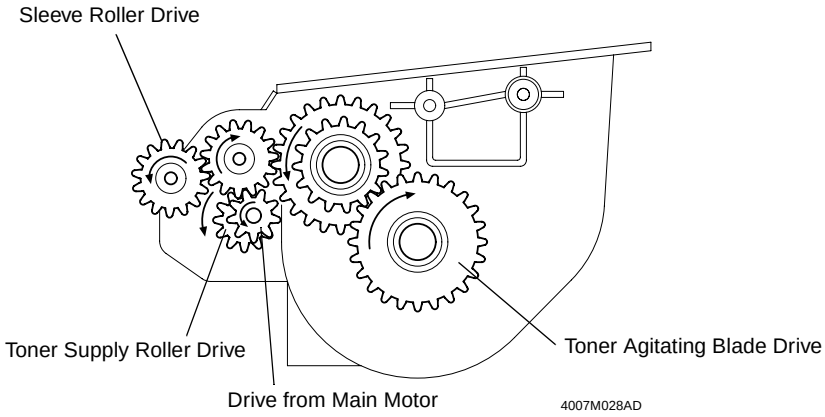

9-2. Sleeve Roller

- The Sleeve Roller consists of a Developing Sleeve and Flexible Sleeve.
- The Flexible Sleeve has a diameter greater than the Developing Sleeve does. The Sleeve Guide presses the Flexible Sleeve against the Developing Sleeve to form a slack in it.
- The slack in the Flexible Sleeve is brought into contact with the surface of the PC Drum to let an even amount of toner stick to the PC Drum.

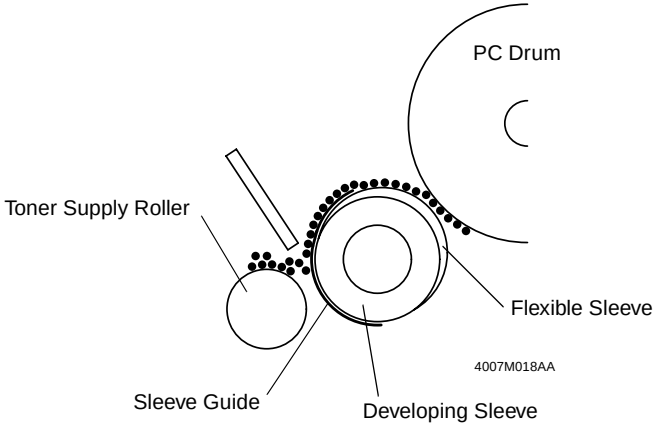

9-3. Developing Bias

- A bias voltage is applied to the Developing Sleeve and Toner Regulator Blades to charge the toner.
- A bias voltage is also applied to the Bias Seal to prevent toner left on the Sleeve Roller after development from falling down over the areas inside the copier.
- The amount of toner sticking to the surface of the PC Drum varies according to the potential difference between the voltage on the surface of the PC Drum (Vi) and that on the surface of the Sleeve Roller (Vb).
- The greater the potential difference, the more the amount of toner.

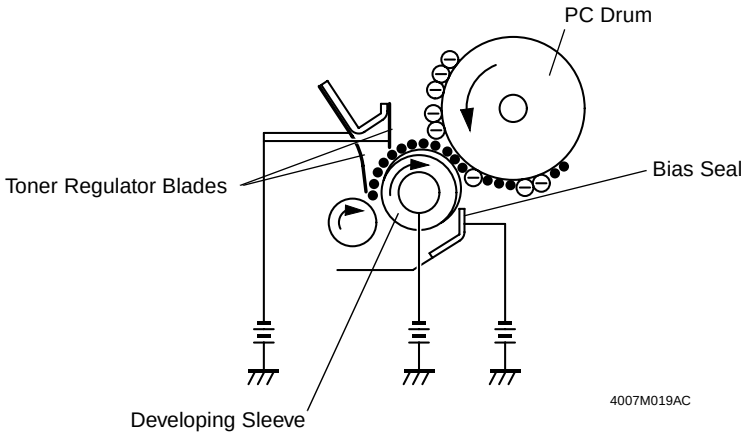

	CONTROL SIGNAL	ON	OFF	WIRING DIAGRAM
Developing Bias	PWB-A PJ4A-7	L	H	1-F
Toner Regulator Blades				
Bias Seal				

9-4. Toner Empty Detection

- An LED and sensor are used to detect a toner-empty condition.

1. Light from the LED strikes the inside of the Supply Unit through the LED Window.
2. The Toner Agitating Blade turns to scrape toner off the surface of the LED Window.
3. The light emitted by the LED is reflected by the Reflecting Mirror to reach the sensor.
4. The amount of toner in the Supply Unit changes the number of times (or the period of time) through which the light from the LED reaches the sensor.
5. The light that reaches the sensor is translated to a corresponding voltage value.
6. If the sensor detects a voltage of 2.0 V or less twice while the Toner Agitating Blade turns five revolutions, the copier considers that it is a toner-near-empty condition.
7. If the sensor detects a voltage of 2.0 V or less three consecutive times while the Toner Agitating Blade turns five revolutions, or if it continues detecting a voltage of 2.0 V or less even after one revolution of the Toner Agitating Blade, the copier considers that it is a toner-empty condition.

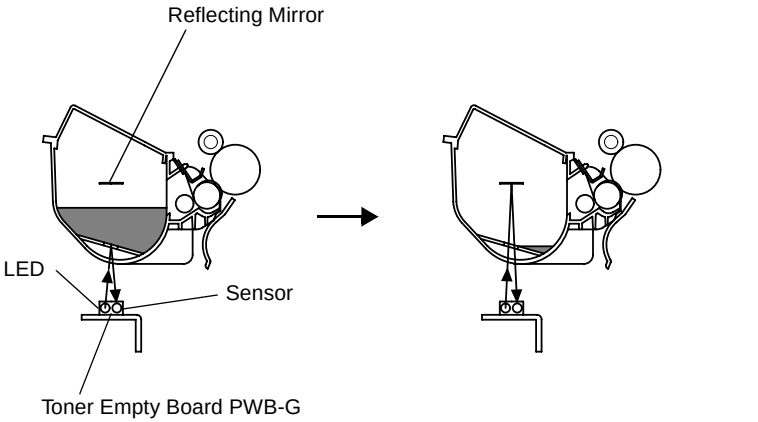

4007M020AA

	CONTROL SIGNAL	ON	OFF	WIRING DIAGRAM
PWB-G	PWB-A PJ10A-6	Analog Input		2-D

10. PAPER TAKE-UP/FEEDING SECTION

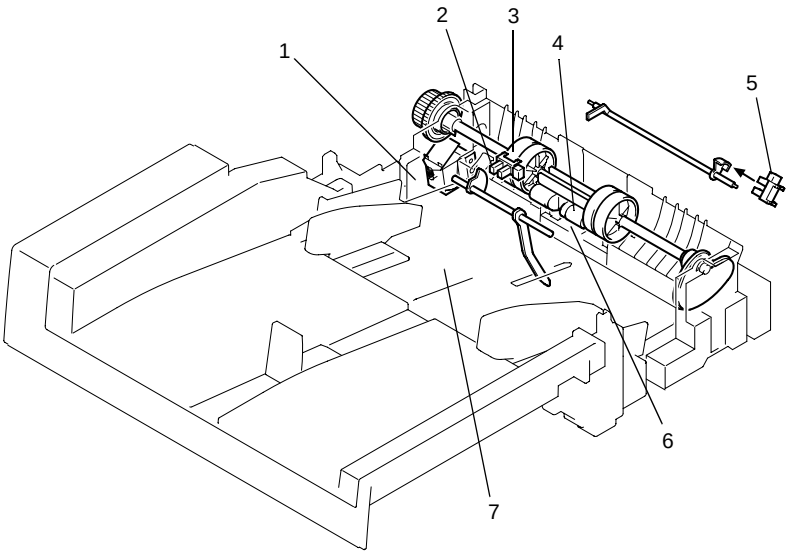

4007M011AB

1. Paper Take-Up Solenoid SL1
2. Paper Empty Sensor PS4
3. Feed Roll
4. Paper Take-Up Roll
5. Paper Take-Up Sensor PS1
6. Separator Pad
7. Paper Lifting Plate

10-1. Paper Empty Detection Mechanism

The Paper Empty Sensor detects a paper-empty condition in the Paper Tray.

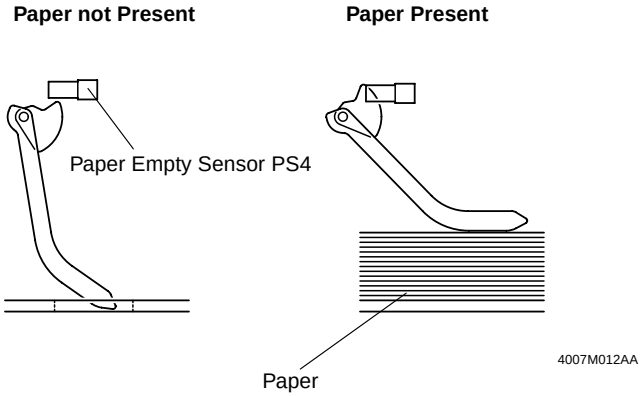

	CONTROL SIGNAL	Blocked	Unblocked	WIRING DIAGRAM
PS4	PWB-A PJ10A-3	H	L	1-I

10-2. Paper Lifting Mechanism

The paper lifting mechanism raises the paper stack in the tray to press it up against the Paper Take-Up Roll.

The Start key is pressed.
↓
The Main Motor is energized.
↓
The Paper Take-Up Solenoid is energized.
↓
The cam turns and the Paper Lifting Lever goes up.
↓
The Paper Take-Up Roll turns to take up and feed one sheet of paper.
↓
The cam turns and the Paper Lifting Lever goes down.

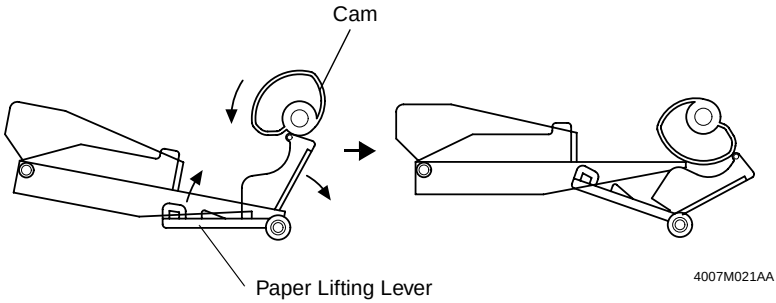

10-3. Paper Take-Up Mechanism

Drive for the paper take-up sequence is transmitted via the Paper Take-Up Clutch and Paper Take-Up Solenoid from a motor.

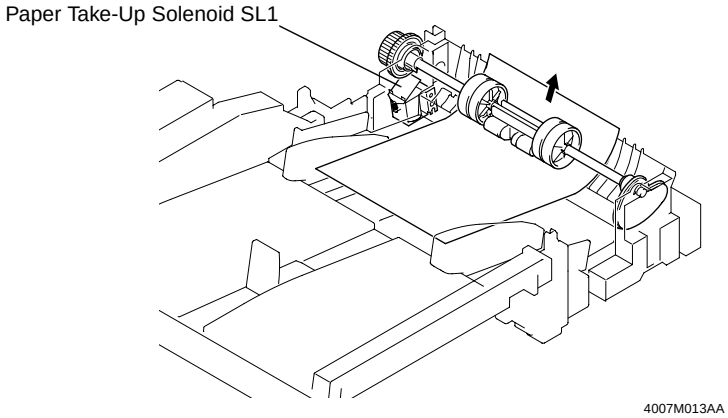

10-4. Paper Take-Up Control

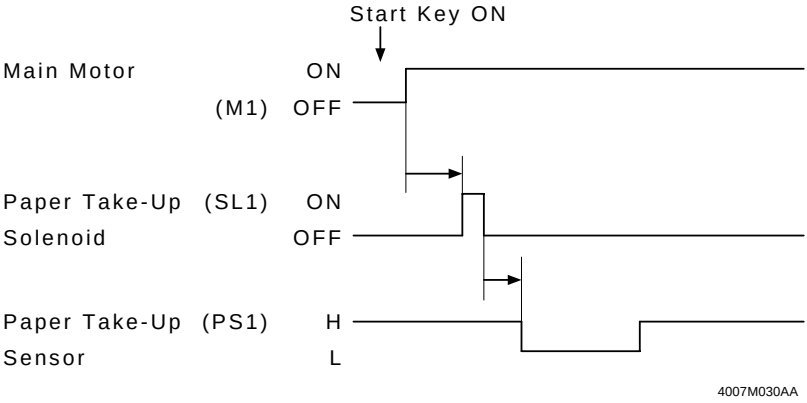

	CONTROL SIGNAL	ON	OFF	WIRING DIAGRAM
SL1	PWB-A PJ3A-2	L	H	1-G

	CONTROL SIGNAL	ON	OFF	WIRING DIAGRAM
PS1	PWB-A PJ8A-3	L	H	1-H

(1) Paper Take-Up Retry Control

To minimize the occurrence of a paper misfeed, the paper take-up sequence is temporarily halted if the paper fails to reach the Paper Take-Up Sensor within a given period of time after the sequence has been started. The paper take-up sequence is then performed again. These paper take-up sequences are repeated a given number of times.

	No. of Paper Take-Up Retry Sequences
Paper Take-Up Retry	1

11. PC DRUM CLEANING SECTION

- Toner that is left on the surface of the PC Drum after image transfer will be scraped off by the Cleaning Blade and conveyed by the Toner Conveying Screw to the Toner Collecting Box. The Toner Antispill Mylar prevents toner scraped off the surface of the PC Drum from falling over the areas inside the copier.
- The Paper Separator Fingers mechanically separate paper from the surface of the PC Drum after image transfer.

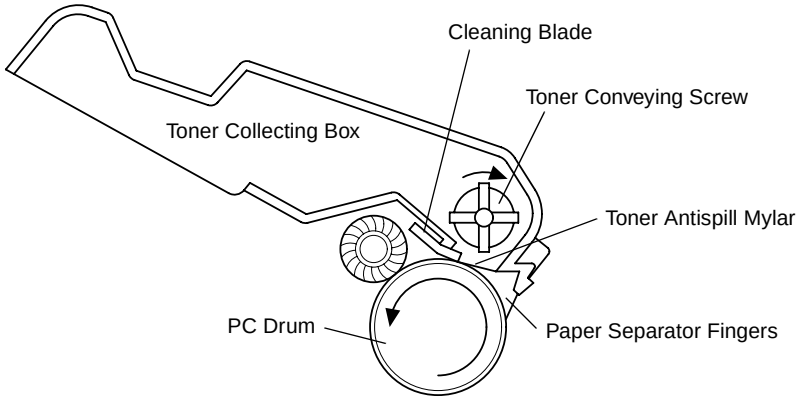

4007M022AA

12. IMAGE TRANSFER SECTION

- A positive voltage is applied to the Image Transfer Roller to transfer the toner image on the surface of the PC Drum to the paper.
- The voltage applied to the Image Transfer Roller varies according to the copy image (B/W ratio) or paper size.

B/W Ratio	Paper Size	Image Transfer Output
Low	Small	Great
High	Large	Small

- The Discharge Needle neutralizes residual potential in the paper after image transfer.
- A negative voltage is applied to the Image Transfer Roller after image transfer so that toner sticking to its surface may be returned to the PC Drum for cleaning of the Image Transfer Roller.

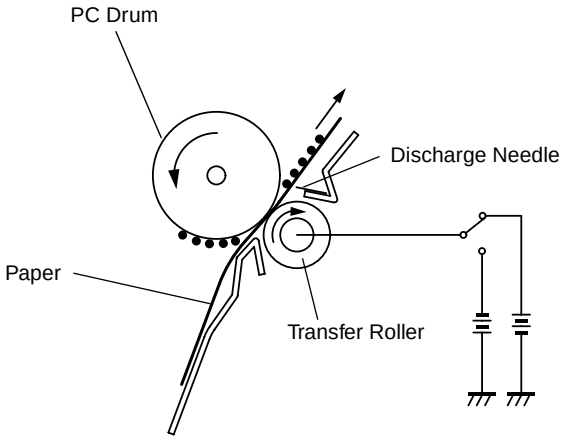

4007M031AA

	CONTROL SIGNAL	ON	OFF	WIRING DIAGRAM
Image Transfer Corona (+)	PWB-A PJ4A-4	L	H	2-E

	CONTROL SIGNAL	ON	OFF	WIRING DIAGRAM
Image Transfer Corona (-)	PWB-A PJ4A-4	H	H	2-E
	PWB-A PJ4A-8	L	H	

13. FUSING UNIT SECTION

The Fusing Unit fixes permanently the developed image to the paper by applying heat and pressure to the toner and paper.

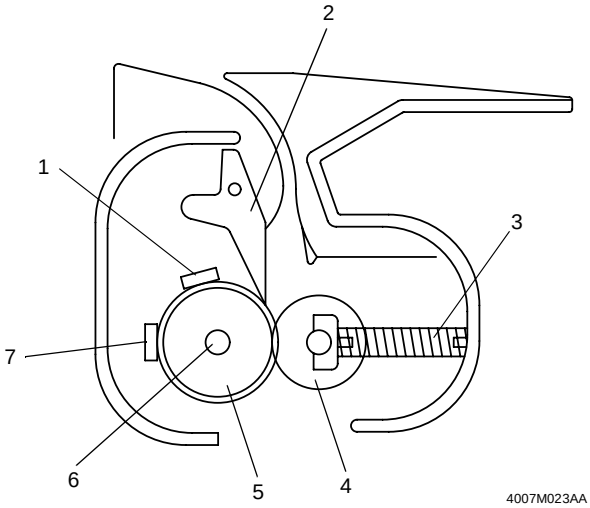

1. Thermoswitch TS1
2. Paper Separator Finger
3. Pressure Spring
4. Fusing Backup Roller
5. Fusing Roller
6. Fusing Heater Lamp H1
7. Thermistor TH1

13-1. Fusing Unit Drive Mechanism

The Fusing Unit is driven by a motor.

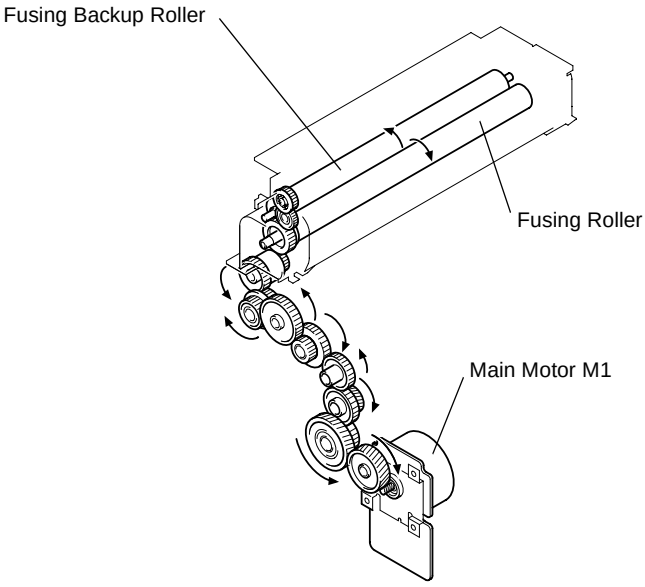

13-2. Fusing Rollers Pressure Mechanism

To ensure that there is a given width of nip between the Fusing Roller and Fusing Backup Roller, pressure springs are installed at the front and rear ends of the Backup Roller. These springs exert a pressure to press the Backup Roller against the Fusing Roller.

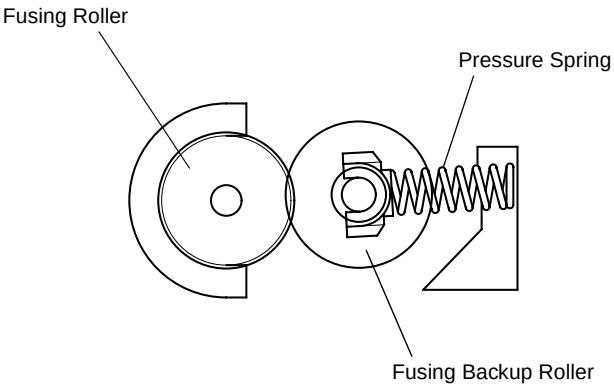

4007M024AA

13-3. Fusing Temperature Control

- The Fusing Roller Heater Lamp is turned ON and OFF to keep a set temperature on the surface of the Fusing Roller.
- The Fusing Roller surface temperature is detected by using a thermistor that translates the temperature to a corresponding electrical signal.
- If the Fusing Roller temperature becomes excessively high, the Fusing Heater Lamp is shut down.

Part Name	Symbol	Function
Fusing Heater Lamp	H1	• Turns ON during the warm-up cycle. • Turns ON during a copy cycle. • Turns ON in the standby state.
Thermistor	TH1	• Detects the surface temperature of the Fusing Roller. • Controls the Fusing Heater Lamp to turn ON and OFF.
Thermoswitch	TS1	• Detects the surface temperature of the Fusing Roller. • Cuts off power when the temperature of the Fusing Roller becomes inordinately high.

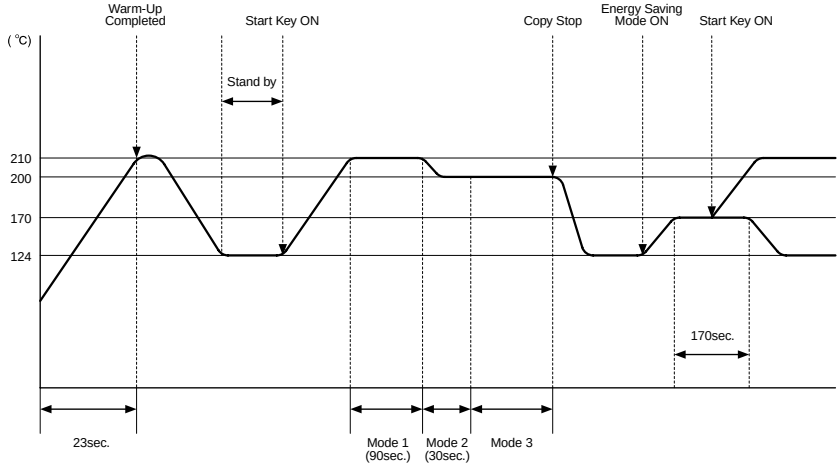

4007M027CA

Conditions	Mode 1	Mode 2	Mode 3
Plain Paper	210 °C (90 s)	210 °C→200 °C (30 s)	200 °C
Thick Paper	210 °C		
In standby state	124 °C		
In Power Save mode	170 °C		

	CONTROL SIGNAL	ON	OFF	WIRING DIAGRAM
H1	PWB-A PJ14A-3	L	H	2-B

	CONTROL SIGNAL	Low Temp. ◄► High Temp.	WIRING DIAGRAM
TH1	PWB-A PJ2A-1	Analog Input	1-B

(1) Fusing Temperature Control during continuous small-size paper feeding

- If paper of a small size is continuously fed through the copier in the Thick Paper mode, the temperature on the edges of the Fusing Roller will rise. When paper of a large size is next fed through the copier, offset can at times occur at the areas on the copy equivalent to the high temperature zones of the Fusing Roller.
- The copying speed is then decreased from 15 copies/min. to 9 copies/min. to allow a greater interval between sheets of paper, thereby preventing the temperature on the ends of the Fusing Roller from rising.
- This control is provided when 10 or more copies are made continuously in the Thick Paper mode.

13-4. Mechanism and Control of Fusing Roller Small-Amount Turning

- If the Fusing Roller is kept stationary in temperature controlled state, the temperature of only the nip becomes inordinately high due to heat and pressure, which tends to cause the paper to be wavy.
- Immediately after the Start key has been pressed, the Main Motor is energized to move the Fusing Roller a half turn.
- Whether to provide this control or not can be selected with “C3 Predrive” of Tech. Rep. Choice.

14. OTHER MECHANISMS

14-1. Memory Backup

EEPROM (U21) connected to the Control Board PWB-I stores the setting/adjustment values set in the Tech. Rep. modes as well as the counter counts.

IMPORTANT

It should also be noted that the EEPROM (U21) should not be replaced at the same time when the Control Board is replaced.

14-2. Cooling Mechanism

(1) PH Section Cooling Mechanism

The PH Section Cooling Fan Motor discharges heat to the outside of the copier to prevent the temperature of the PH Section from rising inordinately.

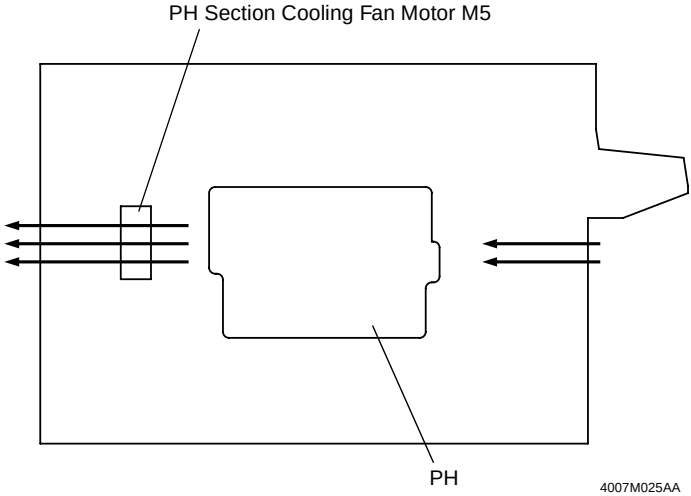

	CONTROL SIGNAL	ON	OFF	WIRING DIAGRAM
M5	PWB-A PJ13A-1	L	H	4-A

(2) Fusing Section Cooling Mechanism

The Fusing Section Cooling Fan Motor discharges heat generated by the Fusing Unit to the outside of the copier to prevent the temperature of the copier interior from rising inordinately. It also functions to draw paper being transported down onto the Suction Deck.

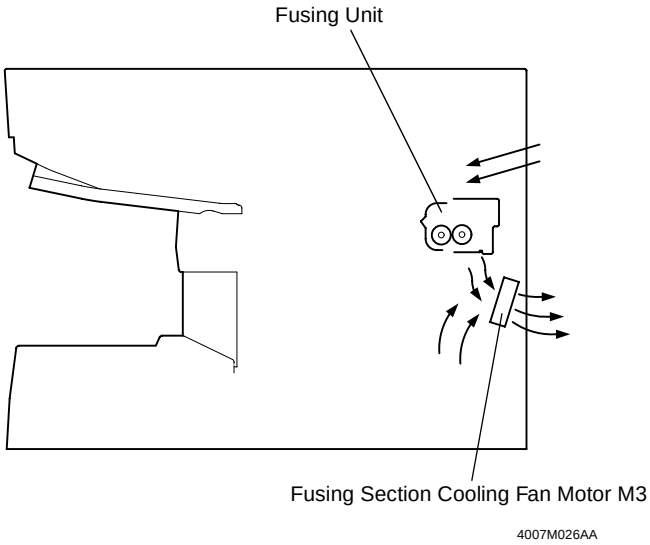

	CONTROL SIGNAL	ON	OFF	WIRING DIAGRAM
M3	PWB-A PJ14A-1	L	H	1-A