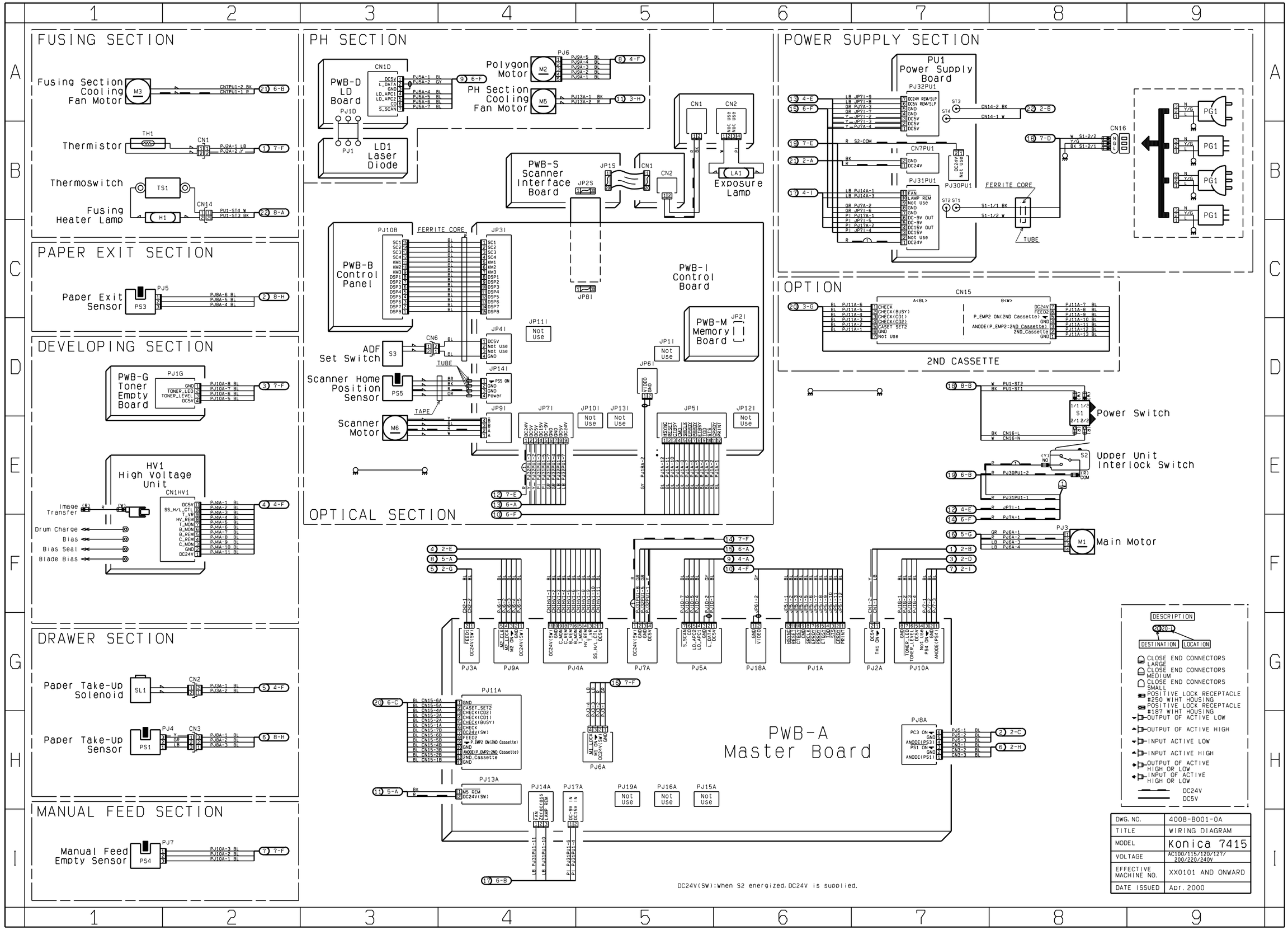

DWG. NO.	4008-B001-0A
TITLE	WIRING DIAGRAM
MODEL	Konica 7415
VOLTAGE	AC100/115/120/127/ 200/220/240V
EFFECTIVE MACHINE NO.	XX0101 AND ONWARD
DATE ISSUED	Apr. 2000

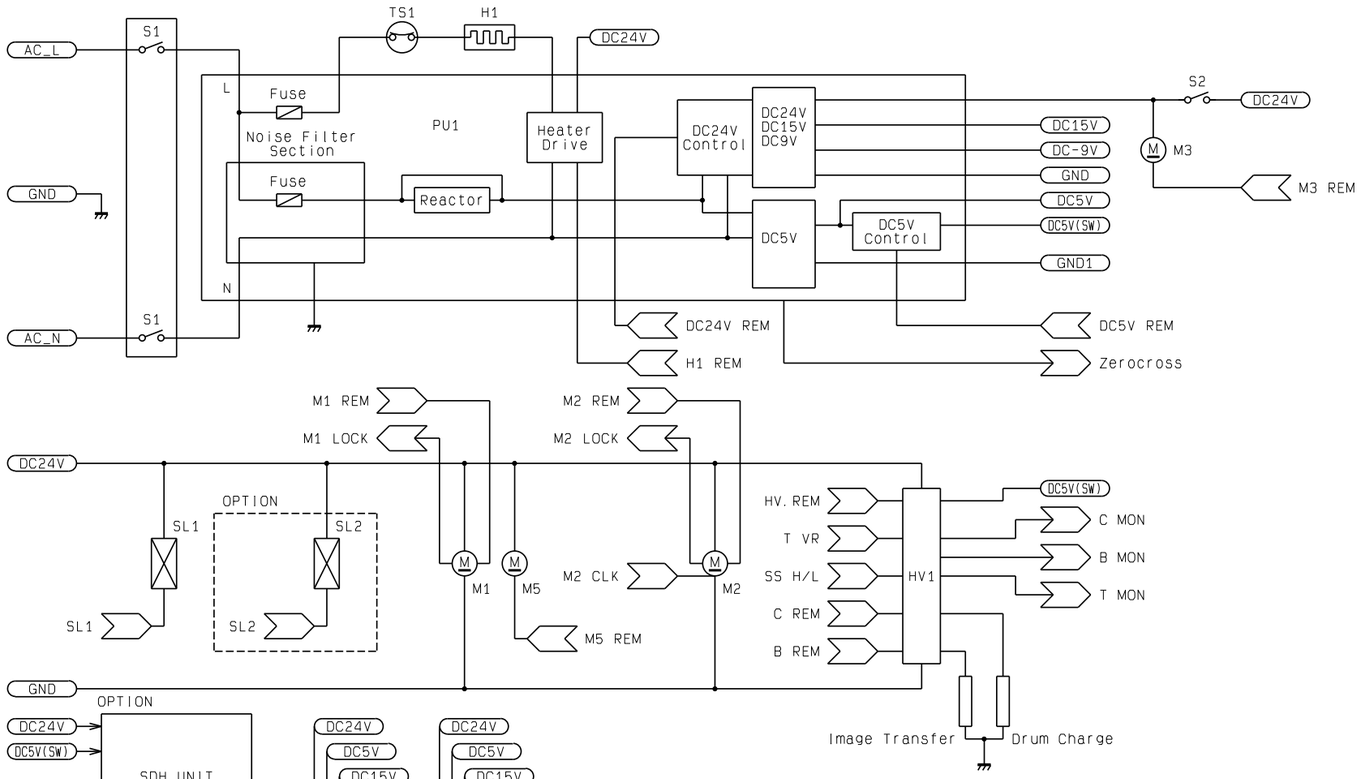

DC5V(SW):When S2 energized. DC5V is supplied.

H1	Fusing Heater Lamp
HV1	High Voltage Unit
LA1	Exposure Lamp
LD1	Laser Diode
M1	Main Motor
M2	Polygon Motor
M3	Fusing Section Cooling Fan Motor
M5	PH Section Cooling Fan Motor
M6	Scanner Motor
PS1	Paper Take-Up Sensor
PS3	Paper Exit Sensor
PS4	Paper Empty Sensor
PU1	DC Power Supply
PWB-A	Master Board
PWB-B	Control Panel
PWB-D	LD Board
PWB-G	Toner Empty Board
PWB-I	Control Board
PWB-M	Memory Board
PWB-S	Scanner Interface Board
TH1	Thermistor
TS1	Thermoswitch
S1	Power Switch
S2	Upper Unit Interlock Switch
S3	ADF Set Switch
SL1	Paper Take-Up Solenoid

DWG. NO.	4008-B101-0A
TITLE	CIRCUIT DIAGRAM
MODEL	Konica 7415
VOLTAGE	AC100/115/120/127/ 200/220/240V
EFFECTIVE MACHINE NO.	XX0101 AND ONWARD
DATE ISSUED	Mar. 2000

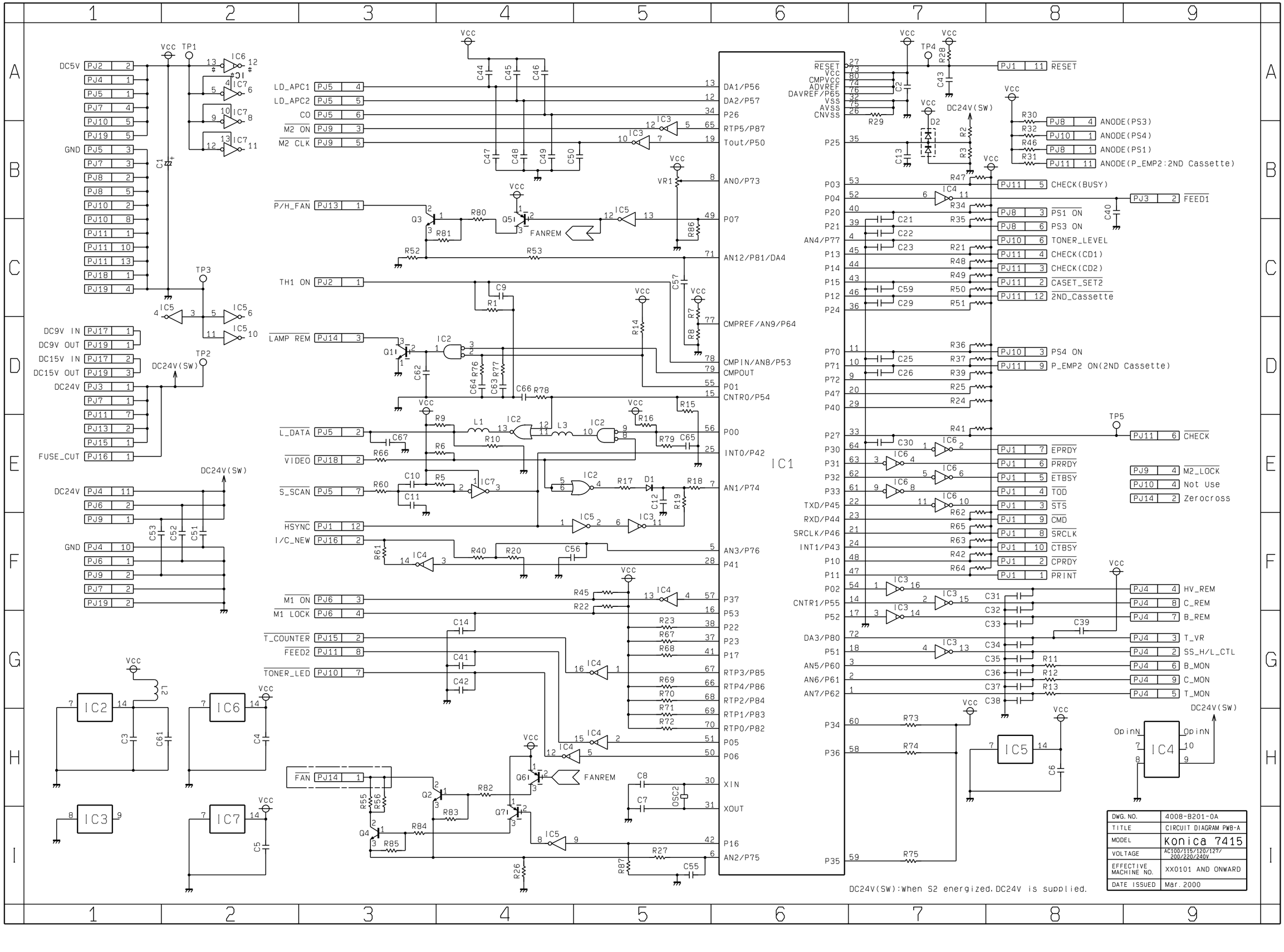
DC5V
GND
DC9V IN
DC9V OUT
DC15V IN
DC15V OUT
DC24V
FUSE_CUT
DC24V(SW)
LD_APC1
LD_APC2
CO
M2 ON
M2 CLK
P/H_FAN
TH1 ON
LAMP REM
L_DATA
VIDEO
S_SCAN
HSYNC
I/C_NEW
M1 ON
M1 LOCK
T_COUNTER
FEED2
TONER_LED
FAN
FANREM
DA1/P56
DA2/P57
P26
RTP5/P87
Tout/P50
AN0/P73
AN12/P81/DA4
CMPREF/AN9/P64
CMPIN/AN8/P53
CMPOUT
P01
CNTR0/P54
P00
INT0/P42
AN1/P74
AN3/P76
P41
P37
P53
P22
P23
P17
RTP3/P85
RTP4/P86
RTP2/P84
RTP1/P83
RTP0/P82
P05
P06
XIN
XOUT
P16
AN2/P75
IC1
RESET
CMPVCC
ADVREF
DAVREF/P65
VSS
AVSS
CNVSS
P25
P03
P04
P20
P21
AN4/P77
P13
P14
P15
P12
P24
P70
P71
P72
P47
P40
P27
P30
P31
P32
P33
TXD/P45
RXD/P44
SRCLK/P46
INT1/P43
P10
P11
P02
CNTR1/P55
P52
DA3/P80
P51
AN5/P60
AN6/P61
AN7/P62
P34
P36
P35
DC24V(SW):When S2 energized, DC24V is supplied.
RESET
CHECK(BUSY)
FEED1
PS1 ON
PS3 ON
TONER_LEVEL
CHECK(CD1)
CHECK(CD2)
CASET_SET2
2ND_Cassette
PS4 ON
P_EMP2 ON(2ND Cassette)
EPRDY
PRRDY
ETBSY
TOD
STS
CMD
SRCLK
CTBSY
CPRDY
PRINT
ANODE(PS3)
ANODE(PS4)
ANODE(PS1)
ANODE(P_EMP2:2ND Cassette)
CHECK
M2_LOCK
Not Use
Zerocross
HV_REM
C_REM
B_REM
T_VR
SS_H/L_CTL
B_MON
C_MON
T_MON
DWG. NO. 4008-B201-0A
TITLE CIRCUIT DIAGRAM PWB-A
MODEL Konica 7415
VOLTAGE AC100/115/120/127/200/220/240V
EFFECTIVE MACHINE NO. XX0101 AND ONWARD
DATE ISSUED Mar. 2000

ELECTRICAL PARTS LAYOUT

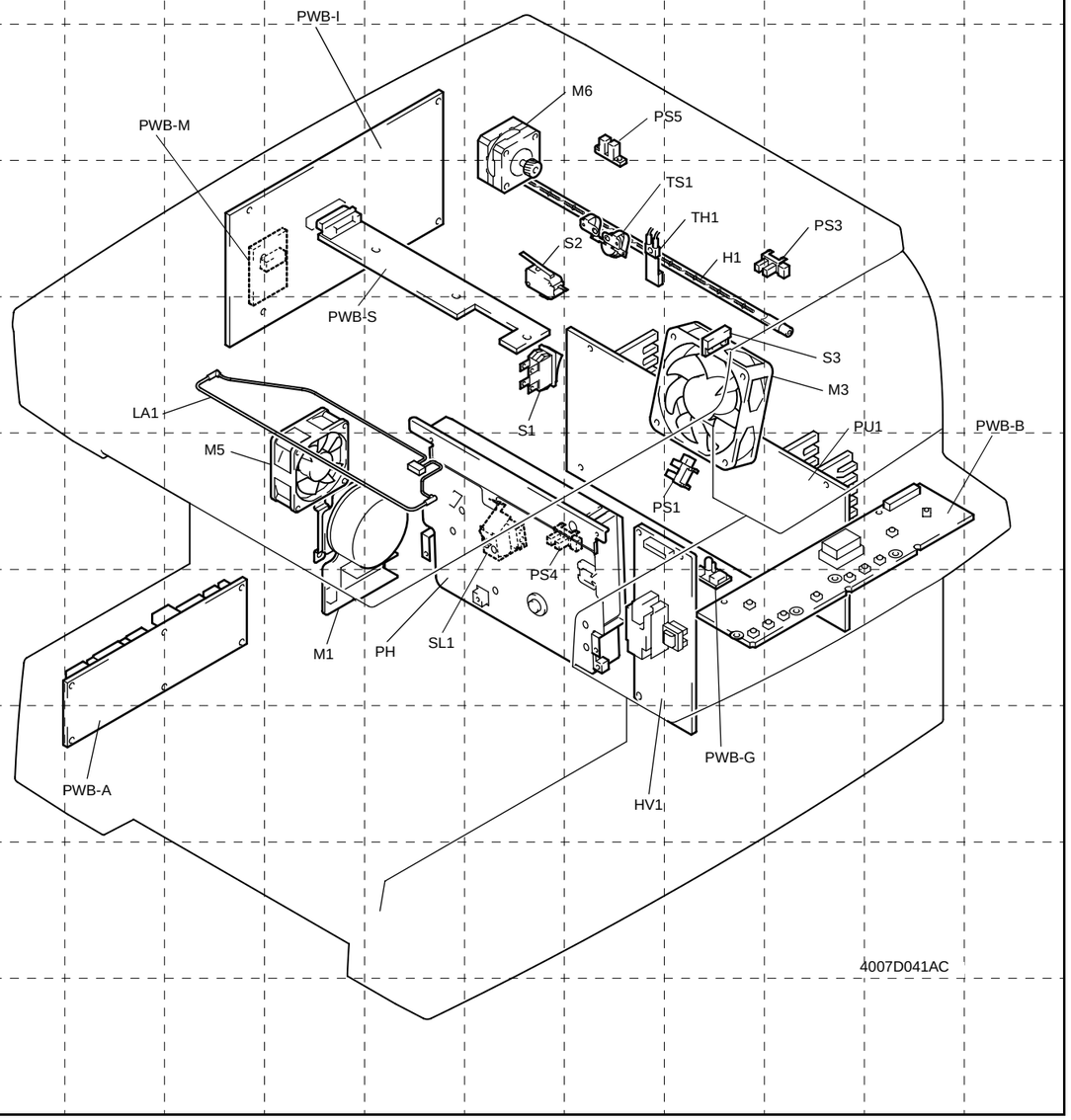

SYMBOL	PART NAME	LOCATION	GRID
H1	Fusing Heater Lamp	2-B	8-C
HV1	High Voltage Unit	2-E	7-F
LA1	Exposure Lamp	6-B	3-D
M1	Main Motor	8-F	4-E
M3	Fusing Section Cooling Fan Motor	1-A	8-D
M5	PH Section Cooling Fan Motor	4-A	4-E
M6	Scanner Motor	4-D	6-C
PH	Printer Head	3-A	6-E
PS1	Paper Take-Up Sensor	1-H	8-E
PS3	Paper Exit Sensor	1-C	9-C
PS4	Paper Empty Sensor	1-I	6-E
PS5	Scanner Home Position Sensor	4-D	7-B
PU1	Power Supply Board	7-B	9-E

SYMBOL	PART NAME	LOCATION	GRID
PWB-A	Master Board	6-H	2-F
PWB-B	Control Panel	4-B	10-E
PWB-G	Toner Empty Board	1-D	8-F
PWB-I	Control Board	5-C	4-C
PWB-M	Memory Board	5-C	4-C
PWB-S	Scanner Interface Board	5-B	5-C
S1	Power Switch	8-D	6-D
S2	Upper Unit Interlock Switch	8-E	6-C
S3	ADF Set Switch	4-C	8-D
SL1	Paper Take-Up Solenoid	1-G	6-E
TH1	Thermistor	1-B	7-C
TS1	Thermoswitch	1-B	7-C

4007-B301-0A

CONNECTORS LAYOUT

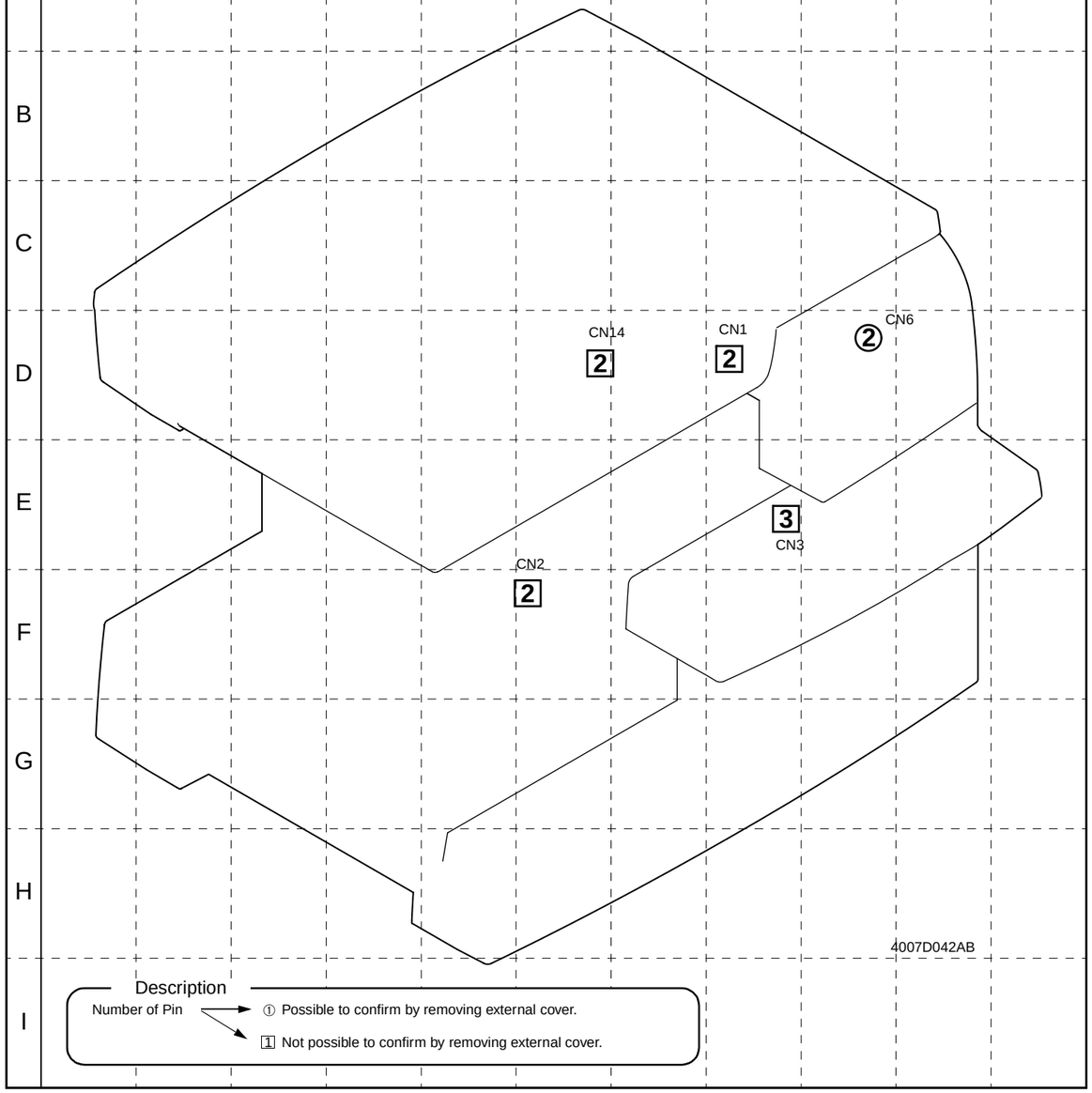

CN No.		LOCATION	GRID
CN1	2P	2-B	8-D
CN2	2P	2-G	6-F
CN3	3P	2-H	8-E
CN6	2P	4-C	9-D
CN14	2P	2-B	6-D

4007-B401-0A