Copystar

PLAIN PAPER COPIER

CS-2014

PARTS LIST

Published in Feb.'98
19570951
Revision 1

CS-2014

NOTE

1. Indicate parts number and machine model when placing an order.

eg.	Parts Number	Parts Name	Machine Model	Cycle	Quantity
	19557070	LEFT FRONT COVER (C)	CS-2014	60Hz	1

2. Service calls and freight will be charged separately.

3. Symbols in the "Parts Number" column.

• Parts with "•" are component parts or sub-assemblies of the assembly appearing immediately above them.

eg.	Parts Number	Parts Name	Parts Number	Parts Name
	19500050	CASSETTE ASS'Y	•19507010	CASSETTE, PAPER FEED
			•19507040	BASE, CASSETTE

• Parts with "••" are component parts or sub-assemblies of the assembly appearing immediately above them.

eg.	*Parts Number*	*Parts Name*	*Parts Number*	*Parts Name*
	•19568120	*FRONT MAIN CHARGER HOUSING ASS'Y*	*••19510030*	*FRONT HOUSING, MAIN*
			••19510090	*FRONT LID, MAIN*

4. See the last page of this parts list for the classification of the screws in the illustrations.

5. Items indicated by shaded areas ( ) are supply parts and should be ordered through your Regional Office.

Parts List

CS-2014

CONTENTS

FIG.1 EXTERIOR COVERS · · · · · 2
FIG.2 FRAMES · · · · · 4
FIG.3 CASSETTE · · · · · 6
FIG.4 PAPER FEED SECTION · · · · · 8
FIG.5 CHARGING SECTION · · · · · 10
FIG.6 ORIGINAL SET SECTION · · · · · 12
FIG.7 OPTICAL SECTION I · · · · · 14
FIG.8 OPTICAL SECTION II · · · · · 16
FIG.9 DEVELOPING SECTION · · · · · 18
FIG.10 CLEANING SECTION · · · · · 20
FIG.*11* TONER HOPPER SECTION · · · · · *22*
FIG.*12* FIXING SECTION · · · · · *24*
FIG.*13* DRIVING, COOLING SECTION · · · · · *26*
FIG.*14* ELECTRICAL COMPONENTS · · · · · *28*
FIG.*15* PROSESS UNIT · · · · · *30*
FIG.*16* ACCESSORY · · · · · *32*
FIG.*17* OPTION · · · · · *34*
• INDEX · · · · · *36*

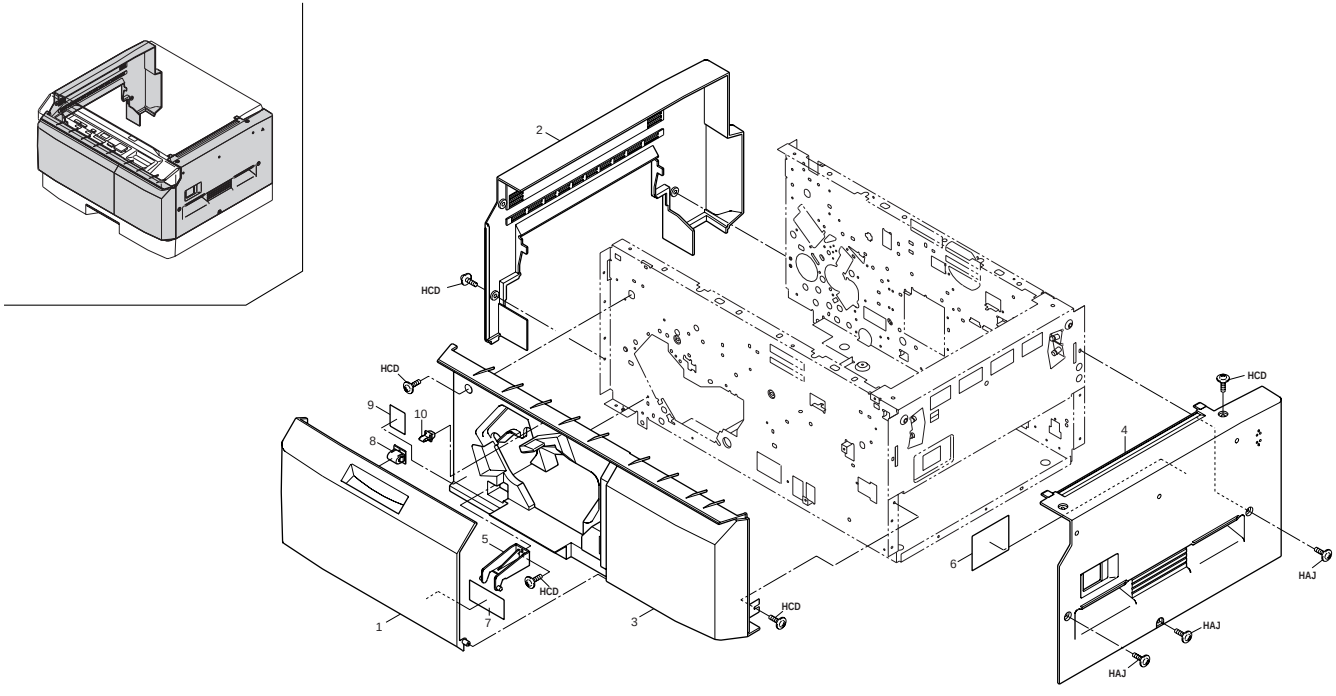
A
B
C
D
E
F
G
H
I
J
1
2
3
4
5
6
7
HCD
HCD
HCD
HCD
HCD
HAJ
HAJ
HAJ
1
2
3
4
5
6
7
8
9
10

FIG. 1 EXTERIOR COVERS

Ref. No.	Part. No.	Description	Quantity USA (120V)
1	19557070	LEFT FRONT COVER(C)	1
2	19557080	LEFT COVER(C)	1
3	19557100	RIGHT FRONT COVER(C)	1
4	19557120	RIGHT COVER(C)	1
5	19504150	FRONT MOUNT,COVER	1
6	19505070	LABEL,SIM	1
7	63856270	LABEL,SUPPLY(CPY)	1
8	75704300	CATCH FRONT COVER	1
9	1AF05040	CAUTION LABEL,HIGH VOLTAGE S (EXP)	1
10	77906210	CASSETTE STOPPER	1

• Parts with "•" are component parts or sub-assemblies of the assembly appearing immediately above them.

• Parts with "• •" are component parts or sub-assembly with "•" appearing immediately above them.

FIG. 2 FRAMES

195-1

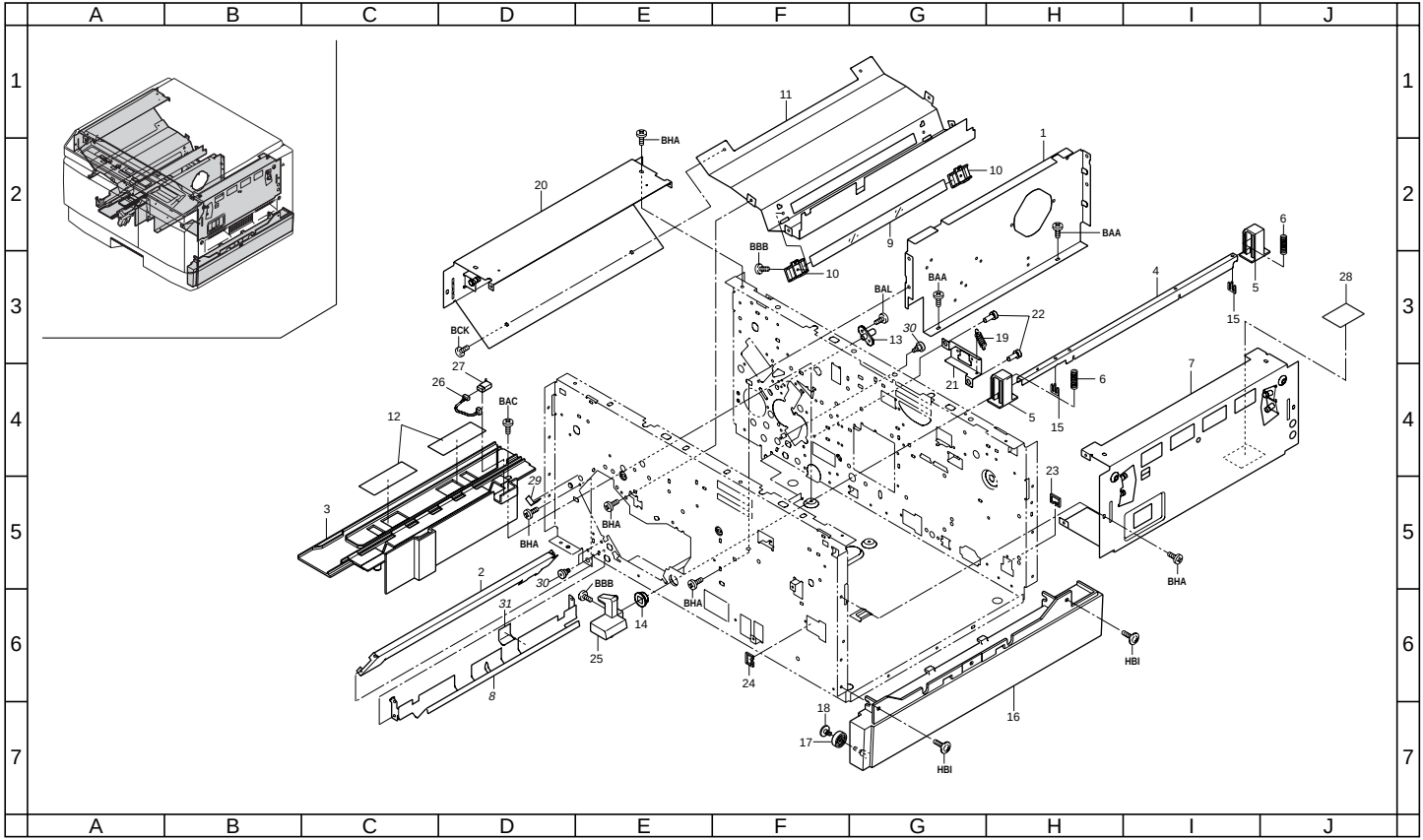

FIG. 2 FRAMES

Ref. No.	Part. No.	Description	Quantity USA (120V)
1	19502070	PARTITION,POWER SOURCE	1
2	19502080	PARTITION,FIXING	1
3	19502140	RAIL,DEVELOPING	1
4	19502150	SHAFT,DEVELOPING HOLDER	1
5	19502160	ARM,DEVELOPING HOLDER	2
6	19502180	SPRING,DEVELOPING HOLDER	2
7	19502200	UPPER RIGHT REINFORCEMENT	1
8	19506140	GUIDE,FEED ROLLER	1
9	19512060	GLASS,DUST SHIELD	1
10	19512250	HOLDER,DUST SHIELD GLASS	2
11	19512310	LEFT PARTITION,SCANNER	1
12	19514260	SEAL,DEVELOPING RAIL	2
13	19526060	MOUNT,FEEDBACK	1
14	75914670	BUSHING DEVELOPING UNIT SHIFT	1
15	75914730	STOPPER DEVELOPING UNIT SHIFT	2
16	19557020	RIGHT RAIL,CASSETTE(C)	1
17	19507100	PULLEY,CASSETTE	1
18	71602180	PIN,SHIFT LEVER	1
19	19502190	SPRING,DRAWER	1
20	19502210	UPPER LEFT REINFORCEMENT	1
21	19526050	MOUNT,DRAWER	1
22	73918080	PIN,CLEANING BLADE	2
23	M2104240	EDGING,EDS-1208U	1
24	M2104220	EDGING,EDS-1717U	1
25	19502260	LEVER,DEVELOPING HOLDER (N.A.)	1
26	19527420	WIRE,CARTRIDGE DETECTION	1
27	76727010	ORIGINAL SIZE SWITCH	1
28	19605050	CAUTION LABEL,CONTACT GLASS	1
29	*19502360*	*SPACER,DRUM POSITIONING*	*1*
30	*19506560*	*PIN,GUIDE*	*4*
31	*19506570*	*FILM,FEED ROLLER*	*1*

• Parts with "•" are component parts or sub-assemblies of the assembly appearing immediately above them.

• Parts with "• •" are component parts or sub-assembly with "•" appearing immediately above them.

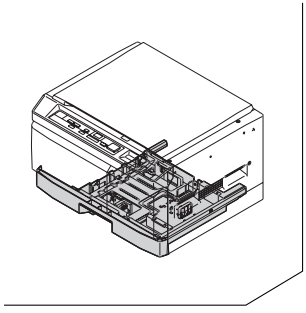

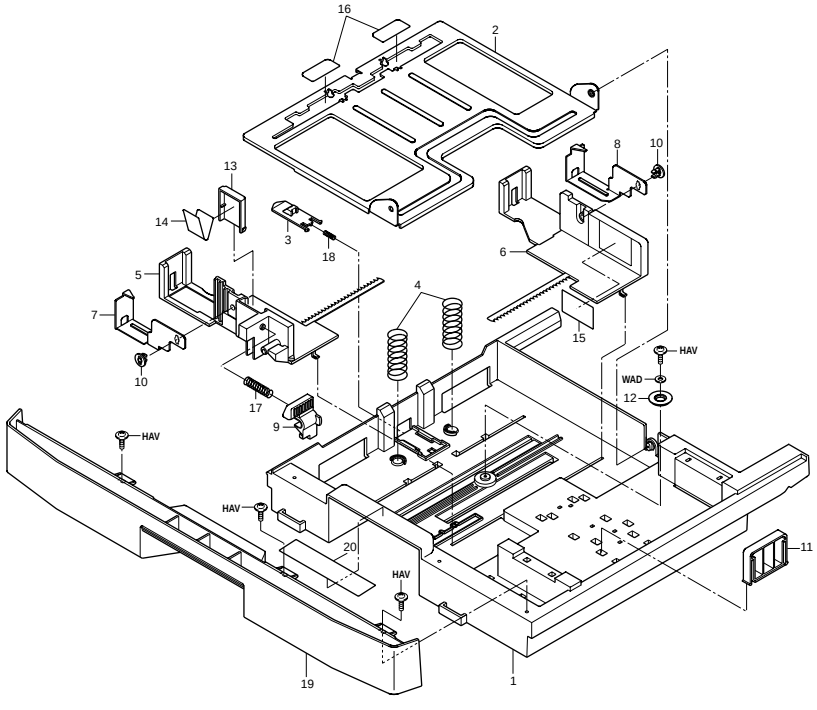
16
2
8
10
13
14
3
18
6
5
4
7
15
HAV
WAD
12
10
17
9
HAV
HAV
20
HAV
11
19
1

FIG. 3 CASSETTE

Ref. No.	Part. No.	Description	Quantity USA (120V)
	19500050	CASSETTE ASS'Y	1
1	•19507010	CASSETTE,PAPER FEED	1
2	•19507040	BASE,CASSETTE	1
3	•19507050	LEVER,CASSETTE BASE RELEASE	1
4	•19507210	SPRING,CASSETTE	2
5	•34907020	FRONT CURSOR,CASSETTE	1
6	•34907030	REAR CURSOR,CASSETTE	1
7	•34907040	FRONT CLAW,CASSETTE	1
8	•34907050	REAR CLAW,CASSETTE	1
9	•34907060	LEVER,CURSOR RETAINING	1
10	•34907070	PIN,CLAW CASSETTE	2
11	•34907130	REAR STOPPER,PAPER	1
12	•34907140	GEAR 18,CASSETTE	1
13	•34907260	HOLDER,CURSOR	1
14	•34907270	PLATE SPRING,CURSOR	1
15	•34907330	LABEL,PAPER UPPER LIMIT	1
16	•34907350	PAD A,CASSETTE	2
17	•68802070	SPRING A,LIFT UP	1
18	•76508130	SPRING BELT GUIDE ROLLER	1
19	19557140	COVER,CASSETTE(C)	1
20	19505100	LABEL PAPER SET	1

• Parts with "•" are component parts or sub-assemblies of the assembly appearing immediately above them.

• Parts with "• •" are component parts or sub-assembly with "•" appearing immediately above them.

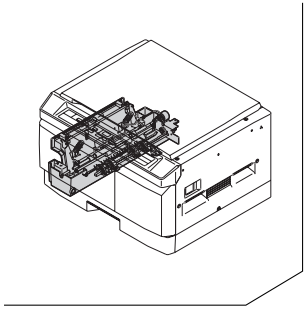

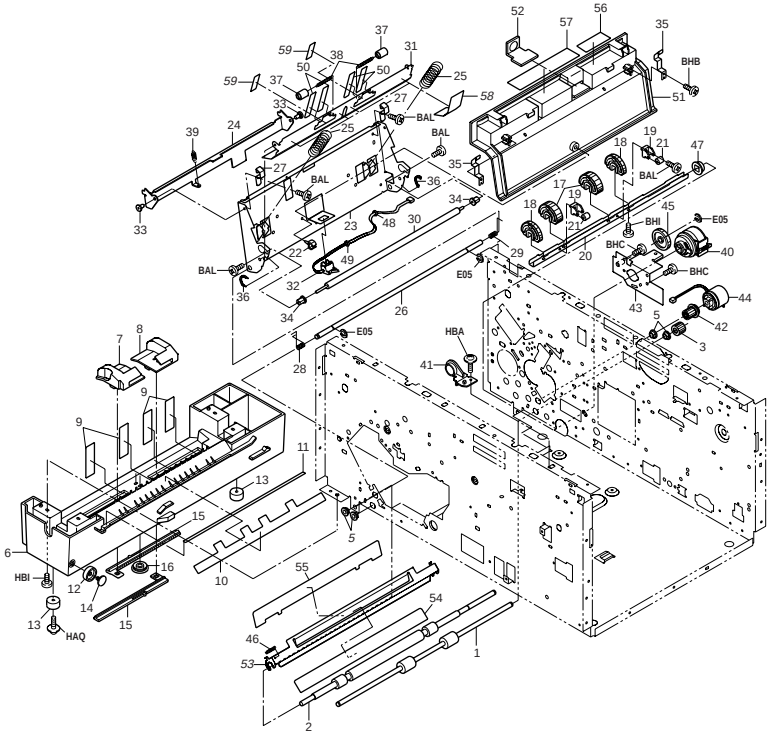
BAL
BHB
BHI
BHC
E05
HBA
HBI
HAQ

FIG. 4 PAPER FEED SECTION

Ref. No.	Part. No.	Description	Quantity USA (120V)
1	19506060	ROLLER,FEED	1
2	19506070	ROLLER,REGISTRATION DRIVE	1
3	19522170	GEAR 16,FEED	1
5	29806810	BUSHING,6 REGISTRATION	*4*
6	19557040	LOWER LEFT MOUNT BASE,FRAME(C)	1
7	19506210	FRONT CURSOR,BYPASS	1
8	19506220	REAR CURSOR,BYPASS	1
9	19506510	FILM,FEED SHIFT	4
10	19506540	FILM B,FEED SHIFT	1
11	19507090	SEAL,CUSHION	1
12	19507100	PULLEY,CASSETTE	1
13	65902670	CUSHION RUBBER	2
14	71602180	PIN,SHIFT LEVER	1
15	72906160	RACK,STACK BYPASS	2
16	72906170	PINION,STACK BYPASS	1
17	19506230	PULLEY A,PAPER FEED	2
18	19506240	PULLEY B,PAPER FEED	2
19	19506250	SUPPORT PLATE,PULLEY	2
20	19506270	SHAFT,PAPER FEED	1
21	34907290	PULLEY,GUIDE	2
22	M2105720	MINIATURE CLAMP,UAMS-05-2	1
23	19502090	BASE,RELEASE	1
24	19502100	HOOK,RELEASE	1
25	19502120	SPRING TRANSFER PRESSING	2
26	19502220	SUPPORT BAR,RELEASE	1
27	19502290	HOLDER,FIXING PRESSURE RELEASE LEVER	2
28	19502340	FRONT SPRING,RELEASE AUXILIARY	1
29	19502350	REAR SPRING,RELEASE AUXILIARY	1
30	19506080	ROLLER,REGISTRATION IDLE	1
31	19506100	GUIDE,BYPASS	1
32	19506310	SWITCH,REGISTRATION	1
33	60116080	PIN RAIL DEV.	2
34	63806240	FRONT BUSHING,REGISUTORATION	2
35	19502330	HOLDER,PRESSURE RELEASE	2
36	71607160	PRESSING SPRING	2
37	72907100	PULLEY,PAPER GUIDE	2
38	72907110	SPRING,PAPER GUIDE PULLEY	2
39	75714310	SPRING DEVELOPING UNIT LOCK LEVER	1
40	19593070	PARTS,CLUTCH,PAPER FEED,SP	1
41	19506050	BUSHING,PAPER FEED ROLLER	1
42	19506090	GEAR 14,REGISTRATION	1
43	19506190	STOPPER,PAPER FEED CLUTCH	1
44	19593080	PARTS,CLUTCH,REGISTRATION,SP	1
45	19522200	GEAR 35	1
46	63213360	SPRING,PAPER EJECT HOLDER	1
47	75914670	BUSHING DEVELOPING UNIT SHIFT	1
48	M2107120	BINDING BAND SG-130	1
49	M2607010	BINDING BAND,PLT1M	1
50	19506550	FILM,FEED PULLEY	4
51	19557110	COVER,RELEASE(C)	1
52	19504080	BUTTON,RELEASE	1
53	19506110	UPPER FRONT GUIDE,TRANSFER	1
54	19506520	UPPER FRONT FILM,TRANSFER	1
55	19506530	UPPER FRONT FILM,TRANSFER AUXILIARY	1
56	19505080	CAUTION LABEL,HIGH VOLTAGE (EXP)	1
57	19505090	CAUTION LABEL,HIGH TEMPERATURE (EXP)	1
58	*19506580*	*FILM,RESISTANCE*	*4*
59	*19506590*	*FILM,PULLEY HOLDER*	*2*

• Parts with "•" are component parts or sub-assemblies of the assembly appearing immediately above them.

• Parts with "• •" are component parts or sub-assembly with "•" appearing immediately above them.

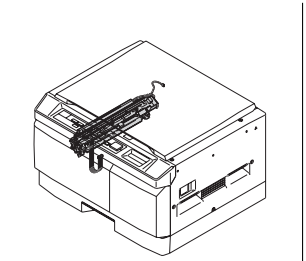

Be sure to order the tungsten wire Ref. No. *19* by the 100 meters spool (41626652)

Be sure to order the tungsten wire Ref. No. 31 by the 50 meters spool (42929503)

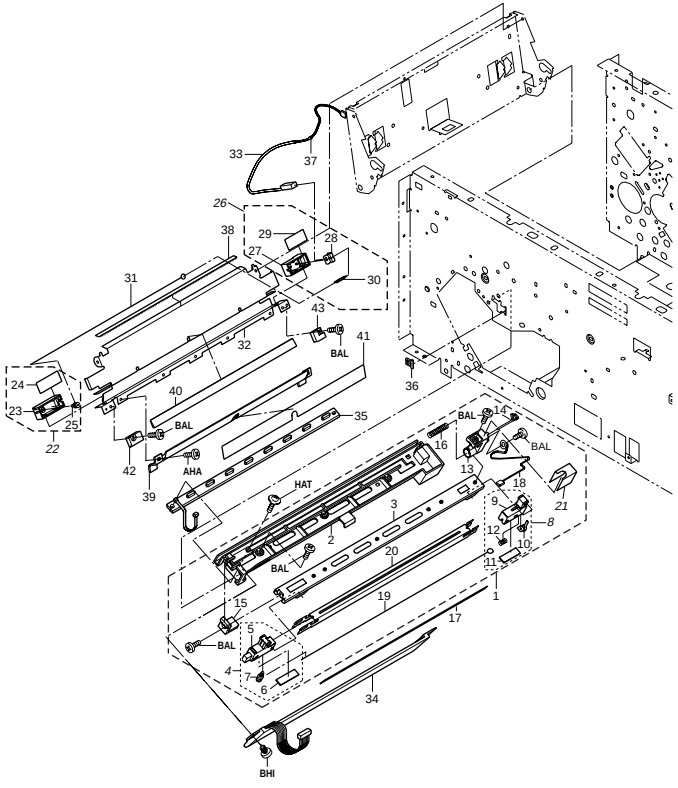

FIG. 5 CHARGING SECTION

Ref. No.	Part. No.	Description	Quantity USA (120V)
1	19593010	PARTS,CHARGE UNIT ASS'Y,SP	1
2	•19510010	HOUSING,CHARGE UNIT	1
3	•19510020	RAIL,MAIN	1
4	*•19568100*	*FRONT MAIN CHARGER HOUSING ASS'Y*	*1*
5	*••19510030*	FRONT HOUSING,MAIN	1
6	*••19510090*	FRONT LID,MAIN	1
7	*••33910230*	PIN,CHARGER	1
8	*•19594900*	*SET,REAR MAIN CHARGER HOUSING,SP*	*1*
9	*••19510040*	REAR HOUSING,MAIN	1
10	*••19510050*	TERMINAL,MAIN	1
11	*••19510100*	REAR LID,MAIN	1
12	*••48527200*	SPRING,CHARGER	1
13	•19510060	HOUSING,MAIN ELECTRODE	1
14	•19510070	ELECTRODE,MAIN	1
15	•19510080	RETAINER,MAIN	1
16	•19510110	SPRING,MAIN RELEASE	1
17	•19510120	SEAL,LIGHT SHIELD BLANK	1
18	•19527140	WIRE,HIGH VOLTAGE	1
19	•41626652	TUNGSTEN WIRE	1
20	•63810010	SHIELD,MAIN CHARGER	1spl
21	*•19510130*	*BARRIER,MAIN ELECTRODE*	*1*
22	*19568120*	*FRONT TRANSFER CHARGER HOUSING ASS'Y*	*1*
23	*•19516020*	FRONT HOUSING,TRANSFER	1
24	*•19516070*	FRONT LID,TRANSFER	1
25	*•33910230*	PIN,CHARGER	1
26	*19594910*	*SET,REAR TRANSFER CHARGER HOUSING,SP*	*1*
27	*•19516030*	REAR HOUSING,TRANSFER	1
28	*•19516040*	TERMINAL,TRANSFER	1
29	*•19516080*	REAR LID,TRANSFER	1
30	*•48527200*	SPRING,CHARGER	1
31	42929503	TUNGSTEN WIRE(50M)	1spl
32	19516010	SHIELD,TRANSFER	1
33	19527150	WIRE,TRANSFER HIGH VOLTAGE	1
34	*19528080*	*BLANK LAMP PCB*	*1*
35	63828090	CLEANING LAMP PCB	1
36	M2104260	EDGING,EDS-0607U(KITAGAWA)	1
37	M2107120	BINDING BAND SG-130	1
38	19516150	STATIC ELIMINATOR,CONVEYING	1
39	19516050	LOWER FRONT GUIDE,TRANSFER	1
40	19516060	REAR GUIDE,TRANSFER	1
41	19516120	LOWER FRONT SHEET,TRANSFER	1
42	19516130	FRONT PROJECTION,TRANSFER	1
43	19516140	REAR PROJECTION,TRANSFER	1

• Parts with "•" are component parts or sub-assemblies of the assembly appearing immediately above them.

• Parts with "• •" are component parts or sub-assembly with "•" appearing immediately above them.

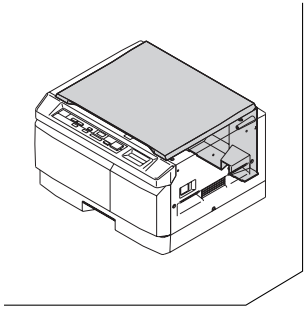

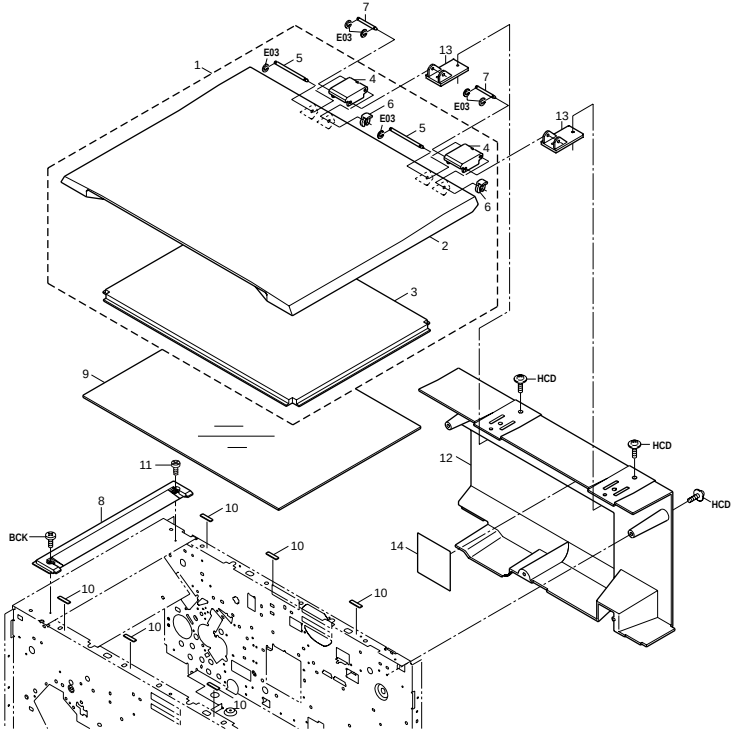
1
2
3
4
5
6
7
8
9
10
11
12
13
14
E03
HCD
BCK

FIG. 6 ORIGINAL SET SECTION

Ref. No.	Part. No.	Description	Quantity USA (120V)
1	19500250	ORIGINAL HOLDER ASS'Y	1
2	•19504170	COVER,ORIGINAL HOLDER	1
3	•19504180	MAT,ORIGINAL	1
4	•19504190	MOUNT,ARM	2
5	•19504210	PIN B,FULCRUM	2
6	•78620710	CLAW STOPPER	2
7	19504200	PIN A,FULCRUM	2
8	19512050	ORIGINAL SIZE INDICATOR,ORIGINAL (INCH)	1
9	19512260	CONTACT GLASS	1
10	29812291	CUSHION,CONTACT GLASS	6
11	67312250	PIN,ORIGINAL INDICATION PLATE	1
12	19557090	REAR COVER(C)	1
13	19504220	MOUNT BASE,ORIGINAL HOLDER	2
14	19512190	FILTER,DUST SHIELD	1

• Parts with "•" are component parts or sub-assemblies of the assembly appearing immediately above them.

• Parts with "• •" are component parts or sub-assembly with "•" appearing immediately above them.

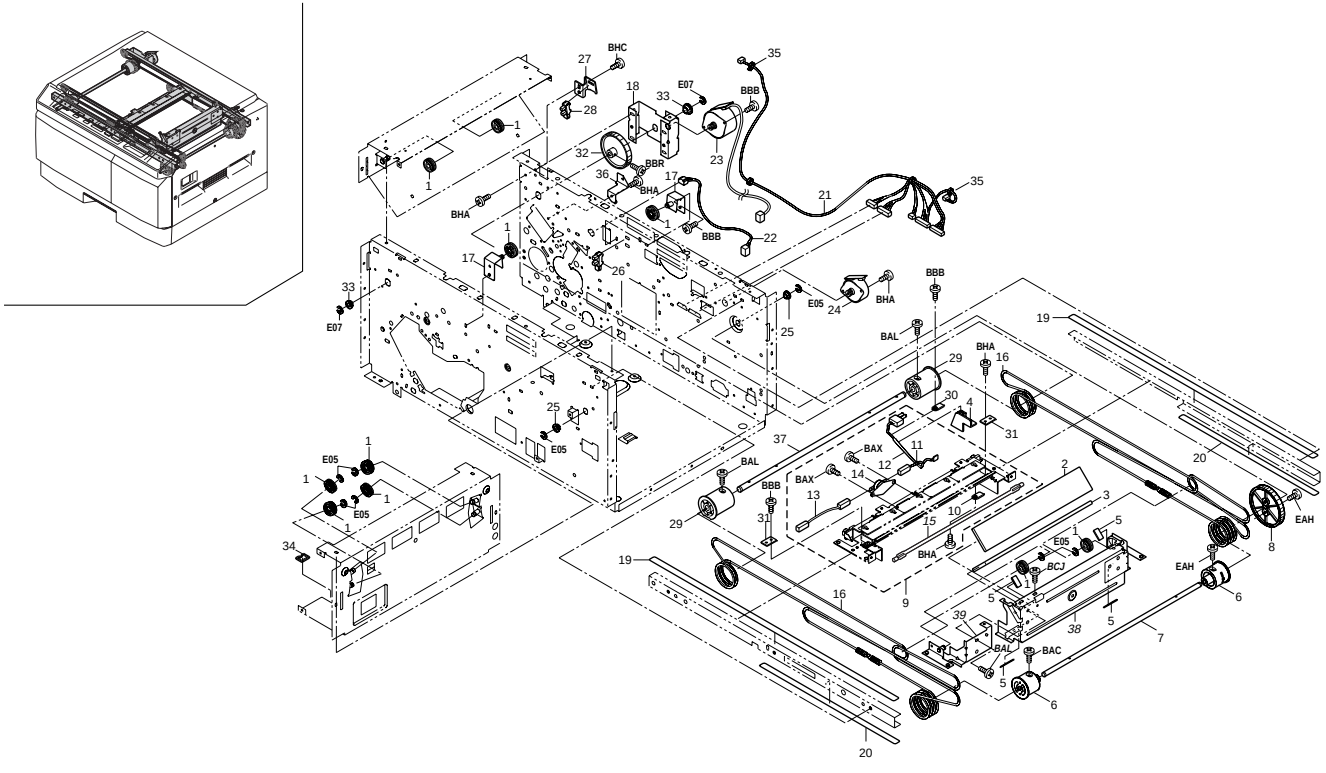
A B C D E F G H I J
1 2 3 4 5 6 7
BHC
E07
BBB
BBR
BHA
E05
BAL
BAX
BCJ
EAH
BAC

FIG. 7 OPTICAL SECTION I

Ref. No.	Part. No.	Description	Quantity USA (120V)
1	19512150	PULLEY,SCANNER	10
2	19512160	MIRROR,2	1
3	19512170	MIRROR,3	1
4	19512200	GUIDE,FEEDER WIRE	1
5	75712080	MIRROR HOLDER	4
6	19512100	DRUM,WIRE	2
7	19512120	SHAFT,WIRE DRUM	1
8	19512240	GEAR 124,WIRE DRIVE	1
9	19593050	PARTS,LIGHT UNIT ASS'Y 100,SP	1
10	•M2105000	NYLON CLAMP 2N,NK-2N	1
11	•M2607010	BINDING BAND,PLT1M	1
12	•19527050	FEEDER WIRE,SCANNER	1
13	•19527060	WIRE,THERMOSTAT SCANNER	1
14	•69312020	THERMAL PROTECTOR,SCANNER	1
15	*•19568140*	*LAMP 100*	*1*
16	19593110	PARTS,WIRE,SCANNER,SP	2
17	19512270	MOUNT,SCANNER PULLEY	2
18	19512280	MOUNT,SCANNER MOTOR	1
19	*19512340*	*UPPER RAIL,SCANNER*	*2*
20	*19512350*	*LOWER RAIL,SCANNER*	*2*
21	19527030	WIRE,SCANNER	1
22	19527170	WIRE,SCANNER PRIMARY	1
23	19593220	PARTS,MOTOR,SCANNER,SP	1
24	19593240	PARTS,MOTOR,LENS UNIT,SP	1
25	29717230	BUSHING 6,FEED BACK	2
26	66006350	SWITCH,CASSETTE LIFT	1
27	66212080	MOUNT,SCANNER SWITCH	1
28	72127100	PI SWITCH,OPTICAL SECTION	1
29	75712120	DRUM SCANNER DRIVE WIRE	2
30	M2105000	NYLON CLAMP 2N,NK-2N	1
31	29912420	HOLDER,WIRE ROPE	2
32	19512220	GEAR 64,SCANNER DRIVE	1
33	67322230	BUSHING 8	2
34	M2104220	EDGING,EDS-1717U	1
35	M2107120	BINDING BAND SG-130	2
36	19502300	REAR MOUNT,COVER	1
37	19512090	SHAFT,SCANNER DRUM	1
38	*19568160*	*MIRROR FRAME 2 ASS'Y*	*1*
39	*19568170*	*MIRROR ADJUSTING PLATE ASS'Y*	*1*

• Parts with "•" are component parts or sub-assemblies of the assembly appearing immediately above them.

• Parts with "• •" are component parts or sub-assembly with "•" appearing immediately above them.

FIG. 8 OPTICAL SECTION II

195

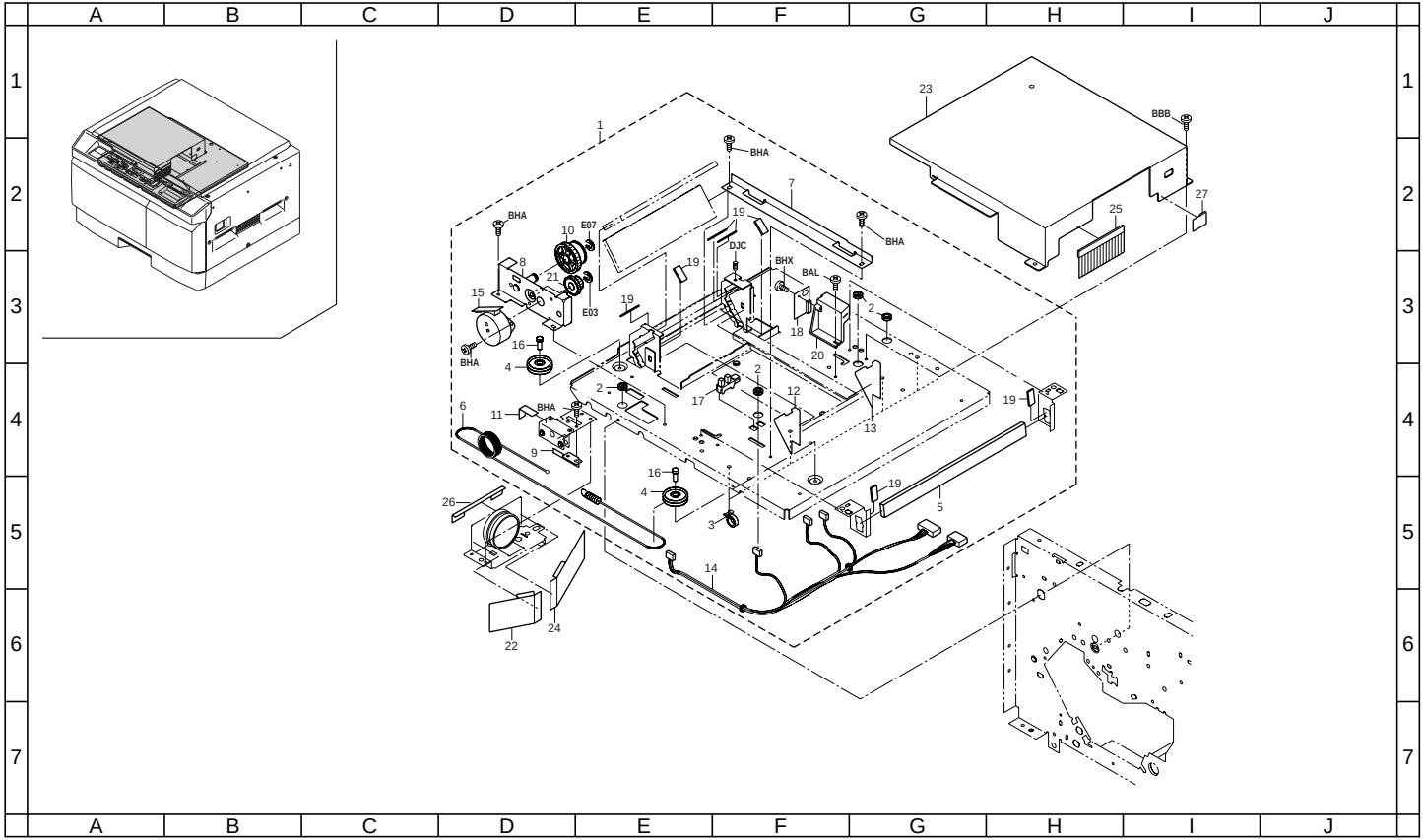

FIG. 8 OPTICAL SECTION II

Ref. No.	Part. No.	Description	Quantity USA (120V)
1	*19593040*	*PARTS,LENS UNIT ASS'Y,SP*	*1*
2	•M1203200	OPEN BUSHING,OCB-375	4
3	•M2107120	BINDING BAND SG-130	5
4	•19513050	PULLEY,LENS WIRE	2
5	•19513060	MIRROR,6	1
6	•19593120	PARTS,WIRE,LENS MOVING SCANNER,SP	1
7	•19513150	RAIL,LENS MOVING SCANNER	1
8	•19513160	MOUNT,LENS MOTOR	1
9	•19513180	LIGHT SHIELD,LENS PI	1
10	•19513190	PULLEY,LENS MOVING SCANNER	1
11	•19513260	LOWER FRONT FILM,LIGHT SHIELD	1
12	•19513280	FRONT SEAL,LIGHT SHIELD	1
13	•19513290	REAR SEAL,LIGHT SHIELD	1
14	•19527040	WIRE,SCANNER UNIT	1
15	•19593240	PARTS,MOTOR,LENS UNIT,SP	1
16	•33408180	PIN,STOPPER	2
17	•66006350	SWITCH,CASSETTE LIFT	1
18	•66228050	AE SENSOR PCB	1
19	•75712080	MIRROR HOLDER	7
20	•75713060	AE SENSOR COVER	1
21	•78022050	GEAR 19/44	1
22	19513090	UPPER FRONT FILM,LIGHT SHIELD	1
23	19513100	COVER,LENS UNIT	1
24	19513110	UPPER REAR FILM,LIGHT SHIELD	1
25	19513170	FRONT FILM,LIGHT SHIELD	1
26	19513250	UPPER FILM B,LIGHT SHIELD	1
27	19513270	REAR FILM,LIGHT SHIELD	1

• Parts with "•" are component parts or sub-assemblies of the assembly appearing immediately above them.

• Parts with "• •" are component parts or sub-assembly with "•" appearing immediately above them.

FIG. 9 DEVELOPING SECTION

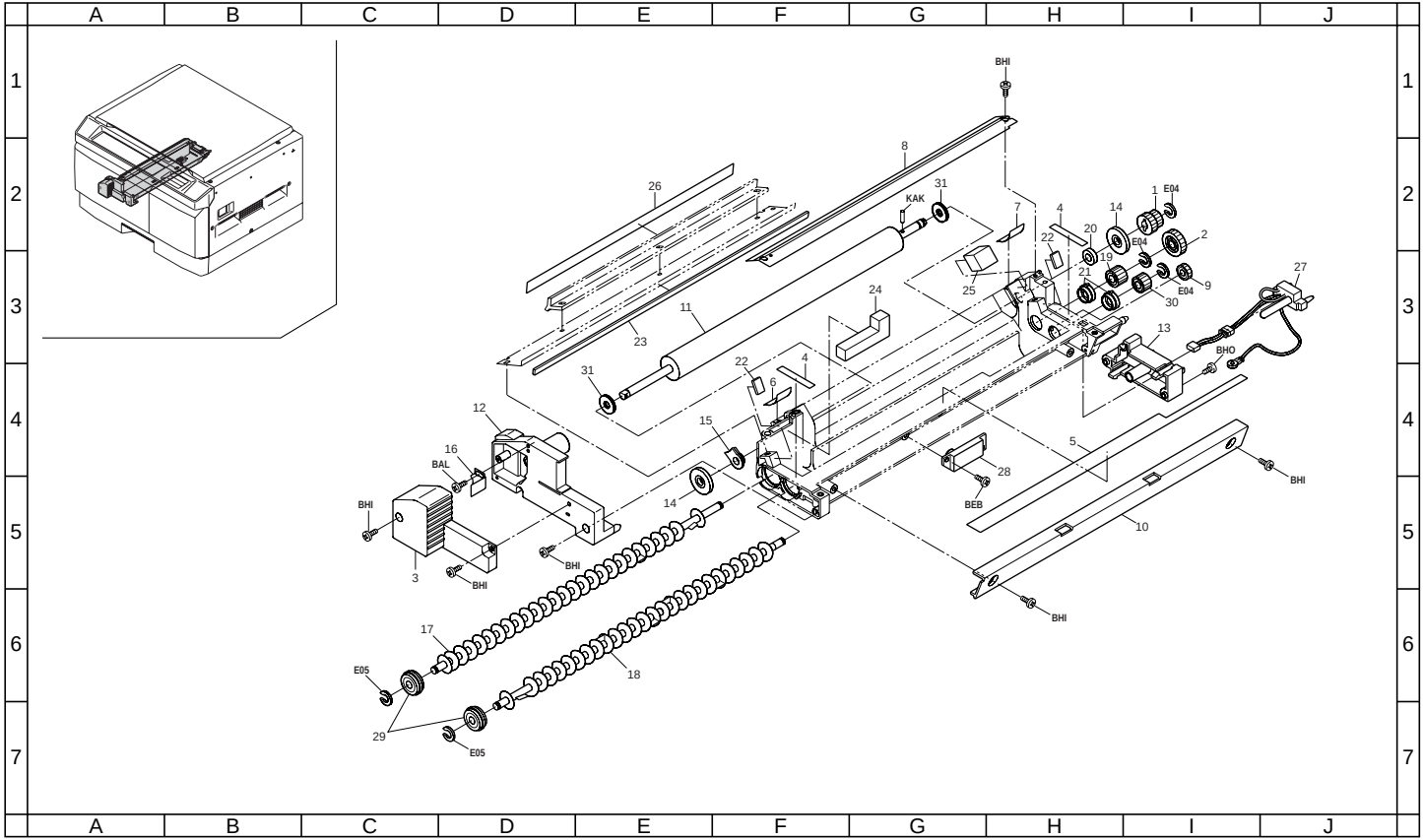

FIG. 9 DEVELOPING SECTION

Ref. No.	Part. No.	Description	Quantity USA (120V)
	19500120	DEVELOPING ASS'Y (N.A.)	1
1	•19514120	GEAR,DEVELOPING INPUT	1
2	•19514130	GEAR,DEVELOPING IDLE	1
3	•19514510	COVER,DEVELOPING TERMINAL(N.A.)	1
4	•19514180	SPONGE A,DEVELOPING	2
5	•19514190	SPONGE B,DEVELOPING	1
6	•19514220	FRONT FILM,DEVELOPING	1
7	•19514230	REAR FILM,DEVELOPING	1
8	•19514240	UPPER SEAL B,DEVELOPING	1
9	•65914110	GEAR 13,IDLE DEVELOPING	1
10	•19514050	RIGHT COVER,DEVELOPING	1
11	•19514010	MAGNET DEVELOPING	1
12	•19514030	FRONT COVER,DEVELOPING (EUR)	1
13	•19514040	REAR COVER,DEVELOPING	1
14	•19514090	PULLEY,DS	2
15	•19514100	FRONT BUSHING,DEVELOPING	1
16	•19514110	RETAINER,DEVELOPING POSITION	1
17	•19514140	SPIRAL A,DEVELOPING	1
18	•19514150	SPIRAL B,DEVELOPING	1
19	•19514160	GEAR,AGITATION	1
20	•19514250	BEARING,DEVELOPING	1
21	•19514270	REAR BUSHING,AGITATION	2
22	•19514280	SPONGE C,DEVELOPING	2
23	•19514290	SPONGE D,DEVELOPING	1
24	•19514300	FRONT SPONGE,DOCTOR BLADE	1
25	•19514310	REAR SPONGE,DOCTOR BLADE	1
26	•19514320	FILM,DOCTOR BLADE	1
27	•19527100	WIRE,DEVELOPING UNIT (N.A.)	1
28	•33914190	TONER SENSOR	1
29	•34914370	REAR BUSHING,SPIRAL	2
30	•63722330	GEAR 14,TONER FEED	1
31	•63814640	FRONT SEAL,SLEEVE	2

• Parts with "•" are component parts or sub-assemblies of the assembly appearing immediately above them.

• Parts with "• •" are component parts or sub-assembly with "•" appearing immediately above them.

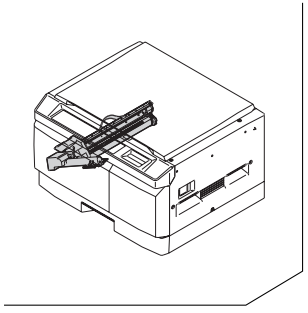

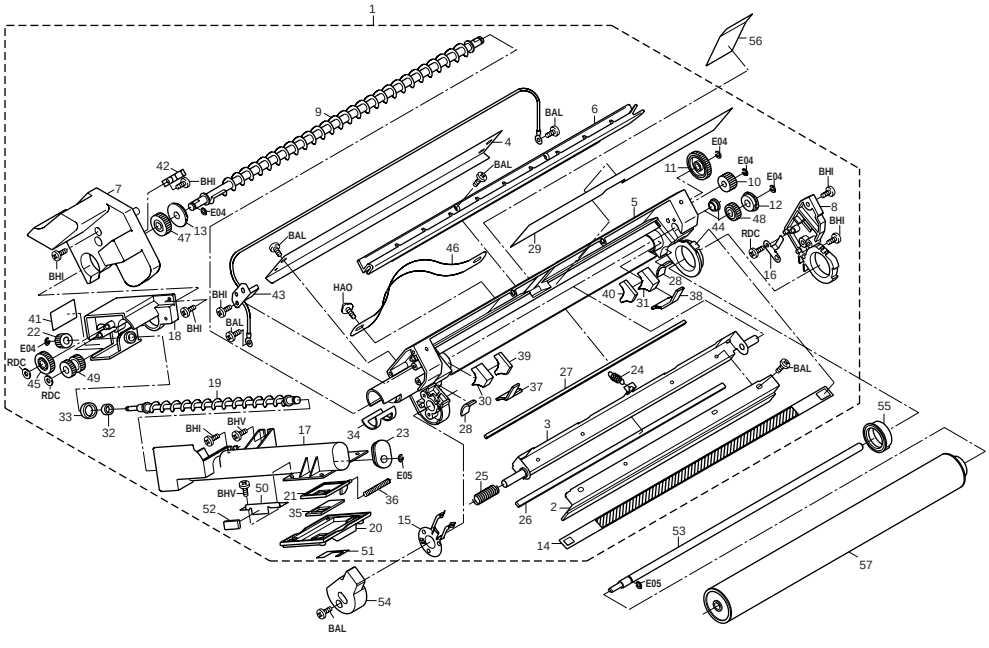
1
2
3
4
5
6
7
8
9
10
11
12
13
14
15
16
17
18
19
20
21
22
23
24
25
26
27
28
29
30
31
32
33
34
35
36
37
38
39
40
41
42
43
44
45
46
47
48
49
50
51
52
53
54
55
56
57
BAL
BHI
BHV
E04
E05
HAO
RDC

FIG. 10 CLEANING SECTION

Ref. No.	Part. No.	Description	Quantity USA (120V)
1	19500091	DRUM UNIT ASS'Y (N.A.)	1
2	•19593130	PARTS,BLADE CLEANING,SP	1
3	•19518020	MOUNT,BLADE	1
4	•19593140	PARTS,LOWER BLADE CLEANING,SP	1
5	•19518040	HOUSING,CLEANING	1
6	•19518050	UPPER COVER,CLEANING	1
7	•19518410	FRONT COVER,CLEANING (N.A.)	1
8	•19518071	REAR COVER,CLEANING (EUR)	1
9	•19518080	SPIRAL,CLEANING	1
10	•19518110	GEAR 15,IDLE	1
11	•19518121	GEAR 27,THRUST	1
12	•19518140	REAR BUSHING,SPIRAL	1
13	•19518150	FRONT BUSHING,SPIRAL	1
14	•19593330	PARTS,GRID MAIN,SP	1
15	•19518171	PLATE SPRING,GRID	1
16	•19518180	PLATE SPRING,FEEDBACK	1
17	•19518191	HOUSING,RECYCLE	1
18	•19518201	MOUNT BASE,RECYCLE	1
19	•19518210	SPIRAL,RECYCLE	1
20	•19518220	COVER,RECYCLE	1
21	•19518230	SHUTTER,RECYCLE	1
22	•19518240	GEAR 12,RECYCLE	1
23	•19518250	BUSHING,RECYCLE	1
24	•19518260	SPRING,BLADE	1
25	•19518270	SPRING,THRUST	1
26	•19518280	SEAL,BLADE	1
27	•19518290	LOWER SEAL,BLADE	1
28	•19518300	SEAL,DRUM	2
29	•19518310	FILM,CLEANING	1
30	•19518320	FRONT SEAL,CLEANING	1
31	•19518330	REAR SEAL,CLEANING	1
32	•19518361	SEAL,SPIRAL	1
33	•19518371	SEAL,MOUNT BASE	1
34	•19518380	SEAL,JOINT	1
35	•19518390	SEAL,SHUTTER	1
36	•19518400	SPRING,SHUTTER	1
37	•19518450	FRONT SEAL A,TONER	1
38	•19518460	REAR SEAL A,TONER	1
39	•19518470	FRONT SEAL B,TONER	1
40	•19518480	REAR SEAL B,TONER	1
41	•19518490	PROTECTING PLATE,GEAR	1
42	•19518500	POSITIONING PLATE,CLEANING	1
43	•19593350	PARTS,GRID PCB,SP	1
44	•29822140	BUSHING,DRUM SHAFT	1
45	•35322020	GEAR 20,PAPER FEED DRIVE	1
46	•63573070	BELT,DEVELOPING HANDLE	1
47	•63814060	GEAR 20,AGITATION	1
48	•63814090	GEAR 15,AGITATION	1
49	•72919050	GEAR 12/15,RECYCLE SECTION	1
50	•19518510	MOUNT,RELEASE SEAL	1
51	•19518520	SEAL,RECYCLE COVER	1
52	•19518540	SEAL,CARTRIDGE SHUTTER	1
53	19508040	SHAFT,DRUM	1
54	19518090	PIN,DRUM	1
55	19518100	BUSHING,DRUM	1
56	19518350	SHIELD,CLEANING	1
57	19582040	SET,DRUM(NEUTRAL)	1

• Parts with "•" are component parts or sub-assemblies of the assembly appearing immediately above them.

• Parts with "• •" are component parts or sub-assembly with "•" appearing immediately above them.

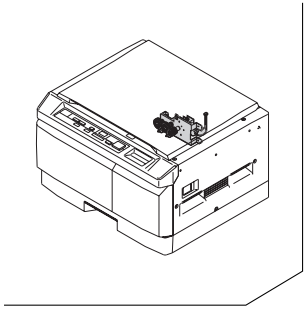

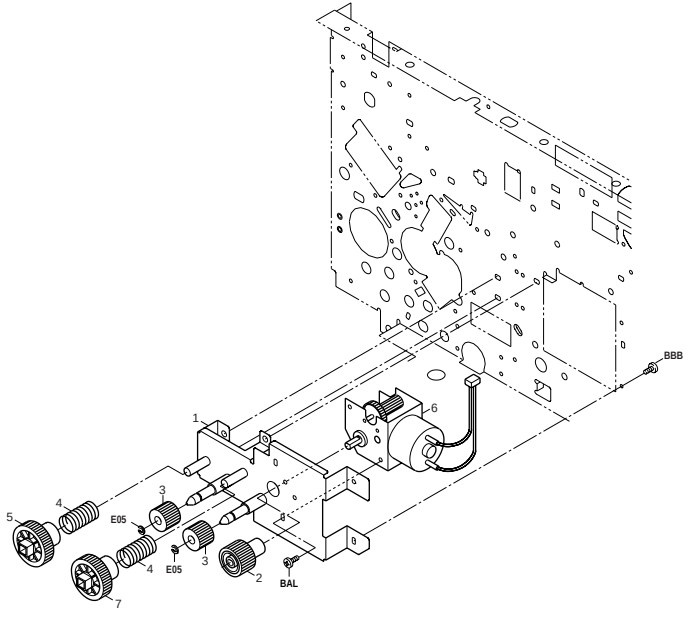
BBB
1
6
5
4
E05
3
4
E05
3
2
BAL
7

FIG. *11* TONER HOPPER SECTION

Ref. No.	Part. No.	Description	Quantity USA (120V)
1	19515010	MOUNT,TONER MOTOR	1
2	19515020	GEAR,TONER MOTOR	1
3	19515030	GEAR,CARTRIDGE IDLE	2
4	33915250	SPRING,CARTRIDGE DRIVE	2
5	33915100	GEAR A,CARTRIDGE DRIVE	1
6	63822320	MOTOR,TONER FEED	1
7	33915330	GEAR C,CARTRIDGE DRIVE	1

• Parts with "•" are component parts or sub-assemblies of the assembly appearing immediately above them.

• Parts with "• •" are component parts or sub-assembly with "•" appearing immediately above them.

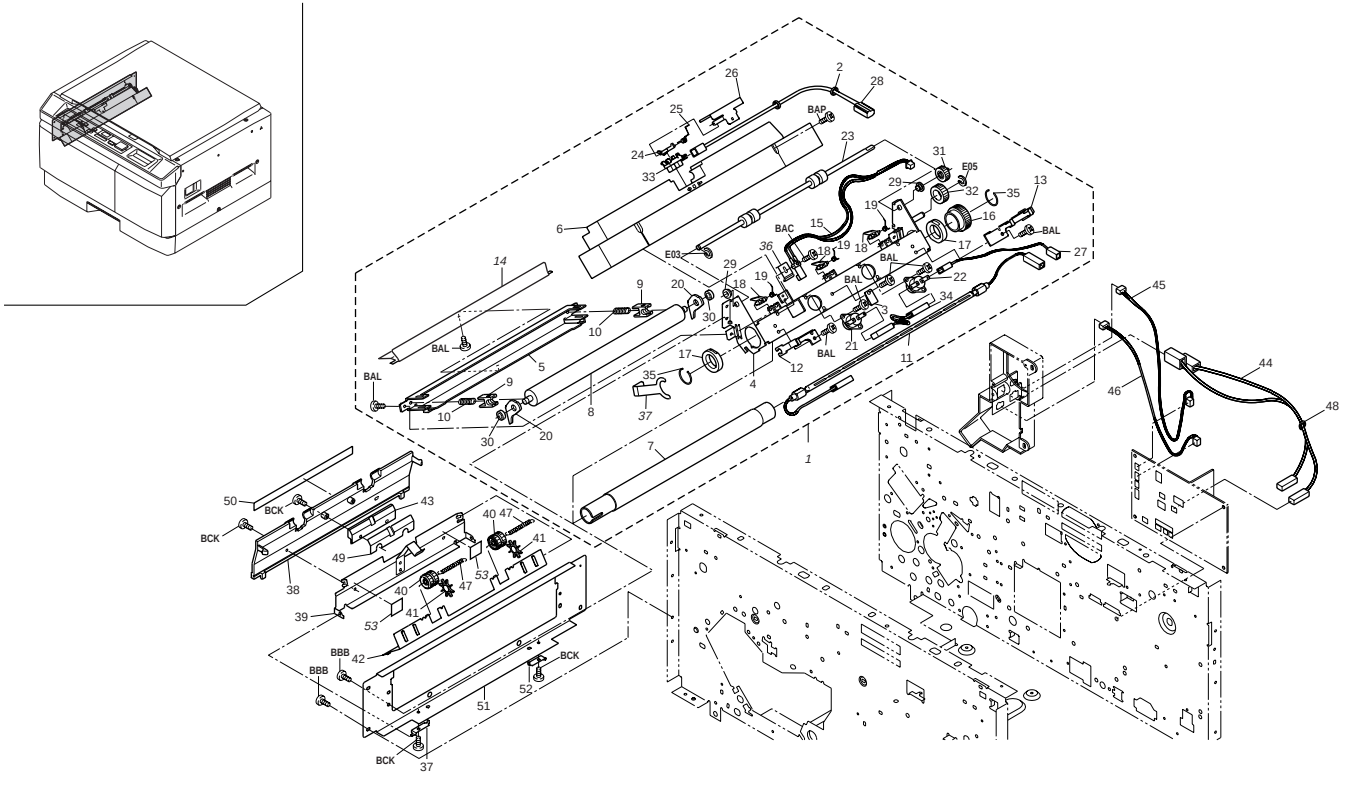
A B C D E F G H I J
1 2 3 4 5 6 7
BAL
BAP
BAC
E03
E05
BCK
BBB

FIG. *12* FIXING SECTION

Ref. No.	Part. No.	Description	Quantity USA (120V)
1	*19593031*	*PARTS FIXING ASS'Y 120,SP*	*1*
2	•M0207000	BINDING BAND,KB-100-1	1
3	•M2105810	CLAMP,HEAT PROOF,KCA-34	1
4	•19520010	UPPER HOUSING,FIXING	1
5	•19520020	LOWER HOUSING,FIXING	1
6	*•19520031*	*COVER,FIXING*	*1*
7	•19593150	PARTS,ROLLER HEAT,SP	1
8	•19593160	PARTS,ROLLER PRESSURE,SP	1
9	•19520060	HOLDER,PRESSURE BEARING	2
10	•19520070	SPRING,PRESSURE	2
11	•19593170	PARTS,FIXING HEATER 120,SP	1
12	•19520100	FRONT MOUNT,HEATER	1
13	•19520110	REAR MOUNT,HEATER	1
14	•19520120	GUIDE,FIXING ADMISSION	1
15	•19593340	PARTS,THERMISTOR FIXING,SP	1
16	•19520140	GEAR 32,FIXING	1
17	•19520150	BUSHING,HEAT ROLLER	2
18	•19520160	CLAW,SEPARATION	3
19	•19520170	SPRING,SEPARATION CLAW	3
20	•19520180	LEVER,FIXING PRESSURE RELEASE	2
21	•19520190	THERMOSTAT A,FIXING	1
22	•19520200	THERMOSTAT B,FIXING	1
23	•19521010	ROLLER,EJECT	1
24	•19521050	ACTUATOR,EJECT SWITCH	1
25	•19521060	SPRING,EJECT ACTUATOR	1
26	•19521070	MOUNT,EJECT SWITCH	1
27	•19527070	WIRE,FIXING HEATER	1
28	•19527270	WIRE,EJECT SWITCH	1
29	•49028102	BUSH 4	2
30	•63820190	BEARING, FIXING UNIT	2
31	•63822150	GEAR 18,EJECTION	1
32	•65011310	GEAR 20,IDLE	1
33	•66006350	SWITCH,CASSETTE LIFT	1
34	•69927040	WIRE,THERMOSTAT JUNCTION	1
35	•76220090	STOPPER HEAT ROLLER	2
36	*•19520210*	*BLADE,THERMISTOR*	*1*
37	*•19520220*	*GROUND PLATE,HEAT ROLLER*	*1*
38	19557130	COVER,EJECT(C)	1
39	19504110	MOUNT,EJECT COVER	1
40	19521020	PULLEY,EJECT	2
41	19521030	PADDLE,EJECT PULLEY	2
42	19521040	GUIDE,EJECT	1
43	19521090	GUIDE,EJECT SUB	1
44	19527210	JUNCTION WIRING,FIXING HEATER	1
45	19527320	JUNCTION WIRING,FIXING THERMISTOR	1
46	19527280	JUNCTION WIRING,EJECT SW	1
47	60516060	SPRING EJECT	2
48	M2607010	BINDING BAND,PLT1M	1
49	19521120	SHEET,EJECT	1
50	35405080	CAUTION LABEL,HIGH TEMPERATURE (EXP)	1
51	19502130	MOUNT,COPY TRAY	1
52	19502280	FULCRUM PLATE,EJECT COVER	2
53	*19521130*	*SPACER,EJECT*	*2*

• Parts with "•" are component parts or sub-assemblies of the assembly appearing immediately above them.

• Parts with "• •" are component parts or sub-assembly with "•" appearing immediately above them.

FIG. *13* DRIVING, COOLING SECTION

195-1

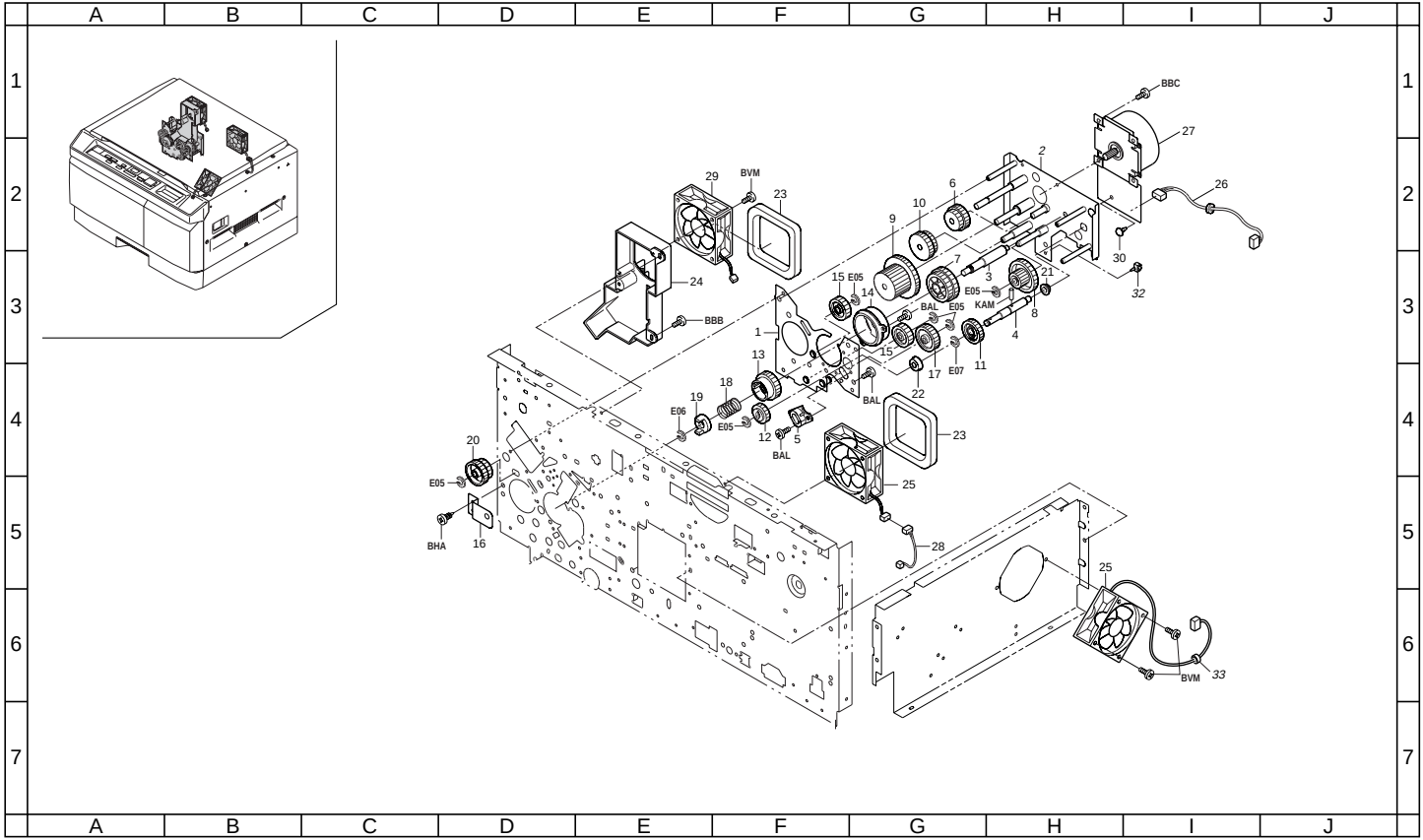

FIG. *13* DRIVING, COOLING SECTION

Ref. No.	Part. No.	Description	Quantity USA (120V)
1	19522010	FRONT MOUNT,DRIVE	1
2	19522020	REAR MOUNT,DRIVE	1
3	19522030	REAR PIN,DRUM	1
4	19522040	SHAFT,DEVELOPING DRIVE	1
5	19522050	BUSHING,DEVELOPING SLEEVE	1
6	19522060	GEAR 26/54	1
7	19522070	GEAR 38/43	1
8	19522080	GEAR 20/43	1
9	19522090	GEAR 41/56	1
10	19522110	GEAR 30/35	1
11	19522130	GEAR 30	1
12	19522140	GEAR 24,DEVELOPING DRIVE	1
13	19522150	GEAR 35,DRUM DRIVE	1
14	19522160	BUSHING,DRUM PIN	1
15	19522180	GEAR 28	2
16	19522190	HOLDER,DRIVE PIN	1
17	63722490	GEAR 33	1
18	63822030	SPRING,COUPLER DRUM	1
19	63822040	COUPLER,DRUM	1
20	63822200	GEAR,27/38	1
21	73210450	BUSH, 6	1
22	74808140	BEARING,LNR-1360ZZR	1
23	19512330	SPONGE,SCANNER FAN	2
24	19523010	DUCT,COOLING	1
25	19523020	FAN,MACHINE INSIDE COOLING	2
26	19527250	WIRE,DRIVE MOTOR	1
27	19593210	PARTS,MOTOR MAIN,SP	1
28	19527380	JUNCTION WIRING,SCANNER FAN	1
29	34927070	FAN,COOLING	1
30	M2108880	SPACER,KGPS-5RF(KITAGAWA)	1
32	*M2105720*	*MINIATURE CLAMP,UAMS-05-2*	*1*
33	*M2607010*	*BINDING BAND,PLT1M*	*1*

• Parts with "•" are component parts or sub-assemblies of the assembly appearing immediately above them.

• Parts with "• •" are component parts or sub-assembly with "•" appearing immediately above them.

FIG. *14* ELECTRICAL COMPONENTS

195-1

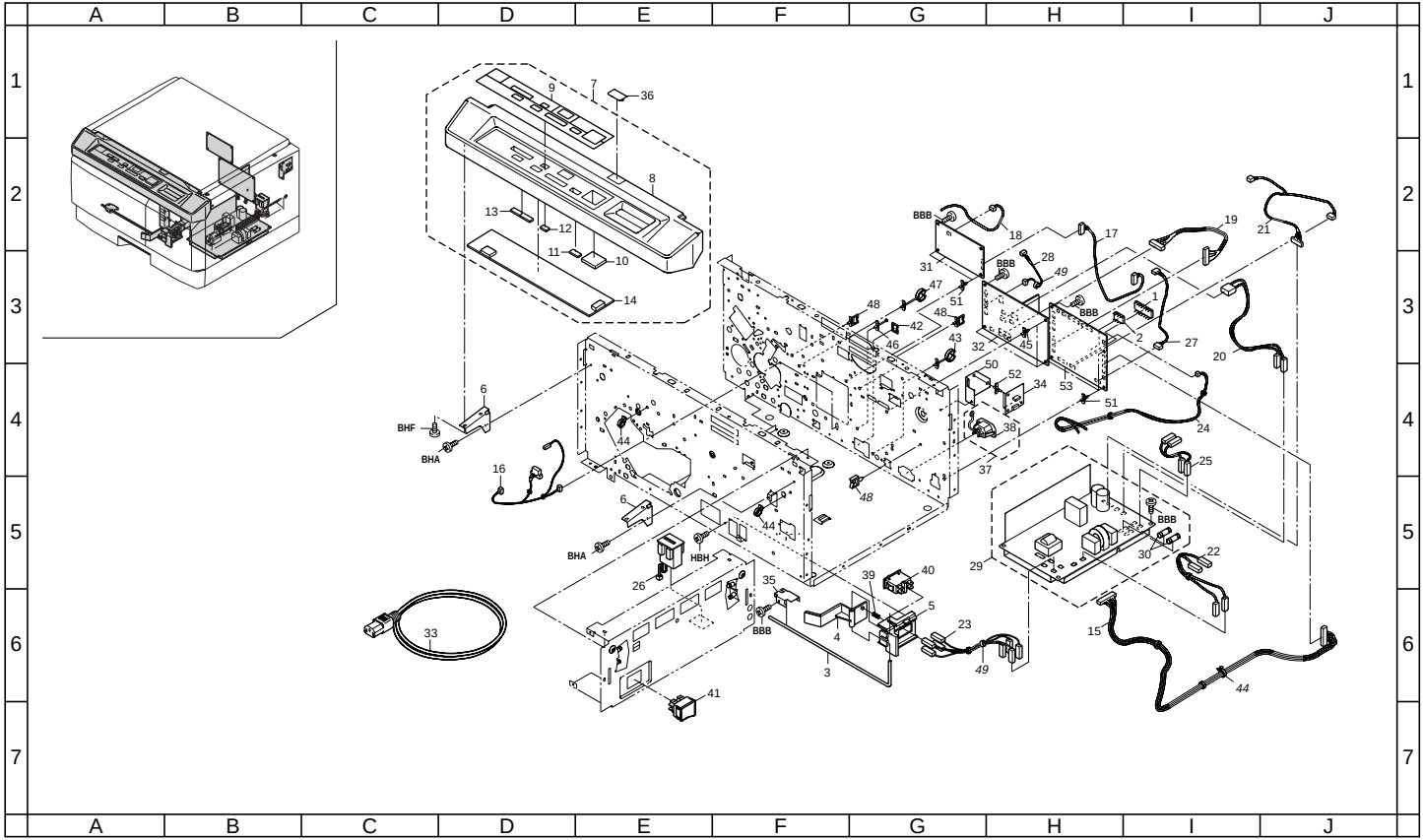

FIG. *14* ELECTRICAL COMPONENTS

Ref. No.	Part. No.	Description	Quantity USA (120V)
1	19527010	IC,ROM	1
2	33227030	IC,EEPROM	1
3	19502230	GUIDE BAR,SAFETY SWITCH	1
4	19502240	LEVER,SAFETY SWITCH	1
5	19502250	MOUNT,SAFETY SWITCH	1
6	19504160	MOUNT,KEYBOARD	2
7	19593190	PARTS,OPERATION UNIT(INCH),SP	1
8	•19568020	FRAME,OPERATION UNIT	1
9	•19568030	SHEET,OPERATION UNIT(INCH)	1
10	•19568050	KEY TOP,PRINT	1
11	•19568060	KEY TOP,STOP CLEAR	1
12	•19568070	KEY TOP,EXPOSURE	1
13	•19568080	KEY TOP,IMAGE DENSITY ADJUSTMENT	1
14	•19568090	OPERATION UNIT PCB	1
15	19527020	WIRE,OPERATION UNIT	1
16	19527080	WIRE,DEVELOPING (N.A.)	1
17	19527120	WIRE,HIGH VOLTAGE JUNCTION	1
18	19527130	WIRE,FEEDBACK	1
19	19527160	WIRE,AVR JUNCTION	1
20	19527180	WIRE,PRIMARY	1
21	19527190	WIRE,SECONDARY	1
22	19527200	WIRE,MAIN SWITCH	1
23	19527220	WIRE,INTERLOCK SWITCH	1
24	19527240	WIRE,INLET	1
25	19527260	WIRE,SWITCH RELEASE	1
26	19527290	TOTAL COUNTER	1
27	19527340	WIRE,HUMIDITY SENSOR	1
28	19527390	JUNCTION WIRING,CLEANING LAMP	1
29	19593250	PARTS,POWER SOURCE PCB(100),SP	1
30	•M1661000	FUSE 15A,314015	2
31	19593270	PARTS,HIGH VOLTAGE PCB,SP	1
32	19593280	PARTS,AVR PCB(100),SP	1
33	19527400	POWER CORD(120)	1
34	36793560	PARTS,HUMIDITY SENSOR PCB(SP)	1
35	19502310	BARRIER,SAFETY SWITCH	1
36	19504230	COVER,OPERATION UNIT	1
37	63801050	INLET WIRING ASS'Y	1
38	•71827340	INLET 3P,POWER	1
39	65926530	SPRING,SAFETY SWITCH	1
40	65927010	SWITCH,INTERLOCK	1
41	69027070	SWITCH,MAIN	1
42	M2104220	EDGING,EDS-1717U	1
43	M2105990	CLAMP,HL-18-0(KITAGAWA)	*1*
44	M2107120	BINDING BAND SG-130	*3*
45	M2108360	SPACER,KGLS-12S	3
46	M2108780	SPACER,KGPS-12S(KITAGAWA)	1
47	M2109310	WIRE SADDLE,HL-28-0(KITAGAWA)	1
48	M2109010	WIRE SADDLE,WS-2NS	*3*
49	M2607010	BINDING BAND,PLT1M	2
50	19502320	MOUNT,HUMIDITY SENSOR	1
51	M2108120	SPACER,KGLS-4S	5
52	M2108000	SPACER,KGLS-3S	3
53	*19593360*	*PARTS,MAIN PCB,SP*	*1*

• Parts with "•" are component parts or sub-assemblies of the assembly appearing immediately above them.

• Parts with "• •" are component parts or sub-assembly with "•" appearing immediately above them.

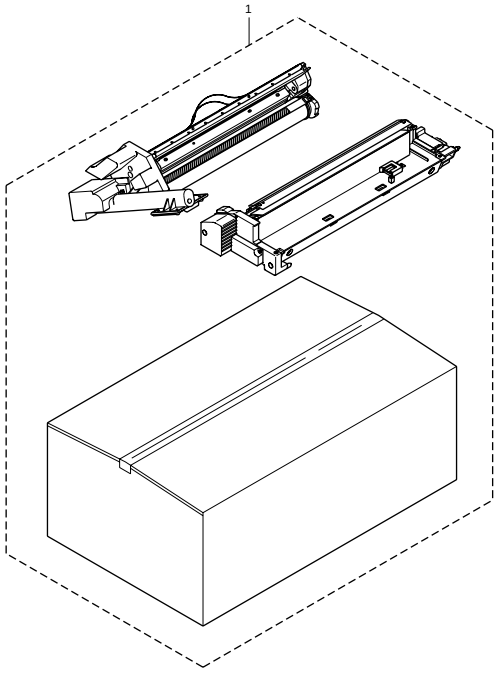
1

FIG. *15* PROSESS UNIT

Ref. No.	Part. No.	Description	Quantity USA (120V)
1	19582410	PROCESS UNIT FOR CS-2014(C)	1

• Parts with "•" are component parts or sub-assemblies of the assembly appearing immediately above them.

• Parts with "• •" are component parts or sub-assembly with "•" appearing immediately above them.

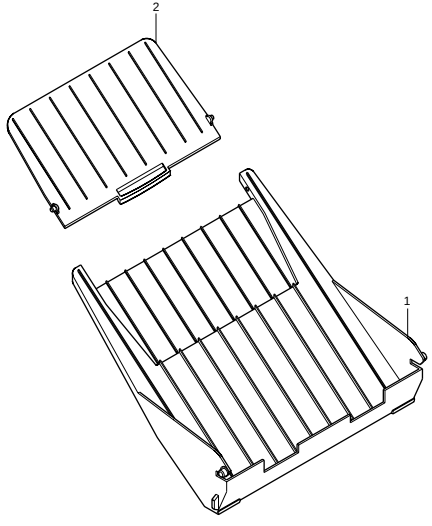
2
1

FIG. *16* ACCESSORY

Ref. No.	Part. No.	Description	Quantity USA (120V)
1	19557150	TRAY,EJECT(C)	1
2	19557160	TRAY,EJECT AUXILIARY(C)	1

• Parts with "•" are component parts or sub-assemblies of the assembly appearing immediately above them.

• Parts with "• •" are component parts or sub-assembly with "•" appearing immediately above them.

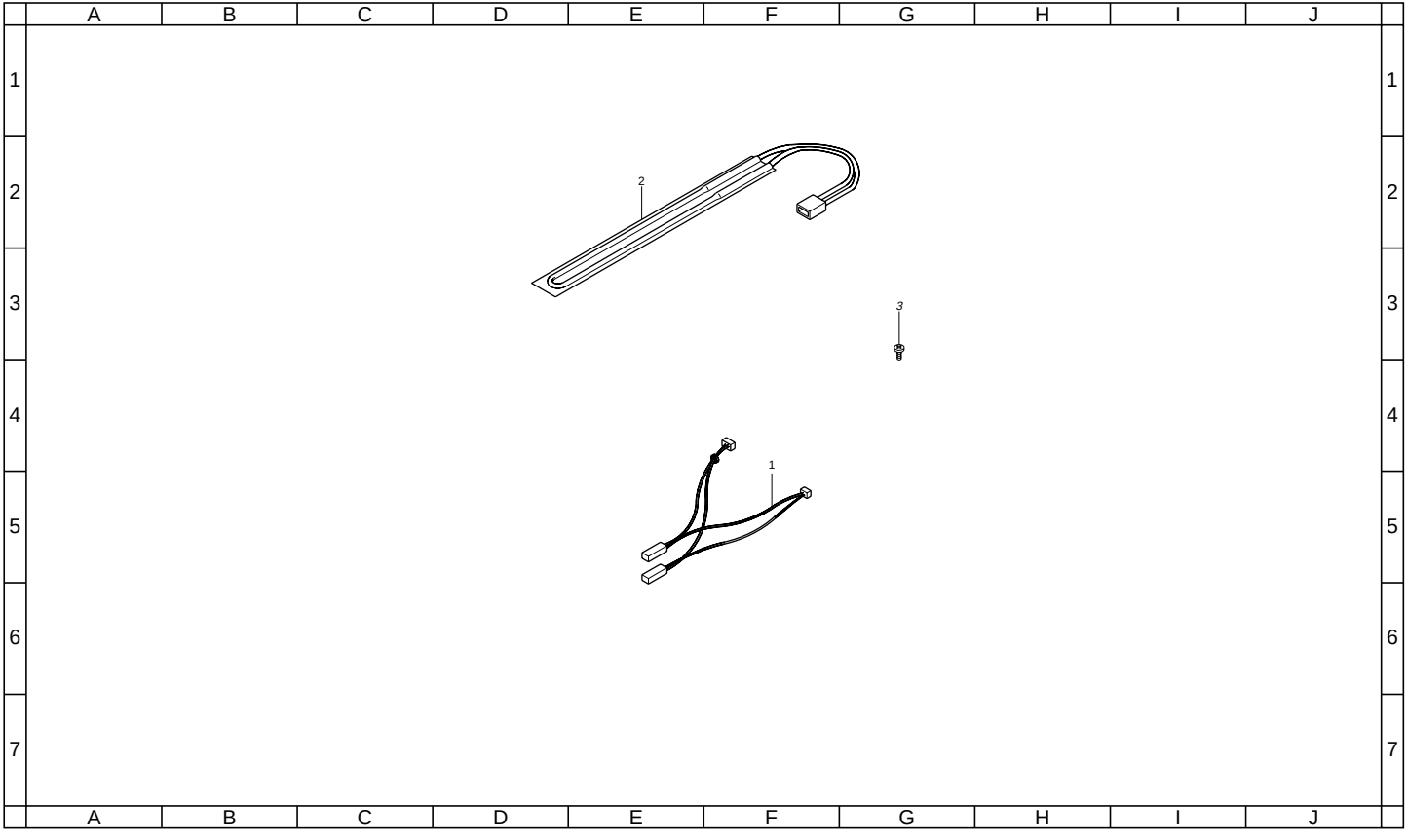
A
B
C
D
E
F
G
H
I
J
1
2
3
4
5
6
7
2
3
1

FIG. *17* OPTION

Ref. No.	Part. No.	Description	Quantity USA (120V)
1	19560010	WIRE,HEATER PRIMARY	1
2	36727460	HEATER,CHARGE (120)	1
3	*B3023060*	*BINDING TAP TIGHT SCREW M3X6*	*2*

• Parts with "•" are component parts or sub-assemblies of the assembly appearing immediately above them.

• Parts with "• •" are component parts or sub-assembly with "•" appearing immediately above them.

Part. No.	Description	Quantity USA (120V)	Fig. No.
1AF05040	CAUTION LABEL,HIGH VOLTAGE S (EXP)	1	1
19500050	CASSETTE ASS'Y	1	3
19500091	*DRUM UNIT ASS'Y (N.A.)*	*1*	*10*
19500120	*DEVELOPING ASS'Y (N.A.)*	*1*	*9*
19500250	ORIGINAL HOLDER ASS'Y	1	6
19502070	PARTITION,POWER SOURCE	1	2
19502080	PARTITION,FIXING	1	2
19502090	BASE,RELEASE	1	4
19502100	HOOK,RELEASE	1	4
19502120	SPRING TRANSFER PRESSING	2	4
19502130	MOUNT,COPY TRAY	1	12
19502140	RAIL,DEVELOPING	1	2
19502150	SHAFT,DEVELOPING HOLDER	1	2
19502160	ARM,DEVELOPING HOLDER	2	2
19502180	SPRING,DEVELOPING HOLDER	2	2
19502190	SPRING,DRAWER	1	2
19502200	UPPER RIGHT REINFORCEMENT	1	2
19502210	UPPER LEFT REINFORCEMENT	1	2
19502220	SUPPORT BAR,RELEASE	1	4
19502230	GUIDE BAR,SAFETY SWITCH	1	14
19502240	LEVER,SAFETY SWITCH	1	14
19502250	MOUNT,SAFETY SWITCH	1	14
19502260	LEVER,DEVELOPING HOLDER (N.A.)	1	2
19502280	FULCRUM PLATE,EJECT COVER	2	12
19502290	HOLDER,FIXING PRESSURE RELEASE LEVER	2	4
19502300	REAR MOUNT,COVER	1	7
19502310	BARRIER,SAFETY SWITCH	1	14
19502320	MOUNT,HUMIDITY SENSOR	1	14
19502330	HOLDER,PRESSURE RELEASE	2	4
19502340	FRONT SPRING,RELEASE AUXILIARY	1	4
19502350	REAR SPRING,RELEASE AUXILIARY	1	4
1950236O	*SPACER,DRUM POSITIONING*	*1*	*2*
19504080	BUTTON,RELEASE	1	4
19504110	MOUNT,EJECT COVER	1	12
19504150	FRONT MOUNT,COVER	1	1
19504160	MOUNT,KEYBOARD	2	14
19504170	COVER,ORIGINAL HOLDER	1	6
19504180	MAT,ORIGINAL	1	6
19504190	MOUNT,ARM	2	6
19504200	PIN A,FULCRUM	2	6
19504210	PIN B,FULCRUM	2	6
19504220	MOUNT BASE,ORIGINAL HOLDER	2	6

Part. No.	Description	Quantity USA (120V)	Fig. No.
19504230	COVER,OPERATION UNIT	1	14
19505070	LABEL,SIM	1	1
19505080	CAUTION LABEL,HIGH VOLTAGE (EXP)	1	4
19505090	CAUTION LABEL,HIGH TEMPERATURE (EXP)	1	4
19505100	LABEL PAPER SET	1	3
19506050	BUSHING,PAPER FEED ROLLER	1	4
19506060	ROLLER,FEED	1	4
19506070	ROLLER,REGISTRATION DRIVE	1	4
19506080	ROLLER,REGISTRATION IDLE	1	4
19506090	GEAR 14,REGISTRATION	1	4
19506100	GUIDE,BYPASS	1	4
19506110	UPPER FRONT GUIDE,TRANSFER	1	4
19506140	GUIDE,FEED ROLLER	1	2
19506190	STOPPER,PAPER FEED CLUTCH	1	4
19506210	FRONT CURSOR,BYPASS	1	4
19506220	REAR CURSOR,BYPASS	1	4
19506230	PULLEY A,PAPER FEED	2	4
19506240	PULLEY B,PAPER FEED	2	4
19506250	SUPPORT PLATE,PULLEY	2	4
19506270	SHAFT,PAPER FEED	1	4
19506310	SWITCH,REGISTRATION	1	4
19506510	FILM,FEED SHIFT	4	4
19506520	UPPER FRONT FILM,TRANSFER	1	4
19506530	UPPER FRONT FILM,TRANSFER AUXILIARY	1	4
19506540	FILM B,FEED SHIFT	1	4
19506550	FILM,FEED PULLEY	4	4
19506560	*PIN,GUIDE*	*4*	*2*
19506570	*FILM,FEED ROLLER*	*1*	*2*
19506580	*FILM,RESISTANCE*	*4*	*4*
19506590	*FILM,PULLEY HOLDER*	*2*	*4*
19507010	CASSETTE,PAPER FEED	1	3
19507040	BASE,CASSETTE	1	3
19507050	LEVER,CASSETTE BASE RELEASE	1	3
19507090	SEAL,CUSHION	1	4
19507100	PULLEY,CASSETTE	2	2, 4
19507210	SPRING,CASSETTE	2	3
19508040	*SHAFT,DRUM*	*1*	*10*
19510010	HOUSING,CHARGE UNIT	1	5
19510020	RAIL,MAIN	1	5
19510030	FRONT HOUSING,MAIN	1	5
19510040	REAR HOUSING,MAIN	1	5
19510050	TERMINAL,MAIN	1	5

Part. No.	Description	Quantity USA (120V)	Fig. No.
19510060	HOUSING,MAIN ELECTRODE	1	5
19510070	ELECTRODE,MAIN	1	5
19510080	RETAINER,MAIN	1	5
19510090	FRONT LID,MAIN	1	5
19510100	REAR LID,MAIN	1	5
19510110	SPRING,MAIN RELEASE	1	5
19510120	SEAL,LIGHT SHIELD BLANK	1	5
19510130	*BARRIER,MAIN ELECTRODE*	*1*	*5*
19512050	ORIGINAL SIZE INDICATOR,ORIGINAL (INCH)	1	6
19512060	GLASS,DUST SHIELD	1	2
19512090	SHAFT,SCANNER DRUM	1	7
19512100	DRUM,WIRE	2	7
19512120	SHAFT,WIRE DRUM	1	7
19512150	PULLEY,SCANNER	10	7
19512160	MIRROR,2	1	7
19512170	MIRROR,3	1	7
19512190	FILTER,DUST SHIELD	1	6
19512200	GUIDE,FEEDER WIRE	1	7
19512220	GEAR 64,SCANNER DRIVE	1	7
19512240	GEAR 124,WIRE DRIVE	1	7
19512250	HOLDER,DUST SHIELD GLASS	2	2
19512260	CONTACT GLASS	1	6
19512270	MOUNT,SCANNER PULLEY	2	7
19512280	MOUNT,SCANNER MOTOR	1	7
19512310	LEFT PARTITION,SCANNER	1	2
19512330	SPONGE,SCANNER FAN	2	13
19512340	*UPPER RAIL,SCANNER*	*2*	*7*
19512350	*LOWER RAIL,SCANNER*	*2*	*7*
19513050	PULLEY,LENS WIRE	2	8
19513060	MIRROR,6	1	8
19513090	UPPER FRONT FILM,LIGHT SHIELD	1	8
19513100	COVER,LENS UNIT	1	8
19513110	UPPER REAR FILM,LIGHT SHIELD	1	8
19513150	RAIL,LENS MOVING SCANNER	1	8
19513160	MOUNT,LENS MOTOR	1	8
19513170	FRONT FILM,LIGHT SHIELD	1	8
19513180	LIGHT SHIELD,LENS PI	1	8
19513190	PULLEY,LENS MOVING SCANNER	1	8
19513250	UPPER FILM B,LIGHT SHIELD	1	8
19513260	LOWER FRONT FILM,LIGHT SHIELD	1	8

Part. No.	Description	Quantity USA (120V)	Fig. No.
19513270	REAR FILM,LIGHT SHIELD	1	8
19513280	FRONT SEAL,LIGHT SHIELD	1	8
19513290	REAR SEAL,LIGHT SHIELD	1	8
19514010	*MAGNET DEVELOPING*	*1*	*9*
19514030	*FRONT COVER,DEVELOPING (EUR)*	*1*	*9*
19514040	*REAR COVER,DEVELOPING*	*1*	*9*
19514050	*RIGHT COVER,DEVELOPING*	*1*	*9*
19514090	*PULLEY,DS*	*2*	*9*
19514100	*FRONT BUSHING,DEVELOPING*	*1*	*9*
19514110	*RETAINER,DEVELOPING POSITION*	*1*	*9*
19514120	*GEAR,DEVELOPING INPUT*	*1*	*9*
19514130	*GEAR,DEVELOPING IDLE*	*1*	*9*
19514140	*SPIRAL A,DEVELOPING*	*1*	*9*
19514150	*SPIRAL B,DEVELOPING*	*1*	*9*
19514160	*GEAR,AGITATION*	*1*	*9*
19514180	*SPONGE A,DEVELOPING*	*2*	*9*
19514190	*SPONGE B,DEVELOPING*	*1*	*9*
19514220	*FRONT FILM,DEVELOPING*	*1*	*9*
19514230	*REAR FILM,DEVELOPING*	*1*	*9*
19514240	*UPPER SEAL B,DEVELOPING*	*1*	*9*
19514250	*BEARING,DEVELOPING*	*1*	*9*
19514260	SEAL,DEVELOPING RAIL	2	2
19514270	*REAR BUSHING,AGITATION*	*2*	*9*
19514280	*SPONGE C,DEVELOPING*	*2*	*9*
19514290	*SPONGE D,DEVELOPING*	*1*	*9*
19514300	*FRONT SPONGE,DOCTOR BLADE*	*1*	*9*
19514310	*REAR SPONGE,DOCTOR BLADE*	*1*	*9*
19514320	*FILM,DOCTOR BLADE*	*1*	*9*
19514510	*COVER,DEVELOPING TERMINAL(N.A.)*	*1*	*9*
19515010	MOUNT,TONER MOTOR	1	11
19515020	GEAR,TONER MOTOR	1	11
19515030	GEAR,CARTRIDGE IDLE	2	11
19516010	SHIELD,TRANSFER	1	5
19516020	FRONT HOUSING,TRANSFER	1	5
19516030	REAR HOUSING,TRANSFER	1	5
19516040	TERMINAL,TRANSFER	1	5
19516050	LOWER FRONT GUIDE,TRANSFER	1	5
19516060	REAR GUIDE,TRANSFER	1	5
19516070	FRONT LID,TRANSFER	1	5
19516080	REAR LID,TRANSFER	1	5
19516120	LOWER FRONT SHEET,TRANSFER	1	5
19516130	FRONT PROJECTION,TRANSFER	1	5

Part. No.	Description	Quantity USA (120V)	Fig. No.
19516140	REAR PROJECTION,TRANSFER	1	5
19516150	STATIC ELIMINATOR,CONVEYING	1	5
19518020	*MOUNT,BLADE*	*1*	*10*
19518040	*HOUSING,CLEANING*	*1*	*10*
19518050	*UPPER COVER,CLEANING*	*1*	*10*
19518071	*REAR COVER,CLEANING (EUR)*	*1*	*10*
19518080	*SPIRAL,CLEANING*	*1*	*10*
19518090	*PIN,DRUM*	*1*	*10*
19518100	*BUSHING,DRUM*	*1*	*10*
19518110	*GEAR 15,IDLE*	*1*	*10*
19518121	*GEAR 27,THRUST*	*1*	*10*
19518140	*REAR BUSHING,SPIRAL*	*1*	*10*
19518150	*FRONT BUSHING,SPIRAL*	*1*	*10*
19518171	*PLATE SPRING,GRID*	*1*	*10*
19518180	*PLATE SPRING,FEEDBACK*	*1*	*10*
19518191	*HOUSING,RECYCLE*	*1*	*10*
19518201	*MOUNT BASE,RECYCLE*	*1*	*10*
19518210	*SPIRAL,RECYCLE*	*1*	*10*
19518220	*COVER,RECYCLE*	*1*	*10*
19518230	*SHUTTER,RECYCLE*	*1*	*10*
19518240	*GEAR 12,RECYCLE*	*1*	*10*
19518250	*BUSHING,RECYCLE*	*1*	*10*
19518260	*SPRING,BLADE*	*1*	*10*
19518270	*SPRING,THRUST*	*1*	*10*
19518280	*SEAL,BLADE*	*1*	*10*
19518290	*LOWER SEAL,BLADE*	*1*	*10*
19518300	*SEAL,DRUM*	*2*	*10*
19518310	*FILM,CLEANING*	*1*	*10*
19518320	*FRONT SEAL,CLEANING*	*1*	*10*
19518330	*REAR SEAL,CLEANING*	*1*	*10*
19518350	*SHIELD,CLEANING*	*1*	*10*
19518361	*SEAL,SPIRAL*	*1*	*10*
19518371	*SEAL,MOUNT BASE*	*1*	*10*
19518380	*SEAL,JOINT*	*1*	*10*
19518390	*SEAL,SHUTTER*	*1*	*10*
19518400	*SPRING,SHUTTER*	*1*	*10*
19518410	*FRONT COVER,CLEANING (N.A.)*	*1*	*10*
19518450	*FRONT SEAL A,TONER*	*1*	*10*
19518460	*REAR SEAL A,TONER*	*1*	*10*
19518470	*FRONT SEAL B,TONER*	*1*	*10*
19518480	*REAR SEAL B,TONER*	*1*	*10*
19518490	*PROTECTING PLATE,GEAR*	*1*	*10*

Part. No.	Description	Quantity USA (120V)	Fig. No.
19518500	*POSITIONING PLATE,CLEANING*	*1*	*10*
19518510	*MOUNT,RELEASE SEAL*	*1*	*10*
19518520	*SEAL,RECYCLE COVER*	*1*	*10*
19518540	*SEAL,CARTRIDGE SHUTTER*	*1*	*10*
19520010	UPPER HOUSING,FIXING	1	12
19520020	LOWER HOUSING,FIXING	1	12
19520031	*COVER,FIXING*	*1*	*12*
19520060	HOLDER,PRESSURE BEARING	2	12
19520070	SPRING,PRESSURE	2	12
19520100	FRONT MOUNT,HEATER	1	12
19520110	REAR MOUNT,HEATER	1	12
19520120	GUIDE,FIXING ADMISSION	1	12
19520140	GEAR 32,FIXING	1	12
19520150	BUSHING,HEAT ROLLER	2	12
19520160	CLAW,SEPARATION	3	12
19520170	SPRING,SEPARATION CLAW	3	12
19520180	LEVER,FIXING PRESSURE RELEASE	2	12
19520190	THERMOSTAT A,FIXING	1	12
19520200	THERMOSTAT B,FIXING	1	12
19520210	*BLADE,THERMISTOR*	*1*	*12*
19520220	*GROUND PLATE,HEAT ROLLER*	*1*	*12*
19521010	ROLLER,EJECT	1	12
19521020	PULLEY,EJECT	2	12
19521030	PADDLE,EJECT PULLEY	2	12
19521040	GUIDE,EJECT	1	12
19521050	ACTUATOR,EJECT SWITCH	1	12
19521060	SPRING,EJECT ACTUATOR	1	12
19521070	MOUNT,EJECT SWITCH	1	12
19521090	GUIDE,EJECT SUB	1	12
19521120	SHEET,EJECT	1	12
19521130	*SPACER,EJECT*	*2*	*12*
19522010	FRONT MOUNT,DRIVE	1	13
19522020	REAR MOUNT,DRIVE	1	13
19522030	REAR PIN,DRUM	1	13
19522040	SHAFT,DEVELOPING DRIVE	1	13
19522050	BUSHING,DEVELOPING SLEEVE	1	13
19522060	GEAR 26/54	1	13
19522070	GEAR 38/43	1	13
19522080	GEAR 20/43	1	13
19522090	GEAR 41/56	1	13
19522110	GEAR 30/35	1	13
19522130	GEAR 30	1	13

Part. No.	Description	Quantity USA (120V)	Fig. No.
19522140	GEAR 24,DEVELOPING DRIVE	1	13
19522150	GEAR 35,DRUM DRIVE	1	13
19522160	BUSHING,DRUM PIN	1	13
19522170	GEAR 16,FEED	1	4
19522180	GEAR 28	2	13
19522190	HOLDER,DRIVE PIN	1	13
19522200	GEAR 35	1	4
19523010	DUCT,COOLING	1	13
19523020	FAN,MACHINE INSIDE COOLING	2	13
19526050	MOUNT,DRAWER	1	2
19526060	MOUNT,FEEDBACK	1	2
19527010	IC,ROM	1	14
19527020	WIRE,OPERATION UNIT	1	14
19527030	WIRE,SCANNER	1	7
19527040	WIRE,SCANNER UNIT	1	8
19527050	FEEDER WIRE,SCANNER	1	7
19527060	WIRE,THERMOSTAT SCANNER	1	7
19527070	WIRE,FIXING HEATER	1	12
19527080	WIRE,DEVELOPING (N.A.)	1	14
19527100	*WIRE,DEVELOPING UNIT (N.A.)*	*1*	*9*
19527120	WIRE,HIGH VOLTAGE JUNCTION	1	14
19527130	WIRE,FEEDBACK	1	14
19527140	WIRE,HIGH VOLTAGE	1	5
19527150	WIRE,TRANSFER HIGH VOLTAGE	1	5
19527160	WIRE,AVR JUNCTION	1	14
19527170	WIRE,SCANNER PRIMARY	1	7
19527180	WIRE,PRIMARY	1	14
19527190	WIRE,SECONDARY	1	14
19527200	WIRE,MAIN SWITCH	1	14
19527210	JUNCTION WIRING,FIXING HEATER	1	12
19527220	WIRE,INTERLOCK SWITCH	1	14
19527240	WIRE,INLET	1	14
19527250	WIRE,DRIVE MOTOR	1	13
19527260	WIRE,SWITCH RELEASE	1	14
19527270	WIRE,EJECT SWITCH	1	12
19527280	JUNCTION WIRING,EJECT SW	1	12
19527290	TOTAL COUNTER	1	14
19527320	JUNCTION WIRING,FIXING THERMISTOR	1	12
19527340	WIRE,HUMIDITY SENSOR	1	14
19527380	JUNCTION WIRING,SCANNER FAN	1	13
19527390	JUNCTION WIRING,CLEANING LAMP	1	14
19527400	POWER CORD(120)	1	14

Part. No.	Description	Quantity USA (120V)	Fig. No.
19527420	WIRE,CARTRIDGE DETECTION	1	2
19528080	*BLANK LAMP PCB*	*1*	*5*
19557020	RIGHT RAIL,CASSETTE(C)	1	2
19557040	LOWER LEFT MOUNT BASE,FRAME(C)	1	4
19557070	LEFT FRONT COVER(C)	1	1
19557080	LEFT COVER(C)	1	1
19557090	REAR COVER(C)	1	6
19557100	RIGHT FRONT COVER(C)	1	1
19557110	COVER,RELEASE(C)	1	4
19557120	RIGHT COVER(C)	1	1
19557130	COVER,EJECT(C)	1	12
19557140	COVER,CASSETTE(C)	1	3
19557150	TRAY,EJECT(C)	1	16
19557160	TRAY,EJECT AUXILIARY(C)	1	16
19560010	WIRE,HEATER PRIMARY	1	17
19568020	FRAME,OPERATION UNIT	1	14
19568030	SHEET,OPERATION UNIT(INCH)	1	14
19568050	KEY TOP,PRINT	1	14
19568060	KEY TOP,STOP CLEAR	1	14
19568070	KEY TOP,EXPOSURE	1	14
19568080	KEY TOP,IMAGE DENSITY ADJUSTMENT	1	14
19568090	OPERATION UNIT PCB	1	14
19568100	*FRONT MAIN CHARGER HOUSING ASS'Y*	*1*	*5*
19568120	*FRONT TRANSFER CHARGER HOUSING ASS'Y*	*1*	*5*
19568140	*LAMP 100*	*1*	*7*
19568160	*MIRROR FRAME 2 ASS'Y*	*1*	*7*
19568170	*MIRROR ADJUSTING PLATE ASS'Y*	*1*	*7*
19593010	PARTS,CHARGE UNIT ASS'Y,SP	1	5
19593031	*PARTS,FIXING ASS'Y 120,SP*	*1*	*12*
19593040	*PARTS,LENS UNIT ASS'Y,SP*	*2*	*8*
19593050	PARTS,LIGHT UNIT ASS'Y 100,SP	1	7
19593070	PARTS,CLUTCH,PAPER FEED,SP	1	4
19593080	PARTS,CLUTCH,REGISTRATION,SP	1	4
19593110	PARTS,WIRE,SCANNER,SP	2	7
19593120	PARTS,WIRE,LENS MOVING SCANNER,SP	1	8
19593130	*PARTS,BLADE CLEANING,SP*	*1*	*10*
19593140	*PARTS,LOWER BLADE CLEANING,SP*	*1*	*10*
19593150	PARTS,ROLLER HEAT,SP	1	12
19593160	PARTS,ROLLER PRESSURE,SP	1	12
19593170	PARTS,FIXING HEATER 120,SP	1	12
19593190	PARTS,OPERATION UNIT(INCH),SP	1	14

Part. No.	Description	Quantity USA (120V)	Fig. No.
19593210	PARTS,MOTOR MAIN,SP	1	13
19593220	PARTS,MOTOR,SCANNER,SP	1	7
19593240	PARTS,MOTOR,LENS UNIT,SP	2	7, 8
19593250	PARTS,POWER SOURCE PCB(100),SP	1	14
19593270	PARTS,HIGH VOLTAGE PCB,SP	1	14
19593280	PARTS,AVR PCB(100),SP	1	14
19593330	*PARTS,GRID MAIN,SP*	*1*	*10*
19593340	PARTS,THERMISTOR FIXING,SP	1	12
19593350	*PARTS,GRID PCB,SP*	*1*	*10*
19593360	PARTS,MAIN PCB,SP	1	14
19594900	SET,REAR MAIN CHARGER HOUSING,SP	1	5
19594910	SET,REAR TRANSFER CHARGER HOUSING,SP	1	5
19605050	CAUTION LABEL,CONTACT GLASS	1	2
29717230	BUSHING 6,FEED BACK	2	7
29806810	BUSHING,6 REGISTRATION	*4*	4
29812291	CUSHION,CONTACT GLASS	6	6
29822140	*BUSHING,DRUM SHAFT*	*1*	*10*
29912420	HOLDER,WIRE ROPE	2	7
33227030	IC,EEPROM	1	14
33408180	PIN,STOPPER	2	8
33910230	PIN,CHARGER	2	5
33914190	*TONER SENSOR*	*1*	*9*
33915100	GEAR A,CARTRIDGE DRIVE	1	11
33915250	SPRING,CARTRIDGE DRIVE	2	11
33915330	GEAR C,CARTRIDGE DRIVE	1	11
34907020	FRONT CURSOR,CASSETTE	1	3
34907030	REAR CURSOR,CASSETTE	1	3
34907040	FRONT CLAW,CASSETTE	1	3
34907050	REAR CLAW,CASSETTE	1	3
34907060	LEVER,CURSOR RETAINING	1	3
34907070	PIN,CLAW CASSETTE	2	3
34907130	REAR STOPPER,PAPER	1	3
34907140	GEAR 18,CASSETTE	1	3
34907260	HOLDER,CURSOR	1	3
34907270	PLATE SPRING,CURSOR	1	3
34907290	PULLEY,GUIDE	2	4
34907330	LABEL,PAPER UPPER LIMIT	1	3
34907350	PAD A,CASSETTE	2	3
34914370	*REAR BUSHING,SPIRAL*	*2*	*9*
34927070	FAN,COOLING	1	13
35322020	*GEAR 20,PAPER FEED DRIVE*	*1*	*10*

Part. No.	Description	Quantity USA (120V)	Fig. No.
35405080	CAUTION LABEL,HIGH TEMPERATURE (EXP)	1	12
36727460	HEATER,CHARGE (120)	1	17
36793560	PARTS,HUMIDITY SENSOR PCB(SP)	1	14
41626652	TUNGSTEN WIRE	1	5
42929503	TUNGSTEN WIRE(50M)	1	5
48527200	SPRING,CHARGER	2	5
49028102	BUSH 4	2	12
60116080	PIN RAIL DEV.	2	4
60516060	SPRING EJECT	2	12
63213360	SPRING,PAPER EJECT HOLDER	1	4
63573070	*BELT,DEVELOPING HANDLE*	*1*	*10*
63722330	*GEAR 14,TONER FEED*	*1*	*9*
63722490	GEAR 33	1	13
63801050	INLET WIRING ASS'Y	1	14
63806240	FRONT BUSHING,REGISUTORATION	2	4
63810010	SHIELD,MAIN CHARGER	1	5
63814060	*GEAR 20,AGITATION*	*1*	*10*
63814090	*GEAR 15,AGITATION*	*1*	*10*
63814640	*FRONT SEAL,SLEEVE*	*2*	*9*
63820190	BEARING, FIXING UNIT	2	12
63822030	SPRING,COUPLER DRUM	1	13
63822040	COUPLER,DRUM	1	13
63822150	GEAR 18,EJECTION	1	12
63822200	GEAR,27/38	1	13
63822320	MOTOR,TONER FEED	1	11
63828090	CLEANING LAMP PCB	1	5
63856270	LABEL,SUPPLY(CPY)	1	1
65011310	GEAR 20,IDLE	1	12
65902670	CUSHION RUBBER	2	4
65914110	*GEAR 13,IDLE DEVELOPING*	*1*	*9*
65926530	SPRING,SAFETY SWITCH	1	14
65927010	SWITCH,INTERLOCK	1	14
66006350	SWITCH,CASSETTE LIFT	3	7, 8, 12
66212080	MOUNT,SCANNER SWITCH	1	7
66228050	AE SENSOR PCB	1	8
67312250	PIN,ORIGINAL INDICATION PLATE	1	6
67322230	BUSHING 8	2	7
68802070	SPRING A,LIFT UP	1	3
69027070	SWITCH,MAIN	1	14
69312020	THERMAL PROTECTOR,SCANNER	1	7
69927040	WIRE,THERMOSTAT JUNCTION	1	12
71602180	PIN,SHIFT LEVER	2	2, 4

Part. No.	Description	Quantity USA (120V)	Fig. No.
71607160	PRESSING SPRING	2	4
71827340	INLET 3P,POWER	1	14
72127100	PI SWITCH,OPTICAL SECTION	1	7
72906160	RACK,STACK BYPASS	2	4
72906170	PINION,STACK BYPASS	1	4
72907100	PULLEY,PAPER GUIDE	2	4
72907110	SPRING,PAPER GUIDE PULLEY	2	4
72919050	*GEAR 12/15,RECYCLE SECTION*	*1*	*10*
73210450	BUSH, 6	1	13
73918080	PIN,CLEANING BLADE	2	2
74808140	BEARING,LNR-1360ZZR	1	13
75704300	CATCH FRONT COVER	1	1
75712080	MIRROR HOLDER	11	7, 8
75712120	DRUM SCANNER DRIVE WIRE	2	7
75713060	AE SENSOR COVER	1	8
75714310	SPRING DEVELOPING UNIT LOCK LEVER	1	4
75914670	BUSHING DEVELOPING UNIT SHIFT	2	2, 4
75914730	STOPPER DEVELOPING UNIT SHIFT	2	2
76220090	STOPPER HEAT ROLLER	2	12
76508130	SPRING BELT GUIDE ROLLER	1	3
76727010	ORIGINAL SIZE SWITCH	1	2
77906210	CASSETTE STOPPER	1	1
78022050	GEAR 19/44	1	8
78620710	CLAW STOPPER	2	6
B3023060	*BINDING TAP TIGHT SCREW M3X6*	*2*	*17*
M0207000	BINDING BAND,KB-100-1	1	12
M1203200	OPEN BUSHING,OCB-375	4	8
M1661000	FUSE 15A,314015	2	14
M2104220	EDGING,EDS-1717U	3	2, 7, 14
M2104240	EDGING,EDS-1208U	1	2
M2104260	EDGING,EDS-0607U(KITAGAWA)	1	5
M2105000	NYLON CLAMP 2N,NK-2N	2	7
M2105720	MINIATURE CLAMP,UAMS-05-2	*2*	4, *13*
M2105810	CLAMP,HEAT PROOF,KCA-34	1	12
M2105990	CLAMP,HL-18-0(KITAGAWA)	*1*	14
M2107120	BINDING BAND SG-130	*12*	4, 5, 7, 8, 14
M2108000	SPACER,KGLS-3S	3	14
M2108120	SPACER,KGLS-4S	5	14
M2108360	SPACER,KGLS-12S	3	14
M2108780	SPACER,KGPS-12S(KITAGAWA)	1	14
M2108880	SPACER,KGPS-5RF(KITAGAWA)	1	13
M2109010	WIRE SADDLE,WS-2NS	3	14
M2109310	WIRE SADDLE,HL-28-0(KITAGAWA)	1	14
M2607010	BINDING BAND,PLT1M	*6*	4, 7, 12, *13*, 14

Part. No.	Description	Quantity USA (120V)	Fig. No.
19582410	PROCESS UNIT FOR CS-2014(C)	1	15
19582040	*SET,DRUM(NEUTRAL)*	*1*	*10*

★ The above items are supply items only and as such, they must be ordered from your regional office.

CLASSFICATION OF THE SCREWS IN ILLUSTRATION

REF.	ITEM #	DESCRIPTION
AHA	B0803060	POLYESTER SCREW PVM3X6
BAA	B1003040	BINDING SCREW,CVM3X4
BAC	B1003080	BINDING SCREW M3X8
BAL	B1003050	BINDING SCREW CVM3X5
BAP	B1003100	BINDING SCREW CVM3X10
BAX	B1004040	BINDING SCREW CVM4X4
BBB	B1303050	BINDING SCREW BVM3X5 (BLACK)
BBC	B1303100	BINDING SCREW BVM3X10 (BLACK)
BBR	B1303080	BINDING SCREW BVM3X8 (BLACK)
BCJ	*B1103100*	*BINDING SCREW VM3X10(CR)*
BCK	B1103050	BINDING SCREW CV3X5
BEB	*B1603060*	*BINDING SCREW M3X6(BRASS,NI)*
BHA	B3023060	BINDING TAP TIGHT SCREW M3X6
BHB	B3023080	BINDING TAP TIGHT SCREW M3X8
BHC	B3024060	BINDING TAP-TIGHT SCREW M4X6
BHF	B3314080	BINDING TAP-TITE P SCREW M4X08
BHI	B3313080	BINDING TAP-TITE SCREW M3X08
BHO	*B3313100*	*BINDING TAP-TITE P BRONZE SCREW M3X10*
BHV	B3313060	+BINDING TAP-TIGHT P BRONZE SCREW M3X06
BHX	B8000060	BINDING TAP-TIGHT P SCREW M2.6X06

REF.	ITEM #	DESCRIPTION
BVM	B1303300	BINDING SCREW BVM3X30(BLACK)
DJC	B5003060	HEX. SOCKET HEAD SCREW HHM3X6
EAH	B3063080	TAPPING SCREW M3X8 (B TYP)
E03	D1000300	STOP RING (E-3)
E04	D1000400	STOP RING (E-4)
E05	D1000500	STOP RING (E-5)
E06	D1000600	STOP RING (E-6)
E07	D1000700	STOP RING (E-7)
HAJ	B4393380	TRIPLE TAP-TITE SCREW M3X08 A-TYPE
HAQ	B4043100	TRIPLE TAP-TITE P SCREW M3X10
HAT	B4144080	+TP TAP-TITE P SCREW(CHROMIUM)
HAV	B4044080	+TP TAP TIGHT P CHROMATE M4X08
HBA	B4303050	TRIPLE SCREW M3X5 (BLACK)
HBH	B4303060	TRIPLE SCREW M3X6 (BLACK)
HBI	B4303080	TRIPLE SCREW M3X8(BLACK)
HCD	B4103080	TRIPLE SCREW M3X08(CHROMIUM)
KAK	*E0020080*	*SPRING PIN 2X8*
KAM	E0020120	SPRING PIN 2X12
RDC	D4000300	STOP RING CSTW-3
WAD	C2005120	PLAIN WASHER PWM5

A division of MITA COPYSTAR AMERICA, INC.

Headquarters:
225 Sand Road, P.O. Box 40008
Fairfield, New Jersey 07004-0008
TEL : (973) 808-8444
FAX : (973) 882-6000

Northeastern Region:
225 Sand Road, P.O. Box 40008
Fairfield, New Jersey 07004-0008
TEL : (973) 808-8444
FAX : (973) 882-4401

Midwestern Region:
225 Spring Lake Drive,
Itasca, Illinois 60143
TEL : (630) 250-7447
FAX : (630) 250-8787

Western Region:
14101 Alton Parkway, P.O.Box 57006,
lrvine, California 92618-7006
TEL : (714) 457-9000
FAX : (714) 457-9119

Southern Region:
1500 Oakbrook Drive,
Norcross, Georgia 30093
TEL : (404) 729-9786
FAX : (404) 729-9873

Southwestern Region:
2825 West Story Road,
Irving, Texas 75038-5299
TEL : (972) 550-8987
FAX : (972) 570-4704

Dallas Parts Distribution Center & National Training Center:
2825 West Story Road,
Irving, Texas 75038-5299
TEL : (972) 659-0055
FAX : (972) 570-5816

© 1997 MITA INDUSTRIAL CO., LTD.

Printed in U.S.A.