Copystar

CS-2114

PARTS LIST

Published in July '98
1AB70951
Revision 1

CS-2114

NOTE

1. Indicate parts number and machine model when placing an order.

eg.	Parts Number	Parts Name	Machine Model	Cycle	Quantity
	1AB57030	LEFT FRONT COVER (C)	CS-2114	60Hz	1

2. Service calls and freight will be charged separately.

3. Symbols in the "Parts Number" column.

- Parts with "•" are component parts or sub-assemblies of the assembly appearing immediately above them.

eg.	Parts Number	Parts Name	Parts Number	Parts Name
	19500050	CASSETTE ASS'Y	•19507010	CASSETTE, PAPER FEED
			•19507040	BASE, CASSETTE

- Parts with "• •" are component parts or sub-assembly with "•" appearing immediately above them.

eg.	Parts Number	Parts Name	Parts Number	Parts Name
	•19568120	FRONT MAIN CHARGER HOUSING ASS'Y	••19510030	FRONT HOUSING, MAIN
			••19510090	FRONT LID, MAIN

4. See the last page of this parts list for the classification of the screws in the illustrations.

5. Items indicated by shaded areas ( ) are supply parts and should be ordered through your Regional Office.

Parts List

CS-2114

CONTENTS

FIG.1 EXTERIOR COVERS · · · · · 2
FIG.2 FRAMES · · · · · 4
FIG.3 CASSETTE · · · · · 6
FIG.4 PAPER FEED SECTION · · · · · 8
FIG.5 CHARGING SECTION · · · · · 10
FIG.6 OPTICAL SECTION I · · · · · 12
FIG.7 OPTICAL SECTION II · · · · · 14
FIG.8 DEVELOPING SECTION · · · · · 16
FIG.9 CLEANING SECTION · · · · · 18
FIG.10 TONER HOPPER SECTION · · · · · 20
FIG.11 FIXING SECTION · · · · · 22
FIG.12 DRIVING, COOLING SECTION · · · · · 24
FIG.13 ELECTRICAL COMPONENTS · · · · · 26
FIG.14 EXTERIOR COVERS (ADF) · · · · · 28
FIG.15 PAPER FEED SECTION I (ADF) · · · · · 30
FIG.15 PAPER FEED SECTION I (ADF) · · · · · 32
FIG.16 PAPER FEED SECTION II (ADF) · · · · · 34
FIG.17 DRIVING SECTION (ADF) · · · · · 36
FIG.18 PAPER CONVEYING SECTION (ADF) · · · · · 38
FIG.19 PAPER EJECT (ADF) · · · · · 40
FIG.20 PROSESS UNIT · · · · · 42
FIG.21 ACCESSORY · · · · · 44
FIG.22 OPTION · · · · · 46
• INDEX · · · · · 48

FIG. 1 EXTERIOR COVERS 1AB/5AA

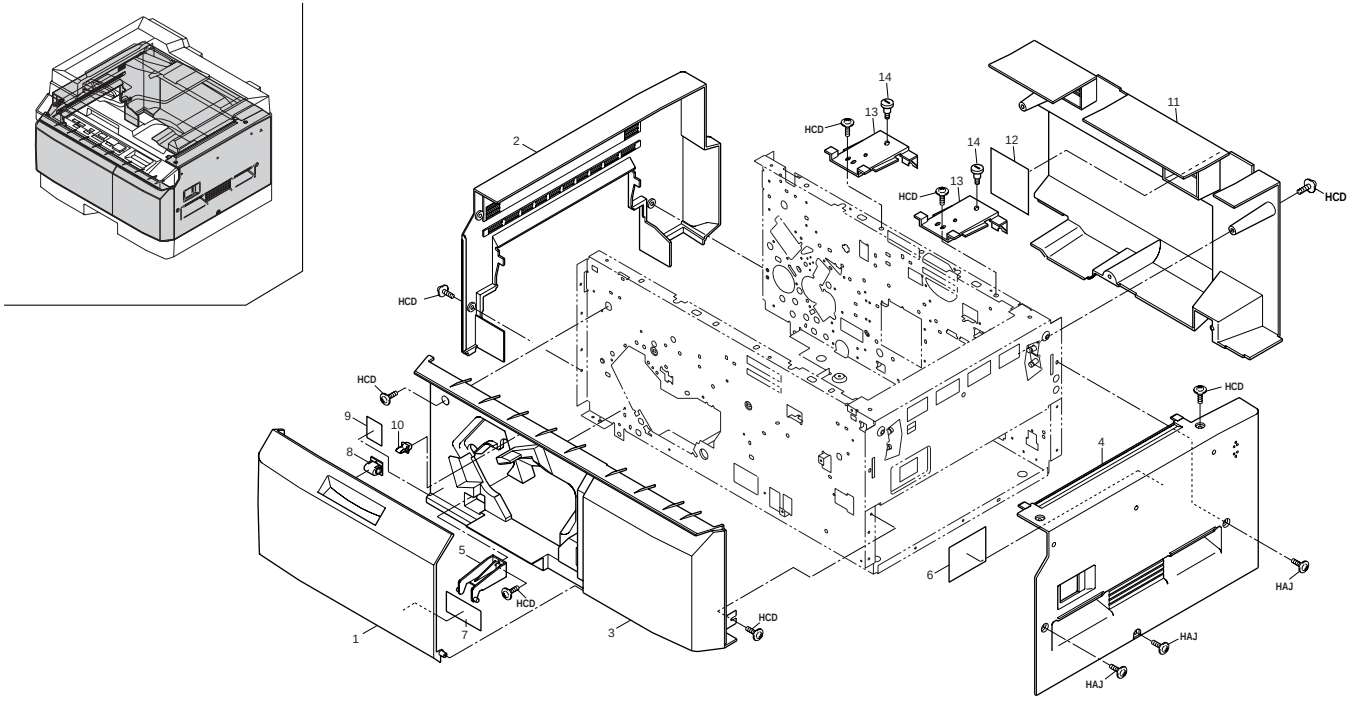

FIG. 1 EXTERIOR COVERS

Ref. No.	Part. No.	Description	Quantity USA (120V)
1	1AB57030	LEFT FRONT COVER(C)	1
2	19557080	LEFT COVER(C)	1
3	19557100	RIGHT FRONT COVER(C)	1
4	19557120	RIGHT COVER(C)	1
5	19504150	FRONT MOUNT,COVER	1
6	19505071	LABEL,SIM	1
7	63856270	LABEL,SUPPLY(CPY)	1
8	75704300	CATCH FRONT COVER	1
9	1AF05040	CAUTION LABEL,HIGH VOLTAGE S (EXP)	1
10	77906210	CASSETTE STOPPER	1
11	1AB57010	REAR COVER(C)	1
12	19512190	FILTER,DUST SHIELD	1
13	1AB57020	UPPER REAR COVER(C)	2
14	34008120	PIN A,STOPPER	2

• Parts with "•" are component parts or sub-assemblies of the assembly appearing immediately above them.

• Parts with "• •" are component parts or sub-assembly with "•" appearing immediately above them.

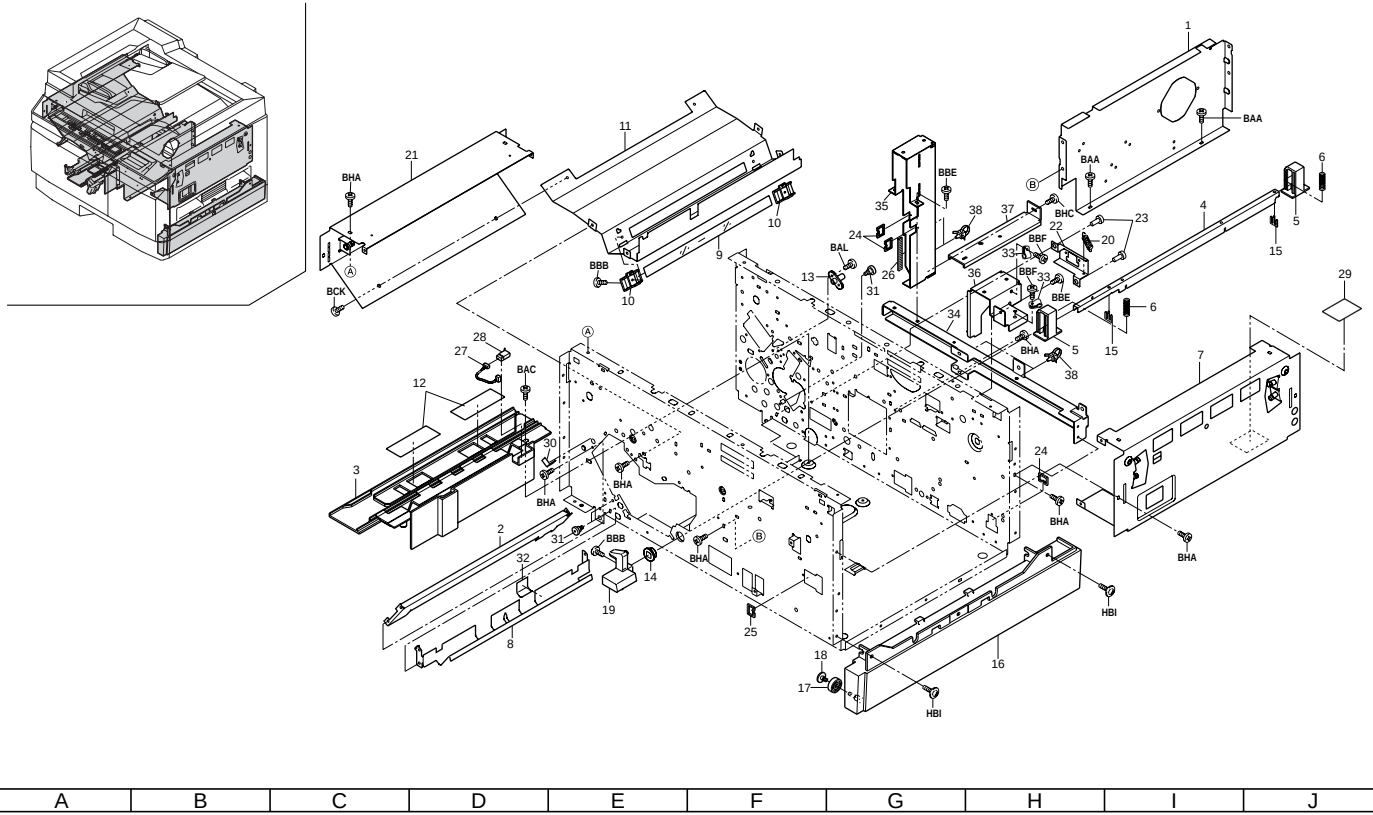
A
B
C
D
E
F
G
H
I
J
1
2
3
4
5
6
7
BAA
BBE
BHC
BBF
BAL
BHA
BBB
BCK
BAC
HBI

FIG. 2 FRAMES

Ref. No.	Part. No.	Description	Quantity USA (120V)
1	19502070	PARTITION,POWER SOURCE	1
2	19502080	PARTITION,FIXING	1
3	19502140	RAIL,DEVELOPING	1
4	19502150	SHAFT,DEVELOPING HOLDER	1
5	19502160	ARM,DEVELOPING HOLDER	2
6	19502180	SPRING,DEVELOPING HOLDER	2
7	19502200	UPPER RIGHT REINFORCEMENT	1
8	19506140	GUIDE,FEED ROLLER	1
9	19512060	GLASS,DUST SHIELD	1
10	19512250	HOLDER,DUST SHIELD GLASS	2
11	19512310	LEFT PARTITION,SCANNER	1
12	19514260	SEAL,DEVELOPING RAIL	2
13	19526060	MOUNT,FEEDBACK	1
14	75914670	BUSHING DEVELOPING UNIT SHIFT	1
15	75914730	STOPPER DEVELOPING UNIT SHIFT	2
16	19557020	RIGHT RAIL,CASSETTE(C)	1
17	19507100	PULLEY,CASSETTE	1
18	71602180	PIN,SHIFT LEVER	1
19	19502260	LEVER,DEVELOPING HOLDER (N.A.)	1
20	19502190	SPRING,DRAWER	1
21	19502210	UPPER LEFT REINFORCEMENT	1
22	19526050	MOUNT,DRAWER	1
23	73918080	PIN,CLEANING BLADE	2
24	M2104240	EDGING,EDS-1208U	3
25	M2104220	EDGING,EDS-1717U	1
26	M2104300	EDGING,KG-012	1
27	19527420	WIRE,CARTRIDGE DETECTION	1
28	76727010	ORIGINAL SIZE SWITCH	1
29	19605050	CAUTION LABEL,CONTACT GLASS	1
30	19502360	SPACER,DRUM POSITIONING	1
31	19506560	PIN,GUIDE	4
32	19506570	FILM,FEED ROLLER	1
33	M2105030	NYLON CLAMP 5N,NK-5N	2
34	1AB02010	SUPPORT PLATE,DF SIDE	1
35	1AB02020	LEFT SUPPORT PLATE,DF	1
36	1AB02030	RIGHT SUPPORT PLATE,DF	1
37	1AB02040	LOWER SUPPORT PLATE,DF	1
38	M2107120	BINDING BAND SG-130	4

• Parts with "•" are component parts or sub-assemblies of the assembly appearing immediately above them.

• Parts with "• •" are component parts or sub-assembly with "•" appearing immediately above them.

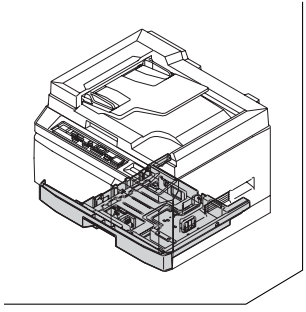

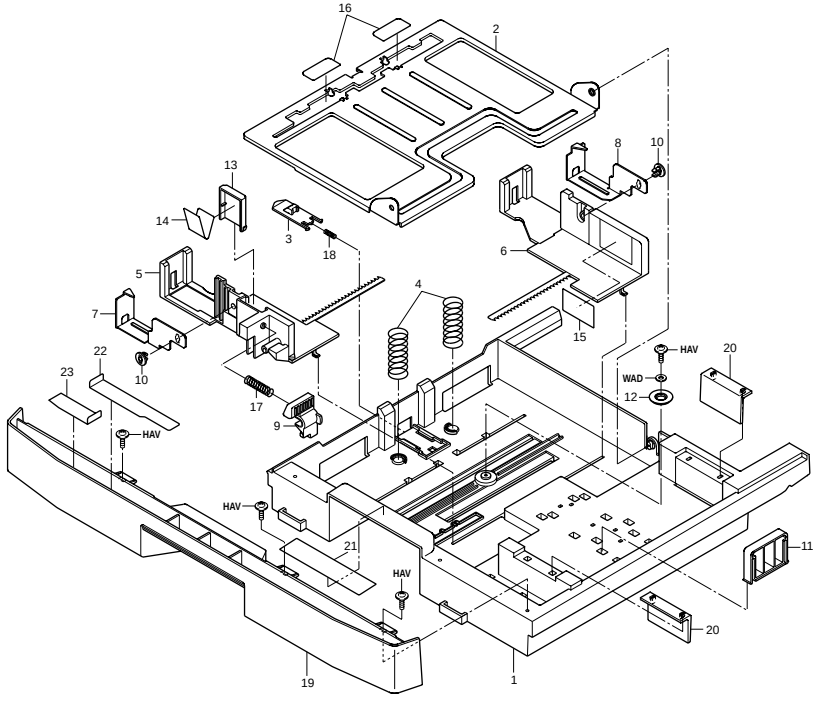
16
2
8
10
13
14
3
18
6
5
4
7
15
HAV
20
22
WAD
23
12
10
17
9
HAV
HAV
21
11
HAV
20
19
1

FIG. 3 CASSETTE

1AB/5AA

Ref. No.	Part. No.	Description	Quantity USA (120V)
	19500050	CASSETTE ASS'Y	1
1	•19507010	CASSETTE,PAPER FEED	1
2	•19507040	BASE,CASSETTE	1
3	•19507050	LEVER,CASSETTE BASE RELEASE	1
4	•19507210	SPRING,CASSETTE	2
5	•34907020	FRONT CURSOR,CASSETTE	1
6	•34907030	REAR CURSOR,CASSETTE	1
7	•34907040	FRONT CLAW,CASSETTE	1
8	•34907050	REAR CLAW,CASSETTE	1
9	•34907060	LEVER,CURSOR RETAINING	1
10	•34907070	PIN,CLAW CASSETTE	2
11	•34907130	REAR STOPPER,PAPER	1
12	•34907140	GEAR 18,CASSETTE	1
13	•34907260	HOLDER,CURSOR	1
14	•34907270	PLATE SPRING,CURSOR	1
15	•34907330	LABEL,PAPER UPPER LIMIT	1
16	•34907350	PAD A,CASSETTE	2
17	•68802070	SPRING A,LIFT UP	1
18	•76508130	SPRING BELT GUIDE ROLLER	1
19	19557140	COVER,CASSETTE(C)	1
20	19505100	LABEL PAPER SET	1
21	19507130	RIGHT LID,CASSETTE COVER	1
22	19507140	LEFT LID,CASSETTE COVER	1

• Parts with "•" are component parts or sub-assemblies of the assembly appearing immediately above them.

• Parts with "• •" are component parts or sub-assembly with "•" appearing immediately above them.

FIG. 4 PAPER FEED SECTION 1AB/5AA

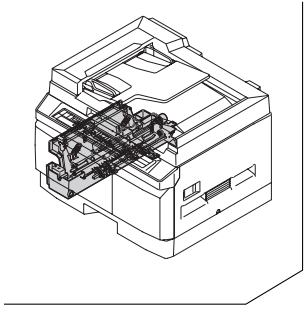

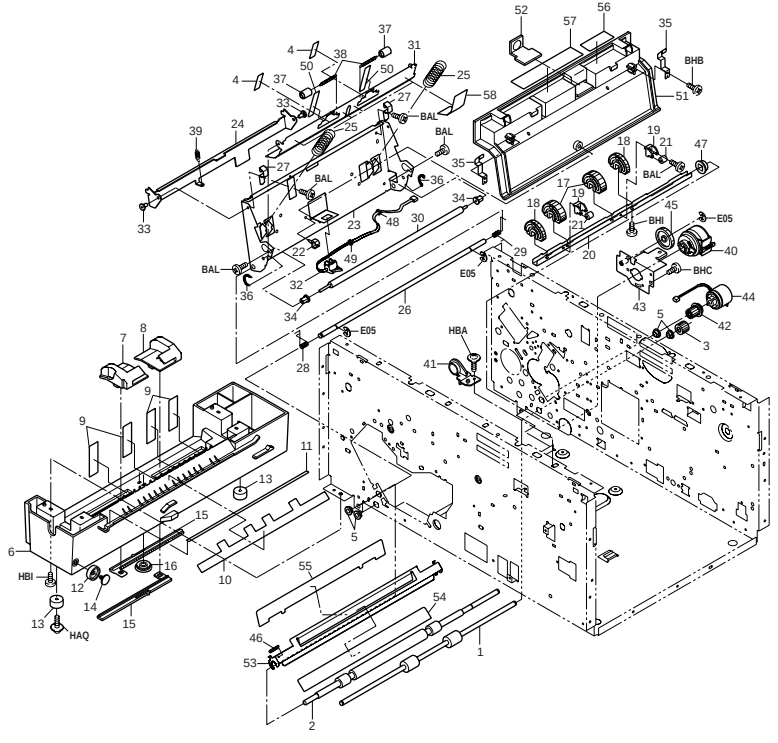

FIG. 4 PAPER FEED SECTION

1AB/5AA

Ref. No.	Part. No.	Description	Quantity USA (120V)
1	19506060	ROLLER,FEED	1
2	19506070	ROLLER,REGISTRATION DRIVE	1
3	19522170	GEAR 16,FEED	1
4	19506590	FILM,PULLEY HOLDER	2
5	29806810	BUSHING,6 REGISTRATION	4
6	19557040	LOWER LEFT MOUNT BASE,FRAME(C)	1
7	19506210	FRONT CURSOR,BYPASS	1
8	19506220	REAR CURSOR,BYPASS	1
9	19506510	FILM,FEED SHIFT	4
10	19506540	FILM B,FEED SHIFT	1
11	19507090	SEAL,CUSHION	1
12	19507100	PULLEY,CASSETTE	1
13	65902670	CUSHION RUBBER	2
14	71602180	PIN,SHIFT LEVER	1
15	72906160	RACK,STACK BYPASS	2
16	72906170	PINION,STACK BYPASS	1
17	19506230	PULLEY A,PAPER FEED	2
18	19506240	PULLEY B,PAPER FEED	2
19	19506250	SUPPORT PLATE,PULLEY	2
20	19506270	SHAFT,PAPER FEED	1
21	34907290	PULLEY,GUIDE	2
22	M2105720	MINIATURE CLAMP,UAMS-05-2	1
23	19502090	BASE,RELEASE	1
24	19502100	HOOK,RELEASE	1
25	19502120	SPRING TRANSFER PRESSING	2
26	19502220	SUPPORT BAR,RELEASE	1
27	19502290	HOLDER,FIXING PRESSURE RELEASE LEVER	2
28	19502340	FRONT SPRING,RELEASE AUXILIARY	1
29	19502350	REAR SPRING,RELEASE AUXILIARY	1
30	19506080	ROLLER,REGISTRATION IDLE	1
31	19506100	GUIDE,BYPASS	1
32	19506310	SWITCH,REGISTRATION	1
33	60116080	PIN RAIL DEV.	2
34	63806240	FRONT BUSHING,REGISUTORATION	2
35	19502330	HOLDER,PRESSURE RELEASE	2
36	71607160	PRESSING SPRING	2
37	72907100	PULLEY,PAPER GUIDE	2
38	72907110	SPRING,PAPER GUIDE PULLEY	2
39	75714310	SPRING DEVELOPING UNIT LOCK LEVER	1
40	19593070	PARTS,CLUTCH,PAPER FEED,SP	1
41	19506050	BUSHING,PAPER FEED ROLLER	1
42	19506090	GEAR 14,REGISTRATION	1
43	1AB06010	STOPPER,PAPER FEED CLUTCH	1
44	19593080	PARTS,CLUTCH,REGISTRATION,SP	1
45	19522200	GEAR 35	1
46	63213360	SPRING,PAPER EJECT HOLDER	1
47	75914670	BUSHING DEVELOPING UNIT SHIFT	1
48	M2107120	BINDING BAND SG-130	1
49	M2607010	BINDING BAND,PLT1M	1
50	19506550	FILM,FEED PULLEY	2
51	19557110	COVER,RELEASE(C)	1
52	19504080	BUTTON,RELEASE	1
53	19506110	UPPER FRONT GUIDE,TRANSFER	1
54	19506520	UPPER FRONT FILM,TRANSFER	1
55	19506530	UPPER FRONT FILM,TRANSFER AUXILIARY	1
56	19505080	CAUTION LABEL,HIGH VOLTAGE (EXP)	1
57	19505090	CAUTION LABEL,HIGH TEMPERATURE (EXP)	1
58	19506580	FILM,RESISTANCE	4

• Parts with "•" are component parts or sub-assemblies of the assembly appearing immediately above them.

• Parts with "• •" are component parts or sub-assembly with "•" appearing immediately above them.

FIG. 5 CHARGING SECTION

1AB/5AA

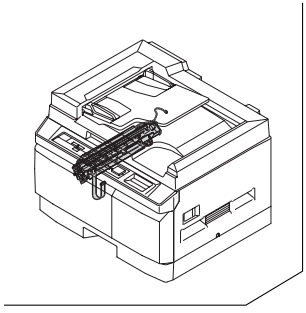

Be sure to order the tungsten wire Ref. No. 19 by the 100 meters spool (41626652)

Be sure to order the tungsten wire Ref. No. 31 by the 50 meters spool (42929503)

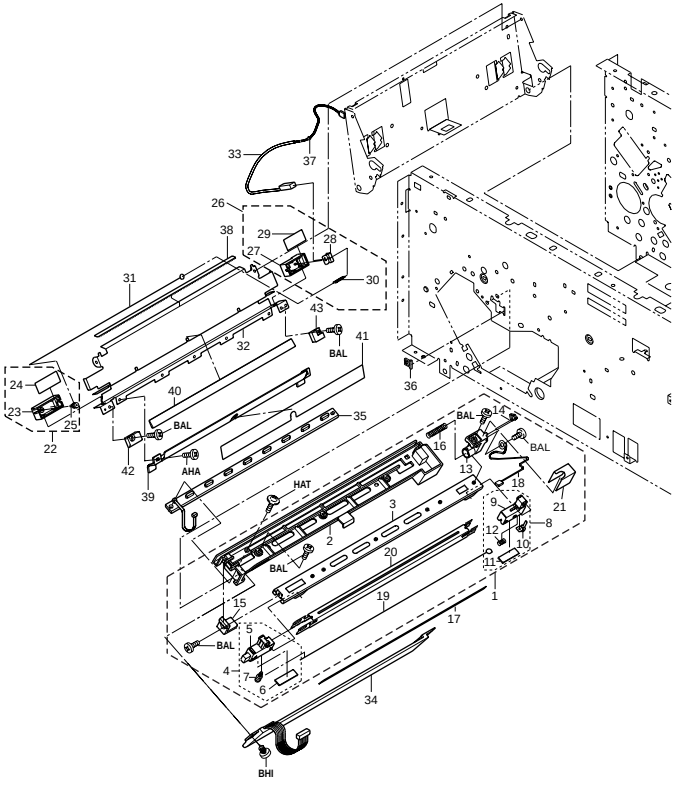

FIG. 5 CHARGING SECTION

Ref. No.	Part. No.	Description	Quantity USA (120V)
1	1AB93010	PARTS,ASS'Y CHARGE UNIT,SP	1
2	•19510010	HOUSING,CHARGE UNIT	1
3	•19510020	RAIL,MAIN	1
4	•19568100	FRONT MAIN CHARGER HOUSING ASS'Y	1
5	••19510030	FRONT HOUSING,MAIN	1
6	••19510090	FRONT LID,MAIN	1
7	••33910230	PIN,CHARGER	1
8	•19594900	SET,REAR MAIN CHARGER HOUSING,SP	1
9	••19568110	REAR MAIN CHARGER HOUSING ASS'Y	1
10	••48527200	SPRING,CHARGER	1
11	•63810010	SHIELD,MAIN CHARGER	1
12	•19510130	BARRIER,MAIN ELECTRODE	1
13	•19510060	HOUSING,MAIN ELECTRODE	1
14	•19510070	ELECTRODE,MAIN	1
15	•19510080	RETAINER,MAIN	1
16	•19510110	SPRING,MAIN RELEASE	1
17	•19510120	SEAL,LIGHT SHIELD BLANK	1
18	•1AB27080	WIRE,HIGH VOLTAGE	1
19	•41626652	TUNGSTEN WIRE	1spl
20	19516060	REAR GUIDE,TRANSFER	1
21	19516120	LOWER FRONT SHEET,TRANSFER	1
22	19568120	FRONT TRANSFER CHARGER HOUSING ASS'Y	1
23	•19516020	FRONT HOUSING,TRANSFER	1
24	•19516070	FRONT LID,TRANSFER	1
25	•33910230	PIN,CHARGER	1
26	19594910	SET,REAR TRANSFER CHARGER HOUSING,SP	1
27	•19568130	REAR TRANSFER CHARGER HOUSING ASS'Y	1
28	•48527200	SPRING,CHARGER	1
29	19516130	FRONT PROJECTION,TRANSFER	1
30	19516140	REAR PROJECTION,TRANSFER	1
31	42929503	TUNGSTEN WIRE(50M)	1spl
32	19516010	SHIELD,TRANSFER	1
33	1AB27090	WIRE,TRANSFER HIGH VOLTAGE	1
34	19528080	BLANK LAMP PCB	1
35	63828090	CLEANING LAMP PCB	1
36	M2104260	EDGING,EDS-0607U(KITAGAWA)	1
37	M2107120	BINDING BAND SG-130	1
38	19516150	STATIC ELIMINATOR,CONVEYING	1
39	19516050	LOWER FRONT GUIDE,TRANSFER	1

• Parts with "•" are component parts or sub-assemblies of the assembly appearing immediately above them.

• Parts with "• •" are component parts or sub-assembly with "•" appearing immediately above them.

FIG. 6 OPTICAL SECTION I

1AB/5AA

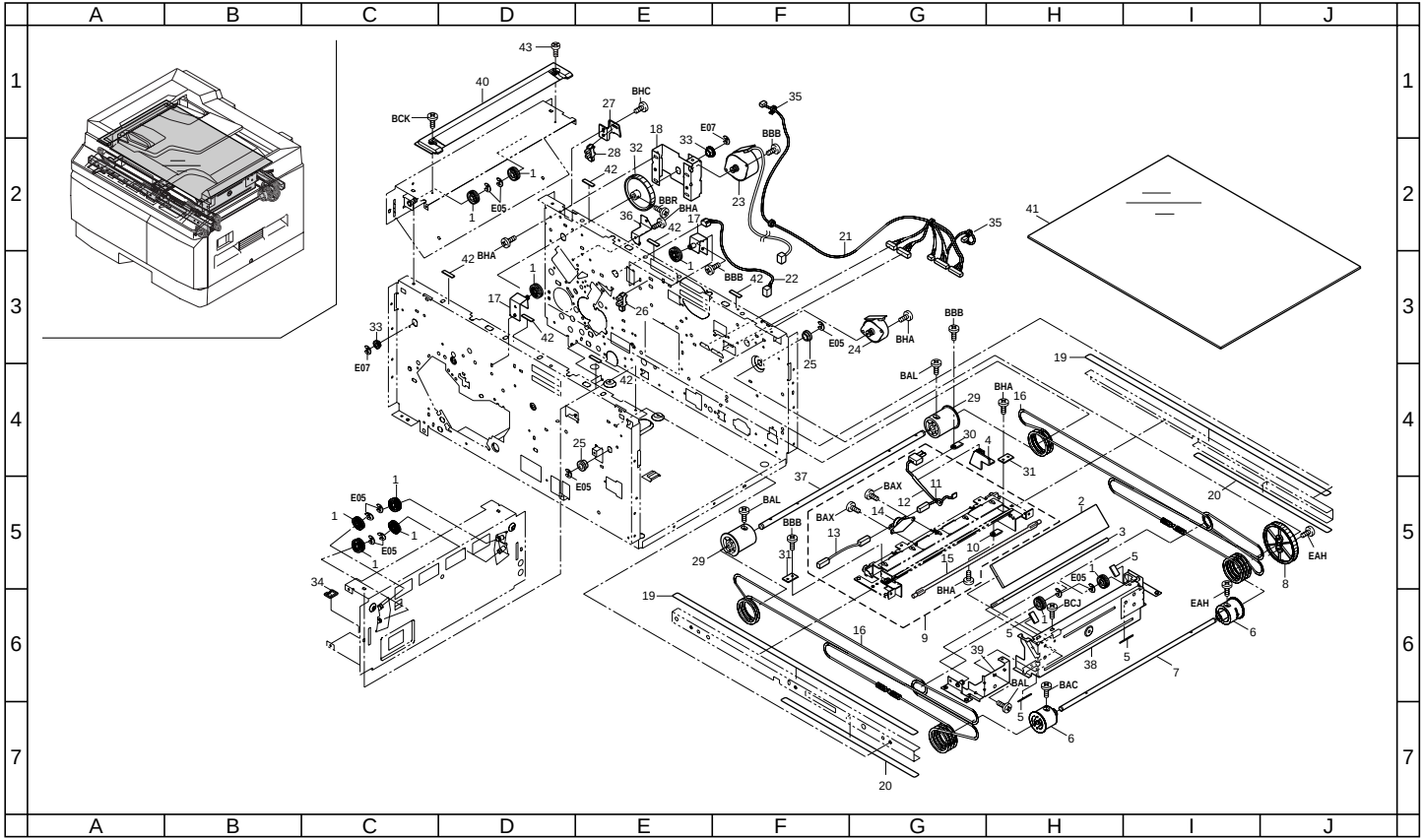

FIG. 6 OPTICAL SECTION I

1AB/5AA

Ref. No.	Part. No.	Description	Quantity USA (120V)
1	19512150	PULLEY,SCANNER	10
2	19512160	MIRROR,2	1
3	19512170	MIRROR,3	1
4	19512200	GUIDE,FEEDER WIRE	1
5	75712080	MIRROR HOLDER	4
6	19512100	DRUM,WIRE	2
7	19512120	SHAFT,WIRE DRUM	1
8	19512240	GEAR 124,WIRE DRIVE	1
9	19593050	PARTS,LIGHT UNIT ASS'Y 100,SP	1
10	•M2105000	NYLON CLAMP 2N,NK-2N	1
11	•M2607010	BINDING BAND,PLT1M	1
12	•19527050	FEEDER WIRE,SCANNER	1
13	•19527060	WIRE,THERMOSTAT SCANNER	1
14	•69312020	THERMAL PROTECTOR,SCANNER	1
15	•19568140	LAMP 100	1
16	19512030	WIRE,SCANNER	2
17	19512270	MOUNT,SCANNER PULLEY	2
18	19512280	MOUNT,SCANNER MOTOR	1
19	19512340	UPPER RAIL,SCANNER	2
20	19512350	LOWER RAIL,SCANNER	2
21	1AB27010	WIRE,SCANNER	1
22	19527170	WIRE,SCANNER PRIMARY	1
23	19527350	MOTOR,SCANNER	1
24	19527370	MOTOR,LENS UNIT	1
25	29717230	BUSHING 6,FEED BACK	2
26	66006350	SWITCH,CASSETTE LIFT	1
27	66212080	MOUNT,SCANNER SWITCH	1
28	72127100	PI SWITCH,OPTICAL SECTION	1
29	75712120	DRUM SCANNER DRIVE WIRE	2
30	M2105000	NYLON CLAMP 2N,NK-2N	1
31	29912420	HOLDER,WIRE ROPE	2
32	19512220	GEAR 64,SCANNER DRIVE	1
33	67322230	BUSHING 8	2
34	M2104220	EDGING,EDS-1717U	1
35	M2107120	BINDING BAND SG-130	2
36	19502300	REAR MOUNT,COVER	1
37	19512090	SHAFT,SCANNER DRUM	1
38	19568160	MIRROR FRAME 2 ASS'Y	1
39	19568170	MIRROR ADJUSTING PLATE ASS'Y	1
40	19512050	ORIGINAL SIZE INDICATOR,ORIGINAL (INCH)	1
41	19512260	CONTACT GLASS	1
42	29812291	CUSHION,CONTACT GLASS	6
43	67312250	PIN,ORIGINAL INDICATION PLATE	1

• Parts with "•" are component parts or sub-assemblies of the assembly appearing immediately above them.

• Parts with "• •" are component parts or sub-assembly with "•" appearing immediately above them.

FIG. 7 OPTICAL SECTION II

1AB/5AA

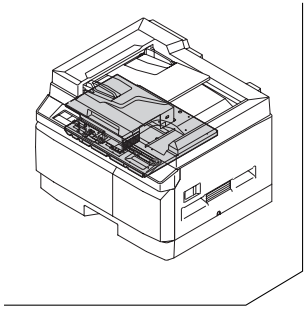

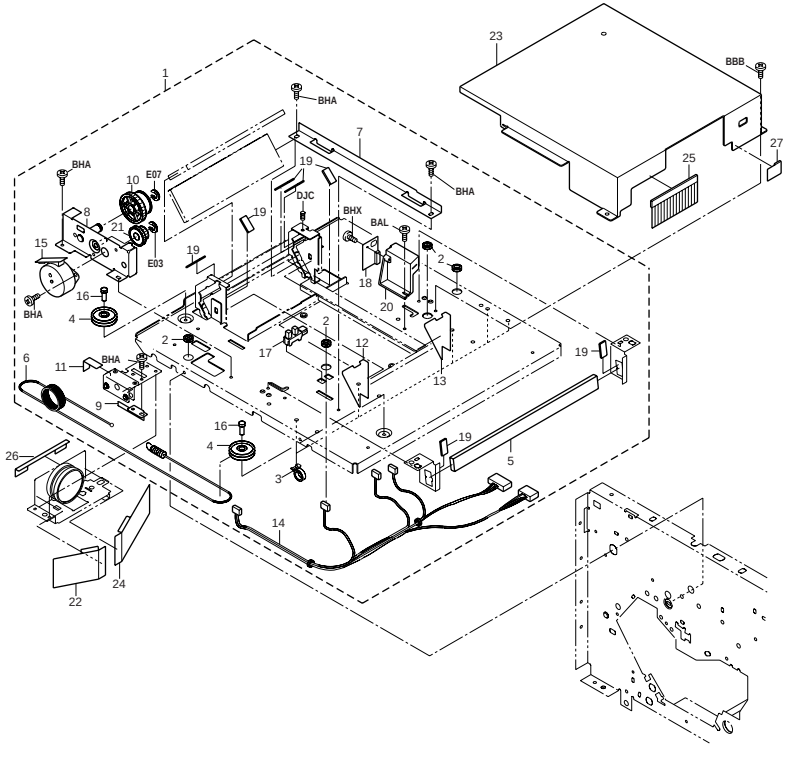

FIG. 7 OPTICAL SECTION II

Ref. No.	Part. No.	Description	Quantity USA (120V)
1	19500190	LENS UNIT ASS'Y	1
2	•M1203200	OPEN BUSHING,OCB-375	4
3	•M2107120	BINDING BAND SG-130	5
4	•19513050	PULLEY,LENS WIRE	2
5	•19513060	MIRROR,6	1
6	•19513140	WIRE,LENS MOVING SCANNER	1
7	•19513150	RAIL,LENS MOVING SCANNER	1
8	•19513160	MOUNT,LENS MOTOR	1
9	•19513180	LIGHT SHIELD,LENS PI	1
10	•19513190	PULLEY,LENS MOVING SCANNER	1
11	•19513260	LOWER FRONT FILM,LIGHT SHIELD	1
12	•19513280	FRONT SEAL,LIGHT SHIELD	1
13	•19513290	REAR SEAL,LIGHT SHIELD	1
14	•19527040	WIRE,SCANNER UNIT	1
15	•19527370	MOTOR,LENS UNIT	1
16	•33408180	PIN,STOPPER	2
17	•66006350	SWITCH,CASSETTE LIFT	1
18	•66228050	AE SENSOR PCB	1
19	•75712080	MIRROR HOLDER	7
20	•75713060	AE SENSOR COVER	1
21	•78022050	GEAR 19/44	1
22	19513090	UPPER FRONT FILM,LIGHT SHIELD	1
23	19513100	COVER,LENS UNIT	1
24	19513110	UPPER REAR FILM,LIGHT SHIELD	1
25	19513170	FRONT FILM,LIGHT SHIELD	1
26	19513250	UPPER FILM B,LIGHT SHIELD	1
27	19513270	REAR FILM,LIGHT SHIELD	1

• Parts with "•" are component parts or sub-assemblies of the assembly appearing immediately above them.

• Parts with "• •" are component parts or sub-assembly with "•" appearing immediately above them.

FIG. 8 DEVELOPING SECTION

1AB/5AA

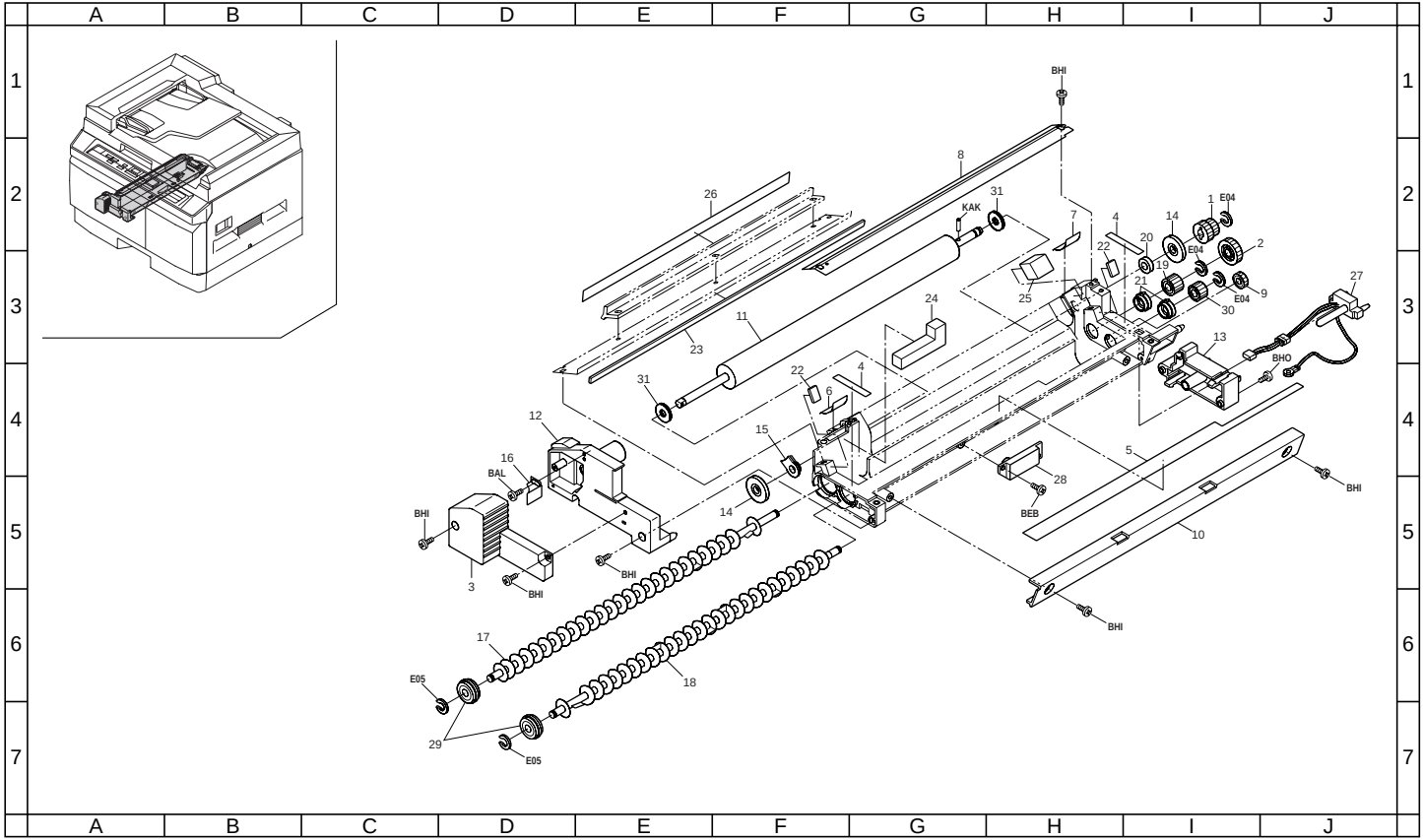

FIG. 8 DEVELOPING SECTION

Ref. No.	Part. No.	Description	Quantity USA (120V)
	19500120	DEVELOPING ASS'Y (N.A.)	1
1	•19514120	GEAR,DEVELOPING INPUT	1
2	•19514130	GEAR,DEVELOPING IDLE	1
3	•19514510	COVER,DEVELOPING TERMINAL(N.A.)	1
4	•19514180	SPONGE A,DEVELOPING	2
5	•19514190	SPONGE B,DEVELOPING	1
6	•19514220	FRONT FILM,DEVELOPING	1
7	•19514230	REAR FILM,DEVELOPING	1
8	•19514240	UPPER SEAL B,DEVELOPING	1
9	•65914110	GEAR 13,IDLE DEVELOPING	1
10	•19514050	RIGHT COVER,DEVELOPING	1
11	•19514010	MAGNET DEVELOPING	1
12	•19514030	FRONT COVER,DEVELOPING (EUR)	1
13	•19514040	REAR COVER,DEVELOPING	1
14	•19514090	PULLEY,DS	2
15	•19514100	FRONT BUSHING,DEVELOPING	1
16	•19514110	RETAINER,DEVELOPING POSITION	1
17	•19514140	SPIRAL A,DEVELOPING	1
18	•19514150	SPIRAL B,DEVELOPING	1
19	•19514160	GEAR,AGITATION	1
20	•19514250	BEARING,DEVELOPING	1
21	•19514270	REAR BUSHING,AGITATION	2
22	•19514280	SPONGE C,DEVELOPING	2
23	•19514290	SPONGE D,DEVELOPING	1
24	•19514300	FRONT SPONGE,DOCTOR BLADE	1
25	•19514310	REAR SPONGE,DOCTOR BLADE	1
26	•19514320	FILM,DOCTOR BLADE	1
27	•19527100	WIRE,DEVELOPING UNIT (N.A.)	1
28	•33914190	TONER SENSOR	1
29	•34914370	REAR BUSHING,SPIRAL	2
30	•63722330	GEAR 14,TONER FEED	1
31	•63814640	FRONT SEAL,SLEEVE	2

• Parts with "•" are component parts or sub-assemblies of the assembly appearing immediately above them.

• Parts with "• •" are component parts or sub-assembly with "•" appearing immediately above them.

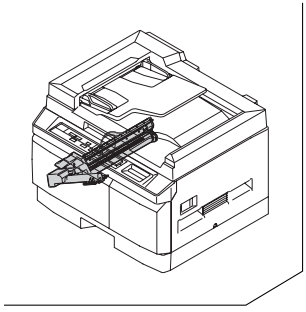

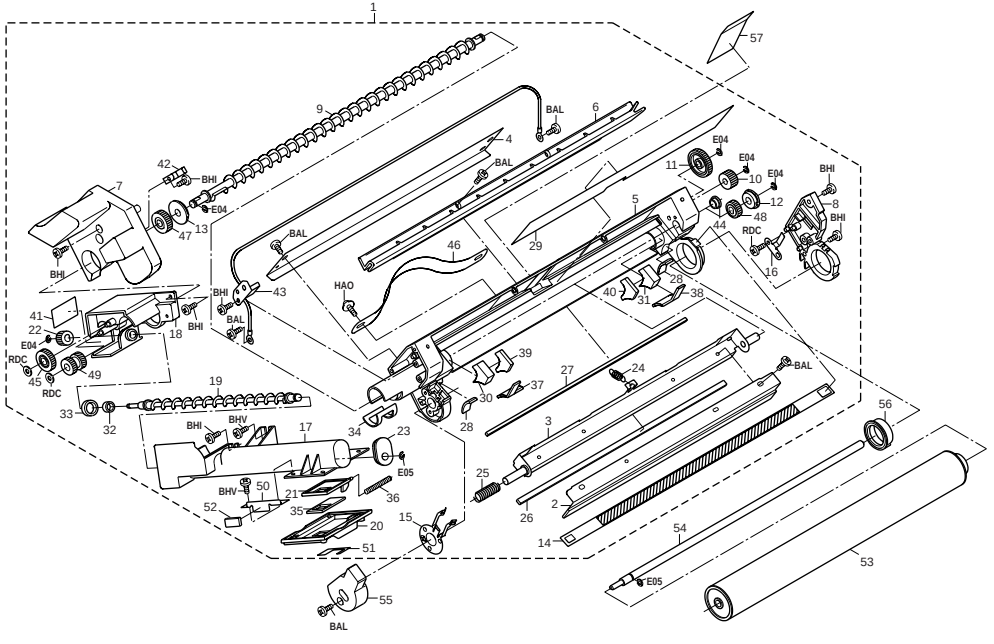
1
2
3
4
5
6
7
8
9
10
11
12
13
14
15
16
17
18
19
20
21
22
23
24
25
26
27
28
29
30
31
32
33
34
35
36
37
38
39
40
41
42
43
44
45
46
47
48
49
50
51
52
53
54
55
56
57
BAL
BHI
BHV
E04
E05
HAO
RDC

FIG. 9 CLEANING SECTION

1AB/5AA

Ref. No.	Part. No.	Description	Quantity USA (120V)
1	19500091	DRUM UNIT ASS'Y (N.A.)	1
2	•19593130	PARTS,BLADE CLEANING,SP	1
3	•19518020	MOUNT,BLADE	1
4	•19593140	PARTS,LOWER BLADE CLEANING,SP	1
5	•19518040	HOUSING,CLEANING	1
6	•19518050	UPPER COVER,CLEANING	1
7	•19518410	FRONT COVER,CLEANING (N.A.)	1
8	•19518071	REAR COVER,CLEANING (EUR)	1
9	•19518080	SPIRAL,CLEANING	1
10	•19518110	GEAR 15,IDLE	1
11	•19518121	GEAR 27,THRUST	1
12	•19518140	REAR BUSHING,SPIRAL	1
13	•19518150	FRONT BUSHING,SPIRAL	1
14	•19593330	PARTS,GRID MAIN,SP	1
15	•19518171	PLATE SPRING,GRID	1
16	•19518180	PLATE SPRING,FEEDBACK	1
17	•19518191	HOUSING,RECYCLE	1
18	•19518201	MOUNT BASE,RECYCLE	1
19	•19518210	SPIRAL,RECYCLE	1
20	•19518220	COVER,RECYCLE	1
21	•19518230	SHUTTER,RECYCLE	1
22	•19518240	GEAR 12,RECYCLE	1
23	•19518250	BUSHING,RECYCLE	1
24	•19518260	SPRING,BLADE	1
25	•19518270	SPRING,THRUST	1
26	•19518280	SEAL,BLADE	1
27	•19518290	LOWER SEAL,BLADE	1
28	•19518300	SEAL,DRUM	2
29	•19518310	FILM,CLEANING	1
30	•19518320	FRONT SEAL,CLEANING	1
31	•19518330	REAR SEAL,CLEANING	1
32	•19518361	SEAL,SPIRAL	1
33	•19518371	SEAL,MOUNT BASE	1
34	•19518380	SEAL,JOINT	1
35	•19518390	SEAL,SHUTTER	1
36	•19518400	SPRING,SHUTTER	1
37	•19518450	FRONT SEAL A,TONER	1
38	•19518460	REAR SEAL A,TONER	1
39	•19518470	FRONT SEAL B,TONER	1
40	•19518480	REAR SEAL B,TONER	1
41	•19518490	PROTECTING PLATE,GEAR	1
42	•19518500	POSITIONING PLATE,CLEANING	1
43	•19593350	PARTS,GRID PCB,SP	1
44	•29822140	BUSHING,DRUM SHAFT	1
45	•35322020	GEAR 20,PAPER FEED DRIVE	1
46	•63573070	BELT,DEVELOPING HANDLE	1
47	•63814060	GEAR 20,AGITATION	1
48	•63814090	GEAR 15,AGITATION	1
49	•72919050	GEAR 12/15,RECYCLE SECTION	1
50	•19518510	MOUNT,RELEASE SEAL	1
51	•19518520	SEAL,RECYCLE COVER	1
52	•19518540	SEAL,CARTRIDGE SHUTTER	1
53	19582030	SET,DRUM	1
54	19508040	SHAFT,DRUM	1
55	19518090	PIN,DRUM	1
56	19518100	BUSHING,DRUM	1
57	19518350	SHIELD,CLEANING	1

• Parts with "•" are component parts or sub-assemblies of the assembly appearing immediately above them.

• Parts with "• •" are component parts or sub-assembly with "•" appearing immediately above them.

FIG. 10 TONER HOPPER SECTION

1AB/5AA

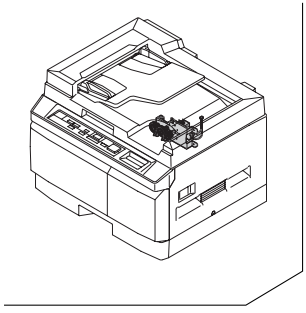

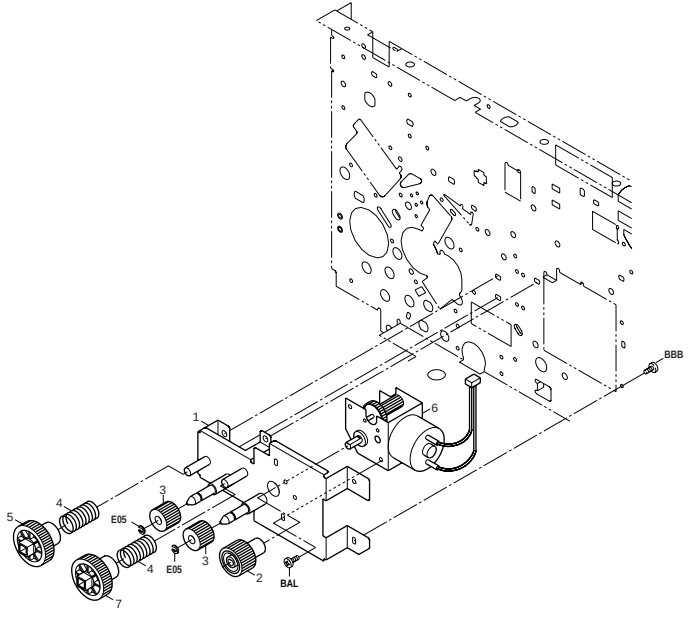

FIG. 10 TONER HOPPER SECTION

Ref. No.	Part. No.	Description	Quantity USA (120V)
1	19515010	MOUNT,TONER MOTOR	1
2	19515020	GEAR,TONER MOTOR	1
3	19515030	GEAR,CARTRIDGE IDLE	2
4	33915250	SPRING,CARTRIDGE DRIVE	2
5	33915100	GEAR A,CARTRIDGE DRIVE	1
6	63822320	MOTOR,TONER FEED	1
7	33915330	GEAR C,CARTRIDGE DRIVE	1

• Parts with "•" are component parts or sub-assemblies of the assembly appearing immediately above them.

• Parts with "• •" are component parts or sub-assembly with "•" appearing immediately above them.

FIG. 11 FIXING SECTION

1AB/5AA

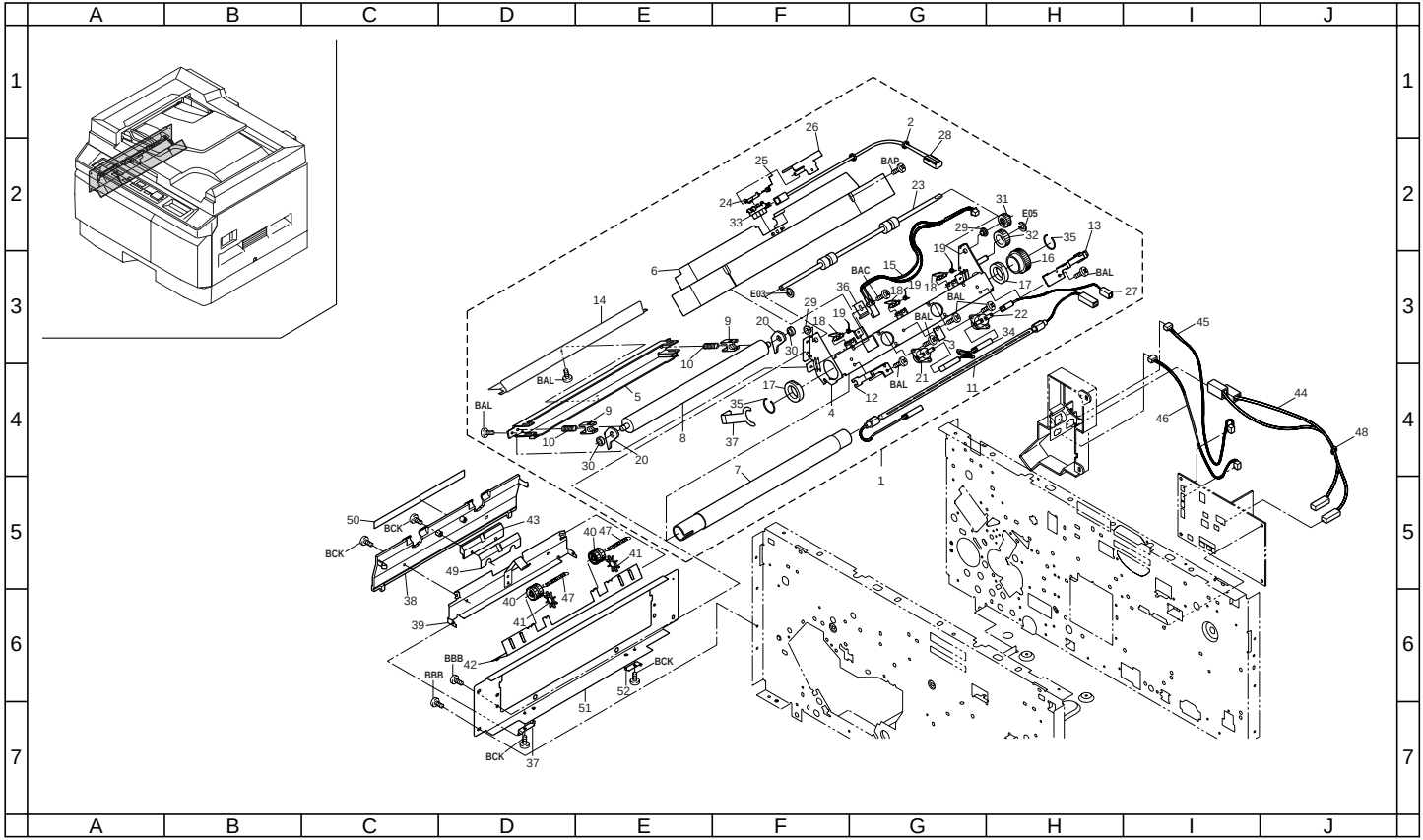

FIG. 11 FIXING SECTION

1AB/5AA

Ref. No.	Part. No.	Description	Quantity USA (120V)
1	19593032	PARTS,FIXING ASS'Y 120,SP	1
2	•M0207000	BINDING BAND,KB-100-1	1
3	•M2105810	CLAMP,HEAT PROOF,KCA-34	1
4	•19520010	UPPER HOUSING,FIXING	1
5	•19520020	LOWER HOUSING,FIXING	1
6	•19520031	COVER,FIXING	1
7	•19593150	PARTS,ROLLER HEAT,SP	1
8	•19593161	PARTS,ROLLER PRESSURE,SP	1
9	•19520060	HOLDER,PRESSURE BEARING	2
10	•19520070	SPRING,PRESSURE	2
11	•19593170	PARTS,FIXING HEATER 120,SP	1
12	•19520100	FRONT MOUNT,HEATER	1
13	•19520110	REAR MOUNT,HEATER	1
14	•19520120	GUIDE,FIXING ADMISSION	1
15	•19593340	PARTS,THERMISTOR FIXING,SP	1
16	•19520140	GEAR 32,FIXING	1
17	•19520150	BUSHING,HEAT ROLLER	2
18	•19520160	CLAW,SEPARATION	3
19	•19520170	SPRING,SEPARATION CLAW	3
20	•19520180	LEVER,FIXING PRESSURE RELEASE	2
21	•19520190	THERMOSTAT A,FIXING	1
22	•19520200	THERMOSTAT B,FIXING	1
23	•19521010	ROLLER,EJECT	1
24	•19521050	ACTUATOR,EJECT SWITCH	1
25	•19521060	SPRING,EJECT ACTUATOR	1
26	•19521070	MOUNT,EJECT SWITCH	1
27	•19527070	WIRE,FIXING HEATER	1
28	•19527270	WIRE,EJECT SWITCH	1
29	•49028102	BUSH 4	2
30	•63820190	BEARING, FIXING UNIT	2
31	•63822150	GEAR 18,EJECTION	1
32	•65011310	GEAR 20,IDLE	1
33	•66006350	SWITCH,CASSETTE LIFT	1
34	•69927040	WIRE,THERMOSTAT JUNCTION	1
35	•76220090	STOPPER HEAT ROLLER	2
36	•19520210	BLADE,THERMISTOR	1
37	•19520220	GROUND PLATE,HEAT ROLLER	1
38	19557130	COVER,EJECT(C)	1
39	19504110	MOUNT,EJECT COVER	1
40	19521020	PULLEY,EJECT	2
41	19521030	PADDLE,EJECT PULLEY	2
42	19521041	GUIDE,EJECT	1
43	19521090	GUIDE,EJECT SUB	1
44	19527210	JUNCTION WIRING,FIXING HEATER	1
45	19527320	JUNCTION WIRING,FIXING THERMISTOR	1
46	19527280	JUNCTION WIRING,EJECT SW	1
47	60516060	SPRING EJECT	2
48	M2607010	BINDING BAND,PLT1M	1
49	19521121	SHEET,EJECT	1
50	35405080	CAUTION LABEL,HIGH TEMPERATURE (EXP)	1
51	19502130	MOUNT,COPY TRAY	1
52	19502280	FULCRUM PLATE,EJECT COVER	2

• Parts with "•" are component parts or sub-assemblies of the assembly appearing immediately above them.

• Parts with "• •" are component parts or sub-assembly with "•" appearing immediately above them.

FIG. 12 DRIVING, COOLING SECTION

1AB/5AA

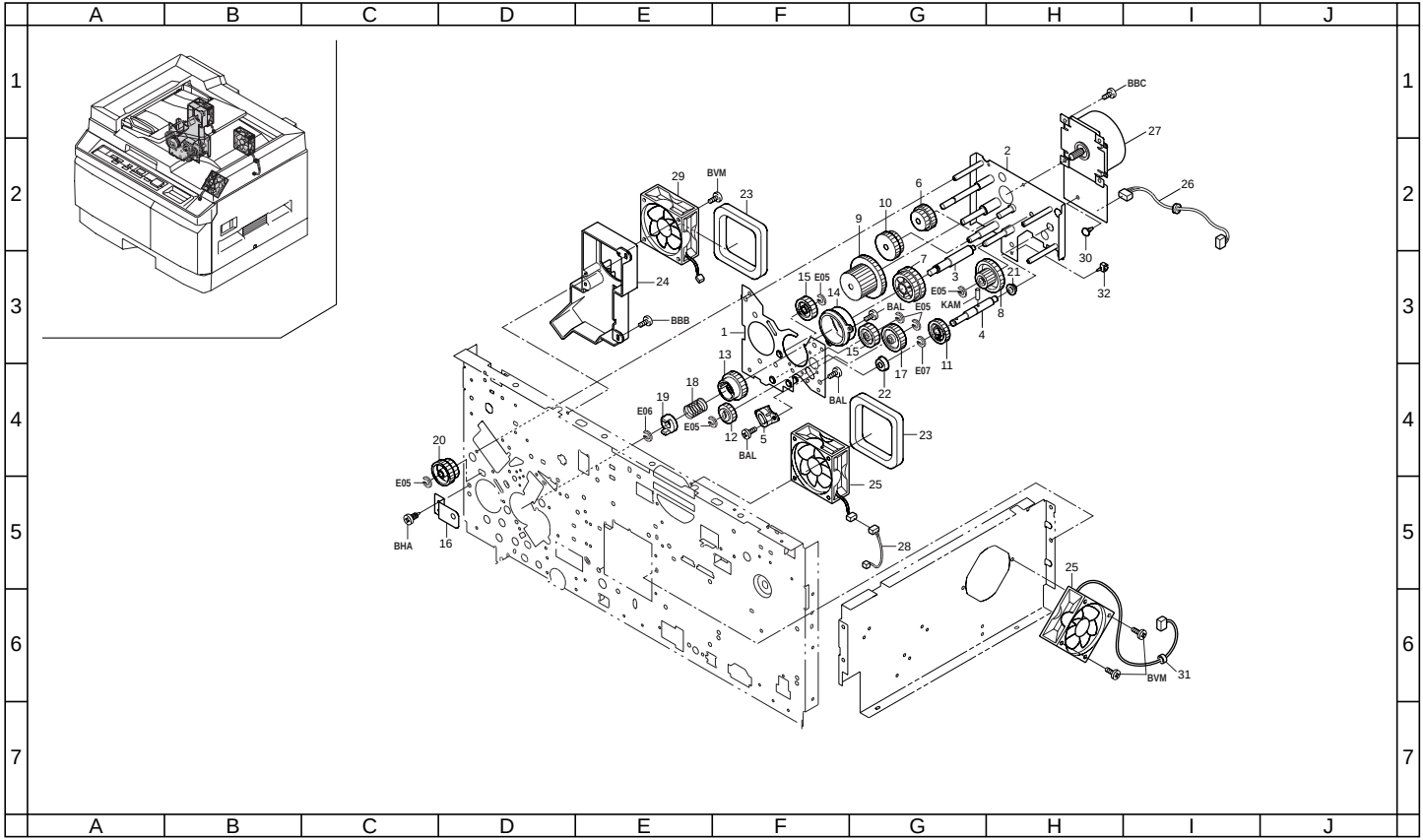

FIG. 12 DRIVING, COOLING SECTION

Ref. No.	Part. No.	Description	Quantity USA (120V)
1	19522010	FRONT MOUNT,DRIVE	1
2	19522020	REAR MOUNT,DRIVE	1
3	19522030	REAR PIN,DRUM	1
4	19522040	SHAFT,DEVELOPING DRIVE	1
5	19522050	BUSHING,DEVELOPING SLEEVE	1
6	19522060	GEAR 26/54	1
7	19522070	GEAR 38/43	1
8	19522080	GEAR 20/43	1
9	19522090	GEAR 41/56	1
10	19522110	GEAR 30/35	1
11	19522130	GEAR 30	1
12	19522140	GEAR 24,DEVELOPING DRIVE	1
13	19522150	GEAR 35,DRUM DRIVE	1
14	19522160	BUSHING,DRUM PIN	1
15	19522180	GEAR 28	2
16	19522190	HOLDER,DRIVE PIN	1
17	63722490	GEAR 33	1
18	63822030	SPRING,COUPLER DRUM	1
19	63822040	COUPLER,DRUM	1
20	63822200	GEAR,27/38	1
21	73210450	BUSH, 6	1
22	74808140	BEARING,LNR-1360ZZR	1
23	19512330	SPONGE,SCANNER FAN	2
24	19523010	DUCT,COOLING	1
25	19523020	FAN,MACHINE INSIDE COOLING	2
26	1AB27120	WIRE,DRIVE MOTOR	1
27	19593210	PARTS,MOTOR MAIN,SP	1
28	19527380	JUNCTION WIRING,SCANNER FAN	1
29	34927070	FAN,COOLING	1
30	M2108880	SPACER,KGPS-5RF(KITAGAWA)	1
31	M2607010	BINDING BAND,PLT1M	1
32	M2105720	MINIATURE CLAMP,UAMS-05-2	1

• Parts with "•" are component parts or sub-assemblies of the assembly appearing immediately above them.

• Parts with "• •" are component parts or sub-assembly with "•" appearing immediately above them.

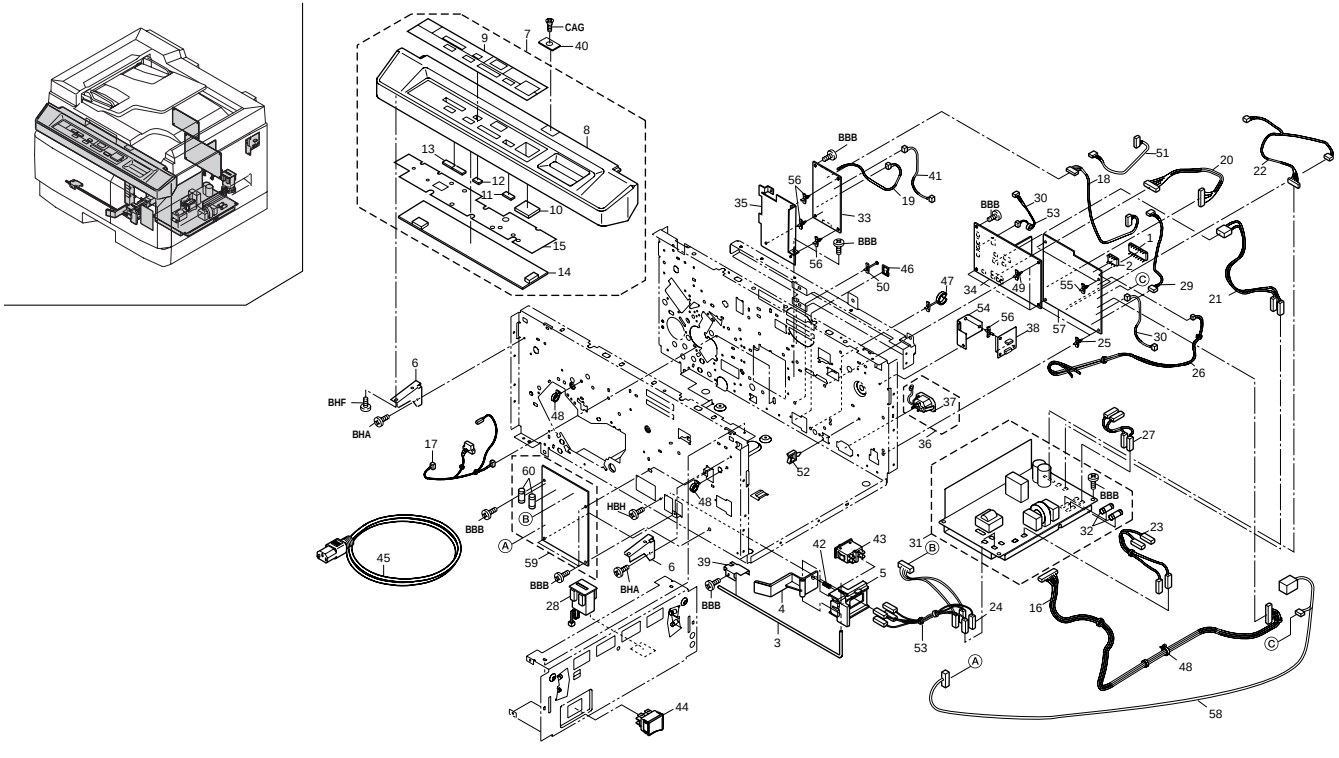
CAG
BBB
BHF
BHA
HBH

FIG. 13 ELECTRICAL COMPONENTS

1AB/5AA

Ref. No.	Part. No.	Description	Quantity USA (120V)
1	1AB27130	IC,ROM CONTROL	1
2	33227030	IC,EEPROM	1
3	19502230	GUIDE BAR,SAFETY SWITCH	1
4	19502240	LEVER,SAFETY SWITCH	1
5	19502250	MOUNT,SAFETY SWITCH	1
6	19504160	MOUNT,KEYBOARD	2
7	1AB93020	PARTS,OPERATION UNIT(INCH)SP	1
8	•19568020	FRAME,OPERATION UNIT	1
9	•1AB68020	SHEET,OPERATION UNIT(INCH)	1
10	•19568050	KEY TOP,PRINT	1
11	•19568060	KEY TOP,STOP CLEAR	1
12	•19568070	KEY TOP,EXPOSURE	1
13	•19568080	KEY TOP,IMAGE DENSITY ADJUSTMENT	1
14	•1AB68040	OPERATION UNIT PCB	1
15	•19568180	PROTECTION SHEET,OPERATION UNIT	1
16	19527020	WIRE,OPERATION UNIT	1
17	1AB27040	WIRE,DEVELOPING (N.A.)	1
18	1AB27060	WIRE,HIGH VOLTAGE JUNCTION	1
19	1AB27070	WIRE,FEEDBACK	1
20	19527160	WIRE,AVR JUNCTION	1
21	19527180	WIRE,PRIMARY	1
22	19527190	WIRE,SECONDARY	1
23	19527200	WIRE,MAIN SWITCH	1
24	1AB27110	WIRE,INTERLOCK SWITCH	1
25	M2108480	SPACER,KGLS-22S	2
26	19527240	WIRE,INLET	1
27	19527260	WIRE,SWITCH RELEASE	1
28	19527290	TOTAL COUNTER	1
29	19527340	WIRE,HUMIDITY SENSOR	1
30	19527390	JUNCTION WIRING,CLEANING LAMP	2
31	19528020	POWER SOURCE PCB (100)	1
32	•M1661000	FUSE 15A,314015	2
33	19593270	PARTS,HIGH VOLTAGE PCB,SP	1
34	19593280	PARTS,AVR PCB(100),SP	1
35	1AB26010	MOUNT,HIGH VOLTAGE PCB	1
36	63801050	INLET WIRING ASS'Y	1
37	•71827340	INLET 3P,POWER	1
38	36793560	PARTS,HUMIDITY SENSOR PCB(SP)	1
39	19502310	BARRIER,SAFETY SWITCH	1
40	71804200	MAGNET PLATE,TOP COVER	1
41	1AB27100	JUNCTION WIRING,TONER MOTOR	1
42	65926530	SPRING,SAFETY SWITCH	1
43	65927010	SWITCH,INTERLOCK	1
44	69027070	SWITCH,MAIN	1
45	19527400	POWER CORD(120)	1
46	M2104220	EDGING,EDS-1717U	1
47	M2105990	CLAMP,HL-18-0(KITAGAWA)	1
48	M2107120	BINDING BAND SG-130	3
49	M2108360	SPACER,KGLS-12S	3
50	M2108780	SPACER,KGPS-12S(KITAGAWA)	1
51	1AB27020	JUNCTION WIRING,SCANNER MOTOR	1
52	M2109010	WIRE SADDLE,WS-2NS	1
53	M2607010	BINDING BAND,PLT1M	2
54	19502320	MOUNT,HUMIDITY SENSOR	1
55	M2108120	SPACER,KGLS-4S	2
56	M2108000	SPACER,KGLS-3S	6
57	1AB68010	MAIN PCB ASS'Y SP	1
58	1AB27030	JUNCTION WIRING,DF	1
59	1AB28020	POWER SOURCE PCB 120	1
60	•M1654020	FUSE,237004(LITTEL FUSE)	2

• Parts with "•" are component parts or sub-assemblies of the assembly appearing immediately above them.

• Parts with "• •" are component parts or sub-assembly with "•" appearing immediately above them.

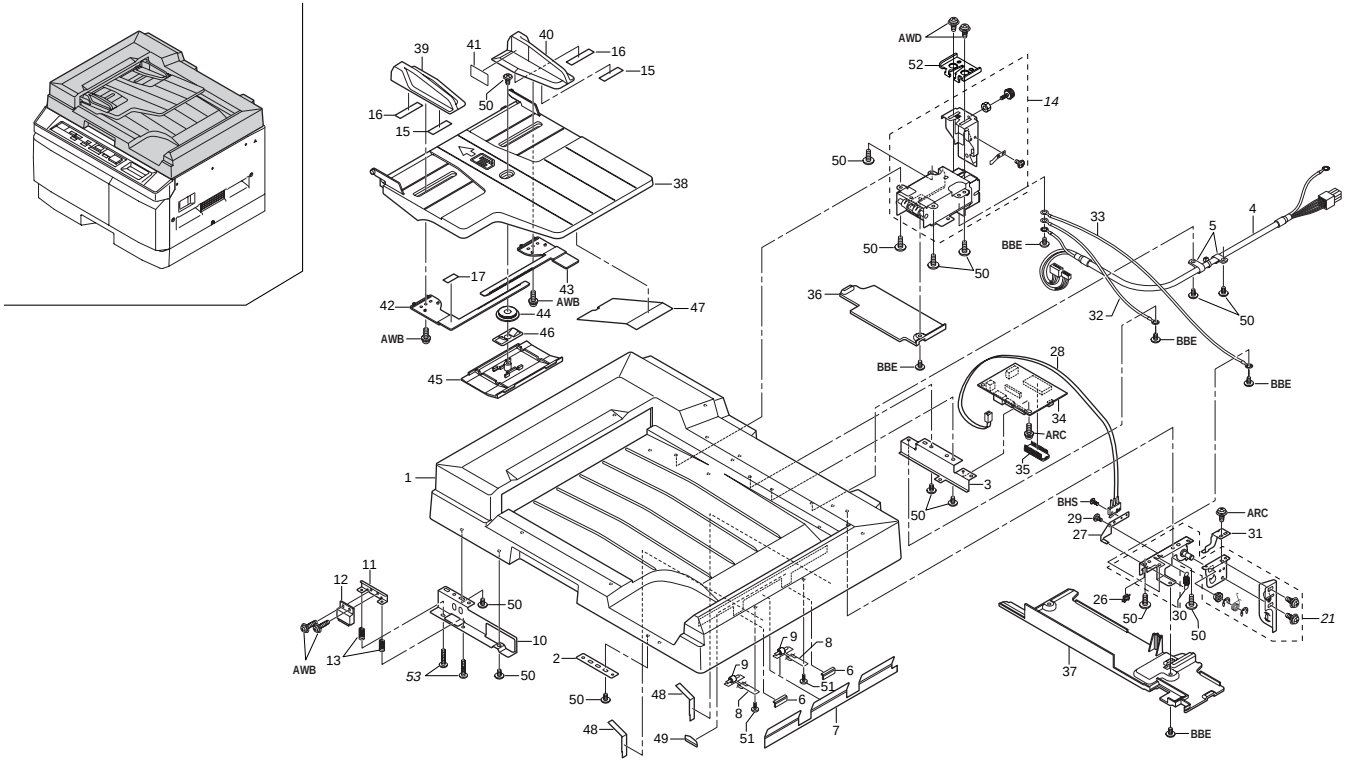
A B C D E F G H I J
1 2 3 4 5 6 7
39 41 40 16 15 16 15 50 38
17 43 AWB 42 44 AWB AWB 46 45 47
AWD 52 14 50 50 50
33 BBE 5 4 32 50 BBE BBE
36 BBE
28 34 ARC 35
1 3 50
BHS 29 27 ARC 31
26 50 30 50 21
37 BBE
12 11 AWB 13 53 50 10 50
2 50 48 48 49
9 8 6 51 9 6 8 51 7

FIG. 14 EXTERIOR COVERS (ADF)

Ref. No.	Part. No.	Description	Quantity USA (120V)
1	5AA04010	COVER,ADF	1
2	5AA07420	DF SUPPORT PLATE F	1
3	5AA07430	DF SUPPORT R	1
4	5AA08620	INTERFACE,ASM	1
5	M2105030	NYLON CLAMP 5N, NK-5N	2
6	5AA08690	GUARD EDGE	2
7	5AA07810	STATIC ELIMINATOR BRUSH,H	1
8	5AA07900	SPRING,PAPER EJECT PULLEY	2
9	5AA07130	H PULLEY	2
10	5AA07590	MG-BKT	1
11	5AA08700	ADJUSTING PLATE,MG	1
12	5AA08320	MG CATCH	1
13	5AA08810	ADJUSTMENT MG SP	2
14	5AA09260	HINGE L,ASS'Y	1
15	5AA09250	T GUIDE TAPE,A	2
16	5AA09240	T GUIDE TAPE,B	2
17	5AA09230	RACK MOQUETTE	1
21	*5AA07050*	*HINGE R,ASS'Y*	*1*
26	M2104350	EDGING,EDS-0607M(KITAGAWA)	1
27	5AA07450	DF-SEN-BKT	1
28	5AA08630	ASM-SW	1
29	5AA08100	M3 SCREW STEPPED,1.4	1
30	5AA07890	SPRING,DF SEN	1
31	5AA07530	DF-SEN-PLT	1
32	5AA08640	ASM-GROUND WIRE	1
33	5AA08660	ASM-GROUND WIRE1	1
34	5AA08430	PBA-CONT SUBASS'Y	1
35	5AA08440	ROM,MPCB	1
36	5AA07280	BOTTOM COVER,K	1
37	5AA07290	BOTTOM COVER,C	1
38	5AA04020	TABLE,ORIGINAL	1
39	5AA04030	FRONT CURSOR	1
40	5AA04040	REAR CURSOR	1

Ref. No.	Part. No.	Description	Quantity USA (120V)
41	5AA05010	LABEL,ORIGINAL INDICATION	1
42	5AA07160	TRAY RACK F	1
43	5AA07150	TRAY RACK R	1
44	5AA08130	GEAR TRAY 22	1
45	5AA07310	BOTTOM COVER,T	1
46	5AA07510	HOLDER,T GEAR	1
47	5AA08820	STACKER FILM	1
48	5AA09210	PULLEY FILM,H	2
49	5AA09220	H-PLT	1
50	5AA08410	SCR4X12,WAVE	14
51	5AA09150	36 WAVE SCREW	2
52	1AB02050	STOPPER,ADF HINGE	1
53	*5AA09440*	*ADJUSTING SCREW,MG*	*2*

• Parts with "•" are component parts or sub-assemblies of the assembly appearing immediately above them.

• Parts with "• •" are component parts or sub-assembly with "•" appearing immediately above them.

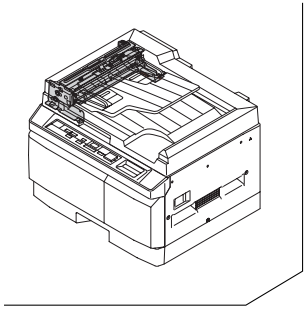

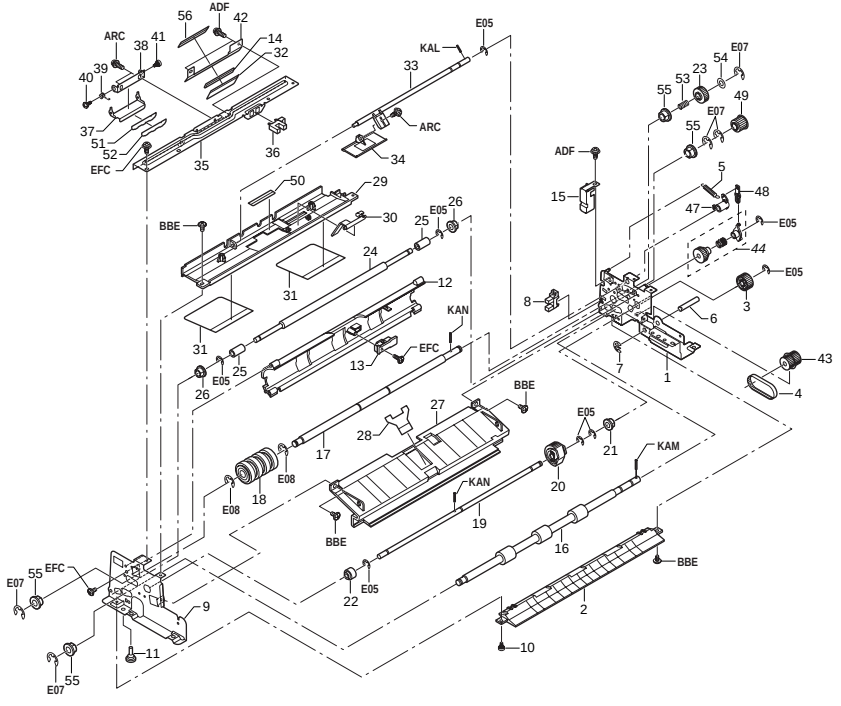
ADF
ARC
KAL
EFC
BBE
KAN
KAM
E05
E07
E08
1
2
3
4
5
6
7
8
9
10
11
12
13
14
15
16
17
18
19
20
21
22
23
24
25
26
27
28
29
30
31
32
33
34
35
36
37
38
39
40
41
42
43
44
47
48
49
50
51
52
53
54
55
56

FIG. 15 PAPER FEED SECTION I (ADF)

Ref. No.	Part. No.	Description	Quantity USA (120V)
1	5AA07010	K FRAME R ASS'Y	1
2	5AA07250	OUTER GUIDE,K	1
3	*5AA07850*	*GER-080-24,OW*	*1*
4	5AA08070	BELTS2M061100	1
5	5AA07930	SPRING P	1
6	5AA07690	IDLER,SFTP-K	1
7	5AA08250	PIERCE RING 6	1
8	5AA09040	TLP1241(C5)	1
9	*5AA07610*	*K FRAME F*	*1*
10	5AA08110	M3 SCREW STEPPED,2.2	1
11	5AA08170	RUBBER SPACER 3.5	1
12	5AA07230	GUIDE REGISTRATION	1
13	5AA08460	PBA SENSOR 9951	1
14	5AA09330	SUPPORT FILM SPACER	1
15	5AA07500	K-OP-SEN COVER	1
16	5AA07790	ROLLER REGISTRATION	1
17	5AA07740	ROLLER,PAPER FEED SFT	1
18	5AA08470	COMB ROLLER	1
19	5AA07730	PICK UP SFT	1
20	5AA08340	D CUT ROLLER,SHP	1
21	59605000	BUSHING6	1
22	5AA07960	OW BUSHING	1
23	5AA07140	GER-080-24	1
24	5AA08780	RESIST PINCH ROLLER	1
25	5AA08210	COLLAR,REGISTRATION	2
26	5AA08360	BUSH-6P	2
27	5AA07220	LOWER GUIDE,K	1
28	5AA07860	P MYLAR	1
29	5AA07240	K UPPER GUIDE	1
30	5AA07070	EMP SENSOR LEVER	1
31	5AA08840	GUIDE FILM,UPPER	2
32	5AA08850	HOLDER FILM	1
33	5AA07100	WEIGHT LEVER SHAFT	1
34	5AA08400	WEIGHT,N	1
35	5AA07600	STAY,UPPER GUIDE	1
36	5AA09040	TLP1241(C5)	1
37	5AA08770	A SEPARATION PRATE,N	1
38	5AA08730	A SEPARATION,PLT	1
39	5AA08830	SEPARATION,NSP	1
40	5AA08530	M3 SCREW STEPPED,3.2-5	1
41	5AA08520	M3 SCROW STEPPED,1.6	1
42	5AA08740	HOLDER FILM,PLT	1
43	5AA07140	GER-080-24	1
44	*5AA09450*	*WEIGHT SPRING,CL ASS'Y*	*1*
47	5AA07080	WEIGHT LEVER	1
48	5AA07100	WEIGHT LEVER SHAFT	1
49	5AA08160	PLY-S2M-28B	1
50	5AA09280	KUG FILM	1
51	5AA09310	SEPARATION FILM-2	1
52	5AA09270	SEPARATION FILM	1
53	5AA09160	K ROLLER SHAFT SPRING	1
54	5AA09170	POLYSLIDER	1
55	5AA08420	BUSH-8P	4
56	5AA09320	HOLDER FILM-2	1

• Parts with "•" are component parts or sub-assemblies of the assembly appearing immediately above them.

• Parts with "• •" are component parts or sub-assembly with "•" appearing immediately above them.

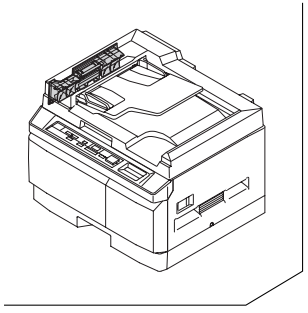

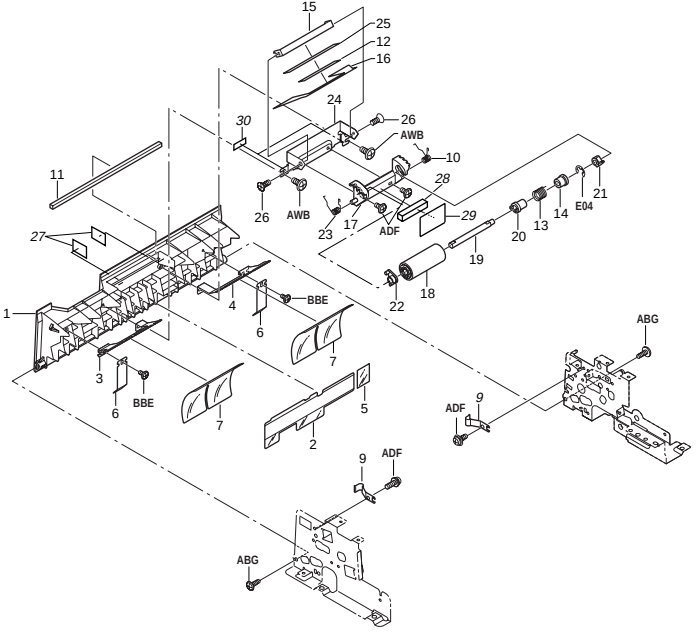
15
25
12
16
24
30
26
AWB
10
28
11
26
AWB
23
17
ADF
29
20
13
14
E04
21
19
27
18
22
4
BBE
1
6
7
3
6
BBE
7
5
2
ABG
ADF
9
9
ADF
ABG

FIG. 16 PAPER FEED SECTION II (ADF)

Ref. No.	Part. No.	Description	Quantity USA (120V)
1	5AA04050	COVER,PAPER FEED	1
2	5AA08800	JAM COVER FILM	1
3	5AA08750	JAM COVER,PLT-F	1
4	5AA08760	JAM COVER,PLT-R	1
5	5AA08310	MIRROR SEAL,REGISTRATION	1
6	5AA07520	REGISTRATION CSP	2
7	5AA07780	K SIDE MYLAR-N	2
9	5AA08330	PLATE SPRING,LOCK	*2*
10	5AA09410	SEPARATION GUIDE SPRING-R	1
11	5AA09300	COVER CUSHION,K	1
12	5AA09290	NIP FILM-2	1
13	5AA09380	SEPARATION,SP	1
14	5AA08570	REVERSE JOINT	1
15	5AA08560	SEPARATION STAY	1
16	5AA09390	SEPARATION NIP FILM	1
17	5AA08540	SEPARETION ROLLER HOLDER	1
18	5AA08450	SEPARATION ROLLER,DX	1
19	5AA08590	SEPARETION SHAFT	1
20	5AA08580	REVERSE DRUM	1
21	5AA09110	SHAFT PLATE	1
22	5AA08550	SLIDE SHAFT PLATE	1
23	5AA09400	SEPARATION GUIDE SPRING-F	1
24	5AA08720	SEPARATION BKT	1
25	5AA09180	SEPARATION FILM SPACER	1
26	5AA08930	COUNTER SUNK HEAD SCREW M2*5	2
27	*5AA09460*	*SLIT FILM*	*2*
28	*5AA09470*	*CUSHION*	*1*
29	*5AA09480*	*CUSHION FILM*	*1*
30	*5AA09490*	*FILM BKT*	*2*

• Parts with "•" are component parts or sub-assemblies of the assembly appearing immediately above them.

• Parts with "• •" are component parts or sub-assembly with "•" appearing immediately above them.

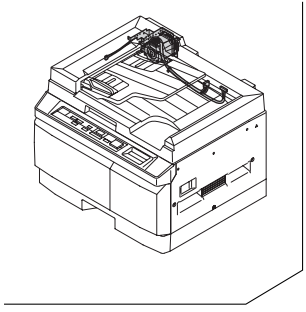

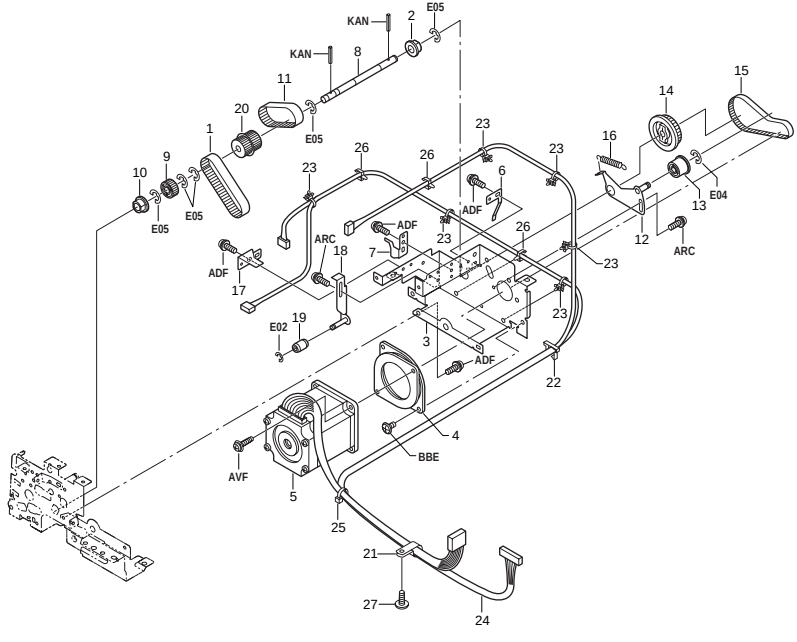
KAN
KAN
E05
E05
E05
E05
E05
E04
E02
ADF
ADF
ADF
ADF
ADF
ARC
ARC
AVF
BBE
1
2
3
4
5
6
7
8
9
10
11
12
13
14
15
16
17
18
19
20
21
22
23
24
25
26
27

FIG. 17 DRIVING SECTION (ADF)

Ref. No.	Part. No.	Description	Quantity USA (120V)
1	5AA08060	BELTS2M056100	1
2	5AA08360	BUSH-6P	1
3	5AA07630	BKT,MOTOR	1
4	5AA08350	CUSHION RUBBER	1
5	5AA08650	MOT-KH56LM2B004	1
6	5AA07560	GROUND PLATE,MOT	1
7	5AA07380	WEIGHT S-PLT	1
8	5AA07670	IDLER,SFT-K	1
9	5AA08180	GER-080-18	1
10	5AA08360	BUSH-6P	1
11	5AA08080	BELTS2M062100	1
12	5AA07020	K TENSION ASS'Y	1
13	5AA08200	ATTENSIONPLEASE	1
14	5AA08150	PLY-S2M-50	1
16	5AA07910	TENSION SPRING,K	1
17	5AA08710	STOPPER,CL	1
18	5AA09430	KO-TEN-BKT,ASS'Y	1
19	5AA08600	16 EJECT PULLEY	1
20	5AA07840	PLY-S2M-30.31.OW	1
21	M2105030	NYLON CLAMP 5N,NK-5N	1
22	M2104350	EDGING, EDS-0607M(KITAGAWA)	1
23	M2107120	BINDING BAND SG-130	6
24	5AA09190	AMS REGISTRATION	1
25	M2107140	BINDING BAND,SKB-1M	1
26	5AA08490	UAMS-05SN	3
27	5AA08410	SCR4X12,WAVE	1

• Parts with "•" are component parts or sub-assemblies of the assembly appearing immediately above them.

• Parts with "• •" are component parts or sub-assembly with "•" appearing immediately above them.

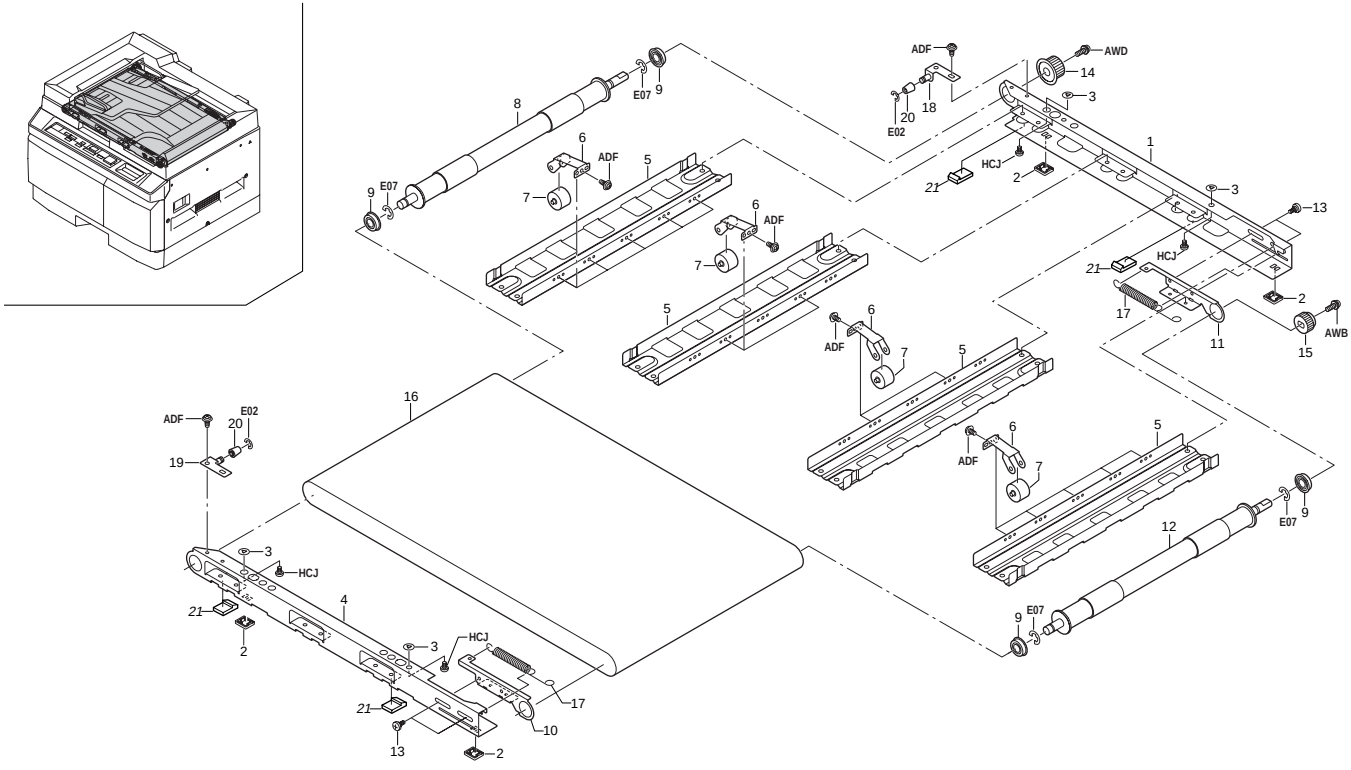
A B C D E F G H I J
1 2 3 4 5 6 7
ADF
AWD
AWB
HCJ
E02
E07
1
2
3
4
5
6
7
8
9
10
11
12
13
14
15
16
17
18
19
20
21

FIG. 18 PAPER CONVEYING SECTION (ADF)

Ref. No.	Part. No.	Description	Quantity USA (120V)
1	5AA07650	DF FRAME R	1
2	5AA07190	DF SPACER	4
3	5AA09100	STOPPER WASHER M4	4
4	5AA07640	DF FRAME F	1
5	5AA07660	STAY,PRESSING PULLEY	4
6	5AA07480	PLATE SPRING,PRESSING PULLEY	14
7	5AA07340	PRESSING PULLEY POM	14
8	5AA07760	ROLLER BELT,L	1
9	5AA08390	BRG-8-16-LC	4
10	5AA07460	BELT TENSION PLATE F	1
11	5AA07470	BELT TENSION PLATE R	1
12	5AA07770	ROLLER BELT,R	1
13	5AA08120	M3 SCREW STEPPED,3.2	4
14	5AA08190	PLY-S2M-30	1
15	5AA07200	GER-080-20	1
16	5AA07750	BELT CONVEYING	1
17	5AA07880	BELT ROLLER TENSION SPRING	2
18	5AA09360	R STOP APPROACH ASS'Y	1
19	5AA09350	F STOP APPROACH ASS'Y	1
20	5AA09340	PULLEY,STOP APPROACH	2
21	*65708181*	*SPACER,ORIGINAL CONVEYING*	*4*

• Parts with "•" are component parts or sub-assemblies of the assembly appearing immediately above them.

• Parts with "• •" are component parts or sub-assembly with "•" appearing immediately above them.

FIG. 19 PAPER EJECT (ADF) 1AB/5AA

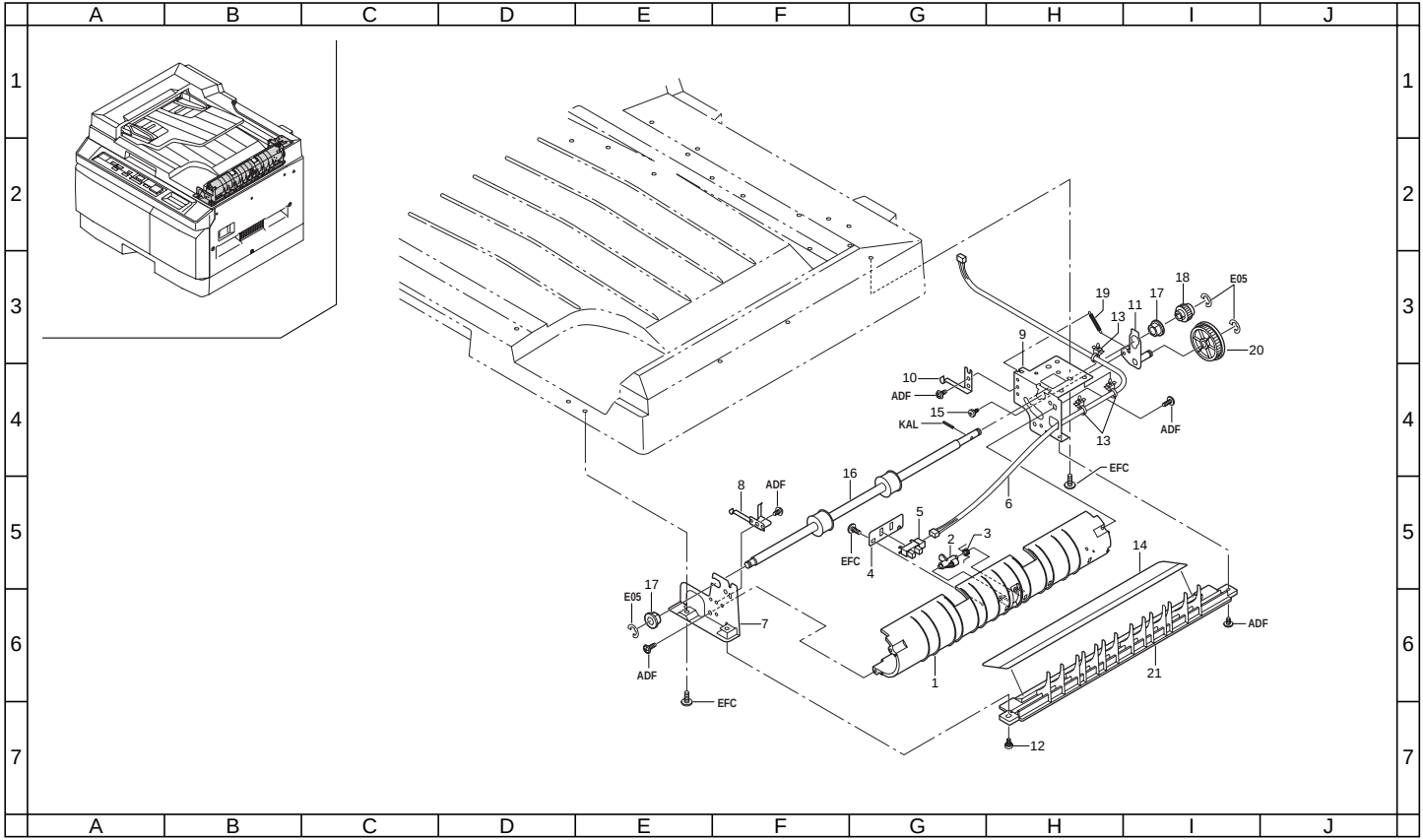

FIG. 19 PAPER EJECT (ADF)

Ref. No.	Part. No.	Description	Quantity USA (120V)
1	5AA07270	INNER GUIDE,H	1
2	5AA07110	H SENSOR LEVER	1
3	5AA08370	SIZE-SEN SPRING	1
4	5AA07410	H-SEN-BKT	1
5	5AA09040	TLP1241(C5)	1
6	5AA09140	ASM PAPER EJECT	1
7	5AA07400	H FRAME F	1
8	5AA07490	GROUND PLATE,H	1
9	5AA07390	H FRAME R	1
10	5AA07540	GROUND PLATE,HR	1
11	5AA07030	H TENSION ASS'Y	1
12	5AA08110	M3 SCREW STEPPED,2.2	1
13	M2107120	BINDING BAND SG-130	3
14	5AA07830	MYLAR,PICK UP	1
15	5AA08100	M3 SCREW STEPPED,1.4	1
16	5AA07800	ROLLER,PAPER EJECT	1
17	59605000	BUSHING6	2
18	5AA07120	GER-080-18	1
19	5AA07820	GEAR TENSION SPRING	1
20	5AA07210	GER-080-44	1
21	5AA07330	PICK UP GUIDE	1

• Parts with "•" are component parts or sub-assemblies of the assembly appearing immediately above them.

• Parts with "• •" are component parts or sub-assembly with "•" appearing immediately above them.

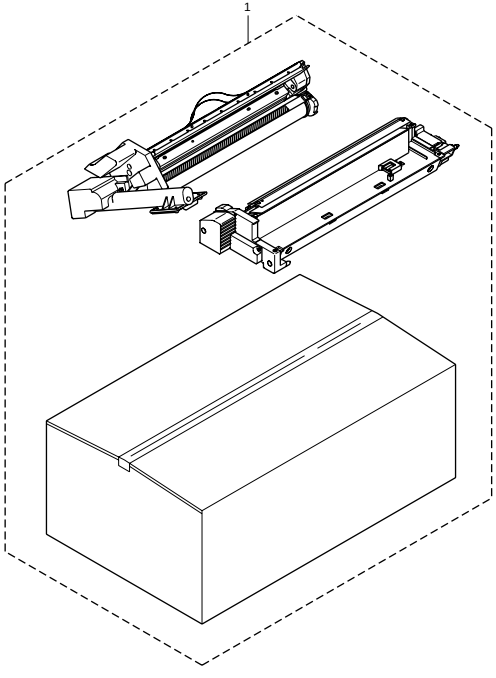
1

FIG. 20 PROSESS UNIT

1AB/5AA

Ref. No.	Part. No.	Description	Quantity USA (120V)
1	19582410	PROCESS UNIT FOR (C)	1

• Parts with "•" are component parts or sub-assemblies of the assembly appearing immediately above them.

• Parts with "• •" are component parts or sub-assembly with "•" appearing immediately above them.

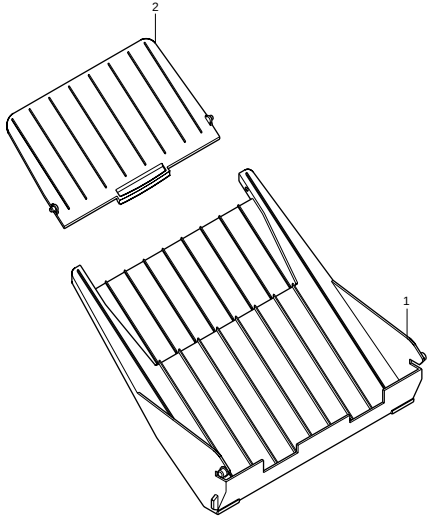
2
1

FIG. 21 ACCESSORY

Ref. No.	Part. No.	Description	Quantity USA (120V)
1	19557150	TRAY,EJECT(C)	1
2	19557160	TRAY,EJECT AUXILIARY(C)	1

• Parts with "•" are component parts or sub-assemblies of the assembly appearing immediately above them.

• Parts with "• •" are component parts or sub-assembly with "•" appearing immediately above them.

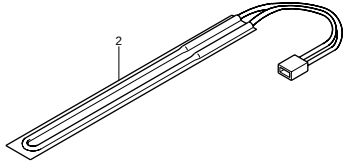
2


3

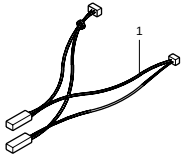
1

FIG. 22 OPTION

1AB/5AA

Ref. No.	Part. No.	Description	Quantity USA (120V)
1	19560010	WIRE,HEATER PRIMARY	1
2	36727460	HEATER,CHARGE (120)	1
3	B3023060	BINDING TAP TIGHT SCREW M3X6	2

• Parts with "•" are component parts or sub-assemblies of the assembly appearing immediately above them.

• Parts with "• •" are component parts or sub-assembly with "•" appearing immediately above them.

Part. No.	Description	Quantity USA (120V)	Fig. No.
1AB02010	SUPPORT PLATE,DF SIDE	1	2
1AB02020	LEFT SUPPORT PLATE,DF	1	2
1AB02030	RIGHT SUPPORT PLATE,DF	1	2
1AB02040	LOWER SUPPORT PLATE,DF	1	2
1AB02050	STOPPER,ADF HINGE	1	14
1AB06010	STOPPER,PAPER FEED CLUTCH	1	4
1AB26010	MOUNT,HIGH VOLTAGE PCB	1	13
1AB27010	WIRE,SCANNER	1	6
1AB27020	JUNCTION WIRING,SCANNER MOTOR	1	13
1AB27030	JUNCTION WIRING,DF	1	13
1AB27040	WIRE,DEVELOPING (N.A.)	1	13
1AB27060	WIRE,HIGH VOLTAGE JUNCTION	1	13
1AB27070	WIRE,FEEDBACK	1	13
1AB27080	WIRE,HIGH VOLTAGE	1	5
1AB27090	WIRE,TRANSFER HIGH VOLTAGE	1	5
1AB27100	JUNCTION WIRING,TONER MOTOR	1	13
1AB27110	WIRE,INTERLOCK SWITCH	1	13
1AB27120	WIRE,DRIVE MOTOR	1	12
1AB27130	IC,ROM CONTROL	1	13
1AB28020	POWER SOURCE PCB 120	1	13
1AB57010	REAR COVER(C)	1	1
1AB57020	UPPER REAR COVER(C)	2	1
1AB57030	LEFT FRONT COVER(C)	1	1
1AB68010	MAIN PCB ASS'Y SP	1	13
1AB68020	SHEET,OPERATION UNIT(INCH)	1	13
1AB68040	OPERATION UNIT PCB	1	13
1AB93010	PARTS,ASS'Y CHARGE UNIT,SP	1	5
1AB93020	PARTS,OPERATION UNIT(INCH)SP	1	13
1AF05040	CAUTION LABEL,HIGH VOLTAGE S (EXP)	1	1
19500050	CASSETTE ASS'Y	1	3
19500091	DRUM UNIT ASS'Y (N.A.)	1	9
19500120	DEVELOPING ASS'Y (N.A.)	1	8
19500190	LENS UNIT ASS'Y	1	7
19502070	PARTITION,POWER SOURCE	1	2
19502080	PARTITION,FIXING	1	2
19502090	BASE,RELEASE	1	4
19502100	HOOK,RELEASE	1	4
19502120	SPRING TRANSFER PRESSING	2	4
19502130	MOUNT,COPY TRAY	1	11
19502140	RAIL,DEVELOPING	1	2

Part. No.	Description	Quantity USA (120V)	Fig. No.
19502150	SHAFT,DEVELOPING HOLDER	1	2
19502160	ARM,DEVELOPING HOLDER	2	2
19502180	SPRING,DEVELOPING HOLDER	2	2
19502190	SPRING,DRAWER	1	2
19502200	UPPER RIGHT REINFORCEMENT	1	2
19502210	UPPER LEFT REINFORCEMENT	1	2
19502220	SUPPORT BAR,RELEASE	1	4
19502230	GUIDE BAR,SAFETY SWITCH	1	13
19502240	LEVER,SAFETY SWITCH	1	13
19502250	MOUNT,SAFETY SWITCH	1	13
19502260	LEVER,DEVELOPING HOLDER (N.A.)	1	2
19502280	FULCRUM PLATE,EJECT COVER	2	11
19502290	HOLDER,FIXING PRESSURE RELEASE LEVER	2	4
19502300	REAR MOUNT,COVER	1	6
19502310	BARRIER,SAFETY SWITCH	1	13
19502320	MOUNT,HUMIDITY SENSOR	1	13
19502330	HOLDER,PRESSURE RELEASE	2	4
19502340	FRONT SPRING,RELEASE AUXILIARY	1	4
19502350	REAR SPRING,RELEASE AUXILIARY	1	4
19502360	SPACER,DRUM POSITIONING	1	2
19504080	BUTTON,RELEASE	1	4
19504110	MOUNT,EJECT COVER	1	11
19504150	FRONT MOUNT,COVER	1	1
19504160	MOUNT,KEYBOARD	2	13
19505071	LABEL,SIM	1	1
19505080	CAUTION LABEL,HIGH VOLTAGE (EXP)	1	4
19505090	CAUTION LABEL,HIGH TEMPERATURE (EXP)	1	4
19505100	LABEL PAPER SET	1	3
19506050	BUSHING,PAPER FEED ROLLER	1	4
19506060	ROLLER,FEED	1	4
19506070	ROLLER,REGISTRATION DRIVE	1	4
19506080	ROLLER,REGISTRATION IDLE	1	4
19506090	GEAR 14,REGISTRATION	1	4
19506100	GUIDE,BYPASS	1	4
19506110	UPPER FRONT GUIDE,TRANSFER	1	4
19506140	GUIDE,FEED ROLLER	1	2
19506210	FRONT CURSOR,BYPASS	1	4
19506220	REAR CURSOR,BYPASS	1	4
19506230	PULLEY A,PAPER FEED	2	4
19506240	PULLEY B,PAPER FEED	2	4

Part. No.	Description	Quantity USA (120V)	Fig. No.
19506250	SUPPORT PLATE,PULLEY	2	4
19506270	SHAFT,PAPER FEED	1	4
19506310	SWITCH,REGISTRATION	1	4
19506510	FILM,FEED SHIFT	4	4
19506520	UPPER FRONT FILM,TRANSFER	1	4
19506530	UPPER FRONT FILM,TRANSFER AUXILIARY	1	4
19506540	FILM B,FEED SHIFT	1	4
19506550	FILM,FEED PULLEY	2	4
19506560	PIN,GUIDE	4	2
19506570	FILM,FEED ROLLER	1	2
19506580	FILM,RESISTANCE	4	4
19506590	FILM,PULLEY HOLDER	2	4
19507010	CASSETTE,PAPER FEED	1	3
19507040	BASE,CASSETTE	1	3
19507050	LEVER,CASSETTE BASE RELEASE	1	3
19507090	SEAL,CUSHION	1	4
19507100	PULLEY,CASSETTE	2	2, 4
19507130	RIGHT LID,CASSETTE COVER	1	3
19507140	LEFT LID,CASSETTE COVER	1	3
19507210	SPRING,CASSETTE	2	3
19508040	SHAFT,DRUM	1	9
19510010	HOUSING,CHARGE UNIT	1	5
19510020	RAIL,MAIN	1	5
19510030	FRONT HOUSING,MAIN	1	5
19510060	HOUSING,MAIN ELECTRODE	1	5
19510070	ELECTRODE,MAIN	1	5
19510080	RETAINER,MAIN	1	5
19510090	FRONT LID,MAIN	1	5
19510110	SPRING,MAIN RELEASE	1	5
19510120	SEAL,LIGHT SHIELD BLANK	1	5
19510130	BARRIER,MAIN ELECTRODE	1	5
19512030	WIRE,SCANNER	2	6
19512050	ORIGINAL SIZE INDICATOR,ORIGINAL (INCH)	1	6
19512060	GLASS,DUST SHIELD	1	2
19512090	SHAFT,SCANNER DRUM	1	6
19512100	DRUM,WIRE	2	6
19512120	SHAFT,WIRE DRUM	1	6
19512150	PULLEY,SCANNER	10	6
19512160	MIRROR,2	1	6
19512170	MIRROR,3	1	6

Part. No.	Description	Quantity USA (120V)	Fig. No.
19512190	FILTER,DUST SHIELD	1	1
19512200	GUIDE,FEEDER WIRE	1	6
19512220	GEAR 64,SCANNER DRIVE	1	6
19512240	GEAR 124,WIRE DRIVE	1	6
19512250	HOLDER,DUST SHIELD GLASS	2	2
19512260	CONTACT GLASS	1	6
19512270	MOUNT,SCANNER PULLEY	2	6
19512280	MOUNT,SCANNER MOTOR	1	6
19512310	LEFT PARTITION,SCANNER	1	2
19512330	SPONGE,SCANNER FAN	2	12
19512340	UPPER RAIL,SCANNER	2	6
19512350	LOWER RAIL,SCANNER	2	6
19513050	PULLEY,LENS WIRE	2	7
19513060	MIRROR,6	1	7
19513090	UPPER FRONT FILM,LIGHT SHIELD	1	7
19513100	COVER,LENS UNIT	1	7
19513110	UPPER REAR FILM,LIGHT SHIELD	1	7
19513140	WIRE,LENS MOVING SCANNER	1	7
19513150	RAIL,LENS MOVING SCANNER	1	7
19513160	MOUNT,LENS MOTOR	1	7
19513170	FRONT FILM,LIGHT SHIELD	1	7
19513180	LIGHT SHIELD,LENS PI	1	7
19513190	PULLEY,LENS MOVING SCANNER	1	7
19513250	UPPER FILM B,LIGHT SHIELD	1	7
19513260	LOWER FRONT FILM,LIGHT SHIELD	1	7
19513270	REAR FILM,LIGHT SHIELD	1	7
19513280	FRONT SEAL,LIGHT SHIELD	1	7
19513290	REAR SEAL,LIGHT SHIELD	1	7
19514010	MAGNET DEVELOPING	1	8
19514030	FRONT COVER,DEVELOPING (EUR)	1	8
19514040	REAR COVER,DEVELOPING	1	8
19514050	RIGHT COVER,DEVELOPING	1	8
19514090	PULLEY,DS	2	8
19514100	FRONT BUSHING,DEVELOPING	1	8
19514110	RETAINER,DEVELOPING POSITION	1	8
19514120	GEAR,DEVELOPING INPUT	1	8
19514130	GEAR,DEVELOPING IDLE	1	8
19514140	SPIRAL A,DEVELOPING	1	8
19514150	SPIRAL B,DEVELOPING	1	8
19514160	GEAR,AGITATION	1	8

Part. No.	Description	Quantity USA (120V)	Fig. No.
19514180	SPONGE A,DEVELOPING	2	8
19514190	SPONGE B,DEVELOPING	1	8
19514220	FRONT FILM,DEVELOPING	1	8
19514230	REAR FILM,DEVELOPING	1	8
19514240	UPPER SEAL B,DEVELOPING	1	8
19514250	BEARING,DEVELOPING	1	8
19514260	SEAL,DEVELOPING RAIL	2	2
19514270	REAR BUSHING,AGITATION	2	8
19514280	SPONGE C,DEVELOPING	2	8
19514290	SPONGE D,DEVELOPING	1	8
19514300	FRONT SPONGE,DOCTOR BLADE	1	8
19514310	REAR SPONGE,DOCTOR BLADE	1	8
19514320	FILM,DOCTOR BLADE	1	8
19514510	COVER,DEVELOPING TERMINAL(N.A.)	1	8
19515010	MOUNT,TONER MOTOR	1	10
19515020	GEAR,TONER MOTOR	1	10
19515030	GEAR,CARTRIDGE IDLE	2	10
19516010	SHIELD,TRANSFER	1	5
19516020	FRONT HOUSING,TRANSFER	1	5
19516050	LOWER FRONT GUIDE,TRANSFER	1	5
19516060	REAR GUIDE,TRANSFER	1	5
19516070	FRONT LID,TRANSFER	1	5
19516120	LOWER FRONT SHEET,TRANSFER	1	5
19516130	FRONT PROJECTION,TRANSFER	1	5
19516140	REAR PROJECTION,TRANSFER	1	5
19516150	STATIC ELIMINATOR,CONVEYING	1	5
19518020	MOUNT,BLADE	1	9
19518040	HOUSING,CLEANING	1	9
19518050	UPPER COVER,CLEANING	1	9
19518071	REAR COVER,CLEANING (EUR)	1	9
19518080	SPIRAL,CLEANING	1	9
19518090	PIN,DRUM	1	9
19518100	BUSHING,DRUM	1	9
19518110	GEAR 15,IDLE	1	9
19518121	GEAR 27,THRUST	1	9
19518140	REAR BUSHING,SPIRAL	1	9
19518150	FRONT BUSHING,SPIRAL	1	9
19518171	PLATE SPRING,GRID	1	9
19518180	PLATE SPRING,FEEDBACK	1	9
19518191	HOUSING,RECYCLE	1	9

Part. No.	Description	Quantity USA (120V)	Fig. No.
19518201	MOUNT BASE,RECYCLE	1	9
19518210	SPIRAL,RECYCLE	1	9
19518220	COVER,RECYCLE	1	9
19518230	SHUTTER,RECYCLE	1	9
19518240	GEAR 12,RECYCLE	1	9
19518250	BUSHING,RECYCLE	1	9
19518260	SPRING,BLADE	1	9
19518270	SPRING,THRUST	1	9
19518280	SEAL,BLADE	1	9
19518290	LOWER SEAL,BLADE	1	9
19518300	SEAL,DRUM	2	9
19518310	FILM,CLEANING	1	9
19518320	FRONT SEAL,CLEANING	1	9
19518330	REAR SEAL,CLEANING	1	9
19518350	SHIELD,CLEANING	1	9
19518361	SEAL,SPIRAL	1	9
19518371	SEAL,MOUNT BASE	1	9
19518380	SEAL,JOINT	1	9
19518390	SEAL,SHUTTER	1	9
19518400	SPRING,SHUTTER	1	9
19518410	FRONT COVER,CLEANING (N.A.)	1	9
19518450	FRONT SEAL A,TONER	1	9
19518460	REAR SEAL A,TONER	1	9
19518470	FRONT SEAL B,TONER	1	9
19518480	REAR SEAL B,TONER	1	9
19518490	PROTECTING PLATE,GEAR	1	9
19518500	POSITIONING PLATE,CLEANING	1	9
19518510	MOUNT,RELEASE SEAL	1	9
19518520	SEAL,RECYCLE COVER	1	9
19518540	SEAL,CARTRIDGE SHUTTER	1	9
19520010	UPPER HOUSING,FIXING	1	11
19520020	LOWER HOUSING,FIXING	1	11
19520031	COVER,FIXING	1	11
19520060	HOLDER,PRESSURE BEARING	2	11
19520070	SPRING,PRESSURE	2	11
19520100	FRONT MOUNT,HEATER	1	11
19520110	REAR MOUNT,HEATER	1	11
19520120	GUIDE,FIXING ADMISSION	1	11
19520140	GEAR 32,FIXING	1	11
19520150	BUSHING,HEAT ROLLER	2	11

Part. No.	Description	Quantity USA (120V)	Fig. No.
19520160	CLAW,SEPARATION	3	11
19520170	SPRING,SEPARATION CLAW	3	11
19520180	LEVER,FIXING PRESSURE RELEASE	2	11
19520190	THERMOSTAT A,FIXING	1	11
19520200	THERMOSTAT B,FIXING	1	11
19520210	BLADE,THERMISTOR	1	11
19520220	GROUND PLATE,HEAT ROLLER	1	11
19521010	ROLLER,EJECT	1	11
19521020	PULLEY,EJECT	2	11
19521030	PADDLE,EJECT PULLEY	2	11
19521041	GUIDE,EJECT	1	11
19521050	ACTUATOR,EJECT SWITCH	1	11
19521060	SPRING,EJECT ACTUATOR	1	11
19521070	MOUNT,EJECT SWITCH	1	11
19521090	GUIDE,EJECT SUB	1	11
19521121	SHEET,EJECT	1	11
19522010	FRONT MOUNT,DRIVE	1	12
19522020	REAR MOUNT,DRIVE	1	12
19522030	REAR PIN,DRUM	1	12
19522040	SHAFT,DEVELOPING DRIVE	1	12
19522050	BUSHING,DEVELOPING SLEEVE	1	12
19522060	GEAR 26/54	1	12
19522070	GEAR 38/43	1	12
19522080	GEAR 20/43	1	12
19522090	GEAR 41/56	1	12
19522110	GEAR 30/35	1	12
19522130	GEAR 30	1	12
19522140	GEAR 24,DEVELOPING DRIVE	1	12
19522150	GEAR 35,DRUM DRIVE	1	12
19522160	BUSHING,DRUM PIN	1	12
19522170	GEAR 16,FEED	1	4
19522180	GEAR 28	2	12
19522190	HOLDER,DRIVE PIN	1	12
19522200	GEAR 35	1	4
19523010	DUCT,COOLING	1	12
19523020	FAN,MACHINE INSIDE COOLING	2	12
19526050	MOUNT,DRAWER	1	2
19526060	MOUNT,FEEDBACK	1	2
19527020	WIRE,OPERATION UNIT	1	13
19527040	WIRE,SCANNER UNIT	1	7

Part. No.	Description	Quantity USA (120V)	Fig. No.
19527050	FEEDER WIRE,SCANNER	1	6
19527060	WIRE,THERMOSTAT SCANNER	1	6
19527070	WIRE,FIXING HEATER	1	11
19527100	WIRE,DEVELOPING UNIT (N.A.)	1	8
19527160	WIRE,AVR JUNCTION	1	13
19527170	WIRE,SCANNER PRIMARY	1	6
19527180	WIRE,PRIMARY	1	13
19527190	WIRE,SECONDARY	1	13
19527200	WIRE,MAIN SWITCH	1	13
19527210	JUNCTION WIRING,FIXING HEATER	1	11
19527240	WIRE,INLET	1	13
19527260	WIRE,SWITCH RELEASE	1	13
19527270	WIRE,EJECT SWITCH	1	11
19527280	JUNCTION WIRING,EJECT SW	1	11
19527290	TOTAL COUNTER	1	13
19527320	JUNCTION WIRING,FIXING THERMISTOR	1	11
19527340	WIRE,HUMIDITY SENSOR	1	13
19527350	MOTOR,SCANNER	1	6
19527370	MOTOR,LENS UNIT	2	6, 7
19527380	JUNCTION WIRING,SCANNER FAN	1	12
19527390	JUNCTION WIRING,CLEANING LAMP	2	13
19527400	POWER CORD(120)	1	13
19527420	WIRE,CARTRIDGE DETECTION	1	2
19528020	POWER SOURCE PCB (100)	1	13
19528080	BLANK LAMP PCB	1	5
19557020	RIGHT RAIL,CASSETTE(C)	1	2
19557040	LOWER LEFT MOUNT BASE,FRAME(C)	1	4
19557080	LEFT COVER(C)	1	1
19557100	RIGHT FRONT COVER(C)	1	1
19557110	COVER,RELEASE(C)	1	4
19557120	RIGHT COVER(C)	1	1
19557130	COVER,EJECT(C)	1	11
19557140	COVER,CASSETTE(C)	1	3
19557150	TRAY,EJECT(C)	1	21
19557160	TRAY,EJECT AUXILIARY(C)	1	21
19560010	WIRE,HEATER PRIMARY	1	22
19568020	FRAME,OPERATION UNIT	1	13
19568050	KEY TOP,PRINT	1	13
19568060	KEY TOP,STOP CLEAR	1	13
19568070	KEY TOP,EXPOSURE	1	13

Part. No.	Description	Quantity USA (120V)	Fig. No.
19568080	KEY TOP,IMAGE DENSITY ADJUSTMENT	1	13
19568100	FRONT MAIN CHARGER HOUSING ASS'Y	1	5
19568110	REAR MAIN CHARGER HOUSING ASS'Y	1	5
19568120	FRONT TRANSFER CHARGER HOUSING ASS'Y	1	5
19568130	REAR TRANSFER CHARGER HOUSING ASS'Y	1	5
19568140	LAMP 100	1	6
19568160	MIRROR FRAME 2 ASS'Y	1	6
19568170	MIRROR ADJUSTING PLATE ASS'Y	1	6
19568180	PROTECTION SHEET,OPERATION UNIT	1	13
19593032	PARTS,FIXING ASS'Y 120,SP	1	11
19593050	PARTS,LIGHT UNIT ASS'Y 100,SP	1	6
19593070	PARTS,CLUTCH,PAPER FEED,SP	1	4
19593080	PARTS,CLUTCH,REGISTRATION,SP	1	4
19593130	PARTS,BLADE CLEANING,SP	1	9
19593140	PARTS,LOWER BLADE CLEANING,SP	1	9
19593150	PARTS,ROLLER HEAT,SP	1	11
19593161	PARTS,ROLLER PRESSURE,SP	1	11
19593170	PARTS,FIXING HEATER 120,SP	1	11
19593210	PARTS,MOTOR MAIN,SP	1	12
19593270	PARTS,HIGH VOLTAGE PCB,SP	1	13
19593280	PARTS,AVR PCB(100),SP	1	13
19593330	PARTS,GRID MAIN,SP	1	9
19593340	PARTS,THERMISTOR FIXING,SP	1	11
19593350	PARTS,GRID PCB,SP	1	9
19594900	SET,REAR MAIN CHARGER HOUSING,SP	1	5
19594910	SET,REAR TRANSFER CHARGER HOUSING,SP	1	5
19605050	CAUTION LABEL,CONTACT GLASS	1	2
29717230	BUSHING 6,FEED BACK	2	6
29806810	BUSHING,6 REGISTRATION	4	4
29812291	CUSHION,CONTACT GLASS	6	6
29822140	BUSHING,DRUM SHAFT	1	9
29912420	HOLDER,WIRE ROPE	2	6
33227030	IC,EEPROM	1	13
33408180	PIN,STOPPER	2	7
33910230	PIN,CHARGER	2	5
33914190	TONER SENSOR	1	8
33915100	GEAR A,CARTRIDGE DRIVE	1	10
33915250	SPRING,CARTRIDGE DRIVE	2	10
33915330	GEAR C,CARTRIDGE DRIVE	1	10
34008120	PIN A,STOPPER	2	1

Part. No.	Description	Quantity USA (120V)	Fig. No.
34907020	FRONT CURSOR,CASSETTE	1	3
34907030	REAR CURSOR,CASSETTE	1	3
34907040	FRONT CLAW,CASSETTE	1	3
34907050	REAR CLAW,CASSETTE	1	3
34907060	LEVER,CURSOR RETAINING	1	3
34907070	PIN,CLAW CASSETTE	2	3
34907130	REAR STOPPER,PAPER	1	3
34907140	GEAR 18,CASSETTE	1	3
34907260	HOLDER,CURSOR	1	3
34907270	PLATE SPRING,CURSOR	1	3
34907290	PULLEY,GUIDE	2	4
34907330	LABEL,PAPER UPPER LIMIT	1	3
34907350	PAD A,CASSETTE	2	3
34914370	REAR BUSHING,SPIRAL	2	8
34927070	FAN,COOLING	1	12
35322020	GEAR 20,PAPER FEED DRIVE	1	9
35405080	CAUTION LABEL,HIGH TEMPERATURE (EXP)	1	11
36727460	HEATER,CHARGE (120)	1	22
36793560	PARTS,HUMIDITY SENSOR PCB(SP)	1	13
41626652	TUNGSTEN WIRE	1	5
42929503	TUNGSTEN WIRE(50M)	1	5
48527200	SPRING,CHARGER	2	5
49028102	BUSH 4	2	11
5AA04010	COVER,ADF	1	14
5AA04020	TABLE,ORIGINAL	1	14
5AA04030	FRONT CURSOR	1	14
5AA04040	REAR CURSOR	1	14
5AA04050	COVER,PAPER FEED	1	16
5AA05010	LABEL,ORIGINAL INDICATION	1	14
5AA07010	K FRAME R ASS'Y	1	15
5AA07020	K TENSION ASS'Y	1	17
5AA07030	H TENSION ASS'Y	1	19
5AA07050	*HINGE R,ASS'Y*	*1*	*14*
5AA07070	EMP SENSOR LEVER	1	15
5AA07080	WEIGHT LEVER	1	15
5AA07100	WEIGHT LEVER SHAFT	2	15
5AA07110	H SENSOR LEVER	1	19
5AA07120	GER-080-18	1	19
5AA07130	H PULLEY	2	14
5AA07140	GER-080-24	2	15
5AA07150	TRAY RACK R	1	14

Part. No.	Description	Quantity USA (120V)	Fig. No.
5AA07160	TRAY RACK F	1	14
5AA07190	DF SPACER	4	18
5AA07200	GER-080-20	1	18
5AA07210	GER-080-44	1	19
5AA07220	LOWER GUIDE,K	1	15
5AA07230	GUIDE REGISTRATION	1	15
5AA07240	K UPPER GUIDE	1	15
5AA07250	OUTER GUIDE,K	1	15
5AA07270	INNER GUIDE,H	1	19
5AA07280	BOTTOM COVER,K	1	14
5AA07290	BOTTOM COVER,C	1	14
5AA07310	BOTTOM COVER,T	1	14
5AA07330	PICK UP GUIDE	1	19
5AA07340	PRESSING PULLEY POM	14	18
5AA07380	WEIGHT S-PLT	1	17
5AA07390	H FRAME R	1	19
5AA07400	H FRAME F	1	19
5AA07410	H-SEN-BKT	1	19
5AA07420	DF SUPPORT PLATE F	1	14
5AA07430	DF SUPPORT R	1	14
5AA07450	DF-SEN-BKT	1	14
5AA07460	BELT TENSION PLATE F	1	18
5AA07470	BELT TENSION PLATE R	1	18
5AA07480	PLATE SPRING,PRESSING PULLEY	14	18
5AA07490	GROUND PLATE,H	1	19
5AA07500	K-OP-SEN COVER	1	15
5AA07510	HOLDER,T GEAR	1	14
5AA07520	REGISTRATION CSP	2	16
5AA07530	DF-SEN-PLT	1	14
5AA07540	GROUND PLATE,HR	1	19
5AA07560	GROUND PLATE,MOT	1	17
5AA07590	MG-BKT	1	14
5AA07600	STAY,UPPER GUIDE	1	15
5AA07610	*K FRAME F*	*1*	*15*
5AA07630	BKT,MOTOR	1	17
5AA07640	DF FRAME F	1	18
5AA07650	DF FRAME R	1	18
5AA07660	STAY,PRESSING PULLEY	4	18
5AA07670	IDLER,SFT-K	1	17
5AA07690	IDLER,SFTP-K	1	15
5AA07730	PICK UP SFT	1	15

Part. No.	Description	Quantity USA (120V)	Fig. No.
5AA07740	ROLLER,PAPER FEED SFT	1	15
5AA07750	BELT CONVEYING	1	18
5AA07760	ROLLER BELT,L	1	18
5AA07770	ROLLER BELT,R	1	18
5AA07780	K SIDE MYLAR-N	2	16
5AA07790	ROLLER REGISTRATION	1	15
5AA07800	ROLLER,PAPER EJECT	1	19
5AA07810	STATIC ELIMINATOR BRUSH,H	1	14
5AA07820	GEAR TENSION SPRING	1	19
5AA07830	MYLAR,PICK UP	1	19
5AA07840	PLY-S2M-30.31.OW	1	17
5AA07850	*GER-080-24.OW*	*1*	*15*
5AA07860	P MYLAR	1	15
5AA07880	BELT ROLLER TENSION SPRING	2	18
5AA07890	SPRING,DF SEN	1	14
5AA07900	SPRING,PAPER EJECT PULLEY	2	14
5AA07910	TENSION SPRING,K	1	17
5AA07930	SPRING P	1	15
5AA07960	OW BUSHING	1	15
5AA08060	BELTS2M056100	1	17
5AA08070	BELTS2M061100	1	15
5AA08080	BELTS2M062100	1	17
5AA08100	M3 SCREW STEPPED,1.4	2	14, 19
5AA08110	M3 SCREW STEPPED,2.2	2	15, 19
5AA08120	M3 SCREW STEPPED,3.2	4	18
5AA08130	GEAR TRAY 22	1	14
5AA08150	PLY-S2M-50	1	17
5AA08160	PLY-S2M-28B	1	15
5AA08170	RUBBER SPACER 3.5	1	15
5AA08180	GER-080-18	1	17
5AA08190	PLY-S2M-30	1	18
5AA08200	ATTENSIONPLEASE	1	17
5AA08210	COLLAR,REGISTRATION	2	15
5AA08250	PIERCE RING 6	1	15
5AA08310	MIRROR SEAL,REGISTRATION	1	16
5AA08320	MG CATCH	1	14

Part. No.	Description	Quantity USA (120V)	Fig. No.
5AA08330	PLATE SPRING,LOCK	2	16
5AA08340	D CUT ROLLER,SHP	1	15
5AA08350	CUSHION RUBBER	1	17
5AA08360	BUSH-6P	4	15, 17
5AA08370	SIZE-SEN SPRING	1	19
5AA08390	BRG-8-16-LC	4	18
5AA08400	WEIGHT,N	1	15
5AA08410	SCR4X12,WAVE	15	14, 17
5AA08420	BUSH-8P	4	15
5AA08430	PBA-CONT SUBASS'Y	1	14
5AA08440	ROM,MPCB	1	14
5AA08450	SEPARATION ROLLER,DX	1	16
5AA08460	PBA SENSOR 9951	1	15
5AA08470	COMB ROLLER	1	15
5AA08490	UAMS-05SN	3	17
5AA08520	M3 SCROW STEPPED,1.6	1	15
5AA08530	M3 SCREW STEPPED,3.2-5	1	15
5AA08540	SEPARETION ROLLER HOLDER	1	16
5AA08550	SLIDE SHAFT PLATE	1	16
5AA08560	SEPARATION STAY	1	16
5AA08570	REVERSE JOINT	1	16
5AA08580	REVERSE DRUM	1	16
5AA08590	SEPARETION SHAFT	1	16
5AA08600	16 EJECT PULLEY	1	17
5AA08620	INTERFACE,ASM	1	14
5AA08630	ASM-SW	1	14
5AA08640	ASM-GROUND WIRE	1	14
5AA08650	MOT-KH56LM2B004	1	17
5AA08660	ASM-GROUND WIRE1	1	14
5AA08690	GUARD EDGE	2	14
5AA08700	ADJUSTING PLATE,MG	1	14
5AA08710	STOPPER,CL	1	17
5AA08720	SEPARATION BKT	1	16
5AA08730	A SEPARATION,PLT	1	15
5AA08740	HOLDER FILM,PLT	1	15
5AA08750	JAM COVER,PLT-F	1	16
5AA08760	JAM COVER,PLT-R	1	16

Part. No.	Description	Quantity USA (120V)	Fig. No.
5AA08770	A SEPARATION PRATE,N	1	15
5AA08780	RESIST PINCH ROLLER	1	15
5AA08800	JAM COVER FILM	1	16
5AA08810	ADJUSTMENT MG SP	2	14
5AA08820	STACKER FILM	1	14
5AA08830	SEPARATION,NSP	1	15
5AA08840	GUIDE FILM,UPPER	2	15
5AA08850	HOLDER FILM	1	15
5AA08930	COUNTER SUNK HEAD SCREW M2*5	2	16
5AA09040	TLP1241(C5)	3	15, 19
5AA09100	STOPPER WASHER M4	4	18
5AA09110	SHAFT PLATE	1	16
5AA09140	ASM PAPER EJECT	1	19
5AA09150	36 WAVE SCREW	2	14
5AA09160	K ROLLER SHAFT SPRING	1	15
5AA09170	POLYSLIDER	1	15
5AA09180	SEPARATION FILM SPACER	1	16
5AA09190	AMS REGISTRATION	1	17
5AA09210	PULLEY FILM,H	2	14
5AA09220	H-PLT	1	14
5AA09230	RACK MOQUETTE	1	14
5AA09240	T GUIDE TAPE,B	2	14
5AA09250	T GUIDE TAPE,A	2	14
5AA09260	HINGE L,ASS'Y	1	14
5AA09270	SEPARATION FILM	1	15
5AA09280	KUG FILM	1	15
5AA09290	NIP FILM-2	1	16
5AA09300	COVER CUSHION,K	1	16
5AA09310	SEPARATION FILM-2	1	15
5AA09320	HOLDER FILM-2	1	15
5AA09330	SUPPORT FILM SPACER	1	15
5AA09340	PULLEY,STOP APPROACH	2	18
5AA09350	F STOP APPROACH ASS'Y	1	18
5AA09360	R STOP APPROACH ASS'Y	1	18
5AA09380	SEPARATION,SP	1	16
5AA09390	SEPARATION NIP FILM	1	16

Part. No.	Description	Quantity USA (120V)	Fig. No.
5AA09400	SEPARATION GUIDE SPRING-F	1	16
5AA09410	SEPARATION GUIDE SPRING-R	1	16
5AA09430	KO-TEN-BKT,ASS'Y	1	17
5AA09440	*ADJUSTING SCREW,MG*	*2*	*14*
5AA09450	*WEIGHT SPRING,CL ASS'Y*	*1*	*15*
5AA09460	*SLIT FILM*	*2*	*16*
5AA09470	*CUSHION*	*1*	*16*
5AA09480	*CUSHION FILM*	*1*	*16*
5AA09490	*FILM BKT*	*2*	*16*
59605000	BUSHING6	3	15, 19
60116080	PIN RAIL DEV.	2	4
60516060	SPRING EJECT	2	11
63213360	SPRING,PAPER EJECT HOLDER	1	4
63573070	BELT,DEVELOPING HANDLE	1	9
63722330	GEAR 14,TONER FEED	1	8
63722490	GEAR 33	1	12
63801050	INLET WIRING ASS'Y	1	13
63806240	FRONT BUSHING,REGISUTORATION	2	4
63810010	SHIELD,MAIN CHARGER	1	5
63814060	GEAR 20,AGITATION	1	9
63814090	GEAR 15,AGITATION	1	9
63814640	FRONT SEAL,SLEEVE	2	8
63820190	BEARING, FIXING UNIT	2	11
63822030	SPRING,COUPLER DRUM	1	12
63822040	COUPLER,DRUM	1	12
63822150	GEAR 18,EJECTION	1	11
63822200	GEAR,27/38	1	12
63822320	MOTOR,TONER FEED	1	10
63828090	CLEANING LAMP PCB	1	5
63856270	LABEL,SUPPLY(CPY)	1	1
65011310	GEAR 20,IDLE	1	11
65708181	*SPACER,ORIGINAL CONVEYING*	*4*	*18*
65902670	CUSHION RUBBER	2	4
65914110	GEAR 13,IDLE DEVELOPING	1	8
65926530	SPRING,SAFETY SWITCH	1	13
65927010	SWITCH,INTERLOCK	1	13
66006350	SWITCH,CASSETTE LIFT	3	6, 7, 11
66212080	MOUNT,SCANNER SWITCH	1	6
66228050	AE SENSOR PCB	1	7
67312250	PIN,ORIGINAL INDICATION PLATE	1	6
67322230	BUSHING 8	2	6

Part. No.	Description	Quantity USA (120V)	Fig. No.
68802070	SPRING A,LIFT UP	1	3
69027070	SWITCH,MAIN	1	13
69312020	THERMAL PROTECTOR,SCANNER	1	6
69927040	WIRE,THERMOSTAT JUNCTION	1	11
71602180	PIN,SHIFT LEVER	2	2, 4
71607160	PRESSING SPRING	2	4
71804200	MAGNET PLATE,TOP COVER	1	13
71827340	INLET 3P,POWER	1	13
72127100	PI SWITCH,OPTICAL SECTION	1	6
72906160	RACK,STACK BYPASS	2	4
72906170	PINION,STACK BYPASS	1	4
72907100	PULLEY,PAPER GUIDE	2	4
72907110	SPRING,PAPER GUIDE PULLEY	2	4
72919050	GEAR 12/15,RECYCLE SECTION	1	9
73210450	BUSH, 6	1	12
73918080	PIN,CLEANING BLADE	2	2
74808140	BEARING,LNR-1360ZZR	1	12
75704300	CATCH FRONT COVER	1	1
75712080	MIRROR HOLDER	11	6, 7
75712120	DRUM SCANNER DRIVE WIRE	2	6
75713060	AE SENSOR COVER	1	7
75714310	SPRING DEVELOPING UNIT LOCK LEVER	1	4
75914670	BUSHING DEVELOPING UNIT SHIFT	2	2, 4
75914730	STOPPER DEVELOPING UNIT SHIFT	2	2
76220090	STOPPER HEAT ROLLER	2	11
76508130	SPRING BELT GUIDE ROLLER	1	3
76727010	ORIGINAL SIZE SWITCH	1	2
77906210	CASSETTE STOPPER	1	1
78022050	GEAR 19/44	1	7
B3023060	BINDING TAP TIGHT SCREW M3X6	2	22
M0207000	BINDING BAND,KB-100-1	1	11
M1203200	OPEN BUSHING,OCB-375	4	7
M1654020	FUSE,237004(LITTEL FUSE)	2	13
M1661000	FUSE 15A,314015	2	13
M2104220	EDGING,EDS-1717U	3	2, 6, 13
M2104240	EDGING,EDS-1208U	3	2
M2104260	EDGING,EDS-0607U(KITAGAWA)	1	5
M2104300	EDGING,KG-012	1	2
M2104350	EDGING,EDS-0607M(KITAGAWA)	2	14, 17
M2105000	NYLON CLAMP 2N,NK-2N	2	6
M2105030	NYLON CLAMP 5N,NK-5N	5	2, 14, 17
M2105720	MINIATURE CLAMP,UAMS-05-2	2	4, 12

Part. No.	Description	Quantity USA (120V)	Fig. No.
M2105810	CLAMP,HEAT PROOF,KCA-34	1	11
M2105990	CLAMP,HL-18-0(KITAGAWA)	1	13
M2107120	BINDING BAND SG-130	25	2, 4, 5, 6, 7, 13, 17 19
M2107140	BINDING BAND, SKB-1M	1	17
M2108000	SPACER,KGLS-3S	6	13
M2108120	SPACER,KGLS-4S	2	13
M2108360	SPACER,KGLS-12S	3	13
M2108480	SPACER,KGLS-22S	2	13
M2108780	SPACER,KGPS-12S(KITAGAWA)	1	13
M2108880	SPACER,KGPS-5RF(KITAGAWA)	1	12
M2109010	WIRE SADDLE,WS-2NS	1	13
M2607010	BINDING BAND,PLT1M	6	4, 6, 11, 12, 13

Part. No.	Description	Quantity USA (120V)	Fig. No.
19582030	SET, DRUM	1	9
19582410	PROCESS UNIT (C)	1	20

★ The above items are supply items only and as such, they must be ordered from your regional office.

CLASSFICATION OF THE SCREWS IN ILLUSTRATION

REF.	ITEM #	DESCRIPTION
AHA	B0803060	POLYESTER SCREW PVM3X6
BAA	B1003040	BINDING SCREW,CVM3X4
BAC	B1003080	BINDING SCREW M3X8
BAL	B1003050	BINDING SCREW CVM3X5
BAP	B1003100	BINDING SCREW CVM3X10
BAX	B1004040	BINDING SCREW CVM4X4
BBB	B1303050	BINDING SCREW BVM3X5 (BLACK)
BBC	B1303100	BINDING SCREW BVM3X10 (BLACK)
BBE	B1304060	BINDING SCREW BVM4X6 (BLACK)
BBF	B1304080	BINDING SCREW BVM4X8 (BLACK)
BBR	B1303080	BINDING SCREW BVM3X8 (BLACK)
BCJ	B1103100	BINDING SCREW VM3X10 (CR)
BCK	B1103050	BINDING SCREW CV3X5
BEB	B1603060	BINDING SCREW M3X6 (BRASS,NI)
BHA	B3023060	BINDING TAP TIGHT SCREW M3X6
BHB	B3023080	BINDING TAP TIGHT SCREW M3X8
BHC	B3024060	BINDING TAP-TIGHT SCREW M4X6
BHF	B3314080	BINDING TAP-TITE P SCREW M4X08
BHI	B3313080	BINDING TAP-TITE SCREW M3X08
BHO	B3313100	BINDING TAP-TITE P BRONZE SCREW M3X10
BHV	B3313060	+BINDING TAP-TIGHT P BRONZE SCREW M3X06
BHX	B8000060	BINDING TAP-TIGHT P SCREW M2.6X06
BVM	B1303300	BINDING SCREW BVM3X30(BLACK)
CAG	B2004060	COUNTER-SUNK HEAD SCREW FHM4X6
DJC	B5003060	HEX. SOCKET HEAD SCREW HHM3X6
EAH	B3063080	TAPPING SCREW M3X8 (B TYP)
E03	D1000300	STOP RING (E-3)
E04	D1000400	STOP RING (E-4)
E05	D1000500	STOP RING (E-5)
E06	D1000600	STOP RING (E-6)
E07	D1000700	STOP RING (E-7)
HAJ	B4393380	TRIPLE TAP-TITE SCREW M3X08 A-TYPE
HAQ	B4043100	TRIPLE TAP-TITE P SCREW M3X10
HAT	B4144080	+TP TAP-TITE P SCREW(CHROMIUM)
HAV	B4044080	+TP TAP TIGHT P CHROMATE M4X08

REF.	ITEM #	DESCRIPTION
HBA	B4303050	TRIPLE SCREW M3X5 (BLACK)
HBH	B4303060	TRIPLE SCREW M3X6 (BLACK)
HBI	B4303080	TRIPLE SCREW M3X8(BLACK)
HCD	B4103080	TRIPLE SCREW M3X08(CHROMIUM)
KAK	E0020080	SPRING PIN 2X8
KAM	E0020120	SPRING PIN 2X12
RDC	D4000300	STOP RING CSTW-3
WAD	C2005120	PLAIN WASHER PWM5
ABG	B0304100	ROUND HEAD SCREW M4X10 (BLACK)
ADF	B4093060	PEDESTALHEAD TAP-TITE SCREW(CHROMATING)M3X06
ARC	B0013060	ROUND HEAD SCREW WITH SW M3X6
AVF	B0024100	ROUND HEAD SCREW WITH SW.W M4X10
AWB	B0323080	ROUND HEAD SCREW WITH SW.W M3X8 (BLACK)
AWC	B0324060	ROUND HEAD SCREW WITH SW.W M4X6 (BLACK)
AWD	B0324080	ROUND HEAD SCREW WITH SW.W M4X8 (BLACK)
BAN	B1004060	BINDING SCREW CVM4X6
BCI	B1104100	BINDING SCREW VM4X10 (CR)
BCN	B1104140	BINDING SCREW M4X14
BHD	B3024080	BINDING TAP-TIGHT SCREW M4X8
BHS	B8012100	BINDING TAP-TITE P SCREW M2X10
EFC	B3003100	TAPPING SCREW M3X10(B TYPE)
EFD	B3004080	BINDING SCREW M4X8
EFG	B3003200	TAPPING SCREW M3X20(B-TYP)
E02	D1000200	STOP RING E-2
E09	D1000900	STOP RING (E-9)
FAG	B3083050	COUNTER-SUNK HEAD TAPPING SCREW M3X5.(B-TYP)
HAI	B4004060	TRIPLE SCREW M4X06(BLACK)
HCA	B4104060	TRIPLE SCREW M4X6(CHROMIUM)
HCJ	B4104100	TRIPLE SCREW M4X10(CHROMIUM)
KAL	E0020100	SPRING PIN 2X10
KAN	E0020140	SPRING PIN 2X14
NAD	C1004000	NUT NM4
WAC	C2004100	PLAIN WASHER PWM4
XCF	C2895130	SHIM 8.2-0.5T

A division of MITA COPYSTAR AMERICA, INC.

Headquarters:
225 Sand Road, P.O. Box 40008
Fairfield, New Jersey 07004-0008
TEL : (973) 808-8444
FAX : (973) 882-6000

Northeastern Region:
225 Sand Road, P.O. Box 40008
Fairfield, New Jersey 07004-0008
TEL : (973) 808-8444
FAX : (973) 882-4401

Midwestern Region:
225 Spring Lake Drive,
Itasca, Illinois 60143
TEL : (630) 250-7447
FAX : (630) 250-8787

Western Region:
14101 Alton Parkway, P.O.Box 57006,
lrvine, California 92618-7006
TEL : (714) 457-9000
FAX : (714) 457-9119

Southern Region:
1500 Oakbrook Drive,
Norcross, Georgia 30093
TEL : (404) 729-9786
FAX : (404) 729-9873

Southwestern Region:
2825 West Story Road,
Irving, Texas 75038-5299
TEL : (972) 550-8987
FAX : (972) 570-4704

Dallas Parts Distribution Center & National Training Center:
2825 West Story Road,
Irving, Texas 75038-5299
TEL : (972) 659-0055
FAX : (972) 570-5816

© 1998 MITA INDUSTRIAL CO., LTD.

Printed in U.S.A.