KYOCERA mita

PLAIN PAPER COPIER

DC-2060/2560

PARTS LIST

Published in Oct.'99
841AH120

NOTE

1. Indicate parts number and machine model when placing an order.

eg.	Parts Number	Parts Name	Machine Model	Cycle	Quantity
	1AH04010	FRONT COVER	DC-2560	50Hz	1
	1AA04010	FRONT COVER	DC-2060	50Hz	1

2. Service calls and freight will be charged separately.

3. Symbols in the "Parts Number" column.

- Parts with "•" are component parts or sub-assemblies of the assembly appearing immediately above them.

eg.	Parts Number	Parts Name	Parts Number	Parts Name
	33900672	CASSETTE ASS'Y U2	•68707030	UPPER COVER,CASSETTE
			•68707040	LOWER COVER, CASSETTE

- Parts with "••" are component parts or the sub-assembly with "•" appering immediately above them.

eg.	Parts Number	Parts Name	Parts Number	Parts Name
	•34868012	FRONT TRANSFER HOUSING ASS'Y	••34817070	FRONT LID,TRANSFER
			••34817011	FRONT HOUSING, TRANSFER

- Parts with "◉" indicates the service parts.

4. See the last page of this parts list for the classification of the screws in the illustrations.

Parts List

DC-2060/DC-2560

CONTENTS

FIG.1 EXTERIOR COVERS · 2
FIG.2 FRAMES · 4
FIG.3 CASSETTE · 6
FIG.4 PAPER FEED-IN SECTION I · · · · · · · · · · · · · · · · · 8
FIG.5 PAPER FEED-IN SECTION II · · · · · · · · · · · · · · · · · 10
FIG.6 PAPER FEED-IN SECTION III · · · · · · · · · · · · · · · · 12
FIG.7 PAPER CONVEYING SECTION · · · · · · · · · · · · · · · 14
FIG.8 CHARGING SECTION · 16
FIG.9 ORIGINAL SET SECTION · · · · · · · · · · · · · · · · · · 18
FIG.10 OPTICAL SECTION · 20
FIG.11 IMAGE FORMATION SECTION I(DEVELOPING) 22
FIG.12 IMAGE FORMATION SECTION II(CLEANIG) · · · 24
FIG.13 TONER HOPPER SECTION · · · · · · · · · · · · · · · · · 26
FIG.14 FIXING SECTION · 28
FIG.15 DRIVING, COOLING SECTION · · · · · · · · · · · · · · 30
FIG.16 EJECT SECTION · 32
FIG.17 ELECTRICAL COMPONENTS I · · · · · · · · · · · · · · 34
FIG.18 ELECTRICAL COMPONENTS II · · · · · · · · · · · · · · 36
FIG.19 OPTION · 38
FIG.20 ACCESSORIES · 40
• INDEX · 42

FIG. 1 EXTERIOR COVERS 1AH

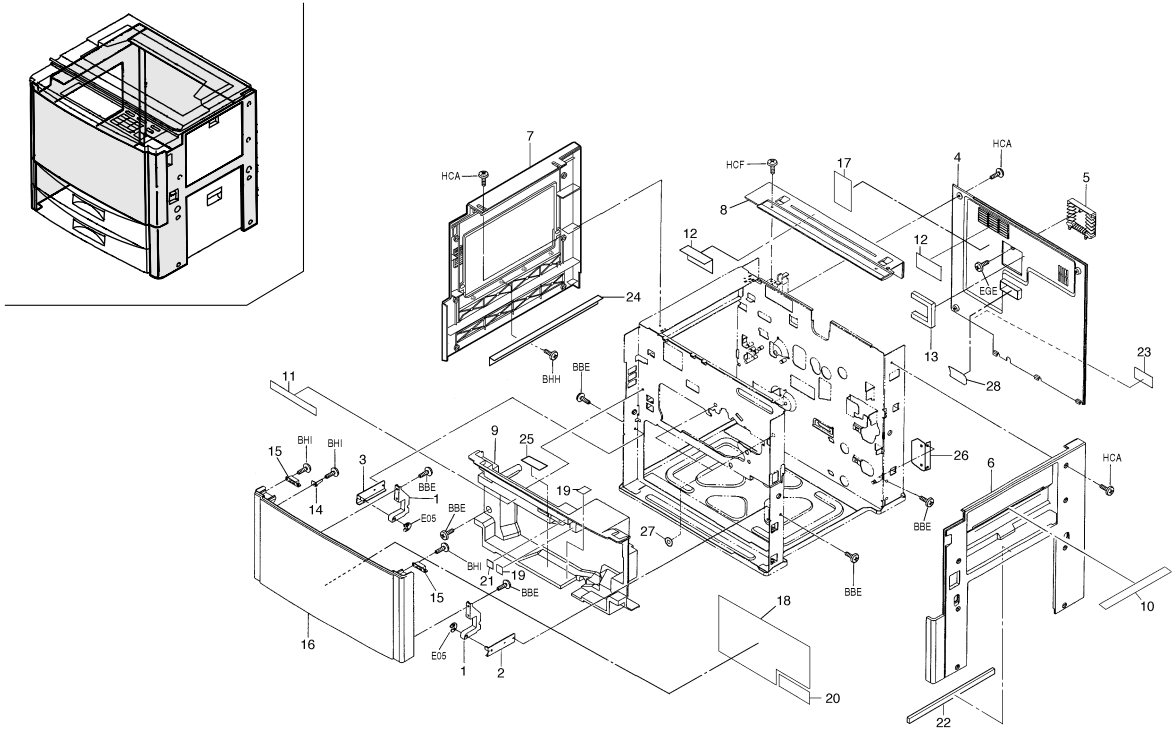

FIG. 1 EXTERIOR COVERS

SP	Ref. No.	Part. No.	Description	Quantity 230V
	1	34804140	FRONT HINGE,COVER	2
	2	34804150	RIGHT MOUNT,HINGE	1
	3	34804160	LEFT MOUNT,HINGE	1
◉	4	34804080	REAR COVER	1
◉	5	34804131	REAR COVER,COOLING	1
◉	6	34804031	RIGHT COVER	1
◉	7	34804042	LEFT COVER	1
◉	8	34804071	UPPER REAR COVER	1
	9	34804120	INNER FRONT COVER	1
	10	34804180	RIGHT SHEET,COVER	1
	11	34705060	LABEL,FIXING OPERATION	1
	12	34812110	REAR FILTER,SCANNER DUST SHIELD	2
	13	34823030	REAR SPONGE COVER,COOLING	1
	14	34804020	ACTUATION PLATE,INTERLOCK	1
	15	60804120	MAGNET CATCH	2
◉	16	1AH04010	FRONT COVER (FOR DC 2560 ONLY)	1
◉		1AA04010	FRONT COVER (FOR DC 2050 ONLY)	1
	17	34705122	LABEL SIM(EXP)	1
◉	18	1AA05020	LABEL,MACHINE OPERATION	1
	19	67305310	CAUTION LABEL,HV	2
	20	46664934	LABEL,SUPPLIES(E,F,G,S)	1
	21	2AG05200	LABEL,HIGH VOLTAGE CAUTION(EXP)	1
	22	1AA04020	RIGHT SPONGE,COVER	1
	23	67805200	LABEL,ROLL HEATER	1
	24	34804190	LEFT REINFORCEMENT,COVER	1
	25	34805130	LABEL,TRANSFER	1
	26	34826230	PROTECTING PLATE,CASSETTE WIRE	1
	27	66014420	SPACER,CLEANING SECTION	2
	28	34804200	REAR SPONGE,COVER	1

• Parts with "•" are component parts or sub-assemblies of the assembly appearing immediately above them.
• Parts with "◉" indicates the Service parts.

• Parts with "• •" are component parts or sub-assembly with "•" appearing immediately above them.

FIG. 2 FRAMES 1AH

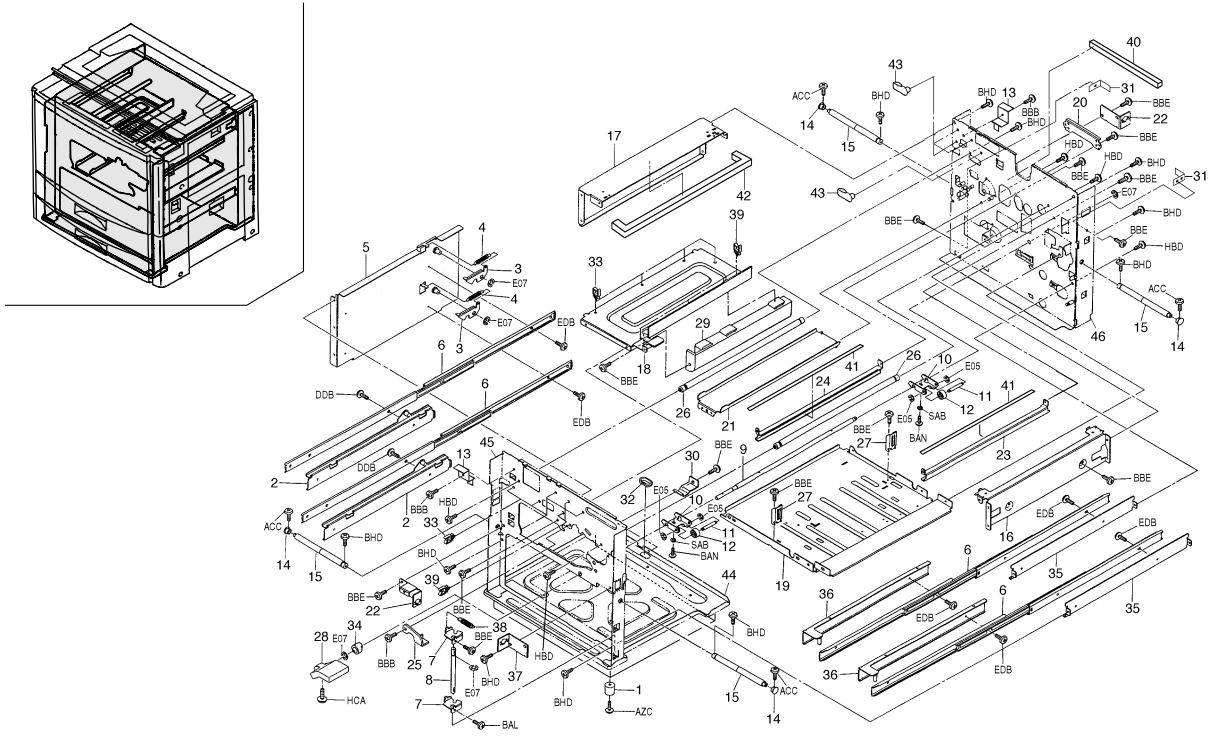

FIG. 2 FRAMES

1AH

SP	Ref. No.	Part. No.	Description	Quantity 230V
	1	66102140	BASE,RUBBER	4
	2	33902070	LEFT MOUNT,RAIL	2
	3	33902120	HOOK,CASSETTE RETAINING	2
◉	4	33902130	SPRING,CASSETTE HOOK	2
	5	34802061	LOWER LEFT REINFORCEMENT	1
	6	66107084	SLIDER,CASSETTE	4
	7	33902150	STOPPER,CASSETTE LOCK	2
	8	34802130	SHAFT,CASSETTE LOCK	1
	9	34816060	SHAFT,CONVEYING RELEASE	1
	10	34816070	SUPPORT PLATE,CONVEYING RELEASE	2
	11	34816080	SHAFT,CONVEYING RELEASE PULLEY	2
◉	12	76507110	COLLAR ORIGINAL FEEDBACK ROLLER	2
	13	34812050	HOLDER,SCANNER UNIT	2
	14	33902260	CAP,HANDLE	4
	15	34802160	HANDLE B,MACHINE	4
	16	34802040	UPPER RIGHT REINFORCEMENT	1
	17	34802050	UPPER LEFT REINFORCEMENT	1
	18	34802070	LOWER REINFORCEMENT,SCANNER	1
	19	34802080	REINFORCEMENT,MIDDLE	1
	20	34802090	REINFORCEMENT, REAR FRAME	1
	21	34802102	RAIL,FIXING	1
	22	34802140	LEFT MOUNT,HANDLE	2
	23	34809010	RIGHT RAIL,IMAGE FORMATION	1
	24	34809020	LEFT RAIL,IMAGE FORMATION	1
	25	34810030	SPACER,MC RETAINING	1
	26	34812040	SHAFT,LENS SCANNER UNIT SUPPORT	2
	27	34816140	STOPPER,CONVEYING RELEASE	2
	28	34816151	HANDLE,CONVEYING RELEASE	1
	29	34823020	RIGHT PARTITION,FIXING	1
	30	34826020	PROTECTING PLATE,CASSETTE CONNECTOR	1
	31	34826190	REAR RETAINER	2
	32	34827050	PROTECTOR,EDGE	1
	33	M2109000	WIRE SADDLE,WS-1NS	7
◉	34	49021700	BUSHING	1
	35	33902060	RIGHT REINFORCEMENT	2
	36	68707050	RIGHT MOUNT,RAIL	2
	37	33902110	MOUNT,HANDLE	1
◉	38	33902160	SPRING,CASSETTE LOCK	1
	39	M2109010	WIRE SADDLE,WS-2NS	5
	40	34823050	REAR SPONGE,FRAME	1
	41	34802170	SHEET,IMAGE FORMATION RAIL	2
	42	34823040	UPPER LEFT SPONGE,REINFORCMENT	1
	43	M2105940	CLAMP,NAD-06(KITAGAWA)	4
	44	34802030	BASE	1
	45	34802011	FRONT FRAME	1
	46	34802022	REAR FRAME	1

• Parts with "•" are component parts or sub-assemblies of the assembly appearing immediately above them.
• Parts with "◉" indicates the Service parts.

• Parts with "• •" are component parts or sub-assembly with "•" appearing immediately above them.

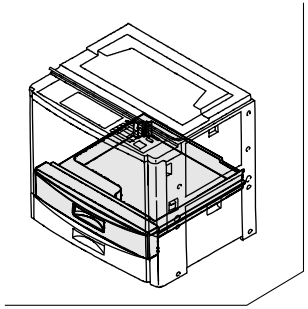

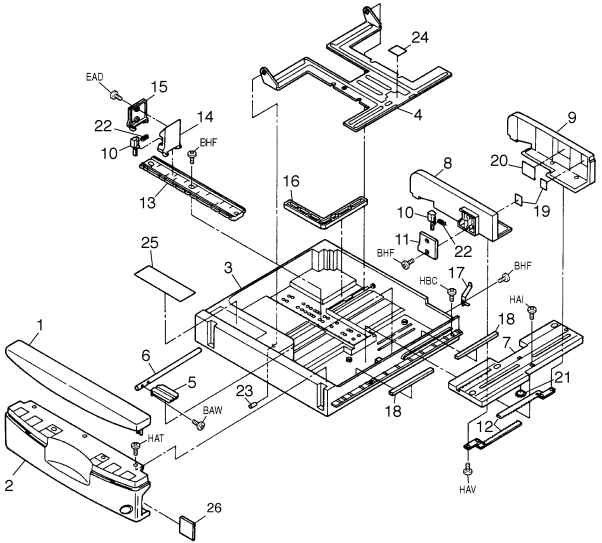
EAD
15
22
14
10
BHF
13
24
4
16
9
20
8
19
10
11
22
BHF
BHF
HBC
17
HAI
18
7
21
25
3
1
6
5
23
BAW
18
12
HAT
2
26
HAV

FIG. 3 CASSETTE

SP	Ref. No.	Part. No.	Description	Quantity 230V
		33900672	CASSETTE ASS'Y U2	2
◉	1	• 68707030	UPPER COVER,CASSETTE	2
◉	2	• 68707040	LOWER COVER,CASSETTE	2
	3	• 33907012	CASSETTE	2
	4	• 33907020	WORK PLATE,CASSETTE	2
	5	• 33907030	WORK PLATE,LIFT CASSETTE	2
	6	• 33968220	CASSETTE LIFT SHAFT ASS'Y	2
	7	• 33907050	RAIL A,CURSOR	2
	8	• 33907060	CURSOR A,CASSETTE	2
	9	• 33907070	CURSOR B,CASSETTE	2
	10	• 33907080	LEVER,CASSETTE CURSOR	4
	11	• 33907090	LID A,CURSOR	2
	12	• 33907100	RACK,CASSETTE	4
	13	• 33907120	RAIL C,CURSOR	2
	14	• 33907130	CURSOR C,CASSETTE	2
	15	• 33907140	LID C,CURSOR	2
	16	• 33907180	DETECTION PLATE,CASSETTE	2
◉	17	• 33907190	GROUND PLATE,CASSETTE	2
	18	• 33907210	CUSHION,CASSETTE WORK PLATE	4
	19	• 60907170	CUSHION,CASSETTE R	4
	20	• 61705110	LABEL,PAPER UPPER LIMIT	2
◉	21	• 65914120	GEAR 18,IDLE DEVELOPING	2
◉	22	• 66007120	SPRING,CURSOR C	4
	23	• 66007310	PIN,CASSETTE WORK PLATE	2
	24	• 66107100	PAD,CASSETTE	2
	25	• 33905020	LABEL,CASSETTE OPERATION	2
	26	33907220	ORIGINAL SIZE INDICATOR,SIZE (METRIC)	2

• Parts with "•" are component parts or sub-assemblies of the assembly appearing immediately above them.
• Parts with "◉" indicates the Service parts.

• Parts with "• •" are component parts or sub-assembly with "•" appearing immediately above them.

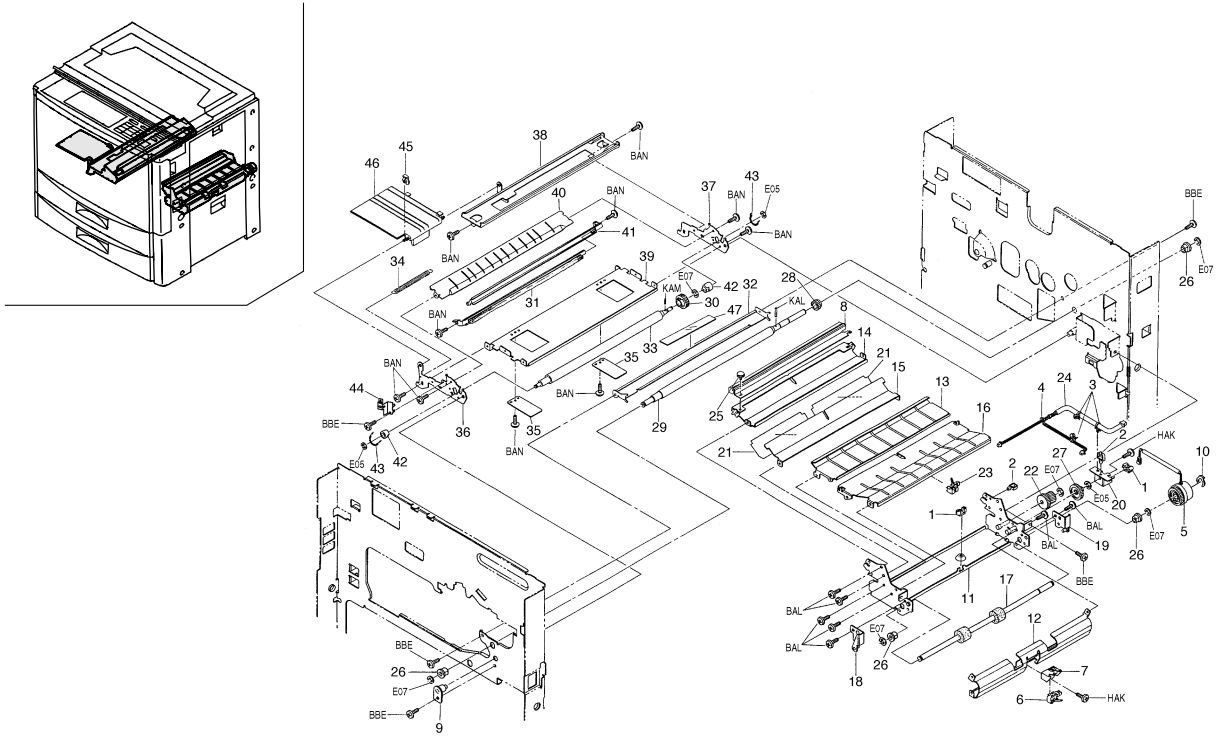
A B C D E F G H I J
1 2 3 4 5 6 7
BAN
BBE
E05
E07
KAM
KAL
BAL
HAK

FIG. 4 PAPER FEED-IN SECTION I

1AH

SP	Ref. No.	Part. No.	Description	Quantity 230V
	1	M2104260	EDGING,EDS-0607U(KITAGAWA)	2
	2	M2105720	MINIATURE CLAMP,UAMS-05-2	2
	3	M2107120	BINDING BAND SG-130	3
	4	M2607010	BINDING BAND,PLT1M	1
◉	5	33906120	CLUTCH 34,FEED	1
◉	6	33906140	SWITCH,VERTICAL CONVEYING	1
	7	33906620	MOUNT BASE,PAPER FEED SWITCH	1
◉	8	34800141	UPPER REGISTRATION CLEANER ASS'Y	1
	9	34817310	FRONT PIN,TRANSFER FRAME	1
◉	10	34806150	STOPPER 5	1
◉	11	34806201	FRAME,FEED UNIT	1
	12	34806210	LOWER GUIDE,FEED	1
	13	34806220	UPPER GUIDE,FEED	1
	14	34806230	UPPER GUIDE,REGISTRATION	1
	15	34806240	GUIDE,REGISTRATION MIDDLE	1
	16	34806250	LOWER GUIDE,REGISTRATION	1
◉	17	34806260	ROLLER,FEED UNIT	1
	18	34806291	FRONT MOUNT,HOOK	1
	19	34806301	REAR MOUNT,HOOK	1
	20	34806311	RETAINER,FEED CLUTCH	1
	21	34806340	SEAL,REGISTRATION GUIDE	2
◉	22	34822140	GEAR 18/26,FEED UNIT	1
◉	23	34827020	SWITCH,REGISTRATION	1
	24	34827170	WIRE,FEED UNIT	1
	25	64007010	PIN,CLEANER	1
◉	26	67322230	BUSHING 8	4
◉	27	73922250	IDLE GEAR A,PF SECTION	1
◉	28	29806490	GEAR 16T	1
◉	29	34806270	UPPER ROLLER,REGISTRATION	1
◉	30	29814340	GEAR 18,DEVELOPER UNIT	1
◉	31	34800150	LOWER REGISTRATION CLEANER AS S'Y	1
	32	34817320	UPPER FRONT GUIDE,TRANSFER	1
◉	33	34806280	LOWER ROLLER,REGISTRATION	1
◉	34	34816120	SPRING,CONVEYING	1
◉	35	34816130	PLATE SPRING,CONVEYING RELEASE	2
	36	34817170	FRONT FRAME,TRANSFER	1
	37	34817180	REAR FRAME,TRANSFER	1
	38	34817190	RAIL,TRANSFER CHARGER	1
	39	34817200	REINFORCEMENT,TRANSFER FRAME	1
	40	34817211	LOWER FRONT GUIDE,TRANSFER	1
	41	34817220	LOWER SUPPORT PLATE,REGISTRATION CLEANER	1
◉	42	72107160	BUSHING 6,LOWER REGISTRATION ROLLER	2
	43	77706461	PRESSING SPRING	2
	44	34817302	HOLDER,TRANSFER CHARGER	1
◉	45	63511220	STOP RING,4	1
	46	34816090	FRONT GUIDE,CONVEYING	1
◉	47	34806540	UPPER FILM,RESISTANCE	1

• Parts with "•" are component parts or sub-assemblies of the assembly appearing immediately above them.
• Parts with "◉" indicates the Service parts.

• Parts with "• •" are component parts or sub-assembly with "•" appearing immediately above them.

FIG. 5 PAPER FEED-IN SECTION II

1AH

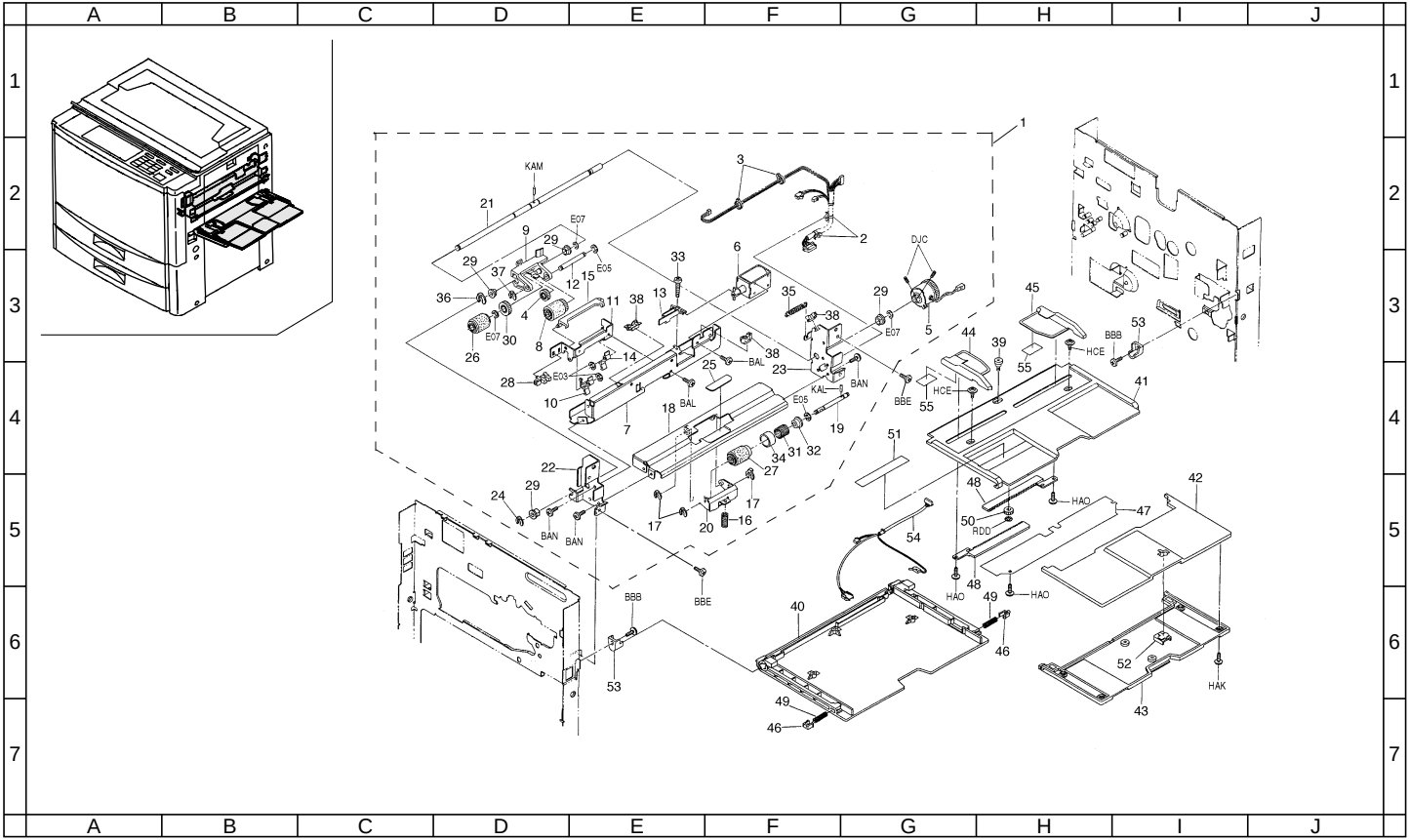

FIG. 5 PAPER FEED-IN SECTION II

1AH

SP	Ref. No.	Part. No.	Description	Quantity 230V
	1	34700110	BYPASS PAPER FEED ASS'Y	1
	2	•M2107120	BINDING BAND SG-130	2
	3	•M2607010	BINDING BAND,PLT1M	2
◉	4	• 29822230	GEAR 16T,PF IDLE	1
◉	5	• 33906130	CLUTCH,BYPASS	1
◉	6	• 33906370	SOLENOID,BYPASS	1
	7	• 33906441	UPPER GUIDE,BYPASS	1
◉	8	• 33906470	PULLEY,LEADING FEED	1
	9	• 33906480	SUPPORT PLATE,LEADING FEED PULLEY BYPASS	1
	10	• 33906930	LEVER,PE	1
	11	• 33906941	MOUNT,STOPPER	1
	12	• 33906950	SHAFT,LEADING FEED PULLEY BYPASS	1
	13	• 33906960	LEVER,BYPASS SOLENOID	1
	14	• 33906970	STOPPER,PAPER	1
	15	• 33906980	LEVER,STOPPER RELEASE	1
◉	16	• 34806050	LOWER SPRING,PAPER FEED	1
	17	• 34806140	STOPPER 4	3
	18	• 34806410	LOWER GUIDE,BYPASS	1
	19	• 34806420	SHAFT,SEPARATION PULLEY	1
	20	• 34806430	SUPPORT PLATE,SEPARATION PULLEY	1
	21	• 34806440	SHAFT,BYPASS PAPER FEED	1
	22	• 34806450	FRONT FRAME,BYPASS	1
	23	• 34806460	REAR FRAME,BYPASS	1
◉	24	• 34806480	STOPPER 6	1
	25	• 34806490	FRICTION PLATE,BYPASS LEADING FEED	1
◉	26	• 61706770	UPPER PULLEY,BYPASS	1
◉	27	• 61706780	LOWER PULLEY,BYPASS	1
◉	28	• 66006350	SWITCH,CASSETTE LIFT	1
◉	29	• 67322230	BUSHING 8	4
◉	30	• 71815110	IDLE GEAR 18,SUB UNIT	1
◉	31	• 72107531	SPRING,LIMITTER	1
◉	32	• 72107710	BOSE,LIMITTER	1
	33	• 72518060	PIN B,DISPOSAL TANK FULCRUM	1
◉	34	• 72707190	COLLAR, LIMITTER	1
◉	35	• 75618100	SPRING DRUM SEPARATION CLAW SHAFT	1
◉	36	• 75706040	STOPRING PAPER FEED PULLEY	1
◉	37	• 75812080	STOP RING 4	1
	38	•M2104260	EDGING,EDS-0607U(KITAGAWA)	3
	39	48128606	PIN,WIRE TENSION	1
◉	40	33906800	TABLE A,BYPASS	1
◉	41	33906810	TABLE B,BYPASS	1
◉	42	33906820	TABLE C,BYPASS	1
◉	43	33906830	TABLE D,BYPASS	1
◉	44	33906840	FRONT CURSOR,BYPASS	1
◉	45	33906850	REAR CURSOR,BYPASS	1
	46	33906880	STOPPER,BYPASS TABLE	2
	47	33906900	COVER,CURSOR	1
	48	33907100	RACK,CASSETTE	2
◉	49	63516110	SPRING,TRANSFER	2
◉	50	65914120	GEAR 18,IDLE DEVELOPING	1
◉	51	66006820	SIZE INDICATOR,BYPASS(METRIC)	1
	52	34706050	LID,BYPASS TABLE	1
	53	33906890	FRONT FULCRUM PLATE,BYPASS TABLE	2
	54	34727060	WIRE,BYPASS UNIT	1
	55	33906220	PAD,BYPASS CURSOR	2

• Parts with "•" are component parts or sub-assemblies of the assembly appearing immediately above them.
• Parts with "◉" indicates the Service parts.

• Parts with "• •" are component parts or sub-assembly with "•" appearing immediately above them.

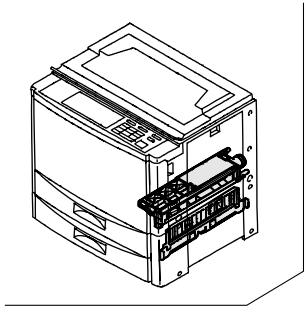

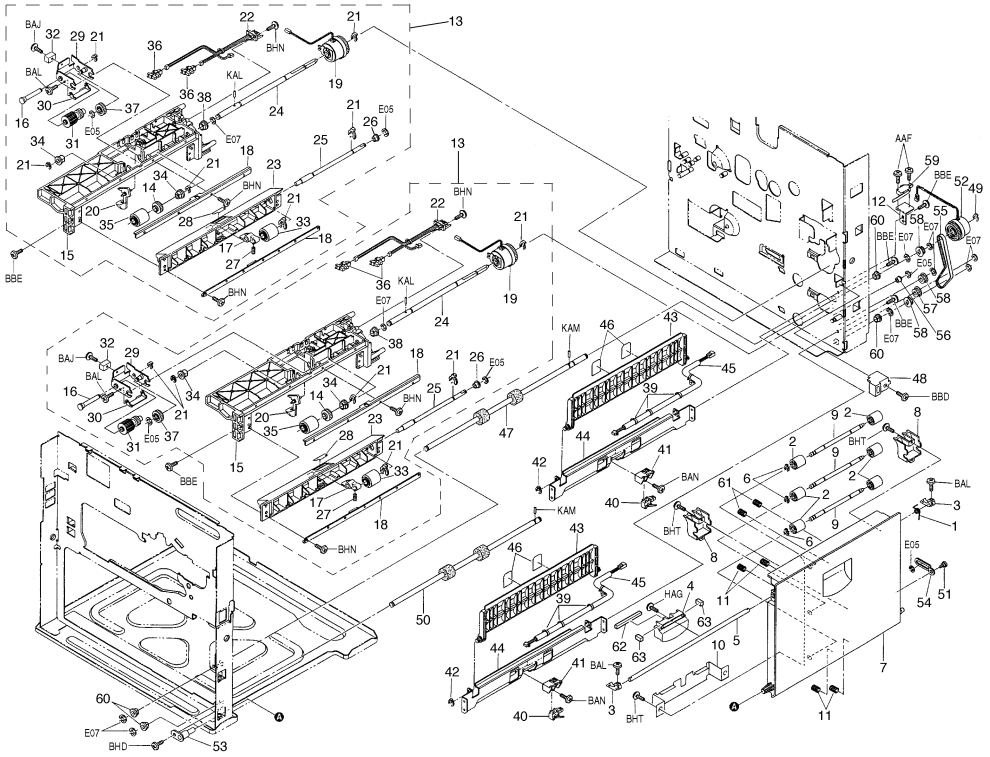
BAJ
BAL
BBE
BHD
BHN
BAN
BBD
BHT
KAL
KAM
HAG
AAF
E05
E07

FIG. 6 PAPER FEED-IN SECTION III

1AH

SP	Ref. No.	Part. No.	Description	Quantity 230V
◉	1	33906640	RIGHT SPRING,FEED RELEASE	1
◉	2	33906660	RIGHT PULLEY,FEED	6
	3	33906670	RIGHT HOOK,FEED RELEASE	2
	4	33906680	RIGHT HANDLE,FEED RELEASE	1
	5	33906690	RIGHT SHAFT,FEED RELEASE	1
	6	34806140	STOPPER 4	3
◉	7	34806161	COVER,VERTICAL CONVEYING	1
	8	34806170	GUIDE,VERTICAL CONVEYING	2
	9	34806181	SHAFT,VERTICAL CONVEYING	3
	10	34806501	PROTECTING PLATE,COVER VERTICAL CONVEYING	1
◉	11	66106610	SPRING,FEED	4
	12	34806120	MOUNT,VERTICAL COVER RELEASE SWITCH	1
	13	34800162	PRIMARY PAPER FEED ASS'Y	2
◉	14	• 29806490	GEAR 16T	2
	15	• 33906012	UPPER HOUSING,PAPER FEED	2
	16	• 33906080	SHAFT,LEADING FEED PULLEY	2
	17	• 33906090	LOWER LEVER,PAPER FEED PULLEY RELEASE	2
	18	• 33906100	REINFORCEMENT,PAPER FEED HOUSING	4
◉	19	• 33906110	CLUTCH,PAPER FEED	2
◉	20	• 33906150	ACTUATOR,PAPER EMPTY	2
◉	21	• 33906630	STOPPER 5,RING	12
	22	• 33927160	WIRE,PAPER FEED UNIT	2
	23	• 34806010	LOWER HOUSING,PAPER FEED	2
	24	• 34806020	UPPER SHAFT,PAPER FEED	2
	25	• 34806030	SHAFT,LEADING FEED PULLEY	2
◉	26	• 34806040	LOWER BUSHING,PAPER FEED	2
◉	27	• 34806050	LOWER SPRING,PAPER FEED	2
◉	28	• 34806060	FILM,PAD PULLEY	2
	29	• 34806070	SUPPORT PLATE,LEADING FEED PULLEY	2
	30	• 34806080	REINFORCEMENT,LEADING FEED SUPPORT PLATE	2
◉	31	• 34806090	PULLEY,LEADING FEED	2
	32	• 34806510	WEIGHT,LEADING FEED PULLEY	2
◉	33	• 60906170	PULLEY,FRICTION PAD	2
◉	34	• 60907880	BUSHING,BYPASS SHAFT	4
◉	35	• 61706770	UPPER PULLEY,BYPASS	2
◉	36	• 66006350	SWITCH,CASSETTE LIFT	4
◉	37	• 66022190	GEAR,21 DEVELOPING	2
◉	38	• 67322230	BUSHING 8	2
	39	M2105720	MINIATURE CLAMP,UAMS-05-2	6
◉	40	33906140	SWITCH,VERTICAL CONVEYING	2
	41	33906620	MOUNT BASE,PAPER FEED SWITCH	2
◉	42	33906630	STOPPER 5,RING	2
	43	33906700	GUIDE,CONFLUENCE	2
	44	33906780	LEFT GUIDE,FEED	2
	45	33927180	WIRE,VERTICAL CONVEYING JUNCTION	2
◉	46	34806520	FILM,CONFLUENCE GUIDE	4
◉	47	34806110	ROLLER,VERTICAL CONVEYING	1
	48	34806130	COVER,SAFETY SWITCH VERTICAL CONVEYING	1
◉	49	34806150	STOPPER 5	1
	50	34806190	ROLLER,DESK CONVEYING	1
	51	29820110	FRONT PIN,FULCRUM	1
◉	52	33906110	CLUTCH,PAPER FEED	1
	53	33906770	RIGHT FULCRUM PIN,COVER FEED	1
	54	33906790	RIGHT ARM,FEED RELEASE	1
◉	55	60922220	LOWER BELT,PAPER FEED	1
◉	56	66015270	PULLEY 10,TONER RECYCLE	1
◉	57	72407330	PULLEY,PF GEAR 30	1
◉	58	72622130	UPPER PULLEY,CENTRAL LEAD ROLLER	3
◉	59	34827230	SWITCH,INTERLOCK	1
◉	60	67322230	BUSHING 8	4
◉	61	34806530	UPPER SPRING,FEED	2
	62	1AA06010	SPONGE A,HANDLE	1
	63	1AA06020	SPONGE B,HANDLE	2

• Parts with "•" are component parts or sub-assemblies of the assembly appearing immediately above them.
• Parts with "◉" indicates the Service parts.

• Parts with "• •" are component parts or sub-assembly with "•" appearing immediately above them.

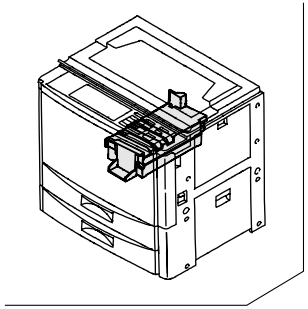

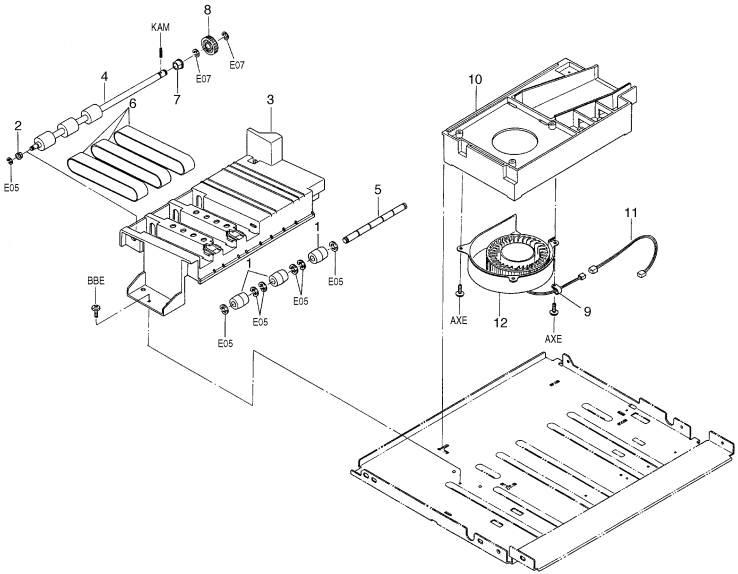
KAM
8
E07
E07
4
7
6
2
E05
3
5
1
1
BBE
1
E05
E05
E05
10
11
AXE
12
9
AXE

FIG. 7 PAPER CONVEYING SECTION

SP	Ref. No.	Part. No.	Description	Quantity 230V
◉	1	48928102	PF PULLEY	3
◉	2	29806810	BUSHING,6 REGISTRATION	1
	3	34816010	GUIDE,CONVEYING	1
◉	4	34816020	ROLLER,CONVEYING	1
	5	34816030	SHAFT,CONVEYING	1
◉	6	34816040	BELT,CONVEYING	3
◉	7	60907880	BUSHING,BYPASS SHAFT	1
◉	8	72622050	GEAR 25,FEED LOOP	1
	9	M2105710	MINIATURE CLAMP,UAMS-05-0	1
	10	34816050	DUCT,CONVEYING	1
	11	34827180	WIRE,CONVEYING FAN	1
	12	61727432	FAN,PTC	1

• Parts with "•" are component parts or sub-assemblies of the assembly appearing immediately above them.
• Parts with "◉" indicates the Service parts.

• Parts with "• •" are component parts or sub-assembly with "•" appearing immediately above them.

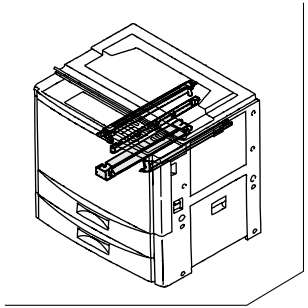

Be sure to order the tungsten wire Ref. No. 21,39 by the 50 meters spool(42929503).

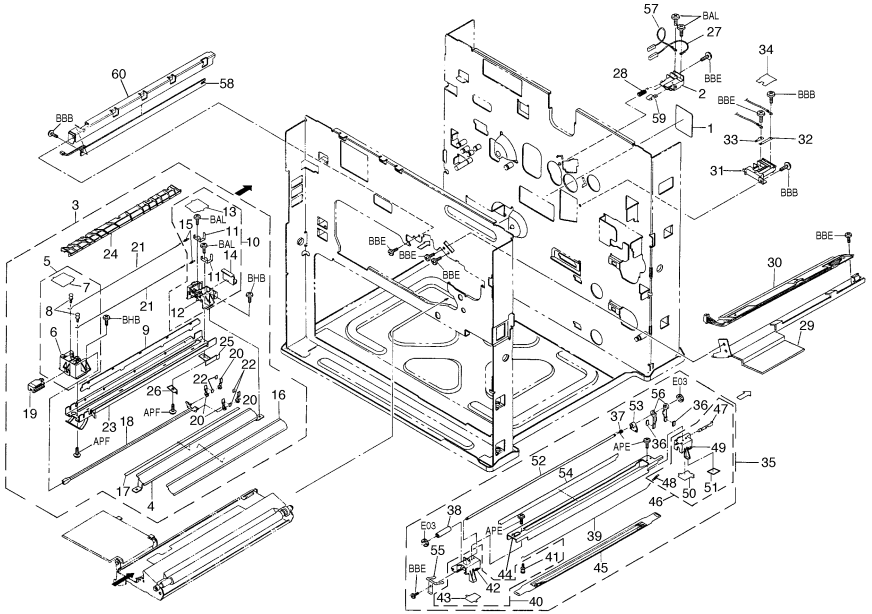

FIG. 8 CHARGING SECTION

1AH

SP	Ref. No.	Part. No.	Description	Quantity 230V
	1	67305310	CAUTION LABEL,HV	1
	2	34910070	HOUSING,MC TERMINAL BASE	1
◉	3	34893064	PARTS TRANSFER CHARGER ASS'Y(SP)	1
	4	• 34817100	GUIDE,TRANSFER	1
◉	5	• 34868012	FRONT TRANSFER HOUSING ASS'Y	1
	6	•• 34817011	FRONT HOUSING,TRANSFER	1
	7	•• 34817070	FRONT LID,TRANSFER	1
	8	•• 34817161	PIN,CHARGER	2
	9	• 34817041	PARTITION,TRANSFER SHIELD	1
◉	10	• 34893901	SET LEFT HOUSING TRANSFER CHARGER	1
	11	•• 34817060	TERMINAL,TRANSFER	2
	12	•• 34817021	REAR HOUSING,TRANSFER	1
	13	•• 34817080	REAR LID,TRANSFER	1
	14	•• 34817090	LID,TRANSFER TERMINAL	1
◉	15	•• 48527200	SPRING,CHARGER	2
◉	16	• 34817111	OUTER SEAL,TRANSFER GUIDE	1
◉	17	• 34817120	INNER SEAL,TRANSFER GUIDE	1
	18	• 34817130	SLIDER,TRANSFER CLEANING	1
	19	• 34817140	KNOB,TRANSFER CLEANING	1
	20	• 34817150	HOLDER,TRANSFER CLEANING	4
◉	21	• 42929503	TUNGSTEN WIRE(50M)	1spl
	22	• 77616110	PAD TC CLEANING	4
	23	• 34817031	SHIELD,TRANSFER	1
	24	• 34817051	GUIDE,SEPARATION	1
◉	25	• 34817350	GROUND PLATE,TRANSFER	1
◉	26	• 34817370	REAR FILM,TRANSFER	1
	27	66001110	TRANSFER WIRING ASS'Y	1
◉	28	34910130	SPRING,MC TERMINAL BASE	1
	29	34810020	MOUNT BL	1
◉	30	34827010	LAMP,BLANK	1
	31	34817250	HOUSING,TRANSFER CONNECTOR	1
	32	34817260	TERMINAL,TRANSFER CONNECTOR	1
	33	34817270	TERMINAL,SEPARATION CONNECTOR	1
	34	34817330	LID,TRANSFER CONNECTOR	1
◉	35	34993441	PARTS MAIN CHARGER ASS'Y(METRIC)SP	1
	36	• 77616110	PAD TC CLEANING	2
	37	• 34910190	SPRING,CHARGE CLEANING	1
	38	• 34910180	KNOB,CHARGE CLEANING	1
◉	39	• 42929503	TUNGSTEN WIRE(50M)	1spl
◉	40	• 34968261	FRONT MAIN CHARGER HOUSING ASS'Y	1

SP	Ref. No.	Part. No.	Description	Quantity 230V
	41	•• 34817161	PIN,CHARGER	1
	42	•• 34910010	FRONT HOUSING,MAIN CHARGER	1
	43	•• 34910110	FRONT LID,MC	1
	44	• 34910030	SHIELD,MAIN CHARGER	1
◉	45	• 34993460	PARTS GRID(METRIC)SP	1
◉	46	• 34993910	SET REAR CHARGER HOUSING	1
	47	•• 34910060	HOOK,MC WIRE	1
◉	48	•• 48527200	SPRING,CHARGER	1
	49	•• 34910020	REAR HOUSING,MAIN CHARGER	1
	50	•• 34910120	REAR LID,MC	1
	51	•• 34910200	REAR SPACER,MC HOUSING	1
	52	• 34910160	SHAFT,CHARGE CLEANING	1
	53	• 34910170	SLIDER,CHARGE CLEANING	1
	54	• 34910080	SEAL,CLEANING LAMP	1
	55	• 34910050	TENSION PLATE,GRID	1
	56	• 34910150	HOLDER,CHARGE CLEANING	2
	57	34827210	WIRE,GRID	1
◉	58	34927031	LAMP,CLEANING	1
◉	59	34910140	PLATE SPRING,MC TERMINAL BASE	1
	60	34810011	MOUNT,CLEANING LAMP	1

• Parts with "•" are component parts or sub-assemblies of the assembly appearing immediately above them.
• Parts with "◉" indicates the Service parts.

• Parts with "• •" are component parts or sub-assembly with "•" appearing immediately above them.

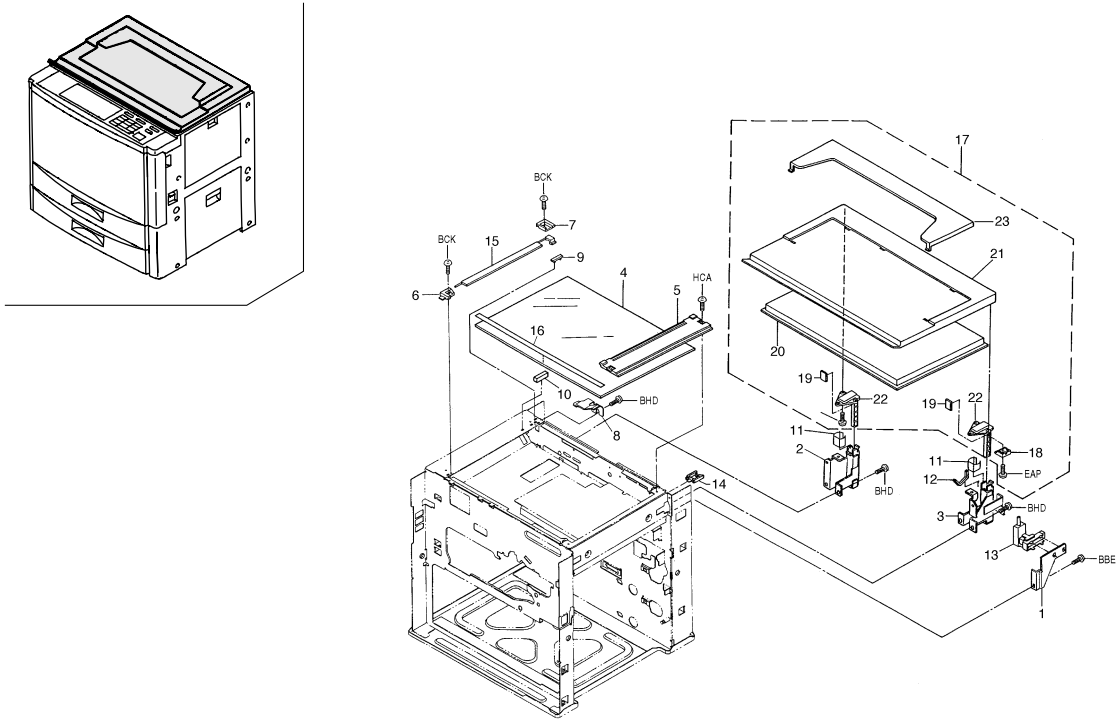
BCK
7
BCK
15
9
6
4
5
HCA
16
10
BHD
8
14
17
23
21
20
19
22
19
22
11
2
18
11
12
EAP
BHD
3
BHD
13
BBE
1

FIG. 9 ORIGINAL SET SECTION

SP	Ref. No.	Part. No.	Description	Quantity 230V
	1	34812060	MOUNT,SWITCH ORIGINAL RELEASE	1
	2	34812071	LEFT MOUNT,ORIGINAL HOLDER	1
	3	34812081	RIGHT MOUNT BASE,ORIGINAL HOLDER	1
◉	4	34912030	CONTACT GLASS	1
◉	5	66004050	UPPER RIGHT COVER	1
◉	6	66012220	FRONT HOLDER,INDICATION PLATE	1
◉	7	66012230	REAR HOLDER,INDICATION PLATE	1
◉	8	66012271	SPRING PLATE,INDICATION PLATE	1
	9	66012360	ASSIST PLATE,SIZE INDICATION PLATE	1
◉	10	66012370	STOPPER,SIZE INDICATION PLATE	1
	11	66026180	UPPER REAR SEAL	2
	12	75726140	BUSHING 21X22	1
◉	13	75827060	ORIGINAL DETECTION SWITCH	1
	14	M2109270	WIRE SADDLE,LWS-5S-2W(KITAGAWA)	1
◉	15	34812140	ORIGINAL SIZE INDICATOR,ORIGINAL(METRIC)	1
◉	16	66012380	FRONT SIZE INDICATION PLATE(METRIC)	1
	17	66000351	ORIGINAL HOLDER ASS'Y	1
	18	• 66012180	ACTUTATION PLATE,ORIGINAL DETECTION SWITCH	1
	19	• 79904140	ORIGINAL HOLDER SPACER	2
	20	• 75704450	MAT ORIGINAL HOLDER(USA)	1
◉	21	• 66012320	COVER,ORIGINAL HOLDER (EXP.)	1
	22	• 75704290	HINGE ORIGINAL HOLDER	2
◉	23	• 75741080	COVER,ORIGINAL STOCK(G)	1

• Parts with "•" are component parts or sub-assemblies of the assembly appearing immediately above them.
• Parts with "◉" indicates the Service parts.

• Parts with "• •" are component parts or sub-assembly with "•" appearing immediately above them.

FIG. 10 OPTICAL SECTION

1AH

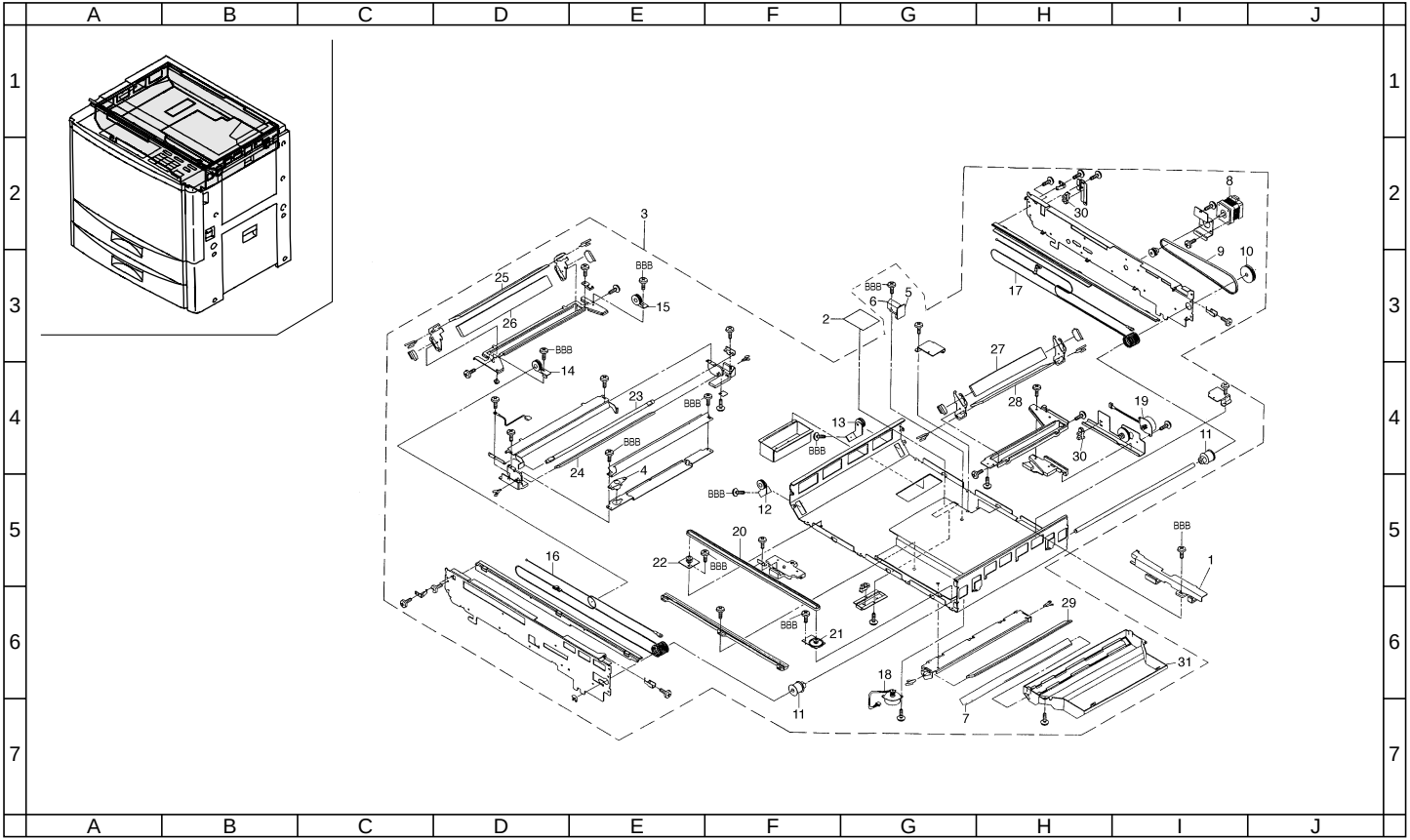

FIG. 10 OPTICAL SECTION

SP	Ref. No.	Part. No.	Description	Quantity 230V
	1	34812131	COVER,WIRE SCANNER UNIT	1
	2	20305071	LABEL,CAUTION CONTACT GLASS	1
	3	34893051	PARTS SCANNER UNIT ASS'Y(230)SP	1
◉	4	• 34812120	THERMAL PROTECTOR,SCANNER	1
◉	5	• 66228050	AE SENSOR PCB	1
	6	• 75713060	AE SENSOR COVER	1
◉	7	• 34868040	GLASS,COVER	1
◉	8	• 34893310	PARTS MOTOR SCANNER DRIVE (SP)	1
◉	9	• 34868060	BELT,SCANNER DRIVE	1
◉	10	• 34868070	PULLEY,SCANNER DRIVE	1
◉	11	• 34868080	DRUM,SCANNER	2
◉	12	• 34868090	FRONT PULLEY,SCANNER WIRE	1
◉	13	• 34868100	REAR PULLEY,SCANNER WIRE	1
◉	14	• 34868110	FRONT PULLEY,2 MOVING SCANNER	1
◉	15	• 34868120	REAR PULLEY,2 MOVING SCANNER	1
◉	16	• 34893320	PARTS FRONT WIRE SCANNER (SP)	1
◉	17	• 34893330	PARTS REAR WIRE SCANNER (SP)	1
◉	18	• 34893340	PARTS MOTOR LENS DRIVE (SP)	1
◉	19	• 34893350	PARTS MOTOR MIRROR DRIVE (SP)	1
◉	20	• 34868170	BELT,MIRROR DRIVE	1
◉	21	• 34868180	PULLEY 1, TENSION	1
◉	22	• 34868190	PULLEY 2,TENSION	1
◉	23	• 34893280	PARTS LAMP 170V (SP)	1
◉	24	• 34868230	MIRROR,1	1
◉	25	• 34868240	MIRROR,2	1
◉	26	• 34868250	MIRROR,3	1
◉	27	• 34868260	MIRROR,4	1
◉	28	• 34868270	MIRROR,5	1
◉	29	• 34868280	MIRROR,6	1
◉	30	• 34968030	SENSOR,POSITION DETECTION	2
	31	• 34812031	LENS 170,SCANNER UNIT	1

• Parts with "•" are component parts or sub-assemblies of the assembly appearing immediately above them.
• Parts with "◉" indicates the Service parts.

• Parts with "• •" are component parts or sub-assembly with "•" appearing immediately above them.

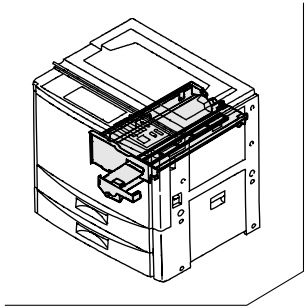

*The unit Ref. No.1 is figured also in FIG.12.

FIG. 11 IMAGE FORMATION SECTION I(DEVELOPING) 1AH

SP	Ref. No.	Part. No.	Description	Quantity 230V
	1	34968301	IMAGE FORMATION ASS'Y SP	1
	2	• 34914030	LEFT SPIRAL,DEVELOPING	1
	3	• 34914040	RIGHT SPIRAL,DEVELOPING	1
	4	• 34914080	RAIL,LID DEVELOPING	4
	5	• 34914100	SHAFT,IMAGE FORMATION HANDLE	1
	6	• 34914110	SPRING,IMAGE FORMATION HANDLE	1
	7	• 34914120	MOUNT BASE,HANDLE	2
	8	• 34914130	STOPPER,DEVELOPING	1
	9	• 34914140	UPPER LID,DEVELOPING	1
	10	• 34914170	UPPER SEAL,LID	1
	11	• 34914180	FRONT LID,DEVELOPING	1
◉	12	• 34914201	GEAR 19,IDLE DEVELOPING	1
◉	13	• 34914210	GEAR 17,MAGNET ROLLER	1
◉	14	• 34914240	SEAL,DEVELOPING	2
◉	15	• 34914270	UPPER SEAL,DEVELOPING	1
◉	16	• 34914310	FRONT SEAL,LID	1
◉	17	• 33914190	TONER SENSOR	1
◉	18	• 34914330	LEFT SEAL,LID	2
◉	19	• 34914360	FRONT BUSHING,SPIRAL	2
	20	• 34914390	LEFT FILM,DEVELOPING SPIRAL	1
◉	21	• 34914400	GEAR 28,DEVELOPING	1
◉	22	• 34914410	GEAR 31,DEVELOPING	1
◉	23	• 34918080	GEAR 31,THRUST	1
	24	• 72114320	PIN,DEV.UNIT HANDLE	2
◉	25	• 72114331	HANDLE,BELT DEV.UNIT	1
◉	26	• 75122090	GEAR , FRONT	1
	27	• 34914430	REAR FILM,DEVELOPING	1
	28	• 34993170	PARTS COVER DOCTOR BLADE(SP)	1
	29	• 34914160	FILM,DEVELOPING	1
◉	30	• 34914250	SEAL,COVER DOCTOR BLADE	2
◉	31	• 34914350	LOWER SEAL,DEVELOPING	1
	32	• 34914420	LOWER SEAL,DEVELOPING HOUSING	2
◉	33	• 45592554	BEARING 688ADD	1
◉	34	• 34914440	REAR SEAL,MAGNET ROLLER	1
	35	• 34914450	LOWER SEAL,LID	1
	36	• 34914050	MOUNT,DOCTOR BLADE	1
	37	• 34914060	DOCTOR BLADE,DEVELOPING	1
◉	38	• 34914280	FRONT SEAL,DEVELOPING	1
◉	39	• 34914290	REAR SEAL,DEVELOPING	1
◉	40	• 34914300	RIGHT SEAL,DEVELOPING	1
◉	41	• 34914340	SEAL,DEVELOPING HOUSING	2
	42	• 34909010	FRONT FRAME,IMAGE FORMATION UNIT	1
	43	• 34909020	REAR FRAME,IMAGE FORMATION UNIT	1
◉	44	• 34914370	REAR BUSHING,SPIRAL	2
	45	34817280	UPPER GUIDE,TRANSFER	1
	46	34914460	FRONT SPONGE,HOUSING	2
◉	47	1AA82010	DRUM	1
◉	48	34908050	SHAFT,DRUM	1
	49	34817340	PLATE,TONER	2

• Parts with "•" are component parts or sub-assemblies of the assembly appearing immediately above them.
• Parts with "◉" indicates the Service parts.

• Parts with "• •" are component parts or sub-assembly with "•" appearing immediately above them.

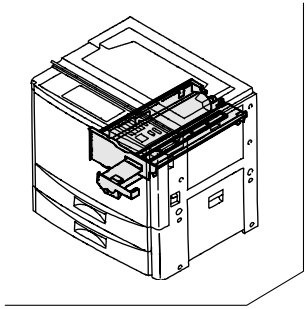

*The unit Ref. No.1 is figured also in FIG.11.

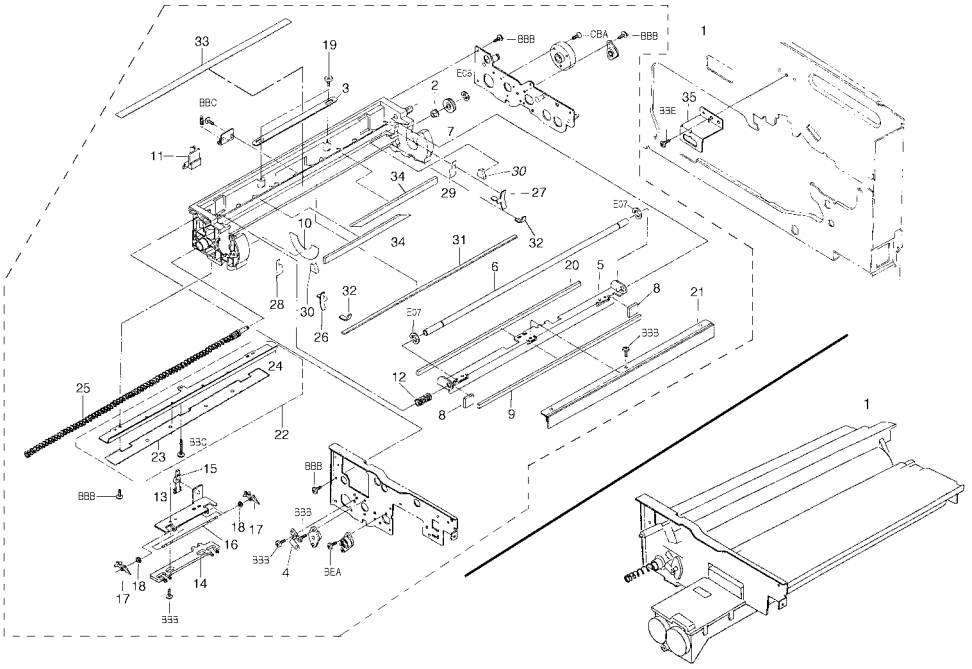

FIG. 12 IMAGE FORMATION SECTION II(CLEANIG)

SP	Ref. No.	Part. No.	Description	Quantity 230V
	1	34968301	IMAGE FORMATION ASS'Y SP	1
◉	2	• 29806810	BUSHING,6 REGISTRATION	1
◉	3	• 72114331	HANDLE,BELT DEV.UNIT	1
◉	4	• 34909050	FRONT GROUND PLATE,DRUM DRIVE	1
	5	• 34918310	MOUNT 23,BLADE	1
	6	• 34918050	SHAFT,THRUST	1
◉	7	• 34918090	GEAR 19,DISPOSAL	1
◉	8	• 34918120	SPONGE,CLEANING	2
◉	9	• 34918130	INNER SPONGE,CLEANING	1
◉	10	• 34918170	SPACER,DRUM	1
	11	• 34918180	LEVER,PRESSURE RELEASE	1
◉	12	• 34918200	SPRING,THRUST	1
◉	13	• 34968350	BUSHING SEPARATION CLAW ASS'Y SP	1
	14	• 34918250	SLIDE PLATE,SEPARATION CLAW	1
	15	• 34918260	LEVER,SEPARATION SEPARATION CLAW	1
	16	• 34918270	SHAFT,SEPARATION CLAW	1
◉	17	• 62218011	SEPARATION CLAW	2
◉	18	• 62218020	RATCHET,SEPARATION	2
	19	• 72114320	PIN,DEV.UNIT HANDLE	2
◉	20	• 34918340	UPPER SPONGE,CLEANING	1
◉	21	• 34993370	PARTS BLADE 23 CLEANING(SP)	1
◉	22	• 34993430	PARTS LOWER CLEANING SEAL ASS'Y(SP)	1
◉	23	•• 34918370	LOWER FILM,CLEANING	1
	24	•• 34993190	PARTS LOWER SEAL CLEANING(SP)	1
	25	• 34918071	SPRING,DISPOSAL	1
◉	26	• 34918100	FRONT SEAL,CLEANING	1
◉	27	• 34918110	REAR SEAL,CLEANING	1
◉	28	• 34918140	FRONT SEAL,DISPOSAL	1
◉	29	• 34918150	REAR SEAL,DISPOSAL	1
◉	30	• 34918160	SPONGE,DISPOSAL	2
◉	31	• 34918210	LOWER SPONGE,HOUSING	1
◉	32	• 34918290	LOWER SPONGE,DISPOSAL	2
◉	33	• 34918300	INNER SEAL,DISPOSAL	1
◉	34	• 34918220	INNER SPONGE,DISPOSAL	2
	35	34826170	MOUNT,IMAGE FORMATION WIRE	1

• Parts with "•" are component parts or sub-assemblies of the assembly appearing immediately above them.
• Parts with "◉" indicates the Service parts.

• Parts with "•• " are component parts or sub-assembly with "•" appearing immediately above them.

FIG. 13 TONER HOPPER SECTION

1AH

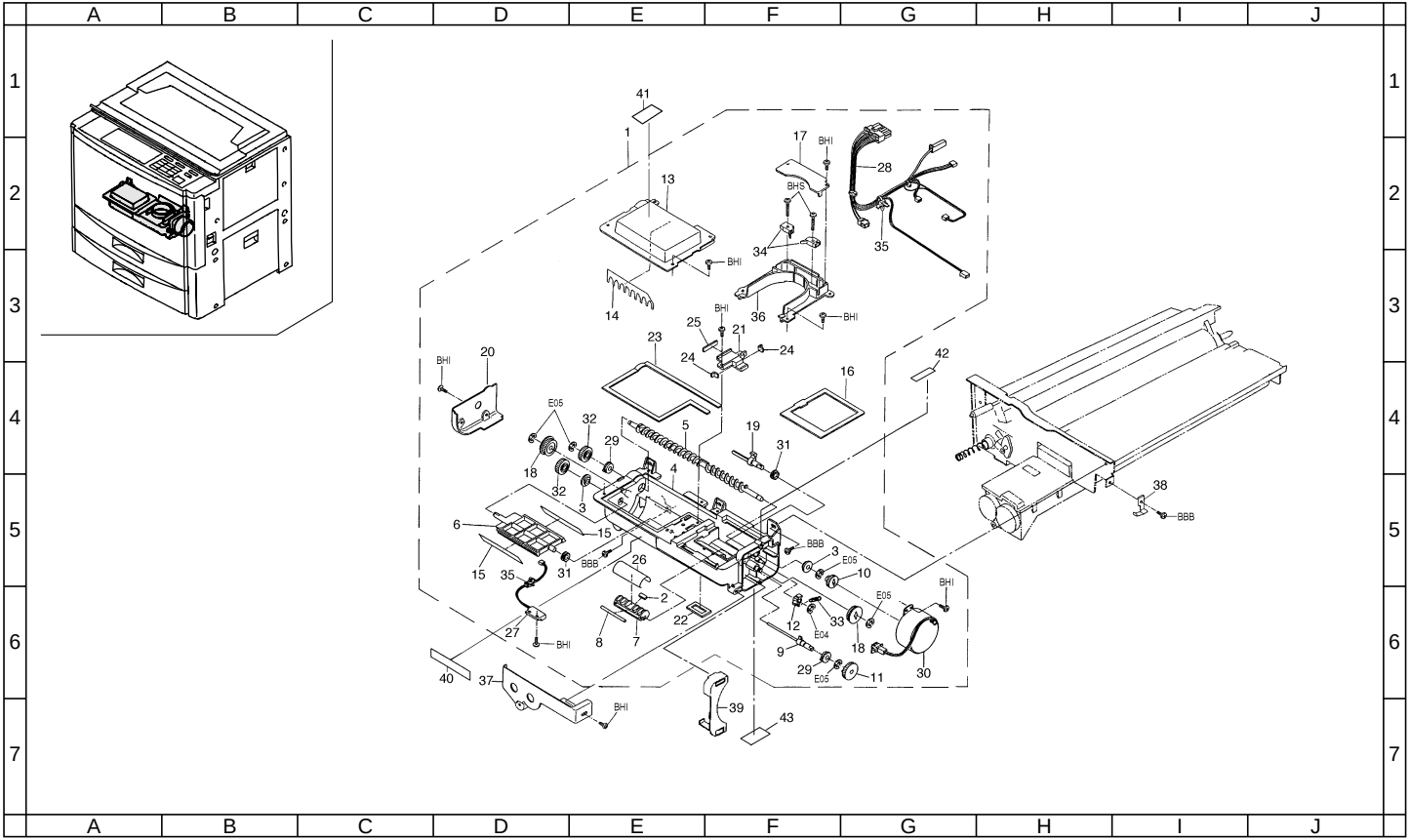

FIG. 13 TONER HOPPER SECTION

SP	Ref. No.	Part. No.	Description	Quantity 230V
◉	1	34993032	PARTS HOPPER ASS'Y(EUR)SP	1
	2	• 49927306	MS MAGNET (S)	1
◉	3	• 49028116	BUSHING 6,CLEANING UNIT	2
	4	• 34915011	HOUSING,HOPPER	1
	5	• 34915020	SPIRAL,HOPPER	1
	6	• 34915030	PADDLE A,HOPPER	1
	7	• 34915040	PADDLE B,HOPPER	1
	8	• 34915050	WEIGHT B,PADDLE	1
	9	• 34915060	SHAFT B,PADDLE	1
◉	10	• 34915070	GEAR 15,SPIRAL	1
◉	11	• 34915080	GEAR 22,PADDLE	1
	12	• 34915090	CAM,HOPPER	1
	13	• 34915110	LEFT LID,HOPPER	1
	14	• 34915120	FILM,SPIRAL	1
	15	• 34915130	FILM A,PADDLE	2
◉	16	• 34915140	RIGHT SEAL,HOPPER	1
	17	• 34915160	RIGHT COVER,LID HOPPER	1
◉	18	• 34915190	GEAR 20,HOPPER	2
	19	• 34915200	SHAFT,VIBRATION	1
	20	• 34915210	LEFT COVER,HOPPER	1
	21	• 34915220	INNER LID,HOPPER	1
◉	22	• 34915230	LOWER SEAL,HOPPER	1
◉	23	• 34915240	LEFT SEAL,HOPPER	1
◉	24	• 34915250	INNER SEAL,LID HOPPER	2
◉	25	• 34915260	LEFT SEAL,LID HOPPER	1
	26	• 34915270	FILM B,PADDLE	1
◉	27	• 34927050	SENSOR,REMAINING DETECTION	1
	28	• 34927150	WIRE,IMAGE FORMATION UNIT	1
◉	29	• 63818250	REAR BUSHING,TONER DISPOSAL ROLLER	2
◉	30	• 66015200	TONER MOTOR	1
	31	• 72114870	V-RING 6 DIA	2
◉	32	• 72418410	GEAR 18, SPIRAL	2
◉	33	• 34915301	SPRING,HOPPER CAM	1
◉	34	• 76727010	ORIGINAL SIZE SWITCH	2
	35	• M2107120	BINDING BAND SG-130	2
	36	• 34915100	RIGHT LID L,HOPPER (EUR)	1
	37	34915290	PROTECTING PLATE,HOPPER	1
◉	38	34915280	GROUND PLATE H,TONER MOTOR	1
	39	34915180	LOWER COVER,HOPPER	1
	40	29705100	CAUTION LABEL,DRUM	1
	41	34905140	LABEL,CHARGE CLEANING	1
	42	34915310	UPPER LABEL,HOPPER	1
	43	34915320	LOWER LABEL,HOPPER	1

• Parts with "•" are component parts or sub-assemblies of the assembly appearing immediately above them.
• Parts with "◉" indicates the Service parts.

• Parts with "• •" are component parts or sub-assembly with "•" appearing immediately above them.

FIG. 14 FIXING SECTION

1AH

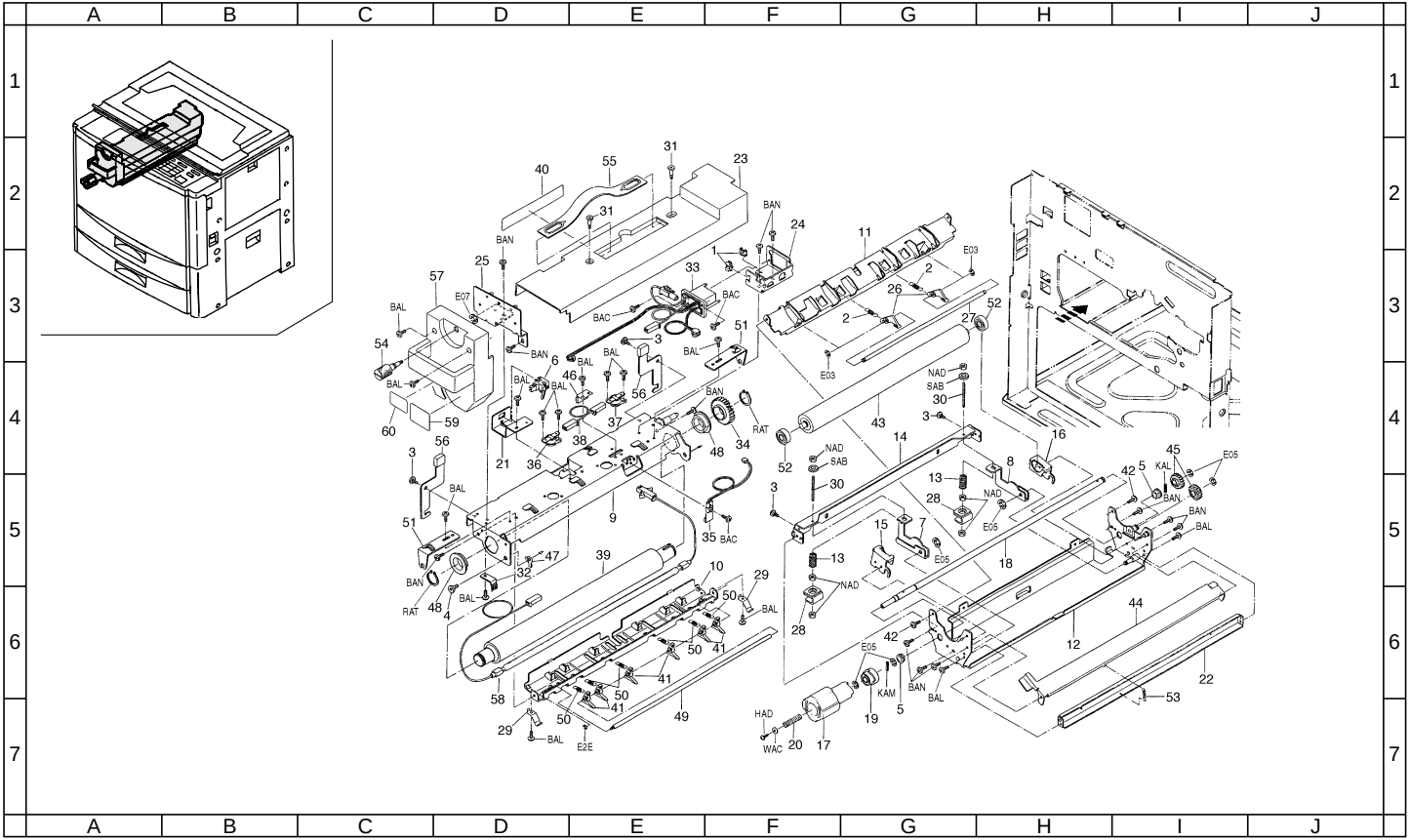

FIG. 14 FIXING SECTION

1AH

SP	Ref. No.	Part. No.	Description	Quantity 230V
◉		34893096	PARTS FIXING ASS'Y(230)SP	1
	1	• M2104260	EDGING,EDS-0607U(KITAGAWA)	2
◉	2	• 48528109	SPRING,BLADE LEVER	2
	3	• 48128609	PIN,UPPER FRONT COVER	4
	4	• 48129208	PIN,TENSION	1
◉	5	• 29806560	BUSHING 6	2
◉	6	• 33920560	SWITCH,FIXING	1
	7	• 34820021	FRONT PRESSING PLATE,FIXING	1
	8	• 34820031	REAR PRESSING PLATE,FIXING	1
	9	• 34820040	HOUSING,FIXING	1
	10	• 34820051	UPPER GUIDE,FIXING	1
	11	• 34820060	LOWER GUIDE,FIXING	1
	12	• 34820073	BASE,FIXING	1
◉	13	• 34820080	SPRING,PRESSURE	2
	14	• 34820092	STAY,FIXING	1
	15	• 34820100	FRONT GUIDE,PRESS ROLLER	1
	16	• 34820110	REAR GUIDE,PRESS ROLLER	1
	17	• 34820120	DIAL,FIXING DRIVE	1
	18	• 34820130	SHAFT,DIAL FIXING DRIVE	1
	19	• 34820140	JOINT,FIXING DRIVE	1
	20	• 34820150	SPRING,FIXING DRIVE	1
	21	• 34820160	MOUNT,EJECT SWITCH	1
	22	• 34820170	MOUNT,STATIC ELIMINATOR	1
	23	• 34820181	COVER,FIXING	1
	24	• 34820190	MOUNT,FIXING DRAWER	1
	25	• 34820201	RETAINER,FIXING	1
◉	26	• 34820240	SEPARATION CLAW,PRESS ROLLER	2
	27	• 34820250	SHAFT,SEPARATION CLAW PRESS ROLLER	1
	28	• 34820271	ADJUSTING PLATE,SPRING PRESSURE	2
	29	• 34820280	HOLDER,FIXING GUIDE	2
	30	• 34820292	SHAFT,FIXING PRESSURE	2
	31	• 34820300	PIN,FIXING COVER	2
◉	32	• 34820310	STATIC ELIMINATOR,HEAT ROLLER	1
	33	• 34827130	WIRE,FIXING UNIT	1
◉	34	• 34920070	GEAR 40,HEAT ROLLER	1
◉	35	• 34920080	THERMISTER,FIXING	1
◉	36	• 34920310	THERMOSTAT 140,FIXING	1
◉	37	• 34920320	THERMOSTAT 150,FIXING	1
	38	• 34927280	JUNCTION WIRING,THERMOSTAT	1
◉	39	• 34993201	PARTS ROLLER HEAT(SP)	1
	40	• 19605060	CAUTION LABEL, HIGH TEMPERATURE S(EXP)	1
◉	41	• 61720750	SEPARATION CLAW B	6
	42	• 63702140	PIN,OPERATION UNIT	2
◉	43	• 66068450	PRESS ROLLER PFA	1
	44	• 66220100	FRONT GUIDE,FIXING	1
◉	45	• 72114130	GEAR 20,AGITATION	2
◉	46	• 73920080	BLADE,HEAT ROLLER	1
◉	47	• 73920280	SPRING,FIXING SECTION GROUND	1
◉	48	• 75720060	BUSHING HEAT ROLLER	2
◉	49	• 75720080	SHAFT SEPARATION CLAW	1
◉	50	• 75720240	SPRING SEPARATION CLAW	6
	51	• 75720280	HOLDER,FIXING UNIT HEATER B	2
◉	52	• 77020010	BEARING PRESS ROLLER	2
	53	• 78102180	HOOK SPRING CRAMSHELL	1
	54	• 33920060	RETAINING PIN,FIXING UNIT	1
	55	• 33920090	HANDLE,FIXING	1
	56	• 34820220	LEVER,PRESSURE	2
	57	• 34820260	FRONT COVER,FIXING	1
◉	58	• 34993220	PARTS HEATER 220-240 FIXING(SP)	1
	59	• 19605071	CAUTION LABEL, TEMPERATURE L(EXP)	1
	60	• 2AA05070	CAUTION LABEL,HIGH TEMPERATURE 2,EXP	1

• Parts with "•" are component parts or sub-assemblies of the assembly appearing immediately above them.
• Parts with "◉" indicates the Service parts.

• Parts with "• •" are component parts or sub-assembly with "•" appearing immediately above them.

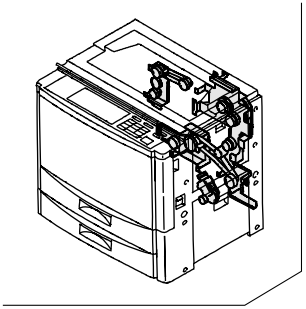

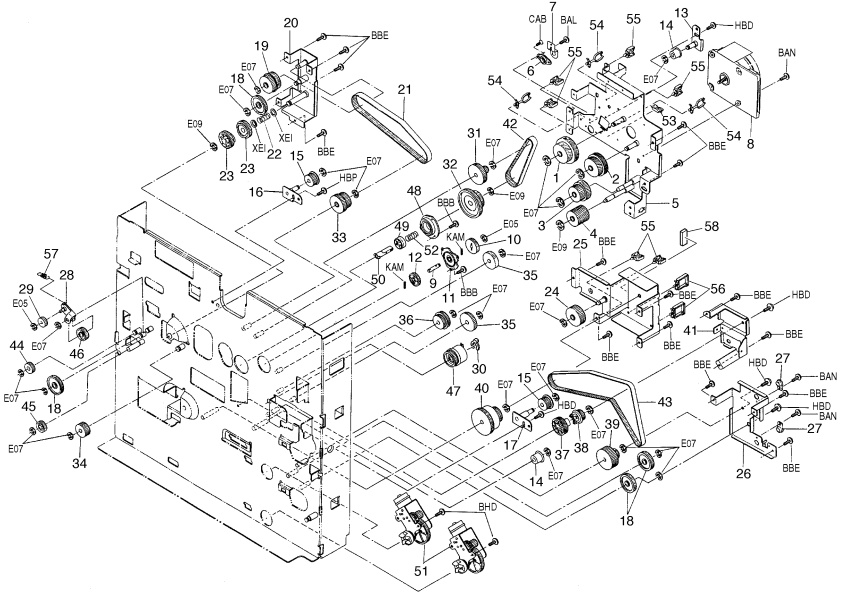
A B C D E F G H I J
1 2 3 4 5 6 7
CAB
BAL
HBD
BAN
BBE
E07
E09
HBP
XEI
BBB
KAM
E05
BHD

FIG. 15 DRIVING, COOLING SECTION

1AH

SP	Ref. No.	Part. No.	Description	Quantity 230V
◉	1	34822010	GEAR 108/38,MOTOR	1
◉	2	34822020	GEAR 88/36,MOTOR	1
◉	3	34822120	GEAR 37/30,BYPASS	1
◉	4	34822130	GEAR 30	1
	5	34822231	MOUNT,DRIVE MOTOR	1
◉	6	34922061	REAR BUSHING,DRUM	1
◉	7	34922071	REAR GROUND PLATE,DRUM	1
◉	8	66227110	MOTOR,MAIN	1
	9	34822280	SHAFT,DEVELOPING DRIVE	1
◉	10	34822330	GEAR 24,IMAGE FORMATION	1
◉	11	34922090	BUSHING,DEVELOPING DRIVE	1
◉	12	66022131	GEAR 30,DEVELOPING DRIVE	1
	13	34822200	TENSION PLATE,DRUM	1
◉	14	72622141	TENSION PULLEY 20	2
◉	15	33922140	PULLEY 27,REGISTRATION	2
	16	34822210	TENSION PLATE,FIXING	1
	17	34822220	TENSION PLATE,PAPER FEED	1
	18	45728900	GEAR 38T	4
◉	19	34822060	PULLEY 37/34	1
	20	34822240	RETAINER,FIXING DRIVE	1
◉	21	34822300	BELT,FIXING	1
◉	22	66222180	SPRING,DRUM DRIVE	1
◉	23	68322050	GEAR 36,FIXING DRIVE	2
◉	24	34822190	GEAR 38,DUPLEX	1
	25	34822261	REINFORCEMENT,DUPLEX DRIVE	1
	26	34822271	REINFORCEMENT,PRIMARY PAPER FEED DRIVE	1
◉	27	74718091	BUSHING CLEANING UNIT	2
	28	34822320	JOINT,EJECT DRIVE	1
◉	29	66018160	GEAR 19,SPIRAL ROLLER	1
◉	30	34806150	STOPPER 5	1
◉	31	34822030	GEAR 40/18	1
◉	32	34822040	PULLEY 38/60,DRUM	1
◉	33	34822050	GEAR 35/34	1
◉	34	34822070	GEAR 26	1
◉	35	34822100	GEAR 35	2
◉	36	34822110	GEAR 27/33,REGISTRATION	1
◉	37	34822150	GEAR 34	1
◉	38	34822160	PULLEY 26	1
◉	39	34822170	PULLEY 24/44,PAPER FEED	1
◉	40	34822180	PULLEY 36/55,DUPLEX	1
	41	34822251	REINFORCEMENT,PAPER FEED DRIVE	1
◉	42	34822290	BELT,DRUM	1
◉	43	34822310	BELT,PAPER FEED	1
◉	44	45725413	IDLE GEAR,PAPER FEED ROLL	1
◉	45	29721040	GEAR,24 SB	1
◉	46	29822350	GEAR 20T,DRIVE	1
◉	47	33906330	CLUTCH,REGISTRATION	1
	48	34922030	POSITIONING PLATE,DRUM	1
◉	49	34922040	COUPLING,DRUM	1
	50	34922050	SHAFT,COUPLING	1
◉	51	66006333	MOTOR,CASSETTE LIFT	2
◉	52	34922590	SPRING,DRUM DRIVE	1
	53	M2104210	EDGING,EDS-2	1
	54	M2105990	CLAMP,HL-18-0(KITAGAWA)	3
	55	M2109010	WIRE SADDLE,WS-2NS	6
	56	M2109270	WIRE SADDLE,LWS-5S-2W(KITAGAWA)	2
◉	57	68818130	SPRING,SHUTTER	1
	58	2AC26300	SHIELD 10X5X20,GASKET (FOR DC 2560 ONLY)	1

• Parts with "•" are component parts or sub-assemblies of the assembly appearing immediately above them.
• Parts with "◉" indicates the Service parts.

• Parts with "• •" are component parts or sub-assembly with "•" appearing immediately above them.

FIG. 16 EJECT SECTION

1AH

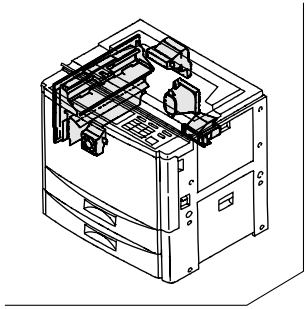

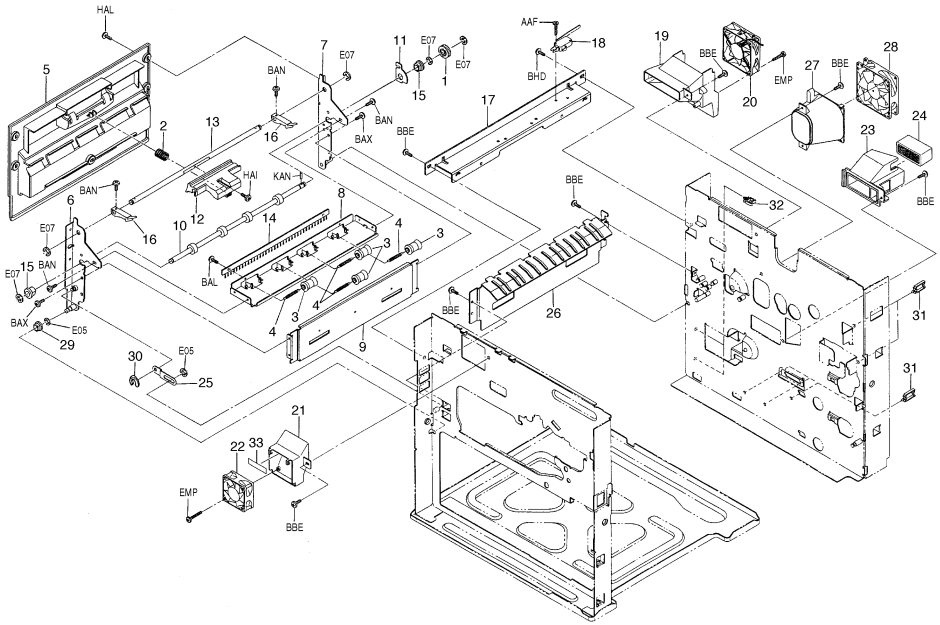

FIG. 16 EJECT SECTION

SP	Ref. No.	Part. No.	Description	Quantity 230V
◉	1	45729420	GEAR,LOWER TRANSFER ROLLER	1
◉	2	33904160	SPRING,EJECT COVER	1
◉	3	33921070	PULLEY,EJECT	4
◉	4	34821110	SPRING,EJECT PULLEY	4
◉	5	34804090	COVER,EJECT	1
	6	34821010	FRONT FRAME,EJECT	1
	7	34821020	REAR FRAME,EJECT	1
	8	34821030	UPPER GUIDE,EJECT	1
	9	34821040	REINFORCEMENT,EJECT	1
	10	34821050	ROLLER,EJECT	1
◉	11	34821060	STOPPER,EJECT DRIVE	1
	12	34821080	LEVER,EJECT	1
	13	34821090	SHAFT,EJECT LEVER	1
◉	14	34821100	STATIC ELIMINATOR,EJECT	1
◉	15	67322230	BUSHING 8	2
	16	77721700	LEVER LOOP SECTION	2
	17	34802110	MOUNT,EJECT HOOK	1
◉	18	34827230	SWITCH,INTERLOCK	1
	19	34812090	REAR DUCT,SCANNER COOLING	1
	20	34893200	PARTS FAN N COOLING(SP)	1
	21	34812100	FRONT DUCT,SCANNER COOLING	1
	22	34993270	PARTS FAN COOLING(SP)	1
	23	34816100	REAR DUCT,CONVEYING	1
◉	24	34816110	FILTER,CONVEYING	1
	25	34821070	ARM,EJECT COVER	1
	26	34821200	GUIDE,EJECT AUXILIARY	1
	27	34823010	DUCT,COOLING	1
	28	34893210	PARTS FAN ND COOLING(SP)	1
◉	29	29717230	BUSHING 6,FEED BACK	1
◉	30	63511220	STOP RING,4	1
	31	M2109010	WIRE SADDLE,WS-2NS	5
	32	M2109020	WIRE SADDLE,WS-2WS	2
	33	34812160	SEAL,SCANNER FAN	1

• Parts with "•" are component parts or sub-assemblies of the assembly appearing immediately above them.
• Parts with "◉" indicates the Service parts.

• Parts with "• •" are component parts or sub-assembly with "•" appearing immediately above them.

FIG. 17 ELECTRICAL COMPONENTS I

1AH

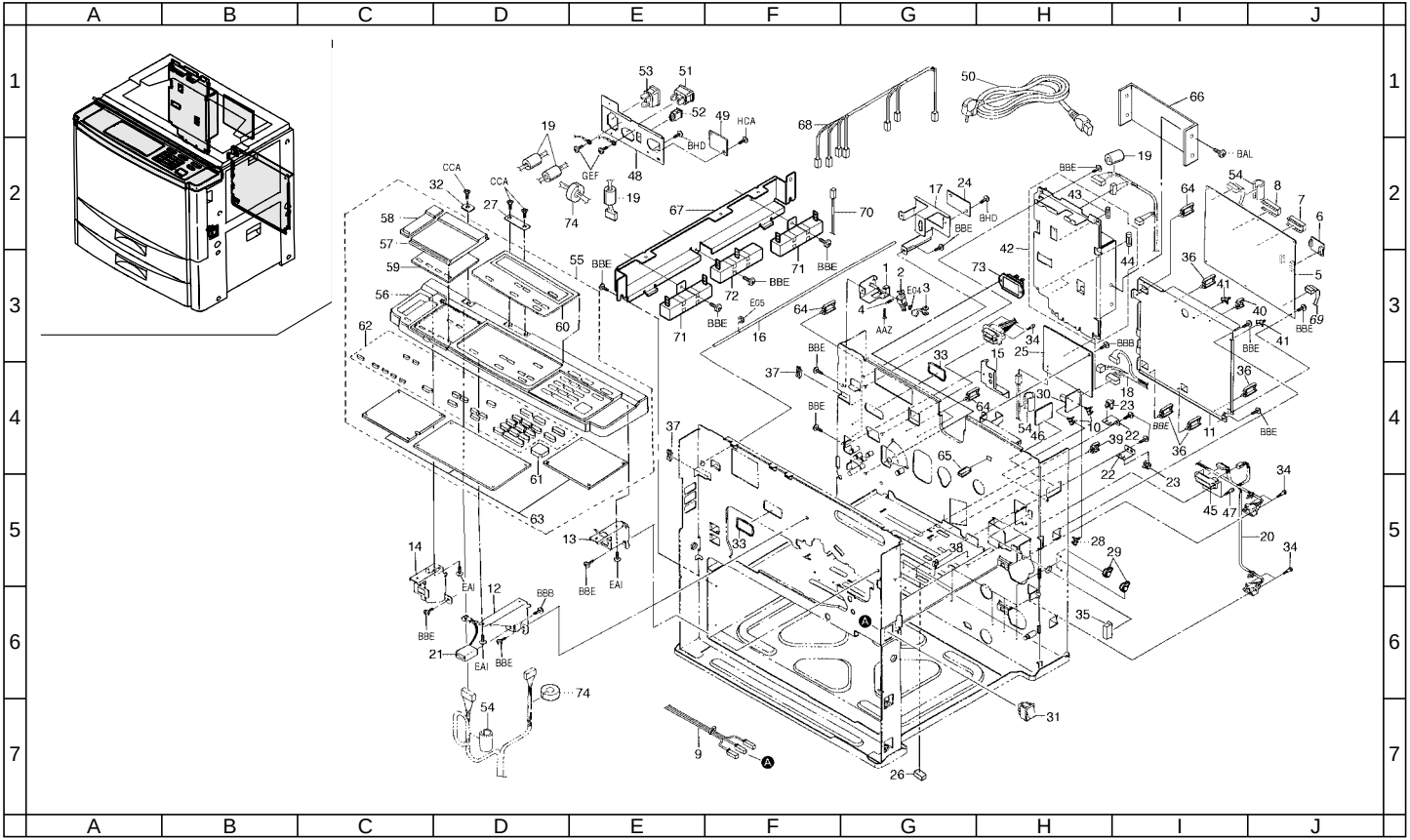

FIG. 17 ELECTRICAL COMPONENTS I

1AH

SP	Ref. No.	Part. No.	Description	Quantity 230V
	1	34826100	MOUNT,INTERLOCK LEVER	1
	2	34826110	LEVER,INTERLOCK SWITCH	1
◉	3	34826120	ACTUATOR,INTERLOCK SWITCH	1
◉	4	34826140	SPRING,LEVER INTERLOCK	1
◉	5	19693073	PARTS MAIN PCB ASS'Y SP (FOR DC 2560 ONLY)	1
◉		34793081	PARTS MAIN PCB ASSY'S (FOR DC2060 ONLY)	1
◉	6	33493320	PARTS BACKUP PCB(SP)	1
	7	34727084	IC BT,ROM (FOR DC 2560 ONLY)	1
		34727025	IC BT,ROM (FOR DC 2060 0NLY)	1
◉	8	1AH27010	IC A,ROM (FOR DC 2560 ONLY)	1
◉		1AA27016	IC A,ROM (FOR DC 2060 0NLY)	1
	9	34827100	WIRE,LIGHT LAMP (EXP)	1
	10	M2108700	SPACER,KGLS-8RF(KITAGAWA)	2
	11	34826010	MOUNT,MAIN PCB	1
	12	34726010	INNER MOUNT,OPERATION UNIT	1
	13	34826040	RIGHT MOUNT,OPERATION UNIT	1
	14	34826050	LEFT MOUNT,OPERATION UNIT	1
	15	34826060	MOUNT,FEED SHIFT CONNECTOR	1
	16	34826150	SHAFT,INTERLOCK SWITCH	1
	17	34826160	MOUNT,DF CONNECTOR	1
	18	34827070	WIRE,HIGH VOLTAGE CIRCUIT PCB	1
	19	33927580	CORE 9-20X32 (FOR DC 2560 ONLY)	4
	20	34827090	WIRE,CASSETTE	1
◉	21	34827220	TOTAL COUNTER	1
	22	33907200	MOUNT,PAPER SIZE DETECTION	2
◉	23	66127010	SWITCH,COVER OPEN	2
	24	33904300	PROTECTING PLATE,DF CONNECTOR	1
◉	25	34828060	HIGH VOLTAGE TRANSFORMER PCB	1
	26	J0315160	RECEPTACLE,5557-16R(MOLEX)	1
	27	66004170	PLATE,MAGNET	1
	28	M2108190	SPACER,KGLS-10S	1
	29	M2107200	BAND,SG-110 V0(KITAGAWA)	8
◉	30	68328170	HUMIDITY SENSOR PCB	1
◉	31	69027070	SWITCH,MAIN	1
	32	71804200	MAGNET PLATE,TOP COVER	1
	33	72626210	BUSHING,24X54	2
	34	74327180	PIN,CONNECTOR	6
	35	J0444160	CASE,DF11-16DEP-2A(HIROSE)	1
	36	M2109030	WIRE SADDLE,WS-3NS	4
	37	M2104210	EDGING,EDS-2	2
	38	M2105710	MINIATURE CLAMP,UAMS-05-0	2
	39	M2109020	WIRE SADDLE,WS-2WS	1
	40	M2109010	WIRE SADDLE,WS-2NS	1

SP	Ref. No.	Part. No.	Description	Quantity 230V
	41	M2108000	SPACER,KGLS-3S	2
◉	42	34893243	PARTS COMPOSITE CIRCUIT PCB(230)SP	1
	43	• M1753000	FUSE,S505(BUSSMANN)	1
	44	• M5558010	FUSE,MT4(SOC)	2
	45	J0464240	RECEPTACLE,QR/P15-24(4)P-C(02)(HIROSE)	1
	46	34826210	UPPER SHEET,MAIN WIRING	1
	47	33927450	RETAINING PIN,DRAWER	2
	48	34826090	MOUNT,POWER SOURCE SUPPLY (230)	1
	49	77502090	LID FINISHER CABLE	1
	50	18527460	POWER CORD 220	1
	51	34801061	OUTLET ASS'Y	1
◉	52	68427020	POWER SOURCE SWITCH	1
	53	34801050	POWER INLET ASS'Y	1
	54	33927590	CORE 7-15X18 (FOR DC 2560 ONLY)	3
		65027470	CORE 7-15X18 (FOR DC 2060 ONLY)	3
◉	55	34724020	OPERATION UNIT(METRIC)	1
◉	56	• 34768030	FRAME,OPERATION UNIT	1
◉	57	• 34868310	LID,OPERATION UNIT	1
◉	58	• 34868340	COVER,OPERATION UNIT SORTER (METRIC)	1
◉	59	• 34768060	INNER SHEET,OPERATION UNIT LID (METRIC)	1
◉	60	• 34768090	SHEET,OPERATION UNIT (METRIC)	1
◉	61	• 34868430	KEY TOP,PRINT (METRIC)	1
◉	62	• 34768120	KEY TOP,OPERATION UNIT (METRIC)	1
◉	63	• 34768130	OPERATION UNIT PCB	1
	64	M2109210	LOCKING WIRE SADDLE,LWS-8S-2.5W	7
	65	J0314020	PLUG 2P,5559-02P	1
	66	34826220	SHIELD,COMPOSITE CIRCUIT	1
	67	34826270	MOUNT,CEMENT RESISTOR	1
	68	34827340	WIRE,CEMENT RESISTOR	1
	69	34827350	WIRE,SSR SIGNAL	1
	70	34827370	JUNCTION WIRING,CEMENT RESISTOR	1
	71	36727600	RESISTOR,10 OHM 40W	2
	72	36727610	RESISTOR,10 OHM 40W 157	1
◉	73	67827330	SSR 230	1
	74	2AR27750	CORE 11-25X14 (FOR DC 2560 ONLY)	2
		65027470	CORE 7-15X18 (FOR DC 2060 ONLY FRONT SIDE)	1

• Parts with "•" are component parts or sub-assemblies of the assembly appearing immediately above them.
• Parts with "◉" indicates the Service parts.

• Parts with "• •" are component parts or sub-assembly with "•" appearing immediately above them.

FIG. 18 ELECTRICAL COMPONENTS II 1AH

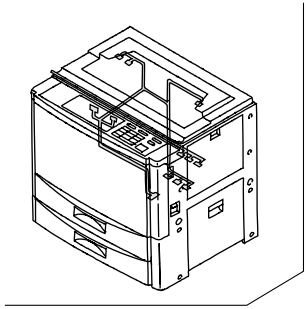

For WIRE,MAIN

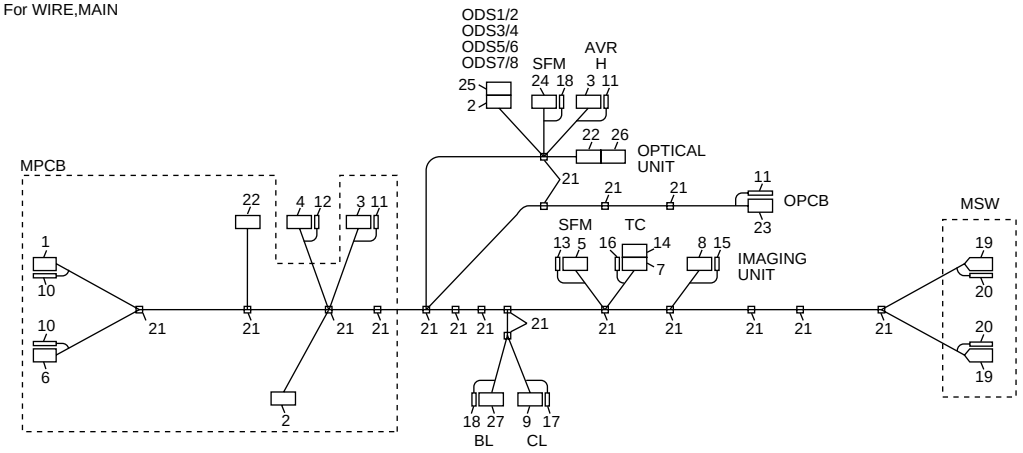

For WIRE,INTERLOCK SWITCH

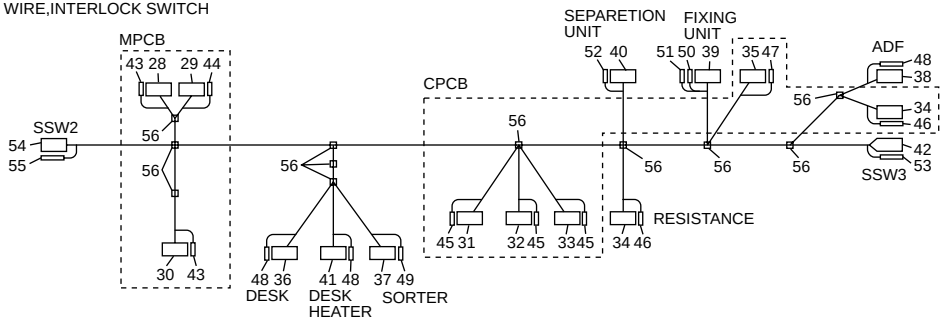

FIG. 18 ELECTRICAL COMPONENTS II

1AH

SP	Ref. No.	Part. No.	Description	Quantity 230V
		34727031	WIRE,MAIN	1
	1	• J0441320	RECEPTACLE,DF11-32DS-2C(HIROCE)	1
	2	• J0442200	RECEPTACLE,DF11-20DS-2R26(HIROSE)	2
	3	• J0450030	PLUG,DF3-3S-2C(HIROSE)	2
	4	• J5020010	PLUG SMF,1P-SMF	1
	5	• J0241030	PLUG SM 3P,SMP-03V-BC	1
	6	• J0441180	RECEPTACLE,DF11-18DS-2C(HIROSE)	1
	7	• J0390040	RECEPTACLE,51090-0400(MOLEX)	1
	8	• J0314120	PLUG 12P,5559-12P	1
	9	• J0150020	RECEPTACLE,175778-2(AMP)	1
	10	• J0441900	CONTACTOR,DF11-2428SC	47
	11	• J0450900	SOCKET,DF3-2428SC(HIROSE)	14
	12	• J5020800	SOCKET SMF,SMF-01T-1.0	1
	13	• J0250900	SOCKET,BHF-001T-0.8SS	2
	14	• J0395040	CASE,53358-0410(MOLEX)	1
	15	• J0341910	PIN,MINI DRAWER,5558T2L	12
	16	• J0390900	CONTACTOR,50212-8100(MOLEX)	4
	17	• J0150900	CONTACTOR,175161-1(AMP)	2
	18	• J0440900	PIN,DF11-EP2428PC(HIROSE)	18
	19	• M3506310	INSULATION SLEEVE,OS-110(SHINAGAWA)	2
	20	• L0001070	FAST-ON RECEPTACLE #110,24-20 (TIN),170043	2
	21	• M0207000	BINDING BAND,KB-100-1	18
	22	• J0442240	RECEPTACLE,DF11-24DS-2R26(HIROSE)	2
	23	• J0450080	RECEPTACLE,DF3-8S-2C(HIROSE)	1
	24	• J0443040	PLUG,DF11-4DEP-2C(HIROSE)	1
	25	• J0444220	CASE,DF11-22DEP-2A(HIROSE)	1
	26	• J0444240	CASE,DF11-24DEP-2A(HIROSE)	1
	27	• J0443160	PLUG,DF11-16DEP-2C(HIROSE)	1
		34827081	WIRE,INTERLOCK SWITCH	1
	28	• J0440100	PLUG,DF11-10DS-2C(HIROSE)	1
	29	• J0150030	RECEPTACLE,175778-3(AMP)	1
	30	• J0441180	RECEPTACLE,DF11-18DS-2C(HIROSE)	1
	31	• J0380040	RECEPTACLE 4P,51024-0400	1
	32	• J0380050	RECEPTACLE 5P 51024-0500	1
	33	• J0380060	RECEPTACLE 6P,51024-0600	1
	34	• J0361030	RECEPTACLE 3P,3191-03R1	2
	35	• J0272030	VH RECEPTACLE 3P,VHR-3N	1
	36	• J0316160	PLUG,5559-16P-210(MOLEX)	1
	37	• J0425060	PLUG S-6P,DF1B-6ES-2.5RC	1
	38	• J0314100	PLUG 10P,5559-10P	1
	39	• J0417120	PLUG 12P,QR/P10-12P-C	1
	40	• J0452050	RECEPTACLE,DF3AA-5EP-2C(HIROSE)	1
	41	• J0314020	PLUG 2P,5559-02P	1
	42	• J0070030	POSITIVE CONNECTOR HOUSING 3P,#187,172075-1	1
	43	• J0441900	CONTACTOR,DF11-2428SC	28
	44	• J0150900	CONTACTOR,175161-1(AMP)	2
	45	• J0311900	SOCKET,5479PBTL	12
	46	• J0361910	SOCKET 1189ATL	4
	47	• J0272900	CONTACTOR,BVH-21T-P1.1(JST)	2
	48	• J0341900	PIN,MINI DRAWER,5558TL	28
	49	• J0421900	CONTACTOR,DF1B-2428SC(HIROSE)	4
	50	• J0410920	CONTACT,QR/P1-PC2A-111	2
	51	• J0410920	CONTACT,QR/P1-PC2A-111	5
	52	• J0452900	PIN,DF3-EP2428PC(HIROSE)	5
	53	• J0070900	POSITIVE CONTACTOR,#187,170330-1	3
	54	• J0241030	PLUG SM 3P,SMP-03V-BC	1
	55	• J0250900	SOCKET,BHF-001T-0.8SS	3
	56	• M2407010	BINDING BAND SK,SKB-100	11

• Parts with "•" are component parts or sub-assemblies of the assembly appearing immediately above them.
• Parts with "◉" indicates the Service parts.

• Parts with "• •" are component parts or sub-assembly with "•" appearing immediately above them.

For Key counter

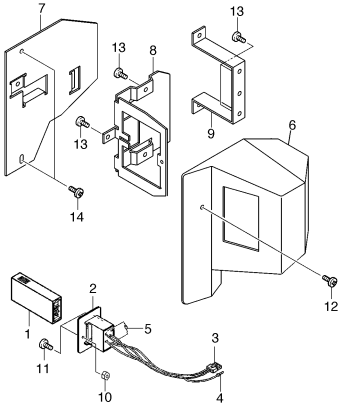

For optical section

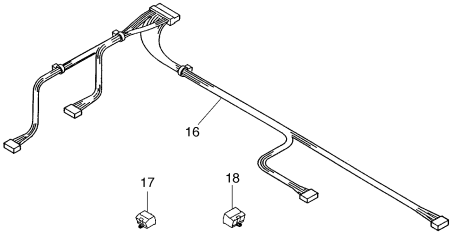

CONTACT GLASS, CONDUCTION

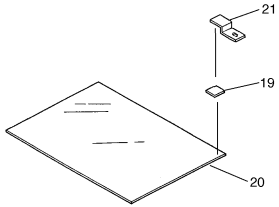

CASSETTE HEATER

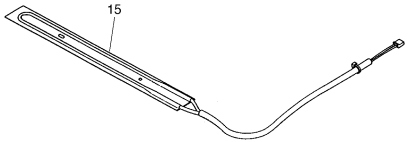

KEY CARD



DEHUMIDIFIER HEATER



FIG. 19 OPTION

SP	Ref. No.	Part. No.	Description	Quantity 230V
	1	82142540	KEY COUNTER	1
	2	41529210	SOCKET ASS'Y,KEY COUNTER	1
	3	• J0220040	PLUG EL 4P,ELP-04V	1
	4	• J0220900	SOCKET EL,LLF-01T-1.3E	4
	5	• 43826700	DI Z1033	1
		66069780	SET PARTS KEY COUNTER	1
◉	6	• 66060010	COVER,KEY COUNTER	1
	7	• 66060021	RETAINER,KEY COUNTER COVER	1
	8	• 66060030	RETAINER,KEY COUNTER	1
	9	• 66060040	MOUNT,KEY COUNTER	1
	10	• C1303000	NUT M3 (BLACK)	1
	11	• B2303060	COUNTER-SUNK HEAD SCREW BFHM3X6 (BLACK)	2
	12	• B4104060	TRIPLE SCREW M4X6(CHROMIUM)	1
	13	• B4304060	TRIPLE SCREW M4X6 (BLACK)	4
	14	• B4304100	TRIPLE SCREW M4X10 (BLACK)	2
◉	15	33960020	HEATER,CASSETTE (240)	1
		34782010	SET ORIGINAL DETECTION	1
	16	• 34827142	WIRE,ORIGINAL SIZE SENSOR (METRIC)	1
◉	17	• 33427430	ORIGINAL DETECTION SENSOR 60	2
◉	18	• 33912230	ORIGINAL DETECTION SENSOR 115	2
	19	61712870	TAPE,CONTACT GLASS	1
◉	20	33912310	CONTACT GLASS,CONDUCTION	1
◉	21	34868470	GROUND PLATE,CONTACT GLASS	1
◉	22	61760081	KEY CARD IF,PCB	1
◉	23	66027021	DEHUMIDIFIER HEATER	1

• Parts with "•" are component parts or sub-assemblies of the assembly appearing immediately above them.
• Parts with "◉" indicates the Service parts.

• Parts with "• •" are component parts or sub-assembly with "•" appearing immediately above them.

FIG. 20 ACCESSORIES 1AH

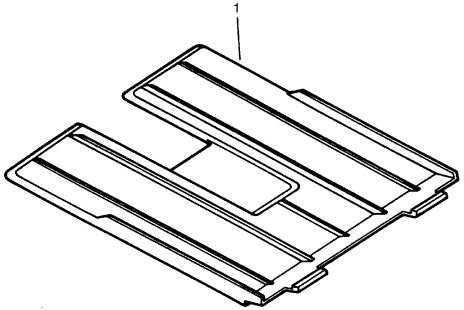

FIG. 20 ACCESSORIES

SP	Ref. No.	Part. No.	Description	Quantity 230V
◉	1	66020110	COPY TRAY,EXP.	1

• Parts with "•" are component parts or sub-assemblies of the assembly appearing immediately above them.
• Parts with "◉" indicates the Service parts.

• Parts with "• •" are component parts or sub-assembly with "•" appearing immediately above them.

SP	Part. No.	Description	Quantity 230V	Fig. No.
	1AA04020	RIGHT SPONGE,COVER	1	1
◉	1AA05020	LABEL,MACHINE OPERATION	1	1
	1AA06010	SPONGE A,HANDLE	1	6
	1AA06020	SPONGE B,HANDLE	2	6
	1AA27016	IC A,ROM (FOR DC 2060 0NLY)	1	17
◉	1AA82010	DRUM	1	11
◉	1AH04010	FRONT COVER (FOR DC 2560 ONLY)	1	1
◉	1AA04010	FRONT COVER (FOR DC 2060 ONLY)	1	1
◉	1AH27010	IC A,ROM (FOR DC 2560 ONLY)	1	17
	18527460	POWER CORD 220	1	17
	19605060	CAUTION LABEL, HIGH TEMPERATURE S(EXP)	1	14
	19605071	CAUTION LABEL, TEMPERATURE L(EXP)	1	14
◉	19693073	PARTS MAIN PCB ASS'Y SP (FOR DC 2560 ONLY)	1	17
	2AA05070	CAUTION LABEL,HIGH TEMPERATURE 2,EXP	1	14
	2AC26300	SHIELD 10X5X20,GASKET (FOR DC 2560 ONLY)	1	15
	2AG05200	LABEL,HIGH VOLTAGE CAUTION(EXP)	1	1
	2AR27750	CORE 11-25X14 (FOR DC 2560 ONLY)	2	17
	20305071	LABEL,CAUTION CONTACT GLASS	1	10
	29705100	CAUTION LABEL,DRUM	1	13
◉	29717230	BUSHING 6,FEED BACK	1	16
◉	29721040	GEAR,24 SB	1	15
◉	29806490	GEAR 16T	3	4,6
◉	29806560	BUSHING 6	2	14
◉	29806810	BUSHING,6 REGISTRATION	2	7,12
◉	29814340	GEAR 18,DEVELOPER UNIT	1	4
	29820110	FRONT PIN,FULCRUM	1	6
◉	29822230	GEAR 16T,PF IDLE	1	5
◉	29822350	GEAR 20T,DRIVE	1	15
◉	33427430	ORIGINAL DETECTION SENSOR 60	2	19
◉	33493320	PARTS BACKUP PCB(SP)	1	17
	33900672	CASSETTE ASS'Y U2	2	3
	33902060	RIGHT REINFORCEMENT	2	2
	33902070	LEFT MOUNT,RAIL	2	2
	33902110	MOUNT,HANDLE	1	2
	33902120	HOOK,CASSETTE RETAINING	2	2
◉	33902130	SPRING,CASSETTE HOOK	2	2
	33902150	STOPPER,CASSETTE LOCK	2	2
◉	33902160	SPRING,CASSETTE LOCK	1	2
	33902260	CAP,HANDLE	4	2
◉	33904160	SPRING,EJECT COVER	1	16
	33904300	PROTECTING PLATE,DF CONNECTOR	1	17
	33905020	LABEL,CASSETTE OPERATION	2	3

SP	Part. No.	Description	Quantity 230V	Fig. No.
	33906012	UPPER HOUSING,PAPER FEED	2	6
	33906080	SHAFT,LEADING FEED PULLEY	2	6
	33906090	LOWER LEVER,PAPER FEED PULLEY RELEASE	2	6
	33906100	REINFORCEMENT,PAPER FEED HOUSING	4	6
◉	33906110	CLUTCH,PAPER FEED	3	6
◉	33906120	CLUTCH 34,FEED	1	4
◉	33906130	CLUTCH,BYPASS	1	5
◉	33906140	SWITCH,VERTICAL CONVEYING	3	4,6
◉	33906150	ACTUATOR,PAPER EMPTY	2	6
	33906220	PAD,BYPASS CURSOR	2	5
◉	33906330	CLUTCH,REGISTRATION	1	15
◉	33906370	SOLENOID,BYPASS	1	5
	33906441	UPPER GUIDE,BYPASS	1	5
◉	33906470	PULLEY,LEADING FEED	1	5
	33906480	SUPPORT PLATE,LEADING FEED PULLEY	1	5
	33906620	MOUNT BASE,PAPER FEED SWITCH	3	4,6
◉	33906630	STOPPER 5,RING	14	6
◉	33906640	RIGHT SPRING,FEED RELEASE	1	6
◉	33906660	RIGHT PULLEY,FEED	6	6
	33906670	RIGHT HOOK,FEED RELEASE	2	6
	33906680	RIGHT HANDLE,FEED RELEASE	1	6
	33906690	RIGHT SHAFT,FEED RELEASE	1	6
	33906700	GUIDE,CONFLUENCE	2	6
	33906770	RIGHT FULCRUM PIN,COVER FEED	1	6
	33906780	LEFT GUIDE,FEED	2	6
	33906790	RIGHT ARM,FEED RELEASE	1	6
◉	33906800	TABLE A,BYPASS	1	5
◉	33906810	TABLE B,BYPASS	1	5
◉	33906820	TABLE C,BYPASS	1	5
◉	33906830	TABLE D,BYPASS	1	5
◉	33906840	FRONT CURSOR,BYPASS	1	5
◉	33906850	REAR CURSOR,BYPASS	1	5
	33906880	STOPPER,BYPASS TABLE	2	5
	33906890	FRONT FULCRUM PLATE,BYPASS TABLE	2	5
	33906900	COVER,CURSOR	1	5
	33906930	LEVER,PE	1	5
	33906941	MOUNT,STOPPER	1	5
	33906950	SHAFT,LEADING FEED PULLEY BYPASS	1	5
	33906960	LEVER,BYPASS SOLENOID	1	5
	33906970	STOPPER,PAPER	1	5

• Parts with "◉" indicates the Service parts.

SP	Part. No.	Description	Quantity 230V	Fig. No.
	33906980	LEVER,STOPPER RELEASE	1	5
	33907012	CASSETTE	2	3
	33907020	WORK PLATE,CASSETTE	2	3
	33907030	WORK PLATE,LIFT CASSETTE	2	3
	33907050	RAIL A,CURSOR	2	3
	33907060	CURSOR A,CASSETTE	2	3
	33907070	CURSOR B,CASSETTE	2	3
	33907080	LEVER,CASSETTE CURSOR	4	3
	33907090	LID A,CURSOR	2	3
	33907100	RACK,CASSETTE	6	3,5
	33907120	RAIL C,CURSOR	2	3
	33907130	CURSOR C,CASSETTE	2	3
	33907140	LID C,CURSOR	2	3
	33907180	DETECTION PLATE,CASSETTE	2	3
◉	33907190	GROUND PLATE,CASSETTE	2	3
	33907200	MOUNT,PAPER SIZE DETECTION	2	17
	33907210	CUSHION,CASSETTE WORK PLATE	4	3
	33907220	ORIGINAL SIZE INDICATOR,SIZE (METRIC)	2	3
◉	33912230	ORIGINAL DETECTION SENSOR 115	2	19
◉	33912310	CONTACT GLASS,CONDUCTION	1	19
◉	33914190	TONER SENSOR	1	11
	33920060	RETAINING PIN,FIXING UNIT	1	14
	33920090	HANDLE,FIXING	1	14
◉	33920560	SWITCH,FIXING	1	14
◉	33921070	PULLEY,EJECT	4	16
◉	33922140	PULLEY 27,REGISTRATION	2	15
	33927160	WIRE,PAPER FEED UNIT	2	6
	33927180	WIRE,VERTICAL CONVEYING JUNCTION	2	6
	33927450	RETAINING PIN,DRAWER	2	17
	33927580	CORE 9-20X32 (FOR DC 2560 ONLY)	4	17
	33927590	CORE 7-15X18 (FOR DC 2560 ONLY)	3	17
◉	33960020	HEATER,CASSETTE (240)	1	19
	33968220	CASSETTE LIFT SHAFT ASS'Y	2	3
	34700110	BYPASS PAPER FEED ASS'Y	1	5
	34705060	LABEL,FIXING OPERATION	1	1
	34705122	LABEL SIM(EXP)	1	1
	34706050	LID,BYPASS TABLE	1	5
◉	34724020	OPERATION UNIT(METRIC)	1	17
	34726010	INNER MOUNT,OPERATION UNIT	1	17
	34727025	ICB, ROM (FOR DC 2060 ONLY)	1	17
	34727031	WIRE,MAIN	1	18

SP	Part. No.	Description	Quantity 230V	Fig. No.
	34727060	WIRE,BYPASS UNIT	1	5
	34727084	IC BT,ROM (FOR DC 2560 ONLY)	1	17
◉	34768030	FRAME,OPERATION UNIT	1	17
◉	34768060	INNER SHEET,OPERATION UNIT LID (METRIC)	1	17
◉	34768090	SHEET,OPERATION UNIT (METRIC)	1	17
◉	34768120	KEY TOP,OPERATION UNIT (METRIC)	1	17
◉	34768130	OPERATION UNIT PCB	1	17
	34782010	SET ORIGINAL DETECTION	1	19
	34793081	PARTS MAIN PCB ASSY'S (FOR DC2060 ONLY)	1	17
◉	34800141	UPPER REGISTRATION CLEANER ASS'Y	1	4
◉	34800150	LOWER REGISTRATION CLEANER ASS'Y	1	4
	34800162	PRIMARY PAPER FEED ASS'Y	2	6
	34801050	POWER INLET ASS'Y	1	17
	34801061	OUTLET ASS'Y	1	17
	34802011	FRONT FRAME	1	2
	34802022	REAR FRAME	1	2
	34802030	BASE	1	2
	34802040	UPPER RIGHT REINFORCEMENT	1	2
	34802050	UPPER LEFT REINFORCEMENT	1	2
	34802061	LOWER LEFT REINFORCEMENT	1	2
	34802070	LOWER REINFORCEMENT,SCANNER	1	2
	34802080	REINFORCEMENT,MIDDLE	1	2
	34802090	REINFORCEMENT, REAR FRAME	1	2
	34802102	RAIL,FIXING	1	2
	34802110	MOUNT,EJECT HOOK	1	16
	34802130	SHAFT,CASSETTE LOCK	1	2
	34802140	LEFT MOUNT,HANDLE	2	2
	34802160	HANDLE B,MACHINE	4	2
	34802170	SHEET,IMAGE FORMATION RAIL	2	2
	34804020	ACTUATION PLATE,INTERLOCK	1	1
◉	34804031	RIGHT COVER	1	1
◉	34804042	LEFT COVER	1	1
◉	34804071	UPPER REAR COVER	1	1
◉	34804080	REAR COVER	1	1
◉	34804090	COVER,EJECT	1	16
	34804120	INNER FRONT COVER	1	1
◉	34804131	REAR COVER,COOLING	1	1
	34804140	FRONT HINGE,COVER	2	1
	34804150	RIGHT MOUNT,HINGE	1	1
	34804160	LEFT MOUNT,HINGE	1	1
	34804180	RIGHT SHEET,COVER	1	1

• Parts with "◉" indicates the Service parts.

SP	Part. No.	Description	Quantity 230V	Fig. No.
	34804190	LEFT REINFORCEMENT,COVER	1	1
	34804200	REAR SPONGE,COVER	1	1
	34805130	LABEL,TRANSFER	1	1
	34806010	LOWER HOUSING,PAPER FEED	2	6
	34806020	UPPER SHAFT,PAPER FEED	2	6
	34806030	SHAFT,LEADING FEED PULLEY	2	6
◉	34806040	LOWER BUSHING,PAPER FEED	2	6
◉	34806050	LOWER SPRING,PAPER FEED	3	5,6
◉	34806060	FILM,PAD PULLEY	2	6
	34806070	SUPPORT PLATE,LEADING FEED PULLEY	2	6
	34806080	REINFORCEMENT,LEADING FEED SUPPORT	2	6
◉	34806090	PULLEY,LEADING FEED	2	6
◉	34806110	ROLLER,VERTICAL CONVEYING	1	6
	34806120	MOUNT,VERTICAL COVER RELEASE SWITCH	1	6
	34806130	COVER,SAFETY SWITCH VERTICAL CONVEYING	1	6
	34806140	STOPPER 4	6	5,6
◉	34806150	STOPPER 5	3	4,6,15
◉	34806161	COVER,VERTICAL CONVEYING	1	6
	34806170	GUIDE,VERTICAL CONVEYING	2	6
	34806181	SHAFT,VERTICAL CONVEYING	3	6
	34806190	ROLLER,DESK CONVEYING	1	6
◉	34806201	FRAME,FEED UNIT	1	4
	34806210	LOWER GUIDE,FEED	1	4
	34806220	UPPER GUIDE,FEED	1	4
	34806230	UPPER GUIDE,REGISTRATION	1	4
	34806240	GUIDE,REGISTRATION MIDDLE	1	4
	34806250	LOWER GUIDE,REGISTRATION	1	4
◉	34806260	ROLLER,FEED UNIT	1	4
◉	34806270	UPPER ROLLER,REGISTRATION	1	4
◉	34806280	LOWER ROLLER,REGISTRATION	1	4
	34806291	FRONT MOUNT,HOOK	1	4
	34806301	REAR MOUNT,HOOK	1	4
	34806311	RETAINER,FEED CLUTCH	1	4
	34806340	SEAL,REGISTRATION GUIDE	2	4
	34806410	LOWER GUIDE,BYPASS	1	5
	34806420	SHAFT,SEPARATION PULLEY	1	5
	34806430	SUPPORT PLATE,SEPARATION PULLEY	1	5
	34806440	SHAFT,BYPASS PAPER FEED	1	5
	34806450	FRONT FRAME,BYPASS	1	5
	34806460	REAR FRAME,BYPASS	1	5
◉	34806480	STOPPER 6	1	5
	34806490	FRICTION PLATE,BYPASS LEADING FEED	1	5
	34806501	PROTECTING PLATE,COVER VERTICAL CONVEYING	1	6
	34806510	WEIGHT,LEADING FEED PULLEY	2	6
◉	34806520	FILM,CONFLUENCE GUIDE	4	6
◉	34806530	UPPER SPRING,FEED	2	6
◉	34806540	UPPER FILM,RESISTANCE	1	4
	34809010	RIGHT RAIL,IMAGE FORMATION	1	2
	34809020	LEFT RAIL,IMAGE FORMATION	1	2
	34810011	MOUNT,CLEANING LAMP	1	8
	34810020	MOUNT BL	1	8
	34810030	SPACER,MC RETAINING	1	2
	34812031	LENS 170,SCANNER UNIT	1	10
	34812040	SHAFT,LENS SCANNER UNIT SUPPORT	2	2
	34812050	HOLDER,SCANNER UNIT	2	2
	34812060	MOUNT,SWITCH ORIGINAL RELEASE	1	9
	34812071	LEFT MOUNT,ORIGINAL HOLDER	1	9
	34812081	RIGHT MOUNT BASE,ORIGINAL HOLDER	1	9
	34812090	REAR DUCT,SCANNER COOLING	1	16
	34812100	FRONT DUCT,SCANNER COOLING	1	16
	34812110	REAR FILTER,SCANNER DUST SHIELD	2	1
◉	34812120	THERMAL PROTECTOR,SCANNER	1	10
	34812131	COVER,WIRE SCANNER UNIT	1	10
◉	34812140	ORIGINAL SIZE INDICATOR,ORIGINAL(METRIC)	1	9
	34812160	SEAL,SCANNER FAN	1	16
	34816010	GUIDE,CONVEYING	1	7
◉	34816020	ROLLER,CONVEYING	1	7
	34816030	SHAFT,CONVEYING	1	7
◉	34816040	BELT,CONVEYING	3	7
	34816050	DUCT,CONVEYING	1	7
	34816060	SHAFT,CONVEYING RELEASE	1	2
	34816070	SUPPORT PLATE,CONVEYING RELEASE	2	2
	34816080	SHAFT,CONVEYING RELEASE PULLEY	2	2
	34816090	FRONT GUIDE,CONVEYING	1	4
	34816100	REAR DUCT,CONVEYING	1	16
◉	34816110	FILTER,CONVEYING	1	16
◉	34816120	SPRING,CONVEYING	1	4
◉	34816130	PLATE SPRING,CONVEYING RELEASE	2	4
	34816140	STOPPER,CONVEYING RELEASE	2	2
	34816151	HANDLE,CONVEYING RELEASE	1	2

• Parts with "◉" indicates the Service parts.

SP	Part. No.	Description	Quantity 230V	Fig. No.
	34817011	FRONT HOUSING,TRANSFER	1	8
	34817021	REAR HOUSING,TRANSFER	1	8
	34817031	SHIELD,TRANSFER	1	8
	34817041	PARTITION,TRANSFER SHIELD	1	8
	34817051	GUIDE,SEPARATION	1	8
	34817060	TERMINAL,TRANSFER	2	8
	34817070	FRONT LID,TRANSFER	1	8
	34817080	REAR LID,TRANSFER	1	8
	34817090	LID,TRANSFER TERMINAL	1	8
	34817100	GUIDE,TRANSFER	1	8
◉	34817111	OUTER SEAL,TRANSFER GUIDE	1	8
◉	34817120	INNER SEAL,TRANSFER GUIDE	1	8
	34817130	SLIDER,TRANSFER CLEANING	1	8
	34817140	KNOB,TRANSFER CLEANING	1	8
	34817150	HOLDER,TRANSFER CLEANING	4	8
	34817161	PIN,CHARGER	3	8
	34817170	FRONT FRAME,TRANSFER	1	4
	34817180	REAR FRAME,TRANSFER	1	4
	34817190	RAIL,TRANSFER CHARGER	1	4
	34817200	REINFORCEMENT,TRANSFER FRAME	1	4
	34817211	LOWER FRONT GUIDE,TRANSFER	1	4
	34817220	LOWER SUPPORT PLATE,REGISTRATION CLEANER	1	4
	34817250	HOUSING,TRANSFER CONNECTOR	1	8
	34817260	TERMINAL,TRANSFER CONNECTOR	1	8
	34817270	TERMINAL,SEPARATION CONNECTOR	1	8
	34817280	UPPER GUIDE,TRANSFER	1	11
	34817302	HOLDER,TRANSFER CHARGER	1	4
	34817310	FRONT PIN,TRANSFER FRAME	1	4
	34817320	UPPER FRONT GUIDE,TRANSFER	1	4
	34817330	LID,TRANSFER CONNECTOR	1	8
	34817340	PLATE,TONER	2	11
◉	34817350	GROUND PLATE,TRANSFER	1	8
◉	34817370	REAR FILM,TRANSFER	1	8
	34820021	FRONT PRESSING PLATE,FIXING	1	14
	34820031	REAR PRESSING PLATE,FIXING	1	14
	34820040	HOUSING,FIXING	1	14
	34820051	UPPER GUIDE,FIXING	1	14
	34820060	LOWER GUIDE,FIXING	1	14
	34820073	BASE,FIXING	1	14
◉	34820080	SPRING,PRESSURE	2	14

SP	Part. No.	Description	Quantity 230V	Fig. No.
	34820092	STAY,FIXING	1	14
	34820100	FRONT GUIDE,PRESS ROLLER	1	14
	34820110	REAR GUIDE,PRESS ROLLER	1	14
	34820120	DIAL,FIXING DRIVE	1	14
	34820130	SHAFT,DIAL FIXING DRIVE	1	14
	34820140	JOINT,FIXING DRIVE	1	14
	34820150	SPRING,FIXING DRIVE	1	14
	34820160	MOUNT,EJECT SWITCH	1	14
	34820170	MOUNT,STATIC ELIMINATOR	1	14
	34820181	COVER,FIXING	1	14
	34820190	MOUNT,FIXING DRAWER	1	14
	34820201	RETAINER,FIXING	1	14
	34820220	LEVER,PRESSURE	2	14
◉	34820240	SEPARATION CLAW,PRESS ROLLER	2	14
	34820250	SHAFT,SEPARATION CLAW PRESS ROLLER	1	14
	34820260	FRONT COVER,FIXING	1	14
	34820271	ADJUSTING PLATE,SPRING PRESSURE	2	14
	34820280	HOLDER,FIXING GUIDE	2	14
	34820292	SHAFT,FIXING PRESSURE	2	14
	34820300	PIN,FIXING COVER	2	14
◉	34820310	STATIC ELIMINATOR,HEAT ROLLER	1	14
	34821010	FRONT FRAME,EJECT	1	16
	34821020	REAR FRAME,EJECT	1	16
	34821030	UPPER GUIDE,EJECT	1	16
	34821040	REINFORCEMENT,EJECT	1	16
	34821050	ROLLER,EJECT	1	16
◉	34821060	STOPPER,EJECT DRIVE	1	16
	34821070	ARM,EJECT COVER	1	16
	34821080	LEVER,EJECT	1	16
	34821090	SHAFT,EJECT LEVER	1	16
◉	34821100	STATIC ELIMINATOR,EJECT	1	16
◉	34821110	SPRING,EJECT PULLEY	4	16
	34821200	GUIDE,EJECT AUXILIARY	1	16
◉	34822010	GEAR 108/38,MOTOR	1	15
◉	34822020	GEAR 88/36,MOTOR	1	15
◉	34822030	GEAR 40/18	1	15
◉	34822040	PULLEY 38/60,DRUM	1	15
◉	34822050	GEAR 35/34	1	15
◉	34822060	PULLEY 37/34	1	15
◉	34822070	GEAR 26	1	15

• Parts with "◉" indicates the Service parts.

SP	Part. No.	Description	Quantity 230V	Fig. No.
◉	34822100	GEAR 35	2	15
◉	34822110	GEAR 27/33,REGISTRATION	1	15
◉	34822120	GEAR 37/30,BYPASS	1	15
◉	34822130	GEAR 30	1	15
◉	34822140	GEAR 18/26,FEED UNIT	1	4
◉	34822150	GEAR 34	1	15
◉	34822160	PULLEY 26	1	15
◉	34822170	PULLEY 24/44,PAPER FEED	1	15
◉	34822180	PULLEY 36/55,DUPLEX	1	15
◉	34822190	GEAR 38,DUPLEX	1	15
	34822200	TENSION PLATE,DRUM	1	15
	34822210	TENSION PLATE,FIXING	1	15
	34822220	TENSION PLATE,PAPER FEED	1	15
	34822231	MOUNT,DRIVE MOTOR	1	15
	34822240	RETAINER,FIXING DRIVE	1	15
	34822251	REINFORCEMENT,PAPER FEED DRIVE	1	15
	34822261	REINFORCEMENT,DUPLEX DRIVE	1	15
	34822271	REINFORCEMENT,PRIMARY PAPER FEED DRIVE	1	15
	34822280	SHAFT,DEVELOPING DRIVE	1	15
◉	34822290	BELT,DRUM	1	15
◉	34822300	BELT,FIXING	1	15
◉	34822310	BELT,PAPER FEED	1	15
	34822320	JOINT,EJECT DRIVE	1	15
◉	34822330	GEAR 24,IMAGE FORMATION	1	15
	34823010	DUCT,COOLING	1	16
	34823020	RIGHT PARTITION,FIXING	1	2
	34823030	REAR SPONGE COVER,COOLING	1	1
	34823040	UPPER LEFT SPONGE,REINFORCMENT	1	2
	34823050	REAR SPONGE,FRAME	1	2
	34826010	MOUNT,MAIN PCB	1	17
	34826020	PROTECTING PLATE,CASSETTE CONNECTOR	1	2
	34826040	RIGHT MOUNT,OPERATION UNIT	1	17
	34826050	LEFT MOUNT,OPERATION UNIT	1	17
	34826060	MOUNT,FEED SHIFT CONNECTOR	1	17
	34826090	MOUNT,POWER SOURCE SUPPLY (230)	1	17
	34826100	MOUNT,INTERLOCK LEVER	1	17
	34826110	LEVER,INTERLOCK SWITCH	1	17
◉	34826120	ACTUATOR,INTERLOCK SWITCH	1	17
◉	34826140	SPRING,LEVER INTERLOCK	1	17
	34826150	SHAFT,INTERLOCK SWITCH	1	17
	34826160	MOUNT,DF CONNECTOR	1	17
	34826170	MOUNT,IMAGE FORMATION WIRE	1	12
	34826190	REAR RETAINER	2	2
	34826210	UPPER SHEET,MAIN WIRING	1	17
	34826220	SHIELD,COMPOSITE CIRCUIT	1	17
	34826230	PROTECTING PLATE,CASSETTE WIRE	1	1
	34826270	MOUNT,CEMENT RESISTOR	1	17
◉	34827010	LAMP,BLANK	1	8
◉	34827020	SWITCH,REGISTRATION	1	4
	34827050	PROTECTOR,EDGE	1	2
	34827070	WIRE,HIGH VOLTAGE CIRCUIT PCB	1	17
	34827081	WIRE,INTERLOCK SWITCH	1	18
	34827090	WIRE,CASSETTE	1	17
	34827100	WIRE,LIGHT LAMP (EXP)	1	17
	34827130	WIRE,FIXING UNIT	1	14
	34827142	WIRE,ORIGINAL SIZE SENSOR (METRIC)	1	19
	34827170	WIRE,FEED UNIT	1	4
	34827180	WIRE,CONVEYING FAN	1	7
	34827210	WIRE,GRID	1	8
◉	34827220	TOTAL COUNTER	1	17
◉	34827230	SWITCH,INTERLOCK	2	6,16
	34827340	WIRE,CEMENT RESISTOR	1	17
	34827350	WIRE,SSR SIGNAL	1	17
	34827370	JUNCTION WIRING,CEMENT RESISTOR	1	17
◉	34828060	HIGH VOLTAGE TRANSFORMER PCB	1	17
◉	34868012	FRONT TRANSFER HOUSING ASS'Y	1	8
◉	34868040	GLASS,COVER	1	10
◉	34868060	BELT,SCANNER DRIVE	1	10
◉	34868070	PULLEY,SCANNER DRIVE	1	10
◉	34868080	DRUM,SCANNER	2	10
◉	34868090	FRONT PULLEY,SCANNER WIRE	1	10
◉	34868100	REAR PULLEY,SCANNER WIRE	1	10
◉	34868110	FRONT PULLEY,2 MOVING SCANNER	1	10
◉	34868120	REAR PULLEY,2 MOVING SCANNER	1	10
◉	34868170	BELT,MIRROR DRIVE	1	10
◉	34868180	PULLEY 1, TENSION	1	10
◉	34868190	PULLEY 2,TENSION	1	10
◉	34868230	MIRROR,1	1	10
◉	34868240	MIRROR,2	1	10
◉	34868250	MIRROR,3	1	10

• Parts with "◉" indicates the Service parts.

SP	Part. No.	Description	Quantity 230V	Fig. No.
◉	34868260	MIRROR,4	1	10
◉	34868270	MIRROR,5	1	10
◉	34868280	MIRROR,6	1	10
◉	34868310	LID,OPERATION UNIT	1	17
◉	34868340	COVER,OPERATION UNIT SORTER (METRIC)	1	17
◉	34868430	KEY TOP,PRINT (METRIC)	1	17
◉	34868470	GROUND PLATE,CONTACT GLASS	1	19
	34893051	PARTS SCANNER UNIT ASS'Y(230)SP	1	10
◉	34893064	PARTS TRANSFER CHARGER ASS'Y(SP)	1	8
◉	34893096	PARTS FIXING ASS'Y(230)SP	1	14
	34893200	PARTS FAN N COOLING(SP)	1	16
	34893210	PARTS FAN ND COOLING(SP)	1	16
◉	34893243	PARTS COMPOSITE CIRCUIT PCB(230)SP	1	17
◉	34893280	PARTS LAMP 170V (SP)	1	10
◉	34893310	PARTS MOTOR SCANNER DRIVE (SP)	1	10
◉	34893320	PARTS FRONT WIRE SCANNER (SP)	1	10
◉	34893330	PARTS REAR WIRE SCANNER (SP)	1	10
◉	34893340	PARTS MOTOR LENS DRIVE (SP)	1	10
◉	34893350	PARTS MOTOR MIRROR DRIVE (SP)	1	10
◉	34893901	SET LEFT HOUSING TRANSFER CHARGER	1	8
	34905140	LABEL,CHARGE CLEANING	1	13
◉	34908050	SHAFT,DRUM	1	11
	34909010	FRONT FRAME,IMAGE FORMATION UNIT	1	11
	34909020	REAR FRAME,IMAGE FORMATION UNIT	1	11
◉	34909050	FRONT GROUND PLATE,DRUM DRIVE	1	12
	34910010	FRONT HOUSING,MAIN CHARGER	1	8
	34910020	REAR HOUSING,MAIN CHARGER	1	8
	34910030	SHIELD,MAIN CHARGER	1	8
	34910050	TENSION PLATE,GRID	1	8
	34910060	HOOK,MC WIRE	1	8
	34910070	HOUSING,MC TERMINAL BASE	1	8
	34910080	SEAL,CLEANING LAMP	1	8
	34910110	FRONT LID,MC	1	8
	34910120	REAR LID,MC	1	8
◉	34910130	SPRING,MC TERMINAL BASE	1	8
◉	34910140	PLATE SPRING,MC TERMINAL BASE	1	8
	34910150	HOLDER,CHARGE CLEANING	2	8
	34910160	SHAFT,CHARGE CLEANING	1	8
	34910170	SLIDER,CHARGE CLEANING	1	8
	34910180	KNOB,CHARGE CLEANING	1	8
	34910190	SPRING,CHARGE CLEANING	1	8
	34910200	REAR SPACER,MC HOUSING	1	8
◉	34912030	CONTACT GLASS	1	9
	34914030	LEFT SPIRAL,DEVELOPING	1	11
	34914040	RIGHT SPIRAL,DEVELOPING	1	11
	34914050	MOUNT,DOCTOR BLADE	1	11
	34914060	DOCTOR BLADE,DEVELOPING	1	11
	34914080	RAIL,LID DEVELOPING	4	11
	34914100	SHAFT,IMAGE FORMATION HANDLE	1	11
	34914110	SPRING,IMAGE FORMATION HANDLE	1	11
	34914120	MOUNT BASE,HANDLE	2	11
	34914130	STOPPER,DEVELOPING	1	11
	34914140	UPPER LID,DEVELOPING	1	11
	34914160	FILM,DEVELOPING	1	11
	34914170	UPPER SEAL,LID	1	11
	34914180	FRONT LID,DEVELOPING	1	11
◉	34914201	GEAR 19,IDLE DEVELOPING	1	11
◉	34914210	GEAR 17,MAGNET ROLLER	1	11
◉	34914240	SEAL,DEVELOPING	2	11
◉	34914250	SEAL,COVER DOCTOR BLADE	2	11
◉	34914270	UPPER SEAL,DEVELOPING	1	11
◉	34914280	FRONT SEAL,DEVELOPING	1	11
◉	34914290	REAR SEAL,DEVELOPING	1	11
◉	34914300	RIGHT SEAL,DEVELOPING	1	11
◉	34914310	FRONT SEAL,LID	1	11
◉	34914330	LEFT SEAL,LID	2	11
◉	34914340	SEAL,DEVELOPING HOUSING	2	11
◉	34914350	LOWER SEAL,DEVELOPING	1	11
◉	34914360	FRONT BUSHING,SPIRAL	2	11
◉	34914370	REAR BUSHING,SPIRAL	2	11
	34914390	LEFT FILM,DEVELOPING SPIRAL	1	11
◉	34914400	GEAR 28,DEVELOPING	1	11
◉	34914410	GEAR 31,DEVELOPING	1	11
	34914420	LOWER SEAL,DEVELOPING HOUSING	2	11
	34914430	REAR FILM,DEVELOPING	1	11
◉	34914440	REAR SEAL,MAGNET ROLLER	1	11
	34914450	LOWER SEAL,LID	1	11
	34914460	FRONT SPONGE,HOUSING	2	11
	34915011	HOUSING,HOPPER	1	13
	34915020	SPIRAL,HOPPER	1	13

• Parts with "◉" indicates the Service parts.

SP	Part. No.	Description	Quantity 230V	Fig. No.
	34915030	PADDLE A,HOPPER	1	13
	34915040	PADDLE B,HOPPER	1	13
	34915050	WEIGHT B,PADDLE	1	13
	34915060	SHAFT B,PADDLE	1	13
◉	34915070	GEAR 15,SPIRAL	1	13
◉	34915080	GEAR 22,PADDLE	1	13
	34915090	CAM,HOPPER	1	13
	34915100	RIGHT LID L,HOPPER (EUR)	1	13
	34915110	LEFT LID,HOPPER	1	13
	34915120	FILM,SPIRAL	1	13
	34915130	FILM A,PADDLE	2	13
◉	34915140	RIGHT SEAL,HOPPER	1	13
	34915160	RIGHT COVER,LID HOPPER	1	13
	34915180	LOWER COVER,HOPPER	1	13
◉	34915190	GEAR 20,HOPPER	2	13
	34915200	SHAFT,VIBRATION	1	13
	34915210	LEFT COVER,HOPPER	1	13
	34915220	INNER LID,HOPPER	1	13
◉	34915230	LOWER SEAL,HOPPER	1	13
◉	34915240	LEFT SEAL,HOPPER	1	13
◉	34915250	INNER SEAL,LID HOPPER	2	13
◉	34915260	LEFT SEAL,LID HOPPER	1	13
	34915270	FILM B,PADDLE	1	13
◉	34915280	GROUND PLATE H,TONER MOTOR	1	13
	34915290	PROTECTING PLATE,HOPPER	1	13
◉	34915301	SPRING,HOPPER CAM	1	13
	34915310	UPPER LABEL,HOPPER	1	13
	34915320	LOWER LABEL,HOPPER	1	13
	34918050	SHAFT,THRUST	1	12
	34918071	SPRING,DISPOSAL	1	12
◉	34918080	GEAR 31,THRUST	1	11
◉	34918090	GEAR 19,DISPOSAL	1	12
◉	34918100	FRONT SEAL,CLEANING	1	12
◉	34918110	REAR SEAL,CLEANING	1	12
◉	34918120	SPONGE,CLEANING	2	12
◉	34918130	INNER SPONGE,CLEANING	1	12
◉	34918140	FRONT SEAL,DISPOSAL	1	12
◉	34918150	REAR SEAL,DISPOSAL	1	12
◉	34918160	SPONGE,DISPOSAL	2	12
◉	34918170	SPACER,DRUM	1	12

SP	Part. No.	Description	Quantity 230V	Fig. No.
	34918180	LEVER,PRESSURE RELEASE	1	12
◉	34918200	SPRING,THRUST	1	12
◉	34918210	LOWER SPONGE,HOUSING	1	12
◉	34918220	INNER SPONGE,DISPOSAL	2	12
	34918250	SLIDE PLATE,SEPARATION CLAW	1	12
	34918260	LEVER,SEPARATION SEPARATION CLAW	1	12
	34918270	SHAFT,SEPARATION CLAW	1	12
◉	34918290	LOWER SPONGE,DISPOSAL	2	12
◉	34918300	INNER SEAL,DISPOSAL	1	12
	34918310	MOUNT 23,BLADE	1	12
◉	34918340	UPPER SPONGE,CLEANING	1	12
◉	34918370	LOWER FILM,CLEANING	1	12
◉	34920070	GEAR 40,HEAT ROLLER	1	14
◉	34920080	THERMISTER,FIXING	1	14
◉	34920310	THERMOSTAT 140,FIXING	1	14
◉	34920320	THERMOSTAT 150,FIXING	1	14
	34922030	POSITIONING PLATE,DRUM	1	15
◉	34922040	COUPLING,DRUM	1	15
	34922050	SHAFT,COUPLING	1	15
◉	34922061	REAR BUSHING,DRUM	1	15
◉	34922071	REAR GROUND PLATE,DRUM	1	15
◉	34922090	BUSHING,DEVELOPING DRIVE	1	15
◉	34922590	SPRING,DRUM DRIVE	1	15
◉	34927031	LAMP,CLEANING	1	8
◉	34927050	SENSOR,REMAINING DETECTION	1	13
	34927150	WIRE,IMAGE FORMATION UNIT	1	13
	34927280	JUNCTION WIRING,THERMOSTAT	1	14
◉	34968030	SENSOR,POSITION DETECTION	2	10
◉	34968261	FRONT MAIN CHARGER HOUSING ASS'Y	1	8
	34968301	IMAGE FORMATION ASS'Y SP	2	11,12
◉	34968350	BUSHING SEPARATION CLAW ASS'Y SP	1	12
◉	34993032	PARTS HOPPER ASS'Y(EUR)SP	1	13
	34993170	PARTS COVER DOCTOR BLADE(SP)	1	11
	34993190	PARTS LOWER SEAL CLEANING(SP)	1	12
◉	34993201	PARTS ROLLER HEAT(SP)	1	14
◉	34993220	PARTS HEATER 220-240 FIXING(SP)	1	14
	34993270	PARTS FAN COOLING(SP)	1	16
◉	34993370	PARTS BLADE 23 CLEANING(SP)	1	12
◉	34993430	PARTS LOWER CLEANING SEAL ASS'Y(SP)	1	12
◉	34993441	PARTS MAIN CHARGER ASS'Y(METRIC)SP	1	8

• Parts with "◉" indicates the Service parts.

SP	Part. No.	Description	Quantity 230V	Fig. No.
◉	34993460	PARTS GRID(METRIC)SP	1	8
◉	34993910	SET REAR CHARGER HOUSING	1	8
	36727600	RESISTOR,10 OHM 40W	2	17
	36727610	RESISTOR,10 OHM 40W 157	1	17
	41529210	SOCKET ASS'Y,KEY COUNTER	1	19
◉	42929503	TUNGSTEN WIRE(50M)	2spl	8
	43826700	DI Z1033	1	19
◉	45592554	BEARING 688ADD	1	11
◉	45725413	IDLE GEAR,PAPER FEED ROLL	1	15
	45728900	GEAR 38T	4	15
◉	45729420	GEAR,LOWER TRANSFER ROLLER	1	16
	46664934	LABEL,SUPPLIES(E,F,G,S)	1	1
	48128606	PIN,WIRE TENSION	1	5
	48128609	PIN,UPPER FRONT COVER	4	14
	48129208	PIN,TENSION	1	14
◉	48527200	SPRING,CHARGER	3	8
◉	48528109	SPRING,BLADE LEVER	2	14
◉	48928102	PF PULLEY	3	7
◉	49021700	BUSHING	1	2
◉	49028116	BUSHING 6,CLEANING UNIT	2	13
	49927306	MS MAGNET (S)	1	13
	60804120	MAGNET CATCH	2	1
◉	60906170	PULLEY,FRICTION PAD	2	6
	60907170	CUSHION,CASSETTE R	4	3
◉	60907880	BUSHING,BYPASS SHAFT	5	6,7
◉	60922220	LOWER BELT,PAPER FEED	1	6
	61705110	LABEL,PAPER UPPER LIMIT	2	3
◉	61706770	UPPER PULLEY,BYPASS	3	5,6
◉	61706780	LOWER PULLEY,BYPASS	1	5
	61712870	TAPE,CONTACT GLASS	1	19
◉	61720750	SEPARATION CLAW B	6	14
	61727432	FAN,PTC	1	7
◉	61760081	KEY CARD IF,PCB	1	19
◉	62218011	SEPARATION CLAW	2	12
◉	62218020	RATCHET,SEPARATION	2	12
◉	63511220	STOP RING,4	2	4,16
◉	63516110	SPRING,TRANSFER	2	5
	63702140	PIN,OPERATION UNIT	2	14
◉	63818250	REAR BUSHING,TONER DISPOSAL ROLLER	2	13
	64007010	PIN,CLEANER	1	4

SP	Part. No.	Description	Quantity 230V	Fig. No.
	65027470	CORE 7-15X18 (ONLY FOR DC 2060)	4	17
◉	65914120	GEAR 18,IDLE DEVELOPING	3	3,5
	66000351	ORIGINAL HOLDER ASS'Y	1	9
	66001110	TRANSFER WIRING ASS'Y	1	8
◉	66004050	UPPER RIGHT COVER	1	9
	66004170	PLATE,MAGNET	1	17
◉	66006333	MOTOR,CASSETTE LIFT	2	15
◉	66006350	SWITCH,CASSETTE LIFT	5	5,6
◉	66006820	SIZE INDICATOR,BYPASS(METRIC)	1	5
◉	66007120	SPRING,CURSOR C	4	3
	66007310	PIN,CASSETTE WORK PLATE	2	3
	66012180	ACTUTATION PLATE,ORIGINAL DETECTION	1	9
◉	66012220	FRONT HOLDER,INDICATION PLATE	1	9
◉	66012230	REAR HOLDER,INDICATION PLATE	1	9
◉	66012271	SPRING PLATE,INDICATION PLATE	1	9
◉	66012320	COVER,ORIGINAL HOLDER (EXP.)	1	9
	66012360	ASSIST PLATE,SIZE INDICATION PLATE	1	9
◉	66012370	STOPPER,SIZE INDICATION PLATE	1	9
◉	66012380	FRONT SIZE INDICATION PLATE(METRIC)	1	9
	66014420	SPACER,CLEANING SECTION	2	1
◉	66015200	TONER MOTOR	1	13
◉	66015270	PULLEY 10,TONER RECYCLE	1	6
◉	66018160	GEAR 19,SPIRAL ROLLER	1	15
◉	66020110	COPY TRAY,EXP.	1	20
◉	66022131	GEAR 30,DEVELOPING DRIVE	1	15
◉	66022190	GEAR,21 DEVELOPING	2	6
	66026180	UPPER REAR SEAL	2	9
◉	66027021	DEHUMIDIFIER HEATER	1	19
◉	66060010	COVER,KEY COUNTER	1	19
	66060021	RETAINER,KEY COUNTER COVER	1	19
	66060030	RETAINER,KEY COUNTER	1	19
	66060040	MOUNT,KEY COUNTER	1	19
◉	66068450	PRESS ROLLER PFA	1	14
	66069780	SET PARTS KEY COUNTER	1	19
	66102140	BASE,RUBBER	4	2
◉	66106610	SPRING,FEED	4	6
	66107084	SLIDER,CASSETTE	4	2
	66107100	PAD,CASSETTE	2	3
◉	66127010	SWITCH,COVER OPEN	2	17
	66220100	FRONT GUIDE,FIXING	1	14
◉	66222180	SPRING,DRUM DRIVE	1	15

• Parts with "◉" indicates the Service parts.

SP	Part. No.	Description	Quantity 230V	Fig. No.
◉	66227110	MOTOR,MAIN	1	15
◉	66228050	AE SENSOR PCB	1	10
	67305310	CAUTION LABEL,HV	3	1,8
◉	67322230	BUSHING 8	16	4,5,6,16
	67805200	LABEL,ROLL HEATER	1	1
◉	67827330	SSR 230	1	17
◉	68322050	GEAR 36,FIXING DRIVE	2	15
◉	68328170	HUMIDITY SENSOR PCB	1	17
◉	68427020	POWER SOURCE SWITCH	1	17
◉	68707030	UPPER COVER,CASSETTE	2	3
◉	68707040	LOWER COVER,CASSETTE	2	3
	68707050	RIGHT MOUNT,RAIL	2	2
◉	68818130	SPRING,SHUTTER	1	15
◉	69027070	SWITCH,MAIN	1	17
	71804200	MAGNET PLATE,TOP COVER	1	17
◉	71815110	IDLE GEAR 18,SUB UNIT	1	5
◉	72107160	BUSHING 6,LOWER REGISTRATION ROLLER	2	4
◉	72107531	SPRING,LIMITTER	1	5
◉	72107710	BOSE,LIMITTER	1	5
◉	72114130	GEAR 20,AGITATION	2	14
	72114320	PIN,DEV.UNIT HANDLE	4	11,12
◉	72114331	HANDLE,BELT DEV.UNIT	2	11,12
	72114870	V-RING 6 DIA	2	13
◉	72407330	PULLEY,PF GEAR 30	1	6
◉	72418410	GEAR 18, SPIRAL	2	13
	72518060	PIN B,DISPOSAL TANK FULCRUM	1	5
◉	72622050	GEAR 25,FEED LOOP	1	7
◉	72622130	UPPER PULLEY,CENTRAL LEAD ROLLER	3	6
◉	72622141	TENSION PULLEY 20	2	15
	72626210	BUSHING,24X54	2	17
◉	72707190	COLLAR, LIMITTER	1	5
◉	73920080	BLADE,HEAT ROLLER	1	14
◉	73920280	SPRING,FIXING SECTION GROUND	1	14
◉	73922250	IDLE GEAR A,PF SECTION	1	4
	74327180	PIN,CONNECTOR	6	17
◉	74718091	BUSHING CLEANING UNIT	2	15
◉	75122090	GEAR , FRONT	1	11
◉	75618100	SPRING DRUM SEPARATION CLAW SHAFT	1	5
	75704290	HINGE ORIGINAL HOLDER	2	9
	75704450	MAT ORIGINAL HOLDER(USA)	1	9

SP	Part. No.	Description	Quantity 230V	Fig. No.
◉	75706040	STOPRING PAPER FEED PULLEY	1	5
	75713060	AE SENSOR COVER	1	10
◉	75720060	BUSHING HEAT ROLLER	2	14
◉	75720080	SHAFT SEPARATION CLAW	1	14
◉	75720240	SPRING SEPARATION CLAW	6	14
	75720280	HOLDER,FIXING UNIT HEATER B	2	14
	75726140	BUSHING 21X22	1	9
◉	75741080	COVER,ORIGINAL STOCK(G)	1	9
◉	75812080	STOP RING 4	1	5
◉	75827060	ORIGINAL DETECTION SWITCH	1	9
◉	76507110	COLLAR ORIGINAL FEEDBACK ROLLER	2	2
◉	76727010	ORIGINAL SIZE SWITCH	2	13
◉	77020010	BEARING PRESS ROLLER	2	14
	77502090	LID FINISHER CABLE	1	17
	77616110	PAD TC CLEANING	6	8
	77706461	PRESSING SPRING	2	4
	77721700	LEVER LOOP SECTION	2	16
	78102180	HOOK SPRING CRAMSHELL	1	14
	79904140	ORIGINAL HOLDER SPACER	2	9
	82142540	KEY COUNTER	1	19
	B2303060	COUNTER-SUNK HEAD SCREW BFHM3X6 (BLACK)	2	19
	B4104060	TRIPLE SCREW M4X6(CHROMIUM)	1	19
	B4304060	TRIPLE SCREW M4X6 (BLACK)	4	19
	B4304100	TRIPLE SCREW M4X10 (BLACK)	2	19
	C1303000	NUT M3 (BLACK)	1	19
	J0070030	POSITIVE CONNECTOR HOUSING 3P,#187,172075-1	1	18
	J0070900	POSITIVE CONTACTOR,#187,170330-1	3	18
	J0150020	RECEPTACLE,175778-2(AMP)	1	18
	J0150030	RECEPTACLE,175778-3(AMP)	1	18
	J0150900	CONTACTOR,175161-1(AMP)	4	18
	J0220040	PLUG EL 4P,ELP-04V	1	19
	J0220900	SOCKET EL,LLF-01T-1.3E	4	19
	J0241030	PLUG SM 3P,SMP-03V-BC	2	18
	J0250900	SOCKET,BHF-001T-0.8SS	5	18
	J0272030	VH RECEPTACLE 3P,VHR-3N	1	18
	J0272900	CONTACTOR,BVH-21T-P1.1(JST)	2	18
	J0311900	SOCKET,5479PBTL	12	18
	J0314020	PLUG 2P,5559-02P	2	17,18
	J0314100	PLUG 10P,5559-10P	1	18
	J0314120	PLUG 12P,5559-12P	1	18

• Parts with "◉" indicates the Service parts.

SP	Part. No.	Description	Quantity 230V	Fig. No.
	J0315160	RECEPTACLE,5557-16R(MOLEX)	1	17
	J0316160	PLUG,5559-16P-210(MOLEX)	1	18
	J0341900	PIN,MINI DRAWER,5558TL	28	18
	J0341910	PIN,MINI DRAWER,5558T2L	12	18
	J0361030	RECEPTACLE 3P,3191-03R1	2	18
	J0361910	SOCKET 1189ATL	4	18
	J0380040	RECEPTACLE 4P,51024-0400	1	18
	J0380050	RECEPTACLE 5P 51024-0500	1	18
	J0380060	RECEPTACLE 6P,51024-0600	1	18
	J0390040	RECEPTACLE,51090-0400(MOLEX)	1	18
	J0390900	CONTACTOR,50212-8100(MOLEX)	4	18
	J0395040	CASE,53358-0410(MOLEX)	1	18
	J0410920	CONTACT,QR/P1-PC2A-111	7	18
	J0417120	PLUG 12P,QR/P10-12P-C	1	18
	J0421900	CONTACTOR,DF1B-2428SC(HIROSE)	4	18
	J0425060	PLUG S-6P,DF1B-6ES-2.5RC	1	18
	J0440100	PLUG,DF11-10DS-2C(HIROSE)	1	18
	J0440900	PIN,DF11-EP2428PC(HIROSE)	18	18
	J0441180	RECEPTACLE,DF11-18DS-2C(HIROSE)	2	18
	J0441320	RECEPTACLE,DF11-32DS-2C(HIROCE)	1	18
	J0441900	CONTACTOR,DF11-2428SC	75	18
	J0442200	RECEPTACLE,DF11-20DS-2R26(HIROSE)	2	18
	J0442240	RECEPTACLE,DF11-24DS-2R26(HIROSE)	2	18
	J0443040	PLUG,DF11-4DEP-2C(HIROSE)	1	18
	J0443160	PLUG,DF11-16DEP-2C(HIROSE)	1	18
	J0444160	CASE,DF11-16DEP-2A(HIROSE)	1	17
	J0444220	CASE,DF11-22DEP-2A(HIROSE)	1	18
	J0444240	CASE,DF11-24DEP-2A(HIROSE)	1	18
	J0450030	PLUG,DF3-3S-2C(HIROSE)	2	18
	J0450080	RECEPTACLE,DF3-8S-2C(HIROSE)	1	18
	J0450900	SOCKET,DF3-2428SC(HIROSE)	14	18
	J0452050	RECEPTACLE,DF3AA-5EP-2C(HIROSE)	1	18
	J0452900	PIN,DF3-EP2428PC(HIROSE)	5	18
	J0464240	RECEPTACLE,QR/P15-24(4)P-C(02)(HIROSE)	1	17
	J5020010	PLUG SMF,1P-SMF	1	18
	J5020800	SOCKET SMF,SMF-01T-1.0	1	18
	L0001070	FAST-ON RECEPTACLE #110,24-20 (TIN),170043	2	18
	M0207000	BINDING BAND,KB-100-1	18	18
	M1753000	FUSE,S505(BUSSMANN)	1	17
	M2104210	EDGING,EDS-2	3	15,17
	M2104260	EDGING,EDS-0607U(KITAGAWA)	7	4,5,14
	M2105710	MINIATURE CLAMP,UAMS-05-0	3	7,17
	M2105720	MINIATURE CLAMP,UAMS-05-2	8	4
	M2105940	CLAMP,NAD-06(KITAGAWA)	4	2
	M2105990	CLAMP,HL-18-0(KITAGAWA)	3	15
	M2107120	BINDING BAND SG-130	7	4,5,13
	M2107200	BAND,SG-110 V0(KITAGAWA)	8	17
	M2108000	SPACER,KGLS-3S	2	17
	M2108190	SPACER,KGLS-10S	1	17
	M2108700	SPACER,KGLS-8RF(KITAGAWA)	2	17
	M2109000	WIRE SADDLE,WS-1NS	7	2
	M2109010	WIRE SADDLE,WS-2NS	17	2,15,16,17
	M2109020	WIRE SADDLE,WS-2WS	3	16
	M2109030	WIRE SADDLE,WS-3NS	4	17
	M2109210	LOCKING WIRE SADDLE,LWS-8S-2.5W	7	17
	M2109270	WIRE SADDLE,LWS-5S-2W(KITAGAWA)	3	9,15
	M2407010	BINDING BAND SK,SKB-100	11	18
	M2607010	BINDING BAND,PLT1M	3	4,5
	M3506310	INSULATION SLEEVE,OS-110(SHINAGAWA)	2	18
	M5558010	FUSE,MT4(SOC)	2	17

• Parts with "◉" indicates the Service parts.

CLASSFICATION OF THE SCREWS IN ILLUSTRATION

REF.	ITEM #	DESCRIPTION
AAF	B0003140	ROUND HEAD SCREW M3X14
ACC	B0103060	ROUND HEAD SCREW M3X6 (CR)
APE	B3013960	ROUND HEAD TAP-TIGHT SCREW P,M3X06
AXE	B0004400	ROUND HEAD SCREW M4X40
AZC	B0024160	ROUND HEAD SCREW WITH SW.W M4X16
BAC	B1003080	BINDING SCREW M3X8
BAJ	B1003120	BINDING SCREW CVM3X12
BAL	B1003050	BINDING SCREW CVM3X5
BAN	B1004060	BINDING SCREW CVM4X6
BAX	B1004040	BINDING SCREW CVM4X4
BBB	B1303050	BINDING SCREW BVM3X5 (BLACK)
BBC	B1303100	BINDING SCREW BVM3X10 (BLACK)
BBD	B1304040	BINDING SCREW BVM4X4 (BLACK)
BBE	B1304060	BINDING SCREW BVM4X6 (BLACK)
BCK	B1103050	BINDING SCREW CV3X5
BEA	B1603050	BINDING SCREW M3X5 (BRASS,NI)
BHB	B3023080	BINDING TAP TIGHT SCREW M3X8
BHC	B3024060	BINDING TAP-TIGHT SCREW M4X6
BHD	B3024080	BINDING TAP-TIGHT SCREW M4X8
BHH	B3024100	BINDING TAP-TIGHT SCREW M4X10
BHI	B3313080	BINDING TAP-TITE SCREW M3X08
BHN	B8013080	BINDING TAP-TIGHT SCREW M3X08
BHS	B8012100	BINDING TAP-TITE P SCREW M2X10
BHT	B8313060	BINDING TAP-TITE P SCREW M3X06
CAB	B2003050	COUNTER-SUNK HEAD SCREW FHM3X5
CBA	B2303050	COUNTER-SUNK HEAD SCREW BFHM3X5 (BLACK)
CCA	B2104060	COUNTER-SUNK HEAD SCREW FHVM4X6(CR)
DJC	B5003060	HEX. SOCKET HEAD SCREW HHM3X6
EAP	B3064100	TAPPING SCREW M4X10 (B TYP)
EDB	B9094060	SPECIAL TRUSS HEAD SCREW M4X06
EGE	B3304100	BIND TAPPING SCREW M4X10(BTYP.BLACK)

REF.	ITEM #	DESCRIPTION
E03	D1000300	STOP RING (E-3)
E04	D1000400	STOP RING (E-4)
E05	D1000500	STOP RING (E-5)
E07	D1000700	STOP RING (E-7)
E09	D1000900	STOP RING (E-9)
E2E	D1000250	STOP RING (E-2.5)
GEF	B9604060	GROUNDING SCREW M4X6 (BRASS,N;)
HAD	B4003050	TRIPLE SCREW M3X05
HAG	B4000080	TRIPLE SCREW M3X8
HAI	B4004060	TRIPLE SCREW M4X06(BLACK)
HAK	B4003060	TRIPLE SEREW M3X6
HAO	B4043080	TRIPLE TAP-TITE P SCREW M3X08
HAU	B4043080	TRIPLE TAP-TITE P SCREW M3X08
HBD	B4304060	TRIPLE SCREW M4X6 (BLACK)
HBH	B4303060	TRIPLE SCREW M3X6 (BLACK)
HBP	B4363100	TRIPLE SCREW(BLACK)M3X10,B-TYPE
HCA	B4104060	TRIPLE SCREW M4X6(CHROMIUM)
HCE	B4104040	TRIPLE SCREW M4X04(CHROMIUM)
HCF	B4104080	TRIPLE SCREW M4X08(CHROMIUM)
KAL	E0020100	SPRING PIN 2X10
KAM	E0020120	SPRING PIN 2X12
KAN	E0020140	SPRING PIN 2X14
NAD	C1004000	NUT NM4
RAT	D2002000	STOP RING C-20
RDD	D4000400	STOP RING CSTW-4
SAB	C3004000	SPRING WASHER SWM4
WAC	C2004100	PLAIN WASHER PWM4
WEB	C2603080	PLAIN WASHER M3-8 (BRASS,N:)
WPB	C2806120	POLYESTER SLIDER WASHER 6.2X12X0.5T
XEI	C2896210	SHIM 10-1.0T

KYOCERA MITA EUROPE B.V.

Hoeksteen 40, 2132 MS Hoofddorp,
The Netherlands
Phone: (020) 6540000
Home page: http://www.kyoceramita-europe.com
Email: info@kyoceramita-europe.com

KYOCERA MITA NEDERLAND B.V.
Gyroscoopweg 122, 1042 AZ Amsterdam,
The Netherlands
Phone: (020) 5877200

KYOCERA MITA (U.K.) LTD.
Mita House, Hamm Moor Lane,
Addlestone, Weybridge,
Surrey KT15 2SB, U.K.
Phone: (01932) 858266

KYOCERA MITA ITALIA S.P.A.
Via Marconi 8, 20041 Agrate Brianza,
Milano, Italy
Phone: (039) 65641

S.A. KYOCERA MITA BELGIUM N.V.
Hermesstraat 8A 1930 Zaventem, Belgium
Phone: (02) 7209270

KYOCERA MITA FRANCE S.A.R.L.
1 Rue Pelloutier,
77183 Croissy Beaubourg, France
Phone: (1) 60175152

KYOCERA MITA ESPAÑA S.A.
Edificio Mita, Avda. De Manacor Nº 2,
Urb. Parque Rozas, Apartado De Correos 76,
28230 Las Rozas, Madrid, Spain
Phone: 34-91-631-8392

KYOCERA MITA FINLAND OY
Kirvesmiehenkatu 4, 00810 Helsinki,
Finland
Phone: (09) 478 05200

KYOCERA MITA (SCHWEIZ) AG
Hölzliwisen Industriestrasse 28,
8604 Volketswil, Switzerland
Phone: (01) 9461600

KYOCERA MITA DEUTSCHLAND GMBH
Industriestrasse 17, D-61449 Steinbach/TS,
Germany
Phone: (06171) 7005-0

KYOCERA MITA GMBH AUSTRIA
Eduard Kittenberger Gasse 95
A-1230 Wien, Austria
Phone: (01) 86338 210

KYOCERA MITA SVENSKA AB
Siktgatan 2
162 26 Vällingby, Sweden
Phone: (08) 4719999

KYOCERA MITA DANMARK A/S
Industrivej 11, DK-4632 Bjæverskov,
Denmark
Phone: 53671100

KYOCERA MITA PORTUGAL LDA.
CASCAISTOCK-Armazem nº8,
Rua das Fisgas, Alcoitão,
2765 Estoril, Portugal
Phone: 1-4602221

KYOCERA MITA SOUTH AFRICA (PTY) LTD.
Unit 3, "KYALAMI CRESCENT",
KYALAMI BUSINESS PARK,
1685 Midrand, South Africa
Phone: (011) 4663290

KYOCERA MITA AMERICA, INC.

Headquarters:
225 Sand Road, P.O. Box 40008
Fairfield, New Jersey 07004-0008
U.S.A.
Phone: (973) 808-8444

KYOCERA MITA ASIA OCEANIA SALES DIVISION

2-28, 1-chome, Tamatsukuri, Chuo-ku,
Osaka 540-8585, Japan
Phone: (06) 6764-3668

KYOCERA MITA AUSTRALIA PTY. LTD.
P.O. Box 211,
Regents Park Estate Unit 2,
Block V 391 Park Road,
Regents Park N.S.W. 2143, Australia
Phone: 61-2-9645-5100

KYOCERA MITA NEW ZEALAND LTD.
5 Howe Street, Newton, Auckland 1,
P.O. Box 68343,
Auckland, New Zealand
Phone: (09) 377-2088

KYOCERA MITA (THAILAND) CORP., LTD.
9/209 Ratchada-Prachacheun Road,
Bang Sue, Bangkok 10800, Thailand
Phone: (02) 586-0333

KYOCERA MITA SINGAPORE PTE LTD.
121 Genting Lane, 3rd. Level,
Singapore 349572
Phone: 65-7418733

KYOCERA MITA HONG KONG LIMITED.
11/F., Mita Centre,
552-566 Castle Peak Road,
Tsuen Wan, New Territories,
Hong Kong
Phone: 852-2423-2163

KYOCERA MITA CORPORATION

2-28, 1-chome, Tamatsukuri, Chuo-ku,
Osaka 540-8585, Japan
Phone: (06) 6764-3555
Fax: (06) 6764-3981

KYOCERA and mita are registered trade marks of KYOCERA CORPORATION and KYOCERA MITA CORPORATION.

Printed in Holland
DC-2060/2560 1AH