mita®

PLAIN PAPER COPIER

DC-5090

On-line parts catalogue

PARTS LIST

Published in Aug.'97
84367120

DC-5090

NOTE

1. Indicate parts number and machine model when placing an order.

eg.	Parts Number	Parts Name	Machine Model	Cycle	Quantity
	36704010	UPPER FRONT COVER	DC-5090	50Hz	1

2. Service calls and freight will be charged separately.

3. Symbols in the "Parts Number" column.

- Parts with "•" are component parts or sub-assemblies of the assembly appearing immediately above them.

eg.	Parts Number	Parts Name	Parts Number	Parts Name
	36700620	CASSETTE ASS'Y(EUR)	•66007120	SPRING,CURSOR C
			•36707410	UPPER COVER,CASSETTE

4. See the last page of this parts list for the classification of the screws in the illustrations.

Parts List

DC-5090

CONTENTS

FIG.1 EXTERIOR COVERS · · · · · 2
FIG.2 FRAMES · · · · · 4
FIG.3 CASSETTE(A4,A4R) · · · · · 6
FIG.4 DECK UNIT I · · · · · 8
FIG.5 DECK UNIT II · · · · · 10
FIG.6 DECK UNIT III · · · · · 12
FIG.7 PAPER FEED-IN SECTION I · · · · · 14
FIG.8 PAPER FEED-IN SECTION II · · · · · 16
FIG.9 PAPER FEED-IN SECTION III · · · · · 18
FIG.10 PAPER FEED-IN SECTION IV · · · · · 20
FIG.11 PAPER CONVEYING SECTION I · · · · · 22
FIG.12 PAPER CONVEYING SECTION II · · · · · 24
FIG.13 ORIGINAL SET SECTION · · · · · 26
FIG.14 OPTICAL SECTION I · · · · · 28
FIG.15 OPTICAL SECTION II · · · · · 30
FIG.16 IMAGE FORMATION SECTION I · · · · · 32
FIG.17 IMAGE FORMATION SECTION II · · · · · 34
FIG.18 DEVELOPING SECTION I · · · · · 36
FIG.19 DEVELOPING SECTION II · · · · · 38
FIG.20 TONER HOPPER SECTION · · · · · 40
FIG.21 CLEANING SECTION I · · · · · 42
FIG.22 CLEANING SECTION II · · · · · 44
FIG.23 FIXING SECTION I · · · · · 46
FIG.24 FIXING SECTION II · · · · · 48
FIG.25 DRIVING, COOLING SECTION I · · · · · 50
FIG.26 DRIVING, COOLING SECTION II · · · · · 52
FIG.27 DRIVING, COOLING SECTION III · · · · · 54
FIG.28 DUPLEX UNIT I · · · · · 56
FIG.29 DUPLEX UNIT II · · · · · 58
FIG.30 DUPLEX UNIT III · · · · · 60
FIG.31 REVERSING SECTION · · · · · 62
FIG.32 PAPER EJECT SECTION · · · · · 64
FIG.33 ELECTRICAL COMPONENTS I · · · · · 66
FIG.34 ELECTRICAL COMPONENTS II · · · · · 70
FIG.35 ELECTRICAL COMPONENTS III · · · · · 74
FIG.36 EXTERIOR COVERS · · · · · 76
FIG.37 TABLE SECTION · · · · · 78
FIG.38 PAPER FEED-IN SECTION I · · · · · 80
FIG.39 PAPER FEED-IN SECTION II · · · · · 82
FIG.40 PAPER CONVEYING SECTION · · · · · 84
FIG.41 PAPER EJECT SECTION · · · · · 86
FIG.42 DRIVING, ELECTRICAL SECTION · · · · · 88
FIG.43 PARTITION SECTION · · · · · 90
FIG.44 ELECTRICAL COMPONENTS · · · · · 92
FIG.45 ACCESSORIES & SERVICE PARTS · · · · · 94

INDEX · · · · · 96

FIG. 1 EXTERIOR COVERS 367/183-1

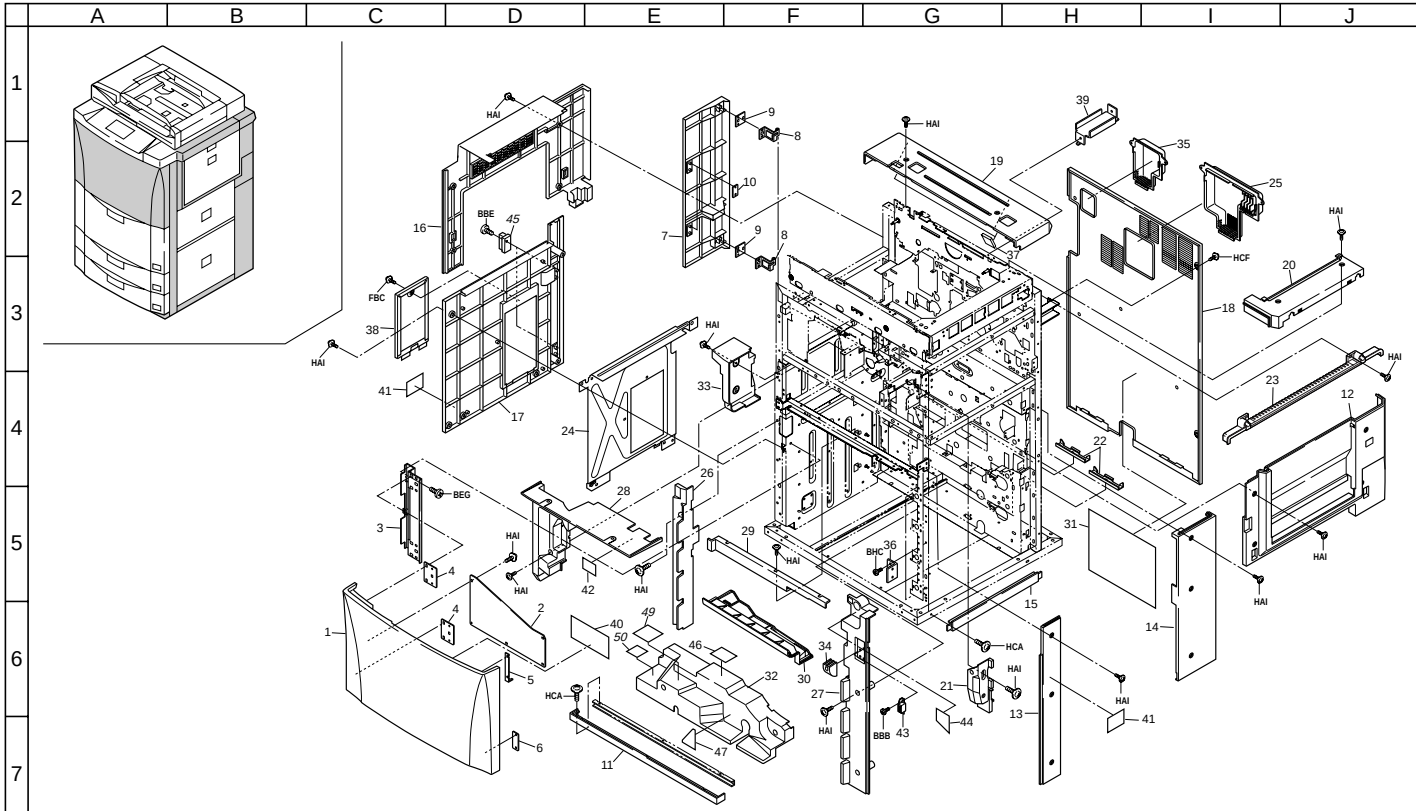

FIG. 1 EXTERIOR COVERS

Ref. No.	Part. No.	Description	Quantity 230V	Quantity 240V
1	36704010	UPPER FRONT COVER	1	1
2	36704020	UPPER FRONT POCKET,COVER	1	1
3	36704030	FRONT HINGE,COVER	1	1
4	36704200	FRONT MOUNT,COVER HINGE	2	2
5	36704330	PROJECTION,SAFETY SWITCH	1	1
6	36704340	FRONT PROJECTION,COVER MAGNET	1	1
7	36704120	LOWER REAR LEFT COVER	1	1
8	36704210	LOWER REAR LEFT HINGE,COVER	2	2
9	36704220	LOWER REAR LEFT MOUNT,COVER HINGE	2	2
10	36704350	LEFT PROJECTION,COVER MAGNET	2	2
11	36704050	LOWER FRONT COVER	1	1
12	36704060	RIGHT COVER,MIDDLE	1	1
13	36704070	LOWER FRONT RIGHT COVER	1	1
14	36704080	LOWER REAR RIGHT COVER	1	1
15	36704090	LOWER RIGHT COVER	1	1
16	36704100	LEFT COVER,MIDDLE	1	1
17	36704110	LOWER LEFT COVER	1	1
18	36704130	REAR COVER	1	1
19	36704140	UPPER REAR COVER	1	1
20	36704150	UPPER RIGHT COVER	1	1
21	36704450	RIGHT COVER,IMAGE FORMATION	1	1
22	36704280	REAR MOUNT B,COVER	2	2
23	36704310	UPPER RIGHT COVER B	1	1
24	36704320	SHIELD,MAIN PCB	1	1
25	36704360	REAR SLIT,COVER	1	1
26	36704370	LOWER LEFT INNER COVER	1	1
27	36704380	LOWER RIGHT INNER COVER	1	1
28	36704390	UPPER INNER COVER	1	1
29	36704400	INNER COVER,MIDDLE	1	1
30	36704410	LOWER COVER,IMAGE FORMATION	1	1
31	36705120	LABEL SIM (EXP)	1	1
32	36704430	COVER,TRANSFER CONVEYING	1	1
33	36704440	LEFT COVER,IMAGE FORMATION	1	1
34	36704460	UPPER FRONT FEED GUIDE,COVER	1	1
35	36704470	REAR SLIT B,COVER	1	1
36	36704490	LOWER FRONT RIGHT MOUNT,COVER	3	3
37	36704500	COVER,RDH ADJUSTMENT	2	2
38	36704510	COVER,ROM	1	1
39	36704540	MIDDLE MOUNT,REAR COVER	1	1
40	36705130	LABEL,JAM REMOVEMENT PAPER FEED	1	1
41	67505110	LABEL,STOPPER	2	2
42	67805200	LABEL,ROLL HEATER	1	1
43	71804400	MAGNET CATCHER	1	1
44	36705010	LABEL,FEED OPERATION	1	1
45	62207620	MAGNET,FEED SHIFT	*2*	*2*
46	67305310	CAUTION LABEL,HV	1	1
47	36705040	LABEL,CONVEYING OPERATION	1	1
49	*36505050*	*LABEL,TRANSFER BELT*	*1*	*1*
50	*19605071*	*COUTION LABEL,TEMPERATURE L(EXP)*	*1*	*1*

• Parts with "•" are component parts or sub-assemblies of the assembly appearing immediately above them.

• Parts with "• •" are component parts or sub-assembly with "•" appearing immediately above them.

FIG. 2 FRAMES

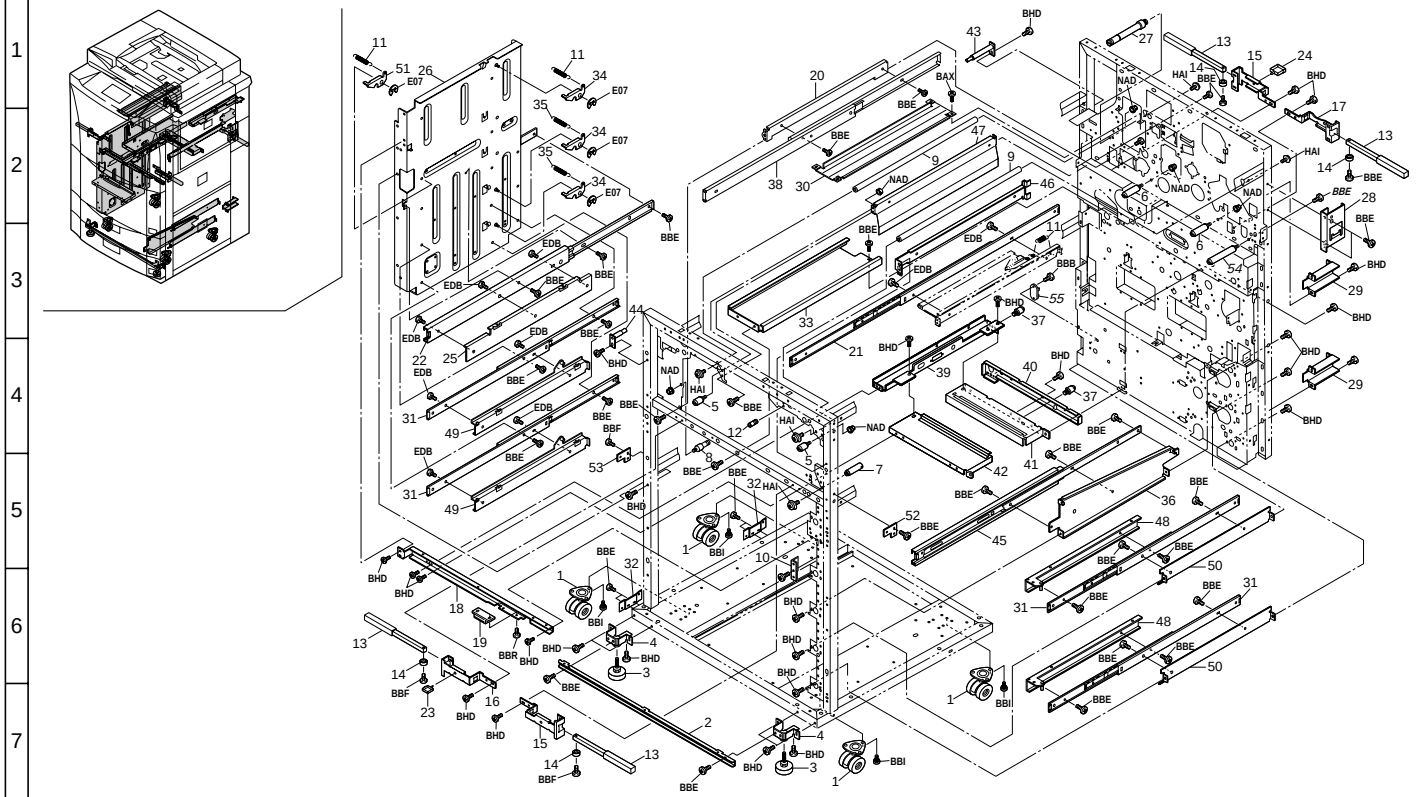

FIG. 2 FRAMES

367/183-1

Ref. No.	Part. No.	Description	Quantity 230V	Quantity 240V
1	36702180	CASTER	4	4
2	36704300	LOWER FRONT MOUNT,COVER	1	1
3	66502120	BOLT,LEVEL	2	2
4	36702270	MOUNT,LEVEL BOLT	2	2
5	36708290	FRONT PIN,IMAGE FORMATION POSITIONING	2	2
6	36716680	PIN,CONVEYING POSITIONING	2	2
7	36707250	FRONT RETAINING PIN,BYPASS	1	1
8	36721370	FRONT PIN,FEED SHIFT UNIT SUPPORT	1	1
9	36702200	SHAFT,SCANNER	2	2
10	36706210	MOUNT 3000,FEED	1	1
11	33902160	SPRING,CASSETTE LOCK	3	3
12	48020704	SET SCREW (4), CLUTCH	1	1
13	74302310	HANDLE	4	4
14	48627404	COLLAR,MAT	4	4
15	36702150	MOUNT A,HANDLE	2	2
16	36702160	MOUNT B,HANDLE	1	1
17	36702170	RIGHT REAR MOUNT,HANDLE	1	1
18	36706640	FRONT STAY,DECK FEED	1	1
19	36707740	MAGNET,DECK	1	1
20	36716020	LEFT MOUNT,SLIDER	1	1
21	36708260	SLIDER,IMAGE FORMATION	1	1
22	36707750	SLIDER,DECK	1	1
23	M2109230	WIRE SADDLE,LWS-3S(KITAGAWA)	1	1
24	M2109210	LOCKING WIRE SADDLE,LWS-8S-2.5W	1	1
25	36707810	LEFT MOUNT,DECK	1	1
26	36707620	LEFT MOUNT,CASSETTE RAIL (EXP)	1	1
27	36721380	UPPER REAR PIN,FEED SHIFT UNIT SUPPORT	1	1
28	36726110	MOUNT,KEY COUNTER	1	1
29	36704260	REAR MOUNT,COVER	2	2
30	36723010	PARTITION,MACHINE INSIDE COOLING	1	1
31	66107083	SLIDER,CASSETTE	4	4
32	36704270	LOWER LEFT MOUNT,COVER	2	2
33	36716720	LOWER STAY,CONVEYING	1	1
34	33902120	HOOK,CASSETTE RETAINING	3	3
35	33902130	SPRING,CASSETTE HOOK	2	2
36	36707630	RIGHT MOUNT,CASSETTE RAIL	1	1
37	75713040	LENS UNIT POSITIONING PIN	2	2
38	36716830	SLIDER,IMAGE FORMATION	1	1
39	36706650	LEFT STAY,DECK FEED	1	1
40	36706680	REAR FRAME,DECK FEED	1	1
41	36706670	REAR RAIL,DECK FEED	1	1
42	36706660	FRONT RAIL,DECK FEED	1	1
43	36721140	REAR FULCRUM PLATE,EJECT UNIT SUPPORT	1	1
44	36721130	FRONT FULCRUM PLATE,EJECT UNIT SUPPORT	1	1
45	36707750	SLIDER,DECK	1	1
46	36708280	RIGHT MOUNT,IMAGE FORMATION SLIDER	1	1
47	36708270	LEFT MOUNT,IMAGE FORMATION SLIDER	1	1
48	36707880	RIGHT MOUNT,RAIL	2	2
49	33902070	LEFT MOUNT,RAIL	2	2
50	33902060	RIGHT REINFORCEMENT	2	2
51	36707860	HOOK,DECK RETAINING	1	1
52	36704230	MOUNT,COVER	1	1
53	36704240	MOUNT B,COVER	1	1
54	*36706230*	*RETAINING PIN,UNIT*	*1*	*1*
55	*67827331*	*SSR 230*	*1*	*1*

• Parts with "•" are component parts or sub-assemblies of the assembly appearing immediately above them.

• Parts with "• •" are component parts or sub-assembly with "•" appearing immediately above them.

FIG. 3 CASSETTE(A4,A4R)

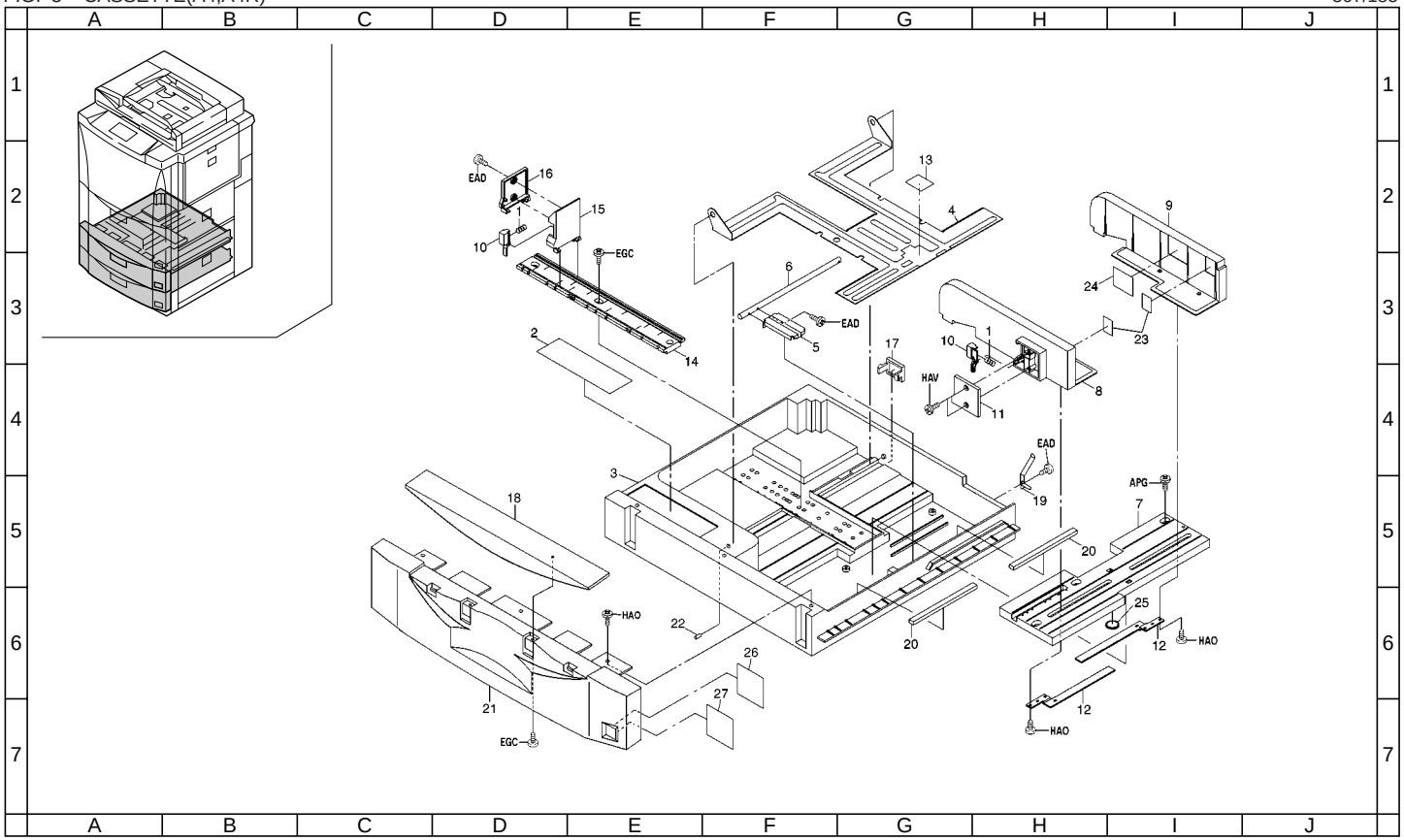

FIG. 3 CASSETTE(A4,A4R)

Ref. No.	Part. No.	Description	Quantity 230V	Quantity 240V
	36700620	CASSETTE ASS'Y (EUR)	2	2
1	•66007120	SPRING,CURSOR C	4	4
2	•36705270	LABEL,CASSETTE OPERATION	2	2
3	•33907012	CASSETTE	2	2
4	•33907020	WORK PLATE,CASSETTE	2	2
5	•33907030	WORK PLATE,LIFT CASSETTE	2	2
6	•33968220	CASSETTE LIFT SHAFT ASS'Y	2	2
7	•33907050	RAIL A,CURSOR	2	2
8	•33907060	CURSOR A,CASSETTE	2	2
9	•33907070	CURSOR B,CASSETTE	2	2
10	•33907080	LEVER,CASSETTE CURSOR	4	4
11	•33907090	LID A,CURSOR	2	2
12	•33907100	RACK,CASSETTE	4	4
13	•66107100	PAD,CASSETTE	2	2
14	•33907120	RAIL C,CURSOR	2	2
15	•33907130	CURSOR C,CASSETTE	2	2
16	•33907140	LID C,CURSOR	2	2
17	•33907180	DETECTION PLATE,CASSETTE	2	2
18	•36707410	UPPER COVER,CASSETTE	2	2
19	•33907190	GROUND PLATE,CASSETTE	2	2
20	•33907210	CUSHION,CASSETTE WORK PLATE	4	4
21	•36707420	LOWER COVER,CASSETTE	2	2
22	•66007310	PIN,CASSETTE WORK PLATE	2	2
23	•60907170	CUSHION,CASSETTE R	4	4
24	•61705110	LABEL,PAPER UPPER LIMIT	2	2
25	•65914120	GEAR 18,IDLE DEVELOPING	2	2
26	36705240	LABEL,PAPER (METRIC)	2	2
27	33907220	ORIGINAL SIZE INDICATOR,SIZE (METRIC)	2	2

• Parts with "•" are component parts or sub-assemblies of the assembly appearing immediately above them.

• Parts with "• •" are component parts or sub-assembly with "•" appearing immediately above them.

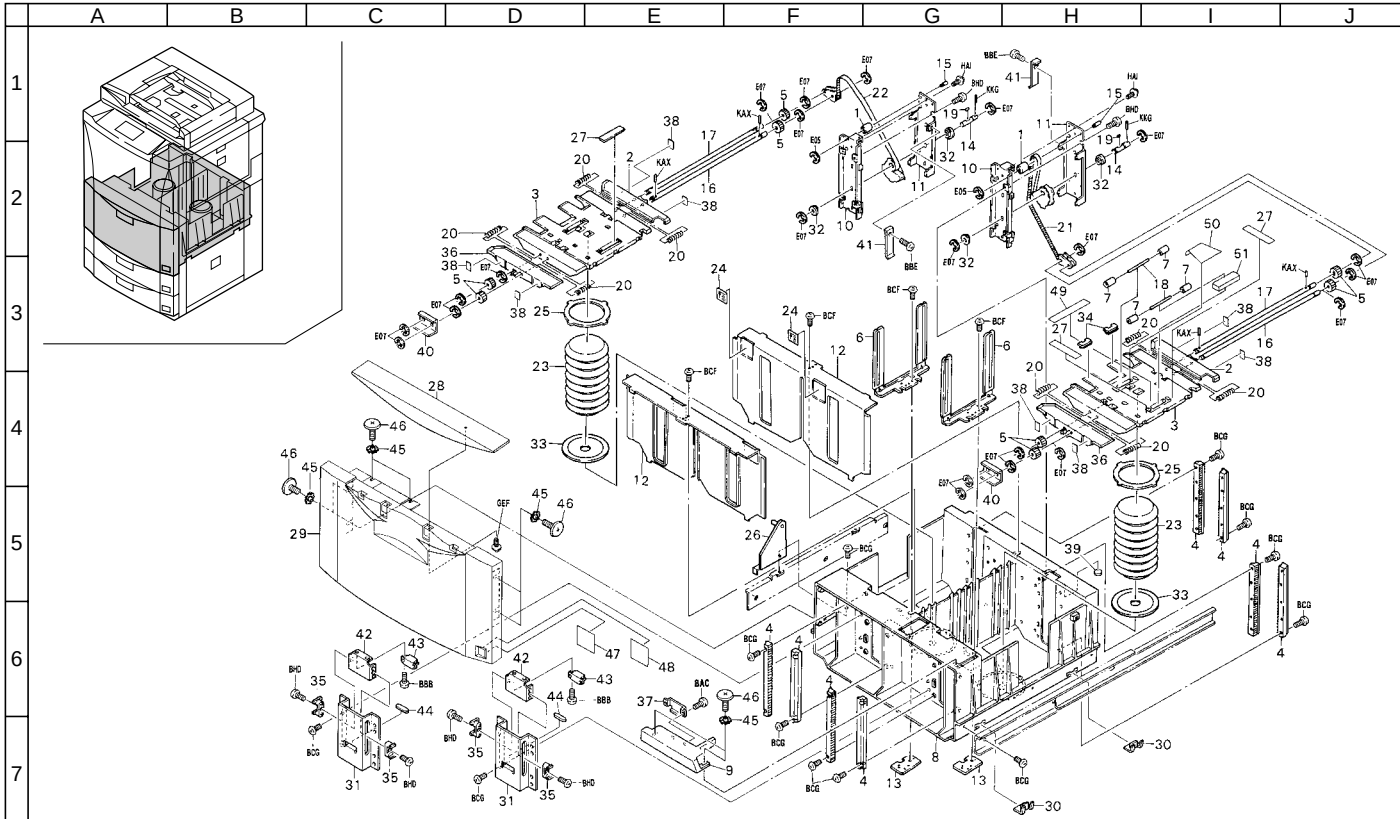

FIG. 4 DECK UNIT I

Ref. No.	Part. No.	Description	Quantity 230V	Quantity 240V
1	54106020	LIFT PULLEY	2	2
2	54106030	SIDE LIFTER	2	2
3	54106040	MAIN LIFTER	2	2
4	54106050	GUIDE RACK LIFTER	8	8
5	54106060	GRAR 1.0-24	8	8
6	53310320	PAPR REAR GUIDE ASS'Y	2	2
7	54106220	GUIDE PULLEY	4	4
8	54106270	CASSETTE	1	1
9	54104080	ADJUSTING PLATE,CASSETTE	1	1
10	54106290	LIFTER DRIVE BKT1	2	2
11	54106300	LIFTER DRIVE BKT2	2	2
12	54106310	GUIDE,PAPER SIDE	2	2
13	54106570	REAR GUIDE BASE PLATE	2	2
14	54106580	CAM SHAFT	2	2
15	54106590	SHAFT,DRIVE FULCLUM	2	2
16	54106600	SHAFT-SUB LIFT	2	2
17	54106610	SHAFT-MAIN LIFT	2	2
18	54106730	SHAFT-PICK PULLEY	2	2
19	54106740	PARALLEL KEY 3X3X10	2	2
20	54106840	SP-SIZE	8	8
21	54106930	RIGHT LIFT BELT ASS'Y	1	1
22	54106940	LEFT LIFT BELT ASS'Y	1	1
23	54106950	AIR DAMPER	2	2
24	54106960	UPPER LIMIT LABEL	2	2
25	54107130	DAMPER SUPPORT	2	2
26	36707870	RETAINER,DECK	1	1
27	54106010	RUBBER	3	3
28	36707410	UPPER COVER,CASSETTE	1	1
29	36707430	COVER,DECK	1	1
30	53310100	GROUND PLATE,CASSETTE	2	2
31	53307060	MOUNT,SLIDE GUIDE	2	2
32	54107180	BUSHING 8MM	4	4
33	54107330	DAMPER MAT	2	2
34	54107380	BRIDGE FILM	2	2
35	53307020	SLIDER MG	4	4
36	53310180	FRONT SIDE LIFTER	2	2
37	54107430	PLT MG CATCH	1	1
38	53310220	SIDE LIFTER SHEET	8	8
39	53310140	FOOT	1	1
40	53307040	MOUNT,MG STOPPER	2	2
41	53307080	CAM STOPPER	2	2
42	53307050	MOUNT,MG SLIDER	2	2
43	53310020	SLIDER MG	2	2
44	53310030	RUBBER,SIDE STOPPER	2	2
45	36707830	WASHER,DECK COVER	8	8
46	36707820	RETAINING PIN,DECK COVER	8	8
47	33907220	ORIGINAL SIZE INDICATOR,SIZE (METRIC)	1	1
48	36705240	LABEL,PAPER (METRIC)	1	1
49	53308210	NON-SLIP PAD	1	1
50	53308200	GUIDE FILM	1	1
51	53308190	SPONGE	1	1

• Parts with "•" are component parts or sub-assemblies of the assembly appearing immediately above them.

• Parts with "• •" are component parts or sub-assembly with "•" appearing immediately above them.

FIG. 5 DECK UNIT II

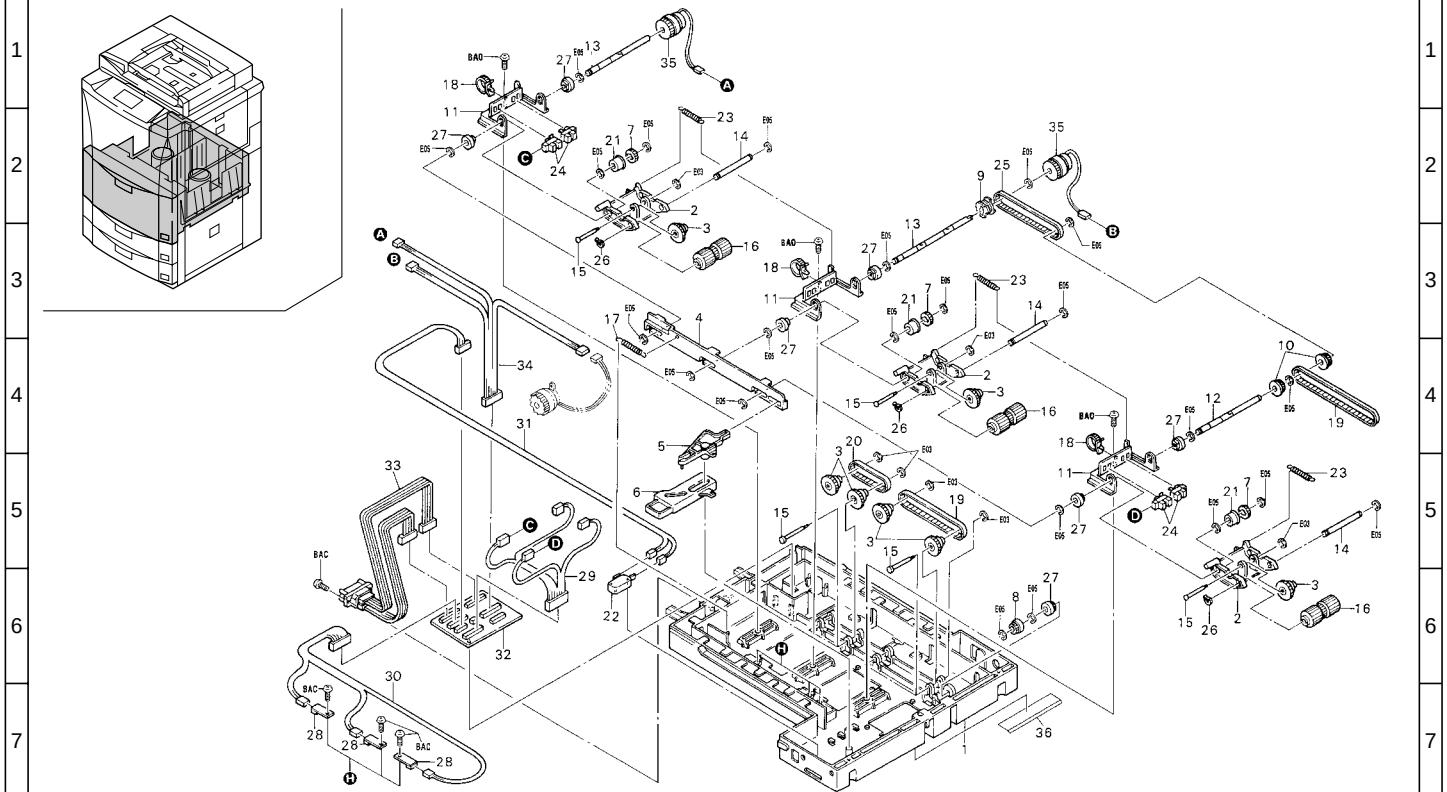

FIG. 5 DECK UNIT II

Ref. No.	Part. No.	Description	Quantity 230V	Quantity 240V
1	54106080	CONVEYING BASE	1	1
2	54106090	PICK ARM	3	3
3	54106100	PULLEY-20 GEAR 0.8-32	7	7
4	54106120	PICK ARM LINK	1	1
5	54106130	LINK ARM	1	1
6	54106140	LINK PUSHER	1	1
7	54106200	GEAR-0.8-20	3	3
8	54106230	GEAR-0.8-16	1	1
9	53310200	PULLEY S3M-18-WF	1	1
10	54106280	PULLEY-S3M-18-OW	2	2
11	54106340	BKT-SENSOR	3	3
12	54106670	SHAFT-PICK UP ARM B	1	1
13	54106680	SHAFT-PICK UP ARM A	2	2
14	54106690	SHAFT-PICK ROLLER	3	3
15	54106700	SHAFT-TWIN GEAR	7	7
16	53310300	PICK-UP ROLLER	3	3
17	54106760	SP-PICK ARM LINK	1	1
18	M2107200	BAND,SG-110 V0(KITAGAWA)	3	3
19	54106820	BELT-B60-S3M-234	2	2
20	54106830	BELT-B60-S3M-144	1	1
21	54106870	ONE-WAY DRUM	3	3
22	54126180	SAFETY SWITCH	1	1
23	54106890	SP-PICK B	3	3
24	54126170	PI SENSOR	4	4
25	54107170	BLT-B60-S3M-258	1	1
26	59606770	CLIP-5	3	3
27	54107190	BUSHING 6MM	7	7
28	54126000	SENSOR51	3	3
29	54126030	LS HARNESS ASS'Y	1	1
30	54126040	PPS1 HARNESS ASS'Y	1	1
31	53308180	ASM-DOOR85	1	1
32	54128030	JUNCTION PCB ASS'Y	1	1
33	54126070	JUNCTION HARNESS ASS'Y	1	1
34	53310060	CL3 HARNESS ASS'Y	1	1
35	54126110	CLUTCH-BJ-2.6-NO.2	2	2
36	53308160	CONVEYING BASE FILM	1	1

• Parts with "•" are component parts or sub-assemblies of the assembly appearing immediately above them.

• Parts with "• •" are component parts or sub-assembly with "•" appearing immediately above them.

FIG. 6 DECK UNIT III

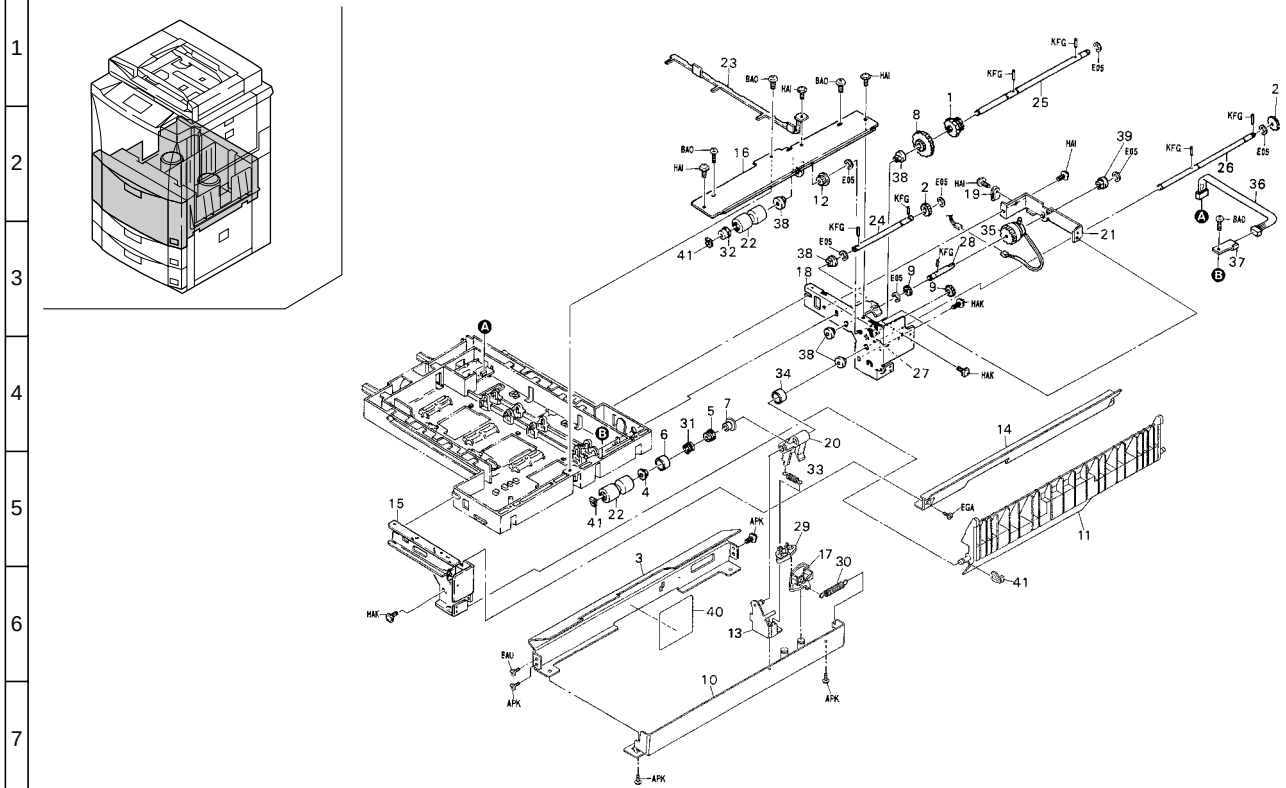

FIG. 6 DECK UNIT III

Ref. No.	Part. No.	Description	Quantity 230V	Quantity 240V
1	54106070	GER 0.8-35-1-20	1	1
2	54106110	GEAR 0.8-26	2	2
3	53308060	PAPER GUIDE-D 85	1	1
4	54106150	TORQUE LIMITER DRUM	1	1
5	54106160	TORQUE LIMITER ARBOR	1	1
6	54106170	TORQUE LIMITER COVER	1	1
7	53308220	ONE-WAY DRUM	1	1
8	54106190	GEAR-0.8-50-20	1	1
9	54106200	GEAR-0.8-20	2	2
10	53308240	ASM-PG-L	1	1
11	53308010	PG-A	1	1
12	53310160	PULLEY S3M-16	1	1
13	53308230	ASM-BKT-B FULCRUM	1	1
14	53308020	PG-R	1	1
15	53308070	FRONT CONVEYING FRAME 85	1	1
16	54106420	PAPER GUIDE-U	1	1
17	53308030	LINK ARM-A	1	1
18	53308080	REAR CONVEYING FRAME 85	1	1
19	M2105040	NYLON CLAMP 6N,NK-6N	1	1
20	53308050	B-AJUSTER SP 85	1	1
21	53308110	BKT-H-GERBOX85	1	1
22	53310310	SEPARETION ROLLER 25B	2	2
23	54106550	SPRING PLATE CONVEYING BASE GROUND	1	1
24	54106620	SHAFT-GEAR-26-16	1	1
25	54106630	SHAFT-NORMAL ROTATION	1	1
26	54106640	SHAFT-TURN OVER	1	1
27	53310230	STUD-PAPER FEED DRIVE	1	1
28	54106660	SHAFT-SEPARATION DRIVE	1	1
29	53308040	LINK ARM-B	1	1
30	53308150	SP-AJUSTMENT LINK 85	1	1
31	54106790	SP-TORQUE LIMITER	1	1
32	54106870	ONE-WAY DRUM	1	1
33	53308140	SP-SEPARATION 85	1	1
34	53308170	BUSH 6X5	1	1
35	54126100	CLUTCH-BJ-2.6-NO.1	1	1
36	54126050	PPS0 HARNESS ASS'Y	1	1
37	54126000	SENSOR51	1	1
38	54107190	BUSHING 6MM	5	5
39	54107200	BUSHING 6MM	1	1
40	54107350	FILM	1	1

Ref. No.	Part. No.	Description	Quantity 230V	Quantity 240V
41	59606770	CLIP-5	3	3

• Parts with "•" are component parts or sub-assemblies of the assembly appearing immediately above them.

• Parts with "• •" are component parts or sub-assembly with "•" appearing immediately above them.

FIG. 7 PAPER FEED-IN SECTION I

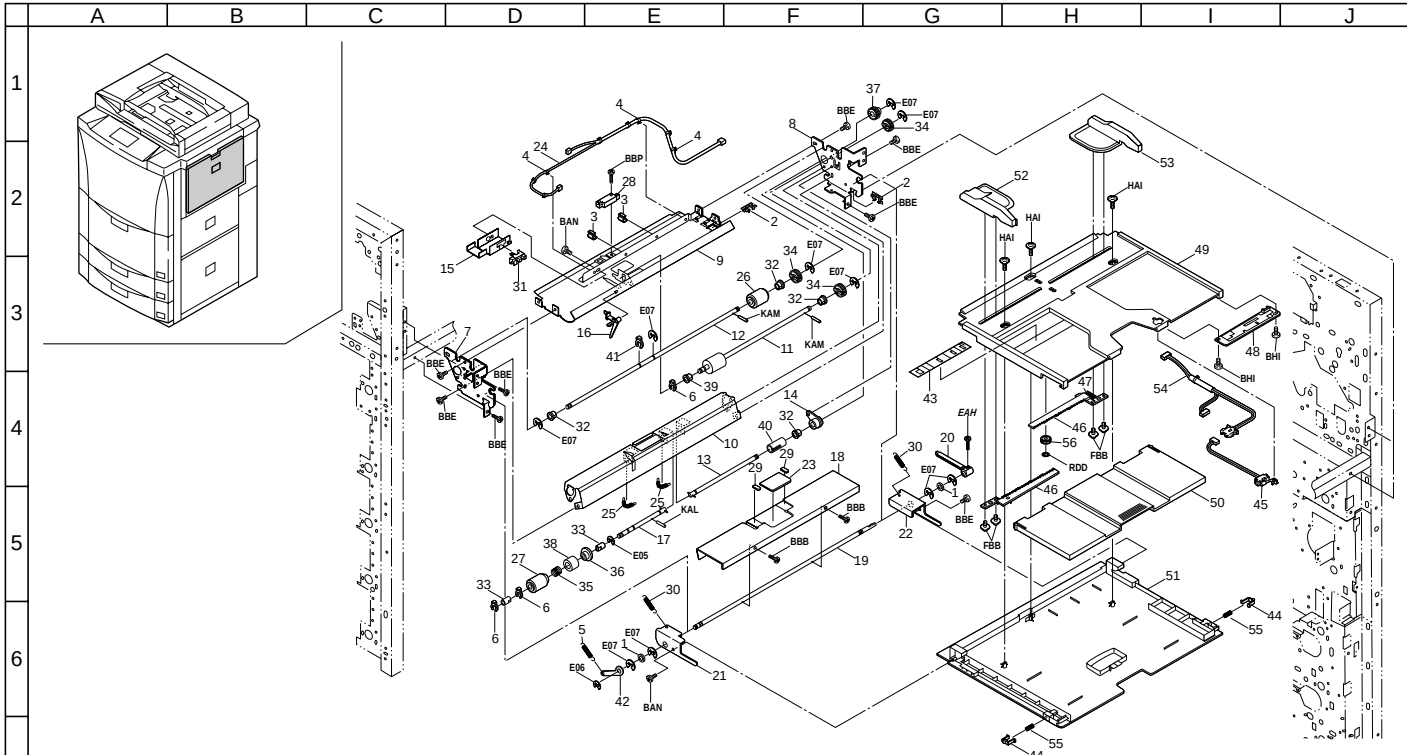

FIG. 7 PAPER FEED-IN SECTION I

Ref. No.	Part. No.	Description	Quantity 230V	Quantity 240V
1	G3001280	BEARING 678ZZ	2	2
2	M2104210	EDGING,EDS-2	2	2
3	M2105720	MINIATURE CLAMP,UAMS-05-2	2	2
4	M2107120	BINDING BAND SG-130	3	3
5	48527327	SPRING LENS GUIDE	1	1
6	33906630	STOPPER 5,RING	3	3
7	36707010	FRONT FRAME,BYPASS	1	1
8	36707020	REAR FRAME,BYPASS	1	1
9	36707030	UPPER GUIDE,BYPASS	1	1
10	36707040	LOWER GUIDE,BYPASS	1	1
11	36707050	ROLLER,SB LEADING FEED	1	1
12	36707060	UPPER SHAFT,SEPARATION	1	1
13	36707070	SHAFT,JOINT	1	1
14	36707080	BUSHING,BYPASS	1	1
15	36707090	MOUNT,PAPER EMPTY	1	1
16	36707100	ACTUATOR,EMPTY SWITCH	1	1
17	36707110	SHAFT,BYPASS LIMITER	1	1
18	36707120	GUIDE,BYPASS LIFT	1	1
19	36707130	SHAFT,BYPASS LIFT	1	1
20	36707140	LEVER,MOVING GUIDE	1	1
21	36707200	FRONT MOUNT,BYPASS TABLE	1	1
22	36707210	REAR MOUNT,BYPASS TABLE	1	1
23	36707260	PAD,BYPASS	1	1
24	36727090	WIRE,BYPASS PAPER FEED	1	1
25	61706470	SPRING,BYPASS SWITCH BACK	2	2
26	61706770	UPPER PULLEY,BYPASS	1	1
27	61706780	LOWER PULLEY,BYPASS	1	1
28	63227020	SWITCH,FEED	1	1
29	63420470	SHEET,BIN	2	2
30	65707510	SPRING,TENSION PAPER FEED	2	2
31	66006350	SWITCH,CASSETTE LIFT	1	1
32	67322230	BUSHING 8	4	4
33	72107160	BUSHING 6,LOWER REGISTRATION ROLLER	2	2
34	72107280	IDLE GEAR 20	3	3
35	72107531	SPRING,LIMITTER	1	1
36	72107710	BOSE,LIMITTER	1	1
37	72107730	ONE-WAY GEAR 20	1	1
38	72707190	COLLAR, LIMITTER	1	1
39	73210450	BUSH, 6	1	1
40	74306520	JOINT,PULLEY DRIVE SHAFT	1	1
41	75706040	STOPRING PAPER FEED PULLEY	1	1
42	77607140	TENSION PLATE FEED GUIDE	1	1
43	66006820	SIZE INDICATOR,BYPASS(METRIC)	1	1
44	33906880	STOPPER,BYPASS TABLE	2	2
45	33906990	SWITCH,BYPASS SIZE DETECTION	1	1
46	33907100	RACK,CASSETTE	2	2
47	33907110	TERMINAL,PAPER SIZE PCB	1	1
48	33928110	SIZE DETECTION PCB	1	1
49	36707150	UPPER TABLE,BYPASS	1	1
50	36707160	INNER TABLE,TABLE BYPASS	1	1
51	36707170	LOWER TABLE,BYPASS	1	1
52	36707180	FRONT CURSOR,BYPASS	1	1
53	36707190	REAR CURSOR,BYPASS	1	1
54	36727380	WIRE,BYPASS UNIT	1	1
55	63516110	SPRING,TRANSFER	2	2
56	65914120	GEAR 18,IDLE DEVELOPING	1	1

• Parts with "•" are component parts or sub-assemblies of the assembly appearing immediately above them.

• Parts with "• •" are component parts or sub-assembly with "•" appearing immediately above them.

FIG. 8 PAPER FEED-IN SECTION II 367/183-1

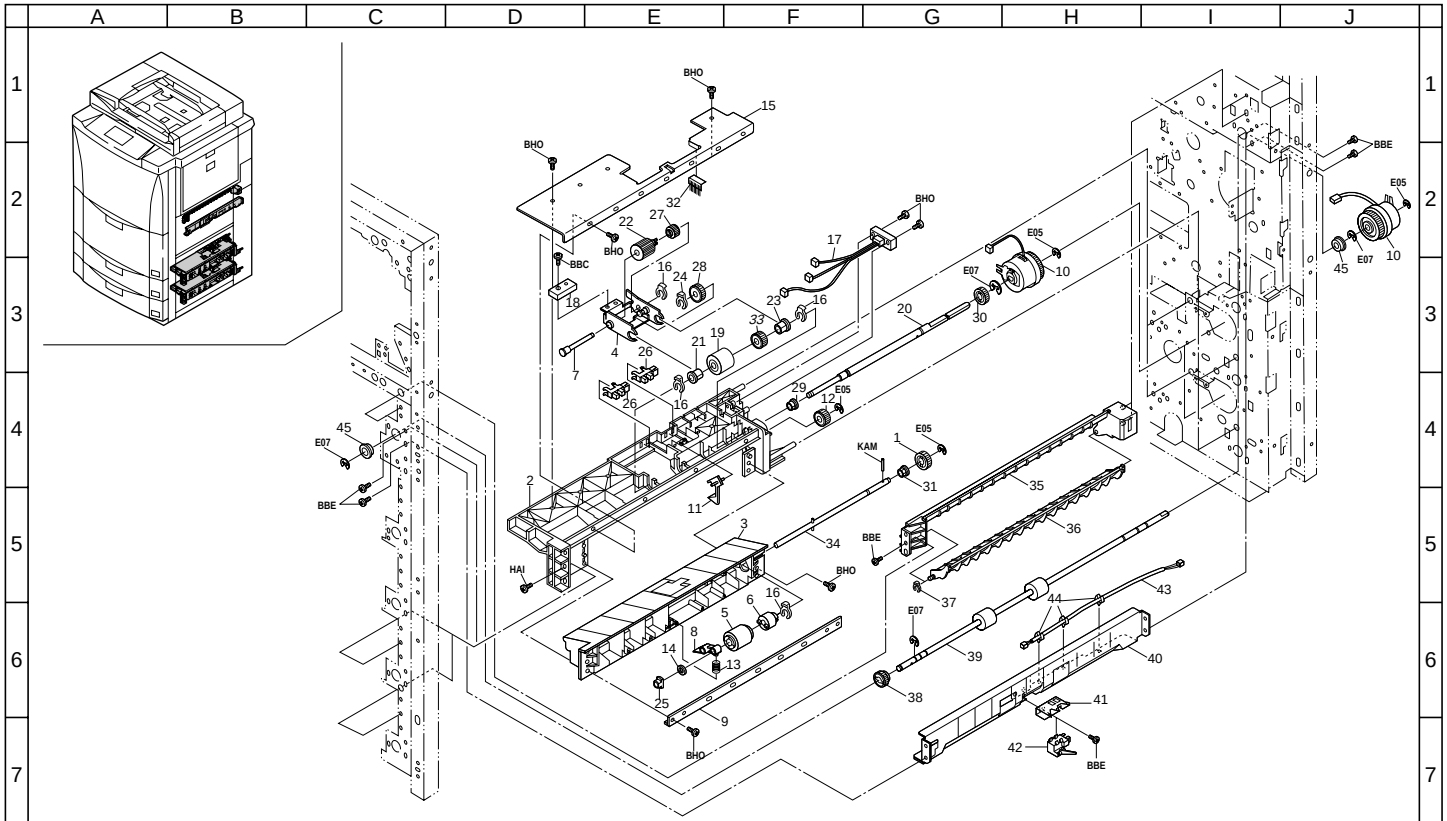

FIG. 8 PAPER FEED-IN SECTION II

367/183-1

Ref. No.	Part. No.	Description	Quantity 230V	Quantity 240V
1	45727501	GEAR,TONER FEED ROLLER	2	2
2	33906012	UPPER HOUSING,PAPER FEED	2	2
3	33906030	LOWER HOUSING,PAPER FEED	2	2
4	33906040	SUPPORT PLATE,LEADING FEED PULLEY	2	2
5	33906060	LOWER PULLEY,PAPER FEED	2	2
6	33906070	TORQUE LIMITER,PAPER FEED	2	2
7	33906080	SHAFT,LEADING FEED PULLEY	2	2
8	33906090	LOWER LEVER,PAPER FEED PULLEY RELEASE	2	2
9	33906100	REINFORCEMENT,PAPER FEED HOUSING	2	2
10	33906110	CLUTCH,PAPER FEED	3	3
11	33906150	ACTUATOR,PAPER EMPTY	2	2
12	33906160	GEAR 16,PAPER FEED	*2*	*2*
13	33906190	LOWER SPRING,PAPER FEED	2	2
14	33906211	VIBRATION INSULATOR,RELEASE LEVER	2	2
15	33906291	UPPER REINFORCEMENT,HOUSING PAPER FEED	2	2
16	33906630	STOPPER 5,RING	8	8
17	33927160	WIRE,PAPER FEED UNIT	2	2
18	36706220	WEIGHT,LEADING FEED PULLEY	2	2
19	36706290	PULLEY,PAPER FEED	2	2
20	36706300	SHAFT,PAPER FEED	2	2
21	36706310	BUSHING,PAPER FEED	2	2
22	60906161	PULLEY,PICK-UP	2	2
23	60907880	BUSHING,BYPASS SHAFT	2	2
24	63511220	STOP RING,4	2	2
25	63806290	BUSHING,6	2	2
26	66006350	SWITCH,CASSETTE LIFT	4	4
27	66014120	GEAR 14,MAGNET ROLLER	2	2
28	66022190	GEAR,21 DEVELOPING	2	2
29	67322230	BUSHING 8	2	2
30	71815110	IDLE GEAR 18,SUB UNIT	2	2
31	73210450	BUSH, 6	2	2
32	75817010	STATIC BRUSH FRONT TRANSFER	2	2
33	*75207370*	*GEAR16 ORIGINAL FEEDBACK*	*2*	*2*
34	33968180	UPPER PAPER FEED SHAFT ASS'Y	2	2
35	36706270	UPPER GUIDE,DUPLEX FEED	1	1
36	36706280	LOWER GUIDE,DUPLEX FEED	1	1
37	63511220	STOP RING,4	1	1
38	29806490	GEAR 16T	1	1
39	36706200	ROLLER A,VERTICAL CONVEYING	1	1
40	36706400	LEFT GUIDE,VERTICAL CONVEYING	1	1
41	33906620	MOUNT BASE,PAPER FEED SWITCH	1	1
42	33906140	SWITCH,VERTICAL CONVEYING	1	1
43	33927180	WIRE,VERTICAL CONVEYING JUNCTION	1	1
44	M2105720	MINIATURE CLAMP,UAMS-05-2	3	3
45	33906610	BEARING,FEED	2	2

• Parts with "•" are component parts or sub-assemblies of the assembly appearing immediately above them.

• Parts with "• •" are component parts or sub-assembly with "•" appearing immediately above them.

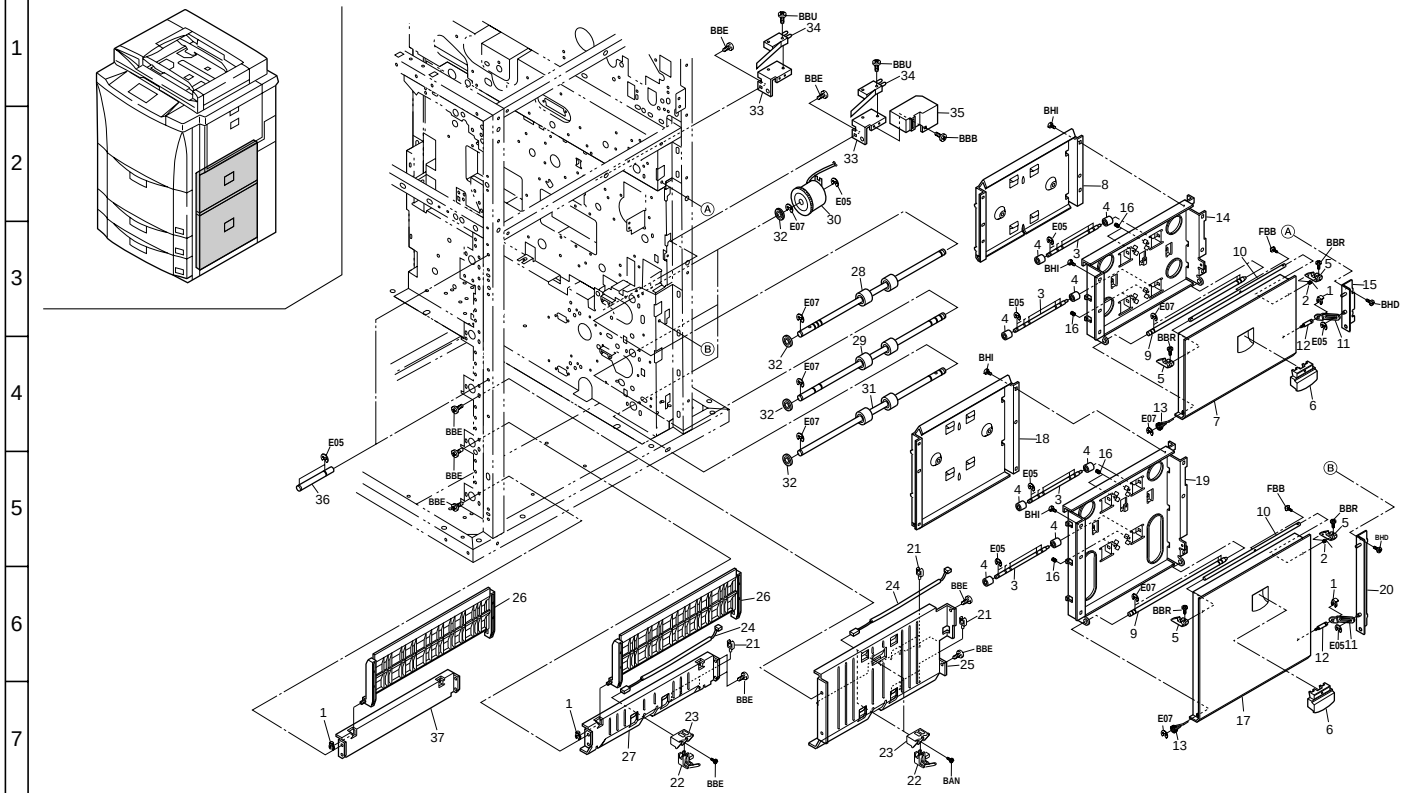
A
B
C
D
E
F
G
H
I
J
1
2
3
4
5
6
7
BBU
BBE
BBB
BHI
BBR
FBB
BHD
BAN
E05
E07

FIG. 9 PAPER FEED-IN SECTION III

Ref. No.	Part. No.	Description	Quantity 230V	Quantity 240V
1	33906630	STOPPER 5,RING	4	4
2	33906640	RIGHT SPRING,FEED RELEASE	2	2
3	33906651	SHAFT,FEED PULLEY	4	4
4	33906660	RIGHT PULLEY,FEED	8	8
5	33906670	RIGHT HOOK,FEED RELEASE	4	4
6	33906680	RIGHT HANDLE,FEED RELEASE	2	2
7	36706710	UPPER COVER,VERTICAL CONVEYING	1	1
8	36706730	UPPER GUIDE,VERTICAL CONVEYING	1	1
9	36706750	SHAFT,VERTICAL CONVEYING FULCRUM	2	2
10	36706760	SHAFT,VERTICAL CONVEYING RELEASE	2	2
11	36706770	SUPPORT PLATE,VERTICAL CONVEYING RELEASE	2	2
12	36706780	PIN,VERTICAL CONVEYING RELEASE	2	2
13	36706800	SPRING,VERTICAL CONVEYING DAMPER	2	2
14	36706810	UPPER MOUNT,VERTICAL CONVEYING GUIDE	1	1
15	36706850	UPPER REAR FRAME,VERTICAL CONVEYING	1	1
16	66106610	SPRING,FEED	8	8
17	36706720	LOWER COVER,VERTICAL CONVEYING	1	1
18	36706740	LOWER GUIDE,VERTICAL CONVEYING	1	1
19	36706820	LOWER MOUNT,VERTICAL CONVEYING GUIDE	1	1
20	36706860	LOWER REAR FRAME,VERTICAL CONVEYING	1	1
21	M2105720	MINIATURE CLAMP,UAMS-05-2	9	9
22	33906140	SWITCH,VERTICAL CONVEYING	3	3
23	33906620	MOUNT BASE,PAPER FEED SWITCH	3	3
24	33927180	WIRE,VERTICAL CONVEYING JUNCTION	3	3
25	36706190	LEFT GUIDE B,VERTICAL CONVEYING	1	1
26	33906700	GUIDE,CONFLUENCE	2	2
27	33906780	LEFT GUIDE,FEED	1	1
28	36706200	ROLLER A,VERTICAL CONVEYING	1	1
29	36706260	ROLLER B,VERTICAL CONVEYING	1	1
30	33906110	CLUTCH,PAPER FEED	3	3
31	33906730	ROLLER C,FEED	1	1
32	33906610	BEARING,FEED	6	6
33	36706790	MOUNT,VERTICAL CONVEYING RELEASE SWITCH	2	2
34	61727540	INTERLOCK SWITCH B	2	2
35	36706830	COVER,VERTICAL CONVEYING RELEASE SWITCH	1	1
36	36706840	PIN,VERTICAL CONVEYING HOOK	2	2
37	68202140	LOWER RIGHT STAY	1	1

• Parts with "•" are component parts or sub-assemblies of the assembly appearing immediately above them.

• Parts with "• •" are component parts or sub-assembly with "•" appearing immediately above them.

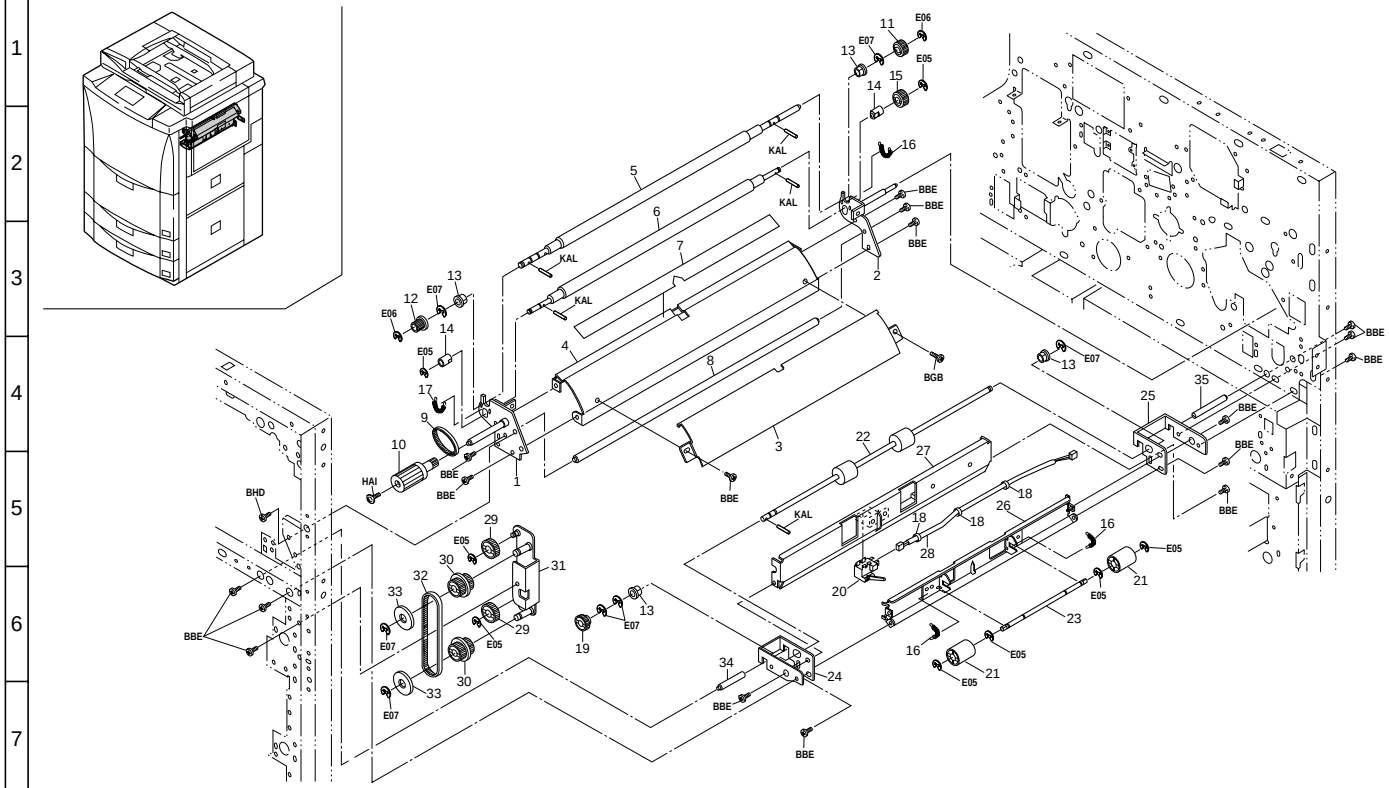
A B C D E F G H I J
1 2 3 4 5 6 7
KAL
BBE
BGB
E05
E06
E07
HAI
BHD

FIG. 10 PAPER FEED-IN SECTION IV

Ref. No.	Part. No.	Description	Quantity	
			230V	240V
1	36706010	UPPER FRONT FRAME,FEED	1	1
2	36706020	UPPER REAR FRAME,FEED	1	1
3	36706030	UPPER RIGHT GUIDE,FEED	1	1
4	36706040	UPPER LEFT GUIDE,FEED	1	1
5	36706050	UPPER ROLLER,FEED	1	1
6	36706060	LOWER ROLLER,FEED	1	1
7	36706180	FILM,FEED	1	1
8	36706320	UPPER STAY,FEED	1	1
9	36706410	BELT,FEED HANDLE	1	1
10	36706420	HANDLE,FEED	1	1
11	36706530	UPPER GEAR 16,REGISTRATION	1	1
12	65722030	PULLEY 22,FEED	1	1
13	67322230	BUSHING 8	4	4
14	72107160	BUSHING 6,LOWER REGISTRATION ROLLER	2	2
15	73210370	GEAR 18,LOOP	1	1
16	77706461	PRESSING SPRING	3	3
17	77706492	FRONT PRESSING SPRING	1	1
18	M0207000	BINDING BAND,KB-100-1	3	3
19	29806490	GEAR 16T	1	1
20	33906140	SWITCH,VERTICAL CONVEYING	1	1
21	33906660	RIGHT PULLEY,FEED	2	2
22	36706140	LEFT ROLLER,FEED	1	1
23	36706150	SHAFT,FEED PULLEY	1	1
24	36706330	LOWER FRONT FRAME,FEED	1	1
25	36706340	LOWER REAR FRAME,FEED	1	1
26	36706350	LOWER RIGHT GUIDE,FEED	1	1
27	36706360	LOWER LEFT GUIDE,FEED	1	1
28	36727390	WIRE,FEED	1	1
29	29816080	GEAR 20,IDLE	2	2
30	33522090	GEAR 22/32,FEED	2	2
31	36706370	MOUNT,FEED DRIVE	1	1
32	36706390	BELT,FEED DRIVE	1	1
33	72407330	PULLEY,PF GEAR 30	2	2
34	36706230	RETAINING PIN,UNIT	1	1
35	36706240	REAR RETAINING PIN,FEED	1	1

• Parts with "•" are component parts or sub-assemblies of the assembly appearing immediately above them.

• Parts with "• •" are component parts or sub-assembly with "•" appearing immediately above them.

FIG. 11 PAPER CONVEYING SECTION I

367/183-1

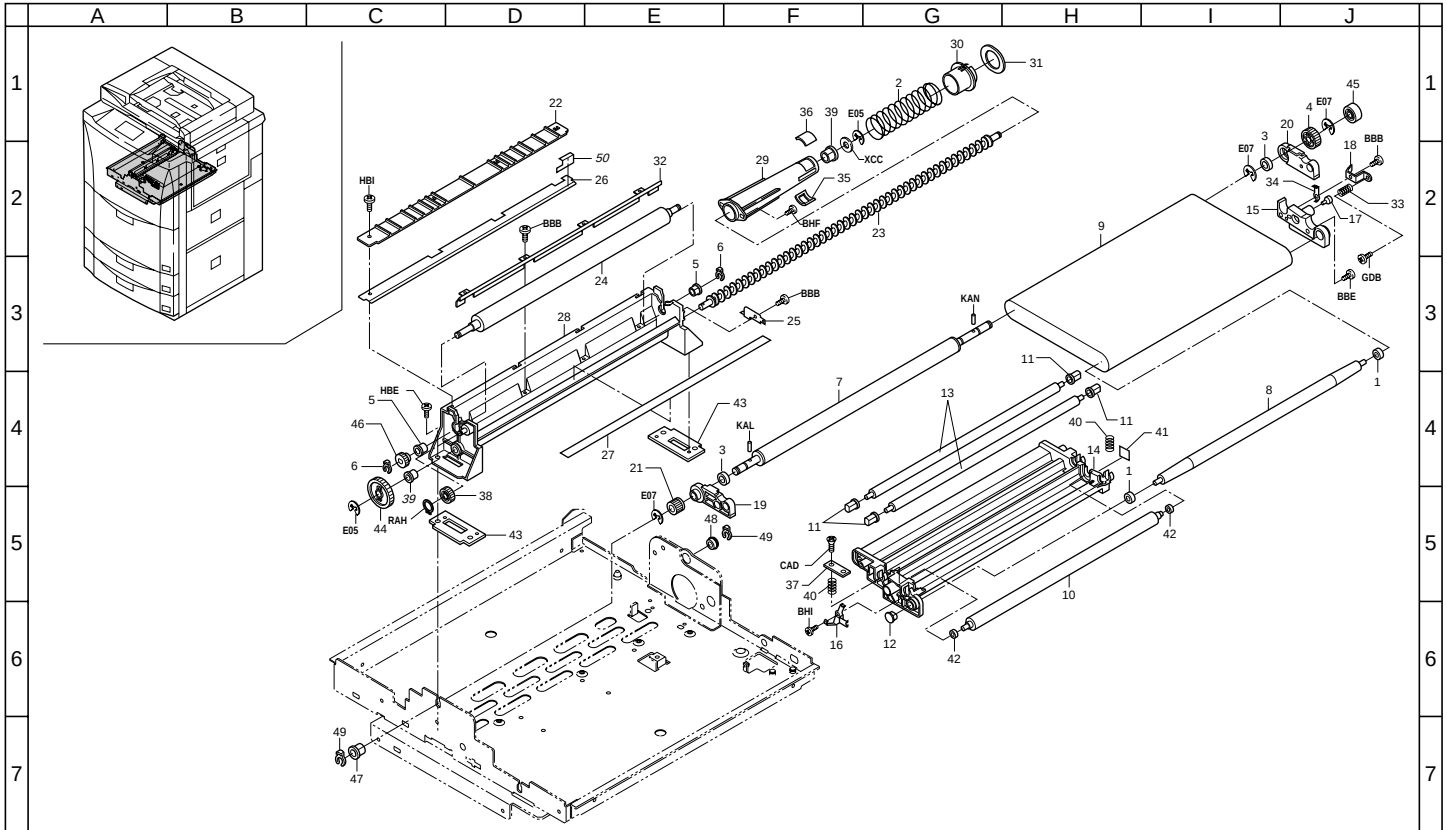

FIG. 11 PAPER CONVEYING SECTION I

Ref. No.	Part. No.	Description	Quantity 230V	Quantity 240V
1	G3001360	BEARING 686ZZ	2	2
2	48527520	SPRING,CASSETTE	1	1
3	45592554	BEARING 688ADD	2	2
4	*45728115*	*IDLE GEAR 22*	*1*	*1*
5	29806810	BUSHING,6 REGISTRATION	2	2
6	33906630	STOPPER 5,RING	2	2
7	36716190	ROLLER,BELT DRIVE	1	1
8	36716200	ROLLER,IDLE	1	1
9	36793280	PARTS,BELT TRANSFER(SP)	1	1
10	36793290	PARTS,ROLLER TRANSFER(SP)	1	1
11	36716230	BUSHING,MIDDLE ROLLER	4	4
12	36716240	BUSHING,IDLE ROLLER	1	1
13	36716250	ROLLER,MIDDLE	2	2
14	36716260	STAY,TRANSFER	1	1
15	36716270	RETAINER,TRANSFER ROLLER	1	1
16	36716280	GROUND PLATE,MIDDLE ROLLER	1	1
17	36716290	ELECTRODE,TRANSFER	1	1
18	36716300	ELECTRODE B,TRANSFER	1	1
19	36716310	FRONT FRAME,TURN	1	1
20	36716320	REAR FRAME,TURN	1	1
21	36716360	GEAR 15,CLEANING DRIVE	1	1
22	36716380	REAR GUIDE,TRANSFER	1	1
23	36716390	SPIRAL,BELT CLEANING	1	1
24	36793300	PARTS,BRUSH BELT CLEANING(SP)	1	1
25	36716410	ELECTRODE,BRUSH	1	1
26	36716420	FRONT SHIELD,CLEANING	1	1
27	36716430	REAR SEAL,CLEANING	1	1
28	36716480	HOUSING,BELT CLEANING	1	1
29	36716490	NOZZLE,DISPOSAL	1	1
30	36716510	SHUTTER,BELT CLEANING	1	1
31	36716530	SHIELD A,SHUTTER	1	1
32	36716610	SCRAPER,BELT CLEANING	1	1
33	36716670	SPRING,TRANSFER ELECTRODE	1	1
34	36716690	ELECTRODE C,TRANSFER	1	1
35	36716810	SEAL A,NOZZLE	1	1
36	36716820	SEAL B,NOZZLE	1	1
37	36716840	SUPPORT PLATE,TRANSFER	1	1
38	36716850	GEAR 17,CLEANING IDLE	1	1
39	49028116	BUSHING 6,CLEANING UNIT	*2*	*2*
40	36716910	SPRING,TRANSFER ROLLER	2	2
41	36716920	FILM,TRANSFER SPRING	1	1
42	63520170	BUSHING,PRESSING ROLLER	2	2
43	36716800	SPACER,BELT CLEANING	2	2
44	45771201	GEAR36,PC CLUTCH	1	1
45	73922330	PULLEY B,COUPLER	1	1
46	75915120	GEAR 16,SUB DEV.UNIT	1	1
47	49028101	BUSH 8	1	1
48	60912270	BEARING,688ZZ	1	1
49	75706040	STOPRING PAPER FEED PULLEY	2	2
50	*36716900*	*REAR SPONGE,TRANSFER*	*1*	*1*

• Parts with "•" are component parts or sub-assemblies of the assembly appearing immediately above them.

• Parts with "• •" are component parts or sub-assembly with "•" appearing immediately above them.

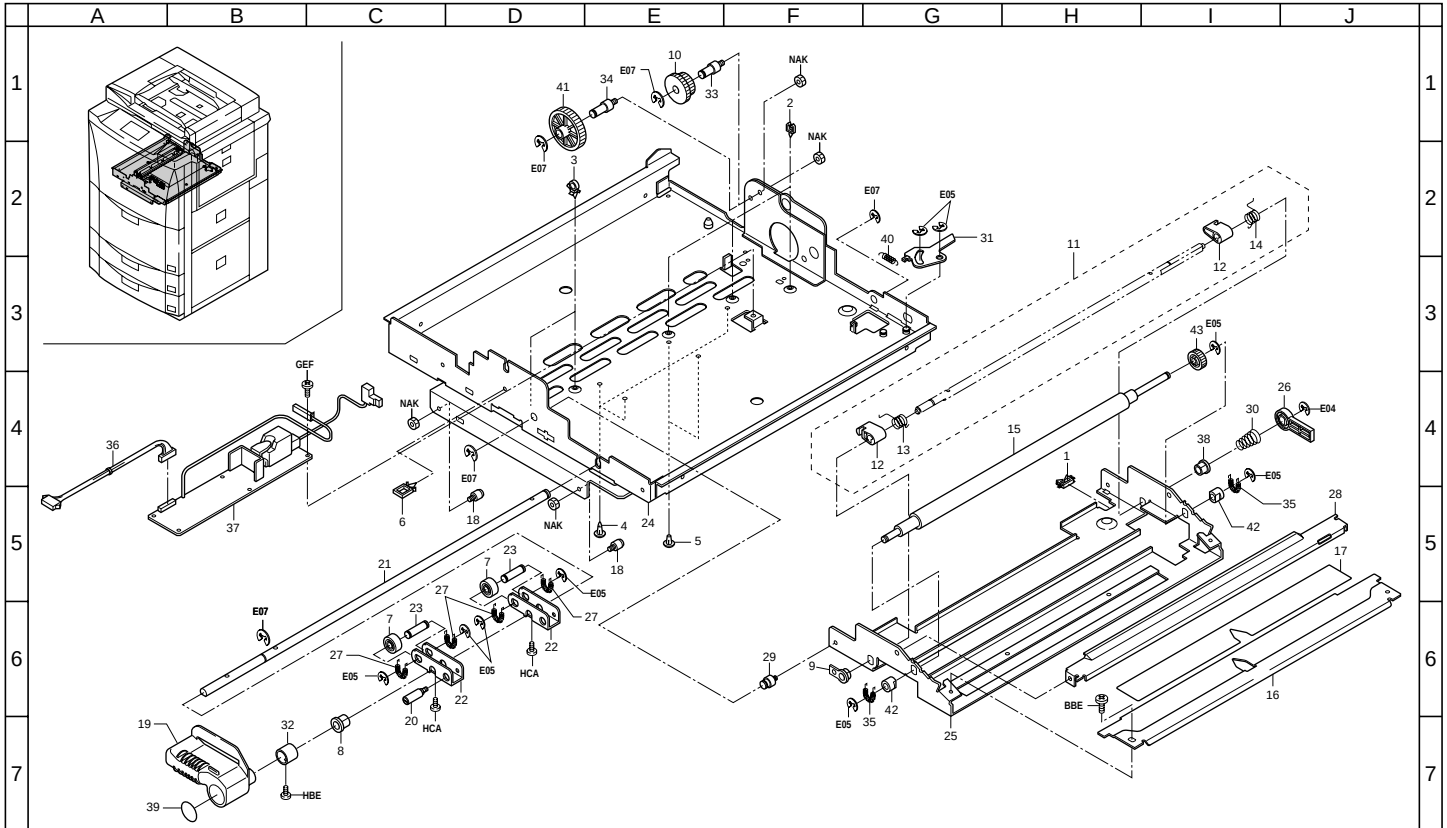
A B C D E F G H I J
1 2 3 4 5 6 7
NAK
E07
E05
GEF
HCA
HBE
BBE
E04

FIG. 12 PAPER CONVEYING SECTION II

Ref. No.	Part. No.	Description	Quantity 230V	Quantity 240V
1	M2104210	EDGING,EDS-2	1	1
2	M2105740	MINIATURE CLAMP,UAMS-05S-2	3	3
3	M2107120	BINDING BAND SG-130	2	2
4	M2108640	SPACER,KGLS-10RT(KITAGAWA)	3	3
5	M2108870	SPACER,KGPS-10RF(KITAGAWA)	2	2
6	M2109230	WIRE SADDLE,LWS-3S(KITAGAWA)	1	1
7	48927324	PULLEY,CLEANING UNIT	2	2
8	49028101	BUSH 8	1	1
9	74718091	BUSHING CLEANING UNIT	1	1
10	29820200	GEAR,FULCRUM	1	1
11	36700690	SHAFT PRESSURE ASS'Y	1	1
12	•36716150	CAM,BELT PRESSURE	2	2
13	•36716160	FRONT SPRING,PRESSURE	1	1
14	•36716170	REAR SPRING,PRESSURE	1	1
15	36706520	LOWER ROLLER,REGISTRATION	1	1
16	36706550	LOWER GUIDE,REGISTRATION	1	1
17	36706570	FILM,REGISTRATION	1	1
18	36708290	FRONT PIN,IMAGE FORMATION POSITIONING	2	2
19	36716030	HANDLE,CONVEYING	1	1
20	36716040	PIN,RELEASE RETAINING	1	1
21	36716090	SHAFT,TRANSFER RELEASE	1	1
22	36716100	SUPPORT PLATE,TRANSFER RELEASE	2	2
23	36716110	SHAFT,RELEASE PULLEY	2	2
24	36716120	BASE,CONVEYING	1	1
25	36716130	BASE,TRANSFER	1	1
26	36716180	LEVER,BELT PRESSURE	1	1
27	36716330	SPRING,TRANSFER PRESSING	4	4
28	36716470	LOWER FRONT GUIDE,TRANSFER	1	1
29	36716540	PIN,TRANSFER FULCRUM	1	1
30	36716570	SPRING,LEVER PRESSURE	1	1
31	36716590	STOPPER,TRANSFER RELEASE	1	1
32	36716600	SPACER,CONVEYING HANDLE	1	1
33	36716700	PIN 45,TRANSFER	1	1
34	36716710	PIN 25/32,TRANSFER	1	1
35	77706461	PRESSING SPRING	2	2
36	36727260	JUNCTION WIRING,TRANSFER BELT	1	1
37	36793510	PARTS,TRANSFER BELT HIGH VOLTAGE PCB(SP)	1	1
38	60907880	BUSHING,BYPASS SHAFT	1	1
39	36705030	LABEL,CONVEYING RELEASE	1	1
40	63706260	SPRING,STACK BYPASS GEAR	1	1
41	67322050	GEAR 45 DEVELOPING DRIVE	1	1
42	72107160	BUSHING 6,LOWER REGISTRATION ROLLER	2	2
43	73210370	GEAR 18,LOOP	1	1

• Parts with "•" are component parts or sub-assemblies of the assembly appearing immediately above them.

• Parts with "• •" are component parts or sub-assembly with "•" appearing immediately above them.

FIG. 13 ORIGINAL SET SECTION

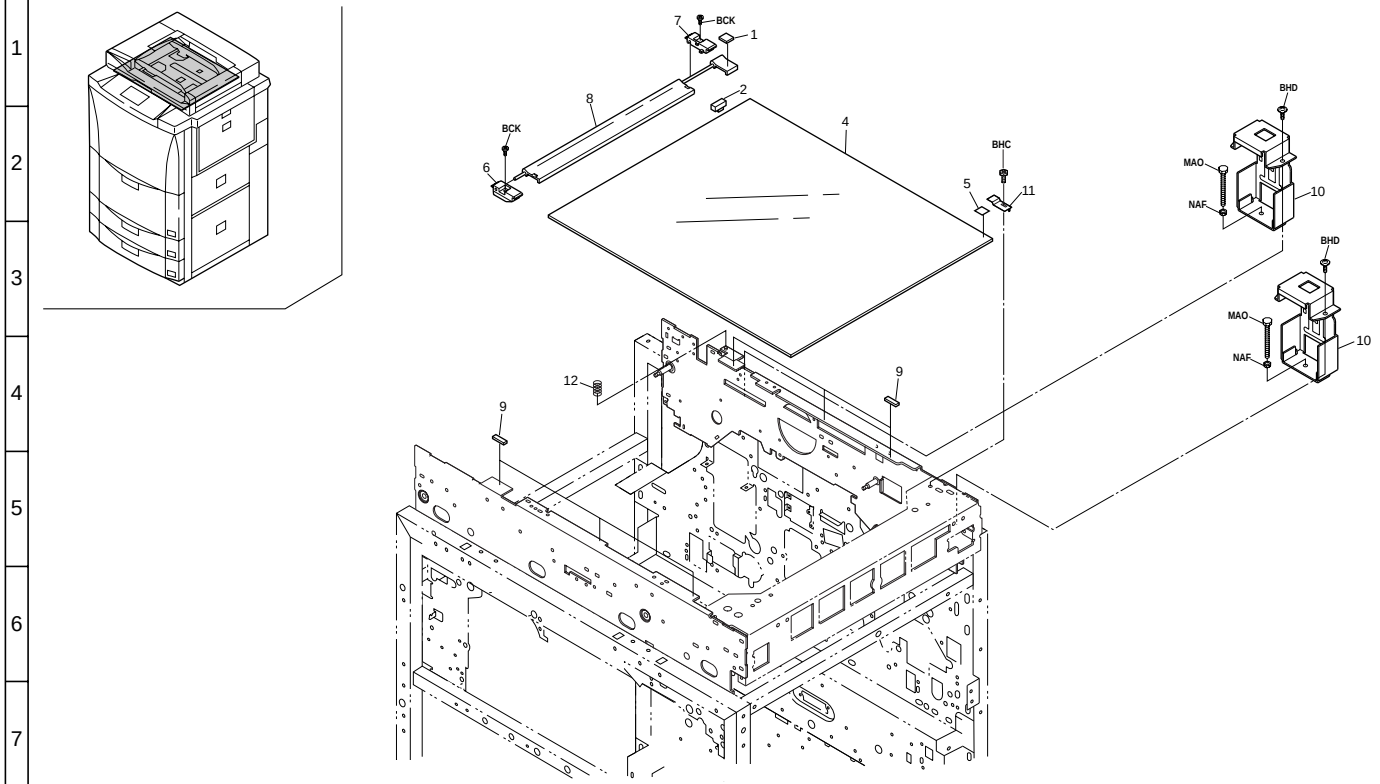

FIG. 13 ORIGINAL SET SECTION

Ref. No.	Part. No.	Description	Quantity 230V	Quantity 240V
1	36712560	CUSHION,SIZE INDICATOR	1	1
2	36712330	BASE, ORIGINAL SIZE INDICATOR	1	1
4	*36712590*	*CONTACT GLASS(METRIC)*	*1*	*1*
5	61712870	TAPE,CONTACT GLASS	1	1
6	36712320	FRONT HOLDER,ORIGINAL SIZE INDICATOR	1	1
7	36712470	REAR HOLDER,ORIGINAL SIZE INDICATOR	1	1
8	36712310	ORIGINAL SIZE INDICATOR,ORIGINAL (METRIC)	1	1
9	29812291	CUSHION,CONTACT GLASS	6	6
10	36702240	MOUNT,RDH	2	2
11	*36712580*	*GROUND PLATE,CONTACT GLASS*	*1*	*1*
12	63822110	SPRING,DEV. DRIVE	1	1

• Parts with "•" are component parts or sub-assemblies of the assembly appearing immediately above them.

• Parts with "• •" are component parts or sub-assembly with "•" appearing immediately above them.

FIG. 14 OPTICAL SECTION I

367/183

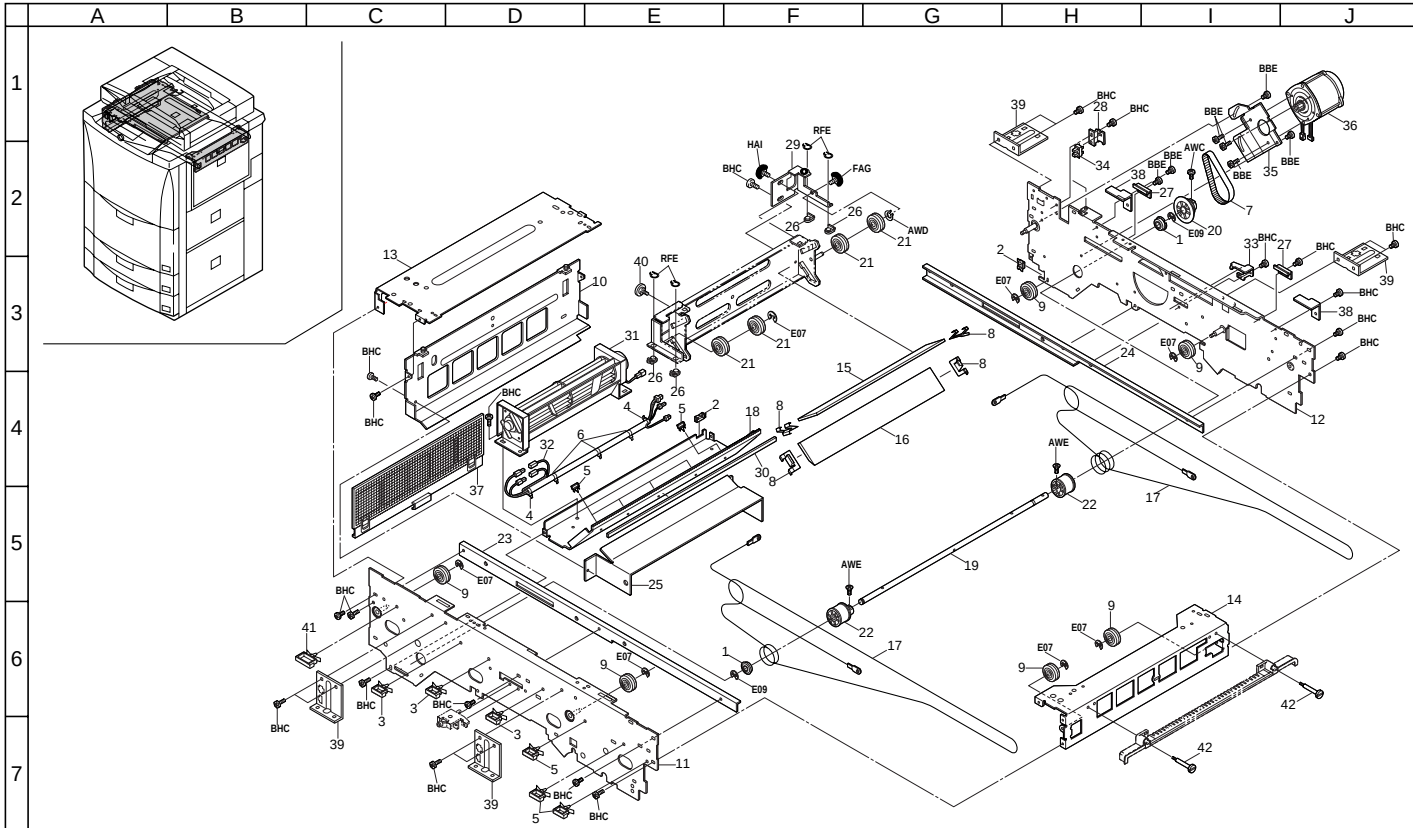

FIG. 14 OPTICAL SECTION I

Ref. No.	Part. No.	Description	Quantity 230V	Quantity 240V
1	G3169000	BEARING 6900ZZNR	2	2
2	M2104210	EDGING,EDS-2	2	2
3	M2109230	WIRE SADDLE,LWS-3S(KITAGAWA)	3	3
4	M2107120	BINDING BAND SG-130	2	2
5	M2109180	WIRE SADDLE,LWS-1S	8	8
6	M2607010	BINDING BAND,PLT1M	3	3
7	36712160	BELT,SCANNER	1	1
8	49528208	HOLDER,MIRROR B	4	4
9	48929500	PULLEY,WIRE ROPE	6	6
10	36712430	LEFT REINFORCEMENT,SCANNER	1	1
11	36712010	FRONT FRAME,SCANNER	1	1
12	36712020	REAR FRAME,SCANNER	1	1
13	36712030	UPPER LEFT REINFORCEMENT,SCANNER	1	1
14	36712040	RIGHT REINFORCEMENT,SCANNER	1	1
15	36712050	MIRROR,2	1	1
16	36712060	MIRROR,3	1	1
17	36793200	PARTS,WIRE SCANNER(SP)	2	2
18	36712090	LOWER LEFT REINFORCEMENT,SCANNER	1	1
19	36712140	SHAFT,SCANNER DRIVE	1	1
20	36712150	PULLEY,SCANNER DRIVE	1	1
21	36712170	PULLEY,SCANNER WIRE	4	4
22	36712180	DRUM,SCANNER WIRE	2	2
23	36712190	FRONT RAIL,SCANNER	1	1
24	36712200	REAR RAIL,SCANNER	1	1
25	36712280	STRAIGHTENING PLATE,SCANNER	1	1
26	36712340	SLIDER,SCANNER	4	4
27	36712350	STOPPER,CONTACT GLASS	2	2
28	36712530	MOUNT,SCANNER PI	1	1
29	36712550	MOUNT,SLIDER	1	1
30	36712570	LOWER LEFT SPONGE,REINFORCEMENT	1	1
31	36727410	FAN,SCANNER	1	1
32	36727420	WIRE,SCANNER LAMP	1	1
33	67312130	HOLDER,MIRROR FRAME 2	1	1
34	72127100	PI SWITCH,OPTICAL SECTION	1	1
35	36712230	MOUNT,SCANNER MOTOR	1	1
36	36793480	PARTS,MOTOR SCANNER(SP)	1	1
37	36700140	SCANNER FILTER ASS'Y	1	1
38	36712440	LOWER STOPPER,CONTACT GLASS	2	2
39	36712390	RETAINER,SCANNER UNIT	4	4
40	60907120	PIN,CASSETTE	1	1
41	M2109200	LOCKING WIRE SADDLE,LWS-3S-2W	1	1
42	18312530	PIN,EJECT TRAY	2	2

• Parts with "•" are component parts or sub-assemblies of the assembly appearing immediately above them.

• Parts with "• •" are component parts or sub-assembly with "•" appearing immediately above them.

FIG. 15 OPTICAL SECTION II

367/183-1

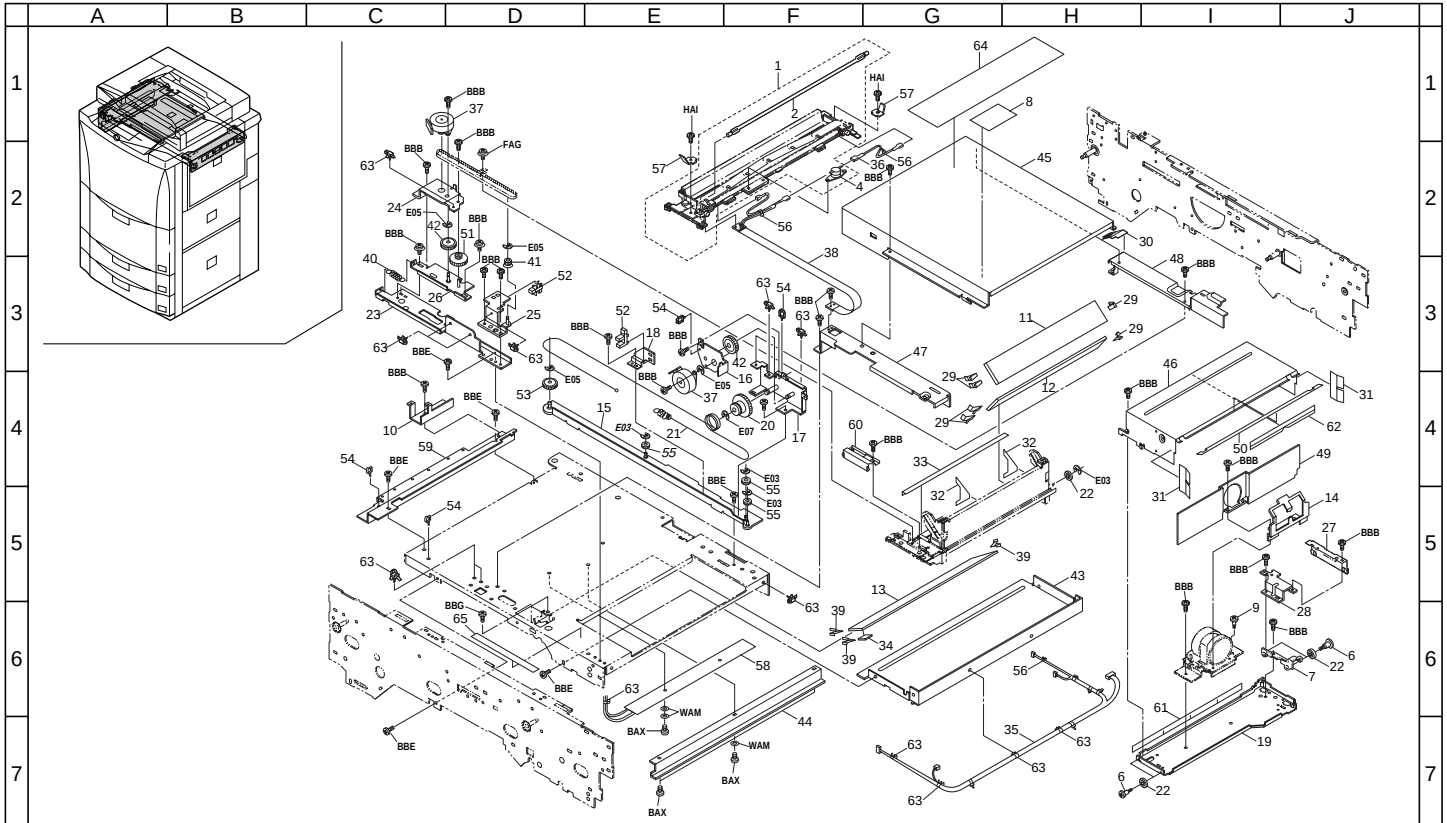

FIG. 15 OPTICAL SECTION II

367/183-1

Ref. No.	Part. No.	Description	Quantity 230V	Quantity 240V
1	36793060	PARTS,LIGHT ASS'Y(170)SP	1	1
2	•36793240	PARTS,LAMP EXPOSURE(170)SP	1	1
4	•68312080	THERMAL PROTECTOR,SCANNER	1	1
6	29804160	PIN,ORIGINAL HOLDER	4	4
7	36700570	LENS MOVING SCANNER ASS'Y C	1	1
8	19605050	CAUTION LABEL,CONTACT GLASS	1	1
9	48128107	PIN,CLEANING BLADE	1	1
10	36712450	PARTITION,SCANNER BASE	1	1
11	36713040	MIRROR,4	1	1
12	36713050	MIRROR,5	1	1
13	36713060	MIRROR,6	1	1
14	36713100	LIGHT ADJUSTING PLATE,LENS	1	1
15	36713120	RAIL,LENS MOVING SCANNER	1	1
16	36713130	MOUNT,MOVING SCANNER MOTOR	1	1
17	36713140	MOUNT,MOVING SCANNER DRIVE	1	1
18	36713150	MOUNT,MOVING SCANNER PI	1	1
19	36713160	SUPPORT PLATE,MOVING SCANNER DRIVE	1	1
20	36713170	PULLEY,LENS DRIVE	1	1
21	36713180	WIRE,LENS MOVING SCANNER	1	1
22	36713190	PULLEY,LENS DRIVE	5	5
23	36713200	RAIL,3 MIRROR FRAME	1	1
24	36713210	MOUNT,MIRROR MOTOR	1	1
25	36713220	MOUNT,MIRROR DRIVE	1	1
26	36713240	TENSION PLATE,MIRROR DRIVE	1	1
27	36700590	MOVING SCANNER HOLDER ASS'Y	1	1
28	36713290	LIGHT SHIELD C,MOVING SCANNER SENSOR	1	1
29	36713540	SPRING,3 MIRROR FRAME	6	6
30	36713590	REAR FILM,LIGHT SHIELD	1	1
31	36713620	FILM,LENS MOVING SCANNER	2	2
32	36713630	SEAL 3,LIGHT SHIELD FRAME	2	2
33	36713640	INNER SEAL 3,LIGHT SHIELD FRAME	1	1
34	36713650	SEAL,6 MIRROR	1	1
35	36727100	JUNCTION WIRING,SCANNER CONTROL	1	1
36	36727110	WIRING,SCAN THERMOSTAT	1	1
37	36793490	PARTS,MOTOR LENS UNIT(SP)	2	2
38	36727320	FEEDER WIRE,SCANNER	1	1
39	75012480	MIRROR HOLDING SPRING	3	3
40	75512290	SPRING WIRE TENSION	1	1

Ref. No.	Part. No.	Description	Quantity 230V	Quantity 240V
41	76514050	PULLEY 20 DRIVE	1	1
42	78122090	GEAR 60-38 PRINT	2	2
43	36713410	LOWER RIGHT STAY,SCANNER	1	1
44	36713420	RAIL,DUST SHIELD GLASS	1	1
45	36713440	UPPER COVER,LENS UNIT	1	1
46	36713450	UPPER COVER,LENS	1	1
47	36713460	FRONT COVER,LENS UNIT	1	1
48	36713470	REAR COVER,LENS UNIT	1	1
49	36713490	LIGHT SHIELD C,LENS	1	1
50	36713580	UPPER FILM,LIGHT SHIELD	1	1
51	63511120	GEAR 65,IDLE	1	1
52	66006350	SWITCH,CASSETTE LIFT	2	2
53	66212051	PULLEY,SCANNER WIRE	1	1
54	M2105740	MINIATURE CLAMP,UAMS-05S-2	4	4
55	29707720	PULLEY,IDLE 10	*3*	*3*
56	M2607010	BINDING BAND,PLT1M	3	3
57	36712270	RETAINER,WIRE	2	2
58	36727470	HEATER,CHARGE (240)	1	1
59	36712370	MOUNT,ORIGINAL DETECTION SENSOR	1	1
60	36700600	MIRROR FRAME HOLDER ASS'Y	1	1
61	36713670	LOWER FILM C,MOVING SCANNER	1	1
62	36713680	FRONT FILM,MOVING SCANNER COVER	1	1
63	M2107120	BINDING BAND SG-130	14	14
64	36713690	UPPER SHIELD,LENS COVER	1	1
65	36713610	SLIDER,3 MIRROR FRAME	1	1

• Parts with "•" are component parts or sub-assemblies of the assembly appearing immediately above them.

• Parts with "• •" are component parts or sub-assembly with "•" appearing immediately above them.

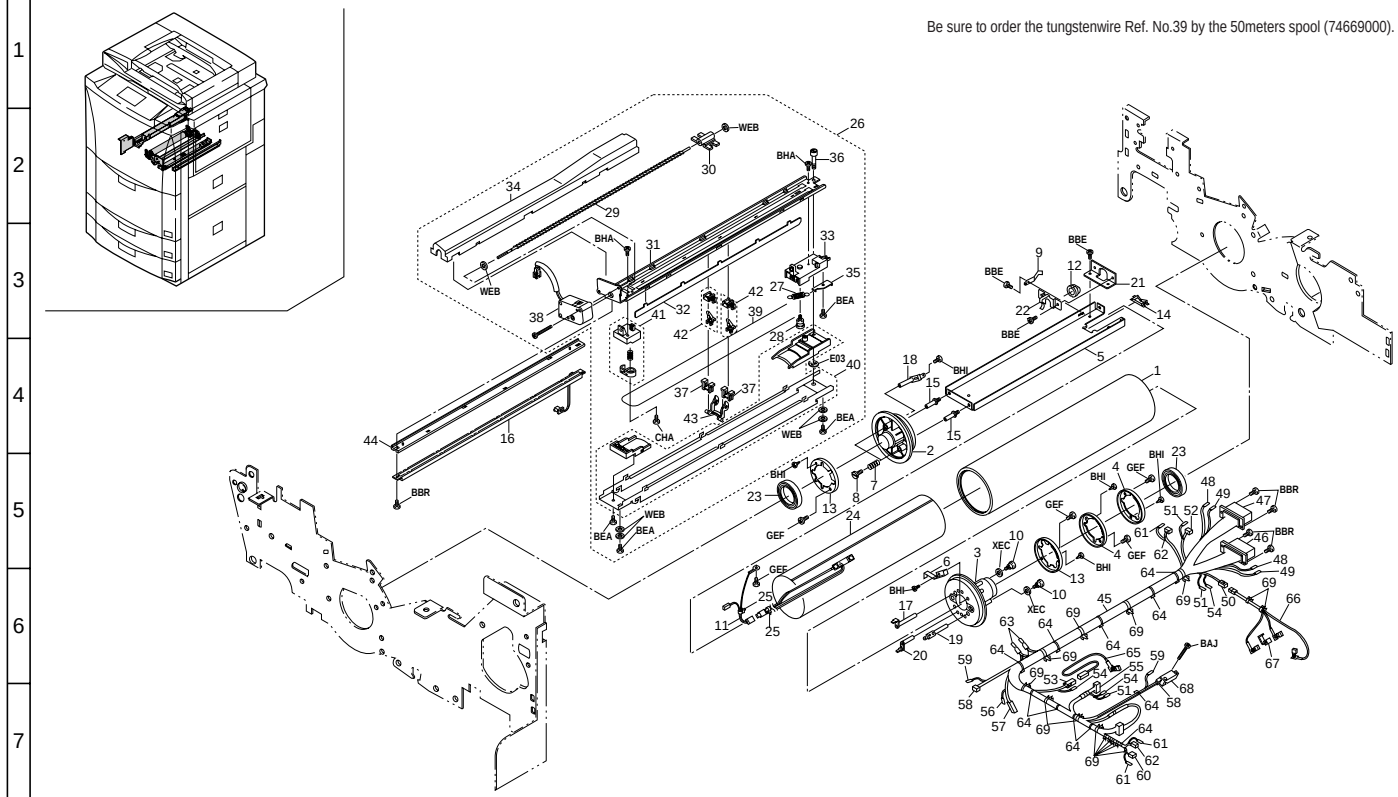
Be sure to order the tungstenwire Ref. No.39 by the 50meters spool (74669000).

FIG. 16 IMAGE FORMATION SECTION I

367/183-1

Ref. No.	Part. No.	Description	Quantity 230V	Quantity 240V
1	36782010	SET DRUM FOR DC-5090	1	1
2	36708020	FRONT FLANGE,DRUM	1	1
3	36708030	REAR FLANGE,DRUM	1	1
4	36708040	ELECTRODE A,DRUM HEATER	2	2
5	36708050	STAY,DRUM	1	1
6	36708060	GROUND PLATE,DRUM	1	1
7	36708070	SPRING,FLANGE	2	2
8	36708080	PIN,DRUM RETAINING	2	2
9	36708090	GROUND PLATE,STAY DRUM	1	1
10	36708100	REAR PIN,DRUM FLANGE	2	2
11	36727190	JUNCTION WIRING,DRUM FLANGE	1	1
12	49021301	BUSHING, CUTTER	1	1
13	36708190	ELECTRODE B,DRUM HEATER	2	2
14	M2104200	EDGING EDS-1	1	1
15	36708320	PIN B,DRUM RETAINING	2	2
16	36793190	PARTS,LAMP CLEANING(SP)	1	1
17	36708380	TERMINAL BASE A,DRUM HEATER	1	1
18	36708390	TERMINAL BASE B,DRUM HEATER	1	1
19	36708400	TERMINAL BASE C,DRUM HEATER	1	1
20	36708410	TERMINAL BASE D,DRUM HEATER	1	1
21	36708420	BASE,BUSHING	1	1
22	36708430	STOPPER,BUSHING	1	1
23	36708450	BEARING,DRUM FLANGE	2	2
24	36727520	HEATER,DRUM (230)	1	1
25	M2107120	BINDING BAND SG-130	2	2
26	36793030	PARTS,MAIN CHARGER ASS'Y(SP)	1	1
27	•48527200	SPRING,CHARGER	1	1
28	•33910230	PIN,CHARGER	1	1
29	•33917200	SPIRAL,CHARGER CLEANING	1	1
30	•33917211	WORK PLATE,CLEANING SLIDER	1	1
31	•36710010	BASE,MC	1	1
32	•36710030	INNER SHIELD,MC	1	1
33	•36710050	REAR HOUSING,MC	1	1
34	•36710080	DUCT,MAIN CHARGER	1	1
35	•36710100	TERMINAL,MAIN CHARGER	1	1
36	•36710270	RETAINING PIN,MAIN CHARGER	1	1
37	*•61768121*	*MC CLEANING PAD ASS'Y*	*2*	*2*
38	•66710060	UNIT,CLEANING MOTOR	1	1
39	•74669000	TUNGSTEN WIRE(OX) S•P (50M)	1spl	1spl
40	•36768090	GRID ASS'Y	1	1
41	•36768100	FRONT CHARGER HOUSING ASS'Y	1	1
42	•36768070	CHARGER CLEANING SLIDER ASS'Y	2	2
43	•36768080	GRID CLEANING PAD ASS'Y	1	1
44	36710230	INSULATING PLATE,CLEANING LAMP	1	1
45	36727080	WIRE,IMAGE FORMATION UNIT	1	1
46	•J0415160	PLUG,QR/P6-16P-C(01)(HIROSE)	1	1
47	•J0415120	PLUG,QR/P6,12P,QR/P6-12P-C(01)	1	1
48	•J0410930	CONTACT (L),QR/P1-PC1A-111	3	3
49	•J0410920	CONTACT,QR/P1-PC2A-111	21	21
50	•J0045030	RECEPTACLE 3P,MINI MATENLOCK,172329-1	1	1
51	•J0045910	PIN,MINI MATENLOCK,(PLATIN) 170363-1	10	10
52	•J0045020	RECEPTACLE 2P,MINI MATENLOCK,172328-1	1	1
53	•J0045010	RECEPTACLE 1P,MINI MATENLOCK,172156-1	1	1
54	•J0045900	PIN,MINI MATENLOCK,170364-1	3	3
55	•J0045090	RECEPTACLE 9P,MINI MATENLOCK,172332-1	1	1
56	•J0250900	SOCKET,BHF-001T-0.8SS	2	2
57	•J0241020	PLUG SM 2P,SMP-02V-BC	1	1
58	•J0150030	RECEPTACLE,175778-3(AMP)	2	2
59	•J0150900	CONTACTOR,175161-1(AMP)	6	6
60	•J0452030	RECEPTACLE,DF3AA-3EP-2C(HIROSE)	1	1
61	•J0452800	PIN,DF3-EP2428PCF(HIROSE)	6	6
62	•J0452020	RECEPTACLE,DF3AA-2EP-2C(HIROSE)	2	2
63	•L4040000	CLOSE TYPE TERMINAL,0.5-1.75,CE-1	2	2
64	•M2607010	BINDING BAND,PLT1M	11	11
65	36701020	FRONT DRUM ELECTRODE WIRE ASS'Y	1	1
66	36701010	REAR DRUM ELECTRODE WIRE ASS'Y	1	1
67	36708150	SPACER,ELECTRODE	1	1
68	63227020	SWITCH,FEED	1	1
69	M2107120	BINDING BAND SG-130	15	15

• Parts with "•" are component parts or sub-assemblies of the assembly appearing immediately above them.

• Parts with "• •" are component parts or sub-assembly with "•" appearing immediately above them.

FIG. 17 IMAGE FORMATION SECTION II

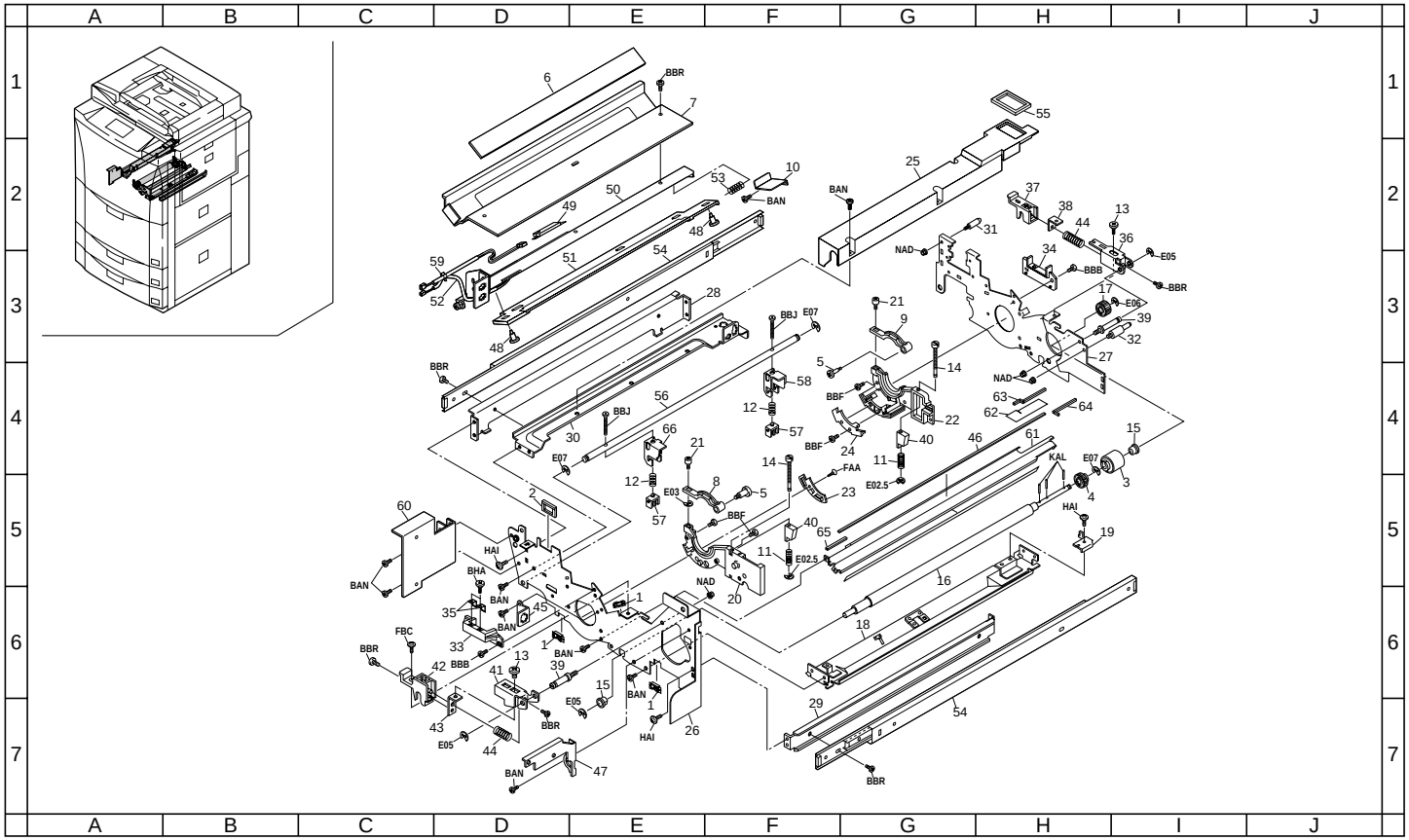

FIG. 17 IMAGE FORMATION SECTION II

Ref. No.	Part. No.	Description	Quantity 230V	Quantity 240V
1	M2104210	EDGING,EDS-2	3	3
2	M2104250	EDGING,EDS-17L(KITAGAWA)	1	1
3	59501122	TORQUE LIMITTER	1	1
4	29806490	GEAR 16T	1	1
5	60906350	PIN,FEED FULCRUM	2	2
6	36713070	GLASS,DUST SHIELD	1	1
7	36713430	MOUNT,DUST SHIELD GLASS	1	1
8	36708160	FRONT STOPPER,DRUM BEARING	1	1
9	36708170	REAR STOPPER,DRUM BEARING	1	1
10	36701020	FRONT DRUM ELECTRODE WIRE ASS'Y	1	1
11	78820310	SPRING TENSION PULLEY	2	2
12	78618510	SPRING RETAINER LEVER	2	2
13	71802210	PIN,DRUM LIFT	2	2
14	68308040	PIN,DS ADJUSTMENT	2	2
15	67322230	BUSHING 8	2	2
16	36706510	UPPER ROLLER,REGISTRATION	1	1
17	36706530	UPPER GEAR 16,REGISTRATION	1	1
18	36706540	UPPER GUIDE,REGISTRATION	1	1
19	36706870	RETAINER,TORQUE LIMITER	1	1
20	36708110	FRONT HOLDER,DRUM	1	1
21	33408340	PIN,DRUM RETAINING	2	2
22	36708120	REAR HOLDER,DRUM	1	1
23	36708130	FRONT LID,DRUM HOLDER	1	1
24	36708140	REAR LID,DRUM HOLDER	1	1
25	36723090	DUCT,IMAGE FORMATION COOLING	1	1
26	36708210	FRONT FRAME,IMAGE FORMATION	1	1
27	36708220	REAR FRAME,IMAGE FORMATION	1	1
28	36708230	LEFT STAY,IMAGE FORMATION	1	1
29	36708240	RIGHT STAY,IMAGE FORMATION	1	1
30	36708250	MOUNT,IMAGE FORMATION WIRE	1	1
31	36708300	LEFT REAR PIN,IMAGE FORMATION POSITIONING	1	1
32	36708330	RIGHT REAR PIN,IMAGE FORMATION POSITIONING	1	1
33	36710240	FRONT POSITIONING PLATE,MAIN CHARGER	1	1
34	36710250	REAR POSITIONING PLATE,MAIN CHARGER	1	1
35	36710290	PLATE SPRING,MC HOLDER	2	2
36	36714190	REAR GUIDE,DEVELOPING PRESSURE	1	1
37	36714200	REAR HOLDER,DEVELOPING PRESSURE	1	1
38	36714210	REAR BASE,DEVELOPING PRESSURE	1	1
39	36714220	FULCRUM PIN,DEVELOPING PRESSURE	2	2
40	36714260	STOPPER,DS ADJUSTMENT	2	2
41	36714300	FRONT GUIDE,DEVELOPING PRESSURE	1	1
42	36714310	FRONT HOLDER,DEVELOPING PRESSURE	1	1
43	36714320	FRONT BASE,DEVELOPING PRESSURE	1	1
44	36714330	SPRING,DEVELOPING PRESSURE	2	2
45	36714470	MOUNT,DEVELOPING BIAS CONNECTOR	1	1
46	36714520	UPPER FRONT SPONGE,TRANSFER	1	1
47	36715170	RIGHT RETAINER,HOPPER	1	1
48	48127502	PIN,SEPARATION PULLEY	2	2
49	33408170	SENSOR,POTENTIAL	1	1
50	36708180	MOUNT,BLANK LAMP	1	1
51	36793180	PARTS,BLANK(SP)	1	1
52	36727140	JUNCTION WIRING,POTENTIAL SENSOR (EXP)	1	1
53	73815070	SPRING, AGITATION PLATE	1	1
54	36708260	SLIDER,IMAGE FORMATION	2	2
55	36723100	SPONGE,IMAGE FORMATION DUCT	1	1
56	36718940	SHAFT,CLEANING RETAINING	1	1
57	36718950	SLIDER,CLEANING RETAINING	2	2
58	36718920	REAR LEVER,CLEANING RETAINING	1	1
59	M2107120	BINDING BAND SG-130	1	1
60	36715180	LEFT RETAINER,HOPPER	1	1
61	36716550	UPPER FRONT GUIDE,TRANSFER	1	1
62	36716860	UPPER FRONT FILM B,TRANSFER	1	1
63	36716870	REAR SPONGE B,TRANSFER	1	1
64	36716880	REAR SPONGE C,TRANSFER	1	1
65	36716890	FRONT SPONGE A,TRANSFER	1	1
66	36718910	FRONT LEVER,CLEANING RETAINING	1	1

• Parts with "•" are component parts or sub-assemblies of the assembly appearing immediately above them.

• Parts with "• •" are component parts or sub-assembly with "•" appearing immediately above them.

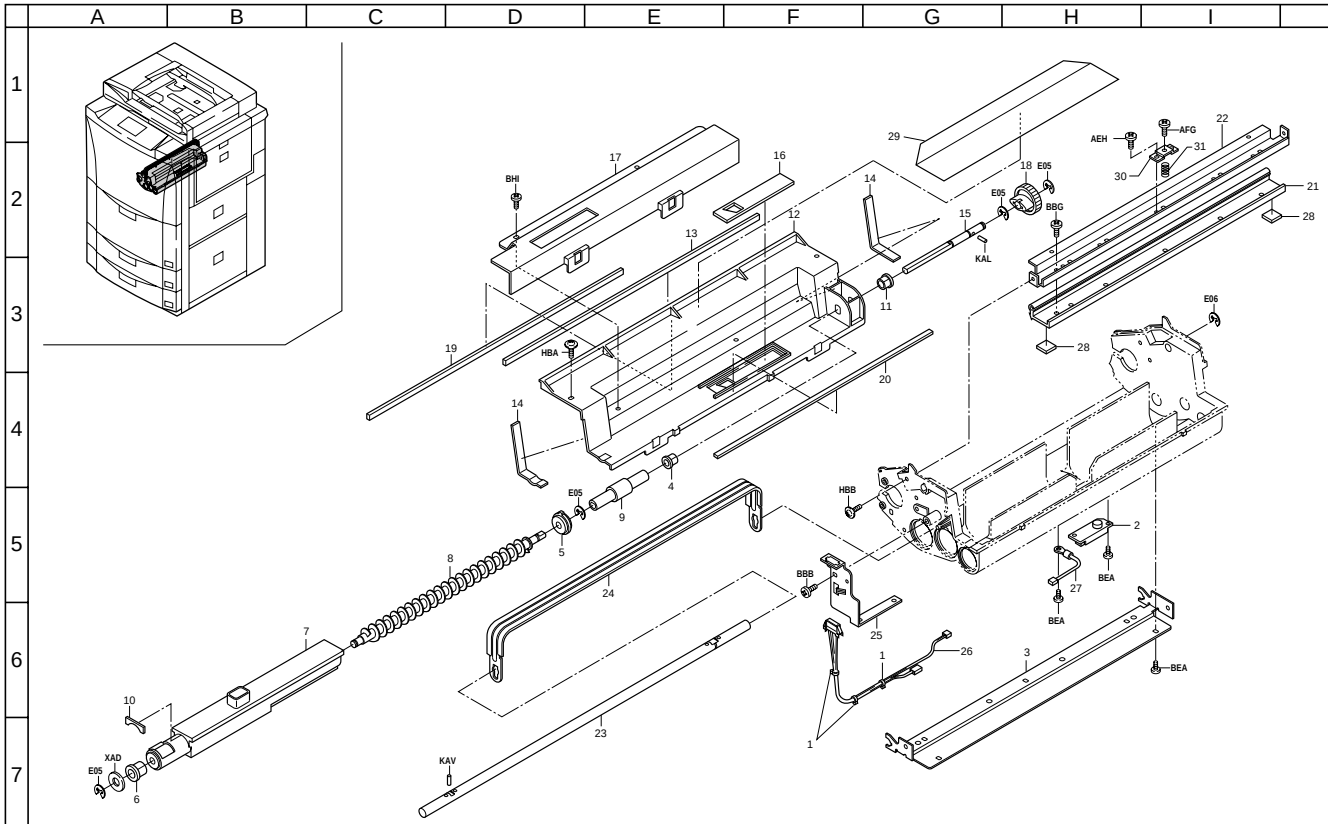
A B C D E F G H I J
1 2 3 4 5 6 7
BHI
HBA
HBB
BBB
BBG
BEA
AEH
AFG
KAL
KAV
XAD
E05
E06

FIG. 18 DEVELOPING SECTION I

Ref. No.	Part. No.	Description	Quantity 230V	Quantity 240V
	36793070	PARTS,DEVELOPING ASS'Y(SP)	1	1
1	•M2607010	BINDING BAND,PLT1M	3	3
2	•33914190	TONER SENSOR	1	1
3	•36793080	PARTS,DEVELOPING BLADE ASS'Y(SP)	1	1
4	•29806560	BUSHING 6	1	1
5	•49028113	BUSHING 6-19,DEV.UNIT	1	1
6	•49028116	BUSHING 6,CLEANING UNIT	1	1
7	•36715030	CASE,TONER SUPPLY	1	1
8	•36715040	SPIRAL,TONER SUPPLY	1	1
9	•36715110	JOINT,HOPPER	1	1
10	•36715190	SPONGE,TONER SUPPLY CASE	1	1
11	•36706310	BUSHING,PAPER FEED	1	1
12	•36714270	COVER,DEVELOPING	1	1
13	•36714410	SPONGE L,DEVELOPING COVER	1	1
14	•36714420	SPONGE S,DEVELOPING COVER	2	2
15	•36715020	SHAFT,TONER SUPPLY DRIVE	1	1
16	•36715150	UPPER SPONGE,DEVELOPING COVER	1	1
17	•36715340	COVER,TONER CONVEYING CASE	1	1
18	•71815100	GEAR 28,SUB UNIT AGITATION	1	1
19	•74315190	SPONGE H,TONER HOPPER	1	1
20	•77616280	SEAL A SEPARATION DUCT	1	1
21	•36714030	STAY,DOCTOR BLADE	1	1
22	•36714040	REINFORCEMENT,DOCTOR BLADE ADJUSTMENT	1	1
23	•36714170	SHAFT,DEVELOPING	1	1
24	•36714180	HANDLE,DEVELOPING	1	1
25	•36714540	MOUNT,DEVELOPING WIRE	1	1
26	•36727270	WIRE,DEVELOPING JUNCTION	1	1
27	•36727330	THERMISTOR,DEVELOPING	1	1
28	•68314160	FELT,DOCTOR BLADE	2	2
29	•36793260	PARTS,UPPER SEAL DEVELOPING(SP)	1	1
30	•36714610	AUXILIARY PLATE,DOCTOR BLADE ADJUSTMENT	1	1
31	*•75502220*	*SPRING BYPASS TABLE*	*1*	*1*

• Parts with "•" are component parts or sub-assemblies of the assembly appearing immediately above them.

• Parts with "• •" are component parts or sub-assembly with "•" appearing immediately above them.

FIG. 19 DEVELOPING SECTION II

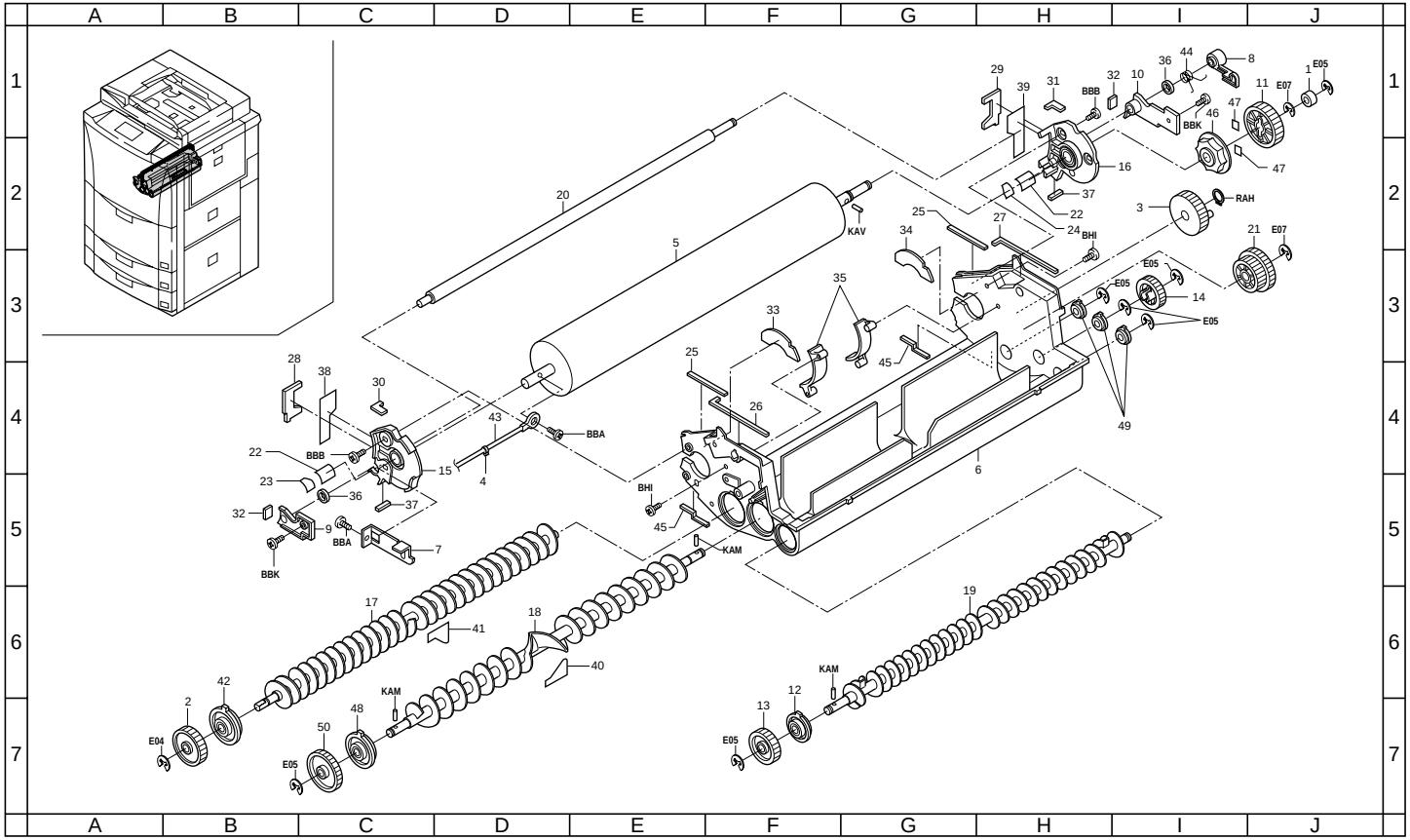

FIG. 19 DEVELOPING SECTION II

Ref. No.	Part. No.	Description	Quantity 230V	Quantity 240V
	36793070	PARTS,DEVELOPING ASS'Y(SP)	1	1
1	•G3006860	MINIATURE BEARING 686ZZ	1	1
2	•45727604	GEAR 34,AGITATION ROLLER	1	1
3	•33414071	GEAR,JOINT DEVELOPING	1	1
4	•M2607010	BINDING BAND,PLT1M	1	1
5	•36793250	PARTS,SLEEVE DEVELOPING UNIT(SP)	1	1
6	•36714020	HOUSING,DEVELOPING	1	1
7	•36714060	ADJUSTING PLATE,MAGNET ROLLER	1	1
8	•36714080	LOWER LEVER,DEVELOPING ROLLER	1	1
9	•36714090	FRONT BUSHING,LOWER DEVELOPING ROLLER	1	1
10	•36714100	REAR BUSHING,LOWER DEVELOPING ROLLER	1	1
11	•36714110	GEAR,DEVELOPING SLEEVE	1	1
12	•36714120	BUSHING 6-23,DEVELOPING	1	1
13	•36714130	GEAR 27,DEVELOPING	1	1
14	•36714140	REAR GEAR 25,DEVELOPING	1	1
15	•36714150	FRONT BUSHING,SLEEVE	1	1
16	•36714160	REAR BUSHING,SLEEVE	1	1
17	•36714230	LEFT SPIRAL,DEVELOPING	1	1
18	•36714240	CENTER SPIRAL,DEVELOPING	1	1
19	•36714250	RIGHT SPIRAL,DEVELOPING	1	1
20	•36714280	LOWER SHAFT,DEVELOPING	1	1
21	•36714340	GEAR 27/36,IDLE DEVELOPING	1	1
22	•36714350	LOWER SEAL,DEVELOPING ROLLER	2	2
23	•36714360	FRONT FELT,DISPOSAL ROLLER	1	1
24	•36714370	REAR FELT,DISPOSAL ROLLER	1	1
25	•36714380	SPONGE,DEVELOPING	2	2
26	•36714390	FRONT SPONGE,DEVELOPING	1	1
27	•36714400	REAR SPONGE,DEVELOPING	1	1
28	•36714430	FRONT FELT,DEVELOPING	1	1
29	•36714440	REAR FELT,DEVELOPING	1	1
30	•36714450	FRONT SPONGE,SLEEVE BUSHING	1	1
31	•36714460	REAR SPONGE,SLEEVE BUSHING	1	1
32	•36714480	LOWER FELT,DEVELOPING ROLLER BUSHING	2	2
33	•36714490	FRONT FELT,SLEEVE	1	1
34	•36714500	REAR FELT,SLEEVE	1	1
35	•36714510	COVER,SLEEVE	2	2
36	•36714530	SHIELD,DEVELOPING DISPOSAL ROLLER	2	2
37	•36714550	LOWER SPONGE,DEVELOPING BUSHING	2	2
38	•36714560	FRONT SEAL,SLEEVE	1	1
39	•36714570	REAR SEAL,SLEEVE	1	1
40	•36714580	FRONT SEAL,SENSOR CLEANING	1	1
41	•36714590	REAR SEAL,SENSOR CLEANING	1	1
42	•71815080	BUSHING 6-28,SUB UNIT	1	1
43	•36727150	WIRE,DEVELOPING BIAS	1	1
44	•61714290	SPRING,LOWER DEV.ROLLER	1	1
45	•61714440	SPONGE,LOWER DEVELOPING	2	2
46	•61714530	CAM,LOWER DEV.ROLLER	1	1
47	•62515160	SPONGE,HOPPER COVER	2	2
48	•71614080	BUSHING 6-31,AGITATION ROTOR	1	1
49	•71615050	BUSHING,AGITATION ROLLER	3	3
50	•71814180	GEAR 35,MAIN UNIT MIXING	1	1

• Parts with "•" are component parts or sub-assemblies of the assembly appearing immediately above them.

• Parts with "• •" are component parts or sub-assembly with "•" appearing immediately above them.

FIG. 20 TONER HOPPER SECTION

367/183-1

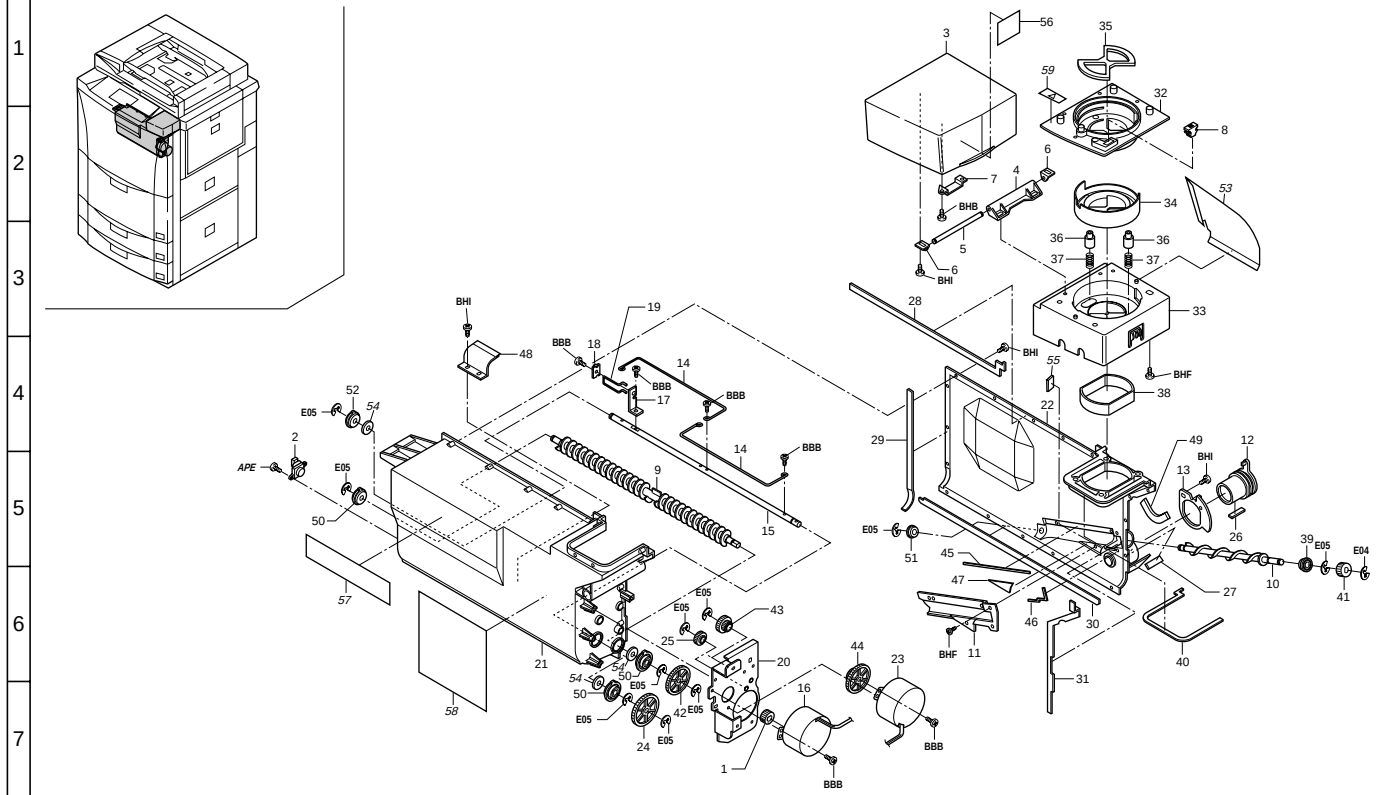

FIG. 20 TONER HOPPER SECTION

367/183-1

Ref. No.	Part. No.	Description	Quantity 230V	Quantity 240V
	36793020	PARTS,HOPPER ASS'Y(EUR)SP	1	1
1	•33415181	GEAR,TONER SUPPLY	1	1
2	•33915180	TONER EMPTY DETECTION SENSOR	1	1
3	•36704160	LID,TONER SUPPLY	1	1
4	•36704170	HINGE,TONER SUPPLY	1	1
5	•36704180	SHAFT,TONER SUPPLY HINGE	1	1
6	•36704190	HOLDER,HINGE	2	2
7	•36704520	RETAINER,MAGNET	1	1
8	•36704530	MAGNET,TONER SUPPLY	1	1
9	•36715050	SPIRAL,TONER CONVEYING	1	1
10	•36715060	SPIRAL,TONER DRAW	1	1
11	•36715070	COVER,TONER DRAW	1	1
12	•36715120	LEVER,SHUTTER	1	1
13	•36715130	HOLDER,SHUTTER	1	1
14	•36715140	SPRING,HOPPER AGITATION	2	2
15	•36715200	SHAFT,HOPPER AGITATION	1	1
16	•36715210	MOTOR,TONER AGITATION	1	1
17	•36715230	MOUNT,CLEANING SPRING	1	1
18	•36715240	HOLDER,CLEANING SPRING	1	1
19	•36715290	SPRING,CLEANING	1	1
20	•36715300	SUPPORT PLATE,HOPPER	1	1
21	•36715310	FRONT HOUSING,HOPPER	1	1
22	•36715320	REAR HOUSING,HOPPER	1	1
23	•36793270	PARTS,MOTOR TONER SUPPLY(SP)	1	1
24	•36715380	GEAR 41,HOPPER AGITATION	1	1
25	•36715410	GEAR 17,IDLE	1	1
26	•36715420	SEAL,SHUTTER LEVER	1	1
27	•36715430	SEAL,SUPPLY JOINT	1	1
28	•36715440	SPONGE A,HOPPER HOUSING	1	1
29	•36715450	SPONGE B,HOPPER HOUSING	1	1
30	•36715460	SPONGE C,HOPPER HOUSING	1	1
31	•36715470	SPONGE D,HOPPER HOUSING	1	1
32	•36715510	UPPER MOUNT BASE B,HOPPER (EUR)	1	1
33	•36715520	LOWER MOUNT BASE,HOPPER	1	1
34	•36715540	SHUTTER B,HOPPER (EUR)	1	1
35	•36715550	SEAL,HOPPER	1	1
36	•36715560	STOPPER,HOPPER	2	2
37	•36715570	SPRING,HOPPER	2	2
38	•36715600	SPONGE,DUCT HOPPER	1	1
39	•36715610	BUSHING 6-12,HOPPER	1	1
40	•36715620	SPONGE E,HOPPER HOUSING	1	1
41	•36715630	GEAR 13,HOPPER DRAW	1	1
42	•36715640	GEAR 22,HOPPER	1	1
43	•36715650	GEAR 22/13,IDLE	1	1
44	•36715660	GEAR 23/44,TONER MOTOR	1	1
45	•36715670	SPONGE A,HOPPER DRAW	1	1
46	•36715680	SPONGE B,HOPPER DRAW	1	1
47	•36715690	SPONGE C,HOPPER DRAW	1	1
48	•36715700	COVER,DRAW SPIRAL	1	1
49	•36715710	SPONGE,TONER SUPPLY JOINT	1	1
50	•63814070	BUSHING,SPIRAL ROLLER	3	3
51	•65814240	FRONT BUSHING 15,AGITATION	1	1
52	•71814100	BUSHING 6-21,MAIN UNIT	1	1
53	*•36715730*	*FILM,HOPPER LID*	*1*	*1*
54	*•36715720*	*SPONGE,HOPPER BUSHING*	*3*	*3*
55	*•36714550*	*LOWER SPONGE DEVELOPING BUSHING*	*1*	*1*
56	36705160	LABEL,TONER SUPPLY OPERATION	1	1
57	36705150	LABEL,JAM REMOVEMENT EJECT	1	1
58	36705140	LABEL,JAM REMOVEMENT CONVEYING	1	1
59	36705060	LABEL,TONER SUPPLY	1	1

• Parts with "•" are component parts or sub-assemblies of the assembly appearing immediately above them.

• Parts with "• •" are component parts or sub-assembly with "•" appearing immediately above them.

FIG. 21 CLEANING SECTION I

367/183-1

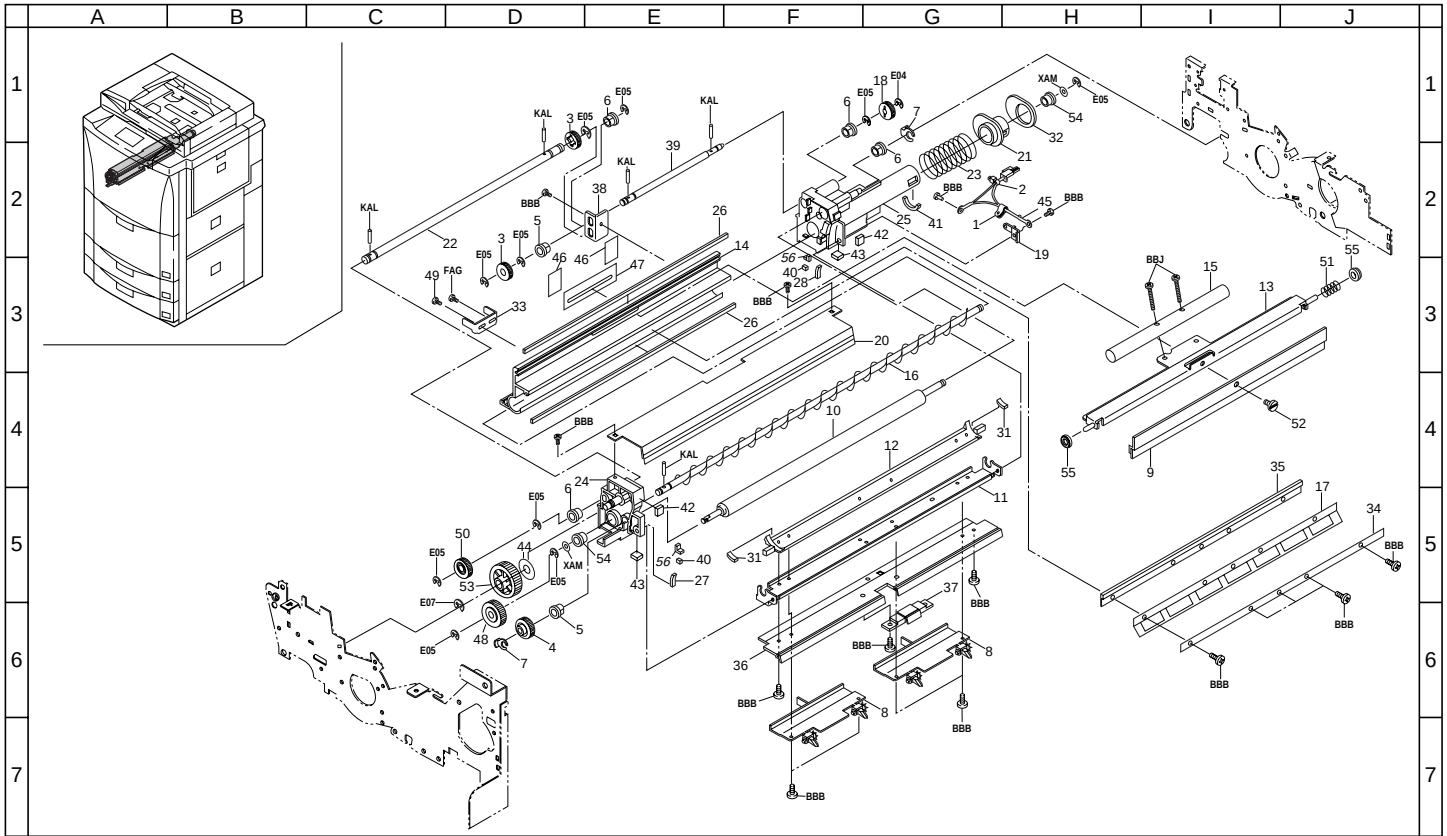

FIG. 21 CLEANING SECTION I

Ref. No.	Part. No.	Description	Quantity 230V	Quantity 240V
	36793090	PARTS,CLEANING ASS'Y(SP)	1	1
1	•M2105000	NYLON CLAMP 2N,NK-2N	1	1
2	•M2307010	BINDING BAND,T18R	1	1
3	•45729206	GEAR,TONER FEED ROLLER	2	2
4	•45729605	GEAR 22,OIL SUPPLY ROLLER	1	1
5	•29806560	BUSHING 6	2	2
6	•29806810	BUSHING,6 REGISTRATION	4	4
7	•33906630	STOPPER 5,RING	2	2
8	•36700750	SEPARATION CLAW ASS'Y	2	2
9	•36793310	PARTS,BLADE CLEANING(SP)	1	1
10	•36793320	PARTS,CLEANING(SP)	1	1
11	•36793330	PARTS,MOUNT CLEANING(SP)	1	1
12	•36718040	GUIDE,CLEANING BRUSH	1	1
13	•36718050	MOUNT,BLADE	1	1
14	•36718060	STAY,CLEANING	1	1
15	•36718070	WEIGHT,MAIN BLADE	1	1
16	•36718080	SPIRAL,CLEANING	1	1
17	•36718090	SCRAPER,CLEANING BRUSH	1	1
18	•36718100	GEAR,CLEANING DRIVE	1	1
19	•36718110	TERMINAL,CLEANING BRUSH	1	1
20	•36793340	PARTS,UPPER COVER CLEANING(SP)	1	1
21	•36718130	SHUTTER,CLEANING	1	1
22	•36718140	FRONT SHAFT,CLEANING DRIVE	1	1
23	•36718150	SPRING,SHUTTER	1	1
24	•36718160	FRONT FRAME,CLEANING	1	1
25	•36718170	REAR FRAME,CLEANING	1	1
26	•36718180	SEAL,BRUSH MOUNT	2	2
27	•36718190	FRONT SEAL A,CLEANING	1	1
28	•36718200	REAR SEAL A,CLEANING	1	1
31	•36718230	SPONGE,BRUSH GUIDE	2	2
32	•36718240	SEAL,CLEANING SHUTTER	1	1
33	•36718260	SLIDE PLATE,BLADE RELEASE	1	1
34	•36718270	INSULATING PLATE,CLEANING BRUSH	1	1
35	•36718280	SPACER,SCRAPING	1	1
36	•36718320	LOWER BASE A,CLEANING	1	1
37	•36718330	LOWER BASE B,CLEANING	1	1
38	•36718340	SUPPORT PLATE,CLEANING DRIVE	1	1
39	•36718350	REAR SHAFT,CLEANING DRIVE	1	1
40	•36718360	SPONGE B,CLEANING	2	2
41	•36718370	INNER SEAL,CLEANING SHUTTER	1	1
42	•36718390	UPPER SPONGE,SEAL	2	2
43	•36718400	LOWER SPONGE,BLADE	2	2
44	•36718410	SHEET,BLADE THRUST	1	1
45	•36727160	WIRE,CLEANING	1	1
46	•61718420	SEAL A,CLEANING STAY	2	2
47	•61718430	SEAL B,CLEANING STAY	1	1
48	•72114130	GEAR 20,AGITATION	1	1
49	•72114320	PIN,DEV.UNIT HANDLE	1	1
50	•73210370	GEAR 18,LOOP	1	1
51	•73818100	SPRING, BLADE THRUST	1	1
52	•74318590	PIN,MAIN BLADE	1	1
53	•78618310	GEAR 36 BLADE THRUST	1	1
54	•49028116	BUSHING 6,CLEANING UNIT	2	2
55	•77618200	BUSHING 7 CLEANING UNIT	2	2
56	*•36718430*	*SPONGE A,CLEANING*	*2*	*2*

• Parts with "•" are component parts or sub-assemblies of the assembly appearing immediately above them.

• Parts with "• •" are component parts or sub-assembly with "•" appearing immediately above them.

FIG. 22 CLEANING SECTION II

367/183-1

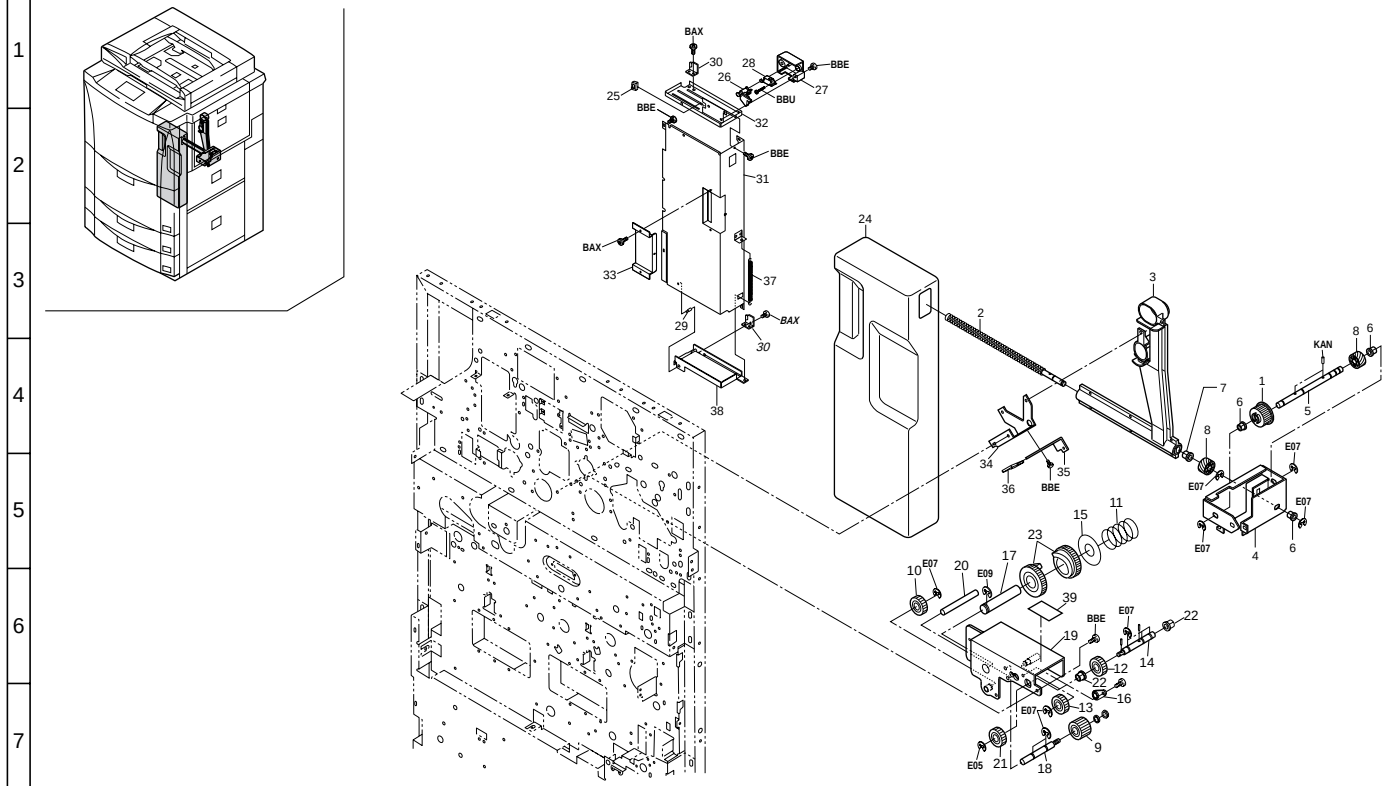

FIG. 22 CLEANING SECTION II

Ref. No.	Part. No.	Description	Quantity 230V	Quantity 240V
1	33922360	PULLEY 36,FIXING DRIVE	1	1
2	36718560	SPRING,DISPOSAL	1	1
3	36718570	HOUSING,DISPOSAL	1	1
4	36722310	MOUNT,DISPOSAL SPIRAL DRIVE	1	1
5	36722470	SHAFT,DISPOSAL SPIRAL DRIVE	1	1
6	67322230	BUSHING 8	3	3
7	74318070	BUSHING 8,TONER DISPOSAL	1	1
8	74318080	GEAR 25,TONER DISPOSAL	2	2
9	45728112	IDLE GEAR 25	1	1
10	45728115	IDLE GEAR 22	1	1
11	48529601	SPRING,DEVELOPING UNIT COUPLER	1	1
12	29717180	GEAR 21,FEED BACK	1	1
13	29822161	GEAR 20T,FIXING UNIT	1	1
14	36722450	PIN,CLEANING DRIVE	1	1
15	36722930	SPACER,CLEANING JOINT	1	1
16	36722940	BUSHING,CLEANING DRIVE	1	1
17	36722950	SHAFT,CLEANING JOINT	1	1
18	36722960	PIN,CLEANING IDLE	1	1
19	36722970	MOUNT,CLEANING DRIVE	1	1
20	36723570	STAY,CLEANING DRIVE	1	1
21	66018160	GEAR 19,SPIRAL ROLLER	1	1
22	67322230	BUSHING 8	2	2
23	68322050	GEAR 36,FIXING DRIVE	2	2
24	36700520	DISPOSAL TANK ASS'Y	1	1
25	M2104200	EDGING EDS-1	1	1
26	33518130	LEVER,DETECTION SWITCH	1	1
27	33518140	COVER,DETECTION SWITCH	1	1
28	74318430	SWITCH,TONER DISPOSAL TANK	1	1
29	36718520	PIN,DISPOSAL SUPPORT	1	1
30	36718530	MOUNT,DISPOSAL SUPPORT	*2*	*2*
31	36718540	LOWER COVER,DISPOSAL TANK	1	1
32	36718550	UPPER COVER,DISPOSAL TANK	1	1
33	36718590	COVER,DISPOSAL TANK MIDDLE	1	1
34	36723510	MOUNT,DISPOSAL PIPE	1	1
35	36723050	ADJUSTING PLATE,COOLING FAN	1	1
36	M2104210	EDGING,EDS-2	1	1
37	48527312	SPRING L,PAPER FEED	1	1
38	36718500	MOUNT BASE,DISPOSAL TANK	1	1
39	67305310	CAUTION LABEL,HV	1	1

• Parts with "•" are component parts or sub-assemblies of the assembly appearing immediately above them.

• Parts with "• •" are component parts or sub-assembly with "•" appearing immediately above them.

FIG. 23 FIXING SECTION I

367/183-1

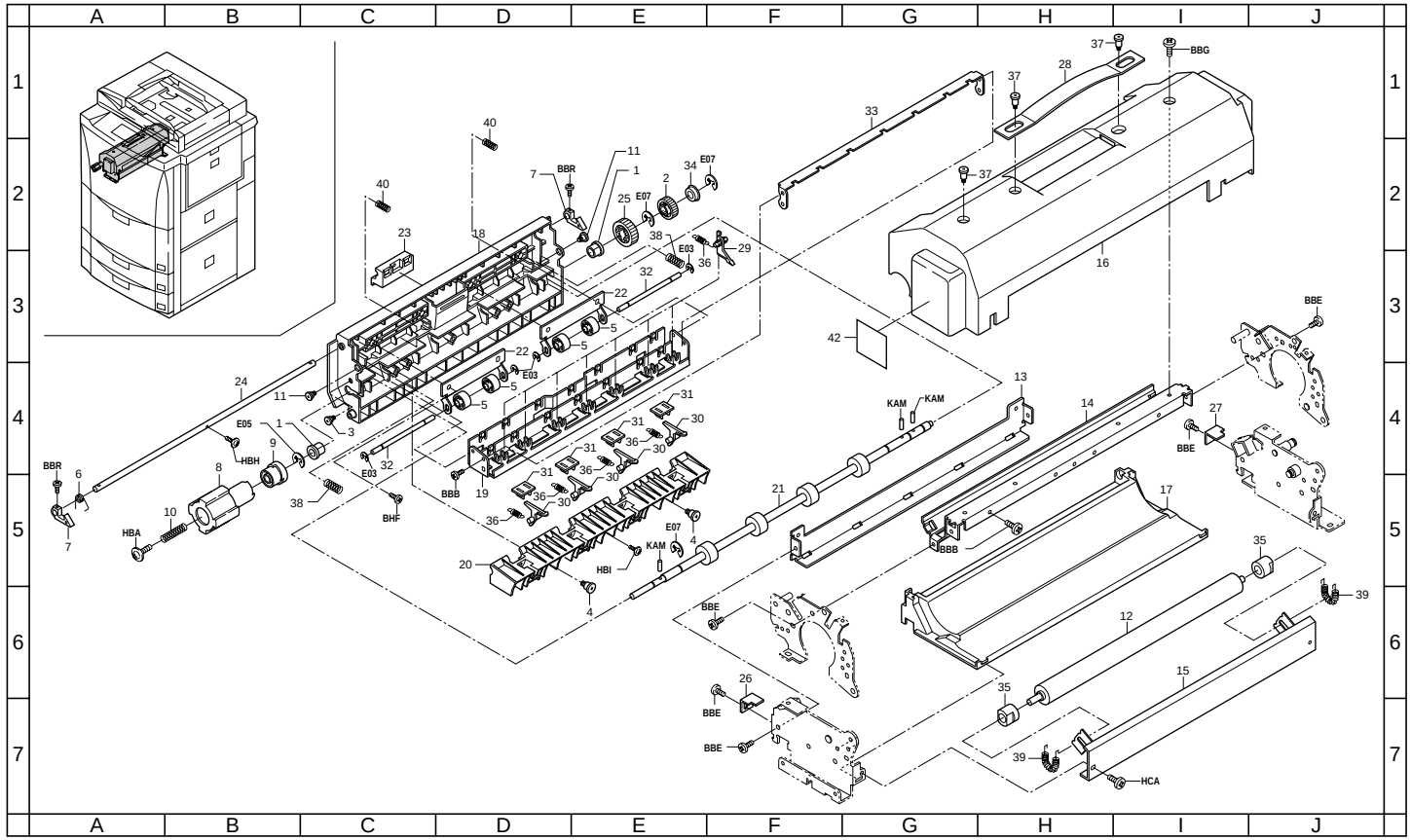

FIG. 23 FIXING SECTION I

367/183-1

Ref. No.	Part. No.	Description	Quantity 230V	Quantity 240V
	36793110	PARTS,FIXING UNIT ASS'Y(240)SP	1	1
1	•49028101	BUSH 8	2	2
2	•45728104	GEAR 20,DEV.UNIT	1	1
3	•29804160	PIN,ORIGINAL HOLDER	1	1
4	•29820420	PIN,BEARING	2	2
5	•33421390	PULLEY,EJECT	4	4
6	•33906640	RIGHT SPRING,FEED RELEASE	1	1
7	•33906670	RIGHT HOOK,FEED RELEASE	2	2
8	•33920310	DIAL,FIXING DRIVE	1	1
9	•33920320	JOINT,FIXING DRIVE	1	1
10	•33920330	SPRING,FIXING DRIVE	1	1
11	•34920170	FULCRUM PIN,FIXING	2	2
12	•36793390	PARTS,LOWER ROLLER CLEANING(SP)	1	1
13	•36720180	LOWER LEFT STAY,FIXING	1	1
14	•36720190	UPPER LEFT STAY,FIXING	1	1
15	•36720200	LOWER MOUNT,CLEANING ROLLER	1	1
16	•36720210	COVER,FIXING	1	1
17	•36720220	LOWER HOUSING,FIXING	1	1
18	•36720230	COVER,FIXING EJECT	1	1
19	•36720240	UPPER GUIDE,FIXING EJECT	1	1
20	•36720250	LOWER GUIDE,FIXING EJECT	1	1
21	•36720260	ROLLER,FIXING EJECT	1	1
22	•36720280	PLATE SPRING,FIXING EJECT PULLEY	2	2
23	•36720290	HANDLE,FIXING EJECT RELEASE	1	1
24	•36720300	SHAFT,FIXING EJECT RELEASE	1	1
25	•36720390	GEAR,FIXING EJECT JOINT	1	1
26	•36720430	FRONT HOLDER,FIXING EJECT UNIT	1	1
27	•36720440	REAR HOLDER,FIXING EJECT UNIT	1	1
28	•36720450	HANDLE,FIXING	1	1
29	•36720480	SEPARATION CLAW,HEAT ROLLER	7	7
30	•36720490	CLAW,PRESS ROLLER	4	4
31	•36720570	PROTECTING PLATE,FIXING SEPARATION CLAW	4	4
32	•36720580	SHAFT,FIXING EJECT PULLEY	2	2
33	•36720630	HOLDER,HEAT ROLLER SEPARATION CLAW	1	1
34	*•G3006980*	*BEARING #698ZZ*	*1*	*1*
35	•61720460	BUSH,FIXING CLEANING	2	2
36	•68320310	SPRING,SEPARATION CLAW	11	11
37	*•33920570*	*PIN,FIXING COVER*	*3*	*3*
38	•73902220	SPRING SHAFT HOOK	2	2
39	•77706461	PRESSING SPRING	2	2
40	•78012030	PRESSING SPRING CIS	2	2
42	19605060	CAUTION LABEL, HIGH TEMPERATURE S(EXP)	1	1

• Parts with "•" are component parts or sub-assemblies of the assembly appearing immediately above them.

• Parts with "• •" are component parts or sub-assembly with "•" appearing immediately above them.

FIG. 24 FIXING SECTION II

367/183-1

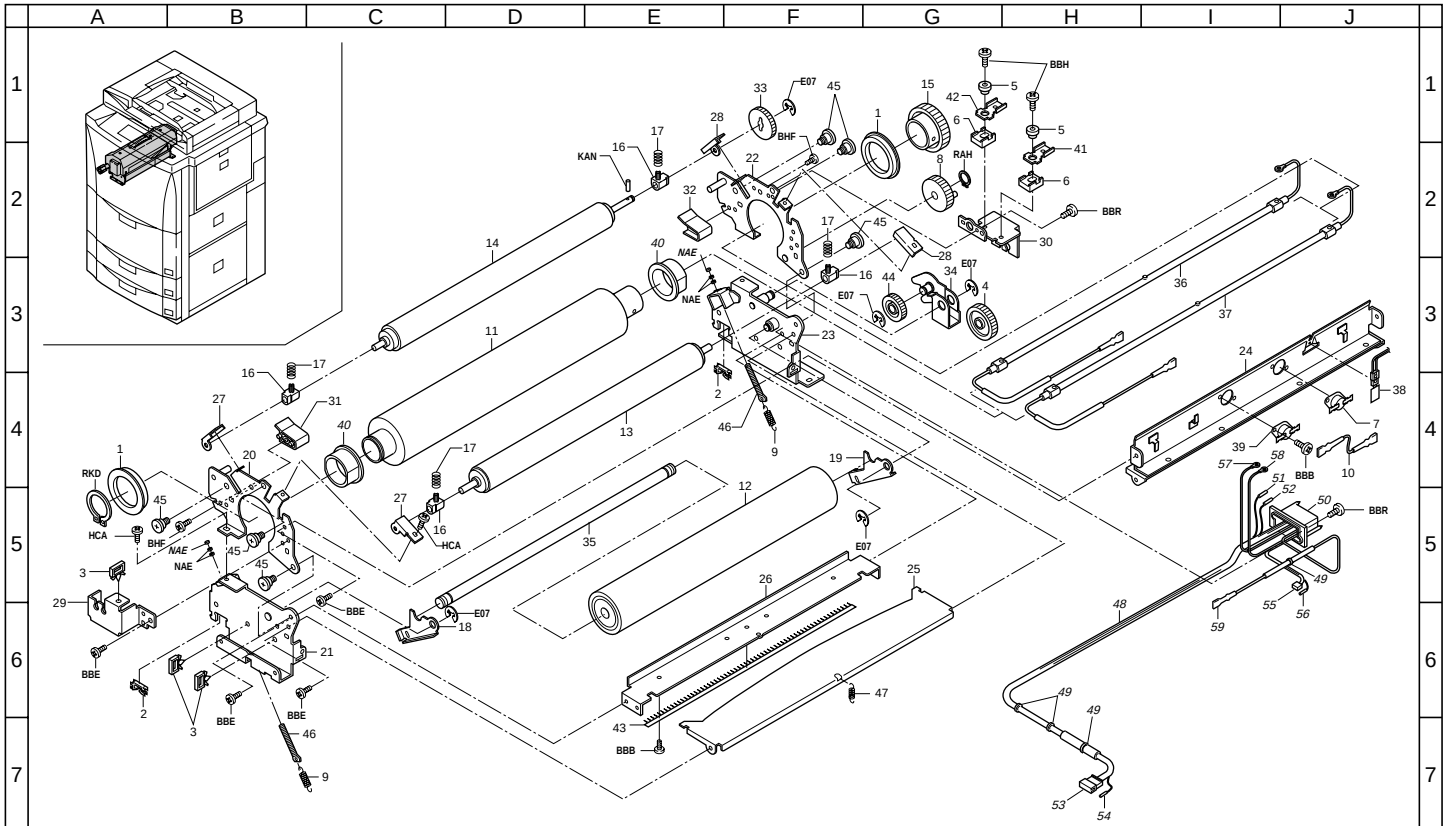

FIG. 24 FIXING SECTION II

Ref. No.	Part. No.	Description	Quantity 230V	Quantity 240V
	36793110	PARTS,FIXING UNIT ASS'Y(240)SP	1	1
1	•G3169070	BEARING 6907ZZNRC4ENS	2	2
2	•M2104210	EDGING,EDS-2	2	2
3	•M2109280	WIRE SADDLE,LWS-1SF(KITAGAWA)	3	3
4	•45728900	GEAR 38T	1	1
5	•29620330	INSULATOR D	2	2
6	•29620340	INSULATOR T	2	2
7	•33027130	THERMOSTAT 180,FIXING	1	1
8	*•33414071*	GEAR,JOINT DEVELOPING	1	1
9	•33920180	SPRING,PRESSURE	2	2
10	•33927441	WIRE,THERMOSTAT FIXING	1	1
11	•36793350	PARTS,ROLLER HEAT(SP)	1	1
12	•36793360	PARTS,PRESS ROLLER(SP)	1	1
13	•36793370	PARTS,ROLLER OIL(SP)	1	1
14	•36793380	PARTS,UPPER ROLLER CLEANING(SP)	1	1
15	•36720060	GEAR,HEAT ROLLER	1	1
16	•36720070	BUSHING,OIL ROLLER	4	4
17	•36720080	SPRING,OIL ROLLER	4	4
18	•36720090	FRONT PRESSING PLATE,PRESS ROLLER	1	1
19	•36720100	REAR PRESSING PLATE,PRESS ROLLER	1	1
20	•36720110	UPPER FRONT FRAME,FIXING	1	1
21	•36720120	LOWER FRONT FRAME,FIXING	1	1
22	•36720130	UPPER REAR FRAME,FIXING	1	1
23	•36720140	LOWER REAR FRAME,FIXING	1	1
24	•36720150	UPPER FRONT GUIDE,FIXING	1	1
25	•36720160	LOWER FRONT GUIDE,FIXING	1	1
26	•36720170	LOWER RIGHT STAY,FIXING	1	1
27	•36720310	FRONT PRESSING PLATE,OIL ROLLER	2	2
28	•36720320	REAR PRESSING PLATE,OIL ROLLER	2	2
29	•36720340	FRONT SUPPORT PLATE,HEATER	1	1
30	•36720350	REAR SUPPORT PLATE,HEATER	1	1
31	•36720370	FRONT GUIDE,FIXING EJECT TURN AUXILIARY	1	1
32	•36720380	REAR GUIDE,FIXING EJECT TURN AUXILIARY	1	1
33	•36720400	UPPER GEAR,CLEANING ROLLER	1	1
34	•36720410	TENSION PLATE,FIXING DRIVE	1	1
35	•36720460	SHAFT,PRESS ROLLER	1	1
36	•36793440	PARTS,HEATER MU FIXING(240)SP	1	1
37	•36793450	PARTS,HEATER SU FIXING(240)SP	1	1
38	•36720560	THERMISTER,FIXING	1	1
39	•36720590	THERMAL PROTECTOR 180,FIXING	1	1
40	•78620531	BUSHING HEAT ROLLER	2	2
41	•61720290	TERMINAL,MAIN HEATER	1	1
42	•61720300	TERMINAL,SUB HEATER	1	1
43	•66321360	STATIC ELIMINATOR,EJECT	1	1
44	•67322180	GEAR 28,IDLE DRIVE	1	1
45	•71802210	PIN,DRUM LIFT	6	6
46	•74318650	PIN WEIGHT DETECTOR	2	2
47	•74710050	SPRING MAIN CHARGER WIRE	1	1
48	•36727180	WIRE,FIXING UNIT	1	1
49	*••M2607010*	*BINDING BAND,PLT1M*	*4*	*4*
50	*••J0416140*	*RECEPTACLE,QR/P10-14S-C(HIROSE)*	*1*	*1*
51	*••J0410830*	*CONTACTOR,RECEPTACLE SC1B,QR/P1-SC1B-221*	*3*	*3*
52	*••J0410810*	*CONTACTOR,RECEPTACLE SC2,QR/P1-SC2A-211*	*9*	*9*
53	*••J0243070*	*RECEPTACLE SM 7P,SMR-07V-B*	*1*	*1*
54	*••J0242810*	*PIN SM,SYM-001T-0.6*	*7*	*7*
55	*••J0240020*	*PLUG SM 2P,SMP-02V-NC*	*1*	*1*
56	*••J0250810*	*SOCKET,SHF-001T-0.8SS*	*2*	*2*
57	*••L0223000*	*ROUND TYPE TERMINAL M4,0.5-2.0 SRA-51T-4*	*1*	*1*
58	*••L0221100*	*ROUND TYPE TERMINAL,SRA-51T-3(JST)*	*1*	*1*
59	*••J0074810*	*POSITIVE CONTACTOR,#250,170328-1*	*1*	*1*

• Parts with "•" are component parts or sub-assemblies of the assembly appearing immediately above them.

• Parts with "• •" are component parts or sub-assembly with "•" appearing immediately above them.

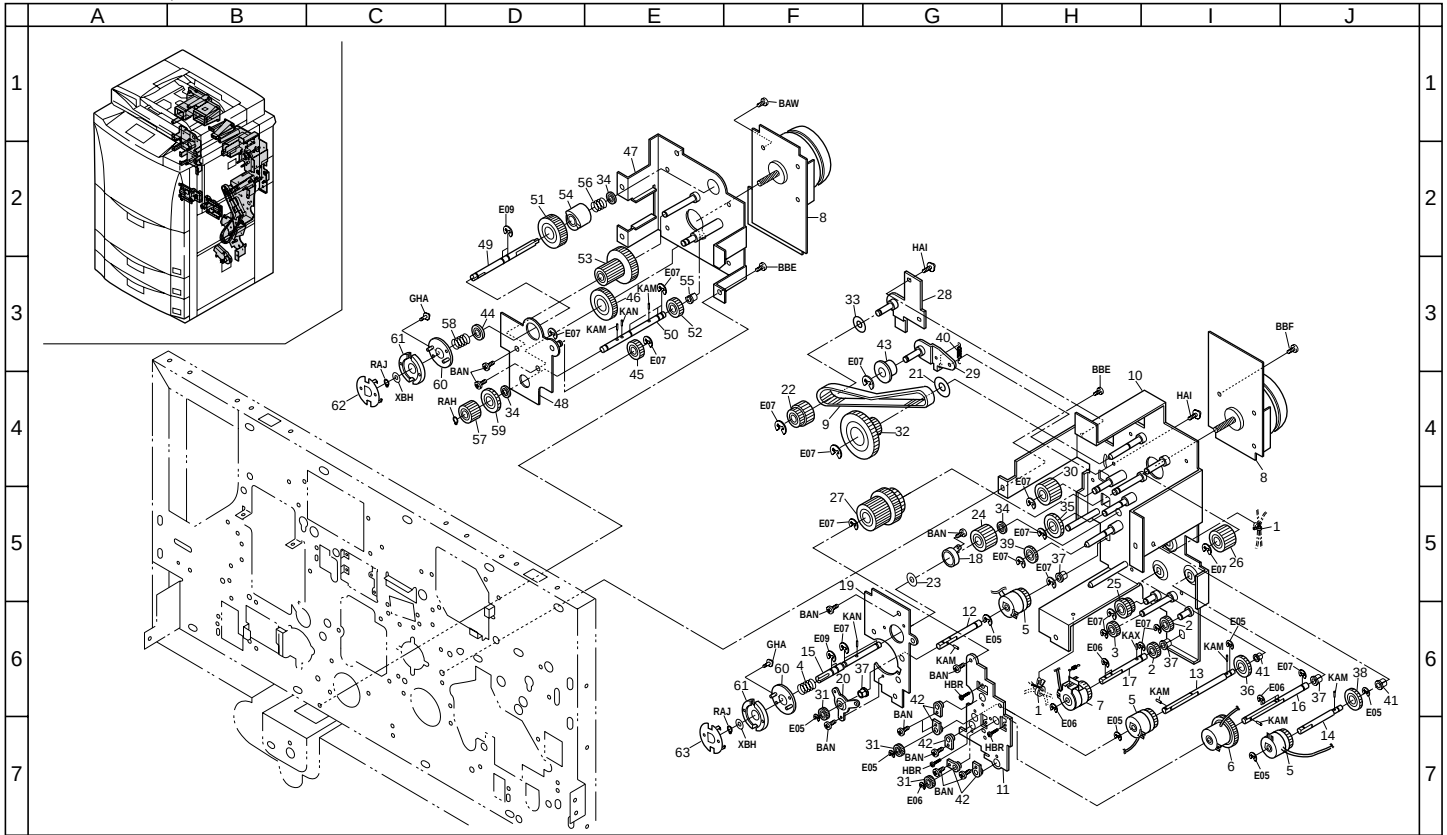
A B C D E F G H I J
1 2 3 4 5 6 7
BAW
BBE
BBF
HAI
GHA
RAJ
XBH
RAH
BAN
KAM
KAN
KAX
HBR
E05
E06
E07
E09

FIG. 25 DRIVING, COOLING SECTION I

Ref. No.	Part. No.	Description	Quantity 230V	Quantity 240V
1	M2107120	BINDING BAND SG-130	2	2
2	45727303	GEAR 26,CLUTCH	2	2
3	45729404	GEAR B,PF PULLEY	1	1
4	48529601	SPRING,DEVELOPING UNIT COUPLER	1	1
5	33906330	CLUTCH,REGISTRATION	3	3
6	36707230	CLUTCH,BYPASS	1	1
7	36707240	CLUTCH,BYPASS LIFT	1	1
8	36793460	PARTS,MOTOR MAIN(SP)	2	2
9	36722050	BELT,DRUM DRIVE	1	1
10	36722210	MOUNT A,IMAGE FORMATION DRIVE	1	1
11	36722220	MOUNT B,IMAGE FORMATION DRIVE	1	1
12	36722350	SHAFT,REGISTRATION DRIVE	1	1
13	36722360	SHAFT A,FEED DRIVE	1	1
14	36722370	SHAFT B,FEED DRIVE	1	1
15	36722380	SHAFT,DEVELOPING COUPLING	1	1
16	36722390	SHAFT,BYPASS CLUTCH	1	1
17	36722400	SHAFT SP,BYPASS CLUTCH	1	1
18	36722500	BUSHING,DEVELOPING DRIVE	1	1
19	36722510	MOUNT C,IMAGE FORMATION DRIVE	1	1
20	36722520	RETAINER,REGISTRATION CLUTCH	1	1
21	36722690	COLLAR,DRUM DRIVE BELT	1	1
22	36722750	PULLEY 26/26,DRUM	1	1
23	36722760	COLLAR,DEVELOPING JOINT	1	1
24	36722770	GEAR 30,DEVELOPING DRIVE	1	1
25	36722780	GEAR 30/15,IDLE	1	1
26	36722790	GEAR 45,DRUM IDLE	1	1
27	36722800	GEAR 53/44/33	1	1
28	36722810	JUNCTION PLATE,DRUM DRIVE	1	1
29	36722820	TENSION PLATE,IMAGE FORMATION DRIVE	1	1
30	36722830	GEAR 27,DEVELOPING IDLE	1	1
31	36722860	GEAR 18	3	3
32	36722870	PULLEY 24/72,IDLE	1	1
33	36723590	FLANGE 30,BELT	1	1
34	60912270	BEARING,688ZZ	3	3
35	61522040	DRIVE GEAR,FIXING SECTION	1	1
36	61714151	GEAR A,PADDLE	1	1
37	67322230	BUSHING 8	4	4
38	68314080	GEAR,DEVELOPING PADDLE	1	1
39	72107640	IDLE GEAR 27	1	1
40	72418140	SPRING, BLADE	1	1
41	73210450	BUSH, 6	2	2
42	74718091	BUSHING CLEANING UNIT	5	5
43	78622270	IDLE PULLEY	1	1
44	G3169000	BEARING 6900ZZNR	1	1
45	45728115	IDLE GEAR 22	1	1
46	45729502	IDLE GEAR 40	1	1
47	36722290	MOUNT A,CONVEYING MOTOR	1	1
48	36722300	MOUNT B,CONVEYING MOTOR	1	1
49	36722420	SHAFT,FIXING DRIVE	1	1
50	36722480	SHAFT,CONVEYING DRIVE	1	1
51	36722680	GEAR 36,FIXING JOINT	1	1
52	36722880	GEAR 45,MOTOR IDLE	1	1
53	36722890	GEAR 56/25,MOTOR IDLE	1	1
54	36722990	COUPLER,FIXING JOINT	1	1
55	36723600	BUSHING 8,MOTOR	1	1
56	71707240	SPRING,CASSETTE LOCK SOL	1	1
57	72114110	GEAR 20,DEVELOPER UNIT	1	1
58	73808100	SPRING, MC BRUSH	1	1
59	73820080	GEAR, OIL ROLLER	1	1
60	33422290	JOINT,DRIVE	2	2
61	33422301	COUPLER,DRIVE	2	2
62	36723560	JUNCTION PLATE,JOINT	1	1
63	36722030	JUNCTION PLATE,DEVELOPING JOINT	1	1

• Parts with "•" are component parts or sub-assemblies of the assembly appearing immediately above them.

• Parts with "• •" are component parts or sub-assembly with "•" appearing immediately above them.

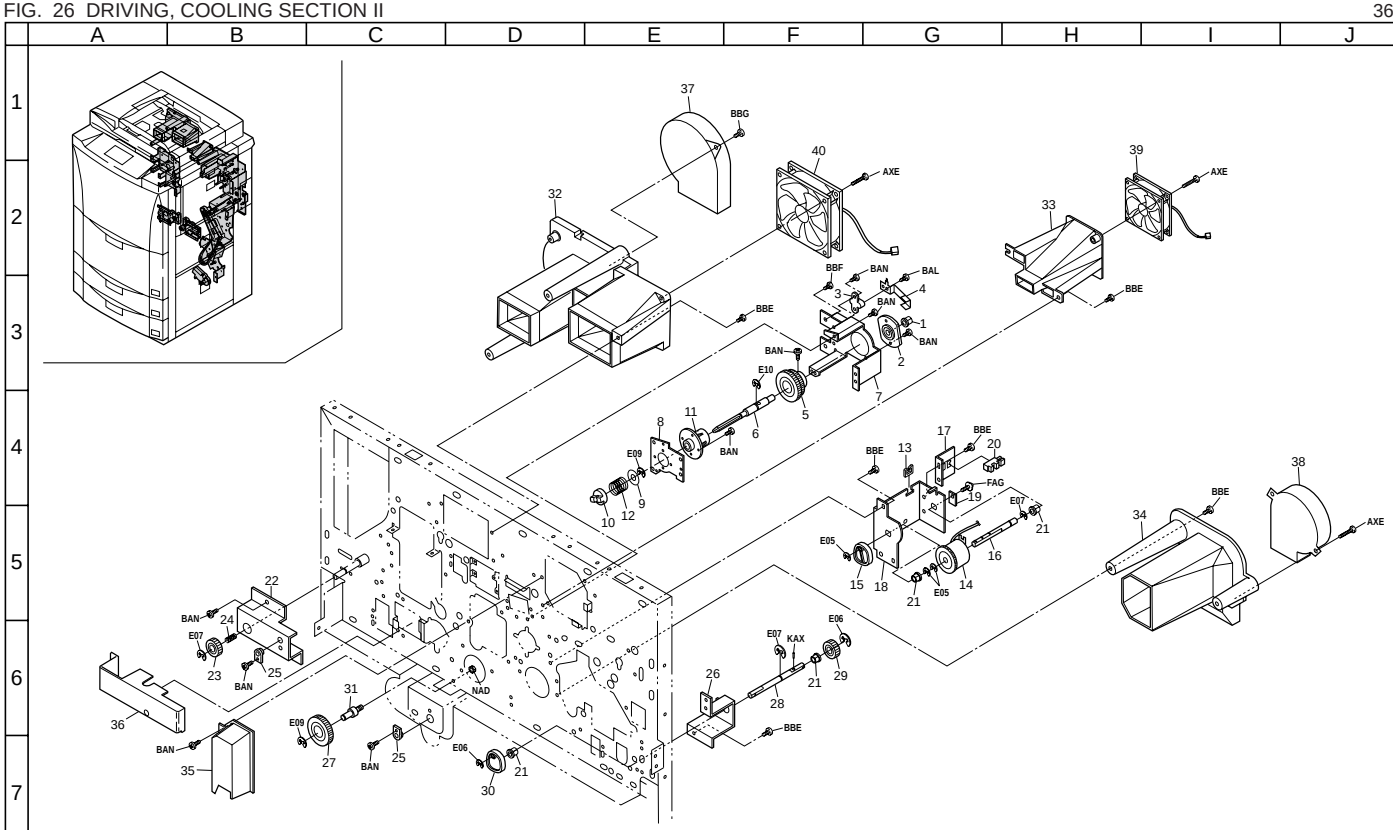
A B C D E F G H I J
1 2 3 4 5 6 7
37
BBG
40
AXE
39
AXE
32
33
BBF
BAN
BAL
4
3
BAN
1
BAN
2
BBE
BBE
BAN
E10
5
7
8
11
6
BAN
E09
9
10
12
17
BBE
20
FAG
19
BBE
13
E07
21
E05
15
18
21
E05
14
16
34
BBE
38
AXE
22
BAN
24
E07
23
25
BAN
36
BAN
35
31
E09
27
BAN
25
NAD
E06
30
21
26
28
E07
KAX
21
E06
29
BBE

FIG. 26 DRIVING, COOLING SECTION II

Ref. No.	Part. No.	Description	Quantity 230V	Quantity 240V
1	49021301	BUSHING, CUTTER	1	1
2	49029408	BUSHING,DRUM DRIVE	1	1
3	29422110	TERMINAL BASE(GND),DRUM	1	1
4	36708310	PLATE SPRING,DRUM GROUND	1	1
5	36722320	GEAR 60/54,DRUM	1	1
6	36722340	SHAFT,DRUM DRIVE	1	1
7	36722700	HOLDER,DRUM DRIVE	1	1
8	36722710	RETAINER,DRUM DRIVE	1	1
9	36722760	COLLAR,DEVELOPING JOINT	1	1
10	36722980	COUPLER,DRUM DRIVE	1	1
11	74322480	BUSHING A,DRUM DRIVE	1	1
12	74722290	SPRING DRUM DRIVE COUPLER	1	1
13	M2104260	EDGING,EDS-0607U(KITAGAWA)	1	1
14	36593510	PARTS CLUTCH PRESSURE(SP)	1	1
15	36722130	CAM,TRANSFER BELT	1	1
16	36722440	SHAFT,TRANSFER BELT CLUTCH	1	1
17	36722610	MOUNT,CUTTER PI	1	1
18	36722620	MOUNT A,TRANSFER BELT CLUTCH	1	1
19	36722720	LIGHT SHIELD,PI	1	1
20	66006350	SWITCH,CASSETTE LIFT	1	1
21	67322230	BUSHING 8	4	4
22	36720420	REINFORCEMENT,FIXING EJECT JOINT	1	1
23	36720390	GEAR,FIXING EJECT JOINT	1	1
24	74706580	JOINT SPRING UPPER PF PULLEY SHAFT	1	1
25	74718091	BUSHING CLEANING UNIT	2	2
26	36722530	RETAINER,BYPASS CAM	1	1
27	74322310	GEAR 44,DUPLEX	1	1
28	36722410	SHAFT,BYPASS CAM	1	1
29	45727303	GEAR 26,CLUTCH	1	1
30	36707220	CAM,MOVING GUIDE	1	1
31	36723520	PIN,CONVEYING IDLE	1	1
32	36723020	LEFT DUCT,MACHINE INSIDE COOLING	1	1
33	36710280	DUCT,CHARGE	1	1
34	36723060	DUCT,DEVELOPING COOLING FAN	1	1
35	36723030	RIGHT DUCT,MACHINE INSIDE COOLING	1	1
36	36723080	INNER DUCT,MACHINE INSIDE COOLING	1	1
37	61727450	FAN,COOLING	1	1
38	33416350	FAN,CONVEYING	1	1
39	34993270	PARTS FAN COOLING(SP)	1	1
40	61727440	FAN,CONVEYING	1	1

• Parts with "•" are component parts or sub-assemblies of the assembly appearing immediately above them.

• Parts with "• •" are component parts or sub-assembly with "•" appearing immediately above them.

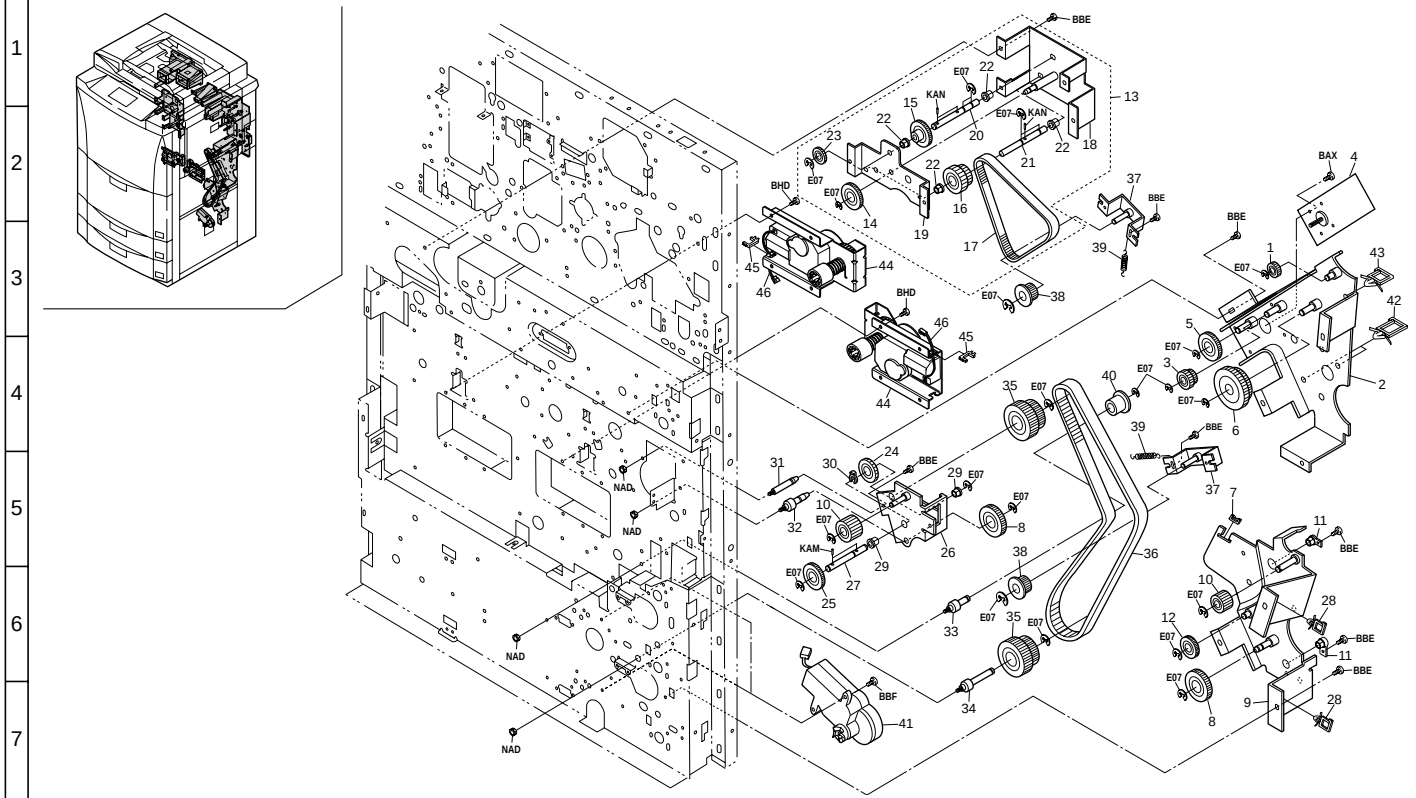
A B C D E F G H I J
1 2 3 4 5 6 7
BBE
E07
KAN
BHD
BAX
BBF
NAD
KAM

FIG. 27 DRIVING, COOLING SECTION III

Ref. No.	Part. No.	Description	Quantity 230V	Quantity 240V
1	45727303	GEAR 26,CLUTCH	1	1
2	36722250	UPPER MOUNT,PAPER FEED DRIVE (EXP)	1	1
3	36723550	GEAR 30/22	1	1
4	36727570	MOTOR,PAPER FEED	1	1
5	75722101	DEVELOPING UNIT DRIVE GEAR 53	1	1
6	77622040	GEAR 63/49 DRIVE	1	1
7	M2104210	EDGING,EDS-2	1	1
8	36722020	GEAR 40,IDLE	2	2
9	36722280	LOWER MOUNT,PAPER FEED DRIVE	1	1
10	36722540	GEAR 26,IDLE	2	2
11	74718091	BUSHING CLEANING UNIT	2	2
12	75722040	DRIVE IDLE GEAR 24	1	1
13	*36700380*	*CONVEYING DRIVE ASS'Y*	*1*	*1*
14	•45729213	GEAR 40,DEVELOPING UNIT	1	1
15	•45729430	GEAR 36,CLEANING UNIT	1	1
16	•33922241	PULLEY 31/42,IDLE	1	1
17	•33922250	BELT,PAPER FEED DRIVE	1	1
18	•36722230	MOUNT A,CONVEYING DRIVE	1	1
19	•36722240	MOUNT B,CONVEYING DRIVE	1	1
20	•36723530	SHAFT,DUPLEX IDLE	1	1
21	•36723540	SHAFT,BELT DRIVE	1	1
22	•67322230	BUSHING 8	4	4
23	•67822290	GEAR 29,ROLL DRIVE	1	1
24	45729404	GEAR B,PF PULLEY	1	1
25	36722170	GEAR 53,CASSETTE DRIVE	1	1
26	36722260	MOUNT,CASSETTE DRIVE	1	1
27	36722460	SHAFT,CASSETTE DRIVE	1	1
28	M2109080	LOCKING WIRE SADDLE,LWS-4NS	2	2
29	67322230	BUSHING 8	2	2
30	75706040	STOPRING PAPER FEED PULLEY	1	1
31	36722560	PIN A,PAPER FEED DRIVE	1	1
32	36722570	PIN B,PAPER FEED DRIVE	1	1
33	36722580	PIN C,PAPER FEED DRIVE	1	1
34	36722590	PIN A,TENSION	1	1
35	36722850	GEAR 42/32	2	2
36	36723580	BELT,PAPER FEED DRIVE	1	1
37	36722730	TENSION PLATE C,PAPER FEED	2	2
38	68322210	PULLEY,21 IDLE	2	2
39	72418140	SPRING, BLADE	2	2
40	72622141	TENSION PULLEY 20	1	1
41	36727480	MOTOR,LIFT CASSETTE	2	2
42	M2109230	WIRE SADDLE,LWS-3S(KITAGAWA)	2	2
43	M2109180	WIRE SADDLE,LWS-1S	1	1
44	36707770	MOTOR,DECK	2	2
45	M2104260	EDGING,EDS-0607U(KITAGAWA)	2	2
46	36727310	JUNCTION WIRING,LIFT MOTOR (EXP)	2	2

• Parts with "•" are component parts or sub-assemblies of the assembly appearing immediately above them.

• Parts with "• •" are component parts or sub-assembly with "•" appearing immediately above them.

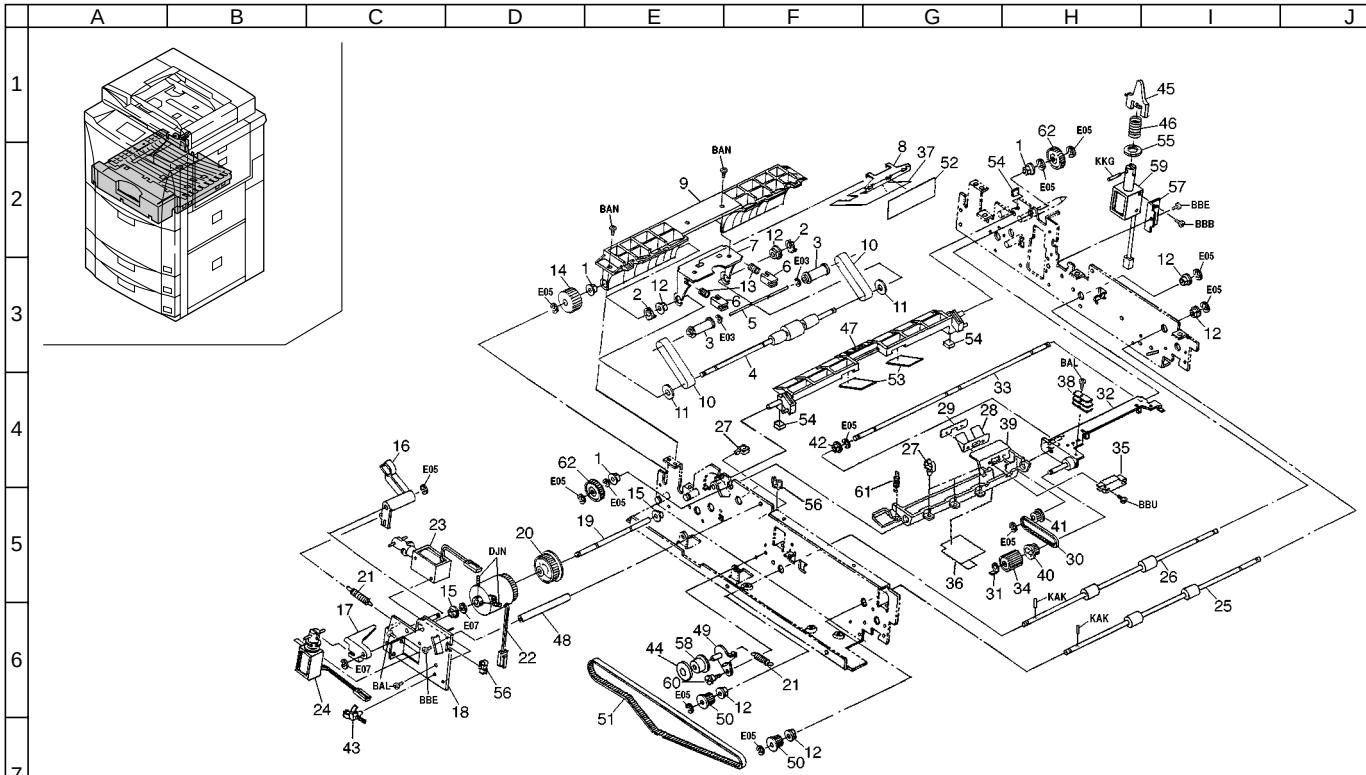
A B C D E F G H I J
1 2 3 4 5 6 7
BAN
BAL
KKG
BBE
BBB
BBU
DJN
KAK
E03
E05
E07

FIG. 28 DUPLEX UNIT I

367/183-1

Ref. No.	Part. No.	Description	Quantity 230V	Quantity 240V
1	29806810	BUSHING,6 REGISTRATION	3	3
2	63511220	STOP RING,4	2	2
3	68721100	COLLAR,SEPARATION	2	2
4	68721110	ROLLER,SEPARATION	1	1
5	68721120	SHAFT,SEPARATION	1	1
6	68721130	BUSHING,SEPARATION	2	2
7	68721140	GUIDE,SEPARATION	1	1
8	68721150	FRONT MOUNT,SEPARATION GUIDE	1	1
9	68721170	UPPER GUIDE,TURN OVER	1	1
10	68721651	BELT,SEPARATION	2	2
11	71602201	SPACER,SHIFT LEVER	2	2
12	73210450	BUSH, 6	6	6
13	76218230	SPRING CLEANING RELEASE	2	2
14	77521010	GEAR 18,ONE WAY SWITCHBACK	1	1
15	67322230	BUSHING 8	2	2
16	68721500	LEVER,TRAILING EDGE TAPPING	1	1
17	68721530	LEVER,REFEED	1	1
18	68721540	MOUNT,SOLENOID	1	1
19	68721560	SHAFT,DUPLEX CONVEYING CLUTCH	1	1
20	68721630	PULLEY 40,DUPLEX CONVEYING	1	1
21	68721760	SPRING,TRAILING EDGE TAPPING	2	2
22	68727070	CLUTCH,DUPLEX CONVEYING	1	1
23	68727080	SOLENOID,TRAILING EDGE TAPPING	1	1
24	68727090	SOLENOID,REFEED	1	1
25	68721090	ROLLER,DUPLEX CONVEYING	1	1
26	68721750	ROLLER B,DUPLEX CONVEYING	1	1
27	M2105220	MINI CLAMP,UAMS-02WH-2(KITAGAWA)	5	5
28	36717020	PLATE SPRING,REFEED	1	1
29	36717030	RETAINER,PLATE SPRING	1	1
30	62207180	BELT,LEADING EDGE	1	1
31	63511220	STOP RING,4	1	1
32	68721400	SUPPORT PLATE,LEADING REGISTRATION	1	1
33	68721410	SHAFT,LEADING REGISTRATION	1	1
34	68721420	PULLEY,LEADING REGISTRATION	1	1
35	66006360	PAPER SWITCH	1	1
36	36717040	GUIDE FILM,LEADING FEED PULLEY	1	1
37	36717070	INNER GUIDE FILM,SEPARATION BELT	1	1
38	68721480	WEIGHT,LEADING REGISTRATION	3	3
39	36717010	HOLDER,REFEED	1	1
40	76007090	DRIVE PULLEY 27,LEADING EDGE	1	1
41	76507170	PULLEY 22 ORIGINAL FEED ROLLER	1	1
42	73210450	BUSH, 6	1	1
43	M2107120	BINDING BAND SG-130	1	1
44	34922530	COLLAR,PULLEY	1	1
45	68721450	LEVER,LEADING REGISTRATION	1	1
46	*73918130*	*SPRING,CLEANING UNIT SOLENOID*	*1*	*1*
47	68721491	GUIDE,TRAILING EDGE TAPPING	1	1
48	68721550	PIN,SOLENOID MOUNT	1	1
49	68721571	TENSION PLATE,DUPLEX CONVEYING	1	1
50	68721640	PULLEY 20,DUPLEX CONVEYING	2	2
51	68721660	BELT 600,DUPLEX CONVEYING	1	1
52	68721700	GUIDE FILM,SEPARATION BELT	1	1
53	68721710	GUIDE FILM,LEADING FEED	2	2
54	*36717080*	*STOPPER,TRAILING EDGE TAPPING*	*3*	*3*
55	68721730	STOPPER,LEADING FEED SOLENOID	1	1
56	M2104260	EDGING,EDS-0607U(KITAGAWA)	2	2
57	68721800	MOUNT,LEADING REGISTRATION SOLENOID	1	1
58	75722252	IDLE PULLEY 15	1	1
59	68727100	SOLENOID,LEADING REGISTRATION	1	1
60	48129000	PIN,ORIGINAL HOLDER	1	1
61	68721900	SPRING,HOLDER	1	1
62	73210370	GEAR 18,LOOP	2	2

• Parts with "•" are component parts or sub-assemblies of the assembly appearing immediately above them.

• Parts with "• •" are component parts or sub-assembly with "•" appearing immediately above them.

FIG. 29 DUPLEX UNIT II

367/183-1

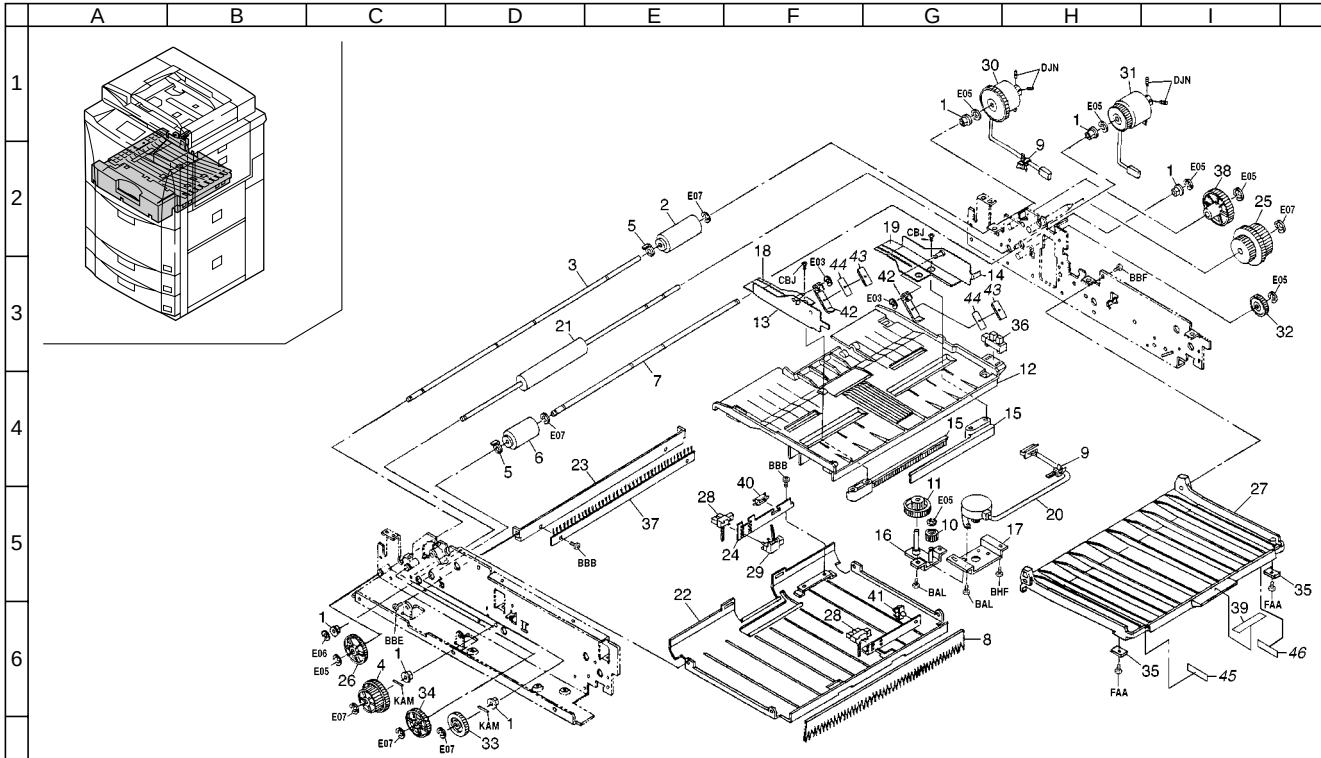

FIG. 29 DUPLEX UNIT II

367/183-1

Ref. No.	Part. No.	Description	Quantity 230V	Quantity 240V
1	67322230	BUSHING 8	6	6
2	68721030	PULLEY,TURN OVER	1	1
3	68721041	SHAFT,TURN OVER	1	1
4	68721610	GEAR 24/36,DUPLEX DRIVE	1	1
5	75706040	STOPRING PAPER FEED PULLEY	2	2
6	68721050	PULLEY,REFEED	1	1
7	68721060	SHAFT,REFEED	1	1
8	67421330	STATIC ELIMINATOR,DUPLEX UNIT	1	1
9	M2107120	BINDING BAND SG-130	2	2
10	65815060	IDLE GEAR 40,TONER SUPPLY	1	1
11	66717230	GEAR,SIDE REGISTRATION	1	1
12	68721161	LEFT GUIDE,MIDDLE TRAY	1	1
13	36717050	FRONT GUIDE,SIDE REGISTRATION	1	1
14	36717060	REAR GUIDE,SIDE REGISTRATION	1	1
15	68721370	RACK,SIDE REGISTRATION	2	2
16	68721380	MOUNT,SIDE REGISTRATION DRIVE	1	1
17	68721390	MOUNT,SIDE REGISTRATION MOTOR	1	1
18	35607060	FRONT COVER,SIDE REGISTRATION GUIDE	1	1
19	35607070	REAR COVER,SIDE REGISTRATION GUIDE	1	1
20	68727020	MOTOR,DUPLEX SIDE REGISTRATION	1	1
21	68721070	UPPER ROLLER,DUPLEX REGISTRATION	1	1
22	68721180	UPPER GUIDE,DUPLEX CONVEYING	1	1
23	68721340	INNER SUPPORT PLATE,DUPLEX UNIT	1	1
24	68721580	MOUNT,DUPLEX SW	1	1
25	68721600	GEAR,DUPLEX JOINT	1	1
26	68721620	GEAR 18/36,DUPLEX DRIVE	1	1
27	68721770	RIGHT GUIDE,MIDDLE TRAY	1	1
28	68727030	SWITCH,DUPLEX CONVEYING	2	2
29	68727040	SWITCH,DUPLEX PE	1	1
30	68727050	CLUTCH,DUPLEX	1	1
31	68727060	CLUTCH,DUPLEX REGISTRATION	1	1
32	45728116	GEAR 28,JOINT	1	1
33	45729404	GEAR B,PF PULLEY	1	1
34	61522040	DRIVE GEAR,FIXING SECTION	1	1
35	65973030	MAGNET,CARTRIDGE	2	2
36	66006350	SWITCH,CASSETTE LIFT	1	1
37	66321360	STATIC ELIMINATOR,EJECT	1	1
38	67322050	GEAR 45 DEVELOPING DRIVE	1	1
39	68705040	RIGHT LABEL,MIDDLE TRAY RELEASE	1	1
40	M2104260	EDGING,EDS-0607U(KITAGAWA)	1	1
41	M2105730	MINIATURE CLAMP,UAMS-07-0	1	1
42	35607031	GUIDE,PAPER HOLDER	2	2
43	68721480	WEIGHT,LEADING REGISTRATION	2	2
44	*18821130*	*DOUBLE COATED TAPE,GUIDE WEIGHT*	*2*	*2*
45	*35607100*	*FRONT UPPER GUIDE FILM,DUPLEX CONVEYING*	*1*	*1*
46	*35607110*	*REAR UPPER GUIDE FILM,DUPLEX CONVEYING*	*1*	*1*

• Parts with "•" are component parts or sub-assemblies of the assembly appearing immediately above them.

• Parts with "• •" are component parts or sub-assembly with "•" appearing immediately above them.

FIG. 30 DUPLEX UNIT III

367/183-1

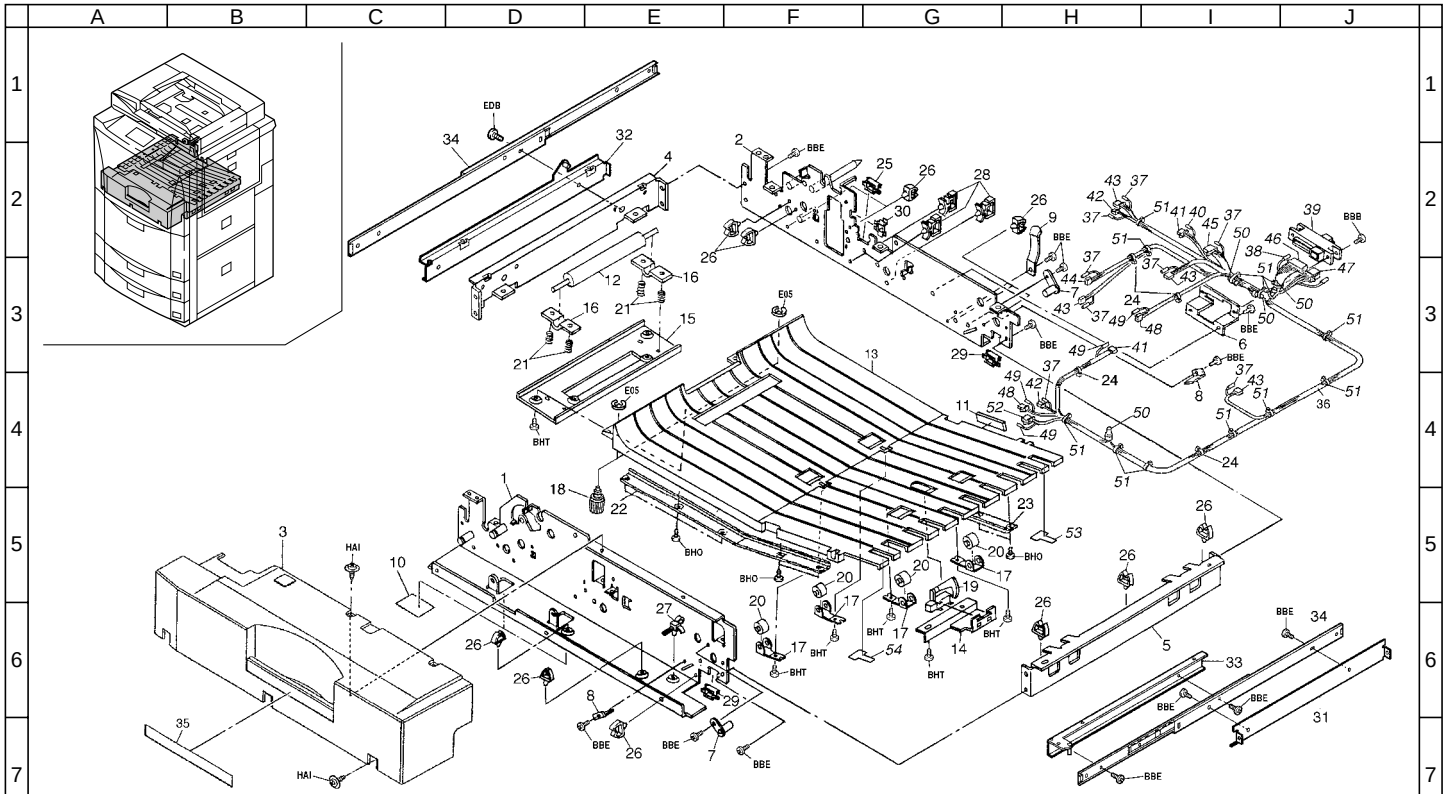

FIG. 30 DUPLEX UNIT III

Ref. No.	Part. No.	Description	Quantity 230V	Quantity 240V
1	68721011	FRONT FRAME,DUPLEX UNIT	1	1
2	68721020	REAR FRAME,DUPLEX UNIT	1	1
3	36704420	COVER,DUPLEX UNIT	1	1
4	*36717090*	*LEFT SUPPORT PLATE,DUPLEX UNIT*	*1*	*1*
5	*36717100*	*RIGHT SUPPORT PLATE,DUPLEX UNIT*	*1*	*1*
6	68721590	MOUNT,DUPLEX DRAWER	1	1
7	68721740	PIN,DUPLEX CONVEYING FULCRUM	2	2
8	68721790	LOWER STOPPER,DUPLEX CONVEYING	2	2
9	68721840	GROUND PLATE,DUPLEX	1	1
10	68721850	BOTTOM FRONT COVER,FRAME	2	2
11	33702270	CUSHION,DUPLEX CONVEYING	1	1
12	68721080	LOWER ROLLER,DUPLEX REGISTRATION	1	1
13	68721190	LOWER GUIDE,DUPLEX CONVEYING	1	1
14	68721200	MOUNT,DUPLEX CONVEYING SW	1	1
15	68721210	RETAINER,DUPLEX REGISTRATION	1	1
16	68721220	PRESSING PLATE,DUPLEX REGISTRATION	2	2
17	68721230	PLATE SPRING,DUPLEX CONVEYING	4	4
18	68721780	RETAINING PIN,CONVEYING	2	2
19	68727110	SWITCH,DUPLEX EJECT	1	1
20	75416200	PAPER CONVEYING PULLEY	4	4
21	78112040	SPRING CIS	4	4
22	68721870	FRONT HOLDER,DUPLEX CONVEYING	1	1
23	68721880	REAR HOLDER,DUPLEX CONVEYING	1	1
24	M2607010	BINDING BAND,PLT1M	4	4
25	M2104250	EDGING,EDS-17L(KITAGAWA)	1	1
26	M2105730	MINIATURE CLAMP,UAMS-07-0	12	12
27	M2107120	BINDING BAND SG-130	1	1
28	M2109180	WIRE SADDLE,LWS-1S	3	3
29	M2104210	EDGING,EDS-2	2	2
30	M2104260	EDGING,EDS-0607U(KITAGAWA)	1	1
31	33902060	RIGHT REINFORCEMENT	1	1
32	33902070	LEFT MOUNT,RAIL	1	1
33	36707880	RIGHT MOUNT,RAIL	1	1
34	66107083	SLIDER,CASSETTE	2	2
35	36705050	LABEL,DUPLEX UNIT	1	1
36	36727510	WIRE,DUPLEX UNIT	1	1
37	*•J0450800*	*SOCKET,DF3-2428SCF(HIROSE)*	*24*	*24*
38	*•J0441800*	*CONTACTOR,DF-11-2428SCF*	*18*	*18*
39	*•J0463240*	*PLUG,QR/P15-24(4)S-C(HIROSE)*	*1*	*1*
40	*•J0150810*	*CONTACTOR,1-175102-1(AMP)*	*6*	*6*
41	*•J0150030*	*RECEPTACLE,175778-3(AMP)*	*2*	*2*
42	*•J0450020*	*PLUG,DF3-2S-2C(HIROSE)*	*2*	*2*
43	*•J0450030*	*PLUG,DF3-3S-2C(HOROSE)*	*4*	*4*
44	*•J0451030*	*PLUG,DF3-3S-2C(18)(HIROSE)*	*1*	*1*
45	*•J0450060*	*PLUG,DF-6S-2C(HIROSE)*	*1*	*1*
46	*•J0440200*	*PLUG,DF11-20DS-2C(HIROSE)*	*1*	*1*
47	*•J0480040*	*PLUG,MDF6-4DS-3.5C*	*1*	*1*
48	*•J0241020*	*PLUG SM 2P,SMP-02V-BC*	*2*	*2*
49	*•J0250810*	*SOCKET,SHF-001T-0.8SS*	*6*	*6*
50	*•L0240000*	*CLOSE TYPE CONNECTOR,0.5-1-75,CE1(CE-100)*	*4*	*4*
51	*•M2307010*	*BINDING BAND T18R*	*13*	*13*
52	*•J0241030*	*PLUG SM 3P,SMP-03V-BC*	*1*	*1*
53	*35607090*	*REAR LOWER GUIDE FILM,DUPLEX CONVEYING*	*1*	*1*
54	*35607080*	*FRONT LOWER GUIDE FILM,DUPLEX CONVEYING*	*1*	*1*

• Parts with "•" are component parts or sub-assemblies of the assembly appearing immediately above them.

• Parts with "• •" are component parts or sub-assembly with "•" appearing immediately above them.

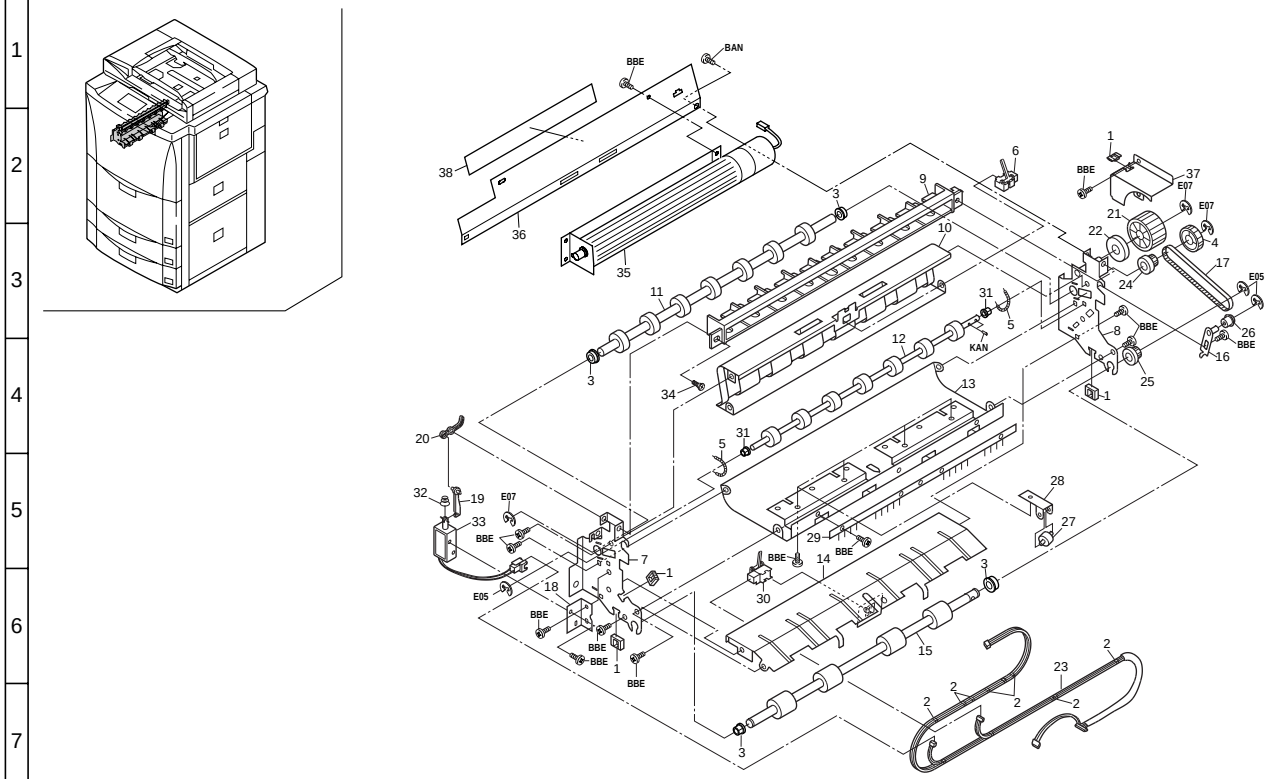
A B C D E F G H I J
1 2 3 4 5 6 7
BBE
BAN
38
36
35
3
9
10
6
1
37
E07
21
22
4
17
24
E05
11
31
5
KAN
8
26
16
12
34
13
25
20
32
19
33
18
7
30
14
29
28
27
15
23
2
E05

FIG. 31 REVERSING SECTION

Ref. No.	Part. No.	Description	Quantity	
			230V	240V
1	M2104260	EDGING,EDS-0607U(KITAGAWA)	4	4
2	M2307010	BINDING BAND,T18R	7	7
3	49028101	BUSH 8	4	4
4	45729420	GEAR,LOWER TRANSFER ROLLER	1	1
5	29717220	PRESSING SPRING B,SB	2	2
6	33920560	SWITCH,FIXING	1	1
7	36721200	FRONT FRAME,FEED SHIFT	1	1
8	36721210	REAR FRAME,FEED SHIFT	1	1
9	36721220	UPPER GUIDE,FEED SHIFT	1	1
10	36721230	LOWER GUIDE,FEED SHIFT	1	1
11	36721250	LEFT ROLLER,FEED SHIFT MIDDLE	1	1
12	36721260	RIGHT ROLLER,FEED SHIFT MIDDLE	1	1
13	36721270	UPPER GUIDE,FEED SHIFT EJECT	1	1
14	36721280	LOWER GUIDE,FEED SHIFT EJECT	1	1
15	36721290	ROLLER,FEED SHIFT	1	1
16	36721300	TENSION PLATE,FEED SHIFT DRIVE	1	1
17	36721310	BELT 240,FEED SHIFT DRIVE	1	1
18	36721320	MOUNT,FEED SHIFT SOLENOID	1	1
19	36721330	LEVER A,CONVEYING SHIFT	1	1
20	36721340	LEVER B,CONVEYING SHIFT	1	1
21	36721350	GEAR,EJECT JOINT	1	1
22	36721360	COLLAR 31,EJECT JOINT	1	1
23	36727170	WIRE,FEED SHIFT UNIT	1	1
24	65722030	PULLEY 22,FEED	1	1
25	65722250	PULLEY 20,EJECT	1	1
26	66015270	PULLEY 10,TONER RECYCLE	1	1
27	68720160	PULLEY,FEED SHIFT	4	4
28	68720170	MOUNT,FEED SHIFT PULLEY	4	4
29	68720180	STATIC ELIMINATOR,FEED SHIFT	1	1
30	68727030	SWITCH,DUPLEX CONVEYING	1	1
31	72107160	BUSHING 6,LOWER REGISTRATION ROLLER	2	2
32	73226040	SPRING,REVERSE SOLENOID	1	1
33	73227090	SOLENOID,LOOP	1	1
34	48129208	PIN,TENSION	1	1
35	36727500	FAN,FIXING	1	1
36	36721410	MOUNT,PAPER EJECT COOLING FAN	1	1
37	36721400	COVER,FEED SHIFT WIRE	1	1
38	19605060	CAUTION LABEL, HIGH TEMPERATURE S(EXP)	1	1

• Parts with "•" are component parts or sub-assemblies of the assembly appearing immediately above them.

• Parts with "• •" are component parts or sub-assembly with "•" appearing immediately above them.

FIG. 32 PAPER EJECT SECTION

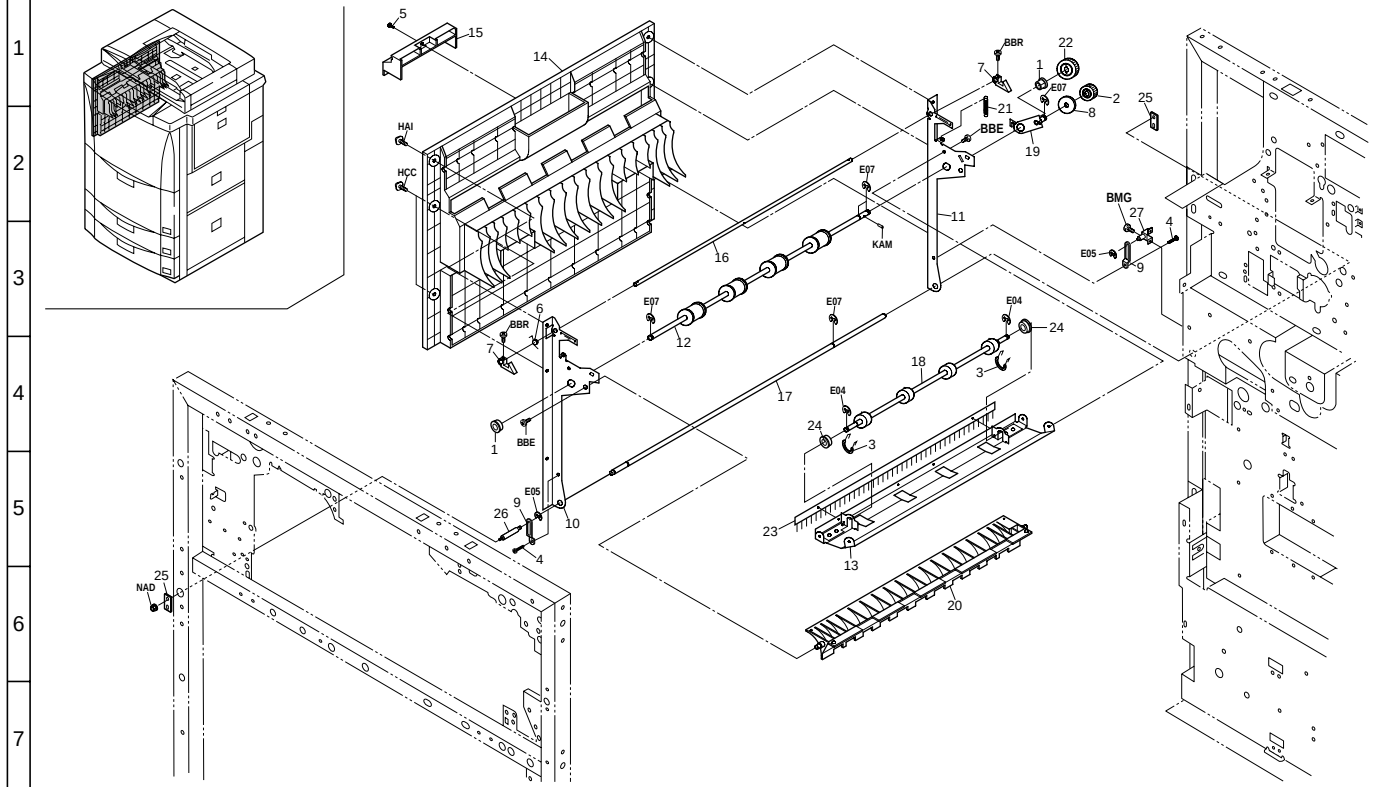

FIG. 32 PAPER EJECT SECTION

Ref. No.	Part. No.	Description	Quantity 230V	Quantity 240V
1	49028101	BUSH 8	2	2
2	45729201	GEAR 20,DEV.UNIT	1	1
3	29717150	PRESSING SPRING,FEED BACK	2	2
4	29820110	FRONT PIN,FULCRUM	2	2
5	29820420	PIN,BEARING	1	1
6	33906640	RIGHT SPRING,FEED RELEASE	1	1
7	33906670	RIGHT HOOK,FEED RELEASE	2	2
8	33921180	COLLAR 27,EJECT DRIVE	1	1
9	36706770	SUPPORT PLATE,VERTICAL CONVEYING RELEASE	2	2
10	36721010	FRONT FRAME,EJECT	1	1
11	36721020	REAR FRAME,EJECT	1	1
12	36721030	ROLLER,EJECT	1	1
13	36721040	UPPER GUIDE,EJECT	1	1
14	36721060	COVER,EJECT	1	1
15	36721090	HANDLE,EJECT COVER RELEASE	1	1
16	36721100	SHAFT,EJECT UNIT RELEASE	1	1
17	36721120	SHAFT,EJECT UNIT FULCRUM	1	1
18	36721150	UPPER ROLLER,EJECT	1	1
19	36721160	TENSION PLATE,EJECT DRIVE	1	1
20	36721240	GUIDE,CONVEYING SHIFT	1	1
21	67318220	SPRING,SOLENOID	1	1
22	67322180	GEAR 28,IDLE DRIVE	1	1
23	68317050	STATIC ELIMINATOR	1	1
24	72107160	BUSHING 6,LOWER REGISTRATION ROLLER	2	2
25	36721110	FULCRUM PLATE,EJECT UNIT	2	2
26	36721180	FRONT PIN,EJECT UNIT SUPPORT	1	1
27	36721190	FRONT MOUNT,EJECT UNIT SUPPORT	1	1

• Parts with "•" are component parts or sub-assemblies of the assembly appearing immediately above them.

• Parts with "• •" are component parts or sub-assembly with "•" appearing immediately above them.

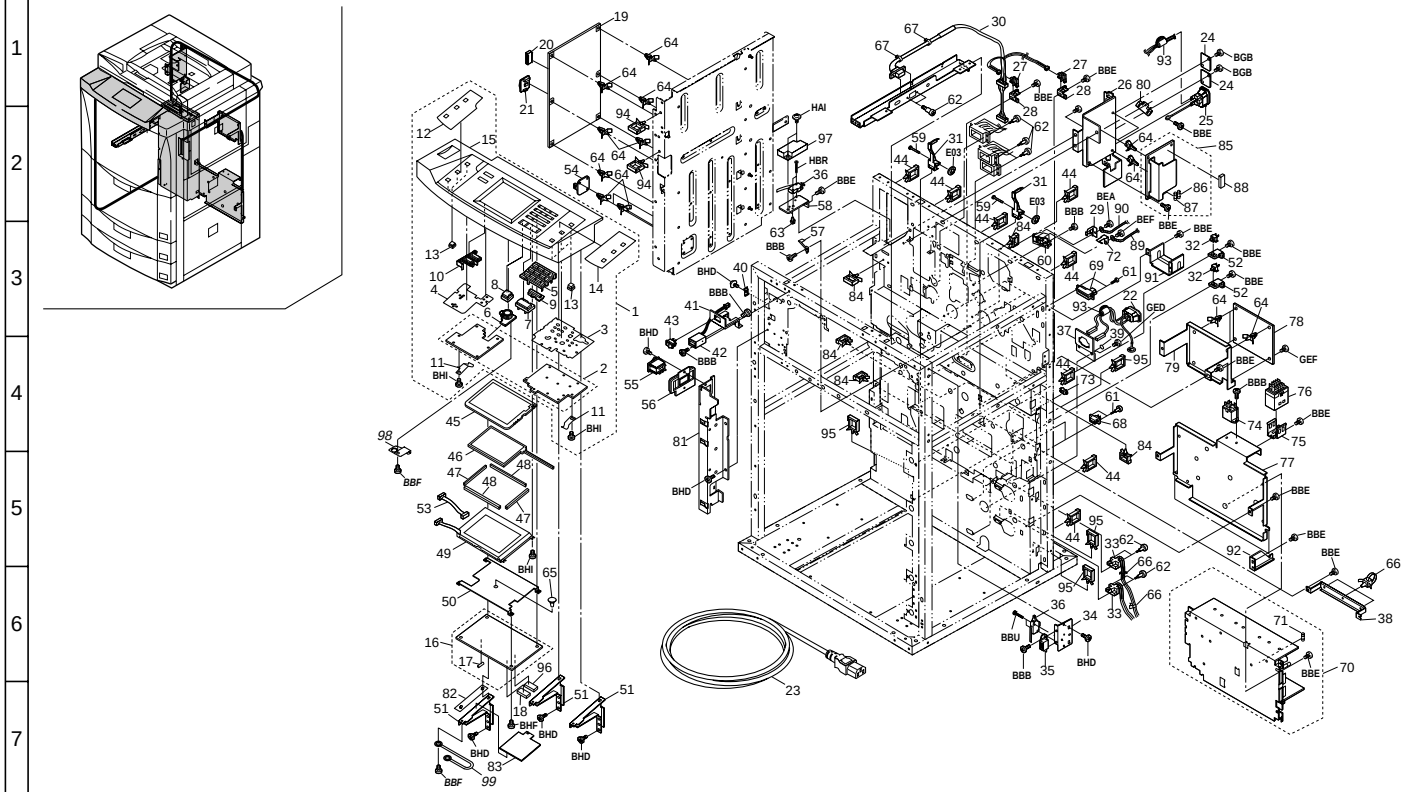
A B C D E F G H I J
1 2 3 4 5 6 7

FIG. 33 ELECTRICAL COMPONENTS I

367/183-1

Ref. No.	Part. No.	Description	Quantity 230V	Quantity 240V
1	36793140	PARTS,OPERATION UNIT ASS'Y(METRIC)SP	1	1
2	•33901130	PCB OPERATION UNIT ASS'Y	1	1
3	•33925010	RIGHT SHEET,DUST SHIELD	1	1
4	•33925020	LEFT SHEET,DUST SHIELD	1	1
5	•33925120	KEY 10,OPERATION UNIT	1	1
6	•33925190	KNOB,VOLUME	1	1
7	•33925280	KEY,PRINT (METRIC)	1	1
8	•33925290	KEY,RESET (METRIC)	1	1
9	•33925300	KEY,STOP CLEAR (METRIC)	1	1
10	•33925310	LEFT KEY,OPERATION UNIT (METRIC)	1	1
11	•33926130	GROUND PLATE,KEYBOARD	2	2
12	•36725010	COVER,OPERATION UNIT	1	1
13	•36725020	KEY,SORT	6	6
14	•36725070	RIGHT SHEET,OPERATION UNIT (METRIC)	1	1
15	•36725080	LEFT SHEET,OPERATION UNIT (METRIC)	1	1
16	36793610	PARTS,OPERATION UNIT MAIN PCB ASS'Y SP(SP)		1
16	36793620	PARTS,OPERATION UNIT MAIN PCB ASS'Y(EUR)SP	1	
17	•M5552040	FUSE,UL TSCR N1(SOC)	1	1
18	36727440	IC,ROM INDICATION (E)	1	1
19	36793590	PARTS,MAIN PCB ASS'Y SP(SP)	1	1
20	36727230	IC B,ROM MAIN PCB	1	1
21	33928050	BACKUP PCB	1	1
22	36701170	POWER INLET ASS'Y	1	
22	67801100	INLET ASS'Y		1
23	29927231	POWER CODE AS(240)		1
23	77727670	POWER CODE 220	1	
24	77502090	LID FINISHER CABLE	2	2
25	36701140	OUTLET ASS'Y	1	1
26	36726060	MOUNT,SORTER CONNECTOR (200)	1	1
27	66006350	SWITCH,CASSETTE LIFT	2	2
28	36707800	MOUNT,R SENSOR	2	2
29	61710610	TERMINAL,GRID CATCHER	1	1
30	36707760	WIRE,DECK	1	1
31	36707780	LEVER,R SENSOR	2	2
32	66127010	SWITCH,COVER OPEN	2	2
33	36727300	JUNCTION WIRING,PAPER FEED UNIT	2	2
34	36702230	MOUNT,SAFETY SWITCH	1	1
35	71804400	MAGNET CATCHER	1	1
36	61727540	INTERLOCK SWITCH B	2	2
37	36726010	MOUNT,INLET	1	1
38	36726050	MOUNT,WIRE MAIN	1	1
39	61405190	LABEL,GROUND	1	1
40	36720470	PLATE SPRING,RELEASE HOLDER	1	1
41	36726080	MOUNT,TOTAL COUNTER	1	1
42	33927260	TOTAL COUNTER	1	1
43	65227040	POWER SOURCE SWITCH	1	1
44	M2109300	WIRE SADDLE,LWS-8SL-2.5W(KITAGAWA)	8	8
45	33926150	BARRIER,TABLET	1	1
46	33927100	TABLET,OPERATION	1	1
47	33925060	CUSHION,LCD SMALL	2	2
48	33925050	CUSHION,LCD LARGE	2	2
49	33928040	LCD PCB	1	1
50	*33926121*	MOUNT,OPERATION UNIT MAIN PCB	1	1
51	36702210	MOUNT,OPERATION UNIT	3	3
52	33907200	MOUNT,PAPER SIZE DETECTION	2	2
53	33927090	WIRE,LCD JUNCTION	1	1
54	36793560	PARTS,HUMIDITY SENSOR PCB(SP)	1	1
55	36727340	SWITCH,MAIN	1	1
56	36704250	COVER,MAIN SWITCH	1	1
57	72418400	GROUND PLATE, CLEANING	1	1
58	36721070	MOUNT,EJECT COVER SW	1	1
59	36707790	SHAFT R,SENSOR LEVER	2	2
60	36710210	TERMINAL BASE,MAIN HIGH VOLTAGE	1	1
61	33927450	RETAINING PIN,DRAWER	6	6
62	74327180	PIN,CONNECTOR	12	12
63	M2105740	MINIATURE CLAMP,UAMS-05S-2	1	1
64	M2108120	SPACER,KGLS-4S	15	15
65	M2108670	SPACER,KGPS-6RF(KITAGAWA)	1	1
66	M2107120	BINDING BAND SG-130	5	5
67	M2607010	BINDING BAND,PLT1M	2	2
68	J0464080	RECEPTACLE,QR/P15-8S-C(02)(HIROSE)	2	2
69	J0464240	RECEPTACLE,QR/P15-24(4)P-C(02)(HIROSE)	1	1
70	36793550	PARTS,POWER SOURCE PCB(240)SP	1	1
71	•M1755010	FUSE,S505 5A(BUSSMANN)	1	1
72	36710220	TERMINAL,MAIN HIGH VOLTAGE	1	1
73	M2104210	EDGING,EDS-2	1	1
74	68327260	RELAY,SAFETY SWITCH	1	1
75	49129418	MOUNT,POWER RELAY	1	1
76	40728600	POWER RELAY 4P	1	1
77	36726070	MOUNT,POWER SOURCE	1	1

• Parts with "•" are component parts or sub-assemblies of the assembly appearing immediately above them.

• Parts with "• •" are component parts or sub-assembly with "•" appearing immediately above them.

FIG. 33 ELECTRICAL COMPONENTS I 367/183-1

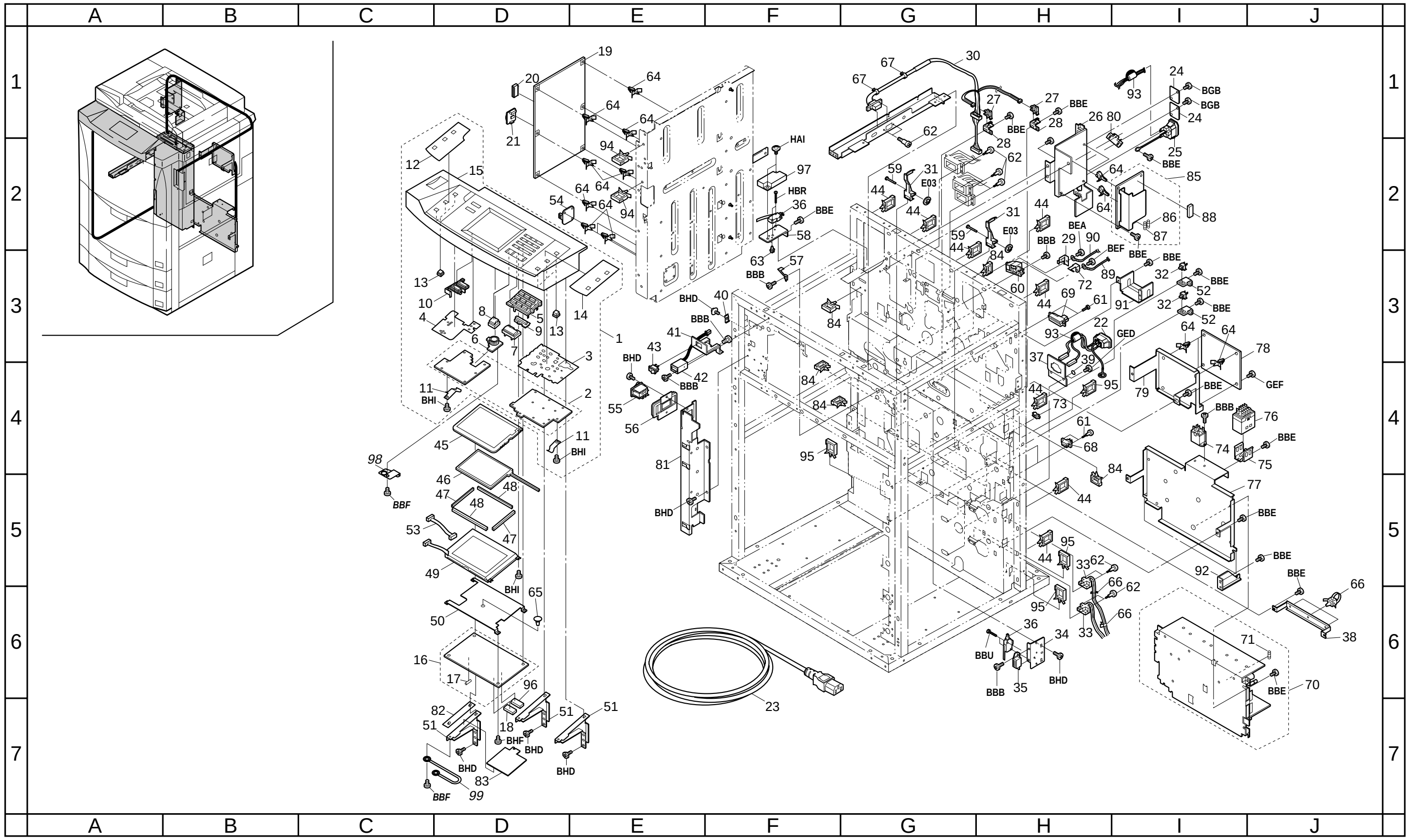

FIG. 33 ELECTRICAL COMPONENTS I

Ref. No.	Part. No.	Description	Quantity 230V	Quantity 240V
78	36793570	PARTS,MAIN HIGH VOLTAGE PCB(SP)	1	1
79	36726040	MOUNT,HIGH VOLTAGE PCB	1	1
80	40929200	CEMENTED RESISTOR 39OHM 15W	1	1
81	36702220	MOUNT,MAIN SWITCH	1	1
82	36725110	LEFT BARRIER,OPERATION UNIT	1	1
83	33926220	SHEET,OPERATION UNIT MOUNT	1	1
84	M2109180	WIRE SADDLE,LWS-1S	5	5
85	36793600	PARTS,SCANNER CONTROL ASS'Y SP (SP)	1	1
86	•M4853010	FUSE,GGS 3.15(NAGASAWA)	1	1
87	•M4855010	FUSE,GGS 5(NAGASAWA)	1	1
88	36727240	IC,RON SCANNER SGS	1	1
89	36727360	WIRE,MAIN HIGH VOLTAGE	1	1
90	36727370	WIRE,GRID	1	1
91	36718610	BASE,DISPOSAL PIPE	1	1
92	36726020	SUPPORT PLATE,POWER SOURCE MOUNT	2	2
93	63827080	FERRITE CORE	2	2
94	M2109230	WIRE SADDLE,LWS-3S(KITAGAWA)	2	2
95	M2109210	LOCKING WIRE SADDLE,LWS-8S-2.5W	4	4
96	36727250	IC,ROM OPERATION	1	1
97	36721080	COVER,EJECT SW	1	1
98	*36725120*	*GROUND PLATE,VOLUME*	*1*	*1*
99	*78127220*	*GROUND WIRE CUTTER*	*1*	*1*

• Parts with "•" are component parts or sub-assemblies of the assembly appearing immediately above them.

• Parts with "• •" are component parts or sub-assembly with "•" appearing immediately above them.

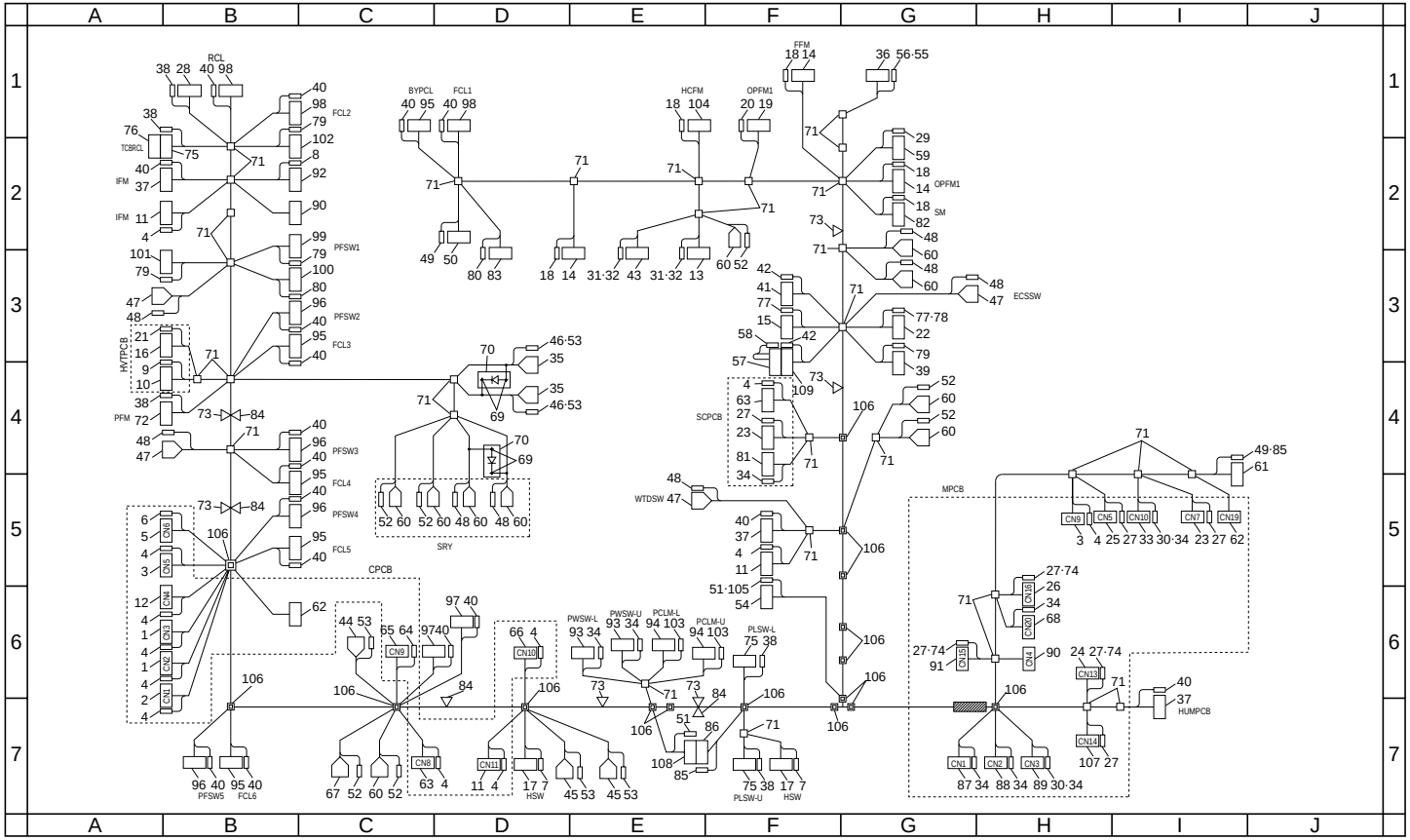
A B C D E F G H I J
1 2 3 4 5 6 7
RCL
FFM
BYPCL
FCL1
HCFM
OPFM1
TCBRCL
IFM
PFSW1
PFSW2
FCL3
HVTPCB
PFM
PFSW3
FCL4
PFSW4
FCL5
SRY
SCPCB
ECSSW
SM
WTDSW
CPCB
PWSW-L
PWSW-U
PCLM-L
PCLM-U
PLSW-L
PLSW-U
HSW
MPCB
HUMPCB
PFSW5
FCL6

FIG. 34 ELECTRICAL COMPONENTS II

Ref. No.	Part. No.	Description	Quantity 230V	Quantity 240V
	36727010	WIRE,MAIN	1	1
1	•J0272080	RECEPTACLE VH8P,VHR-8N	2	2
2	•J0272060	RECEPTACLE VH 6P,VHR-6N	1	1
3	•J0272010	RECEPTACLE VH 7P,VHR-7N	2	2
4	•J0272900	CONTACTOR,BVH-21T-P1.1(JST)	52	52
5	•J0260040	PLUG EH 4P,EHR-4	1	1
6	•J0260800	SOCKET EH,SEH-001T-P0.6	3	3
7	•J0340900	SOCKET,MINI DRAWER,5556TL	4	4
8	•J0480800	CONTACTOR,MDF6-2022SCF(HIROSE)	4	4
9	•J0300800	SOCKET,5194T	4	4
10	•J0303040	RECEPTACLE 4P,5198-04	1	1
11	•J0272020	RECEPTACLE,VH,2P,VHR-2N	3	3
12	•J0272050	RECEPTACLE,VHR-5N(JST)	1	1
13	•J0414120	SOCKET,QR/P6,12P,QR/P6-12S-C(02)	1	1
14	•J0241020	PLUG SM 2P,SMP-02V-BC	3	3
15	•J0111120	RECEPTACLE 12P,MINI MATENLOCK,VO,172162-1	1	1
16	•J0380120	RECEPTACLE 12P,51024-1200	1	1
17	•J0315020	RECPTACLE 2P,5557-02R	2	2
18	•J0250900	SOCKET,BHF-001T-0.8SS	11	11
19	•J0243020	RECEPTACLE SM 2P,SMR-02V-B	1	1
20	•J0242900	PIN SM,BYP-001T-0.6	2	2
21	•J0311900	SOCKET,5479PBTL	12	12
22	•J0045150	RECEPTACLE 15P,MINI MATENLOCK,172334-1	1	1
23	•J0390130	RECEPTACLE,51090-1300(MOLEX)	2	2
24	•J0396400	RECEPTACLE,51089-4005(MOLEX)	1	1
25	•J0396200	RECEPTACLE,51089-2005(MOLEX)	1	1
26	•J0396340	RECEPTACLE,51089-3405(MOLEX)	1	1
27	•J0390900	CONTACTOR,50212-8100(MOLEX)	119	119
28	•J0150030	RECEPTACLE,175778-3(AMP)	1	1
29	•J0341900	PIN,MINI DRAWER,5558TL	4	4
30	•J0441910	CONTACTOR,DF11-22SC(HIROSE)	9	9
31	•J0410900	CONTACTOR,RECEPTACLE SC1,QR/P1-SC1A-111	3	3
32	•J0410910	CONTACTOR,RECEPTACLE SC2,QR/P1-SC2A-111	21	21
33	•J0440260	PLUG,DF11-26DS-2C(HIROSE)	1	1
34	•J0441900	CONTACTOR,DF11-2428SC	126	126
35	•J0074040	POSITIVE CONTACTOR,#250,174429-1	2	2
36	•J0417140	PLUG,QR/P10-14P-C(HIROSE)	1	1
37	•J0450050	PLUG,DF3-5S-2C(HIROSE)	3	3
38	•J0150900	CONTACTOR,175161-1(AMP)	14	14
39	•J0452100	RECEPTACLE,DF3AA-10EP-2C(HIROSE)	1	1
40	•J0450900	SOCKET,DF3-2428SC(HIROSE)	58	58
41	•J0425060	PLUG S-6P,DF1B-6ES-2.5RC	1	1
42	•J0421900	CONTACTOR,DF1B-2428SC(HIROSE)	16	16
43	•J0414160	RECEPTACLE,QR/P6-16S-C(01)(HIROSE)	1	1
44	•J0075010	POSITIVE CONNECTOR,#250,(YELLOW),172076-4	1	1
45	•J0074010	POSITIVE CONNECTOR,#250,172076-1	2	2
46	•J0074900	POSITIVE CONTACTOR,#250,170333-1	4	4
47	•J0070030	POSITIVE CONNECTOR HOUSING 3P,#187,172075-	4	4
48	•J0070900	POSITIVE CONTACTOR,#187,170330-1	15	15
49	•J0222900	PIN EL,LLM-01T-1.3E	14	14
50	•J0223040	RECEPTACLE EL 4P,ELR-04V	1	1
51	•J0220910	SOCKET EL,LLF-41T-1.3E	5	5
52	•J0070910	POSITIVE CONTACTOR,#187,170331-1	8	8
53	•J0074910	POSITIVE CONTACTOR,#250,170334-1	7	7
54	•J0220040	PLUG EL 4P,ELP-04V	1	1
55	•J0410920	CONTACT,QR/P1-PC2A-111	3	3
56	•J0410940	CONTACT (S),QR/P1-PC2B-121	9	9
57	•J0423100	RECEPTACLE W-10P,DF1B-10DEP-2.5RC	1	1
58	•J0423900	PIN,DFIB-2428PC(HIROSE)	2	2
59	•J0314040	PLUG 4P,5559-04P	1	1
60	•J0070010	POSITIVE CONNECTOR,#187,172074-1	10	10
61	•J0223120	RECEPTACLE,ELR-12V(JST)	1	1
62	•J0454080	RECEPTACLE,DF3-8S-2R26(HIROSE)	2	2
63	•J0272030	VH RECEPTACLE 3P,VHR-3N	2	2
64	•J0361910	SOCKET 1189ATL	2	2
65	•J0361030	RECEPTACLE 3P,3191-03R1	1	1
66	•J0272050	RECEPTACLE,VHR-5N(JST)	1	1
67	•J0070020	POSITIVE CONNECTOR HOUSING 2P	1	1
68	•J0440140	PLUG,DF11-14DS-2C(HIROSE)	1	1
69	•J0064900	CONTACTOR,SPARK SUPPRESSOR,170284-1	4	4
70	•J0064000	HOUSING,SPARK SUPPRESSOR,172006-1	2	2
71	•M2607010	BINDING BAND,PLT1M	31	31
72	•J0150050	RECEPTACLE,175778-5(AMP)	1	1
73	•L4040000	CLOSE TYPE TERMINAL,0.5-1.75,CE-1	6	6
74	•J0390910	CONTACTOR,50372-8100(MOLEX)	5	5
75	•J0150020	RECEPTACLE,175778-2(AMP)	3	3
76	•J0144020	CASE,175694-2(AMP)	1	1
77	•J0045910	PIN,MINI MATENLOCK,(PLATIN) 170363-1	20	20
78	•J0045900	PIN,MINI MATENLOCK,170364-1	4	4
79	•J0452800	PIN,DF3-EP2428PCF(HIROSE)	22	22

• Parts with "•" are component parts or sub-assemblies of the assembly appearing immediately above them.

• Parts with "• •" are component parts or sub-assembly with "•" appearing immediately above them.

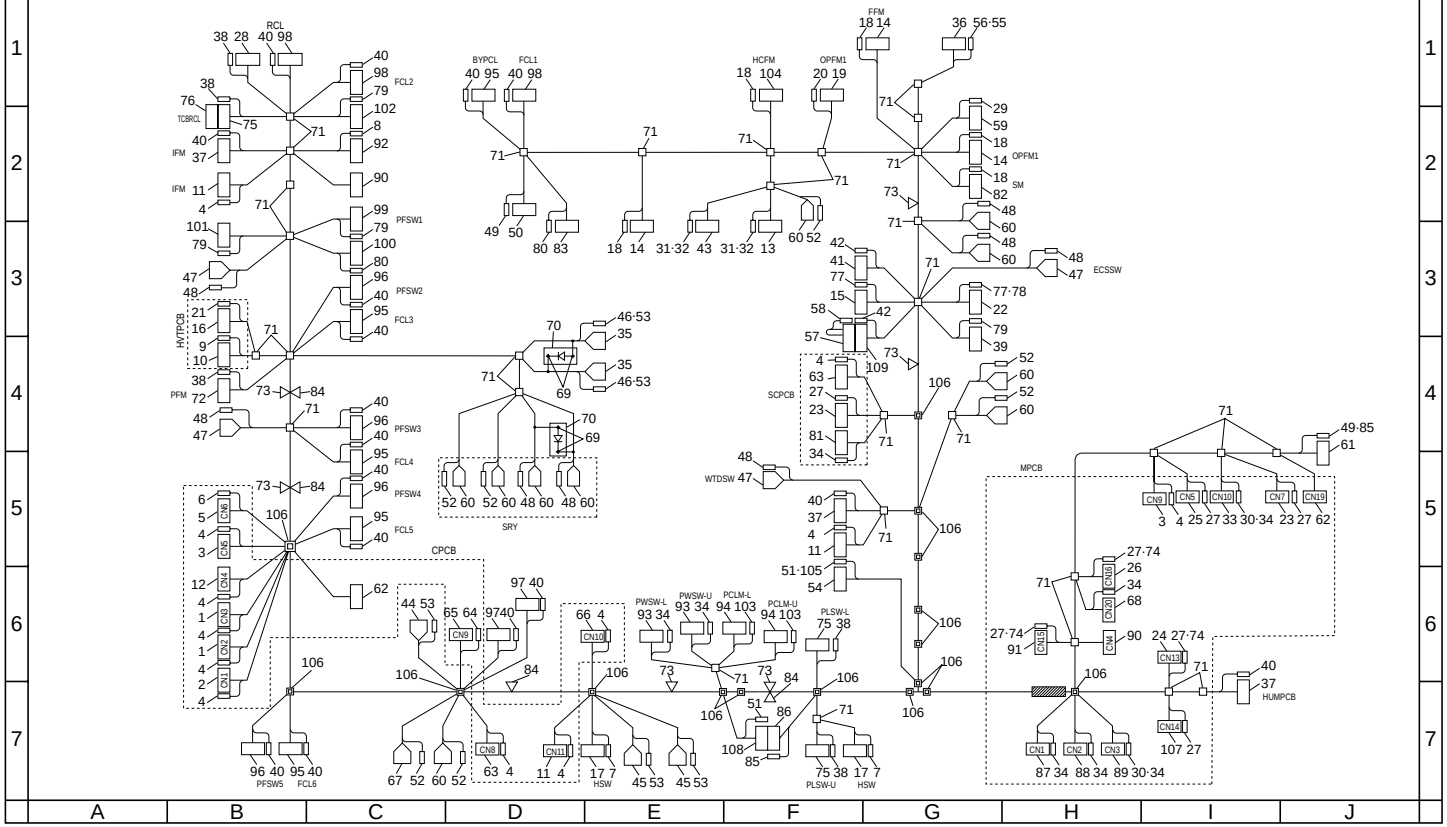
A B C D E F G H I J
1 2 3 4 5 6 7
RCL
BYPCL
FCL1
HCFM
OPFM1
FFM
PFSW1
PFSW2
FCL3
PFSW3
FCL4
PFSW4
FCL5
FCL2
TCBRCL
IFM
HVTPCB
PFM
SCPCB
SRY
CPCB
WTDSW
ECSSW
OPFM1
SM
MPCB
PWSW-L
PWSW-U
PCLM-L
PCLM-U
PLSW-L
PLSW-U
HSW
PFSW5
FCL6
HUMPCB
CN1
CN2
CN3
CN4
CN5
CN6
CN7
CN8
CN9
CN10
CN11
CN12
CN13
CN14
CN15
CN19
CN20

FIG. 34 ELECTRICAL COMPONENTS II

Ref. No.	Part. No.	Description	Quantity 230V	Quantity 240V
80	•J0440900	PIN,DF11-EP2428PC(HIROSE)	22	22
81	•J0440200	PLUG,DF11-20DS-2C(HIROSE)	1	1
82	•J0250030	PLUG NH 3P,H3P-SHF-AA	1	1
83	•J0443160	PLUG,DF11-16DEP-2C(HIROSE)	1	1
84	•L4040020	CLOSE TYPE TERMINAL,2.5-6.0,CE-5	4	4
85	•J0222910	PIN EL,LLM-41T-1.3E	5	5
86	•J0223030	RECEPTACLE EL 3P,ELR-03V	1	1
87	•J0440220	W-LOW SOCKET 22P,DF11-22DS-2C	1	1
88	•J0441160	RECEPTACLE,DF11-16DS-2C(HIROSE)	1	1
89	•J0441320	RECEPTACLE,DF11-32DS-2C(HIROCE)	1	1
90	•J0442200	RECEPTACLE,DF11-20DS-2R26(HIROSE)	2	2
91	•J0396180	RECEPTACLE,51089-1805(MOLEX)	1	1
92	•J0480040	PLUG,MDF-4DS-3.5C	1	1
93	•J0441080	RECEPTACLE,DF11-8DS-2C(HIROSE)	2	2
94	•J0370020	RECEPTACLE 2P,5102-02	2	2
95	•J0450020	PLUG,DF3-2S-2C(HIROSE)	5	5
96	•J0450030	PLUG,DF3-3S-2C(HIROSE)	4	4
97	•J0450080	RECEPTACLE,DF3-8S-2C(HIROSE)	2	2
98	•J0450040	PLUG,DF3-4S-2C(HIROSE)	3	3
99	•J0452030	RECEPTACLE,DF3AA-3EP-2C(HIROSE)	1	1
100	•J0440060	PLUG,DF11-6DEP-2C(HIROSE)	1	1
101	•J0452070	RECEPTACLE,DF3AA-7EP-2C(HIROSE)	1	1
102	•J0452020	RECEPTACLE,DF3AA-2EP-2C(HIROSE)	1	1
103	•J0304900	SOCKET,5103PBTL	4	4
104	•J0241030	PLUG SM 3P,SMP-03V-BC	1	1
105	•J0220900	SOCKET EL,LLF-01T-1.3E	2	2
106	•M2107170	BINDING BAND,SKB-2M	16	16
107	•J0390080	RECEPTACLE,51090-0800(MOLEX)	1	1
108	•J0220030	PLUG EL 3P,ELP-03V	1	1
109	•J0422100	PLUG W-10P,DF1B-10DES-2.5RC	1	1

• Parts with "•" are component parts or sub-assemblies of the assembly appearing immediately above them.

• Parts with "• •" are component parts or sub-assembly with "•" appearing immediately above them.

FIG. 35 ELECTRICAL COMPONENTS III

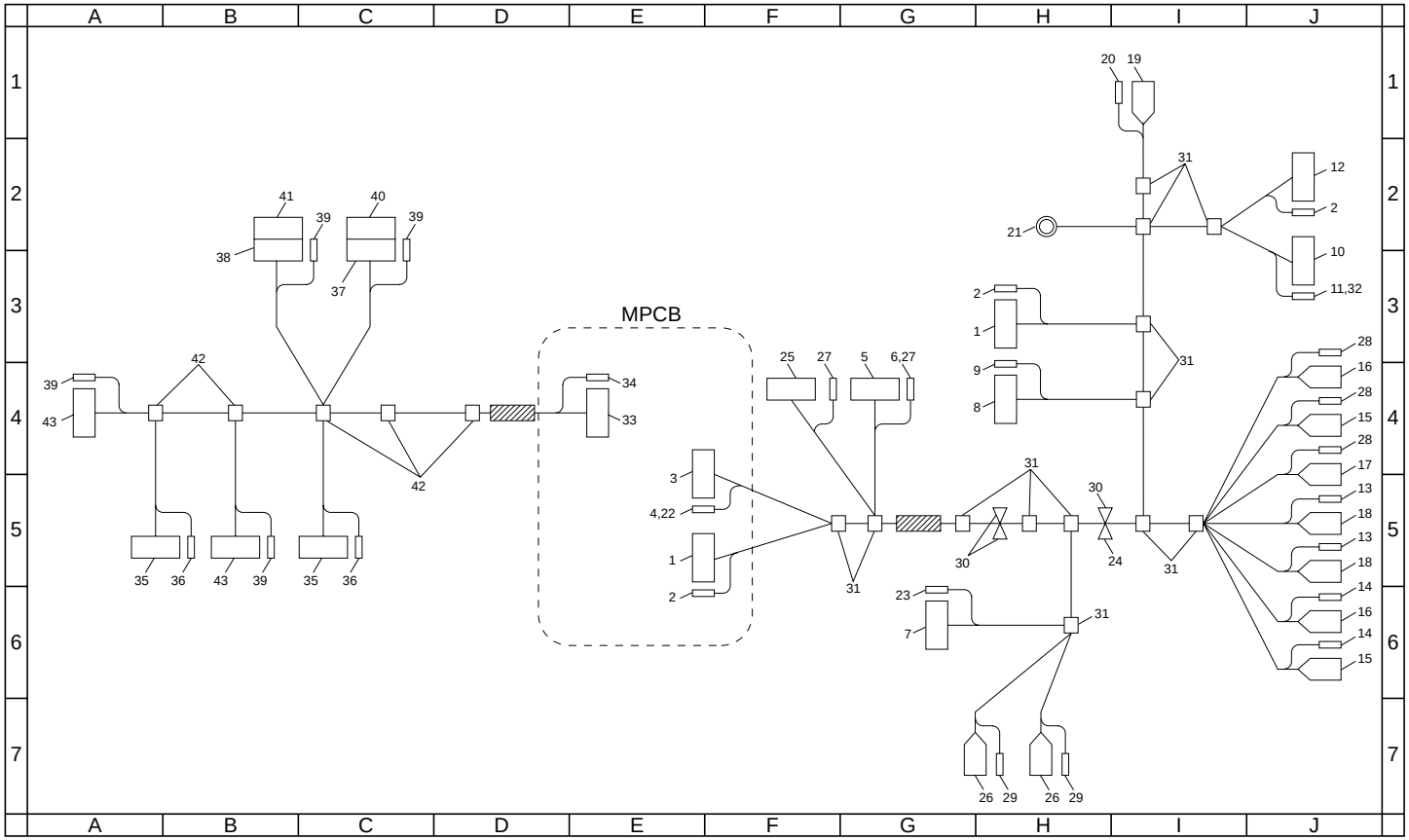

FIG. 35 ELECTRICAL COMPONENTS III

Ref. No.	Part. No.	Description	Quantity 230V	Quantity 240V
	36727030	WIRE,OPERATION UNIT	1	1
1	•J0450090	PLUG,DF3-9S-2C(HIROSE)	2	2
2	•J0450900	SOCKET,DF3-2428SC(HIROSE)	21	21
3	•J0396160	RECEPTACLE,51089-1605(MOLEX)	1	1
4	•J0390900	CONTACTOR,50212-8100(MOLEX)	11	11
5	•J0220120	PLUG,ELP-12V(JST)	1	1
6	•J0220900	SOCKET EL,LLF-01T-1.3E	8	8
7	•J0453020	PLUG,DF3-2EP-2C(HIROSE)	1	1
8	•J0272040	RECEPTACLE,VH,4P,VHR-4N	1	1
9	•J0272900	CONTACTOR,BVH-21T-P1.1(JST)	4	4
10	•J0441080	RECEPTACLE,DF11-8DS-2C(HIROSE)	1	1
11	•J0441900	CONTACTOR,DF11-2428SC	4	4
12	•J0450030	PLUG,DF3-3S-2C(HIROSE)	1	1
13	•J0166900	POSITIVE,CONTACTOR,175412-1(AMP)	2	2
14	•J0074900	POSITIVE CONTACTOR,#250,170333-1	2	2
15	•J0074010	POSITIVE CONNECTOR,#250,172076-1	2	2
16	•J0075010	POSITIVE CONNECTOR,#250,(YELLOW),172076-4	2	2
17	•J0077010	POSITIVE CONNECTOR,#250,(BLUE),172076-6	1	1
18	•J0166010	POSITIVE,RECEPTACLE,174779-1(AMP)	2	2
19	•J0070030	POSITIVE CONNECTOR HOUSING 3P,#187,172075-	1	1
20	•J0070900	POSITIVE CONTACTOR,#187,170330-1	3	3
21	•L0223040	ROUND TYPE TERMINAL,SRA-21T-4,(REEL)	1	1
22	•J0390910	CONTACTOR,50372-8100(MOLEX)	3	3
23	•J0452800	PIN,DF3-EP2428PCF(HIROSE)	2	2
24	•L4040000	CLOSE TYPE TERMINAL,0.5-1.75,CE-1	1	1
25	•J0220020	PLUG EL 2P,ELP-02V	1	1
26	•J0070010	POSITIVE CONNECTOR,#187,172074-1	2	2
27	•J0220910	SOCKET EL,LLF-41T-1.3E	6	6
28	•J0074910	POSITIVE CONTACTOR,#250,170334-1	3	3
29	•J0070940	POSITIVE,CONTACTOR,173723-1(AMP)	2	2
30	•L4040010	CLOSE TYPE TERMINAL,1.0-3.0,CE-2	3	3
31	•M2307010	BINDING BAND,T18R	13	13
32	•J0441910	CONTACTOR,DF11-22SC(HIROSE)	4	4
	36727070	JUNCTION WIRING,PAPER FEED (EXP)	1	1
33	•J0396280	RECEPTACLE,51089-2805(MOLEX)	1	1
34	•J0390900	CONTACTOR,50212-8100(MOLEX)	25	25
35	•J0450020	PLUG,DF3-2S-2C(HIROSE)	2	2
36	•J0450900	SOCKET,DF3-2428SC(HIROSE)	4	4
37	•J0150110	RECEPTACLE,1-175778-1(AMP)	1	1
38	•J0150120	RECEPTACLE,1-175778-2(AMP)	1	1
39	•J0150900	CONTACTOR,175161-1(AMP)	21	21
40	•J0144110	CASE,1-175694-1(AMP)	1	1
41	•J0144120	CASE,1-175694-2(AMP)	1	1
42	•M2607010	BINDING BAND,PLT1M	5	5
43	•J0150030	RECEPTACLE,175778-3(AMP)	2	2

• Parts with "•" are component parts or sub-assemblies of the assembly appearing immediately above them.

• Parts with "• •" are component parts or sub-assembly with "•" appearing immediately above them.

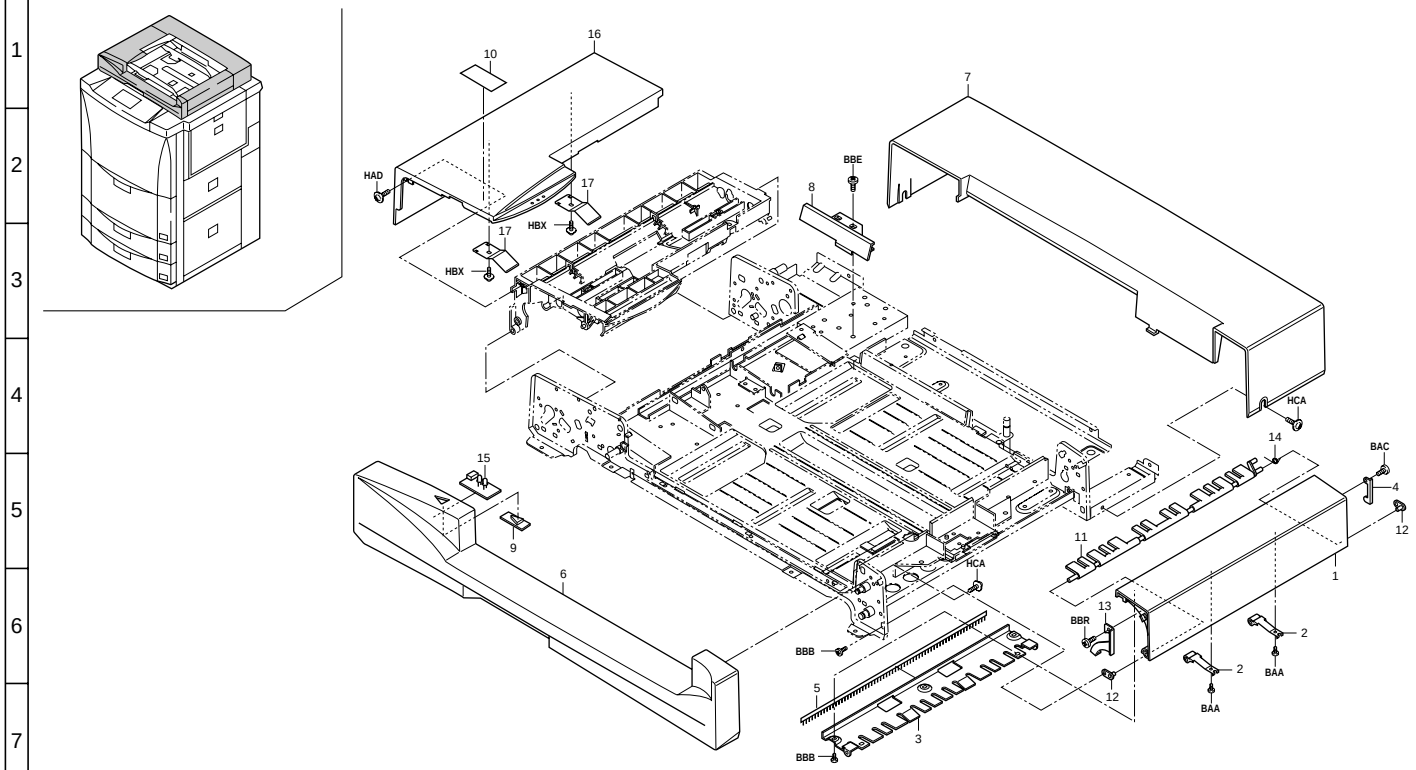
A B C D E F G H I J
1 2 3 4 5 6 7
16
10
7
HAD
17
HBX
17
HBX
BBE
8
HCA
14
BAC
4
12
15
9
6
11
1
HCA
13
BBR
2
BAA
2
BAA
12
BBB
5
3
BBB

FIG. 36 EXTERIOR COVERS

Ref. No.	Part. No.	Description	Quantity 230V	Quantity 240V
1	18304040	COVER,EJECT	1	1
2	18368030	UPPER EJECT PULLEY ASS'Y	2	2
3	18312240	MOUNT,STATIC ELIMINATOR	1	1
4	18312250	PROJECTION,EJECT SAFETY SWITCH	1	1
5	18393020	PARTS,STATIC ELIMINATOR EJECT(SP)	1	1
6	18304010	FRONT COVER	1	1
7	18304020	REAR COVER	1	1
8	18304050	INNER REAR COVER	1	1
9	18304070	COVER,LED	1	1
10	18305030	LABEL,ORIGINAL INDICATION (EUR)	1	1
11	18312160	LEVER,FEED SHIFT	1	1
12	18312210	FULCRUM PIN,EJECT	2	2
13	18312280	HOOK,EJECT COVER	1	1
14	18312320	SPRING,FEED SHIFT LEVER	1	1
15	18393160	PARTS,ORIGINAL SET LED PCB (SP)	1	1
16	18304030	COVER,PAPER FEED	1	1
17	18307680	FRONT HOLDER,SEPARATION STOPPER	2	2

• Parts with "•" are component parts or sub-assemblies of the assembly appearing immediately above them.

• Parts with "• •" are component parts or sub-assembly with "•" appearing immediately above them.

FIG. 37 TABLE SECTION

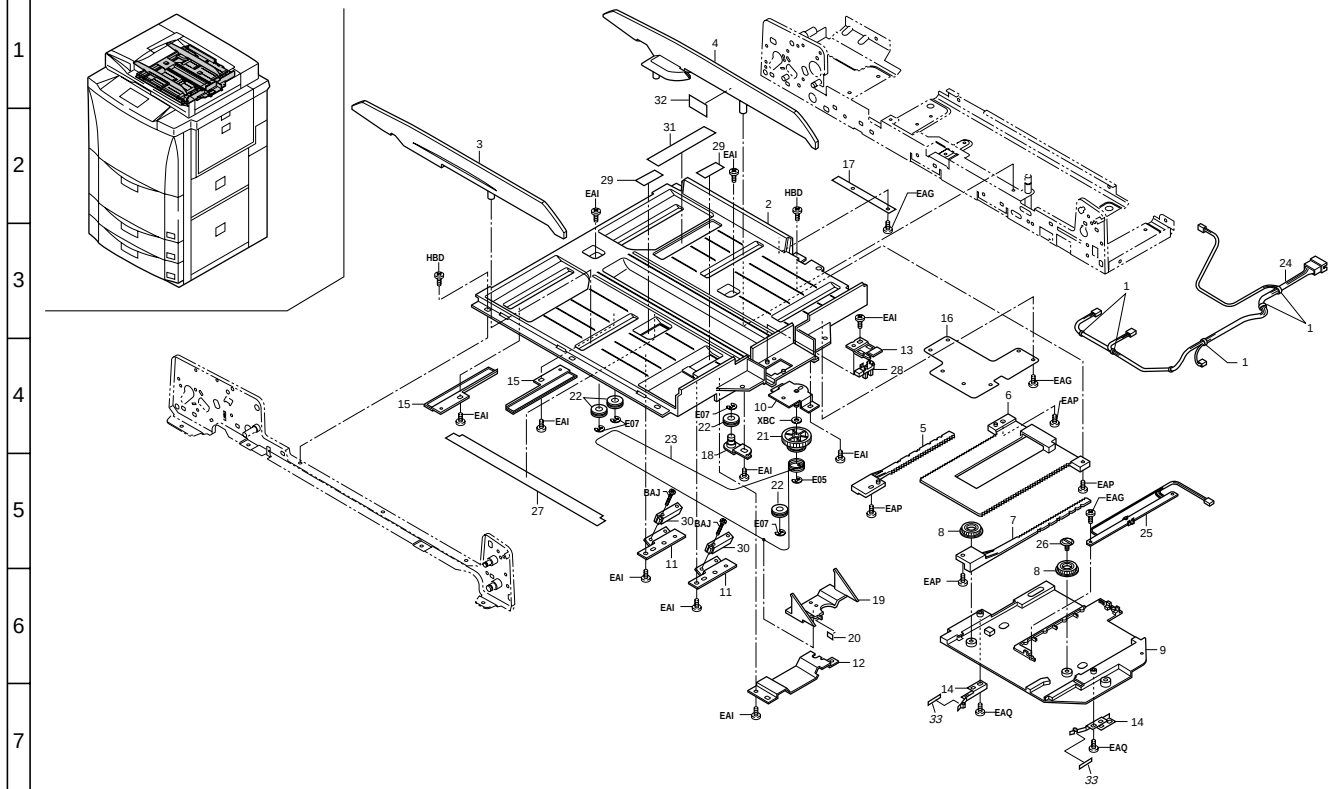

FIG. 37 TABLE SECTION

Ref. No.	Part. No.	Description	Quantity 230V	Quantity 240V
1	M0207000	BINDING BAND,KB-100-1	5	5
2	18306010	TABLE,ORIGINAL	1	1
3	18306020	FRONT CURSOR	1	1
4	18306030	REAR CURSOR	1	1
5	18306040	LEFT RACK,TABLE	1	1
6	18306050	RACK,TABLE MIDDLE	1	1
7	18306060	RIGHT RACK,TABLE	1	1
8	18306070	GEAR,TABLE	2	2
9	18306080	ADJUSTING PLATE,CURSOR	1	1
10	18306090	MOUNT,PULLEY	1	1
11	18306100	MOUNT,SIZE SENSOR	2	2
12	18306110	GUIDE,MOVING	1	1
13	18306120	MOUNT,MOVING SENSOR	1	1
14	18306130	PROJECTION,RACK	2	2
15	18306140	COVER,RACK	2	2
16	18306150	RIGHT SHEET,TABLE WIRE	1	1
17	18306160	LEFT SHEET,TABLE WIRE	1	1
18	18306170	MOUNT,MOVING PULLEY	1	1
19	18313010	MOVING PLATE,ORIGINAL	1	1
20	18313020	SHEET,LIGHT SHIELD	1	1
21	18314030	PULLEY,PARTITION DRIVE	1	1
22	18314080	PULLEY,MOVING IDLE	4	4
23	18393030	PARTS,WIRE MOVING (SP)	1	1
24	18327030	WIRE,TABLE	1	1
25	18393090	PARTS,SWITCH SIZE DETECTION(SP)	1	1
26	61507350	RETAINING PIN,ORIGINAL FEED	1	1
27	63206221	SHEET,TABLE A	1	1
28	63527240	PI,GP1A71A	1	1
29	78706240	FILTER CF SENSOR	2	2
30	78727110	JAM DETECTION SWITCH	2	2
31	63205041	ORIGINAL SIZE INDICATOR METRIC	1	1
32	63205090	LABEL,ORIGINAL SET,METRIC	1	1
33	*75268050*	*SPACER SHEET B(SP)*	*2*	*2*

• Parts with "•" are component parts or sub-assemblies of the assembly appearing immediately above them.

• Parts with "• •" are component parts or sub-assembly with "•" appearing immediately above them.

FIG. 38 PAPER FEED-IN SECTION I

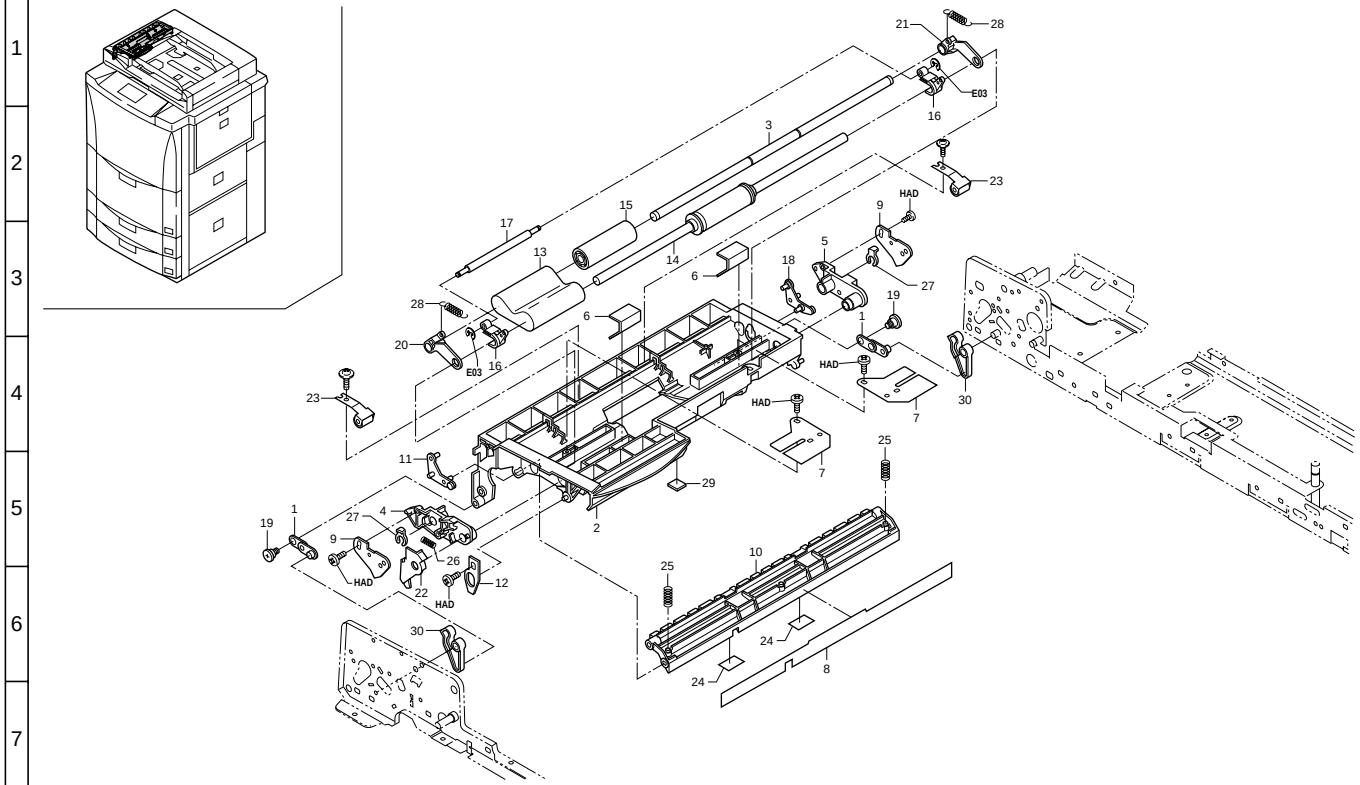

FIG. 38 PAPER FEED-IN SECTION I

Ref. No.	Part. No.	Description	Quantity	
			230V	240V
1	18310090	JUNCTION PLATE,PRESSURE RELEASE	2	2
2	18307010	HOUSING,PAPER FEED	1	1
3	18307140	STAY,SEPARATION BELT	1	1
4	18307200	FRONT FULCRUM PLATE,SEPARATION BELT	1	1
5	18307210	REAR FULCRUM PLATE,SEPARATION BELT	1	1
6	18307280	UPPER FEED GUIDE,PAPER FEED	2	2
7	18307290	HOLDER,SEPARATION SHAFT	2	2
8	18307450	SHEET ,PAPER FEED/ LOOP	1	1
9	18307470	RETAINER,SEPARATION BELT	2	2
10	18307510	GUIDE ,REGISTRATION/ LOOP	1	1
11	18307540	FRONT FULCRUM PLATE,REGISTRATION GUIDE	1	1
12	18307560	LEVER,SAFETY SWITCH	1	1
13	*18307750*	*BELT B,SEPARATION*	*1*	*1*
14	18307600	ROLLER,SEPARATION BELT	1	1
15	18307610	PULLEY,SEPARATION BELT	1	1
16	18307620	LEVER,SEPARATION BELT	2	2
17	18307630	SHAFT,SEPARATION TENSION	1	1
18	18307660	REAR FULCRUM PLATE,REGISTRATION GUIDE	1	1
19	77706670	PIN,FEED FULCRUM	2	2
20	18307700	FRONT RETAINER,SEPARATION TENSION	1	1
21	18307710	REAR RETAINER,SEPARATION TENSION	1	1
22	18307720	LEVER,SEPARATION CAM	1	1
23	18368020	UPPER LOOP PULLEY ASS'Y	2	2
24	63207470	SHEET,ORIGINAL FEED PULLEY	2	2
25	63502400	SPRING A,TONER DETECTION	2	2
26	68814740	SPRING C,DEVELOPING PRESSURE	1	1
27	75706040	STOPRING PAPER FEED PULLEY	2	2
28	76209120	SPRING D-S	2	2
29	78710370	CUSHION UPPER LOOP	1	1
30	18310060	LEVER,PRESSURE RELEASE	2	2

• Parts with "•" are component parts or sub-assemblies of the assembly appearing immediately above them.

• Parts with "• •" are component parts or sub-assembly with "•" appearing immediately above them.

FIG. 39 PAPER FEED-IN SECTION II 367/183-1

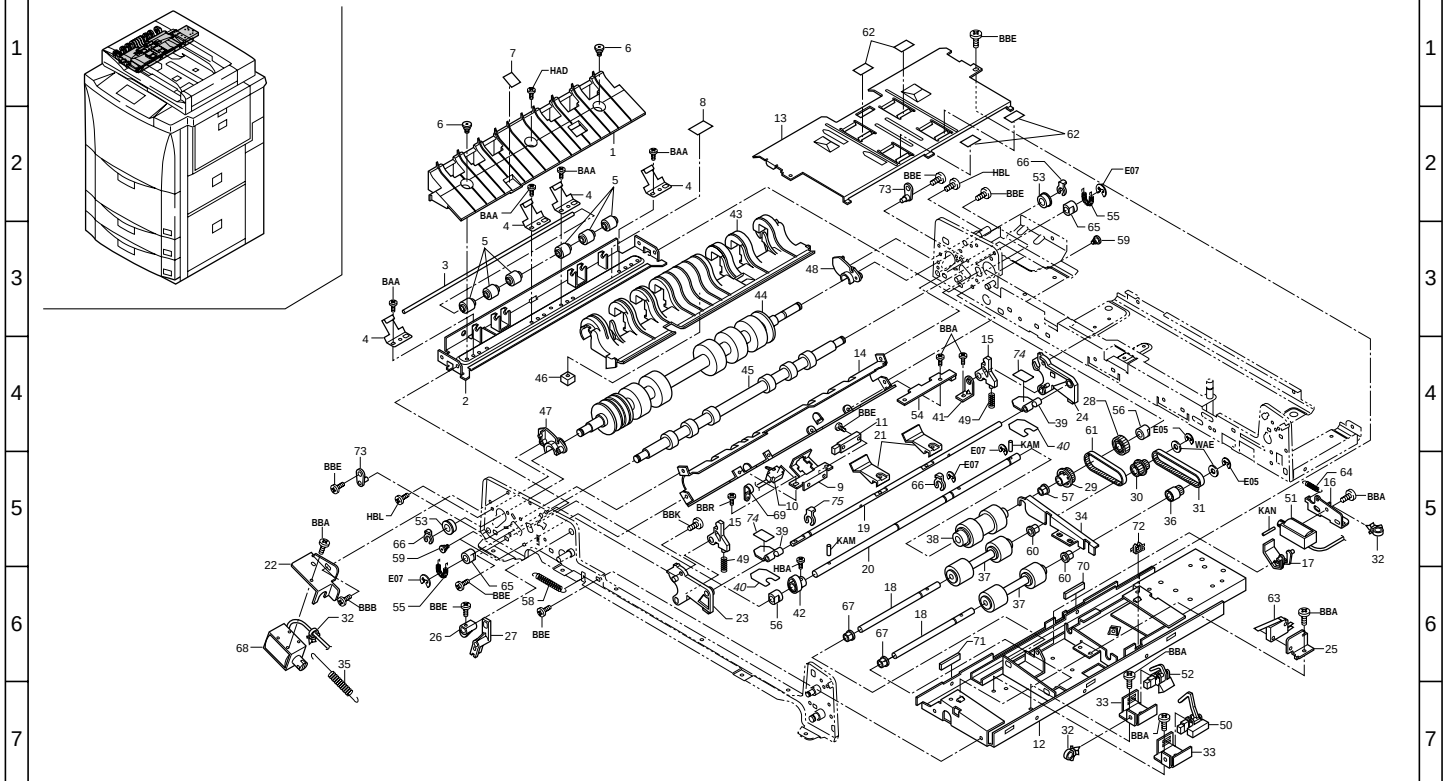

FIG. 39 PAPER FEED-IN SECTION II

367/183-1

Ref. No.	Part. No.	Description	Quantity 230V	Quantity 240V
1	18310010	GUIDE,LOOP CONVEYING	1	1
2	18310030	MOUNT,LOOP PULLEY	1	1
3	18310080	SHAFT,LOOP PULLEY	1	1
4	18310100	HOLDER,LOOP PULLEY	4	4
5	18310120	PULLEY,LOOP CONVEYING	6	6
6	29820420	PIN,BEARING	2	2
7	63210240	FELT,LOOP FEED	1	1
8	78606900	CUSHION PULLEY	1	1
9	18307240	MOUNT,CONVEYING SWITCH	1	1
10	18393140	PARTS,SWITCH REGISTRATION (SP)	1	1
11	63227150	SWITCH L,FEED	1	1
12	18307020	REINFORCEMENT,PAPER FEED	1	1
13	18307030	GUIDE,PAPER FEED	1	1
14	18307040	GUIDE,REGISTRATION	1	1
15	18307050	HOOK,PAPER FEED	2	2
16	18307060	MOUNT SOL,STOPPER	1	1
17	18307070	STOPPER,ORIGINAL SET	1	1
18	18307090	SHAFT,PAPER FEED	2	2
19	18307100	SHAFT,PRESSING PLATE PAPER FEED	1	1
20	18307110	SHAFT,SEPARATION PULLEY	1	1
21	18307170	PRESSING PLATE,ORIGINAL PAPER FEED	2	2
22	18307190	MOUNT SOL,PRESSURE	1	1
23	18307220	FRONT POSITIONING PLATE,SEPARATION BELT	1	1
24	18307230	REAR POSITIONING PLATE,SEPARATION BELT	1	1
25	18307250	MOUNT,SAFETY SWITCH	1	1
26	18307260	LEVER,PRESSING PLATE SOLENOID	1	1
27	18307270	JUNCTION PLATE,PRESSURE SOLENOID	1	1
28	18307350	GEAR 26,SEPARATION	1	1
29	18307360	PULLEY 32P2M,PAPER FEED	1	1
30	18307370	PULLEY 25/18P2M,PAPER FEED	1	1
31	18307390	BELT 166,LEADING FEED	1	1
32	M2107120	BINDING BAND SG-130	3	3
33	18307410	MOUNT,ORIGINAL SET SW	2	2
34	18307480	PROJECTION,LEADING FEED DRIVE	1	1
35	18307490	SPRING,PAPER FEED PRESSURE	1	1
36	18307550	PULLEY 18P2M,LEADING FEED	1	1
37	18307570	PULLEY,PAPER FEED	2	2
38	18307580	PULLEY,SEPARATION	1	1
39	18307640	LEVER,ORIGINAL HOLDER	2	2
40	18307650	SHEET,ORIGINAL HOLDER	2	2
41	18307670	RETAINER,PIN HOOK	1	1
42	18307690	CAM,SEPARATION BELT	1	1
43	18310020	GUIDE,CONVEYING PAPER FEED	1	1
44	18310040	LEFT ROLLER,REGISTRATION/LOOP	1	1
45	18310050	RIGHT ROLLER,REGISTRATION	1	1
46	18310130	PROJECTION,LOOP CONVEYING	1	1
47	18310140	FRONT SUPPORT PLATE,REGISTRATION GUIDE	1	1
48	18310150	REAR SUPPORT PLATE,REGISTRATION GUIDE	1	1
49	18307530	SPRING,HOOK PAPER FEED	2	2
50	18393070	PARTS,SWITCH ORIGINAL SET (SP)	1	1
51	18393100	PARTS,SOLENOID STOPPER(SP)	1	1
52	18327190	SWITCH P,SET	1	1
53	28107400	BEARING,688ZZNR	2	2
54	18328050	ORIGINAL READING PCB	1	1
55	48521523	PRESSING SPRING	2	2
56	49021700	BUSHING	2	2
57	49028112	BUSHING 8,LOWER REG.ROLLER	1	1
58	48528216	SPRING,PAPER GUIDE	1	1
59	29802390	PIN,TORSION BAR HOLDER	4	4
60	29806810	BUSHING,6 REGISTRATION	2	2
61	63207420	BELT,142P2M6	1	1
62	63207470	SHEET,ORIGINAL FEED PULLEY	4	4
63	63527020	SAFETY,SWITCH	1	1
64	63720250	SPRING,EJECT	1	1
65	71807040	BUSHING 8,PF	2	2
66	75706040	STOPRING PAPER FEED PULLEY	*3*	*3*
67	76514080	BUSHING 6 DRIVE	2	2
68	18393110	PARTS,SOLENOID LEADING FEED(SP)	1	1
69	M2105000	NYLON CLAMP 2N,NK-2N	1	1
70	M2104120	EDGING CE-024	1	1
71	M2104140	EDGING CE-012S	1	1
72	M2104350	EDGING,EDS-0607M(KITAGAWA)	1	1
73	63202120	SUPPORT PLATE,COVER	2	2
74	*18307740*	*SHEET B,ORIGINAL HOLDER*	*2*	*2*
75	*78620710*	*CLAW STOPPER*	*1*	*1*

• Parts with "•" are component parts or sub-assemblies of the assembly appearing immediately above them.

• Parts with "• •" are component parts or sub-assembly with "•" appearing immediately above them.

FIG. 40 PAPER CONVEYING SECTION 367/183-1

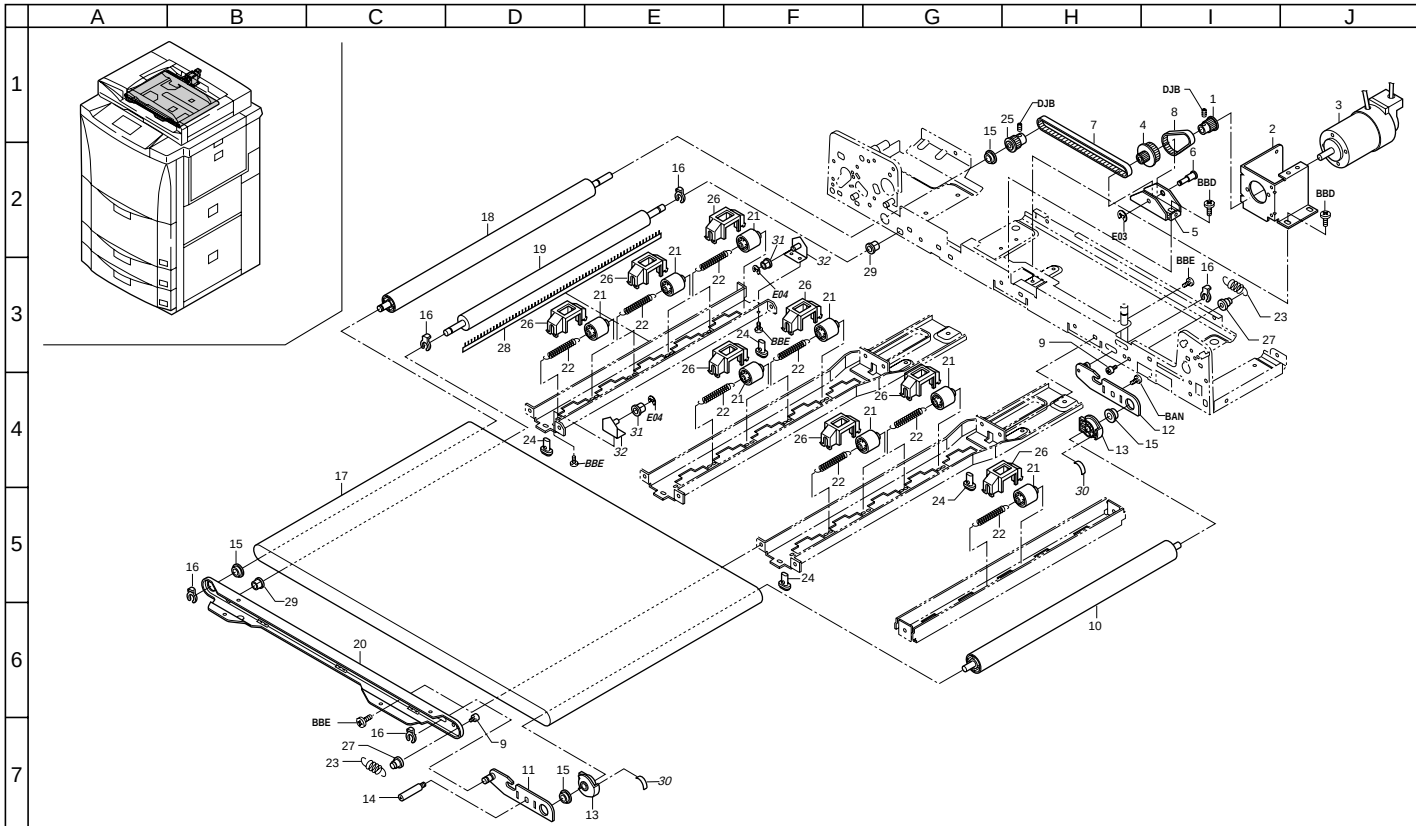

FIG. 40 PAPER CONVEYING SECTION

Ref. No.	Part. No.	Description	Quantity 230V	Quantity 240V
1	18308130	PULLEY 21,CONVEYING MOTOR	1	1
2	18308150	MOUNT,CONVEYING MOTOR	1	1
3	18393050	PARTS,MOTOR CONVEYING(SP)	1	1
4	18308140	PULLEY 21/36,CONVEYING DRIVE	1	1
5	18308160	MOUNT,CONVEYING DRIVE	1	1
6	18308170	SHAFT,CONVEYING DRIVE	1	1
7	18308180	BELT 310P2M6	1	1
8	18308220	BELT 118P2M6	1	1
9	48128807	PIN,FRAME	2	2
10	18308020	ROLLER,CONVEYING TENSION	1	1
11	18308050	FRONT TENSION PLATE,CONVEYING	1	1
12	18308060	REAR TENSION PLATE,CONVEYING	1	1
13	18308110	GUIDE,CONVEYING BELT	2	2
14	29512160	PIN,OPTICAL UNIT ADJUSTING	1	1
15	74808080	BEARING,686ZZNR	4	4
16	63511220	STOP RING,4	5	5
17	65708010	BELT,ORIGINAL CONVEYING	1	1
18	18308010	ROLLER,ORIGINAL CONVEYING DRIVE	1	1
19	18308030	ROLLER,CONVEYING IDLE	1	1
20	18308040	FRONT FRAME,CONVEYING	1	1
21	18308070	PULLEY,CONVEYING PRESSURE	8	8
22	18308080	SPRING,PRESSURE PULLEY	8	8
23	18308090	SPRING,CONVEYING TENSION	2	2
24	18308100	SPACER,CONVEYING	4	4
25	18308120	PULLEY 24,CONVEYING DRIVE	1	1
26	18308230	GUIDE,CONVEYING PULLEY	8	8
27	18308240	PIN,CONVEYING TENSION	2	2
28	18393020	PARTS,STATIC ELIMINATOR EJECT(SP)	1	1
29	73210450	BUSH, 6	2	2
30	*18308250*	*SPACER,CONVEYING GUIDE FILM*	*2*	*2*
31	*18308260*	*PULLEY,CONVEYING BELT*	*2*	*2*
32	*18308270*	*MOUNT,BELT PULLEY*	*2*	*2*

• Parts with "•" are component parts or sub-assemblies of the assembly appearing immediately above them.

• Parts with "• •" are component parts or sub-assembly with "•" appearing immediately above them.

FIG. 41 PAPER EJECT SECTION 367/183-1

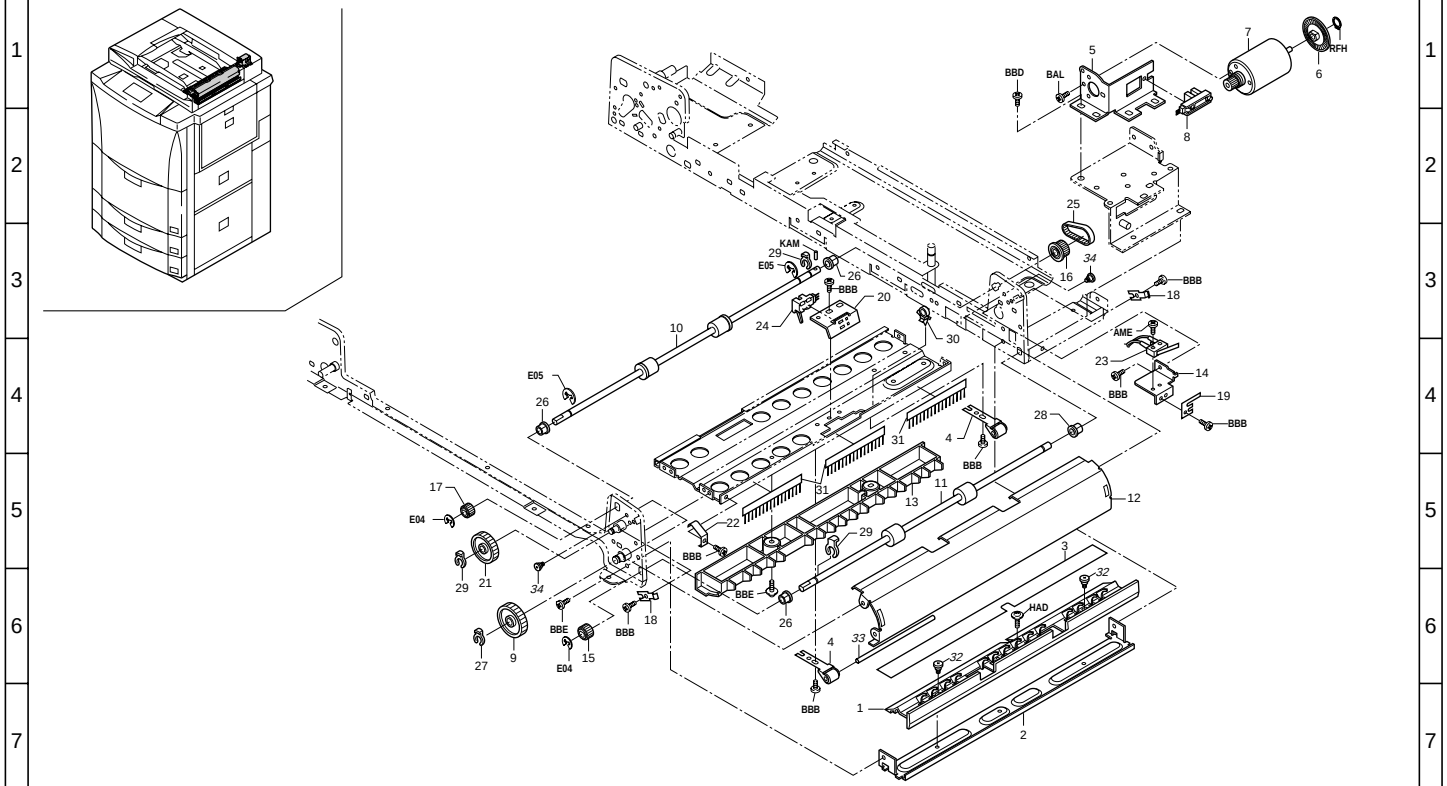

FIG. 41 PAPER EJECT SECTION

Ref. No.	Part. No.	Description	Quantity 230V	Quantity 240V
1	18312050	LOWER GUIDE,EJECT	1	1
2	18312060	LOWER MOUNT,EJECT GUIDE	1	1
3	18312220	LOWER SHEET,EJECT GUIDE FILM	1	1
4	18300140	LOWER EJECT PULLEY ASS'Y	2	2
5	18312070	MOUNT,EJECT MOTOR	1	1
6	18312200	PULSE DISC,EJECT	1	1
7	18393060	PARTS,MOTOR EJECT(SP)	1	1
8	73127200	PHOTO-INTERRUPTOR	1	1
9	76206040	GEAR 44 PAPER FEED	1	1
10	18312010	UPPER ROLLER,EJECT	1	1
11	18312020	LOWER ROLLER,EJECT	1	1
12	18312030	GUIDE,EJECT	1	1
13	18312040	UPPER GUIDE,EJECT	1	1
14	18312080	MOUNT,EJECT SAFETY SWITCH	1	1
15	18312090	GEAR 16,EJECT DRIVE	1	1
16	18312100	PULLEY 28,EJECT DRIVE	1	1
17	18312110	GEAR 14,EJECT DRIVE	1	1
18	18312130	PLATE SPRING,EJECT RELEASE	2	2
19	18312230	PLATE SPRING,GROUND	1	1
20	18312260	MOUNT,EJECT SWITCH	1	1
21	18312270	GEAR 39,EJECT DRIVE	1	1
22	18312300	LOWER PLATE SPRING,EJECT GROUND	1	1
23	18327140	SWITCH,PARTITION	1	1
24	*68727030*	*SWITCH,DUPLEX CONVEYING*	*1*	*1*
25	65722080	BELT 100,ORIGINAL FEED	1	1
26	73210450	BUSH, 6	3	3
27	75706040	STOPRING PAPER FEED PULLEY	1	1
28	76514080	BUSHING 6 DRIVE	1	1
29	63511220	STOP RING,4	3	3
30	M2107120	BINDING BAND SG-130	1	1
31	18312330	STATIC ELIMINATOR B,EJECT	3	3
32	*29820420*	*PIN,BEARING*	*2*	*2*
33	*18312360*	*LOWER SHAFT,EJECT PULLEY*	*1*	*1*
34	*29802390*	*PIN,TORSION BAR HOLDER*	*2*	*2*

• Parts with "•" are component parts or sub-assemblies of the assembly appearing immediately above them.

• Parts with "• •" are component parts or sub-assembly with "•" appearing immediately above them.

FIG. 42 DRIVING, ELECTRICAL SECTION 367/183-1

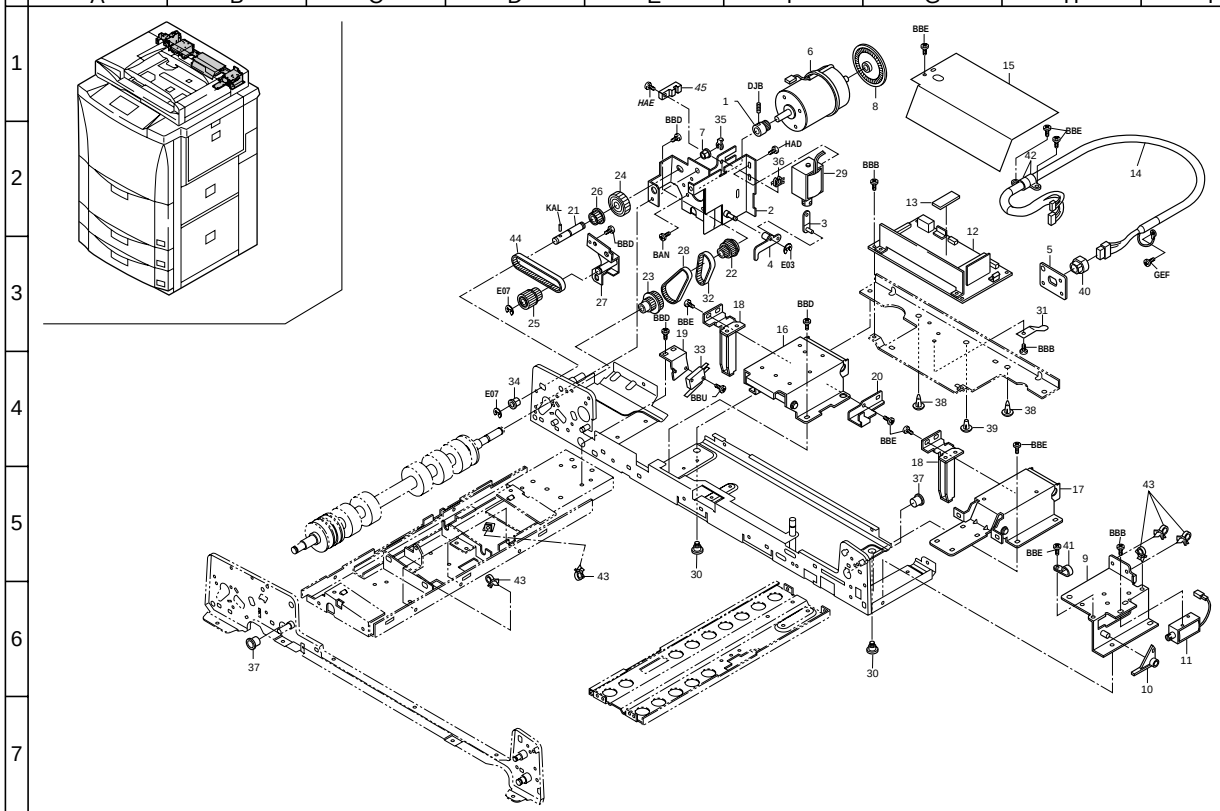

FIG. 42 DRIVING, ELECTRICAL SECTION

Ref. No.	Part. No.	Description	Quantity 230V	Quantity 240V
1	18307300	PULLEY 20P2M,MOTOR	1	1
2	18307420	MOUNT,MOTOR PAPER FEED	1	1
3	18308200	JUNCTION PLATE,ORIGINAL SIZE INDICATOR HOLDER	1	1
4	18308210	LEVER,ORIGINAL SIZE INDICATOR HOLDER	1	1
5	78826100	MOUNT SIGNAL CABLE	1	1
6	63227121	MOTOR,FEED	1	1
7	49028112	BUSHING 8,LOWER REG.ROLLER	1	1
8	78722111	PULSE PLATE CONVEYING SECTION	1	1
9	18312140	MOUNT,FEED SHIFT SOLENOID	1	1
10	18312150	JUNCTION PLATE,FEED SHIFT	1	1
11	18393130	PARTS,SOLENOID MOVING DRIVE(SP)	1	1
12	18393170	PARTS,MAIN PCB ASS'Y SP(SP)	1	1
13	18327150	IC,ROM	1	1
14	18327070	JUNCTION WIRING,INTERFACE	1	1
15	18302080	SHEET,MAIN PCB	1	1
16	18303010	LEFT HINGE	1	1
17	18303020	RIGHT HINGE	1	1
18	18303030	SUPPORT BAR,HINGE	2	2
19	18303040	MOUNT,DF SAFETY SWITCH	1	1
20	18303050	LEVER,DF SAFETY SWITCH	1	1
21	18307150	SHAFT,JOINT PAPER FEED	1	1
22	18307310	PULLEY 34/18P2M,JOINT	1	1
23	18307320	PULLEY 40/20,REGISTRATION	1	1
24	18307330	GEAR 36,JOINT	1	1
25	18307340	PULLEY 26P2M/22,SEPARATION	1	1
26	18307380	PULLEY 28P2M,JOINT	1	1
27	18307430	MOUNT,SEPARATION PIN	1	1
28	18307520	BELT 146,JOINT	1	1
29	18393110	PARTS,SOLENOID LEADING FEED(SP)	1	1
30	48128100	FULCRUM PIN	2	2
31	63202180	HOLDER,HANDLE	1	1
32	63212240	BELT,126P2M6	1	1
33	63527020	SAFETY,SWITCH	1	1
34	67322230	BUSHING 8	1	1
35	75706040	STOPRING PAPER FEED PULLEY	1	1
36	M2104350	EDGING,EDS-0607M(KITAGAWA)	1	1
37	M1203240	OPEN BUSHING,OCB-500	2	2
38	M2108700	SPACER,KGLS-8RF(KITAGAWA)	2	2
39	M2108850	SPACER,KGPS-8RF(KITAGAWA)	1	1
40	M1203550	STRAIN RELEAF BUSHING,SR-7W-2	1	1
41	M2105020	NYLON CLAMP 4N,NK-4N	1	1
42	M2105040	NYLON CLAMP 6N,NK-6N	2	2
43	M2107120	BINDING BAND SG-130	5	5
44	18307400	BELT 200,PAPER FEED	1	1
45	*73127200*	*PHOTO-INTERRUPTOR*	*1*	*1*

• Parts with "•" are component parts or sub-assemblies of the assembly appearing immediately above them.

• Parts with "• •" are component parts or sub-assembly with "•" appearing immediately above them.

FIG. 43 PARTITION SECTION

367/183-1

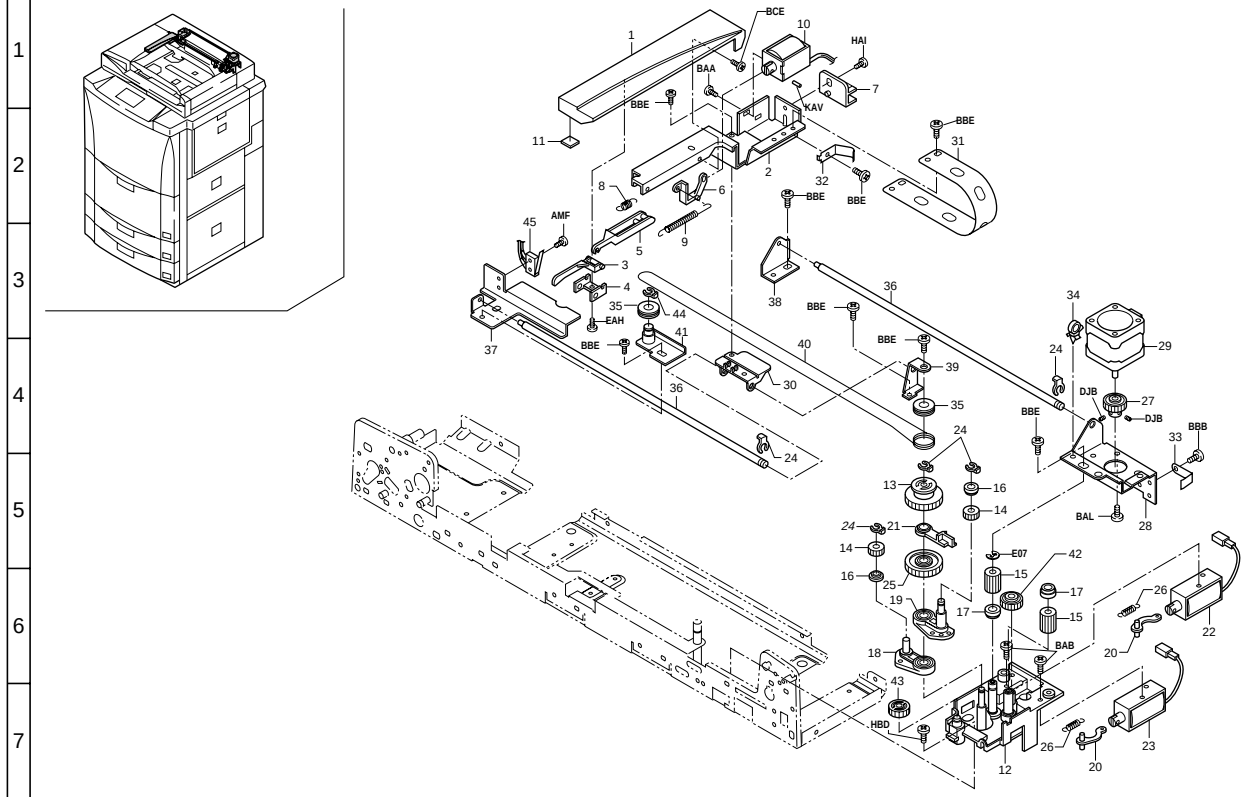

FIG. 43 PARTITION SECTION

Ref. No.	Part. No.	Description	Quantity 230V	Quantity 240V
1	18313030	COVER,PARTITION	1	1
2	18313050	MOUNT,PARTITION SOLENOID	1	1
3	18313070	PARTITION,ORIGINAL	1	1
4	18313080	HOLDER,PARTITION	1	1
5	18313090	JUNCTION PLATE,ORIGINAL	1	1
6	18313100	LEVER,PARTITION SOLENOID	1	1
7	18313110	SLIDER,PARTITION	1	1
8	18313130	SPRING,PARTITION	1	1
9	18313140	SPRING,PARTITION SOLENOID	1	1
10	18327180	SOLENOID,PARTITION LEVER	1	1
11	78710370	CUSHION UPPER LOOP	1	1
12	18314010	MOUNT BASE,PARTITION DRIVE	1	1
13	18314030	PULLEY,PARTITION DRIVE	1	1
14	18314040	GEAR 13,PARTITION JOINT	2	2
15	18314050	GEAR 13,IDLE	2	2
16	18314060	COLLAR,PARTITION JOINT	2	2
17	18314070	COLLAR,PARTITION DRIVE	2	2
18	18314090	LEFT LEVER,PARTITION JOINT	1	1
19	18314100	RIGHT LEVER,PARTITION JOINT	1	1
20	18314110	JUNCTION PLATE,PARTITION SOLENOID	2	2
21	18314120	CLAW,PARTITION DRIVE	1	1
22	18393130	PARTS,SOLENOID MOVING DRIVE(SP)	1	1
23	*18327200*	*SOLENOID,PARTITION DRIVE*	*1*	*1*
24	63511220	STOP RING,4	5	5
25	71822120	GEAR 35,DUPLEX DRIVE	1	1
26	71907120	SPRING,DUPLEX STOPPER	2	2
27	18314020	GEAR 21,PARTITION MOTOR	1	1
28	18314180	MOUNT,PARTITION MOTOR	1	1
29	18393080	PARTS,MOTOR MOVING(SP)	1	1
30	18313060	MOUNT BASE,PARTITION WIRE	1	1
31	18313120	SHEET,PARTITION JUNCTION WIRING	1	1
32	18313150	GROUND PLATE,PARTITION	1	1
33	29808320	FRONT GROUND PLATE,CHARGER	1	1
34	M2107120	BINDING BAND SG-130	1	1
35	18314080	PULLEY,MOVING IDLE	2	2
36	18314130	SHAFT,PARTITION	2	2
37	18314140	MOUNT,PARTITION SWITCH	1	1
38	18314150	LEFT MOUNT,PARTITION SHAFT	1	1
39	18314160	RIGHT MOUNT,PARTITION SHAFT	1	1
40	18393040	PARTS,WIRE REGISTRATION (SP)	1	1
41	18314210	TENSION PLATE,MOVING PULLEY	1	1
42	71807200	GEAR 20,REFEED PULLEY	1	1
43	71815110	IDLE GEAR 18,SUB UNIT	1	1
44	75706040	STOPRING PAPER FEED PULLEY	1	1
45	18327140	SWITCH,PARTITION	1	1

• Parts with "•" are component parts or sub-assemblies of the assembly appearing immediately above them.

• Parts with "• •" are component parts or sub-assembly with "•" appearing immediately above them.

FIG. 44 ELECTRICAL COMPONENTS

367/183

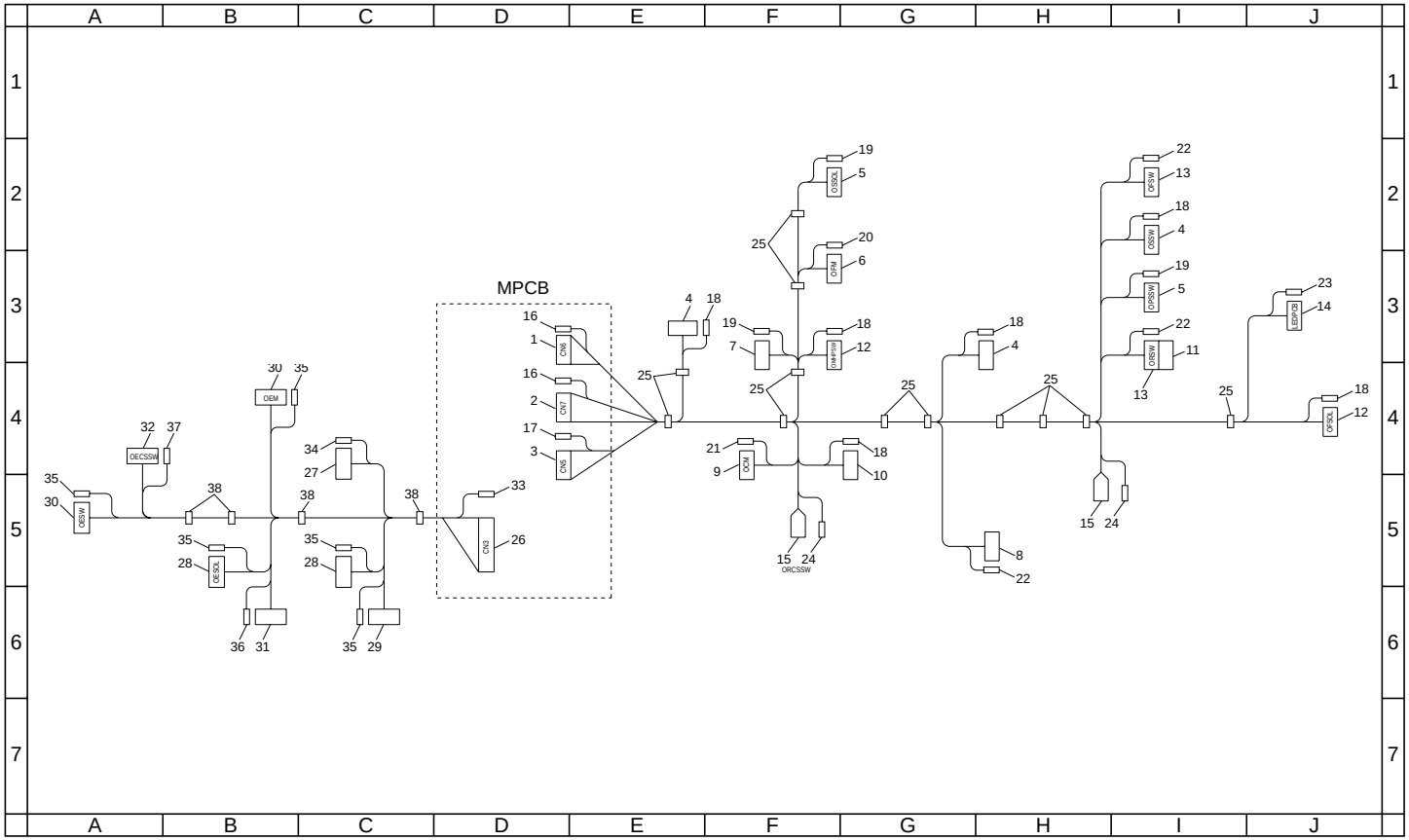

FIG. 44 ELECTRICAL COMPONENTS

Ref. No.	Part. No.	Description	Quantity 230V	Quantity 240V
	18327010	JUNCTION WIRING,PAPER FEED	1	1
1	•J5080180	RECEPTACLE,PHDR-18VS(JST)	1	1
2	•J5080260	RECEPTACLE,PHDR-26VS(JST)	1	1
3	•J0480100	PLUG,MDF6-10DS-3.5C(HIROSE)	1	1
4	•J0450030	PLUG,DF3-3S-2C(HIROSE)	3	3
5	•J0250030	PLUG NH 3P,H3P-SHF-AA	2	2
6	•J0223020	RECEPTACLE EL 2P,ELR-02V	1	1
7	•J0241020	PLUG SM 2P,SMP-02V-BC	1	1
8	•J0150040	RECEPTACLE,175778-4(AMP)	1	1
9	•J5090020	RECEPTACLE,SLR-02VF(JST)	1	1
10	•J0450040	PLUG,DF3-4S-2C(HIROSE)	1	1
11	•J0144030	CASE,175694-3(AMP)	1	1
12	•J0450020	PLUG,DF3-2S-2C(HIROSE)	2	2
13	•J0150030	RECEPTACLE,175778-3(AMP)	2	2
14	•J0260030	PLUG EH 3P,EHR-3	1	1
15	•J0070020	POSITIVE CONNECTOR HOUSING 2P	2	2
16	•J5080800	SOCKET,SPHD-002T-P0.5(JST)	37	37
17	•J0480800	CONTACTOR,MDF6-2022SCF(HIROSE)	8	8
18	•J0450900	SOCKET,DF3-2428SC(HIROSE)	17	17
19	•J0250900	SOCKET,BHF-001T-0.8SS	8	8
20	•J0222900	PIN EL,LLM-01T-1.3E	2	2
21	•J5090800	SOCKET,SSM-01T-P1.4(JST)	2	2
22	•J0150900	CONTACTOR,175161-1(AMP)	9	9
23	•J0260810	CONTACTOR,SEH-001T-N0.6(JST)	3	3
24	•J0070910	POSITIVE CONTACTOR,#187,170331-1	4	4
25	•M0207000	BINDING BAND,KB-100-1	12	12
	18327020	JUNCTION WIRING,EJECT	1	1
26	•J5080320	RECEPTACLE,PHDR-32VS(JST)	1	1
27	•J0200060	PLUG,PHR-6(JST)	1	1
28	•J0241020	PLUG SM 2P,SMP-02V-BC	2	2
29	•J0240030	PLUG SM 3P,SMP-03V-NC	1	1
30	•J0250030	PLUG NH 3P,H3P-SHF-AA	2	2
31	•J0422120	PLUG,DF1B-12DES-2.5RC(HIROSE)	1	1
32	•J0450020	PLUG,DF3-2S-2C(HIROSE)	1	1
33	•J5080800	SOCKET,SPHD-002T-P0.5(JST)	32	32
34	•J5000810	CONTACT,SPH-002T-P0.5L	6	6
35	•J0250900	SOCKET,BHF-001T-0.8SS	12	12
36	•J0421900	CONTACTOR,DF1B-2428SC(HIROSE)	12	12
37	•J0450900	SOCKET,DF3-2428SC(HIROSE)	2	2
38	•M0207000	BINDING BAND,KB-100-1	4	4

• Parts with "•" are component parts or sub-assemblies of the assembly appearing immediately above them.

• Parts with "• •" are component parts or sub-assembly with "•" appearing immediately above them.

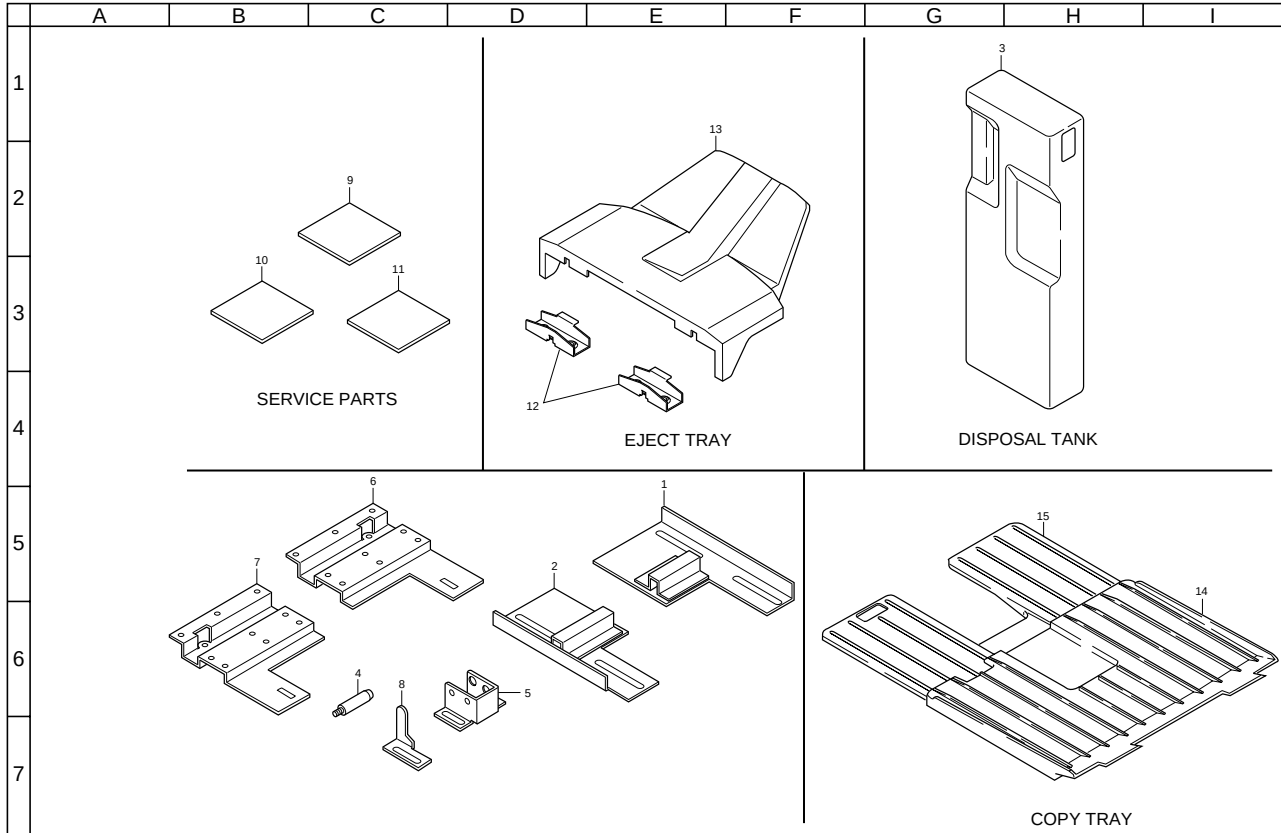
9
10
11
SERVICE PARTS
13
12
EJECT TRAY
3
DISPOSAL TANK
6
7
1
2
4
8
5
15
14
COPY TRAY

FIG. 45 ACCESSORIES & SERVICE PARTS

Ref. No.	Part. No.	Description	Quantity	
			230V	240V
1	36768050	RIGHT BASE,HOOK	1	1
2	36768060	LEFT BASE,HOOK	1	1
3	36700520	DISPOSAL TANK ASS'Y	1	1
4	48127306	RETAIN.PIN,DRUM UNIT FRAM	2	2
5	63416400	CATCH,SORTER	2	2
6	63416411	FRONT CATCH,SORTER	1	1
7	63416421	REAR CATCH,SORTER	1	1
8	63416430	LEVER,SAFETY SWITCH	1	1
9	36705280	LABEL B,CASSETTE SIZE	3	3
10	36705290	LABEL C,CASSETTE SIZE	3	3
11	36705300	LABEL D,CASSETTE SIZE	3	3
12	18312520	REINFORCEMENT,EJECT TRAY	2	2
13	18312510	TRAY,EJECT	1	1
14	66020080	COPY TRAY A	1	1
15	66020090	COPY TRAY B		

• Parts with "•" are component parts or sub-assemblies of the assembly appearing immediately above them.

• Parts with "• •" are component parts or sub-assembly with "•" appearing immediately above them.