2-3-1 Consists of electric circuit

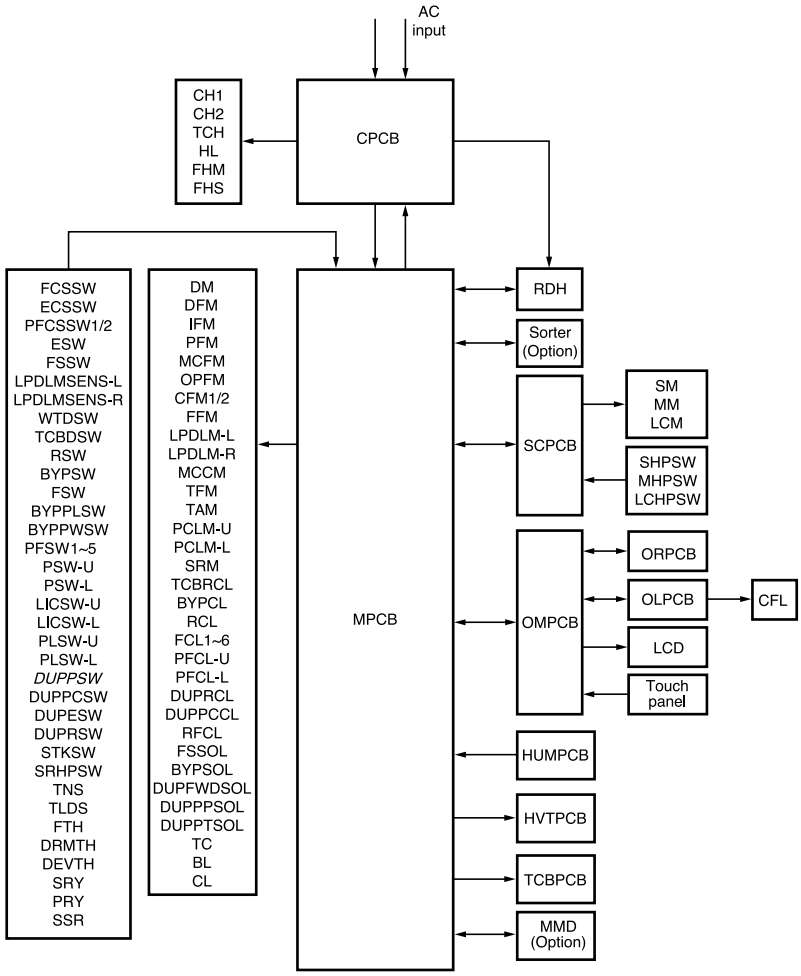

Figure 2-3-1 Electric circuit block diagram

The electric circuit of the copier consists of the composition PCB (CPCB), main PCB (MPCB), scanner control PCB (SCPCB), high voltage transformer PCB (HVTPCB), transfer charger belt bias PCB (TCBPCB), operation unit main PCB (OMPCB), operation unit left PCB (OLPCB), operation unit right PCB (ORPCB), humidity sensor PCB (HUMPCB), RDH main PCB (RDHMPCB) and each load, switch.

2-3-2 Composition PCB

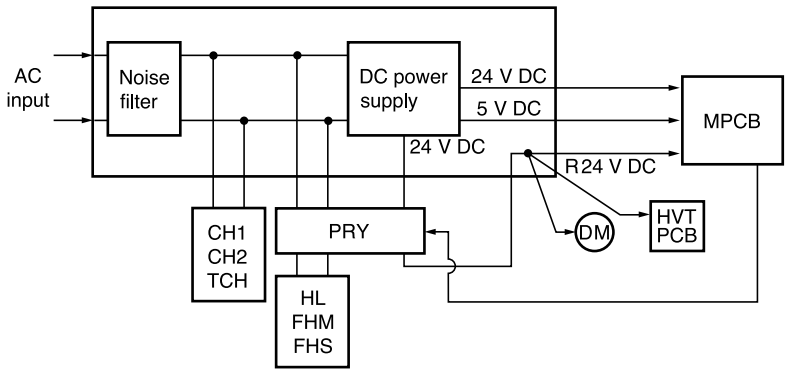

Figure 2-3-2 Composition PCB block diagram

Composition PCB consists of the circuit shown in FIgure 2-3-2 and each circuit operates as follows.

• Noise filter
It prevents high-frequency noise peculiar to the switching regulator from escaping out of the copier via the AC line input and also protects the internal circuits from the adverse effects of external noise.

• DC power source circuit
DC power source circuit rectifies and smoothes the AC input through the noise filter and generates the 24 V DC and 5 V DC output that supply to the main PCB (MPCB), the RDH main PCB (RDHMPCB), the drive motor, etc and the high voltage transformer PCB (HVTPCB) by the switching regulator circuit.

• Fixing heater control circuit
Fixing heater control circuit turns on/off the AC voltage that apply to the fixing heater M/S according to the fixing heater control signal (FHM REM/FHS REM) from the main PCB (MPCB).

• Halogen lamp control circuit
Halogen lamp control circuit turns on/off the AC voltage that apply to the halogen lamp and adjust light density according to the halogen lamp control signal (HL CNT) from the main PCB (MPCB).

2-3-3 Main PCB

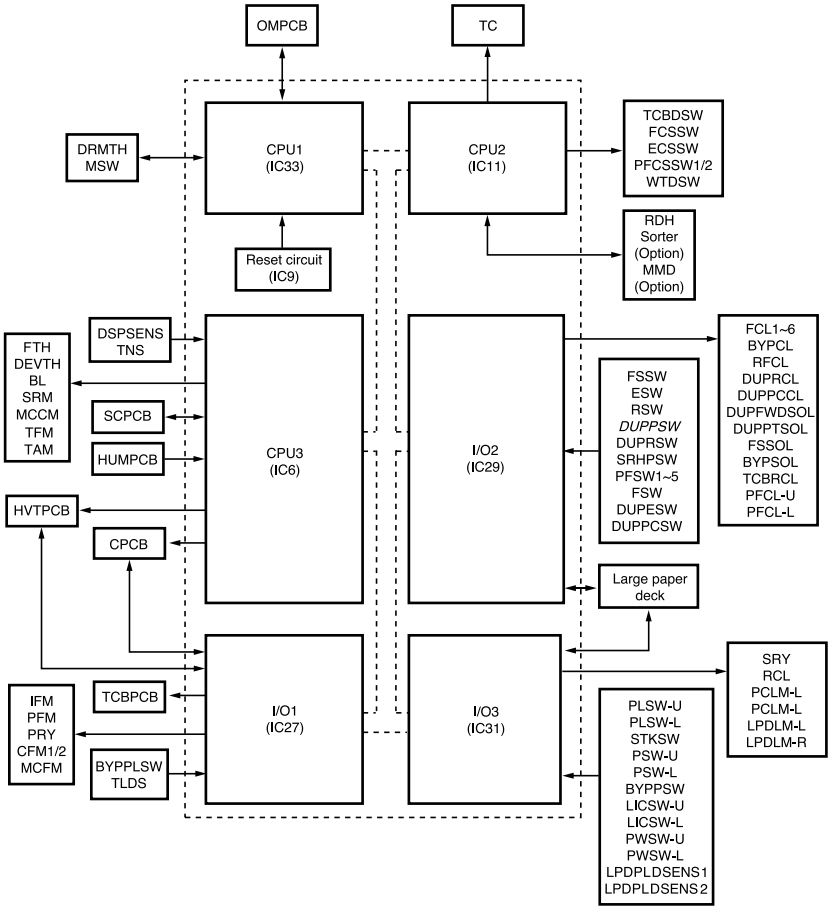

Figure 2-3-3 Main PCB block diagram

Main PCB consists of the circuit shown in Figure 2-3-3.

The main PCB (MPCB) control circuit mainly consists of three PCB CPU1(IC33), CPU2(IC11), CPU3(IC6).
The CPU1 (IC33) operates the following function according to the program in the CPU; controls the operation unit main PCB (OMPCB) input/output and forced off of the main switch (MSW); input each signal of the drum thermistor (DRMTH) .
The CPU2 (IC11) operates the following function; inputs each signal of the transfer charger belt detection switch (TCBDSW), front cover safety switch (FCSSW), eject cover safety switch (ECSSW), paper feed cover safety switch 1 - 2 (PFCSSW 1-2) and waste toner detection switch (WTDSW); controls the RDH, sorter, total counter (TC) and management system (MMD) input/output.
The CPU3 (IC6) operates the following function; controls the scanner control PCB (SCPCB) input/output, humidity sensor PCB (HUMPCB) output, high voltage transformer PCB (HVTPCB) output, and composition PCB (CPCB) output; inputs each signal of the toner sensor (TNS), developing thermistor (DEVTH), fixing unit thermistor (FTH), drives the blank lamps (BL), drive motor (DM), side registration motor (SRM), main charger cleaning motor (MCCM), developing unit fan motor (DFM), toner feed motor (TFM) and toner agitation motor (TAM).
Also, the CPU3(IC6) operates the following function via I/O 1 (IC27) ; controls the high voltage transformer PCB (HVTPCB), transfer charger belt bias PCB (TCBPCB), composition PCB (CPCB) output, inputs the bypass paper length switch (BYPPLSW), bypass paper width switch (BYPPWSW) and controls the image forming motor (IFM), paper feed motor (PFM), power relay cooling fan motor 1,2 (CFM1,2), main charging fan motor (MCFM) drive.
The I/O2 (IC29) operates the following function; inputs each signal of the feedshift switch (FSSW), eject switch (ESW), registration switch (RSW), duplex paper switch (DUPPSW), duplex registration switch (DUPRSW), side registraion home position switch (SRHPSW), paper feed switch 1 - 5 (PFSW 1-5), feed switch (FSW), duplex eject switch (DUPESW) and duplex paper conveying switch (DUPPCSW); drives the feed clutch 1 - 6 (FCL 1-6), upper and lower paper feed clutch (PFCL-U, -L), bypass paper feed clutch (BYPCL), refeed clutch (RFCL),duplex registration clutch (DUPRCL), duplex paper conveying clutch (DUPPCCL), transfer charger belt release clutch (TCBRCL), duplex forward solenoid (DUPFWDSOL), duplex paper tapping solenoid (DUPPTSOL), feedshift solenoid (FSSOL), bypass solenoid (BYPSOL).
The I/O3 (IC31) operates the following function; inputs each signal of the upper and lower length switch (PLSW-U, -L), upper and lower paper width switch (PWSW-U, -L), upper and lower paper switch (PSW-U, -L), stock switch (STKSW), bypass paper switch (BYPPSW) and upper and lower lift limit switch (LICSW-U, -L); drive the large paper deck.

The reset circuit emits a reset signal to the CPU (IC8) at power on, sudden voltage drops or if the CPU behaves abnormaly.

2-3-4 Scanner control PCB

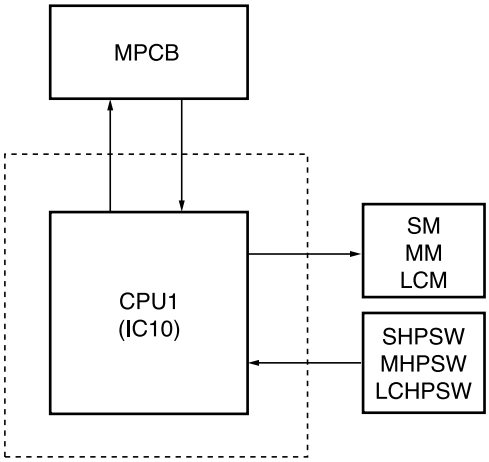

Figure 2-3-4 Scanner control PCB block diagram

Scanner control PCB consists of the circuit shown in Figure 2-3-4.

The scanner control circuit PCB controls the following function by the MPCB. ; controls the scanner motor (SM), mirror motor (MM), lens carriage motor (LCM) drive and input each signal of the scanner home position switch (SHPSW), mirror home position switch (MHPSW), lens carriage home position switch (LCHPSW).

2-3-5 Operation unit main, left and right PCB

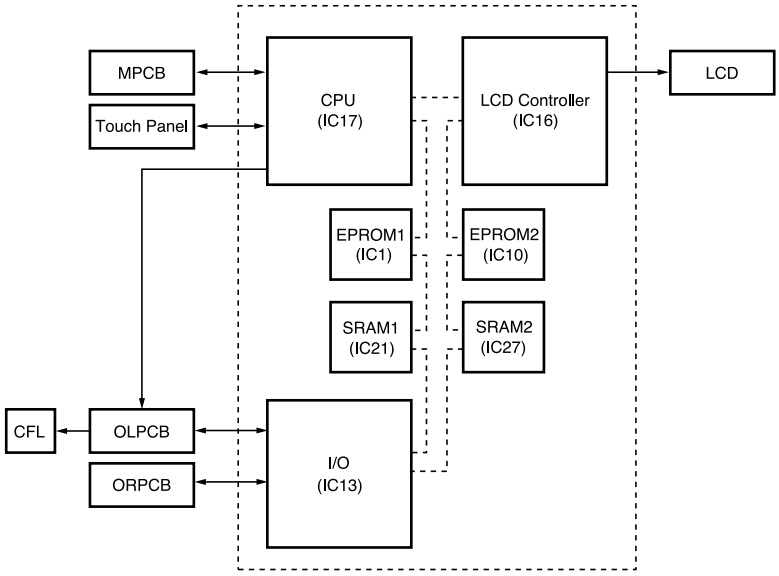

Figure 2-3-5 Operation unit main, left and right PCB block diagram

The operation unit main PCB (OMPCB) consists of CPU (IC17) which controls the entire operation unit directly or via I/O (IC13) using EPROM1 (IC1) which holds the control program, EPROM2 (IC10) where LCD display fonts are stored, and SRAM1 (IC21). LCD controller (IC16) and SRAM2 (IC27) control the display screen on the LCD panel.
The operation unit right PCB (ORPCB) consists of a key switch and LED display section and is controlled by the scan signal and LED lighting signal from the operation unit main PCB (OMPCB).
The operation unit left PCB (OLPCB) consists of key switch and LED display section and CFL drive circuit. The key switch and LED display section is controlled by the scan signal and LED lighting signal from the operation unit main PCB (OMPCB); while the CFL drive circuit is operated by the CFL signal from the operation unit main PCB to generate the AC supply which lights the CFL.

2-3-6 RDH main PCB

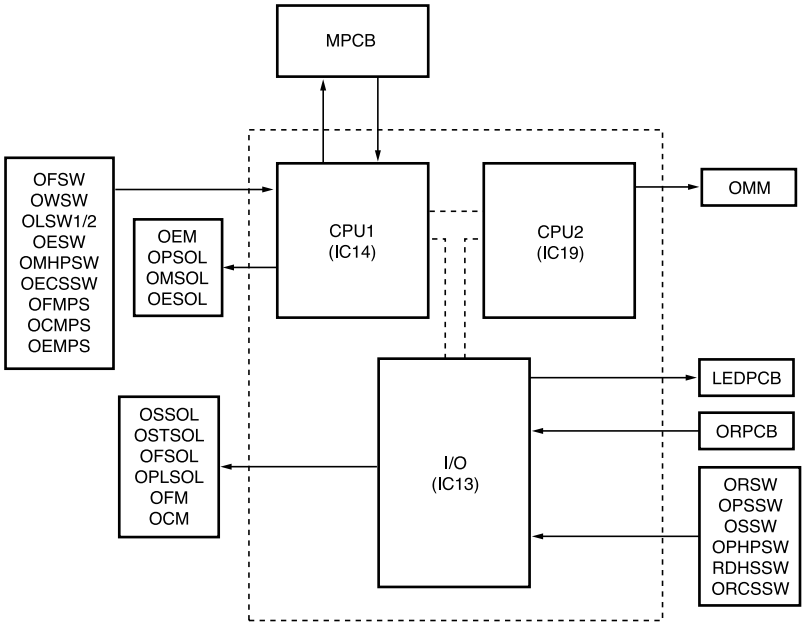

Figure 2-3-6 RDH main PCB block diagram

RDH main PCB consists of the circuit shown in Figure 2-3-6.

The CPU1 (IC14) of the RDH main PCB (RDHMPCB) operates the following function according to the program in the CPU; inputs each signal of the original feed switch (OFSW), original width switch (OWSW), original length switch 1 - 2 (OLSW1-2), original eject switch (OESW), original moving home position switch (OMHPSW), original eject cover safety switch (OECSSW), original feed motor pulse sensor (OFMPS), original conveying motor pulse sensor (OCMPS) and original eject motor pulse sensor (OEMPS); drives the original eject motor (OEM), original partition solenoid (OPSOL), original moving solenoid (OMSOL) and original eject solenid (OESOL).
The CPU2 controls the original moving motor (OMM) drive, also via I/O (IC13) inputs each signal of the original registration switch (ORSW), original preset switch (OPSSW), original set switch (OSSW), original partition home position switch (OPHPSW), RDH safety switch (RDHSSW), original reverse cover safety switch (ORCSSW), controls the original stopper solenoid (OSSOL), original strike solenoid (OSTSOL), original feed solenoid (OFSOL), original partition lever solenoid (OPLSOL), original feed motor (OFM), original conveying motor (OCM) drive, and controls the original reading PCB (ORPCB), LED PCB (LEDPCB).