3-1-1 Unpacking and installation

(1) Installation environment

1. Temperature: 10 - 38°C/50 - 95°F
2. Humidity: 15 - 85%
3. Power supply: 120 V AC. 15 A
   220 - 240 V AC, 10 A
4. Power source frequency: 50/60 Hz ± 0.3%
5. Installation location
   - Avoid direct sunlight or bright lighting. Make sure that the photoconductor will not be exposed to direct sunlight or other strong light when removing paper jams.
   - Avoid extremes of teemperature and jumidity, abrupt ambient temperature changes, and hot or cold air directly hitting the machine.
   - Avoid dust and vibration.
   - Choose a surface capable of supporting the weght of the machine.
   - Place the machine on a level surface (maximum allowable inclination: 1°).
   - Aboid air-borne substances that may adversely affect the machine or degrade the photoconductor, such as mercury, acidic and alkaline vapors, inorganic gases, NOx, SOx gases and chlorine-based organic solvents.
   - Select a room with good ventilaiton.
6. Allow sufficient access for proper operation and maintenance of the machine.
   Machine front: 1000 mm/39 3/8" Machine rear: 100 mm/4"
   Mahcine right: 700 mm/27 5/8" Machine left: 600 mm/23 5/8"

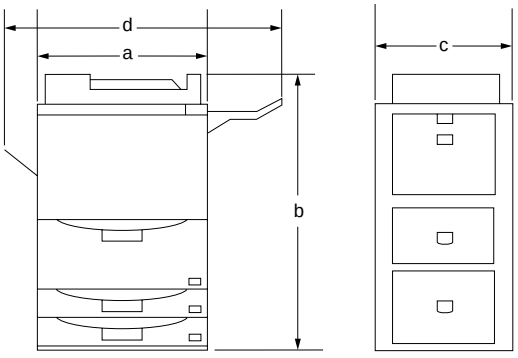

a: 685 mm/27"
b: 1128 mm/44 3/4"
c: 752 mm/29 5/8"
d: 1380 mm/54 5/16"

Figure 3-1-1 Installation dimensions

(2) Installation procedure

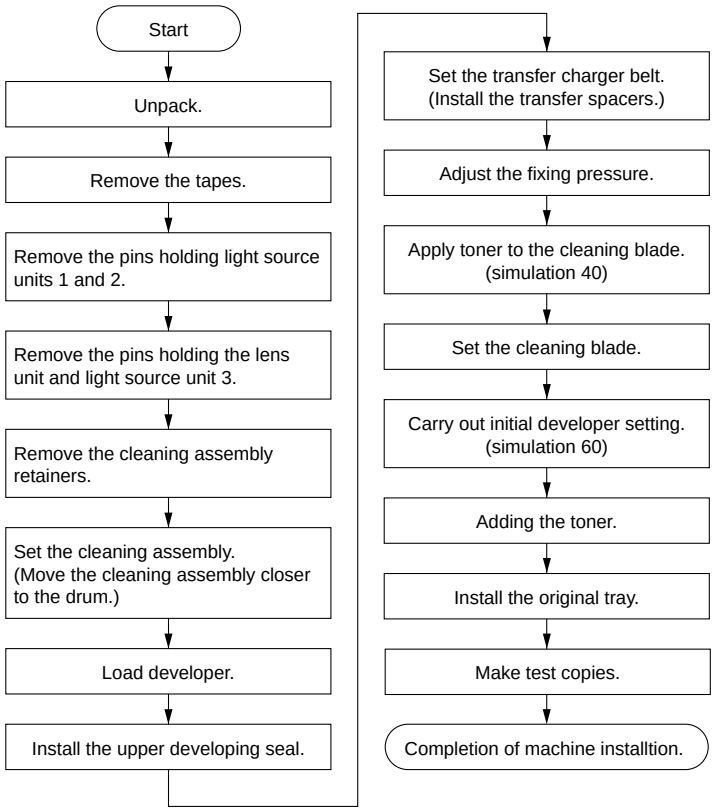

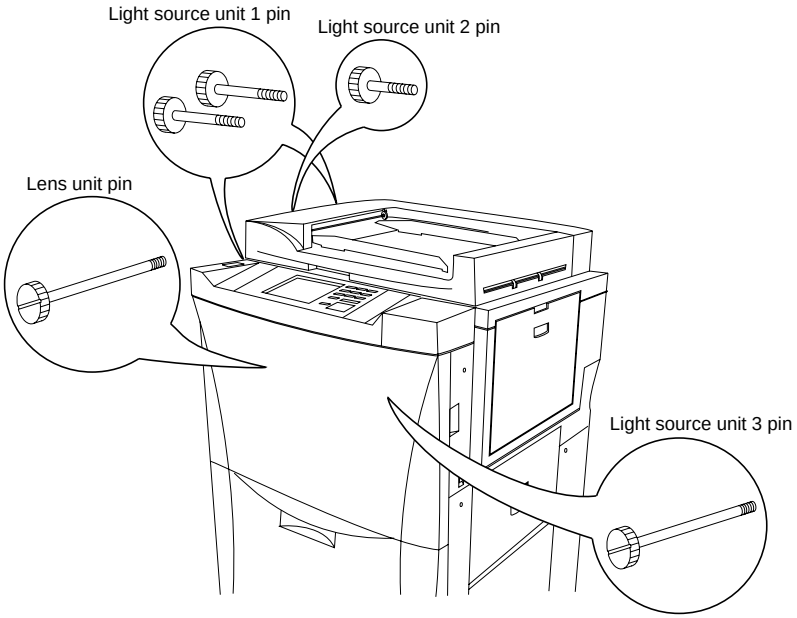
Light source unit 1 pin
Light source unit 2 pin
Lens unit pin
Light source unit 3 pin

Figure 3-1-2

Unpack.

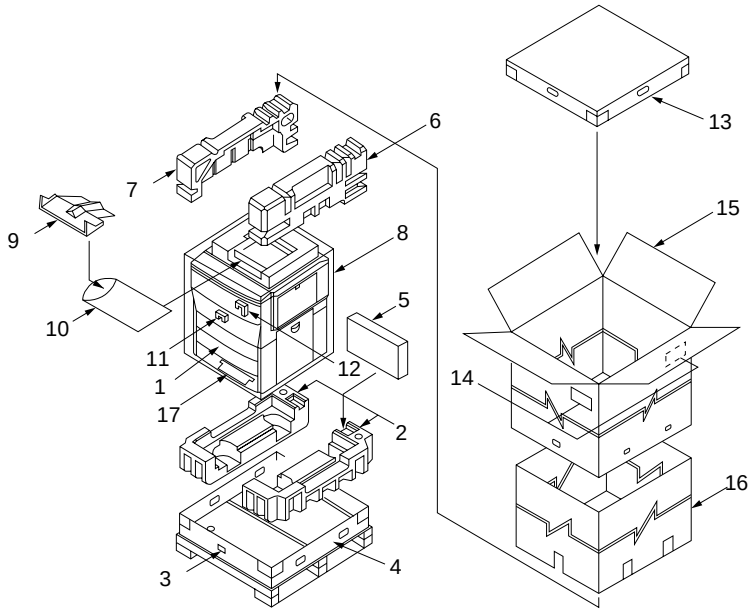

Figure 3-1-3 Unpacking

1 Copier
2 Bottom pad
3 Hinge joints
4 Skid
5 Toner waste tank
6 Right pad
7 Left pad
8 Machine cover
9 Original tray
10 Air-padded bag
11 Front transfer spacer
12 Rear transfer spacer
13 Accessories case (instruction handbook, Warranty, Business mail)
14 Bar code labels
15 Outer case
16 Inner frame
17 Upper developing seal

Remove the tapes.

1. Remove the tapes holding the original trays and RDH.
2. Remove the tape holding the front cover.
3. Remove the tape holding the right cover.
4. Remove the tapes holding the large paper deck and cassettes.
5. Remove the tape holding the bypass table.
6. Remove the tape holding the power cord.

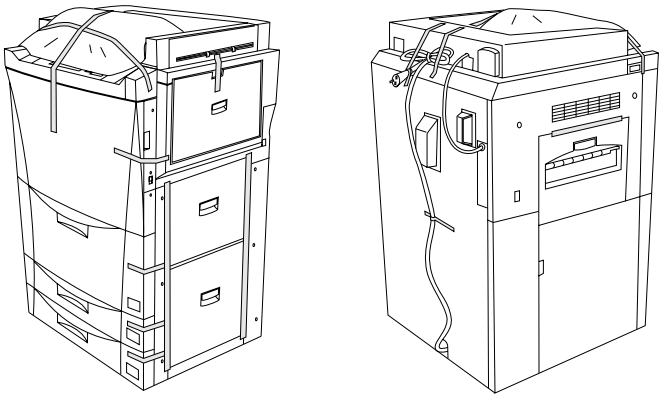

Figure 3-1-4

7. Draw out the upper cassette and pull out the tapes holding the cassette lift and spacer for the transfer charger belt.

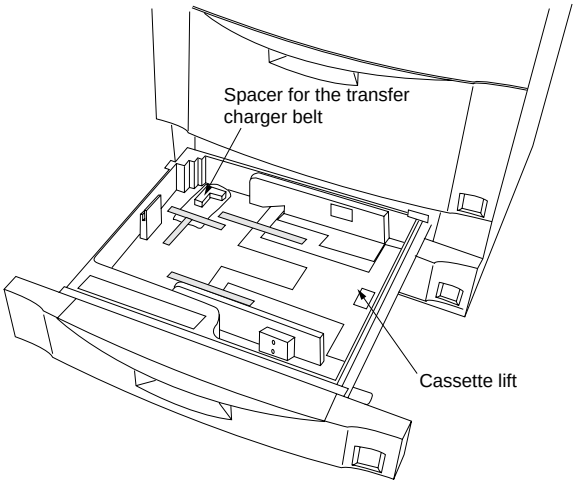

Figure 3-1-5

8. Draw out the lower cassette and remove the tapes holding the cassette lift and pull out the upper developing seal.

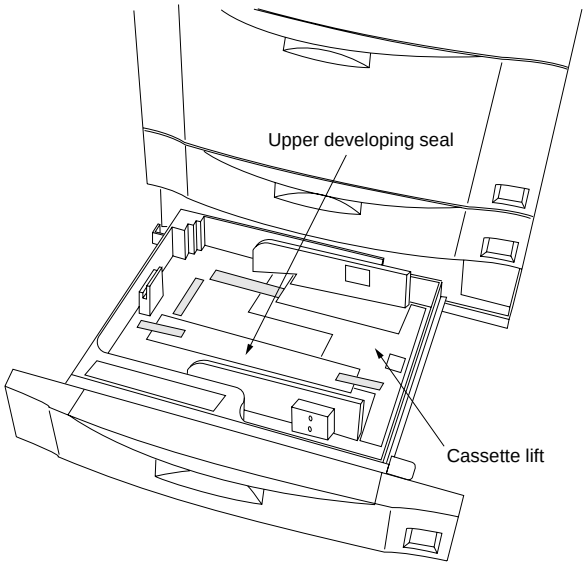

Figure 3-1-6

Remove the pins holding light source units 1 and 2.

1. Remove the tapes with the two pins holding light source unit 1 and the one pin holding light source unit 2 at the left side of the machine, and remove the each pin.

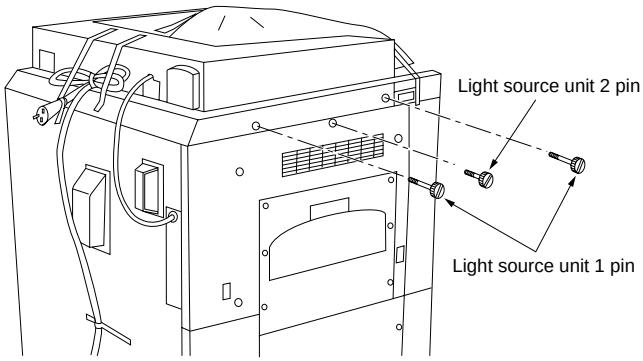

Figure 3-1-7

Remove the pins holding the lens unit and light source unit 3.

1. Open the front cover and remove the three screws holding the image forming unit. Tip the transfer section release lever, then pull out the image forming unit horizontally.
   Caution: When pulling out the image forming unit, hold the both of the image forming unit firmly and do not touch the separation claws.

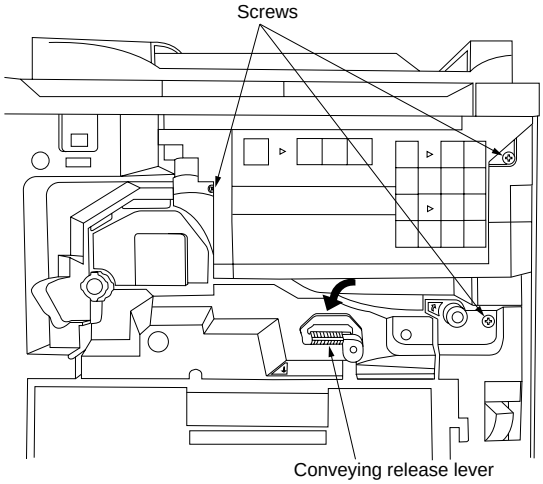

Figure 3-1-8

2. Remove the tape with the pin holding lens unit (at the left side of the machine) and the pin holding light source unit 3 (at the right side of the machine), and remove the each pin.

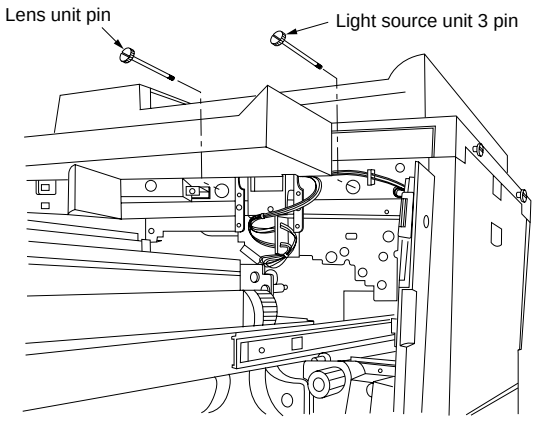

Figure 3-1-9

Remove the cleaning assembly retainers.

1. Remove the screw holding the cleaning assembly retainer (at the front side of the machine), then remove the cleaning assembly retainer. Turn the screw holding the cleaning assembly retainer (at the rear side of the machine) with hand and remove it, then remove the cleaning assembly retainer.

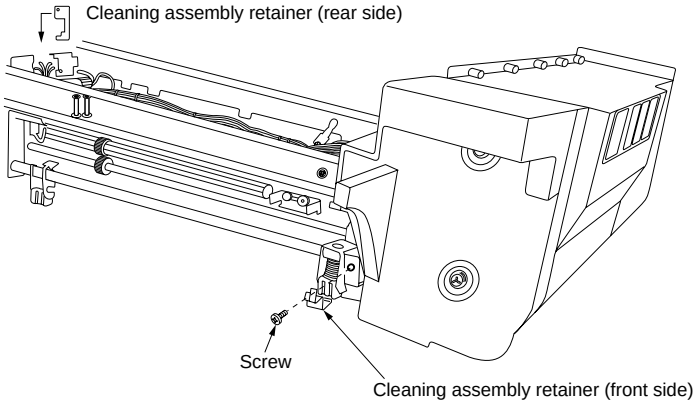

Figure 3-1-10

Set the cleaning assembly.
(Move the cleaning assembly closer to the drum.)

1. Turn the cleaning retaining levers in the direction of the arrow and set the cleaning retaining levers firmly.

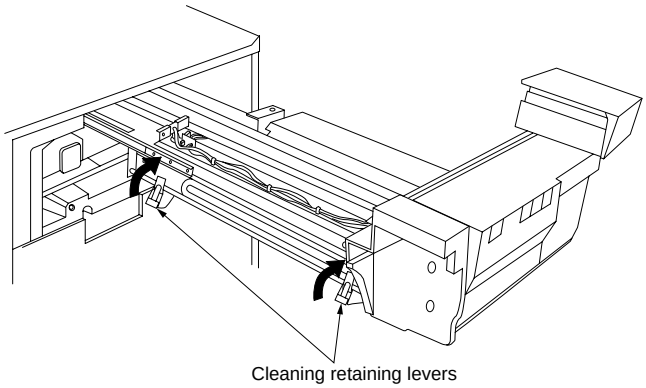

Figure 3-1-11

Load developer.

1. Lift the lock lever holding the developing assembly 90 degree and insert the lever at the top of the developing assembly into the inside of the machine, then release the nozzles for the toner hopper and developing section.
2. Remove the screw each holding the developing assembly retainers (front and rear) and disconnect the 9P connector.

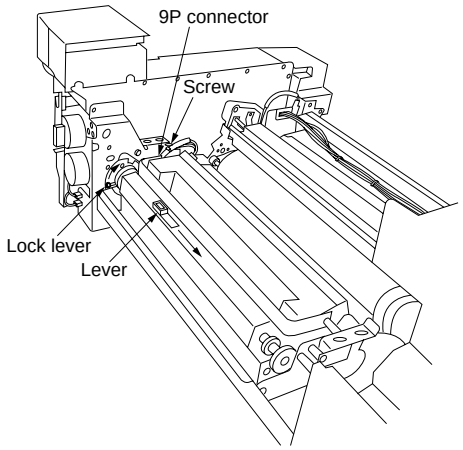

Figure 3-1-12

3. Hold the handle of the developing assembly and remove the developing assembly from the machine.

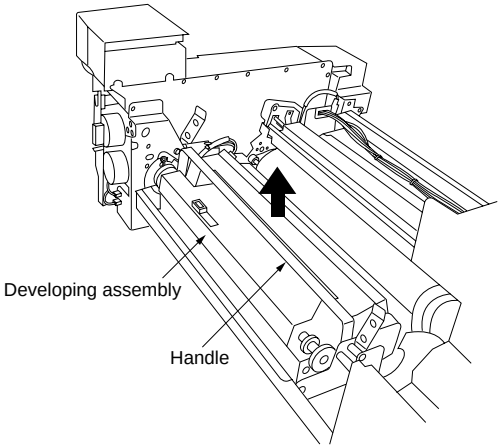

Figure 3-1-13

4. Remove the three screws and two hooks at the top of the developing assembly, and then remove the upper developing cover.
   Caution: When installing the developer, put the developing assembly on the horizontal place.

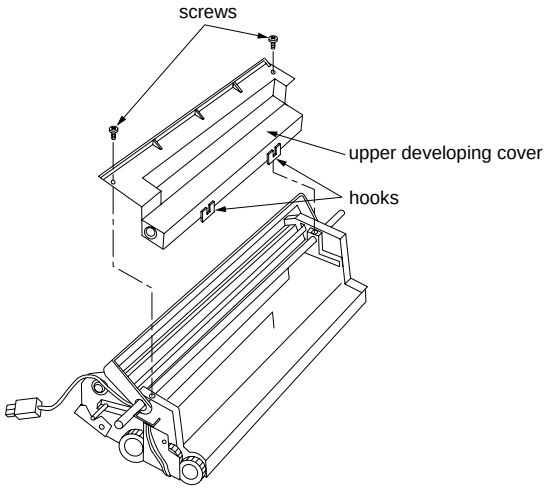

Figure 3-1-14

5. Shake the bottle well and agitate the developer.
6. Pour developer into the developing assembly uniformly while turning the developing gear (marked with the arrow) in the direction of the arrow.
   * Do not turn the developing gear in the opposite direction.

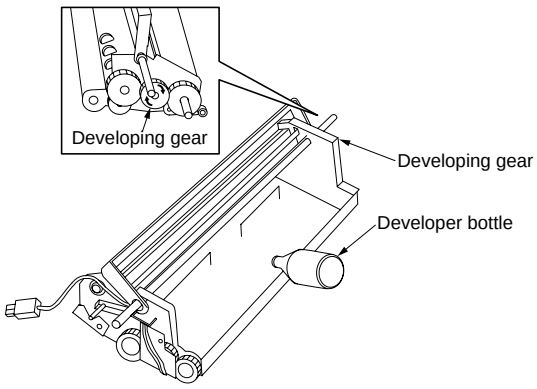

Figure 3-1-15

7. Refit the upper developing cover to the developing assembly.
   * When refitting, firmly refit the hooks (large/small) to fasten with the screw.

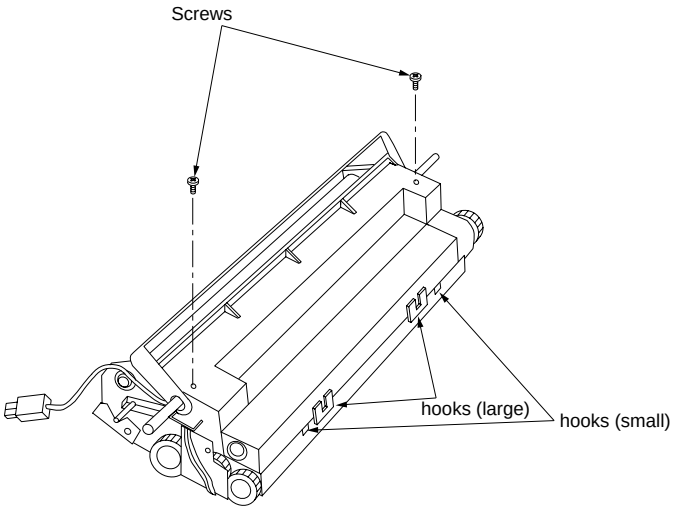

Figure 3-1-16

Install the upper developing seal.

1. Check that the semitransparent films of the developing assembly stack out from the red felts. If so, insert the semitransparent films into the red felts.

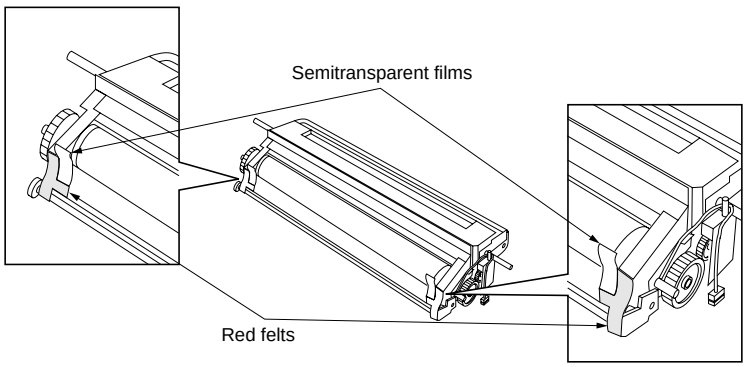

Figure 3-1-17

2. Remove the two screws attached the developing assembly, hook the upper developing seal packed with the lower cassette to the claws at the both side, and then attached with the two screws removed.
   * When refitting, refit the upper developing seal to the outside of the developing assembly all the way for moving to the drum.

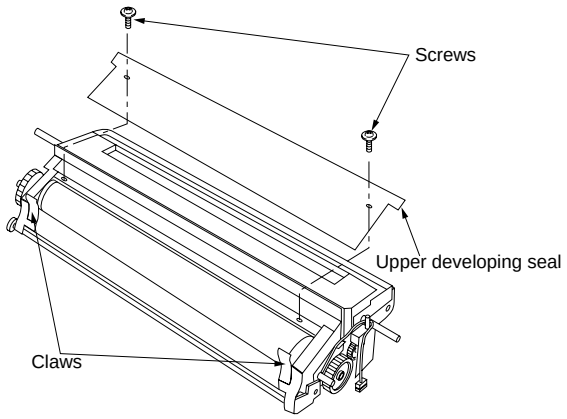

Figure 3-1-18

3. Reattach the developing assembly to the image forming unit.
4. Slide the lever at the top of the developing assembly to the machine front side and tip the lock lever 90 degree, then fasten the nozzle of the developing assembly with the toner hopper.

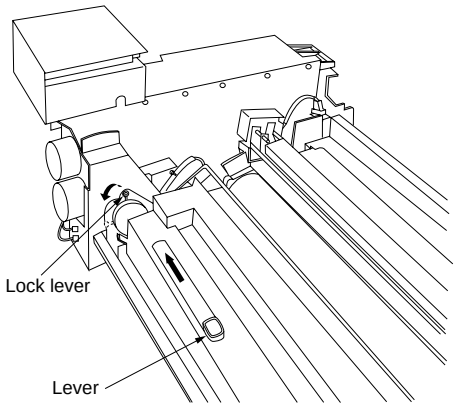

Figure 3-1-19

5. Push back the image forming unit its original position.
   * Do not reattach the screws holding the image forming unit yet.

Set the transfer charger belt.
(Install the transfer spacers.)

1. Remove the screw holding the conveying section.

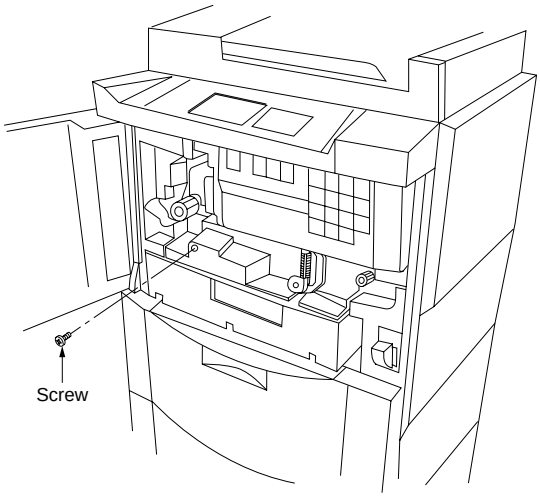

Figure 3-1-20

2. Pull out the conveying section horizontally.

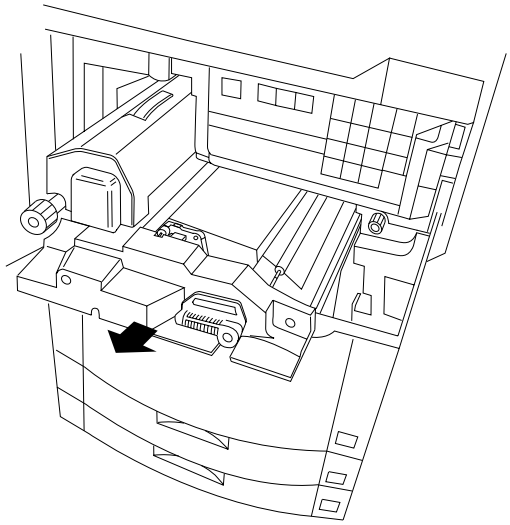

Figure 3-1-21

3. Remove the stop ring, bushing and bearing from the shaft of the transfer charger belt.
   * When removing the transfer charger belt, do not touch the transfer charger belt with bare hand.

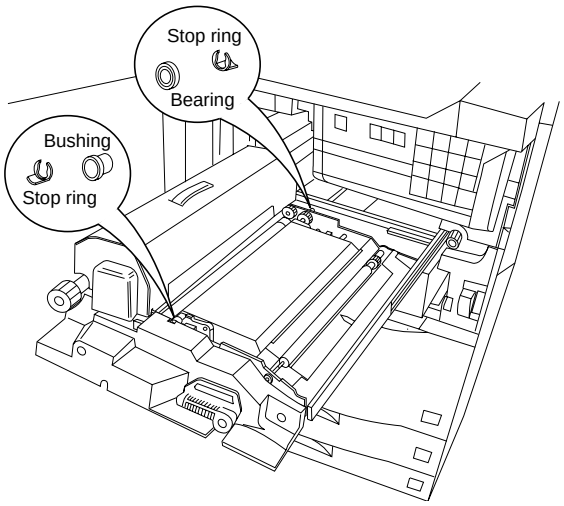

Figure 3-1-22

4. Disconnect the 1P connector (white wire) and lift the transfer charger belt up in the direction of the arrow, then remove the transfer charger belt.

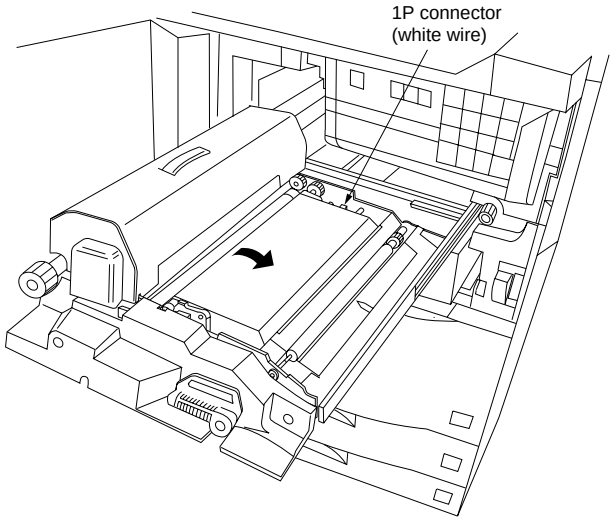

Figure 3-1-23

5. Remove the four screws holding the belt cleaning housing and disconnect the 1P connector (red wire), then remove the belt cleaning housing.

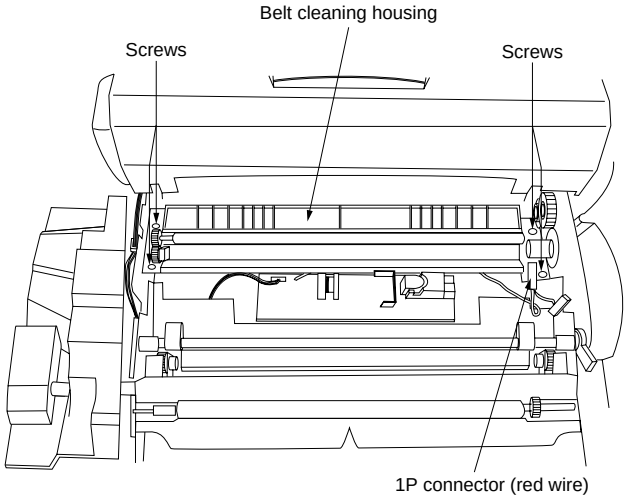

Figure 3-1-24

6. *Install the front and rear transfer spacers packed in the upper cassette as shown in the figure and fasten the front and rear transfer spaces together with the belt cleaning housing by the screw packed with the front and rear transfer spacers.*

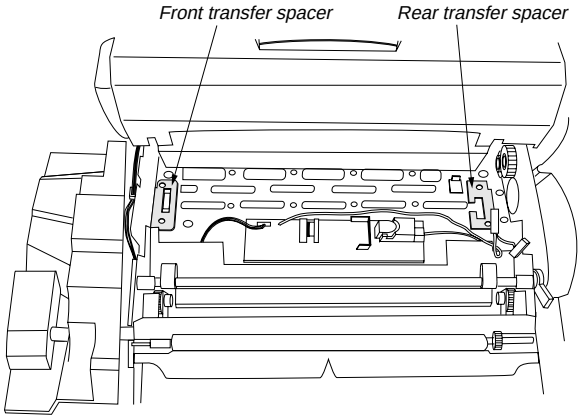

Figure 3-1-25

7. Reattach the transfer charger belt its original position.

Adjust the fixing pressure.

1. Open the fixing eject cover.

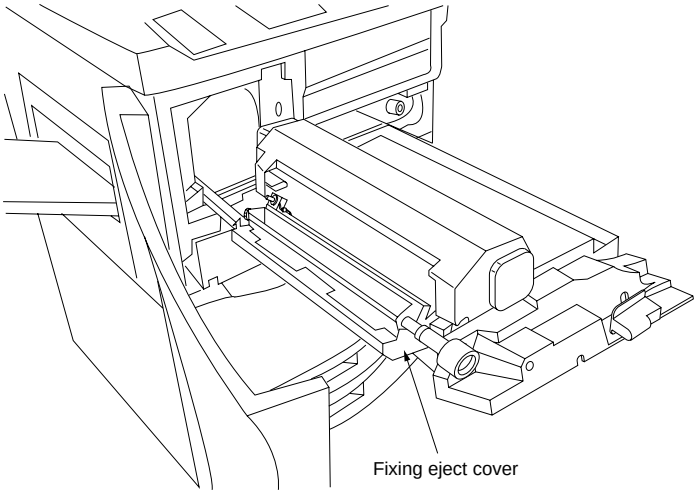

Figure 3-1-26

2. Turn the fixing pressure screws in the direction of the clockwise and tighten it, then adjust the fixing pressure.

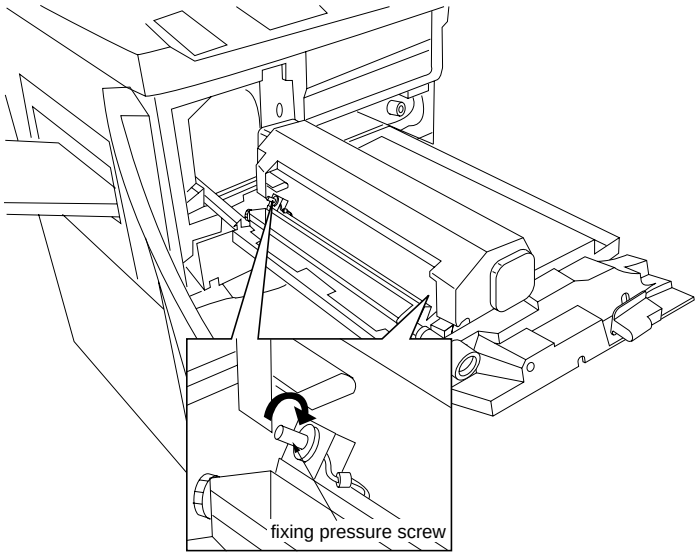

Figure 3-1-27

3. Close the fixing eject cover.
4. Reattach the conveying cover its original position.
5. Push back the transfer section its original position and lift the transfer section release lever to the its original position, then fasten it.

Carry out initial developer setting. (simulation 60)

1. Insert the power plug into the wall outlet and turn the main switch on with opening the front cover.
2. The machine starts warming up, after “Close the front cover” message is displayed, enter 10871087 with the numeric keys and run the simulation mode.
3. *Enter 60 with the numeric keys and press the print key.*
4. *Press the enter key.*
   ** After 2 min, the initial value of the toner sensor output voltage and toner sensor control voltage is set automatically, the setting is displayed on the touch screen.*
   Example
   TARGET: 111 (initial value of the toner sensor output voltage)
   CONTROL: 94 (toner sensor control voltage)
5. *Wright down the CONTROL value in the space of SIM62 for the label simulation.*
6. *Press the stop/clear key.*

Apply toner to the cleaning blade. (simulation 40)

1. *Enter 40 with the numeric keys and press the print key.*
2. *Close the front cover and press the enter key.*
   ** Apply the toner to the drum, and the machine stops automatically.*
   ** After running simulation 40, it can not be released until step 5 in the next page even if the stop/clear key is pressed unless the front cover is not opened or closed (turn the front cover safety switch off/on) (So as not to enter the developer initialization in state that the toner applies on the drum.).*

Set the cleaning blade.

1. Open the front cover and tip the conveying release lever, then pull out the image forming unit horizontally.

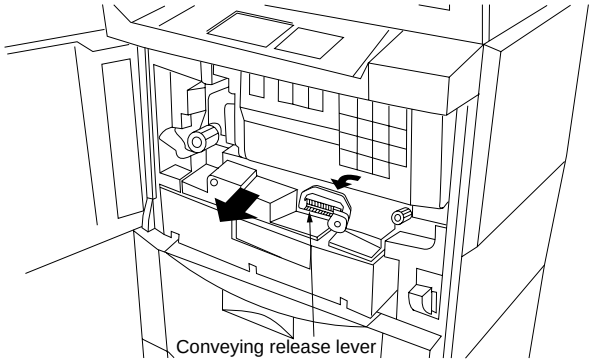

Figure 3-1-28

2. *Check that the toner is applied to the drum and loosen the blade retaining pin at the left side of the image forming unit, then slide the blade release lever in the direction of the arrow.*
   * The cleaning blade is set and the cleaning blade contacts with the drum.

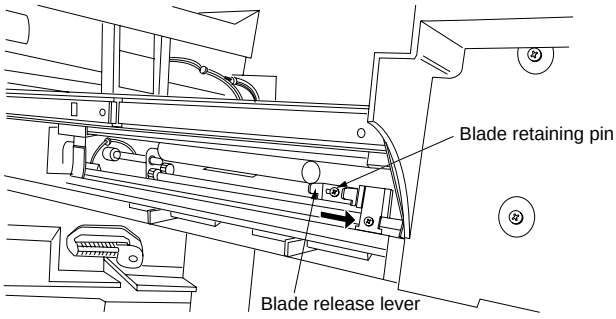

Figure 3-1-29

3. Refasten the blade retaining pin, then fasten the blade release lever.

4. Push back the image forming unit its original position and lift the conveying release lever up the its original position, and then fasten with the three screws fastened the image forming unit .

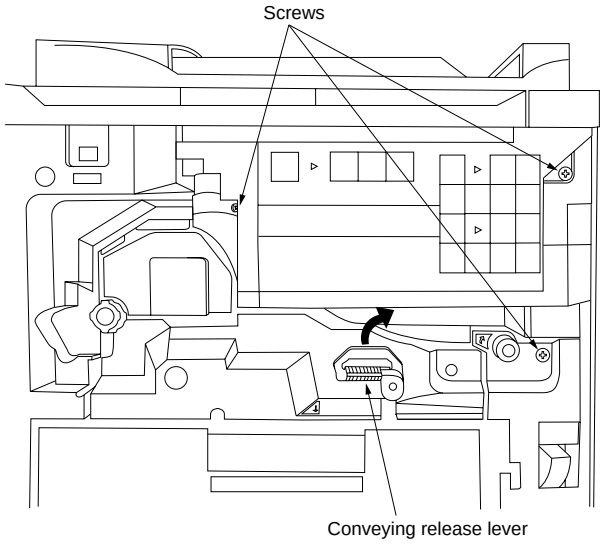

Figure 3-1-30

5. Close the front cover. (The drive is started/stopped automatically.)
6. Press the stop/clear key.

Simulation mode is exited.

1. Enter 01 with the numeric keys and press the print key.
   * Exit from the simulation mode

Adding the toner.

1. Open the operation section right cover.

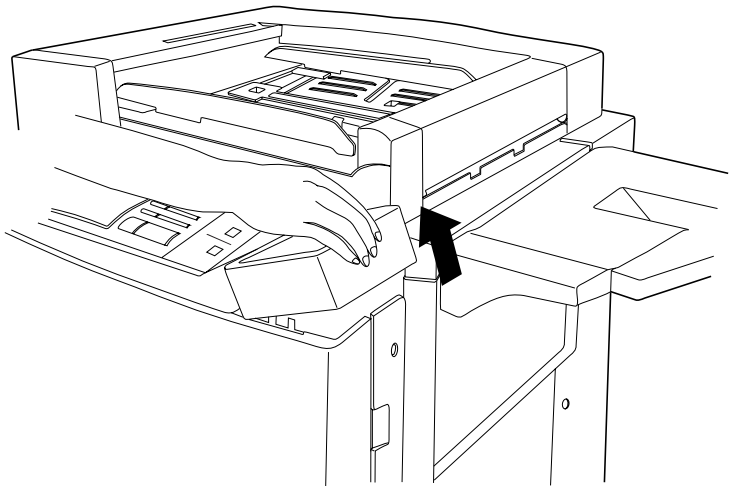

Figure 3-1-31

2. Hold the new bottle cartridge securely and shake it top and bottom, right and left 7 or 8 times.

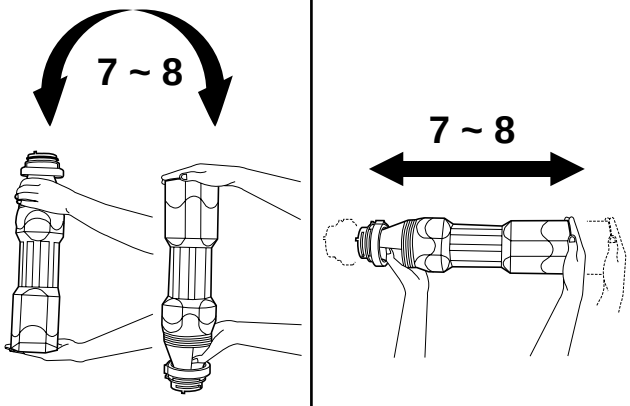

Figure 3-1-32

3. Insert the bottle cartridge into the toner replenishing opening and rotate it 90 degree in the direction of the arrow to replenish.
   * Align the ▲ mark of the cartridge with that of the copier and set the cartridge similarly to insertion of metal fittings.

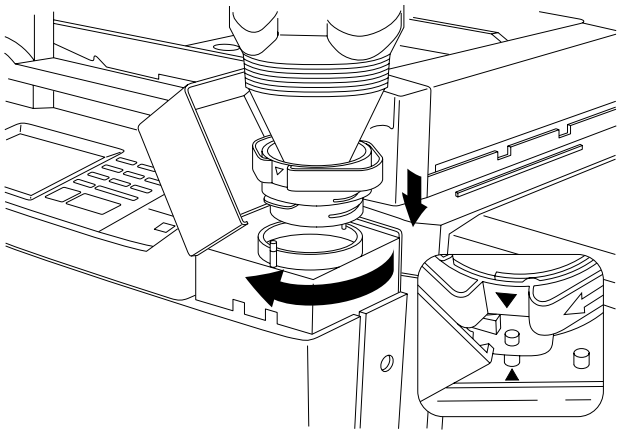

Figure 3-1-33

4. Wait 30 seconds and then tap both sides of the bottle cartridge 7 or 8 times to release all toner.

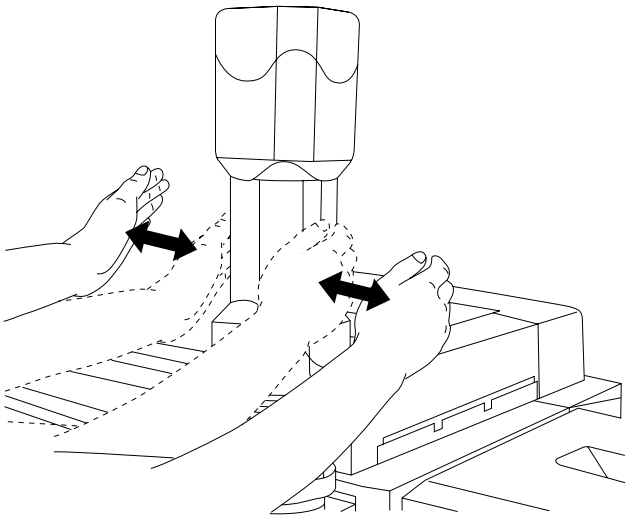

Figure 3-1-34

5. Rotate the bottle cartridge back to the original position and then remove it carefully.

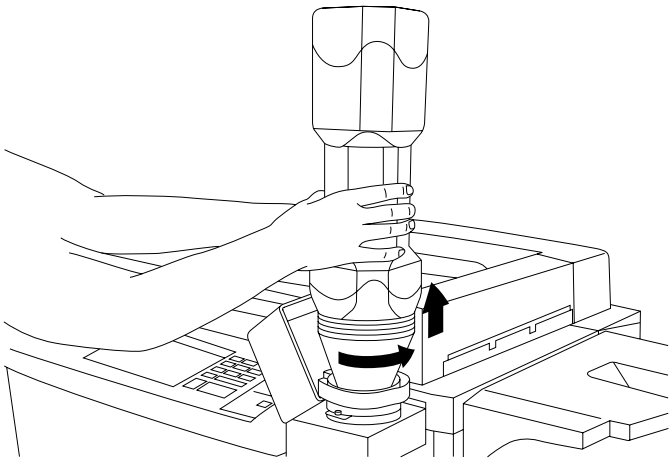

Figure 3-1-35

Install the original/copy trays.

1. Hook the grooves of the original tray to the pins (two) at the right side of the machine, then install the original tray to the machine.

Make test copies.

1. Load paper in a casette and make test copies.

Completion of machine installation.

Goto disassembly & adjustment

3-1-2 Setting initial copy modes

Factory settings are as follows:

Sim. No.	Contents	Default
U14	Setting folio size	LENGTH DATA: 330 mm WIDTH DATA: 210 mm
U58	Selecting the key card/key counter	Not selected
U59	Selecting the punch holes	UPPER: 2 / LOWER: 4 (5)
U80	Selecting between double/single count	DOUBLE COUNT
U81	Selecting newspaper original exposure mode	Normal mode
U84	Setting the auto clear time	90 s
U85	Setting the auto preheat/energy saver time	ON
U91	Setting operation under the toner empty condition Number of copies that can be made Copy mode possible	 100 copies Single copies
U92	Setting between auto start on/off	ON
U94	Selecting mode Selecting RADF-6 function Selecting DF copy at original left Coin bender	 valid Copy OK Not
User settings	Exposure mode	Metric models: auto Inch models: manual
	Exposure steps	7 steps
	Auto exposure adjustment	7 (center)
	Manual exposure adjustment	7 (center)
	Default cassette	Large paper deck
	Paper selection	Auto (APS)
	Automatic cassette switching	ON
	Cassette paper size *1	A4
	Special paper	Not set
	APS for special paper	OFF
	Auto shut off time	15 min
	Auto shut off ON/OFF	ON
	Auto preheat time	15 min

**1: Only manual input (metric models)*

367-1

Sim. No.	Contents	Default
User settings	Copy limit	999 copies
	Management code change	5000
	Custom border erase size	Metric models: 60 - 94 mm Inch models: $2^{3}/_{8}$" - $3^{11}/_{16}$"
	Margin	Only left margin
	Cassette for insert sheet	Upper cassette
	Punch holes pitch *2	80-80-80 (mm)
	Auto stacker setting	More than 21
	Create shortcut	Not set
	Key sound	ON
	Program key mode	Metric models: direct recall Inch models: regular
	Zoom mode	Metric models: Standard zoom Inch models: Size zoom
	Auto stack timer	OFF
	Function 2 display	ON

*2: Only for metric models

3-1-3 Installing the key counter (option)

Key counter installation requires the following parts:
Key counter set (P/N 66069780)
Key counter socket (P/N 41529210)
Contents of the set:
- Key counter cover (P/N 66060010)
- Key counter retainer (P/N 66060030)
- Key counter cover retainer (P/N 66060020)
- Key counter mount (P/N 66060040)
- Four M4 × 6 bronze TP-A screws (P/N B4304060)
- Two M4 × 10 bronze TP-A screws (P/N B4304100)
- One M4 × 6 chrome TP-A screw (P/N B4104060)
- Two M3 × 6 bronze flat-head screws (P/N B2303060)
- *One M3 bronze nut (P/N C1303000)*

1. Fit the key counter socket to the key counter retainer with the two screws.
2. Fit the key counter mount to the key counter cover with two screws, and attach the retainer to the mount with two screws.

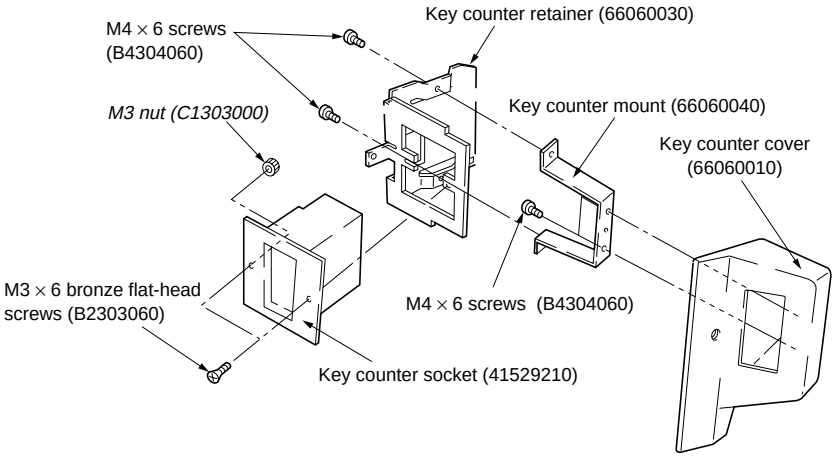

Figure 3-1-36

3. Detach the rear cover from the copier.
4. Cutout the area in the inner right cover using nippers.
5. Remove the one screw holding the inner right cover at the machine rear.

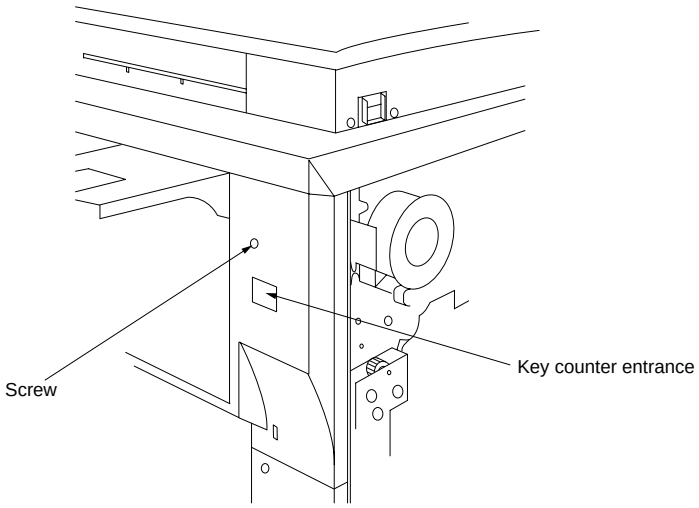

Figure 3-1-37

6. Pass the 4P connector of the copier through the cutout in the inner right cover.

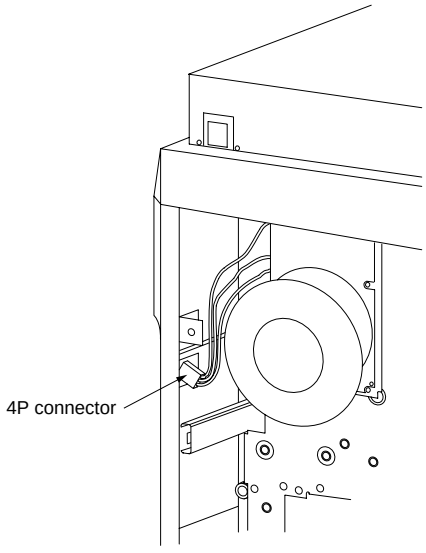

Figure 3-1-38

7. Hook the projection of the key counter cover retainer onto the cutout in the inner right cover, and fasten them together to the copier with the screw which were removed in step 5.
8. *Plug the 4P connector of the copier to the 4P connector of the key counter.*
9. Fit the key counter cover to the key counter cover retainer on the copier, using one screw.

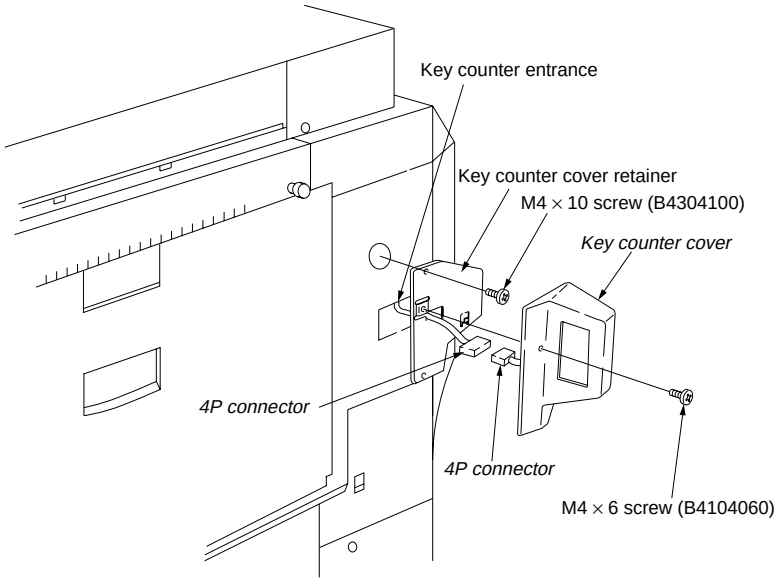

Figure 3-1-39

10. Refit the rear cover.
11. Insert the key counter into the key counter socket.
12. Turn the main switch on, enter simulation 58 and select “KEY COUNTER”.
13. Check that the message requesting the key counter to be inserted is displayed when the key counter is pulled out.
14. Check that the counter counts up as copies are produced.

3-1-4 Installing the cassette heater (option)

• The parts required for installation
Cassette heaters (2 pcs.) (Accessories: screws (4 pcs.))
1. Remove the rear cover.
2. Remove the four screws, and then the large paper deck.

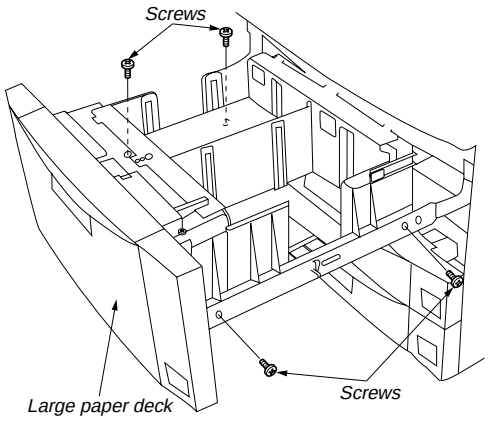

Figure 3-1-40

3. Pull out the upper and lower cassettes.
4. Install the cassette heater to the machine with its accompanying two screws.
5. Pass the wires through the clearance under the machine rear and let them out.

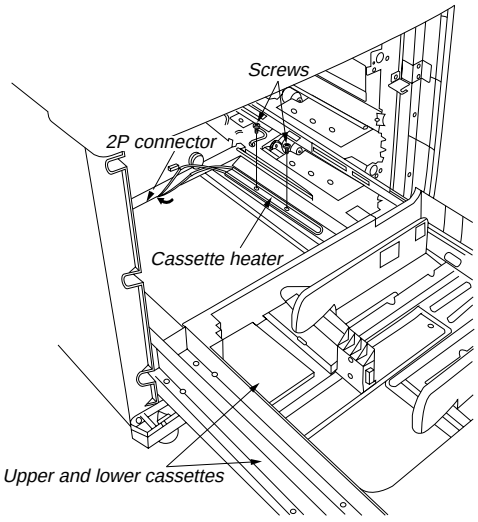

Figure 3-1-41

6. *Connect the 2P connector of the cassette heater to that of the machine.*

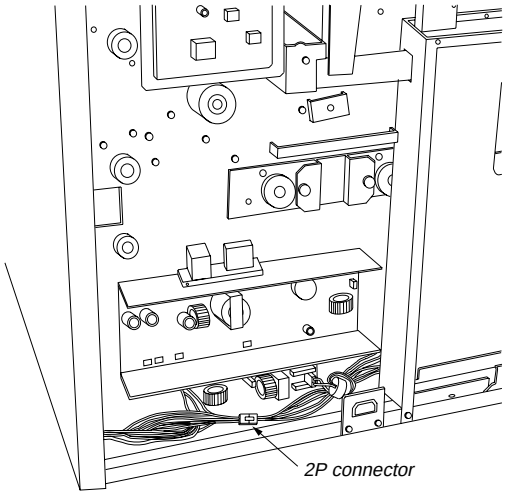

Figure 3-1-42

7. *Remove the eject cover.*
8. *While lifting the waste toner tank cover, remove it.*
9. *Detach the waste toner tank.*

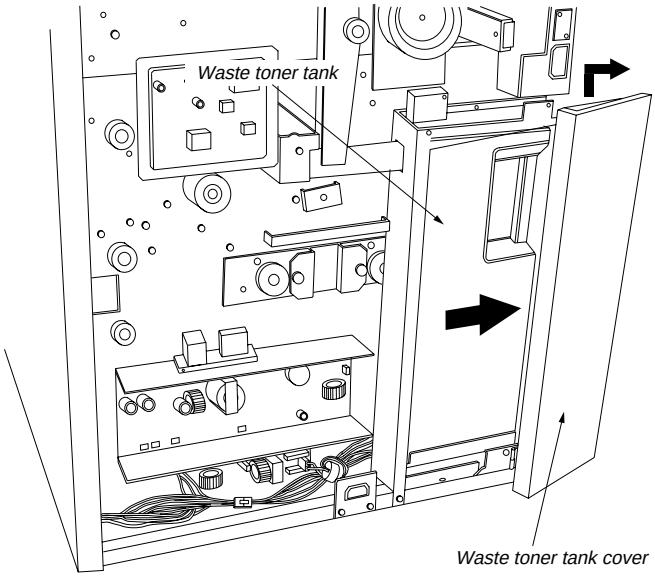

Figure 3-1-43

10. Remove the 2P connector of the waste toner detection switch.
11. Remove the wire from the cord clamp.

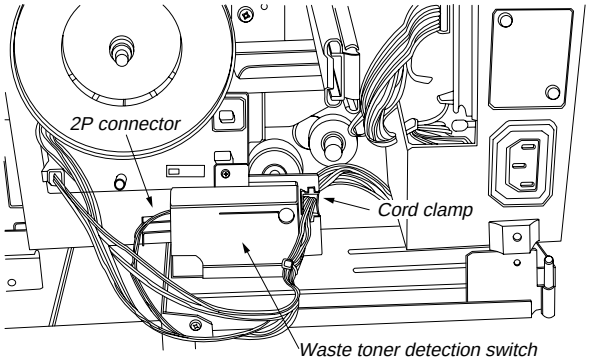

Figure 3-1-44

12. Remove the five screws.
13. While pulling the spring in the direction of the arrow, remove it.
14. Remove the waste toner tank tray.

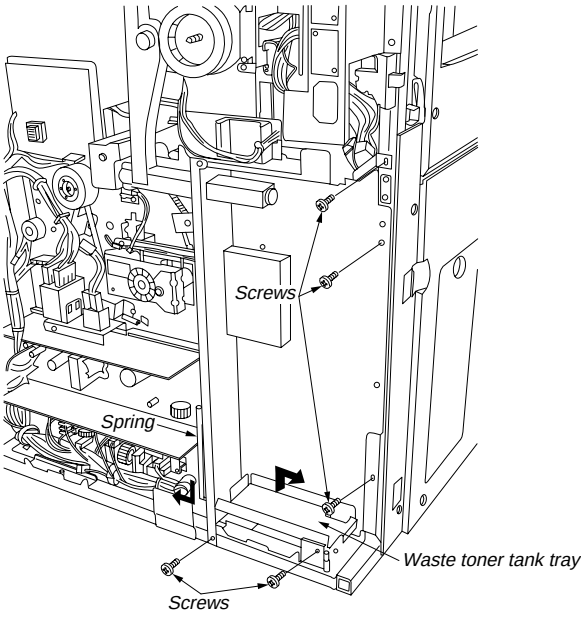

Figure 3-1-45

15. *Remove the screw, and then the rear cover holder.*
16. *Remove the waste toner tank case.*

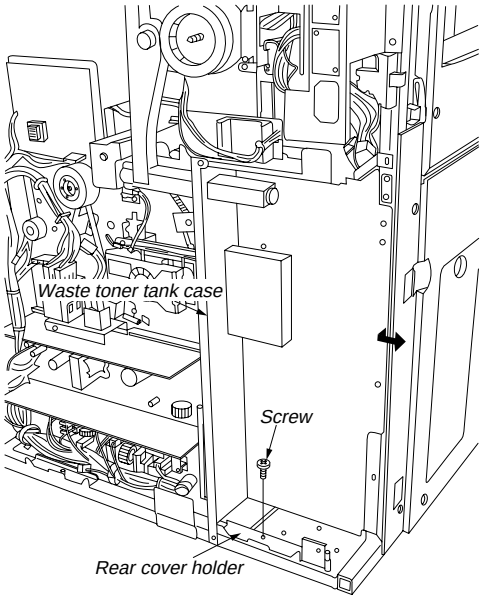

Figure 3-1-46

17. *Install the cassette heater to the machine with its accompanying two screws.*
18. *Connect the 2P connector of the cassette heater to that of the machine.*
19. *Bind the wires with the binding band of the machine.*

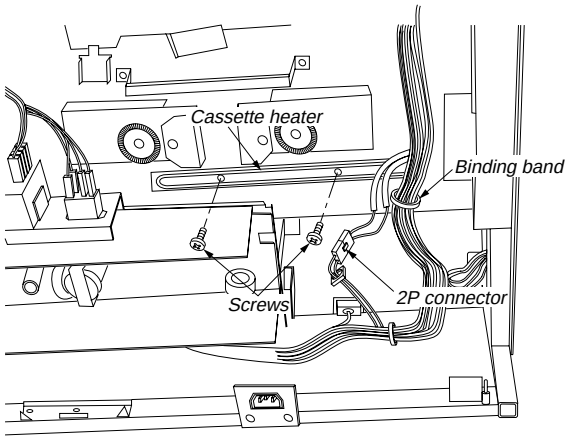

Figure 3-1-47

20. *Refit all the removed parts.*

3-1-5 Installing the MMD (option) (Inch models only)

• The parts required for installation
MMD (Accessories: screws (2pcs.))

1. *Remove the eject cover.*
2. *Remove the two screws, and then connector cover.*
3. *Remove the short connector connected to the 10P connector of the machine.*
4. *Install the MMD to the machine with its accompanying two screws.*

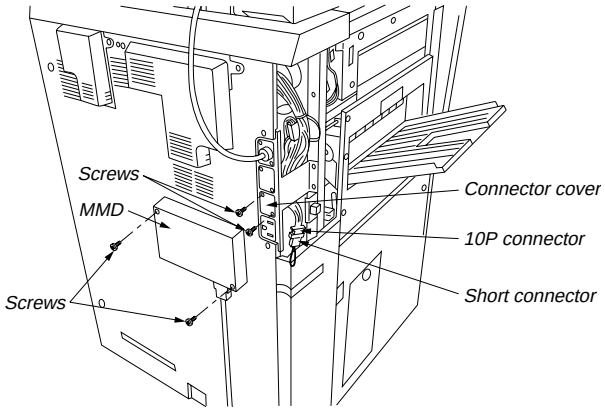

Figure 3-1-48

5. *Connect the 10P connector of the machine to the MMD connector.*
6. *Install the MMD connector cover to the machine with the two screws which have been removed in procedure 2.*
7. *Install the eject cover.*

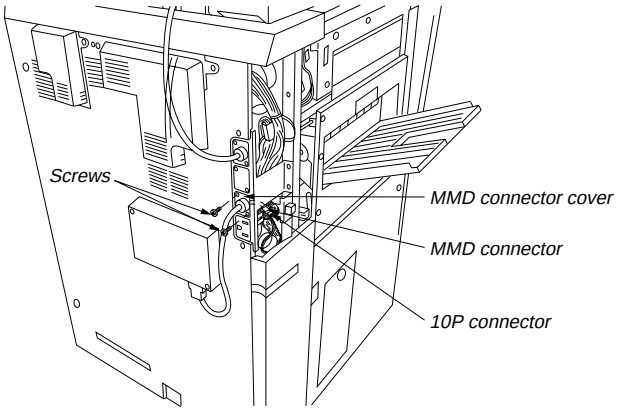

Figure 3-1-49