3-3-1 Precautions for assembly and disassembly

(1) Precautions

- Be sure to turn the main switch off and disconnect the power plug before starting disassembly.
- When handling PCBs, do not touch connectors with bare hands or damage the board.
- Do not touch any PCB containing ICs with bare hands or any object prone to static charge.
- Use only the specified parts to replace the fixing unit or optical section thermostats. Never substitute electric wires, as the copier may be seriously damaged.
- Use the following testers when measuring voltages:
  Hioki 3200
  Sanwa MD-180C
  Sanwa YX-360TR
  Beckman TECH300
  Beckman DM45
  Beckman 330*
  Beckman 3030*
  Beckman DM850*
  Fluke 8060A*
  Arlec DMM1050
  Arlec YF1030C
  * Capable of measuring RMS values.
- Prepare the following as test originals:
  1. NTC (new test chart)
  2. NPTC (newspaper test chart)
  3. Blue graph paper

(2) Running a simulation

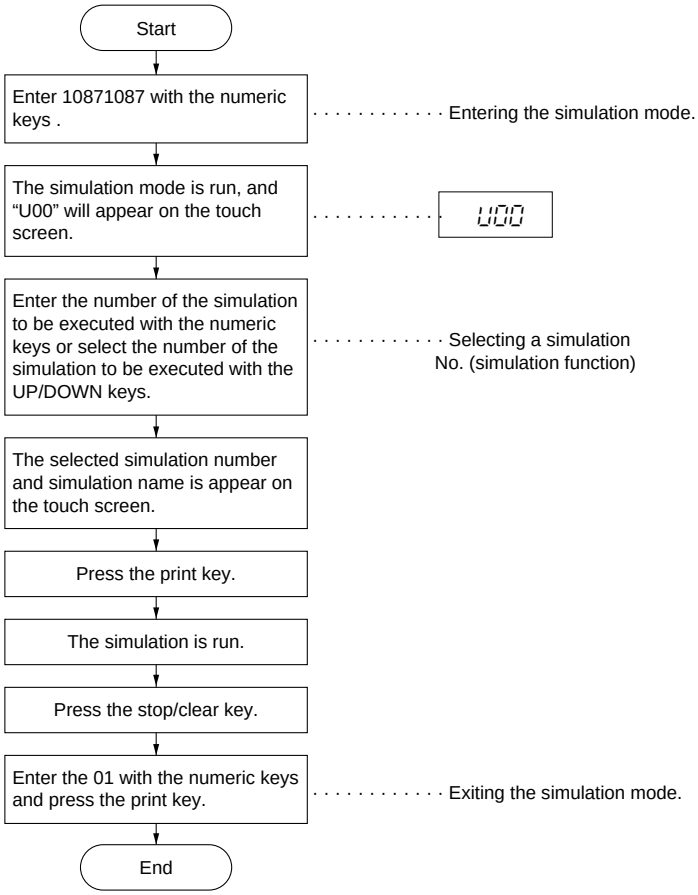

3-3-2 Paper feed section

(1) Detaching and refitting the forwarding, upper and lower paper feed pulleys
Follow the procedure below to clean or replace the upper and lower paper feed pulleys.

Procedure

1. Remove the lower right inner cover.
2. Open the lower vertical conveying cover.
3. Remove the screw each and pull out the primary paper feed units (for upper cassette and lower cassette) as shown in the figure, then remove the primary paper feed units from the machine.

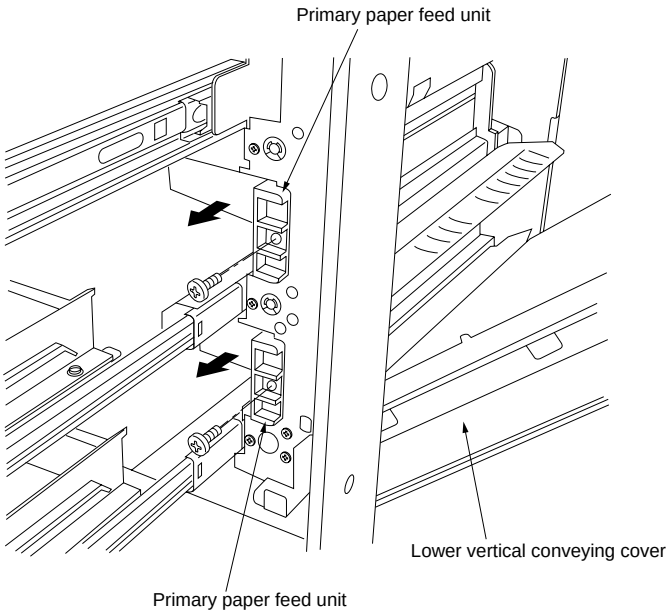

Figure 3-3-1

• Removing the forwarding pulley

4. Raise the forwarding pulley retainer in the directions of the arrows as shown in the figure, and remove it from the primary paper feed unit.

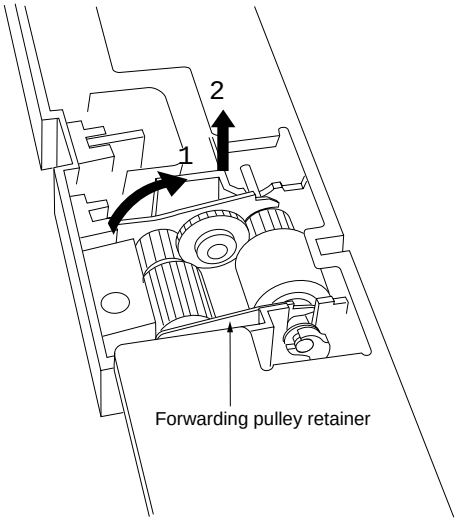

Figure 3-3-2

5. Remove the stop ring and pull out the forwarding pulley shaft in the direction of the arrow, then remove the forwarding pulley.

* When refitting the forwarding pulley, check that the joint section of the forwarding pulley (section indicated by round mark in the figure) is firmly geared with the joint section of the gear.

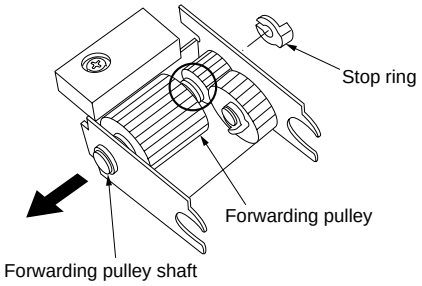

Figure 3-3-3

• Removing the upper paper feed pulley

6. Remove the eight screws, then remove upper paper feed housing reinforcement plate.

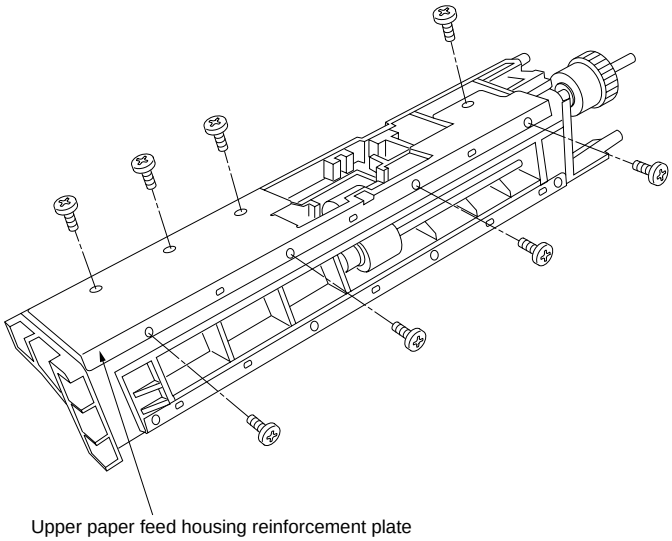

Figure 3-3-4

7. Free the wire of the paper feed clutch from the two hooks and groove of the upper paper feed housing.
8. Remove the stop ring, then remove the bushing.
9. Pull the upper paper feed shaft in the direction of the arrow, then remove the upper paper feed pulley as shown in the figure.

* When refitting, be careful about following points.

- Refit the upper paper feed pulley so that the one-way clutch is machine front.
- Refit the gear so that the one-way clutch (Black) is machine front.
- The stopper (section indicated by round mark in the figure) of the paper feed clutch must be firmly into the groove of the upper paper feed housing.

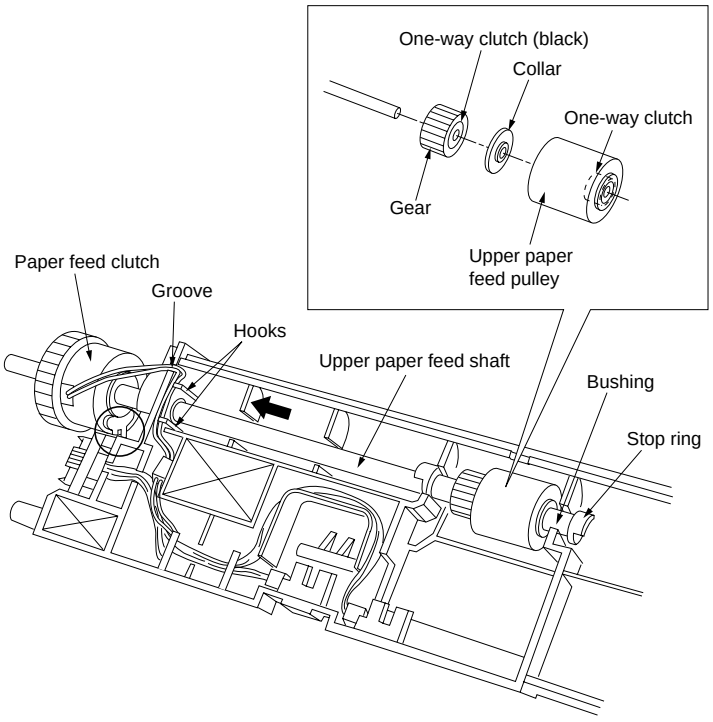

Figure 3-3-5

• Removing the lower paper feed pulley

10. Remove the stop ring on the rear of the primary paper feed unit.
11. Pull the lower paper feed shaft in the direction of the arrow as shown in the figure.

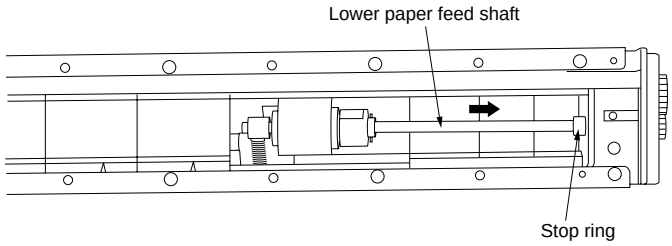

Figure 3-3-6

12. Remove the lower paper feed pulley.

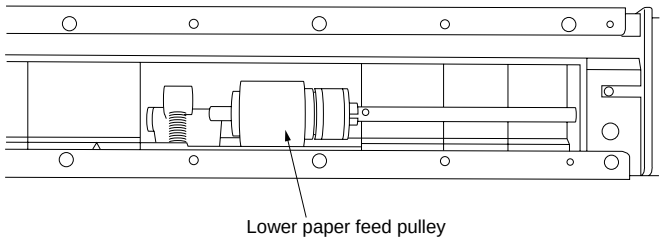

Figure 3-3-7

13. Refit all the removed parts.

(2) Detaching and refitting the bypass forwarding roller, bypass upper and lower paper feed pulleys

Follow the procedure below to clean or replace the bypass forwarding roller, bypass upper and lower paper feed pulleys.

(2-1) Detaching the bypass paper feed unit

Follow the procedure below to detach the bypass paper feed unit to perform disassembly.

Procedure

1. Remove the upper right cover.
2. Disconnect the 7-pin connector and free the wire of the connector from the cord clamp.
3. Remove the two screws, then remove the bypass table assembly as shown in the figure.

* When refitting, be careful about following points.

- Run the wire of the connector through the part (indicated by the arrow a in the figure), rewind the wire to the cord clamp.
- Check that the rail sections (sections indicated by round marks in the figure) at the bypass table assembly must be firmly into the bypass table mounts (machine front and rear).

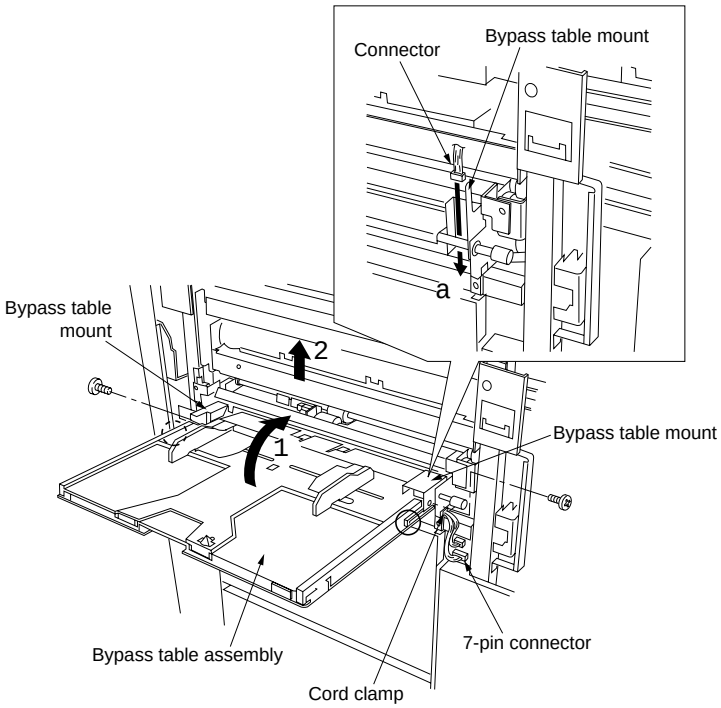

Figure 3-3-8

4. Disconnect the 6-pin connector and remove the four screws, then remove the bypass paper feed unit.

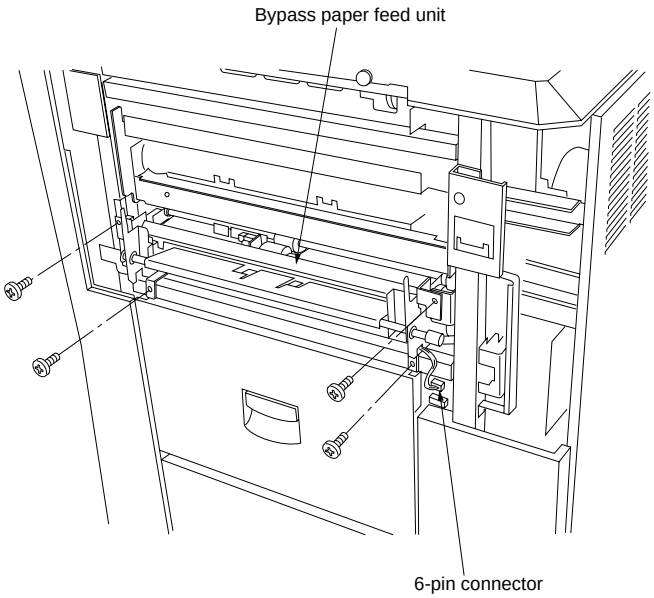

Figure 3-3-9

(2-2) Detaching the bypass forwarding roller

Procedure

1. Remove the bypass paper feed unit. (see page 3-3-8)
2. Remove the E ring, then remove the gear, pin and bushing.
3. Remove the stop ring, then remove the bushing.
4. Remove the bypass forwarding roller from the bypass paper feed unit.

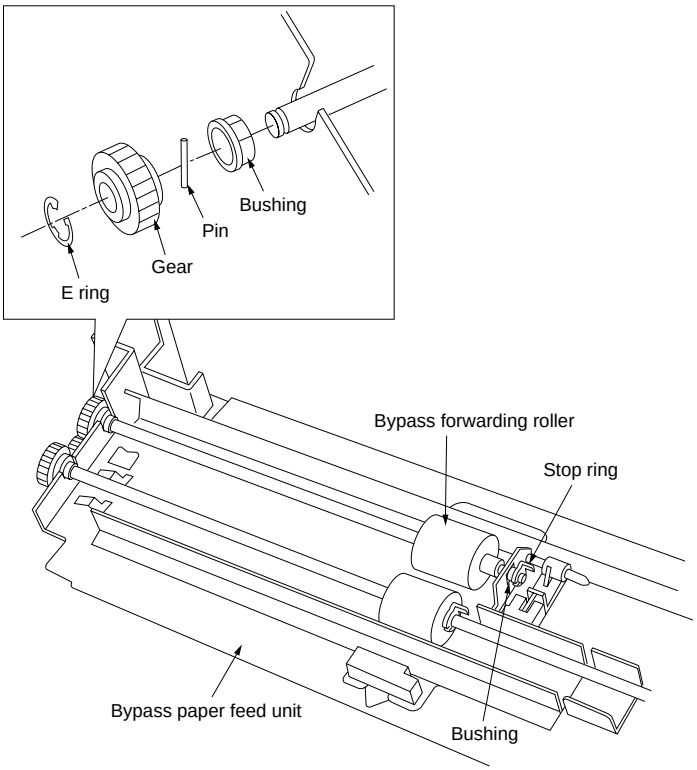

Figure 3-3-10

5. Refit all the removed parts.

(2-3) Detaching the bypass upper paper feed pulley

Procedure

1. Remove the bypass paper feed unit. (see page 3-3-8)
2. Remove the E ring, then remove the bushing.
3. Shift the bushing in the direction of the arrow a , then remove the upper separation shaft from the bypass paper feed unit.
4. Remove the stop ring, then remove the bypass upper paper feed pulley from the upper separation shaft.

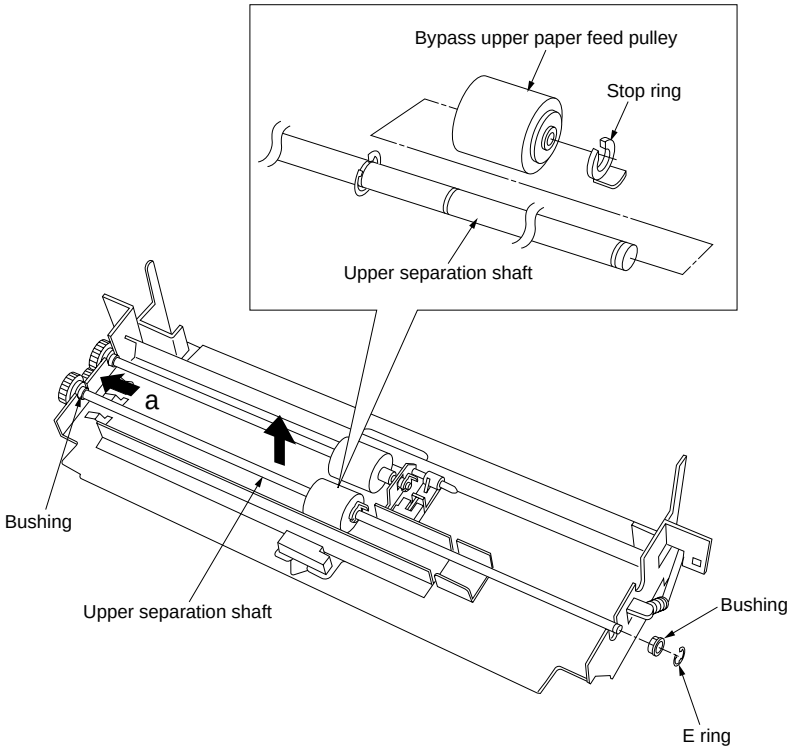

Figure 3-3-11

5. Refit all the removed parts.

(2-4) Detaching the bypass lower paper feed pulley

Procedure

1. Remove the bypass paper feed unit. (see page 3-3-8)
2. Remove the left and right crimp-style springs, then remove the bypass limiter shaft from the bypass paper feed unit in the direction of the arrows as shown in the figure.
3. Remove the stop ring, then remove the bushing.
4. Remove the stop ring and remove the each parts as shown in the figure, then remove the bypass lower paper feed pulley.

* When refitting, apply the specified grease to the part of the lower bypass paper feed pulley (a indicated in the figure) and inside of the limiter collar (b indicated in the figure).

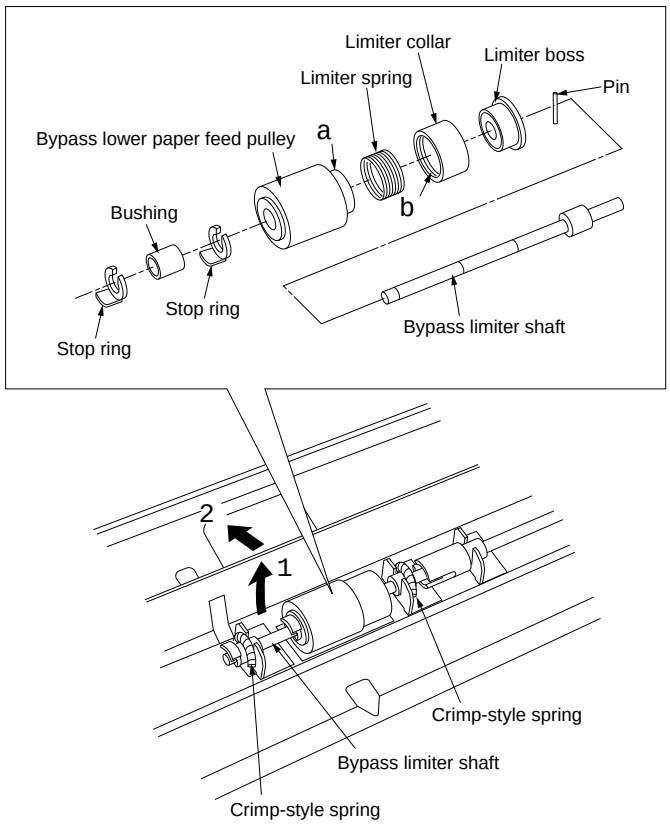

Figure 3-3-12

5. Refit all the removed parts.

(3) Detaching and refitting the deck upper and lower separation pulleys
Follow the procedure below to clean or replace the deck upper and lower separation pulleys.

Procedure
1. Remove the lower rear right cover.
2. Remove the two screws, then remove the vertical conveying mount.
3. Remove the hook of the vertical conveying damper spring from the hole of the machine, then remove the upper vertical conveying cover assembly.

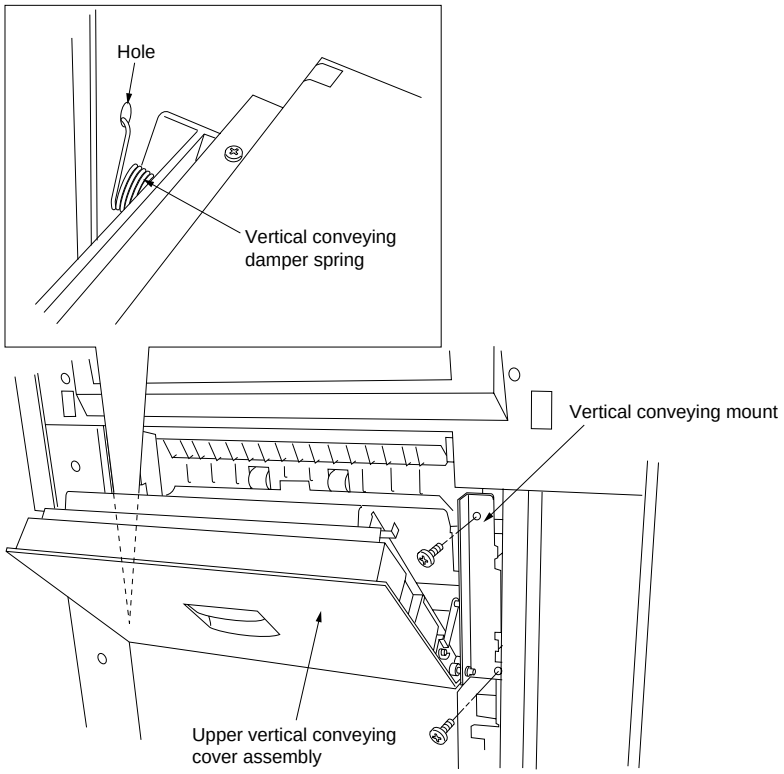

Figure 3-3-13

4. Remove the stop ring, then remove the deck vertical conveying open/close guide.

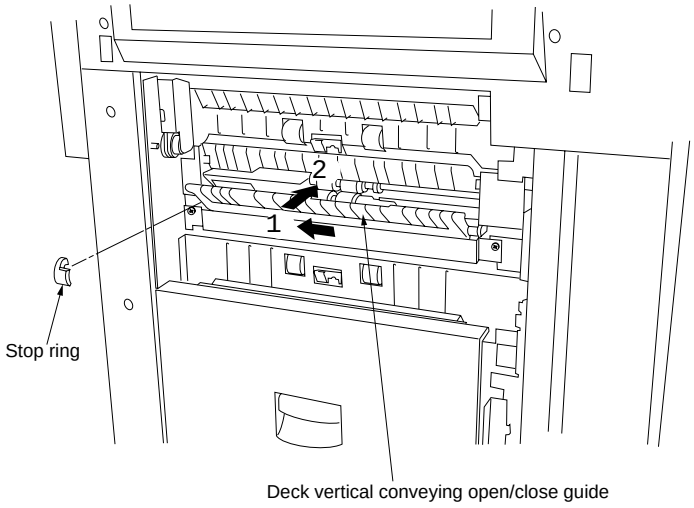

Figure 3-3-14

5. Remove the stop ring, then remove the deck lower separation pulley.
6. Remove the stop ring, then remove the one-way drum and deck upper separation pulley.

* When refitting the each roller, refit roller so that the paint marking (white) is in the machine front.

* When refitting the one-way drum, the two projections of the one-way drum must be firmly into the grooves of the deck upper separation pulley.

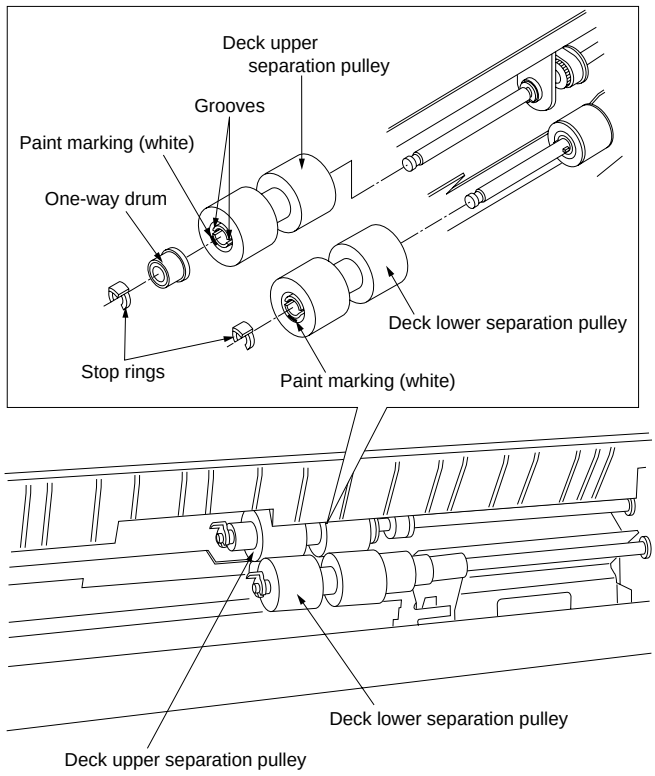

Figure 3-3-15

7. Refit all the removed parts.

(4) Detaching and refitting the deck paper feed rollers 1, 2 and deck paper conveying roller

Follow the procedure below to clean or replace the deck paper feed rollers 1, 2 and deck paper conveying roller.

Procedure

1. Pull the large paper deck out of the machine.
2. Remove the upper vertical conveying cover assembly. (see page 3-3-13)
3. Remove the two screws and pull out the deck paper conveying unit in the direction of the arrow, then remove the deck paper conveying unit from the machine.

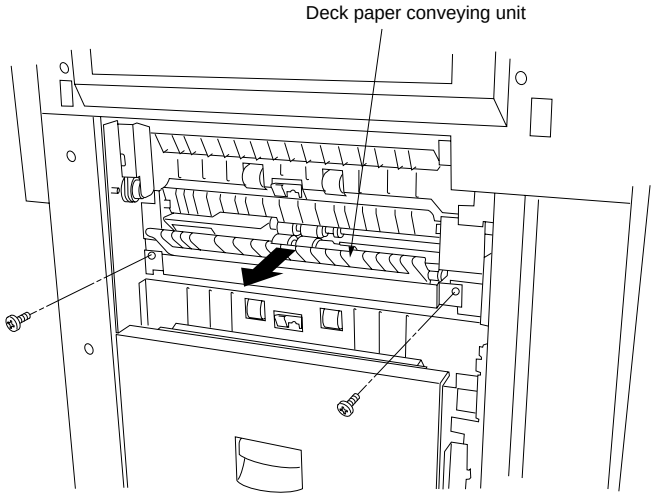

Figure 3-3-16

4. Remove the stop ring each holding the shift shaft.
5. While pressing the pickup arm down and pull out the shift shaft, then remove the each roller.

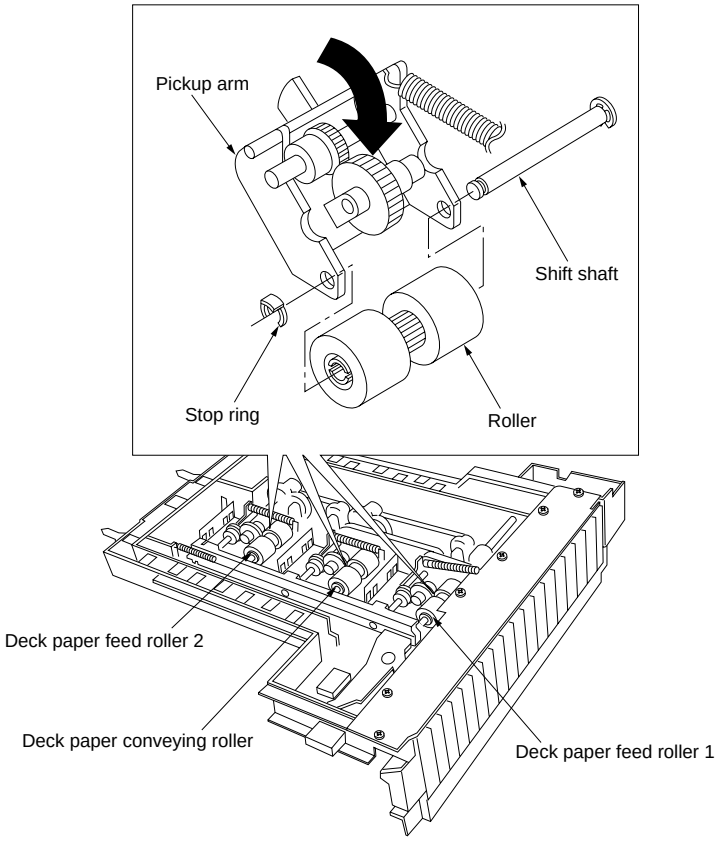

Figure 3-3-17

6. Refit all the removed parts.

(5) Detaching and refitting the upper and lower paper width switches (For inch models only.)

Follow the procedure below to check or replace the upper and lower paper width switches.

Caution: After replacing a paper width switch, be sure to perform (7-1) Adjusting the position of the width adjustment lever. (see page 3-3-23)

Procedure

1. Remove the four screws, then remove the cassette from the machine.

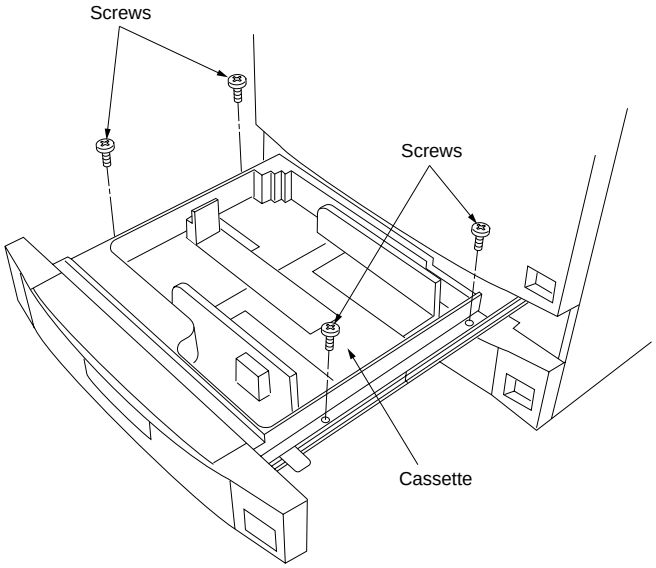

Figure 3-3-18

2. Remove the two screws and two spacers, then remove the 8-pin socket from the rear of the cassette.
3. Remove the 8-pin connector for the paper width switch from the 8-pin socket.
4. Remove the three screws holding the width adjustment lever.
5. While lifting the cassette lift in the direction of the arrow, then remove the width adjustment lever.

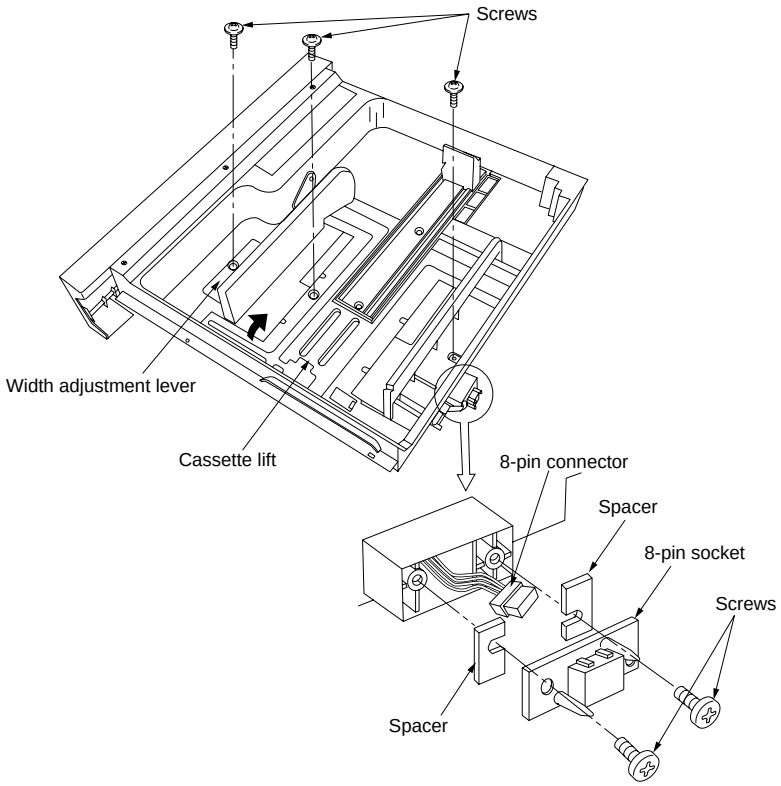

Figure 3-3-19

6. Remove the two screws on the back of the width adjustment lever, then remove the paper width switch.
   * When replacing, apply the specified grease to the printed surface of the new paper width switch (shaded area in the figure) and fit the switch to the width adjustment lever.

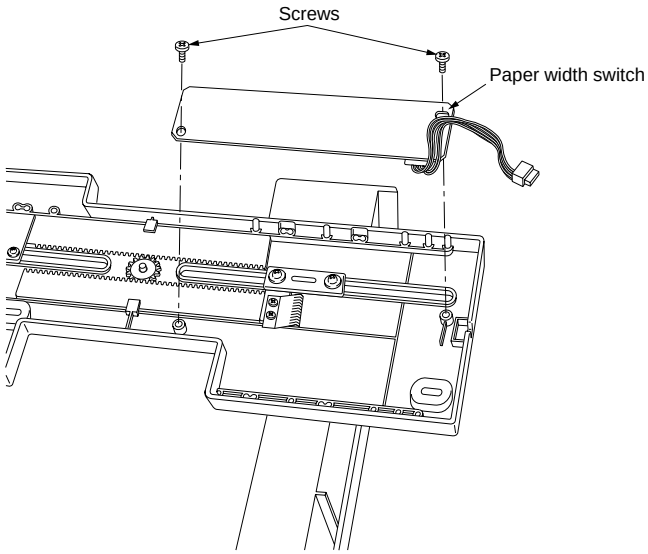

Figure 3-3-20

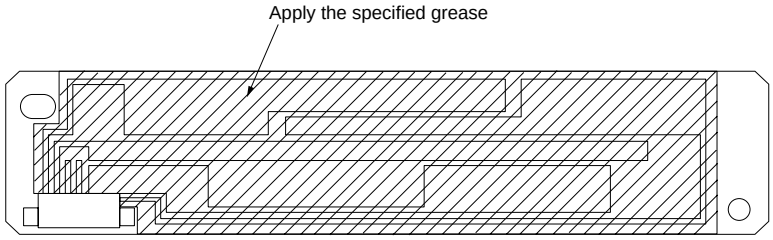

Figure 3-3-21

7. Refit all the removed parts.

(6) Detaching and refitting the bypass paper width switch

Follow the procedure below to check or replace the bypass paper width switch.

Caution: After replacing a bypass paper width switch, be sure to perform (7-2) Adjusting the position of the upper bypass table. (see page 3-3-24)

Procedure

1. Remove the bypass table assembly. (see page 3-3-8)
2. Remove the three screws, then remove the upper bypass table.

* When refitting, check that the wire of the connector must be run through the notch of the upper bypass table (section indicated by round mark in the figure).

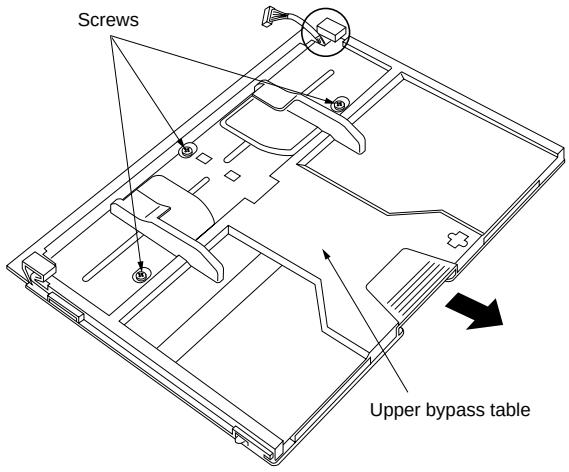

Figure 3-3-22

3. Remove the two screws and disconnect the connector, then remove the bypass paper width switch.
 * When replacing, apply the specified grease to the printed surface of the new bypass paper width switch (shaded area in the figure) and fit the switch to the upper bypass table.

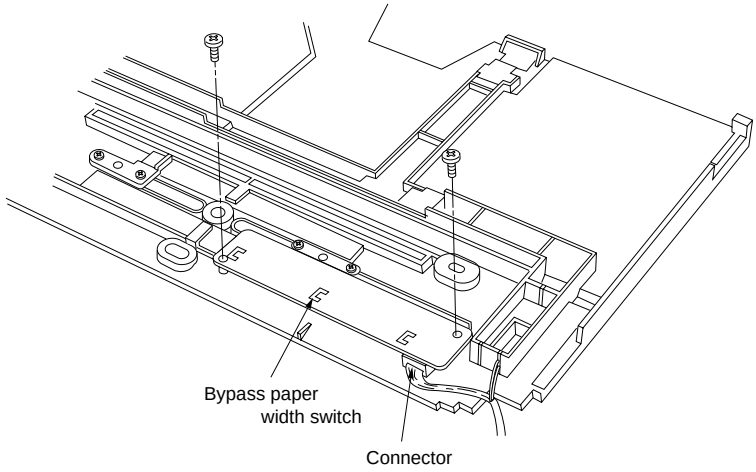

Figure 3-3-23

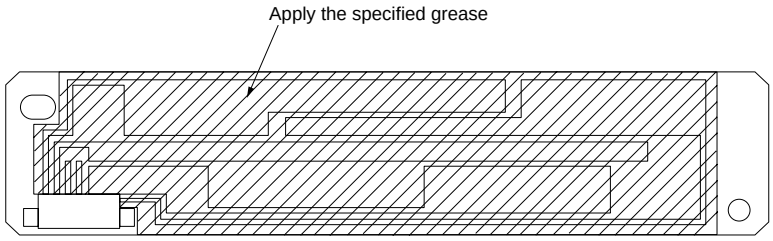

Figure 3-3-24

4. Refit all the removed parts.

(7) Adjusting the center registration

Perform the following adjustment if there is a regular error between the centers of the original and the copy image.

(7-1) Adjusting the position of the width adjustment lever

Perform the following adjustment if there is a regular error between the centers of the original and the copy image on the paper fed from a cassette.

Procedure

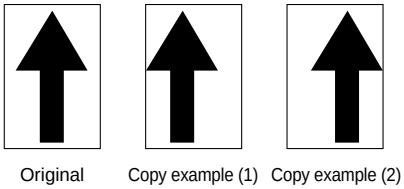

Figure 3-3-25

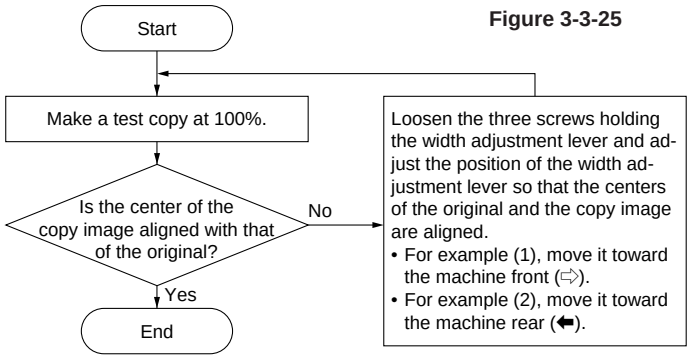

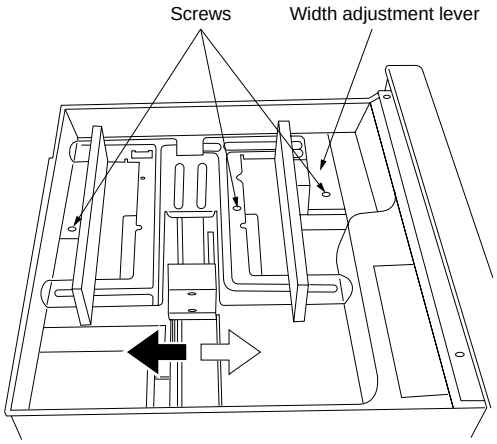

Figure 3-3-26

(7-2) Adjusting the position of the upper bypass table

Perform the following adjustment if there is a regular error between the centers of the original and the copy image on the paper fed from a bypass table.

Procedure

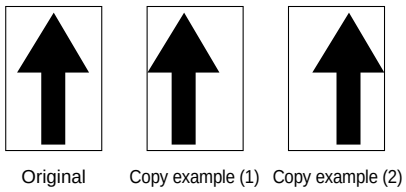

Figure 3-3-27

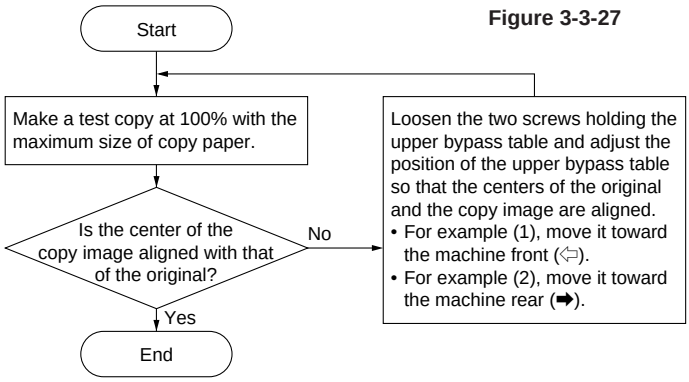

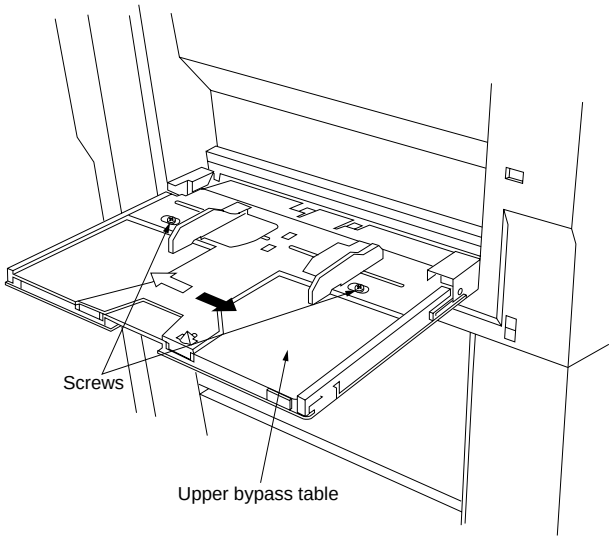

Figure 3-3-28

(7-3) Adjusting the position of the center adjuster

Perform the following adjustment if there is a regular error between the centers of the original and the copy image on the paper feed from a large paper deck.

Procedure

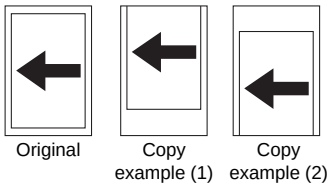

Figure 3-3-29

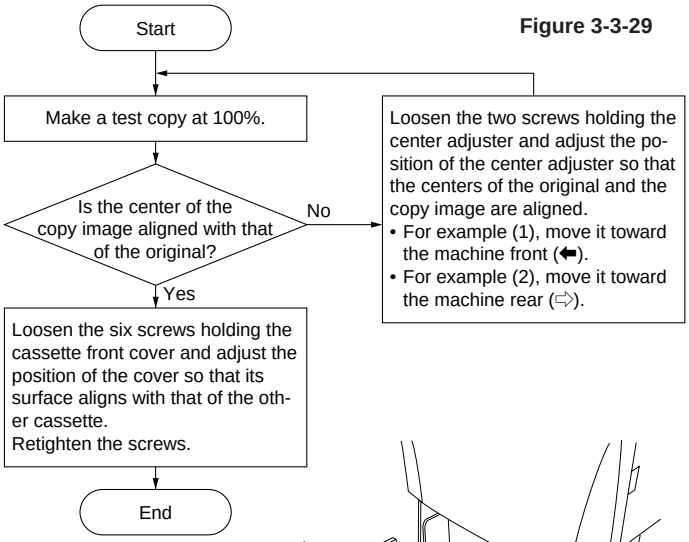

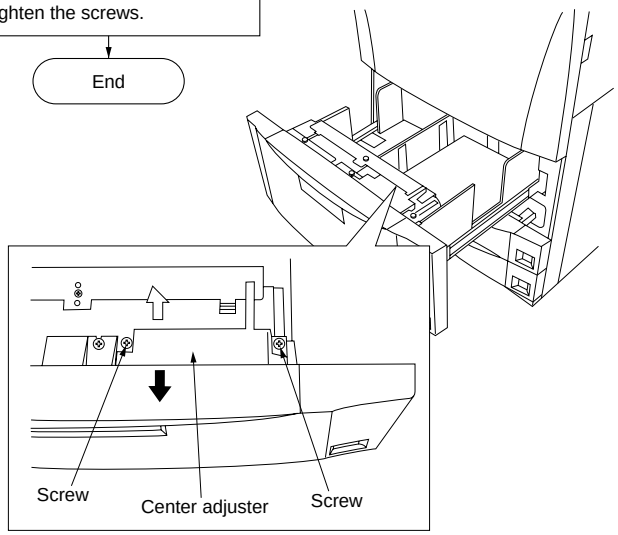

Figure 3-3-30

(8) Adjustments after installing rollers and clutches
Perform the following adjustments after detaching and refitting the rollers and clutches.

(8-1) Adjusting the leading edge registration
Perform the following adjustment if there is a regular error between the leading edges of the original and the copy image.

Procedure

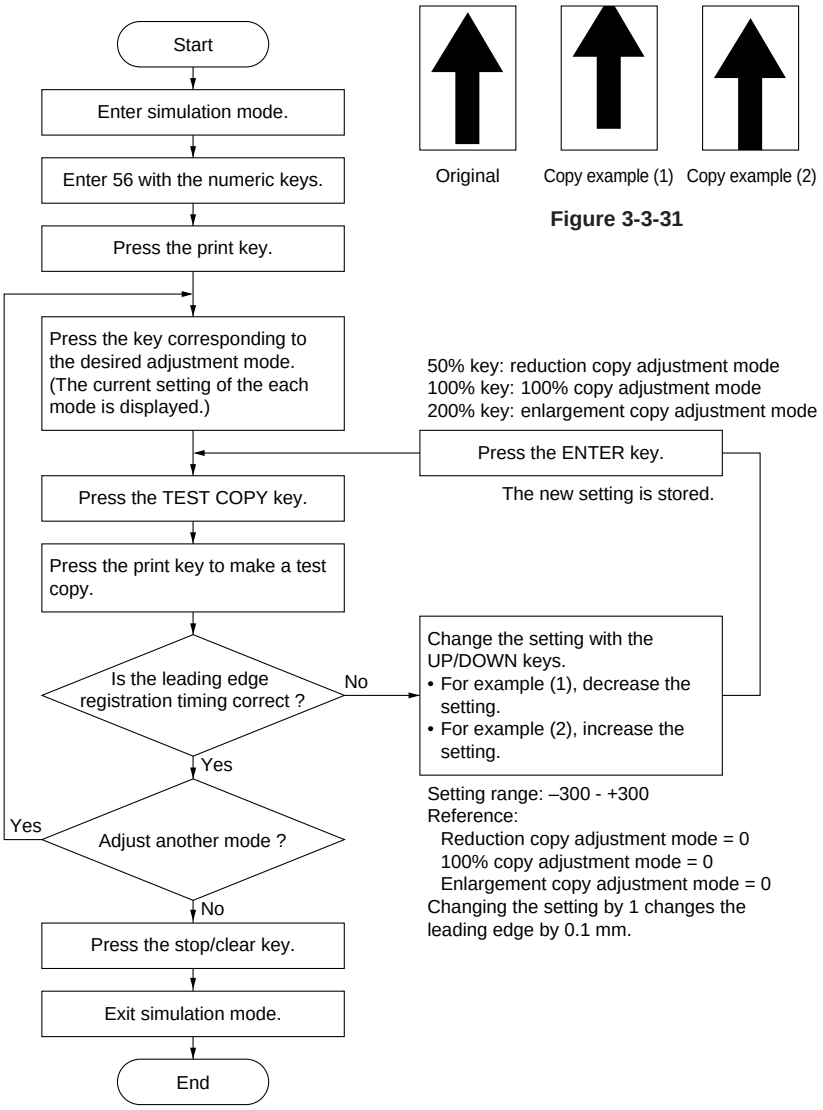

Figure 3-3-31

(8-2) Adjusting the leading edge margin

Perform the following adjustment if the leading edge margin does not meet specifications.

Caution: Before starting this adjustment, ensure that (8-1) Adjusting the leading edge registration on page 3-3-26 has been completed.

Procedure

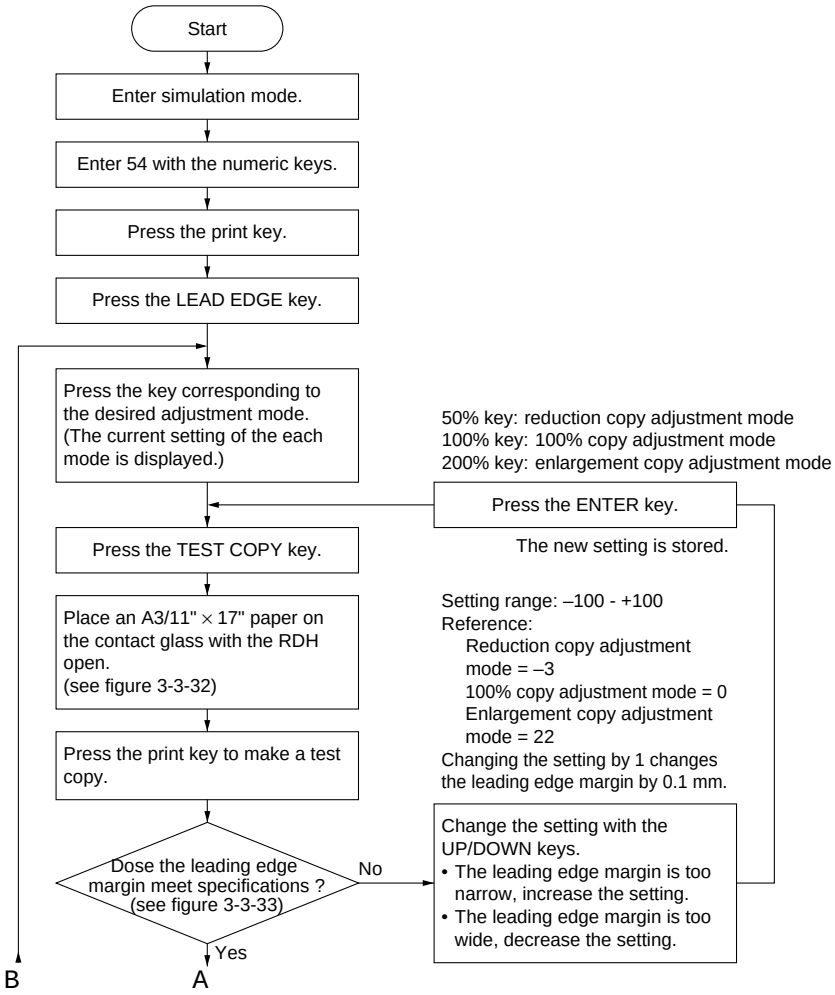

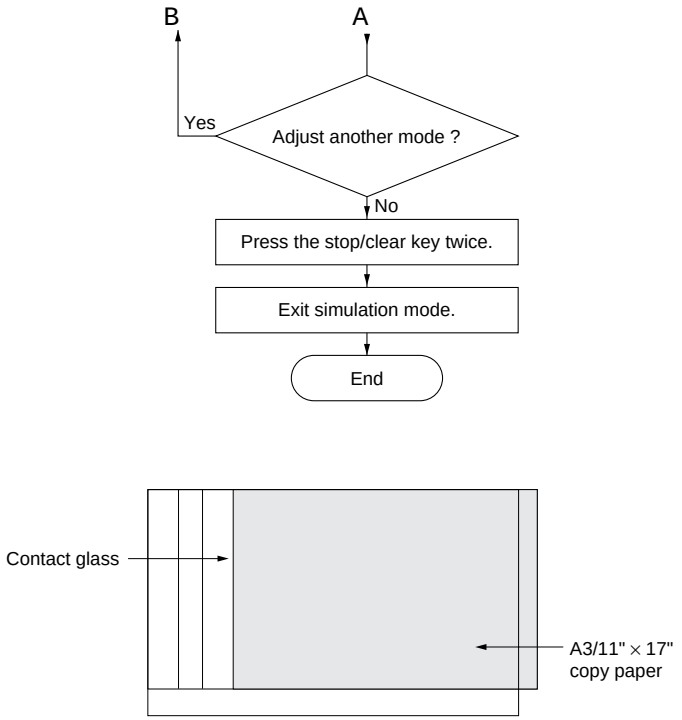

Figure 3-3-32

Specification ranges (A):

Reduction copy (50%) = 3 ± 2.5 mm
100% copy = 3 ± 2.5 mm
Enlargement copy (200%) = 6 ± 2.5 mm

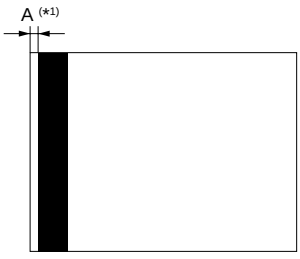

*1: Use a scale to measure accurately.

Figure 3-3-33

(8-3) Adjusting the trailing edge margin

Perform the following adjustment if the trailing edge margin does not meet specifications or a black line appears at the trailing edge of the copy image in the reduction copy mode.

Caution: Before starting this adjustment, ensure that (8-1) Adjusting the leading edge registration on page 3-3-26 has been completed.

Procedure

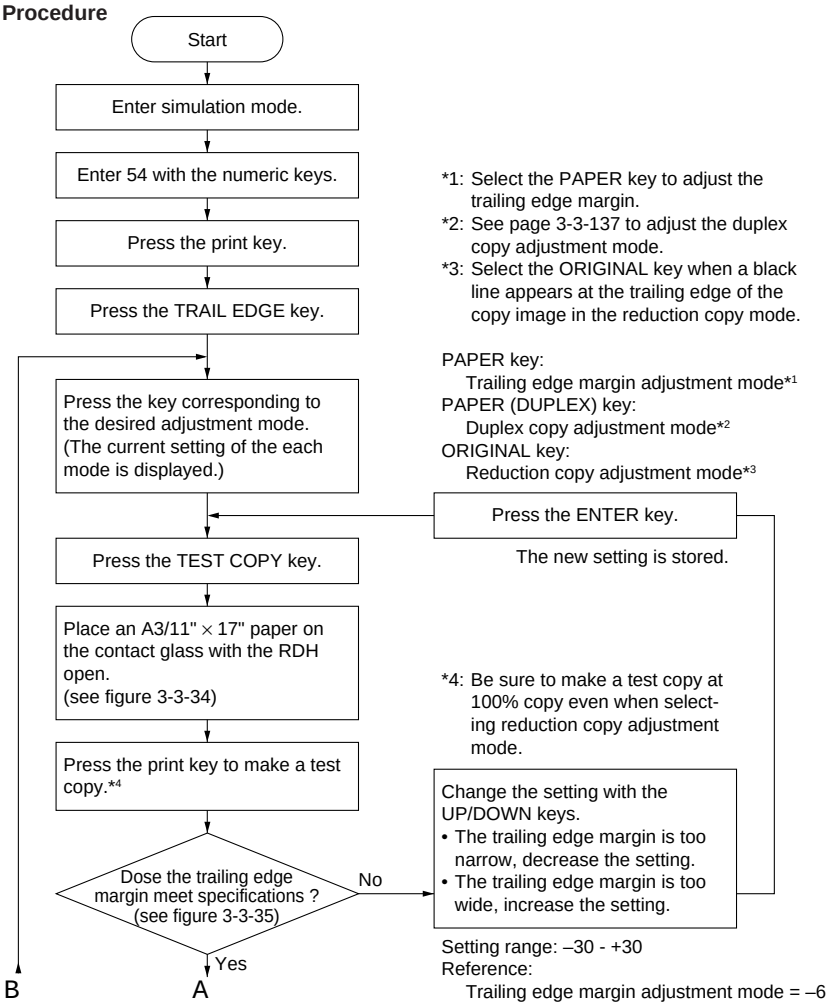

*1: Select the PAPER key to adjust the trailing edge margin.
*2: See page 3-3-137 to adjust the duplex copy adjustment mode.
*3: Select the ORIGINAL key when a black line appears at the trailing edge of the copy image in the reduction copy mode.

PAPER key:
Trailing edge margin adjustment mode*1
PAPER (DUPLEX) key:
Duplex copy adjustment mode*2
ORIGINAL key:
Reduction copy adjustment mode*3

*4: Be sure to make a test copy at 100% copy even when selecting reduction copy adjustment mode.

Setting range: –30 - +30
Reference:
Trailing edge margin adjustment mode = –6
Reduction copy adjustment mode = 2
Changing the setting by 1 changes the trailing edge margin by 0.76 mm.

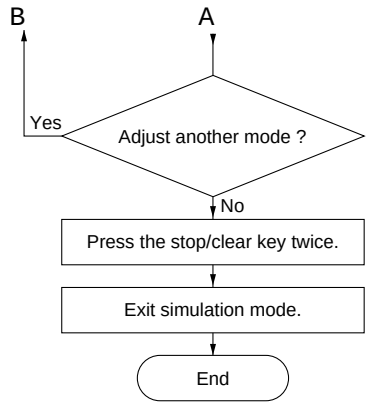

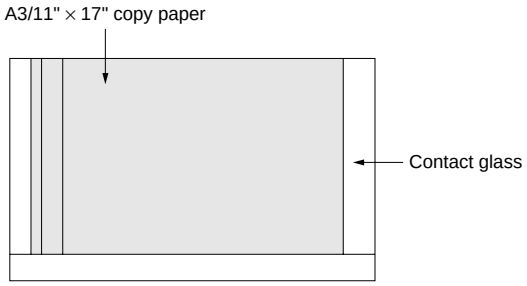

Figure 3-3-34

Specification ranges (A):

Trailing edge margin = 3 ± 2.5 mm

Reduction copy adjustment mode = 6 ± 1 mm

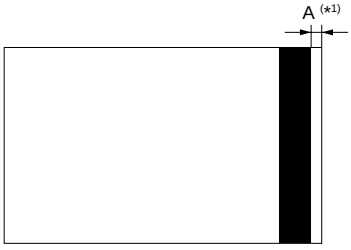

*1: Use a scale to measure accurately.

Figure 3-3-35

(8-4) Adjusting the side edge margin

Perform the following adjustment after replacing the blank lamps, or if the side edge margins do not meet specification.

Caution: Before starting this adjustment, ensure that (7) Adjusting the center registration on page 3-3-23 has been completed.

Procedure

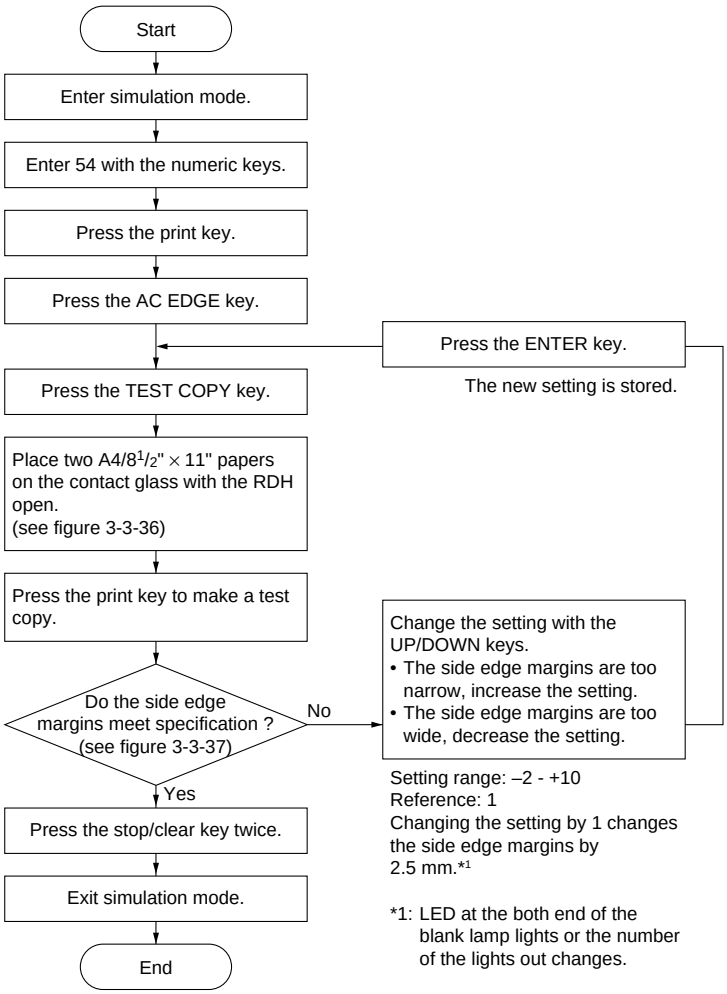

*1: LED at the both end of the blank lamp lights or the number of the lights out changes.

367

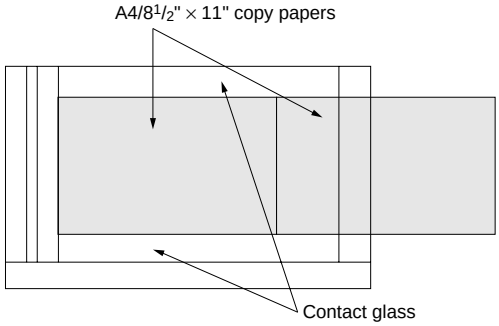

Figure 3-3-36

Specification range: A = 3.5 – 1 mm

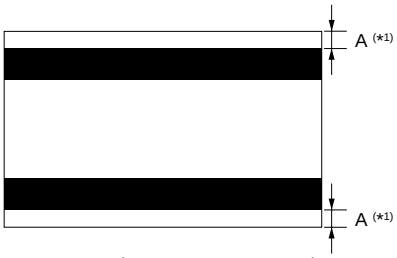

*1: Use a scale to measure accurately.

Figure 3-3-37

(8-5) Adjusting the book copy margin

Perform the following adjustment if the margin dose not meet specification or margin position is not center of the paper (slip to the left and right) at the book copy.

Caution: Before starting this adjustment, ensure that (8-1) Adjusting the leading edge registration on page 3-3-26 has been completed.

Procedure

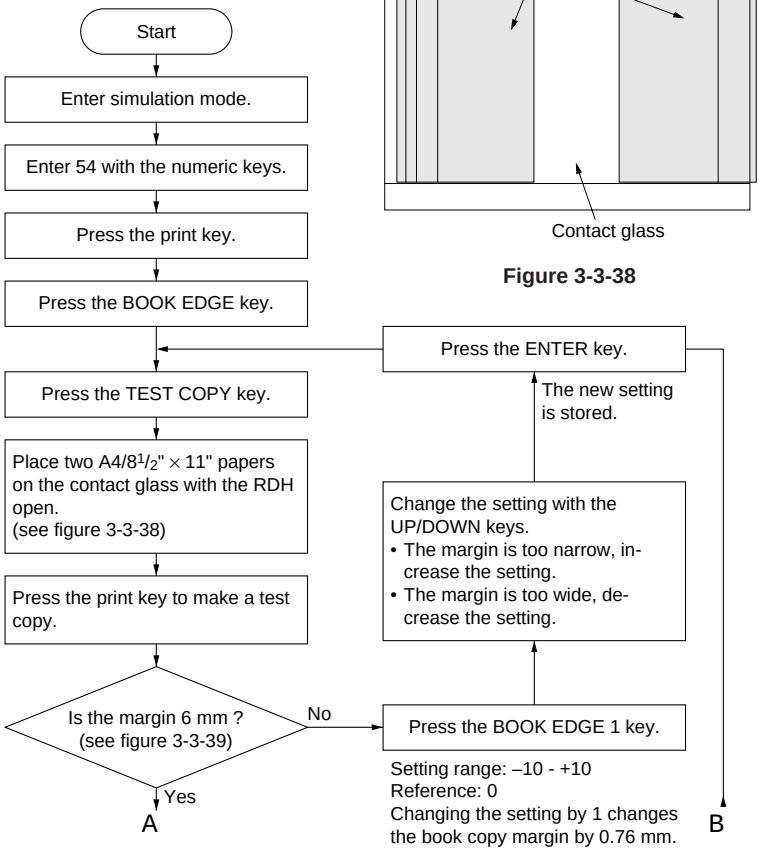

Figure 3-3-38

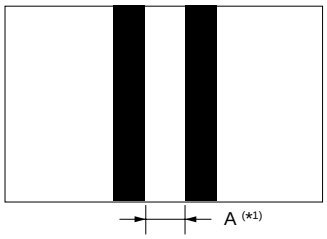

Specification range: A = 6 mm

*1: Use a scale to measure accurately.

Figure 3-3-39

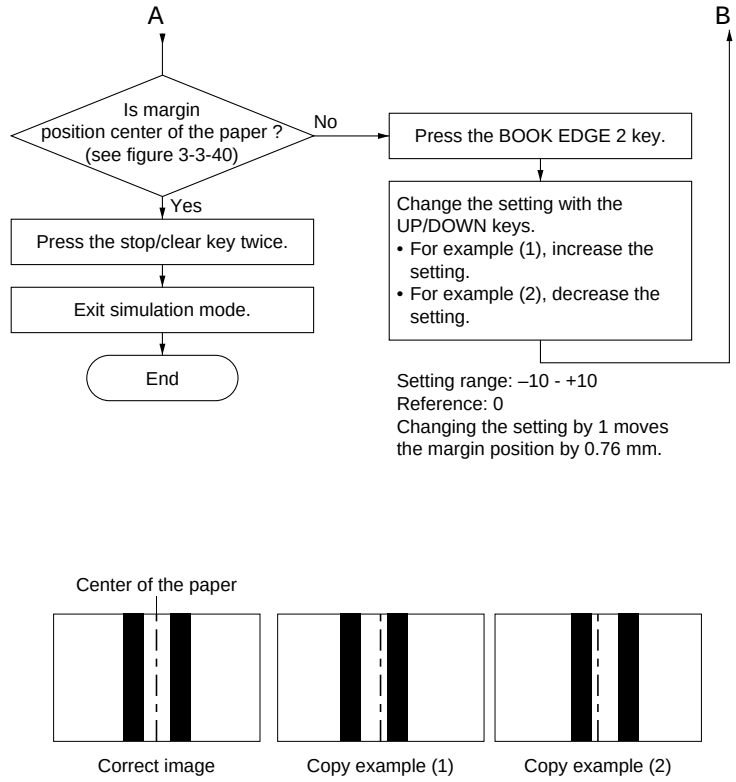
A
B
Is margin position center of the paper ? (see figure 3-3-40)
No
Yes
Press the BOOK EDGE 2 key.
Change the setting with the UP/DOWN keys.
• For example (1), increase the setting.
• For example (2), decrease the setting.
Press the stop/clear key twice.
Exit simulation mode.
End
Setting range: –10 - +10
Reference: 0
Changing the setting by 1 moves the margin position by 0.76 mm.
Center of the paper
Correct image
Copy example (1)
Copy example (2)

Figure 3-3-40

(8-6) Adjusting the slack amount before registration

Perform the following adjustment if the leading edge of the copy image is chipped and varied irregularly, or paper is folded in shape of Z.

Procedure

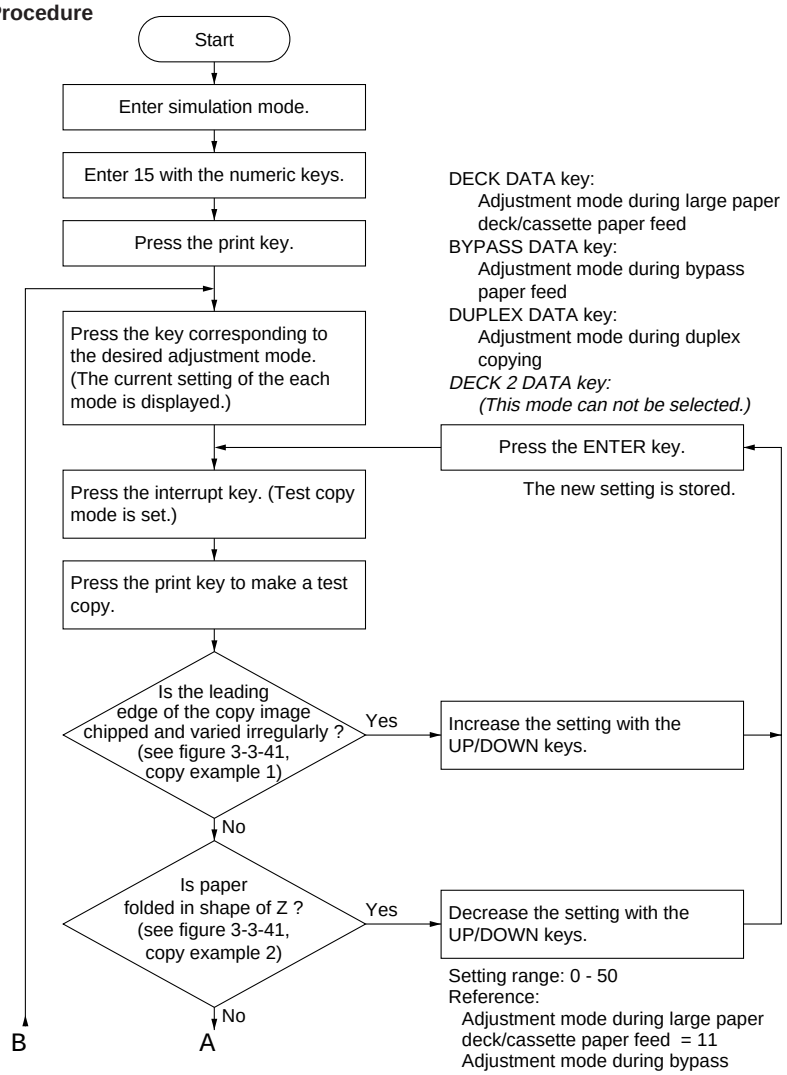

Setting range: 0 - 50
Reference:
Adjustment mode during large paper deck/cassette paper feed = 11
Adjustment mode during bypass paper feed = 24
Adjustment mode during duplex copying = 15
Changing the setting by 1 changes the slack amount by 2.3 mm.
(Increasing the setting makes the slack amount larger, decreasing the setting makes the slack amount smaller.)

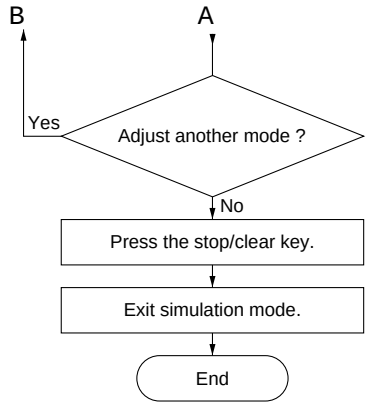
B
A
Yes
Adjust another mode ?
No
Press the stop/clear key.
Exit simulation mode.
End

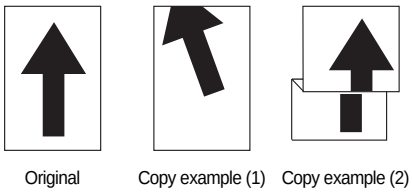
Original
Copy example (1)
Copy example (2)

Figure 3-3-41

3-3-3 Main charging section

(1) Replacing the charger wire and charger grid assembly
Follow the procedure below when the charger wire or charger grid wire is broken or to be replaced.

Precautions
- Use the specified tungsten wire for the charger wire.
- The part of the wire wrapped around the charger spring must not protrude from the charger housing.
- The cut end of the charger wire must not protrude more than 2 mm from under the charger wire retainer pin.
- Use a clean, undamaged tungsten charger wire.
- Keep the charger wire taut by stretching the charger spring.
- Clean the main charger shield when replacing the charger wire.
  * Do not use organic solvents such as alcohol and thinner to clean the main charger shield.

367

Procedure

1. Pull out the image formation section (three screws) from the machine.
2. Disconnect the two 2-pin connectors for the main charger cleaning motor and cleaning lamp.
3. Loosen the retainer pin, then remove the main charger assembly as shown in the figure.

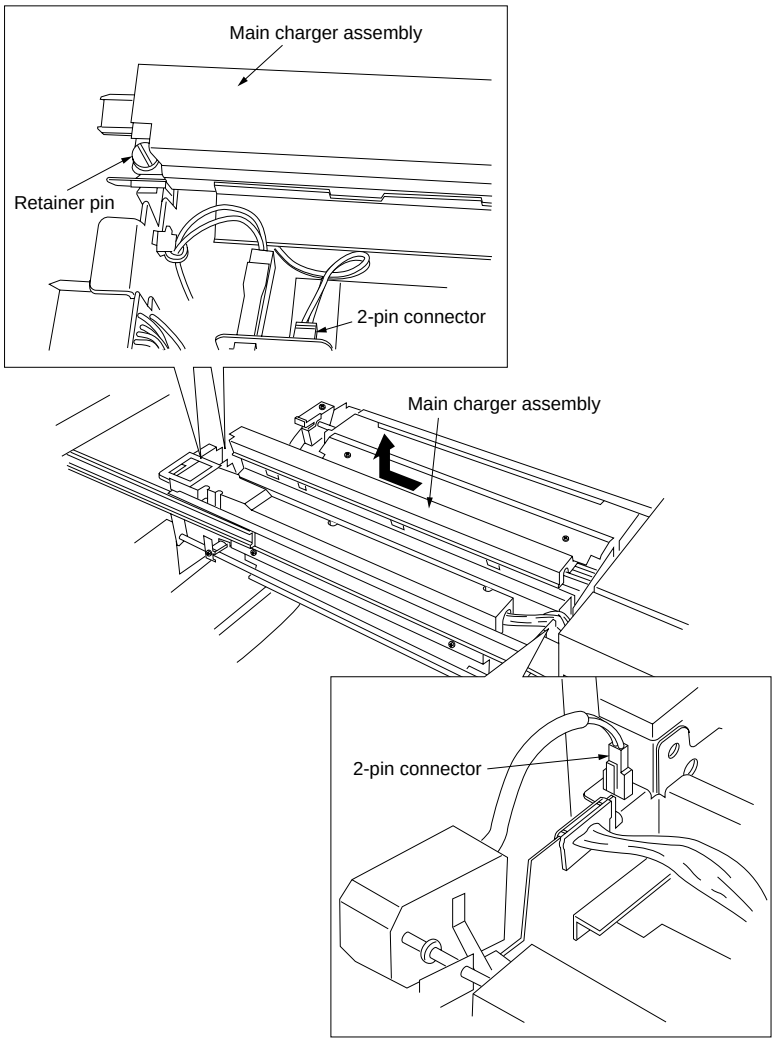

Figure 3-3-42

4. Remove the E ring holding the retainer pin. Remove the screw, then remove the charger grid assembly.

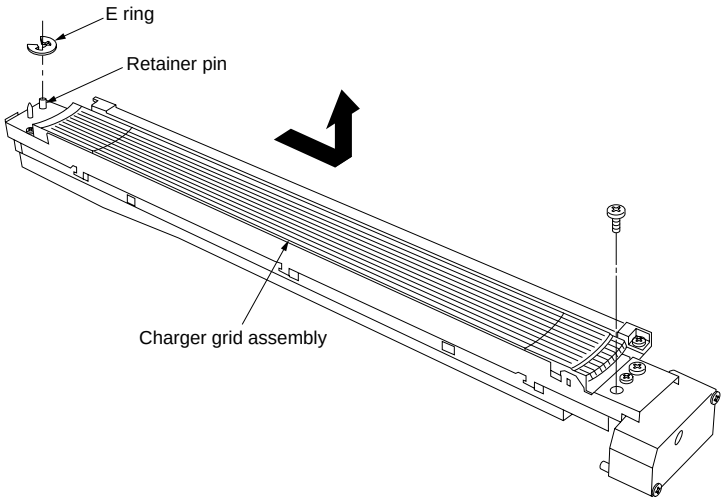

Figure 3-3-43

5. Remove the grid wire cleaning pad and charger wire cleaning pad. (see page 3-3-41)

6. Remove the charger retainer pin and the charger spring, then remove the charger wire.
7. Wind the new tungsten wire at 4 and 6 turns around one end of the charger spring and trim the end of the wire.
   * The length of the twists and the cut wire must be less than 2 mm.
8. Hook the other end of the charger spring onto the charger terminal of the main charger rear housing, then pass the wire through the notches of the main charger rear housing as shown in the figure.
9. Pass the charger wire through the main charger front housing as shown in the figure.
10. Pass the wire through the notch of the main charger rear housing.
11. Pass the charger wire through the V cut part of the charger retainer pin.
12. Pull the charger wire so that the length of the charger spring is 14 and 16 mm, then insert the charger retainer pin into the projection of the main charger rear housing and fix the charger wire.
13. Cut off the excess wire under the charger retainer pin so less than 2 mm protrudes.

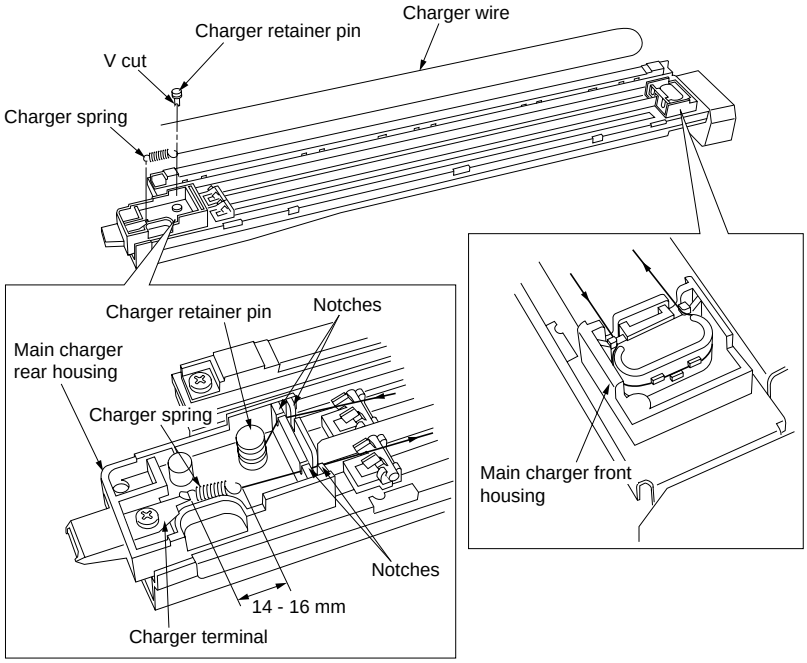

Figure 3-3-44

14. Refit all the removed parts.

(2) Replacing the grid wire cleaning pad and charger wire cleaning pad
Follow the procedure below to replace the grid wire cleaning pad and charger wire cleaning pad.

Procedure

1. Remove the charger grid assembly. (see page 3-3-39)
2. Open the hinge of the grid wire cleaning pad in the direction of the arrow 1 to remove from pin, then remove the grid wire cleaning pad.
3. Remove the two claws each (sections indicated by round marks in the figure), then remove the charger wire cleaning pads.

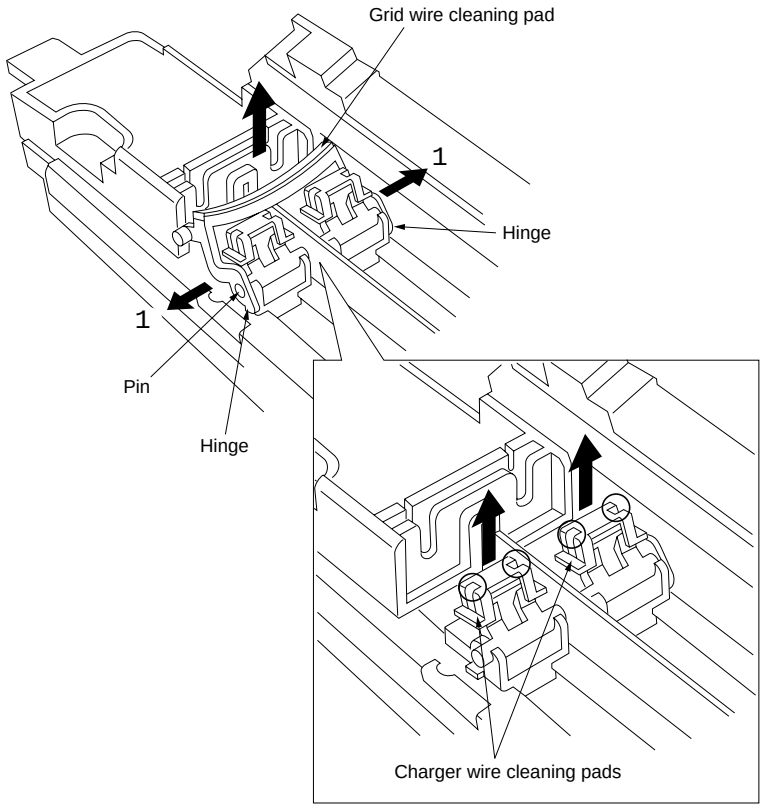

Figure 3-3-45

4. Refit all the removed parts.

(3) Adjusting the drum surface potential ..... (reference)
Perform this adjustment when proper image is not obtained, even if each adjustment has been carried out.
(In this adjustment, perform adjustment of the target dark potential at the potential correction.)

Procedure

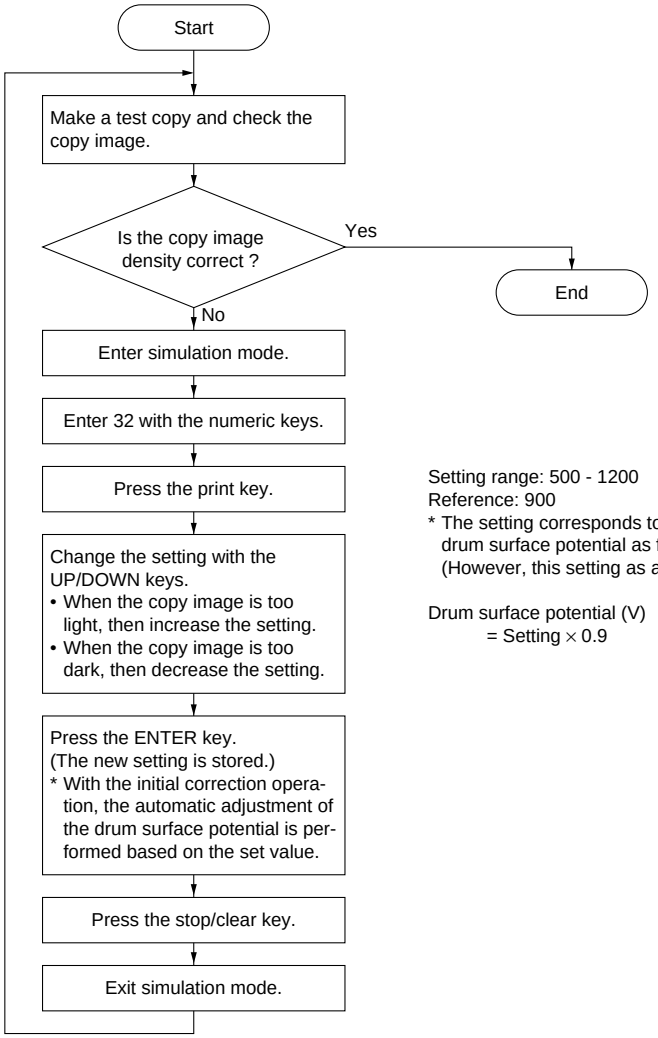

Setting range: 500 - 1200
Reference: 900
* The setting corresponds to the drum surface potential as follows. (However, this setting as an index.)

Drum surface potential (V)
= Setting × 0.9

3-3-4 Exposure section

(1) Detaching and refitting the halogen lamp
Follow the procedure below to clean or replace the halogen lamp.

Procedure

1. Remove the upper right cover.
2. Remove the screw, then remove the contact glass grounding plate.
3. Remove the contact glass.
4. Move the light source unit 1 to the notches on the left of the machine.
5. Remove the two screws, then remove the light adjuster assembly.
6. *Open the lamp terminal of the front and rear light source unit 1 to the outside of the machine, and remove the halogen lamp. At this time, be careful not to deform the lamp terminals.*

* When handling the halogen lamp, touch only the ceramic parts at the both ends of the lamp.
* When refitting the halogen lamp, take care that the projection of the lamp is located at the rear side of the machine so that it dose not contact with the reflector.

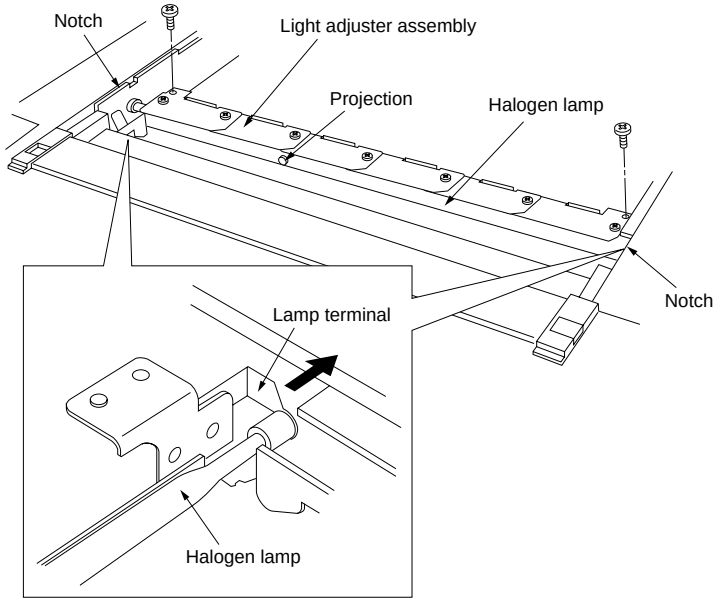

Figure 3-3-46

7. Refit all the removed parts.

367

(2) Detaching and refitting the optical section thermostat

Follow the procedure below to check or replace the optical section thermostat.

* The optical section thermostat is reset by pressing the button after it has been triggered. If it does not resume normal operation, replace the thermostat.

Caution: Use the specified thermostat for replacement. Do not substitute a simple wire or similar; otherwise, the copier will be seriously damaged.

Procedure

1. Remove the upper right cover.
2. Remove the screw, then remove the contact glass grounding plate.
3. Remove the contact glass.
4. Disconnect the two connectors connected to the optical section thermostat.
   * When disconnecting the connector, disconnect the connector while pressing the projection of the connector.
5. Check for continuity across the thermostat using a tester. If there is no continuity, press the button and check for continuity again.
6. If continuity cannot be restored, remove the two screws holding the optical thermostat and replace it.

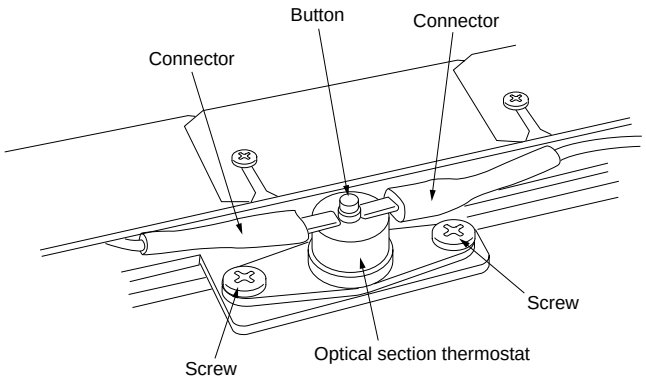

Figure 3-3-47

7. Refit all the removed parts.

(3) Adjusting the positions of the light adjusters

Perform the following adjustment after replacing the light adjusters, or if the copy image is abnormally light or dark on one side.

Caution: Before starting this adjustment, be sure that the main chargers, mirrors and dust shield glass are not stained with toner.

Procedure

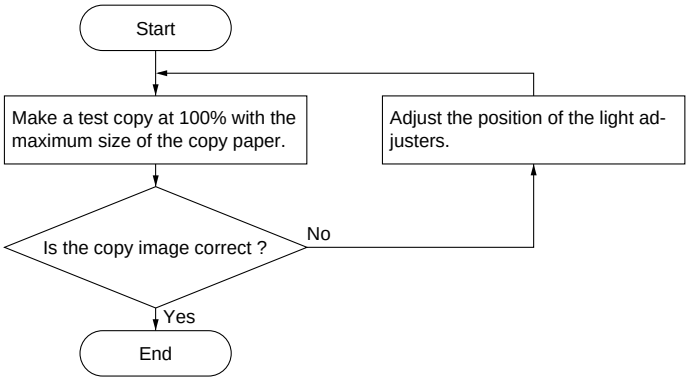

* If the copy image is not correct on the machine front, adjust the light adjuster on the machine rear.
* If the copy image is not correct on the machine rear, adjust the light adjuster on the machine front.
* Moving the light adjuster to the left (⇦) makes the copy image darker, and moving it to the right (➡) makes the copy image lighter.

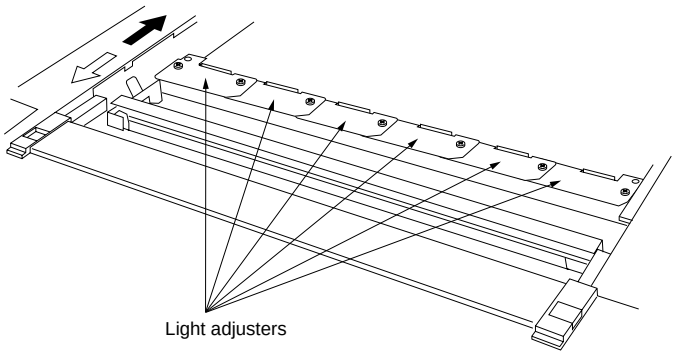

Figure 3-3-48

(4) Replacing and refitting the scanner wires

Follow the procedure below when the scanner wires are broken or to be replaced.

Caution: After replacing the scanner wires, perform (5) Adjusting focus (see page 3-3-57), (6) Adjusting longitudinal image squareness (see page 3-3-65) and (1) Adjusting tension of the scanner drive belt. (see page 3-3-169)

(4-1) Detaching the scanner wires

Procedure

1. Remove the upper right cover.
2. Remove the screw, then remove the contact glass grounding plate.
3. Remove the contact glass.
4. Remove the rear cover.
5. Remove the two screws, then remove the signal cable for the RDH.
6. Disconnect the connector for the RDH signal cable from the connector for the machine.
7. Remove the two screws each holding the front and rear hinges of the RDH.
8. Remove the RDH from the machine.
9. Remove the upper rear cover.

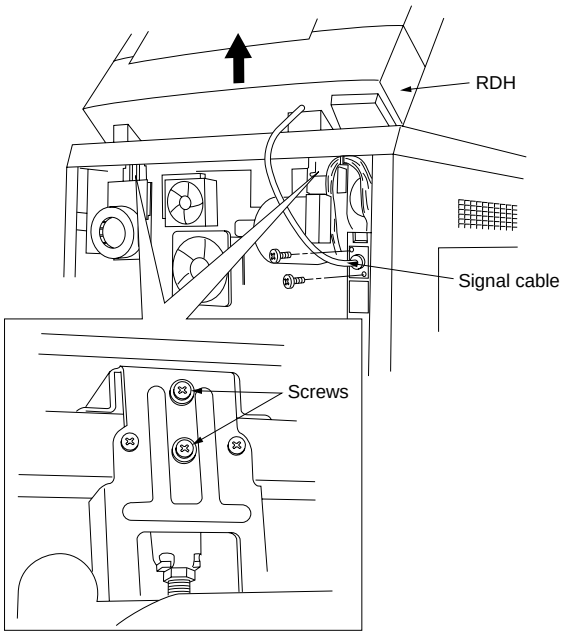

Figure 3-3-49

10. Remove the four screws, then remove the RDH mount on the machine rear right side.
11. Remove the screw, then remove the contact glass stopper on the machine rear right side.

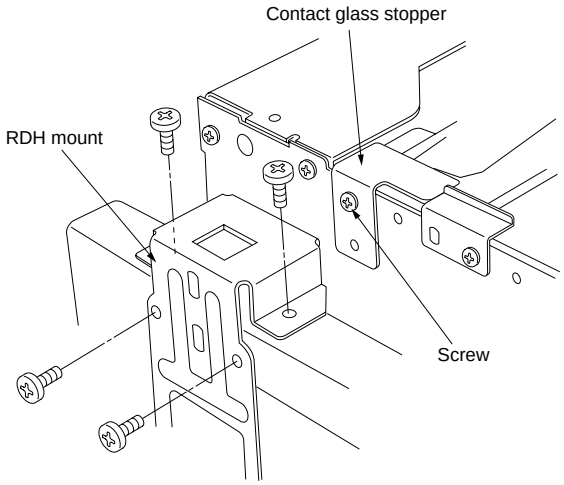

Figure 3-3-50

12. Remove the upper left cover, middle left cover and upper inner cover.
13. Move the light source unit 2 to the notches (machine left side) of the front and rear scanner frames.
14. Fasten the light source unit 2 to the notches of the front and rear scanner frames with two screws (M4) of the outer cover.
15. Remove the one screw each, then remove the wire retainers of the front and rear of the light source unit 1.
    * When refitting, the projection of the wire retainer must be firmly into the square hole of the light source unit 1.
16. Move the light source unit 1 to the square hole (center of the machine) of the rear scanner frame, then remove the light source unit 1 from the machine rotating in the direction of the arrow.

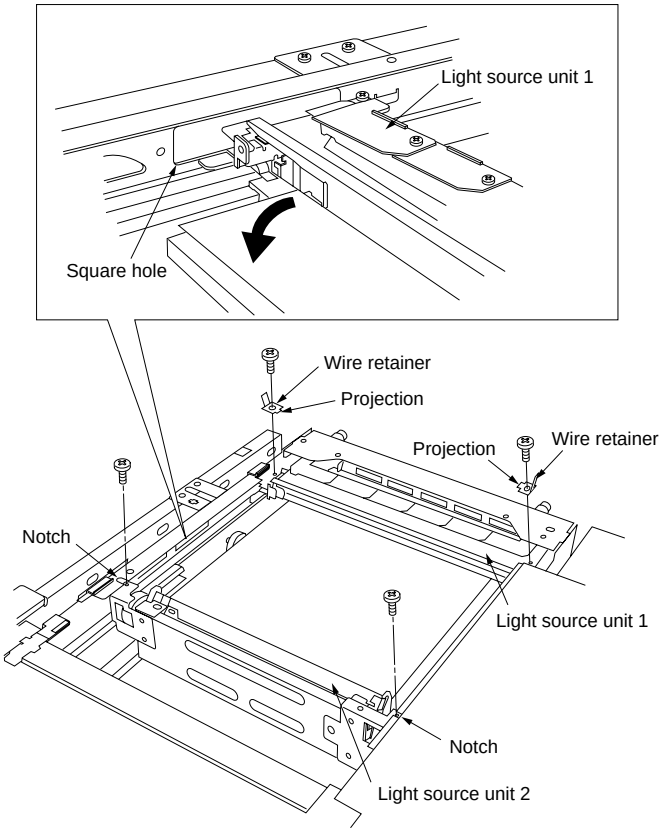

Figure 3-3-51

* When refitting the light source unit 1, fasten the light source unit 1 so that the center of the screw for the wire retainer is aligned with the marking of the front scanner frame and V cut of the rear scanner frame.

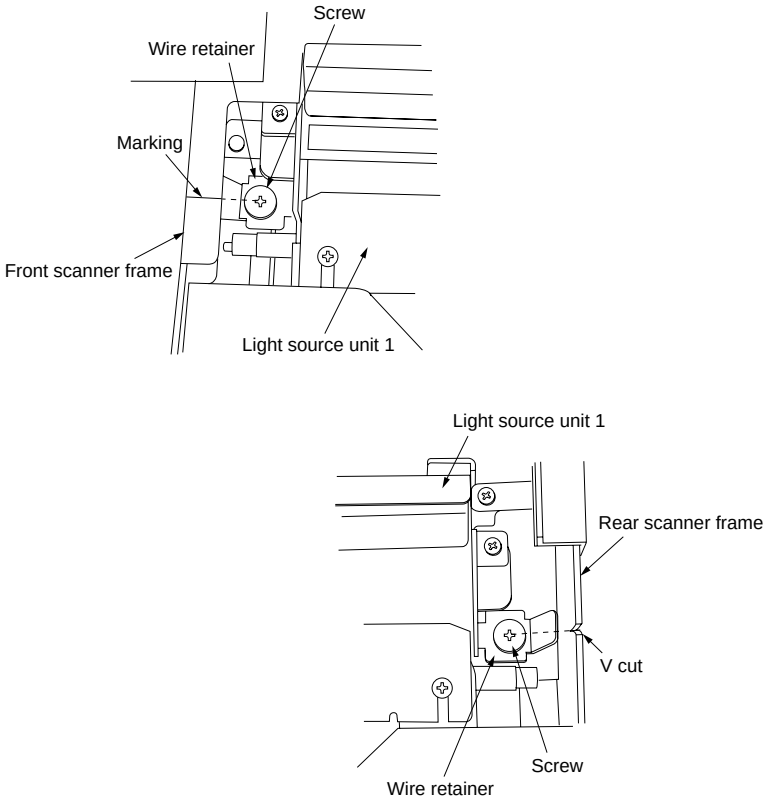

Figure 3-3-52

17. Disconnect the connectors for the scanner feeder wire connected to the lamp terminal and optical section thermostat.
    * When disconnecting the connector, disconnect the connector while pressing the projection of the connector.
18. Cut off the binding band fastening the wire of the scanner feeder wire.
    * When refitting, fasten the wire with binding band to its original position.
19. Remove the screw, then remove the scanner feeder wire from the light source unit 1.

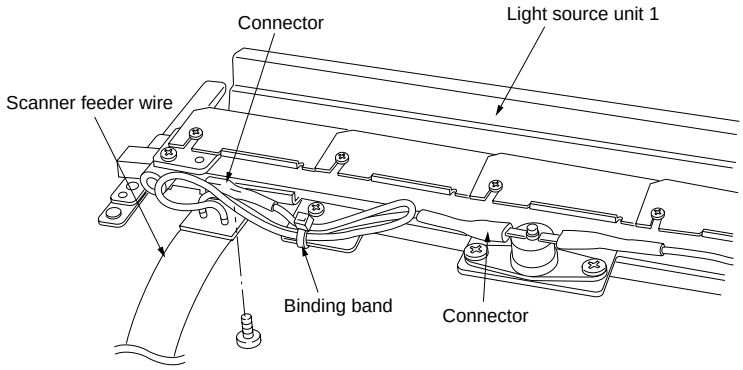

Figure 3-3-53

20. Remove the round terminal from each (front and rear) hook for the scanner wire spring.
21. Remove the round terminal from each (front and rear) hook for the scanner wire adjuster of the front and rear of the machine.
22. Remove the scanner wires (front and rear) from the scanner wire drum, scanner wire pulley, and wire loop pulleys.

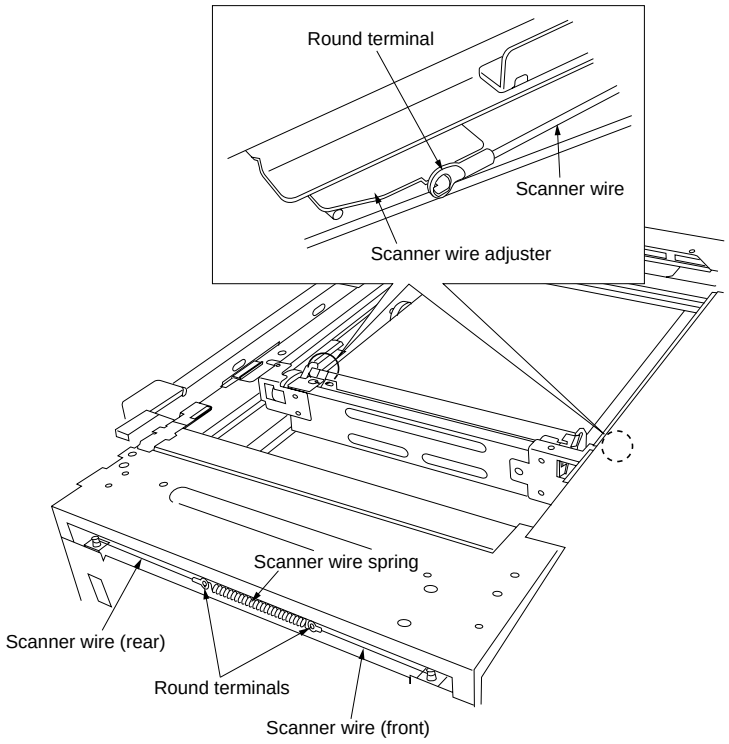

Figure 3-3-54

(4-2) Refitting the scanner wires

Procedure

1. Remove the three screws, then remove the scanner motor.
2. Remove the scanner drive belt.
3. *Remove the screw, then remove the scanner drive pulley from the scanner drive shaft.*

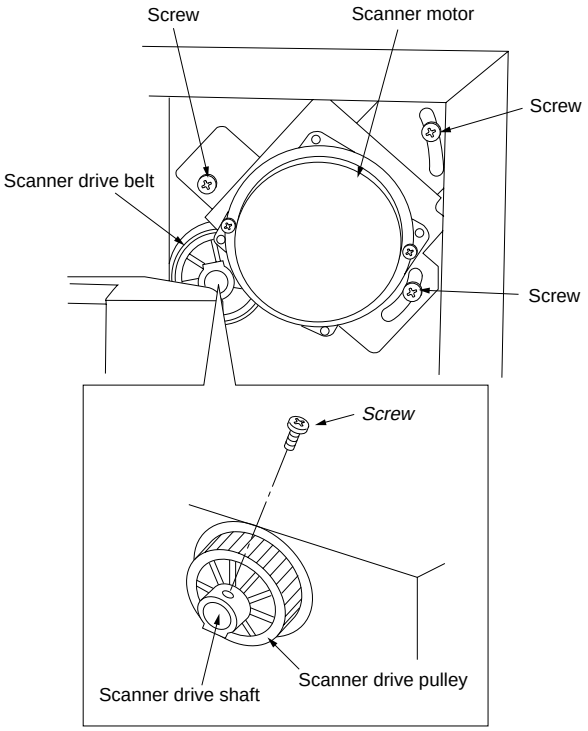

Figure 3-3-55

4. Remove the screw from each (front and rear) for the scanner wire drum.
5. Remove the E ring and bearing fastening the scanner drive shaft to the front scanner frame.
6. Remove the bearing from the rear scanner frame and pull out the scanner drive shaft to the machine rear side, then remove the scanner wire drums.

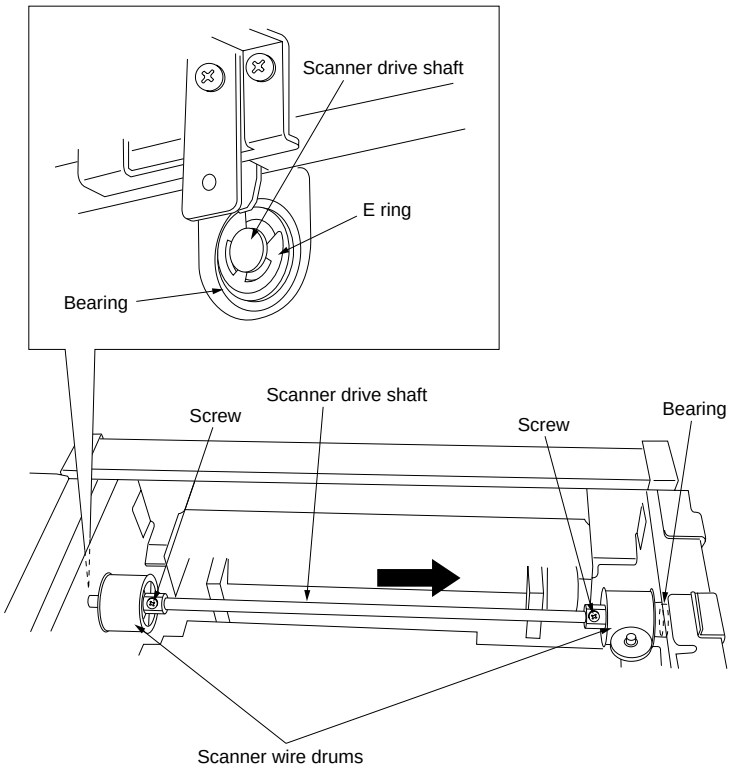

Figure 3-3-56

7. Attach the new scanner wire to the scanner wire drum.
   * When attaching, wind the wire so that there is no crevice.

• When attaching the scanner wire to the machine front scanner wire drum.
  1 Holding the wire with the marking (red) on the round terminal of the scanner wire to the right side of the machine, insert the ball at the center of the scanner wire into the hole in the scanner wire drum.
  2 Wind the end of scanner wire with the marking (red) on the round terminal six turns around the scanner wire drum toward the machine front side.
  3 Wind the another end of scanner wire two turns around the scanner wire drum toward the machine rear side.
  4 Hold the scanner wire to the scanner wire drum with the tape and so on.

• When attaching the scanner wire to the machine rear scanner wire drum.
  1 Holding the wire with the marking (red) on the round terminal of the scanner wire to the right side of the machine, insert the ball at the center of the scanner wire into the hole in the scanner wire drum.
  2 Wind the end of scanner wire with the marking (red) on the round terminal six turns around the scanner wire drum toward the machine rear side.
  3 Wind the another end of scanner wire two turns around the scanner wire drum toward the machine front side.
  4 Hold the scanner wire to the scanner wire drum with the tape and so on.

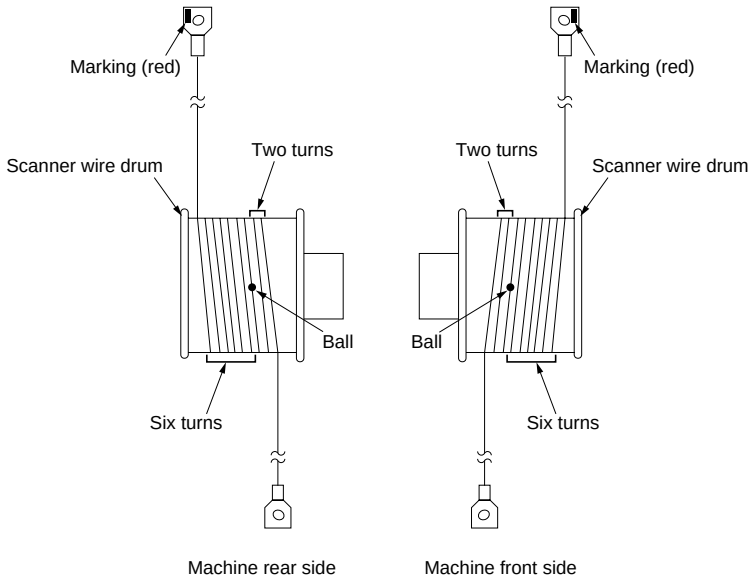

Figure 3-3-57

8. Refit the scanner wire drums and scanner drive shaft to the machine. (Refer to procedure 4 - 6)
9. Attach the scanner wire of the machine front with the following procedure.
   1 Run the one end of scanner wire with the marking (red) on the round terminal along the groove in the machine front side scanner loop pulley.
   2 Run the scanner wire along the groove in the machine front side scanner loop pulley, from bottom to top.
   3 Run the scanner wire along the groove in the machine front side scanner wire pulley on light source unit 2, from top to bottom.
   4 Hook the round terminal on the end of scanner wire onto the hook on the scanner wire adjuster (front).
   5 Run the another end of scanner wire along the groove in the machine front side scanner loop pulley, from bottom to top.
   6 Run the scanner wire along the groove in the machine front side scanner wire pulley on light source unit 2, from bottom to top, then pass the scanner wire to the square hole on the light source unit 2.
   7 Run the wire along the groove on the pin, then fasten the scanner wire to the left scanner reinforcement with the tape and so on.

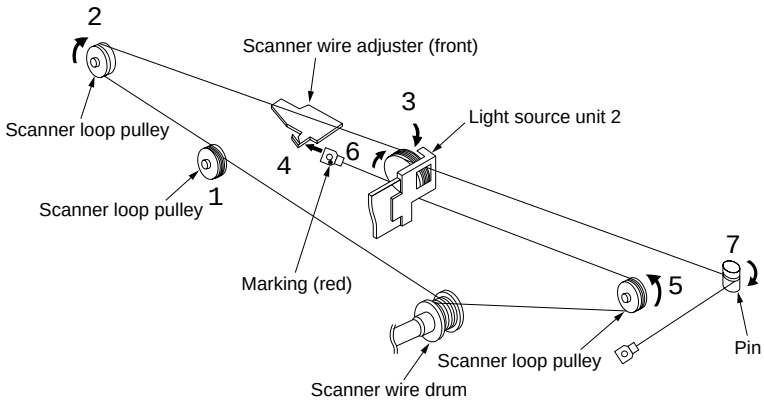

Figure 3-3-58

10. Attach the scanner wire of the machine rear with the following procedure.
    1 Run the one end of scanner wire with the marking (red) on the round terminal along the groove in the machine rear side scanner loop pulley.
    2 Run the scanner wire along the groove in the machine rear side scanner loop pulley, from bottom to top.
    3 Run the scanner wire along the groove in the machine rear side scanner wire pulley on light source unit 2, from top to bottom.
    4 Hook the round terminal on the end of scanner wire onto the hook on the scanner wire adjuster (rear).
    5 Run the another end of scanner wire along the groove in the machine rear side scanner loop pulley, from bottom to top.
    6 Run the scanner wire along the groove in the machine rear side scanner wire pulley on light source unit 2, from bottom to top, then pass the scanner wire to the square hole on the light source unit 2.
    7 Run the wire along the groove on the pin.

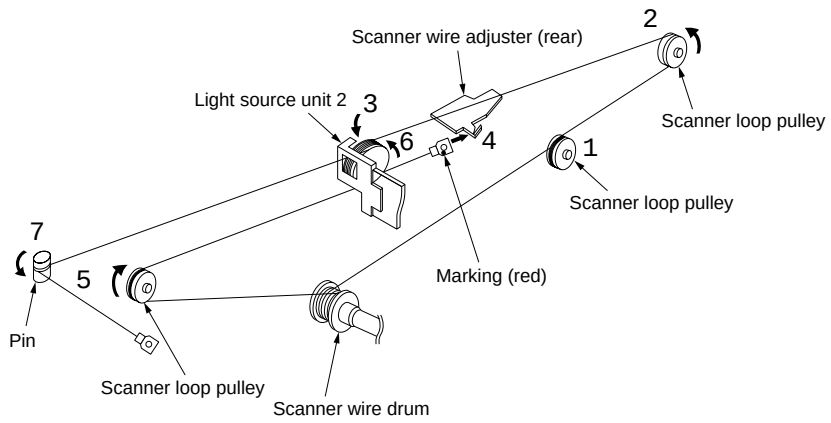

Figure 3-3-59

11. Remove the tape and so on fastening the scanner wire (front) to the left scanner reinforcement, then hook the round terminal of the front and rear scanner wires to the hook on the scanner spring. (See figure 3-3-54 on page 3-3-51.)
12. Remove the tape and so on holding the scanner wires to the scanner wire drums.
13. Refit all the removed parts.

(5) Adjusting focus

Perform the following adjustment when the scanner wire or lens is replaced, after adjusting longitudinal image squareness, or if the entire copy image is out of focus.

* After replacing the scanner wire, or one side copy image is out of focus, perform (5-1) Adjusting position of light source unit 1.
* After replacing the scanner wire, lens, or entire copy image is out of focus, perform (5-2) setting the lens unit rank.

(5-1) Adjusting position of light source unit 1

Procedure

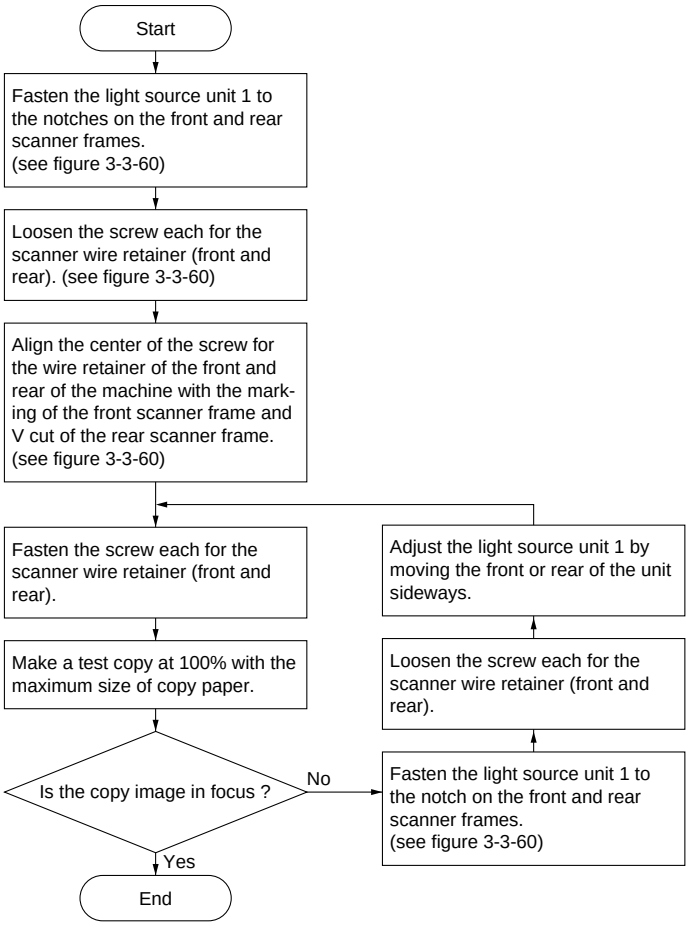

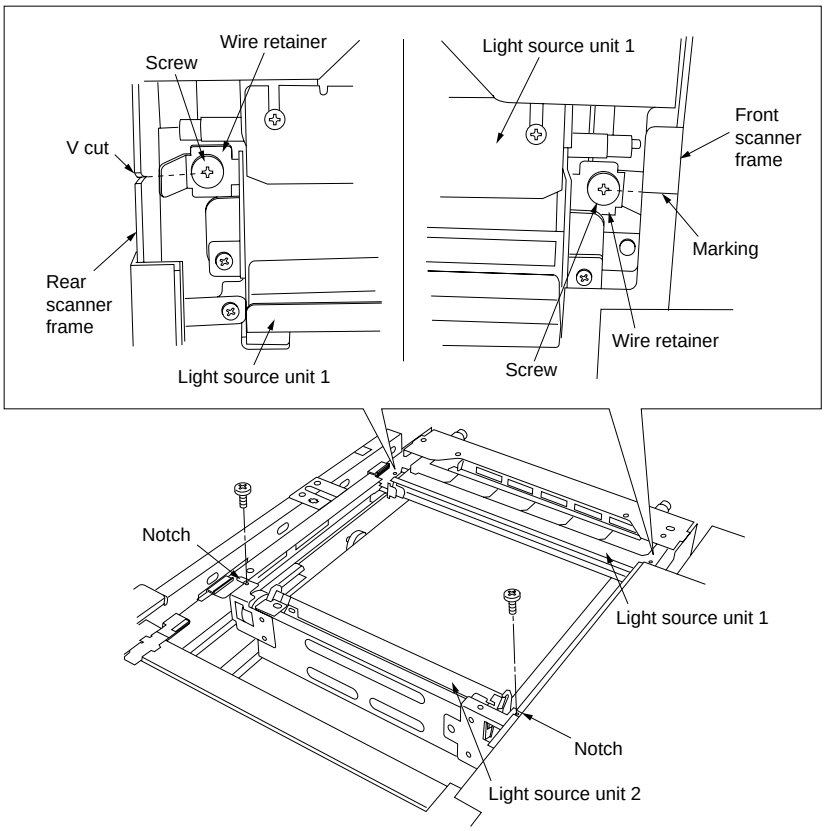

Figure 3-3-60

- If the image on the front side is out of focus, adjust the rear side position of the light source unit 1.
- If the image on the rear side is out of focus, adjust the front side position of the light source unit 1.

(5-2) Setting the lens unit rank

Adjusting sequence

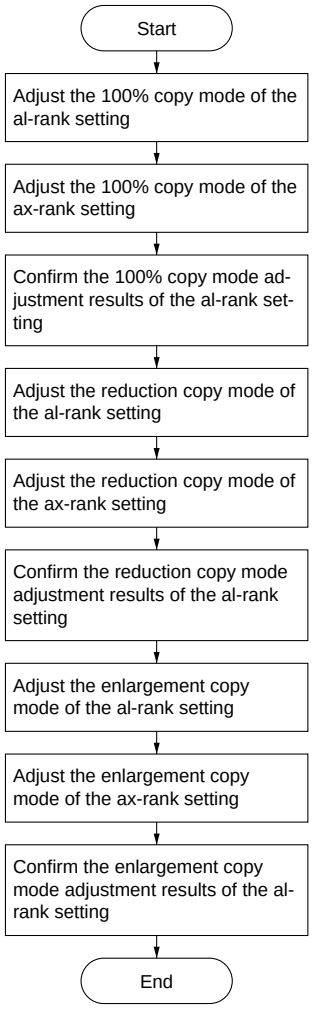

ax: Lens position
al: Mirrors 4 and 5 position

Procedure

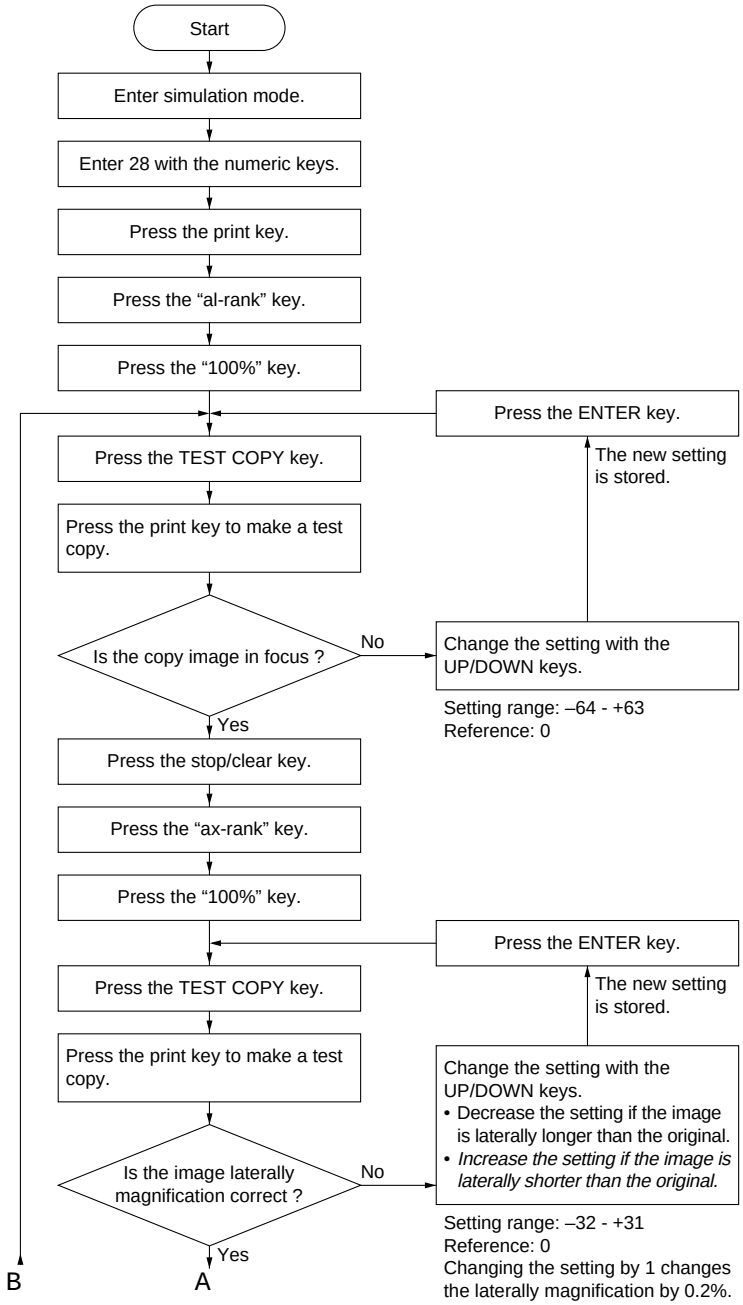
Start
Enter simulation mode.
Enter 28 with the numeric keys.
Press the print key.
Press the “al-rank” key.
Press the “100%” key.
Press the ENTER key.
The new setting is stored.
Press the TEST COPY key.
Press the print key to make a test copy.
Is the copy image in focus ?
No
Change the setting with the UP/DOWN keys.
Setting range: –64 - +63
Reference: 0
Yes
Press the stop/clear key.
Press the “ax-rank” key.
Press the “100%” key.
Press the ENTER key.
The new setting is stored.
Press the TEST COPY key.
Press the print key to make a test copy.
Change the setting with the UP/DOWN keys.
• Decrease the setting if the image is laterally longer than the original.
• Increase the setting if the image is laterally shorter than the original.
Is the image laterally magnification correct ?
No
Setting range: –32 - +31
Reference: 0
Changing the setting by 1 changes the laterally magnification by 0.2%.
Yes
B
A

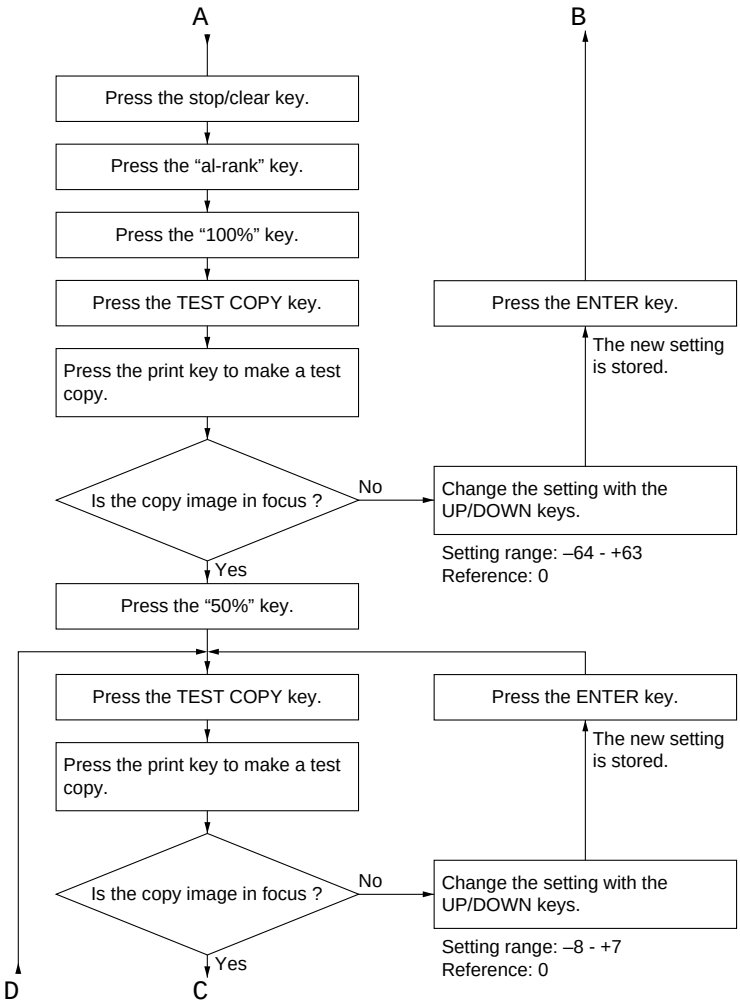
A
B
Press the stop/clear key.
Press the “al-rank” key.
Press the “100%” key.
Press the TEST COPY key.
Press the print key to make a test copy.
Is the copy image in focus ?
No
Yes
Change the setting with the UP/DOWN keys.
Setting range: –64 - +63
Reference: 0
Press the ENTER key.
The new setting is stored.
Press the “50%” key.
Press the TEST COPY key.
Press the print key to make a test copy.
Is the copy image in focus ?
No
Yes
Change the setting with the UP/DOWN keys.
Setting range: –8 - +7
Reference: 0
Press the ENTER key.
The new setting is stored.
D
C

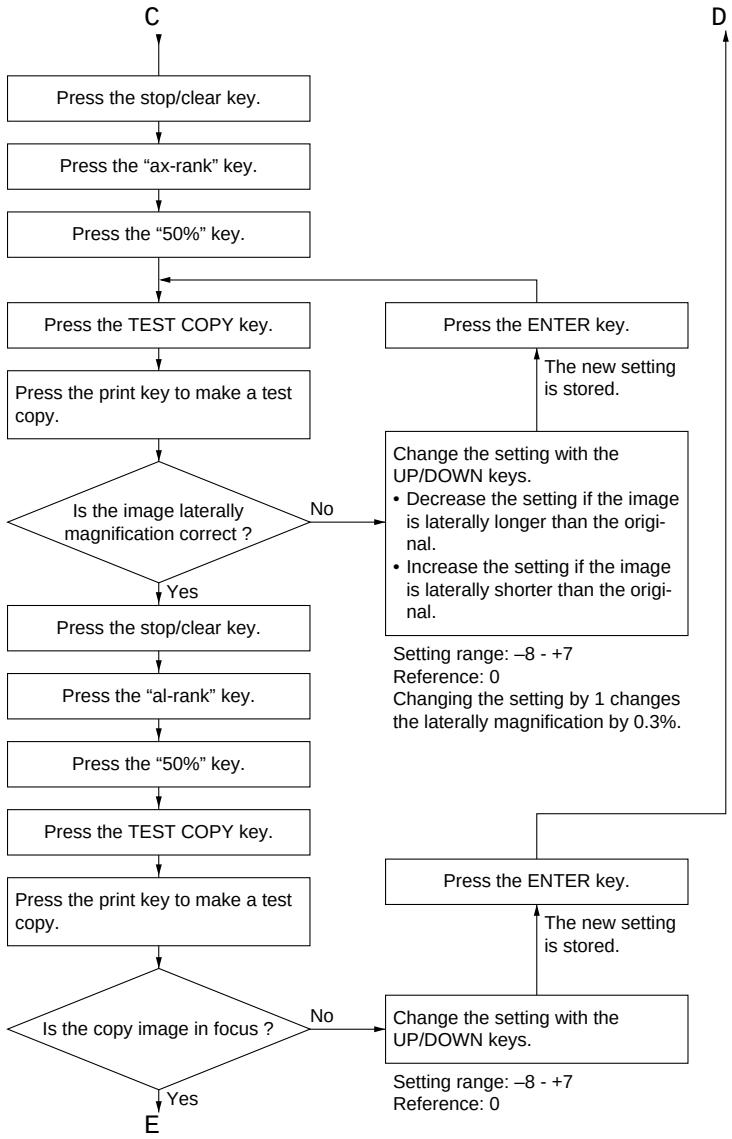
C
D
Press the stop/clear key.
Press the “ax-rank” key.
Press the “50%” key.
Press the TEST COPY key.
Press the print key to make a test copy.
Is the image laterally magnification correct ?
No
Yes
Press the ENTER key.
The new setting is stored.
Change the setting with the UP/DOWN keys.
• Decrease the setting if the image is laterally longer than the original.
• Increase the setting if the image is laterally shorter than the original.
Setting range: –8 - +7
Reference: 0
Changing the setting by 1 changes the laterally magnification by 0.3%.
Press the stop/clear key.
Press the “al-rank” key.
Press the “50%” key.
Press the TEST COPY key.
Press the print key to make a test copy.
Is the copy image in focus ?
No
Yes
Press the ENTER key.
The new setting is stored.
Change the setting with the UP/DOWN keys.
Setting range: –8 - +7
Reference: 0
E

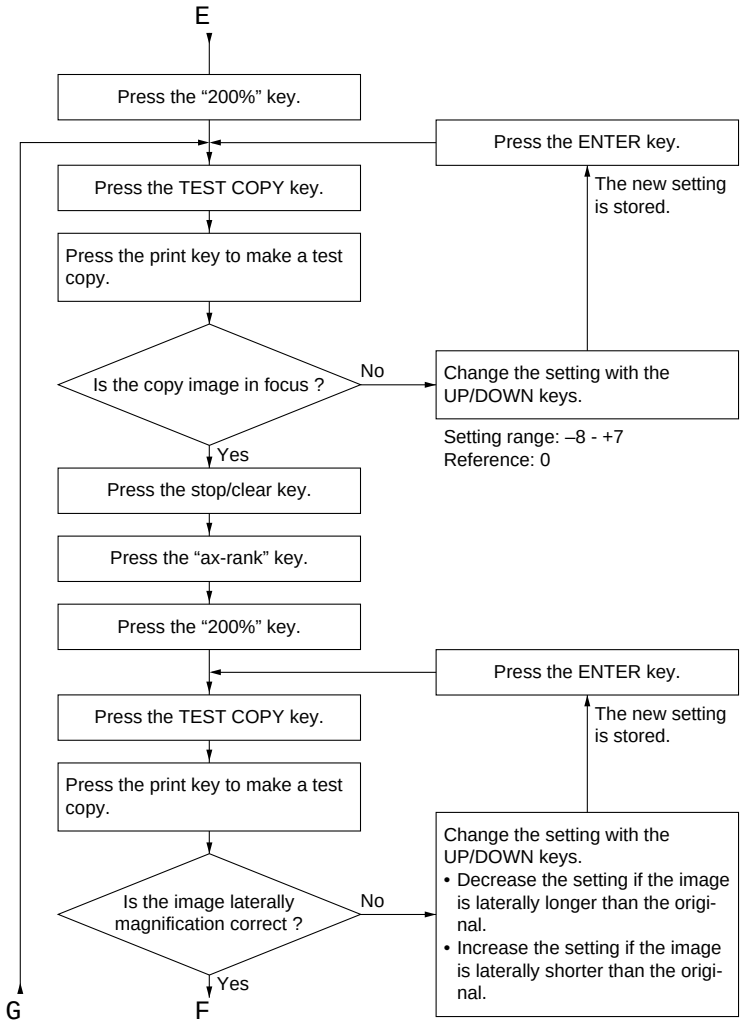
E
Press the “200%” key.
Press the ENTER key.
Press the TEST COPY key.
The new setting is stored.
Press the print key to make a test copy.
Is the copy image in focus ?
No
Change the setting with the UP/DOWN keys.
Setting range: –8 - +7
Reference: 0
Yes
Press the stop/clear key.
Press the “ax-rank” key.
Press the “200%” key.
Press the ENTER key.
Press the TEST COPY key.
The new setting is stored.
Press the print key to make a test copy.
Change the setting with the UP/DOWN keys.
• Decrease the setting if the image is laterally longer than the original.
• Increase the setting if the image is laterally shorter than the original.
Is the image laterally magnification correct ?
No
Yes
Setting range: –8 - +7
Reference: 0
Changing the setting by 1 changes the laterally magnification by 0.4%.
G
F

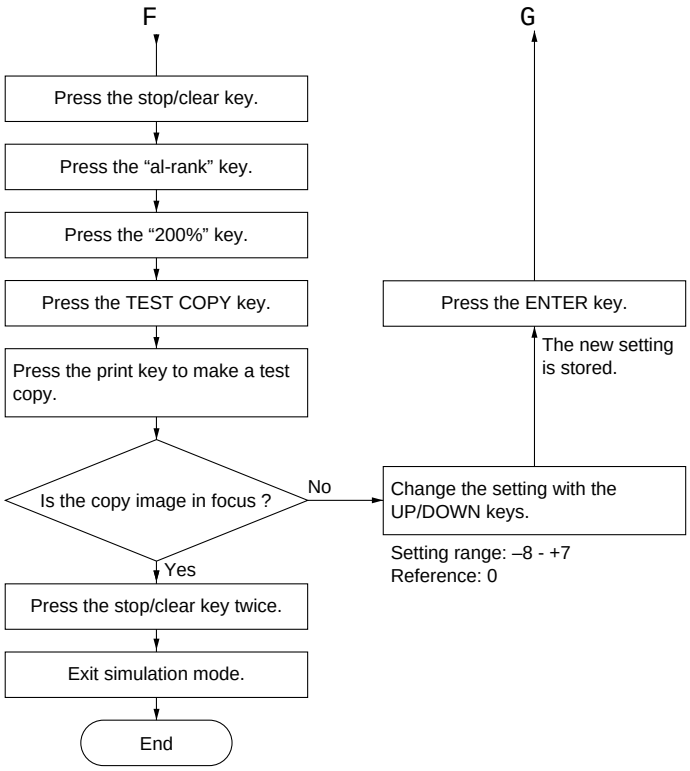
F
Press the stop/clear key.
Press the “al-rank” key.
Press the “200%” key.
Press the TEST COPY key.
Press the print key to make a test copy.
Is the copy image in focus ?
No
Yes
Change the setting with the UP/DOWN keys.
Setting range: –8 - +7
Reference: 0
Press the ENTER key.
The new setting is stored.
G
Press the stop/clear key twice.
Exit simulation mode.
End

(6) Adjusting longitudinal image squareness (position of light source unit 2)

Perform the following adjustment when the scanner wire is replaced or if the copy image is longitudinally skewed (longitudinal squareness is not obtained).

Caution: After adjusting longitudinal image squareness, be sure to perform "(5) Adjusting focus" (see page 3-3-57).

* Before starting the adjustment, remove the upper inner cover.

Procedure

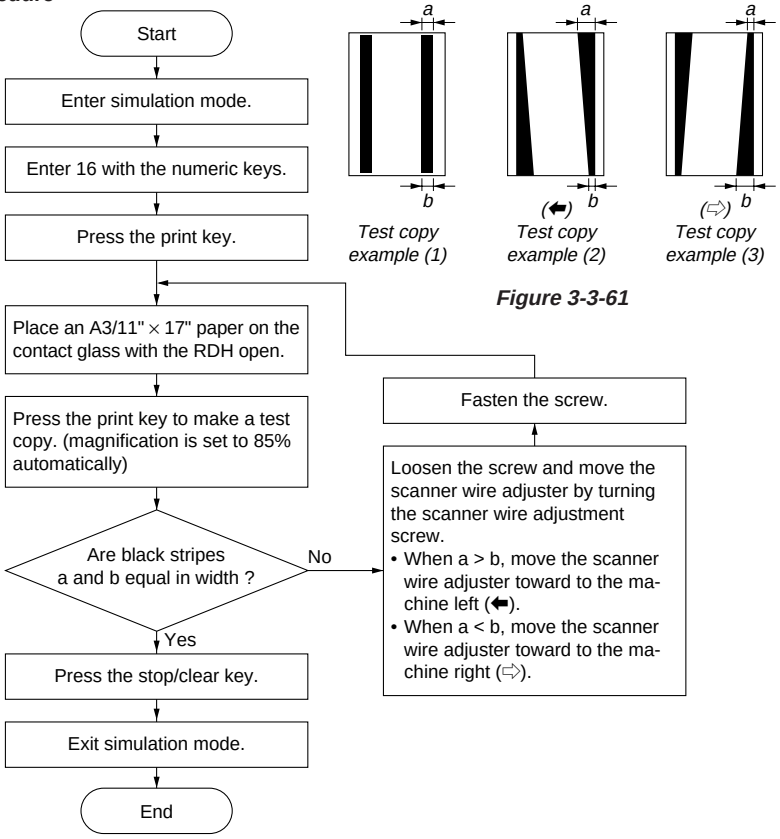

Figure 3-3-61

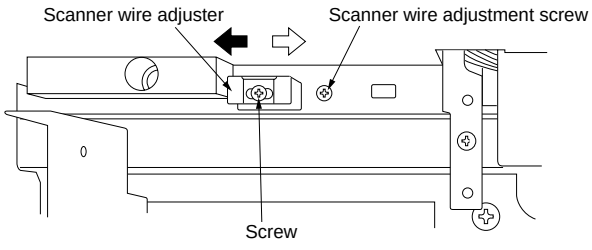

Figure 3-3-62

(7) Adjusting lateral image squareness (height of light source unit 2)
Perform the following adjustment if the copy image is longitudinally skewed (lateral squareness is not obtained).

Procedure

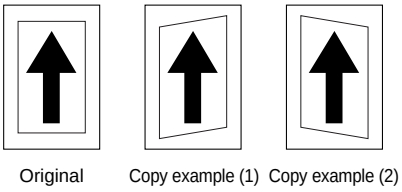

Figure 3-3-63

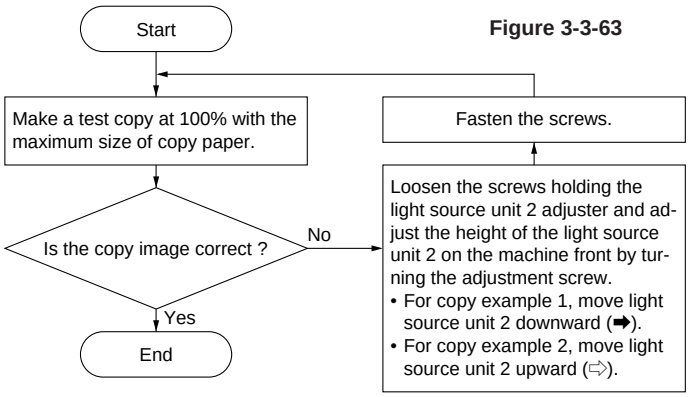

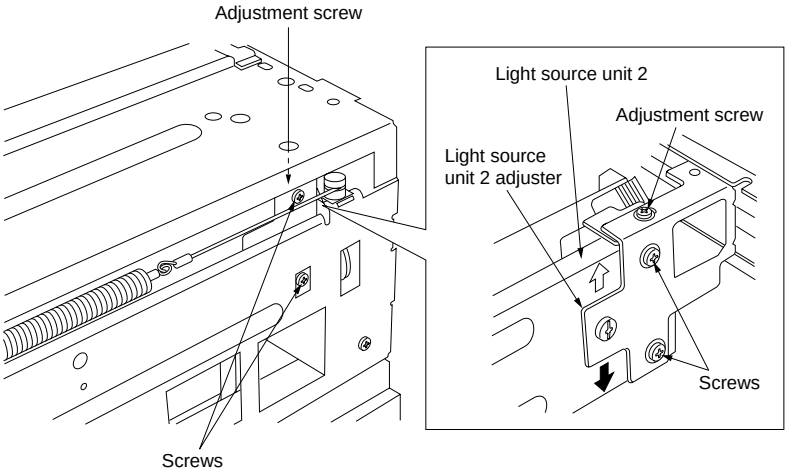

Figure 3-3-64

(8) Adjust lateral magnification

Perform the following adjustment if the lateral magnification is not correct.

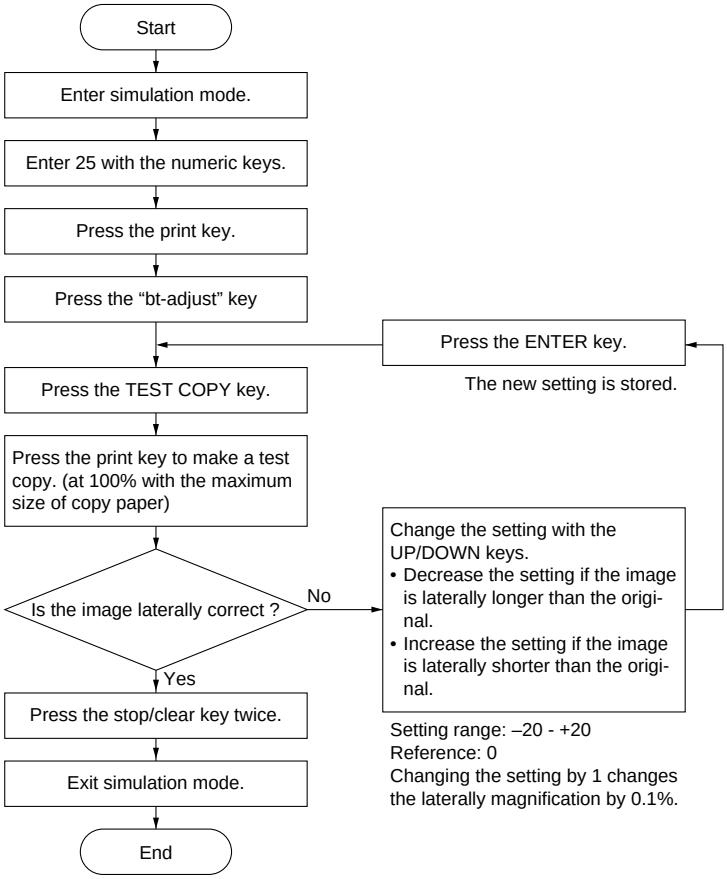

(9) Adjust longitudinal magnification (scanning speed correction)
Perform the following adjustment if the longitudinal magnification is not correct.

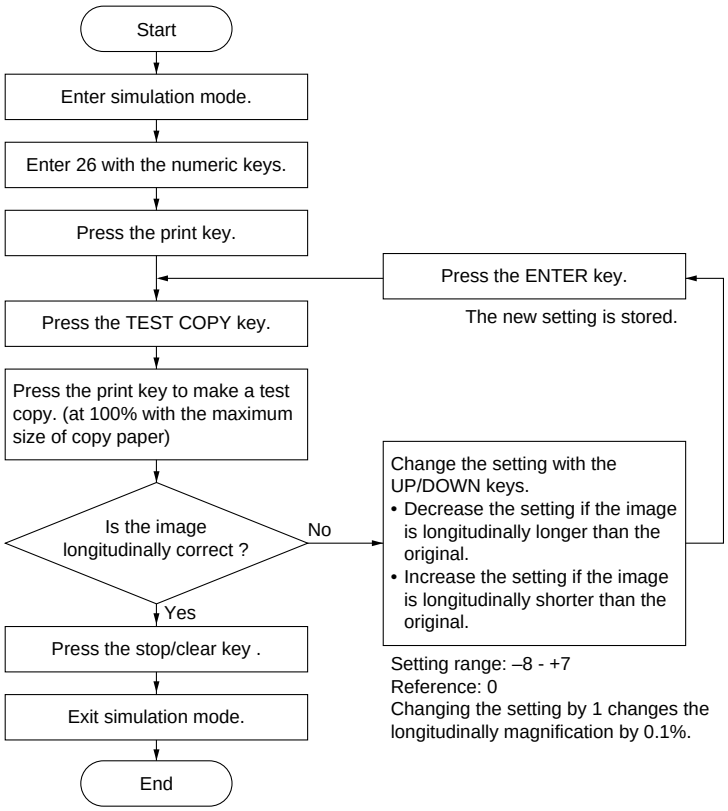

(10) Adjusting the position of the original size indicator
Perform the following adjustment if the copy image is skewed.

Procedure

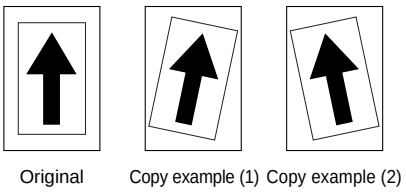

Figure 3-3-65

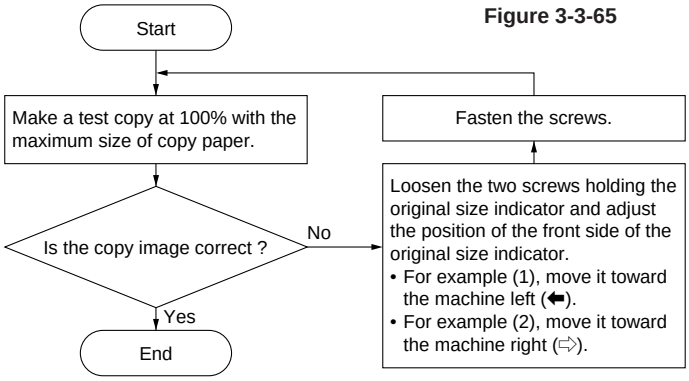

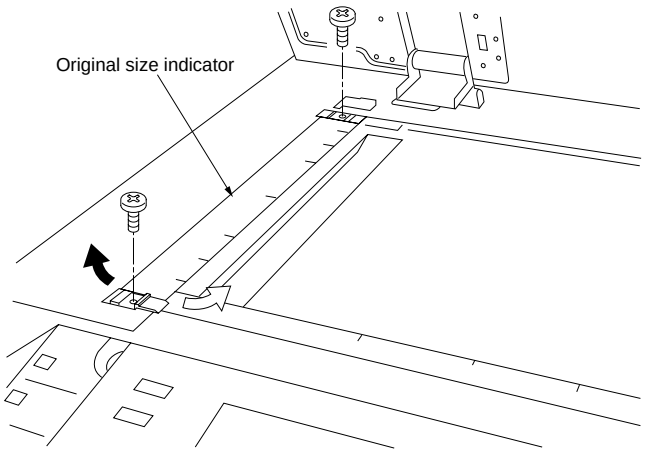

Figure 3-3-66

(11) Setting exposure amount (for equal magnification mode)

Perform the following adjustment if the drum, halogen lamp is to be replaced or image density is not correct at manual exposure.

Cautions:

1) When the drum, halogen lamp is to be replaced, adjust all EXP of the normal/photo exposure mode.
2) Before adjustment, check for the following point.
   - Check that the developer density is correct.
   - Check that the halogen lamp has not deteriorated.
   - Clean the optical unit.
3) Never touch VR1, VR501, VR502 and VR503 on the composite PCB.

<Mode setting sequence>

Caution: *When adjusting all EXPs, perform the adjustment and setting in the following order.*

1. *Exposure adjusting for the normal exposure mode (see page 3-3-71)*
2. *Exposure adjusting for the photo exposure mode (see page 3-3-74)*
3. *Setting the amount of the exposure for AE (auto exposure) (see page 3-3-77)*
4. *Adjusting the amount of the exposure for AE (auto exposure) (see page 3-3-78)*
5. *Adjusting the exposure amount for enlargement/reduction mode (see page 3-3-80)*

1 Exposure adjusting for the normal exposure mode (see page 3-3-71)

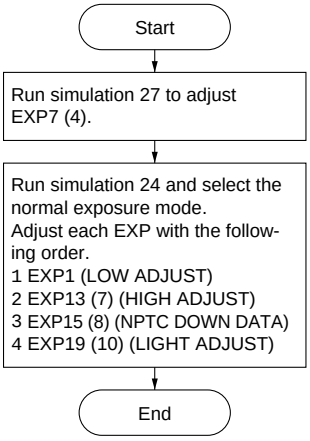

2 Exposure adjusting for the photo exposure mode (see page 3-3-74)

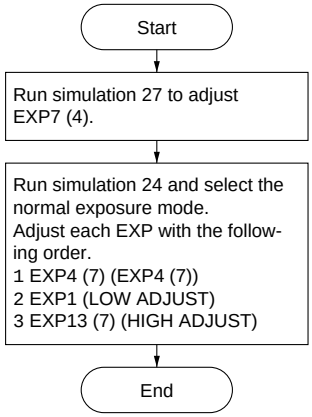

(11-1) Adjusting the exposure amount for normal mode

Procedure

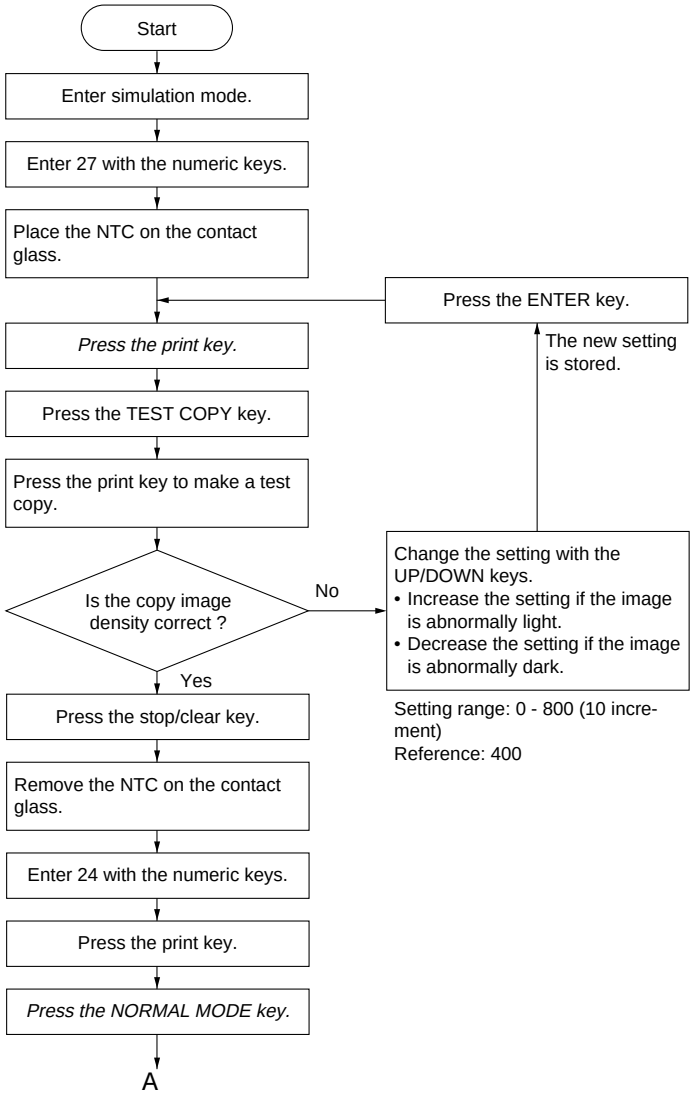

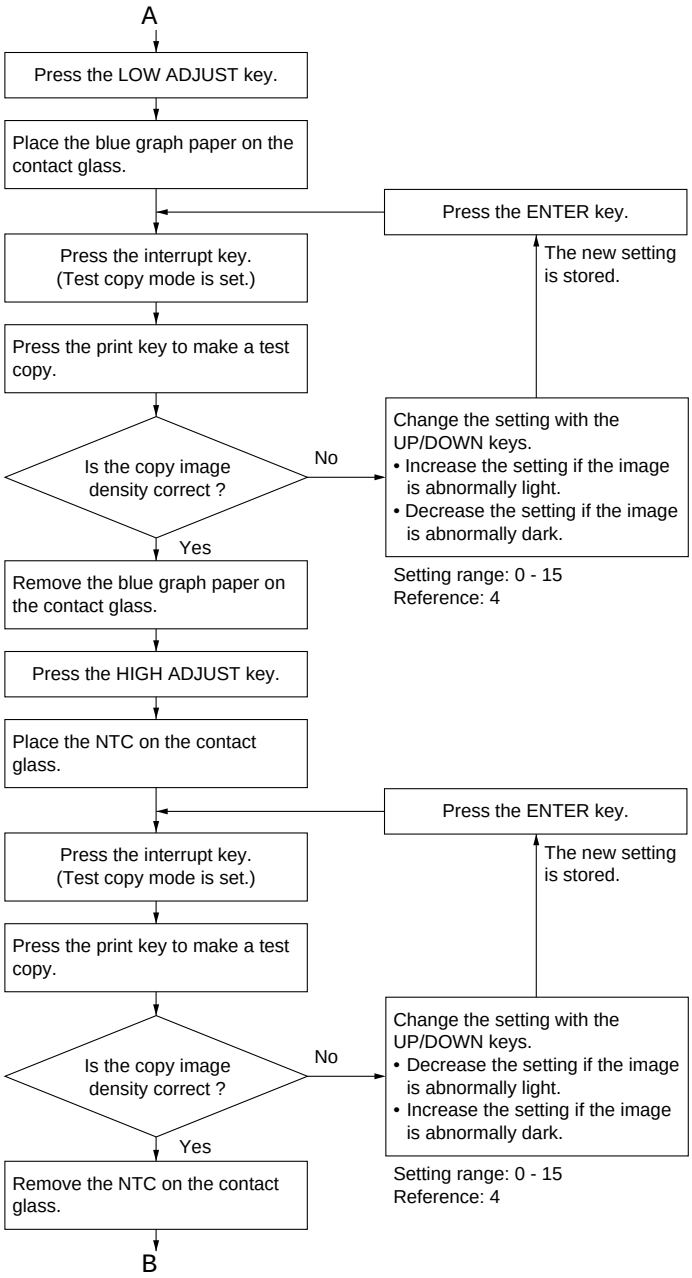
A
Press the LOW ADJUST key.
Place the blue graph paper on the contact glass.
Press the ENTER key.
Press the interrupt key. (Test copy mode is set.)
The new setting is stored.
Press the print key to make a test copy.
Change the setting with the UP/DOWN keys.
• Increase the setting if the image is abnormally light.
• Decrease the setting if the image is abnormally dark.
Is the copy image density correct ?
No
Yes
Setting range: 0 - 15
Reference: 4
Remove the blue graph paper on the contact glass.
Press the HIGH ADJUST key.
Place the NTC on the contact glass.
Press the ENTER key.
Press the interrupt key. (Test copy mode is set.)
The new setting is stored.
Press the print key to make a test copy.
Change the setting with the UP/DOWN keys.
• Decrease the setting if the image is abnormally light.
• Increase the setting if the image is abnormally dark.
Is the copy image density correct ?
No
Yes
Setting range: 0 - 15
Reference: 4
Remove the NTC on the contact glass.
B

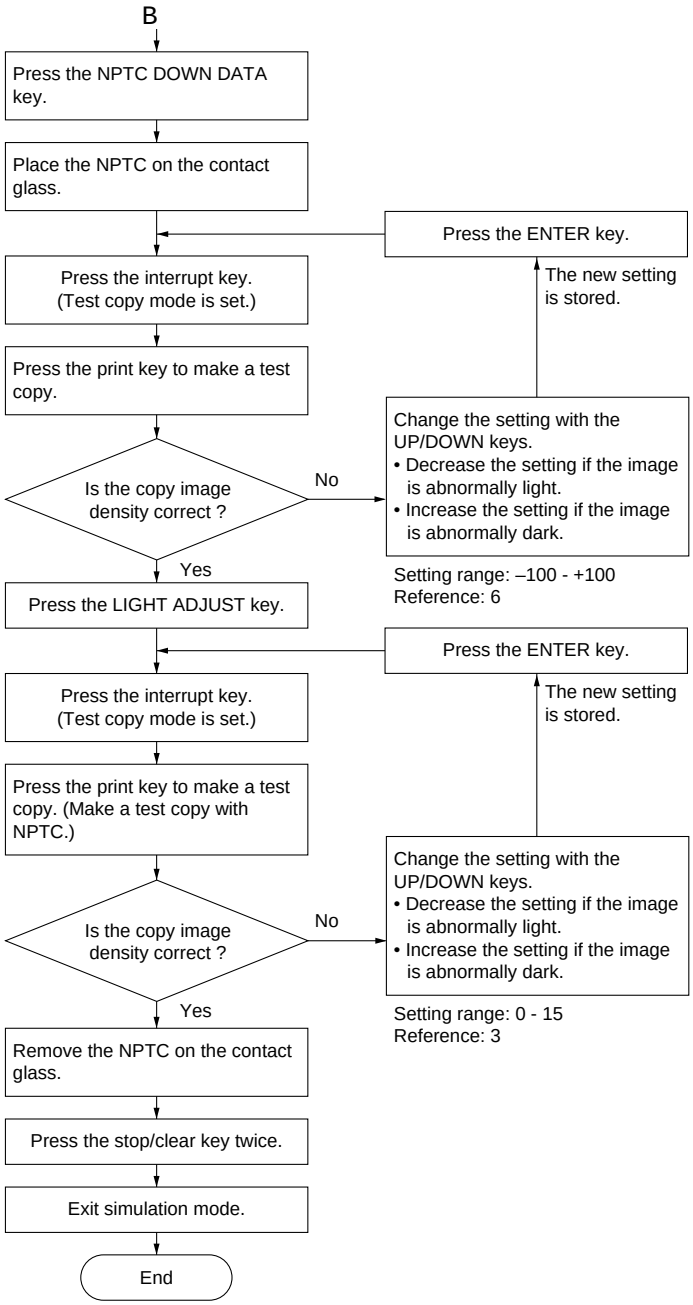
B
Press the NPTC DOWN DATA key.
Place the NPTC on the contact glass.
Press the ENTER key.
Press the interrupt key. (Test copy mode is set.)
The new setting is stored.
Press the print key to make a test copy.
Change the setting with the UP/DOWN keys.
• Decrease the setting if the image is abnormally light.
• Increase the setting if the image is abnormally dark.
Is the copy image density correct ?
No
Yes
Setting range: –100 - +100
Reference: 6
Press the LIGHT ADJUST key.
Press the ENTER key.
Press the interrupt key. (Test copy mode is set.)
The new setting is stored.
Press the print key to make a test copy. (Make a test copy with NPTC.)
Change the setting with the UP/DOWN keys.
• Decrease the setting if the image is abnormally light.
• Increase the setting if the image is abnormally dark.
Is the copy image density correct ?
No
Yes
Setting range: 0 - 15
Reference: 3
Remove the NPTC on the contact glass.
Press the stop/clear key twice.
Exit simulation mode.
End

(11-2) Adjusting the exposure amount for photo mode

Procedure

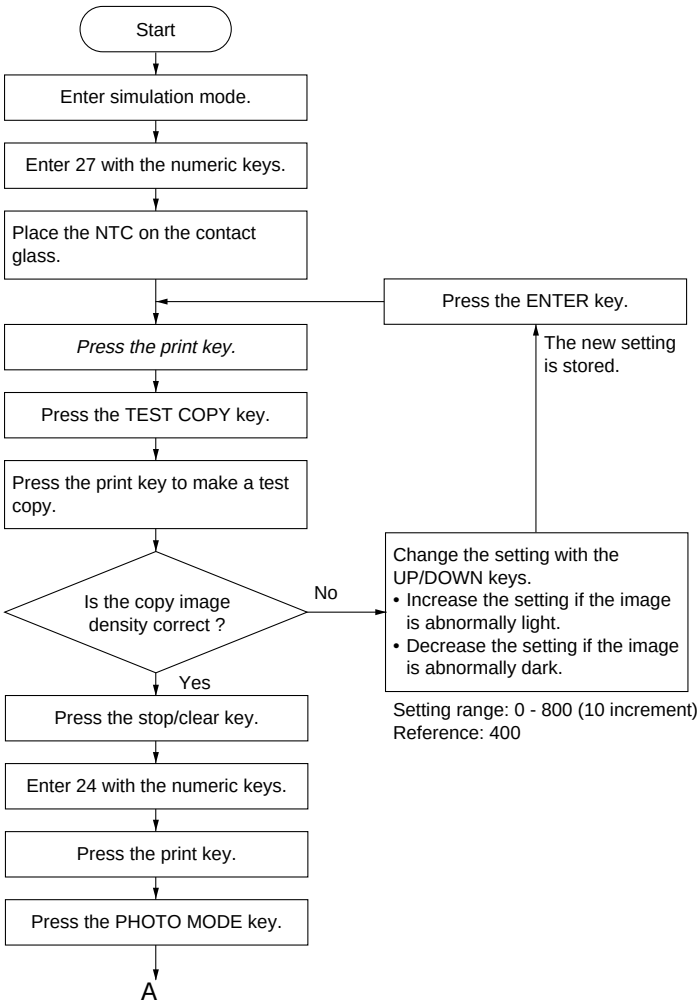

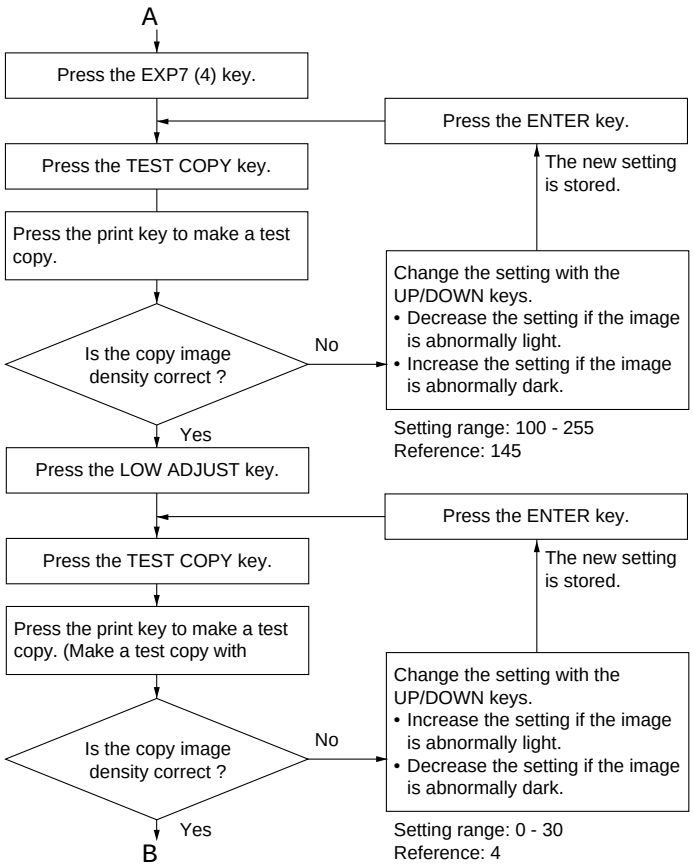
A
Press the EXP7 (4) key.
Press the ENTER key.
Press the TEST COPY key.
The new setting is stored.
Press the print key to make a test copy.
Change the setting with the UP/DOWN keys.
• Decrease the setting if the image is abnormally light.
• Increase the setting if the image is abnormally dark.
Is the copy image density correct ?
No
Yes
Setting range: 100 - 255
Reference: 145
Press the LOW ADJUST key.
Press the ENTER key.
Press the TEST COPY key.
The new setting is stored.
Press the print key to make a test copy. (Make a test copy with
Change the setting with the UP/DOWN keys.
• Increase the setting if the image is abnormally light.
• Decrease the setting if the image is abnormally dark.
Is the copy image density correct ?
No
Yes
Setting range: 0 - 30
Reference: 4
B

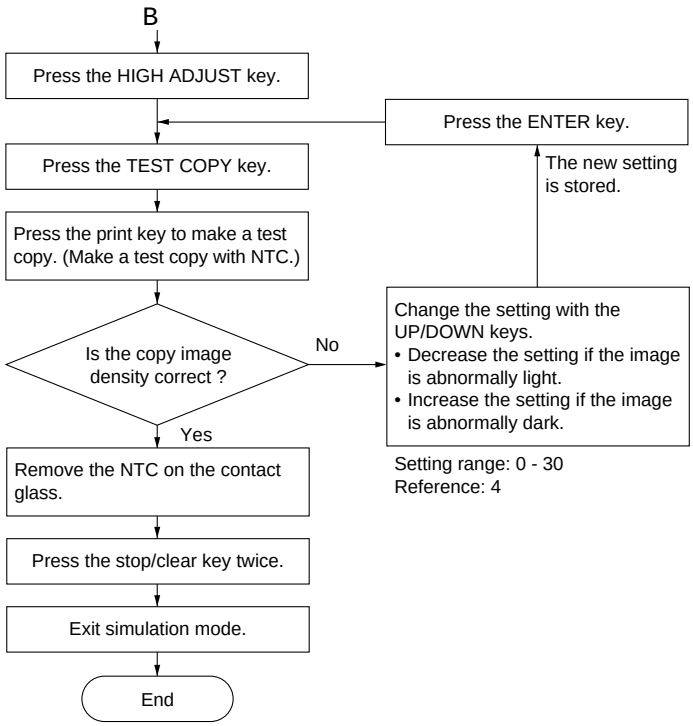
B
Press the HIGH ADJUST key.
Press the ENTER key.
Press the TEST COPY key.
The new setting is stored.
Press the print key to make a test copy. (Make a test copy with NTC.)
Change the setting with the UP/DOWN keys.
• Decrease the setting if the image is abnormally light.
• Increase the setting if the image is abnormally dark.
Is the copy image density correct ?
No
Yes
Setting range: 0 - 30
Reference: 4
Remove the NTC on the contact glass.
Press the stop/clear key twice.
Exit simulation mode.
End

(12) Setting the amount of the exposure for AE (auto exposure)
Reading NTC and NPTC for the reference of the exposure for the AE control.
Caution: Before adjusting, check that scanner section is not stained.

Procedure

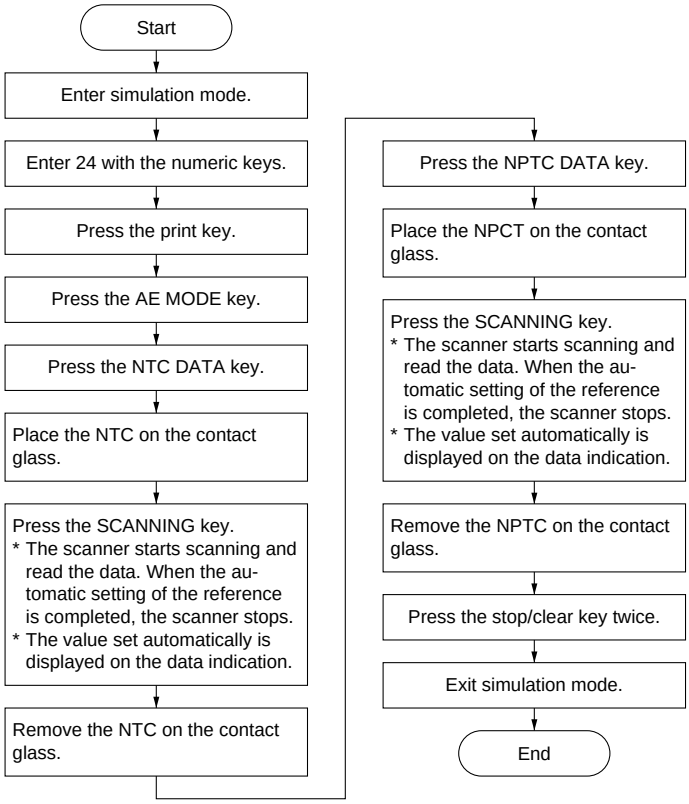

(13) Adjusting the amount of the exposure for AE (auto exposure)

Perform the following adjustment if the copy image is not correct at auto exposure.

* The value set automatically at “(12) Setting the amount of the exposure for AE” (see page 3-3-77), adjust the exposure amount for AE with this adjustment when frequently used original copy image is too light or dark.

Caution: Before adjusting, check that scanner section is not stained.

Procedure

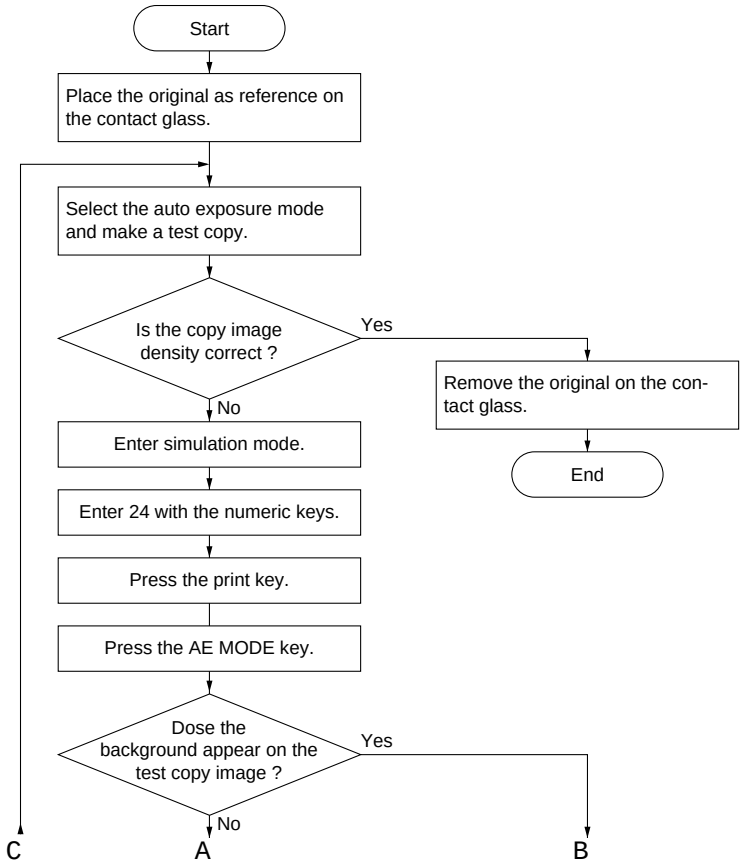

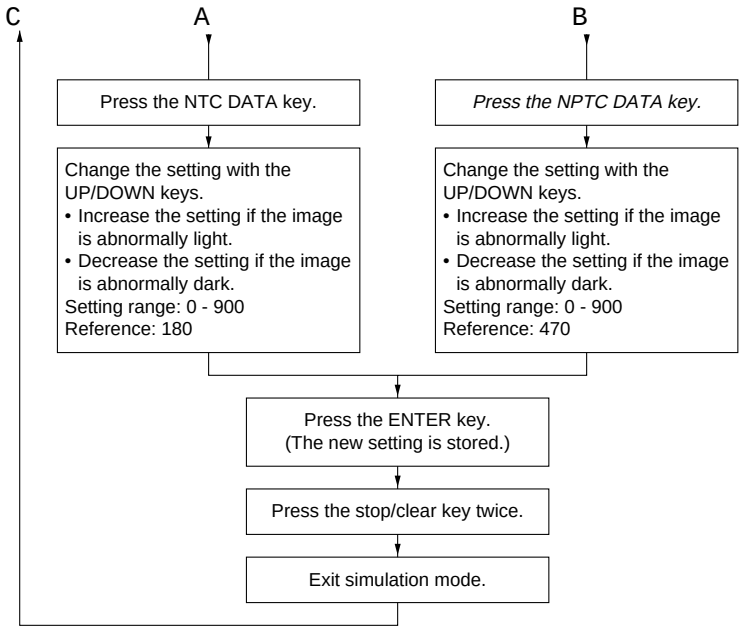
C
A
B
Press the NTC DATA key.
Press the NPTC DATA key.
Change the setting with the UP/DOWN keys.
• Increase the setting if the image is abnormally light.
• Decrease the setting if the image is abnormally dark.
Setting range: 0 - 900
Reference: 180
Change the setting with the UP/DOWN keys.
• Increase the setting if the image is abnormally light.
• Decrease the setting if the image is abnormally dark.
Setting range: 0 - 900
Reference: 470
Press the ENTER key.
(The new setting is stored.)
Press the stop/clear key twice.
Exit simulation mode.

(14) Adjusting the exposure amount for enlargement/reduction mode

Perform the following adjustment if the copy image is not correct at reduction/ enlargement copy or manual exposure (EXP7 (4)).

Cautions:

1) Perform this adjustment after "(11) Setting exposure amount (for equal magnification mode)" (see page 3-3-70) is completed.
2) It is impossible to adjust EXP1, EXP13 (7) and EXP15 (8) for reduction/enlargement mode.

Procedure

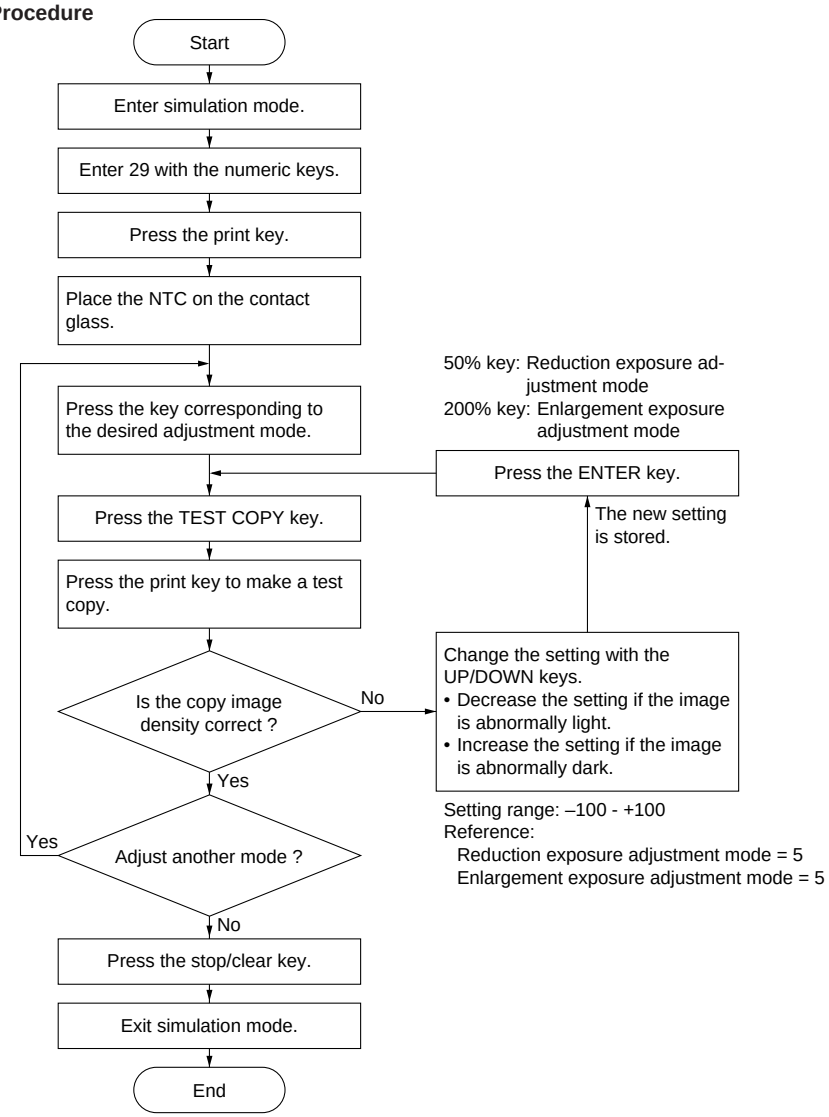

3-3-5 Drum section

(1) Detaching and refitting the drum and drum heater
Follow the procedure below to replace the drum and drum heater.
Cautions:
- Avoid direct sunlight and strong light when detaching and refitting the drum.
- Hold the drum at the ends and never touch the drum surface.
- After removing the drum, keep it in the drum case or storage bag to protect the surface from light.
- When cleaning drum, rub with a clean wears.

Procedure
1. Remove the developing assembly and cleaning assembly.
2. Remove the main charger assembly. (see page 3-3-38)
3. Loosen the retainer pins each (front and rear) holding the drum stopper, then release the drum stoppers in the direction of the arrow.
4. Remove the drum assembly from the image forming section.

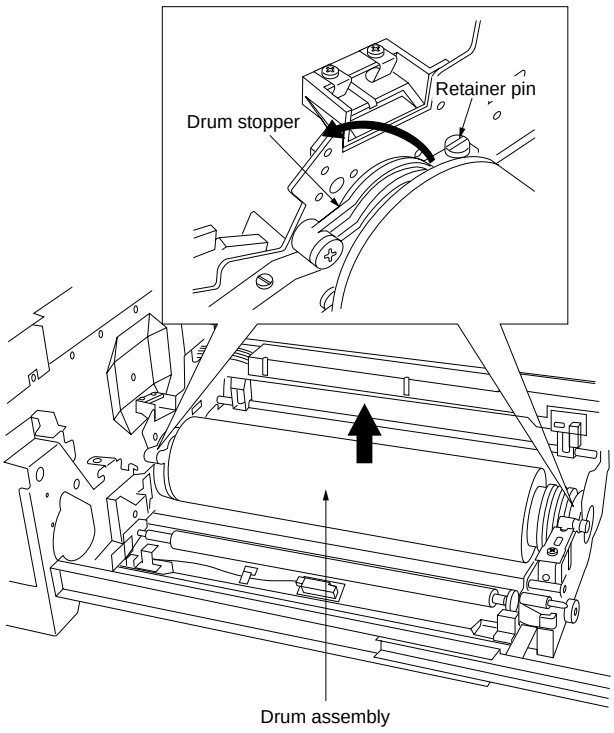

Figure 3-3-67

5. Remove the bearings from the drum assembly.

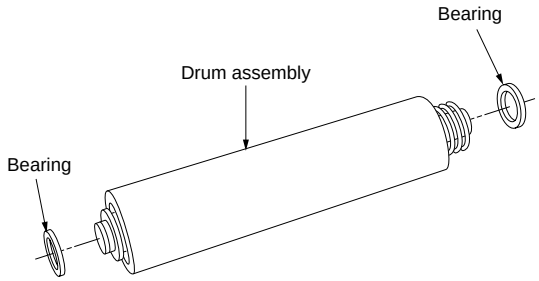

Figure 3-3-68

6. Remove the two retainer pins and two springs, then remove the front drum flange from the drum assembly slowly.
7. Disconnect the 1-pin connector, then remove the front drum flange.
8. Disconnect the 6-pin connector for the drum heater.

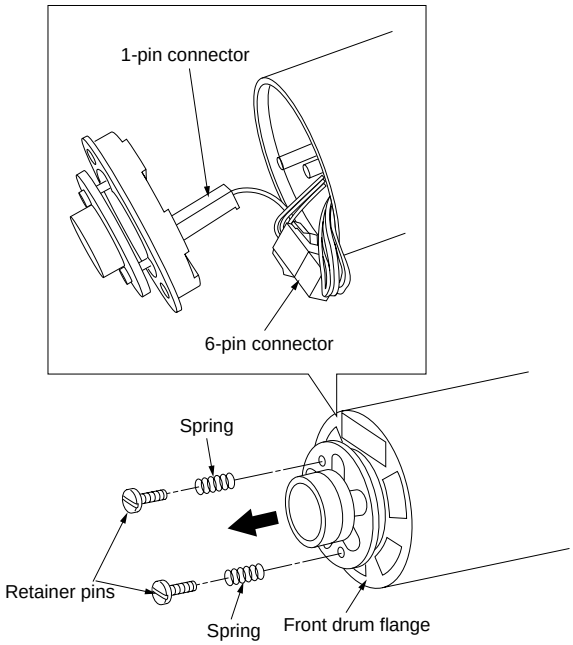

Figure 3-3-69

9. Pull the rear drum flange out together with the drum flange stay from the drum slowly.
10. Pull the drum heater out of the drum.
    * When refitting drum, refit the drum so that the label pasted inside drum is in the machine front.

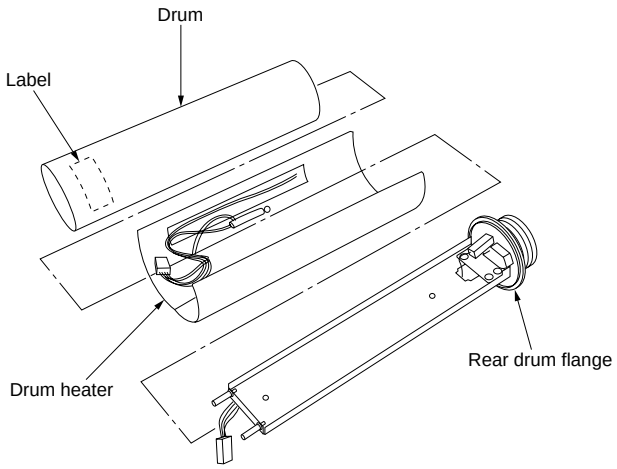

Figure 3-3-70

11. Refit all the removed parts.

(2) Detaching and refitting the front and rear drum electrode wires
Follow the procedure below to check or replace the front and rear drum electrode wires.

Procedure
1. Remove the drum assembly. (see page 3-3-81)
2. Remove the left and right image forming covers.
3. Remove the toner hopper assembly.
4. Remove the three screws (machine front: 2, machine rear: 1), then remove the upper front transfer guide from the image forming assembly.
5. Disconnect the 1-pin connector for the front drum electrode wire.
6. Cut off the binding band, then free the wire from the cord clamp.
   * When refitting, fasten the wire with binding band to its original position.
7. *Remove the screw on the image forming rear side plate and the two screws on the image forming front side plate, then remove the transfer upper front guide plate.*
8. *Remove the screw on the front drum holder lid, then remove the front drum holder lid.*

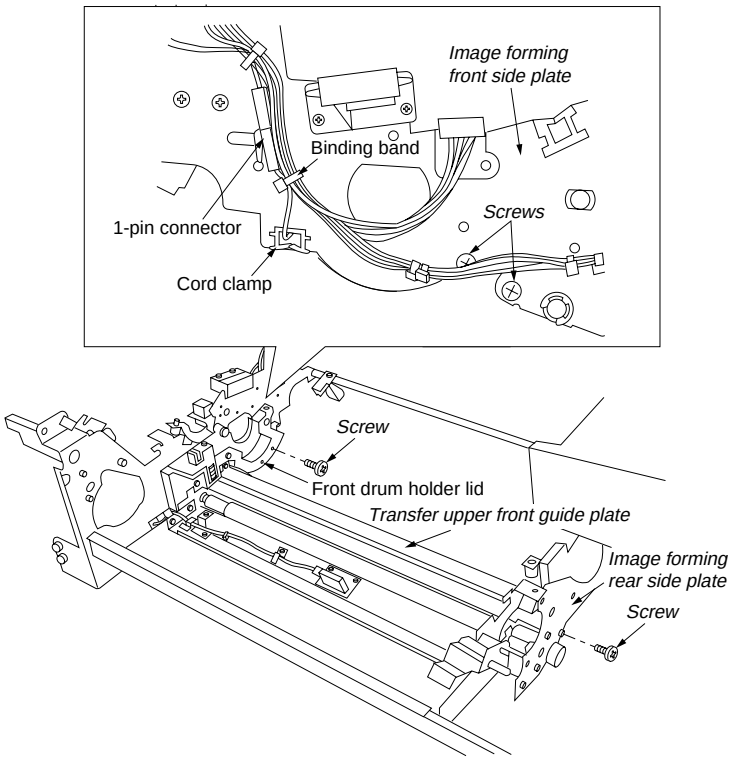

Figure 3-3-71

9. Remove the electrode for the front drum electrode wire from the front drum holder, then remove the front drum electrode wire.

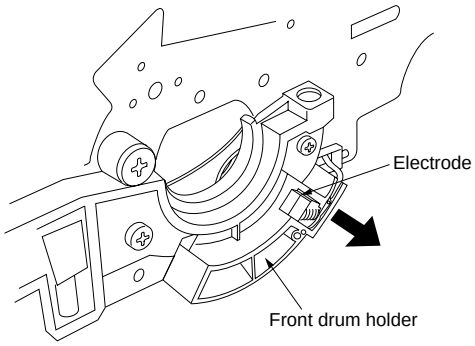

Figure 3-3-72

This page is intentionally left blank.

10. Disconnect the 3-pin connector for the rear drum electrode wire.
11. Cut off the two binding bands.
* When refitting, fasten the wire with binding bands to its original position.
12. Remove the two screws, then remove the rear drum holder lid.

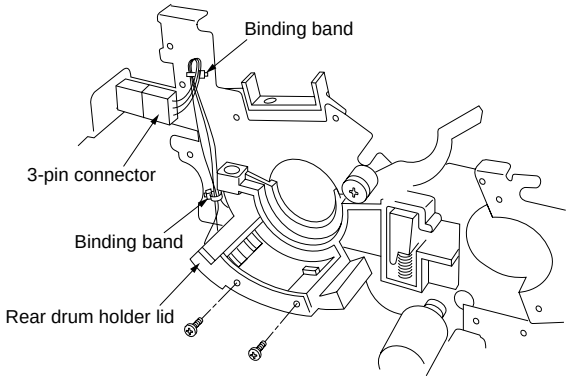

Figure 3-3-73

13. Remove the electrode 1 (black wire) for the rear drum electrode wire from the rear drum holder.
14. Remove the electrode spacer.
15. Remove the electrode 2 (brown wire) for the rear drum electrode wire from the rear drum holder.
16. Remove the electrode 3 (blue wire) for the rear drum electrode wire from the rear drum holder, then remove the rear drum electrode wire.
* When refitting, be careful about following points.
• Be careful of the fitting position of the each electrode.
• When refitting, run the wire of the electrode 3 through the groove (broken line indicated in the figure) between rear drum holder and rear image forming plate.

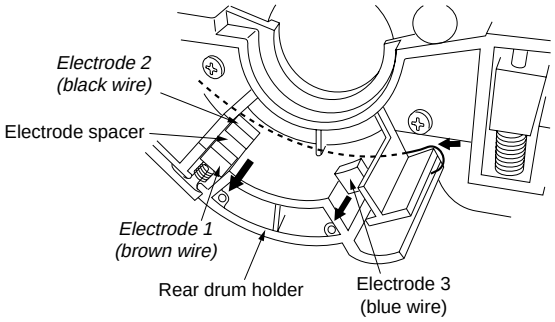

Figure 3-3-74

17. Refit all the removed parts.

(3) Detaching and refitting the drum heater electrodes A and B
Follow the procedure below to replace the drum heater electrodes A and B.

Procedure
1. Remove the drum assembly. (see page 3-3-81)
2. Remove the front drum flange from the drum assembly. (see page 3-3-82)
3. Remove the two screws, then remove the drum heater electrode B.

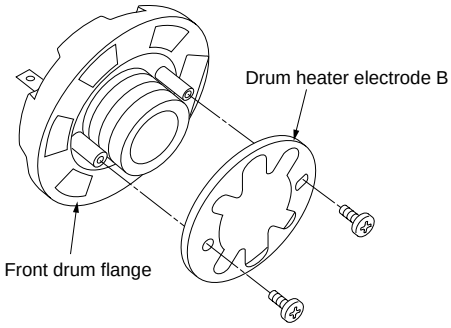

Figure 3-3-75

4. Remove the rear drum flange from the drum assembly. (see page 3-3-83)
5. Remove the two screws each, then remove the two drum heater electrodes A from the rear drum flange.
6. Remove the two screws, then remove the drum heater electrode B from the rear drum flange.

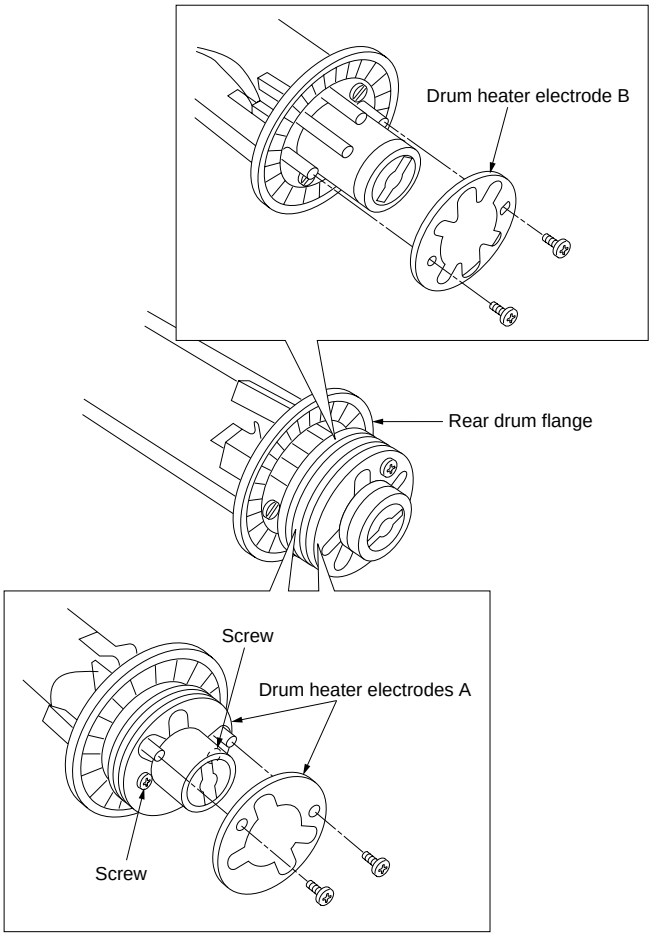

Figure 3-3-76

7. Refit all the removed parts.

This page is intentionally left blank.

(4) Setting main charging voltage

Setting control value of main charging voltage after replacement of drum.

Procedure

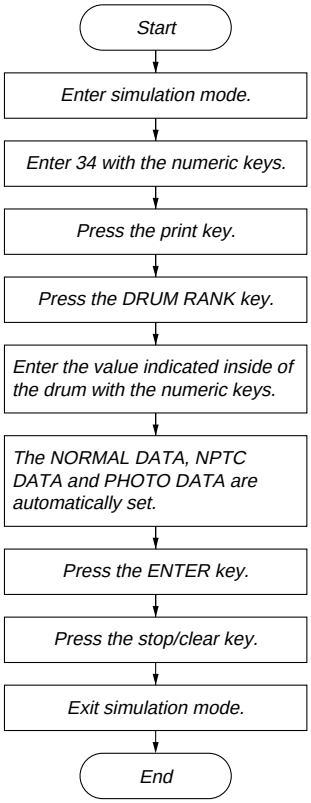

USE: Set this setting after changing the drum.

** Enter the main output voltage DATA corresponding to the drum charging ability (DRUM RANK).*

** When the setting is not input, the dark potential correction value does not match, which may cause problems (the image is too dark or light).*

3-3-6 Developing section

(1) Adjusting the position of the magnetic brush (developing roller) ... (reference)
Check or adjust if the image density is too dark or light.
* Before starting this adjustment, ensure that the correct amount of developer is present.

Procedure

1. Loosen the screw holding the magnet roller adjusting plate.
2. Move the installation position of the magnet roller adjusting plate toward to up or down.
   - When the magnet roller adjusting plate fitting position is moved to upward. The image density becomes darker. (the position of the magnetic brush moves to the downward.
     However, the image resolution becomes deteriorate.
   - When the magnet roller adjusting plate fitting position is moved to downward. The image density becomes lighter. (the position of the magnetic brush moves to the upward.
     However, the faint of dark part for the original image occurs.
3. Refasten the screw holding the magnet roller adjusting plate.
4. After adjustment, make a test copy to check for performance.

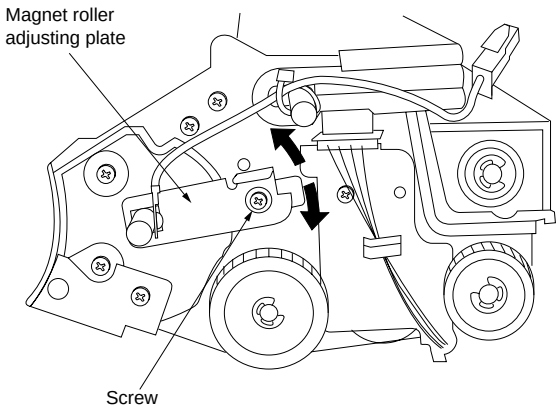

Figure 3-3-77

(2) Detaching and refitting the lower developing roller lever and lower developing roller cam

Follow the procedure below to check or replace the lower developing roller lever and lower developing roller cam.

Procedure

1. Remove the developing assembly from the machine.
2. Remove the E ring, then remove the lower developing roller lever while pressing down the hook of the lower developing roller spring.
3. Remove the lower developing roller spring.

* When refitting, check that the hook of the end of the lower developing roller spring must firmly hooked on the rear lower developing roller bushing and another end must firmly hooked on the lower developing roller lever.

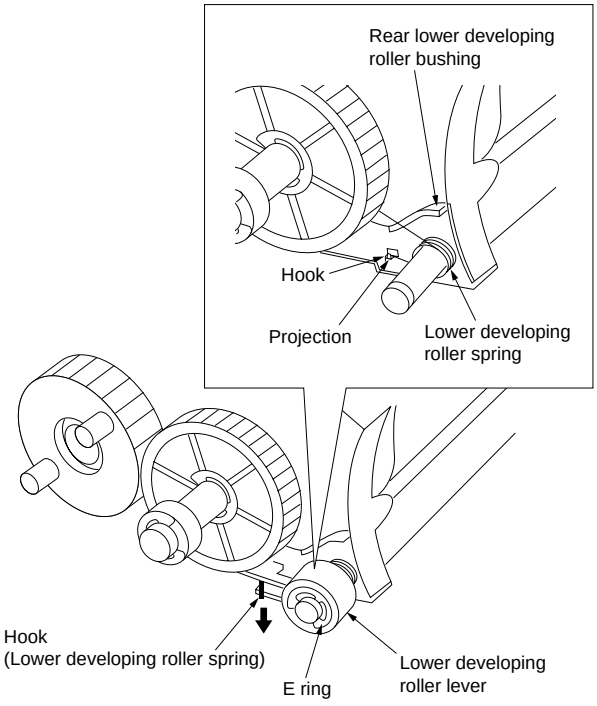

Figure 3-3-78

4. Remove the E ring, then remove the bearing.
5. Remove the E ring, then remove the developing sleeve gear.
   * When refitting, check that the projection of the lower developing cam must be firmly into the groove with sponge inside of the developing sleeve gear. (see figure 3-3-80)

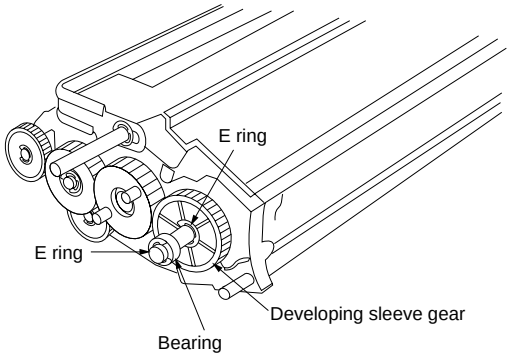

Figure 3-3-79

6. Remove the pin, then remove the lower developing roller cam.
   * When refitting, apply the specified grease to the cam section of the lower developing roller cam.

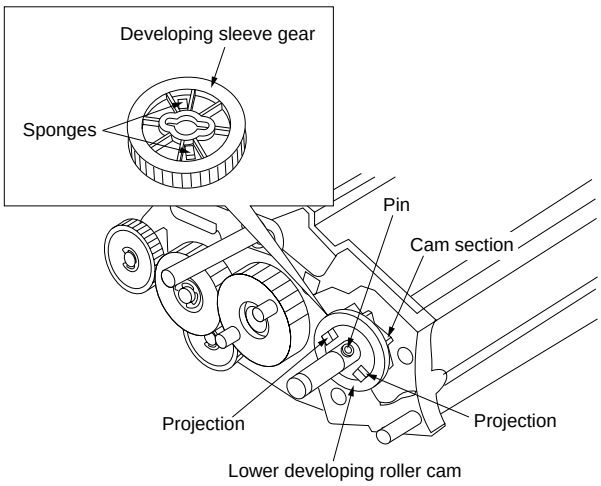

Figure 3-3-80

7. Refit all the removed parts.

(3) Detaching and refitting the developing blade assembly

Follow the procedure below to check or replace the developing blade assembly.

* When detaching and refitting the developing blade assembly, be sure to remove the developer.

Procedure

1. Remove the lower developing roller lever and lower developing roller spring. (see page 3-3-89)
2. Remove the screw each, then remove the front and rear lower developing roller bushings.
3. Remove the lower developing roller.

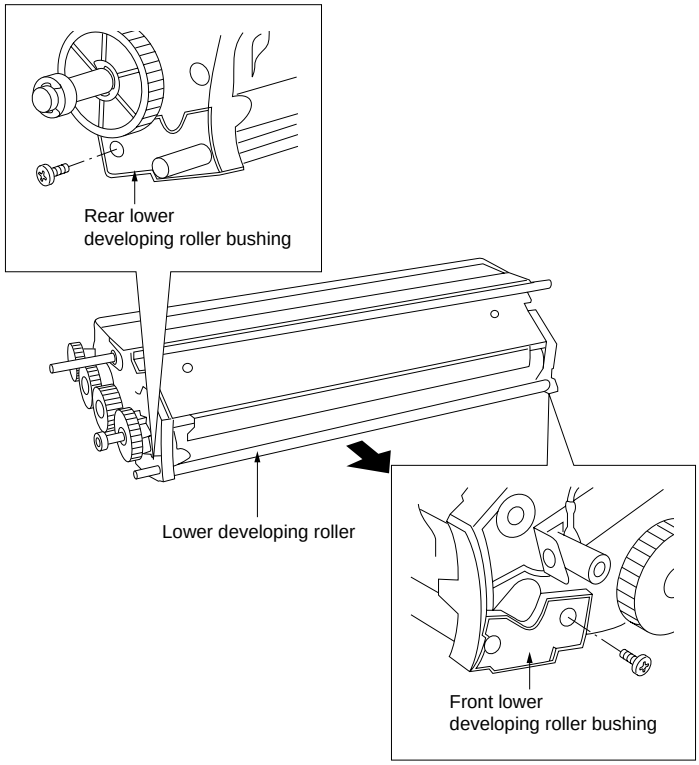

Figure 3-3-81

4. Remove the two screws, then remove the developing blade assembly.

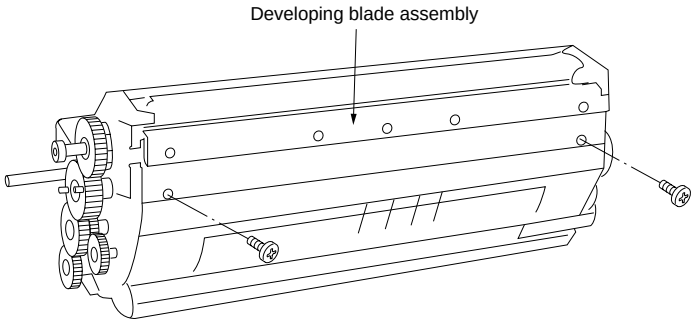

Figure 3-3-82

5. Refit all the removed parts.

(4) Adjusting developing bias voltage

Perform the following adjustment only when carrier or background appears on the copy image.

Procedure

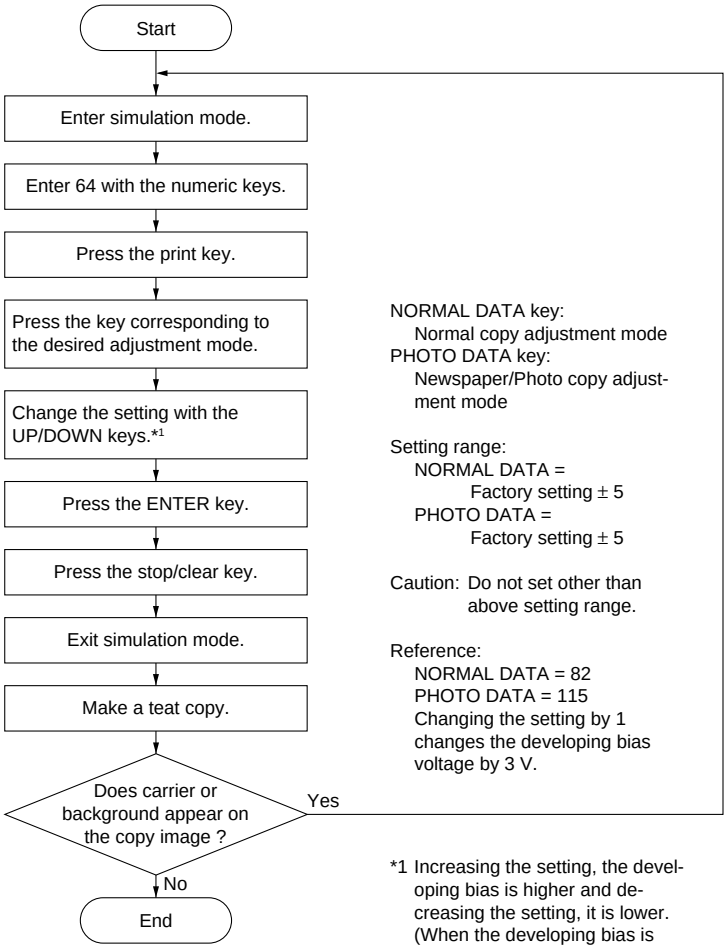

NORMAL DATA key:
Normal copy adjustment mode
PHOTO DATA key:
Newspaper/Photo copy adjustment mode

Setting range:
NORMAL DATA =
Factory setting ± 5
PHOTO DATA =
Factory setting ± 5

Caution: Do not set other than above setting range.

Reference:
NORMAL DATA = 82
PHOTO DATA = 115
Changing the setting by 1 changes the developing bias voltage by 3 V.

*1 Increasing the setting, the developing bias is higher and decreasing the setting, it is lower. (When the developing bias is low, background appears and the developing bias is high, copy image is lighter.)

3-3-7 Transfer section

(1) Detaching and refitting the transfer charger belt
Follow the procedure below to clean or replace the transfer charger belt.
Cautions:
- When handling the transfer charger belt, hold the both end of the transfer charger belt (within 10 mm), do not touch the surface with bare hand.
- Be careful not so as to adhere grease on the surface of the transfer charger belt.

Procedure
1. Pull the transfer/fixing sections out of the machine.
2. Remove the stop ring, then remove the bearing.
3. Remove the stop ring, then remove the bushing.
4. Disconnect the 1-pin connector, then remove the transfer belt unit from the machine.

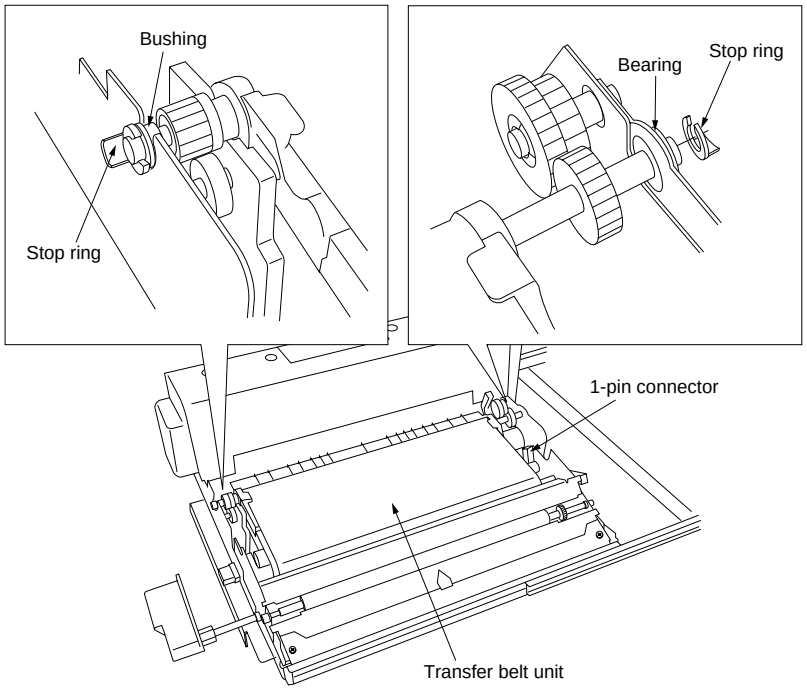

Figure 3-3-83

5. Remove the screw each, then rotate the front and rear turn frames in the direction of the arrow a .
6. Pull out the transfer charger belt in the direction of the arrow b , then remove the transfer charger belt from the transfer belt unit.

* When refitting the transfer charger belt, check that the transfer charger belt pass under the belt guide section of the front and rear turn frame.
After refitting, turn the belt drive roller and turn the transfer charger belt two or three times, check that the edge of the transfer charger belt runs on to the front/rear turn frame and the side plate section of the transfer charger belt unit. If so, rotate the transfer charger belt until the edge of the transfer charger belt does not run on.

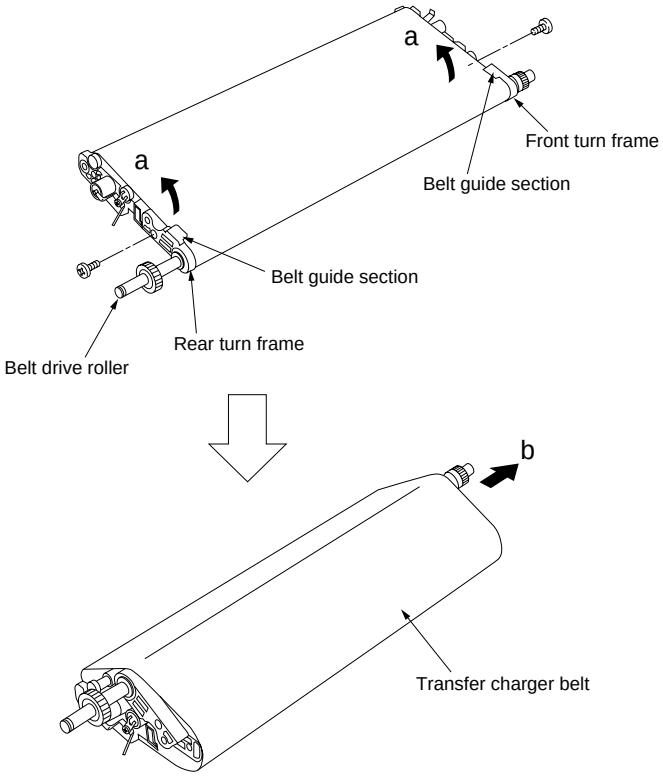

Figure 3-3-84

7. Refit all the removed parts.

(2) Detaching and refitting the transfer roller
Follow the procedure below to clean or replace the transfer roller.

Procedure
1. Remove the transfer charger belt. (See page 3-3-94.)
2. Remove the two screws, then remove the transfer roller retainer.
3. Remove the transfer roller.
4. Remove the bearings from the end of the transfer roller.

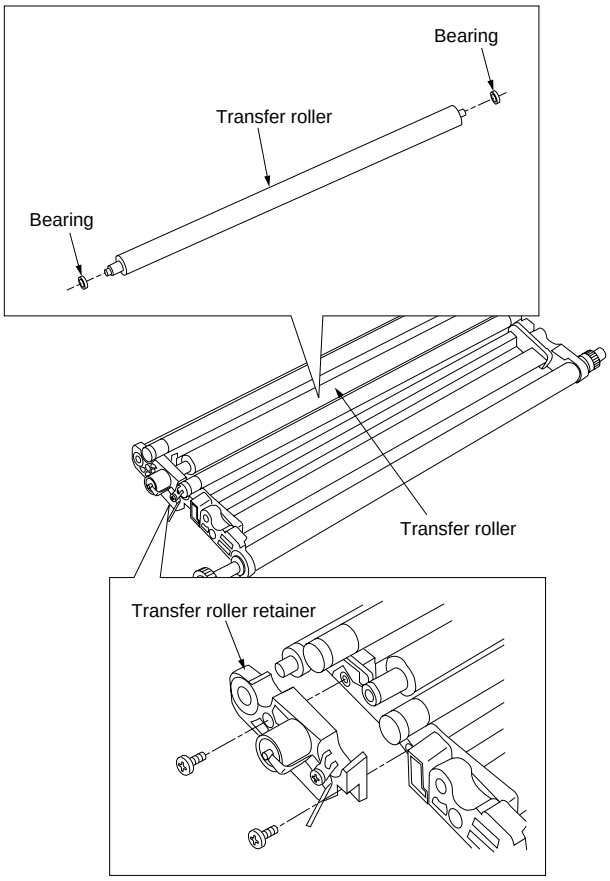

Figure 3-3-85

5. Refit all the removed parts.

(3) Detaching and refitting the belt cleaning brush
Follow the procedure below to clean or replace the belt cleaning brush.

Procedure
1. Remove the transfer belt unit. (See page 3-3-94.)
2. Remove the four screws and 1-pin connector for the brush electrode, then remove the belt cleaning housing.

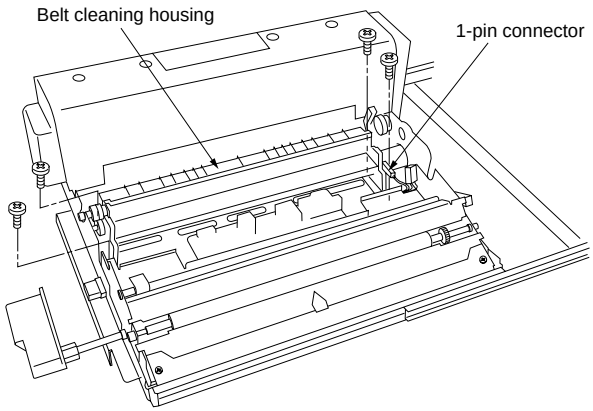

Figure 3-3-86

3. Remove the screw, then remove the brush electrode.
4. Remove the stop ring, then remove the bushing.

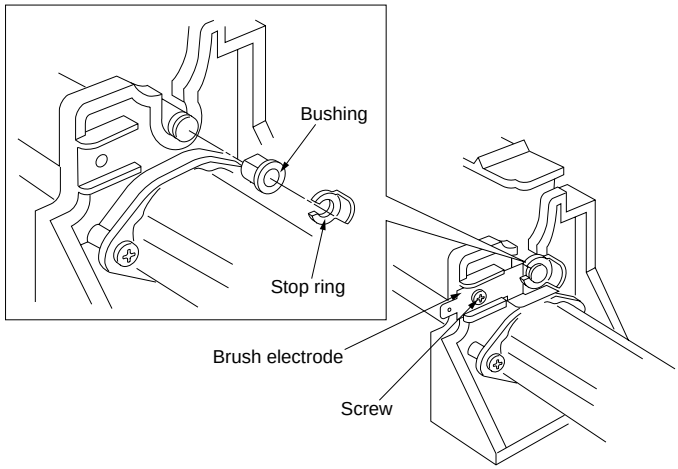

Figure 3-3-87

5. Shift the belt cleaning brush in the direction of the arrow a and remove the pin, then remove the gear and bushing.
6. Remove the belt cleaning blush from the belt cleaning housing.

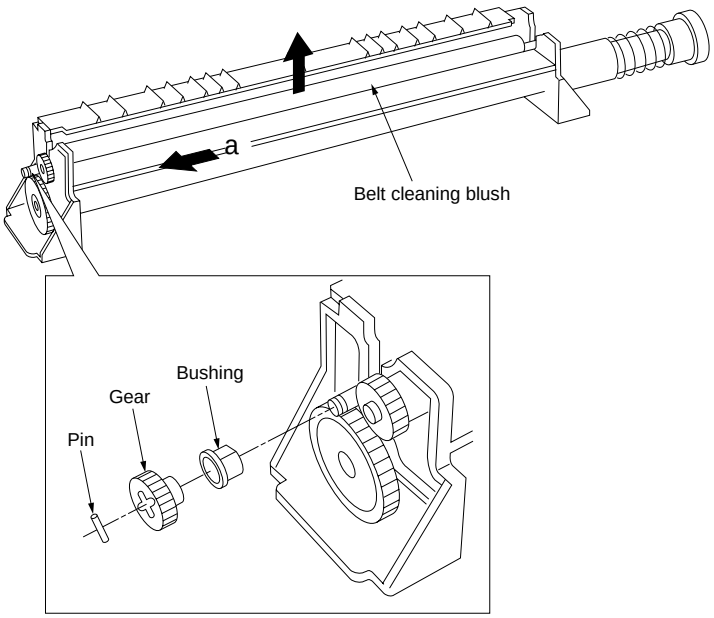

Figure 3-3-88

7. Refit all the removed parts.

(4) Adjusting the transfer timing ..... (reference)
Perform the following adjustment when copying is made using the thin paper at high temperature high humidity, paper misfeed frequently occurs. (Adjust the transfer charging start timing, and then adjust the separation efficiency.)

Procedure

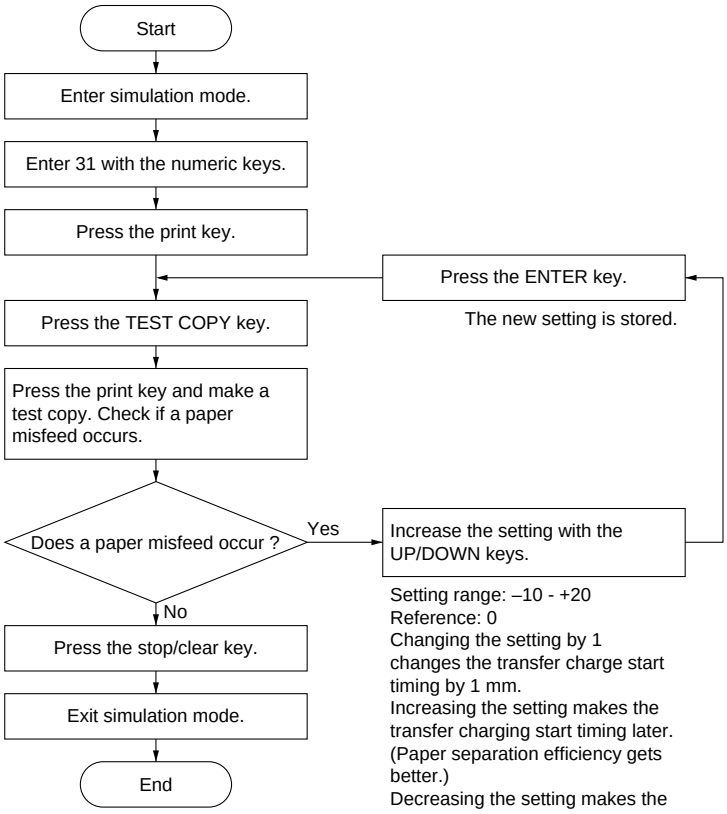

3-3-8 Cleaning section

(1) Detaching and refitting the cleaning blade
Follow the procedure below to replace the cleaning blade.

Procedure

1. Remove the cleaning assembly from the machine.
2. Remove the two screws, then remove the upper cleaning cover.
   * When refitting, with pushing the upper cleaning cover all the way in the direction of the arrows to fasten.

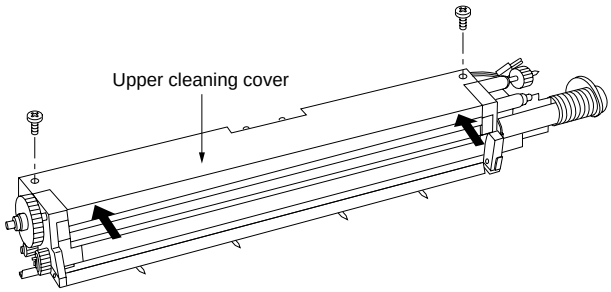

Figure 3-3-89

3. Remove the retainer pin, then remove the cleaning blade.
   * When refitting, check that the both end of the cleaning blade is in contact with the side of the sponge in the figure. (never run on to the sponge)

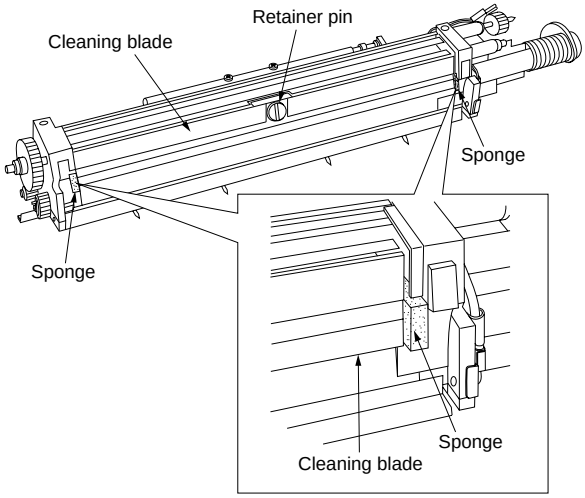

Figure 3-3-90

4. Replace the cleaning blade.
5. Loosen the screw holding the blade release slide plate.
6. While lifting the cleaning blade weight up, slide the blade release slide plate in the direction of the arrow a and fix the cleaning blade to the release position.
7. Fasten the screw holding the blade release slide plate.

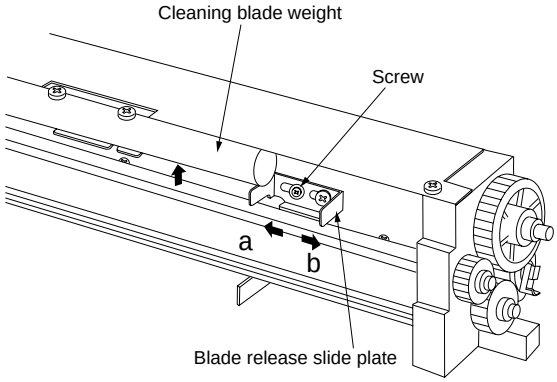

Figure 3-3-91

8. Refit all the removed parts.
9. Turn the main switch on and enter simulation mode.
10. Enter 40 (Applying toner to the cleaning blade) with the numeric keys and press the print key.
11. Press the ENTER key.
    * The machine starts driving and the toner apples to the drum.
12. After the machine stops driving, open the front cover and pull out the image forming section, then loosen the screw holding the blade release slide plate.
13. Slide the blade release slide plate in the direction of the arrow b , contact the cleaning blade to the drum.(see figure 3-3-91)
14. Fasten the screw holding the blade release slide plate.
15. Push back the image forming section and close the front cover.
    * The machine starts driving and the applying toner to the cleaning blade starts.
16. After machine stops, exit the simulation mode.

(2) Detaching and refitting the cleaning brush
Follow the procedure below to clean or replace the cleaning brush.

Procedure
1. Remove the cleaning assembly from the machine.
2. Remove the stop ring, then remove the gear and bushing (plastic: white).
3. Remove the screw holding the cleaning brush mount assembly.

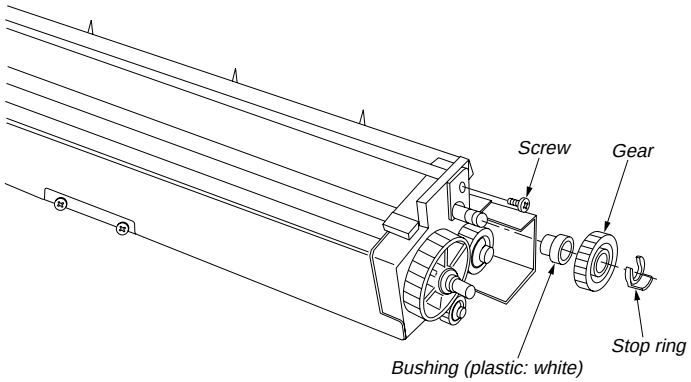

Figure 3-3-92

4. Remove the screw, then remove the grounding terminal and cleaning brush terminal.
5. Remove the stop ring, then remove the bushing (metal).

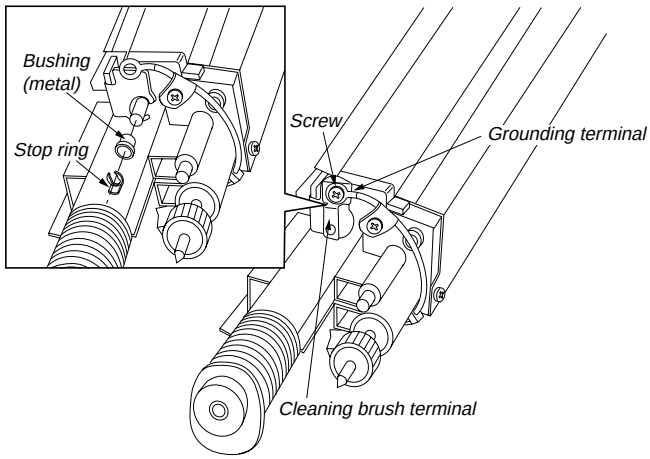

Figure 3-3-93

6. Remove the screw, then remove the cleaning brush mount assembly.
7. Remove the cleaning brush.

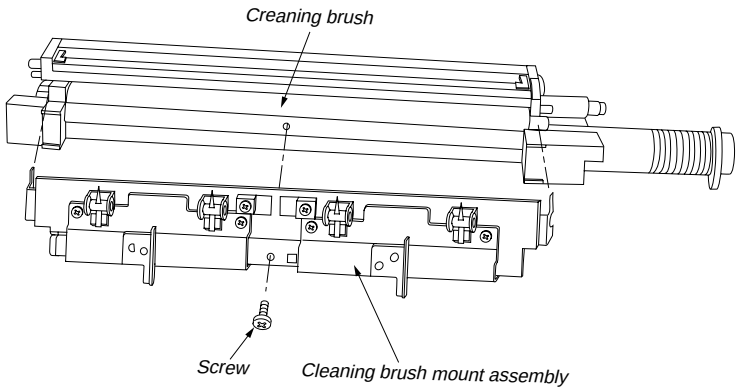

Figure 3-3-94

8. Refit all the removed parts.

(3) Detaching and refitting the cleaning brush mount
Follow the procedure below to replace the cleaning brush mount.

Procedure
1. Remove the cleaning brush mount assembly. (see page 3-3-103)
2. Remove the separation claw assemblies. (see page 3-3-105)
3. Remove the two screws, then remove the lower cleaning base assembly from the cleaning brush mount.
   * When refitting, firmly insert the four projections of the lower cleaning base assembly into the holes of the cleaning brush mount.

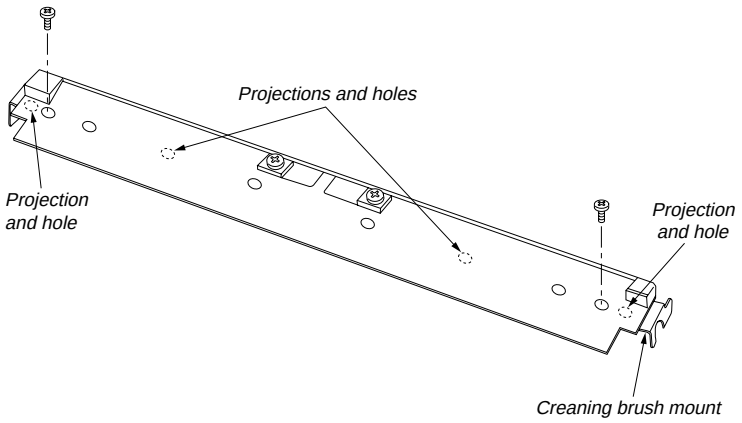

Figure 3-3-95

4. Refit all the removed parts.

(4) Detaching and refitting the separation claw assembly
Follow the procedure below to replace the separation claw assembly.

Procedure

1. Remove the cleaning assembly from the machine.
2. Remove the two screws each, then remove the separation claw assemblies.
   * When refitting, press the separation claw assembly in the direction of the arrow (away from the drum), and fasten the screws.

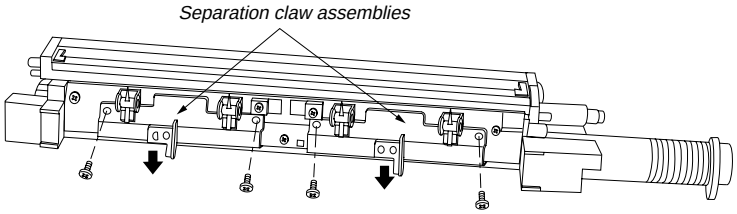

Figure 3-3-96

3. Refit all the removed parts.

3-3-9 Fixing section

(1) Detaching and refitting the fixing unit thermostats 1 and 2
Follow the procedure below to check or replace the fixing unit thermostats.
Caution: Use the specified thermostat for replacement. Do not substitute a simple wire or similar; otherwise, the copier will be seriously damaged.

Procedure
1. Pull the transfer/fixing sections out of the machine.
2. Remove the three retainer pins and screw, then remove the fixing cover.

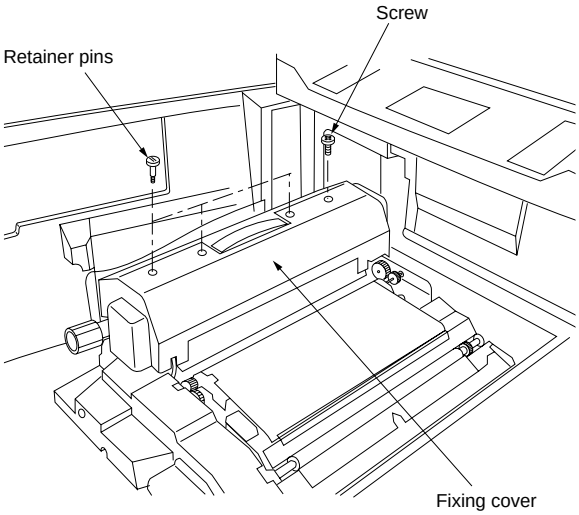

Figure 3-3-97

3. Disconnect the connectors for the fixing heater wire and fixing unit thermostat wire from the fixing unit thermostat 1.
 * When disconnecting the connector for the fixing unit thermostat wire, disconnect the connector while pressing the projection of the connector.
4. Remove the two screws, then remove the fixing unit thermostat 1.
5. Disconnect the connectors for the fixing unit wire and fixing unit thermostat wire from the fixing unit thermostat 2.
 * When disconnecting the connector for each wire, disconnect the connector while pressing the projection of the connector.
6. Remove the two screws, then remove the fixing unit thermostat 2.
 * When refitting the fixing unit thermostat, refit the thermostat so that the fixing unit thermostat 1 with maker marking is in the machine front and he fixing unit thermostat 2 with type number is in the machine rear.

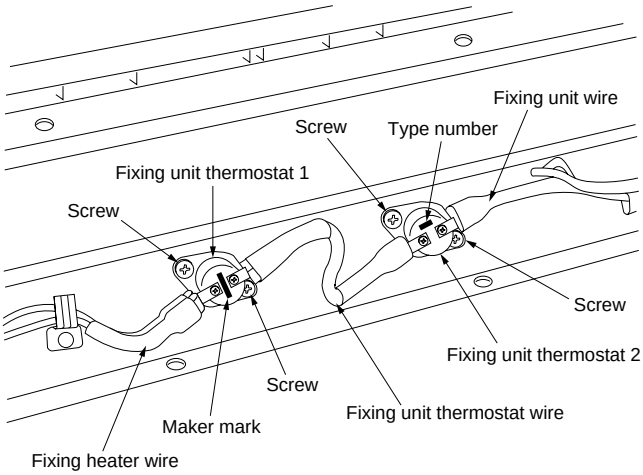

Figure 3-3-98

7. Refit all the removed parts.

(2) Detaching and refitting the oil roller
Follow the procedure below to replace the oil roller.

Procedure
1. Remove the fixing cover. (see page 3-3-106)
2. Remove the screw each, then release the front and rear oil roller pressing plates in the direction of the arrow a .
3. Remove the oil roller from the fixing assembly.

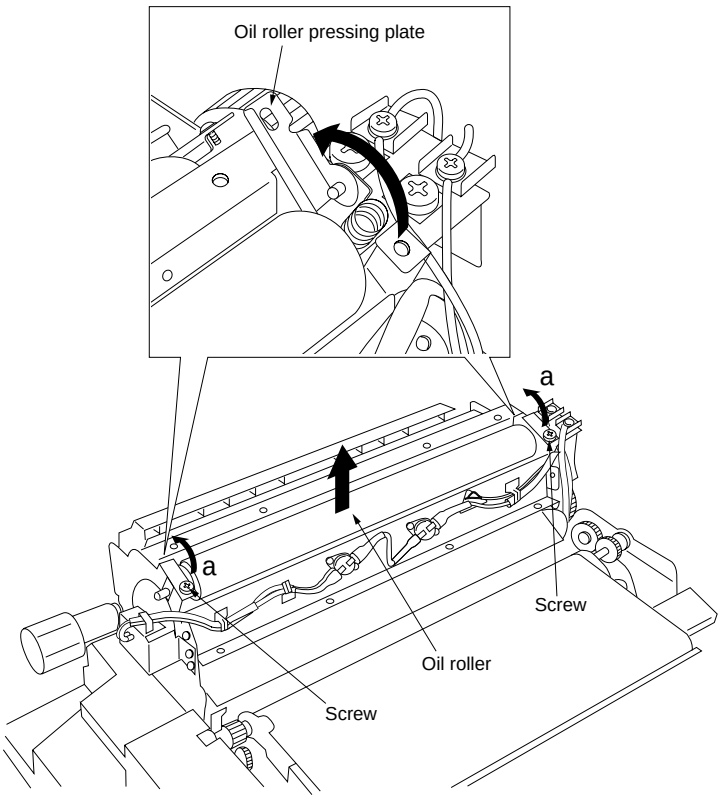

Figure 3-3-99

4. Remove the oil roller bushings from the both ends of the oil roller.
 * When refitting the oil roller to the fixing assembly, refit so that the side of long shaft (b indicated in the figure) is in the machine front.

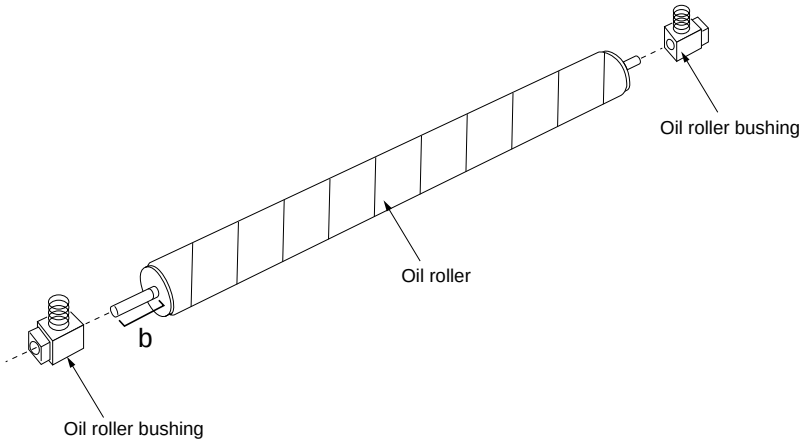

Figure 3-3-100

5. Refit all the removed parts.

(3) Detaching and refitting the upper cleaning roller
Follow the procedure below to replace the upper cleaning roller.

Procedure
1. Remove the fixing cover. (see page 3-3-106)
2. Remove the screw each, then release the front and rear upper cleaning roller pressing plates in the direction of the arrow a .
3. Remove the upper cleaning roller from the fixing assembly.

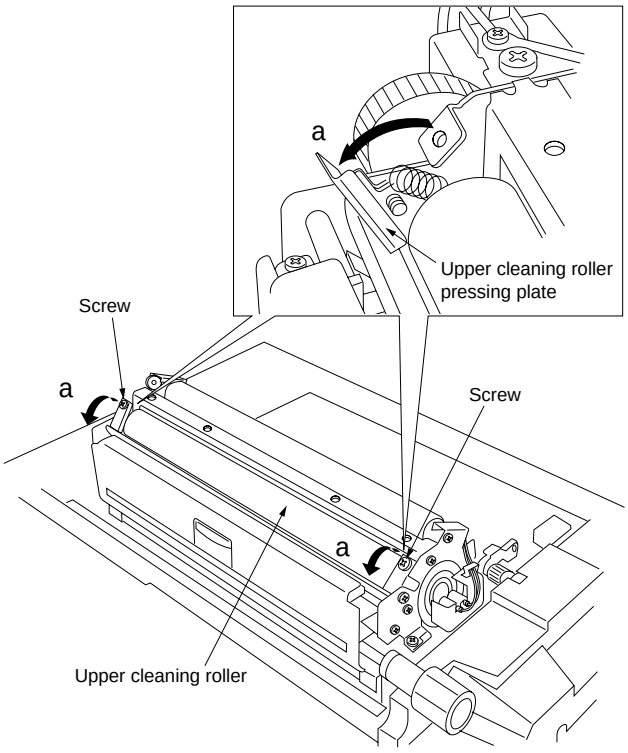

Figure 3-3-101

4. Remove the upper cleaning roller bushing from the upper cleaning roller (machine front).
5. Remove the E ring, then remove the upper cleaning roller gear, pin and upper cleaning roller bushing from the upper cleaning roller (machine rear).

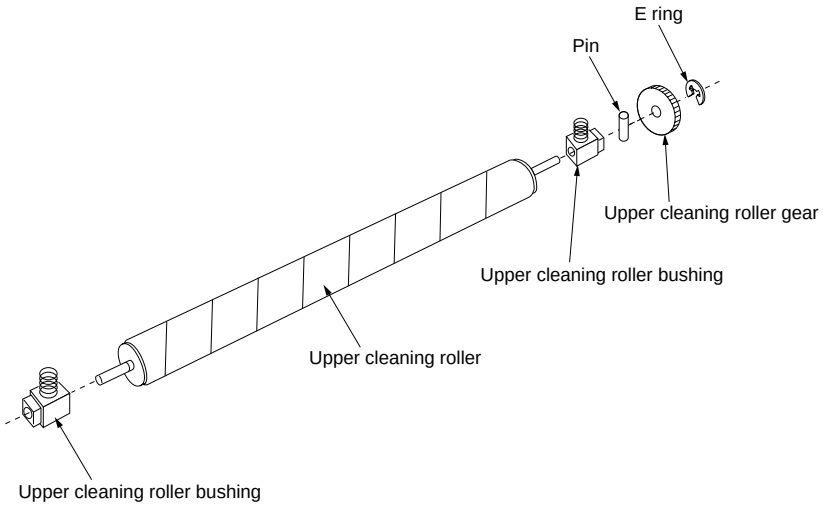

Figure 3-3-102

6. Refit all the removed parts.

(4) Detaching and refitting the fixing heaters M and S

Follow the procedure below to check or replace the fixing heaters M and S.

Procedure

1. Pull the fixing/conveying sections out of the machine.
2. Disconnect the 7-pin connector for the fixing assembly.
3. Release the two cord clamps, then free the wire for the 7-pin connector from the cord clamps.
4. Open the fixing eject cover.
5. Remove the four screws, then remove the fixing assembly.

* When refitting the fixing assembly, be careful about following points.

- Check that the pins (broken line circles in the figure) of the fixing conveying unit must be firmly into the notches of the fixing side plate.
- While passing the fixing assembly in the direction of the arrow a (machine front), after fasten the two screws of the machine front, fasten the two screws of the machine rear.

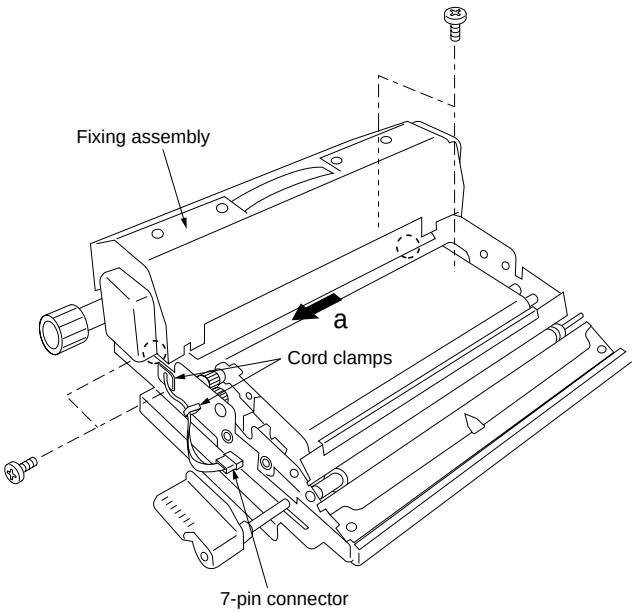

Figure 3-3-103

6. Remove the fixing cover. (see page 3-3-106)
7. Disconnect the connector for the fixing heater from the fixing unit thermostat 1.
8. Release the cord clamp, then free the wire for the fixing heater from the cord clamp and two cord clamp sections of the fixing assembly.
9. Remove the screw (M3), then remove the terminals for the fixing heater S and fixing unit wire.
10. Remove the screw (M4), then remove the terminals for the fixing heater M and fixing unit wire.
    * When fastening the terminal of the fixing heater M, be sure to fasten the screw with pressing all the way to the machine left (in the direction of the arrow b).
11. Remove the screw, then remove the rear heater support plate.
12. Pull the fixing heaters M and S out to the machine rear side (in the direction of the arrow a), then remove the fixing heaters M and S from the fixing assembly.
    * When refitting the fixing heaters M and S, place the fixing heater M on the right side and fixing heater S on the left side of the machine.

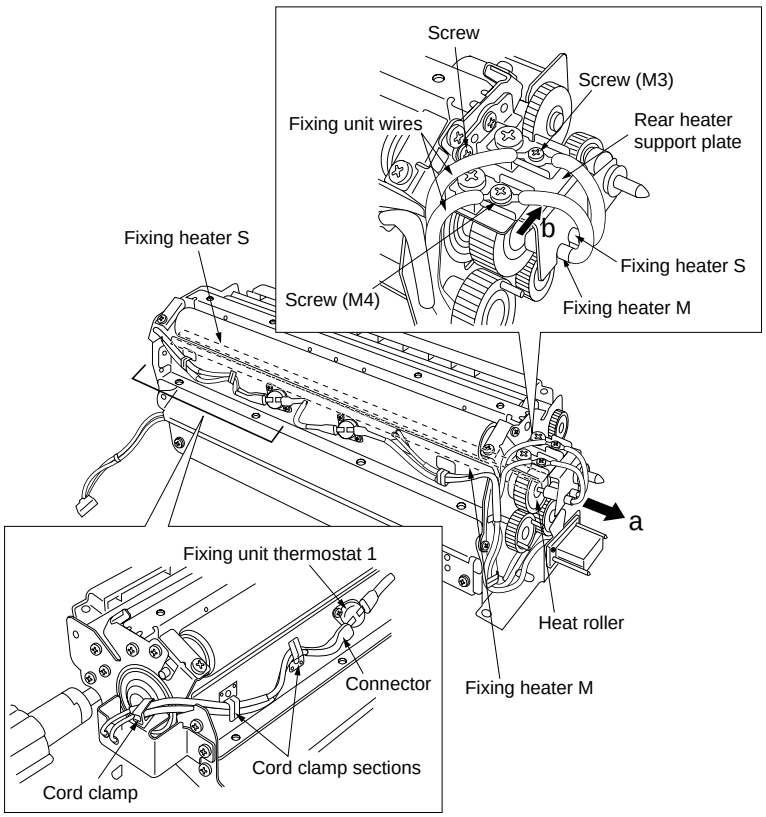

Figure 3-3-104

13. Disconnect the connector (male) for the fixing heater S from the connector (female) for fixing heater M.

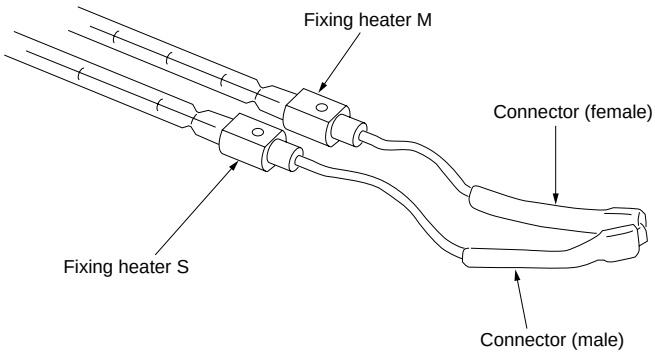

Figure 3-3-105

14. Refit all the removed parts.

(5) Detaching and refitting the fixing unit thermistor

Follow the procedure below to check or replace the fixing unit thermistor.

Procedure

1. Remove the fixing assembly. (see page 3-3-112)
2. Remove the fixing cover. (see page 3-3-106)
3. Disconnect the connector for the fixing unit thermostat 2.
   * When disconnecting the connector, remove while pressing the projection of the connector.
4. Disconnect the 2-pin connector for the fixing unit thermistor.
5. Free the wire for the fixing unit thermistor from the three cord clamp sections of the fixing assembly.
6. Remove the screw, then remove the fixing unit thermistor.
   * When refitting the fixing thermistor, check that the projection of the fixing thermistor must be firmly into the notch the fixing assembly.

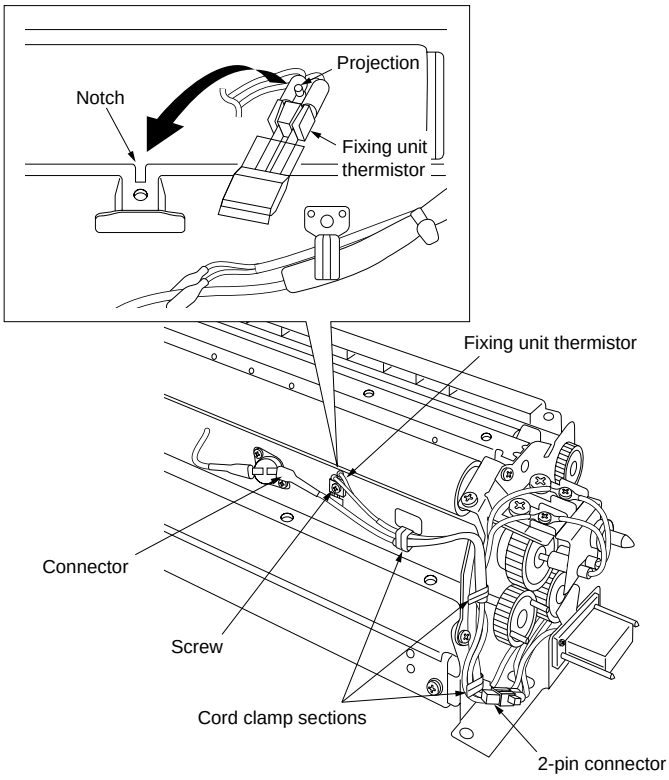

Figure 3-3-106

7. Refit all the removed parts.

(6) Detaching and refitting the lower cleaning roller
Follow the procedure below to replace the lower cleaning roller.

Procedure
1. Remove the fixing assembly. (see page 3-3-112)
2. Remove the two screws, then remove the lower cleaning roller mount from the fixing assembly.

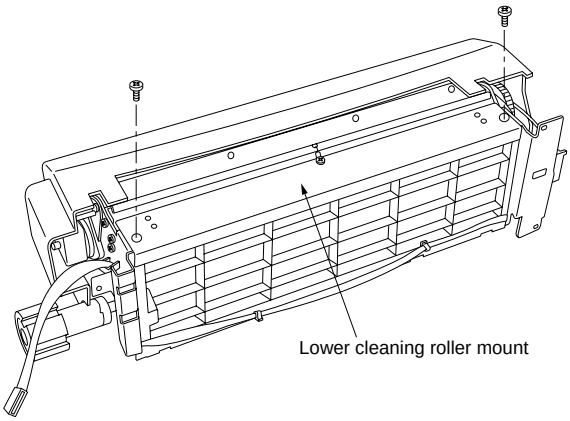

Figure 3-3-107

3. Remove the crimp-style spring and slide the lower cleaning roller bushing in the direction of the arrow 1 , then remove the lower cleaning roller bushing from the lower cleaning roller.
4. Pull out the lower cleaning roller in the direction of the arrow 2 and remove the lower cleaning roller from the bushing on the opposite side, then remove the lower cleaning roller.

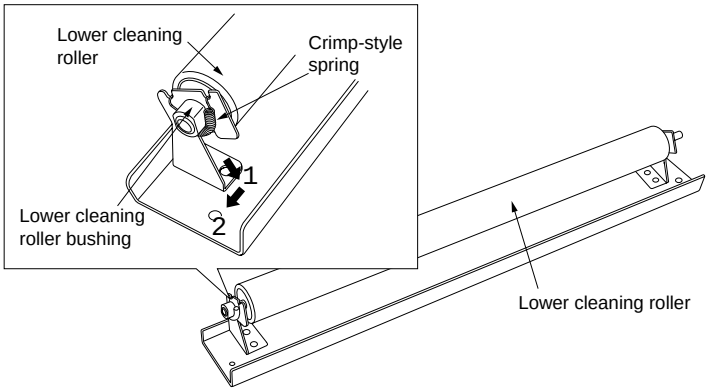

Figure 3-3-108

5. Refit all the removed parts.

(7) Detaching and refitting the heat roller and press roller
Follow the procedure below to clean or replace the heat roller and press roller.

Procedure

1. Remove the fixing assembly from the machine. (see page 3-3-112)
2. Remove the fixing cover. (see page 3-3-106)
3. Remove the screw, then remove the fixing eject unit holder.
4. Open the fixing eject cover, then remove the fixing eject cover from the fixing assembly as shown in the figure.
   * When refitting, the hinge of the fixing eject cover on the rear of the machine must be firmly into the gap between the groove of the fixing assembly and the rear fixing eject unit holder. (section indicated by round mark in the figure)

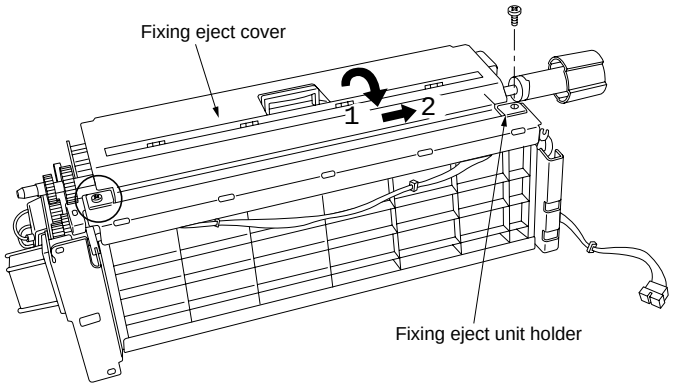

Figure 3-3-109

5. Remove the two screws, then open the fixing assembly.

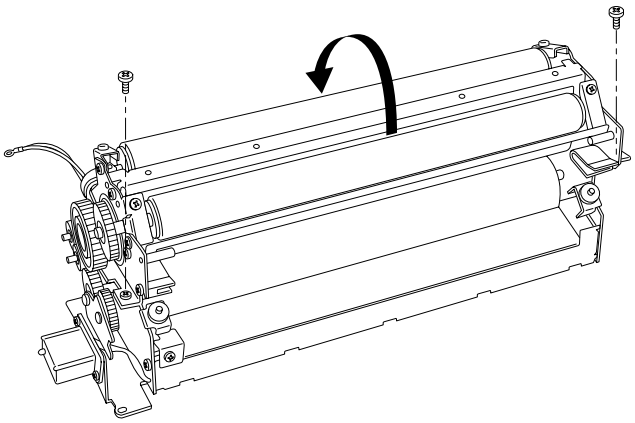

Figure 3-3-110

6. Remove the press roller from the fixing assembly.
7. Remove the C ring, then remove the bearing (machine front).
8. Remove the screw, then slide the heat roller gear in the direction of the arrow a .
9. Slide the heat roller in the direction of the arrow 1 and remove the heat roller from the bearing (machine rear).
10. Remove the heat roller from the fixing assembly as shown in the arrows 2 and 3 .

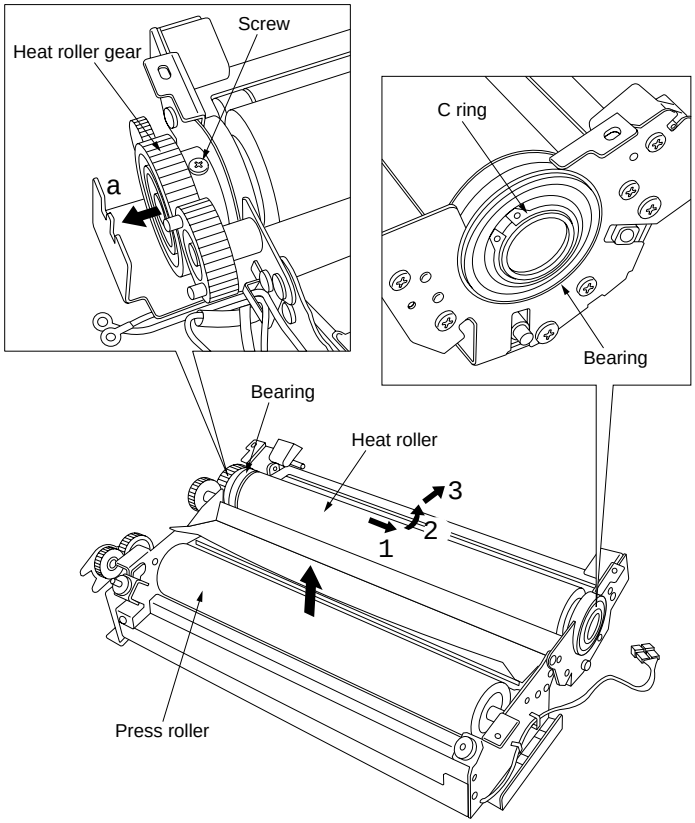

Figure 3-3-111

11. Refit all the removed parts.

(8) Detaching and refitting the heat roller separation claw
Follow the procedure below to clean or replace the heat roller separation claw.

Procedure
1. Remove the fixing eject cover from the fixing assembly. (see page 3-3-117)
2. Remove the four screws, then remove the heat roller separation claw holder.
3. Remove the heat roller separation claw spring each, then remove the seven heat roller separation claws.

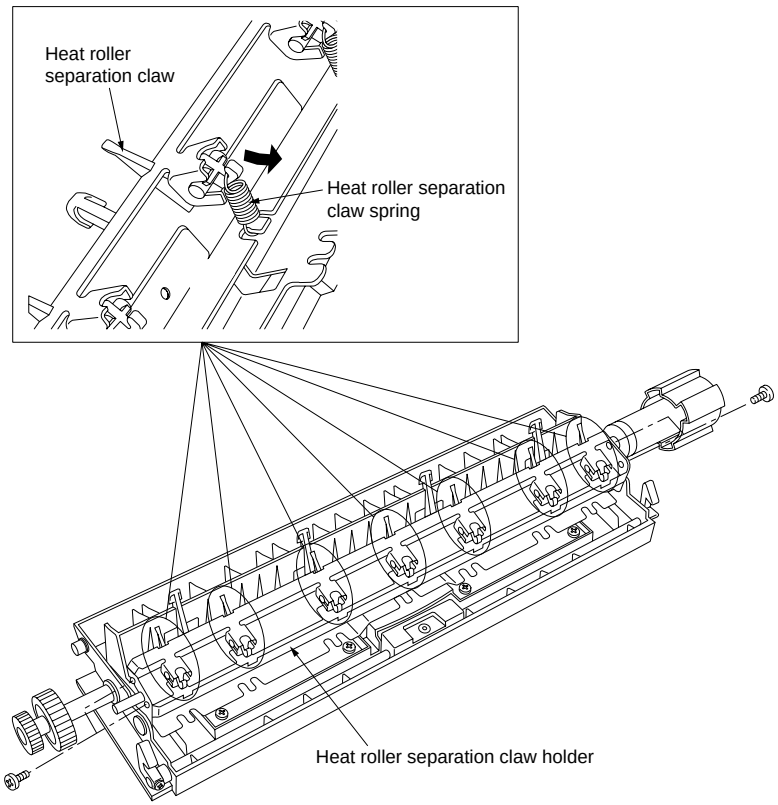

Figure 3-3-112

4. Refit all the removed parts.

(9) Detaching and refitting the press roller separation claw
Follow the procedure below to clean or replace the press roller separation claw.

Procedure
1. Remove the fixing eject cover from the fixing assembly. (see page 3-3-117)
2. Remove the two retainer pins and screw, then remove the lower fixing eject guide from the fixing eject cover.

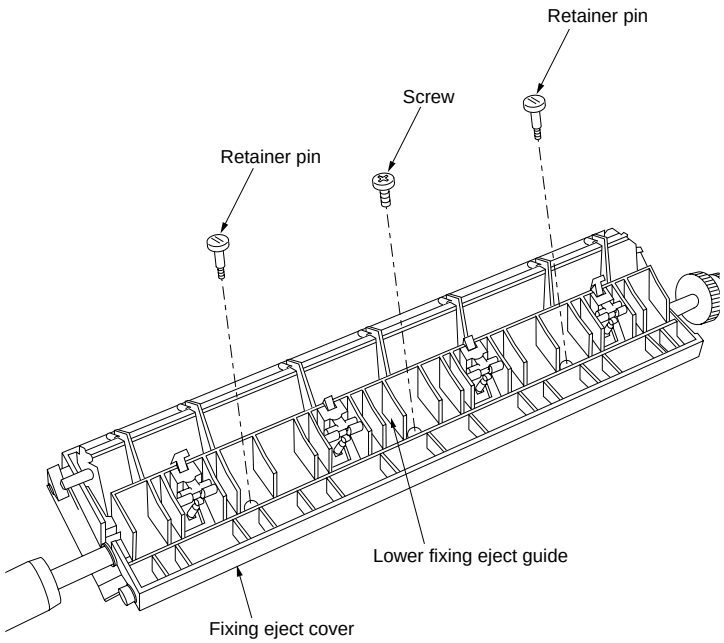

Figure 3-3-113

3. Release the two claws each, then remove the four fixing separation claw protecting plates from the lower fixing eject guide.
4. Remove the press roller separation claw spring each, then remove the four press roller separation claws.

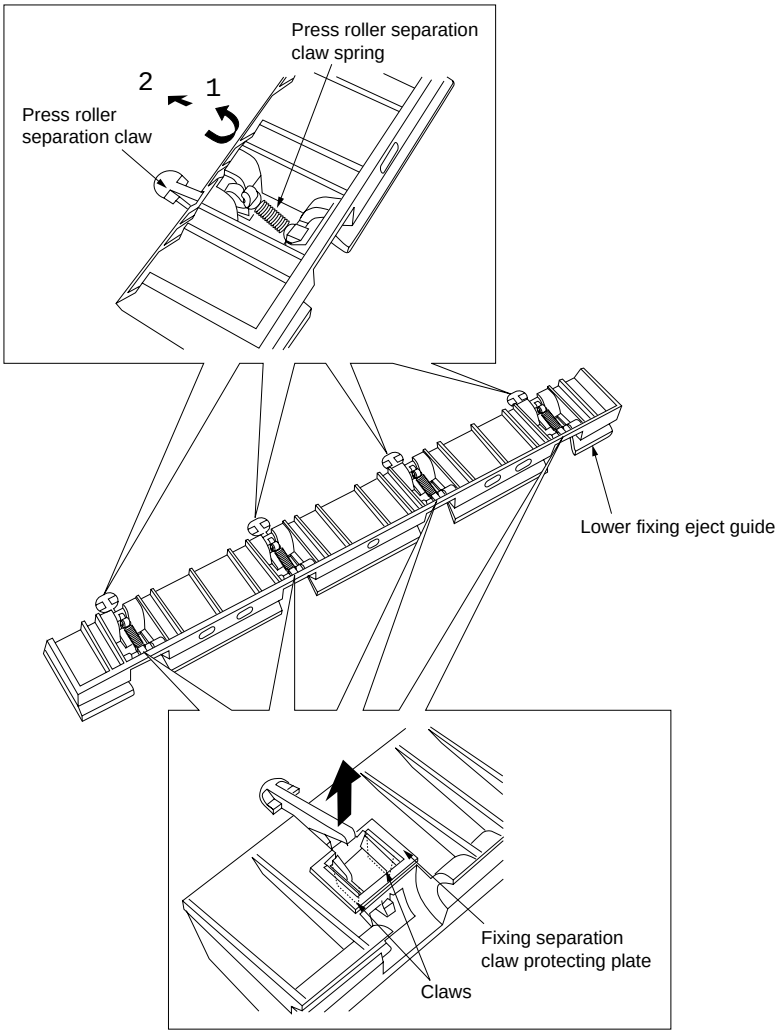

Figure 3-3-114

5. Refit all the removed parts.

3-3-10 Duplex section

(1) Detaching and refitting the duplex forwarding pulley
Follow the procedure below to clean or replace the duplex forwarding pulley.

Procedure
1. Remove the stop ring, then remove the duplex forwarding pulley.
2. Refit all the removed parts.
   * When refitting the duplex forwarding pulley, align the projections of the duplex forwarding pulley with the slots in the leading edge pulley.

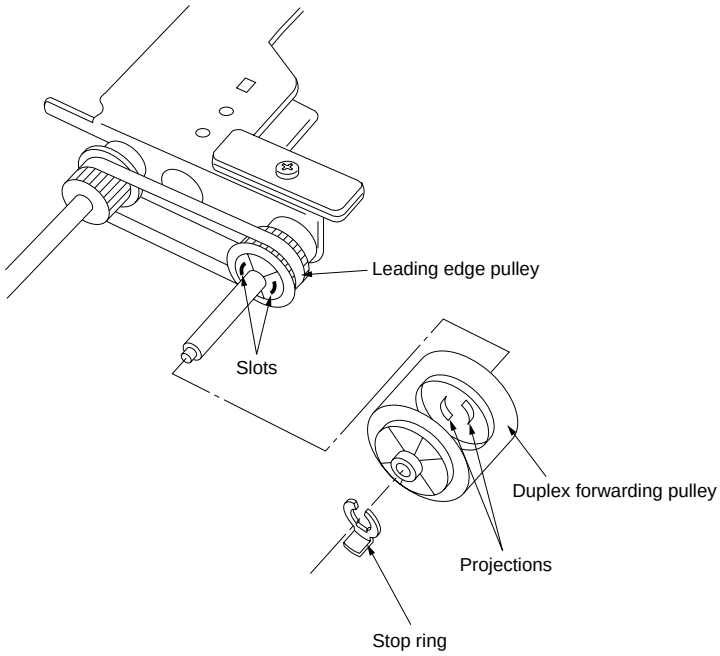

Figure 3-3-115

(2) Detaching and refitting the switchback separation belts
Follow the procedure below to clean or replace the switchback separation belts.

Procedure
1. Remove the duplex unit cover.
2. Remove the two screws, then remove the separation assembly.

* When separation assembly, be careful about following points.
- Refit the separation belt guide in the direction of the arrow a while pressing slightly not so as to bend backward to the switchback roller side.
- Move the shaft on the front of the machine to the gear side (in the direction of the arrow b) and the shaft must be firmly into the side plate bushing section.

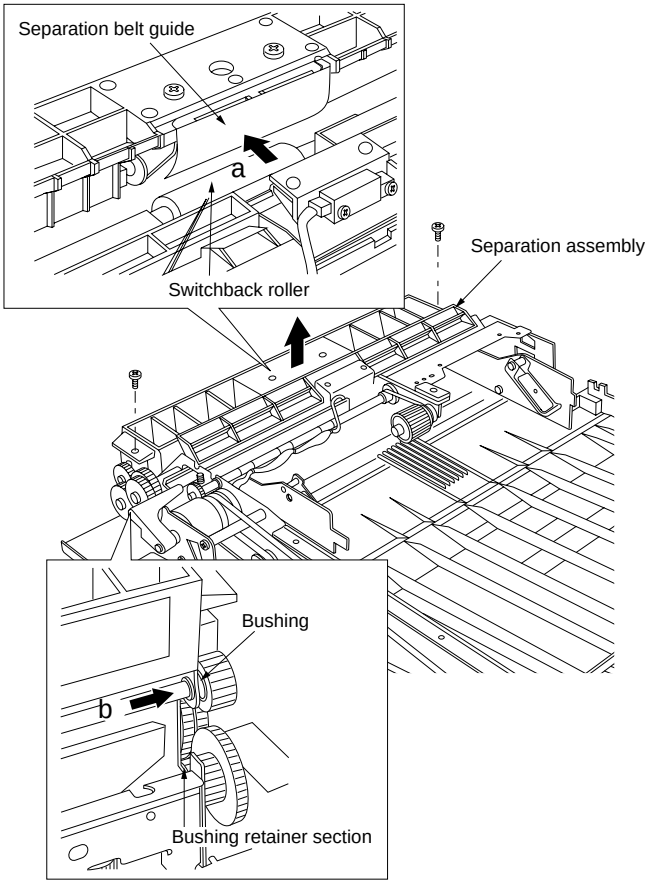

Figure 3-3-116

3. Remove the E-ring, then remove the gear, shim and bushing.
   * When refitting the gear, insert it to the shaft from the side marked arrow indicated the rotating direction of the one-way clutch to refit.
4. Remove the three screws, then remove the separation guide.
5. Disengage the two hooks (sections indicated by round marks in the figure), then remove the separation front guide mount from the separation guide.

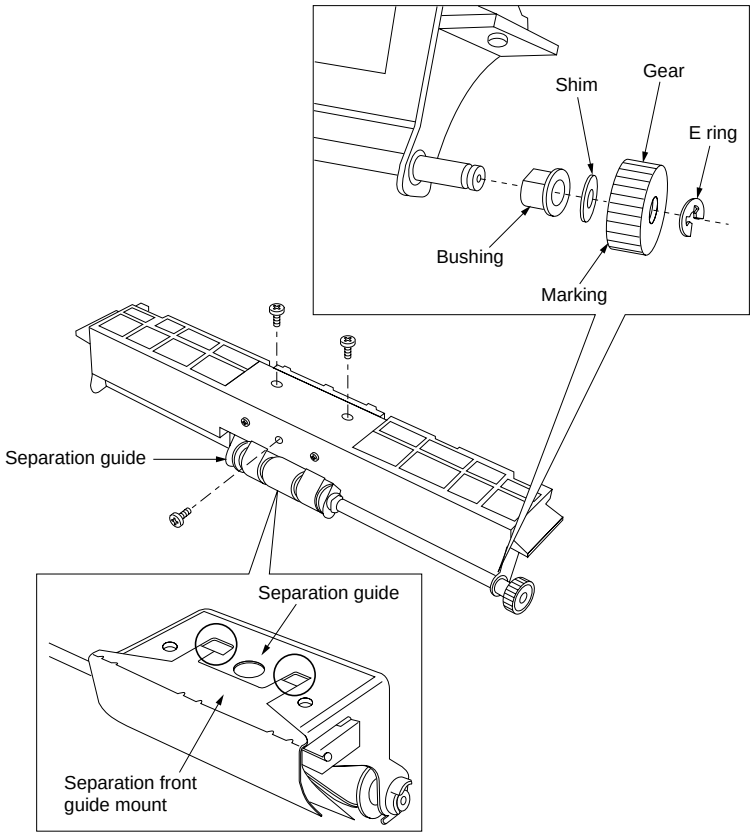

Figure 3-3-117

6. Remove the two stop rings, then remove the separation roller from the separation guide.
7. Remove the separation shaft from the separation bushings, then remove the switchback separation belts.
 * Always replace the switchback separation belts as a pair.
 * When fitting the switchback separation belts, keep the shiny surface facing out.

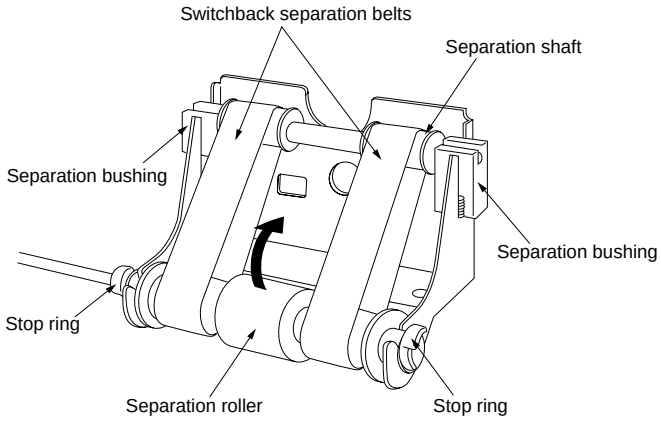

Figure 3-3-118

8. Refit all the removed parts.

(3) Detaching and refitting the switchback roller, duplex upper registration roller and refeed roller

Follow the procedure below to clean or replace the switchback roller, duplex upper registration roller and refeed roller.

(3-1) Detaching the switchback roller

Procedure

1. Remove the duplex unit from the rails.
2. Remove the two screws (a), then remove the side registration section right guide.
3. Release the cord clamp.
4. Disconnect the 6-pin connector for the side registration section and the 3-pin connector for the side registration home position switch, then free the wires from the cord clamp.
5. Squeeze the paper tapping guide and take hinge out of the hole (section indicated by round mark in the figure) on the rear of the machine, then remove the paper tapping guide from the machine.
6. Remove the four screws (b) and slide the side registration section toward the machine right, then remove the side registration section.
7. Remove the two screws (c), then remove the separation assembly.

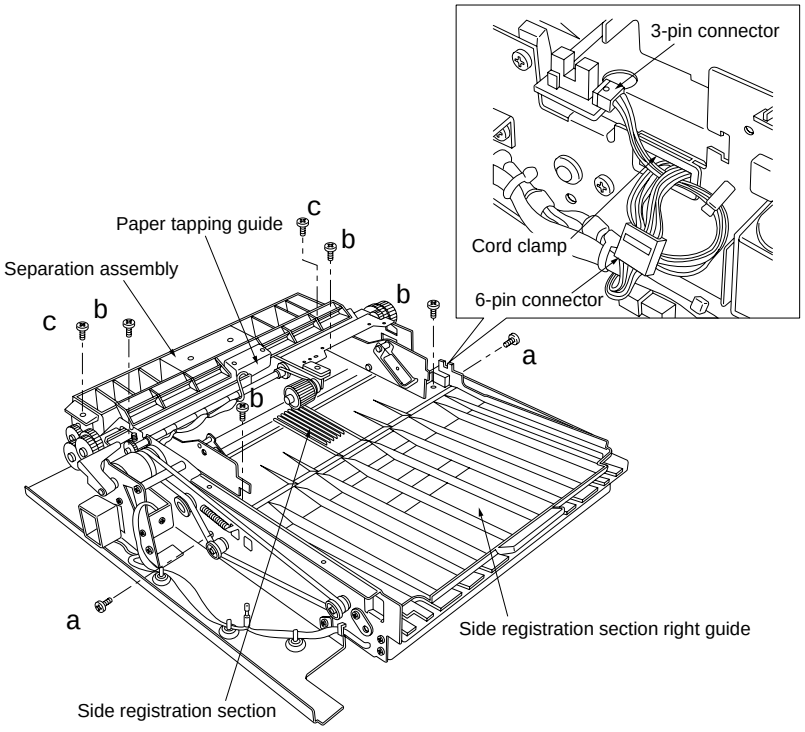

Figure 3-3-119

8. Remove the E-ring, then remove the idle gear 18/36.
9. Remove the E-ring, then remove the switchback roller gear, pin and bushing.
10. Remove the stop ring, then remove the switchback roller from the shaft in the direction of the black arrow.
    * Refit the switchback roller so that it turns in the same direction as the shaft when the shaft is turned in the direction of the white arrow (⇨).

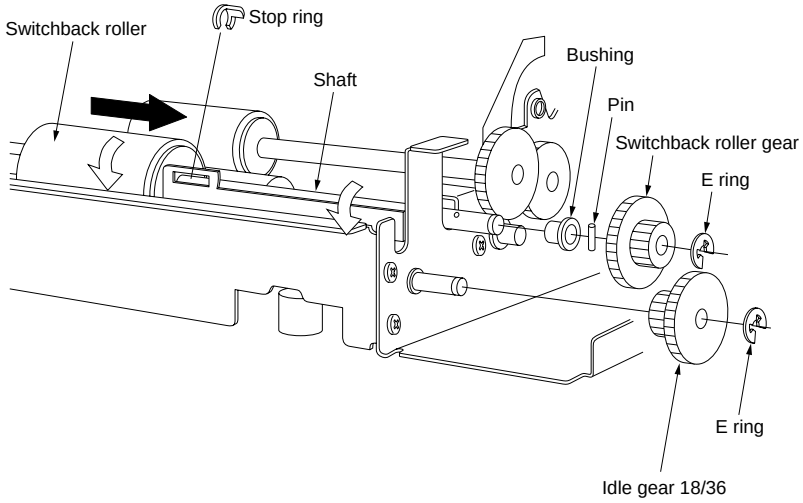

Figure 3-3-120

11. Refit all the removed parts.
    * After refitting the side registration section, perform (9) Adjusting the position of the side registration section. (see page 3-3-139)

367

(3-2) Detaching the duplex upper registration roller

Procedure

1. Remove the duplex unit from the rails.
2. Remove the switchback roller. (see page 3-3-126)
3. Remove the E-ring, then remove the idle gear 34.
4. Remove the E-ring, then remove the bushing from the duplex upper registration roller shaft.

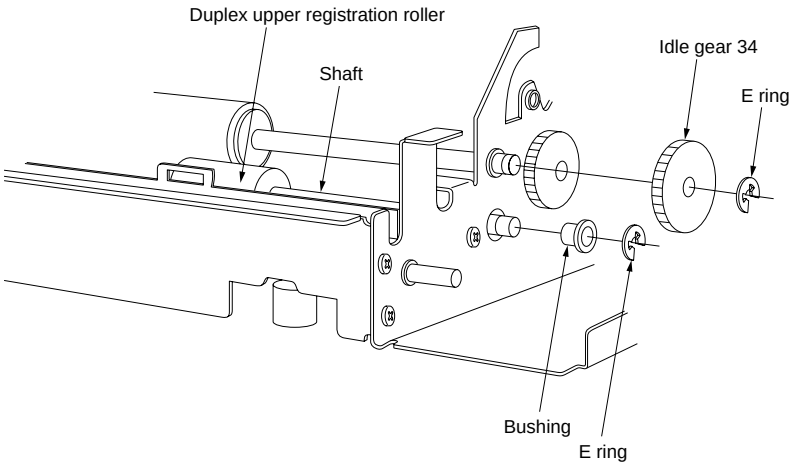

Figure 3-3-121

5. Remove the two screws, then remove the switch retainer.
6. Loosen the hex. socket head screws, then remove the duplex registration clutch.
7. Remove the E-ring, then remove the duplex joint gear.
8. Remove the E-ring, then remove the duplex drive gear.
9. Remove the E-ring and bushing, then remove the duplex upper registration roller.

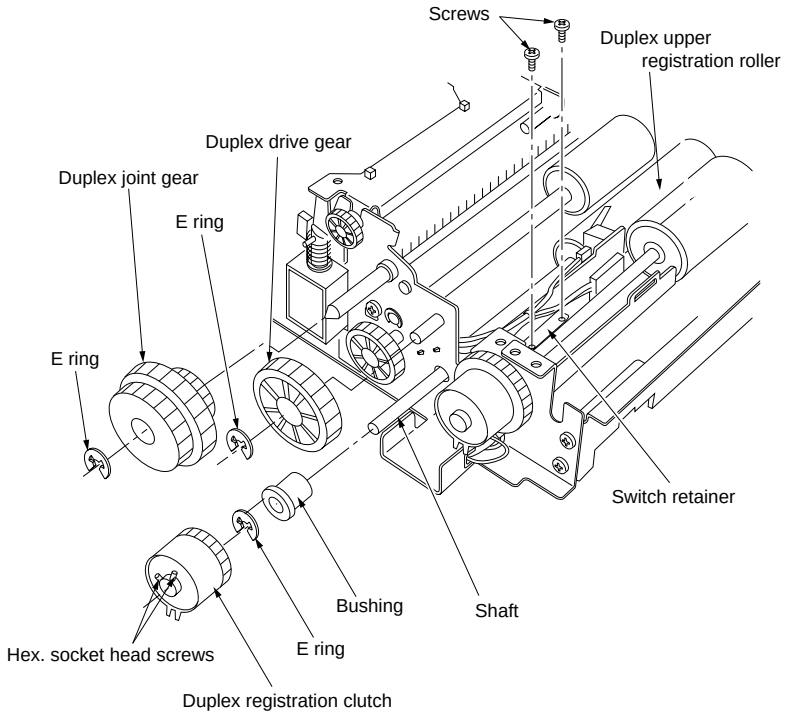

Figure 3-3-122

367

10. Refit all the removed parts.
    * Refit the duplex registration clutch so that the notch in the duplex registration clutch engages with the tab of the frame and that end of the shaft is aligned with the end of the projection that holds the hex. socket head screws in place.

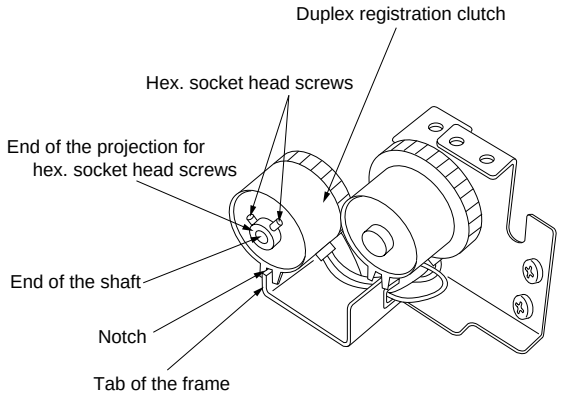

Figure 3-3-123

* After refitting the side registration section, perform (9) Adjusting the position of the side registration section. (see page 3-3-139)

(3-3) Detaching the refeed roller

Procedure

1. Remove the duplex unit from the rails.
2. Remove the switchback roller and the duplex upper registration roller. (see page 3-3-126)
3. Remove the E-ring, then remove the refeed roller gear, pin and bushing.
4. Remove the stop ring, then remove the refeed roller from the shaft.

* Refit the refeed roller so that it turns in the same direction as the shaft when the shaft is turned in the direction of the white arrow (⇨).

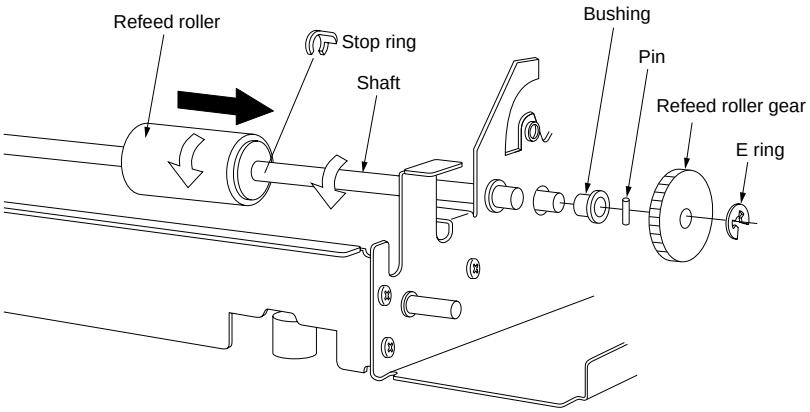

Figure 3-3-124

5. Refit all the removed parts.

* After refitting the side registration section, perform (9) Adjusting the position of the side registration section. (see page 3-3-139)

* Refit the duplex registration clutch so that the notch in the duplex registration clutch engages with the tab of the frame and that end of the shaft is aligned with the end of the projection that holds the hex. socket head screws in place. (see page 3-3-130)

(4) Adjusting the position of the refeed solenoid
Follow the procedure below to check or replace the refeed solenoid.

Procedure
1. Loosen the screws holding the refeed solenoid.
2. With the plunger pressed, adjust the position of the refeed solenoid by moving it up and down until part A of the refeed press plate contacts the refeed roller.
3. Tighten the screws holding the refeed solenoid.

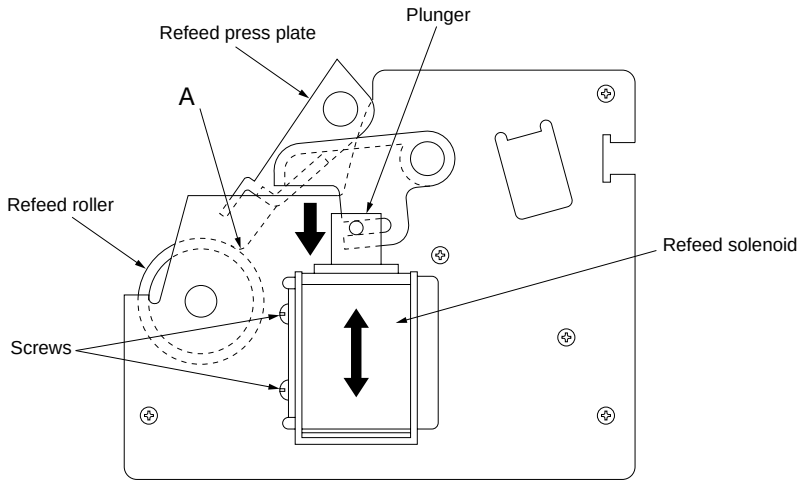

Figure 3-3-125

(5) Adjusting the position of the duplex paper tapping solenoid
Follow the procedure below to check or replace the duplex paper tapping solenoid.

Procedure

1. Loosen the screws holding the duplex paper tapping solenoid.
2. With the plunger pressed, adjust the position of the duplex paper tapping solenoid by moving it right and left so that the bottom surface A of the paper tapping guide sits on the frame.
3. Tighten the screws holding the duplex paper tapping solenoid.

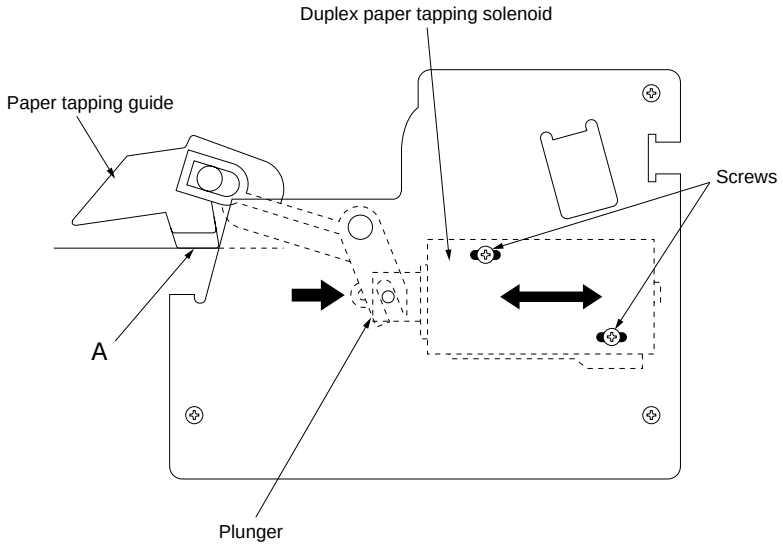

Figure 3-3-126

(6) Adjusting the side registration amount

Perform the following adjustment when paper is fed askew during refeed from the duplex unit.

Procedure

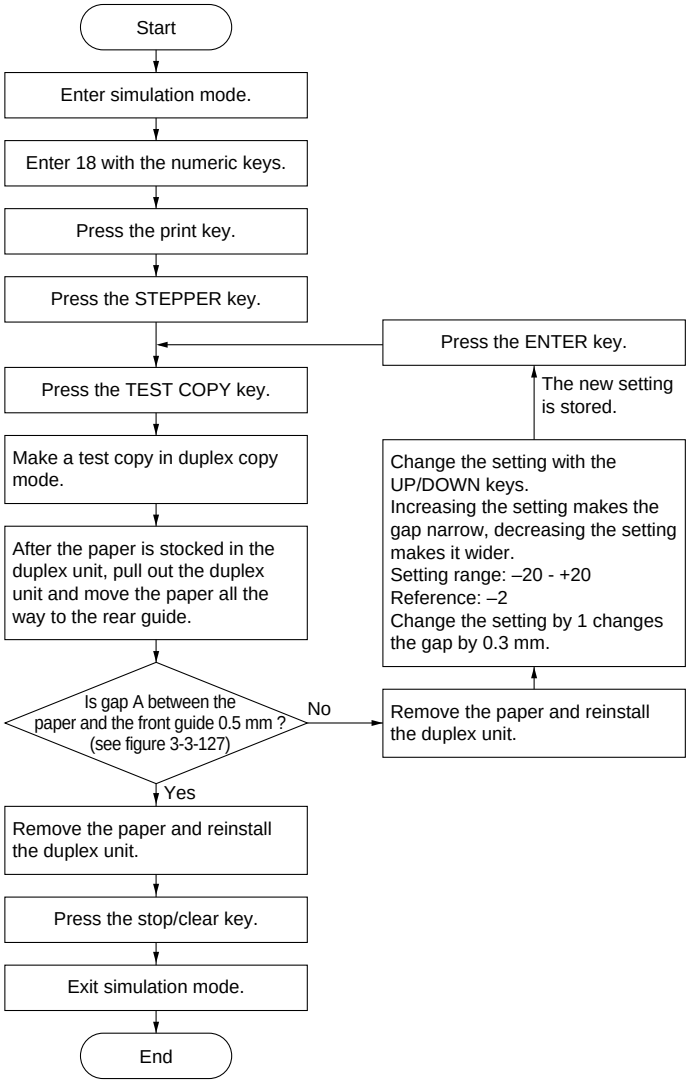

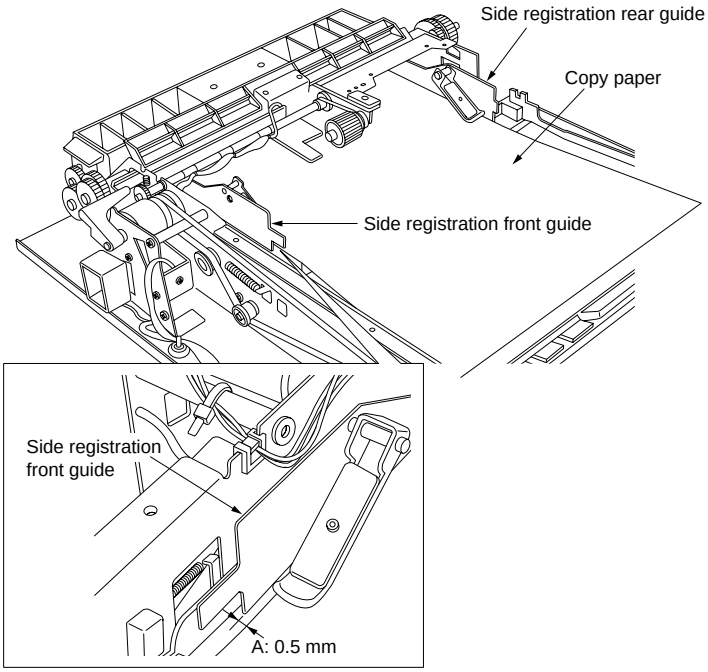

Figure 3-3-127

(7) Adjusting the duplex forwarding amount

Adjust the duplex forwarding solenoid on time when paper misfeeds frequently during refeed from the duplex unit.

Procedure

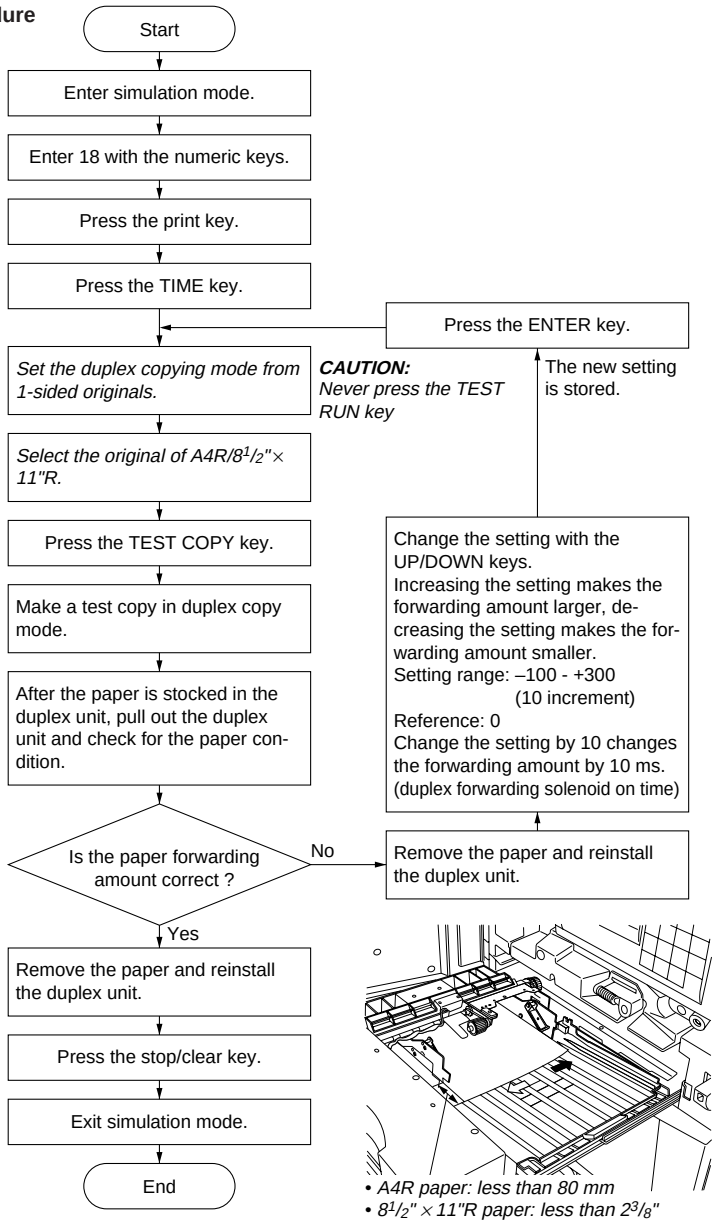

Figure 3-3-127-1

(8) Adjusting the trailing edge margin

Perform the following adjustment if the trailing edge margin does not meet specifications in the duplex copy mode (first side: back).

Caution: Before starting this adjustment, ensure (8-1) Adjusting the leading edge registration on page 3-3-26 has been completed.

Procedure

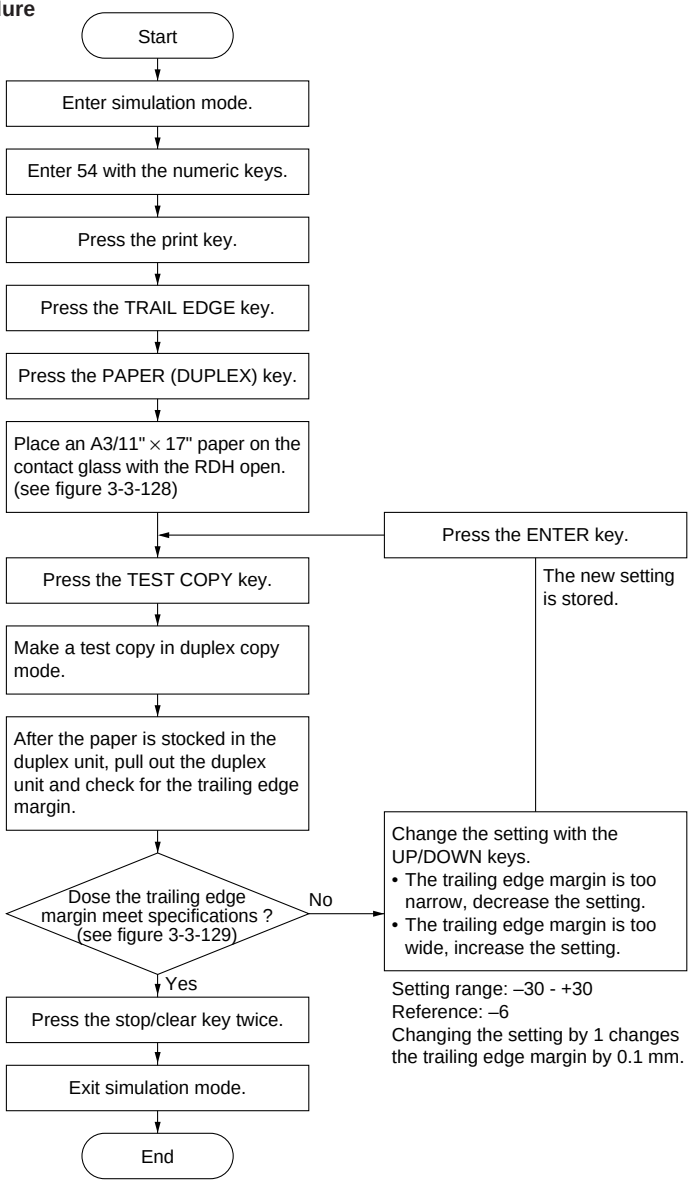

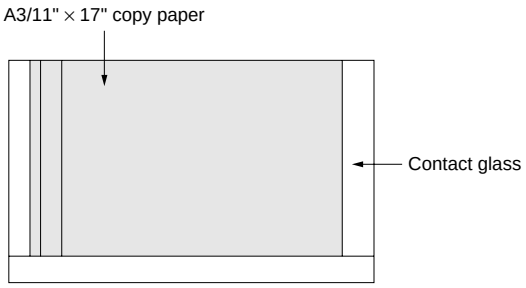

Figure 3-3-128

Specification range (A): 3 ± 2.5 mm



*1: Use a scale to measure accurately.

Figure 3-3-129

(9) Adjusting the position of the side registration section

Perform the following adjustment when there is a regular error between the centers of the original and copy image during duplex copying.

Procedure

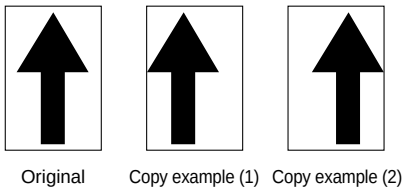

Figure 3-3-130

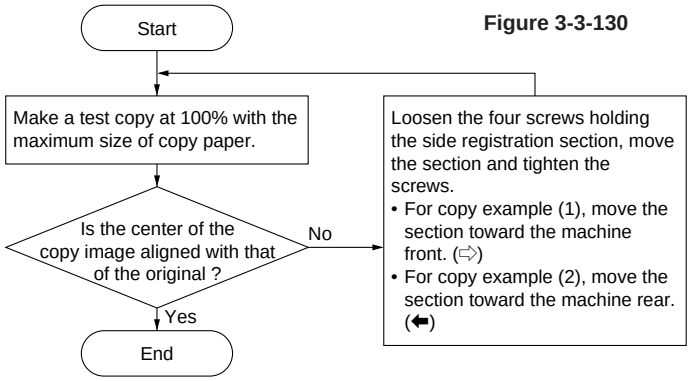

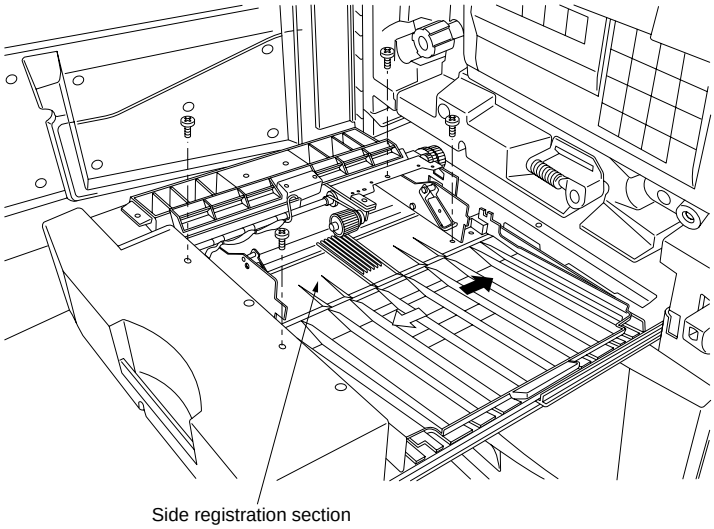

Figure 3-3-131

3-3-11 RDH

(1) Detaching and refitting the original feed pulley
Follow the procedure below to check, clean or replace the original feed pulleys.

Procedure
1. Move the partition joint gear 13 and shift the original partition plate while releasing the lock. (see “(5) Applying the grease to the original partition shaft” on page 3-3-146)
2. Remove the screw and stop ring, then remove the original feed pressing plate assembly.
3. Remove the two screws, then remove the original feed guide.

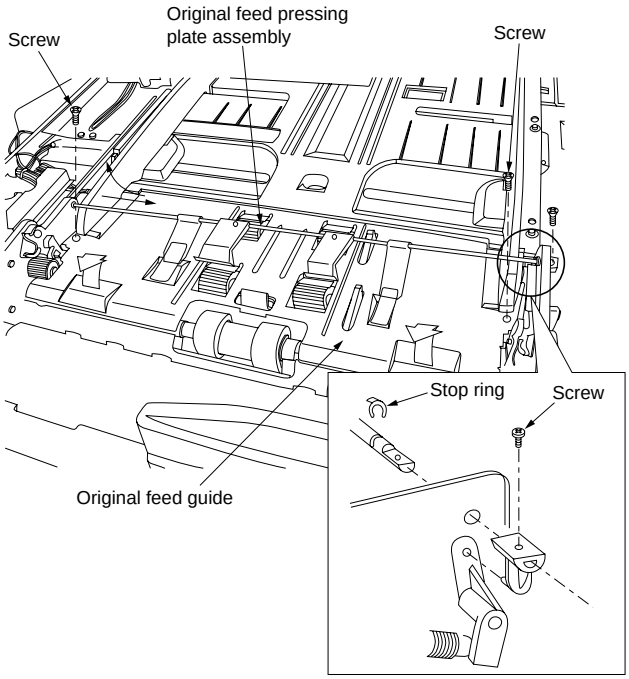

Figure 3-3-132

4. Remove the screw, then remove the original forwarding drive plate.
5. Remove the shaft busing, then remove the original feed pulley from the original feed shaft.

* When refitting the original feed pulley, be sure to refit so that the direction of the arrow marking indicated on the original feed pulley must be the machine front. (Be careful of the direction so that the one-way clutch is embedded in the original feed pulley.)

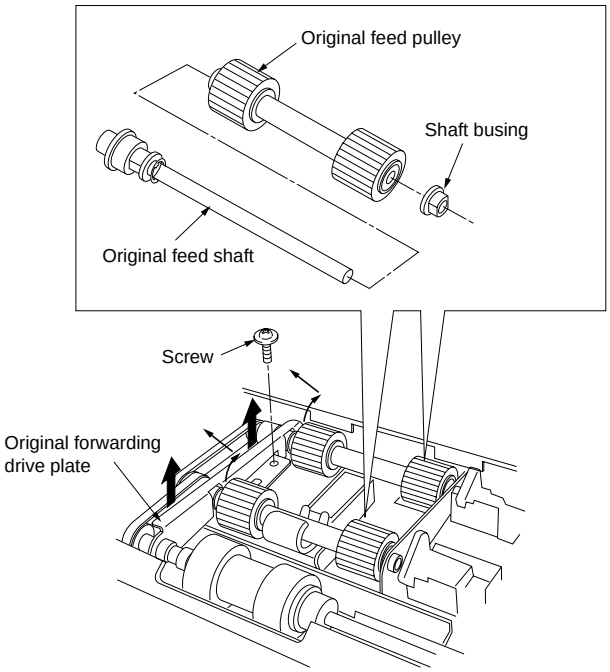

Figure 3-3-133

(2) Detaching and refitting the original separation pulley
Follow the procedure below to check, clean or replace the original separation pulley.

Procedure
1. Perform steps 1 to 4 of “(1) Detaching and refitting the original feed pulley” on page 3-3-140.
2. Remove the screw and stop ring, and shift the original separation belt cam, bushing and original separation pulley, then remove the original separation shaft.

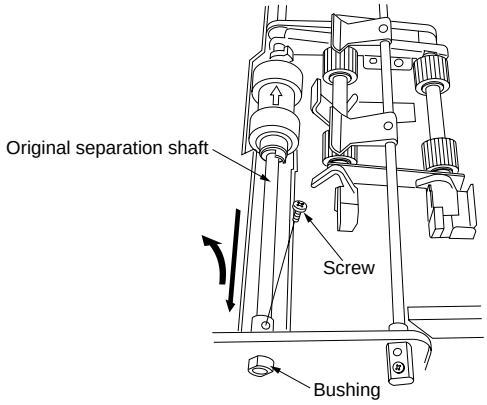

Figure 3-3-134

3. Remove the original separation pulley from the original separation shaft.
 * When refitting the original feed pulley, be sure to refit so that the direction of the arrow marking indicated on the original feed pulley must be the machine front (insert with aligning in the direction of the arrow marked on the original separation pulley). (Be careful of the direction so that the one-way clutch is embedded in the original feed pulley.)

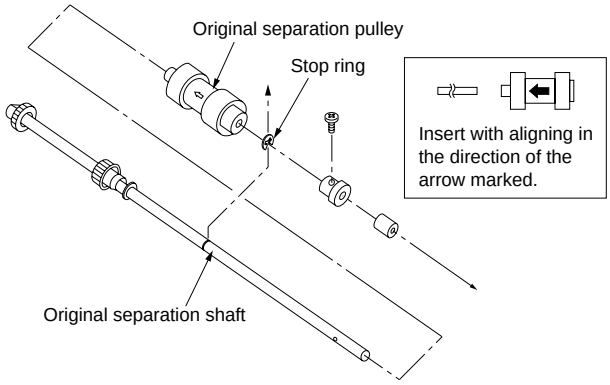

Figure 3-3-135

(3) Detaching and refitting the original separation belt
Follow the procedure below to check, clean or replace the original separation belt.

Procedure
1. Remove the two screws, then remove the two original separation shaft holders.
2. Remove the two upper original feed guides.
3. *Remove the original separation belt lever from the original separation belt roller and move the front/rear original separation tension retainers in an inward direction.*
4. Remove the stop ring, then remove the original separation belt retainer assembly.
5. Shift the assembly parts form the original feed housing to the machine rear.

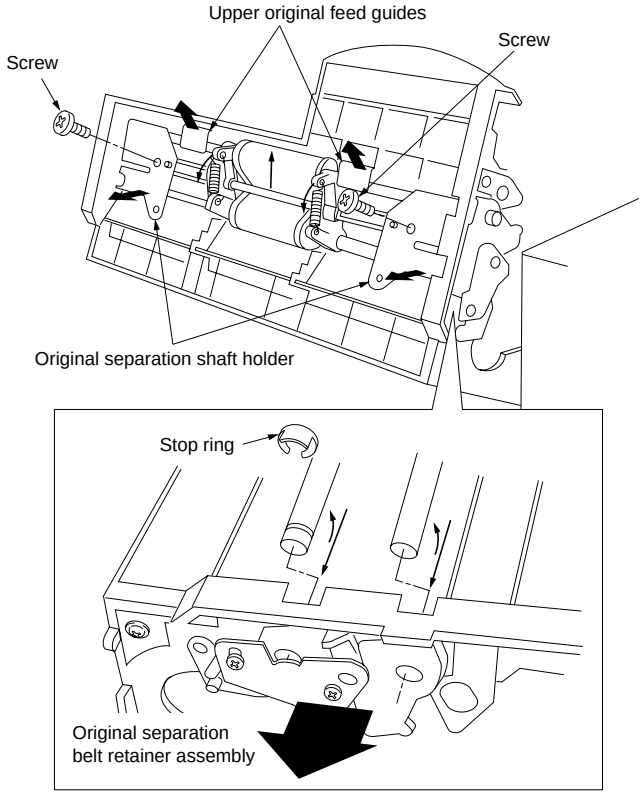

Figure 3-3-136

6. Remove the D-S spring attached the front original separation tension retainer.
7. Raise the two roller shaft and remove the original separation belt.

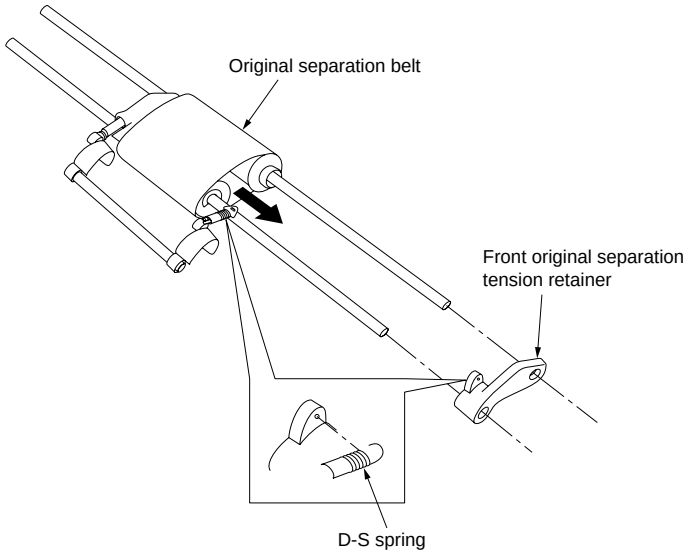

Figure 3-3-137

(4) Detaching and refitting the original conveying belt

Follow the procedure below to check, clean or replace the original conveying belt.

Procedure

1. Remove the four screws.
2. Push the both end of the original conveying tension roller in the direction of the arrow, then release original conveying tension roller.
   When removing the original conveying belt, be careful not to open the conveying unit forcibly.

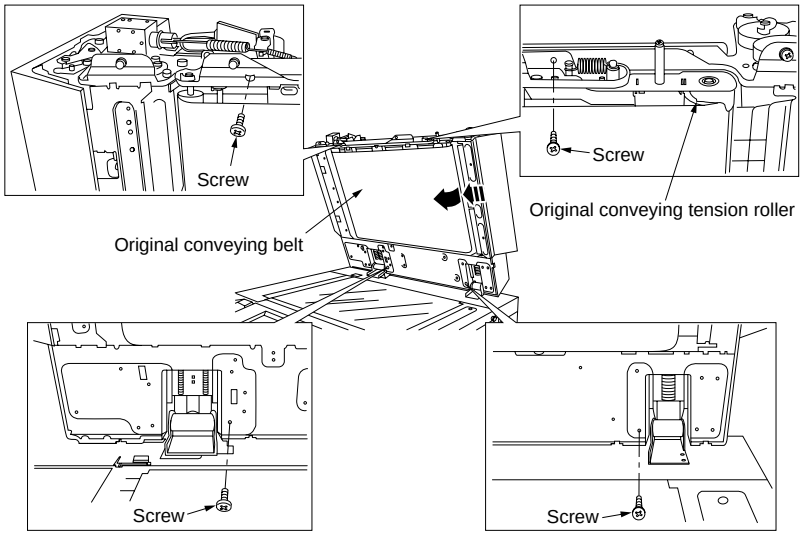

Figure 3-3-138

3. Remove the original conveying belt in the direction of the arrow.
   * When refitting the original conveying belt, be sue that the original conveying belt must be refitted inside of the original conveying belt guide and original conveying guide spacer. Make sure that the original conveying belt does not run on to the original conveying belt guide and original conveying guide spacer.

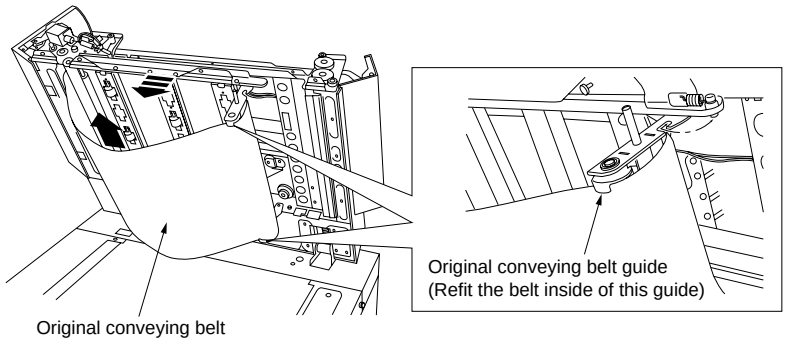

Figure 3-3-139

(5) Applying the grease to the original partition shaft
Follow the procedure below to check, clean or replace the original partition shaft.

Procedure

1. *Apply the specified grease (Optical rail grease (PG671): 60170001) properly to the original partition shaft of the machine front (shaded area in the figure).*
2. Move the partition joint gear 13 in the direction of the arrow and make two round trips the original partition plate in the left and right direction while releasing the lock and reach the grease entire part of the original partition shaft.

* At this time, be careful not to stick the grease to the original partition shaft and original partition wire of the machine rear.

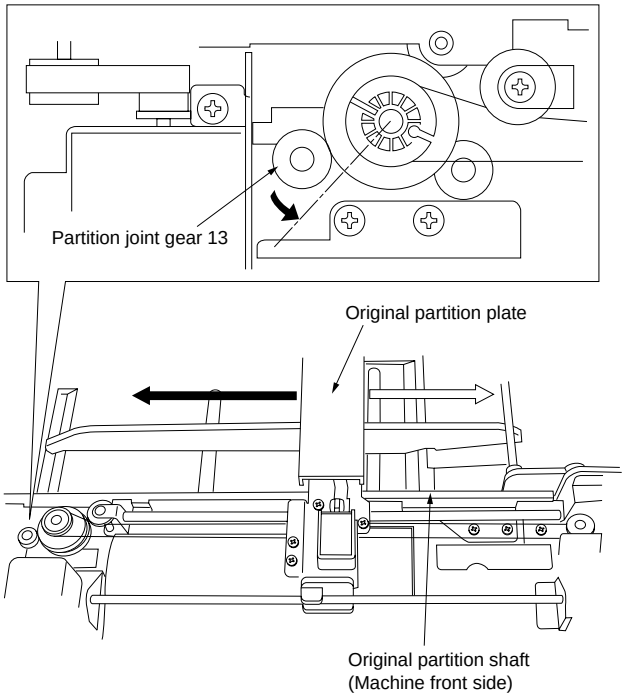

Figure 3-3-140

(6) Adjusting the position of the original conveying drive assembly
Follow the procedure below to replace or detach the original conveying motor.

Procedure

1. Loosen the two screws holding the original conveying drive mount.
2. Adjust the tension of the original conveying drive belt 2 with moving the position of the original conveying drive mount within the long hole, then refasten the screws.
3. Loosen the four screws holding the original conveying motor mount.
4. Adjust the tension of the original conveying drive belt 1 with moving the position of the original conveying motor mount within the long hole, then refasten the screws.

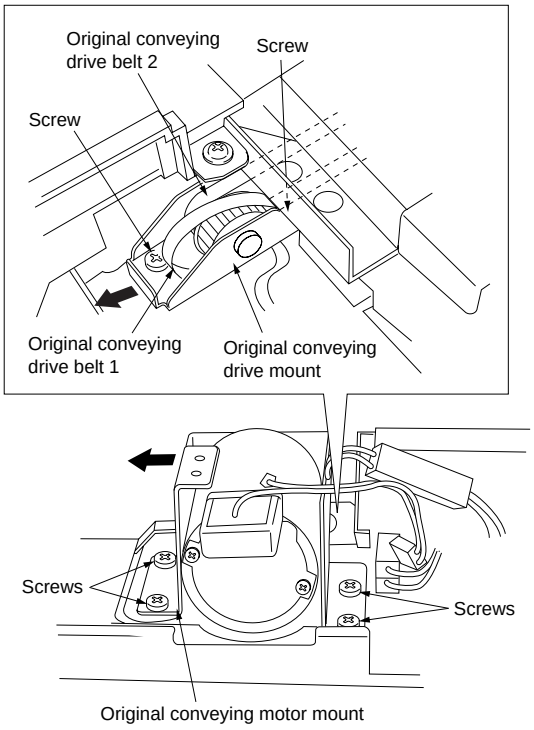

Figure 3-3-141

(7) Adjusting the position of the original eject motor
Follow the procedure below to replace or detach the original eject motor.

Procedure
1. Loosen the two screws holding the original eject motor mount.
2. Adjust the tension of the original eject drive belt with moving the position of the original eject motor mount within the long hole, then refasten the screws.

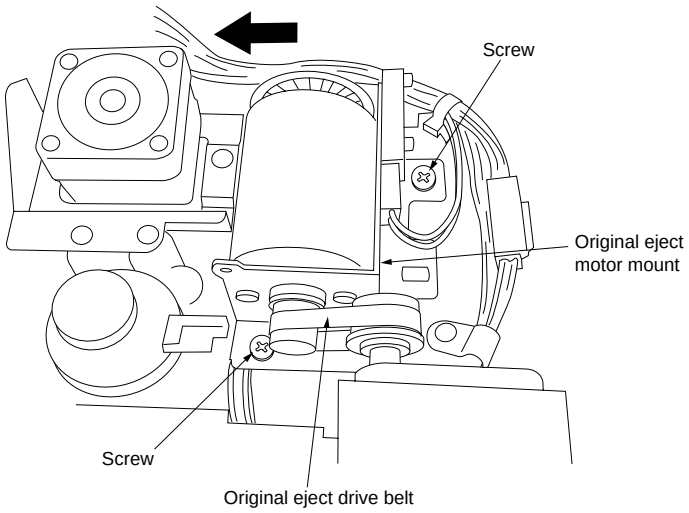

Figure 3-3-142

(8) Replacing the original partition wire

Follow the procedure below to replace the original partition wire.

Procedure

1. Remove the two screws and remove the original partition lever solenoid mount in the direction of the arrow, then move the original partition wire mount base closer to the original moving pulley tension plate.
2. Loosen the screw holding the original moving pulley tension plate.

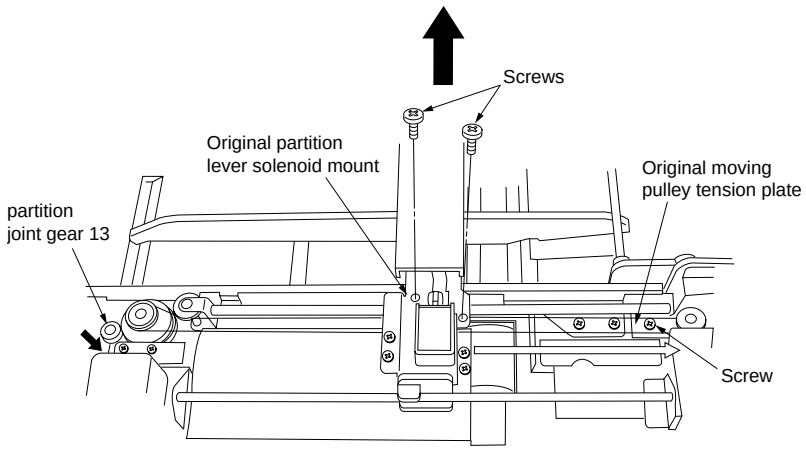

Figure 3-3-143

3. Run the ball (blue) of the original partition wire into the hole with notch in the three hole of the original partition wire mount.
4. Run the another side of the ball into the hole at opposite side on the original partition wire mount.
5. Insert the ball at the center of the original partition wire into the center of the hole on the original partition mount.
6. Run the original partition wire to the pulley on the original moving pulley tension plate.

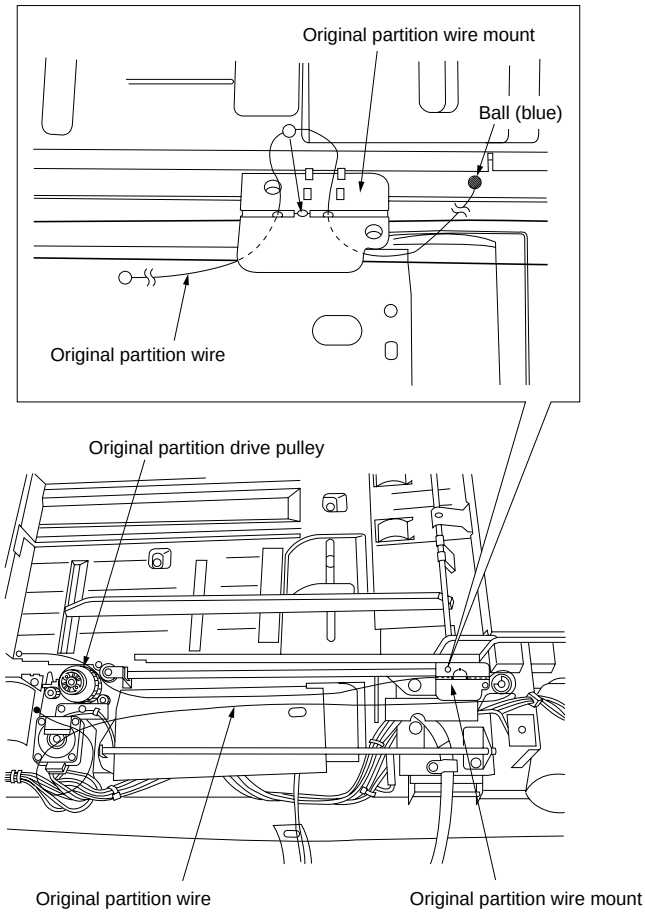

Figure 3-3-144

7. Insert the ball (blue) at the end of the original partition wire into the hole on the original partition drive pulley.
8. Push the partition joint gear 13 and release it from the original partition drive pulley, then turn the original partition drive pulley in the direction of the arrow and wind the original partition wire to original partition drive pulley, from bottom to top.

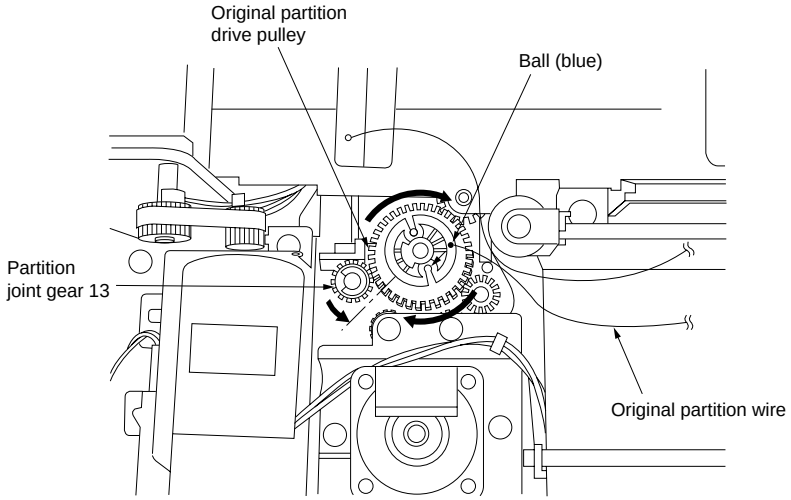

Figure 3-3-145

9. Run the another side of the original partition wire to the original moving idle pulley and insert the ball of the original partition wire into the another hole of the original partition drive pulley, then turn the original partition drive pulley in the direction of the clockwise.

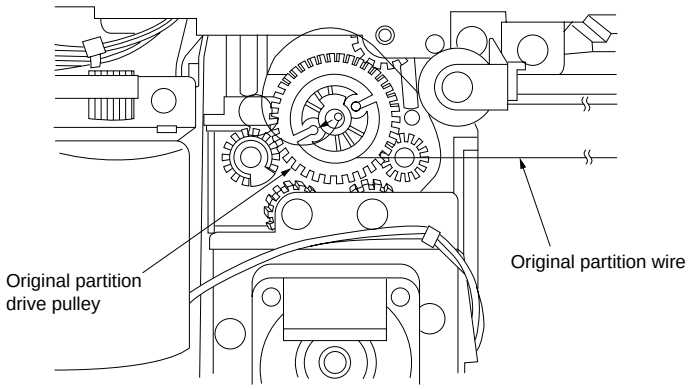

Figure 3-3-146

10. Move the original moving pulley tension plate in the direction of the arrow, push the original partition wire with finger slightly to keep a slack a little to adjust and fasten the screw.

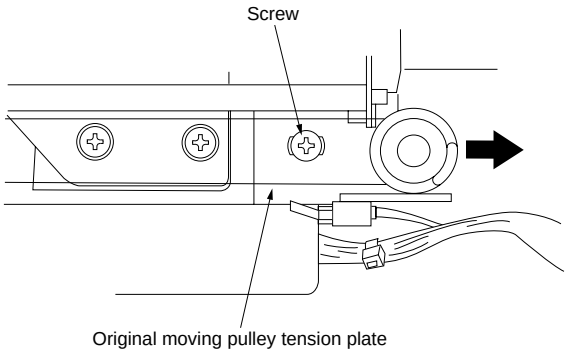

Figure 3-3-147

(9) Replacing the original moving wire

Follow the procedure below to replace the original moving wire.

Procedure

1. Remove the original feed pressing plate assembly. (see page 3-3-137)
2. Remove the original feed guide. (see page 3-3-137)
3. Remove the screw, then remove the cord clamp. Disconnect the 12P connector.
4. Remove the seven screws, then remove the original table.

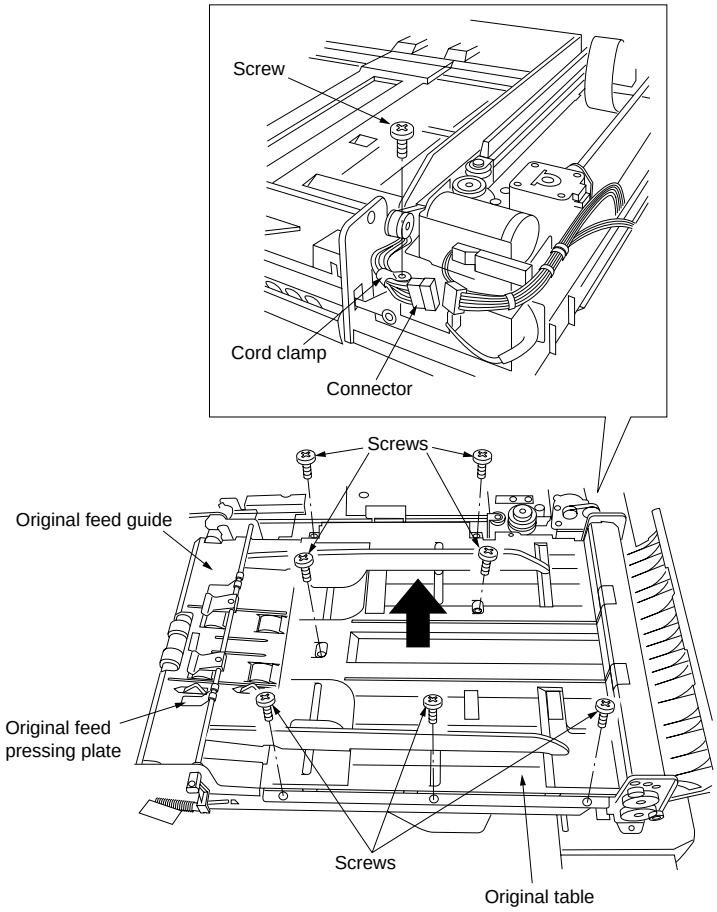

Figure 3-3-148

5. Turn over the original table and remove the two screws, then remove the original moving guide.
6. Remove the two screw, then remove the two original rack covers.
7. Remove the screw, then remove the original cursor adjusting plate.

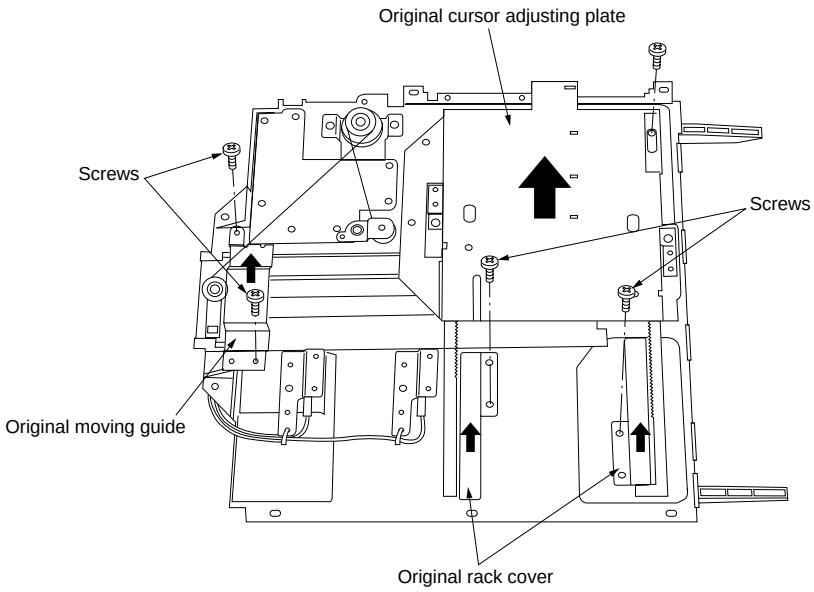

Figure 3-3-149

8. Remove the two screws, then remove the cursor adjuster.

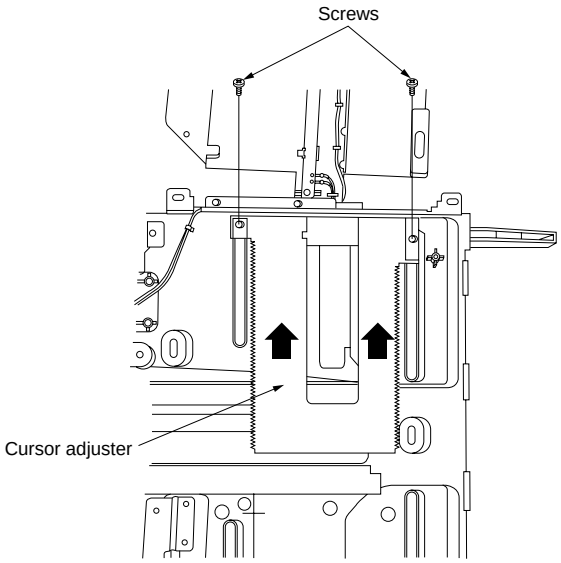

Figure 3-3-150

9. Remove the two screws, then remove the original right and left cursor.

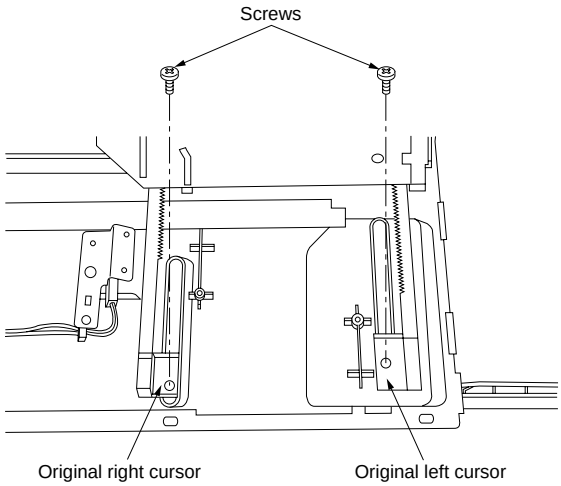

Figure 3-3-151

10. Run the ball (red) of the original moving wire into the hole with round notch in the three hole of the original moving plate.
11. Run the another side of the ball into the hole at opposite side.
12. Insert the ball at the center of the original moving wire into the center of the hole on the original moving plate.
13. Run the end of the original moving wire on the ball (red) to the original moving idle pulley on the original moving plate.
14. Insert the ball (red) of the original moving wire into the hole on the original partition drive pulley, then turn the original partition drive pulley in the direction of the arrow.
15. Run the another side of the original moving wire to the two original moving pulleys, from the outside.
16. Run into the pulley of the original moving pulley mount so as to run on the original moving wire, insert the ball of the original moving wire into the another hole of the original moving drive pulley.
17. Move the original moving pulley mount in the direction of the arrow, push the original moving wire with finger slightly to keep a slack a little to adjust and fasten the screw.

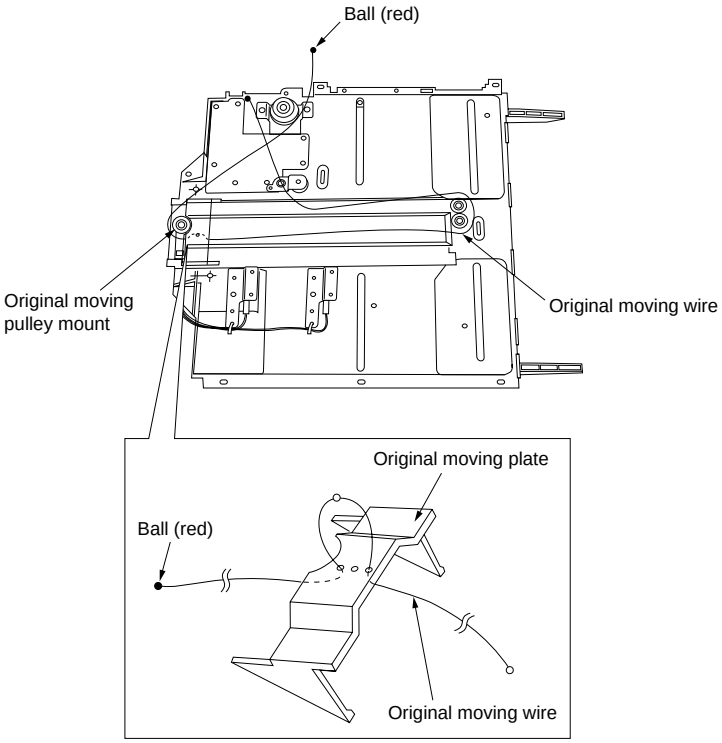

Figure 3-3-152

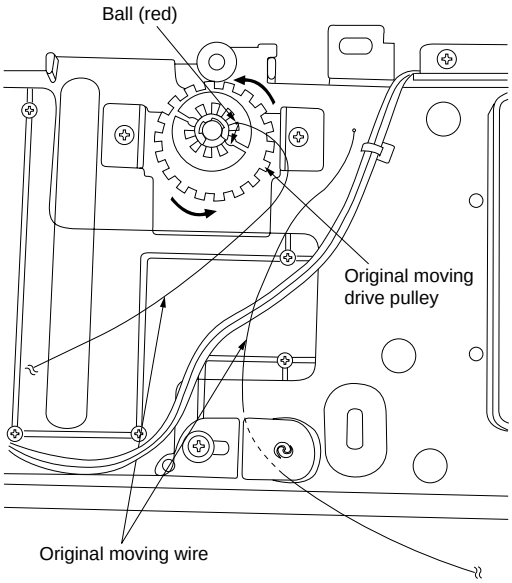

Figure 3-3-153

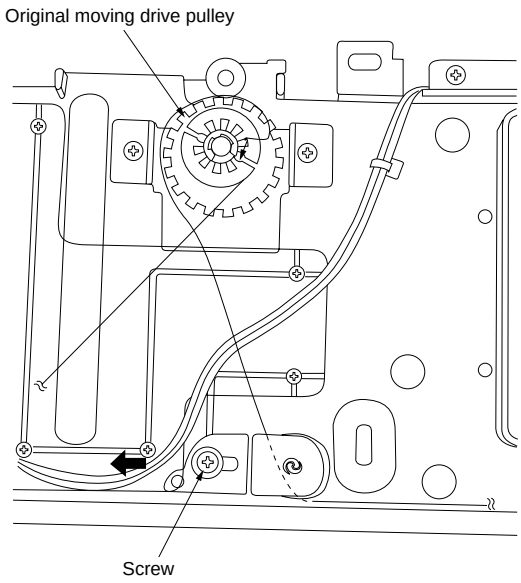

Figure 3-3-154

367

(10) Adjusting the position of the original feed solenoid
Follow the procedure below to replace or detach the original feed solenoid.

Procedure
1. Loosen the screw holding the original feed solenoid.
2. With pressing the plunger (the state of on), move the original feed solenoid in the direction of the arrow until the position where the original feed pressing plate contacts with the original feed pulley.
   Fasten the screw at the position moved one marking from the original feed pressing spring starts to stretch.

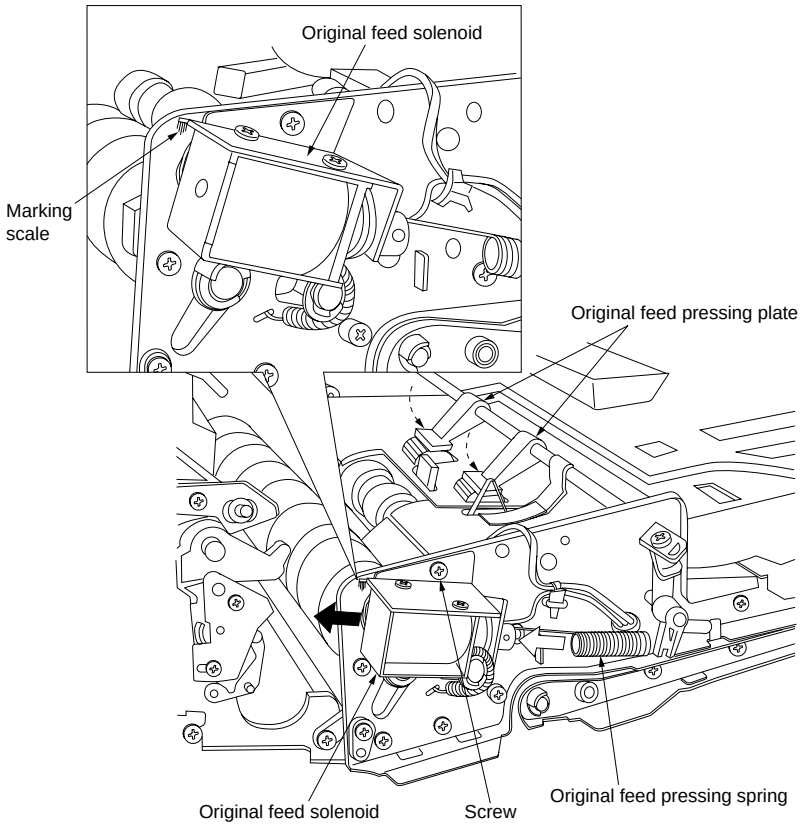

Figure 3-3-155

(11) Adjusting the position of the original strike solenoid
Follow the procedure below to replace or detach the original strike solenoid.

Procedure
1. Loosen the two screws holding the original strike solenoid.
2. With pressing the plunger (the state of on), fasten the screw to adjust so that the projection stroked to the original size indicator is 6 - 7mm.

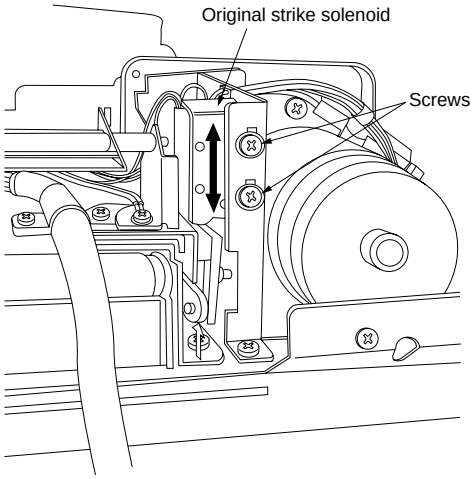

Figure 3-3-156

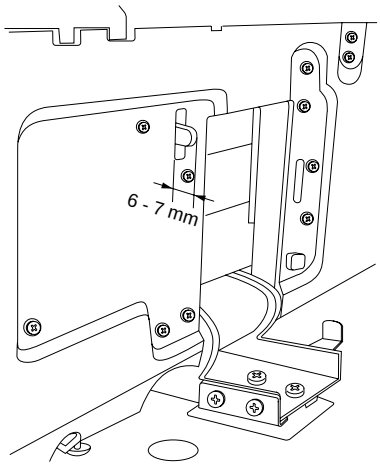

Figure 3-3-157

(12) Adjusting the position of the original eject solenoid
Follow the procedure below to replace or detach the original eject solenoid.

Procedure
1. Loosen the two screws holding the original eject solenoid.
2. With pressing the plunger (the state of on), fasten the screw to adjust so that the position of the original eject solenoid is the center of the long hole.

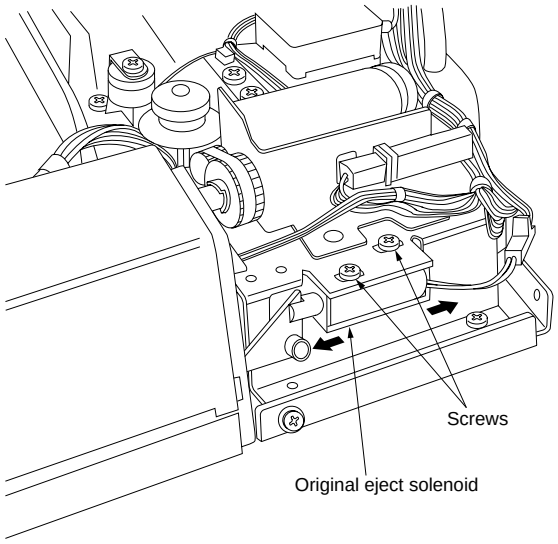

Figure 3-3-158

(13) Adjusting the position of the original partition lever solenoid
Follow the procedure below to replace or detach the original partition lever solenoid.

Procedure
1. Loosen the two screws holding the original partition lever solenoid.
2. With pressing the plunger (the state of on), contact the original partition lever with the original table.

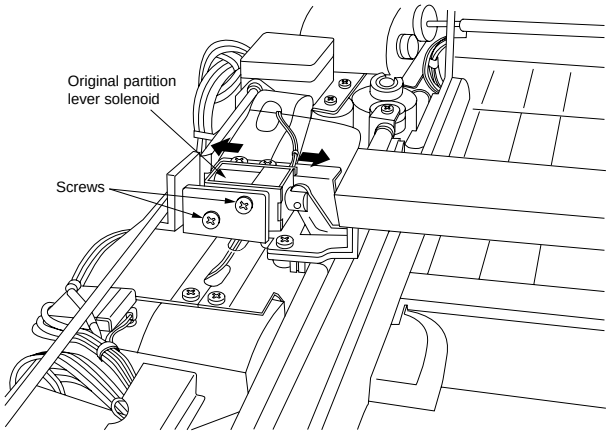

Figure 3-3-159

3. Fasten the screw of the original partition lever solenoid in the position that the original partition lever is coming up 3 mm to the direction of the arrow.

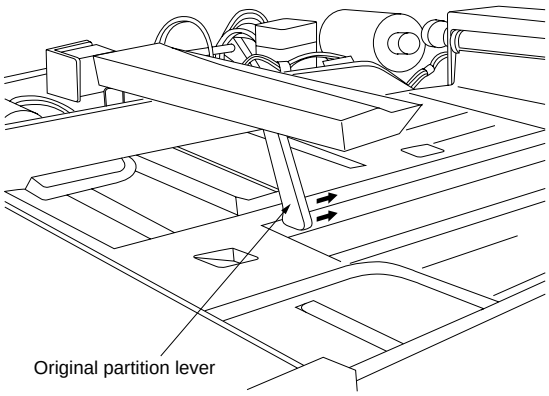

Figure 3-3-160

(14) Adjusting the gap between the original partition plate and the original feed cover

If the original partition plate is installed diagonally, perform the following adjustment.

Procedure

1. Move the original partition plate closer to the original feed cover.
2. Loosen the two screws holding the original partition plate.
3. Align the gap between the original partition plate and original feed cover and fasten the two screws.

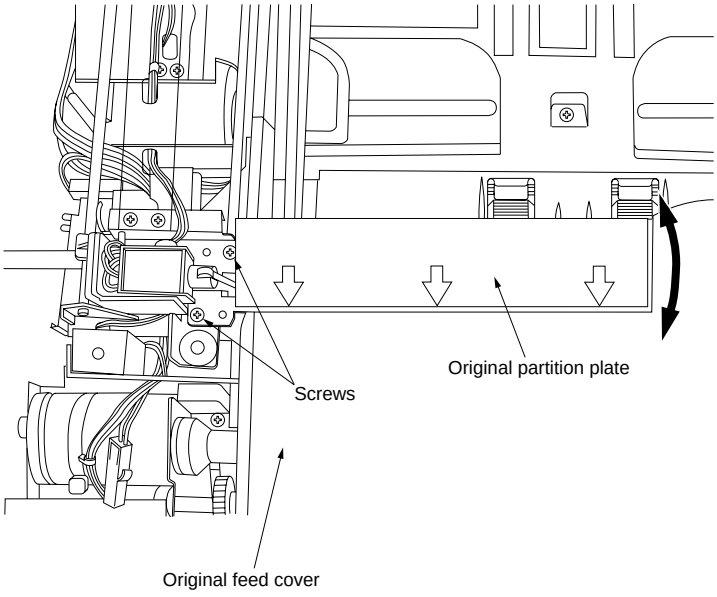

Figure 3-3-161

(15) Adjusting the skewed paper feed

If the original is fed diagonally, perform the following adjustment. (The RDH is installed diagonally to the copier.)

Procedure

1. Open the RDH and loosen the four screws holding the right hinge of the RDH.
2. Adjust the position of the RDH installation position, and refasten the screws. Make a test copy and check the copy image.

* For example (1), move the position toward the machine front.
For example (2), move the position toward the machine rear.

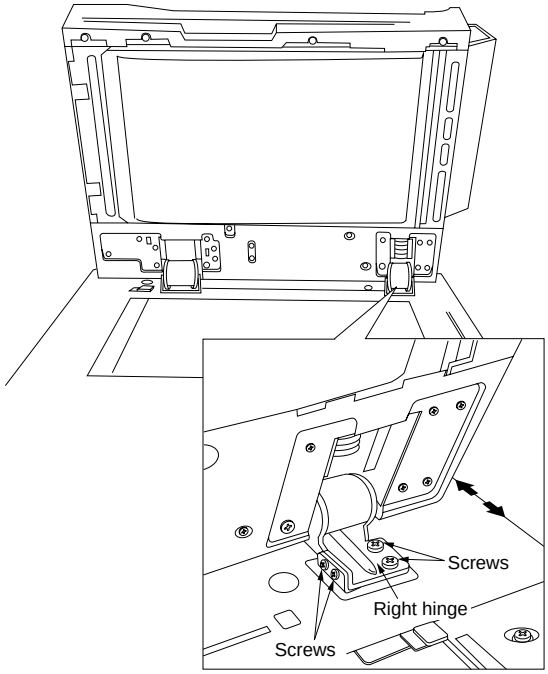

Figure 3-3-162

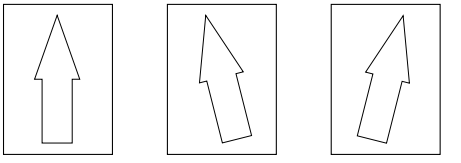

Figure 3-3-163

(16) Adjusting the original axis

Perform the following adjustment if there is a regular error between the centers of the original and the copy image on the original fed from the RDH.

Procedure

1. Loosen the two screws holding the original table.
2. Adjust the position of the original cursors (front and rear) installation position, and refasten the screws.
   Make a test copy and check the copy image.

 * For example (1), move the position toward the machine front.
   For example (2), move the position toward the machine rear.

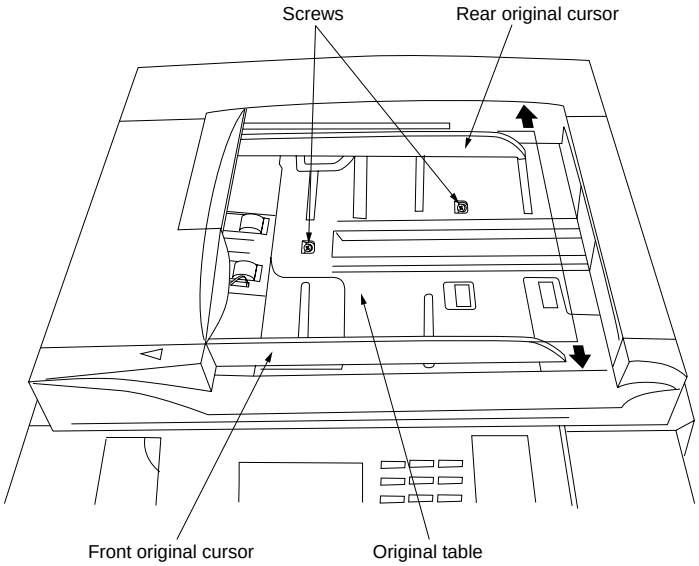

Figure 3-3-164

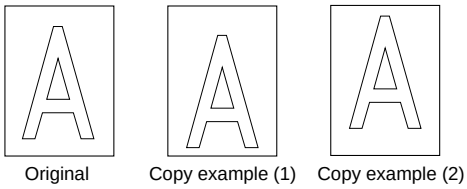

Figure 3-3-165

(17) Adjusting the leading edge registration (RDH)

Perform the following adjustment if there is a regular error between the leading edges of the original and the copy image when copying with RDH.

Caution: Before starting this adjustment, ensure that (8-1) Adjusting the leading edge registration on page 3-3-26 has been completed.

Procedure

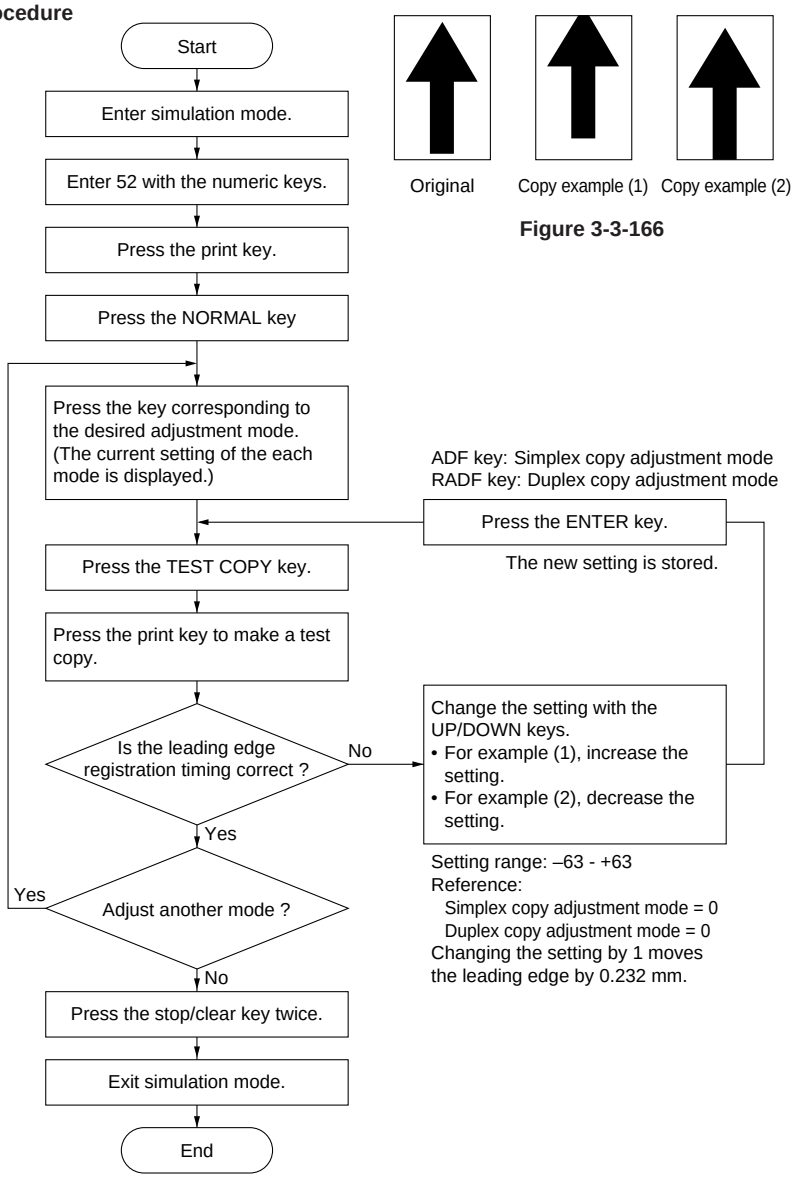

Figure 3-3-166

(18) Adjusting the 2 in 1 mode timing

Perform the following adjustment when an original stops in the proper position on the contact glass at the 2 in 1 mode.

* If there is regular error occurs between left page and right page of the copy image, perform “(18-1) 2 in 1 mode timing adjustment 1”.
* If the original of the even number sheet is selected, the original of the odd number sheet is set, the position of the copy image for the last copied right page is not correct, perform “(18-2) 2 in 1 mode timing adjustment 2”.

Caution: Before starting this adjustment, ensure “(8-1) Adjusting the leading edge registration” on page 3-3-26 and “(17) Adjusting the leading edge registration (RDH)” on page 3-3-165 have been completed.

(18-1) 2 in 1 mode timing adjustment 1

Procedure

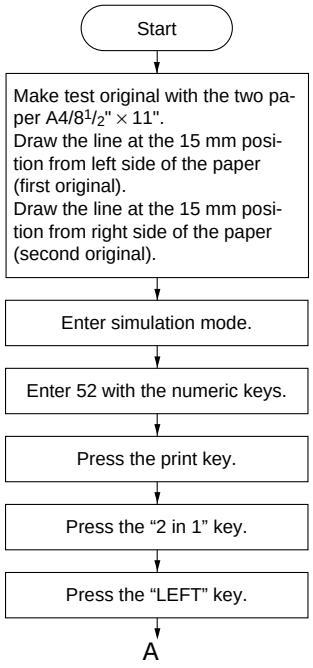

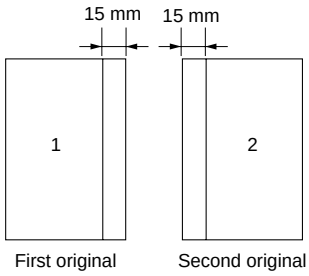

Figure 3-3-167

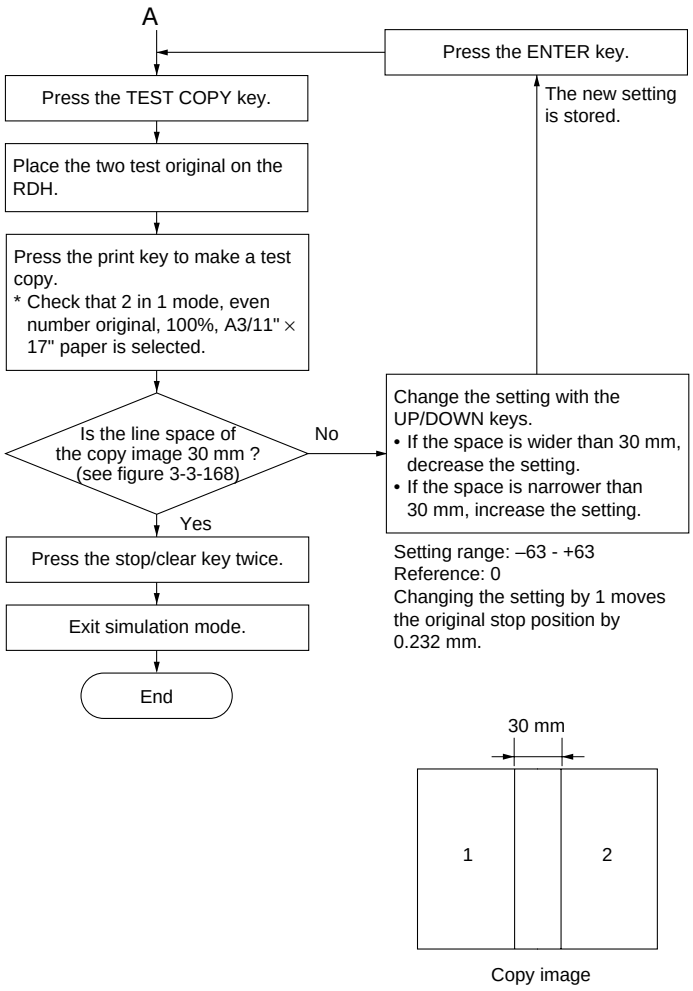

Figure 3-3-168

(18-2) 2 in 1 mode timing adjustment 2

Procedure

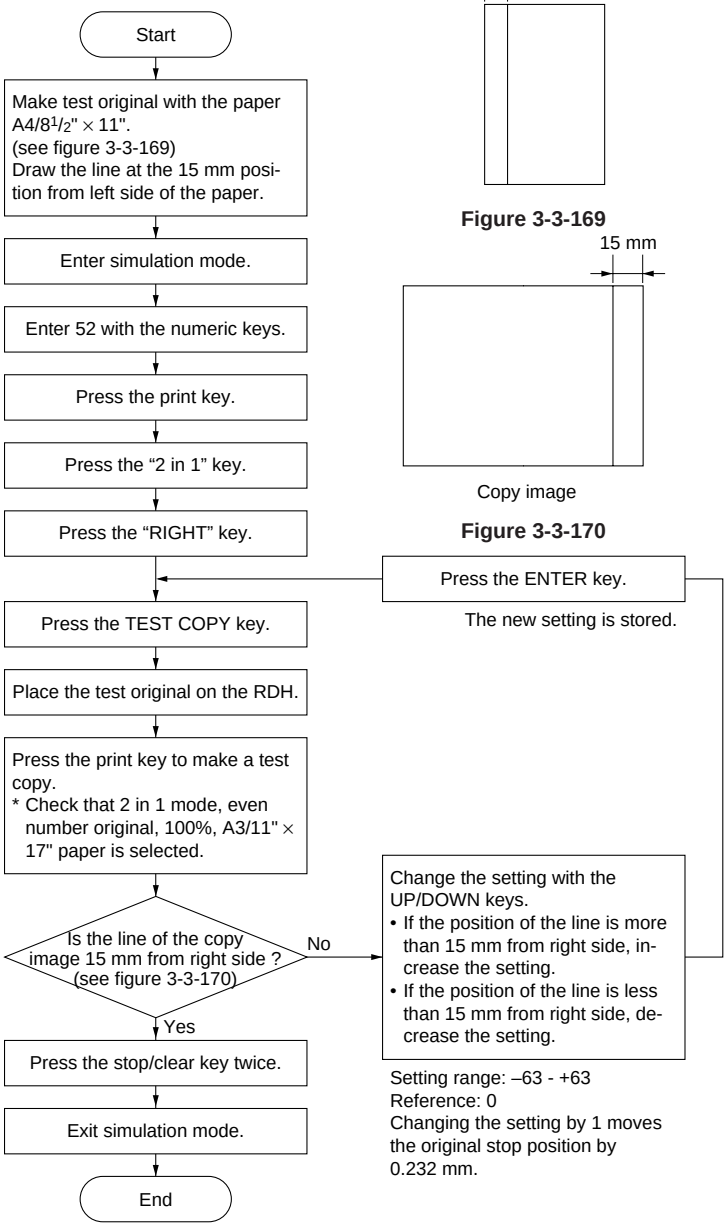

Figure 3-3-169

Copy image

Figure 3-3-170

3-3-12 Others

(1) Adjusting tension of the scanner drive belt
Follow the procedure below to detach or replace the scanner wire, scanner drive belt and scanner motor.

Procedure
1. Loosen the three screws holding the scanner motor.
2. Adjust the position of the scanner motor within the range of the long hole.
3. Retighten three screws holding the scanner motor.
4. Refit all the removed parts.
5. Make a test copy and check the operation, if there is any problems such as skipping teeth, repeat steps 1 - 5.

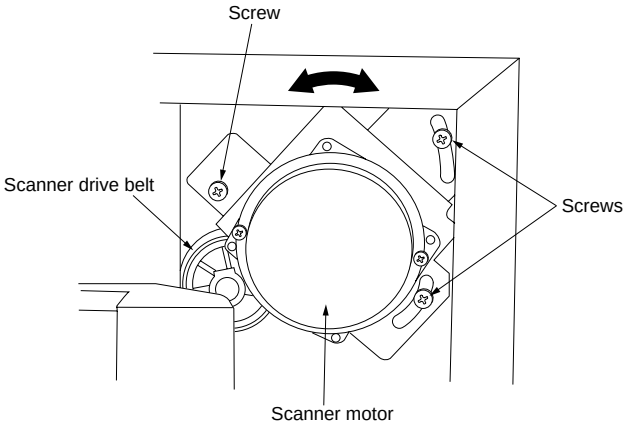

Figure 3-3-171

(2) Adjusting tension of the drum drive belt

Follow the procedure below to detach or replace the drum drive belt and image forming motor.

Procedure

1. Loosen the two screws holding the drum drive tension plate.
2. With the tension from the tension spring applied to the drum drive belt, retighten the screws.
3. Refit all the removed parts.
4. Make a test copy and check the operation, if there is any problems such as skipping teeth, adjust the tension within the range of the long hole.

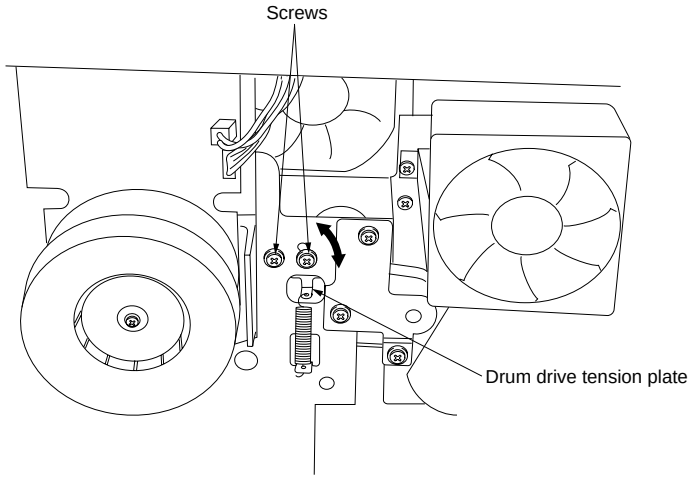

Figure 3-3-172

(3) Adjusting tension of the conveying drive belt

Follow the procedure below to detach or replace the conveying drive belt.

Procedure

1. Loosen the two screws holding the conveying drive tension plate.
2. With the tension from the tension spring applied to the conveying drive belt, retighten the screws.
3. Refit all the removed parts.
4. Make a test copy and check the operation, if there is any problems such as skipping teeth, adjust the tension within the range of the long hole.

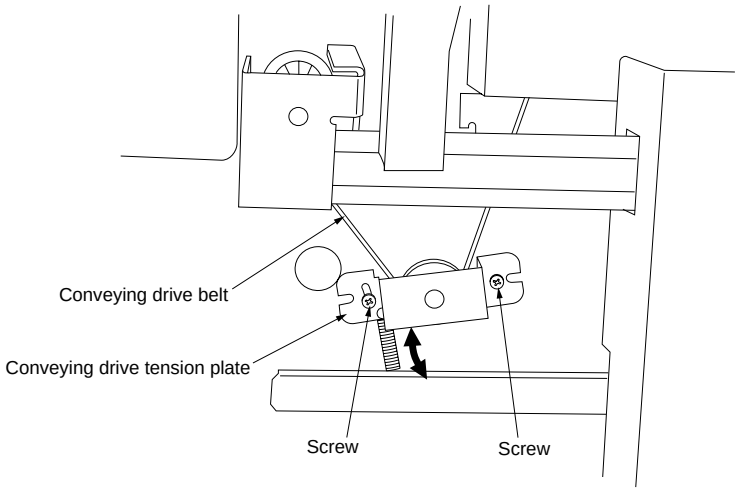

Figure 3-3-173

(4) Adjusting tension of the paper feed drive belt
Follow the procedure below to detach or replace the paper feed drive belt.

Procedure
1. Loosen the two screws holding the paper feed drive tension plate.
2. With the tension from the tension spring applied to the paper feed drive belt, retighten the screws.
3. Refit all the removed parts.
4. Make a test copy and check the operation, if there is any problems such as skipping teeth, adjust the tension within the range of the notches.

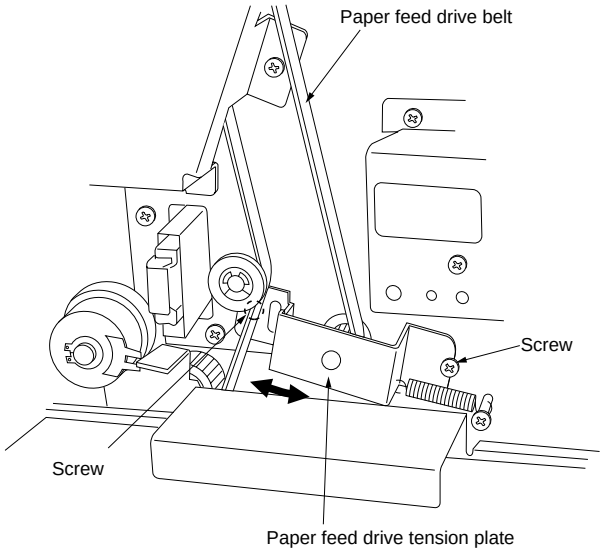

Figure 3-3-174