mita®

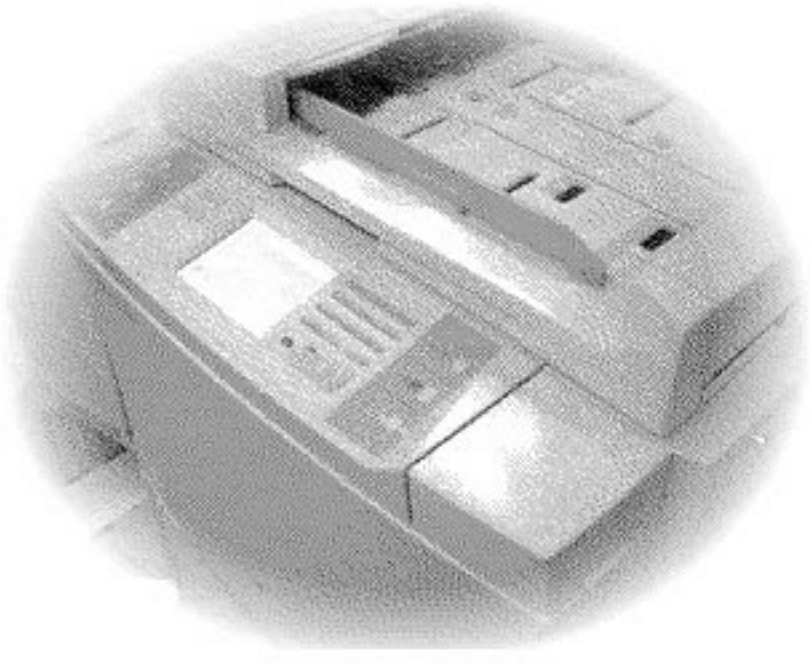

DC-5090

Product Technical Information

***October** 1997* ***Version** 1.0*

DC-5090

The DC-5090 is a newly designed copier system. The so called "steel prop" machine frame, a heavily reinforced welded frame forms the solid basis of the copier. The paper feed section features an in-line paper deck with two paper stacks containing 3,000 sheets on top of the two paper drawers. The machine also features a transfer belt.
Moreover, the user can find more advanced copying functions than ever before presented in a clear and comprehensive touch-screen display.

This Product Technical Booklet is also available in Adobe Acrobat 3.0 PDF format and as a Microsoft Office 97 Powerpoint presentation. Please mail to http://www.jgelderen@mita.nl to receive the files.

© Mita Europe Technical Department 1997. Design and specifications can be subject to change without notification.

Contents

1.	General specifications	4
2.	Lifetimes	7
3.	Description of the machine parts / operation panel	8
4.	Machine Structure	10
5.	Functions	12
6.	Environmental aspects	16
7.	Technical specifications	17
8.	Performance (image quality aspects)	18

Appendix 1	Lifetimes of main parts and consumable parts
Appendix 2	Maintenance lists DC-5090, AS-F6010 and the RDH
Appendix 3	Maintenance kits DC-5090 including the RDH
Appendix 4	Specifications of the AS-F6010 and the RDH

1. General specifications

Model		DC-5090
Type		Console
System		Original stationary, moving scanner unit, dry dual-component and heat/pressure fixing
Copy speed	**A4**	**50** (+1,4/-0,5) copies per minute
	A3	25 (+1,4/-0,5) copies per minute

(Measurement: Manual exposure, regardless of paper position, 1:1 copying/without document feeder)

Copy speed with RDH

The copy speed with the RDH is 50 (+1,4/-0,5) copies per minute a single copy is being made. When 10 sets of 10 single sided original originals is copied, the copy speed will become 48 (+1,4/-0,5) copies per minute.

Duplex copy speed

(Measurement: upper paper drawer/manual exposure/A4 original)

Single sided to double sided	
10 sets of 5 duplex copies from 10 pages of single sided original	**< 141 seconds**
Double sided to double sided	
10 sets of 10 duplex copies from 10 pages of double sided original	**< 282 seconds**

Originals			
	Sort	Sheets, books and solid objects	
	Sizes	Max.: A3 (Metric)	
	Alignment	Centre alignment	
Copies			
	Sizes	A3~A6R, Folio	
	Paper weight	Paper drawer / Paper deck	60~80 g/m^2
		Duplex unit	64 ~80 g/m^2
		Stack bypass	45~200 g/m^2
	Sorts	Standard plain paper, Recycled paper, Coloured paper, Transparencies (3M PP2500)	
Zoom Range		50 to 200% (in steps of 1%)	
Fixed Magnifications		13 reductions and 9 enlargements	
First copy		< 3.0 sec. (upper right cassette paper feed/ A4 /1:1/Manual exposure)	
	AE	< 4.0 s (upper right cassette paper feed/A4/1:1)	
	With RDH	< 3.5 s (upper right cassette paper feed/ A4 /1:1/Manual exposure)	
Warming up time		< 240 seconds (20°C/65%RH)	
Energy saver (recovery time)		< 30 seconds (20°C/65%RH)	

Paper feed system	2 paper drawers, a paper deck and stack bypass		
	Paper drawers	paper deck	stack bypass
Capacity	500 sheets (80 g/m^2)*	3000 sheets (80 g/m^2)	100 sheets (80 g/m^2)**
Sizes	A3~A5R, folio	A4	A3-A6R, folio
Size detection	User input	N.A.	Yes (up to B6)

** 550 sheets can be inserted provided that the paper is well conditioned (i.e. not moist)*
*** or 30 sheets heavy paper (200 g/m^2)*

Paper eject	Paper is ejected on a paper tray (face up) with a capacity of 250 sheets (80 g/m^2)
Machine size	(W) 685 mm x (D) 752 mm x (H) 1021 mm (level of the contact glass)
Machine weight	approx. 178 kg/392.1 lbs (copier + RDH: approx. 194 kg/427.3 lbs)

Optional equipment

Document feeder	RDH (standard equipment)
Sorter	AS-4020 AS-S5120 (optional punch unit available / Stacker SK-1(633)
Sorter/stacker	AS-F6010 (optional punch unit available)
Key counter	
Dehumidifier	

Languages (Metric Europe)

Standard	English, German, French, Italian, Spanish
Optional	Swedish, Norwegian, Danish, Turkish, Polish, Czech, Hebrew, Hungarian, Finnish, Dutch, Spanish

Standard functions

Density adjustment (7 steps or 13 steps /
Max. 13 steps or 25 steps)
Automatic Exposure
Photo Mode
(Magnification Selection Mode
Margin Shift (left margin/duplex margin)
Border Erase Mode
Sheet border erase
Book border erase
Custom border erase
Automatic Duplex Copy:
Split copy (
Interrupt
Energy Saver
Auto Energy Saver (default: 90 sec)
Stop/Clear/All Clear
Auto Clear (0~270 s in intervals of 30 sec/default: 90 sec)
Weekly Timer
Auto Start (default: on)
Original Size Detection (RDH)
Paper Size Selection
Automatic Paper Selection (APS)
Automatic Magnification selection (AMS)
Covering Mode (RDH)
Sheet Insert Mode (RDH)
Chapter Mode (RDH)
Auto punching (AS-F6010/AS-4020)
Auto Stapling (AS-F6010/ AS-4020)
Presentation Copy Function
Transparency(OHP film) + cover sheet

2-in-1 function
Skip mode
Exceptions mode
Auto selection (RDH)
single/double sided originals mixed mode (RDH)
Copying time indication
Auto stack (AS-F6010 or AS-S5120 with SK-1)
ID code function (1000 entries/4 digits)
Mode program (7 programs)
(paper) Clip Tray
Original remainder (Display)
LCD (Touch panel) display
Animated display: Paper jam and toner replenishment
Setting Mode Confirmation
Copy Number (3 digits/~999 sheets)
Paper Jam Detection
Paper Jam Number Correction
Total Counter (7 digits)
Simulation mode
Paper Volume Indication
Paper Volume Detection
Toner replenishment during copying
Program ahead function (multiple jobs setting)
Retry paper feed
Partial operation control (DF, sorter, duplex unit, paper sources,
AS-F6010 stack section, (SK-1)
Cassette paper size detection
Cassette paper size indication
Deck paper size setting
Self diagnosis
Short cut????????????

User default settings (*factory settings are given between brackets*)

Density Adjustment	Manual/Automatic (automatic)
Density Steps	Normal mode : 7 steps or 13 steps (7 steps)
Auto Density Levels	7 levels (centre)
Manual Density Levels	7 levels (centre)
Paper Selection	Manual/auto (auto selection (APS)
Default drawer	Designated for each slot (first slot)
Automatic Drawer switching	ON/OFF (ON)
Entering Drawer Size	Manual (each size) /automatic (Metric : manual A4)
Special Paper Setting	Each slot designated (not designated)
Auto Special Paper Feed	ON/OFF (OFF)
Auto Shut Off Time	10 min ~ 240 min in steps of 15 min (60min)
Auto Shut Off On/off	ON/OFF (ON)
Auto Preheat Time	5 min ~ 45 min in 5 min steps (15 min)
Limited Number of Copies	Up to 999 (999)
Encryption Number Change	4 digits (5000)
Border Erase Default	Longitudinal/honzontal (60/94 mm)
Margin setting	Left/left+special (left)
Drawer For Inter Sheet	Stack bypass/2nd drawer, (2nd drawer)
Interval Of Punch Hole	20-80-20/21-71-21/80-80-80mm, (80-80-80mm)
Auto Sticker Setting	All of 21 volumes or more/21 volumes or more (every 20 volumes)/ All of setting volumes (all of 21 volumes or more)
Short cut key setting	
Key sound	ON/OFF (ON)
Program key operation mode	Regular/direct (Direct).
Standard/Fixed Magnification Switch.	Standard/fixed Metric (Standard)
Auto stack timer setting:	5 ~ 60 min. (5 min.)
2 funcfions display:	ON/OFF (On)

2. Lifetimes

Machine	5 years or 2,400,000 copies
Drum	2,400,000 copies
Developer	200,000 copies
Toner	approx. 27,700 copies (1050 g cartridge)

(Measurement A4/continuous copying/6% duty original/20°C/65%RH)

3. Description of the machine parts / operation panel

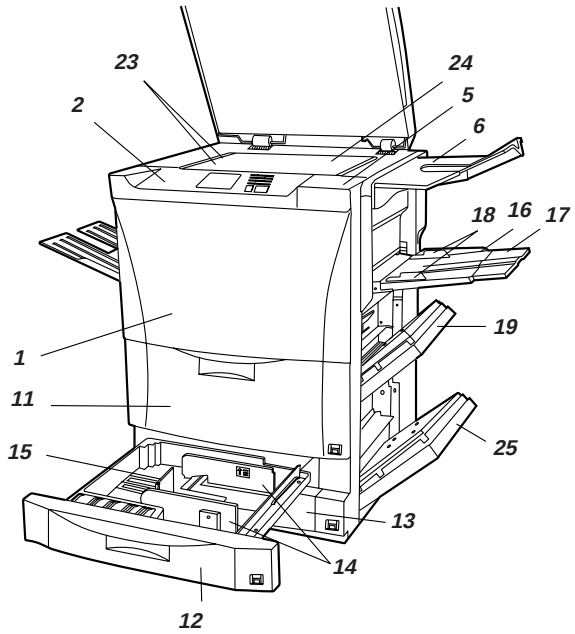

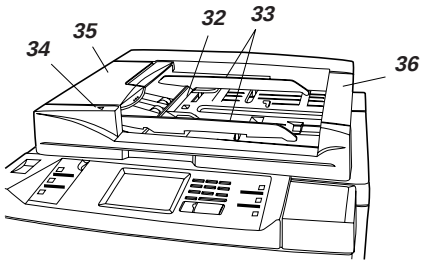

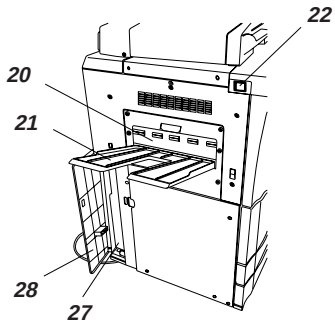

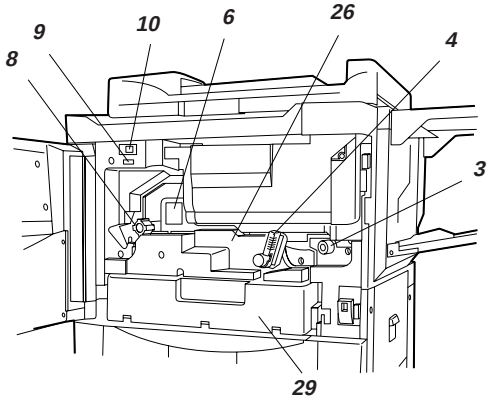

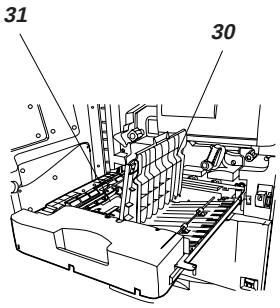

1	Front cover
2	Operation panel
3	Paper feed section knob
4	Paper transfer section release lever
5	Operation section right cover (toner replenishment)
6	Fixing unit
7	Original tray
8	Fixing knob
9	Total counter
10	Heater switch (technician item)
11	Upper deck (3,000 sheets)
12	Middle drawer (550 sheets)
13	Lower drawer (550 sheets)
14	Width adjustment lever
15	Length adjustment lever
16	Stack bypass tray
17	Support guide
18	Insert guides
19	Upper right cover
20	Ejection cover
21	Copy eject tray (optional)
22	Main power switch
23	Original size indicator lines
24	Glass plate
25	Lower right cover
26	Paper transfer section
27	Waste toner tank
28	Waste toner tank cover
29	Duplex unit
30	Duplex cover
31	Re-feeding section
32	Original table
33	Original insert guides
34	Original set indicator
35	Left cover
36	Right cover

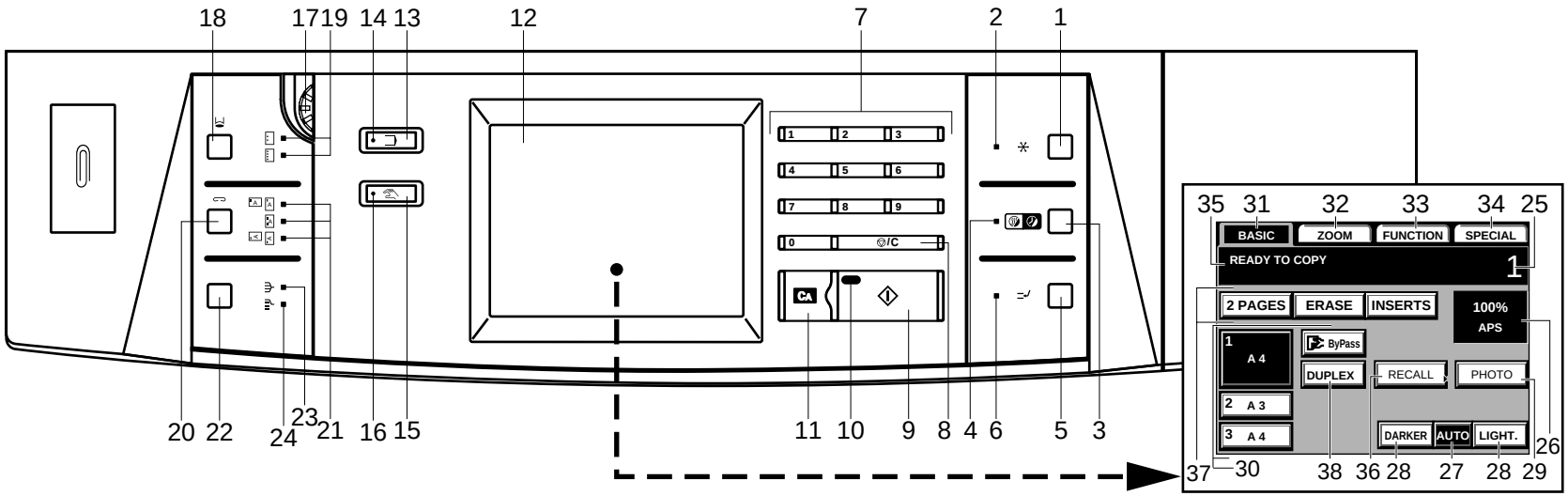

1 Auto selection key
2 Auto selection indicator
3 Energy saver key
4 Energy saver indicator
5 Interrupt key
6 Interrupt indicator
7 Numeric keys
8 Stop/clear key
9 Print key
10 Print indicator
11 Reset key
12 Touch panel
13 Program key
14 Program indicator
15 Manual key
16 Manual indicator
17 Brightness adjustment knob (panel)
18 Punch mode selection key
19 Punch mode indicator
20 Staple mode selection key
21 Staple mode indicator
22 Sorter mode selection key
23 Sort mode indicator
24 Group mode indicator
25 Copy number display
26 Zoom ratio display
27 “Auto” (auto/manual exposure adjustment selection) key
28 Copy exposure adjustment keys
29 “Photo” key
30 Drawer selection key/indicator
31 “Basic” key
32 “Zoom” key
33 “Added” key
34 “Default” [Management mode] key
35 Message display
36 “Recall” key
37 “Create Shortcut” key
38 “2sided” key

4. Machine Structure

Photoconductor

Sort	Drum (diameter: Ø 84 mm)
Type	a-Si
Surface potential	820 V
Speed	382 mm/s

Main charger

System	Double wire charging separated by a partition (Scorotron)
Discharge Current	700 µA

Exposure

System	Mirror Scanning
Lens	Short focus lens array
Exposure Control	AVR (Phase control)
	Manual exposure control (7 levels or 13 levels)
Automatic exposure control	Pre-scan
Exposure Source	Halogen lamp (rating: 170V/300 W for 220-240V)

Developing

System	Dual-component (Forward)	
Developer Capacity	1400 g	
Toner Feed System	1050 g per bottle	
Toner : Developer ratio	7:93 (Weight ratio)	
Density Control System	Developer density detection (toner sensor)	
Developing Bias Voltage	240 V DC	
Clearances	between Drum and Developing roller	0.535 mm
	between Developing Roller and Doctor Blade	0.625 mm

Image transfer

System	Belt (roller) transfer system
Voltage	2.5~4.5 kV (rated current 40 µA)

Separation

System	Transfer belt
Separation claws	present

Fixing

System	Heat roller
Heater	Halogen heater
Ratings	Main heater 920 W
	Sub heater 570 W

Control System	Thermistor detection, ON-OFF control
Roller Control Temperature	195°C (under normal conditions)
Fixing Pressure	Approx. 180 N
Overheat Prevention	180°C (Thermostat)
Fixing Rollers	Heat roller PFA hard roller (Convex)
	Press roller PFA tube (Straight)

Charge erasing

System	Charge-erasure by light
Lamp Type	LED
Lamp Rating	24V (5 W) (One lamp)

Cleaning

System	Blade + Fur blush
Blade material	Polyurethane rubber
Toner disposal system	Toner disposal bottle (capacity: > 100,000 copies/bottle)

Machine cross view

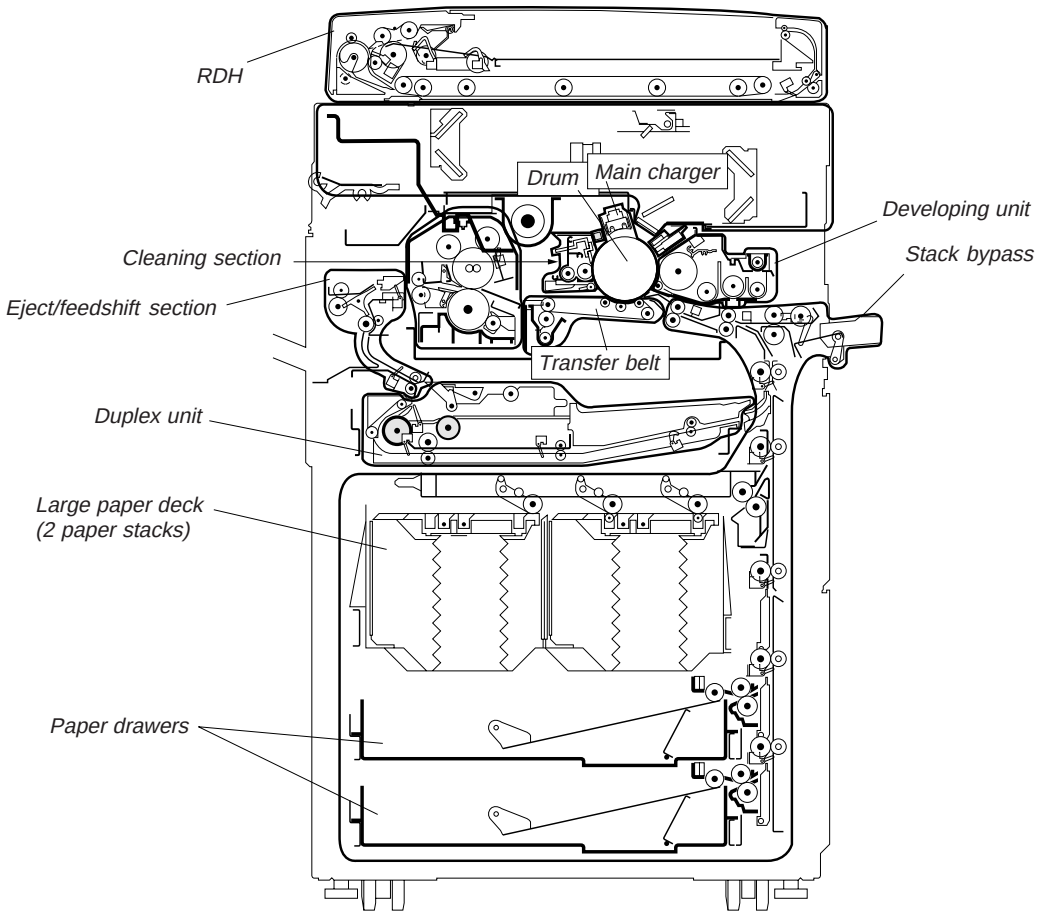

5. Functions

Exposure adjustment

Manual

System	Image exposure with the exposure adjustment key
Range	Max. 13 levels or 25 levels

Adjustment key

Normal exposure range	: 7 levels	Exp.1 to 7 or 13 levels Exp.1 to 13
Light exposure range	: 3 levels	Exp.+1 to +3 or 6 levels Exp. +1 to +6
Dark exposure range	: 3 levels	Exp.-3 to -1 or 6 levels Exp. -6 to -1

Adjustment in the user simulation 7 levels adjustment (The entire exposure volume)

Auto Exposure

System	Pre-scan	
Setting	Dark original	Newspaper
	Neutral original	NTC

User adjustment

Photo mode

Reproduction of photographs is enhanced by lowering surface potential and exposure.
The image density becomes lower and contrast will become less to

Surface potential	600 V
Developing bias	250 V
Exposure	Exp.4 (Adjust N8.0 Munsell Gray Scale to 0.005<FD<0 15)

Margin shift

Left margin

The copy image can be shifted to the right to create a margin on the left side of the page.

Image shift setting 6, 9, 12, 15, 18 mm

NORMAL MARGIN
SINGLE SIDED COPY/
DOUBLE SIDED COPY (FRONT)

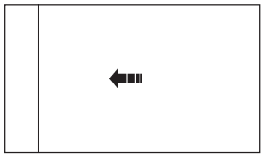

leading edge = 3 ± 2.5 mm

LEFT MARGIN

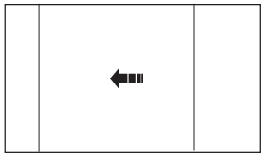

leading edge = 3 ± 2.5 mm
trailing edge = setting ± 4.5 mm

DOUBLE SIDED COPY (FRONT)

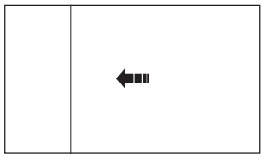

leading edge = (setting+3) ± 2.5 mm

Duplex margin

The widths of the margins for the front and back of the copies can be set separately in the duplex copy mode.

Image shift setting 0, 6, 9,12,15, 18 mm

NORMAL MARGIN

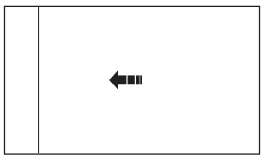

leading edge = 3 ± 2.5 mm

DOUBLE SIDED COPY (FRONT)

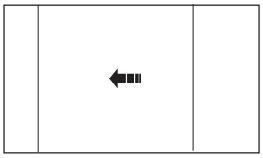

leading edge = 3 ± 2.5 mm
trailing edge = setting ± 4.5 mm

DOUBLE SIDED COPY (BACK)

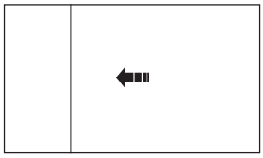

leading edge = (setting+3) ± 2.5 mm

Erase functions

Border erase function	Settings		6, 12, 18mm
Book erase	Settings		6,12, 1 8mm
Custom erase	Setting size	X	60 to 296mm in 4mm steps
		Y	94 to 214mm in 8mm steps

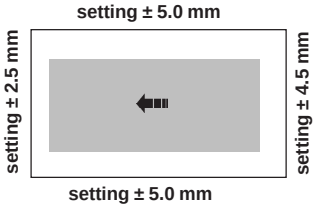

BORDER ERASE

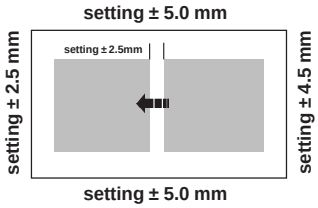

BOOK ERASE

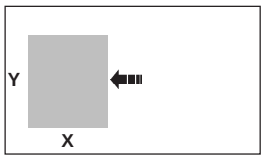

CUSTOM ERASE

Automatic duplex copying

Paper sizes	A3 to A5R, Folio (normal plain paper, recycled paper or coloured paper)
Paper weight	64 to 80g/m2
Duplex tray capacity	50 sheets (80g/m2)
Copy direction	The leading edge and trailing edge are aligned
Copy modes	An odd or even number of single sided originals (it is possible to have the number of originals automatically count) or double sided or Book originals

Split copy

Duplex split copy	A double sided original is split into a double-sided copy.
Book split copy	A book original is be split into 2 single sided copies.

Copy sizes (Book split copy)

Original sizes	A3, B4 (sizes can be added by simulation)
Copy sizes	A4, B5 (sizes can be added by simulation)

Weekly timer

Functions The copiers switches on or off at predetermined times
Settings The timer can be set to switch the machine ON and OFF on each day of the week.

Original size detection

System Sensor of reflecting type (Infrared)

Sheets insert modes

Cover mode
Sheets can be added as front or rear covers for the copy sets. These sheets are fed from the stack bypass. It is possible to copy onto these sheets (on one side or on both sides of the sheets) or to leave the cover sheets blank.*

**It is however only possible to copy onto one side of the rear cover .*

Sheet/insert mode
Up to 30 (coloured) sheets can be inserted between copies to separate them. The separation sheets are feed from the second paper drawer or the stack bypass. It is possible to copy onto these sheets (on one side or on both sides of the sheets) or to leave the cover sheets blank.

Chapter mode
The first page of each chapter in a set of originals will start on a new page when a set of single sided originals are copied to double sided copies. The page numbers of each chapter's first page are entered before copying, whereas the maximum is 30 "first pages".

Presentation copy mode
An original is copied simultaneously onto a transparency fed from the stack bypass and onto plain paper fed from the paper deck/drawers or can be ejected without being copied to serve as a back-up sheet (very similar to the OHP backing sheet mode). In addition, the originals are also copied onto a pre-set number of (plain paper) copies to serve as hand-outs.

OHP backing sheet mode mode
An original is copied simultaneously onto a transparency fed in from the stack bypass and onto normal plain paper fed in from the paper deck/drawers. It is also possible to leave the paper blank.

Separate copy counts

Up to 1.000 separate copy accounts can be allocated to registered user (using a ID code of 4 digits).
The number of copies made by user, the total (overall) copy count and the copy count per paper size can be displayed (with a maximum of 6 digits).

Partial system control

Should the self-diagnostics system detect a malfunction, it will generate a specific service call. The copier will thereupon disconnect the relevant section to allow continued copying. After repair, the service technician can reset the section in question.
The following sections can be disconnected by the copier; the document feeder, each paper slot, the duplex unit and installed sorter. (or just the stacker unit in case of the AS-F6010)

Original skip mode

The user can enter up to 30 page numbers of originals that do not have to be copied. The copier will skip the specified pages of originals not to be copied (when the DF is used).

Original except mode

When the user is copying a set or originals from the document feeder, he/she can program different copy settings for some originals in the set. It is possible to copy up to 30 originals at different settings. (see below)

PROCEDURE
Select the exceptions function. Enter the page numbers (up to 30 pages) where the selected functions are to be enabled, and select the desired functions.
Available functions: exposure (AE or manual), photo mode, margin settings, border erasure, zoom/fixed magnification and preset number of copies.

2 in 1 copy mode

The images of 2 originals are reduced and copied onto one single copy when the DF is used
Any copy size can be selected (AMS).

PROCEDURE
Select the 2-in-1 function. Select single sided copying from single-sided originals
or double side copying from single-sided originals.

Program ahead copy mode

Several originals can be placed in the document feeder, but each separate original can be copied with different setting and functions. The originals have to be the same size and partition sheets have to inserted.

Remaining job time

An indication is displayed, indicating how much time is will take to finish a the current copy job.
“Copying is about to end” appears after 5 minutes or at 90% of the estimated total copy time.

6. Environmental aspects

Ratings and power comsumption

Ratings	220-240V /50Hz 8.5A (Ave.) / 10A (Max.)
Power consumption Rated Stand-by Copying	
Insulation resistance	2MW or more by 500V megger
Earth continuity	0.1 W or less
Interference	conform CE standard

Work environment

Operation	temperature	10 °C to 35 °C
	humidity	15 % RH to 85 % RH
Recommended operation	**temperature**	**20 °C**
	humidity	**65 % RH**
Storage	temperature	-10 °C to 40 °C
	humidity	15 % RH to 85 % RH

Approvals

RWTüV Approval No. 3169/96 conform EN60950: 1993+A2:1994-09
Safety 73/23/EEC
EMC 89/336/EEC
93/68/EEC

By-products

Noise warming-up	59 dB
standing-by	48 dB (with the fan operating)
operation	64 dB
Ozone	Ave. 0.08 ppm or less
Fine dust	0.2 mg/m^3 or less

7. Technical specifications

Reliability

MCBC (Mean Copies Between Calls)		200,000 copies
MCBJ (Mean Copies Between Jams)		
Single sided copying	Front cassette feed	10,000 copies or more
	Stack bypass feed	2,000 copies or more
Auto Duplex copy	Front cassette feed	6,000 copies or more
	Stack bypass feed	1,200 copies or more

Maintenance

Maintenance cycle	200,000 copies
Maintenance time	Within 60 min.
Machine set-up	

See also the appendix for a detailed maintenance list.

Machine set-up

1. Unpack the machine
2. Remove the retaining tapes
3. Remove the retaining pins (in total 5 pieces)
4. Removbe the cleaning assembly retainers
5. Set the cleaning unit to the drum
6. Load developer
7. Install the upper developing seal
8. Set the transfer charger belt (installation of the transfer spacers)
9. Adjust the fixing pressure
10. Apply toner to the cleaning blade (simulation 40)
11. Set the cleaning blade
12. Set the developer (simulation 60)
13. Add toner
14. Install the original/copy trays
15. Make test copies

8. Performance

General remark

Unless specially specificied, tests are executed conform the JIS (Japanese Industrial standard) Z-8703 standard, i.e. copying to standard plain paper (excluding A6R) of which the moisture level is not adjusted with the rated power source, temperature/humidity 20 °C [class 2]/65 % RDH[class 5]. "Inifial" in the following paragraphs indicates the period till the copy count has reached 3000 counts.

IMAGE QUALITY

Proper exposure	initial	4.0
	life	reproduction conform the normal exposure range
Image density	initial	1.40 or more
	life average	1.30 or more
	minimum	1.10 or more
Image density gap	initial	Δ ID < 0.15
	life	Δ ID < 0.20
Background	initial	FD < 0.005
	life	FD < 0.008

Resolution

Magnification	**Centre** lines/mm	**Sides** lines/mm
50 %	2.8	2.5
100%	5.0	4.5
200 %	5.6	5.0

Reproduction of fine lines		8.0 or more lines/mm (1:1)
Magnification tolerance		< 0.8 % (1:1) < 1.0 % (reduction/enlargement)
Squareness		± 13 mm/375 mm or less
Image distortion	total length	0.8 mm or less per 375 mm
	partial	0.4 mm or less per 50 mm

	Copy margin imperfect image area [1:1]	**Margin width [1:1]**
side A	< 7.0	< 9.0
side B	< 3 ± 2.5	< 5.5
side C	< 7.0	< 9.0
side D	< 3 ± 2.5	< 5.5

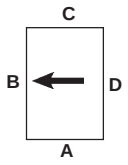

PAPER FEED/CONVEYING

Leading edge timing tolerance	cassette	± 2.5 mm.
	bypass	± 2.5 mm.
	refeed	± 2.5 mm.
Paper feed tolerance (skew)	cassette	< 1.5 mm.
	bypass	< 1.5 mm.
	refeed	< 2.0 mm.
Side registration tolerance	cassette	< 2.0 mm.
	bypass	< 2.0 mm.
	refeed	< 3.0 mm.
Paper curl	single sided	< 10.0 mm
	double sided	< 10.0 mm

Appendix 1 **Lifetime** of the **consumables** & **main parts**

The listed parts should be replaced after the indicated number of copies.

DC-5090 Consumable parts

No.	Part	Part No.	Quantity	Lifetime (x1000 copies)
00	Drum DC-5090	36782010	1	2000
01	Parts, blade cleaning	36793310	1	200
02	Parts, cleaning	36793320	1	200
03	Parts, upper cleaning roller	36793380	1	200
04	Parts, lower cleaning roller	36793390	1	200
05	Parts, oil roller	36793370	1	200
06	Parts, heat roller	36793350	1	400
07	Parts, press roller	36793360	1	600

DC-5090 Main parts

No.	Part	Part No.	Quantity	Lifetime (x1000 copies)
08	Belt, original conveying	65708010	1	(100) (RDH part)
09	Pulley, paper feed	18307570	2	(100) (RDH part)
10	Pulley, separation	18307580	1	(100) (RDH part)
11	Belt, separation	18307590	1	(100) (RDH part)
12	Lower lever, developing roller	36714080	1	200
13	Terminal cleaning brush	36718110	1	200
14	Separation roller 25B	53310310	2	(200)
15	Pulley, pick-up	60906161	2	(200)
16	Pulley, paper feed	36706290	2	(200)
17	Lower pulley, paper feed	33906060	2	(200)
18	Roller, SB leading feed	36707050	1	(200)
19	Upper pulley, bypass	61706770	1	(200)
20	Lower pulley, bypass	61706780	1	(200)
21	Torque limitter assembly	53310420	1	(200)
22	Pulley, turn over	68721030	1	(200)
23	Pulley, refeed	68721050	1	(200)
24	Pulley, leading registration	68721420	1	(200)
25	Belt, separation	68721651	1	(200)
26	Parts, developing blade ass'y	36793080	1	400
27	MC cleaning pad assembly	61768121	2	400
28	Grid cleaning pad assembly	36768080	1	400
29	Pick-up roller	53310300	3	(400)
30	Parts, upper seal developing	36793260	1	400~600
31	Parts, upper cover cleaning	36793340	1	400~600
32	Parts, belt transfer	36793280	1	600
33	Parts, roller transfer	36793290	1	600
34	Parts, brush belt cleaning	36793300	1	600

Note

The figures between brackets () = The mentioned lifetime is depending on the number of times that part has actually been used during operation. The counts can be checked by simulation.

The following parts might require replacement during the machine lifetime

No.	Description	Part No.	Q'ty
1	Electrode A, drum heater	36708040	2
2	Electrode B, drum heater	36708190	2
3	Rear drum, electrode wire ass'y	36701011	1
4	Front drum, electrode wire ass'y	36701020	1
5	Cam, lower developing roller	61714530	1
6	Lower shaft, developing	36714280	1
7	Separation claw assembly	36700750	2
8	Thermistor, fixing	36720560	1
9	Claw, press roller	36720490	4
10	Separation claw, heat roller	36720480	7
11	Parts, main fixing heater (240)	36793440	1
12	Parts, sub fixing heater (240P)	36793450	1
13	Parts, exposure lamp	36793240	1
14	Parts, static eliminator eject	18393020 (RDH part)	2
15	Parts, cleaning lamp	36793190	1

Appendix 2 **Maintenance list DC-5090** including the **RDH** & the Sorter/Stacker **AS-F6010**

LIST OF ABBREVIATIONS

Cl	**Clean**
Lu	**Lubricate**
Re	**Replace**
Ch/Ad	**Check and adjust**
Ch/Re	**Check and replace if necessary**
0	**On delivery**
U/C	**User's call**

DC-5090			COPY Q'TY (x 1000 COPIES)							Page 1 of 3	
	DESCRIPTION	PART No.	0	U/C	200	400	600	800		Manual reference	REMARKS
A	SET-UP										
1	Developer	----------	**Re**		**Re**	**Re**	**Re**	**Re**			
2	Toner	----------	**Re**								toner life is approx. 27.7K
3	Copy quality	----------	**Ch/Ad**	**Ch/Ad**	**Ch/Ad**	**Ch/Ad**	**Ch/Ad**	**Ch/Ad**			
B	COVERS										
1	contact glass	36712080	**Ch**	**Ch/Cl**	**Ch/Cl**	**Ch/Cl**	**Ch/Cl**	**Ch/Cl**			Alcohol or dry cloth/check earth continuity, if > 400 Ohm, check installation
2	Exterior covers	----------			**Cl**	**Cl**	**Cl**	**Cl**			Clean with alcohol or dry cloth
C	PAPER FEED and CONVEYING										
1	Parts, belt transfer (SP)	36793280					**Re**				
2	Parts, roller transfer (SP)	36793290					**Re**				
3	Parts, brush belt cleaning (SP)	36793300					**Re**				
4	Rear guide, transfer	36716380			**Cl**	**Cl**	**Cl**	**Cl**			Vacuum and dry cloth
5	Separation roller 25B (2)	36710310				**Ch/Re**	**Ch/Re**	**Ch/Re**			Check the pf count (by sim.), Re the pulleys at 200 or more
6	Pick-up roller (3)	36710300			**Cl**	**Cl**	**Cl/Re**	**Cl/Re**			Alcohol or dry cloth. Check the pf count (by sim.), Re the pulleys at 400 or more
7	Pulley, pick-up (2)	60906161			**Cl**	**Cl/Re**	**Cl/Re**	**Cl/Re**			Alcohol or dry cloth. Check the pf count (by sim.), Re the pulleys at 200 or more
8	Pulley, paper feed (2)	36706290			**Cl**	**Cl/Re**	**Cl/Re**	**Cl/Re**			Alcohol or dry cloth. Check the pf count (by sim.), Re the pulleys at 200 or more
9	Lower pulley, paper feed (2)	33906060			**Cl**	**Cl/Re**	**Cl/Re**	**Cl/Re**			Alcohol or dry cloth. Check the pf count (by sim.), Re the pulleys at 200 or more
10	Roller, SB leading feed	36707050			**Cl**	**Cl/Re**	**Cl/Re**	**Cl/Re**			Alcohol or dry cloth. Check the pf count (by sim.), Re the pulleys at 200 or more
11	Upper pulley, bypass	61706770			**Cl**	**Cl/Re**	**Cl/Re**	**Cl/Re**			Alcohol or dry cloth. Check the pf count (by sim.), Re the pulleys at 200 or more
12	Lower pulley, bypass	61706780			**Cl**	**Cl/Re**	**Cl/Re**	**Cl/Re**			Alcohol or dry cloth. Check the pf count (by sim.), Re the pulleys at 200 or more
13	Torque limitter ass'y	53310420			**Ch/Re**	**Ch/Re**	**Ch/Re**	**Ch/Re**			Check the pf count (by sim.), Re the pulleys at 200 or more
14	Other rollers	----------			**Cl**	**Cl**	**Cl**	**Cl**			Alcohol or dry cloth
15	Other guides	----------			**Cl**	**Cl**	**Cl**	**Cl**			Alcohol or dry cloth
D	DUPLEX SECTION										
1	Pulley, turn-over	68721030				**Cl/Re**	**Cl/Re**	**Cl/Re**			Alcohol or dry cloth. Check the pf count (by sim.), Re the pulleys at 200 or more
2	Pulley, refeed	68721050				**Cl/Re**	**Cl/Re**	**Cl/Re**			Alcohol or dry cloth. Check the pf count (by sim.), Re the pulleys at 200 or more
3	Pulley, leading registration	68721420				**Cl/Re**	**Cl/Re**	**Cl/Re**			Alcohol or dry cloth. Check the pf count (by sim.), Re the pulleys at 200 or more
4	Belt, separation	68721651				**Ch/Re**	**Ch/Re**	**Ch/Re**			Check the pf count (by sim.), Re the pulleys at 200 or more
E	OPTICAL SECTION										
1	Parts, lamp unit (SP)	36793210			**Ch/Ad**	**Ch/Ad**	**Ch/Ad**	**Ch/Ad**			Alcohol or dry cloth/check if the exposure is even

DC-5090			COPY Q'TY (x 1000 COPIES)							Page 2 of 3	
	DESCRIPTION	PART No.	0	U/C	200	400	600	800		Manual reference	REMARKS
E	OPTICAL SECTION (continued)										
2	Parts, exposure lamp (170) SP	36793220			**Ch/Re**	**Ch/Re**	**Ch/Re**	**Ch/Re**			Dry cloth / Ch darkening of the lamp
3	Belt, scanner	36793240			**Ch/Ad**	**Ch/Ad**	**Ch/Ad**	**Ch/Ad**			Ch the belt tension and Ad if necessary
4	Filter, scanner (2)	36712410			**Cl**	**Cl**	**Cl**	**Cl**			Vacuum
5	Mirror (No. 1-6)	----------			**Cl**	**Cl**	**Cl**	**Cl**			Alcohol or dry cloth
6	Glass, dust shield	36713070			**Cl**	**Cl**	**Cl**	**Cl**			Alcohol or dry cloth
7	Lens, scanner	36713520			**Cl**	**Cl**	**Cl**	**Cl**			Alcohol or dry cloth
8	Front rail, scanner	36712190				**Ch/Lu**		**Ch/Lu**			Apply scanner rail grease PG-671 (60170000) in case of abnormal noise
9	Rear rail, scanner	36712200				**Ch/Lu**		**Ch/Lu**			Apply scanner rail grease PG-671 (60170000) in case of abnormal noise
F	IMAGE FORMATION										
1	Set, drum DC-5090	36782010			**Ch/Cl**	**Ch/Cl**	**Ch/Cl**	**Ch/Cl**			Alcohol or dry cloth. Check the surface for any scratches
2	Electrode A, drum heater (2)	36708040			**Cl**	**Ch/Re**	**Ch/Re**	**Ch/Re**			Dry cloth. Re if resistance between heater flange and electrode is > 10 Ohm
3	Electrode B, drum heater (2)	36708190			**Cl**	**Ch/Re**	**Ch/Re**	**Ch/Re**			Dry cloth. Re if resistance between heater flange and electrode is > 10 Ohm
4	Parts, blank lamp (SP)	36793180			**Cl**	**Cl**	**Cl**	**Cl**			Alcohol or dry cloth
5	Parts, lamp cleaning (SP)	36793190			**Cl**	**Cl**	**Cl**	**Cl**			Alcohol or dry cloth
6	Sensor, potential	33408170			**Cl**	**Cl**	**Cl**	**Cl**			Air brush (do not use a vacuum cleaner)
7	Parts, main charger (SP)	36793030			**Cl**	**Cl**	**Cl**	**Cl**			Clean with a wet cloth (water) and dry cloth
8	· Tungsten wire (ox) SP (50m)	74669000			**Re**	**Re**	**Re**	**Re**			
9	Rear drum electrode wire ass'y	36701011			**Cl**	**Ch/Re**	**Ch/Re**	**Ch/Re**			Dry cloth. Re if resistance between drum flange and electrode is > 10 Ohm
10	Front drum electrode wire ass'y	36701020			**Cl**	**Ch/Re**	**Ch/Re**	**Ch/Re**			Dry cloth. Re if resistance between drum flange and electrode is > 10 Ohm
11	MC cleaning pas ass'y (2)	61768121				**Re**		**Re**			
12	Grid cleaning pad ass'y	36768080				**Re**		**Re**			
G	DEVELOPING SECTION										
1	Parts, developing ass' y (SP)	36793070			**Cl**	**Cl**	**Cl**	**Cl**			Vacuum and dry cloth
2	· Parts, developing blase ass'y (SP)	36793080			**Ch/Re**	**Re**	**Ch/Re**	**Re**			
3	· Lower lever, developing roller	36714080			**Re**	**Re**	**Re**	**Re**			
4	· Cam, lower developing roller	61714530			**Ch/Re**	**Ch/Re**	**Ch/Re**	**Ch/Re**			grease TMP1-200g(66668050) every 200K or after Re. Ch condition of the part in contact with the lever
5	· Lower shaft, developing	36714280			**Cl**	**Cl**	**Cl**	**Ch/Re**			Dry cloth/Re if toner stciks to the surface of the roller
6	Parts, upper seal developing (SP)	36793260			**Cl**	**Re**	**Cl**	**Re**			Vacuum and dry cloth
7	Cartridge installation position	----------			**Cl**	**Cl**	**Cl**	**Cl**			Vacuum

DC-5090			COPY Q'TY (x 1000 COPIES)							Page 3 of 3	
	DESCRIPTION	PART No.	0	U/C	200	400	600	800		Manual reference	REMARKS
G	DEVELOPING SECTION (continued)										
8	Other seals	----------			Cl	Cl	Cl	Cl			Vacuum or dry cloth
H	CLEANING SECTION										
1	Parts, cleaning ass'y (SP)	36793090			Cl	Cl	Cl	Cl			
2	· Parts, cleaning blade (SP)	36793310			Re	Re	Re	Re			
3	· Separation claw ass'y (2)	36700750			Cl	Ch/Re	Ch/Re	Ch/Re			Dry cloth/Ch the condition of the tips of the claws
4	· Parts, cleaning (SP)	36793320			Re	Re	Re	Re			
5	· Parts, upper cleaning cover (SP)	36793340			Cl	Re	Cl	Re			Vacuum and dry cloth
6	· Terminal, cleaning brush	36718110			Re	Re	Re	Re			
7	· Parts, mount cleaning (SP)	36793330			Cl	Re	Cl	Re			Vacuum and dry cloth
8	Disposal tank ass'y (2)	36700520			Re	Re	Re	Re			2 disposal tanks are used per 200K
9	Other seals	----------			Cl	Cl	Cl	Cl			Vacuum and dry cloth
I	FIXING SECTION										
1	Parts, heat roller (SP)	36793350			Cl	Re	Cl	Re			Silicon oil SH200CV (75770000)
2	Parts, press roller (SP)	36793360			Cl	Cl	Re	Cl			Silicon oil SH200CV (75770000)
3	Parts, upper roller cleaning (SP)	36793380			Re	Re	Re	Re			
4	Parts, lower roller cleaning (SP)	36793390			Re	Re	Re	Re			
5	Parts, roller oil (SP)	36793370			Re	Re	Re	Re			
6	Thermistor, fixing	36720560			Ch/Cl	Ch/Cl	Ch/Cl	Ch/Cl			Thinner or Toluene/Ch the condition of the part in contact with the roller
7	Claw, press roller (4)	36720490			Cl	Cl/Re	Cl/Re	Cl/Re			Alcohol or dry cloth/Ch the tips of the claws & claw surface coating
8	Separation claw, heat roller (7)	36720480			Cl	Cl/Re	Cl/Re	Cl/Re			Alcohol or dry cloth/Ch the tips of the claws & claw surface coating
9	Gear, joint developing (2)	33414071			Cl	Cl	Cl	Cl			Deatch the gear an Lu the part in conatc with the shaft with grease TMP1
10	Static eliminator, eject (2)	66321360			Cl	Cl	Cl	Cl			Wipe any toner stcicking to the fibres with toluene or thinner
11	Other guides	----------			Cl	Cl	Cl	Cl			Alcohol or dry cloth
12	Other rollers	----------			Cl	Cl	Cl	Cl			Alcohol or dry cloth
H	EJECT SECTION										
1	Other rollers	----------			Cl	Cl	Cl	Cl			Alcohol or dry cloth
2	Other guides	----------			Cl	Cl	Cl	Cl			Alcohol or dry cloth

RDH			COPY Q'TY (x 1000 Counts/check by DC-5090 simulation)							Page 1 of 1	
	DESCRIPTION	PART No.	0	U/C	100	200	300	400	500	Manual reference	REMARKS
A	SET-UP										
1	Copy quality	----------	**Ch/Ad**	**Ch/Ad**	**Ch/Ad**	**Ch/Ad**	**Ch/Ad**	**Ch/Ad**	**Ch/Ad**		Ch registration gap and paper skew
B	COVERS										
1	Exterior covers	----------		**Cl**	**Cl**	**Cl**	**Cl**	**Cl**	**Cl**		Clean with alcohol or dry cloth
C	ORIGINAL FEED										
1	Pulley, paper feed (2)	18307570		**Cl**	**Re**	**Re**	**Re**	**Re**	**Re**		Alcohol
2	Pulley, separation	18307580		**Cl**	**Re**	**Re**	**Re**	**Re**	**Re**		Alcohol
3	Belt B, separation	18307750		**Cl**	**Re**	**Re**	**Re**	**Re**	**Re**		Alcohol
4	Left roller, registration/loop	18310040		**Cl**	**Cl**	**Cl**	**Cl**	**Cl**	**Cl**		Alcohol
5	Switch L, feed	63227150		**Cl**	**Cl**	**Cl**	**Cl**	**Cl**	**Cl**		Cl the surface of thesensor with an air brush
6	Guide, loop conveying	18310010		**Cl**	**Cl**	**Cl**	**Cl**	**Cl**	**Cl**		Air brush
7	Original reading PCB	18328050			**Cl**	**Cl**	**Cl**	**Cl**	**Cl**		Cl the surface of thesensor with an air brush
8	Cushion, pulley	78606900			**Cl**	**Cl**	**Cl**	**Cl**	**Cl**		Air brush
D	ORIGINAL CONVEYING										
1	Belt, original conveying	65708010		**Cl**	**Re**	**Re**	**Re**	**Re**	**Re**		
2	Roller, original conveying drive	18308010			**Cl**	**Cl**	**Cl**	**Cl**	**Cl**		Alcohol or dry cloth
3	Roller, conveying tension	18308020			**Cl**	**Cl**	**Cl**	**Cl**	**Cl**		Dry cloth
4	Roller, conveying idle	18308030			**Cl**	**Cl**	**Cl**	**Cl**	**Cl**		Alcohol or dry cloth
5	Parts, static eliminator eject (SP)	18393020			**Ch/Re**	**Ch/Re**	**Ch/Re**	**Ch/Re**	**Ch/Re**		Ch the condition of the fibres (if they do not come off or break, etc.)
E	EJECT										
1	Upper roller, eject	18312010		**Cl**	**Cl**	**Cl**	**Cl**	**Cl**	**Cl**		Alcohol or dry cloth
2	Lower roller, eject	18312020		**Cl**	**Cl**	**Cl**	**Cl**	**Cl**	**Cl**		Alcohol or dry cloth
3	Parts, static eliminator eject (SP)	18393020			**Ch/Re**	**Ch/Re**	**Ch/Re**	**Ch/Re**	**Ch/Re**		Ch the condition of the fibres (if they do not come off or break, etc.)
F	ORIGINAL TABLE										
1	Filter, CF sensor	78706240		**Cl**	**Cl**	**Cl**	**Cl**	**Cl**	**Cl**		Air brush
G	DRIVE SYSTEM										
1	Shaft, partition (2)	18314130							**Cl/Lu**		Dry cloth/Scanner rail grease PG671 (60170000)

Appendix 3 **Maintenance kits DC-5090** including the **RDH**

DC-5090 Maintenance kit 200K (58336720)

Item Number	Description	Q'ty
36714080	Lower lever, developing roller	1
36718110	Terminal, cleaning brush	1
36793310	Parts, cleaning blade	1
36793320	Parts, cleaning	1
36793370	Parts, oil roller	1
36793380	Parts, upper roller cleaning	1
36793390	Parts, lower roller cleaning	1

DC-5090 Maintenance kit 400K (58336740)

Item Number	Description	Q'ty
36768080	Grid cleaning pad ass'y	1
36793080	Parts, developing blade ass'y	1
36793260	Parts, upper seal developing	1
36793330	Parts, mount cleaning	1
36793340	Parts, upper cover cleaning	1
36793350	Parts, roller heat	1
61768121	MC cleaning pad ass'y	2

DC-5090 Maintenance kit 600K (58336760)

Item Number	Description	Q'ty
36793280	Parts, belt transfer	1
36793290	Parts, roller transfer	1
36793300	Parts, brush belt cleaning	1

DC-5090 RDH Maintenance kit (58336700)

Item Number	Description	Q'ty
18307570	Pulley, paper feed	2
18307580	Pulley, separation	1
18307750	Belt B, separation	1
65708010	Belt, original conveying	1

DC-5090 Paper feed Maintenance kit (58336701)

Item Number	Description	Q'ty
33906060	Lower pulley, paper feed	1
36706290	Pulley, paper feed	1
60906161	Pulley, pick-up	1

DC-5090 Bypass feed Maintenance kit (58336702)

Item Number	Description	Q'ty
36707050	Roller, SB leading feed	1
53310420	Torque limiter ass'y	1
61706770	Upper pulley, bypass	1
61706780	Lower pulley, bypass	1

DC-5090 Duplex Maintenance kit (58336703)

Item Number	Description	Q'ty
68721030	Pulley, turn over	1
68721050	Pulley, refeed	1
68721420	Pulley, leading registration	1
68721651	Pulley, separation	1

Appendix 4 **AS-F6010 Specifications**

1-1-1 Specifications

Type	Floor-standing, single sorter
Number of bins	Non-sort bin: 1
	Sort bin: 10
Bin capacity	Non-sort bin: 100 sheets (64 - 80 g/m^2)
	Sort bin: 50 sheets (64 - 80 g/m^2) or 30 sheets of A3
	Stack section: Max. 1500 sheets (64 - 80 g/m^2)
	Non-staple mode, using one size B4 or smaller.
Paper sizes	Non-sort mode: A3 - A6R
	Sort and group modes: A3 - B6R
	Staple and punch modes: A3 - B5R
	Stack section: A3 - B5R
Paper weight	Non-sort bin: 35 - 200 g/m^2
	Sort bin: 64 - 200 g/m^2
Stapler capacity	Up to 50 sheets (64 - 80 g/m^2)
Punch capacity	Up to 50 sheets (64 - 80 g/m^2)
Power supply	Electrically connected to copier
Size	597 (W) x 710 (D) x 1115 (H) mm
Weight	87 kg/191.4 lbs

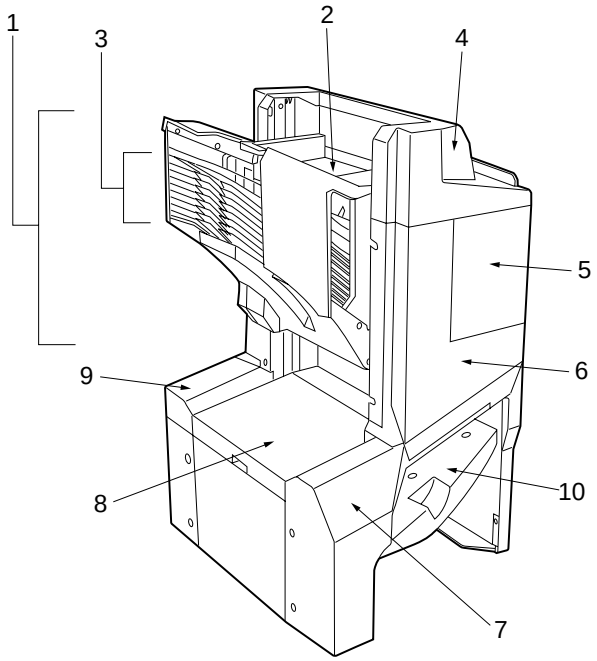

1.	Bin unit	6.	Front cover
2.	Non-sort bin	7.	Left front cover
3.	Sort bins	8.	Middle cover
4.	Top cover	9.	Left rear cover
5.	Front door	10.	Upper rear cover